Kawasaki

CONCOURS 1000GTR

Motorcycle Service Manual

Quick Reference Guide

This quick reference guide will assist you in locating a desired topic or procedure.

- Bend the pages back to match the black tab of the desired chapter number with the black tab on the edge at each table of contents page.
- Refer to the sectional table of contents for the exact pages to locate the specific topic required.

Kawasaki

CONCOURS 1000GTR

Motorcycle Service Manual

Tenth Edition (1) : Dec. 26, 1999 (K)

LIST OF ABBREVIATIONS

A	ampere(s)	lb	pound(s)
ABDC	after bottom dead center	m	meter(s)
AC	alternating current	min	minute(s)
ATDC	after top dead center	N	newton(s)
BBDC	before bottom dead center	Pa	pascal(s)
BDC	bottom dead center	PS	horsepower
BTDC	before top dead center	psi	pound(s) per square inch
°C	degree(s) Celsius	r	revolution
DC	direct current	rpm	revolution(s) per minute
F	farad(s)	TDC	top dead center
°F	degree(s) Fahrenheit	TIR	total indicator reading
ft	foot, feet	V	volt(s)
g	gram(s)	W	watt(s)
h	hour(s)	Ω	ohm(s)
L	liter(s)		

This warning may apply to any of the following components or any assembly containing one or more of these components:—

Brake Shoes or Pads
Clutch Friction Material
Gaskets
Insulators

SAFETY INSTRUCTIONS

- Operate if possible out of doors or in a well ventilated place.
- Preferably use hand tools or low speed tools equipped, if necessary, with an appropriate dust extraction facility. If high speed tools are used, they should always be so equipped.
- If possible, dampen before cutting or drilling.
- Dampen dust and place it in properly closed receptacle and dispose of it safely.

Read OWNER'S MANUAL before operating.

EMISSION CONTROL INFORMATION

To protect the environment in which we all live, Kawasaki has incorporated crankcase emission (1) and exhaust emission (2) control systems in compliance with applicable regulations of the United States Environmental Protection Agency and California Air Resources Board. Additionally, Kawasaki has incorporated an evaporative emission control system (3) in compliance with applicable regulations of the California Air Resources Board on vehicles sold in California only.

1. Crankcase Emission Control System

   This system eliminates the release of crankcase vapors into the atmosphere. Instead, the vapors are routed through an oil separator to the intake side of the engine. While the engine is operating, the vapors are drawn into combustion chamber, where they are burned along with the fuel and air supplied by the carburetion system.

2. Exhaust Emission Control System

   This system reduces the amount of pollutants discharged into the atmosphere by the exhaust of this motorcycle. The fuel and ignition systems of this motorcycle have been carefully designed and constructed to ensure an efficient engine with low exhaust pollutant levels.

3. Evaporative Emission Control System

   Vapors caused by fuel evaporation in the fuel system are not vented into the atmosphere. Instead, fuel vapors are routed into the running engine to be burned, or stored in a canister when the engine is stopped. Liquid fuel is caught by a vapor separator and returned to the fuel tank.

The Clean Air Act, which is the Federal law covering motor vehicle pollution, contains what is commonly referred to as the Act's "tampering provisions."

"Sec. 203(a) The following acts and the causing thereof are prohibited...

(3)(A) for any person to remove or render inoperative any device or element of design installed on or in a motor vehicle or motor vehicle engine in compliance with regulations under this title prior to its sale and delivery to the ultimate purchaser, or for any manufacturer or dealer knowingly to remove or render inoperative any such device or element of design after such sale and delivery to the ultimate purchaser.

(3)(B) for any person engaged in the business of repairing, servicing, selling, leasing, or trading motor vehicles or motor vehicle engines, or who operates a fleet of motor vehicles knowingly to remove or render inoperative any device or element of design installed on or in a motor vehicle or motor vehicle engine in compliance with regulations under this title following its sale and delivery to the ultimate purchaser..."

(Continued on next page.)

NOTE

○ *The phrase "remove or render inoperative any device or element of design" has been generally interpreted as follows:*

1. *Tampering does not include the temporary removal or rendering inoperative of devices or elements of design in order to perform maintenance.*
2. *Tampering could include:*
   a. *Maladjustment of vehicle components such that the emission standards are exceeded.*
   b. *Use of replacement parts or accessories which adversely affect the performance or durability of the motorcycle.*
   c. *Addition of components or accessories that result in the vehicle exceeding the standards.*
   d. *Permanently removing, disconnecting, or rendering inoperative any component or element of design of the emission control systems.*

WE RECOMMEND THAT ALL DEALERS OBSERVE THESE PROVISIONS OF FEDERAL LAW, THE VIOLATION OF WHICH IS PUNISHABLE BY CIVIL PENALTIES NOT EXCEEDING $10,000 PER VIOLATION.

TAMPERING WITH NOISE CONTROL SYSTEM PROHIBITED

Federal law prohibits the following acts or the causing thereof:
(1) The removal or rendering inoperative by any person other than for purposes of maintenance, repair, or replacement, of any device or element of design incorporated into any new vehicle for the purpose of noise control prior to its sale or delivery to the ultimate purchaser or while it is in use, or (2) the use of the vehicle after such device or element of design has been removed or rendered inoperative by any person.

Among those acts presumed to constitute tampering are the acts listed below:

- Replacement of the original exhaust system or muffler with a component not in compliance with Federal regulations.
- Removal of the muffler(s) or any internal portion of the muffler(s).
- Removal of the air box or air box cover.
- Modifications to the muffler(s) or air intake system by cutting, drilling, or other means if such modifications result in increased noise levels.

Foreword

This manual is designed primarily for use by trained mechanics in a properly equipped shop. However, it contains enough detail and basic information to make it useful to the owner who desires to perform his own basic maintenance and repair work. A basic knowledge of mechanics, the proper use of tools, and workshop procedures must be understood in order to carry out maintenance and repair satisfactorily. Whenever the owner has insufficient experience or doubts his ability to do the work, all adjustments, maintenance, and repair should be carried out only by qualified mechanics.

In order to perform the work efficiently and to avoid costly mistakes, read the text, thoroughly familiarize yourself with the procedures before starting work, and then do the work carefully in a clean area. Whenever special tools or equipment are specified, do not use makeshift tools or equipment. Precision measurements can only be made if the proper instruments are used, and the use of substitute tools may adversely affect safe operation.

For the duration of your warranty period, especially, we recommend that all repairs and scheduled maintenance be performed in accordance with this service manual. Any owner maintenance or repair procedure not performed in accordance with this manual may void the warranty.

To get the longest life out of your Motorcycle:

- Follow the Periodic Maintenance Chart in the Service Manual.
- Be alert for problems and non-scheduled maintenance.
- Use proper tools and genuine Kawasaki Motorcycle parts. Special tools, gauges, and testers that are necessary when servicing Kawasaki motorcycles are introduced by the Special Tool Manual. Genuine parts provided as spare parts are listed in the Parts Catalog.
- Follow the procedures in this manual carefully. Don't take shortcuts.
- Remember to keep complete records of maintenance and repair with dates and any new parts installed.

How to Use this Manual

In preparing this manual, we divided the product into its major systems. These systems became the manual's chapters. All information for a particular system from adjustment through disassembly and inspection is located in a single chapter.

The Quick Reference Guide shows you all of the product's system and assists in locating their chapters. Each chapter in turn has its own comprehensive Table of Contents.

The Periodic Maintenance Chart is located in the General Information chapter. The chart gives a time schedule for required maintenance operations.

If you want spark plug information, for example, go to the Periodic Maintenance Chart first. The chart tells you how frequently to clean and gap the plug. Next, use the Quick Reference Guide to locate the Electrical System chapter. Then, use the Table of Contents on the first page of the chapter to find the Spark Plug section.

Whenever you see these WARNING and CAUTION symbols, heed their instructions! Always follow safe operating and maintenance practices.

WARNING

○**This warning symbol identifies special instructions or procedures which, if not correctly followed, could result in personal injury, or loss of life.**

CAUTION

○**This caution symbol identifies special instructions or procedures which, if not strictly observed, could result in damage to or destruction of equipment.**

This manual contains five more symbols (in addition to WARNING and CAUTION) which will help you distinguish different types of information.

NOTE

○*This note symbol indicates points of particular interest for more efficient and convenient operation.*

- ● Indicates a procedural step or work to be done.
- ○ Indicates a procedural sub-step or how to do the work of the procedural step it follows. It also precedes the text of a WARNING, CAUTION, or NOTE.
- ★ Indicates a conditional step or what action to take based on the results of the test or inspection in the procedural step or sub-step it follows.
- ☆ Indicates a conditional sub-step or what action to take based upon the results of the conditional step it follows.

In most chapters an exploded view illustration of the system components follows the Table of Contents. In these illustrations you will find the instructions indicating which parts require specified tightening torque, oil, grease or a locking agent during assembly.

General Information

Table of Contents

Before Servicing

Before starting to service a motorcycle, careful reading of the applicable section is recommended to eliminate unnecessary work. Photographs, diagrams, notes, cautions, warnings, and detailed descriptions have been included wherever necessary. Nevertheless, even a detail account has limitations, a certain amount of basic knowledge is also required for successful work.

Especially note the following:

(1) Dirt

Before removal and disassembly, clean the motorcycle. Any dirt entering the engine or other parts will work as an abrasive and shorten the life of the motorcycle. For the same reason, before installing a new part, clean off any dust or metal filings.

(2) Battery Ground

Remove the ground (–) lead from the battery before performing any disassembly operations on the motorcycle. This prevents:

(a) the possibility of accidentally turning the engine over while partially disassembled.
(b) sparks at electrical connections which will occur when they are disconnected.
(c) damage to electrical parts.

(3) Tightening Sequence

Generally, when installing a part with several bolts, nuts, or screws, they should all be started in their holes and tightened to a snug fit. Then tighten them evenly in a cross pattern. This is to avoid distortion of the part and/or causing gas or oil leakage. Conversely when loosening the bolts, nuts, or screws, first loosen all of them by about a quarter of turn and then remove them.

Where there is a tightening sequence indication in this Service Manual, the bolts, nuts, or screws must be tightened in the order and method indicated.

(4) Torque

The torque values given in this Service Manual should always be adhered to. Either too little or too much torque may lead to serious damage. Use a good quality, reliable torque wrench.

(5) Force

Common sense should dictate how much force is necessary in assembly and disassembly. If a part seems especially difficult to remove or install, stop and examine what may be causing the problem. Whenever tapping is necessary, tap lightly using a wooden or plasticfaced mallet. Use an impact driver for screws (particularly for the removal of screws held by a locking agent) in order to avoid damaging the screw heads.

(6) Edges

Watch for sharp edges, especially during major engine disassembly and assembly. Protect your hands with gloves or a piece of thick cloth when lifting the engine or turning it over.

(7) High Flash-point Solvent

A high flash-point solvent is recommended to reduce fire danger. A commercial solvent commonly available in North America is Stoddard solvent (generic name). Always follow manufacturer and container directions regarding the use of any solvent.

(8) Gasket, O-ring

Do not reuse a gasket or O-ring once it has been in service. The mating surfaces around the gasket should be free of foreign matter and perfectly smooth to avoid oil or compression leaks.

(9) Liquid Gasket, Non-permanent Locking Agent

Follow manufacturer's directions for cleaning and preparing surfaces where these compounds will be used. Apply sparingly. Excessive amounts may block engine oil passages and cause serious damage. An example of a nonpermanent locking agent commonly available in North America is Loctite Lock'n Seal (Blue).

(10) Press

A part installed using a press or driver, such as a wheel bearing, should first be coated with oil on its outer or inner circumference so that it will go into place smoothly.

(11) Ball Bearing

When installing a ball bearing, the bearing race which is affected by friction should be pushed by a suitable driver. This prevents severe stress on the balls and races, and prevents races and balls from being dented. Press a ball bearing until it stops at the stop in the hole or on the shaft.

(12) Oil Seal and Grease Seal

Replace any oil or grease seals that were removed with new ones, as removal generally damages seals.

When pressing in a seal which has manufacturer's marks, press it in with the marks facing out. Seals should be pressed into place using a suitable driver, which contacts evenly with the side of seal, until the face of the seal is even with the end of the hole.

(13) Seal Guide

A seal guide is required for certain oil or grease seals during installation to avoid damage to the seal lips. Before a shaft passes through a seal, apply a little oil, preferably high temperature grease on the lips to reduce rubber to metal friction.

(14) Circlip, Retaining Ring

Replace any circlips and retaining rings that were removed with new ones, as removal weakens and deforms them. When installing circlips and retaining rings, take care to compress or expand them only enough to install them and no more.

(15) Cotter Pin

Replace any cotter pins that were removed with new ones, as removal deforms and breaks them.

(16) Lubrication

Engine wear is generally at its maximum while the engine is warming up and before all the rubbing surfaces have an adequate lubricative film. During assembly, oil or grease (whichever is more suitable) should be applied to any rubbing surface which has lost its lubricative film. Old grease and dirty oil should be cleaned off. Deteriorated grease has lost its lubricative quality and may contain abrasive foreign particles.

Don't use just any oil or grease. Some oils and greases in particular should be used only in certain applications and may be harmful if used in an application for which they are not intended. This manual makes reference to molybdenum disulfide grease (MoS_2) in the assembly of certain engine and chassis parts. Always check manufacturer recommendations before using such special lubricants.

(17) Electrical Wires

All the electrical wires are either single-color or two-color and, with only a few exceptions, must be connected to wires of the same color. On any of the two-color wires there is a greater amount of one color and a lesser amount of a second color, so a two-color wire is identified by first the primary color and then the secondary color. For example, a yellow wire with thin red stripes is referred to as a "yellow/red" wire; it would be a "red/yellow" wire if the colors were reversed to make red the main color.

Wire (cross-section)	Name of Wire Color	Picture in Wiring Diagram
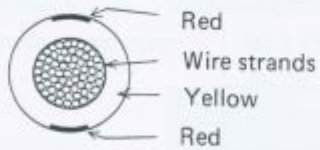	Yellow/red	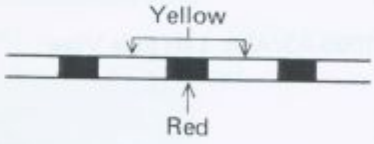

(18) Replacement Parts

When there is a replacement instruction, replace these parts with new ones every time they are removed. These replacement parts will be damaged or lose their original function once removed.

(19) Inspection

When parts have been disassembled, visually inspect these parts for the following conditions or other damage. If there is any doubt as to the condition of them, replace them with new ones.

Abrasion	Crack	Hardening	Warp
Bent	Dent	Scratch	Wear
Color change	Deterioration	Seizure	

(20) Service Data

Numbers of service data in this text have following meanings:

"Standards": Show dimensions or performances which brand-new parts or systems have.

"Service limits": Indicate the usable limits. If the measurement shows excessive wear or deteriorated performance, replace the damaged parts.

Model Identification

ZG1000-A1 Left Side View:

ZG1000-A2 Left Side View:

ZG1000-A3/A3A Left Side View:

General Specifications

Items	ZG1000-A1/A2/A3/A3A
Dimensions:	
Overall length	2,290 mm
Overall width	[ZG1000-A1] 760 mm, Ⓐ Ⓒ (SA) Ⓤ 930 mm
	[ZG1000-A2/A3/A3A] 930 mm, (Fi)(N) 760 mm
Overall height	1,415 mm
Wheelbase	1,555 mm
Road clearance	140 mm
Seat height	815 mm
Dry weight	[ZG1000-A1] 258 kg, Ⓐ Ⓒ (SA) Ⓤ 265 kg, (Cal) 265.5 kg
	[ZG1000-A2/A3/A3A] 265 kg, (Fi)(N) 258 kg, (Cal) 265.5 kg
Curb weight: Front	142 kg
Rear	[ZG1000-A1] 152 kg, ⒶⒸ(SA)Ⓤ 160 kg, (Cal) 160.5 kg
	[ZG1000-A2/A3/A3A] 160 kg, (Cal) 160.5 kg
Fuel tank capacity	28.5 L
Performance:	
Climbing ability	30°
Braking distance	12.5 m from 50 km/h
Minimum turning raius	3.3 m
Engine:	
Type	4-stroke, DOHC, 4-cylinder
Cooling system	Liquid-cooled
Bore and stroke	74.0 x 58.0 mm
Displacement	997 mL
Compression ratio	10.2
Maximum horsepower	80.9 kW (110 PS) @9,500 r/min (rpm),
	Ⓕ 75.1 kW (102 PS) @9,000 r/min (rpm)(UTAC's Norms),
	Ⓐ 78.0 kW (106 PS) @8,500 r/min (rpm),
	(Swi) 52.2 kW (71 PS) @6,000 r/min (rpm),
	(Swe) Ⓦ 73.6 kW (100 PS) @8,500 r/min (rpm)(DIN)
Maximum torque	98.0 N-m (10.0 kg-m, 72.3 ft-lb) @6,500 r/min (rpm),
	Ⓕ —, Ⓐ 94.1 N-m (9.6 kg-m, 69.4 ft-lb) @6,500 r/min (rpm),
	(Swi) 85.3 N-m (8.7 kg-m, 62.9 ft-lb) @5,500 r/min (rpm),
	(Swe) Ⓦ 90.2 N-m (9.2 kg-m, 66.5 ft-lb) @6,500 r/min (rpm)(DIN)
Carburetion system	Carburetors, Keihin CVK32 x 4
Starting system	Electric starter
Ignition system	Battery and coil (transistorized)
Timing advance	Electrically advanced

Items			ZG1000-A1/A2/A3/A3A
Ignition timing			From 10° BTDC @1,000 r/min (rpm) to 35° BTDC @3,500 r/min (rpm), (Ca) From 10° BTDC @1,200 r/min (rpm) to 35° BTDC @3,500 r/min (rpm), [ZG1000-A3 (Swi)] From 10° BTDC @1,200 r/min (rpm) to 35° BTDC @3,500 r/min (rpm)
Spark plug			NGK DR8ES or ND X27ESR-U, (Ca) (U) NGK D8EA or ND X24ES-U, (A) (I) (SA) NGK D9EA or ND X27ES-U, (C) NGK DR8ES-L or ND X24ESR-U
Cylinder numbering method			Left to right, 1-2-3-4
Firing order			1-2-4-3
Valve timing:	Inlet	Open	37.5° BTDC
		Close	57.5° ABDC
		Duration	275°
	Exhaust	Open	57.5° BBDC
		Close	37.5° ATDC
		Duration	275°
Lubrication system			Forced lubrication (wet sump with cooler)
Engine oil:	Grade		SE or SF class
	Viscosity		SAE 10W40, 10W50, 20W40, or 20W50
	Capacity		3.7 L
Drive Train:			
Primary reduction system:			
	Type		Gear
	Reduction ratio		1.732 (97/56)
Clutch type			Wet multi disc
Transmission:	Type		6-speed, constant mesh, return shift
	Gear ratios:	1st	3.071 (43/14)
		2nd	2.055 (37/18)
		3rd	1.590 (35/22)
		4th	1.333 (32/24)
		5th	1.153 (30/26)
		6th	0.965 (28/29)
Final drive system:	Type		Shaft drive
	Reduction ratio		2.708 (16/21 x 32/9)
	Overall drive ratio		4.530 @ Top gear
Final gear case oil:	Type		API GL-5 Hypoid gear oil SAE90 (above 5°C) SAE80 (below 5°C)
	Capacity		220 mL

Items		ZG1000-A1/A2/A3/A3A
Frame:		
Type		Tubular, diamond
Caster (rake angle)		28.5°
Trail		123 mm
Front tire:	Type	Tubeless
	Size	110/80 VR 18 or 110/80 V18
Rear tire:	Type	Tubeless
	Size	150/80 VR 16 or 150/80 VB 16
Front suspension:	Type	Telescopic fork (pneumatic)
	Wheel travel	140 mm
Rear suspension:	Type	Swing arm (uni-trak)
	Wheel travel	140 mm
Brake type:	Front	Dual disc
	Rear	Single disc
Electrical Equipment:		
Battery		12 V 18 Ah
Headlight:	Type	Semi-sealed beam
	Bulb	12 V 60/55 W
Tail/brake light		12 V 5/21 W x 2, Ⓒ ⓢⓐ Ⓤ 12 V 8/27 W x 2
Alternator:	Type	Three-phase AC
	Rated output	28.6 A @6,000 r/min (rpm), 14 V
Voltage regulator:	Type	Short-circuit

Specifications subject to change without notice, and may not apply to every country.

Ⓐ : Australian Model
Ⓒ : Canadian Model
Ⓒal : California Model
Ⓕ : French Model
Ⓕi : Finnish Model
Ⓘ : Italian Model
Ⓝ : Norwegian Model
ⓢⓐ : South African Model
Ⓢwe : Swedish Model
Ⓢwi : Swiss Model
Ⓤ : US Model
Ⓦ : West German Model

Periodic Maintenance Chart

The scheduled maintenance must be done in accordance with this chart to keep the motorcycle in good running condition. **The initial maintenance is vitally important and must not be neglected.**

OPERATION \ FREQUENCY	Every (Whichever comes first)	† ODOMETER READING 800 km	5,000 km	10,000 km	15,000 km	20,000 km	25,000 km	30,000 km	See Page
Spark plug -- clean			●	●	●	●	●	●	15-23
Spark plug -- check *			●	●	●	●	●	●	15-23
Valve clearance -- check *		●		●		●		●	4-19
Air suction valve (Swi, US) -- check *			●	●	●	●	●	●	4-7
Air cleaner element -- clean		●		●				●	2-13
Air cleaner element -- replace	5 cleanings					●			2-14
Throttle grip play -- check *		●		●		●		●	2-5
Idle speed -- check *		●	●	●	●	●	●	●	2-7
Engine vacuum synchronization -- check *		●	●	●	●	●	●	●	2-7
Fuel system -- check *				●		●		●	2-9
Evaporative emission control system (Cal) -- check *		●	●	●	●	●	●	●	2-16
Engine oil -- change	year	●		●		●		●	6-6
Oil filter -- replace		●		●		●		●	6-6
Radiator hoses, connections -- check *	year	●		●		●		●	3-10
Coolant -- change	2 years							●	3-4
Final gear case oil level -- check *				●		●		●	10-5
Final gear case oil -- change		●						●	10-5
Propeller shaft joint-- lubricate				●				●	10-14
Fuel hose -- replace	4 years								
Clutch fluid level -- check *	month	●	●	●	●	●	●	●	5-5
Clutch fluid -- change	2 years					●			5-5
Clutch hose and pipe -- replace	4 years								5-7
Clutch master cylinder cup and dust seal -- replace	2 years								5-7
Clutch slave cylinder piston seal -- replace	2 years								5-8
Brake lining or pad wear -- check *			●	●	●	●	●	●	11-7
Brake fluid level -- check *	month	●	●	●	●	●	●	●	11-11
Brake fluid -- change	2 years					●			11-12
Brake hose -- replace	4 years								11-14
Brake master cylinder cup and dust seal -- replace	2 years								11-8
Caliper piston seal and dust seal -- replace	2 years								11-6
Brake light switch -- check *		●	●	●	●	●	●	●	15-35
Steering -- check *		●	●	●	●	●	●	●	13-4
Steering stem bearing -- lubricate	2 years					●			13-6
Front fork oil -- change								●	12-5
Tire wear -- check *			●	●	●	●	●	●	9-10
Swing arm pivot, uni-trak linkage -- lubricate				●		●		●	12-9
Battery electrolyte level -- check *	month	●	●	●	●	●	●	●	15-9
General lubrication -- perform			●	●	●	●	●	●	16-8
Nut, bolt, and fastener tightness -- check *		●		●		●		●	1-9
Coolant filter -- lean	year								2-13

†: For higher odometer readings, repeat at the frequency interval established here.
*: Replace, add, adjust, clean, or torque if necessary.

(Cal) : California Model
(US) : U.S.A. Model
(Swi) : Switzerland —ZG1000-A3— Model

Torque and Locking Agent

The following tables list the tightening torque for the major fasteners requiring use of a non-permanent locking agent or liquid gasket.

Letters used in the "Remarks" column mean:
L : Apply a non-permanent locking agent to the threads.
LG: Apply liquid gasket to the threads.
SS : Apply silicone sealant to the threads.
O : Apply an oil to the threads and seated surface.
S : Tighten the fasteners following the specified sequence.
St : Stake the fasteners to prevent loosening.

Fastener	Torque			Remarks
	N-m	kg-m	ft-lb	
Cooling System:				
Fan Switch	27	2.8	20	
Water Temperature Sensor	7.8	0.80	69 in-lb	SS
Bleeder Bolt	7.8	0.80	69 in-lb	
Drain Plugs	7.8	0.80	69 in-lb	
Engine Top End:				
Cylinder Head Cover Bolts	9.8	1.0	87 in-lb	
Upper Chain Guide Mounting Bolts	9.8	1.0	87 in-lb	
Rear Chain Guide Mounting Bolt	20	2.0	14.5	L
Chain Tensioner Mounting Bolts	9.8	1.0	87 in-lb	
Camshaft Sprocket Bolts	15	1.5	11.0	L
Valve Clearance Adjusting Screw Locknuts	25	2.5	18.0	
Rocker Shaft (Small	9.8	1.0	87 in-lb	
Main Oil Pipe Banjo Bolts	25	2.5	18.0	
Head Oil Pipe Bolts	9.8	1.0	87 in-lb	
Camshaft Cap Bolts	12	1.2	104 in-lb	S
Cylinder Head Bolts (10 mm Dia.)	39	4.0	29	S
When reusing any one of the following parts:				
Bolt	36	3.7	27	S
Washer				
Cylinder Head				
Cylinder Head Bolts (11 mm Dia.)	51	5.2	38	S
When reusing any one of the following parts:				
Bolt	48	4.9	35	S
Washer				
Cylinder Head				
Cylinder Head Bolt (6 mm Dia.)	9.8	1.0	87 in-lb	
Cylinder Bolts	15	1.5	11.0	
Drain Plugs	7.8	0.80	69 in-lb	
Cylinder Head Mounting Bolts (10 mm Dia.)	54	5.5	40	
Exhaust Pipe Mounting Bolts				L

Fastener	Torque			Remarks
	N-m	kg-m	ft-lb	
Clutch:				
Clutch Hose Banjo Bolts	29	3.0	22	
Clutch Lever Pivot Nut	5.9	0.60	52 in-lb	
Clutch Master Cylinder Clamp Bolts	8.8	0.90	78 in-lb	
Clutch Hose Joint	18	1.8	13.0	
Clutch Slave Cylinder Bleeder Bolt	7.8	0.80	69 in-lb	
Clutch Spring Retainer Bolt	11	1.1	95 in-lb	
Clutch Hub Nut	130	13.5	98	
Right Cover Bolts				L*1
Right Cover Damper Bolts				L
Engine Lubrication System:				
Oil Passage Plug	18	1.8	13.0	
Lower Crankcase Plug (25 mm Dia.)	18	1.8	13.0	
Crankcase Outside Oil Pipe Banjo Bolts	25	2.5	18.0	
Oil Pump Gear Holder Screws				L
Oil Pump Mounting Bolts	12	1.2	104 in-lb	L
Oil Pump Relief Valve				L
Main Oil Pipe Banjo Bolt	25	2.5	18.0	
Oil Pressure Switch	15	1.5	11.0	L
Oil Cooler Banjo Bolts (Oil Cooler Side)	25	2.5	18.0	
Oil Cooler Banjo Bolts (Oil Pan Side)	34	3.5	25	
Oil Pan Bolts				L*2
Oil Filter Bolt	20	2.0	14.5	
Engine Removal/Installation:				
Engine Mounting Nuts	54	5.5	40	
Crankshaft/Transmission:				
Connecting Rod Big End Cap Nuts	—	—	—	See p. 8-10.
Timing Rotor Bolt	25	2.5	18.0	
Alternator Shaft Left End Bolt	25	2.5	18.0	
Alternator Coupling Brades Bolt	9.8	1.0	87 in-lb	
Alternator Shaft Right End Nut	59	6.0	43	
Alternator Shaft Chain Tensioner Mounting Bolts				L
Alternator Shaft Chain Guide Bolts				L
One-way Clutch Bolts	12	1.2	104	L
Balancer Shaft Guide Pin Plate Bolt				L
Balancer Shaft Clamp Lever Mounting Bolt				L
Crankshaft Main Bearing Cap Bolts	34	3.5	25	
Crankshaft Bolts (8 mm Dia.)	27	2.8	20	
Crankshaft Bolts (6 mm Dia.)	15	1.5	11.0	
Shift Drum Ball Bearing Holder Allen Bolts				L
Shift Drum Pin Plate Screw				L
External Shift Mechanism Return Spring Pin				L
Shift Pedal Pivot Bolt	25	2.5	18.0	L
Shift Pedal Bracket Bolt (14 mm Dia.)	78	8.0	58	
Drive Shaft Left Side Damper Cam Nut	225	23.0	166	

Fastener	Torque			Remarks
	N-m	kg-m	ft-lb	
Wheels/Tires:				
Front Axle Nut	88	9.0	65	
Tire Air Valve Nuts	1.5	0.15	13 in-lb	
Rear Axle Nut	110	11.0	80	
Final Drive:				
Front Drive Gear Nut	195	20.0	145	St
Front Driven Gear Bolt	120	12.0	87	St
Front Driven Gear Bearing Housing Bolts	9.8	1.0	87	
Front Drive Gear Cap Bolts	9.8	1.0	87	
Ring Gear Mounting Bolts (8 mm Dia.)	24	2.4	17.5	
Ring Gear Mounting Bolt (10 mm Dia.)	34	3.5	25	
Fianl Gear Case Mounting Studs				L
Final Gear Case Oil Pipe Banjo Bolts	12	1.2	104 in-lb	
Final Gear Case Mounting Nuts	29	3.0	22	
Pinion Gear Nut	120	12.0	87	St
Drive Shaft Left Side Damper Cam Nut	225	23.0	166	
Final Gear Case Oil Drain Bolt	17	1.7	12.0	
Brakes:				
Brake Lever Pivot Nut	5.9	0.60	52 in-lb	
Front Master Cylinder Clamp Bolts	8.8	0.90	78 in-lb	
Brake Hose Banjo Bolts	25	2.5	18.0	
Bleed Valves	7.8	0.80	69 in-lb	
Front Brake Caliper Mounting Bolts	32	3.3	24	
Disc Mounting Bolts	23	2.3	16.5	
Torque Link Nuts	29	3.0	22	
Rear Master Cylinder Mounting Bolts	23	2.3	16.5	
Rear Brake Caliper Mounting Bolts	34	3.5	25	
Suspension:				
Front Fork:				
Top Plugs	23	2.3	16.5	
Upper Fork Clamp Bolts	16	1.6	11.5	
Lower Fork Clamp Bolts	21	2.1	15.0	
Drain Screws	1.5	0.15	13 in-lb	LG
Bottom Allen Bolts: A1 ~ A8	2.0	14.5		
Axle Clamp Bolts: On and after A9	35	3.6	26	
Rear Shock Absorber:				
Upper Shock Absorber Bolt	39	4.0	29	
Lower Shock Absorber Bolt	59	6.0	43	
Rocker Arm Bolt/Tie-rod Bolts	59	6.0	43	
Air Valve Hose End	12	1.2	104	
Damper Adjusting Rod				L
Swing Arm Pivot Bolt Mounting Bolts	23	2.3	16.5	
Swing Arm Pivot Bolt Locknut	52	5.3	38	
Swing Arm Pivot Bolt	27	2.8	20	
Steering:				
Steering Stem Head Nut	39	4.0	29	
Handlebar Holder Mounting Bolts	19	1.9	13.5	
Handlebar Clamp Bolts	19	1.9	13.5	

Fastener	Torque			Remarks
	N-m	kg-m	ft-lb	
Electrical System:				
Alternator Mounting Bolts	25	2.5	18.0	L
Alternator Coupling Brades Bolt	9.8	1.0	87 in-lb	
Starter Motor Lead Terminal	4.9	0.50	43 in-lb	
Pickup Coil Cover Bolts				L*3
Spark Plugs	14	1.4	10.0	
Timing Rotor Bolt	25	2.5	18.0	
Alternator Cover Cap Nut	4.9	0.50	43	
Fan Switch	27	2.8	20	
Water Temperature Sensor	7.8	0.80	69 in-lb	SS
Neutral Switch	15	1.5	11.0	
Oil Pressure Switch	15	1.5	11.0	L
Side Stand Switch Mounting Bolts				L

*1 : Four of them require non-permanent locking agent (see Right Cover Installation Note).
*2 : Three of them require non-permanent locking agent (see Oil Pan Installation Notes).
*3 : Two of them require non-permanet locking agent (see Pickup Coil Removal/Installation Notes).

This table relating tightening torque to thread diameter, lists the basic torque for bolts and nuts. Use this table for only the bolts and nuts which do not require a specific torque value.

General Fasteners

Threads dia. (mm)	Torque		
	N-m	kg-m	ft-lb
5	3.4 – 4.9	0.35 – 0.50	30 – 43 in-lb
6	5.9 – 7.8	0.60 – 0.80	52 – 69 in-lb
8	14 – 19	1.4 – 1.9	10.0 – 13.5
10	25 – 34	2.6 – 3.5	19.0 – 25
12	44 – 61	4.5 – 6.2	33 – 45
14	73 – 98	7.4 – 10.0	54 – 72
16	115 – 155	11.5 – 16.0	83 – 115
18	165 – 225	17.0 – 23	125 – 165
20	225 – 325	23 – 33	165 – 240

Hose Routing

Radiator Water Hose Routing

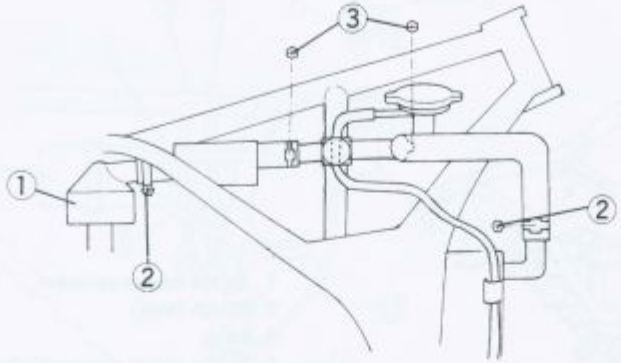

1. Thermostat Housing
2. The bolt head faces outward.
3. The bolt head faces upward.

Coolant Reservoir Tank Hose Routing

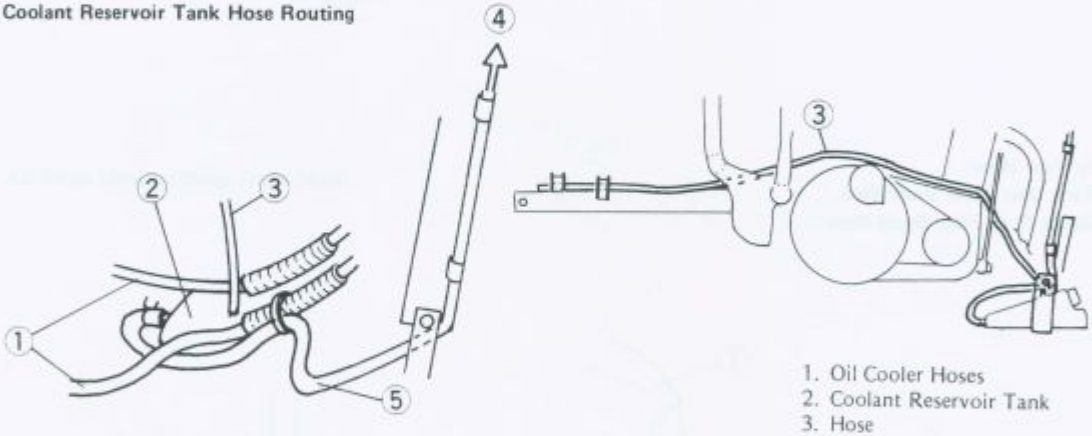

1. Oil Cooler Hoses
2. Coolant Reservoir Tank
3. Hose
4. To the radiator cap.
5. Hose

Carburetor Air Breather Hose Routing

Other than Californian Model

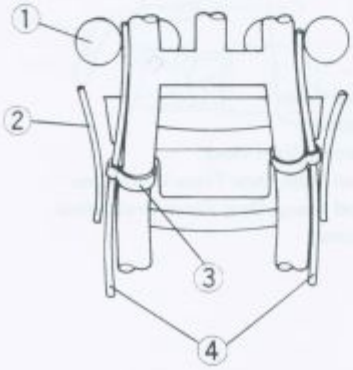

Californian Model

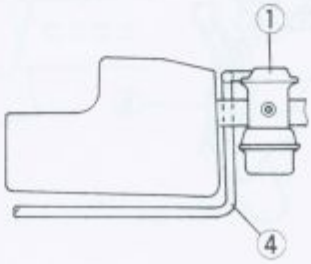

1. Carburetor
2. Side Cover
3. Clamp
4. Air Breather Hose

*: Route the hoses between #2 and #3 carburetors.

Clutch Hose

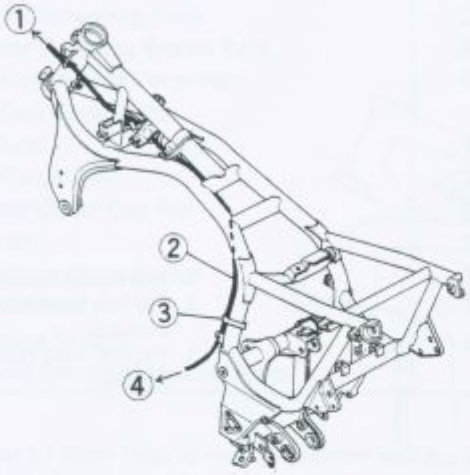

1. To the master cylinder.
2. Clutch Hose
3. Strap
4. To the clutch slave cylinder.

Battery Vent Hose
Fuel Tank Over Flow Vent Hose
Fuel Gauge Over Flow Drain Hose

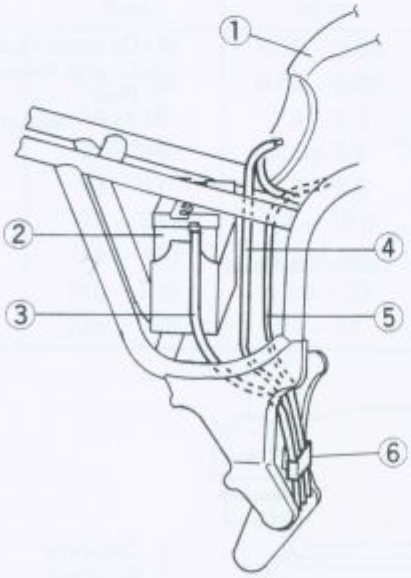

1. Fuel Tank
2. Battery
3. Battery Vent Hose
4. Fuel Tank Over Flow Vent Hose
5. Fuel Gauge Over Flow Drain Hose
6. Clamp

Evaporative Emission Control System Hose

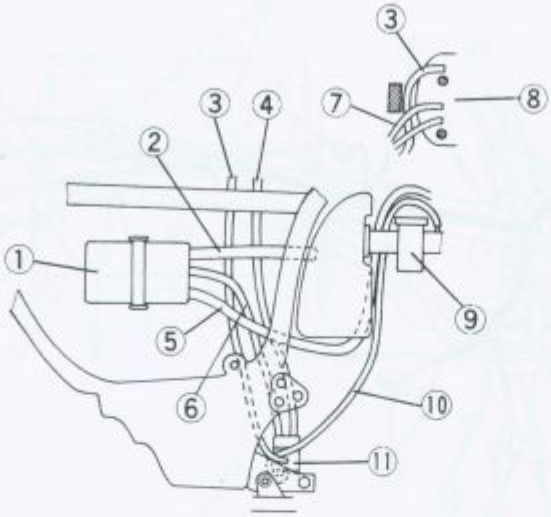

1. Canister
2. Purge Hose (Green)
3. Fuel Return Hose (Red)
4. Breather Hose (Blue)
5. Breather Hose (Yellow)
6. Breather Hose (Blue)
7. Water Drain Hose
8. Fuel Tank
9. Carburetor
10. Vacuum Hose (White)
11. Liquid/Vapor Separator

Air Filter Housing Water Drain Hose

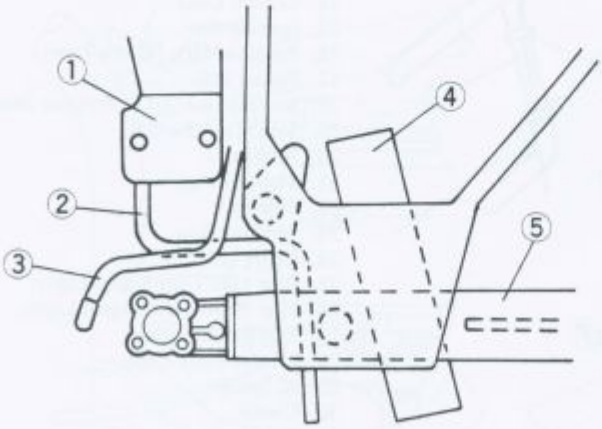

1. Air Filter Housing
2. Water Drain Hose
3. Clutch Oil Pipe
4. Rear Shock Absorber
5. Swing Arm

Wire Routing

Electrical Wiring

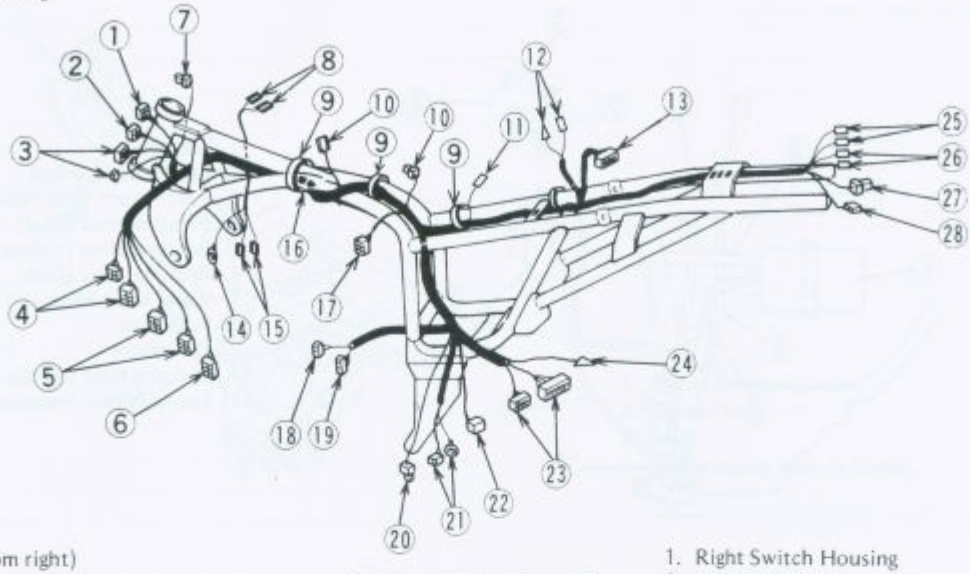

(viewed from right)

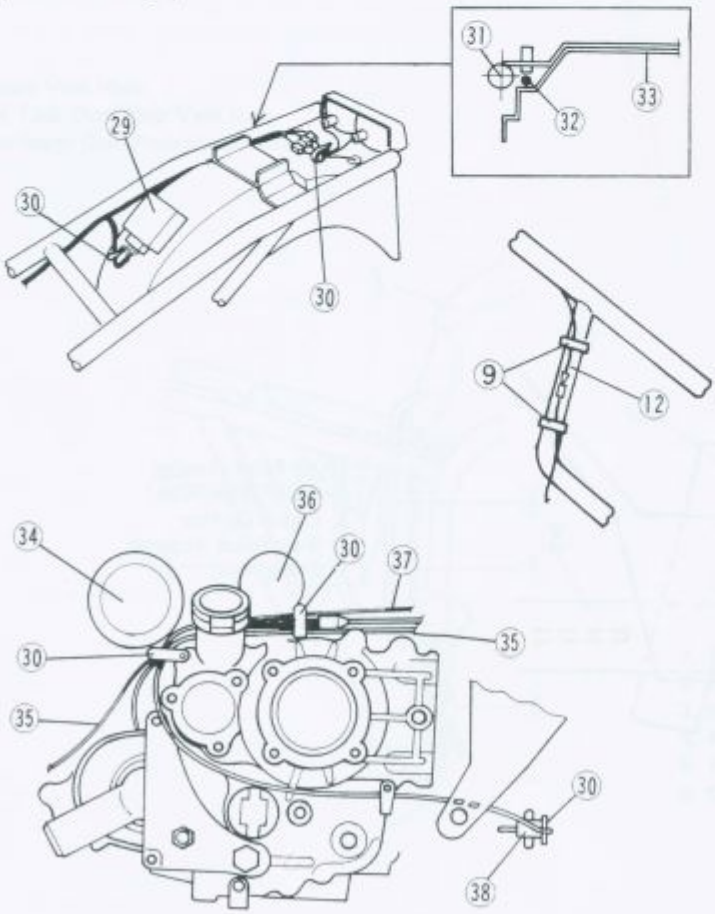

1. Right Switch Housing
2. Ignition Switch
3. Left Switch Housing
4. Meter Assembly
5. Front Harness
6. Reserve Lighting Device
7. Cooling Fan
8. Ignition Coil
9. Strap
10. Coolant Temperature Sensor
11. Battery (–)
12. Rear Brake Light Switch
13. IC Igniter
14. Ground Lead
15. Ignition Coil
16. Position Mark (White Tape)
17. Pickup Coil
18. Neutral Switch/Oil Pressure Switch
19. Side Stand Switch
20. Alternator
21. Starter Relay
22. Fuse Box
23. Junction Box
24. Batter (+)
25. Rear Left Turn Signal Lights
26. Rear Right Turn Signal Lights
27. Tail/Brake Lights
28. License Plate Light
29. IC Igniter
30. Clamp
31. Frame
32. Harness
33. Rear Fender
34. Alternator
35. Pickup Coil Lead
36. Starter Motor
37. Alternator Lead
38. Side Stand Switch

(viewed from front)

ZG1000-A1 ~ ZG1000-A8

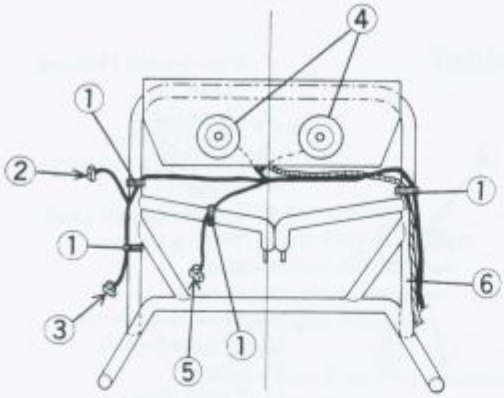

(viewed from left)

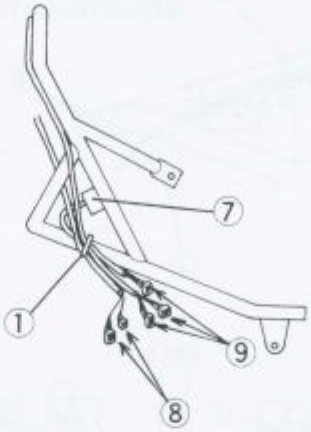

1. Strap
2. Front Right Turn Signal Light
3. Turn Signal Relay
4. Horns
5. Headlight
6. Meter Lead
7. Reserve Lighting Device
8. Meter
9. Front Harness
10. City Light Lead (Other than US and Canadian Model)
11. Clamp
12. Right Switch Housing Lead
13. Left Switch Housing Lead
14. Ignition Switch Lead
15. Ground Lead
16. Ignition Coil

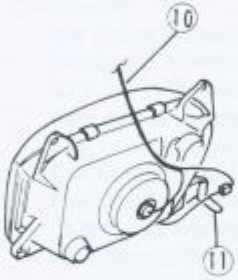

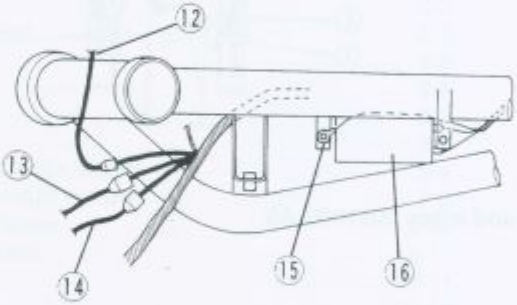

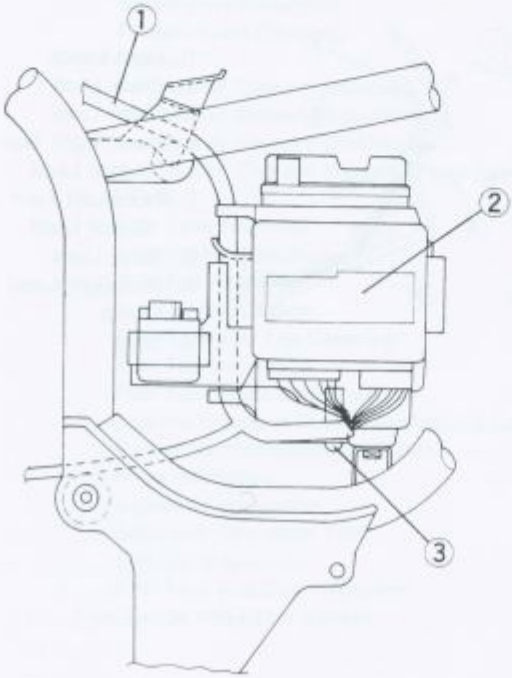

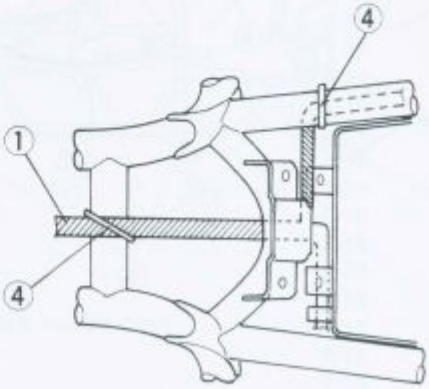

1. Harness
2. Junction Box
3. Clamp
4. Strap

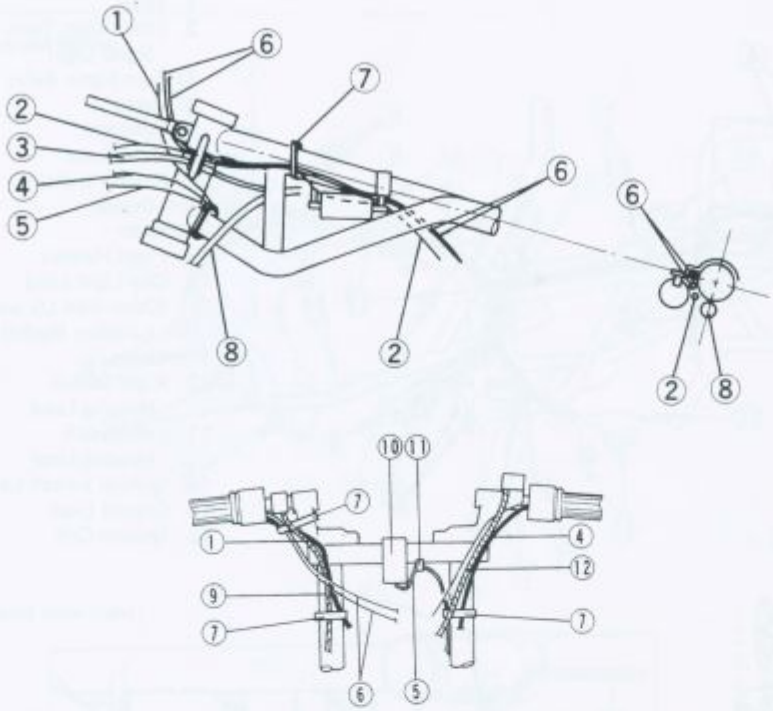

1. Right Switch Housing Lead
2. Choke Cable
3. Cltuch Oil Pipe
4. Left Switch Housing Lead
5. Ignition Switch Lead
6. Throttle Cables
7. Strap
8. Harness
9. Front Brake Hose
10. Ignition Switch
11. Clamp
12. Clutch Hose

On and after 'ZG1000-A9

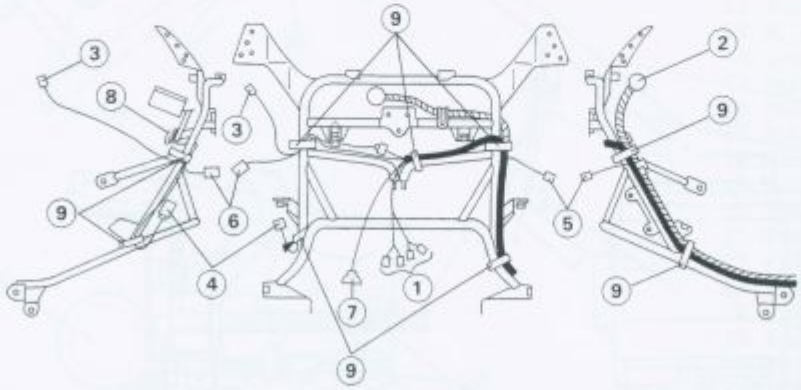

1. Horn Leads
2. Clock Lead
3. Meter Lead
4. Front Right Turn Signal Lead
5. Front Left Turn Signal Lead
6. Relay Lead
7. Headlight Lead
8. Clamp
9. Strap

Fuel System

Table of Contents

Exploded View

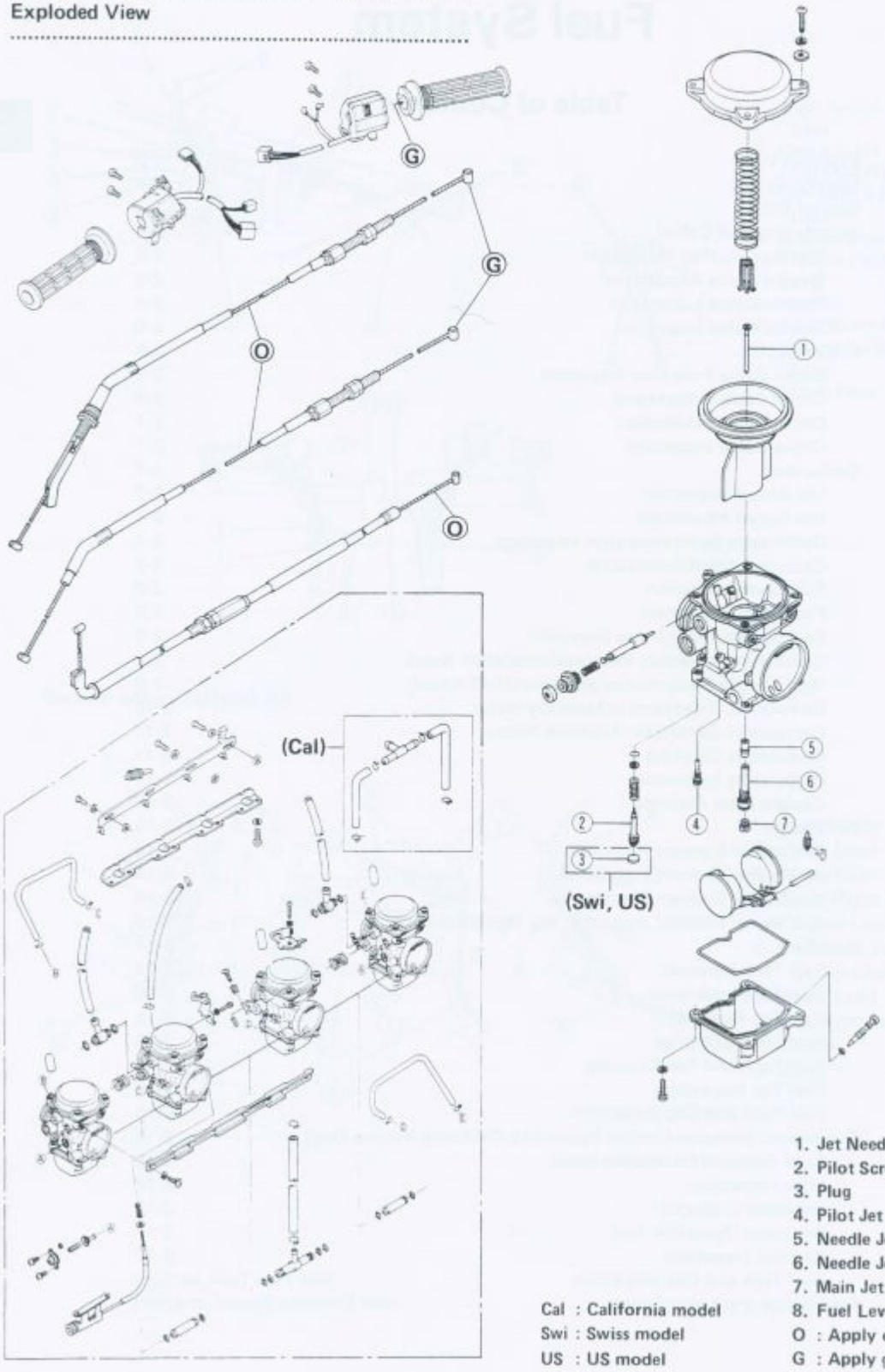

1. Jet Needle
2. Pilot Screw
3. Plug
4. Pilot Jet
5. Needle Jet
6. Needle Jet Holder
7. Main Jet
8. Fuel Level Sensor

Cal : California model
Swi : Swiss model
US : US model

O : Apply oil.
G : Apply grease.

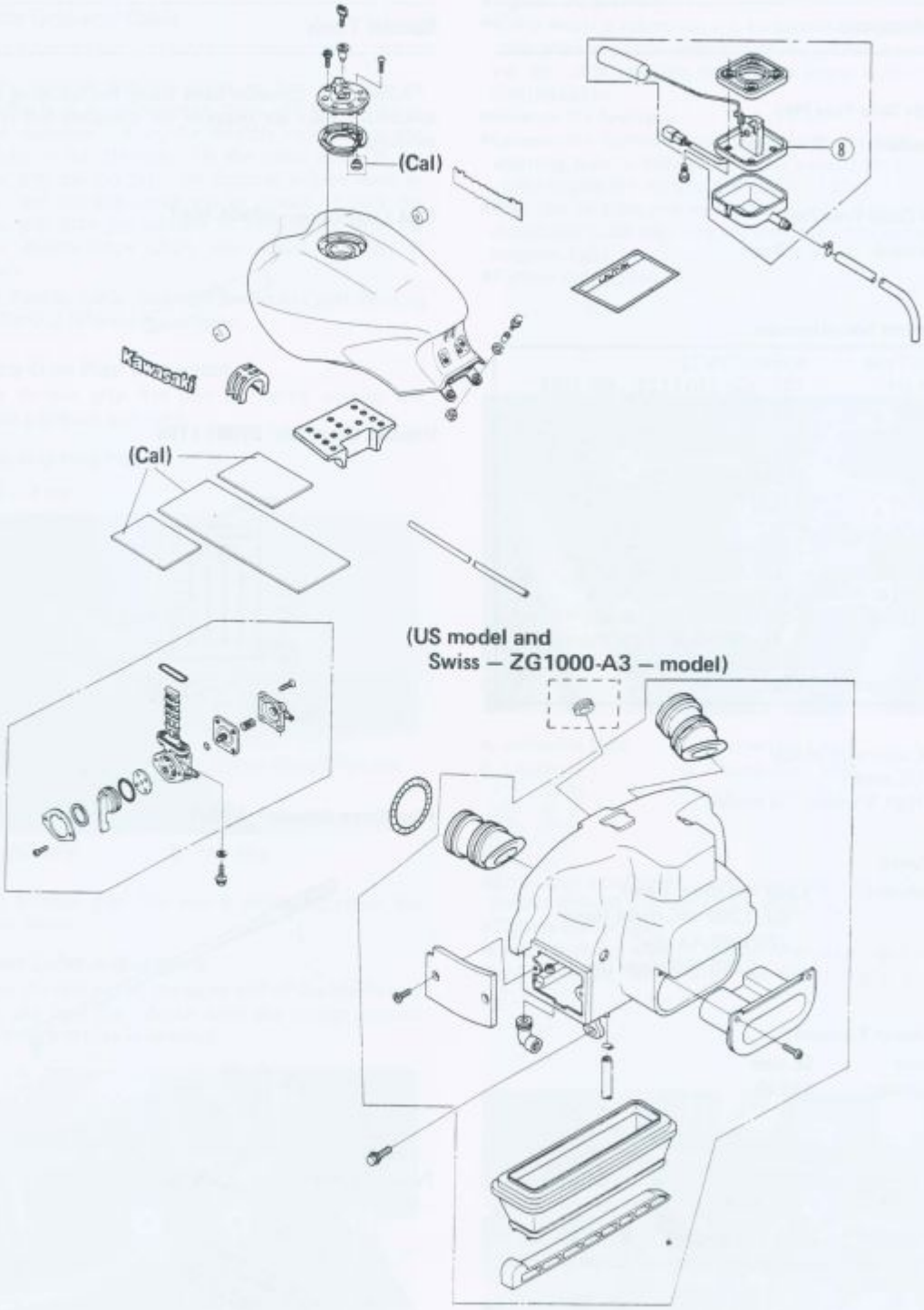
(Cal)
8
Kawasaki
(Cal)
(US model and
Swiss – ZG1000-A3 – model)

Specifications

Throttle Grip Free Play

Standard: 2 – 3 mm

Choke Cable Free Play

Standard: 2 – 3 mm

Carburetor Specifications

Make/Type	Keihin/CVK32
Main Jet	125, (Cal) 130 [122, (Cal) 128]
Main Air Jet	130
Air Cut Valve Air Jet	#85
Jet Needle	N52M
Pilot Jet	35 [32]
Pilot Air Jet	85
Pilot Screw	2 turns out, (U) –, (Swi) 1¾, [ZG1000-A3 (Swi)] 1¼
Starter Jet	55, (Cal) 45
Fuel Level	–0.5 mm [1.5 mm (above) ~ 0.5 mm (below) from bottom edge of carburetor body]
Float Height	17 mm

(Cal) : Californian model
(U) : US model
[ ] : High Altitude (US model)

Idle Speed

Standard: 1,000 ±50 r/min (rpm),
(Cal) 1,200 ±50 r/min (rpm)
[ZG1000-A3 (Swi)]
1,200 ±50 r/min (rpm)

Air Cleaner Element

Grade: SE class
Viscosity: SAE30

NOTE

○The vacuum gauge & tachometer (P/N 57001-1291) can be used instead of the vacuum gauge set (P/N 57001-1198).

Special Tools

Along with common hand tools, the following more specialized tools are required for complete fuel system servicing.

Fuel Level Gauge: 57001-1017

Vacuum Gauge Set: 57001-1198

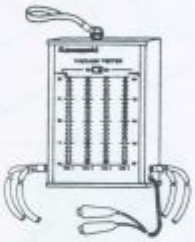

Pilot Screw Adjuster: 57001-1239

Pressure Cable Luber: K56019-021

Throttle Grip and Cable

If the throttle grip has excessive free play due to cable stretch or misadjustment, there will be a delay in throttle response. Also, the throttle valves may not open fully at full throttle. On the other hand, if the throttle grip has no play, the throttle will be hard to control, and the idle speed will be erratic. Check the throttle grip play periodically in accordance with the Periodic Maintenance Chart, and adjust the play if necessary.

The throttle cable routing is shown in Cable Routing in the General Information chapter.

Throttle Grip Play Inspection

- Check throttle grip free play by lightly turning the throttle grip back and forth.

Throttle Grip Free Play

2 – 3 mm

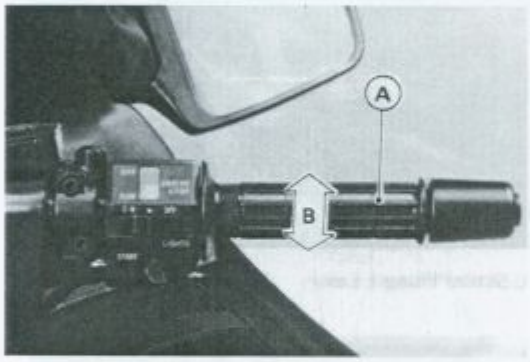

A. Throttle Grip B. Free Play

★If the throttle grip free play is incorrect, adjust the throttle cables.

Throttle Cable Adjustment

- Loosen the locknut at the upper end of the accelerator cable, and turn the adjuster until the porper amount of throttle grip play is obtained.

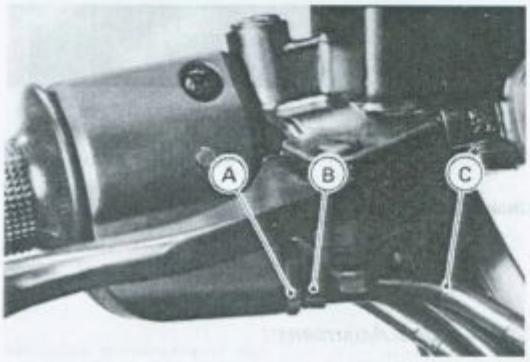

A. Locknut C. Accelerator Cable
B. Adjuster

- Tighten the locknut.

★If the throttle cables can not be adjusted by ussing the cable adjuster at the upper end of the accelerator cable, use the cable adjusting nuts at the lower ends of the throttle cables.

- Remove the fuel tank.
- Loosen the locknuts, and screw both throttle cable adjusting nuts in fully at the lower ends of the throttle cables to give the throttle grip plenty of play.
- With the throttle grip completely closed, turn out the decelerator cable adjusting nut until the inner cable just becomes tight.
- Tighten the locknut.

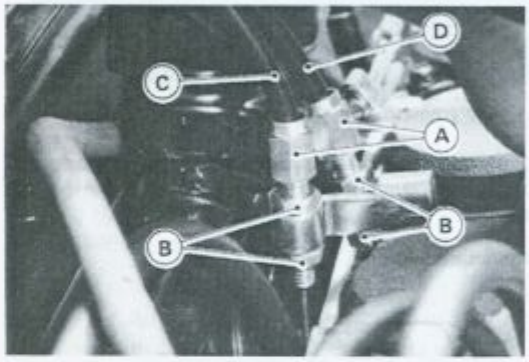

A. Adjusting Nuts C. Decelerator Cable
B. Locknuts D. Accelerator Cable

- Turn the accelerator cable adjusting nut until the correct throttle grip free play is obtained.
- Tighten the locknut.
- Check that the throttle linkage lever stops against the idle adjusting screw with the throttle grip closed.

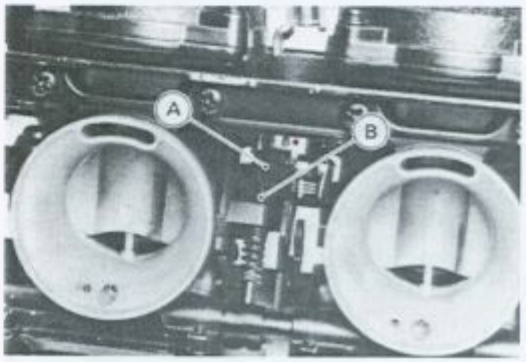

A. Linkage Lever B. Idle Adjusting Screw

Throttle Cable Lubrication

Whenever the throttle cable is removed, and in accordance with the Periodic Maintenance Chart (see General Information chapter), perform the following.

- Apply a thin coating of grease to the throttle cable lower end.

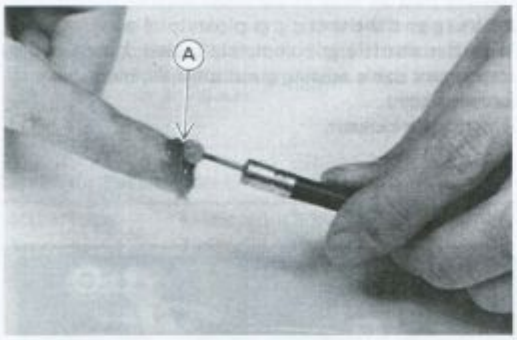

A. Apply grease.

- Lubricate the throttle cable with a penetrating rust inhibiter through the Pressure Cable Luber (special tool).

Cable Lubrication

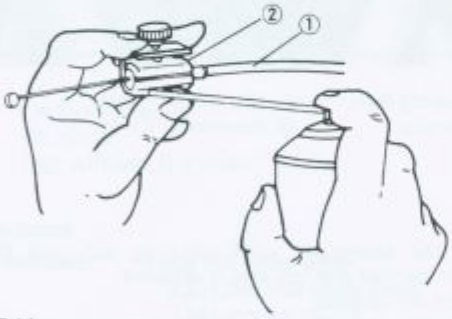

1. Cable
2. Pressure Cable Luber: K56019-021

Throttle Cable Inspection

- With the throttle cable disconnected at both ends, the cable should move freely within the cable housing.

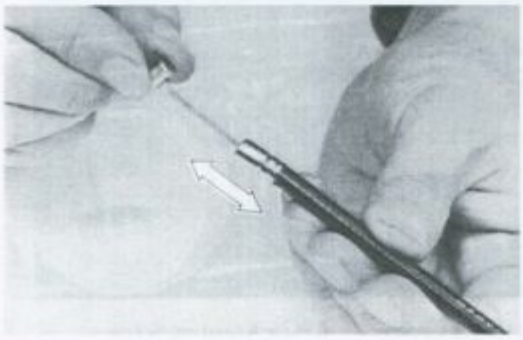

Choke Cable

The choke cable routing is shown in Cable Routing in the General Information chapter.

Choke Cable Free Play Inspection

- Check that the choke lever returns properly and that the inner cable slides smoothly.

★If there is any irregularity, check the choke cable as follows:

- Determine the amount of choke cable play at the choke lever. Pull the choke lever until the starter plunger lever at the carburetor contacts with the starter plunger; the amount of choke lever travel is the amount of choke cable play.

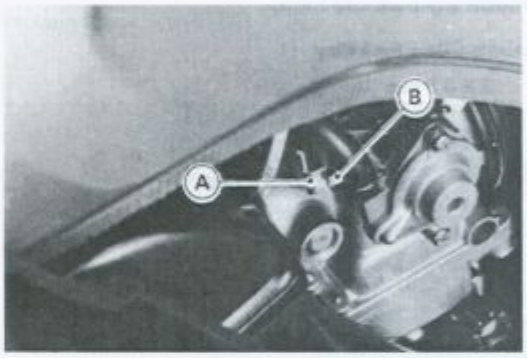

A. Starter Plunger Lever B. Starter Plunger

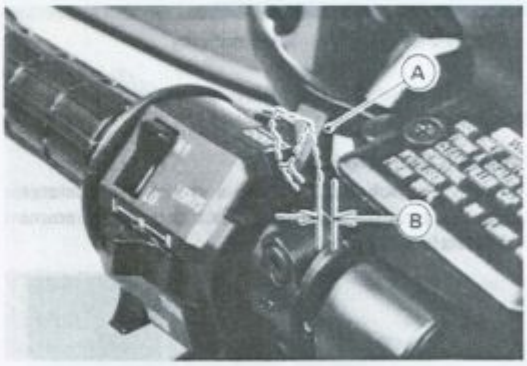

A. Choke Lever B. Play

★If free play is not correct, adjust the choke cable.

Choke Cable Free Play

2 – 3 mm

Choke Cable Adjustment

- Loosen the locknut at the adjusting nut of the choke cable, and turn the adjusting nut until the cable has the proper amount of play.

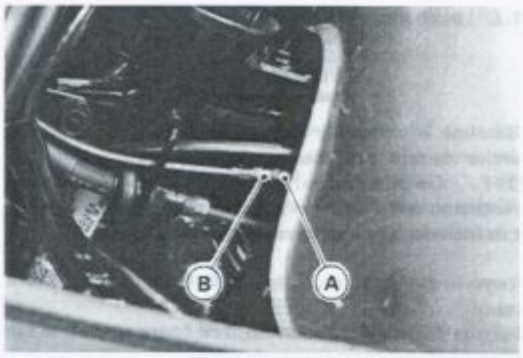

A. Adjusting Nut B. Locknut

•Tighten the locknut after adjustment.

Choke Cable Lubrication

Whenever the choke cable is removed, lubricate the choke cable as follows.

•Lubricate the choke cable with a penetrating rust inhibiter through the Pressure Cable Luber (special tool).

Cable Lubrication

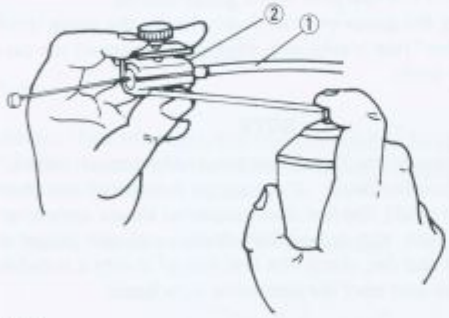

1. Cable
2. Pressure Cable Luber: K56019-021

Choke Cable Inspection

•With the choke cable disconnected at the both ends, the cable should move freely within the cable housing.

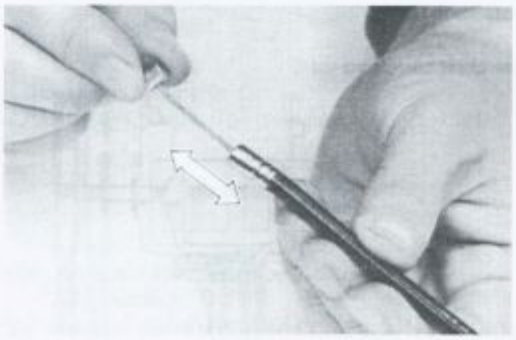

★If cable movement is not free after lubricating (see Choke Cable Lubrication), if the cable is frayed, or if the housing is kinked, replace the cable.

Carburetors

Idle Speed Inspection

•Start the engine and warm it up thoroughly.

•With the engine idling, turn the handlebar to both sides.

★If handlebar movement changes the idle speed; the throttle cable may be improperly adjusted or incorrectly routed, or it may be damaged. Be sure to correct any of these conditions before riding.

WARNING

○**Operation with improperly adjusted, incorrectly routed, or a damaged cable could result in an unsafe riding condition.**

•Check idle speed.

★If the idle speed is out of the specified range, adjust it.

Idle Speed

1,000 ±50 r/min (rpm), (Cal) 1,200 ±50 r/min (rpm)
[ZG1000-A3 (Swi)] 1,200 ±50 r/min (rpm)

Idle Speed Adjustment

•Turn the adjusting screw until idle speed is correct.

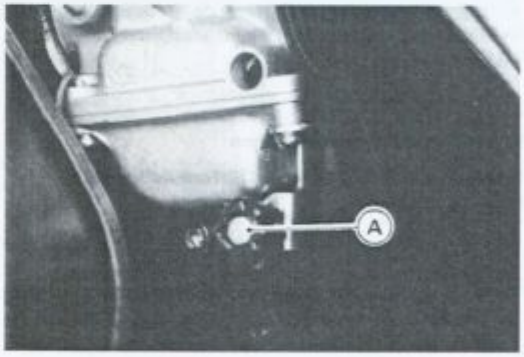

A. Adjusting Screw

•Open and close the throttle a few times to make sure that the idle speed is within the specified range. Readjust if necessary.

Carburetor Synchronization Inspection

•Warm up the engine.

•Check idle speed and adjust if necessary.

•Remove the fuel tank.

•Supply fuel to the carburetors with an auxiliary fuel tank.

WARNING

○**Gasoline is extremely flammable and can be explosive under certain conditions. Turn the ignition switch OFF. Do not smoke. Make sure the area is well ventilated and free from any source of flame or spark; this includes any appliance with a pilot light.**

- Attach vacuum gauge set (special tool: 57001-1198) to the vacuum hose fittings on the carburetors.

Carburetor Synchronization

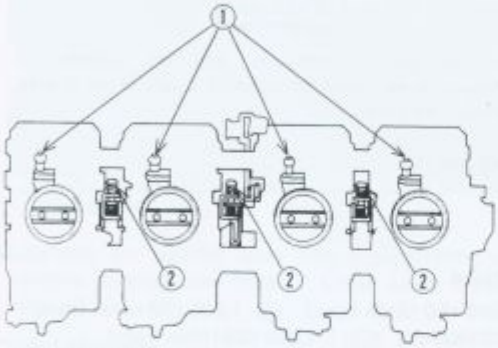

1. Vacuum Hose Fitting
2. Adjusting Screw

- Start the engine and idle to measure the engine intake vacuum.

★If the intake vacuum difference between any two cylinders exceeds the limit, synchronize the carburetor butterfly valves.

Engine Vacuum Synchronization

Less than 2.7 kPa (2 cmHg) difference between any two cylinders

- Remove the vacuum gauge, connect the vacuum hose(s) to the vacuum hose fitting(s), and/or put the cap(s) back on the fitting(s).
- Install the fuel tank.

Carburetor Synchronization

- Turn the adjusting screws to synchronize the butterfly valves.

NOTE

○*With the engine idling, first synchronize the left two or right two cylinders by means of the adjusting screw between No. 1 and No. 2 cylinders, or No. 3 and No. 4 cylinders. Then synchronize the left two cylinders and the right two cylinders using the center adjusting screw.*

- Check idle speed and adjust if necessary.

Fuel Level Inspection

WARNING

○**Gasoline is extremely flammable and can be explosive under certain conditions. Turn the ignition switch OFF. Do not smoke. Make sure the area is well ventilated and free from any source of flame or sparks; this includes any appliance with a pilot light.**

- Remove the carburetors, and hold them in upright on a stand.
- Put the fuel tank on a bench, and connect the fuel tap to the carburetors using a suitable hose.
- Prepare a fuel hose (6 mm in diameter and about 300 mm long).
- Connect fuel level gauge (special tool) to the carburetor float bowl with the fuel hose.
- Hold the gauge vertically against the side of the carburetor body so that the "zero" line is several millimeters higher than the bottom edge of the carburetor body.
- Turn the fuel tap to the PRI position to feed fuel to the carburetor, then turn out the carburetor drain plug a few turns.
- Wait until the fuel level in the gauge settles.
- Keeping the gauge vertical, slowly lower the gauge until the "zero" line is even with the bottom edge of the carburetor body.

NOTE

○*Do not lower the "zero" line below the bottom edge of the carburetor body. If the gauge is lowered and then raised it again, the fuel level measured shows somewhat higher than the actual fuel level. If the gauge is lowered too far, dump the fuel out of it into a suitable container and start the procedure over again.*

- Read the fuel level in the gauge and compare it to the specification. Screw in the carburetor drain plug.
- Turn the fuel tap to the ON position and remove the fuel level gauge.
- Inspect the fuel level in the other carburetors in the same manner.

★If any fuel level is incorrect, adjust it (see Fuel Level Adjustment).

Fuel Level Measurement

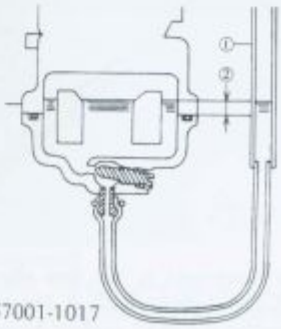

1. Fuel Level Gauge: 57001-1017
2. Fuel Level

Fuel Level

0.5 ±1 mm above the bottom edge of carburetor body

Fuel Level Adjustment

- Read the WARNING in the Fuel Level Inspection.
- Drain the fuel out of the carburetors into a suitable container.
- Remove the float bowl by taking out the screws with lockwashers.
- Slide out the pivot pin and remove the float.
- Bend the tang on the float arm very slightly to change the float height. Increasing the float height lowers the fuel level and decreasing the float height raises the fuel level.

Float Height

17.0 mm

Float Level Adjustment

1. Tang

- Assemble the carburetor, and recheck the fuel level.

★If the fuel level cannot be adjusted by this method, the float or the float valve is damaged.

Float Height Measurement-Keihin Carburetor

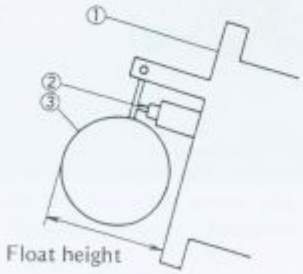

1. Float Bowl Mating Surface
2. Float Valve Needle Rod (contacted but unloaded)
3. Float

High Altitude Performance Adjustment (US model)

○To improve the EMISSION CONTROL PERFORMANCE of vehicles operated above 4,000 feet, Kawasaki recommends the following Environmental Protection Agency (EPA) approved modification.

- Change the main jet and pilot jet for high altitude use.

High Altitude Carburetor Specifications

Main Jet:	**#122, (Cal) 128**
Pilot Jet:	**#32**

Fuel System Cleanliness Inspection

- Read the WARNING in the Fuel Level Inspection.
- Connect a suitable hose to the fitting at the bottom of each carburetor float bowl.
- Run the lower ends of the hoses into a suitable container.
- Turn the fuel tap to the PRI position.
- Turn out each drain plug a few turns and drain the float bowls.

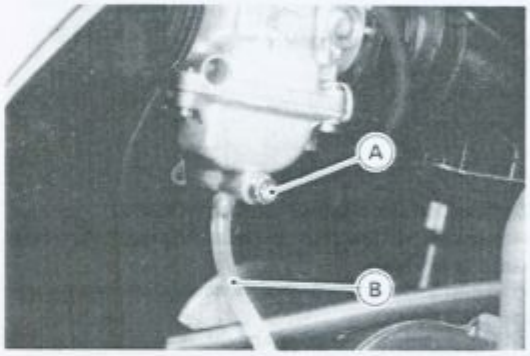

A. Drain Plug B. Suitable Hose

- Check to see if water or dirt comes out.
- Tighten the drain plugs to the specified torque (see Exploded View), and turn the fuel tap to ON position.

★If any water or dirt appeared during the above inspection, clean the fuel system (see Carburetor Cleaning and Fuel Tank and Tap Cleaning).

Carburetor Removal/Installation Notes

WARNING

○**Gasoline is extremely flammable and can be explosive under certain conditions. Turn the ignition switch OFF. Do not smoke. Make sure the area is well ventilated and free from any source of flame or sparks; this includes any appliance with a pilot light.**

- After removing the carburetors, stuff pieces of lint-free, clean cloth into the carburetor holders and the intake ducts to keep dirt out of the engine and air cleaner.

WARNING

○**If dirt or dust is allowed to pass through into the carburetors, the throttle may become stuck, possibly causing an accident.**

CAUTION

○**If dirt gets through into the engine, excessive engine wear and possibly engine damage will occur.**

•After installing the carburetors, perform the following.
○Check fuel leakage from the carburetors.

WARNING

○**Fuel spilled from the carburetors is hazardous.**

○Adjust the following items if necessary.
Idle speed
Vacuum Synchronization
Throttle cable
Choke cable

Carburetor Disassembly/Assembly Notes

•Read the WARNING in the Carburetor Removal/Installation Notes.
•For the Swiss and US models, remove the pilot screw plug as follows:
○Punch a hole in the plug and pry it at with an awl or other suitable tool.
•Turn in the pilot screw and count the number of turns until it seats fully but not tightly, and then remove the screw. This is to set the screw to its original position when assembling.
•After installing the upper chamber cover, check that the vacuum piston slides up and down smoothly without binding in the carburetor bore.

CAUTION

○**During carburetor disassembly, be careful not to damage the diaphragm. Never use a sharp edge to remove the diaphragm.**

•Turn in the pilot screw fully but not tightly, and then back it out the same number of turns counted during disassembly.
•For the Swiss and US models, install the pilot screw plug as follow:
○Install a new plug in the pilot screw hole, and apply a small amount of a bonding agent to the circumference of the plug to fix the plug.

CAUTION

○**Do not apply too much bond on the plug to keep the pilot screw itself from being fixed.**

Plug Installation (Swiss and US models only)

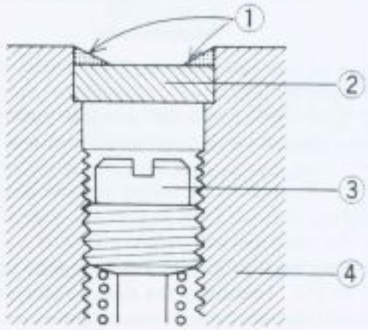

1. Apply a bonding agent.
2. Plug
3. Pilot screw
4. Carburetor body

•Turn the carburetor body upside-down, and drop the needle jet into place so that the smaller diameter end of the jet goes in first.

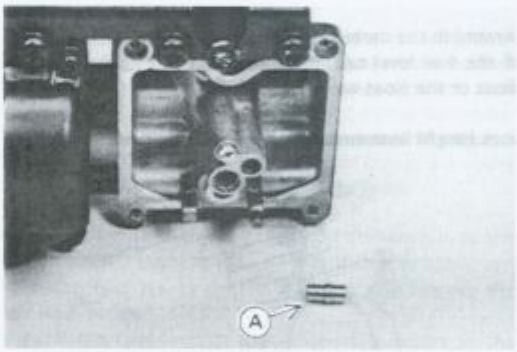

A. Small End

•Carefully screw in the air bleed pipe. It will seat against the needle jet, pushing the end of the jet into the carburetor bore.

CAUTION

○**Do not force the air bleed pipe or overtighten it. The needle jet or the carburetor body could be damaged requiring replacement.**

•Slip the needle through the hole in the center of the vacuum piston, and put the spring seat on the top of the needle. Turn the seat so that it does not block the hole at the bottom of the vacuum piston.

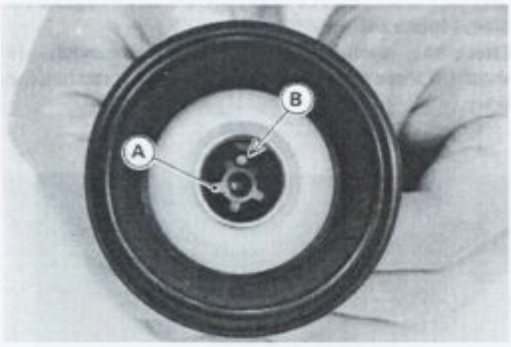

A. Spring Seat B. Hole

Carburetor Separation/Assembly Notes

- Read the WARNINGS in the Carburetor Removal/Installation Notes.
- Assemble the carburetors as shown.

Carburetor Assembly

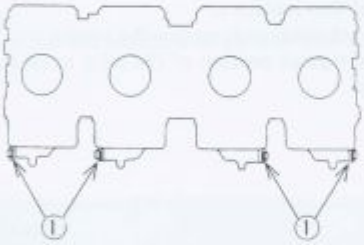

1. Drain plugs must be faced to outside.

- The center lines of the carburetor bores must be parallel both horizontally and vertically. If they are not, loosen the mounting screws and align the carburetors on a flat surface. Retighten the mounting screws.
- After assembling the choke mechanism, check to see that the choke shaft slides right to left smoothly without abnormal friction.

CAUTION

○**Fuel mixture trouble could result if the starter does not seat properly in its rest position after the choke knob it returned.**

- Visually synchronize the throttle (butterfly) valves.

○Check to see that all throttle valves open and close smoothly without binding when turning the pulley.

○Visually check the clearance between the throttle valve and the carburetor bore in each carburetor.

Throttle Valve Synchronization

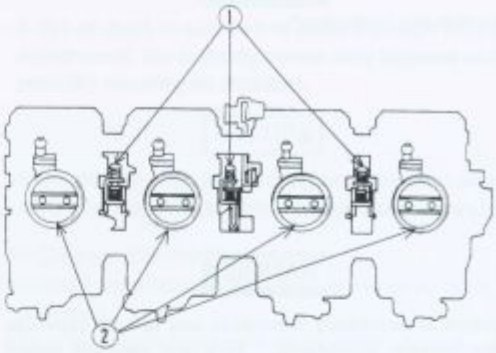

1. Balance Adjusting Screw
2. Clearance

☆If there is a difference between any two carburetors, turn the balance adjusting screw(s) to obtain the same clearance.

Carburetor Cleaning

WARNING

○**Clean the carburetors in a well-ventilated area, and take care that there is no spark or flame anywhere near the working area; this includes any appliance with a pilot light. Because of the danger of highly flammable liquids, do not use gasoline or low flash-point solvents to clean the carburetors.**

CAUTION

○**Do not use compressed air on an assembled carburetor, the floats may be crushed by the pressure, and the vacuum piston diaphragms may be damaged.**

○**Remove as many rubber or plastic parts from the carburetor as possible before cleaning the carburetor with a cleaning solution. This will prevent damage or deterioration of the parts.**

○**The carburetor body has plastic parts that cannot be removed. DO NOT use a strong carburetor cleaning solution which could attack these parts; instead, use a mild high flash-point cleaning solution safe for plastic parts.**

○**Do not use wire or any other hard instrument to clean carburetor parts, especially jets, as they may be damaged.**

- Disassemble the carburetors.
- Immerse all the metal parts in a carburetor cleaning solution.
- Rinse the parts in water.
- When the parts are clean, dry them with compressed air.

- Blow through the air and fuel passages with compressed air.
- Assemble the carburetors.

Carburetor Inspection

WARNING

Gasoline is extremely flammable and can be explosive under certain conditions. Turn the ignition switch OFF. Do not smoke. Make sure the area is well ventilated and free from any source of flame or sparks; this includes any appliance with a pilot light.

- Remove the carburetors.
- Before disassembling the carburetors, check the fuel level (see Fuel Level Inspection).
- ★If the fuel level is incorrect, inspect the rest of the carburetor before correcting it.
- Move the choke shaft left and release it to check that the starter plungers move smoothly and return by spring tension.
- ★If the starter plungers do not work properly, replace the carburetors.
- Turn the throttle cable pulley to check that the throttle butterfly valves move smoothly and return by spring tension.
- ★If the throttle valves do not move smoothly, replace the carburetors.

Throttle Valve Inspection

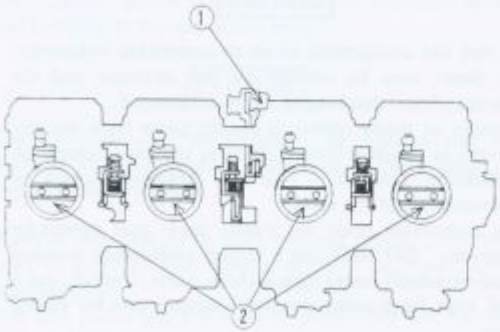

1. Throttle Cable Pulley
2. Throttle Valves

- Disassemble the carburetors.
- Clean the carburetors.
- Check that the O-rings on the float bowl and drain plug and the diaphragm on the vacuum piston are in good condition.
- ★If any of the O-rings or diaphragms are not in good condition, replace them.
- Check the plastic tip of the float valve needle. It should be smooth, without any grooves, scratches, or tears.

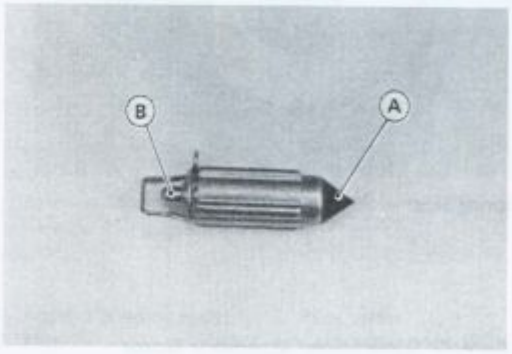

A. Tip B. Rod

- ★If the plastic tip is damaged, replace the needle.
- Push in the rod in the other end of the float valve needle and then replace it.
- ★If it does not spring out, replace the needle.
- Check the tapered portion of the pilot screw for wear or damage.

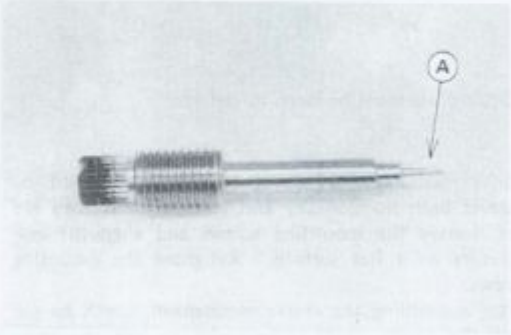

A. Tapered Portion

- ★If the pilot screw is worn or damaged on the tapered portion, it will prevent the engine from idling smoothly. Replace it.
- Check that the vacuum piston moves smoothly in the carburetor body. The surface of the piston must not be excessively worn.
- ★If the vacuum piston does not move smoothly, or if it is very loose in carburetor body, replace both the body and the vacuum piston.

Vacuum Piston Inspection

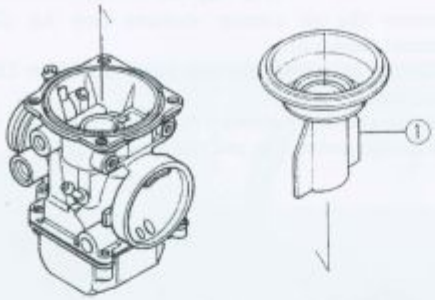

1. Vacuum Piston

- Check the O-ring and diaphragm of coasting enricher system.

★If any of the O-rings or diaphragms are not in good condition, replace them.

Coolant Filter Cleaning

Before winter season starts, clean the filter of carburetor system.

- Remove the fuel tank.
- Drain the coolant (see Cooling System chapter).
- Remove the filter from the cooling hoses of carburetor system.
- Blow off dirt and sediment on the filter with compressed air.

Air Cleaner

Air Cleaner Element Removal

- Remove the left side cover.
- Remove the air cleaner cover taking out the screws.

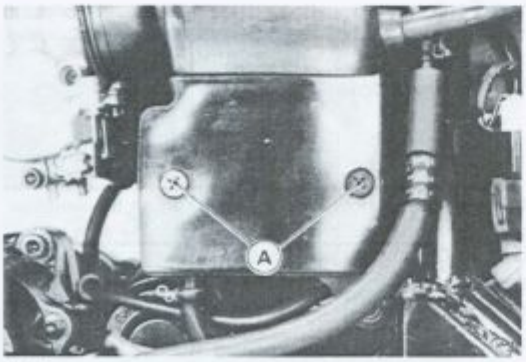

A. Screws

- Pull out the air cleaner element holder, and take off the element.
- Push a clean, lint-free towel into the air cleaner housing to keep dirt or other foreign material from entering.

WARNING

If dirt or dust is allowed to pass through into the carburetors, the butterfly valves may become stuck, possibly causing an accident.

CAUTION

If dirt gets through into the engine, excessive engine wear and possibly engine damage will occur.

Air Cleaner Element Installation

- Element installation is the revers of removal. Note the following.
- Meet the element sponge with the body opening.
- While pushing the element, against the opening, insert the element holder with the chamfer facing upwards. The element holder should be easily installed.

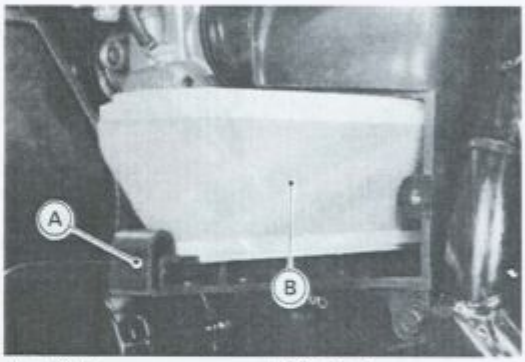

A. Holder B. Element

Air Cleaner Element Cleaning

NOTE

In dusty areas, the element should be cleaned more frequently than the recommended interval.

After riding through rain or on muddy roads, the element should be cleaned immediately.

- Remove the air cleaner element (see Air Cleaner Element Removal).

WARNING

Clean the element in a well-ventilated area, and take care that there is no spark or flame near the working area. Because of the danger of highly flammable liquids, do not use gasoline or low flash-point solvents to clean the element.

- Clean the element in a bath of a high flash-point solvent, and then dry it with compressed air or by shaking it.

When rinsing the element in solvent, do not mix the element inside bath and the element outside bath to prevent the contamination of the inside element.

Element Rinse

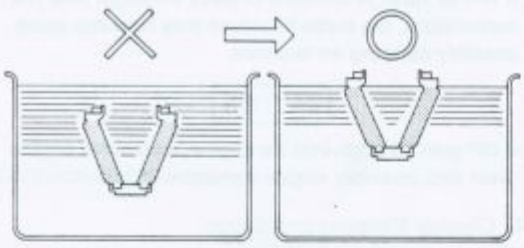

○Dry the element by directing a stream of compressed air from the inside to the outside (from the clean side to the dirty side).

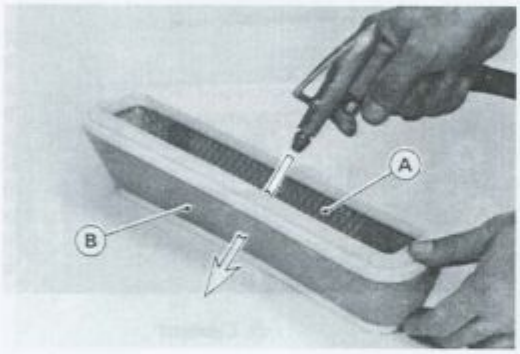

A. Inside B. Outside

●After cleaning, saturate a clean, lint-free towel with SE class SAE 30 oil and apply the oil to the element by tapping the element outside with the towel.

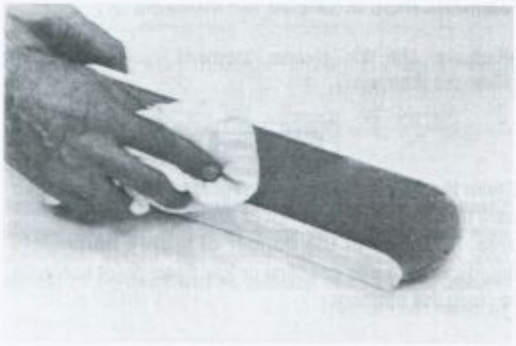

●Inspect the element before installing it (see Air Cleaner Element Inspection and Replacement and Air Cleaner Element Installation).

Air Cleaner Element Inspection and Replacement

●Remove the air cleaner element (see Air Cleaner Element Removal).
●Clean the air cleaner element (see Air Cleaner Element Cleaning).
●Visually check the element for tears or breaks. Check the sponge gasket also, and the plastic frame.

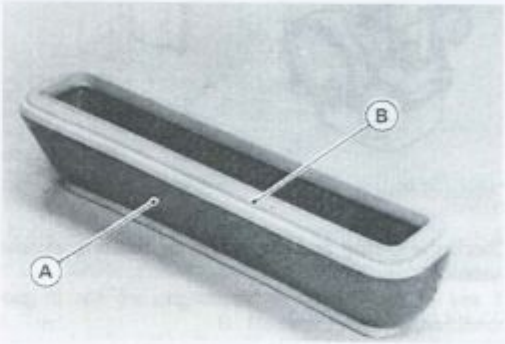

A. Element B. Gasket

★If the element or gasket have any tears or breaks, replace the element.
★If the element frame is damaged or distorted, replace the element.
★If the sponge gasket comes loose, stick it back on with an adhesive sealant.
●Repeated cleaning opens the pores of the foam in the element. Replace the element according to the Periodic Maintenance Chart (see General Information chapter).

Fuel Tank

Fuel Tank Removal

WARNING

○**Gasoline is extremely flammable and can be explosive under certain conditions. Turn the engine stop switch OFF. Do not smoke. Make sure the area is well ventilated and free from any source of flame or sparks; this includes any appliance with a pilot light.**

CAUTION

○**If gasoline, solvent, water or any other liquid enters the canister, the canister's vapor absorbing capacity is greatly reduced. If the canister does become contaminated replace it with a new one.**

•Remove the seat and both side covers.

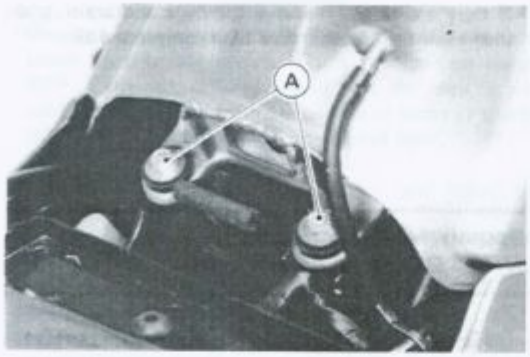

A. Bolts

•Turn the fuel tap on the ON position.
•Pull the hoses off the tank and tap.
○For California vehicles, the breather and fuel return hoses must be disconnected from the tank fittings before tank removal. Plug the fuel return fitting. This prevents gasoline from flowing into the canister.
•Tilt the tank out the rear of the frame.
•Disconnect the fuel level sensor leads.
•Drain the fuel tank.
○Arrange a suitable container under the fuel tank.
○Turn the fuel tap to the PRI position to drain the fuel into the container.

Fuel Tank Installation

•Fuel Tank installation is the reverse of removal. Note the following.
•Read the WARNING in the Fuel Tank Removal section.
•Check the rubber dampers on the frame top-tube.

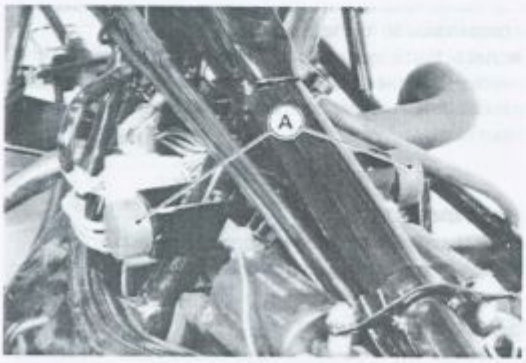

A. Dampers

★If the dampers are damaged or deteriorated, replace them.

•Be sure the hoses are clamped to the fuel tap and fuel tank to prevent leaks.
•Fit the tabs into the slots on both sides of the dampers.

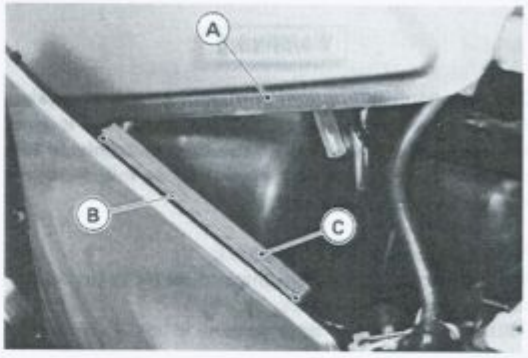

A. Tab B. Slot C. Damper

Fuel Tap Removal

•Remove the fuel tank and drain it (see Fuel Tank Removal).
•Remove the bolts with nylon flat washers and take out the fuel tap.

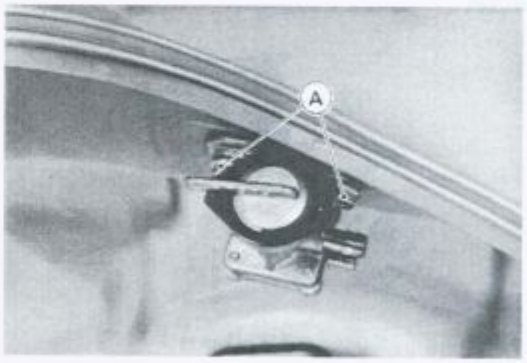

A. Bolts

Fuel Tap Installation

•Fuel tap installation is the reverse of removal. Note the following.
•Be sure the O-ring is in good condition to prevent leaks.
•Be sure to clamp the fuel hose to the tap to prevent leaks.
•Be sure the nylon washers are in good condition to prevent leaks.
○Do not use steel washers in place of the nylon washers, because they will not seal the bolts properly and fuel will leak.

Fuel Tank and Tap Cleaning

- Remove the fuel tank and drain it (see Fuel Tank Removal).
- Pour some high flash-point solvent into the fuel tank and shake the tank to remove dirt and fuel deposits.

WARNING

○**Clean the tank in a well-ventilated area, and take care that there is no spark or flame anywhere near the working area. Because of the danger of highly flammable liquids, do not use gasoline or low flash-point solvents to clean the tank.**

- Pour the solvent out of the tank.
- Remove the fuel tap from the tank by taking out the bolts with nylon washers.
- Clean the fuel tap filter screens in a high flash-point solvent.
- Pour high flash-point solvent through the tap in all lever positions.
- Dry the tank and tap with compressed air.
- Install the tap in the tank (see Fuel Tap Installation).
- Install the fuel tank (see Fuel Tank Installation).

Fuel Tap Inspection

- Remove the fuel tap (see Fuel Tap Removal).
- Check the fuel tap filter screens for any breaks or deterioration.

Fuel Tap

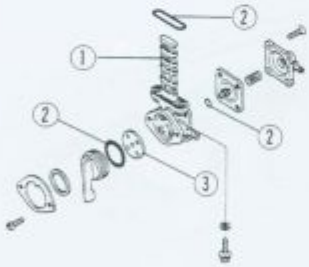

1. Filter
2. O-ring
3. Gasket

★If the fuel tap screens have any breaks or are deteriorated, it may allow dirt to reach the carburetor, causing poor running. Replace the fuel tap.

★If the fuel tap leaks, or allows fuel to flow when it is ON or RES without engine running, replace the damaged gasket or O-ring.

Fuel Tank and Cap Inspection

- Visually inspect the gaskets on the tank and cap for any damage.

★Replace the gaskets if they are damaged.

- Remove the hose(s) from the fuel tank, and open the tank cap.
- Check to see if the breather and water drain pipes (also the fuel return pipe for the US California vehicle) in the tank do not cloged up. Check the tank cap breather too.

★If they are cloged, remove the tank and drain it, and then blow the breather free with compressed air.

Evaporative Emission Control System (US California Vehicle only)

The Evaporative Emission Control System routes fuel vapors from the fuel system into the running engine or stores the vapors in a canister when the engine is stopped. Although no adjustments are required, a thorough visual inspection must be made at the intervals specified by the Periodic Maintenance Chart.

Parts Removal/Installation Notes

WARNING

○**Gasoline is extremely flammable and can be explosive under certain conditions. Turn the ignition switch OFF. Do not smoke. Make sure the area is well ventilated and free from any source of flame or sparks; this includes any appliance with a pilot light.**

CAUTION

○**If gasoline, solvent, water or any other liquid enters the canister, the canister's vapor absorbing capacity is greately reduced. If the canister does become contaminated replace it with a new one.**

- To prevent the gasoline from flowing into the canister or from flowing out of the canister, hold the separator perpendicular to the ground.
- Connect the hoses according to the diagram of the system. Make sure they do not get pinched or crimped (see Cable Routing in the General Information chapter too).

Hose Inspection

- Check that the hoses are securely connected.
- Replace any kinked, deteriorated or damaged hoses.

Separator Inspection

- Disconnect the hoses from the liquid/vapor separator, and remove the separator from the motorcycle.
- Visually inspect the separator for cracks and other damage.

★If the separator has any crack or bad damage, replace it with a new one.

Separator Operation Test

WARNING

○**Gasoline is extremely flammable and can be explosive under certain conditions. Turn the ignition switch OFF. Do not smoke. Make sure the area is well ventilated and free from any source of flame or sparks; this includes any appliance with a pilot light.**

- Connect the hoses to the separator, and install the separator on the motorcycle.
- Disconnect the breather hose from the separator, and inject about 20 mL of gasoline into the separator through the hose fitting.
- Disconnect the fuel return from the fuel tank.
- Run the open end of the return hose into the container level with the tank top.
- Start the engine, and let it idle.
- ★If the gasoline in the separator comes out of the hose, the separator works well. If it does not, replace the separator with a new one.

Canister Inspection

- Remove the canister, and disconnect the hoses from the canister.
- Visually inspect the canister for cracks and other damage.
- ★If the canister has any crack or bad damage, replace it with a new one.

NOTE

○*The canister is designed to work well through the motorcycle's life without any maintenance if it is used under normal conditions.*

Evaporative Emission Control System

VACUUM HOSE ROUTING DIAGRAM

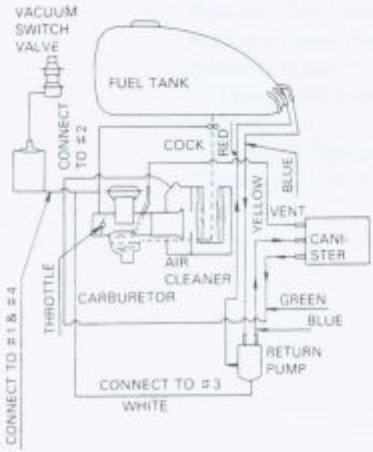

Cooling System

3

Table of Contents

Exploded Views

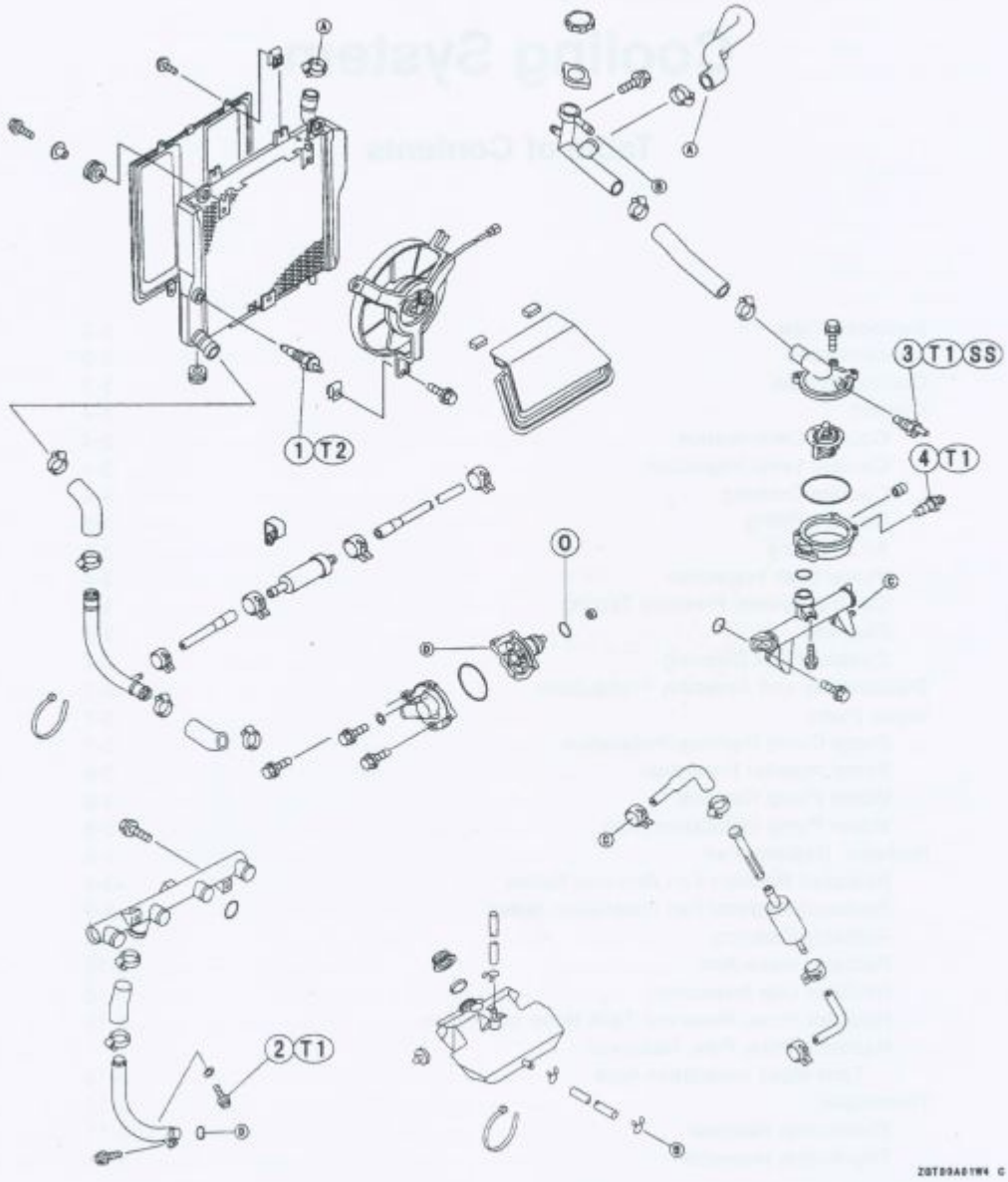

1. Fan Switch
2. Drain Plug
3. Water Temperature Sensor
4. Bleeder Bolt

SS : Apply silicone sealant (Kawasaki Bond: 56019-120) to the threads.
O : Apply engine oil to the surface.
T 1 : 7.8 N-m (0.80 kg-m, 69 in-lb)
T 2 : 27 N-m (2.8 kg-m, 20 ft-lb)

Specifications

Item		Standard
Coolant Provided when Shipping		
	Type	Permanent type of antifreeze for aluminum engine and radiator
	Color	Green
	Mixed ratio	Soft water 50%, coolant 50%
	Freezing point	−35˚C (−31˚F)
	Total amount	3.1 L (up to " U" mark)
Radiator Cap :	Relief pressure	93— 123 kPa (0.95— 1,25 kg /cm², 14— 8 psi)
Thermostat :		
Valve opening temperature		80— 84˚C (176— 183˚F)
Valve full opening lift		not less than 8 mm @ 95˚C (203˚F)

Cooling System

The liquid cooling system is a pressurized forced circulation type. When the engine load varies, this system controls the engine temperature within narrow limits where the engine operates most efficiently. In this way the engine performs stably in various riding conditions, and is verry durable.

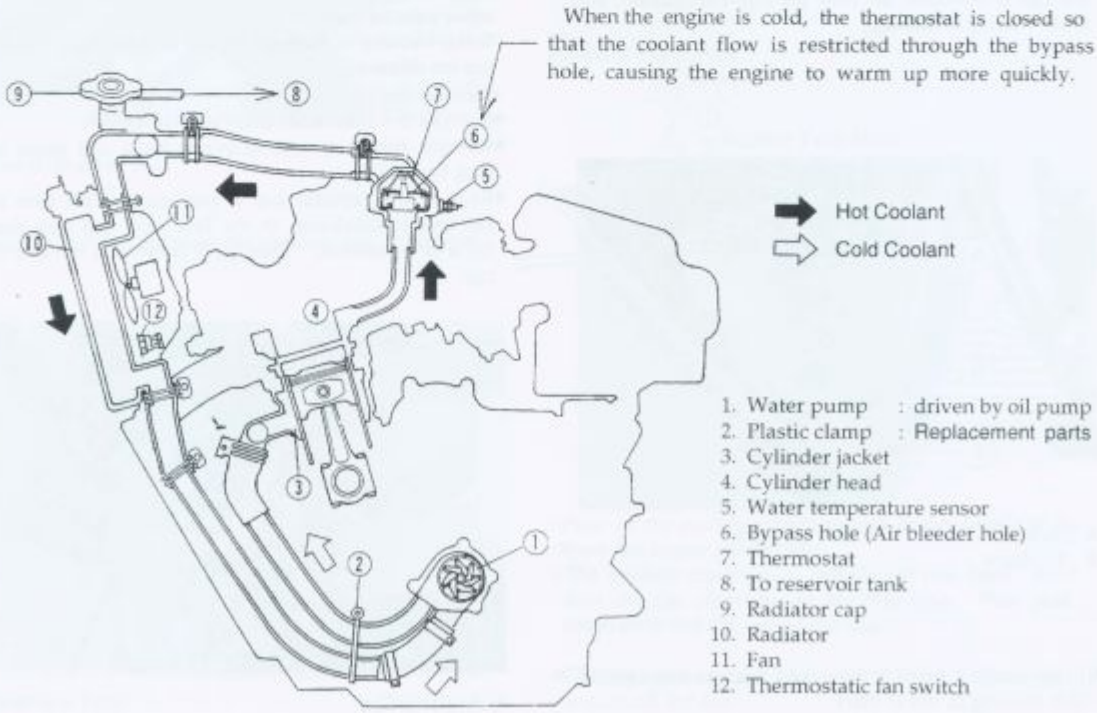

Coolant

Coolant Deterioration

- Visually inspect the coolant in the reservoir tank.
- If whitish cotton-like wafts are observed, aluminum parts in the cooling system are corroded. If the coolant is brown, iron or steel parts are rusting. In either case, flush the cooling system.
- If the coolant gives off an abnormal smell when changing, check for a cooling system leak. It may be caused by exhaust gas leaking into the cooling system.

NOTE

- *Be sure to inspect the coolant at the reservoir tank. If the coolant is checked by removing the radiator cap, the air must be bled from the cooling system.*

Coolant Level Inspection

- Situate the motorcycle so that it is perpendicular to the ground (on its center stand).
- Check the level through the coolant level gauge on the reservoir tank. The coolant level should be between the U and the L marks.

NOTE

- *Check the level when the engine is cold (room or ambient temperature).*
- *Do not check the level by removing the radiator cap. If the cap is removed, air may get into the coolant, and lower cooling efficiency.*

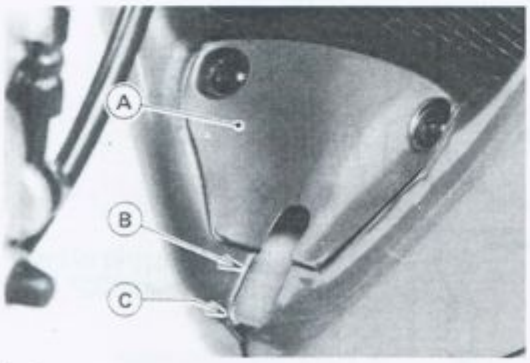

A. Cover
B. "U" Mark
C. "L" Mark

★If the coolant level is low, add coolant through the filler opening to the U mark.

CAUTION

- **For refilling, add the specified mixture of coolant and soft water. Adding water alone dilutes the coolant and degrades its anticorrosion properties. The diluted coolant can attack the aluminum engine parts. In an emergency, soft water can be added. But the diluted coolant must be returned to the correct mixture ratio within a few days.**
- **If coolant must be added often, or the reservoir tank has run completely dry; there is probably leakage in the cooling system. Check the system for leaks (See Visual Leak Inspection, and Pressure Testing).**

Coolant Draining

The coolant should be changed periodically to ensure long engine life.

CAUTION

- **Use coolant containing corrosion inhibitors made specifically for aluminum engines and radiators in accordance with the instructions of the manufactures (See Coolant Filling Section).**

WARNING

- **To avoid burns do not remove the radiator cap or try to change the coolant when the engine is still hot. Wait until it cools down.**
- **Coolant on tires will make them slippery and can cause an accident and injury. Immediately wipe up or wash away any coolant that spills on the frame, engine, or other painted parts.**
- **Since coolant is harmful to the human body, do not use for drinking.**

- Remove the seat.
- Remove the both side covers and fairings.
- Remove the fuel tank mounting bolts and move the tank backwards.
- Remove the radiator cap in two steps. First turn the cap counterclockwise to the first stop and wait there for a few seconds. Then push down and remove the cap.

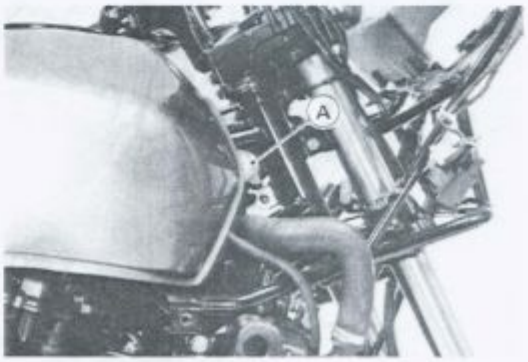

A. Radiator Cap

•Drain the coolant from the radiator and engine by removing the drain plug at the bottom of the radiator pipe.

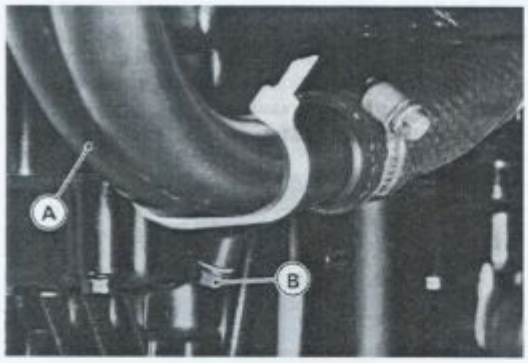

A. Radiator Pipe
B. Drain Plug

•Unscrew the reservoir tank lower bracket bolts from both sides, and remove the reservoir tank with its bracket and hoses attached.

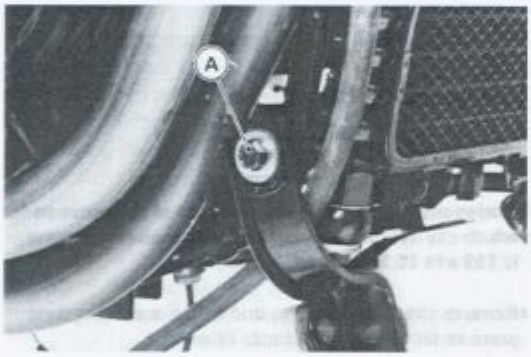

A. Lower Bracket Bolt

•Unscrew the cap and pour the coolant into a container.

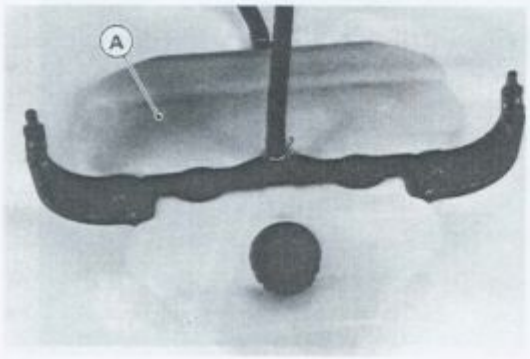

A. Reservoir Tank

•Remove the drain plugs at the bottom of the cylinder after removal of the exhaust pipes and the front water pipe.

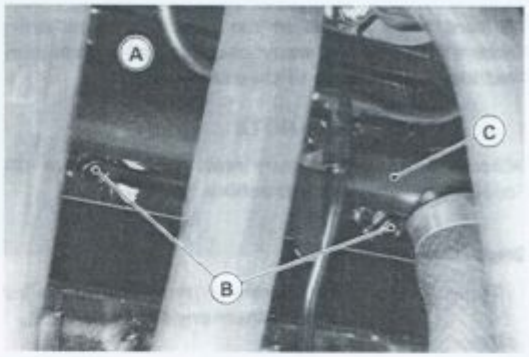

A. Cylinder
B. Drain Plug
C. Front Water Pipe

•Inspect the old coolant for color, smell (see Coolant Deterioration).

Coolant Filling

•Install the drain plugs. Always replace the gaskets with new ones, if they are damaged.
•Tighten the drain plugs to the specification (see Exploded Views).
•Fill the radiator up to the bottom of the radiator filler neck with coolant, and install the cap turning it clockwise about ¼ turn.

Radiator Filler Neck

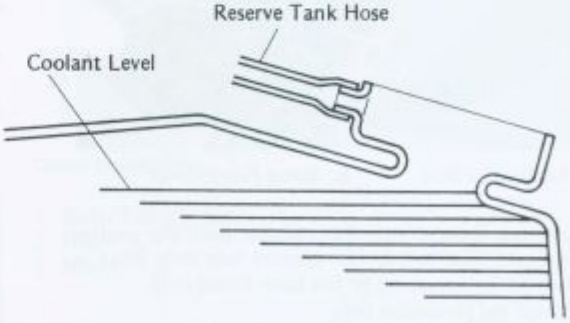

NOTE

○*Pour in the coolant slowly so that it can expel the air from the engine and radiator.*
○*The radiator cap must be installed in two steps. First turn the cap clockwise to the first stop. Then push down on it and the rest of the way.*

•Fill the reservoir tank up to the U mark with coolant, and install the cap.

CAUTION

○**Soft or distilled water must be used with the antifreeze (see below for antifreeze) in the cooling system.**
○**If hard water is used in the system, it causes scales accumulation in the water passages, and considerably reduces the efficiency of the cooling system.**

NOTE

○*Choose a suitable mixture ratio by referring to the coolant manufacturer's directions.*

Original coolant

Type	:	Permanent type antifreeze for aluminum engine and radiator
Color	:	green
Mixed ratio	:	soft water 50%, coolant 50%
Freezing point	:	−35°C (−31°F)
Total amount	:	3.1 L (up to "U" mark)

Air Bleeding

Before putting the motorcycle into operation, any air trapped in the cooling system must be removed as follows.

- Remove the radiator cap.
- Loosen the air bleeder bolt on the top of the water pump cover.

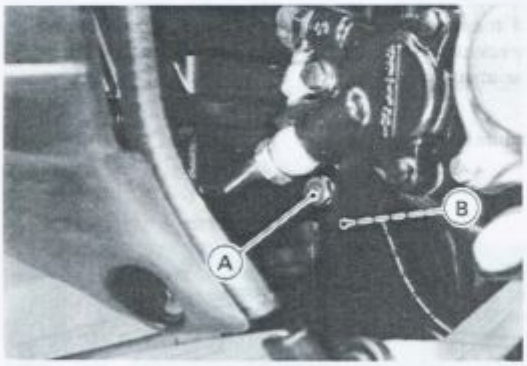

A. Air Bleeder Bolt B. Water Pump Cover

- Pour the coolant into the radiator until the coolant begins to flow out the air bleeder bolt hole (that is, when all the remaining air has been forced out).
- Tighten the air bleeder bolt.
- Fill the radiator up to the radiator filler neck with coolant.
- Check the cooling system for leaks.
- Install the radiator cap.
- Start the engine, warm it up thoroughly, and then stop it.
- Check the coolant level in the reservoir tank after the engine cools down.
- ★If the coolant level is low, add coolant up to the Full mark through the reservoir tank opening.

Visual Leak Inspection

Any time the system slowly loses water, inspect for leaks.

- Check the water pump body drainage outlet passage for coolant leaks.
- ★If the mechanical seal is damaged, the coolant leaks through the seal and drains through the passage. Replace the water pump unit.
- ★If there are no apparent leaks, pressure test the system.

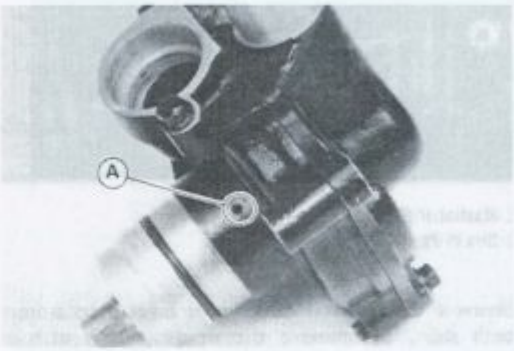

A. Drainage Outlet Passage
: at the bottom of the pump body

Cooling System Pressure Testing

CAUTION

○**During pressure testing, do not exceed the pressure for which the system is designed. The maximum pressure is 123 kPa (1.25 kg/cm², 18 psi).**

- Remove the radiator cap, and install a cooling system pressure tester on the radiator filler neck.
- Wet the cap sealing surfaces with water or coolant to prevent pressure leaks.
- Build up pressure in the system carefully until the pressure reaches 123 kPa (1.25 kg/cm², 18 psi).
- Watch the gauge for at least 6 seconds. If the pressure holds steady, the system is all right.

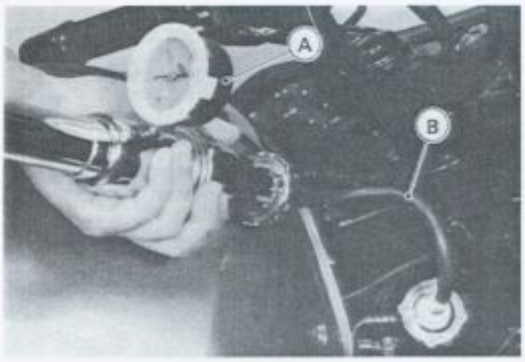

A. Pressure Tester B. Adapter

- Remove the pressure tester, replenish the coolant, and install the radiator cap.
- ★If the pressure drops and no external source is found check for internal leaks. Droplets in the engine oil indicate internal leakage. Check the cylinder head gasket and the cylinder liner O-ring leak.

Flushing

Over a period of time, the cooling system accumulates rust, scale and lime in the water jacket an radiator. When this accumulation is suspected or observed, flush the cooling system. If this accumulation is not removed, it will clog up the water passage and considerably reduce the efficiency of the cooling system.

- Drain the cooling system.
- Fill the cooling system with fresh water mixed with a flushing compound.

CAUTION

Avoid the use of a flushing compound witch is harmful to the aluminum engine and radiator. Carefully follow the instructions supplied by the manufacturer of the cleaning product.

- Warm up the engine, and run it at normal operating temperature for about ten minutes.
- Stop the engine, and drain the cooling system.
- Fill the system with fresh water.
- Warm up the engine and drain the system.
- Repeat the previous two steps once more.
- Fill the system with a permanent type coolant, and bleed the air from the system.

Coolant Filter cleaning

Refer to the chapter of carburetor in Fuel System for the cleaning Procedures.

Disassembly and Assembly Precautions

- Prior to disassembly of cooling system parts (radiator, pump, sensors, etc), wait until the coolant cools down, and then drain the coolant.
- After assembling and filling the system with coolant, bleed any air from the system.

Water Pump

Pump Cover Removal/Installation

- Remove the clutch slave cylinder (see Clutch Slave Cylinder Removal in the Clutch chapter).
- Remove the clutch push rod to prevent its damage.

A. Clutch Push Rod

- Remove the lower fairing cover.
- Remove the shift pedal and the shift pedal bracket.
- Loosen the clamp and remove the water pump cover.

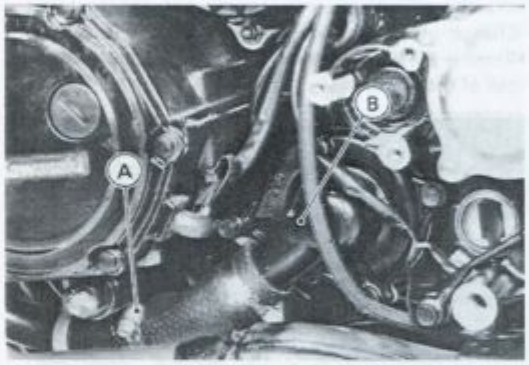

A. Clamp B. Water Pump Cover

- When installing the water pump cover, align the mark on the cover with the arrow mark on the hose.

Cover Installation

1. Water Pump Cover
2. Hose
3. Marks

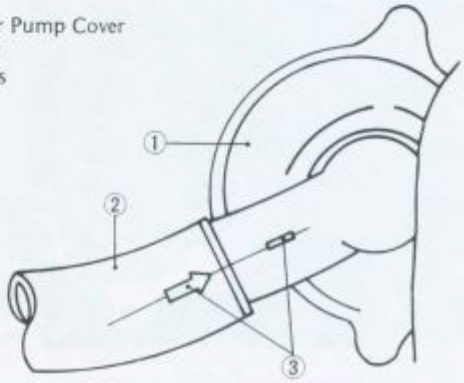

Pump Impeller Inspection

•Visually check the impeller.

★If the surface is corroded, or if the blades are damaged, replace the water pump unit.

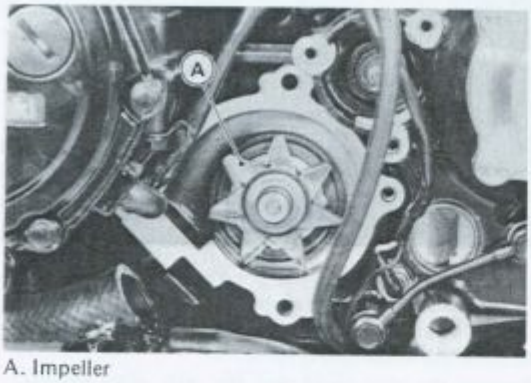

A. Impeller

Water Pump Removal

•Drain the engine oil (see Engine Oil and/or Filter Change in the Engine Lubrication System Chapter).

•Remove the water pipe mounting bolt and pull the pipe out of the pump case.

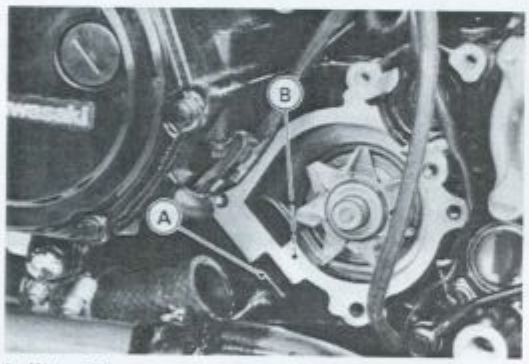

A. Water Pipe B. Bolt

•Pull the pump unit out of the left crankcase.

○The pump unit may be removed by installing the sprocket cover bolts and pulling them.

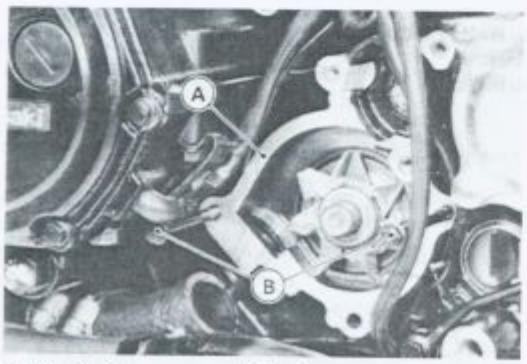

A. Pump Unit B. Bolt

Water Pump Installation Note

•When installing the water pump, note the position of the oil pump shaft projection and turn the water pump shaft so that the projection fits into the slot.

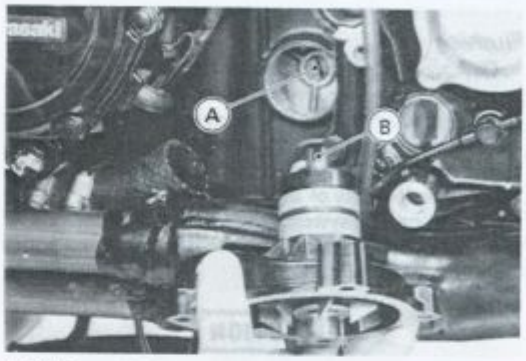

A. Oil Pump Shaft B. Water Pump Shaft

•Be sure to install the water pipe O-ring.

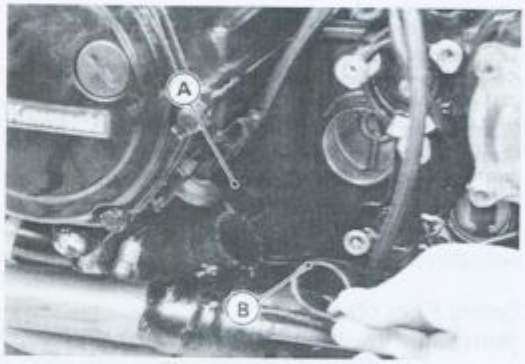

A. Water Pipe B. O-ring

Radiator/Radiator Fan

Radiator/Radiator Fan Removal Notes

WARNING

○The radiator fan and fan switch are connected directly the battery. The radiator fan may start even if the ignition switch is off. NEVER TOUCH THE RADIATOR FAN UNTIL THE ENGINE COMPLETELY COOLS OFF. TOUCHING THE FAN BEFORE THE ENGINE COOLS COULD CAUSE INJURY FROM THE FAN BLANDES.

- Remove the fairings (see the Frame chapter).
- Drain the coolant (see Coolant Draining).
- Loosen the hose clamps and pull off the radiator hoses on both sides.

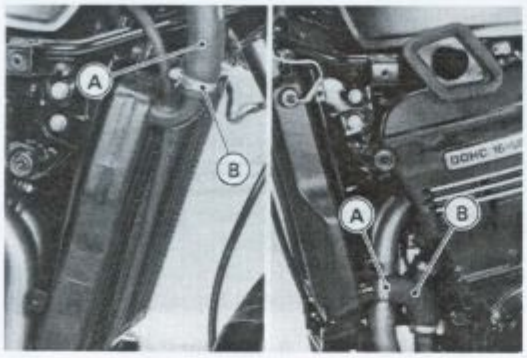

A. Clamp B. Radiator Hose

- Unscrew the fairing bracket mounting bolts.

Fairing Bracket

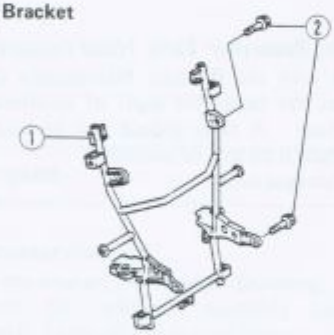

1. Fairing Bracket
2. Mounting Bolts

- Unscrew the radiator mounting bolts, and push the fairing bracket down.
- Remove the radiator.

○Disconnect the fan motor connector and fan switch connector before removal of the radiator.
○Take care not to damage the radiator core and the fan.

Radiator Cleaning

CAUTION

○When cleaning the radiator with compressed air or with a steam cleaner, be careful of the following to avoid damage to the fins.
○Keep the air nozzle over 0.5 m (20 in.) away from the radiator.
○Blow air perpendicularly to the radiator core.
○Never blow air at an angle against the fins but straight through them in the direction of natural air flow.

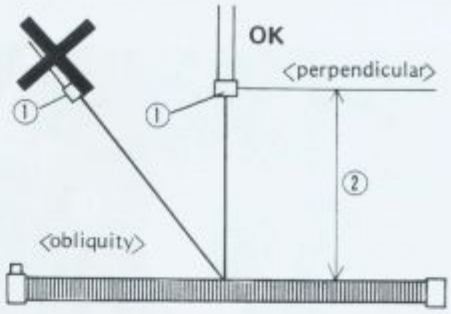

1. Stem Gun 2. More than 50 cm

- Run the gun horizontally following the core fin direction.

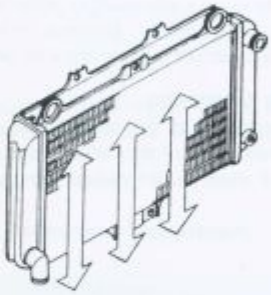

Radiator Inspection

- Check the radiator core.

★If there are obstructions to air flow, remove them.
★If the corrugated fins are deformed, carefully straighten them with the blade of a thin screw driver.

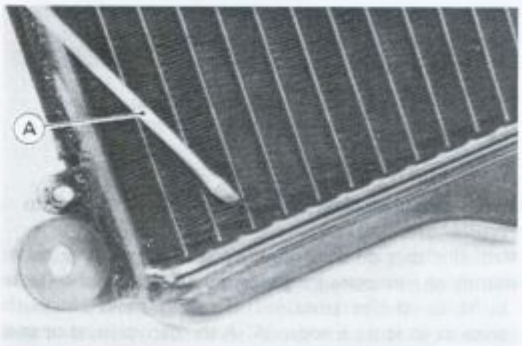

A. Thin Screwdriver

★If the air passages of the radiator core are blocked more than 20% by unremovable obstructions or irreparably deformed fins, replace the radiator with a new one.

- Check the radiator filler neck for signs of damage.
- Check the condition of the top and bottom sealing seats in the filler neck. They must be smooth and clean for the radiator cap to function properly.

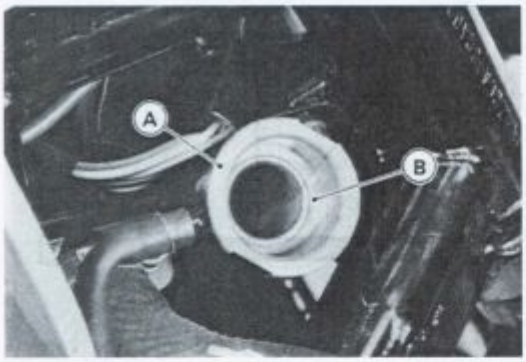

A. Top Sealing Seat B. Bottom Sealing Seat

Radiator Cap Inspection

- Check the condition of the valve spring, and the top and bottom valve seals of the radiator cap.

★If any one of them shows visible damage, replace the cap.

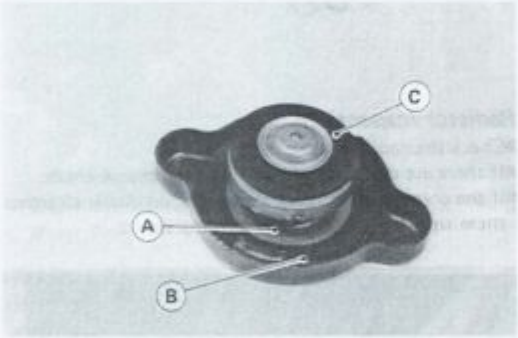

A. Valve Spring C. Bottom Seal
B. Top Seal

- Wet the cap sealing surfaces with water or coolant to prevent pressure leaks.
- Install the cap on a cooling system pressure tester.
- Watching the pressure gauge, pump the pressure tester to build up the pressure. The cap must retain the pressure at least 6 seconds. Also the cap must open at the pressure shown in the table.

Radiator Cap Relief Pressure

93 – 123 kPa
(0.95 – 1.25 kg/cm^2, 14 – 18 psi)

★If the cap cannot hold the specified pressure, or if it holds too much pressure, replace it with a new one.

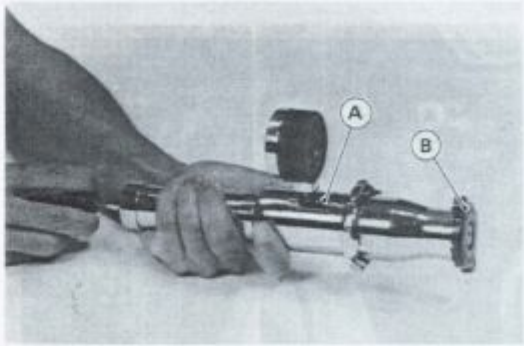

A. Pressure Tester B. Radiator Cap

Radiator Hose, Reservoir Tank Hose Inspection

- In accordance with the Periodic Maintenance Chart, visually inspect the hoses for signs of deterioration. Squeeze the hose. A hose should not be hard and brittle, nor should it be soft or swollen.
- Replace any damaged hose.

Radiator Hose, Pipe, Reservoir Tank Hose Installation Note

- Install the radiator hoses or pipes being careful to follow the performed bends (see Exploded View). Avoid sharp bending, kinking, flattening, or twisting.
- Tighten the hose clamps securely.
- Bind the water pipes with a new plastic tie wrap and make sure they do not touch the exhaust pipe.

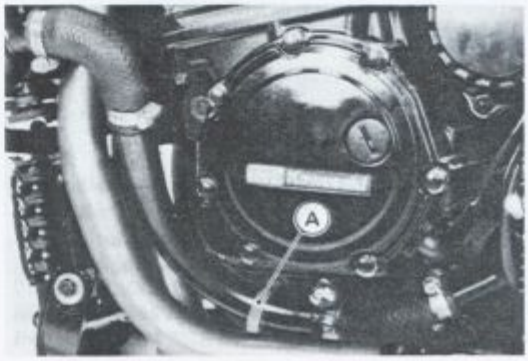

A. Plastic Tie Wrap

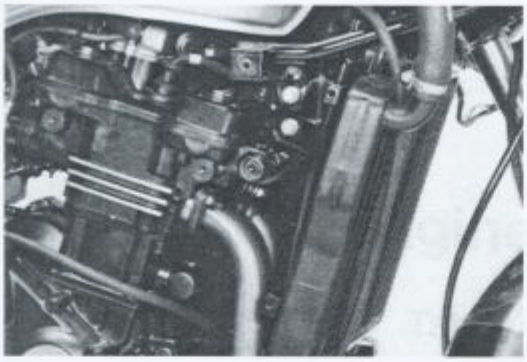

•Route the reservoir tank hoses correctly (see Hose Routing in the General Information chapter).

Thermostat

Thermostat Removal

•Drain the coolant (see Coolant Draining).
•Remove the carburetor assembly (see Carburetor Assembly Removal/Installation Notes).
•Unclamp the water hose clamp.

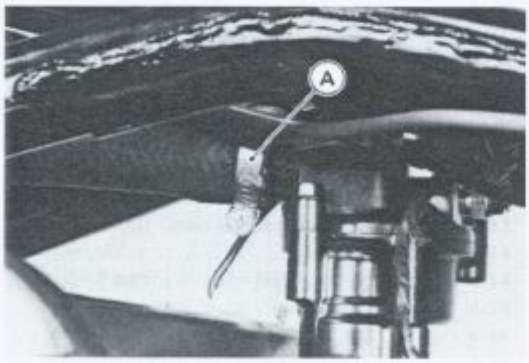

A. Clamp

•Disengage the thermostat housing from the water hose.
•Unscrew the mounting bolts and remove the thermostat housing with rear water pipe.

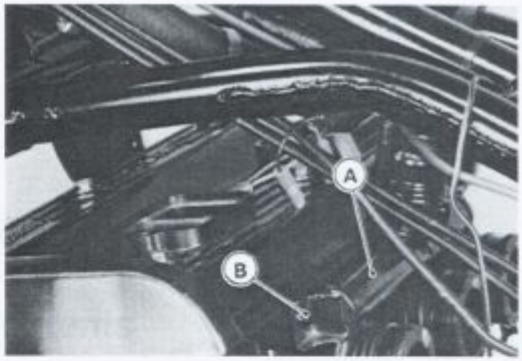

A. Rear Water Pipe B. Mounting Bolt

Thermostat Inspection

•Remove the thermostat, and inspect the thermostat valve at room temperature.
★If the valve is open, replace the valve with a new one.
•To check valve opening temperature, suspend the thermostat and an accurate thermometer in a container of water.
•Place the container over a source of heat and gradually raise the temperature of the water while stirring the water gently.

Valve Opening Temperature Measurement

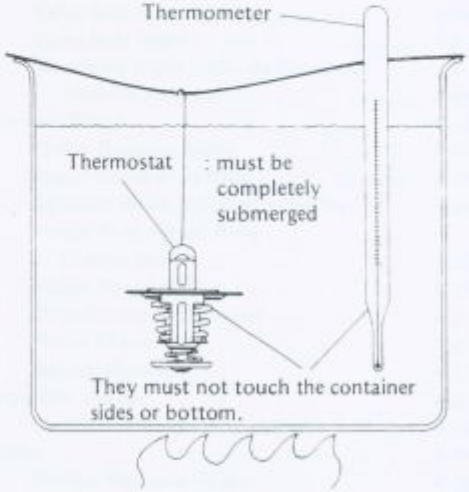

•Watch the valve. As soon as the valve starts to open, note the temperature.
★If it is out of the service limit range, replace the thermostat.

Thermostat Valve Opening Temperature

80 – 84°C (176 – 183°F)

Engine Top End

Table of Contents

4

Exploded View

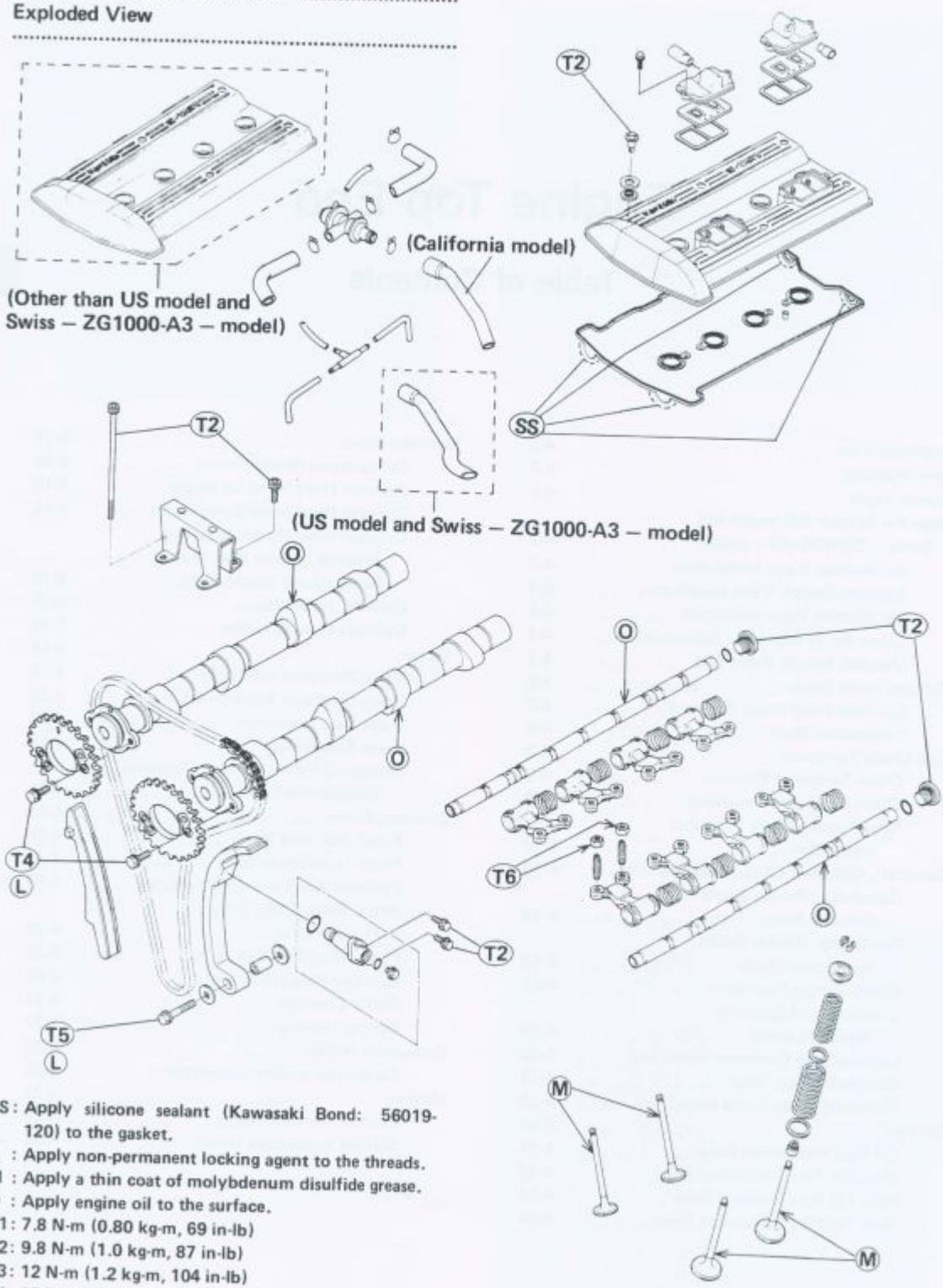

SS : Apply silicone sealant (Kawasaki Bond: 56019-120) to the gasket.
L : Apply non-permanent locking agent to the threads.
M : Apply a thin coat of molybdenum disulfide grease.
O : Apply engine oil to the surface.
T1 : 7.8 N-m (0.80 kg-m, 69 in-lb)
T2 : 9.8 N-m (1.0 kg-m, 87 in-lb)
T3 : 12 N-m (1.2 kg-m, 104 in-lb)
T4 : 15 N-m (1.5 kg-m, 11.0 ft-lb)
T5 : 20 N-m (2.0 kg-m, 14.5 ft-lb)
T6 : 25 N-m (2.5 kg-m, 18.0 ft-lb)

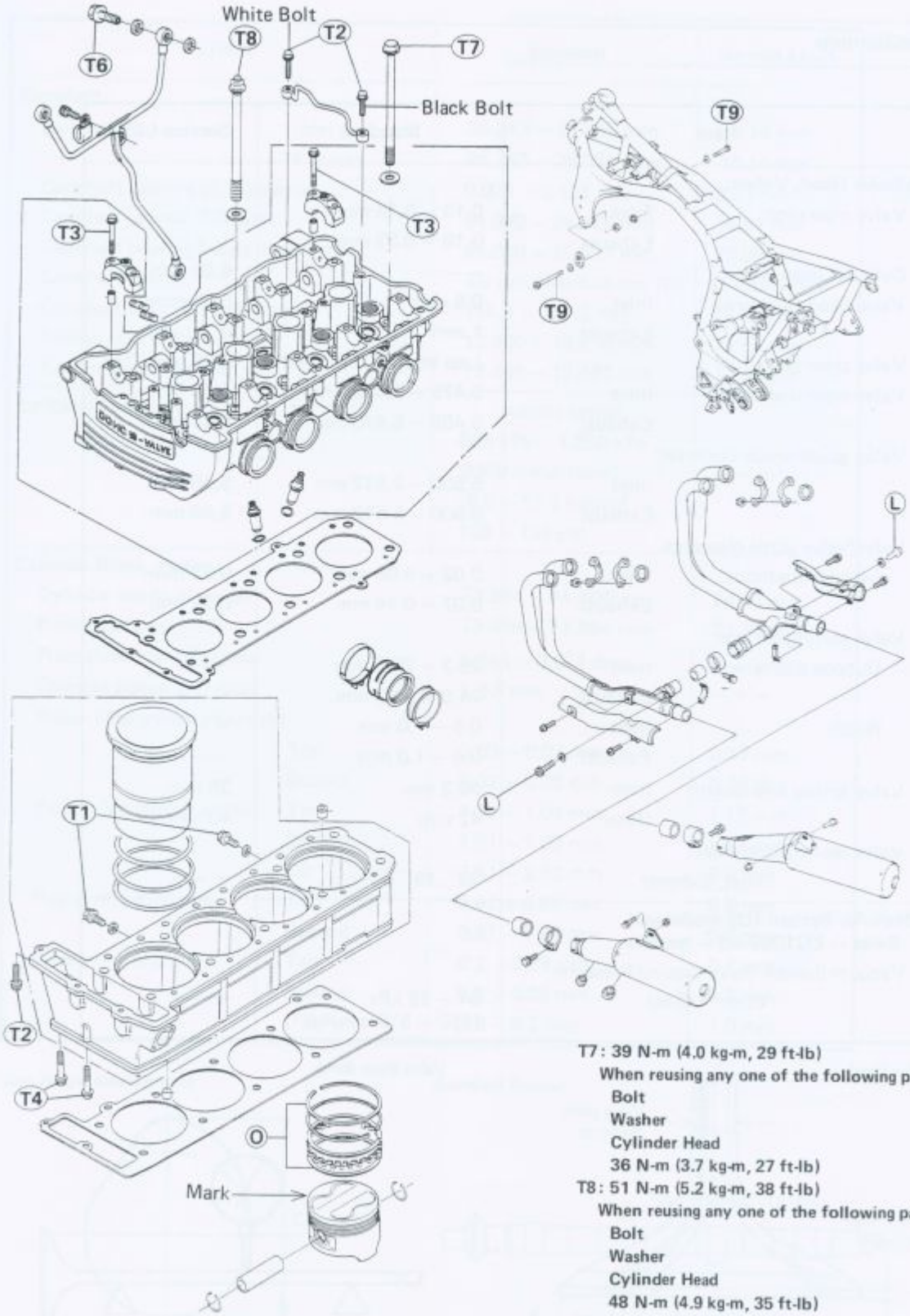

T7: 39 N-m (4.0 kg-m, 29 ft-lb)
When reusing any one of the following parts:
Bolt
Washer
Cylinder Head
36 N-m (3.7 kg-m, 27 ft-lb)

T8: 51 N-m (5.2 kg-m, 38 ft-lb)
When reusing any one of the following parts:
Bolt
Washer
Cylinder Head
48 N-m (4.9 kg-m, 35 ft-lb)

T9: 54 N-m (5.5 kg-m, 40 ft-lb)

Specifications

Item		Standard	Service Limit
Cylinder Head, Valves:			
Valve clearance:	Inlet	0.13 – 0.18 mm	– – –
	Exhaust	0.18 – 0.23 mm	– – –
Cylinder head warp		– – –	0.05 mm
Valve head thickness:	Inlet	0.5 mm	0.25 mm
	Exhaust	1 mm	0.7 mm
Valve stem bend		Less than 0.02 mm TIR	0.05 mm TIR
Valve stem diameter:	Inlet	5.475 – 5.490 mm	5.46 mm
	Exhaust	5.455 – 5.470 mm	5.44 mm
Valve guide inside diameter:			
	Inlet	5.500 – 5.512 mm	5.58 mm
	Exhaust	5.500 – 5.512 mm	5.58 mm
Valve/valve guide clearance (wobble method):	Inlet	0.02 – 0.08 mm	0.22 mm
	Exhaust	0.07 – 0.14 mm	0.27 mm
Valve seating surface:			
Outside diameter	Inlet	28.3 – 28.5 mm	– – –
	Exhaust	24.0 – 24.2 mm	– – –
Width	Inlet	0.5 – 1.0 mm	– – –
	Exhaust	0.5 – 1.0 mm	– – –
Valve spring free length:	Inner	36.3 mm	35 mm
	Outer	42 mm	40 mm
Valve seat cutting angle:			
Inlet, Exhaust		32°, 45°, 60°	– – –
Clean Air System (US model and Swiss – ZG1000-A3 – model):			
Vacuum Switch Valve Closing Pressure:			
Open → Close		54 – 68 kPa (410 – 510 mmHg)	– – –

Valve Head

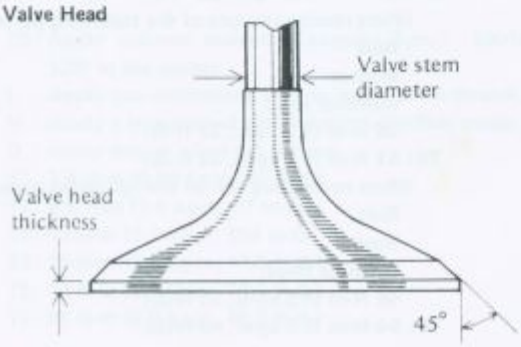

Valve Stem Bend

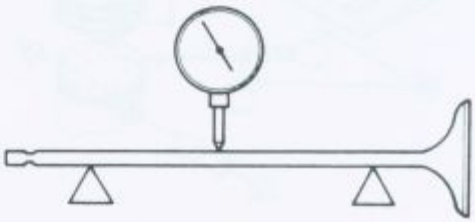

Item		Standard	Service Limit
Camshaft:			
Cam height	Inlet	35.243 – 35.385 mm	35.14 mm
	Exhaust	35.243 – 25.385 mm	35.14 mm
Camshaft bearing oil clearance		0.078 – 0.121 mm	0.21 mm
Camshaft journal diameter		24.900 – 24.922 mm	24.87 mm
Camshaft bearing inside diameter		25.000 – 25.021 mm	25.08 mm
Camshaft runout		not more than 0.02 mm TIR	0.1 mm TIR
Camshaft chain 20-link length		158.8 – 159.2 mm	161.5 mm
Rocker arm inside diameter		12.500 – 12.518 mm	12.55 mm
Rocker shaft diameter		12.466 – 12.484 mm	12.44 mm
Cylinder Compression:		(usable range) 885 kPa – 1,350 kPa @300 r/min (rpm) (9.0 – 13.8 kg/cm², 128 – 196 psi)	– – –
Cylinder Block, Piston:			
Cylinder inside diameter		73.994 – 74.006 mm	74.11 mm
Piston diameter		73.935 – 73.964 mm	73.79 mm
Piston/cylinder clearance		0.044 – 0.071 mm	– – –
Oversize piston and rings		+ 0.5 mm	– – –
Piston ring/groove clearance			
	Top	0.03 – 0.07 mm	0.17 mm
	Second	0.02 – 0.06 mm	0.16 mm
Piston ring groove width	Top	1.02 – 1.04 mm	1.12 mm
	Second	1.01 – 1.03 mm	1.11 mm
	Oil	2.51 – 2.53 mm	2.6 mm
Piston ring thickness	Top	0.97 – 0.99 mm	0.9 mm
	Second	0.97 – 0.99 mm	0.9 mm
Piston ring end gap	Top	0.2 – 0.35 mm	0.7 mm
	Second	0.2 – 0.35 mm	0.7 mm
	Oil	0.2 – 0.7 mm	1.0 mm

Cam Height Measurement

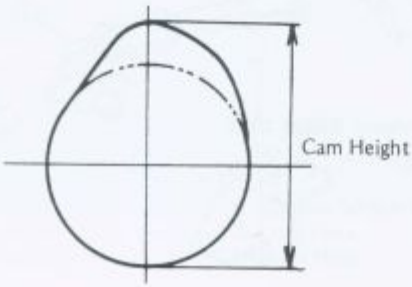

Camshaft Runout

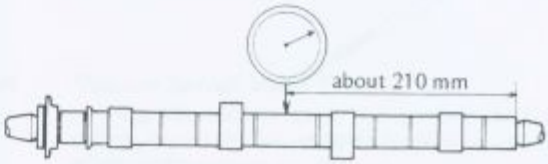

Special Tools

Along with common hand tools, the following more specialized tools are required for complete engine top end servicing.

Vacuum Gauge Set: 57001-1198

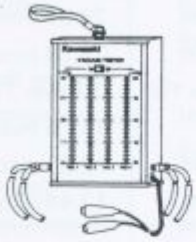

Compression Gauge: 57001-221
Adapter: 57001-1018

Valve Spring Compressor Assembly: 57001-241
Adapter: 57001-1019

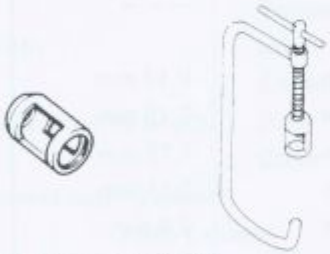

Valve Guide Arbor: 57001-1021

Valve Guide Reamer: 57001-1079

NOTE

○*The vacuum gauge & tachometer (P/N 57001-1291) can be used instead of the vacuum gauge set (P/N 57001-1198).*

Valve Seat Cutter: 57001-1114
Valve Seat Cutter: 57001-1119
Valve Seat Cutter: 57001-1120
Valve Seat Cutter: 57001-1123
Valve Seat Cutter: 57001-1187

Cutter Holder – ϕ5.5 mm : 57001-1125

Bar: 57001-1128

Piston Pin Puller Assembly: 57001-910

Piston Ring Pliers: 57001-115

Piston Ring Compressor Assy: 57001-1094

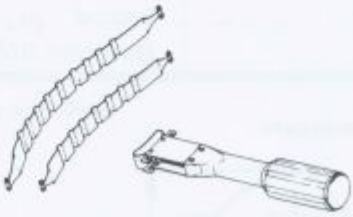

Piston Holder: 57001-1030

Clean Air System (US model and Swiss – ZG1000-A3 – model)

Air Suction Valve Installation

•Replace the gasket with a new one, and install it between the cylinder head cover and the valve assembly.

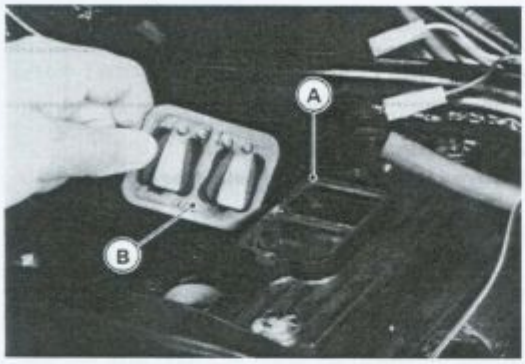

A. Gasket B. Valve Assembly

Vacuum Switch Valve Installation

•Install the switch valve so that the air hole faces downwards.

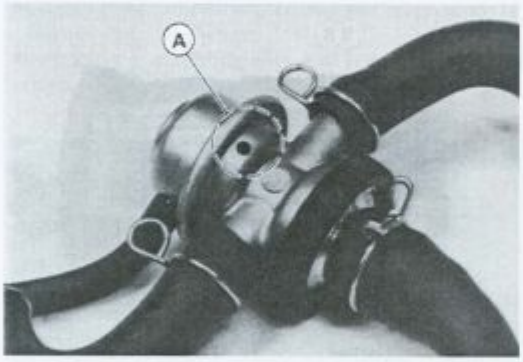

A. Air Hole

•Install the switch valve as shown.

Vacuum Switch Valve Installation

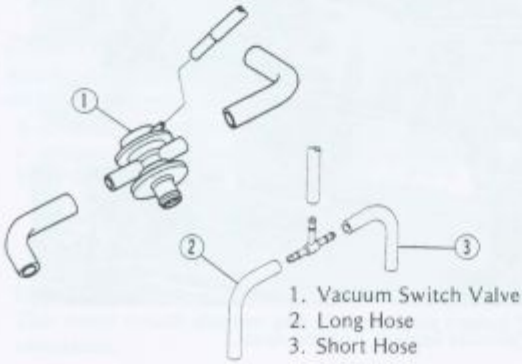

1. Vacuum Switch Valve
2. Long Hose
3. Short Hose

Air Suction Valve Inspection

The air suction valve is essentially a check valve which allows fresh air to flow from the air cleaner into the exhaust port. Any air that has passed the air suction valve is prevented from returning to the air cleaner.

•Remove the air suction valves.

•Visually inspect the reeds for cracks, folds, warps, heat damage, or other damage.

★If there is any doubt as to the condition of the reed, replace the air suction valve as an assembly.

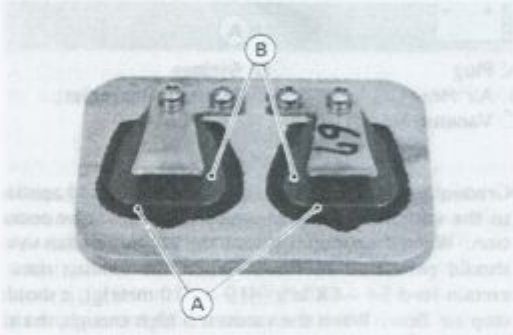

A. Valve Holder B. Reeds

•Check the reed contact areas of the valve holder for grooves, scratches, any signs of separation from the holder, or heat damage.

★If there is any doubt as to the condition of the reed contact areas, replace the air suction valve as an assembly.

•If any carbon or other foreign particles have accumulated between the reed and the reed contact area, wash the valve assembly clean with a high flash-point solvent.

CAUTION

○**Do not scrape off the deposits with a scraper as this could damage the rubber, requiring replacement of the suction valve assembly.**

Clean Air System Hose Inspection

•Be certain that all the hoses are routed without being flattened or kinked, and are connected correctly to the air cleaner housing, silencer, vacuum switch valve, #1 and #4 carburetors, and air suction valve covers.

★If they are not, correct them. Replace them if they are damaged.

Vacuum Switch Valve Test

Using the vacuum gauge set (special tool) and a syringe, inspect the vacuum switch operation as follows:

•Remove the vacuum switch valve.

•Connect the vacuum gauge set (special tool) and syringe to the vacuum hoses as follows.

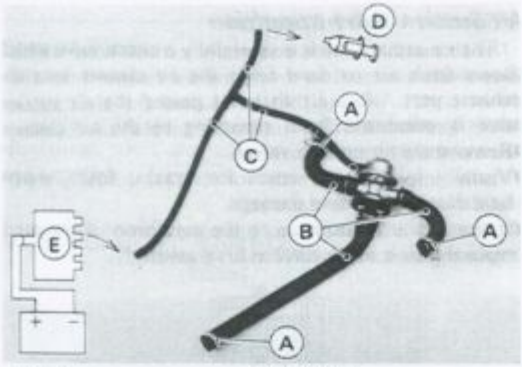

A. Plug
B. Air Hose
C. Vacuum Hose
D. Syringe
E. Vacuum Gauge Set: 57001-1198

•Gradually raise the vacuum (lower the pressure) applied to the vacuum switch valve, and check the valve operation. When the vacuum is low, the vacuum switch valve should permit air to flow. When the vacuum rises a certain level 54 – 68 kPa (410 – 510 mmHg), it should stop air flow. When the vacuum is high enough, the air cannot also flow through the valve.

Vacuum Switch Valve Operation

1. During Cruising (open throttle)

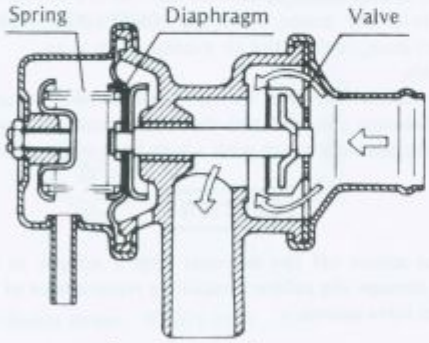

Secondary air flows.

2. During Engine Braking (Closed throttle)

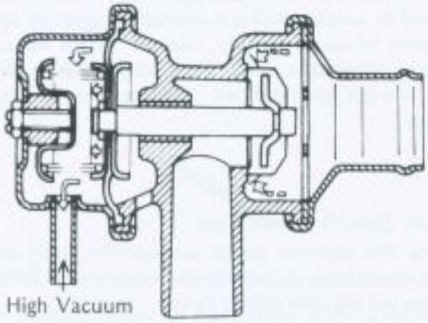

Secondary air cannot flow.

★If the vacuum switch valve does not operate as described, replace it with a new one.

NOTE

○*To check air flow through the vacuum switch valve, just blow through the air cleaner hose.*

Cylinder Head Cover

Cylinder Head Cover Removal

•Remove the following parts before the removal.
- ○Fairings
- ○Fuel tank (See Fuel Tank Removal in Fuel System)
- ○Ignition coils
- ○Air suction valves and hoses (US model).

Installation Note

•Replace the headcover gasket or gasket with new one, if it is damaged.
•Stick the gaskets partially to the cover with a liquid gasket for installation convenience.
•Be sure to install the knock pins.

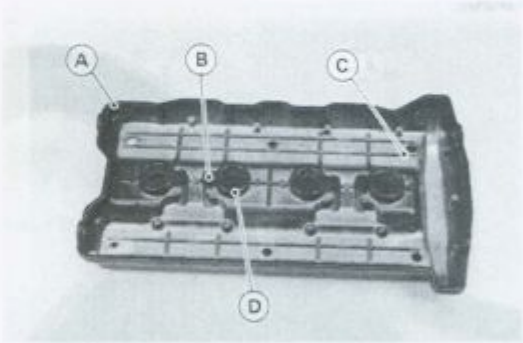

A. Headcover Gasket
B. Knock Pin
C. Head Cover
D. Gasket

•Apply silicone sealant (Kawasaki Bond: 56019-120) as shown in the figure below.

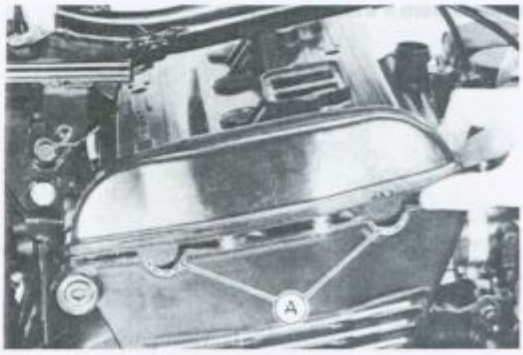

A. Silicone Sealant Applied Areas

•Tighten the cover bolts to the specification (See Exploded Views).

Cam Chain Tensioner

Chain Tensioner Removal

CAUTION

This is a non-return type cam chain tensioner. The push rod does not return to its original position once it moves out to take up cam chain slack. Observe all the rules listed below:

○When removing the tensioner, do not take out the mounting bolts only halfway. Retightening the mounting bolts from this position could damage the tensioner and the camshaft chain. Once the bolts are loosened, the tensioner must be removed and reset as described in "Chain Tensioner Installation".

○Do not turn over the crankshaft while the tensioner is removed. This could upset the cam chain timing, and damage the valves.

•Loosen the cap bolt before tensioner removal for later disassembly convenience.
•Unscrew the mounting bolts and remove the camshaft chain tensioner.

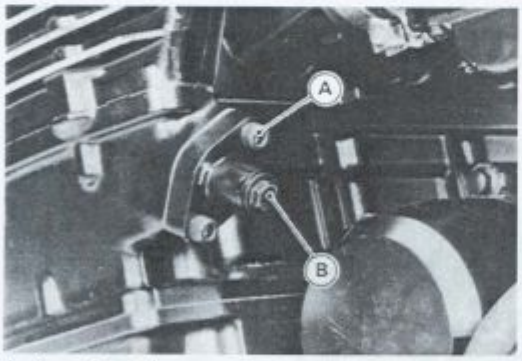

A. Mounting Bolt B. Cap Bolt

Chain Tensioner Installation

•Remove the cap bolt and O-ring.
•While compressing the push rod, turn it **clockwise** with a suitable screwdriver to put it into until the rod protrusion comes to about **10 mm** from the tensioner body as shown.

CAUTION

○Do not turn the rod counterclockwise at installation. This could detach the rod and the tensioner cannot be reinstalled.

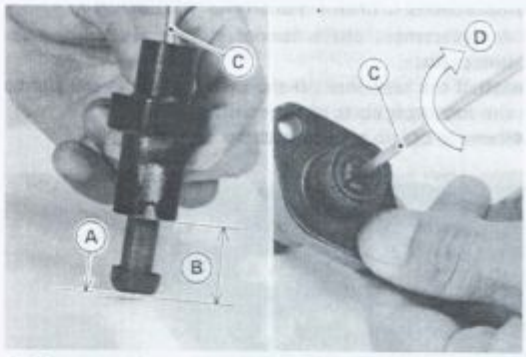

A. Compress the rod C. Screwdriver
B. About 10 mm D. Clockwise

•While holding the rod in position with the screwdriver install the tensioner on the cylinder block.
•While pushing the tensioner against the cylinder block as shown, remove the screwdriver.
•Tighten the mounting bolts finger tight to hold the tensioner.

A. Push the tensioner.

•Tighten the mounting bolts to the specification.
•Install the O-ring and tighten the cap bolt.

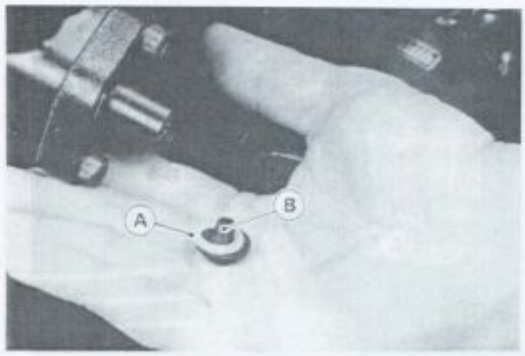

A. O-ring B. Cap Bolt

Replacement Chain Tensioner Installation

○A replacement chain tensioner from stock has a rod holder plate.

- Install the tensioner on the cylinder block, and tighten the mounting bolts to the specification.
- Remove the plate to release the push rod.

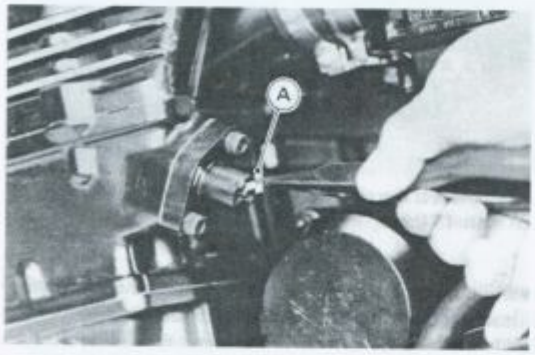

A. Rod Holder Plate

- Install the O-ring and tighten the cap bolt.

CAUTION

○**Do not pull the rod while the tensioner is removed. This could detach the rod and the tensioner cannot be reinstalled.**

Camshaft, Camshaft Chain, Rocker Shaft

Camshafts, Rocker Shafts Removal Note

- Remove the cam chain tensioner assembly before removing the camshafts.
- Remove the rocker shaft (small).
- Using a suitable bolt (8 P 1.25 x more than 18 mm long), pull the rocker shaft (long) out.

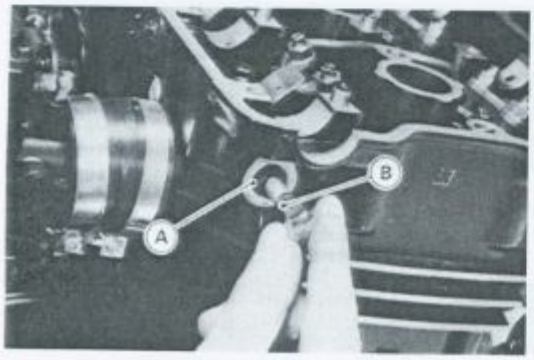

A. Rocker Shaft B. Bolt

CAUTION

○**The crankshaft may be turned, while the camshafts are removed, but always pull the chain taut while turning the crankshaft. This avoids kinking the chain on the lower (crankshaft) sprocket. A kinked chain could damage both the chain and the sprocket.**

Camshafts, Rocker Shafts Installation Notes

- Blow the rocker arm oil passage clean with compressed air and apply oil to the internal surface before installation.

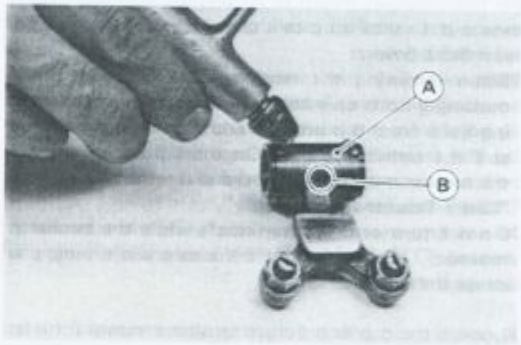

A. Rocker Arm B. Oil Passage

- Install the retainer spring on each rocker arm so that the spring is placed on the rocker arm right side at the installation.

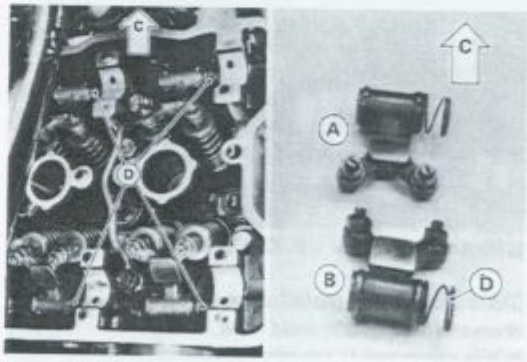

A. Exhaust Side
B. Inlet Side
C. Front
D. Retainer Spring

- Apply engine oil to the rocker shaft, insert the shaft running it through the cylinder head, the rocker arms and springs.
- Tighten the rocker shaft (small) to the specification (See Exploded Views).

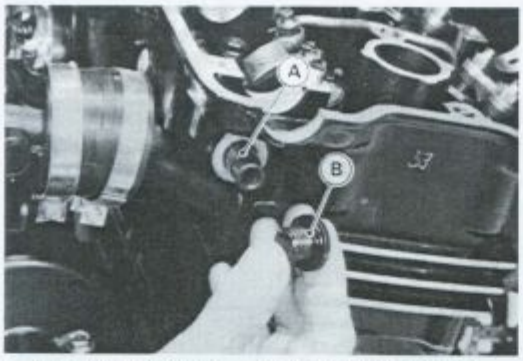

A. Rocker shaft (long) B. Rocker shaft (small)

- Tighten the head bolts to the specification, following the specified tightening sequence (See Cylinder Head Installation Note).
- Install the head oil pipes (See Head Oil Pipe Installation).
- Apply engine oil to all cam parts. If the camshaft(s) and/or cylinder head are replaced with new ones, apply a thin coat of a molybdenum disulfide engine assembly grease on the new cam part surfaces.

NOTE

○*The exhaust camshaft has an EX mark and the inlet camshaft has an IN mark. Be careful not to mix up these shafts.*

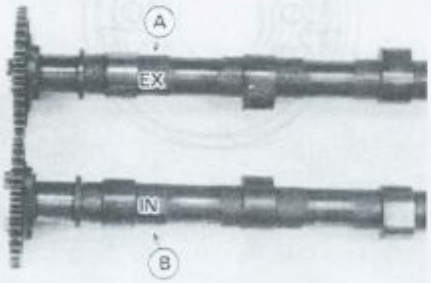

A. EX mark B. IN mark

- Apply engine oil to the camshaft bearing portion.
- Install the camshaft caps in the correct locations as shown in the figure below. Location numbers are marked on the cylinder head and each caps.

CAUTION

○**The camshaft caps are machined with the cylinder head. So, if a cap is installed in a wrong location, the camshaft may seize because of improper oil clearance in the bearings.**

Camshaft Cap Installation

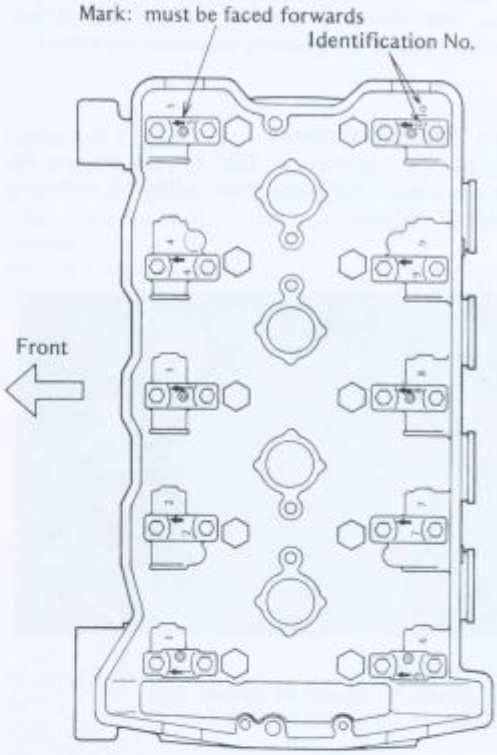

Camshaft Cap Bolt Tightening Sequence

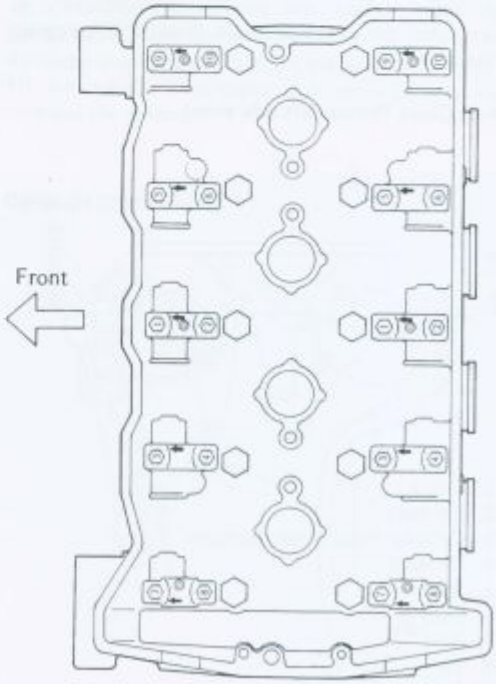

- First tighten down the two camshaft cap bolts (#1 and #2 bolts in the figure) evenly to seat the camshafts in place, then torque all bolts to the specification, following the specified tightening sequence.

Chain Timing Procedure

- Position the crankshaft at TDC for the #1 and #4 pistons, engage the cam chain with the camshaft sprockets as shown.

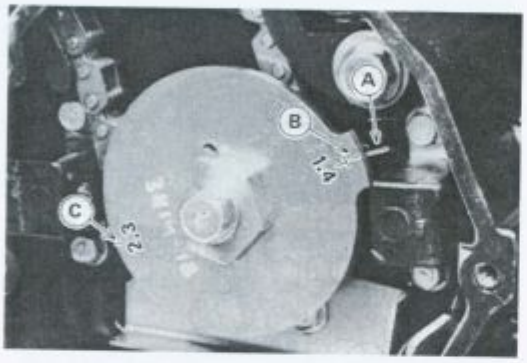

A. Timing Mark
B. TDC mark for #1 and #4 pistons
C. TDC mark for #2 and #3 pistons

- Pull the tension side (exhaust side) of the chain taut to install the chain.
  - The timing marks must be aligned with the cylinder head upper surface and positioned respectively as shown, after the camshaft chain slack is taken up by the tensioner.

Camshaft Chain Timing (left side view)

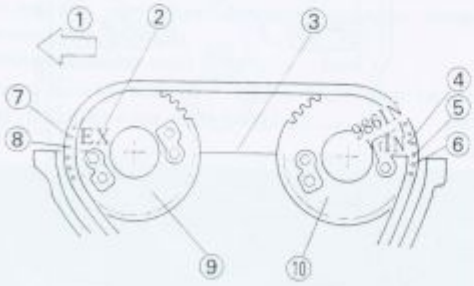

1. Front
2. EX Mark
3. Cylinder Head Upper Surface
4. IN Mark
5. 35th
6. 36th
7. 2 nd
8. 1st
9. Exhaust Camshaft
10. Inlet Camshaft

- Install the top chain guide and tighten the mounting bolts to the specification (See Exploded Views).

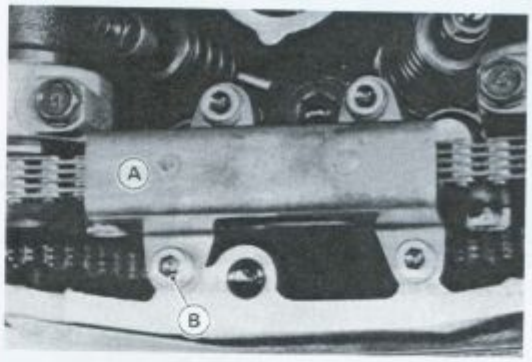

A. Top Chain Guide B. Mounting Bolt

Camshaft and Sprocket Assembly Note

- Since the inlet and exhaust camshaft sprockets are the same, they have a set of bolt holes for the exhaust camshaft and another for the intake. Install the sprockets as shown.

Bolt Holes in the Camshaft Sprocket

1. Bolt Holes for the Inlet and Exhaust Camshafts

- Install the sprockets so that the marked side faces outwards.
- Apply a locking agent to the camshaft sprocket bolts and tighten them to the specification (See Exploded Views).
- If a new camshaft is to be used, apply a thin coat of a molybdenum disulfide grease to the cam surfaces.

Camshaft Oil Clearance Inspection

The journal wear is measured using plastigage (press gauge), which is inserted into the clearance to be measured. The plastigage indicates the clearance by the amount it is compressed and widened when the parts are assembled.

•Cut strips of plastigage to journal width. Place a strip on each journal parallel to the camshaft with the camshaft installed in the correct position and so that the plastigage will be compressed between the journal and camshaft cap.

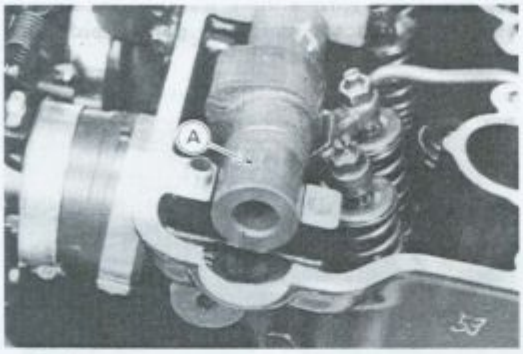

A. Plastigage Strip

•Install the camshaft caps, tightening the bolts in the correct sequence to the specified torque.

NOTE

○*Do not turn the camshaft when the plastigage is between the journal and camshaft cap.*

•Remove the camshaft caps again, and measure the plastigage width to determine the clearance between each journal and the camshft cap. Measure the widest portion of the plastigage.

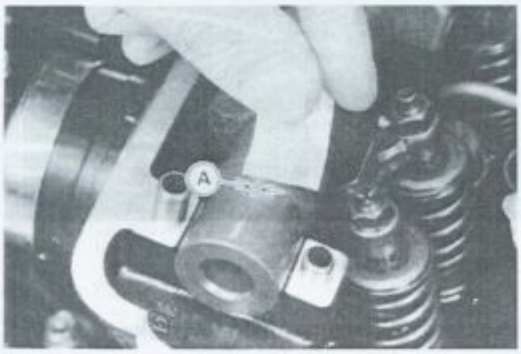

A. Plastigage Width

★If any clearance exceeds the service limit, replace the camshaft with a new one and measure the clearance again.
★If the clearance still remains out of the limit, replace the cylinder head unit.

Camshaft Bearing Oil Clearance

Standard	:	**0.078 – 0.121 mm**
Service limit	:	**0.21 mm**

Camshaft Chain Wear

•Hold the chain taut with a force of about 5 kg in some manner, and measure a 20-link length. Since the chain may wear unevenly, take measurements at several places.
★If any measurement exceeds the service limit, replace the chain.

Camshaft Chain 20-link Length

Standard	:	**158.8 – 159.2 mm**
Service limit	:	**161.5 mm**

Chain Length Measurement

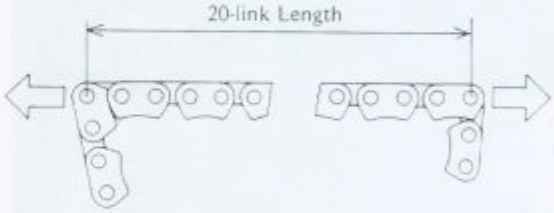

Camshaft Chain Guide Wear

•Visually inspect the rubber on the guides.
★If the rubber is damaged, cut, or is missing pieces, replace the guides.

Camshaft Chain Guides

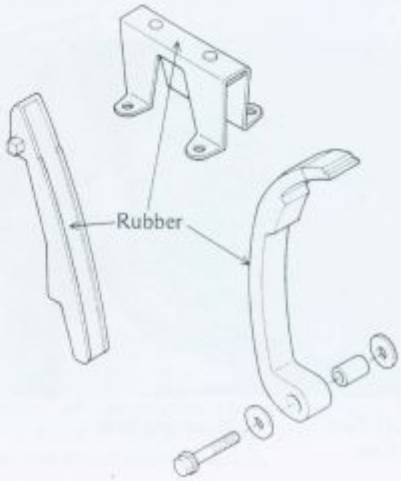

Oil Pipe

Oil Pipe Installation Note

- Before installation, flush out the oil pipes with a high flash-point solvent.

Head Oil Pipe Installation Note

- Install the white bolts on the exhaust side and the black bolts on the inlet side.
- Tighten the oil bolts to the specification (See Exploded Views).

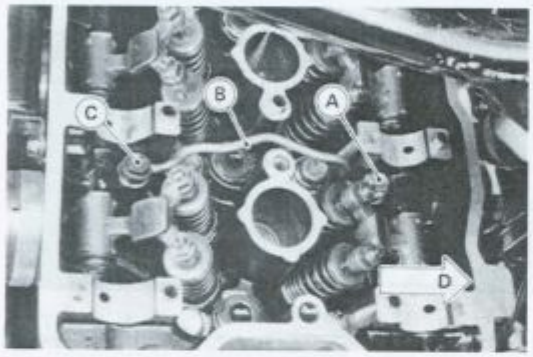

A. White Bolt
B. Head Oil Pipe
C. Black Bolt
D. Exhaust Side

Main Oil Pipe Removal Note

- Remove the radiator (see Radiator Removal in Cooling System) before removal of the main oil pipes.

Main Oil Pipe Installation Note

- Discard the used flat washers and install new washers on each side of the pipe fittings.
- Tighten the banjo bolts and mounting bolts to a snug fit, and tighten them to the specification (See Exploded Views).

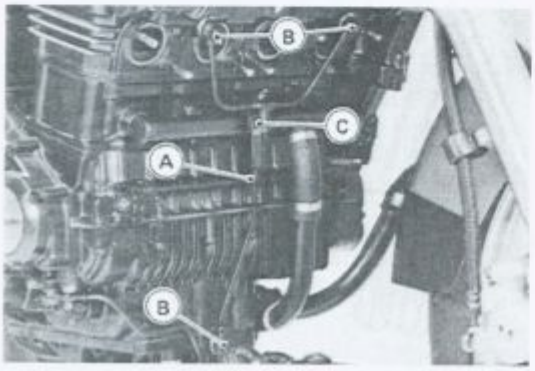

A. Main Oil Pipe
B. Banjo Bolt
C. Mounting Bolt

Cylinder Head

Compression Measurement

- Thoroughly warm up the engine so that engine oil between the piston and cylinder wall will help seal compression as it does during normal running.
- Stop the engine, remove the spark plugs and ignition coils, and attach compression gauge (special tool) firmly into the spark plug hole.

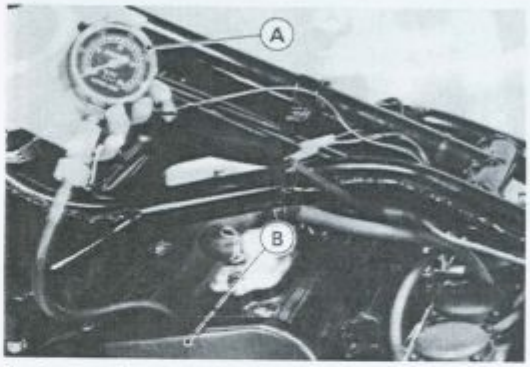

A. Compression Gauge: 57001-221
B. Adapter: 57001-1018

- Install the main harness ground lead using a suitable bolt.

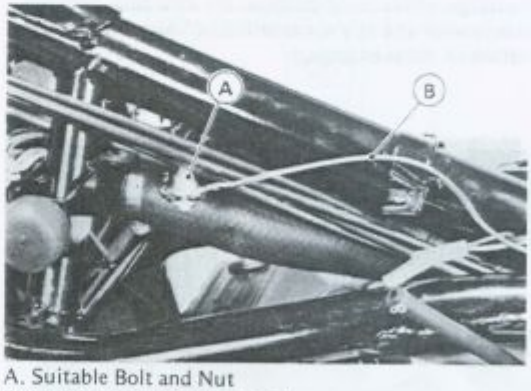

A. Suitable Bolt and Nut
B. Main Harness Ground Lead

- Using the starter motor, turn the engine over with the throttle fully open until the compression gauge stops rising; the compression is the highest reading obtainable.
- Repeat the measurement for the other cylinder.

Cylinder Compression (Usable Range)

885 – 1,350 kPa @300 r/min (rpm)
(0 – 13.8 kg/cm^2, 128 – 196 psi)

★If cylinder compression is higher than the standard value, check the following:

1. Carbon build-up on the piston head and cylinder head. – clean off any carbon on the piston head and cylinder head.
2. Cylinder head gasket, cylinder base gasket – use only the proper gaskets for the cylinder head and base. The use of gaskets of the incorrect thickness will change the compression.
3. Valve stem oil seals and piston rings – rapid carbon accumulation in the combustion chambers may be caused by damaged valve stem oil seals and/or damaged piston oil rings. This may be indicated by white exhaust smoke.

★If cylinder compression is lower than the service limit, check the following:

1. Gas leakage around the cylinder head – replace the damaged gasket and check the cylinder head for warp.
2. Condition of the valve seating.
3. Valve clearance – if a valve requires an unusually adjustment to obtain proper clearance, the valve may be bend, and not seating completely.
4. Piston/cylinder clearance, piston seizure.
5. Piston ring, piston ring groove.

Cylinder Head Removal Notes

- Remove the radiator with its bracket (see Radiator Removal in Cooling System).
- Remove the baffle plate.

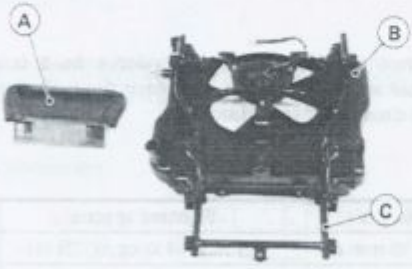

A. Baffler Plate
B. Radiator Bracket
C. Radiator

- Remove the following parts.
  Cylinder Head Cover (see Cylinder Head Cover Removal)
  Cam Chain Tensioner (see Chain Tensioner Removal)
  Camshaft

- Remove the exhaust pipes (see Muffler Removal).

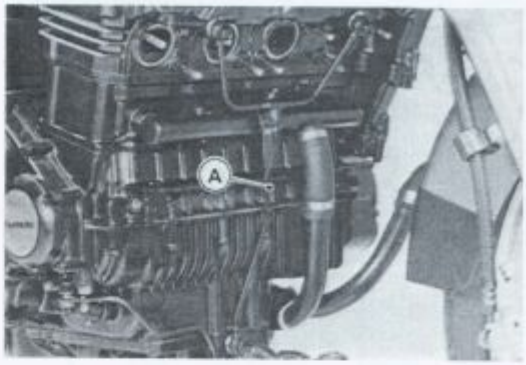

A. Main Oil Pipe

- Remove the cylinder head bolt and the cylinder bolts (6 mm) first, then remove the cylinder head bolts. This prevents excessive stress on the small bolts.

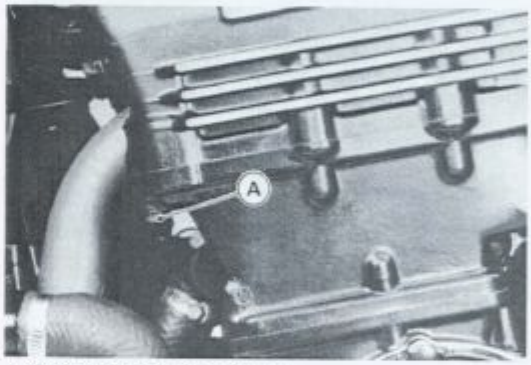

A. Cylinder Head Bolt (6 mm)

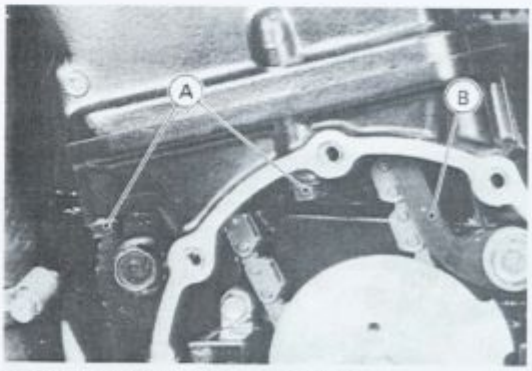

A. Cylinder Bolt (6 mm) C. Plate
B. Chain Guide (Mounting Bolt and Collar)

- At removal of the cylinder head mounting bolts, use a jack or stand so that the engine unit is stable during removal and installation operation.

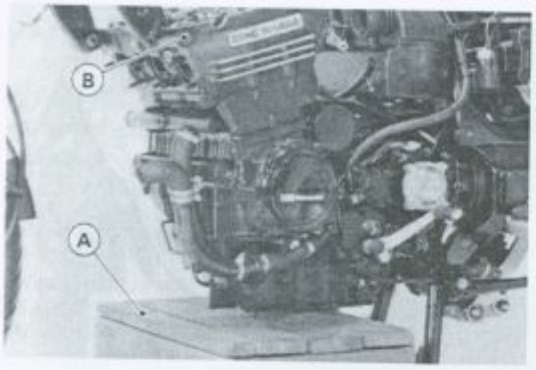

A. Stand
B. Cylinder Head Mounting Bolt

•Tap the portions as shown with a mallet to remove the cylinder head.

A. Mallet

Cylinder Head Installation Notes

•Before cylinder head installation, install the chain and the chain guides.

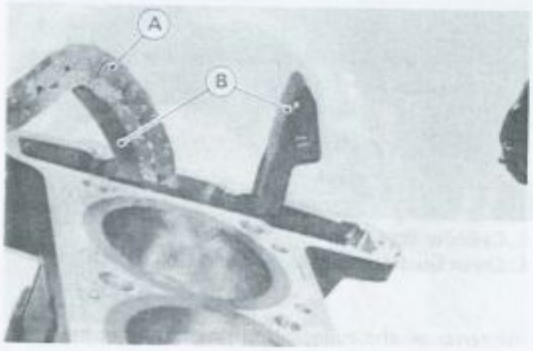

A. Chain B. Chain Guide

•Insert the 2.0 mm thick shim into the gap between the left mounting of the cylinder head and the frame bracket.

★If the 2.0 mm thick shim can not be inserted in the gap, use the thinner one: 1.2 mm thick shim. Also, if the 1.2 mm thick shim can not be inserted in, the shim adjustment is not necessary for that model.

Shim Adjustment **illust**

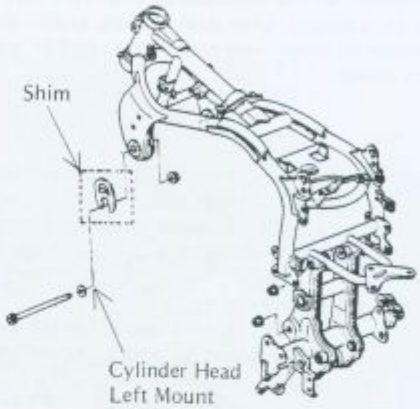

NOTE

○*Two sizes of shims are available: 2.0 mm and 1.2 mm thickness.*

•When the cylinder head, cylinder head bolt and its washer are all new parts, tighten the cylinder head bolt to the torque specified below.

Bolt size	Tightening torque
10 mm dia.	39 N-m (4.0 kg-m, 29 ft-lb)
11 mm dia.	51 N-m (5.2 kg-m, 38 ft-lb)

•When any one of the cylinder head, cylinder head bolt and its washer is reused, tighten the cylinder head bolt to the torque specified below.

Bolt size	Tightening torque
10 mm dia.	36 N-m (3.7 kg-m, 27 ft-lb)
11 mm dia.	48 N-m (4.9 kg-m, 35 ft-lb)

Location of Cylinder Head Bolts **illust**

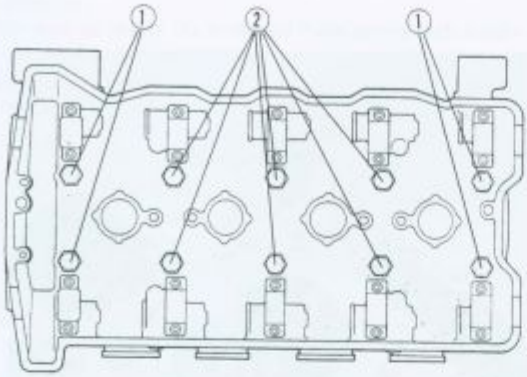

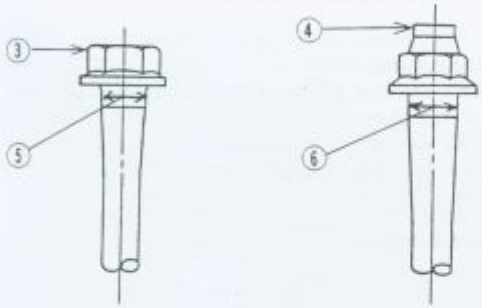

1. 10 mm Dia. Bolt
2. 11 mm Dia. Bolt
3. Flat
4. Protruded
5. 10 mm
6. 11 mm

○Apply a molybdenum disulfide grease to both upper and lower sides of the washer.

Washer Lubrication

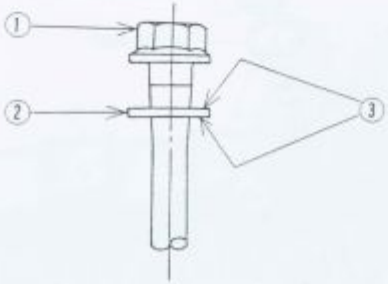

1. Cylinder Head Bolt
2. Washer
3. Apply a molybdenum disulfide grease

- The camshaft caps are machined with the cylinder head so if a new cylinder head is installed, use the caps that are supplied with the new head.
- Torque the cylinder head bolts following the tightening sequence. Torque them first to about one half of the specification and then torque them to the specification as shown.

Cylinder Head Bolt Tightening Sequence

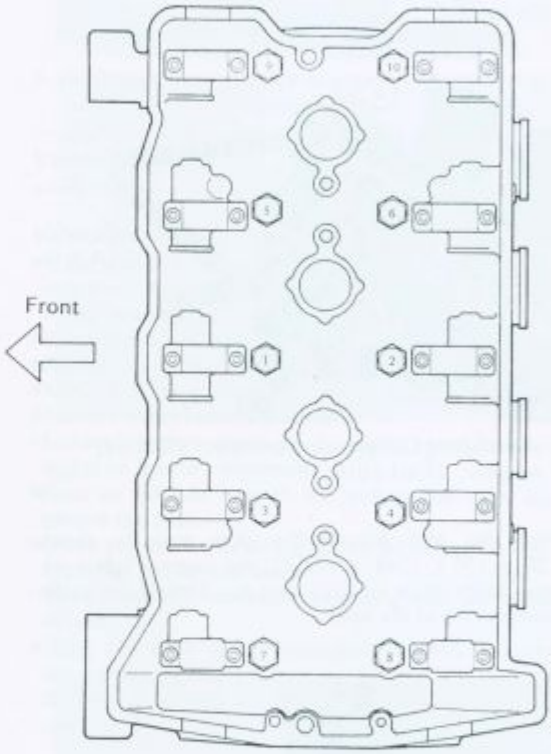

- Tighten the cylinder bolts to the specification.

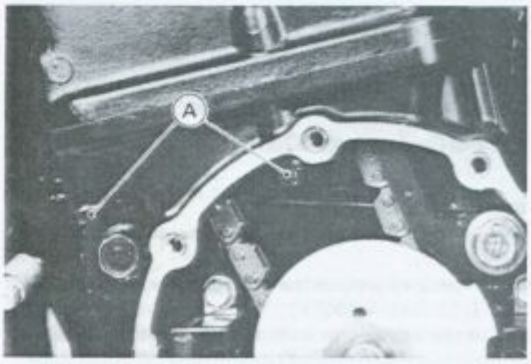

A. Cylinder Bolt

- Install the head oil pipes (See Head Oil Pipe Installation).
- Install the cam shafts and camshaft caps (See Camshaft Installation Note).
- Tighten the cylinder head mounting bolts to the specification (See Exploded Views).

Cylinder Head Disassembly and Assembly (Valve Mechanism Removal and Installation)

- Use valve spring compressor assembly (special tool) to press down the valve spring retainer, and remove the split keepers.

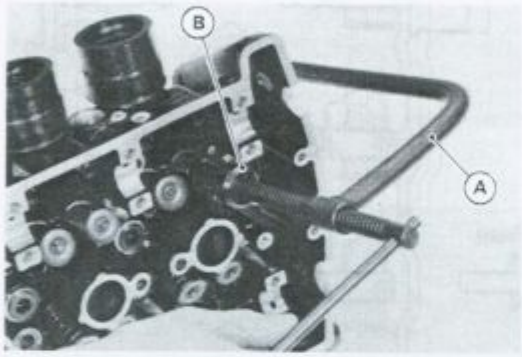

A. Valve Spring Compressor Assembly: 57001-241
B. Adapter: 57001-1019

- Heat the area around the valve guide to about 120 – 150°C (248 – 302°F), and hammer lightly on valve guide arbor (special tool) to remove the guide from the top of the head.

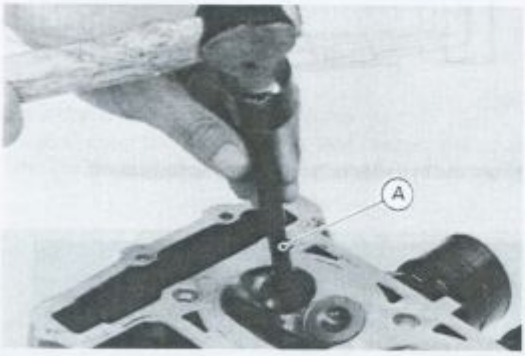

A. Valve Guide Arbor: 57001-1021

- Valve Guide Installation:
  - ○Apply oil to the valve guide outer surface before installation.
  - ○Heat the area around the valve guide hole to about 120 – 150°C (248 – 302°F).
  - ○Drive the valve guide in from the top of the head using the valve guide arbor. The circlip stops the guide from going in too far.
  - ○Ream the valve guide with a valve guide reamer (special tool) even if the old guide is re-used.

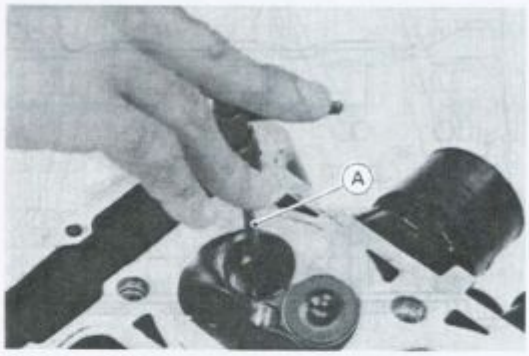

A. Valve Guide Reamer: 57001-1079

- Valve Installation.
  - ○Check to see that the valve moves smoothly up and down in the guide.
  - ○Check to see that the valve seats properly in the valve seat. If it does not, repair the valve seat.

Valve and Springs

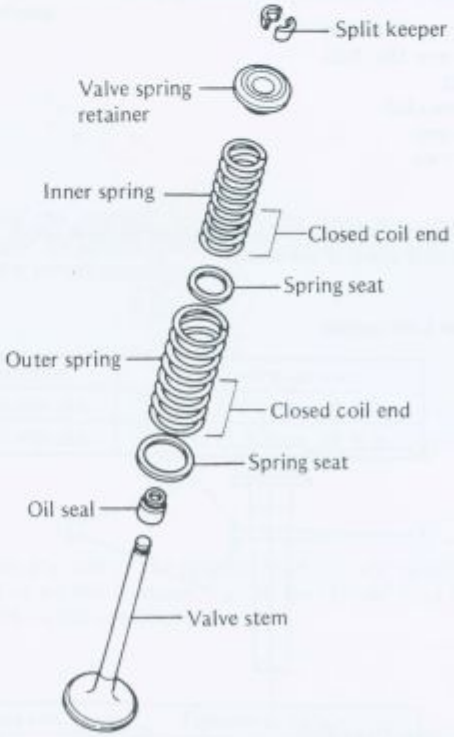

○Apply a thin coat of molybdenum disulfide engine assembly grease to the valve stem before valve installation.
○Be sure to install the inner and outer spring seats under the inner and outer springs.
○Install the springs so that the closed coil end is facing toward the valve seat (downwards).

Cylinder Head Warp

●Lay a straightedge across the lower surface of the head at several different points, and measure warp by inserting a thickness gauge between the straightedge and the head.
★If warp exceeds the service limit, repair the mating surface. Replace the cylinder head if the mating surface is badly damaged.

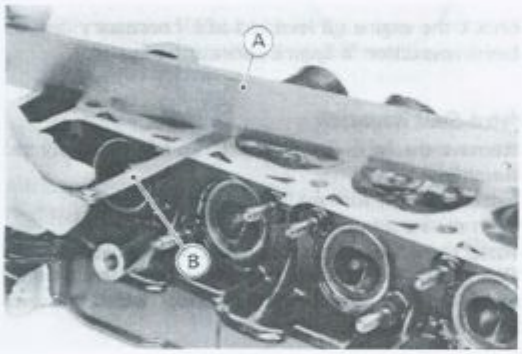

A. Straightedge B. Thickness Gauge

Cylinder Head Warp

Service Limit: 0.05 mm

Cylinder Head Cleaning

●Before installation, blow the oil passages clean with compressed air.

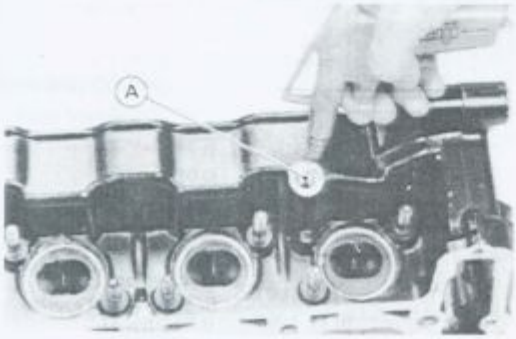

A. Oil Passage

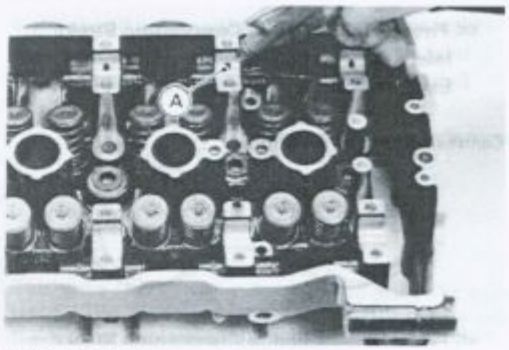

A. Oil Passage

Valves

Valve Clearance Inspection

●If the engine is hot, wait until the engine cools. Valve clearance must be checked when the engine is cold (room temperature).
●Remove the fuel tank (See Fuel Tank Removal).
●Remove the ignition coils.
●Remove the air suction valve and air hoses (US model).
●Remove the cylinder head cover.
○Situate the motorcycle on its center stand to make engine oil loss to a minimum.
●Place an oil pan beneath the pickup coil cover and remove the cover.
●Check the valve clearance when the pistons are at TDC, according to the table below.
○The pistons are numbered beginning with the engine left side.
●Using a wrench on the crankshaft rotation nut, turn the crankshaft counterclockwise until a TDC mark on the rotor is aligned with the timing mark on the crankcase.

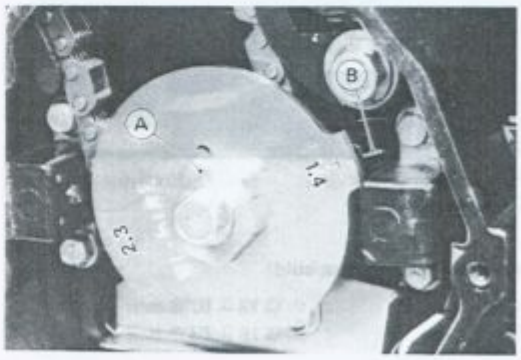

A. Rotation Nut B. TDC Mark

○Measure the valve clearance for the valves whose cam lobe is pointing away from the rocker arm.
●Each piston has two inlet and two exhaust valves. Measure both inlet or both exhaust valves at the same time.

Valve Clearance Measuring Position

#4 Piston TDC at End of Compression Stroke →
Inlet valve clearance of #2 and #4 pistons, and
Exhaust valve clearance of #3 and #4 pistons

Camshaft Sprocket Position

#1 Piston TDC at End of Compression Stroke →
Inlet valve clearance of #1 and #3 pistons, and
Exhaust valve clearance of #1 and #2 pistons

NOTE

○*Check the valve clearance using this method only. Checking the clearance at any other cam position may result in improper valve clearance.*

•Measure the clearance of each valve by inserting a thickness gauge between the adjusting screw and the valve stem.

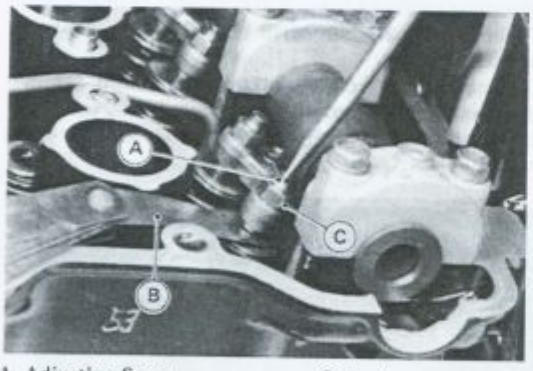

A. Adjusting Screw
B. Thickness Gauge
C. Locknut

Valve Clearance (when cold)

Inlet	**: 0.13 – 0.18 mm**
Exhaust	**: 0.18 – 0.23 mm**

Valve Clearance Adjustment

★If the valve clearance is incorrect, loosen the locknut and turn the adjusting screw until the correct clearance is obtained.
•Tighten the locknut.
•Install the pickup coil cover and new gasket.

○Apply a non-permanent locking agent to the following bolts at installation.

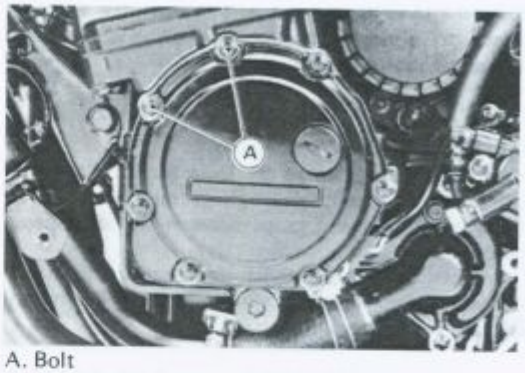

A. Bolt

○Check the engine oil level and add if necessary (See Oil Level Inspection in Engine Lubrication System).

Valve Seat Inspection

•Remove the valve (see Cylinder Head Disassembly and Assembly).
•Coat valve seat with machinist's dye.
•Push the valve into the guide.
•Rotate the valve against the seat with a lapping tool.
•Pull the valve out, and check the seating pattern on the valve head. It must be the correct width and even all the way around.

Valve Seating Surface Width

Inlet	**: 0.5 – 1.0 mm**
Exhaust	**: 0.5 – 1.0 mm**

NOTE

○*The valve stem and guide must be in good condition or this check will not be valid.*

★If the valve seating pattern is not correct, repair the seat (see Valve Seat Repair).

Valve Seating Area Dimensions

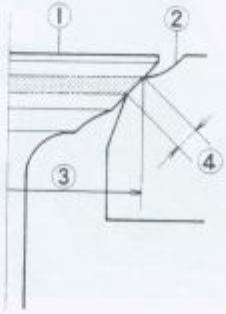

1. Valve
2. Valve Seat
3. Seating Area Outside diameter
4. Seating Area Width

Valve Seating Pattern

Good Too Wide

Too Narrow Uneven

- Measure the outside diameter of the seating pattern on the valve seat.
- *If the outside diameter of the valve seating pattern is too large or too small, repair the seat (see Valve Seat Repair).

Valve Seating Surface Outside Diameter

Inlet :	28.3 – 28.5 mm
Exhaust :	24.0 – 24.2 mm

Valve Seat Repair

- Use the following procedures and tools to repair the valve seat.

Valve Seat Cutters

Inlet Valves

45° – φ30.0	57001-1187
32° – φ30.0	57001-1120
60° – φ30.0	57001-1123

Exhaust Valves

45° – φ27.5	57001-1114
32° – φ28.0	57001-1119
60° – φ30.0	57001-1123

Holder and Bar

Holder – φ5.5	57001-1125
Bar	57001-1128

Seat Cutter Operating Care:

1. This valve seat cutter is developed to grind the valve seat for repair. Therefore the cutter must not be used for other purposes than seat repair.
2. Do not drop or shock the valve seat cutter, or the diamond particles may fall off.
3. Do not fail to apply engine oil to the valve seat cutter before grinding the seat surface. Also wash off ground particles sticking to the cutter with washing oil.

NOTE

○*Do not use a wire brush to remove the metal particles from the cutter. It will take off the diamond particles.*

4. Setting the valve seat cutter holder in position, operate the cutter in one hand. Do not apply too much force to the diamond portion.

NOTE

○*Prior to grinding, apply engine oil to the cutter and during the operation, wash off any ground particles sticking to the cutter with washing oil.*

Valve Seat Cutter

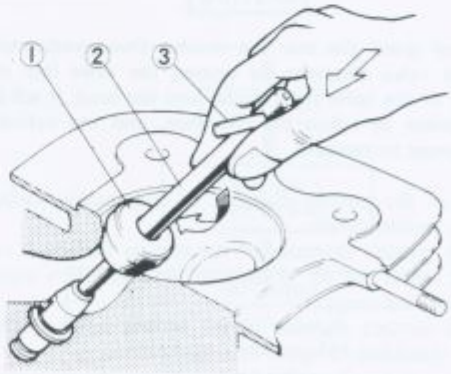

1. Cutter
2. Cutter Holder
3. Bar

5. After use, wash it with washing oil and apply thin layer of engine oil before storing.

Marks Stamped on the Cutter:

The marks stamped on the back of the cutter represent the following.

①	Cutter number, selected from ① to ⑫
45°	Cutter angle
24.5φ	Outer diameter of cutter
KS00	Manufactured lot number

Cutter

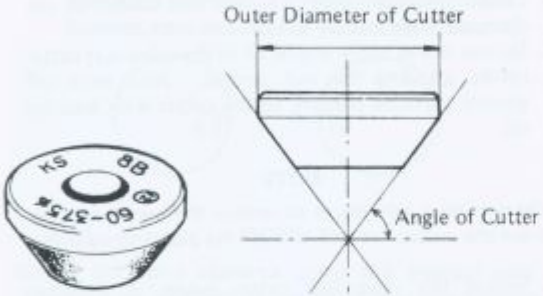

Operating Procedures:

- ●Clean the seat area carefully.
- ●Coat the seat with machinist's dye.
- ●Fit a 45° cutter to the holder and slide it into the valve guide.
- ●Press down lightly on the handle and turn it right or left. Grind the seating surface only until it is smooth.

CAUTION

○**Do not grind the seat too much. Overgrinding will reduce valve clearance by sinking the valve into the head. If the valve sinks too far into the head, it will be impossible to adjust the clearance, and the cylinder head must be replaced.**

- ●Measure the outside diameter of the seating surface with a vernier caliper.
- ★If the outside diameter of the seating surface is too small, repeat the 45° grind until the diameter is within the specified range.
- ★If the outside diameter of the seating surface is too large, make the 32° grind described below.
- ★If the outside diameter of the seating surface is within the specified range, measure the seat width as described below.
- ●Grind the seat at a 32° angle until the seat O.D. is within the specified range.
- ○To make the 32° grind, fit a 32° cutter to the holder, and slide it into the valve guide.
- ○Turn the holder one turn at a time while pressing down very lightly. Check the seat after each turn.

CAUTION

○**The 32° cutter removes material very quickly. Check the seat outside diameter frequently to prevent overgrinding.**

Valve Seat Repair

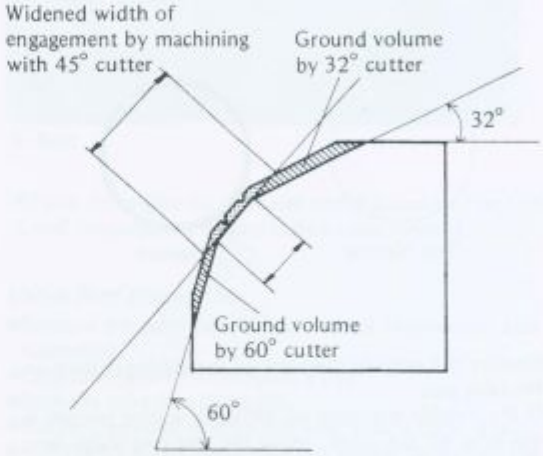

- ○After making the 32° grind, return to the seat O.D. measurement step above.
- ●To measure the seat width, use a vernier caliper to measure the width of the 45° angle portion of the seat at several places around the seat.
- ★If the seat width is too narrow, repeat the 45° grind until the seat is slightly too wide, and then return to the seat O.D. measurement step above.
- ★If the seat width is too wide, make the 60° grind described below.
- ★If the seat width is within the specified range, lap the valve to the seat as described below.
- ●Grind the seat at a 60° angle until the seat width is within the specified range.
- ○To make the 60° grind, fit a 60° cutter to the holder, and slide it into the valve guide.
- ○Turn the holder, while pressing down lightly.
- ○After making the 60° grind, return to the seat width measurement step above.
- ●Lap the valve to the seat, once the seat width and O.D. are within the ranges specified above.
- ○Put a little coarse grinding compound on the face of the valve in a number of places around the valve head.
- ○Spin the valve against the seat until the grinding compound produces a smooth, matched surface on both the seat and the valve.
- ○Repeat the process with a fine grinding compound.
- ●The seating area should be marked about in the middle of the valve face.

Valve Seat Repair

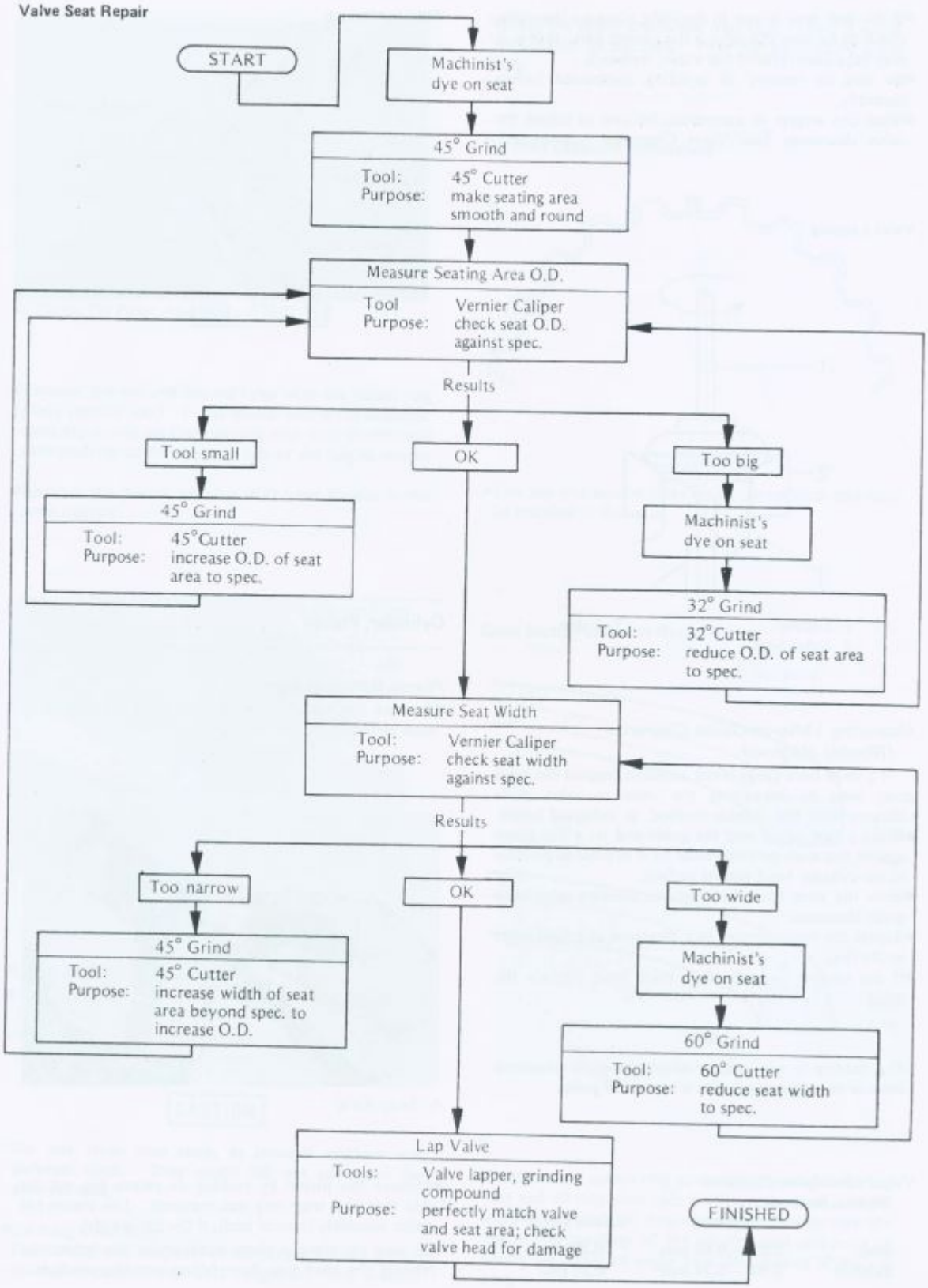

★If the seat area is not in the right place on the valve, check to be sure the valve is the correct part. If it is, it may have been refaced too much; replace it.
●Be sure to remove all grinding compound before assembly.
●When the engine is assembled, be sure to adjust the valve clearances (see Valve Clearance Adjustment).

Valve Lapping

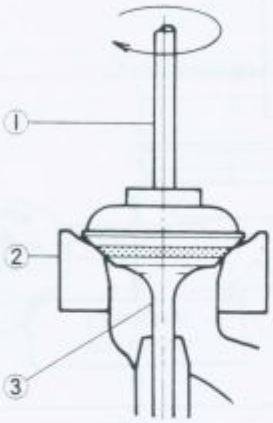

1. Lapper
2. Valve Seat
3. Valve

Measuring Valve-to-Guide Clearance (Wobble Method)

If a small bore gauge is not available, inspect the valve guide wear by measuring the valve to valve guide clearance with the wobble method, as indicated below.
●Insert a new valve into the guide and set a dial gauge against the stem perpendicular to it as close as possible to the cylinder head mating surface.
●Move the stem back and forth to measure valve/valve guide clearance.
●Repeat the measurement in a direction at a right angle to the first.
★If the reading exceeds the service limit, replace the guide.

NOTE

○*The reading is not actual valve/valve guide clearance because the measuring point is above the guide.*

Valve/Valve Guide Clearance (Wobble Method)

	Standard	Service Limit
Inlet	0.02 – 0.08 mm	0.22 mm
Exhaust	0.07 – 0.14 mm	0.27 mm

Wobble Method

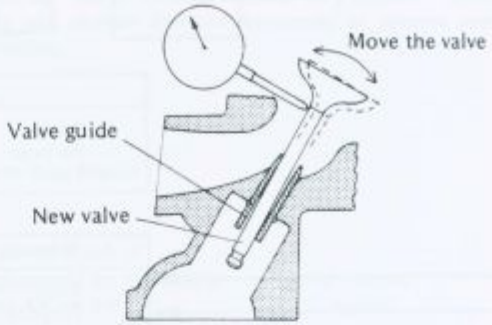

Cylinder, Piston

Piston Removal Notes

●Remove the piston pin snap rings from the outside of each piston.

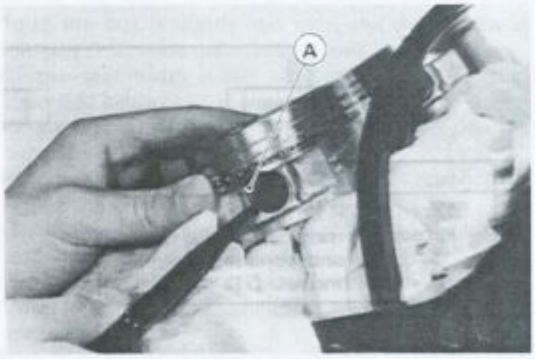

A. Snap Ring

●Remove the piston by pushing its piston pin out the side that the snap ring was removed. Use piston pin puller assembly (special tool), if the pin is tight.
○Be sure to place a clean cloth under the piston to prevent the snap ring from falling into the crankcase.

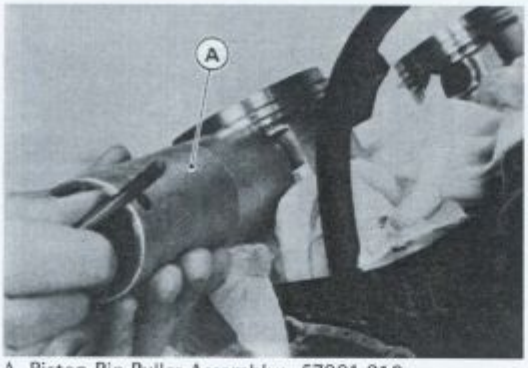

A. Piston Pin Puller Assembly: 57001-910

- Remove the top and second rings with the piston ring pliers (special tool). If the special tool is not available, carefully spread the ring opening with your thumbs and then push up on the opposite side of the ring to remove it.
- Remove the 3-piece oil ring with your thumbs in the same manner.

A. Piston Ring Pliers: 57001-115

Piston Installation Note

- The arrow on the top of the piston must point toward the front of the engine.
- When installing a piston pin snap ring, compress it only enough to install it and no more.

CAUTION

○**Do not reuse snap rings, as removal weakens and deforms them. They could fall out and score the cylinder wall.**

- Oil Ring Installation:

○First install the expander in the piston oil ring groove so that expander ends butt together, never overlap.

○Install the upper and lower steel rails. There is no UP or DOWN to the rails. They can be installed either way.

Oil Ring Expander Installation

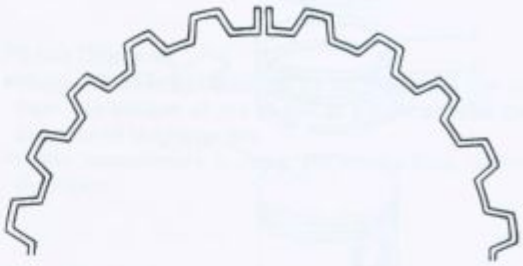

- The top and second rings are not symetrical and must be installed as shown.

Cross Section of Piston Rings

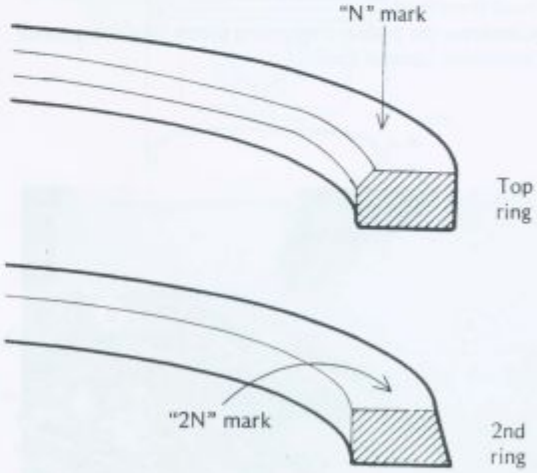

- Position each piston ring so that the opening in the top ring and oil ring steel rails are facing forwards, and the second ring and oil ring expander openings face the rear. The openings of the oil ring steel rails must be about 30 – 40° of angle from the opening of the top ring.

Piston Ring Openings
: Viewed from Front

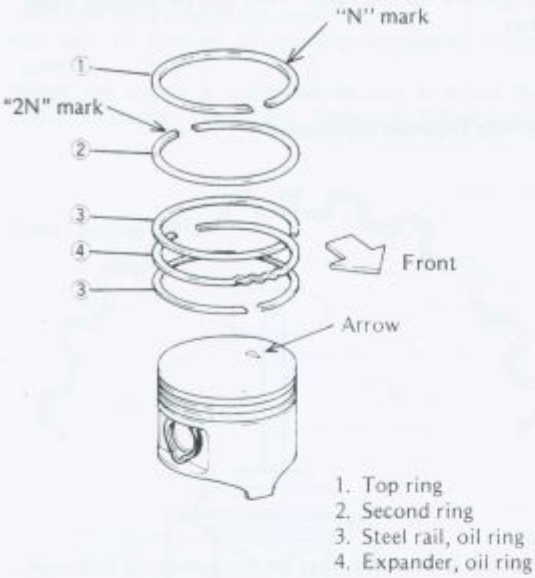

Cylinder Block Installation Notes

- Apply a engine oil to the cylinder bores, and apply a thin coat of a molybdenum disulfide grease to the piston skirt.
- Slip piston bases (special tool) under the pistons to hold them level.
- Compress the piston rings using piston ring compressor assemblies (special tool).

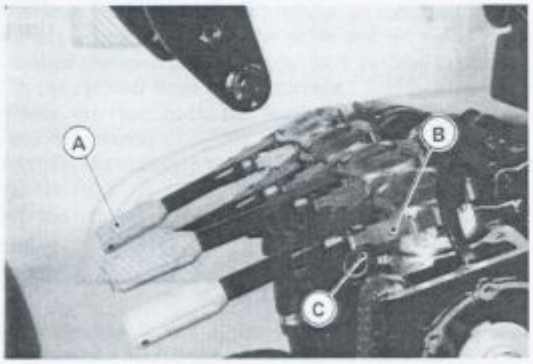

A. Piston Ring Compressor Assembly: 57001-1094
B. Use belt (ϕ50 – ϕ67).
C. Piston Holder: 57001-1030

- Torque the cylinder bolt after the cylinder head bolts tightening.

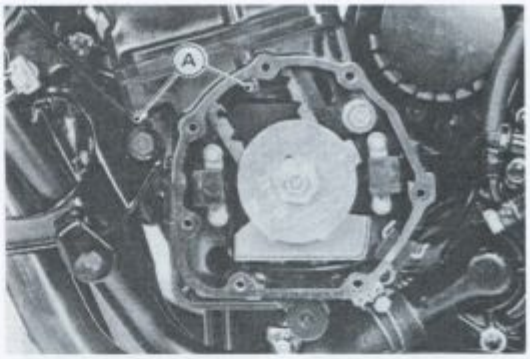

A. Cylinder Bolt

Piston Ring, Piston Ring Groove Wear

- Check for uneven groove wear by inspecting the ring seating.
- ★The rings should fit perfectly parallel to the groove surfaces. If not, the piston must be replaced.
- With the piston rings in their grooves, make several measurements with a thickness gauge to determine piston ring/groove clearance.

Piston Ring Groove Clearance

	Standard	Service Limit
Top	0.03 – 0.07 mm	0.17 mm
Second	0.02 – 0.06 mm	0.16 mm

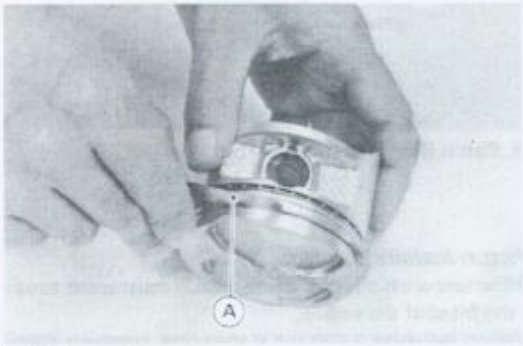

A. Thickness Gauge

Piston Ring End Gap

- Place the piston ring inside the cylinder, using the piston to locate the ring squarely in place. Set it close to the bottom of the cylinder, where cylinder wear is low.
- Measure the gap between the ends of the ring with a thickness gauge.

Piston Ring End Gap

	Standard	Service Limit
Top	0.2 – 0.35 mm	0.7 mm
Second	0.2 – 0.35 mm	0.7 mm
Oil	0.2 – 0.7 mm	1.0 mm

End Gap Measurement

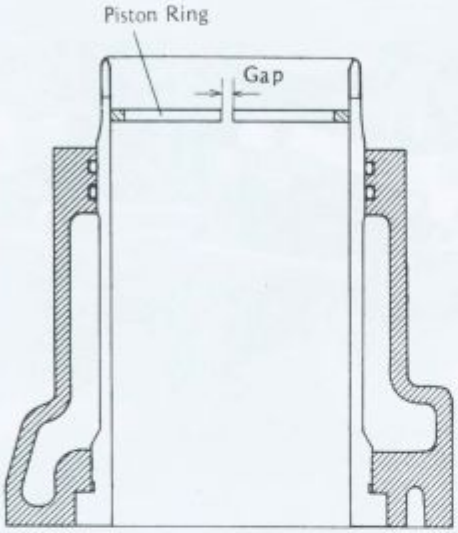

Cylinder Inside Diameter

- Since there is a difference in cylinder wear in different directions, take a side-to-side and a front-to-back measurement at each of the 3 locations (total of 6 measurements) shown in the figure.
- ★If any of the cylinder inside diameter measurements exceeds the service limit, the cylinder will have to be bored to oversize and then honed.

Cylinder Inside Diameter Measurement

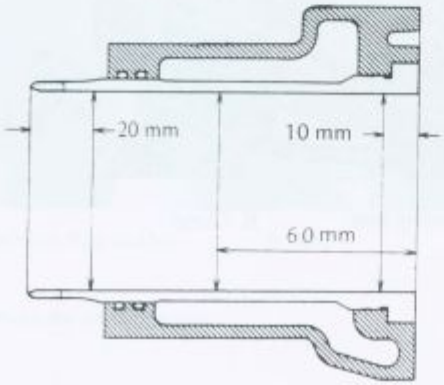

Cylinder Inside Diameter

Standard: **73.994 – 74.006 mm and less than 0.01 mm difference between any two measurements**

Service Limit: **74.11 mm, or more than 0.05 mm difference between any two measurement**

Piston Diameter

- Measure the outside diameter of each piston 5 mm up from the bottom of the piston at a right angle to the direction of the piston pin.
- ★If the measurement is under the service limit, replace the piston.

Piston Diameter

Standard:	**73.935 – 73.964 mm**
Service Limit:	**73.79 mm**

Piston Diameter Measurement

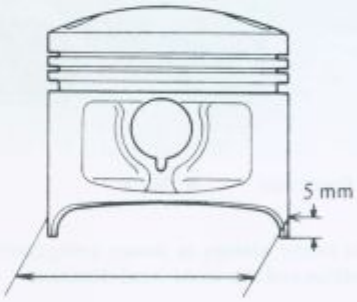

Boring, Honing

When boring and honing a cylinder, note the following:

- ○There is one size of oversize piston available. Oversize piston requires oversize rings.
  Oversize Piston and Rings
  0.5 mm – First Oversize
- ○Before boring a cylinder, first measure the exact diameter of the oversize piston, and then, according to the standard clearance in the Service Data Section, determine the rebore diameter. However, if the amount of boring necessary would make the inside diameter greater than **0.5 mm** oversize, the cylinder block must be replaced.
- ○Cylinder inside diameter must not vary more than **0.01 mm** at any point.
- ○Be wary of measurements taken immediately after boring since the heat affects cylinder diameter.

○In the case of a rebored cylinder and oversize piston, the service limit for the cylinder is the diameter that the cylinder was bored to plus **0.1 mm** and the service limit for the piston is the oversize piston original diameter minus **0.15 mm**. If the exact figure for the rebored diameter is unknown, it can be roughly determined by measuring the diameter at the base of the cylinder.
○Never separate the liner from the cylinder, because the top surface of cylinder and liner is machined at the factory as an assembly.

Carburetor Holder

Carburetor Holder Installation

- Install the carburetor holders so that the projections face upwards and align with the cylinder head marks.

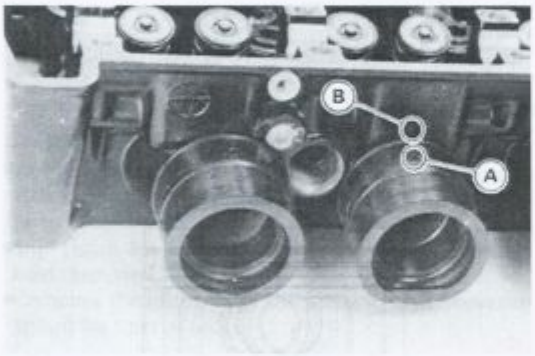

A. Holder Projection B. Mark

- Install the holder clamps as shown being careful of the screw position and the screw head direction.

WARNING

○**Install the clamp screws horizontal. Or, the screws could come in contact with the vacuum adjusting screws, resulting in an unsafe riding condition.**

Holder Clamp Installation

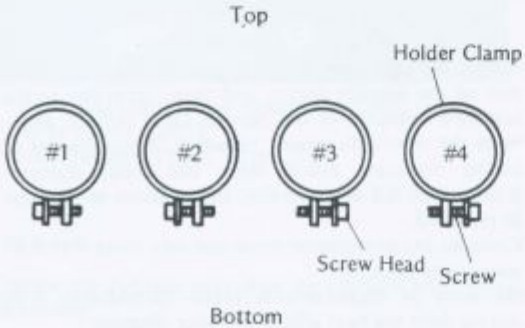

Muffler

Muffler Removal

- Remove the radiator (see Radiator Removal in the Coolant System chapter).
- Remove the trunks.
- Unscrew the muffler cover clamp screws and mounting screws from both sides. And remove the muffler covers.

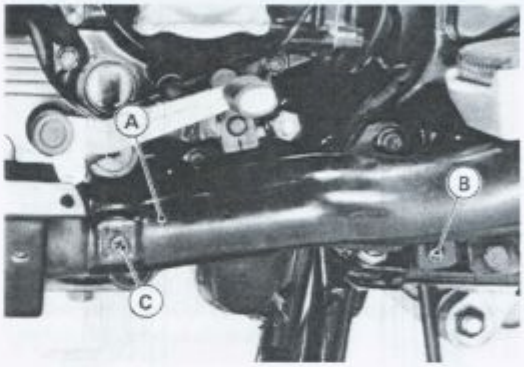

A. Muffler Cover C. Mounting Screw
B. Clamp Screw

- Loosen the clamps on both sides.
- Unscrew the mounting bolts and pull the mufflers out of the exhaust pipes.

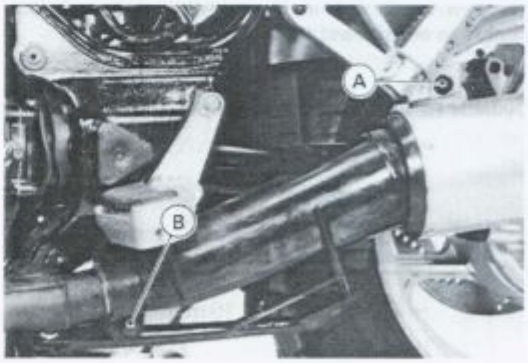

A. Mounting Bolt B. Clamp

•Remove the bracket from the engine bottom.

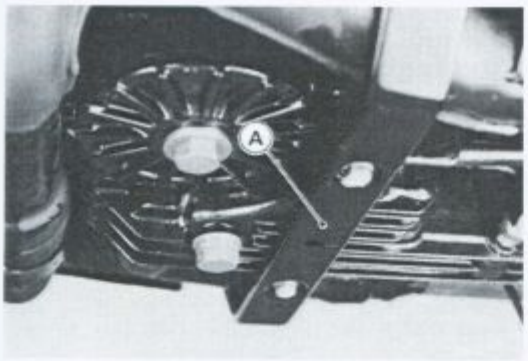

A. Bracket

•Remove the exhaust pipe mounting bolts on both sides.

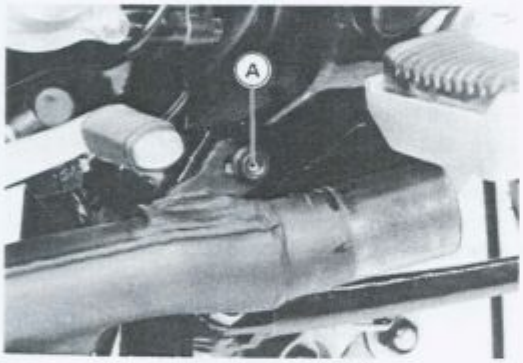

A. Exhaust Pipe Mounting Bolt

•Remove the exhaust pipe holders and nuts.

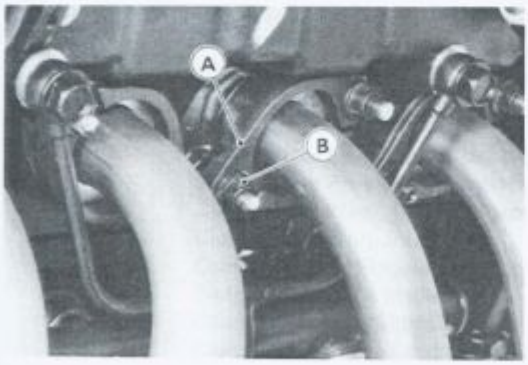

A. Exhaust Pipe Holder B. Nut

•Remove the exhaust pipes.

Meter Installation Notes

•Tighten the muffler mounting bolts, nuts, and clamp bolts in the order and method indicated below.

○First, tighten all the bolts and nuts to a snug fit.

○Apply a non permanent locking agent to the exhaust pipe mounting bolts threads.

○Secondly, tighten the exhaust pipe holder nuts evenly to avoid exhaust leaks.

○Lastly, tighten the rest of the mounting bolts and clamp bolts securely.

•Thoroughly warm up the engine, wait until the engine cools down, and retighten all the clamp bolts.

Clutch

Table of Contents

Exploded View

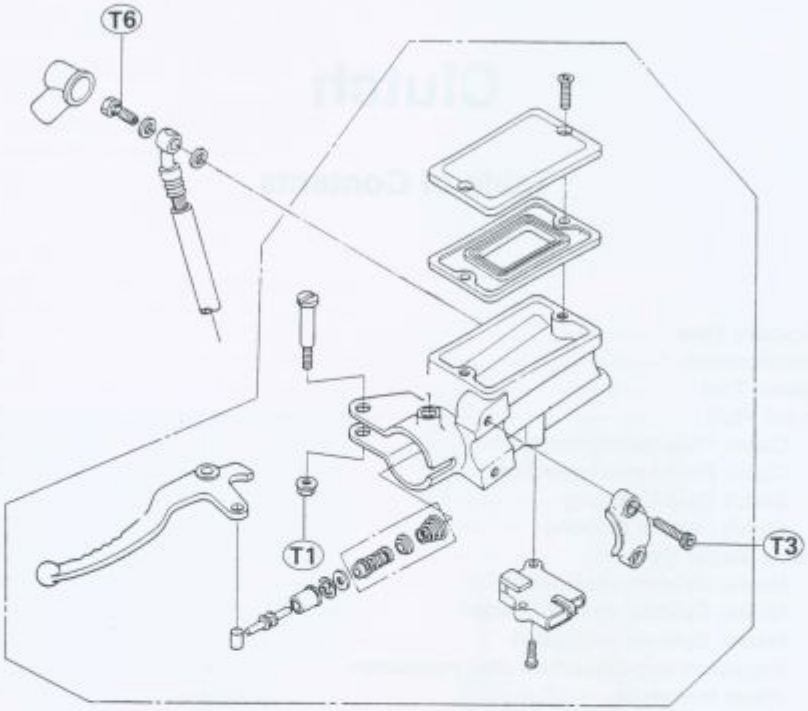

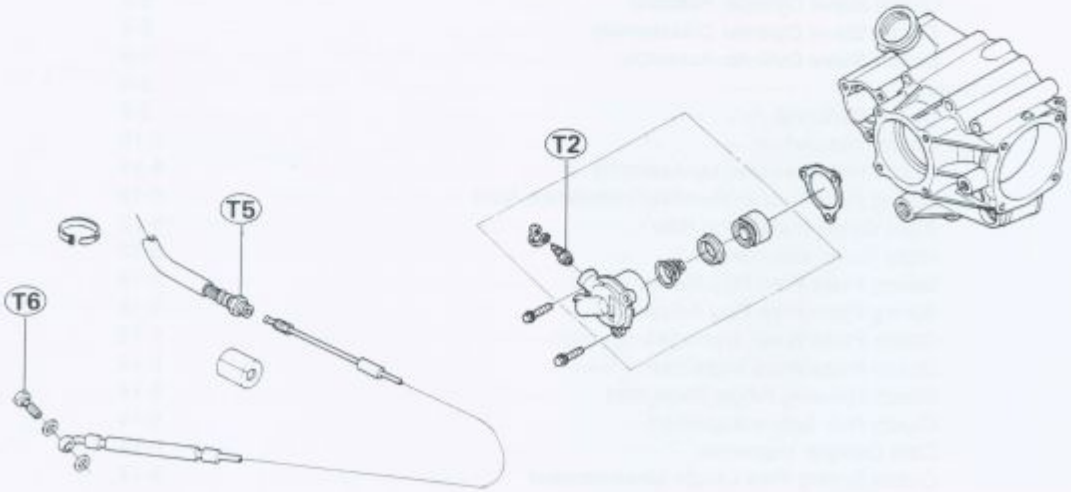

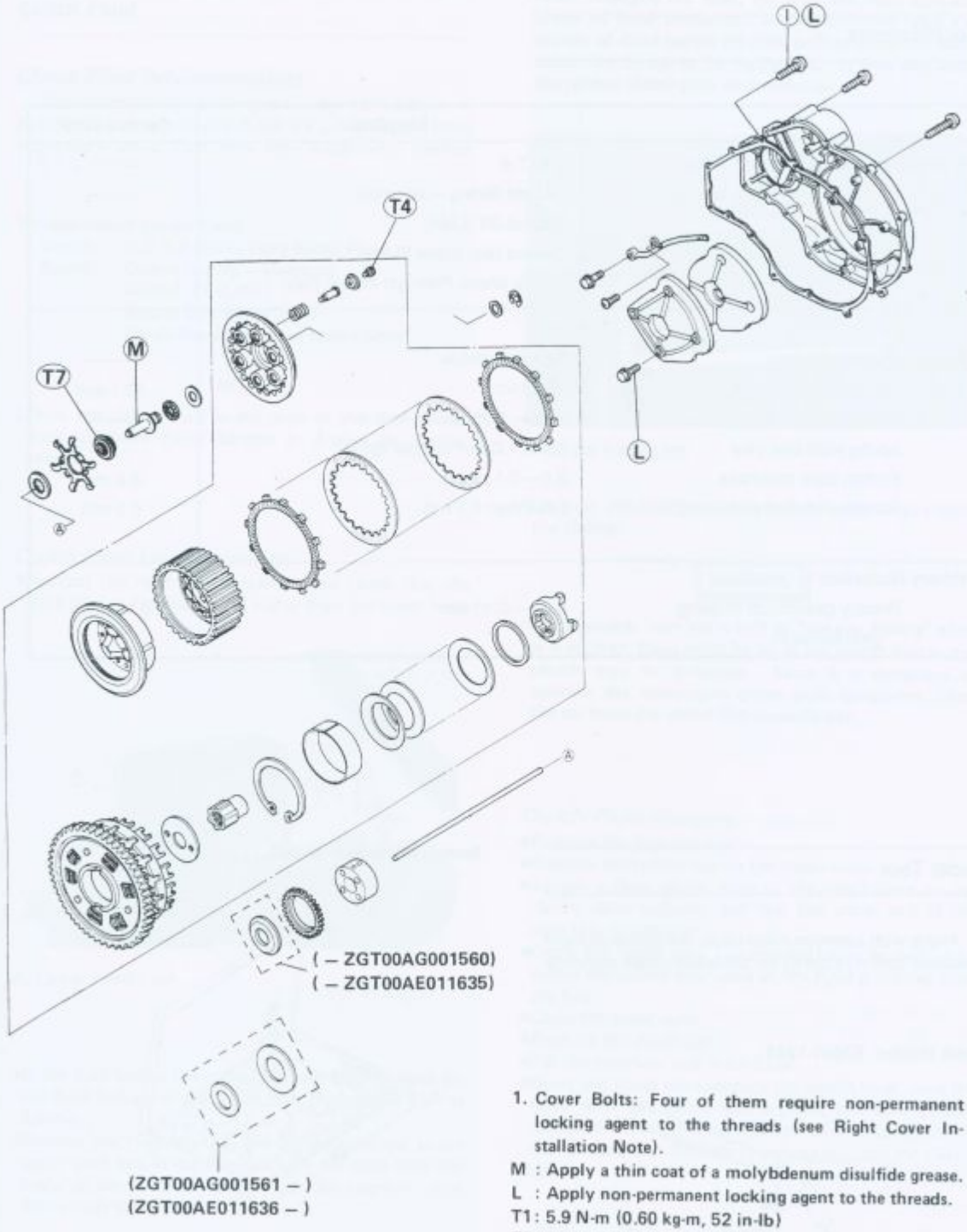

1. Cover Bolts: Four of them require non-permanent locking agent to the threads (see Right Cover Installation Note).

M : Apply a thin coat of a molybdenum disulfide grease.
L : Apply non-permanent locking agent to the threads.
T1: 5.9 N-m (0.60 kg-m, 52 in-lb)
T2: 7.8 N-m (0.80 kg-m, 69 in-lb)
T3: 8.8 N-m (0.90 kg-m, 78 in-lb)
T4: 11 N-m (1.1 kg-m, 95 in-lb)
T5: 18 N-m (1.8 kg-m, 13.0 ft-lb)
T6: 29 N-m (3.0 kg-m, 22 ft-lb)
T7: 130 N-m (13.5 kg-m, 98 ft-lb)

Specifications

Item	Standard	Service Limit
Recommended Clutch Fluid: Grade	D.O.T.4	— — —
Brand	Castrol Girling – Universal Castrol GT (LMA) Castrol Disk Brake Fluid Check Shock Premium Heavy Duty	— — —
Clutch : Clutch lever play	Non-adjustable	— — —
Clutch spring free length	33.2 mm	32.1 mm
Spring plate/pusher clearance	0.05 – 0.25 mm	— — —
Spring plate free play	0.4 – 1.0 mm (usable range)	— — —
Friction plate thickness	2.9 – 3.1 mm	2.8 mm
Friction and steel plate warp	Less than 0.2 mm	0.3 mm
Primary Reduction :		
Primary gear/clutch housing gear backlash	0.03 – 0.10 mm	0.14 mm

Special Tool

Along with common hand tools, the following more specialized tool is required for complete clutch servicing.

Clutch Holder: 57001-1243

Bearing Driver Set: 57001-1129

Clutch Fluid

Clutch Fluid Recommendation

Recommended fluids are given in the table below. If none of the recommended fluids are available, use extra heavy-duty brake fluid only from a container marked D.O.T.4.

Recommended Clutch Fluid

Grade:	**D.O.T.4 Heavy Duty Brake Fluid**
Brand:	**Castrol Girling – Universal**
	Castrol GT (LMA)
	Castrol Disc Brake Fluid
	Check Shock Premium Heavy Duty

NOTE

○*Since the clutch fluid is the same as the brake fluid, refer to Brake Fluid Section in Brakes for further details.*

Clutch Fluid Level Inspection

•Position the reservoir horizontal, and check that the fluid level in the reservoir is higher than the lower level.

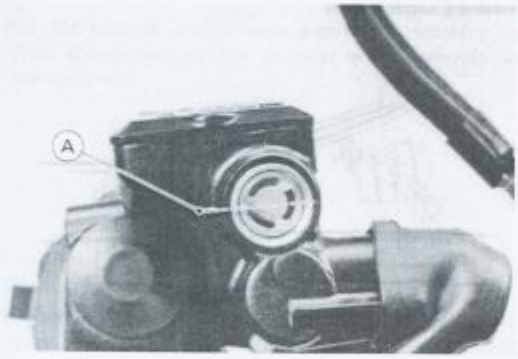

A. Lower Level Line

★If the fluid level is lower than the lower level, check for the fluid leakage of the clutch line, and add the fluid as follows.

○Remove the reservoir cap, and fill the reservoir to the upper level line in the reservoir with the same type and brand of the fluid that already is in the reservoir. And then install the reservoir cap.

WARNING

○**Change the fluid in the clutch line completely if the fluid must be refilled but the type and brand of the fluid that already is in the reservoir are unidentified.**

○**After changing the fluid, use only the same type and brand of fluid thereafter. Mixing different types and brands of fluid lowers the fluid boiling point and could cause the clutch to be ineffective. It may also cause the rubber clutch parts to deteriorate.**

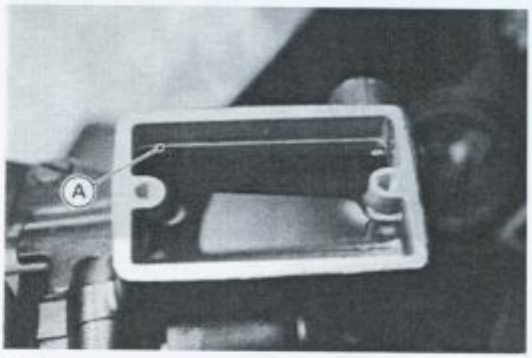

A. Upper Level Line

•Operate the clutch, and check for fluid leakage around the fittings.

WARNING

○**If the clutch lever has a soft or "spongy feeling" when it is applied, there might be air in the clutch lines or the clutch may be defective. Since it is dangerous to operate the motorcycle under such conditions, bleed the air from the clutch line immediately.**

Clutch Fluid Changing

•Remove the reservoir cap.
•Remove the rubber cap on the bleed valve.
•Attach a clear plastic hose to the bleed valve on the clutch slave cylinder, and run the other end of the hose into a container.
•Open the bleed valve (counterclockwise to open), and pump the clutch lever until all the fluid is drained from the line.
•Close the bleed valve.
•Remove the diaphragm.
•Fill the reservoir with fresh fluid.
•Open the bleed valve,squeeze the clutch lever, close the valve with the clutch held applied, and then quickly release the lever. Repeat this operation until the clutch line is filled and fluid starts coming out into the plastic hose.

NOTE

○*Replenish the fluid in the reservoir as often as necessary to keep it from running completely out.*

•Tighten the bleed valve to the specification (See Exploded Views).

Filling up Clutch Line

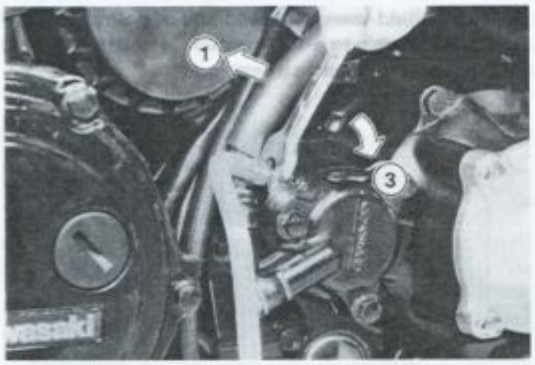

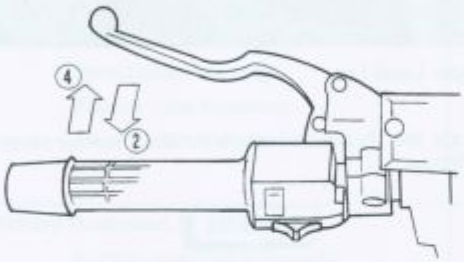

1. Open the bleed valve.
2. Apply the clutch lever and hold it.
3. Close the bleed valve.
4. Then release the clutch lever suddenly.

Clutch Line Air Bleeding

- Remove the reservoir cap, and check that there is plenty of fluid in the reservoir.

NOTE

○*The fluid level must be checked several times during the bleeding operation and replenished as necessary. If the fluid in the reservoir runs completely out any time during bleeding, the bleeding operation must be done over again from the beginning since air will have entered the line.*

- Connect a clear plastic hose to the bleed valve at the clutch slave cylinder, running the other end of the hose into a container.
- With the reservoir cap off, slowly pump the clutch lever several times until no air bubbles can be see rising up through the fluid from the holes at the bottom of the reservoir. This bleeds the air from the master cylinder end of the line.
- Pump the clutch lever a few times until it becomes hard and then, holding the lever squeezed, quickly open (turn counterclockwise) and close the bleed valve. Then release the lever. Repeat this operation until no more air can be seen coming out into the plastic hose.
- When air bleeding is finished, check that the fluid is filled to the upper level line marked in the reservoir.

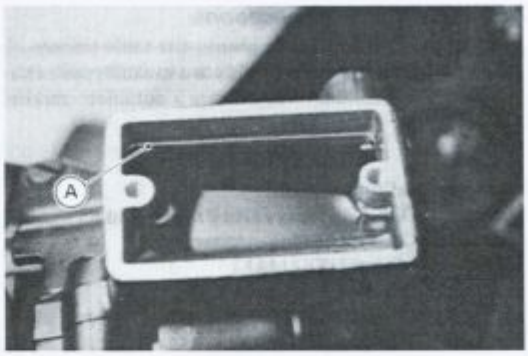

A. Upper Level Line

- Install the reservoir cap.
- Tighten the bleed valve to the specification.
- Apply the clutch lever forcefully for a few seconds, and check for fluid leakage around the fittings.

Bleeding Clutch Line

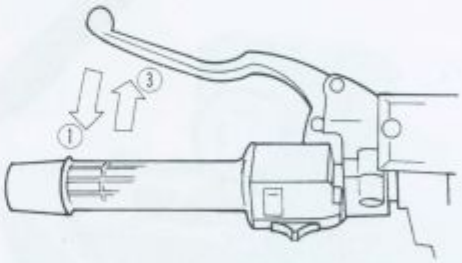

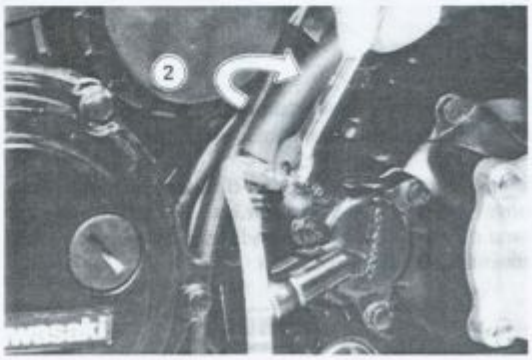

1. Hold the clutch lever applied.
2. Quickly open and close the valve.
3. Release the clutch lever.

Clutch Master Cylinder

Master Cylinder Disassembly

- Drain the clutch fluid.
- Remove the clutch lever and the master cylinder.
- Remove the push rod, the dust seal and the circlip.

Master Cylinder Inside Parts

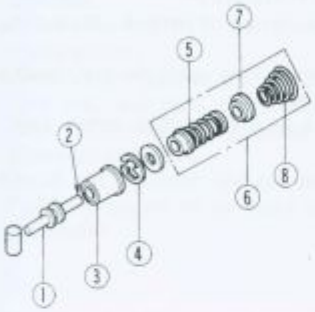

1. Push rod
2. Rod round end
3. Dust seal
4. Circlip
5. Primary cup
6. Piston assembly
7. Secondary cup
8. Spring

CAUTION

○**Do not remove the primary cup and secondary cup from the piston or the cylinder since removal will damage them.**

Master Cylinder Assembly Note

- Apply brake fluid to the parts removed and to the inner wall of the cylinder. Take care not to scratch the piston or the inner wall of cylinder.
- Check to see that the piston return spring pushes back the piston to its rest position when the spring is compressed.
- Install the push rod with the dust seal fitted into the groove.

○The push rod round end must be faced inwards.

Master Cylinder Installation

- The master cylinder clamp must be installed with the UP mark faced upwards.
- Torque the upper clamp bolt first, and then the lower clamp bolt to the specification. There will be a gap at the lower part of the clamp after tightening.

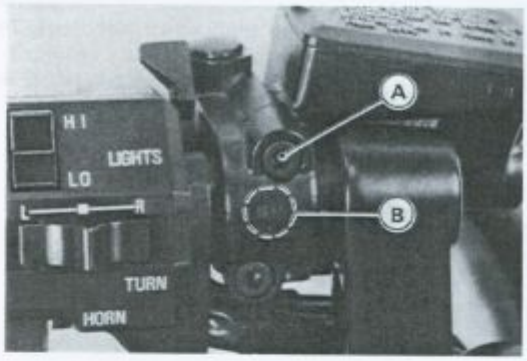

A. Tighten upper clamp bolt first
B. Up mark

Inspection and Adjustment after Installation

- Bleed the clutch line after master cylinder installation (see Clutch Line Air Bleeding).
- Check that the clutch line has proper fluid pressure and no fluid leakage.

Visual Inspection

- Check that there are no scratches, rust or pitting on the inside of the master cylinder and on the outside of the piston.

★If the master cylinder or piston shows any damage, replace the master cylinder and piston.

- Inspect the primary cup.

★If a cup is worn, damaged, softened (rotted), or swollen, replace the piston assembly.

★If fluid leakage is noted at the clutch lever, the piston assembly should be replaced to renew the cups.

NOTE

○*The cups and spring are part of the piston assembly. Replace the piston assembly if any one of the cups or the spring requires replacement.*

Clutch Pipe

Installation Note

- Route and clamp the clutch pipe as shown.
- Tighten the banjo bolts and the pipe joint to the specification (see Exploded Views).

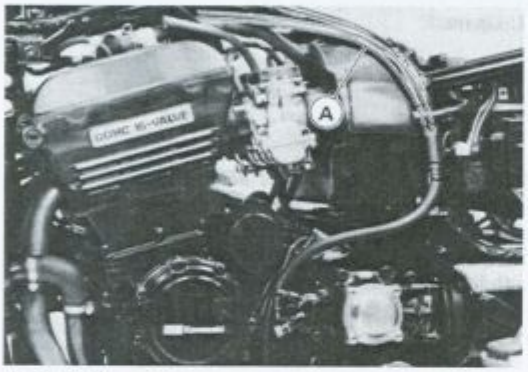

A. Clutch Pipe

Clutch Slave Cylinder

Since the hydraulic clutch compensate automatically friction plate wear and has no clutch cable, no periodic adjustment is needed.

Clutch Slave Cylinder Removal

- Remove the banjo bolt.
- Remove the mounting bolts.
- Remove the slave cylinder unit.

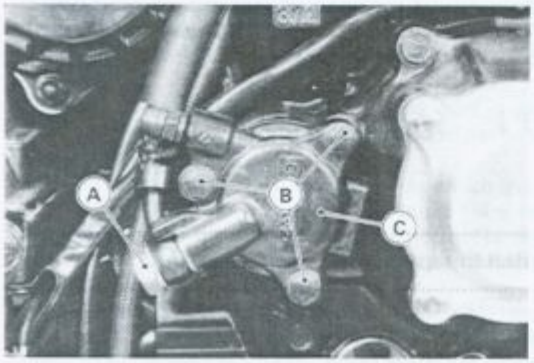

A. Banjo Bolt
B. Mounting Bolt
C. Slave Cylinder Unit

CAUTION

○**Do not spill clutch fluid onto any painted surface.**

Clutch Slave Cylinder Installation

- Installation procedure is reverce of removal. Note the following.

○Apply a non-permanent locking agent to the clutch slave cylinder mounting bolts.
○Tighten the banjo bolt to the specified torque (see Exploded View).

Clutch Slave Cylinder Disassembly

- Remove the banjo bolt.
- Using compressed air, remove the piston.

○Cover the cylinder opening with a clean, heavy cloth.
○Face the opening downwards.
○Remove the piston by lightly applying compressed air to where the clutch line fits into the slave cylinder.

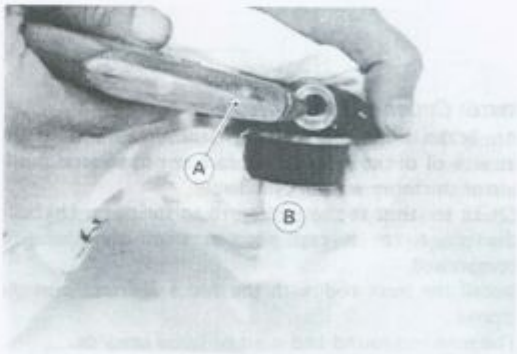

A. Apply compressed air.
B. Cloth

CAUTION

○**If the fluid seal is removed from the piston, replace the seal with a new one. Removal would damage the seal.**

WARNING

○**To avoid serious injury, never place your fingers or palm in front of the cylinder opening. If you apply high compressed air to the cylinder, the piston may injure your hand or fingers.**

Clutch Slave Cylinder Assembly

- Install the fluid seal being careful of the installation direction.
- Check that the fluid seal is properly fitted into the piston groove.
- Apply clutch fluid to the outside of the piston and the fluid seal, and push the piston into the cylinder by hand. Take care that neither the cylinder nor the piston get scratched.
- Install the insulator and the slave cylinder assembly.

○Push the piston in by hand as far as it will go at installation.

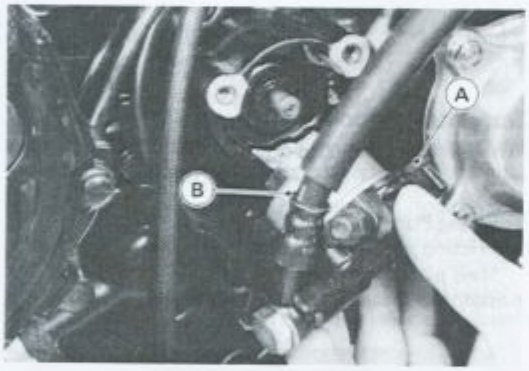

A. Insulator B. Slave Cylinder Assembly

Clutch Slave Cylinder

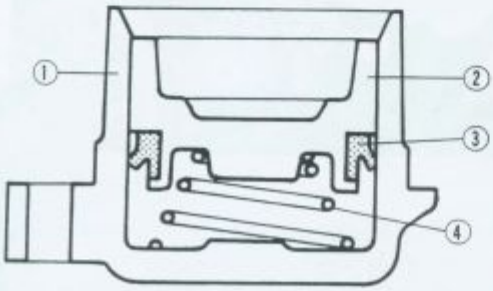

1. Cylinder
2. Piston
3. Fluid Seal
4. Spring

- Use a new flat washer on each side of the hose fitting.
- Tighten the banjo bolt to the specification (see Exploded Views).
- Fill the clutch fluid into the clutch line and bleed the clutch line. (See Clutch Fluid Changing and Clutch Line Air Bleeding).

Clutch

Clutch Removal

NOTE

○*It is not necessary to remove the alternator sprocket and the chain tensioner for clutch removal.*

- Remove the right engine cover.
- Remove the clutch spring bolts, retainers and springs.
- Remove the spring palte with the spring plate pusher.
- Remove the friction plates and steel plates.

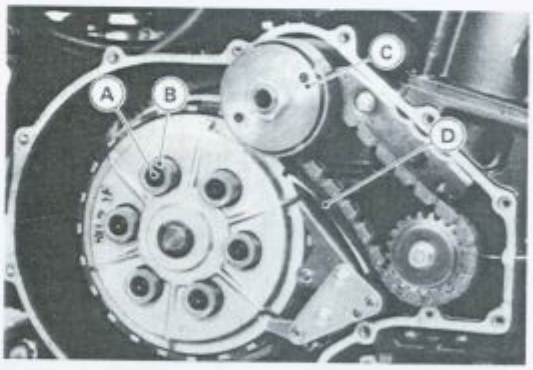

A. Clutch Spring Bolt
B. Retainer
C. Alternator Sprocket
D. Chain Tensioner

- Remove the cover and unscrew one of the engine bracket mounting bolt, and mount an auxiliary bolt (8 (8 mm dia. 1.25 mm pitch, about 60 mm length).
- Hook the clutch holder (special tool: 57001-1243) on the auxiliary bolt, and unscrew the clutch hub self-locking nut.

- Pull out the sleeve, thrust washer, clutch housing, clutch housing bearing collar, oil pump driven gear, and spacer.

○The clutch housing bearing collar can easily be removed by installing right engine cover bolts into the collar holes and pulling them.

○The clutch housing can be removed after removing the bearing collar.

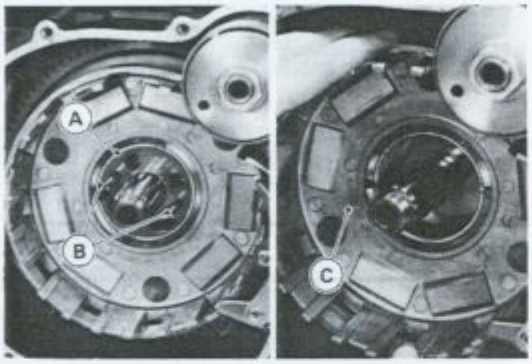

A. Collar
B. Right Engine Cover Bolt
C. Clutch Housing

○The spacer is changed with two washers from Engine No. ZGT00AG001561/ZGT00AE011635.

Clutch Housing

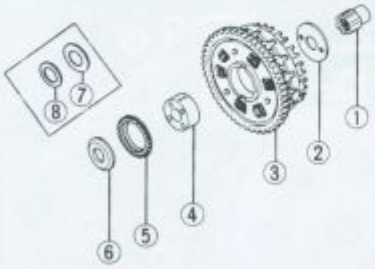

1. Sleeve
2. Thrust Washer
3. Clutch Housing
4. Clutch Housing Bearing Collar
5. Oil Pump Driven Gear
6. Spacer
7. Washer (large dia.)
8. Washer (small dia.)

- Remove the spring, washer, sub clutch hub, clutch hub assembly, and cam follower.

Clutch Hub

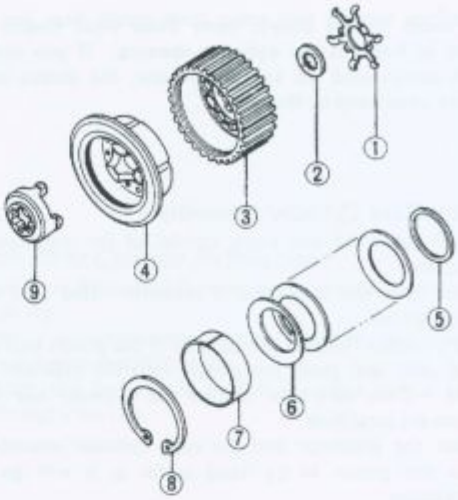

1. Spring
2. Washer
3. Sub Clutch Hub
4. Clutch Hub
5. Spacer
6. Damper Spring
7. Bushing
8. Retainer
9. Cam Follower

Clutch Installation

- When replacing any one of the following parts, adjust the spring plate free play (see spring plate Free Play Adjustment).
  Spring Plate
  Friction Plate
  Steel Plate
- Install the spacer with the chamfer side facing inwards.

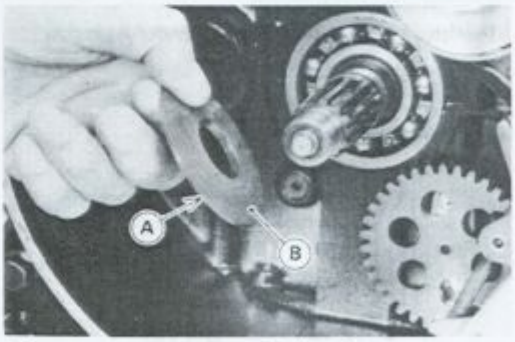

A. Spacer
B. Chamfer

○For two washers, first install the small diameter washer and next the large one.

- Discard the used clutch hub self-locking nut, and install a new nut.
- Install the clutch holder (special tool: 57001-1243) to keep the clutch hub from turning and tighten the clutch hub nut to the specified torque (see Exploded View).

•Install the friction plates and steel plates, starting with a friction plate and alternating them.

○The grooves on the friction plate surfaces are cut tangentially and radially, install the friction plates so that the grooves run toward the center in the direction of the clutch housing rotation (counterclockwise viewed from the engine right side).

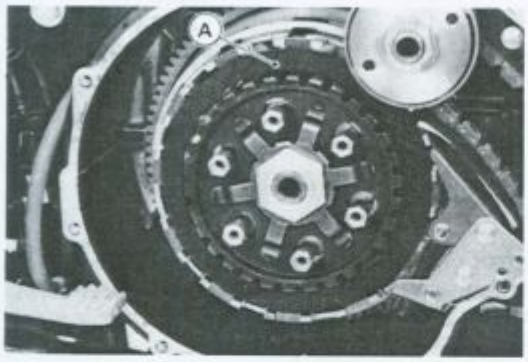

A. Grooves

CAUTION

○**If new dry steel plates and friction plates are installed, apply engine oil to the surfaces of each plate to avoid clutch plate seizure.**

NOTE

○*First, Install the seven friction plates fitting the tangs of plates in the grooves Ⓐ in the clutch housing. And then, install the last one fitting the tangs in the grooves Ⓑ in the housing.*

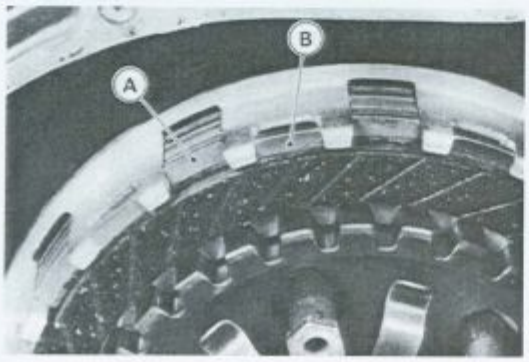

•Apply a molybdenum disulfide grease to the clutch push rod (shorter).

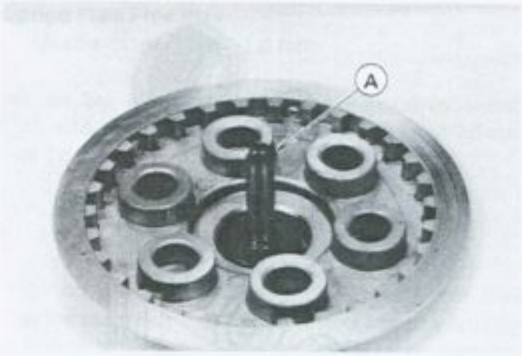

A. Apply here.

•Tighten the clutch spring bolts to the specified torque (see Exploded View).

Clutch Hub Disassembly/Assembly

•Using a suitable press and bearing driver set (special tool), compress the damper springs.

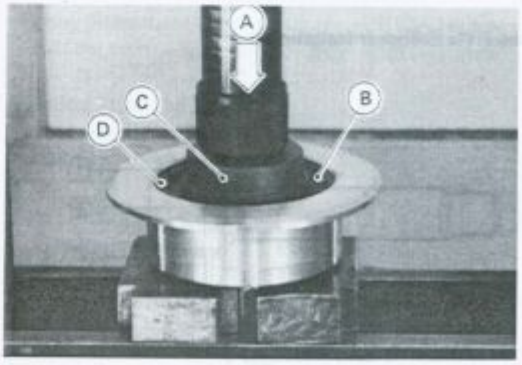

A. Press
B. Damper Spring
C. Bearing Driver Set: 57001-1129
D. Retainer

•Remove the retainer, damper springs, spacer, and cam follower.

Clutch Hub

1. Cam Follower
2. Spacer
3. Damper Spring
4. Retainer

Spring Plate Pusher Removal/Installation Note

- Check the clearance between the E-ring and the washer with a thickness gauge.
- ★If the clearance is out of the standard range, change the washer.
- Repeat the above procedure if necessary.

Spring Plate Pusher Installation

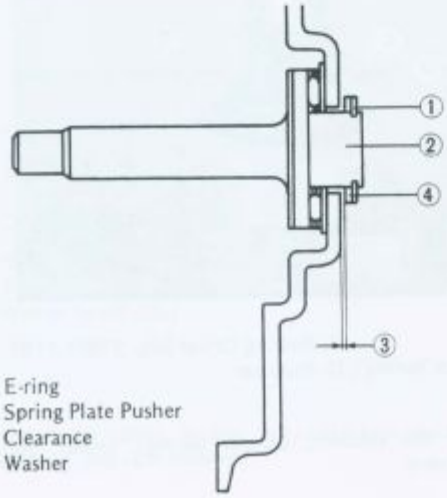

1. E-ring
2. Spring Plate Pusher
3. Clearance
4. Washer

Clearance

Standard: 0.05 ~ 0.25 mm

Washers

Thickness (mm)	Part Number
0.8	92022-1751
1.0	92022-1750
1.2	92022-1752
1.4	92022-1753
1.6	92022-1754
1.8	92022-1755

Right Cover Installation Notes

- Apply silicone sealant (Kawasaki Bond: 56019-120) to the area where the mating surface of the crankcase contacts the clutch cover gasket.
- Apply a non-permanent locking agent to the following bolts.

A. Bolt

Right Cover Cleaning

- Remove the banjo bolt and blow out any particles which may obstruct the oil pipe.

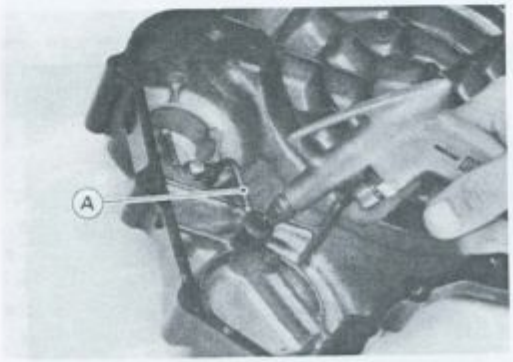

A. Oil Pipe

Spring Plate Free Play Measurement

Insufficient clutch free play will cause the engine braking effect to be more sudden, resulting in rear wheel hop. On the other hand, if the free play is excessive, the clutch lever may feel "spongy" or pulsate when pulled.

- Assemble the clutch hub (see Clutch Hub Disassembly/Assembly).
- Install the following parts on an extra drive shaft as shown (see Clutch Removal and Clutch Installation Note).
  - Spacer
  - Oil Pump Driven Gear
  - Clutch Housing Bearing Collar
  - Clutch Housing
  - Thrust Washer
  - Sleeve
  - Clutch Hub (Assembled)
  - Friction Plates
  - Steel Plates
  - Spring Plate with Spring Plate Pusher
- To meausre the free play, set a dial gauge against the center of the pusher on the clutch spring plate.

A. Dial Gauge

- Move the clutch housing gear back and forth while holding the drive shaft steady. The difference between the highest and lowest gauge readings is the amount of free play.

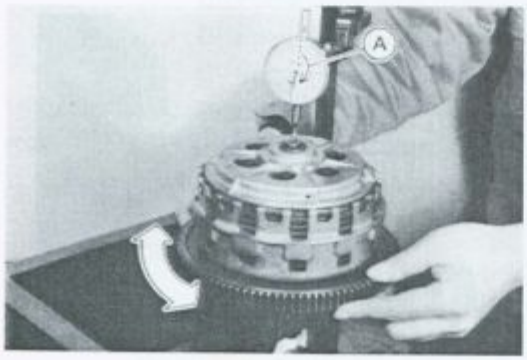

A. Difference

Spring Plate Free Play Adjustment

- Measure the spring plate free play and adjust it if necessary. (see Spring Plate Free Play Measurement).

Spring Plate Free Play
Usable range: 0.4 – 1.0 mm

★If the free play is not within the usable range, install the standard steel plate 2.3 mm thick ×7 and 2.0 mm or 2.6 mm thick ×1 ; total 8 plates.

NOTE

1.Do not use the steel plates 2.0 and 2.6 mm thick at the same time because it cancels free play change.
2.In case of rear wheel hop, adjust the spring plate gap a bit larger, and in case of clutch slip, or " spongy" clutch lever, adjust the gap a bit smaller within the usable range.

Friction and Steel Plat Damage, Wear

- Visually inspect the friction and steel plates for signs of seizure, overheating (discoloration), or uneven wear.
- Measure the thickness of the friction plates [A] at several points.

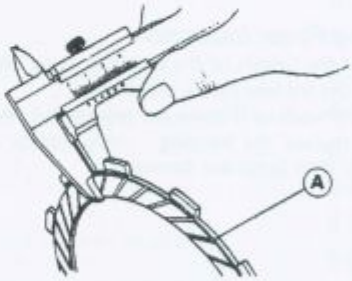

★If any plates show signs of damage, or if they have worn past the service limit, replace them with new ones.

Friction Plate Thickness

Standard:	**2.9 – 3.1 mm**
Service Limit:	**2.8 mm**

Steel Plates

Thickness (mm)	Part Number
2.0	13089-1068
2.3	13089-1004 (standard)
2.6	13089-1067

NOTE

If new friction plates are installed, apply engine oil to the surfaces of each plate.

Clutch Plate Warp Inspection

- Place each friction plate or steel plate on a surface plate, and measure the gap between the surface plate and each friction plate or steel plate. The gap is the amount of friction or steel plate warp.
- ★If any plate is warped over the service limit, replace it with a new one.

Friction and Steel Plate Warp

Standard:	**less than 0.2 mm**
Service Limit:	**0.3 mm**

Friction and Steel Plate Warp Measurement

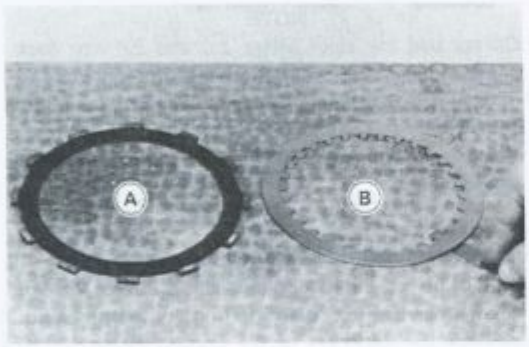

A. Friction Plate B. Steel Plate

Clutch Housing Finger Inspection

- Visually inspect the fingers of the clutch housing where the housing of the friction plates hit them.
- ★If they are badly worn or if there are grooves cut where the tangs hit, replace the housing. Also, replace the friction plates if their tangs are damaged.

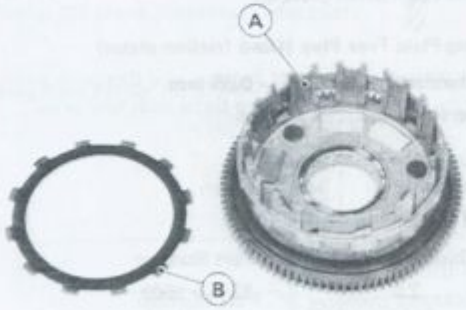

A. Clutch Housing Finger B. Friction Plate Tang

Clutch Hub Spline Inspection

- Visually inspect where the teeth on the steel plates wear against the splines of the clutch hub.
- ★If there are notches worn into the splines, replace the clutch hub. Also, replace the steel plates if their teeth are damaged.

A. Clutch Hub Spline

Cam Damper Inspection

- Remove the clutch (see Clutch Removal).
- Visually inspect the damper cam, damper spring, and cam follower.
- ★Replace the part if it appears damaged.

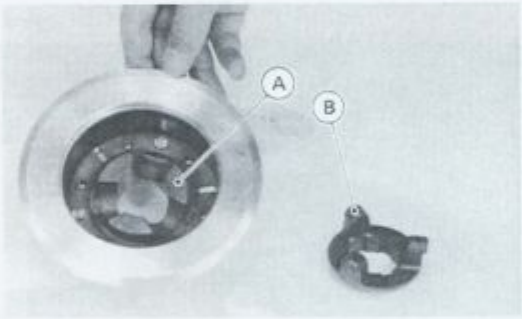

A. Cam B. Cam Follower

Clutch Spring Free Length Measurement

Clutch Spring Free Length

Standard:	**33.2 mm**
Service Limit:	**32.1 mm**

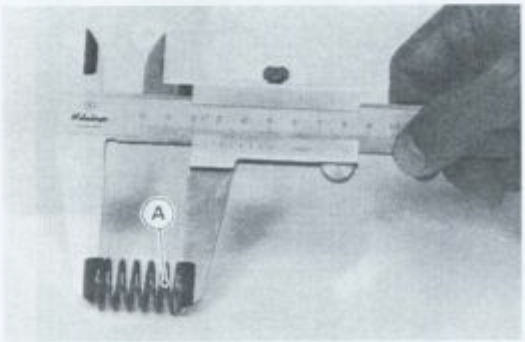

A. Clutch Spring

Engine Lubrication System

Table of Contents

Exploded View

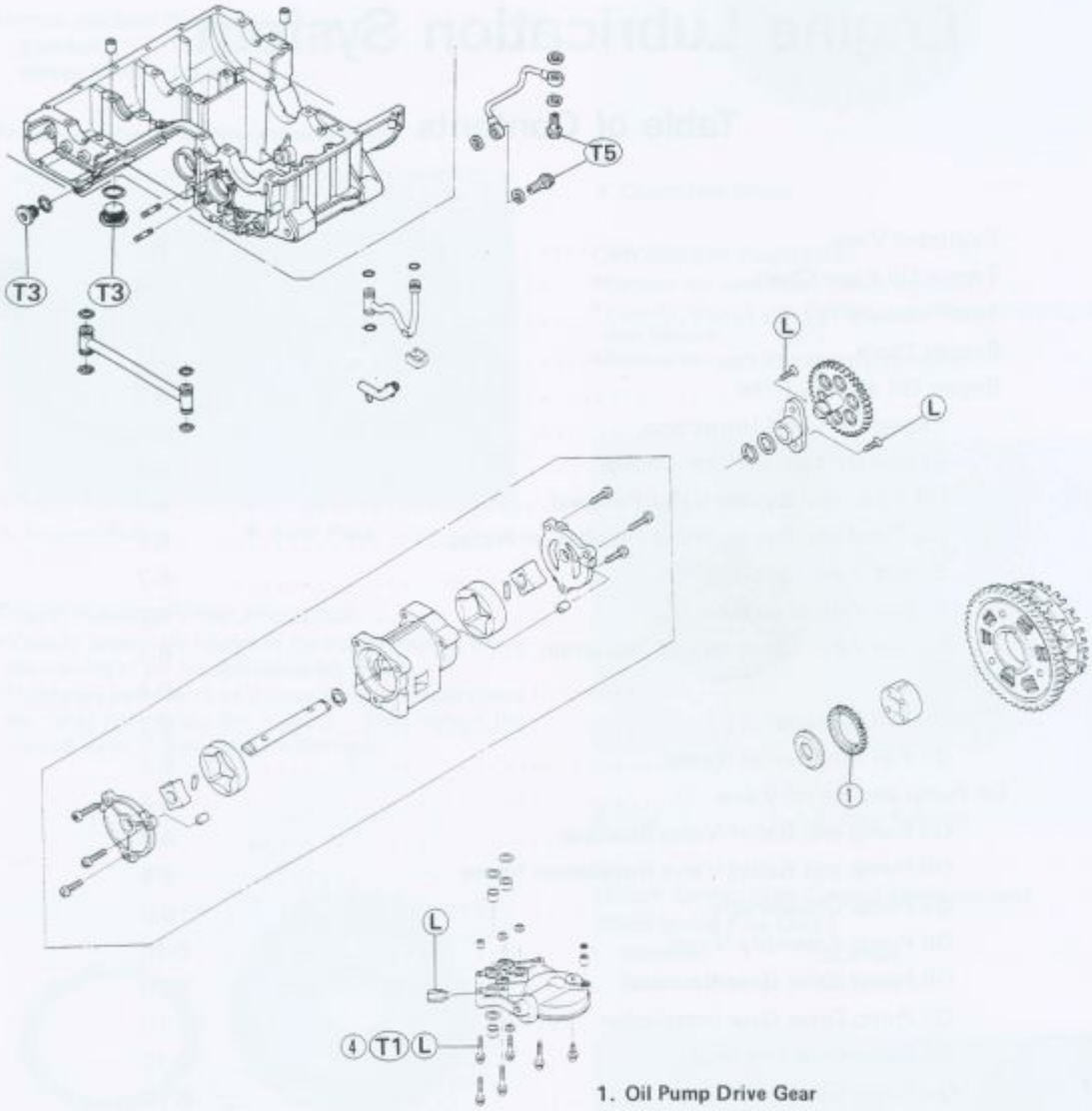

1. Oil Pump Drive Gear
2. Oil Pressure Switch
3. Oil Pan Bolts: Three of them of require locking agent (see Oil Pan Installation Notes)
4. Oil Pump Mounting Bolts

L : Apply non-permanent locking agent to the threads.
T1: 12 N-m (1.2 kg-m, 104 in-lb)
T2: 15 N-m (1.5 kg-m, 11.0 ft-lb)
T3: 18 N-m (1.8 kg-m, 13.0 ft-lb)
T4: 20 N-m (2.0 kg-m, 14.5 ft-lb)
T5: 25 N-m (2.5 kg-m, 18.0 ft-lb)
T6: 34 N-m (3.5 kg-m, 25 ft-lb)

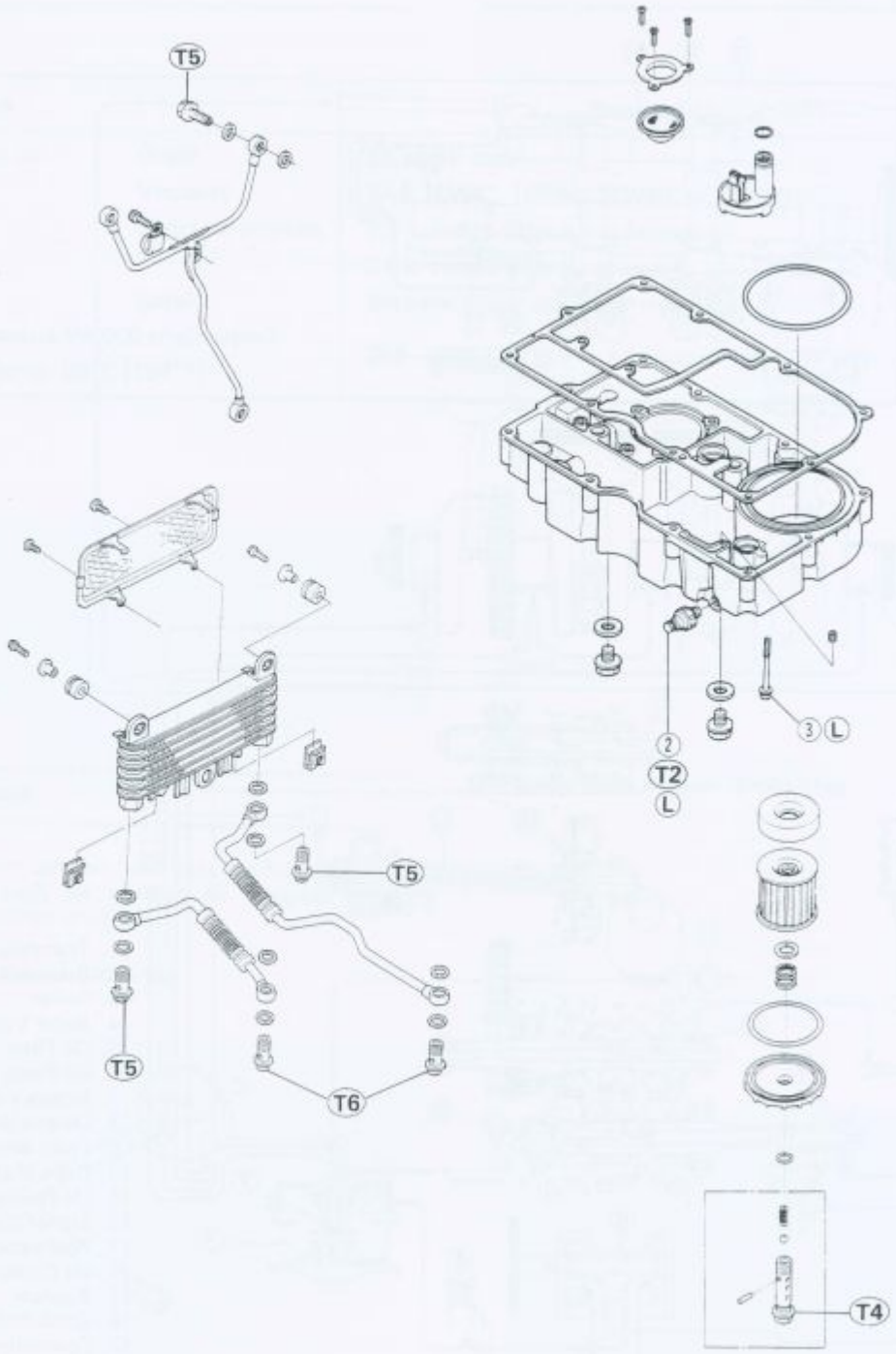
T5
T5
T5
T6
2
T2
L
3
L
T4

Engine Oil Flow Chart

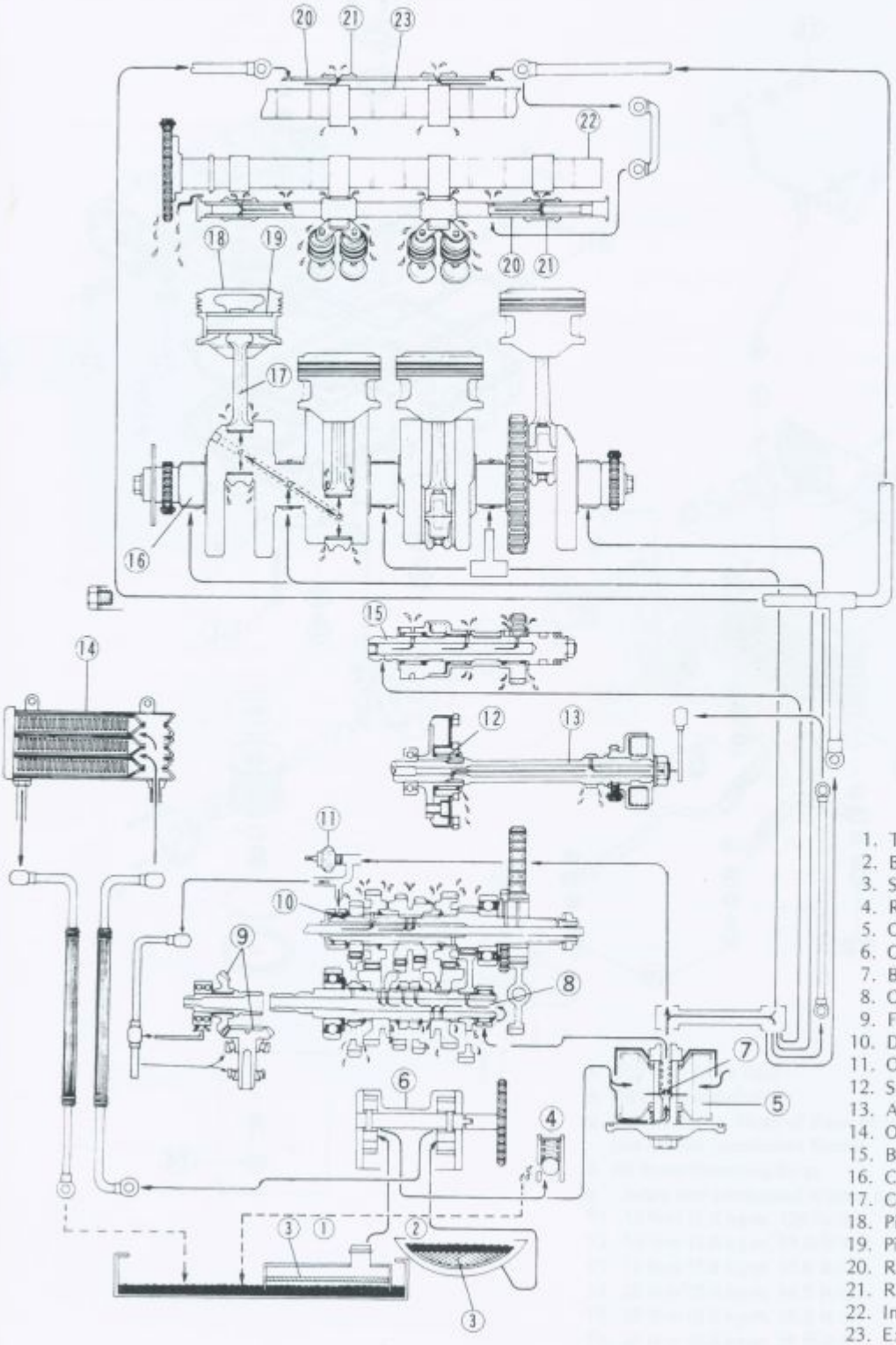

1. Transmission Chamber
2. Balancer Chamber
3. Screen
4. Relief Valve
5. Oil Filter
6. Oil Pump
7. Bypass Valve
8. Output Shaft
9. Front Bevel gear
10. Drive Shaft
11. Oil Pressure Switch
12. Starter Clutch
13. Alternator Shaft
14. Oil Cooler
15. Balancer
16. Crankshaft
17. Connecting Rod
18. Piston
19. Piston Pin
20. Rocker Shaft
21. Rocker Arm
22. Inlet Camshaft
23. Exhaust Camshaft

Specifications

Item		Standard
Engine oil:	Grade	SE or SF class
	Viscosity	SAE 10W40, 10W50, 20W40, or 20W50
	Required amount	2.7 L (when filter is not removed) 3.0 L (when filter is removed)
	Level	Between upper and lower levels
Oil pressure @4,000 r/min (rpm), oil temp. 90°C (194°F)		265 – 325 kPa (2.7 – 3.3 kg/cm², 38 – 47 psi)

Special Tools

Along with common hand tools, the following more specialized tools are required for complete engine lubrication system servicing.

Oil Pressure Gauge: 57001-164

Oil Pressure Gauge Adapter: 57001-1188

Engine Oil and Filter

WARNING

○**Motorcycle operation with insufficient, deteriorated, or contaminated engine oil will cause accelerated wear and may result in engine or transmission seizure, accident, and injury.**

Engine Oil Level Inspection

●If the oil has just been changed, start the engine and run it for several minutes at idle speed. This fills the oil filter with oil. Stop the engine, then wait several minutes until the oil settles.

CAUTION

○**Racing the engine before the oil reaches every part can cause engine seizure.**

●If the motorcycle has just been used, wait several minutes for all the oil to drain down.
●Situate the motorcycle so that it is perpendicular to the ground, and check the engine oil level through the oil level gauge.
★The oil level should come up between the upper and lower level lines.
★If the oil level is too high, remove the excess oil, using a syringe or some other suitable device.
★If the oil level is too low, add the correct amount of oil through the oil filler opening. Use the same type and make of oil that is already in the engine.

NOTE

○*If the engine oil type and make are unknown, use any brand of the specified oil to top up the level in preference to running the engine with the oil level low. Then at your earliest convenience, change the oil completely.*

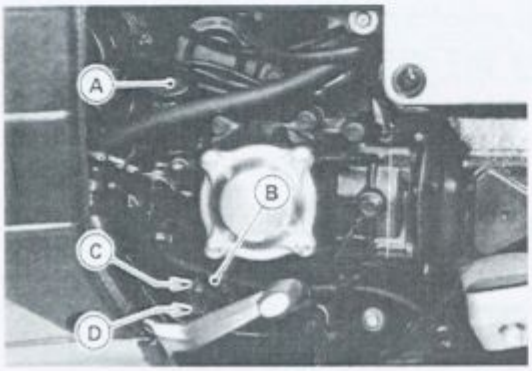

A. Oil Filler Opening Cap
B. Oil Level Gauge
C. Upper Level
D. Lower Level

CAUTION

○**If the engine oil gets extremely low or if the oil pump or oil passages clog up or otherwise do not function properly, the oil pressure warning light will light. If this light stays on when the engine is running above idle speed, stop the engine immediately and find the cause.**

Engine Oil and/or Filter Change

●Remove the under cowling.
●Warm up the engine so that the oil will pick up any sediment and drain easily. Then stop the engine.
●With the motorcycle up on its center stand, place an oil pan beneath the engine.
●Remove two engine drain plugs, and let the oil drain completely.

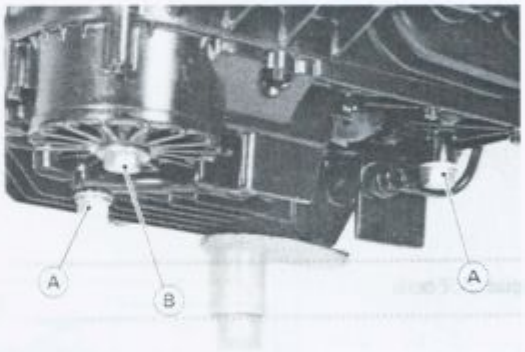

A. Drain Plug
B. Oil Filter Mounting Bolt

●If the oil filter is to be changed, replace it with a new one (see Oil Filter and Bypass Valve Removal and Installation Notes).
●Check the gaskets at the drain plugs for damage.
★Replace the gaskets with new ones if they are damaged.
●After the oil has completely drained out, install the drain plugs with the gaskets, and tighten them.
●Fill the engine with a good quality motor oil specified in the table.
●Check the oil level.

Engine Oil

Grade:	**SE or SF class**
Viscosity:	**SAE 10W40, 10W50, 20W40, or 20W50**

Required Amount
When filter is not removed: 2.7 L
When filter is removed: 3.0 L

Oil Filter and Bypass Valve Removal

- Remove the under cowling.
- With the motorcycle up on its center stand, place an oil pan beneath the engine.
- Unscrew the oil filter mounting bolt and drop out the filter.
- Remove the oil fence.
- Holding the filter steady, turn the mounting bolt to work the filter free.
- Remove the flat washer and spring, and pull the filter cover off the bolt.
- The oil filter bypass valve is assembled in the mounting bolt.

Oil Filter and Bypass Valve Installation Notes

- Check that the O-rings are in good condition.
- ★If they are damaged, replace them with new ones.

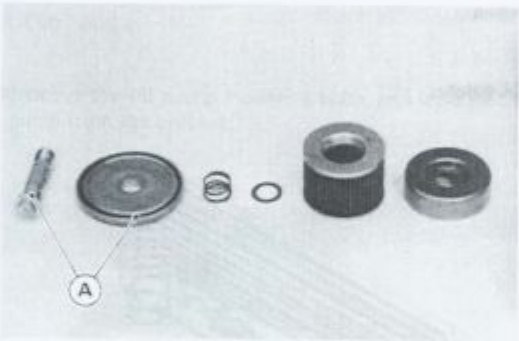

A. O-rings

- Apply oil to the mounting bolt, turn the filter or the mounting bolt to work the filter into place. Be careful that the filter grommets do not slip out of place.

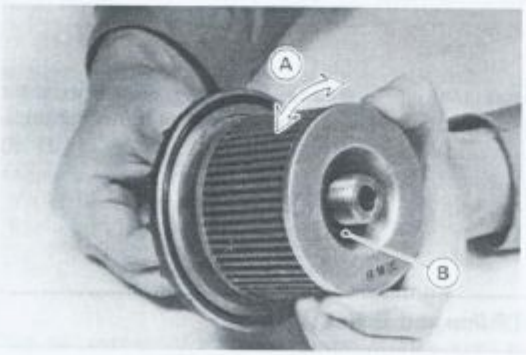

A. Turn the filter. B. Grommet

- Install the oil filter and tighten the mounting bolt to the specified torque (see Exploded View).
- Add engine oil. (see Oil Level Inspection).

Bypass Valve Disassembly

- Remove the oil filter. Oil draining is not necessary.
- Drive the retaining pin out of the filter mounting bolt.
- Drop out the spring and the bypass valve steel ball.

Bypass Valve Assembly

- Drop the bypass valve steel ball into the filter mounting bolt.
- Put the spring into the mounting bolt and compress it beyond the small hole.
- Drive the retaining pin into the small hole to hold the spring.
- Install the oil filter.

Bypass Valve Cleaning and Inspection

- Remove the oil filter.
- Disassemble the bypass valve.
- Clean the bypass valve parts in a high flash-point solvent.

WARNING

○**Clean the parts in a well-ventilated area, and take care that there is no spark or flame anywhere near the working area. Because of the danger of highly flammable liquids, do not use gasoline or low flash-point solvent.**

- Visually inspect the bypass valve parts.
- ★If there is any damaged part, replace it.

Oil Pan

Oil Pan Removal

- Drain the engine oil (see Engine Oil and/or Filter Change).
- Remove the radiator (see Radiator/Radiator Fan Removal Notes in the Cooling System chapter).
- Remove the banjo bolts at the ends of both oil cooler hoses.
- Remove the mufflers and exhaust pipes.
- Remove the oil filter. (see Oil Filter and Bypass Valve Removal and Installation Notes).
- Remove the banjo bolts at both ends of the oil pipe connecting the oil pan and the crankcase lower half.
- Remove the banjo bolt at the lower end of the oil pipe connecting the oil pan and the cylinder head.
- Remove the oil pan bolts, and oil pipe and pull the oil pan off the crankcase.
- The oil pipes in the crankcase and one of the oil screens come off with the oil pan.

Oil Pan Installation Notes

•Check that the O-rings are in good condition.

○The outlet side O-ring between the oil pan and the oil pump bracket must be installed so that flat side faces the bracket.

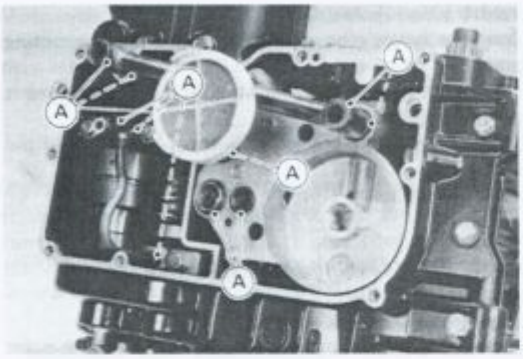

A. O-rings

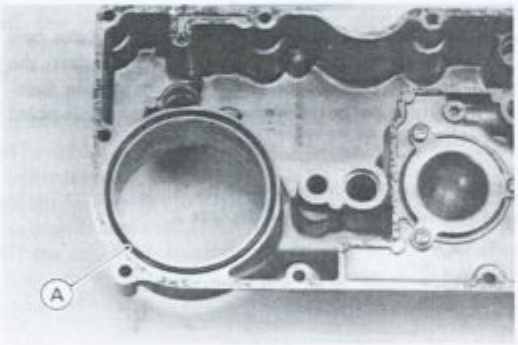

A. O-ring

•Apply a small amount of oil to the O-rings.

•Apply a non-permanent locking agent to the threads of the four oil pan bolts which are indicated by the triangular marks.

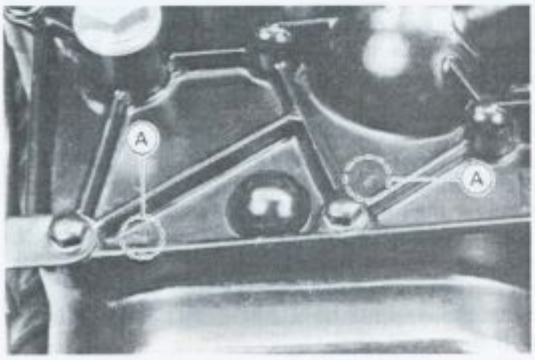

A. Triangular Mark

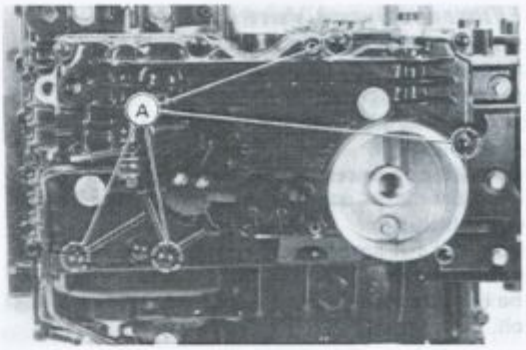

A. Bolts requiring locking agent.

•Tighten the oil pipe and hose banjo bolts to the specified torque (see Exploded View).

○The oil cooler hoses must be installed correctly as shown.

Oil Cooler

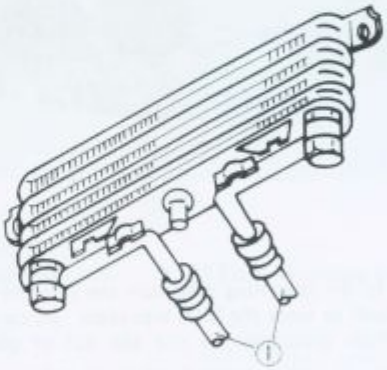

1. Oil Cooler Hoses

•Install the oil filter and fill the engine with the specified oil (see Engine Oil and/or Filter Change).

Oil Pump and Relief Valve

Oil Pump and Relief Valve Removal

•Remove the oil pan.

•Pull out the oil screen, oil pipe, collar, and O-rings.

•Unscrew the oil pump bracket bolts, and pull out the bracket and pump as an assembly.

○Remove the pickup coil cover, and turn the crankshaft until the catches of the pump shaft ends are vertical. This procedure allows the pump and bracket assembly to be removed easily, if the pump drive gear and/or water pump are installed.

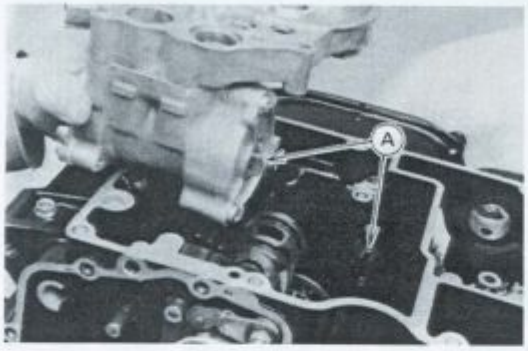

A. Catches

•Remove the oil pump mounting bolts, and separate the pump from the bracket.

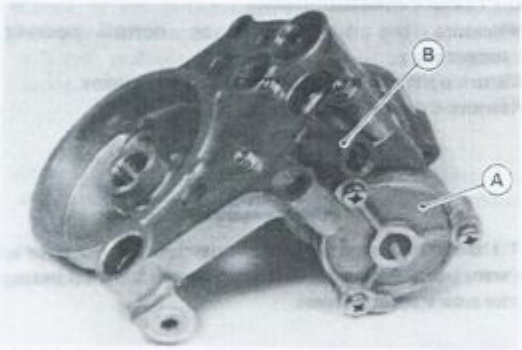

A. Oil Pump B. Relief Valve

•Unscrew the relief valve.

Oil Pump and Relief Valve Installation Notes

•Apply a non-permanent locking agent to the threads of the relief valve, and torque it to the specified (see Exploded View).

CAUTION

○**Do not over-apply a non-permanent locking agent to the threads. This may block the oil passage.**

•Fill the pump with engine oil before installation.
•Check that the collars and O-rings are between the oil pump and the bracket. The outlet side O-rings must be installed so that the flat side faces the bracket.

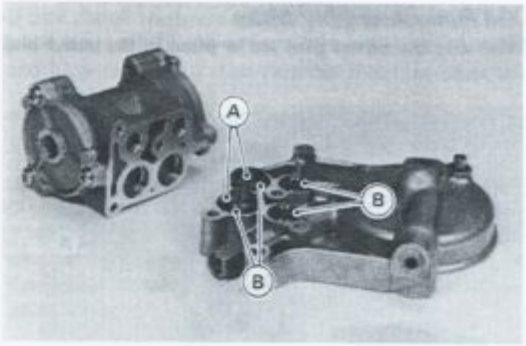

A. Collars B. O-rings

•Apply a non-permanent locking agent to the threads of the oil pump mounting bolts.
•Tighten the oil pump mounting bolts to the specified torque (see Exploded View).
•Check that the knock pin, nozzle, and O-ring are between the crankcase lower half and the oil pump bracket. The small hole of the nozzle must face the bracket.

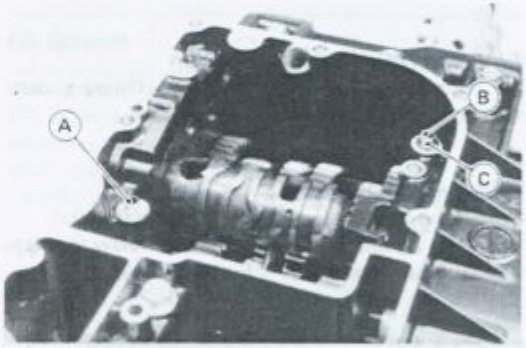

A. Knock Pin C. O-ring
B. Nozzle

•If the oil pump drive gear and/or water pump are installed, check that the oil pump shaft catches of both components are vertical.
•Install the pickup coil cover if it was removed (see Pickup Coil Removal/Installation Notes).

Oil Pump Disassembly

•Remove the oil pump.
•Take out the oil pump cover screws.
•Take out the oil pump cover.
•Drop the rotors out of the oil pump body.
•Pull the pin out of the pump shaft.
•Remove the rotors from the other side of the pump in the same manner.
•Pull the oil pump shaft out of the body.

Oil Pump Assembly Notes

•Be sure the dowel pins are in place in the pump body.

A. Dowel Pin

•Before installing the oil pump, be sure the shaft and rotors turn freely.

Oil Pump Drive Gear Removal

•The oil pump drive gear is removed during clutch assembly removal (see Clutch chapter).

Oil Pump Drive Gear Installation

•The oil pump drive gear is installed during clutch assembly installation (see Clutch chapter).

Oil Pump Gear Removal

•Remove the clutch assembly (see Clutch chapter).
•Turn the oil pump gear until the gear holder screws are visible through the holes in the oil pump gear.

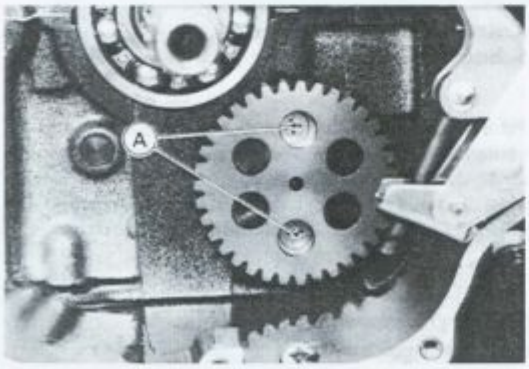

A. Screws

•Take out the screws and remove the oil pump gear with the holder.
•Remove the circlip and separate the gear from the holder.

Oil Pump Gear Installation Notes

•When installing the oil pump gear, note the position of the oil pump shaft projection and turn the gear so that the projection fits into the slot of the shaft.

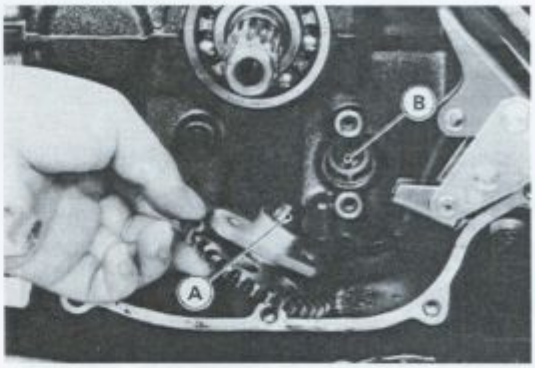

A. Slot B. Projection

•Apply a non-permanent locking agent to the threads of the holder screws.

Oil Pressure Measurement

•Measure the oil pressure at normal operating temperature.
○Warm up the engine, and then stop the engine.
○Remove the oil passage plug.

WARNING

○**If the oil passage plug is removed while the engine is warm, hot engine oil will drain through the oil passage; take care against burns.**

○Install oil pressure gauge (special tool) and adapter (special tool).

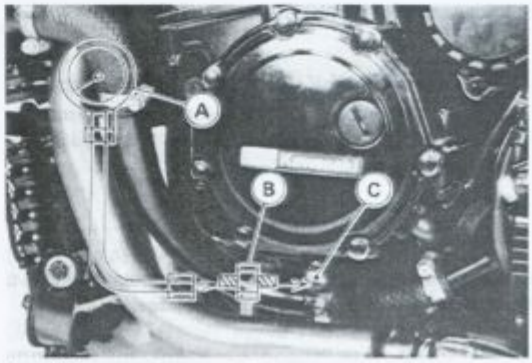

A. Oil Pressure Gauge: 57001-164
B. Adapter: 57001-1188
C. Plug

○Start the engine again.
○Run the engine at the specified speed, and read the oil pressure gauge.
★If the oil pressure is significantly below the specification, inspect the oil pump and relief valve.

Oil Pressure

265 – 325 kPa (2.7 – 3.3 kg/cm^2, 38 – 47 psi) @4,000 r/min (rpm), 90°C (194°F) of oil temp.

☆If the oil pump and relief valve are not at fault, inspect the rest of the lubrication system.

Oil Pump Inspection

●Disassemble the oil pump.
●Visually inspect the oil pump body, outer and inner rotors, and covers.
★If there is any damage or uneven wear, replace the rotors or the oil pump assembly.

Relief Valve Inspection

●Remove the relief valve.
●Check to see if the steel ball inside the valve slides smoothly when pushing it in with a wooden or other soft rod, and see if it comes back to its seat by valve spring pressure.

NOTE

○*Inspect the valve in its assembled state. Disassembly and assembly may change the valve performance.*

★If any rough spots are found during above inspection, wash the valve clean with a high flash-point solvent and blow out any foreign particles that may be in the valve with compressed air.

WARNING

○**Clean the parts in a well-ventilated area, and take care that there is no spark or flame anywhere near the working area. Because of the danger of highly flammable liquids, do not use gasoline or low flash-point solvents.**

★If cleaning does not solve the problem, replace the relief valve as an assembly. The relief valve is precision made with no allowance for replacement of individual parts.

Oil Screens

Oil Screen Removal

●Remove the oil pan.
●Pull the oil screen which is located on the oil pump bracket, and take it off the bracket.

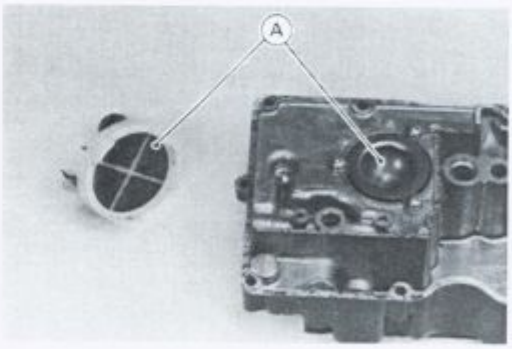

A. Oil Screens

●Unscrew the screws and take off the oil screen which is located on the oil pan.

Oil Screen Installation Note

●Clean the oil screens thoroughly whenever they are removed for any reason.

Oil Screen Cleaning and Inspection

- Clean the oil screen with high flash-point solvent and remove any particles stuck to it.

WARNING

- **Clean the screen in a well-ventilated area, and take care that there is no spark or flame anywhere near the working area. Because of the danger of highly flammable liquids, do not use gasoline or low flash-point solvents.**

NOTE

- *While cleaning the screen, check for any metal particles that might indicate internal engine damage.*

- Check the screen carefully for any damage: holes and broken wires.
- ★If the screen is damaged, replace it.

Engine Removal/Installation

Table of Contents

Exploded View

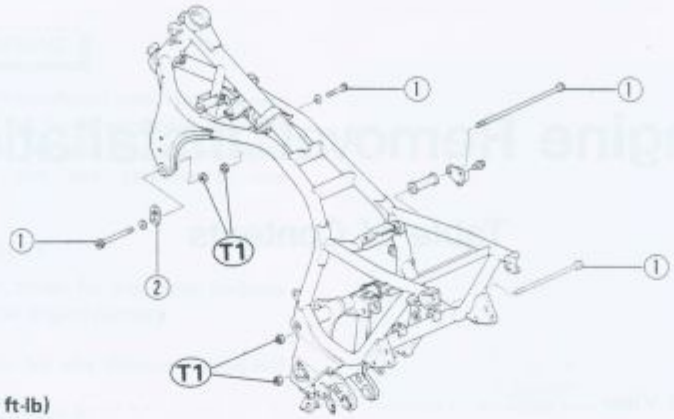

1. Engine Mounting Bolt
2. Shim
T1: 54 N-m (5.5 kg-m, 40 ft-lb)

Engine Removal/Installation

Engine Removal

- Drain the engine oil (see Engine Oil Change in the Engine Lubrication System chapter).
- Drain the coolant (see Coolant Change in the Cooling System chapter).
- Remove the following:
  - Seat
  - Fuel Tank
  - Fairing
  - Radiator and Oil Cooler
  - Propeller Shaft
  - Water Pump and Hoses
  - Mufflers and Exhaust Pipes (with Horn and Bracket)
  - Ignition Coils
  - Vacuum Switch Valve (US model) and Hoses
  - Carburetors
  - Air Cleaner Housing
- Disconnect wirings from the engine components, and free them from the clamps if there are.
  - Starter Motor Lead
  - Neutral Switch Wire
  - Oil Pressure Switch Wire
  - Oil Temperature Switch Wire
  - Battery Ground Lead
- Remove the engine mounting bolts. Support the engine before sliding out the engine mounting bolts.

Engine Installation

- Engine installation is the reverse of removal. Note the following.
- Adjust the shim on the left side of the cylinder head if necessary (see Cylinder Head Installation Notes in the Engine Top End chapter).
- Tighten the engine mounting bolts to the specified torque (see Exploded View).
- Fill the engine with engine oil (see Engine Oil Change in the Engine Lubrication System chapter).
- Fill the engine with coolant (see Coolant Change in the Cooling System chapter).
- Adjust the following.
  - Throttle Cable
  - Choke Cable

Crankshaft/Transmission

Table of Contents

Exploded View

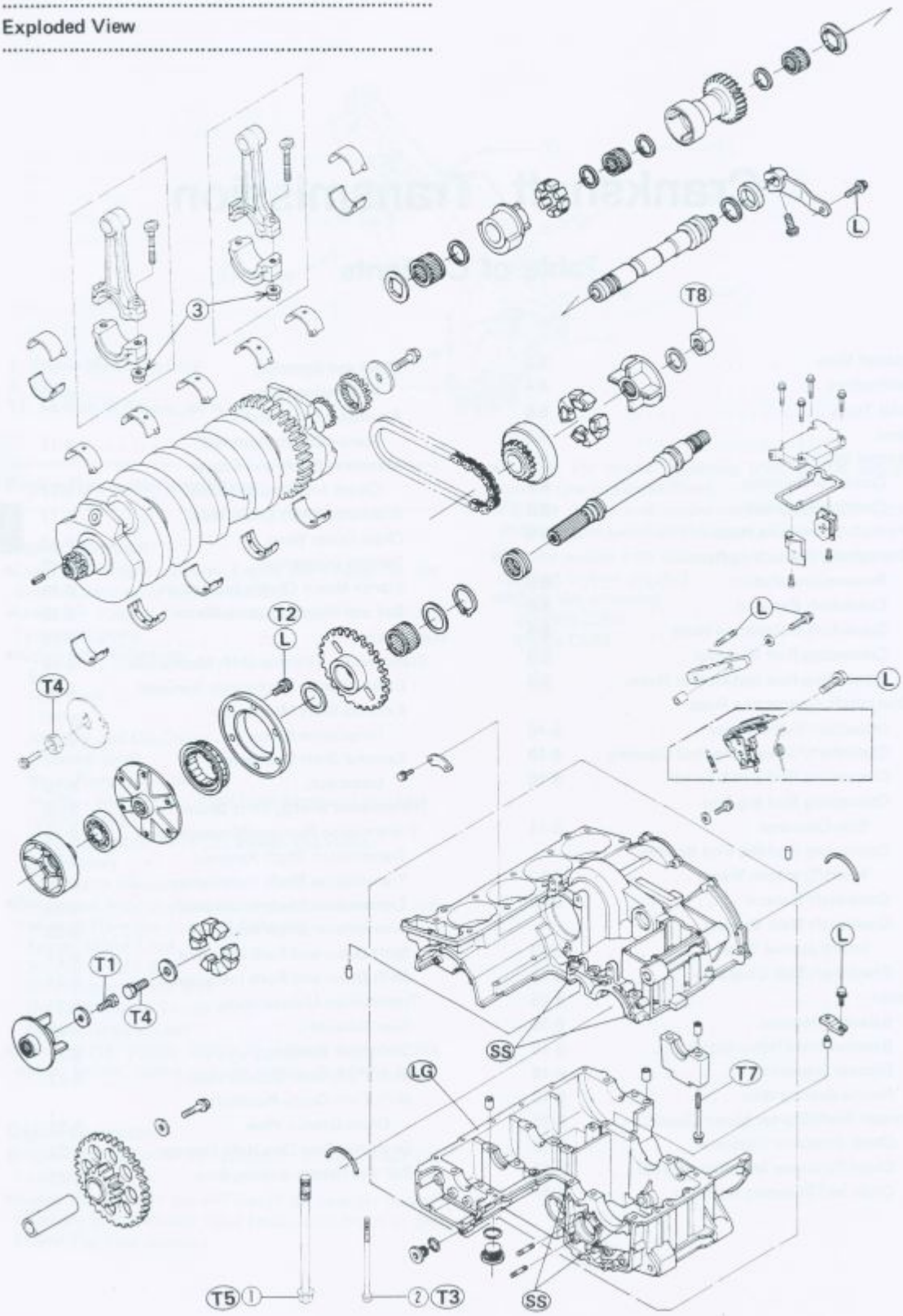

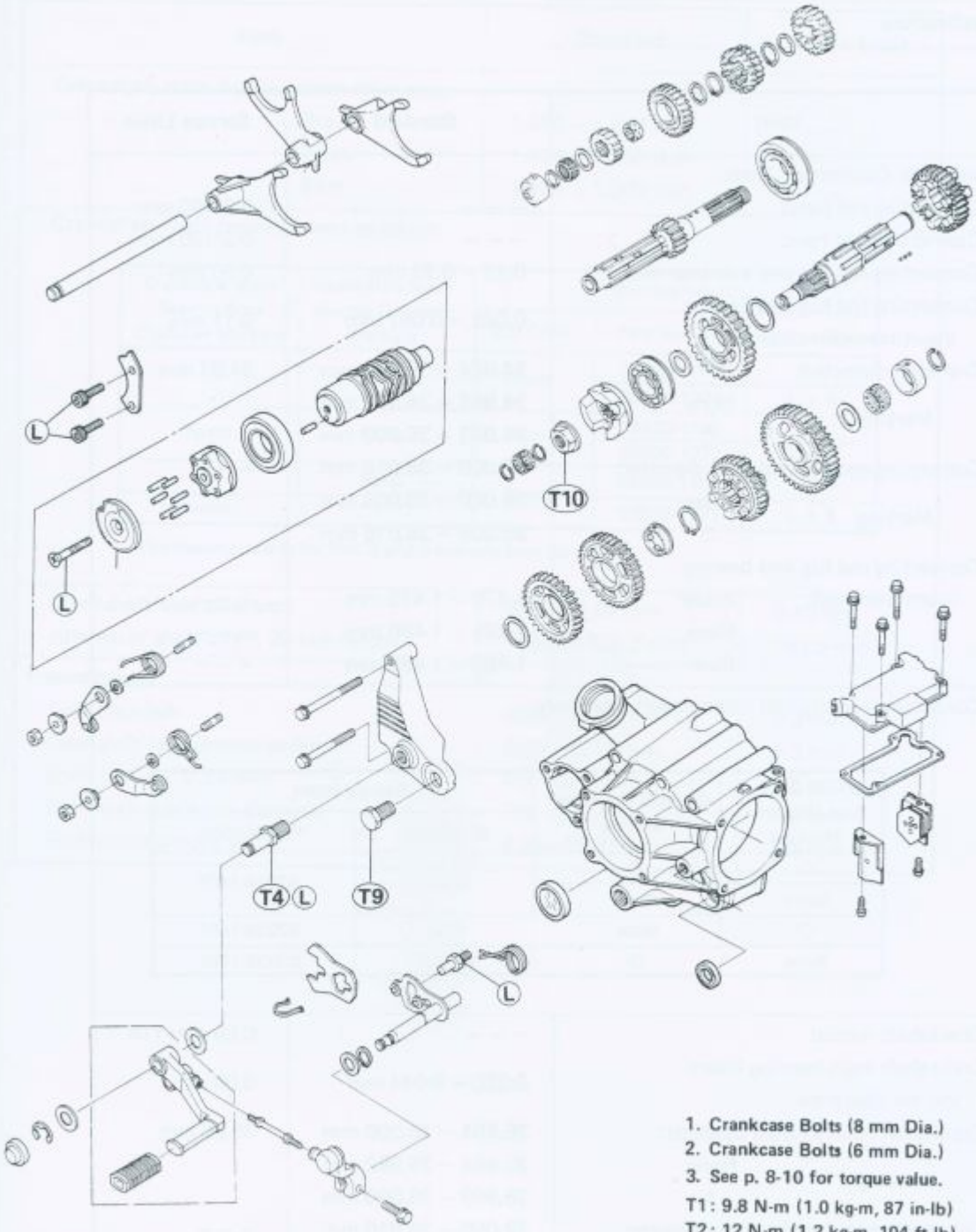

SS : Apply silicone sealant (Kawasaki Bond: 56019-120) to the area where the mating surface of the crankcase contacts the front bevel gear case gasket.

LG : Apply liquid gasket — black (Kawasaki Bond: 92104-1003) to the mating surface of the lower crankcase half.

L : Apply non-permenent locking agent to the threads.

1. Crankcase Bolts (8 mm Dia.)
2. Crankcase Bolts (6 mm Dia.)
3. See p. 8-10 for torque value.

T1 : 9.8 N-m (1.0 kg-m, 87 in-lb)
T2 : 12 N-m (1.2 kg-m, 104 ft-lb)
T3 : 15 N-m (1.5 kg-m, 11.0 ft-lb)
T4 : 25 N-m (2.5 kg-m, 18.0 ft-lb)
T5 : 27 N-m (2.8 kg-m, 20 ft-lb)
T7 : 34 N-m (3.5 kg-m, 25 ft-lb)
T8 : 59 N-m (6.0 kg-m, 43 ft-lb)
T9 : 78 N-m (8.0 kg-m, 58 ft-lb)
T10 : 225 N-m (23.0 kg-m, 166 ft-lb)

Specifications

Item		Standard	Service Limit
Crankshaft, Connecting Rods:			
Connecting rod bend		– – –	0.2/100 mm
Connecting rod twist		– – –	0.2/100 mm
Connecting rod big end side clearnace		0.13 – 0.33 mm	0.50 mm
Connecting rod big end bearing insert/crankpin clearance		0.046 – 0.067 mm	0.11 mm
Crankpin diameter:		34.984 – 35.000 mm	34.97 mm
Marking	None	34.984 – 34.992 mm	
	○	34.993 – 35.000 mm	
Connecting rod big end bore diameter:		38.000 – 38.016 mm	– – –
Marking	None	38.000 – 38.008 mm	
	○	38.009 – 38.016 mm	
Connecting rod big end bearing insert thickness:	Brown	1.470 – 1.475 mm	– – –
	Black	1.475 – 1.480 mm	– – –
	Blue	1.480 – 1.485 mm	– – –

Connecting rod big end bearng insert selection:

Con-rod Big End Bore Diameter Marking	Crankpin Diameter Marking	Bearing Insert	
		Size Color	Part Number
○	○	Black	92028-1408
None	None		
○	None	Blue	92028-1407
None	○	Brown	92028-1409

Crankshaft runout		– – –	0.05 mm TIR
Crankshaft main bearing insert/journal clearance		0.020 – 0.044 mm	0.08 mm
Crankshaft main journal diameter:		35.984 – 36.000 mm	35.96 mm
Marking	None	35.984 – 35.992 mm	
	1	35.993 – 36.000 mm	
Crankcase main bearing bore diameter:		39.000 – 39.016 mm	– – –
Marking	○	39.000 – 39.008 mm	
	None	39.009 – 39.016 mm	

Item	Standard	Service Limit
Crankshaft main bearing insert thickness:		
Brown	1.490 – 1.494 mm	– – –
Black	1.494 – 1.498 mm	– – –
Blue	1.498 – 1.502 mm	– – –
Crankshaft main bearing insert selection:		

Crankcase Main Bearing Bore Diameter Marking	Crankshaft Main Journal Diameter Marking	Bearing Insert*		
		Size Color	Part Number	Journal Nos.
○	1	Brown	92028-1102	2, 4
			92028-1274	1, 3, 5
None	None	Blue	92028-1100	2, 4
			92028-1272	1, 3, 5
○	None	Black	92028-1101	2, 4
None	1		92028-1273	1, 3, 5

*The bearing inserts for Nos. 2 and 4 journals have oil grooves.

Crankshaft side clearance	0.05 – 0.20 mm	0.40 mm
Alternator shaft chain 20-link length	158.8 – 159.2 mm	161.5 mm
Transmission:		
Gear backlash	0.06 – 0.23 mm	0.3 mm
Gear shift fork groove width	5.05 – 5.15 mm	5.3 mm
Shift fork ear thickness	4.9 – 5.0 mm	4.8 mm
Shift fork guide pin diameter	7.9 – 8.0 mm	7.8 mm
Shift drum groove width	8.05 – 8.20 mm	8.3 mm

Special Tools

Along with common hand tools and precision instrument specialized tools are required for complete crankshaft/transmission servicing.

Stem Bearing Driver: 57001-137

Outside Circlip Pliers: 57001-144

Bearing Puller: 57001-158

Oil Seal Guide: 57001-264

Bearing Puller Adapter: 57001-317

Bearing Driver Set: 57001-1129

Coupling Holder: 57001-1189

Sealant

Kawasaki Bond (Liquid Gasket — Black): 92104-1003

Kawasaki Bond (Silicone Sealant): 56019-120

Crankcase Splitting

Crankcase Splitting

- Remove the engine (see Engine Removal/Installation chapter).
- Set the engine on a clean surface while parts are being removed.
- Remove the following parts from the engine.
  - External Shift Mechanism Cover
  - Starter Motor
  - Alternator
  - Pickup Coils
  - Right Engine Cover
  - Alternator Shaft Chain Tensioner
- Remove the following parts only if the crankshaft is to be removed.
  - Pistons
  - Alternator Shaft Chain and Sprockets
- Remove the following part only if the transmission drive shaft assembly is to be disassembled.
  - Clutch
- Remove the 6 mm upper crankcase-half bolts first, and then the 8 mm bolts.

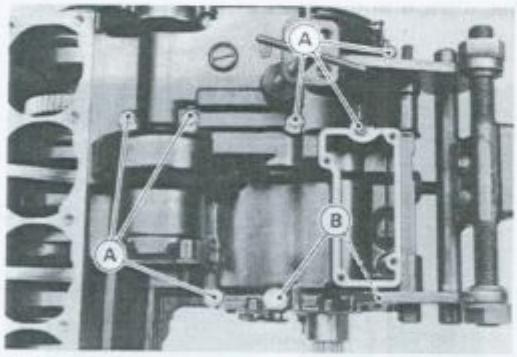

A. 6 mm Bolts B. 8 mm Bolts

- Turn the engine upside down and remove the following parts.
  - Oil Pump and Bracket
- Remove the 6 mm lower crankcase-half bolts first, and then the 8 mm bolts. Be careful not to take out the crankshaft main bearing cap bolts.

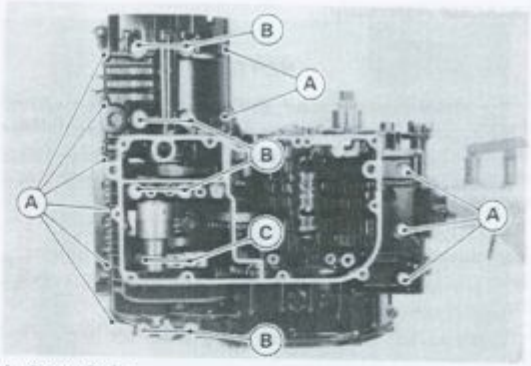

A. 6 mm Bolts
B. 8 mm Bolts
C. Remove is not necessary for crankcase split.

- Pry the points indicated in the figure to split the crankcase halves apart, and remove the lower crankcase half. There are two knock pins on the left and right of the mating surface.

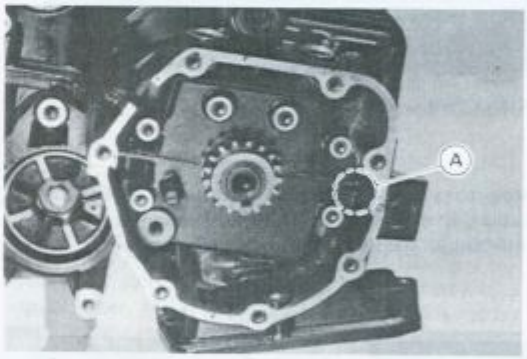

A. Pry Point

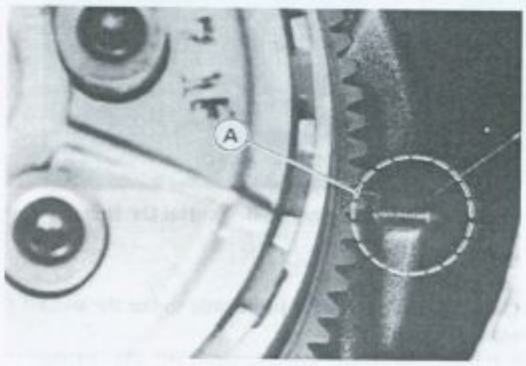

A. Pry Point

Crankcase Assembly

NOTE

○*The upper crankcase half, the lower crankcase half, and the crankshaft main bearing cap are machined at the factory in the assembled state, so the crankcase halves and the main bearing cap must be replaced together as a set.*

●Assembly is the reverse of splitting. Note the following.
●Before fitting the lower case on the upper case, check the following.
○Check to see that the following parts are in place on the upper crankcase half.

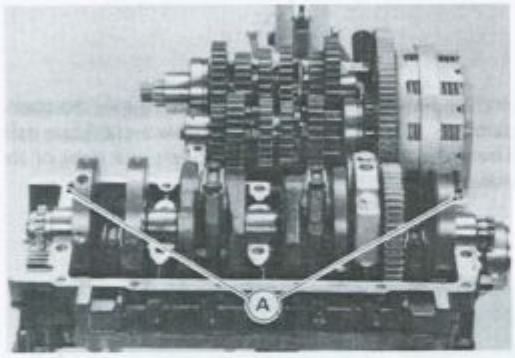

A. Knock Pins

○Check to see that the shift drum is in the neutral position, that is, the neutral positioning lever fits into the detent on the shift drum bearing holder.

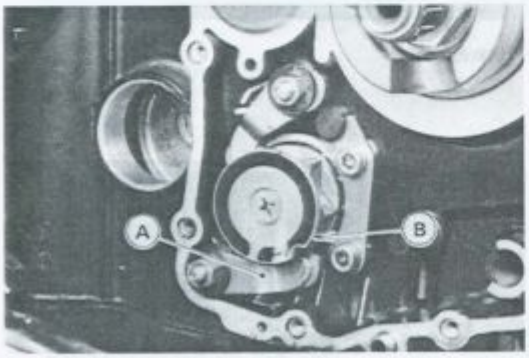

A. Neutral Positioning Lever B. Neutral Detent

○Check that the crankshaft is positioned so the #1 and 4 pistons are at TDC.
●With a high flash-point solvent, clean off the mating surfaces of the crankcases halves and wipe dry.

●Apply liquid gasket – black (Kawasaki Bond: 92104-1003) to the mating surface of the lower crankcase half.

CAUTION

○**Do not apply liquid gasket – black (Kawasaki Bond: 92104-1003) around the crankshaft main bearing inserts.**

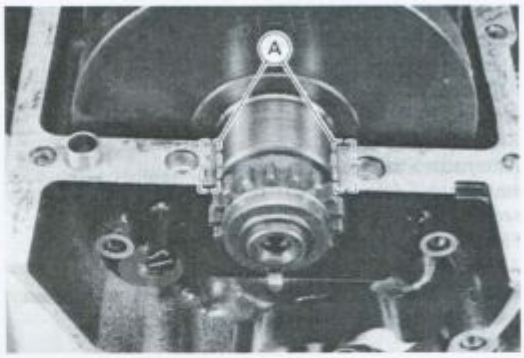

A. Do not apply liquid gasket – black (Kawasaki Bond: 92104-1003) here.

●Fit the lower crankcase half on the upper crankcase half observing the following.
○Set the shift forks so that the fingers of each fork fit into the grooves of the gears.
○Hold the balancer so that the mark on the balancer weight aligns with the center of the oil passage hole.

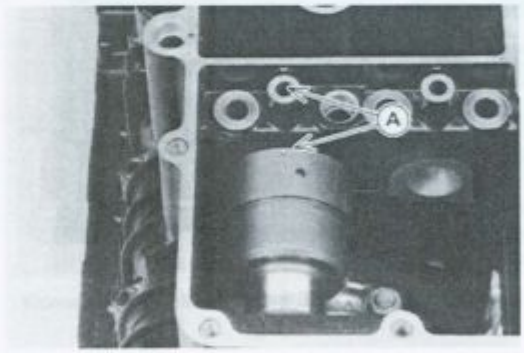

A. Align mark with hole center.

●Tighten the lower crankcase half bolts using the following 3 steps:
○Lightly tighten all lower crankcase half bolts to a snug fit. The three 8 mm bolts (sequence numbered 1 through 3) have a flat washer.
○Following the sequence numbers on the lower crankcase half, torque the 8 mm bolts first to about one half of the specification (see Exploded View), and finally to the specification in the same sequence.

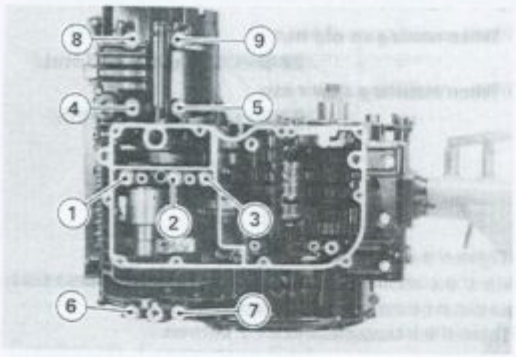

Torque Value for 8 mm Bolts

First:	**14 N-m (1.4 kg-m, 10.0 ft-lb)**
Final:	**27 N-m (2.8 kg-m, 20 ft-lb)**

○Torque the 6 mm bolts to the specification (see Exploded View).

●After tightening all crankcase bolts, check the following items:

○Drive shaft and output shafts turn freely.

○While spinning the output shaft, gears shift smoothly from the 1st to 6th gear, and 6th to 1st.

○When the output shaft stays still, the gear can not be shift to 2nd gear or other higher gear positions.

Crankshaft/Connecting Rods

Crankshaft, Connecting Rod Removal/Installation:

Crankshaft Removal

●Remove the engine.

●Remove the pistons.

●Split the crankcase.

●Remove the main bearing cap bolts with flat washers, and take off the cap.

Crankshaft Installation Notes

●If the crankshaft or bearing inserts are replaced with new ones, check clearance with plastigage before assembling engine to be sure the correct bearing inserts are installed.

●Install the crankshaft main bearing cap with the arrow on it pointing forward. Tighten bolts to the specified torque (see Exploded View).

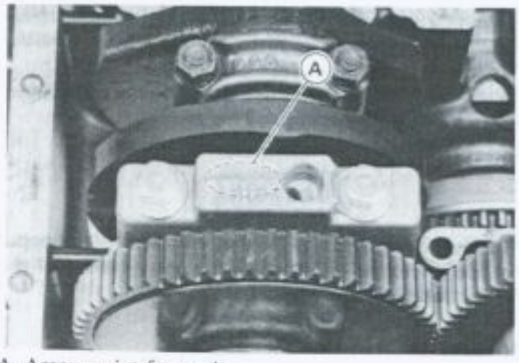

A. Arrow point forward.

Connecting Rod Removal

●Remove the crankshaft.

●Mark and record locations of the connecting rods and their big end caps so that they can be re-assembled in their original positions.

●Remove the connecting rod big end cap nuts, and take off the rod and cap with the bearing inserts.

CAUTION

○**To prevent damage to the crankpin surfaces, do not allow the big end cap bolts to bump against them.**

Connecting Rod Installation Notes

●To minimize vibration, a pair of connecting rod (left two rods or right two) should have the same weight mark. The left two rods are a pair and the right two rods are a pair. The weight mark is indicated by a capital letter, and is stamped on the connecting rod big end.

Weight Mark Location

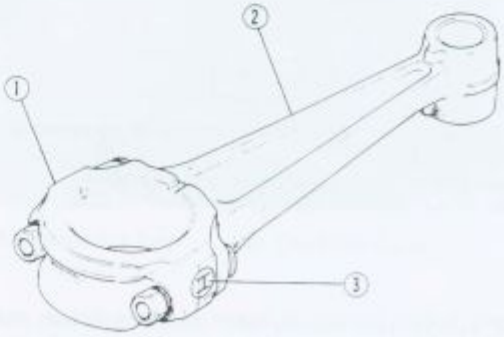

1. Big end cap
2. Connecting rod
3. Weight mark, alphabet

- If the connecting rods or bearing inserts are replaced with new ones check clearance with plastigage before assembling engine to be sure the correct bearing inserts are installed.
- Apply molybdenum disulfide grease to the upper inner surface of the connecting rod big end.

CAUTION

○**Do not apply grease to the inner surface of the upper or lower bearing inserts or to the outer surface of the lower bearing insert.**

Connecting Rod and Bearing Insert

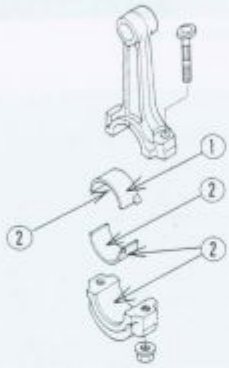

1. Apply grease.
2. Do not apply grease.

- The connecting rod bolts are designed to stretch when tightened. Never reuse them. Replace the connecting rod big end bolts with new ones.

○The new conneting bolt and nut are treated with an anti-rust solution, be sure to clean the bolt and nut thoroughly with high flash point solvent.

WARNING

○**Clean the bolts and nuts in a well-ventilated area, and take care that there is no spark or flame anywhere near the working area, this includes any appliance with a pilot light. Because of the danger of highly flammable liquides, do not use gasoline or low flash-point solvents to clean the bolts and nuts.**

CAUTION

○**Immediately dry the bolts and nuts with compressed air after cleaning.**

○**Clean and dry the bolts and nuts completely.**

- Apply a small amount of engine oil to the threads and seating surface of the connecting rod bolts and nuts.
- Tighten the nuts to the specified torque, according to whether they are new or used.

Tightening Torque for the Connecting Rod Big End Nuts

When reusing an old nut
26 N-m (2.7 kg-m, 19.5 ft-lb)

When installing a new nut
29 N-m (3.0 kg-m, 22 ft-lb)

- Tighten the nuts **120°** more.

○Mark the connecting rod big end caps and nuts so that nuts can be turned 120° properly.

○Tighten the hexagonal nut by 2 corners.

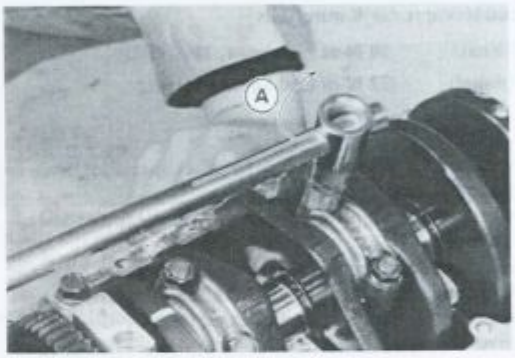

A. 120°

Connecting Bolt Tightening

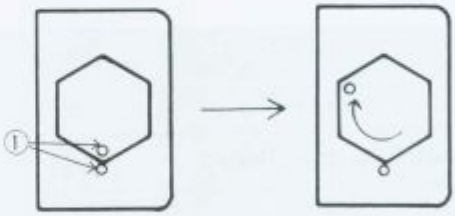

1. Marks

CAUTION

○**Be careful not to overtighten the nuts.**

- Check the protruding length of the connecting rod bolt.

★If the length is more than 0.8 mm, the bolt has stretched too much. Replace the bolt and nut with new ones. An over elongated bolt may break in use.

Connecting Rod Big End

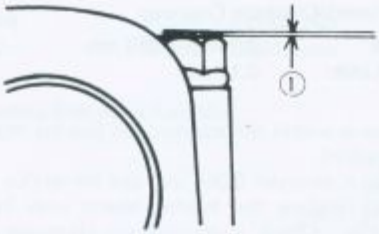

1. Protruding Length

Crankshaft, Connecting Rod Inspection/Maintenance:

Crankshaft/Connecting Rod Cleaning

- After removing the connecting rods from the crankshaft with a high flash-point solvent.
- Blow the crankshaft oil passages with compressed air to remove any foreign particles or residue that may have accumulated in the passages.

Connecting Rod Bend/Twist

- Measure connecting rod bend.

○Remove the connecting rod big end bearing inserts, and reinstall the connecting rod big end cap.

○Select an arbor of the same diameter as the connecting rod big end, and insert the arbor through the connecting rod big end.

○Select an arbor of the same diameter as the piston pin and at least 100 mm long, and insert the arbor through the connecting rod small end.

○On a surface plate, set the big-end arbor on V block.

○With the connecting rod held vertically, use a height gauge to measure the difference in the height of the arbor above the surface plate over a 100 mm length to determine the amount of connecting rod bend.

★If connecting rod bend exceeds the service limit, the connecting rod must be replaced.

Connecting Rod Bend

Service Limit:	**0.2/100 mm**

Connecting Rod Bend Measurement

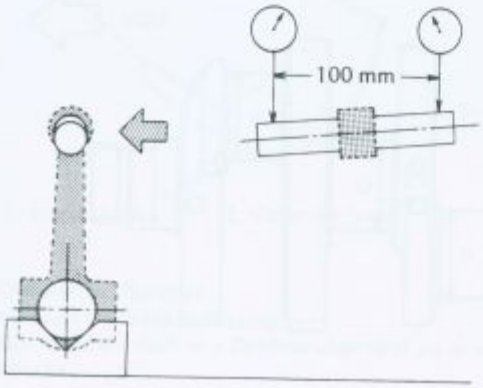

- Measure connecting rod twist.

○With the big-end arbor still on V block, hold the connecting rod horizontally and measure the amount that the arbor varies form being parallel with the surface plate over a 100 mm length of the arbor to determine the amount of connecting rod twist.

★If connecting rod twist exceeds the service limit, the connecting rod must be replaced.

Connecting Rod Twist

Service Limit:	**0.2/100 mm**

Connecting Rod Twist Measurement

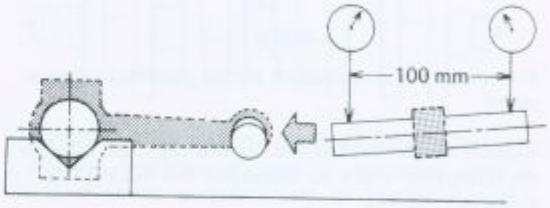

Connecting Rod Big End Side Clearance

- Measure connecting rod big end side clearance.

○Insert a thickness gauge between the big end and either crank web to determine clearance.

Connecting Rod Big End Side Clearance

Standard:	**0.13 – 0.33 mm**
Service Limit:	**0.50 mm**

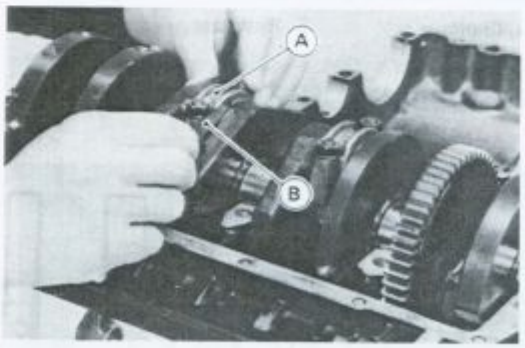

A. Connecting Rod B. Thickness Gauge

★If clearance exceeds the service limit, replace the connecting rod with new one and then check clearance again. If clearance is too large after connecting rod replacement, also the crankshaft must be replaced.

Connecting Rod Big End Bearing Insert/Crankpin Wear

Bearing insert/crankpin wear is measured using a plastigage (press gauge), which is inserted into the clearance to be measured. The plastigage indicates the clearance by the amount it is compressed and widened when the parts are assembled.

●Measure the bearing insert/crankpin clearance.

○Remove the connecting rod big end caps and wipe each bearing insert and crankpin surface clean of oil.

○Cut strips of plastigage to bearing insert width, and place a strip on the crankpin for each connecting rod parallel to the crankshaft so that the plastigage will be compressed between the crankpin and the bearing insert.

○Install the connecting rod big end caps and tighten the big end cap nuts to the specified torque (see Exploded View).

NOTE

○*Do not turn the crankshaft during clearance measurement.*

○Remove the connecting rod big end caps, and measure the plastigage width to determine the bearing insert/crankpin clearance.

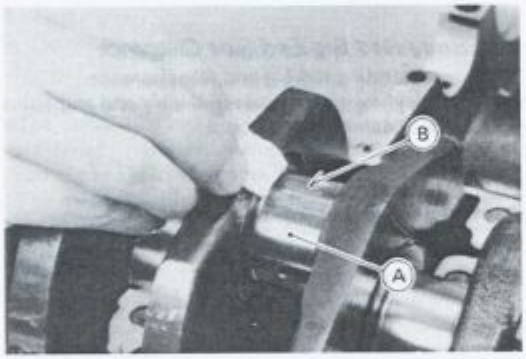

A. Crankpin B. Plastigage

Connecting Rod Big End Bearing Insert/Crankpin Clearance

Standard:	**0.046 – 0.076 mm**
Service Limit:	**0.11 mm**

★If clearance is within the standard, no bearing replacement is required.

★If clearance is between 0.066 mm and the service limit (0.10 mm), replace the bearing inserts with inserts painted blue. Check insert/crankpin clearance with plastigage. The clearance may exceed the standard slightly, but it must not be less than the minimum in order to avoid bearing seizure.

★If clearance exceeds the service limit, measure the diameter of the crankpins.

Crankpin Diameter

Standard:	**34.984 – 35.000 mm**
Service Limit:	**34.97 mm**

★If any crankpin has worn past the service limit, replace the crankshaft with a new one.

★If the measured crankpin diameter are not less than the service limit, but do not coincide with the original diameter markings on the crankshaft, write new marks on it.

Crankpin Diameter Marks

None:	**34.984 – 34.992 mm**
○ :	**34.993 – 35.000 mm**

●Put the connecting rod big end caps on the rods and tighten the nuts to the specified torque (see Exploded View).

●Measure the inside diameter, and mark each connecting rod big end in accordance with the inside diameter.

NOTE

○*The mark already on the big end should almost coincide with the measurement.*

Crankshaft Mark Location

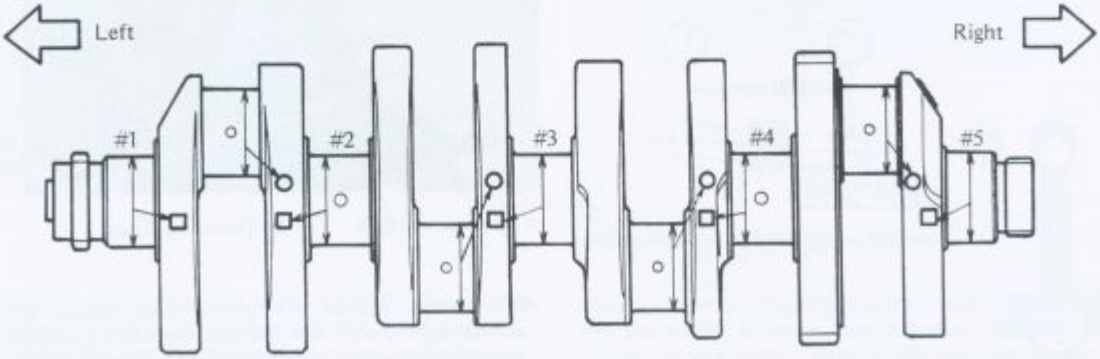

Connecting Rod Big End Inside Diameter Marks

None:	38.000 – 38.008 mm
○ :	38.009 – 38.016 mm

Connecting Rod Mark Location

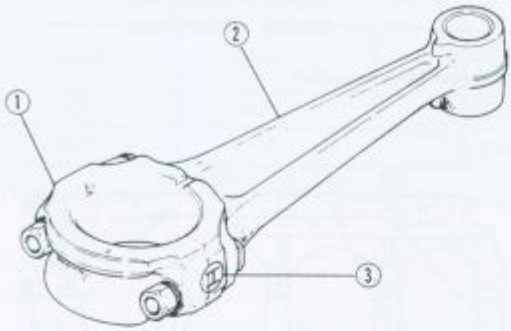

1. Big end cap
2. Connecting rod
3. Diameter mark
   ○mark or no mark, around weight mark alphabet

●Select the proper bearing insert in accordance with the combination of the connecting rod and crankshaft coding.
●Install the new insert in the connecting rod and check insert/journal clearance with plastigage.

Bearing Insert Selection

Con-rod Big End Bore Diameter Mark	Crankpin Diameter Mark	Bearing Insert	
		Size Color	Part Number
○	○	Black	92028-1408
None	None		
○	None	Blue	92028-1407
None	○	Brown	92028-1409

Bearing Insert Size Mark Location

1. Bearing insert
2. Color size mark

Crankshaft Runout

●Measure the crankshaft runout.
○Set the crankshaft in a flywheel alignment jig or on V blocks.
○Set a dial gauge against the center journal.
○Turn the crankshaft slowly to measure the runout. The difference between the highest and lowest dial gauge readings (TIR) is the amount of runout.
★If the measurement exceeds the service limit, replace the crankshaft.

Crankshaft Runout

Service Limit: 0.05 mm TIR

Crankshaft Runout

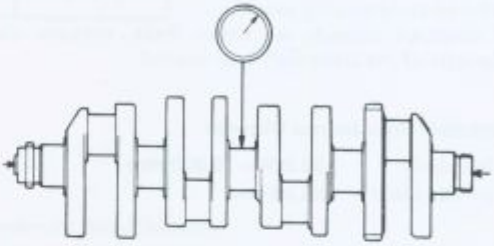

Crankshaft Main Bearing Insert/Journal Wear

Bearing insert/journal wear is measured using a plastigage (press gauge), which is inserted into the clearance to be measured. The plastigage indicates the clearance by the amount it is compressed and widened when the parts are assembled.

●Measure the bearing insert/journal clearance.
○Split the crankcase and wipe each bearing insert and journal surface clean of oil.
○Cut strips of plastigage to bearing insert width, and place a strip on each journal parallel to the crankshaft so that the plastigage will be compressed between the journal and the bearing insert.
○Install the lower crankcase half, and tighten the case bolts to the specified torque (see Exploded View).

NOTE

○*Do not turn the crankshaft during clearance measurement.*

○Remove the lower crankcase half and measure the plastigage width to determine the bearing insert/journal clearance.

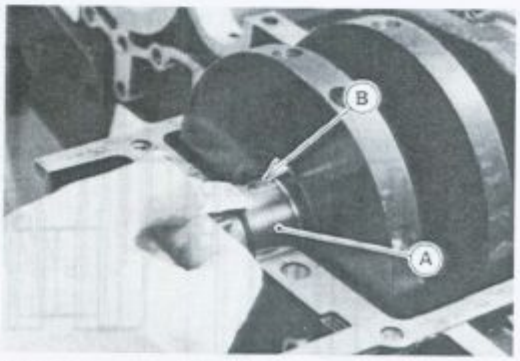

A. Journal
B. Plastigage

Crankshaft Main Bearing Insert/Journal Clearance

Standard:	**0.020 – 0.044 mm**
Service Limit:	**0.08 mm**

★If clearance is within the standard, no bearing replacement is required.
★If clearance is between 0.044 mm and the service limit (0.08 mm), replace the bearing inserts with inserts painted blue. Check insert/journal clearance with plastigage. The clearance may exceed the standard slightly, but it must not be less than the minimum in order to avoid bearing seizure.
★If clearance exceeds the service limit, measure the diameter of the crankshaft main journal.

Crankshaft Main Journal Diameter

Standard:	**35.984 – 36.000 mm**
Service Limit:	**35.96 mm**

★If any journal has worn past the service limit, replace the crankshaft with a new one.
★If the measured journal diameter are not less than the service limit, but do not coincide with the original diameter markings on the crankshaft, write new marks on it.

Crankshaft Main Journal Diameter Marks

None:	**35.984 – 35.992 mm**
1 :	**35.993 – 36.000 mm**

●Put the lower crankcase half and bearing cap on the upper crankcase half without bearing inserts, and tighten the case and cap bolts to the specified torque and sequence (see Crankcase Assembly).
●Measure the main bearing bore diameter, and mark the upper crankcase half in accordance with the bore diameter.

NOTE

○The mark already on the upper crankcase half should almost coincide with the measurement.

Crankcase Main Bearing Bore Diameter Marks

○ :	**39.000 – 39.008 mm**
None:	**39.009 –39.016 mm**

Crankcase Mark Location

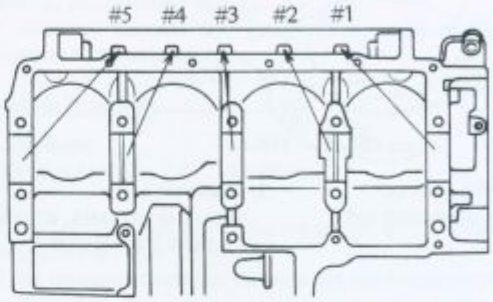

●Select the proper bearing insert in accordance with the combination of the crankcase and crankshaft coding.
●Install the new insert in the crankcase and cap and check insert/journal clearance with plastigage.

Bearing Insert Size Mark Location

1. Bearing insert 2. Color size mark

Crankshaft Mark Location

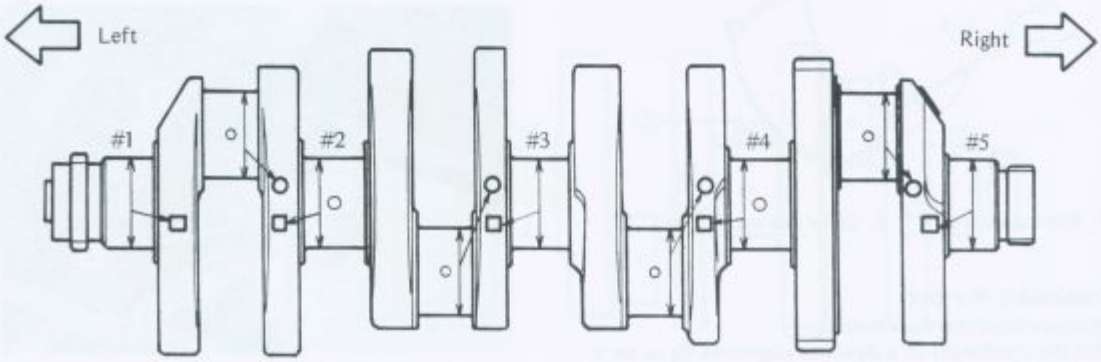

Bearing Insert Selection

Crankcase Main Bearing Bore Diameter Mark	Crankshaft Main Journal Diameter Mark	Bearing Insert*		
		Size Color	Part Number	Journal Nos.
○	1	Brown	92028-1102	2, 4
			92028-1274	1, 3, 5
None	None	Blue	92028-1100	2,4
			92028-1272	1, 3, 5
○	None	Black	92028-1101	2, 4
None	1		92028-1273	1, 3, 5

*The bearing inserts for Nos. 2 and 4 journals have oil groove.

Crankshaft Side Clearance

- Measure crankshaft side clearance.
- ○Insert a thickness gauge between the crankcase main bearing cap and the crank web at the No.2 journal to determine clearance.
- ★If the clearance exceeds the service limit, replace the crankcase halves and main bearing cap as a set.

NOTE

○*The upper crankcase half, lower crankcase half, and main bearing cap are machined at the factory in the assembled state, so they must be replaced as a set.*

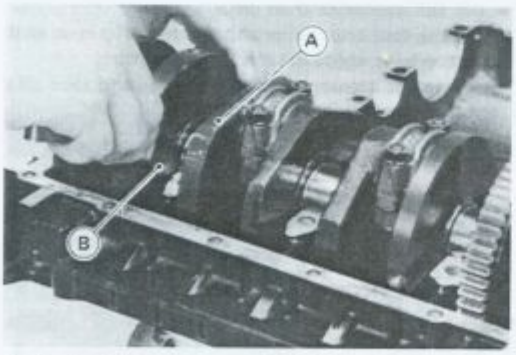

A. Crankshaft B. Thickness Gauge

Crankshaft Side Clearance

Standard:	**0.05 – 0.20 mm**
Service Limit:	**0.40 mm**

Balancer

Balancer Removal

- Split the crankcase.
- Unscrew the balancer shaft clamp bolts, and pull off the clamp lever.
- Unscrew the bolt holding the balancer shaft guide pin plate, and take off the plate and guide pin.
- Pull the balancer shaft with the oil seal toward the right out of the crankcase. At the same time, the balancer weight and gear assembly comes off.

Balancer Installation Notes

- When coupling the balancer weight and the gear, observe the following.
- ○Check that the damper rubbers are in place.
- Fit the copper washers on both sides of the weight and gear assembly. The projected side faces toward the assembly.

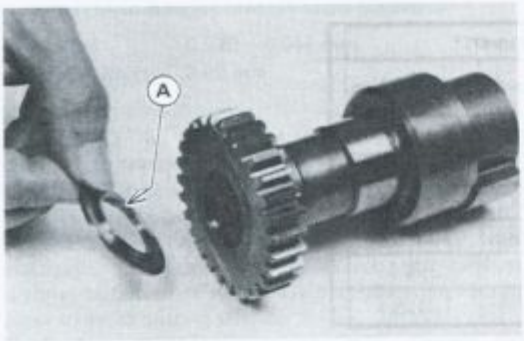

A. Projected Side

•Turn the balancer shaft until the line mark on the end of the shaft points to the front. And then, install the clamp lever. Tighten the bolt at the rear of the lever first then tighten the clamp bolt at the front of the lever temporarily.

Balancer Shaft Installation

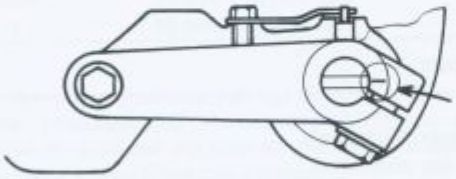

•Adjust the balancer shaft position during the preparation of the motorcycle. This adjustment must be done when engine is cold.

○Start the engine and let it at idle.

○Loosen the clamp bolt and turn the balancer shaft counterclockwise until the balancer gear makes a noise.

○Turn the shaft clockwise until the balancer gear stops to make a noise, and tighten the clamp bolt securely.

Damper Inspection

•Remove the balancer and disassemble the weight and gear assembly.

•Visually inspect the rubber dampers.

★If they appear damaged or deteriorated, replace them.

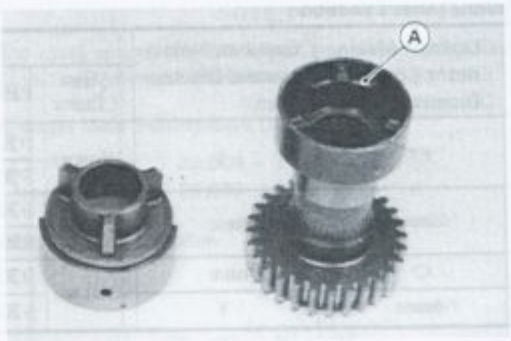

A. Rubber Dampers

Needle Bearing Wear

•Visually check the needle bearings.

○The rollers in a needle bearing normally wear very little, and wear is difficult to measure. Instead of measuring, inspect the bearing for abrasion, color change, or other damage.

★If there is any doubt as to the condition of a needle bearing, replace it.

Alternator Shaft/Starter Motor Clutch

Chain Tensioner Removal

•Remove the right engine cover.

•Lock the alternator shaft chain tensioner.

○Push the tensioner guide and the rod stop lever so that the stop lever keeps the rod from returning.

•Remove the tensioner mounting bolts and take off the tensioner assembly.

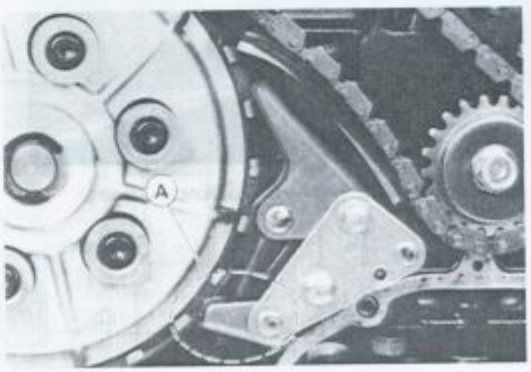

A. Tensioner in free positioned

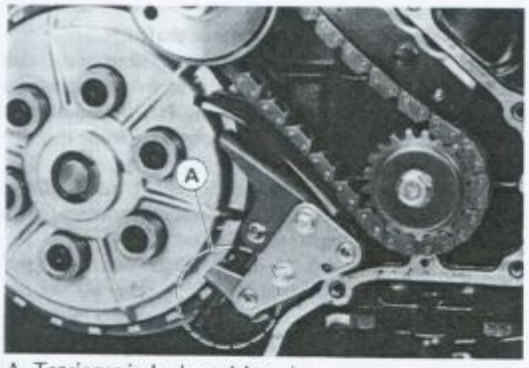

A. Tensioner in lock positioned

Chain Tensioner Installation Note

- Lock the chain tensioner and install it with the mounting bolts. The tensioner should be freed from the locked position after installing it.

Chain and Sprocket Removal

- Remove the right engine cover.
- Remove the chain tensioner.
- Using coupling holder 57001-1189, to keep the alternator shaft from turning, remove the alternator shaft right end nut and crankshaft right end bolt.
- If necessary, remove the coupling bolt at the alternator shaft left end at this time.

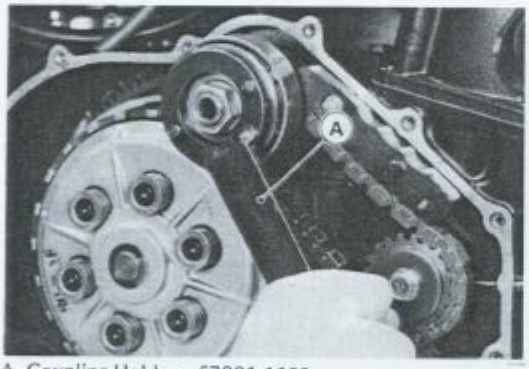

A. Coupling Holder: 57001-1189

- Pull the chain and the sprockets as a set.

Chain and Sprocket Installation Note

- Tighten the alternator shaft right end nut, crankshaft right end bolt, and alternator left end bolt to the specified torque. (see Exploded View)

Alternator Shaft and Starter Clutch Removal

- Remove the engine.
- Split the crankcase.
- Remove the alternator shaft chain and sprockets.
- Remove the coupling with the rubber dampers at the left end of the shaft.
- Holding the starter motor clutch, pull the alternator shaft off the crankcase.

Alternator Shaft and Starter Clutch Installation Notes

- If the starter motor idle gear is removed, install it so that the small diameter gear side faces to the starter motor side.

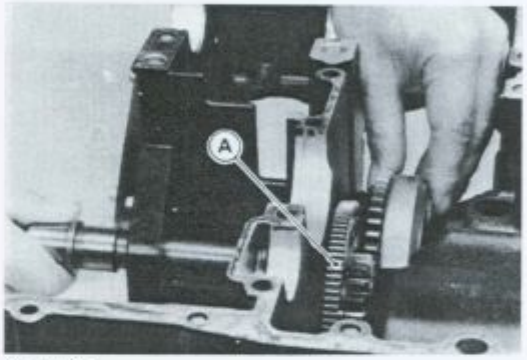

A. Idle Gear

- If the alternator shaft ball bearing and/or needle bearing is removed, install it so that the marked side of it faces out and press it until it stops by bearing driver set 57001-1129.

Alternator Shaft Chain Wear

- Hold the alternator shaft chain so that it may be pulled tight.
- Measure the length of 20 links (21 pins) with a vernier caliper.
- ★If the 20-link length of the alternator shaft chain is greater than the service limit, replace it.

Alternator Shaft Chain 20-link Length

Standard:	**158.8 – 159.2 mm**
Service Limit:	**161.5 mm**

Chain 20-Link Length Measurement

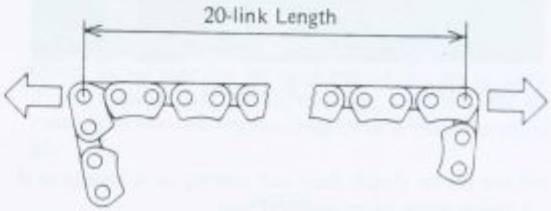

Chain Guide Wear

- Visually inspect the rubber on the guides.
- If the rubber is cut or damaged in any way, replace the guide.

Damper Inspection

- Visually inspect the rubber dampers at both end couplings of the alternator shaft.
- ★If they appear damaged or deteriorated, replace them.

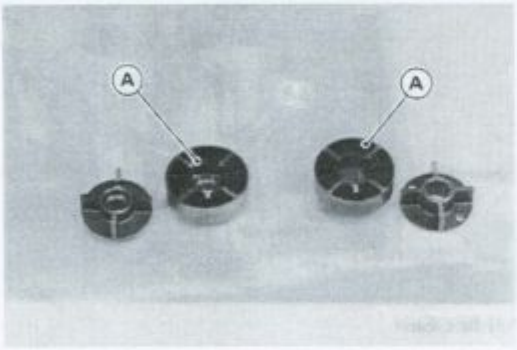

A. Rubber Dampers

Starter Motor Clutch Inspection

- Remove the starter motor.
- Turn the starter motor idle gear by hand. When viewed from the left side of the engine, the idle gear should turn counterclockwise freely, but should not turn clockwise.

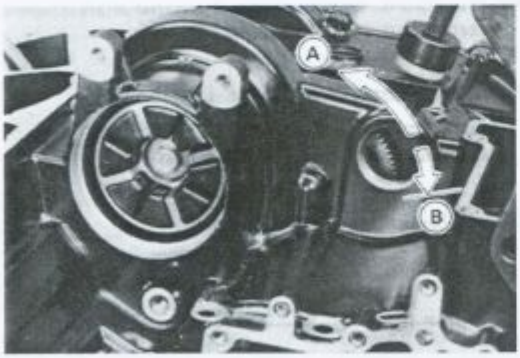

A. Turn freely. B. Locked

- ★If the starter clutch does not operate as it should or if it makes noise, go to the next step.
- Disassemble the starter motor clutch, and visually inspect the clutch parts: springs, spring caps, rollers, and gear.
- ★If there is any worn or damaged part, replace it.

Ball and Needle Bearing Wear

- Check the ball bearing: alternator shaft LH.
- ○Since the ball bearing is make to extremely close tolerances, the wear must be judged by feel rather than measurement. Clean the bearing in a high flash-point solvent, dry it (do not spin the bearing while it is dry), and oil it with engine oil.
- ○Spin the bearing by hand to check its condition.
- ★If the bearing is noisy, does not spin smoothly, or has any rough spots, replace it.
- Check the following needle bearings: alternator shaft RH and starter motor clutch.
- ○The rollers in a needle bearing normally wear very little, and wear is difficult to measure. Instead of measuring, inspect the bearing for abrasion, color change, or other damage.
- ★If there is any doubt as to the condition of a needle bearing, replace it.

Transmission

Transmission External Shift Mechanism:
External Shift Mechanical Removal

- Remove the front bevel gear case (see Front Gear Case Removal).
- Move the shift mechanism arm out of its position on the end of the shift drum, and pull out the shift shaft with the arm, spring, and shaft return spring.

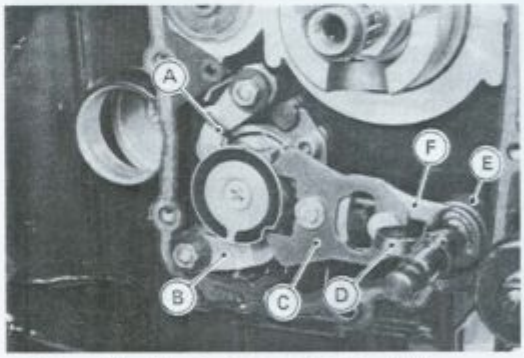

A. Neutral Positioning Lever
B. Gear Positioning Lever
C. Shift Mechanism Arm
D. Arm Spring
E. Return Spring
F. Shift Shaft

- Remove the nuts and take off the neutral positioning lever and gear positioning lever. Each lever has the collor, spring, and washer.

External Shift Mechanism Installation Notes

- The neutral positioning lever and the gear positioning lever are identical. The spring painted blue is for the neutral positioning lever.
- The projected side of the collar must face toward the lever.

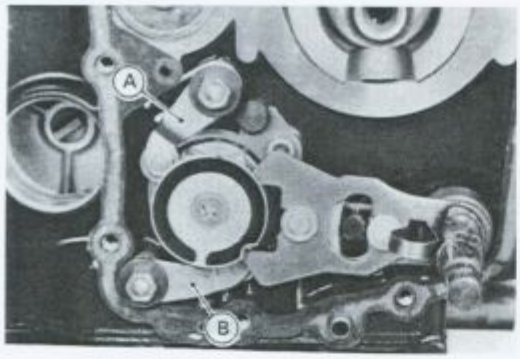

A. Neutral Positioning Lever B. Gear Positioning Lever

- Apply silicone sealant (Kawasaki Bond: 56019-120) to the area where the mating surface of the crankcase contacts the front bevel gear case gasket.
- Fill the engine with coolant (see Coolant Change in the Cooling System chapter).
- Check the engine oil level, and add oil if necessary (see Engine Oil Level Inspection in the Engine Lubrication System chapter).

External Shift Mechanism Inspection

- Examine the shift shaft for any damage.

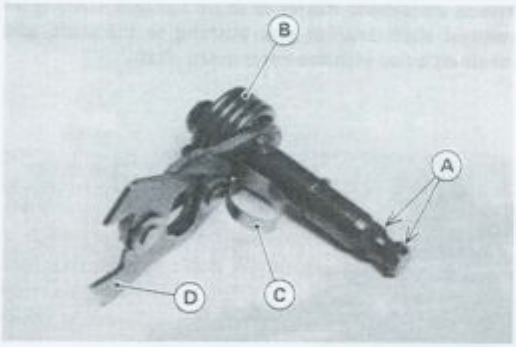

A. Splines
B. Return Spring
C. Arm Spring
D. Arm

○Check the shift shaft for bending or damage to the splines.
☆If the shaft is bent, straighten or replace it. If the splines are damaged, replace the shaft.
○Check the return spring and arm spring for breaks or distortion.
☆If the springs are damaged in any way, replace them.
○Check the shift mechanism arm for distortion.
☆If the shift mechanism arm is damaged in any way, replace the arm.
- Check the return spring pin is not loose.
★If it is loose, unscrew it, apply a non-permanent locking agent to the threads, and tighten it to the specified torque (see Exploded View).

- Check the gear positioning lever, neutral positioning lever, and their springs for breaks or distortion.
★If the levers or springs are damaged in any way, replace them.

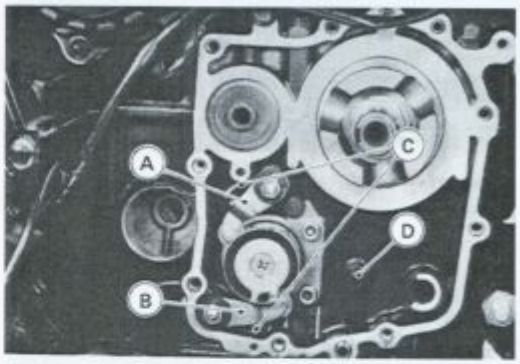

A. Nuetral Positioning Lever
B. Gear Positioning Lever
C. Springs
D. Return Spring Pin

- Visually inspect the shift drum pins, pin holder, and pin plate.
★If they are badly worn or if they show any damage, replace them.

Transmission Shafts, Shift Drum, Forks:

Transmission Removal/Disassembly:

Transmission Shaft Removal

- Remove the engine.
- Split the crankcase.
- Take out the drive and output shaft assemblies.
- If the drive shaft assembly is to be disassembled, remove the clutch.

Transmission Shaft Installation

- Install the clutch if it has been removed.
- With a high flash-point solvent, clean off the outer circumferences of the transmission ball bearings and needle bearings, and their bearing housings, and wipe dry.
- Check to see that the set rings and set pins are in place in the transmission bearing housings, and blow the oil passages in the bearing housings clean with compressed air.

NOTE

○*If the standard set rings (P/N: 14013-1005) cannot be put into the crankcase and ball bearing grooves, use the thin set rings (P/N: 14013-1006) instead of the standard set rings.*

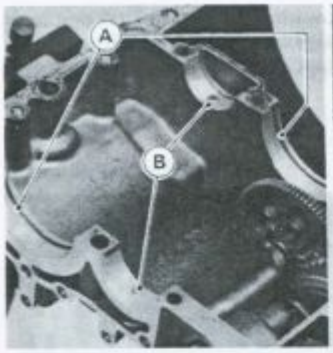

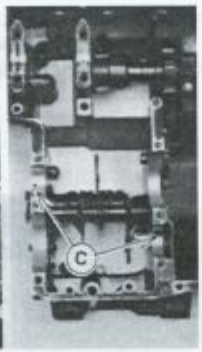

A. Set Rings
B. Set Pins
C. Oil Passage Holes

- Install the drive and output shaft assemblies in the upper crankcase half.

○The bearing set pins and rings must match properly with the holes or grooves in the bearing outer races. When they are properly matched, there is no clearance between the crankcase and the bearing outer races.

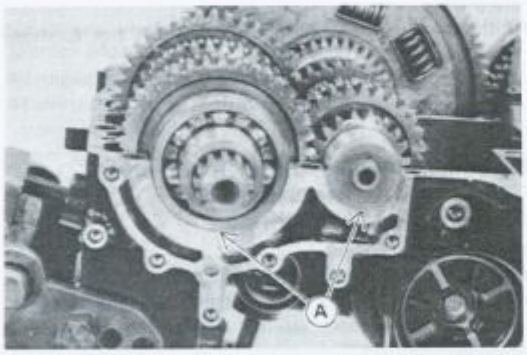

A. No Clearance (both left and right sides)

- Assemble the crankcase.
- Install the engine.

Transmission Shaft Disassembly

- Remove the transmission shafts.
- Using outside circlip pliers (special tool: 57001-144) to remove the circlips, disassemble the transmission shafts.
- The 5th gear on the output shaft has three steel balls assembled into it for the positive neutral finder mechanism. To remove this gear from the shaft, quickly spin the shaft in a vertical position while holding the 3rd gear, and pull off the 5th gear upwards.

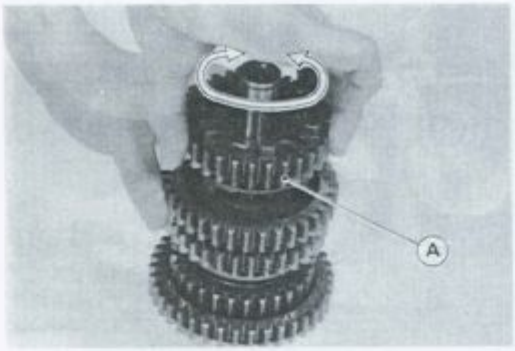

A. 5th Gear

- The ball bearings are press-fit on the transmission shafts. To remove the bearings, use bearing puller (special tool: 57001-158) and adapter (special tool: 57001-317).

Transmission Shaft Assembly

- Assembly is the reverse of disassembly. Note the following.
- When installing the 5th gear and steel balls on the output shaft, do not apply grease to the balls to hold them in place. This will cause the positive neutral finder mechanism to malfunction.
- When assembling the drive shaft 6th gear bushing and output shaft 3rd/4th gear bushing to the shaft, align their oil holes with the holes in the shaft.

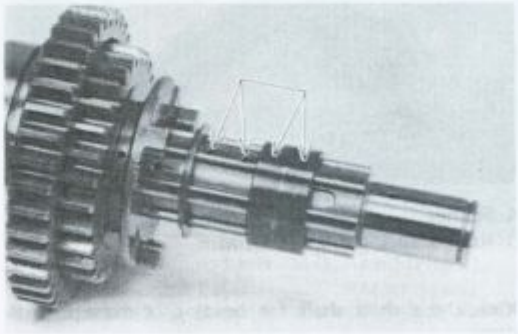

- Replace any circlip that were removed with new ones.
- Always install circlips so that the opening is aligned with a spline groove, and install toothed washers so that the teeth are not aligned with the circlip opening.
- The transmission gears can be identified by size;
  Drive shaft gears – the smallest diameter gear is 1st gear, and the largest is 6th.
  Output shaft gears – the largest diameter gear is 1st gear, and the smallest is 6th.

Circlip and Toothed Washer Installation

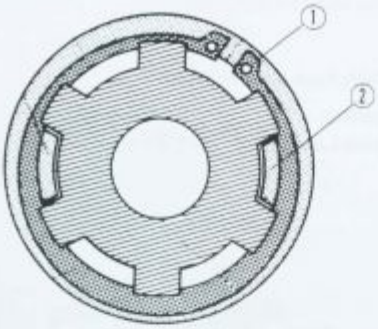

1. Circlip
2. Toothed Washer

•Using stem bearing driver (special tool: 57001-137), install the ball bearings and collar. The ball bearing for the drive shaft must be pressed on with the set ring groove toward the clutch side. The bearing for the output shaft must be pressed on with the set ring groove toward the opposite side of the engine sprocket.

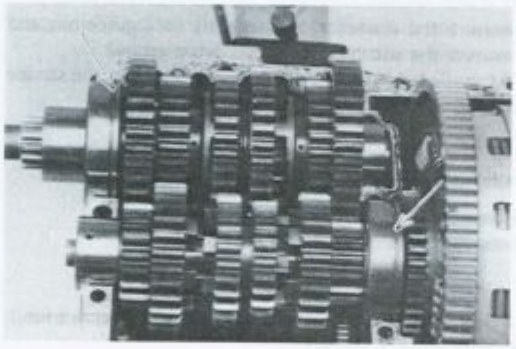

Shift Drum and Fork Removal

•Remove the external shift mechanism.
•Remove the oil pump and bracket.
•Unscrew the Allen bolts holding the shift drum ball bearing holder.

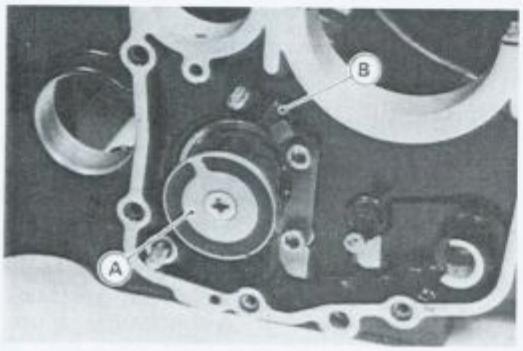

A. Shift Drum B. Shift Rod

•Pull out the shift rod, and take off the shift forks.
•Pull out the shift drum.

Shift Drum and Fork Installation

•Installation is the reverse of removal. Note the following.
•If the shift drum pin plate was removed, install it as following.
○One of the six pins is longer than the others. The long shift drum pin must be installed in the correct position, and must be fit into the correct hole in the back of the pin plate. If these parts are assembled in the wrong position, the neutral indicator light will not light when the gears are in neutral.

Shift Drum Pin Plate

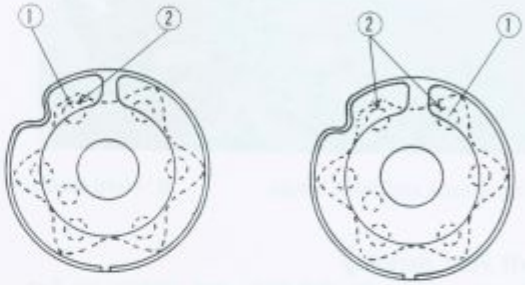

1. Long Pin
2. Recess in Pin Plate

If the pin plate has two recesses, the long pin should be instelled as shown above.

○Apply a non-permanent locking agent to the pin plate screw.
•The shift forks can be identified by their shape. Install them as following.

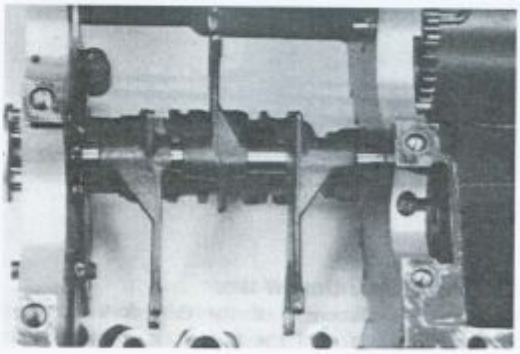

Transmission Maintenance:

Gear Backlash

•Split the crankcase leaving the transmission in place.
•Set a dial gauge against the teeth on one gear, and move the gear back and forth while holding the other gear steady. The difference between the highest and the lowest gauge readings is the amount of backlash.

★Replace both gears if the amount of backlash exceeds the service limit.

Gear Backlash

Standard:	**0.06 – 0.23 mm**
Service Limit:	**0.3 mm**

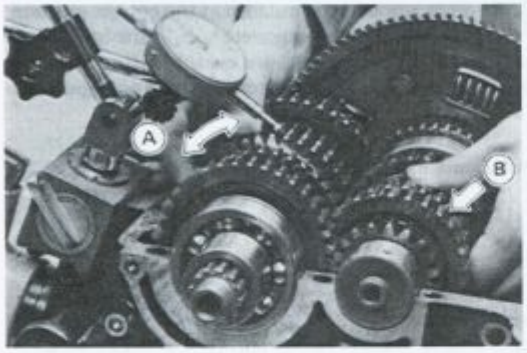

A. Move back and forth lightly. B. Hold steady.

Shift Fork Bending

●Visually inspect the shift forks, and replace any fork that is bent. A bent fork could cause difficulty in shifting, or allow the transmission to jump out of gear when under power.

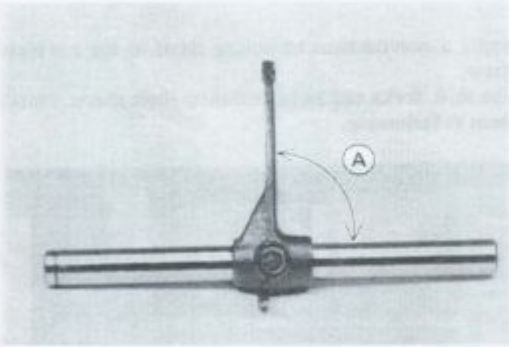

A. 90°

Shift Fork/Gear Groove Wear

●Measure the thickness of the shift fork ears, and measure the width of the shift fork grooves on the transmission gears.

★If the thickness of a shift fork ear is less than the service limit, the shift fork must be replaced.

Shift Fork Ear Thickness

Standard:	**4.9 – 5.0 mm**
Service Limit:	**4.8 mm**

★If a gear shift fork groove is worn over the service limit, the gear must be replaced.

Gear Shift Fork Groove Width

Standard:	**5.05 – 5.15 mm**
Service Limit:	**5.3 mm**

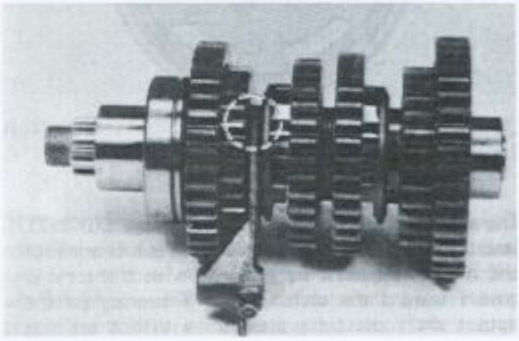

Shift Fork Guide Pin/Shift Drum Groove Wear

●Measure the diameter of each shift fork guide pin, and measure the width of each shift drum groove.

★If the guide pin on any shift fork is less than the service limit, the fork must be replaced.

Shift Fork Guide Pin Diameter

Standard:	**7.9 – 8.0 mm**
Service Limit:	**7.8 mm**

★If any shift drum groove is worn over the service limit, the drum must be replaced.

Shift Drum Groove Width

Standard:	**8.05 – 8.20 mm**
Service Limit:	**8.3 mm**

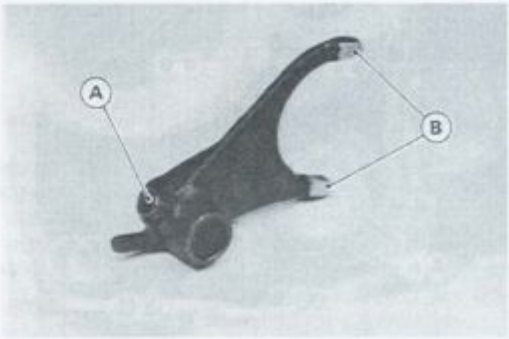

A. Shift Fork Guide Pin B. Shift Fork Ears

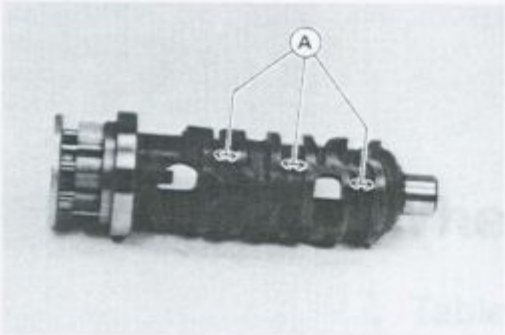

A. Shift Drum Grooves

Gear Dog/Gear Dog Hole Damage

●Visually inspect the gear dogs and gear dog holes.
★Replace any gears that have damaged or excessively worn dogs or dog holes.

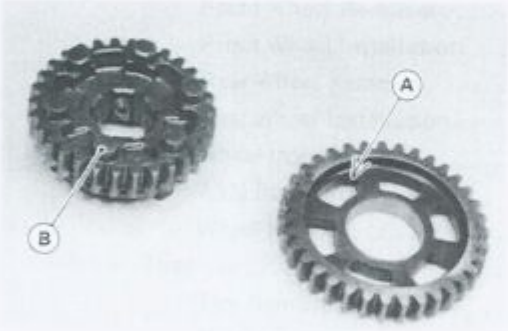

A. Dog Hole B. Dog

Ball and Needle Bearing Wear

●Check the following ball bearings: shift drum LH, drive shaft RH, and output shaft LH.
○Since the ball bearings are made to extremely close tolerances, the wear must be judged by feel rather than measurement. Clean each bearing in a high flash-point solvent, dry it (do not spin the bearing while it is dry), and oil it with engine oil.
○Spin the bearing by hand to check its condition.
★If the bearing is noisy, does not spin smoothly, or has any rough spots, replace it.
●Check the following needle bearing: drive shaft LH and output shaft RH.
○The rollers in a needle bearing normally wear very little, and wear is difficult to measure. Instead of measuring, inspect the bearing for abrasion, color change, or other damage.
★If there is any doubt as to the condition of a needle bearing, replace it.

Wheels/Tires

Table of Contents

Exploded View

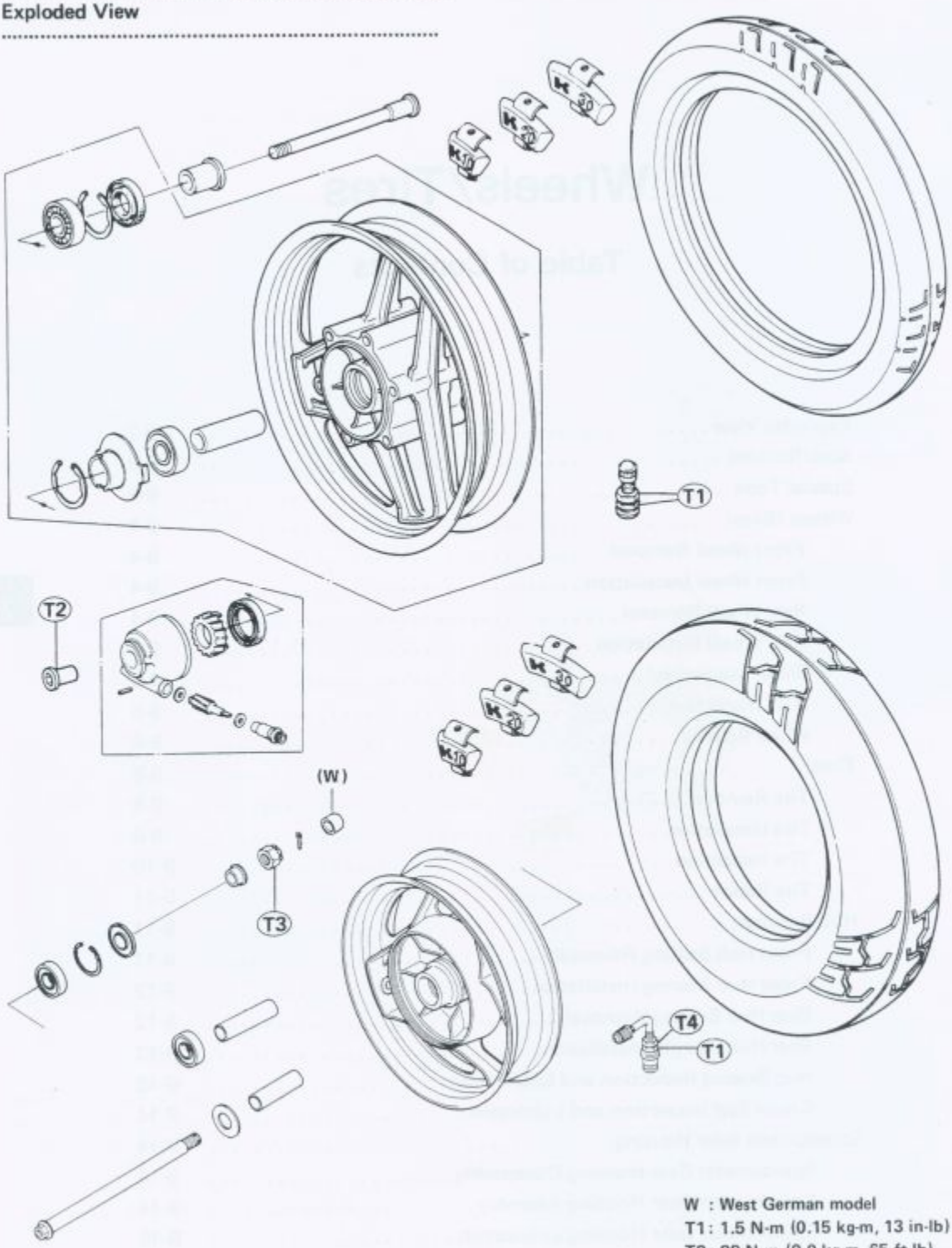

W : West German model
T1: 1.5 N-m (0.15 kg-m, 13 in-lb)
T2: 88 N-m (9.0 kg-m, 65 ft-lb)
T3: 110 N-m (11.0 kg-m, 80 ft-lb)
T4: 5.9 N-m (0.60 kg-m, 52 in-lb)

Specifications

Item		Standard	Service Limit
Tire tread depth	Front	4.4 mm	1 mm
	Rear	6.9 mm	2 mm (Under 130 km/h) 3 mm (Over 130 km/h)
Standard tire	Front	110/80 VR 18 DUNLOP K105F, Tubeless / 110/80 V18, Tubeless METZELER ME33 LASER	
	Rear	150/80 VR16 DUNLOP K700G, Tubeless / 150/80 VB16 METZELER ME99 A2, Tubeless	

			Load	Air Pressure (when cold)
Tire air pressure	Front			250 kPa (2.50 kg/cm², 36 psi)
	Rear	US, Canadian, Australian, and South African Model	Up to 200 kg (441 lb)	290 kPa (2.90 kg/cm², 41 psi)
		Other than above Model	Up to 97.5 kg (215 lb)	250 kPa (2.50 kg/cm², 36 psi)
			97.5 – 183 kg (215 – 404 lb) *97.5 – 191 kg (215 – 421 lb)	290 kPa (2.90 kg/cm², 41 psi)
Rim runout:		Axial	– – –	0.5 mm
		Radial	– – –	0.8 mm
Axle runout/100 mm			Under 0.05 mm	0.2 mm (0.7 mm : RL)

*Norwegian and Finnish models and ZG1000-A1 model

Special Tools

Bearing Driver Set: 57001-1129

Inside Circlip Pliers: 57001-143

Rim Protector: 57001-1063

Bead Breaker Ass'y: 57001-1072

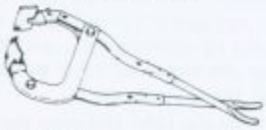

Tire Iron: 57001-1073

NOTE

○*The tire irons (P/N 57001-1073) are included in the bead breaker assembly (P/N 57001-1072).*

Wheels (Rims)

Front Wheel Removal

- Remove the following parts before front wheel removal.
  Lower fairing
  Speedometer cable lower end
  Brake caliper mounting bolts (one of the calipers)

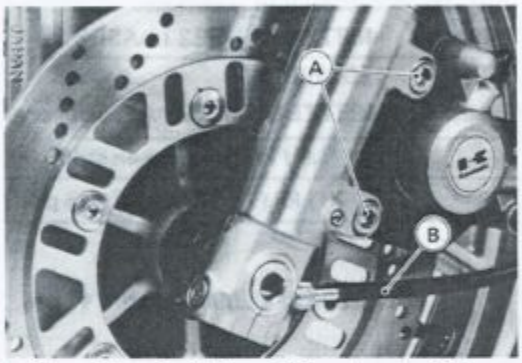

A. Caliper Mounting Bolts B. Speedometer Cable

Right side axle clamp bolt (loosen)

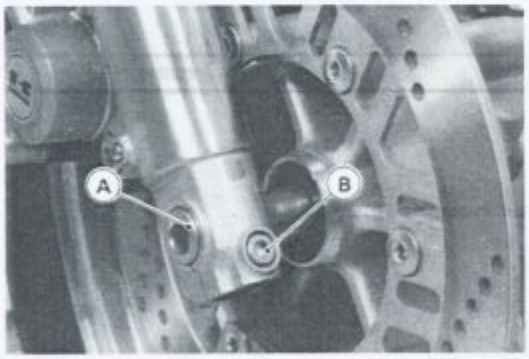

A. Axle B. Axle Clamp Bolt

Axle (loosen)

- Use a jack under the engine or other suitable means to lift the front of the motorcycle.
- Pull out the axle to the right and drop the front wheel out of the forks.
- Remove the caliper (one of the calipers).
- Remove the front wheel.

CAUTION

○**Do not lay the wheel down on one of the discs. This can damage or warp the disc. Place blocks under the wheel so that the discs do not touch the ground.**

Front Wheel Installation

- Installation is the reverse of removal. Note the following.

NOTE

○*Install the speedometer gear housing so that it fits in the speedometer gear drive notches.*
○*Fit the speedometer gear housing stop to the fork leg stop, and check that the collar is on the right hand side of the hub.*

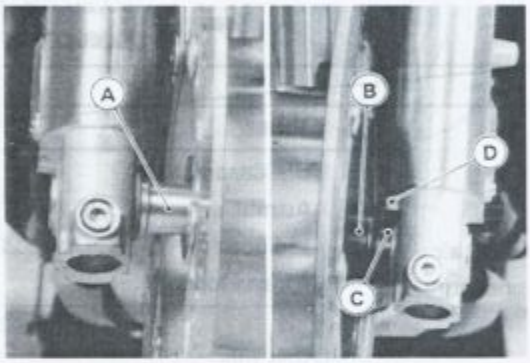

A. Collar
B. Speedometer Gear Housing
C. Housing Stop
D. Fork Leg Stop

○Tighten the axle nut to the specified torque.
○Tighten the axle clamp bolts to the specified torque.
○Tighten the caliper mounting bolts to the specified torque.
○Check the front brake.

WARNING

○**Do not attempt to drive the motorcycle until a full brake lever is obtained by pumping the brake lever until the pads are against the disc. The brakes will not function on the first application of the lever if this is not done.**

Rear Wheel Removal

- Remove the following parts.
  Trunks
  Cotter pin and axle nut (loosened)
  Torque link lower end bolt

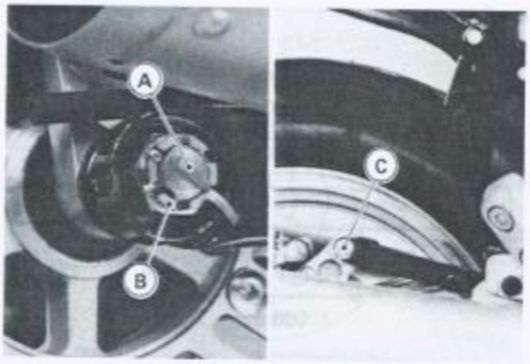

A. Cotter Pin C. Torque Link Lower End Bolt
B. Axle Nut

- Put the motorcycle on its center stand.
- Remove the axle nut.
- Pull out the axle, rear caliper bracket, cap and collar.
- Slide the rear wheel toward the right to disengage the wheel from the final gear case.

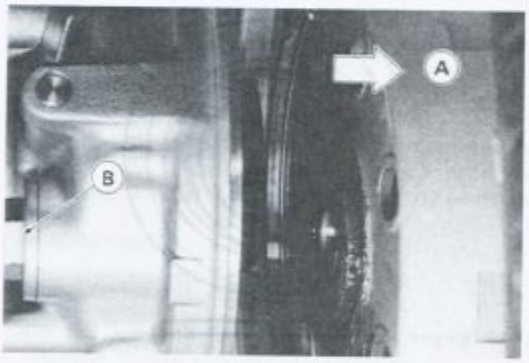

A. Slide the wheel toward the right
B. Cap

- Remove the final gear case (see Final Gear Case Removal in the Final Drive chapter).
- Remove the rear wheel.

CAUTION

Do not lay the wheel down on the disc. This can damage or warp the disc.

Rear Wheel Installation

- Apply grease to the splined portion and the circumference of the rear wheel coupling.

Rear Wheel Coupling

1. Apply grease.

- Be sure to insert the collar on the right side of the hub.
- Tighten the axle nut to the specified torque.
- Replace the axle nut cotter pin with a new one.
- Check the rear brake for weak braking power and brake drag.

Wheel Inspection

If there is any doubt as to the condition of the wheel, or if the wheel has received a heavy impact, check the rim runout as follows:

Remove the tire and support the wheel by the axle. Set a dial gauge against the side of the rim, and rotate the wheel to measure the axial runout. The difference between the highest and lowest dial readings is the amount of runout.

Set the dial gauge against the outer circumference of the rim, and rotate the wheel to measure radial runout. The difference between the highest and lowest dial readings is the amount of runout.

If rim runout exceeds the service limit, check the wheel bearings first. Replace them if they are damaged. If the problem is not due to the bearings, the wheel must be replaced. Do not attempt to repair a damaged wheel.

Axial Runout

Service Limit: **0.5 mm**

Radial Runout

Service Limit: **0.8 mm**

Rim Runout

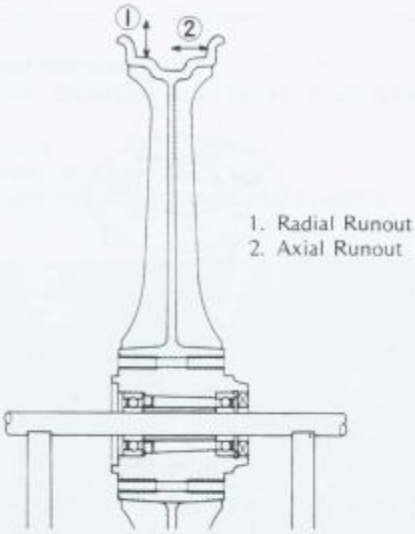

Carefully inspect the wheel for small cracks, dents, bending, or warping. If there is any damage to the wheel, it must be replaced.

WARNING

Never attempt to repair a damaged wheel. If there is any damage besides wheel bearings, the wheel must be replaced to insure safe operational condition.

If the rim has a scratch deeper than 0.5 mm and/or across the rim sealing surface, replace the wheel.

Axle Inspection

To measure axle runout, remove the axle, place it in V blocks that are 100 mm apart, and set a dial gauge on the axle at a point halfway between the blocks. Turn the axle to measure the runout. The amount of runout is the amount of dial variation.

If runout exceeds the service limit, straighten the axle or replace it. If the axle cannot be straightened to within service limit, or if runout exceeds the repair limit, replace the axle.

Axle Runout/100 mm

Service Limit:	**0.2 mm**
Repair Limit:	**0.7 mm**

Axle Runout

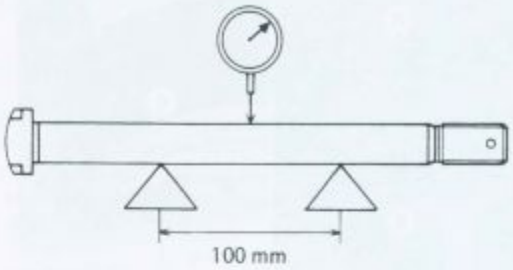

Wheel Balance

To check the wheel balance:

- Support the wheel so that it can be spun freely
- Spin the wheel lightly, and mark the wheel at the top when the wheel stops.

Wheel Balance Check

1. Mark

- Repeat this procedure several times. If the wheel stops of its own accord in various positions, it is well balanced.

To balance the wheel:

- If the wheel always stops in one position, provisionally attach a balance weight on the rim at the marking using adhesive tape.
- Rotate the wheel ¼ turn, and see whether or not the wheel stops in this position. If it does, the correct balance weight is being used.
- If the wheel rotates and the weight goes up, replace the weight with the next heavier size. If the wheel rotates and the weight goes down, replace the weight with the next lighter size. Repeat these steps until the wheel remains at rest after being rotated ¼ turn.
- Rotate the wheel another ¼ turn and then another ¼ turn to see if the wheel is correctly balanced.
- Repeat the entire procedure as many times as necessary to achieve correct wheel balance.
- Permanently install the balance weight.

Wheel Balance Adjust

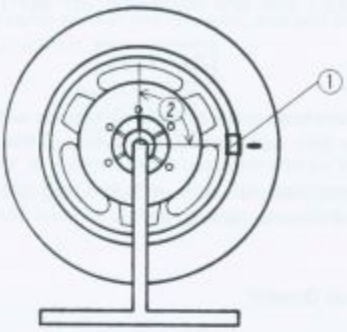

1. Balance Weight
2. ¼ Turn

Installation of Balance Weight:

- Check if the weight portion has any play on the blade-and-clip plate.
- ★If it does, discard it.
- Lubricate the balance weight blade, tire bead, and rim flange with a slap and water solution or rubber lubricant. This helps the balance weight slip on the rim flange.

CAUTION

○**Do not lubricate the tire bead with engine oil or gasoline because they will deteriorate the tire.**

- Install the balance weight on the rim.

○Slip the weight on the rim flange by pushing or lightly hammering the weight in the direction shown in the figure.

○Check that the blade and weight seat fully on the rim flange, and that the clip is hooked over the rim ridge and reaches rim flat portion.

WARNING

○**If the balance weight has any play on the rim flange, the blade and/ or clip of weight are widened. Replace the loose balance weight.**

○**Do not reuse used balance weights.**

Balance Weight

Part Number	Weight (grams)
41075-1014	10
41075-1015	20
41075-1016	30

Installing Balance Weight

(a) Press or lightly hammer the weight in.

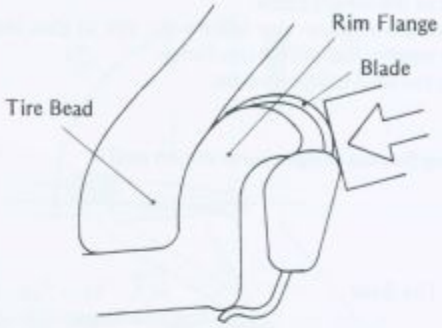

(b) Installation completed.

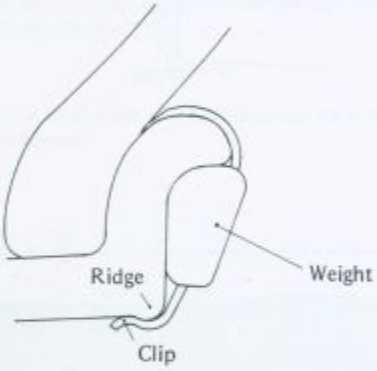

Removal of Balance Weight:

(a)When the tire is not on the rim.

- Push the blade portion toward the outside with a regular tip screw driver, and slip the weight off the rim flange.
- Discard the used balance weight.

Removing Balance Weight (without tire on rim)

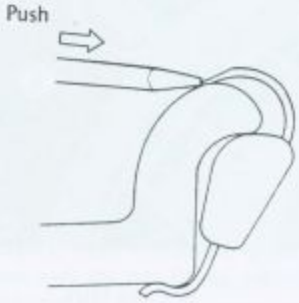

(b)When the tire is on the rim.

- Pry the balance weight off the rim flange using a regular tip screw driver as shown in the figure.
  - Insert the tip of the screw driver between the tire bead and the weight blade until the end of the tip reaches the end of the weight blade.
  - Push the screw driver grip toward the tire so that the balance weight slips off the rim flange.
- Discard the used balance weight.

Removing Balance Weight (with tire on rim)

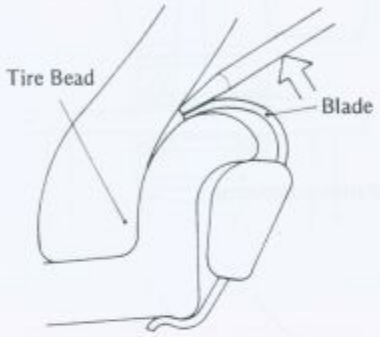

Tires

Tire Removal

- Remove the wheel from the motorcycle (see Front Wheel Removal or Rear Wheel Removal), and remove the disc(s) from the hub.
- To maintain wheel balance, mark the valve stem position on the tire with chalk so that the tire can be reinstalled in the same position.
- Take out the valve core to let out the air.

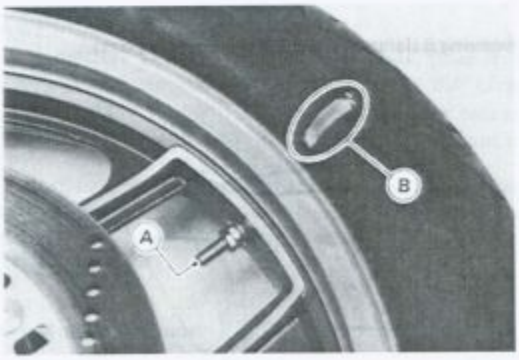

A. Valve Core B. Chalk Mark

- Lubricate the tire beads and rim flanges on both sides with a soap and water solution or rubber lubricant. This helps the tire beads slip off the rim flanges.

CAUTION

- **Never lubricate with mineral oil (engine oil) or gasoline because they will cause deterioration of the tire.**

- Break the beads away from both sides of the rim with the bead breaker (special tool).

Tire Beads Breaker

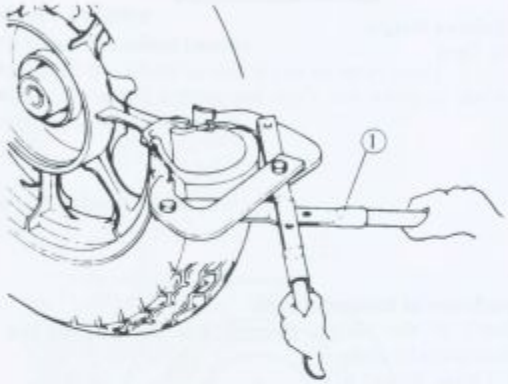

1. Bead Breaker: 57001-1072

- Install the rim protectors (special tools) around the valve stem. Lubricate the tire irons and rim protectors with a soap and water solution, or rubber lubricant.
- Step on the side of the tire opposite the valve stem, and start prying the tire off the rim near the valve stem with tire irons (special tools).

Tire Removal

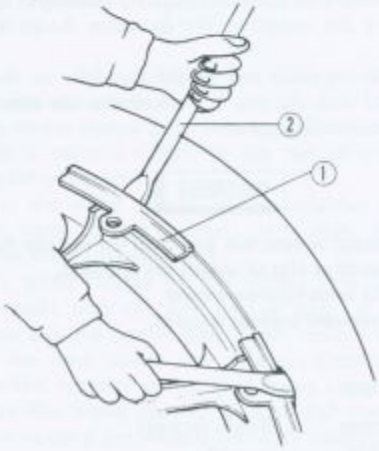

1. Rim Protectors: 57001-1063
2. Tire Irons: 57001-1073

NOTE

○*For easier removal, always position the tire bead opposite the valve stem in the rim well, and pry the tire bead a little at a time.*

CAUTION

○**Be careful not to scratch the inner liner and air sealing surfaces of the rim and tire with the tire irons. A scratched inner liner or sealing surface may allow air to leak.**

Air Sealing Surfaces

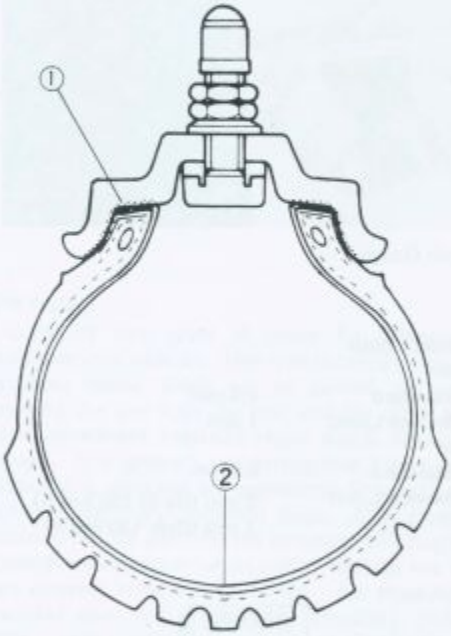

1. Air Sealing Surfaces
2. Inner Liner

- After removing the bead on one side, remove the other bead from the same side.
- Remove the rim from the tire.
- Remove the rim protectors from the rim.

Tire Installation

- Inspect the rim and tire, and replace them if necessary.
- Clean the sealing surfaces of the rim and tire, and smooth the sealing surfaces of the rim with a fine emery cloth if necessary.
- Replace the valve with a new one. Tighten the mounting nut and locknut to the specified torque (see Exploded View).

○For the rear wheel valve, install it so that the valve cap can be at left 85° – 95° angles to the running direction.

Rear Wheel Valve Installation

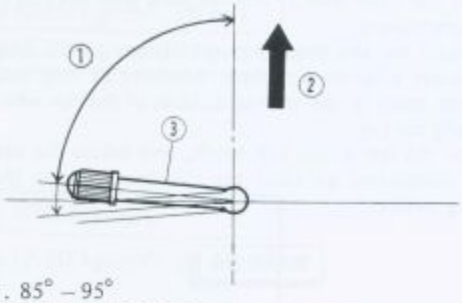

1. 85° – 95°
2. Running Direction
3. Rear Wheel Valve

- Apply a soap and water solution, or rubber lubricant to the rim flanges, rim protectors, tire beads, and tire irons.
- Check the tire rotation mark on the tire and install it on the rim accordingly.

NOTE

○*The direction of the tire rotation is shown by an arrow on the tire sidewall.*

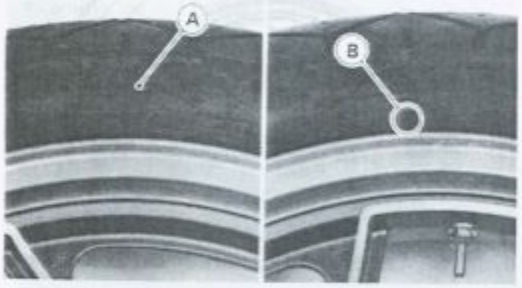

A. Rotation Mark (Arrow)
B. Balance Mark (Yellow Paint)

- Position the tire on the rim so that the valve is at the tire balance mark (the chalk mark made during removal, or the yellow paint mark on a new tire).
- Fit the rim protectors and tire irons to install the remaining part of the tire bead which cannot be installed by hand. For easy tire installation, position the part of the bead which is already over the rim flange in the rim well.
- By hand, slide as much as possible of the lower side of the tire bead over the rim flange, starting at the side opposite the valve.

NOTE

○*To prevent rim damage, be sure to place the rim protectors at any place the tire irons are applied.*

- Install the other side of the tire bead onto the rim in the same manner.
- Lubricate the tire beads and rim flanges with a soap and water solution or rubber lubricant to help seat the tire beads in the sealing surfaces of the rim while inflating the tire.
- Center the rim in the tire beads, and inflate the tire with compressed air until the tire beads seat in the sealing surfaces.

WARNING

○**Be sure to install the valve core whenever inflating the tire, and do not inflate the tire to more than 390 kPa (4.0 kg/cm^2, 57 psi). Overinflation can explode the tire with possibility of injury and loss of life.**

- Check to see that the rim lines on both sides of the tire sidewalls are parallel with the rim flanges.

Rim Line

1. Rim line

- If the rim flanges and tire sidewall rim lines are not parallel, remove the valve core. Lubricate the rim flanges and tire beads. Install the valve core and inflate the tire again.
- After the tire beads seat in the rim flanges, check for air leaks. Inflate the tire slightly above standard inflation. Use a soap and water solution or submerge it, and check for bubbles that would indicate leakage.
- Adjust the air pressure to the specified pressure (see Tire Inspection).
- Install the brake disc(s).
- Adjust the wheel balance (see Wheel Balance).

Tire Inspection

As the tire tread wears down, the tire becomes more susceptible the puncture and failure. An accepted estimate is that 90% of all tire failures occur during the last 10% of tread life (90% worn). So it is false economy and unsafe to use the tires until they are bald.

- Remove any imbedded stones or other foreign particles from the tread.
- Visually inspect the tire for cracks and cuts, replacing the tire in case of bad damage. Swelling or high spots indicate internal damage, requiring tire replacement.
- Measure the tread depth at the center of the tread with a depth gauge. Since the tire may wear unevenly, take measurements at several places.
- ★If any measurement is less than the service limit, replace the tire.

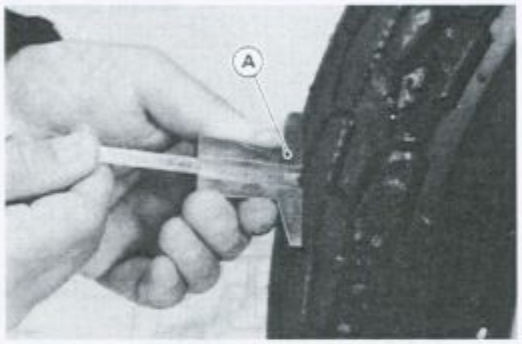

A. Depth Gauge

Tire Tread Depth

Front	
Standard	**4.4 mm**
Service Limit	**1 mm**
Rear	
Standard	**6.9 mm**
Service Limit	**2 mm (Up to 130 km/h)** **3 mm (Over 130 km/h)**

WARNING

○**To ensure safe handling and stability, use only the recommended standard tires for replacement, inflated to the standard pressure.**

○**Use the same manufacturers tires on both front and rear wheels.**

NOTE

○*Check and balance the wheel when a tire is replaced with a new one.*

Standard Tire

Front	**110/80 VR 18** **DUNLOP K105F** **Tubeless**	**110/80 V18** **METZELER ME33LASER** **Tubeless**
Rear	**150/80 VR 16** **DUNLOP K700G** **Tubeless**	**150/80 VB16** **METZELER ME99 A2** **Tubeless**

Tire Air Pressure (when cold)
(US, Canadian, Australian, and South African Model)

	Load	Air Pressure
Front		250 kPa (2.50 kg/cm², 36 psi)
Rear	Up to 200 kg (441 lb)	290 kPa (2.90 kg/cm², 41 psi)

Tire Air Pressure (when cold)
(Other than above Model)

	Load	Aire Pressure
Front		250 kPa (2.50 kg/cm², 36 psi)
Rear	Up to 97.5 kg (215 lb)	
	97.5 – 183 kg (215 – 421 lb)	290 kPa (2.90 kg/cm², 41 psi)
	*97.5 – 191 kg (215 – 421 lb)	

*Norwegian and Finnish models and ZG1000-A1 model

Tire repair

Currently two types of repair for tubeless tires have come into wide use. One type is called a temporary (external) repair which can be carried out without removing the tire from the rim, and the other type is called permanent (internal) repair which requires tire removal. It is generally understood that higher running durability is obtained by permanent (internal) repairs than by temporary (external) ones. Also, permanent (internal) repairs also have the advantage of permitting a thorough examination for secondary damage not visible from external inspection of the tire. For these reasons, Kawasaki does not recommend temporary (external) repair. Only appropriate permanent (internal) repairs are recommended. Repair methods may vary slightly from make to make. Follow the repair methods indicated by the manufacturer of the repair tools and materials so that safe results can be obtained.

Hub Bearings

Front Hub Bearing Removal

CAUTION

Do not lay the wheel on the ground with the disc facing down. This can damage or warp the disc. Place blocks under the wheel so the disc does not touch the ground.

- Remove the front wheel.
- Remove the speedometer gear housing, and collar(s) from the wheel.
- Remove the disc mounting Allen bolts and take off the discs.
- Remove the circlip and speedometer gear drive.

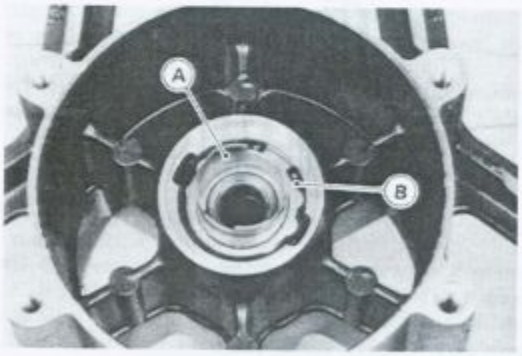

A. Speedometer Gear Drive B. Circlip

- Remove the grease seal using a hook, and remove the circlip.

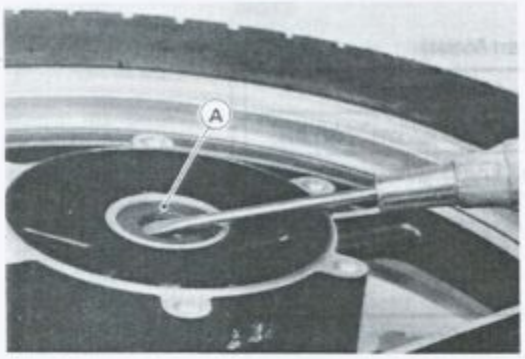

A. Grease Seal

- Insert a metal rod into the hub from the left side, and remove the right side bearing by tapping evenly around the bearing inner race.
- Remove the remaining bearing by tapping evenly around the bearing inner race. The distance collar comes out with the bearing.

Bearing Removal

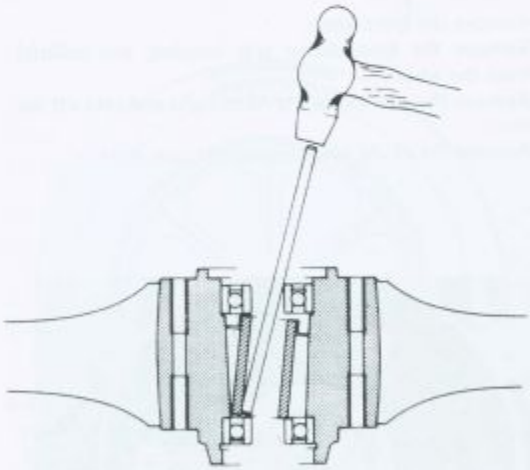

Front Hub Bearing Installation

- When installing the front hub bearings, be careful of the following items.

○Before installing the wheel bearings, blow any dirt or foreign particles out of the hub with compressed air to prevent contamination of the bearings.

○Inspect the bearings and replace them if necessary. Lubricate them and install them using the bearing driver set (special tools) so that the marked or shielded sides face out.

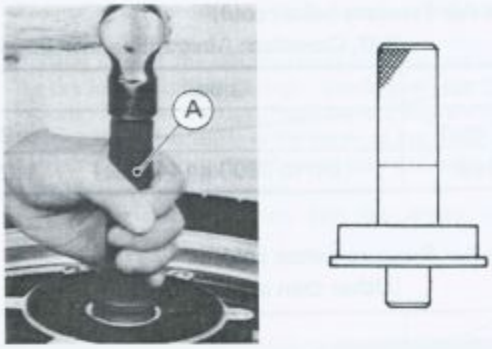

A. Bearing Driver Set: 57001-1129

○Inspect the grease seal and replace if necessary. Press it in until it stops at the circlip in the hole using the same special tools used for bearing installation.

○Tighten the disc mounting Allen bolts to the specified torque. The disc must be installed with the chamfered hole side facing toward the wheel. After installing the disc check the disc runout. Completely clean off any grease that has gotton on either side of the disc with a high flash-point solvent. Do not use one which will leave an oily residue.

Rear Hub Bearing Removal

CAUTION

○Do not lay the wheel on the ground with the disc facing down. This can damage or warp the disc. Place blocks under the wheel so the disc does not touch the ground.

- Remove the rear wheel.
- Remove the retaining ring, and remove the coupling.
- Remove the disc mounting Allen bolts and take off the disc.

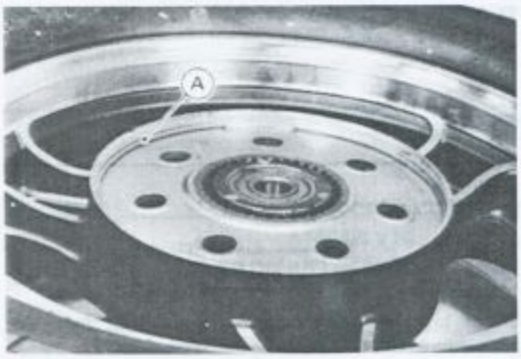

A. Retaining Ring

•Remove the grease seal using a hook, and remove the circlip.

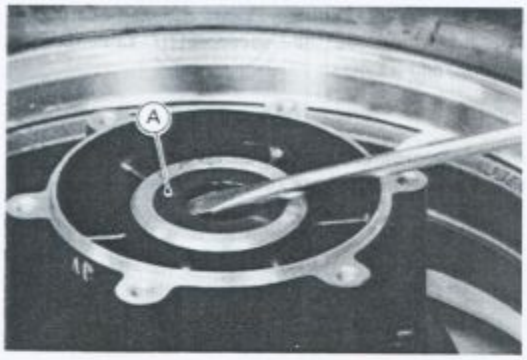

A. Grease Seal

•Insert a metal rod into the hub from the left side, and remove the right side bearing by tapping evenly around the bearing inner race. The distance collar comes out with the bearing.
•Remove the remaining bearing by tapping evenly around the bearing inner race.

Bearing Removal

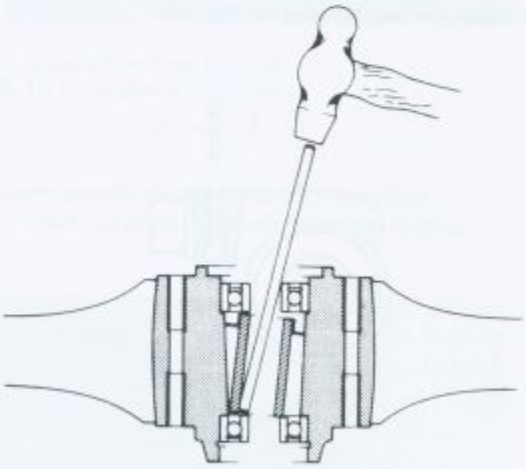

Rear Hub Bearing Installation

•When installating the rear hub, be careful of the following items.
○Before installing the wheel bearings, blow any dirt or foreign particles out of the hub with compressed air to prevent contamination of the bearings.
○Inspect the bearings and replace them if necessary (see Hub Bearing inspection). Install them using the bearing driver (special tools set).

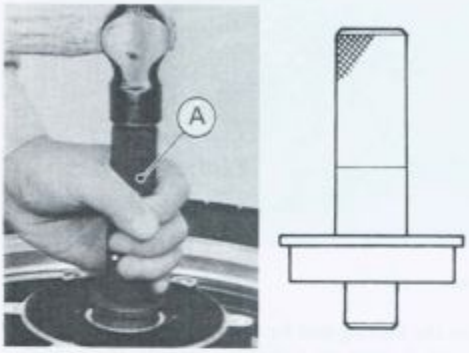

A. Bearing Driver Set: 57001-1129

○Inspect the grease seal and replace if necessary (see Grease Seal Inspection). Press it in until it stops at the circlip in the hole using the same special tools used for bearing installation.
○Tighten the disc mounting Allen bolts to the specified torque. The disc must be installed with the chamfered hole side facing toward the wheel. After installing the disc, check the disc runout (see Disc Wear in Brake chapter).
○Completely clean off any grease that has gotten on either side of the disc with a high flashpoint solvent. Do not use one which will leave an oily residue.

Hub Bearing Inspection and Lubrication

Since the hub bearings are made to extremely close tolerances, the clearance cannot normally be measured.
•For rear hub bearing, turn each bearing back and forth while checking for roughness or binding.
★If roughness or binding is found, replace the bearing.
•For front hub bearing, wash the bearing with a high flash-point solvent, dry it (do not spin it while it is dry), and oil it. Spin it by hand to check its condition.
★If it is noisy, does not spin smoothly, or has any rough spots, it must be replaced.
•If the bearing is to be used again, rewash it with a high flash-point solvent, dry it, and pack it with good quality bearing grease before installation. Turn the bearing by hand a few times to make sure the grease is distributed uniformly inside the bearing, and wipe the old grease out of the hub before bearing installation.

NOTE

○*Since the bearings on the rear wheel hub are packed with grease and shielded, they are not required to be removed for lubrication.*

A. Grease.

- Examine the bearing seal for tears or leakage.
- ★If the seal is torn or is leaking, replace the bearing.

Grease Seal Inspection and Lubrication

If the grease seals are examined without removing the seals themselves, lock for discoloration (indicating the rubber has deteriorated), hardening, damage to the internal ribbing, or other damage. If the seal or internal ribbing has hardened, the clearance between the seal and the axle sleeve will not be taken up, which will allow dirt and moisture to enter and reach the bearing. If in doubt as to its condition and whenever the seal is removed for greasing the bearing, the seal should be replaced. The seal are generally damaged upon removal.

Speedometer Gear Housing

Speedometer Gear Housing Disassembly

- Pull the speedometer gear housing and collar off the front wheel.
- Pull out the grease seal using a hook.

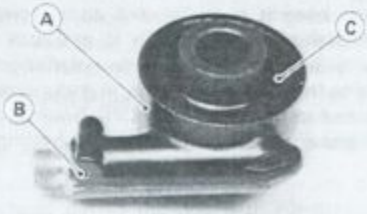

A. Speedometer Gear Housing C. Grease Seal
B. Pin

- Pull out the speedometer gear.
- If the speedometer cable bushing or speedometer pinion needs to be removed, first drill the housing through the pin using a 1.0 to 1.5 mm drill bit. Drill the housing from the under side using a 3.0 to 3.5 mm drill bit. Using a suitable 3 mm rod, tap out the pin, and then pull out the speedometer cable bushing, pinion, and washers.

NOTE

○*It is recommended that the assembly be replaced rather than attempting to repair the components.*

Speedometer Gear Housing Assembly

- When assembling the speedometer gear housing, be careful of the following items.
  - ○After inserting a new pin, stake the housing hole to secure the pin in place.
  - ○Replace the grease seal with a new one. Apply a little grease to the seal. Install it using a press or a suitable driver so that the face of the seal is level with the surface of the housing.
  - ○Regrease the speedometer gear.
  - ○Install the speedometer gear housing so that it fits in the speedometer gear drive notches.

Speedometer Gear Housing Pin Removal

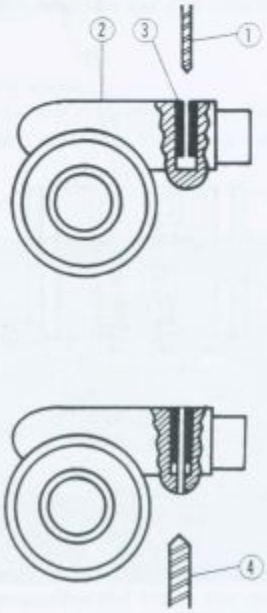

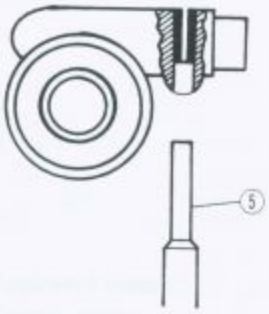

1. 1 ~ 1.5 mm bit
2. Housing
3. Pin
4. 3 ~ 3.5 mm bit
5. 3 mm Rod

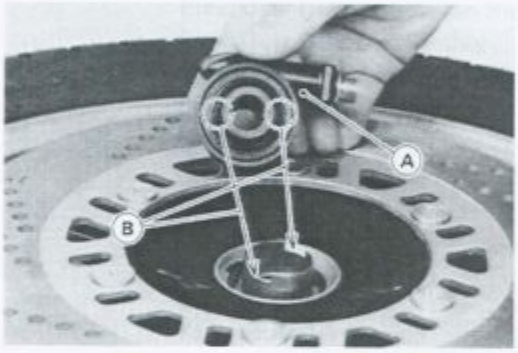

A. Speedometer Gear Housing
B. Fit in the gear drive notches.

Speedometer Gear Housing Lubrication

Clean and grease the speedometer gear housing.

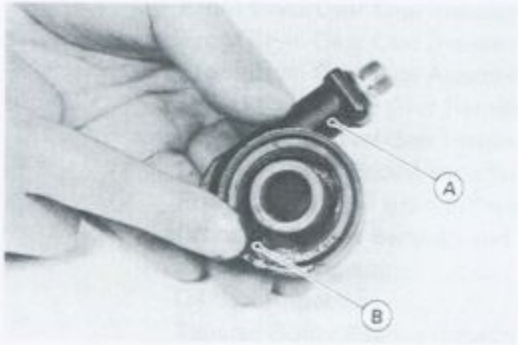

A. Speedometer Gear Housing
B. Grease.

Final Drive

Table of Contents

Exploded View

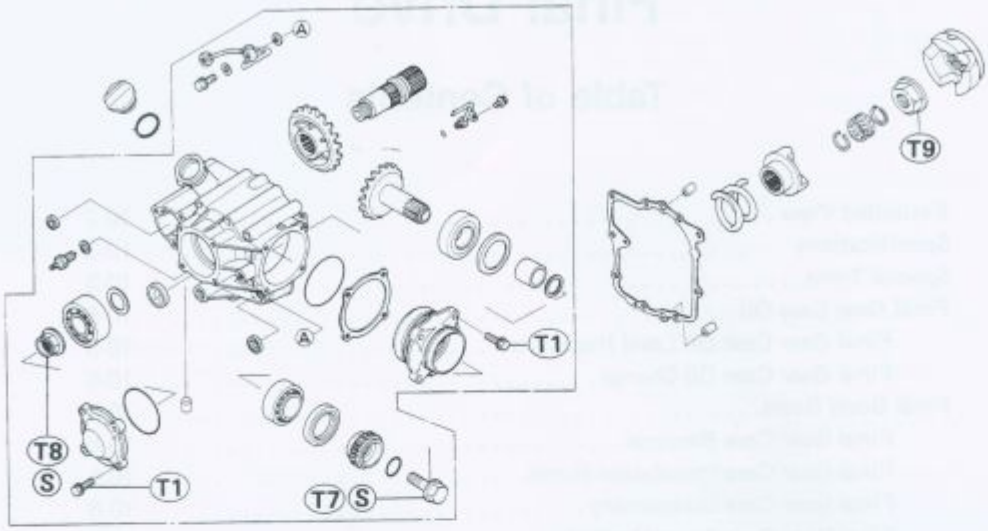

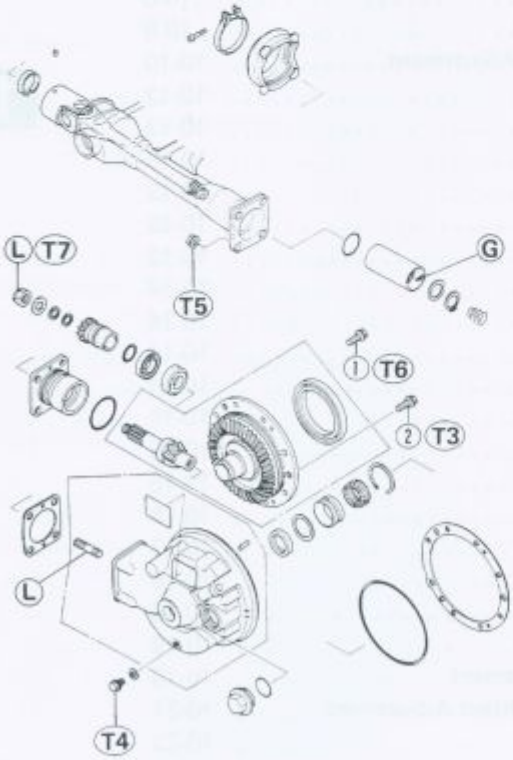

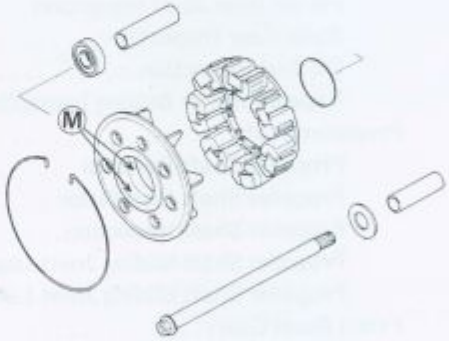

1. Ring Gear Mounting Bolt (10 mm Dia.)
2. Ring Gear Mounting Bolts (8 mm Dia.)

G : Apply a thin coat of grease.
L : Apply non-permanent locking agent to the threads.
M : Apply a thin coat of molybdenum disulfide grease.
S : Stake the bolt or nut.
T1 : 9.8 N-m (1.0 kg-m, 87 in-lb)
T2 : 12 N-m (1.2 kg-m, 104 in-lb)
T3 : 24 N-m (2.4 kg-m, 17.5 ft-lb)
T4 : 17 N-m (1.7 kg-m, 12.0 ft-lb)
T5 : 29 N-m (3.0 kg-m, 22 ft-lb)
T6 : 34 N-m (3.5 kg-m, 25 ft-lb)
T7 : 120 N-m (12.0 kg-m, 87 ft-lb)
T8 : 195 N-m (20.0 kg-m, 145 ft-lb)
T9 : 255 N-m (23.0 kg-m, 166 ft-lb)

Specifications

Item		Standard
Final Gear Case Oil:	Grade	API GL-5 hypoid gear oil
	Amount	220 mL
	Viscosity	When above 5°C (41°F) SAE 90 When below 5°C (41°F) SAE 80
Final Bevel Gear Backlash:		0.13 – 0.18 mm
Front Bevel Gear Backlash:		0.13 – 0.18 mm
Preload for Pinion Gear Bearings:		
Using spring scale		2.9 – 4.9 N (0.30 – 0.50 kg, 0.7 – 1.1 lb)
Using torque wrench		0.6 – 1.0 N-m (0.06 – 0.10 kg-m, 5.2 – 8.7 in-lb)
Preload for Driven Bevel Gear Shaft Bearings:		
Using spring scale		2.9 – 4.9 N (0.30 – 0.50 kg, 0.7 – 1.1 lb)
Using torque wrench		0.6 – 1.0 N-m (0.06 – 0.10 kg-m, 5.2 – 8.7 in-lb)

Special Tools

Bearing Driver Set: 57001-1129

Drive Gear Holder: 57001-1026

Oil Seal Guide: 57001-264

Driven Gear Holder: 57001-1027

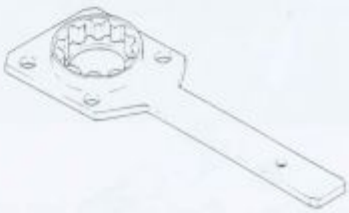

Bearing Puller: 57001-135

Damper Cam Holder: 57001-1025

Bearing Driver: 57001-382

Pinion Gear Holder: 57001-1165

Dial Gauge Holder: 57001-1049

Oil Seal & Bearing Remover: 57001-1058

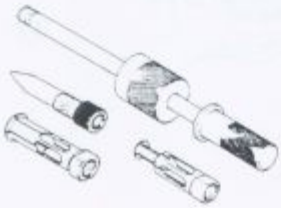

Final Gear Case Oil

Final Gear Case Oil Level Inspection

- According to the Periodic Maintenance Chart, or if the lubricant level is suspected of being low, check the final gear case oil level.
- Put the motorcycle on its center stand.
- Unscrew the filler plug. The oil level is correct if a small amount of oil comes out of the opening.

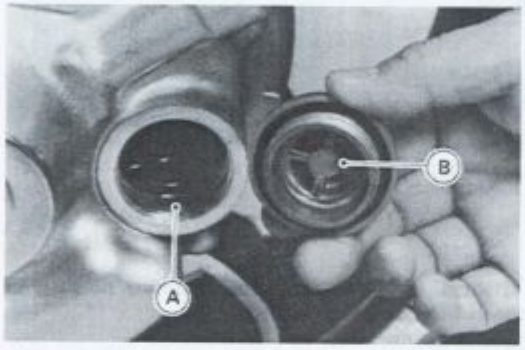

A. Filler Hole B. Filler Plug

★If no oil comes out, first check the final gear case for oil leakage, remedy it if necessary, and add oil through the filler hole. Use the same type and brand of oil that is already in the final gear case.

- Install the filler plug.

Final Gear Case Oil Change

- Warm up the oil by running the motorcycle so that the oil will pick up any sediment and drain easily. Then stop it.
- Put the motorcycle on its center stand.
- Place an oil pan beneath the final gear case, and remove the drain plug.

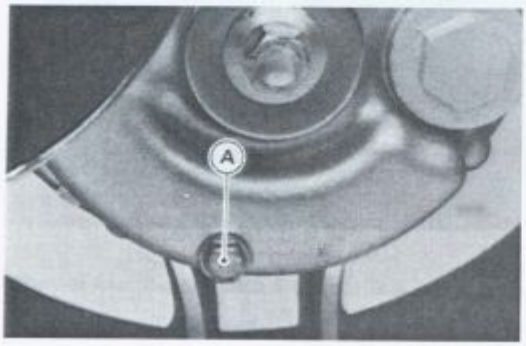

A. Drain Plug

WARNING

○**When draining or filling the final gear case, be careful that no oil gets on the tire or rim. Clean off any oil that inadvertently gets on them with a high flash-point solvent.**

- After the oil has completely drained out, install the drain plug with a new aluminum gasket, and tighten it to the specified torque (see Exploded View).
- Fill the final gear case with the specified oil and quantity.

Final Gear Case Oil:

Amount	**220 mL**
Grade	**API GL-5 hypoid gear oil**
Viscosity:	
When above 5°C (41°F)	**SAE 90**
When below 5°C (41°F)	**SAE 80**

NOTE

○*The term "GL-5" indicates a quality and additive rating. A "GL-6" rated hypoid gear oil can also be used.*

- Be sure the O-ring is in place, and install the filler plug.

Final Bevel Gears

Final Gear Case Removal

- If the final gear case is to be disassembled, drain the final gear case oil (see Final Gear Case Oil Change).
- Remove the rear wheel (see Wheels/Tires chapter).

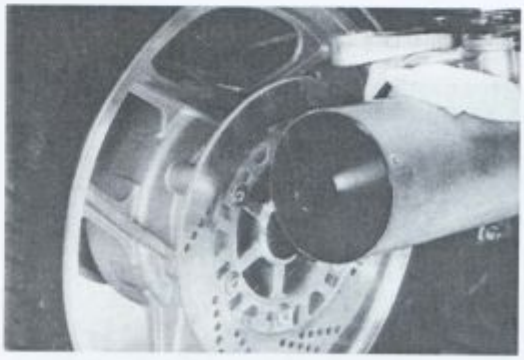

- Remove the final gear case by taking off the mounting nuts. The spring comes off with the case.

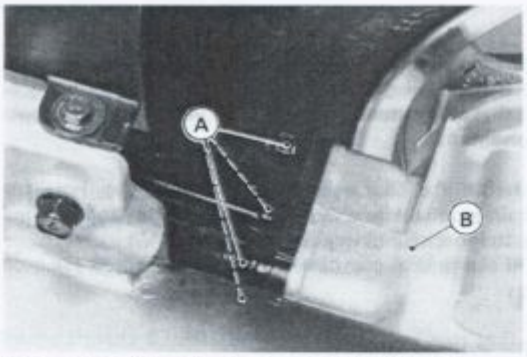

A. Gear Case Mounting Nuts B. Final Gear Case

NOTE

○*If the final gear case is full of oil, place the case so that the breather hole is on top.*

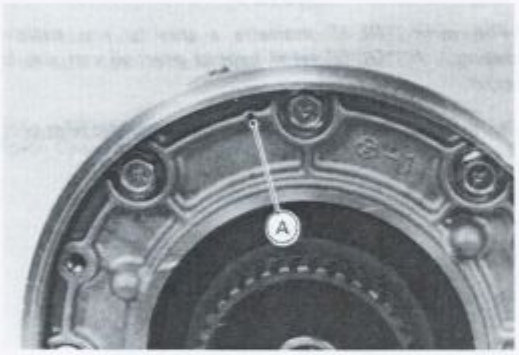

A. Breather Hole

Final Gear Case Installation Notes

- Lubricate the propeller shaft joint (see Properller Shaft Joint Lubrication).
- Install the spring so that small diameter end faces toward to final gear case.

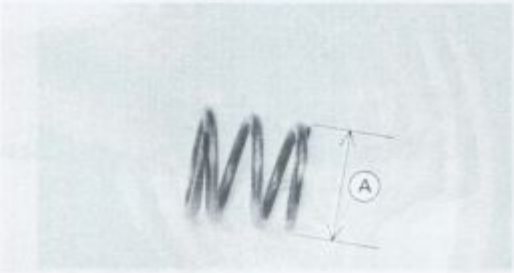

A. Small Diameter End

- Fit the pinion gear splines to the properller shaft joint while truning the ring gear hub.

A. Ring Gear Hub

- Tighten the final gear case mounting nuts to the specified torque (see Exploded View).
- Install the rear wheel.
- If the final gear case oil was drained, fill the case with oil (see Final Gear Case Oil Change).

Final Gear Case Disassembly

- Using 6 mm bolts with 1.0 mm pitch threads, jack up the pinion gear assembly.

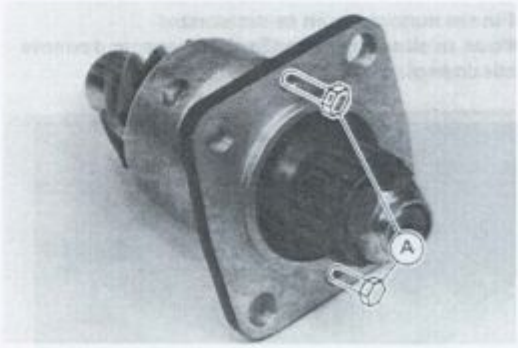

A. Bolts

- Use three cover bolts to remove the ring gear assembly from the gear case.

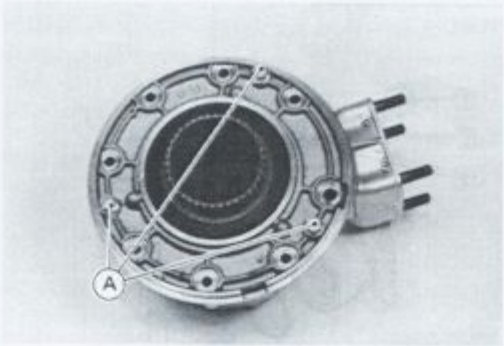

A. Cover Bolts (ϕ8 x p1.25 mm)

- To remove the ring gear oil seal, soak the ring gear assembly in oil and heat the oil to **120 ~ 150°C (248 ~ 302°F)**, and then pry out the seal. Be careful not to scratch the sealing surface on the ring gear hub.

CAUTION

○**Do not heat the case with a torch. This will warp the case.**

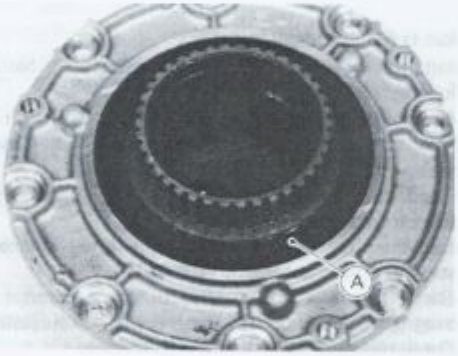

A. Ring Gear Oil Seal

- Remove the needle bearing outer race and oil seal in the final gear case as follows.
- Remove the snap ring.
- Soak the final gear case in oil and heat the oil to approximately **100°C (212°F)**.

CAUTION

○**Do not heat the case with a torch. This will warp the case.**

- Pull out the oil seal and bearing outer race together using the oil seal & bearing remover (special tool).

Oil Seal and Bearing Outer Race Removal

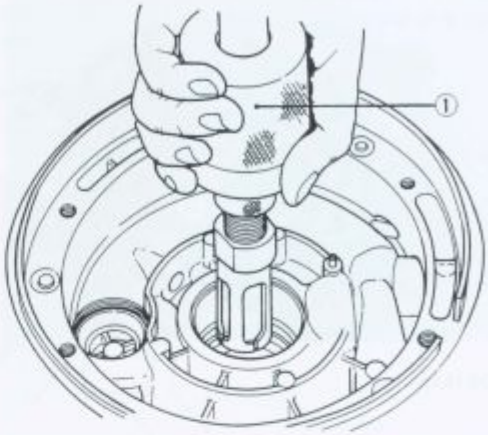

1. Oil Seal & Bearing Remover: 57001-1058

Final Gear Case Assembly Notes

- The ring gear and pinion gears are lapped as a set in the factory to get the best tooth contact. They must be installed as a pair, never replace one without the other.
- Check and adjust the preload of tapered roller bearing, if necessary (see Pinion Gear Bearing Preload Adjustment).
- When final gear case parts are replaced, the final bevel gears must be adjusted (see Final Gear Backlash and Tooth Contact Adjustment).
- If no parts of the final bevel gear case are replaced, install the shims in the original positions to keep the gear backlash and the tooth contact unchanged.
- Blow the breather hole clean with compressed air.

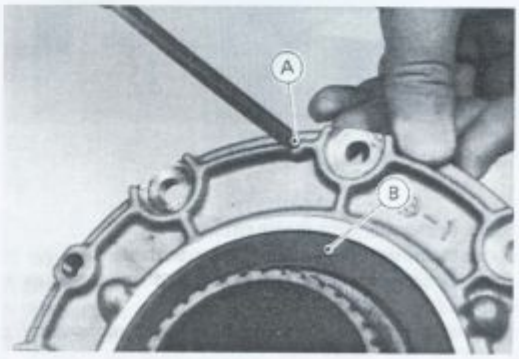

A. Breather Hole B. Ring Gear Assembly

- Align the oil hole in the needle bearing outer race with the oil hole in the final gear case.

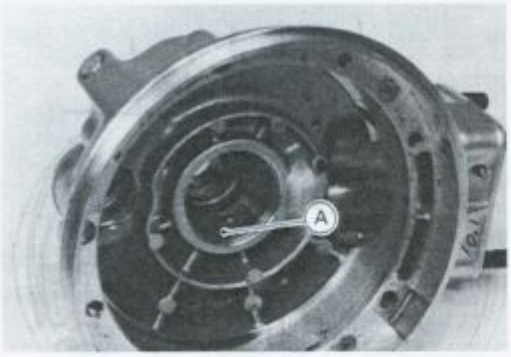

A. Oil Hole

- Apply a non-permanent locking agent to the threads of the cover bolts, and tighten to the specified torque (see Exploded View).
- Apply a non-permanent locking agent to the inner end of each stud and to the oil line plug to prevent oil leakage.

Pinion Gear Removal

- Remove the pinion gear assembly (see Final Gear Case Disassembly).
- Pry open the pinion gear nut.
- Unscrew the pinion gear nut using the pinion gear holder (special tool).

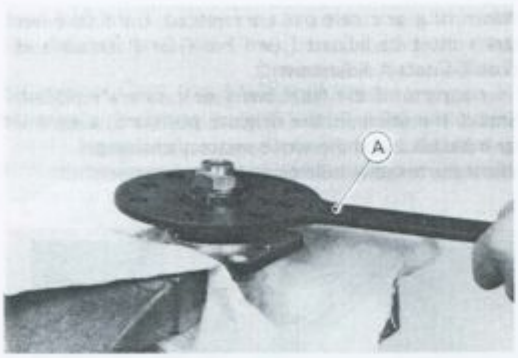

A. Pinion Gear Holder: 57001-1165

- Remove the washer and the shim(s).
- Remove the pinion gear shaft joint with the O-ring.
- Remove the pinion gear with tapered roller bearing as one unit.
- Drive the tapered roller bearing in the bearing housing and the oil seal using the bearing driver set (special tool: 57001-1129).

Pinion Gear Assembly

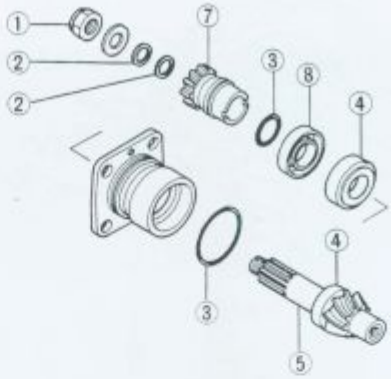

1. Pinion Gear Nut
2. Shim
3. O-ring
4. Tapered Roller Bearing
5. Pinion Gear
6. Washer
7. Pinion Gear Shaft Joint
8. Oil Seal

Pinion Gear Installation

- Installation is the reverse of removal. Note the following.
- The pinion gear and ring gear are lapped as a set in the factory to get the best tooth contact. They must be replaced as a set.
- Check the tapered roller bearing (see Tapered Roller Bearing Inspection).
- Install the tapered roller bearing using the bearing driver set (special tool: 57001-1129).
- Check and adjust the preload of the tapered roller bearing (see Pinion Gear Bearing Preload Adjustment).
- Check the oil seal (see Oil Seal Inspection).
- Drive the oil seal using the bearing driver set (special tool: 57001-1129).
- Install the pinion gear with the tapered roller bearing as one unit.
- Check the O-ring on the pinion shaft joint for any kind of damage. And replace it if necessary.
- Install the shim(s) and the washer.
- Replace the pinion gear nut with a new one.
- Tighten the pinion gear nut to the specified torque (see Exploded View).
- Stake the pinion gear nut with a punch.

CAUTION

When staking the nut and holder, be careful not to apply shock to the pinion and their bearings. Such a shock could damage the pinion and/or bearings.

A. Stake the Pinion Gear Nut

- Be sure to check and adjust the bevel gear backlash and tooth contact, when any of the parts which influence these items are replaced (see Final Bevel Gear Adjustment).

Pinion Gear Bearing Preload Adjustment

Preload Measurement:

- Check and adjust the bearing preload in the following cases.
  - When any of the parts listed below are replaced with new ones.
    - Tapered roller bearings
    - Bevel gears
    - Bearing housing
    - Pinion gear joint
  - When the pinion gear nut is loosened, even if the purpose is not to replace the parts.
- Assemble the pinion gear bearing housing, and tighten the pinion gear nut to the specified torque. Oil seal installation is not required until the correct bearing preload is obtained.

CAUTION

- **To start with, choose a shim or shims so that the bearings are just SNUG with NO play but also with NO preload.**
- **Any over-preload on the bearings could damage the bearings.**

- Apply a little final gear case oil to the bearings, and turn the gear shaft more than 5 turns to allow the bearings to seat.
- Measure the bearing preload. Bearing preload is defined as the force or torque which is needed to start the gear shaft turning.

NOTE

- *Preload can be measured either with a spring scale or a beam-type torque wrench. When measured with a spring scale, the preload is designated by force (N, kg), and when measured with a torque wrench, it is designated by torque (N-m, kg-m, in-lb).*

Using Spring Scale:

Hook the spring scale on the handle at the point 200 mm from the center of the gear shaft. Hold the bearing housing in a vise so that the gear shaft axis is vertical. Apply force to the handle horizontally and at a right angle to it.

Preload Measurement

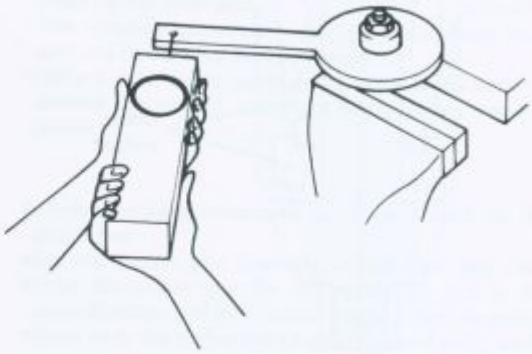

1. Spring Scale
2. Hole
3. Pinion Gear Holder: 57001-1165

★If the preload is out of the specified range, replace the shims under the flat washer, and re-check the preload. Refer to the next paragraph to select suitable shims.

Preloading Bearings

(A) Before tightening

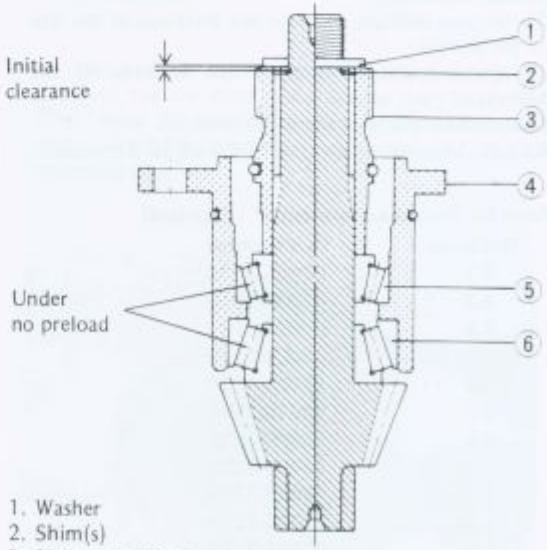

1. Washer
2. Shim(s)
3. Pinion gear joint
4. Bearing housing
5. Tapered roller bearing
6. Tapered roller bearing

(B) After tightening

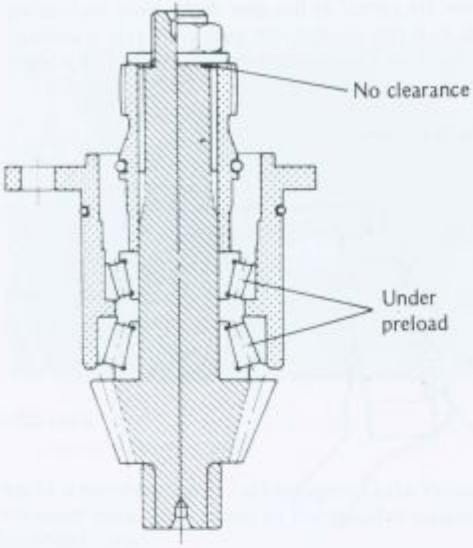

Preload for Pinion Gear Bearings

Using spring scale:

2.9 ~ 4.9 N (0.30 ~ 0.50 kg)

Using torque wrench:

0.6 ~ 1.0 N-m (0.06 ~ 0.10 kg-m, 5.2 ~ 8.7 in-lb)

Preload Adjustment:

- To increase preload, decrease the thickness of the size of the shim(s).
  To decrease preload increase the thickness of the shim(s).
- Change the thickness a little at a time.
- Re-adjust the bearing preload, and re-adjust if necessary.

Shims for Preload Adjustment (* : Standard)

Thickness	Part Number
0.1	92025-1219
0.2	92025-1220
0.3	92025-1221
0.5	92025-1222
0.6	92025-1223
0.7	92025-1224
0.8	92025-1225
* 0.9	92025-1226
1.0	92025-1227
1.30	92025-1214
1.32	92025-1215
1.34	92025-1216
1.36	92025-1217
1.38	92025-1218

Final Gear Backlash and Tooth Contact Adjustment

The **backlash** (distance one gear will move back and forth without moving the other gear) and **tooth contact pattern** of the bevel gears must be correct to prevent the gears from making noise and being damaged.

When replacing any one of the following parts which influence the backlash and tooth contact of bevel gears, make sure to check and adjust them. First, adjust the backlash of the bevel gears. Second, get the correct tooth contact pattern by replacing shims. Last, check to see if backlash is within the standard. If backlash is out of range, repeat above procedure again.

Parts which change the backlash and tooth contact are:

Ring Gear
Final Gear Case Cover
Pinion Gear
Tapered Roller Bearing
Final Gear Case

NOTE

○*After replacing any one of the parts listed above, install the standard shim both a the reing gear side and the pinion gear side.*

The amount of backlash is influenced by the ring gear position more than by the pinion gear position. Tooth contact location is influenced by pinion gear position more than by ring gear position.

First change ring gear shim(s) until the backlash is correct, then adjust the tooth contact by changing the pinion gear shim(s).

CAUTION

○**The ring gear and pinion gears are lapped as a set at the factory to get the best tooth contact. They must be replaced together.**

Backlash Adjustment:

- Clean any dirt and oil off the teeth of the bevel gears.
- Tighten the final pinion gear bearing housing mounting bolts to the specified torque (see Exploded View).
- Set up a dial gauge against the end of the rear hub coupling.
- Check the backlash while tightening the cover mounting bolt. Stop disappears immediately if the backlash disappears. Then, change the ring gear shim with a thicker one.

Final Gear Case Assembly

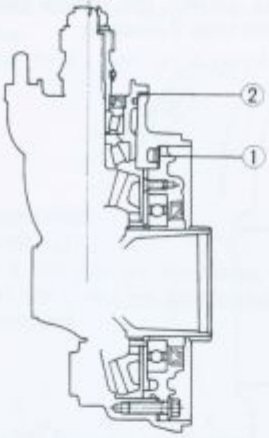

1. Shim(s) for Ring Gear
2. Shim(s) for Pinion Gear

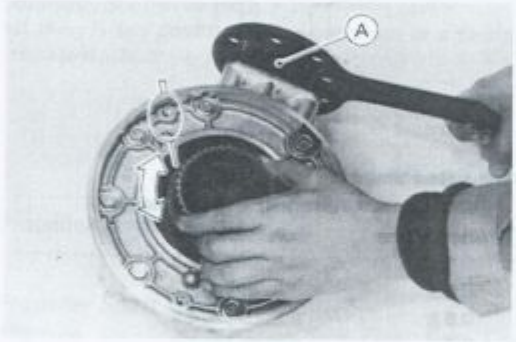

A. Locked

NOTE

○*Backlash, or gear lash is the amount of movement of one gear relative to the other, measured with one gear stationary.*

★If the amount of backlash is out of the standard range, replace the shim(s) of the ring gear and check the backlash. Repeat if necessary.
☆Change the size a little at a time.

Gear Backlash

Standard	**0.13 ~ 0.18 mm**

Shim Sizes for Ring Gear (* : Standard)

Thickness (mm)	Part Number
0.1	92025-1625
0.15	92025-1626
0.2	92025-1627
* 0.3	92025-1628
0.6	92025-1629
0.9	92025-1630
1.2	92025-1631

Tooth Contact Adjustment:

NOTE

○*Check to see that there is no dirt and oil on the gear teeth.*
○*Special compounds are available from automotive supply stores for the purpose of checking differential gear tooth patterns and contact. Use one of these for checking the bevel gears.*
○*The checking compound must be smooth and firm, with the consistency of tooth paste.*
○*Using a paint brush, apply a thin layer to the teeth. If painted too thickly, the exact tooth pattern may not appear.*

- Apply checking compound to 4 or 5 teeth of the pinion gear.
- Set the pinion gear assembly in the final gear case.
- Turn the pinion gear for one revolution, first in the drive direction and then in the reverse (coast) direction.
- Turn with the pinion joint holder (special tool), while creating a drag on the ring gear with the ring nut wrench (special tool).
- Pull out the pinion gear assembly, and check the drive pattern and coast pattern of the bevel gear teeth.

NOTE

○*The tooth contact patterns of both (drive and coast) sides should be centrally located between the top and bottom of the tooth. The drive pattern can be a little closer to the toe and the coast pattern can be somewhat longer and closer to the toe. The drive side of the ring gear tooth is the convex side, and the coast side is the concave side.*

- If the correct tooth contact pattern cannot be obtained, replace shims in the manner described below. Then erase the original tooth contact pattern, and apply checking compound as mentioned in the preceding step.

A. Pinion Gear Holder: 57001-1165

Correct Tooth Contact Pattern

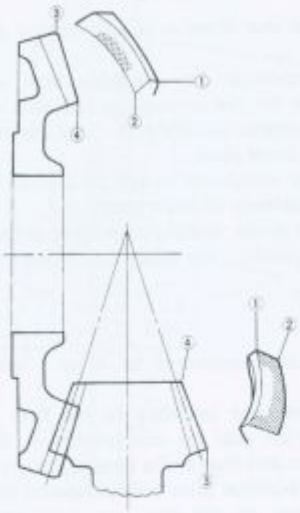

1. Top
2. Bottom
3. Heel
4. Toe

Incorrect Tooth Contact Patters

Example 1: Decrease the size of the pinion gear shim(s) by 0.05 mm to correct the pattern shown below. Repeat in 0.05 mm steps if necessary.

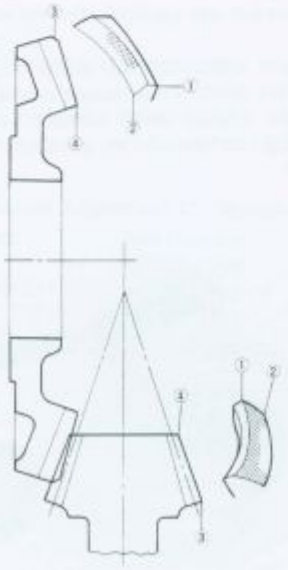

Example 2: Increase the size of the pinion gear shim(s) by 0.05 mm to correct the pattern shown below. Repeat in 0.05 mm steps if necessary.

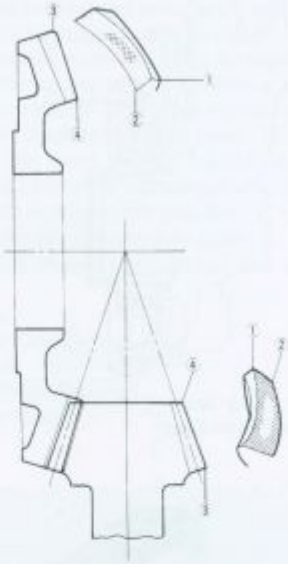

1. Top
2. Bottom
3. Heel
4. Toe

Pinion Gear Shims for Tooth Contact Adjustment (* : Standard)

Thickness (mm)	Part Number
0.15	92025-1052
0.5	92025-1053
0.6	92025-1054
* 0.7	92025-1055
0.8	92025-1056
0.9	92025-1057
1.0	92025-1058
1.2	92025-1059

Pinion Gear Joint Inspection

●Visually inspect the splines of the pinion gear joint.
★If they are badly worn or chipped, replace the joint with a new one.

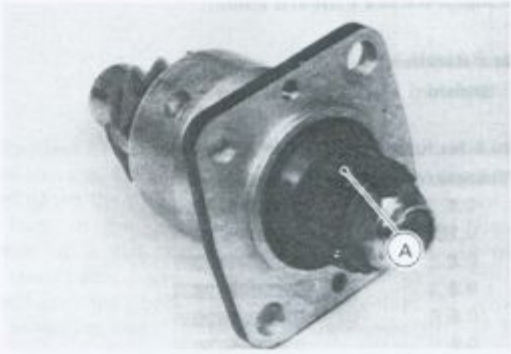

A. Check splined portion.

Bevel Gear Inspection

- Visually check the bevel gears for scoring, chipping, or other damage.
- ★Replace the bevel gears as a set if either gear is damaged.

Oil Seal Inspection

- Inspect the oil seal.
- ★Replace it if the lips are misshapen, discolored (indicating that the rubber has deteriorated), hardened, or otherwise damaged.

Tapered Roller Bearing Inspection

- Using a high flash-point solvent, wash the tapered roller bearing.
- Visually check the tapered roller bearing for scoring, chipping, or other damage.
- ★If there is any doubt as to the condition of a bearing, replace it.

Propeller Shaft

Propeller Shaft Removal

- Remove the final gear case (see Final Gear Case Removal).
- Remove the swing arm (see Swing Arm Removal in the Suspension chapter).
- Remove the propeller shaft from the front bevel gear case as follows.

Disengagement of Propeller Shaft from Bevel Gear Case

(1) Push on the locking pin about 3 mm into the drive gear joint, and hold the pin.

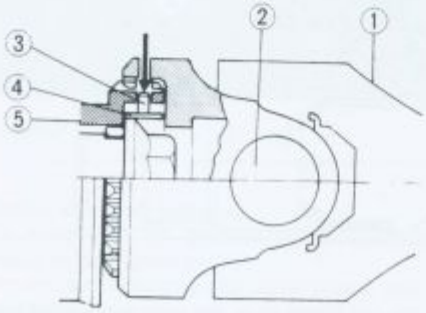

1. Propeller Shaft
2. Universal Joint
3. Locking Pin
4. Spring
5. Driven Gear Joint

(2) Slip the propeller shaft off the joint.

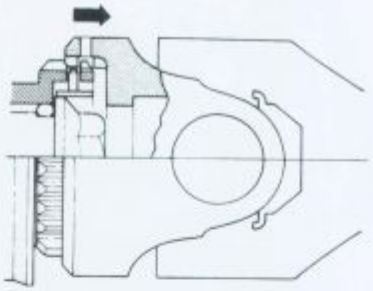

Propeller Shaft Engagement with Bevel Gear Case

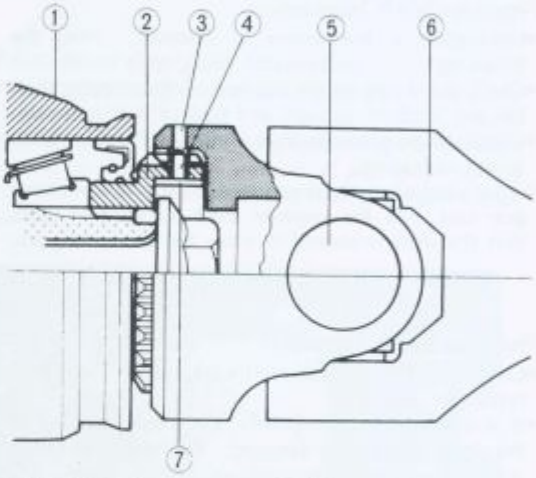

1. Bevel Gear Case
2. Driven Gear Joint
3. Locking Pin Access Hole
4. Locking Pin
5. Universal Joint
6. Propeller Shaft
7. Spring

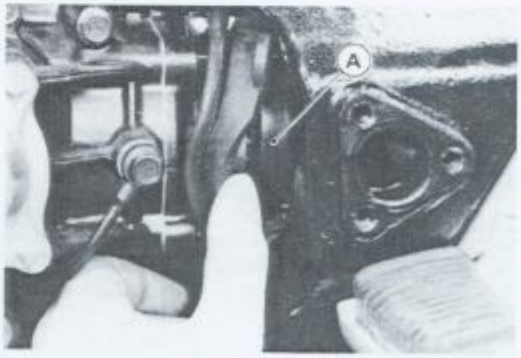

A. Locking Pin Access Hole

- Remove the circlip and washer from the rear end of the propeller shaft.
- Pull out the propeller shaft sliding joint off the propeller shaft, and out of the swing arm.

Propeller Shaft

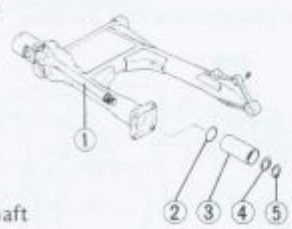

1. Propeller Shaft
2. O-ring
3. Propeller Shaft Sliding Joint
4. Washer
5. Circlip

Propeller Shaft Installation

- Installation is the reverse of removal. Note the following.
- Check the O-ring on the rear end of the propeller shaft for any kind of damage, and replace it if necessary.
- Lubricate the propeller shaft joint (see Propeller Shaft Joint Lubrication).
- After connecting the propeller shaft to the front bevel gear case, pull the propeller shaft rearward to check that the shaft is secured in place by the locking pin.

Propeller Shaft Inspection

- Check that the universal joint works smoothly without rattling or sticking.
- ★If it does not work smoothly, the needle bearings of the universal joint are damaged. Replace the propeller shaft assembly with a new one.
- Visually inspect the bending of the shaft and the wear of the splined section at the rear end of the shaft.
- ★If it is bent at all, replace the propeller shaft assembly. Do not attempt to straighten a bent shaft.

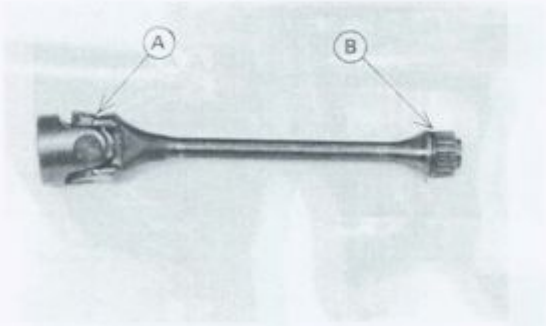

A. Check universal joint.
B. Inspect shaft and and splined portion.

Propeller Shaft Sliding Joint Inspection

- Visually inspect the internal splines of the propeller shaft sliding joint.
- ★If they are badly worn or chipped, replace the joint with a new one.

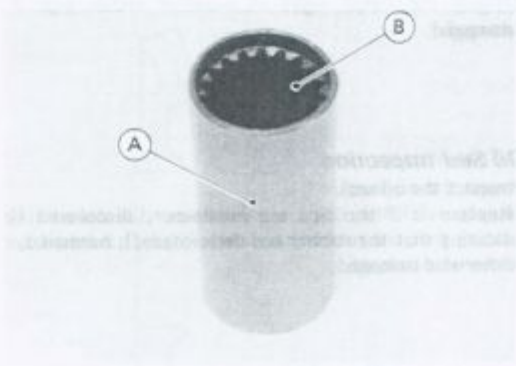

A. Propeller Shaft Joint B. Check the splined portion.

Properller Shaft Sliding Joint Lubrication

Usually the center of the swing arm pivot does not coinside with the center of the propeller shaft universal joint. As the rear wheel moves up and down, the distance between the front bevel driven gear and the final pinion gear will change to some extent. To allow the propeller shaft to adjust to these variations in length, a sliding joint is used at the rear end of the propeller shaft. Lubricate the propeller shaft joint in accordance with the Periodic Maintenance Chart.

- Remove the final gear case and propeller shaft (see Final Gear Case Removal and Propeller Shaft Removal).
- Wipe off the old grease from the propeller shaft sliding joint and pinion gear joint.
- Pack the propeller shaft sliding joint with 20 cc (16 grams) of high temperature grease.

Propeller Shaft Sliding Joint Lubrication

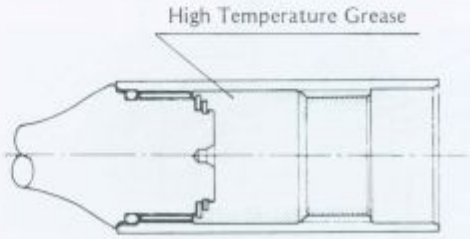

- Wipe off the old grease from the joint at the front end of the propeller shaft and from the driven shaft joint.
- Apply a thin coat of a high temperature grease to the joint splines.
- Install the parts removed.

Front Bevel Gears

Front Bevel Gear Case Removal

- Remove the propeller shaft (see Propeller Shaft Removal).
- Unscrew the clutch slave mounting bolts.

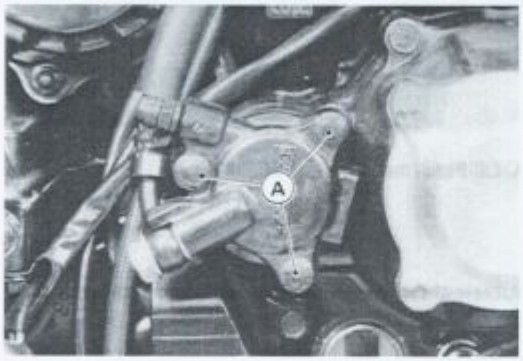

A. Mounting Bolts

- Rest the slave on some kind of stand so that it does not dangle.
- Unscrew the shift pedal clamp bolt.
- Unscrew the shift pedal bracket mounting bolts and remove the shift pedal with its bracket.
- Remove the water pump (see Water Pump Removal in the Cooling System chapter).

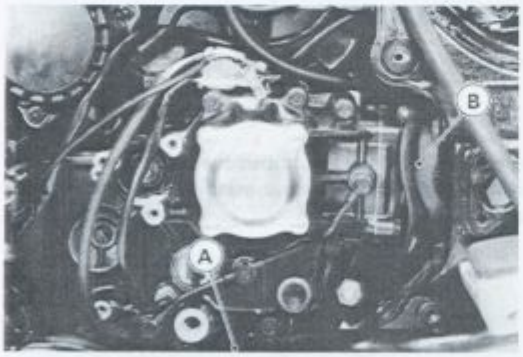

A. Muffler Cover B. Boot

- Remove the clutch push rod.
- Disconnect the oil pressure switch connector and neutral switch connector.
- Unscrew the mounting and clamp screws, and remove the muffler cover.
- Unclamp the boot clamp, and remove the boot.
- Unscrew the mounting bolts, and remove the front bevel gear case. The cam follower and the damper spring come off with the gear case.

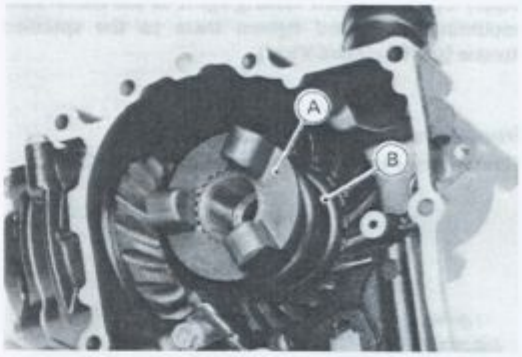

A. Cam Follower B. Damper Spring

Front Bevel Gear Case Installation

- Installation is the reverse of removal. Note the following.
- For oil seal at the shift shaft, apply a high temperature grease to the seal lip, and use oil seal guide (special tool) to protect the seal during front bevel gear installation.

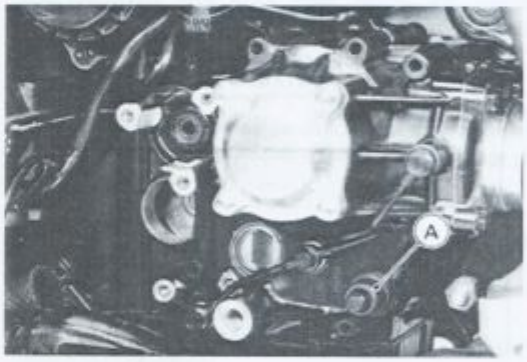

A. Oil Seal Guide: 57001-264

- Apply non-permanent locking agent to the following bolts, and tighten them to the specified torque (see Exploded View).

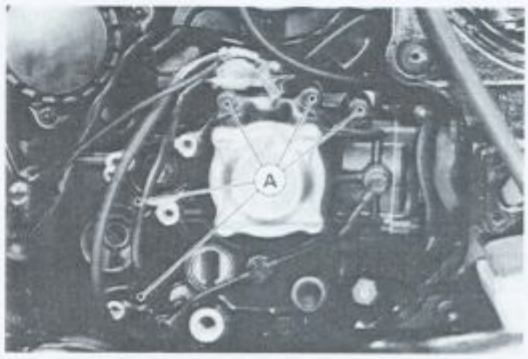

A. Bolts

•Apply non-permanent locking agent to the clutch slave mounting bolts, and tighten them to the specified torque (see Exploded View).

Front Bevel Gear Case Disassembly

•Remove the cam follower and the damper spring.

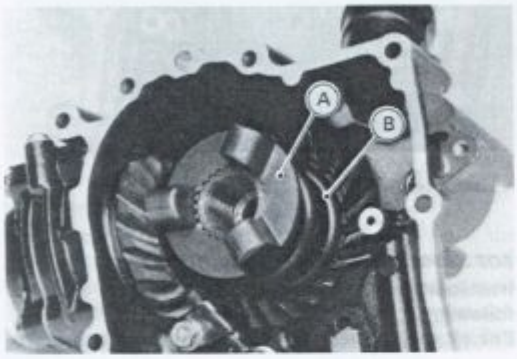

A. Cam Follower B. Damper Spring

•Unscrew the bearing housing mounting bolts and remove the driven shaft bevel gear assembly and shim(s).

Driven Shaft Bevel Gear

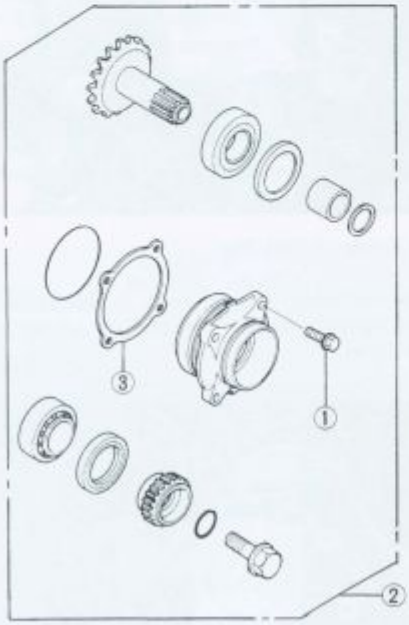

1. Mounting Bolts
2. Driven Shaft Bevel Gear Assembly
3. Shim(s)

•Unscrew the oil pipe clamp bolt from inside the case and remove the oil pipe with the O-ring.

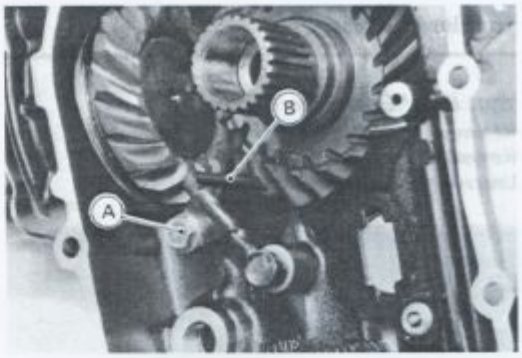

A. Oil Pipe Clamp Bolt B. Oil Pipe

•Unscrew the cap mounting bolts, and remove the cap with the O-ring.

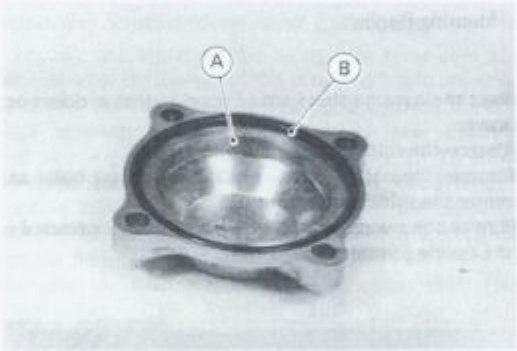

A. Cap B. O-ring

•Pry open the drive gear nut with a small chisel.
•Unscrew the drive gear nut using the drive gear holder (special tool).

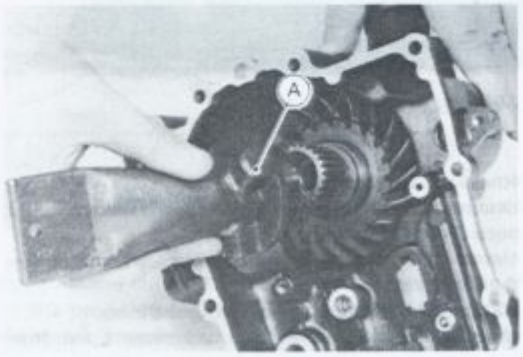

A. Drive Gear Holder: 57001-1026

- Remove the drive shaft with the drive shaft bevel gear and shim(s) from the case.
- Remove the ball bearing using bearing driver set (special tool: 57001-1129).

Drive Shaft Bevel Gear

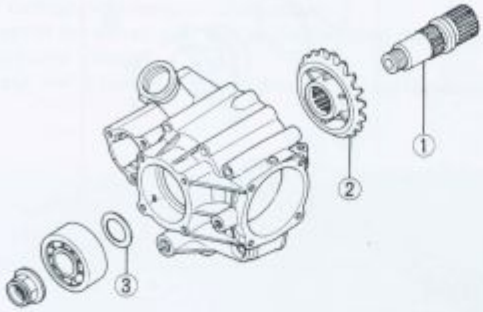

1. Drive Shaft
2. Drive Shaft Bevel Gear
3. Shim(s)

Front Bevel Gear Case Assembly

- Assembly is the reverse of disassembly. Note the following.
- The drive and driven shaft bevel gears are lapped as a set at the factory to get the best tooth contact. They must be replaced as a set.
- ★Adjust the front bevel gears if necessary (see Front Driven Gear Bearing Preload Adjustment and/or Front Bevel Gear Backlash and Tooth Contact Adjustment).
- Inspect the oil seal (see Oil Seal Inspection).

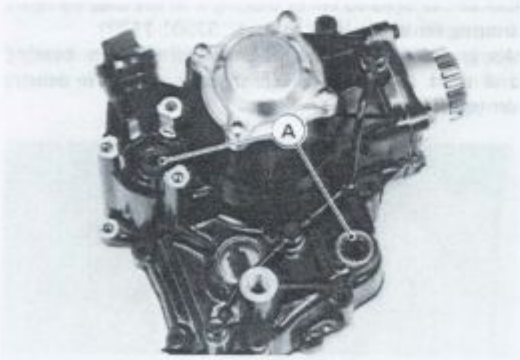

A. Oil Seals

- When installing the oil pipe check the O-ring for any kind of damage, and replace it if necessary.

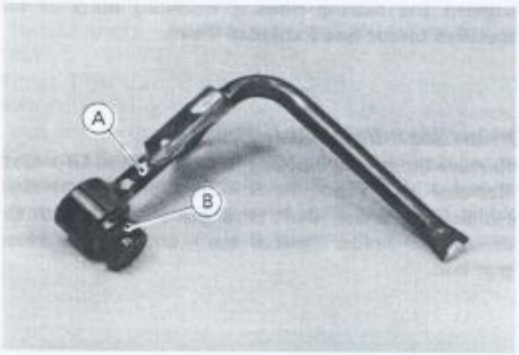

A. Oil Pipe B. O-ring

- Inspect the drive gear bearing for damage (see Drive Gear Bearing Inspection).
- Inspect the drive shaft bevel gear for damage (see Bevel Gear Inspection).
- When installing the drive gear nut apply molybdenum disulfide grease to its threads and seating surface.
- Tighten the drive gear nut to the specified torque (see Exploded View).
- Stake the drive gear nut to secure it in place.

CAUTION

□**When staking the nut, be careful not to apply shock to the shaft and bearings. Such a shock could damage the shaft and/or bearings.**

- When installing the oil pipe, replace the flat washers with new ones.
- Check the O-ring inside the cap for any kind of damage, and replace it if necessary.
- Tighten the cap mounting bolts to the specified torque (see Exploded View).
- Check the O-ring on the bearing housing for any kind of damage, and replace it if necessary.
- Install the bearing housing so that oil hole on the housing aligns with the oil hole in the final gear case.

A. Oil Holes

- Tighten the bearing housing mounting bolts to the specified torque (see Exploded View).

Driven Shaft Bevel Gear Removal

- Remove the bearing housing (see Front Bevel Gear Case Removal and Front Bevel Gear Case Disassembly).
- Holding the driven shaft bevel gear assembly with the driven gear holder (special tool), unscrew the driven gear bolt.

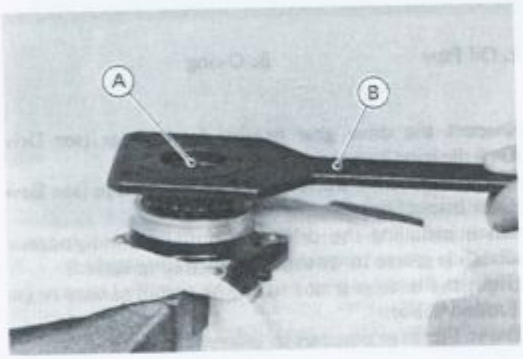

A. Driver Gear Bolt
B. Driver Gear Holder: 57001-1027

- Remove the driven gear joint with its O-ring.
- Remove the driven shaft bevel gear from the bearing housing.
- Remove the collar and the spacer(s) from the driven shaft bevel gear.
- Press the tapered roller bearing and oil seal out of the housing using the bearing driver set (special tool: 57001-1129).
- Remove the tapered roller bearing which is pressed onto the driven shaft, with the bearing puller (special tools).

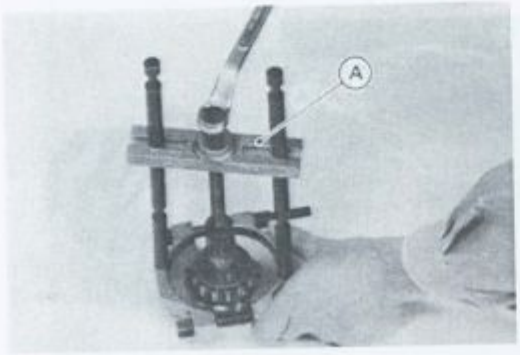

A. Bearing Puller: 57001-135

Driven Gear

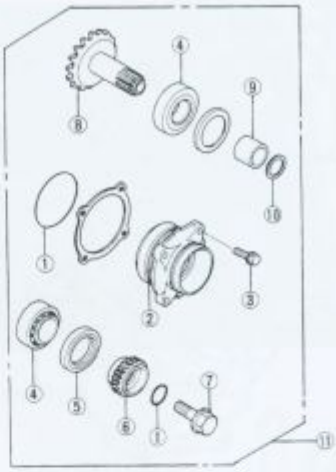

1. O-ring
2. Bearing Housing
3. Bearing Housing Mounting Bolts
4. Tapered Roller Bearing
5. Oil Seal
6. Driven Gear Joint
7. Driven Gear Bolt
8. Driven Shaft Bevel Gear
9. Collar
10. Spacer(s)
11. Driven Shaft Bevel Gear Assembly

Driven Shaft Bevel Gear Installation

- Installation is the reverse of removal. Note the following.
- The drive and driven shaft bevel gears are lapped as a set at the factory to get the best tooth contact. They must be replaced as a set.
- Check the tapered roller bearing for damage (see Tapered Roller Bearing Inspection).
- Install the tapered roller bearing into the case using the bearing driver set (special tool: 57001-1129).
- Apply grease to the remaining tapered roller bearing, and drive it onto the driven shaft using the bearing driver (special tool).

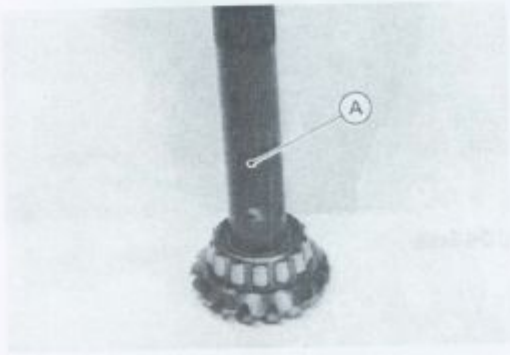

A. Bearing Driver: 57001-382

- Check and adjust the preload of the tapered roller bearing if necessary (see Front Driven Gear Bearing Preload Adjustment).
- Check the oil seal (see Oil Seal Inspection).
- Using the bearing driver set (special tool: 57001-1129), press the oil seal in until the face of the seal is level with the end of the bearing housing hole.
- Check the O-ring in the driven gear joint for any kind of damage, and replace it if necessary.
- Tighten the driven gear bolt to the specified torque (see Exploded View).
- Stake the driven gear bolt to prevent it from loosening.

A. Stake the Bolt.

CAUTION

○**When staking the bolt, be careful not to apply shock to the driven shaft bevel gear and their bearings. Such a shock could damage the driven shaft and/or bearings.**

Damper Cam Removal/Installation Notes

- Remove the retainers and needle bearing.

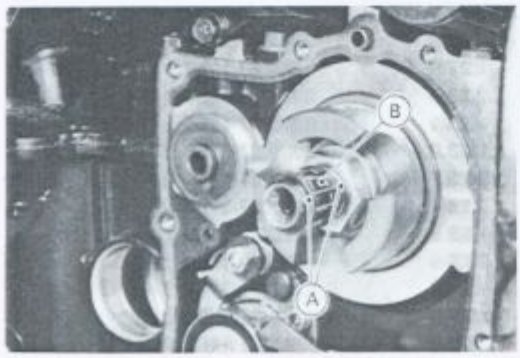

A. Retainers B. Needle Bearing

- Holding the dmaper cam with the damepr cam holder (special tool: 57001-1025), unscrew the damper cam nut.
- Inspect the damper cam (see Damper Cam Inspection).
- When installing the damper cam, tighten the damper cam nut to the specified torque (see Exploded View).
- Inspect the needle bearing for any kind of damage, and replace it if necessary.

Front Driven Gear Bearing Preload Adjustment

Preload Measurement:

- Adjust the bearing proload in the following cases.
  - ○When one or both of the tapered roller bearings, bearing housing, and driven shaft bevel gear are replaced with new ones.
  - ○When the driven gear bolt is loosened.
- Assemble the driven shaft bevel gear assembly, and tighten the drive gear nut to the specified torque (see Exploded View). Do not install the oil seal until the correct bearing preload is obtained.

CAUTION

○**To start with, choose a shim or shims so that the bearings are just SNUG with NO play but also with NO preload.**

○**Any over-preload on the bearings could damage the bearings.**

- Apply a little engine oil to the bearings, and turn the gear shaft more than 5 turns to allow the bearings to seat.
- Measure the bearing preload. Bearing preload is defined as the force or torque which is needed to start the gear shaft turning.

NOTE

○*Preload can be measured either with a spring scale or a beam-type torque wrench. When measured with a spring scale, the preload is designated by force (N, kg), and when measured with a torque wrench, it is designated by torque (N-m, kg-m, in-lb).*

Using Spring Scale:

Hook the spring scale on the handle at a point 200 mm from the center of the gear shaft. Hold the bearing housing in a vise so that the gear shaft axis is vertical. Apply force to the handle horizontally and at a right angle to it.

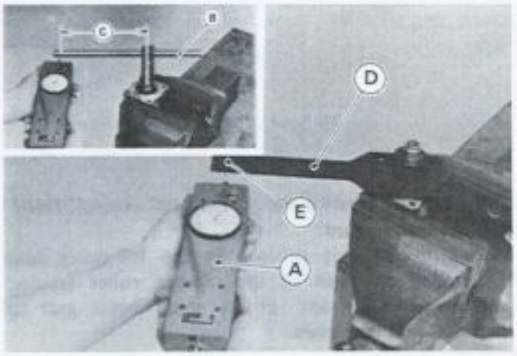

A. Spring Scale
B. Handle of Wrench
C. 200 mm
D. Driven Gear Holder: 57001-1027
E. Hole

★If the preload is out of the specified range, adjust it. Refer to the next paragraph to select shims.

Preload for Driven Bevel Gear Shaft Bearings

Using spring scale:

2.9 ~ 4.9 N (0.30 ~ 0.50 kg, 0.7 ~ 1.1 lb)

Using torque wrench:

0.6 ~ 1.0 N-m (0.06 ~ 0.10 kg-m, 5.2 ~ 8.7 in-lb)

Bearing Preloading Mechanism

(A) Before Tightening

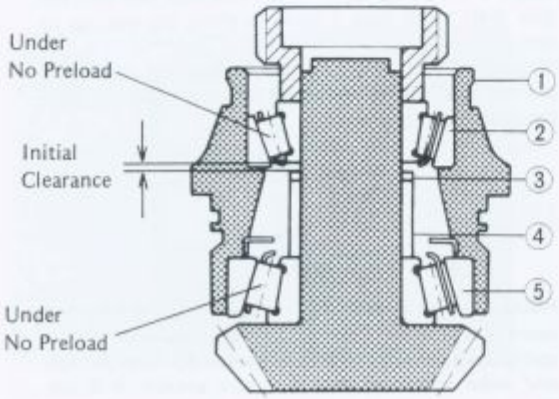

(B) After Tightening

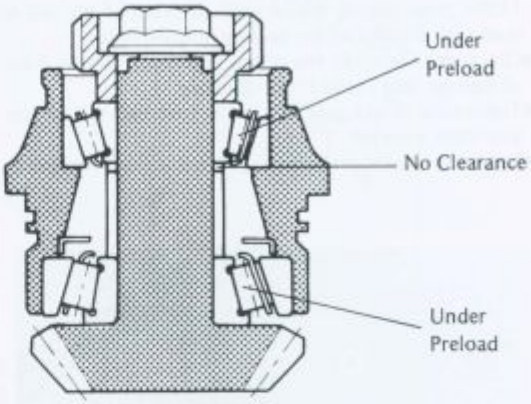

1. Bearing Housing
2. Tapered Roller Bearing
3. Spacer
4. Collar
5. Tapered Roller Bearing

Preload Adjustment:

- To increase preload, decrease the stack length of the collar and spacer(s).
  To decrease preload increase the stack length of the collar and spacer(s).
- Change the stack length a little at a time.
- Re-check the bearing preload, and re-adjust as necessary.

Collars for Preload Adjustment (•: Standard)

Length (mm)	Part Number
22.8	92027-1152
22.9	92027-1153
23.0	92027-1154
23.1	92027-1155
23.2	92027-1156
23.3	92027-1157
23.4	92027-1158
* 23.5	92027-1159
23.6	92027-1160
23.7	92027-1161
23.8	92027-1162
23.9	92027-1163
24.0	92027-1164
24.1	92027-1165

Spacers for Preload Adjustment (•: Standard)

Thickness (mm)	Part Number
1.70	92025-1072
1.72	92025-1073
1.74	92025-1074
• 1.76	92025-1075
1.78	92025-1076
1.80	92025-1077

Front Bevel Gear Backlash and Tooth Contact Adjustment

Improper backlash and/or tooth contact of bevel gears lead to noise and damage of gears.

When replacing any one of the parts which influence the backlash and tooth contact of the bevel gears, make sure to check and adjust them. First, adjust the backlash. Second, get the correct tooth contact. Last, check to see if backlash is within the standard. If backlash is out of range, repeat above procedure again. Backlash and tooth contact adjustments for the bevel gears are accomplished by moving the bevel gear(s) closer to or away from each other. This is done by changing thickness of the shims between each bearing housing and the front bevel gear case.

Parts which change the backlash and tooth contact are

Front bevel gear case
Drive and driven shaft bevel gears
Tapered roller bearings
Bearing housings

Backlash Adjustment:

- Clean any dirt and oil off the bevel gear teeth.
- Install the drive and driven shaft assemblies into the front bevel gear case. Install the standard shim (see the shim tables) between each bearing housing and the front bevel gear case, and tighten the drive gear nut to the specified torque (see Exploded View).
- Using two 6 mm bolts which are used to mount the front bevel gear case on the engine, and two 6 mm nuts (any 6 mm diameter with 1.0 mm pitch threads will work); install the dial gauge holder (special tool).
- Hold the drive gear steady.

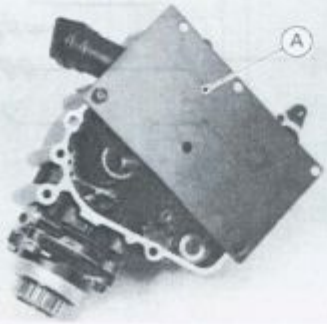

A. Dial Gauge Holder: 57001-1049

- Check the backlash while tightening the driven gear bearing housing mounting bolts. Stop immediately if the backlash disappears. Then, replace the shim at the drive gear housing and/or the shim at the driven gear housing.

NOTE

○*Backlash, or gear lash is the amount of movement of one gear relative to the other, measured with one gear stationary.*

Front Bevel Gear Backlash

Standard **0.13 – 0.18 mm**

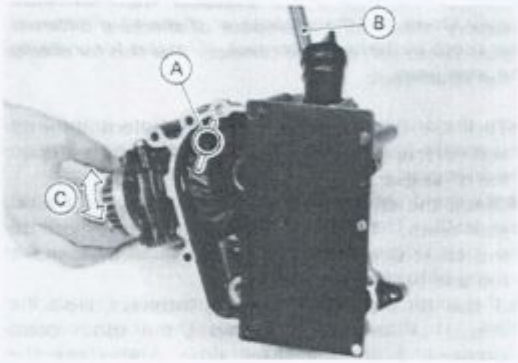

A. Dial Gauge C. Move.
B. Hold.

★If the backlash is incorrect, replace the shim at the drive gear housing and/or the shim at the driven gear housing, and recheck the backlash.

Shims for Drive Shaft Bevel Gear (* : Standard)

Thickness (mm)	Part Number
0.10	92025-1016
0.15	92025-1017
0.20	92025-1018
* 0.30	92025-1019
0.60	92025-1013
0.90	92025-1014
1.20	92025-1015

Shims for Driven Shaft Bevel Gear (* : Standard)

Thickness (mm)	Part Number
0.10	92025-1606
0.15	92025-1607
0.50	92025-1608
0.60	92025-1609
* 0.70	92025-1610
0.80	92025-1611
0.90	92025-1612
1.00	92025-1613
1.20	92025-1614

Tooth Contact Adjustment:

- Remove the dial gauge and its holder from the gear case.
- Clean any dirt and oil off the teeth of the bevel gears.
- Apply checking compound to 4 or 5 teeth of the driven gear.

NOTE

○*Apply the checking compound to the teeth in a thin, even coat with a fairly stiff paint brush. If painted too thickly, the exact tooth pattern may not appear.*
○*The checking compound must be smooth and firm, with the consistency of tooth paste.*
○*Special compounds are available from automotive supply stores for the propose of checking differential gear tooth patterns and contact. Use this for checking the bevel gears.*

- Turn the driven gear for 3 or 4 revolutions in the drive and reverse (coast) directions, while creating a drag on the drive gear.
- Check the drive pattern and coast pattern of the bevel gear teeth. The tooth contact patterns of both drive and coast sides should be centrally located between the top and bottom of the tooth.

★If the tooth contact pattern is incorrect, replace the shims, as shown. Then erase the tooth contact patterns, and check them again. Also check the backlash every time the shims are replaced. Repeat the shim change procedure as necessary.

Correct Tooth Contact Pattern

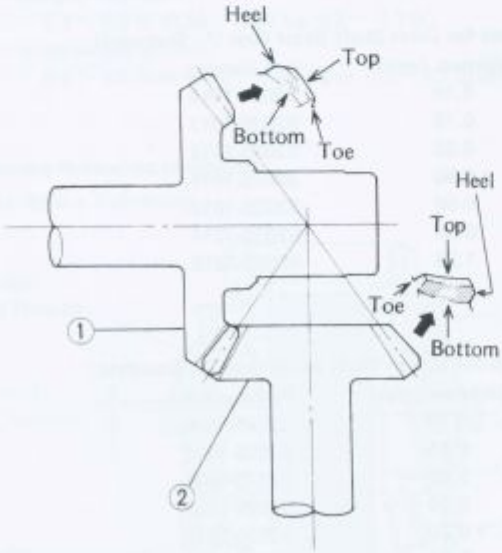

1. Drive Shaft Bevel Gear
2. Driven Shaft Bevel Gear

Incorrect Tooth Contact Patterns

Example 1: Decrease the thickness of the shim pack at the drive gear housing by 0.05 mm, and increase the thickness of the shim pack at the driven gear housing by 0.1 mm to correct the pattern.

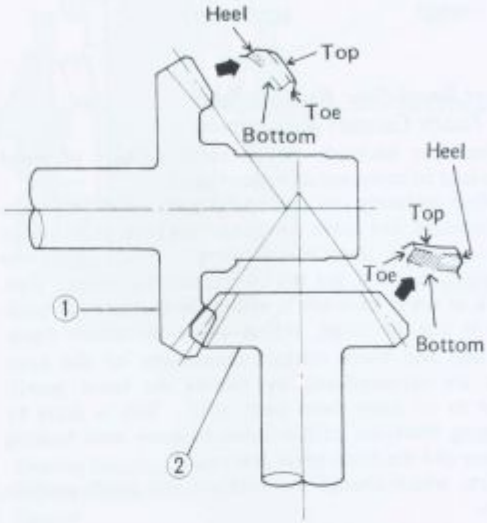

Example 2: Increase the thickness of the shim pack at the drive gear housing by 0.05 mm, and decrease the thickness of the shim pack at the driven gear housing by 0.1 mm to correct the pattern.

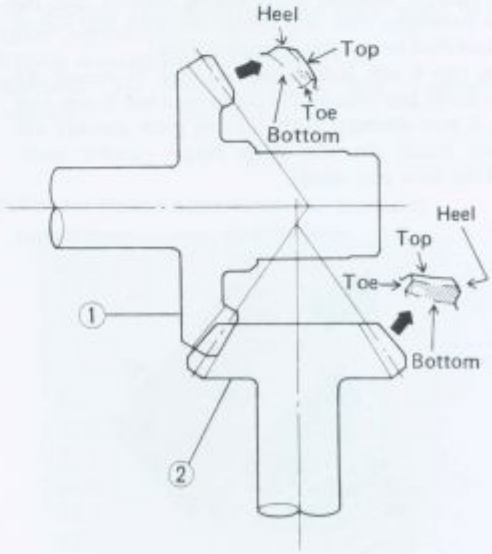

1. Drive Shaft Bevel Gear
2. Driven Shaft Bevel Gear

Bevel Gear Inspection

- Visually check the bevel gears for scoring, chipping, or other damage.
- ★Replace the bevel gears as a set if either gear is damaged.

Oil Seal Inspection

- Inspec the oil seal.
- ★Replace it if the lips are misshapen, discolored (indicating that the rubber has deteriorated), hardened, or otherwise damaged.

Tapered Roller Bearing Inspection

- Using a high flash-point solvent, wash the tapered roller bearing.
- Visually check the tapered roller bearing for scoring, chipping, or other damage.
- ★If there is any doubt as to the condition of a bearing, replace it.

Drive Gear Bearing Inspection

- Disassembly the front bevel gear case (see Front Bevel Gear Case Disassembly).
- Visually inspect the bearings for abrasion, color change, or other damage.
- ★If there is any doubt as to the condition of a bearing, replace it.

Damper Cam Inspection

- Disassemble the damper cam (see Damper Cam Removal/Installation Notes).
- Visually inspect the cam damper, cam follower, and spring.
- ★Replace any parts that appear damaged.

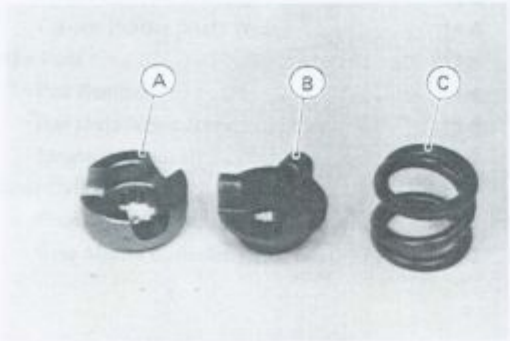

A. Damper Cam
B. Cam Follower
C. Spring

Brakes

Table of Contents

Exploded View

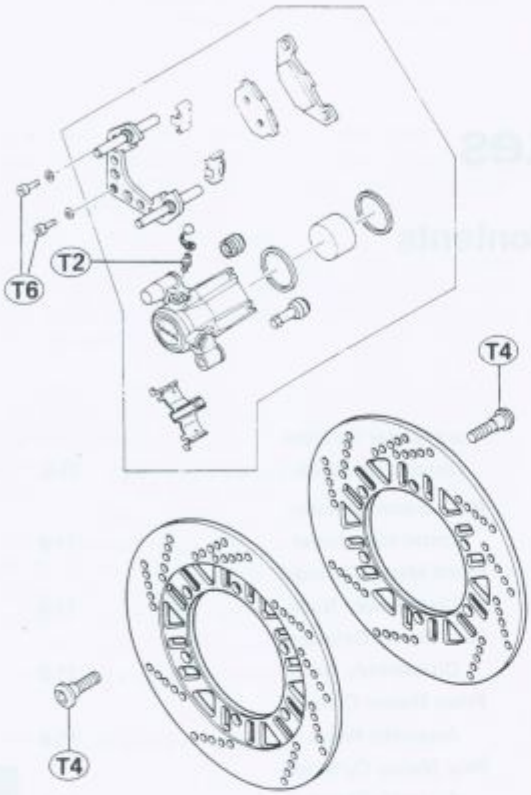

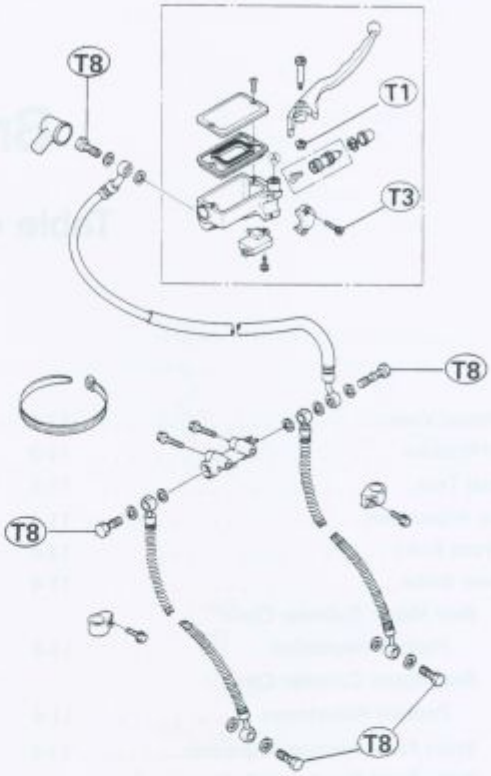

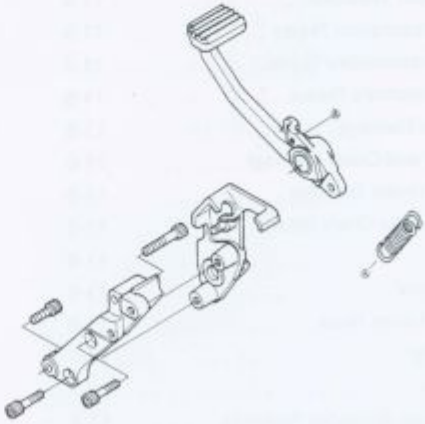

G : Apply a thin coat of grease.
T1 : 5.9 N-m (0.60 kg-m, 52 in-lb)
T2 : 7.8 N-m (0.80 kg-m, 69 in-lb)
T3 : 8.8 N-m (0.90 kg-m, 78 in-lb)
T4 : 23 N-m (2.3 kg-m, 16.5 ft-lb)
T5 : 29 N-m (3.0 kg-m, 22 ft-lb)
T6 : 32 N-m (3.3 kg-m, 24 ft-lb)
T7 : 34 N-m (3.5 kg-m, 25 ft-lb)
T8 : 25 N-m (2.5 kg-m, 18.0 ft-lb)

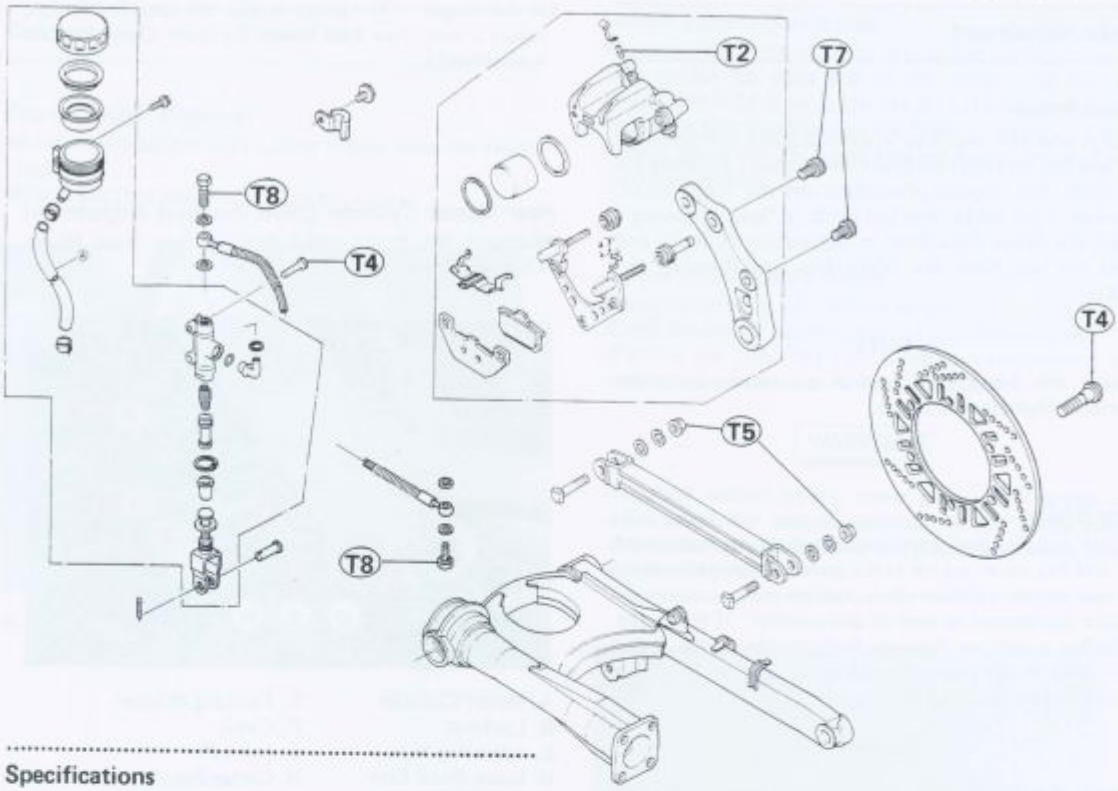

Specifications

Item		Standard	Service Limit
Brakes:			
Pad lining thickness:	Front	4.85 mm	1 mm
	Rear	4.85 mm	1 mm
Brake fluid grade		D.O.T.4	– – –
Disc runout:	Front	Under 0.15 mm	0.3 mm
	Rear	Under 0.15 mm	0.3 mm
Disc thickness:	Front	4.8 – 5.1 mm	4.5 mm
	Rear	6.8 – 7.1 mm	6.0 mm

Recommended Brake Fluid

Castrol Girling-Universal
Castrol GT
Castrol Disc Brake Fluid
Check Shock Premium Heavy Duty

Special Tool

Inside Circlip Pliers: 57001-143

Brake Adjustment

Front Brake:

Disc and disc pad wear is automatically compensated for and has no effect on brake lever action. So there are no parts that require adjustment on the front brake. However if the brake lever has a soft, or "spongy feeling", check the brake fluid level in the master cylinder and bleed the air from the brake line (see Bleeding the Brake).

NOTE

○*Check the brake fluid level in accordance with the Periodic Maintenance Chart.*

Rear Brake:

Disc and disc pad wear is automatically compensated for and has no effect on brake pedal action. However, the rear master cylinder clevis position may occasionally require adjustment in case of disassembly. If the brake pedal has a soft, or "spongy feeling', check the brake fluid level in the reservoir and bleed the air from the brake line (see Bleeding the Brake).

NOTE

○*Check the brake fluid level in accordance with the Periodic Maintenance Chart.*

Rear Master Cylinder Clevis Position Inspection

•When the brake pedal is in its rest position, measure the length Ⓐ indicated in the figure.

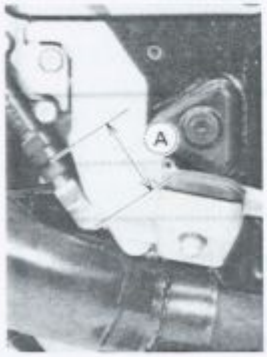

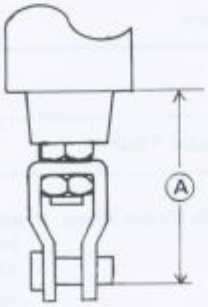

Length Ⓐ

Standard: **43.5 – 45.5 mm**

★If the length Ⓐ is not within the specified length, adjust a nut. (see Rear Master Cylinder Clevis Position Adjustment).

Rear Master Cylinder Clevis Position Adjustment

•Remove the brake pedal bracket (see Rear Master Cylinder Removal).

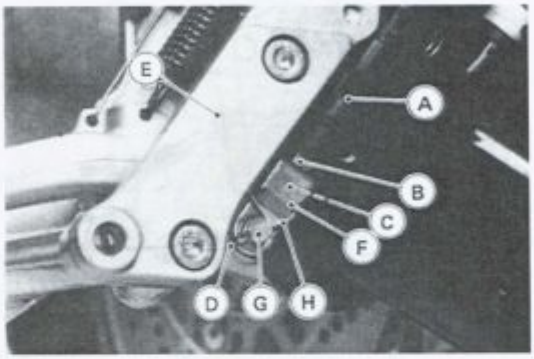

A. Master Cylinder
B. Locknut
C. Adjusting Nut
D. Brake Pedal End
E. Footpeg Bracket
F. Clevis
G. Joint Pin
H. Cotter Pin

•Loosen the master cylinder locknut.
•Pull out the cotter pin and joint pin.
•Up or down the adjusting nut by turning the clevis to adjust length Ⓐ shown in Rear Master Cylinder Clevis Position Inspection.
•After the adjustment is made, tighten the master cylinder locknut.

NOTE

○*If the length Ⓐ cannot be adjusted by turning the clevis, master cylinder may be damaged.*

Brake Rod

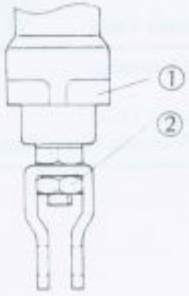

1. Master Cylinder
2. Adjusting Nut

Calipers

Front Caliper Removal

- Remove the caliper with caliper holder from the front fork.
- Disconnect the brake hose from the caliper.

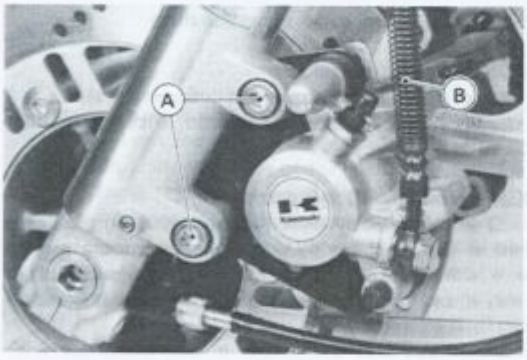

A. Calier Mouting Bolts B. Brake Hose

Rear Caliper Removal

- Remove the right side trunk.
- Remove the right side muffler.
- Remove the caliper mounting bolts, and take off the caliper body with caliper holder.

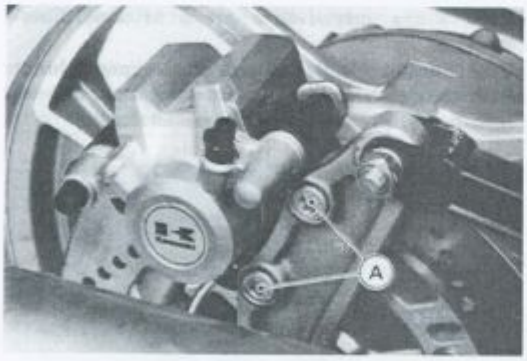

A. Mounting Bolts

- If the caliper is to be disassembled after removal and if compressed air is not available, remove the piston using the following two steps before disconnecting the brake hose from the caliper.
  - Remove the pads.
  - Pump the brake lever or pedal to remove the caliper piston.
  - Immediately wipe up any brake fluid that spills.
- Remove the brake hose from the caliper.

Caliper Installation Notes

- Connect the brake hose to the caliper putting a new flat washer on each side of the brake hose fitting.
- Check the fluid level in the master cylinder, and bleed the brake line (see Bleeding the Brake Line).
- Check the brake for weak braking power, brake drag, and fluid leakage.

Caliper Disassembly Notes

- Using compressed air, remove the piston.
  - Cover the caliper opening with a clean, heavy cloth.
  - Remove the piston by lightly applying compressed air to where the brake line fits into the caliper.

WARNING

- **To avoid serious injury, never place your fingers or palm inside the caliper opening. If you apply compressed air into the caliper, the piston may crush your hand or fingers.**

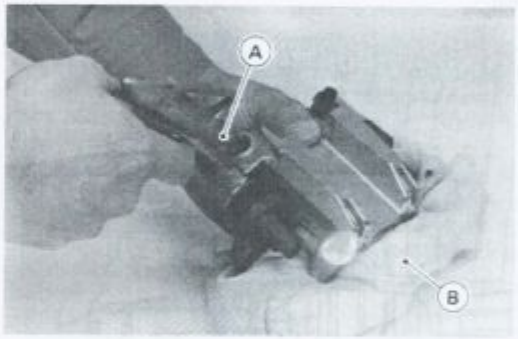

A. Apply compressed air. B. Cloth

Caliper Assembly Notes

- Apply brake fluid to the outside of the piston and the fluid seal, and push the piston into the cylinder by hand. Take care that neither the cylinder nor the piston skirt get scratched.
- Install the dust seal around the piston. Check that the dust seal is properly fitted into the grooves in the piston and caliper.
- Apply a thin coat of PBC (Poly Butyl Cuprysil) grease to the caliper holder shafts and holder holes. (PBC is a special high temperature, water-resistant grease).
- Install the anti-rattle spring in the calipers as shown.

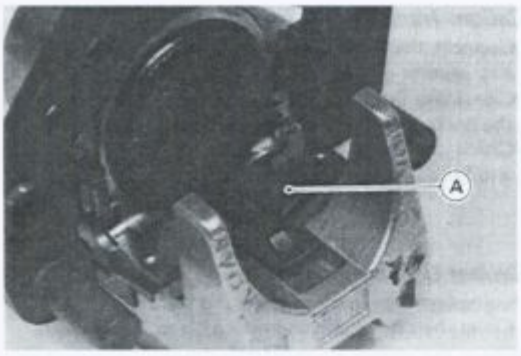

A. Anti-rattle Spring

Fluid Seal Damage

The fluid seal around the piston maintains the proper pad/disc clearance. If this seal is not satisfactory, pad wear will increase, and constant pad drag on the disc will raise brake and brake fluid temperature.

Caliper

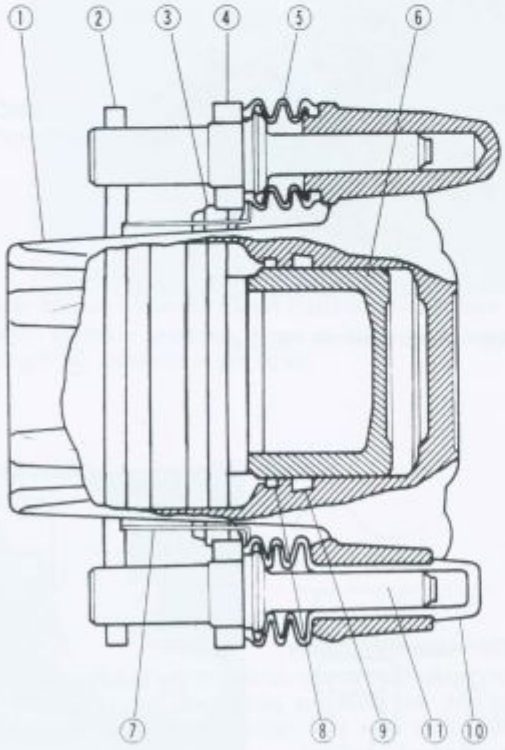

1. Caliper
2. Brake Pad
3. Brake Pad
4. Caliper Holder
5. Dust Cover
6. Piston
7. Anti-rattle Spring
8. Dust Seal
9. Fluid Seal
10. Friction Boot
11. Caliper Holder Shaft

Replace the fluid seals under any of the following conditions: (a) fluid leakage around the pad; (b) brakes overheat; (c) there is a large difference in left and right pad wear; (d) the seal is stuck to the piston. If the fluid seal is replaced, replace the dust seal as well. Also, replace all seals every other time the pads are changed.

Dust Seal and Cover Damage

- Check that the dust seals and covers are not cracked, worn, swollen, or otherwise damaged.

★If they show any damage, replace them.

Piston Cylinder Damage

- Visually inspect the piston and cylinder surfaces.

★Replace the cylinder and piston if they are badly scored or rusty.

Caliper Holder Shaft Wear

The caliper body must slide smoothly on the caliper holder shafts. If the body does not slide smoothly, one pad will wear more than the other, pad wear will increase, and constant drag on the disc will raise brake and brake fluid temperature.

- Check to see that the caliper holder shafts are not badly worn or stepped, or the rubber friction boots are not damaged.

★If the rubber friction boots are damaged, replace the rubber friction boots, and the caliper holder.

Brake Pads

Pad Removal

- Remove the caliper (see Front or Rear Caliper Removal).
- Take the piston-side pad out of the caliper holder.
- Push the caliper holder forward the piston, and then remove the pad from the caliper holder shaft.

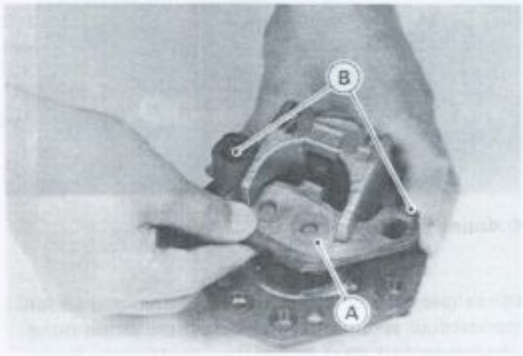

A. Pad B. Caliper Holder Shaft

Pad Installation Note

- Push the caliper piston in by hand as far as it will go.

WARNING

○**Do not attempt to drive the motorcycle until a full brake lever or pedal is obtained by pumping the brake lever or pedal until the pads are against the disc. The brake will not function on the first application of the lever or pedal if this is not done.**

Lining Wear

In accordance with the Periodic Maintenance Chart, inspect the front and rear brakes for wear.

- Check the lining thickness of the pads in each caliper.
- ★If the lining thickness of either pad is less than the service limit, replace both pads in the caliper as a set.

Brake Pad

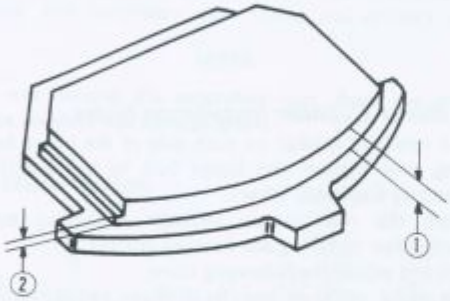

1. Lining Thickness
2. Service Limit

Pad Lining Thickness		A1 ~ A8	A9
Standard	FR	5.0 mm	4.5 mm
	R	5.0 mm	5.0 mm
Service Limit		1 mm	

Master Cylinders

Front Master Cylinder Removal

- Pull back the dust cover, and remove the banjo bolt to disconnect the upper brake hose from the master cylinder. There is a flat washer on each side of the hose fitting.

A. Banjo Bolt
B. Master Cylinder
C. Clamp Bolts

- Remove the clamp bolts and take off the master cylinder. Immediately wipe up any brake fluid that spills.

Rear Master Cylinder Removal

- Remove the reservoir mounting bolt and slide the clamp out of its place. Disconnect the brake hose from the reservoir. Immediately wipe up any brake fluid that spills.
- Remove the banjo bolt to disconnect the brake hose from the master cylinder, and temporarily secure the end of the brake hose to some high place to keep fluid loss to a minimum. There is a flat washer on each side of the hose fitting.

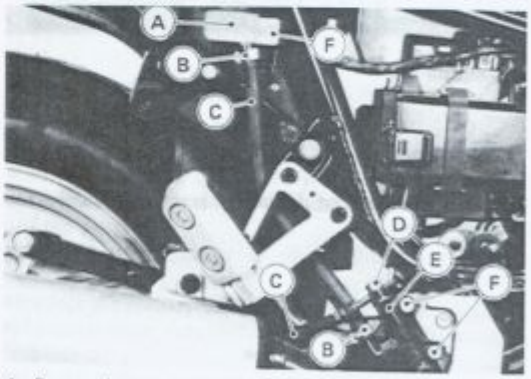

A. Reservoir
B. Hose Clamp
C. Brake Hose
D. Banjo Bolt
E. Master Cylinder
F. Mounting Bolts

- Loosen the rear master cylinder mounting bolts.
- Unscrew the mounting bolts, and remove the brake pedal bracket.

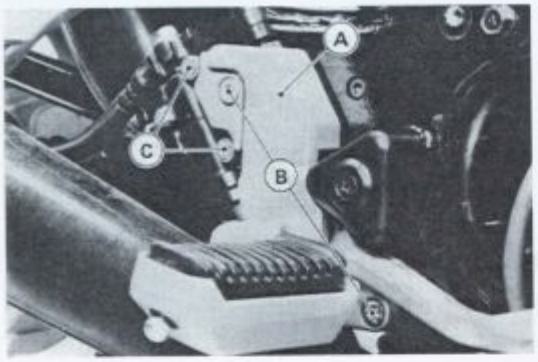

A. Brake Pedal Bracket
B. Brake Pedal Bracket Mounting Bolt
C. Rear Master Cylinder Mounting Bolts

•Remove the cotter pin and joint pin.

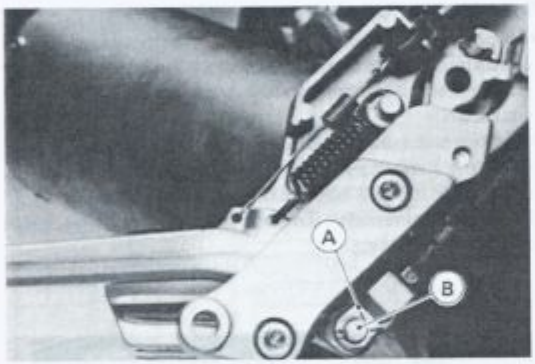

A. Cotter Pin B. Joint Pin

•Unscrew the mounting bolts, and remove the rear master cylinder.

Front Master Cylinder Installation Notes

•Master Cylinder Clamp Installation:
○The master cylinder clamp must be installed with the arrow mark upward.
○Torque the upper clamp bolt first, and then the lower clamp bolt to the specification. There will be a gap at the lower part of the clamp after tightening.

A. Tighten upper clamp bolts first. B. Arrow Mark

•Use a new flat washer on each side of the brake hose fitting, and tighten the banjo bolts to the specified torque.

Rear Master Cylinder Installation Notes

•Use a new flat washer on each side of the brake hose fitting, and tighten the banjo bolt to the specified torque (see Exploded View).
•Tighten the rear master cylinder mounting bolts securely after installing the footpeg bracket.
•Check and adjust the following items.
○Brake pedal position (see Rear Brake Pedal Position Inspection).
○Rear brake light switch (see Rear Brake Light Switch Adjustment in the Electrical System chapter).
○Check the fluid level in the master cylinder, and bleed the brake line (see Bleeding the Brake Line).
○Check the brake for weak braking power, brake drag, and fluid leakage.

Front Master Cylinder Disassembly Notes

•Remove the front master cylinder from the handlebar.
•Remove the reservoir cap and diaphragm, and empty out the brake fluid.
•Remove the locknut and pivot bolt, and remove the brake lever.
•Slide the dust cover out of place.
•Remove the retainer with circlip pliers and pull out the piston with the secondary cup, and take off the primary cup and spring.

CAUTION

○Do not remove the secondary cup from the piston since removal will damage it.

Front Master Cylinder

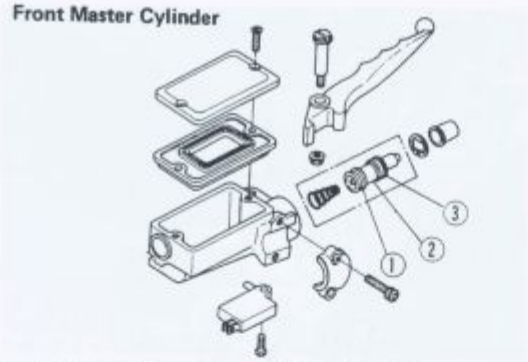

1. Primary Cup
2. Piston
3. Secondary Cup
4. Dust Cover

Rear Master Cylinder Disassembly Notes

- Remove the rear master cylinder from the right footpeg bracket.
- Remove the retainer with a circlip priers, and pull out the piston stop, push rod, as a set. Then remove the piston and secondary cup, spring and primary cup.

NOTE

○*Do not remove the secondary cup from the piston since removal will damage them.*

Rear Master Cylinder

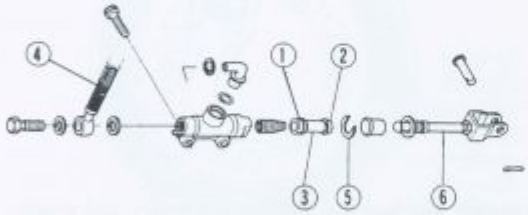

1. Primary Cup
2. Secondary Cup
3. Piston
4. Brake Hose
5. Retainer
6. Push Rod

- Remove the retainer with a circlip pliers and pull out the brake hose connector and O-ring from the master cylinder.

Front Master Cylinder Assembly Notes

- Before assembly, clean all parts including the master cylinder with brake fluid or alcohol.

CAUTION

○**Except for the disc pads and disc; use only disc brake fluid, isopropyl alcohol, or ethyl alcohol, for cleaning brake parts. Do not use any other fluid for cleaning these parts. Gasoline, motor oil, or any other petroleum distillate will cause deterioration of the rubber parts. Oil spilled on any part will be difficult to wash off completely, and will eventually deteriorate the rubber used in the disc brake.**

- Apply brake fluid to the removed parts and to the inner wall of the cylinder.
- Tighten the brake lever pivot bolt and tighten the locknut to the specified torque.

Rear Master Cylinder Assembly Notes

- Before assembly, clean all parts including the master cylinder with brake fluid or alcohol, and apply brake fluid to the removed parts and the inner wall of the cylinder.

CAUTION

○**Except for the disc pads and disc; use only disc brake fluid, isopropyl alcohol, or ethyl alcohol, for cleaning brake parts. Do not use any other fluid for cleaning these parts. Gasoline, motor oil, or any other petroleum distillate will cause deterioration of the rubber parts. Oil spilled on any part will be difficult to wash off completely, and will eventually deteriorate the rubber used in the disc brake.**

- Take care not to scratch the piston or the inner wall of the cylinder.
- When assembling the rear master cylinder parts, they must be assembled correctly.

Master Cylinder Inspection (Visual Inspection)

- Disassemble the front and rear master cylinders.
- Check that there are no scratches, rust or pitting on the inside of the master cylinder and on the outside of the piston.
- ★If the master cylinder or piston shows any damage, replace them.
- Inspect the primary cups and secondary cups.
- ★If a cup is worn, damaged, softened (rotted), or swollen, replace it.
- ★If fluid leakage is noted at the brake lever, the piston assembly should be replaced to renew the cup.
- Check the dust covers for damage.
- ★If they are damaged, replace them.
- Check that the relief and supply ports are not plugged.
- ★If the small relief port becomes plugged, the brake pads will drag on the disc. Blow the ports clean with compressed air.
- Check the piston return springs for any damage.
- ★If the spring is damaged, replace it.

Front and Rear Master Cylinders

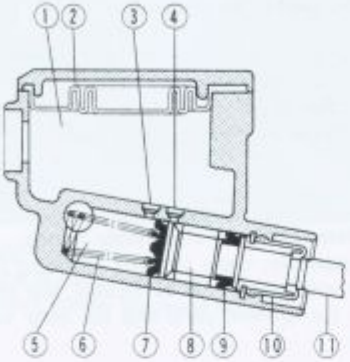

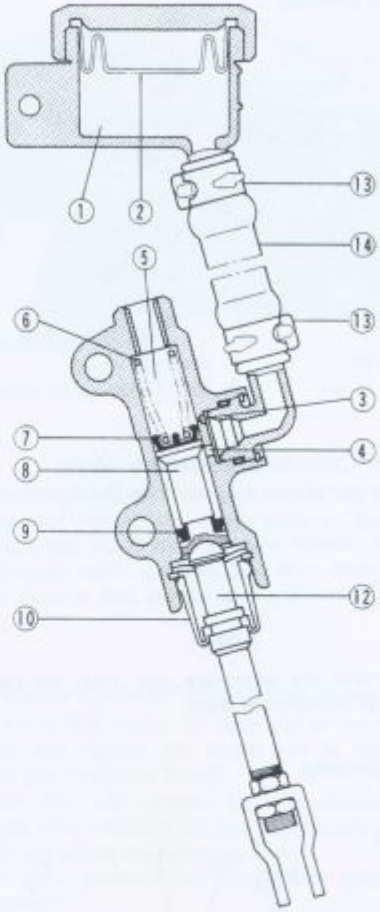

1. Reservoir
2. Diaphragm
3. Relief Port
4. Supply Port
5. Cylinder
6. Return Spring
7. Primary Cup
8. Piston
9. Secondary Cup
10. Dust Cover
11. Brake Lever
12. Push Rod
13. Clamp
14. Hose

Reservoir Disassembly Notes

- Remove the rear brake reservoir mounting bolt, and take the reservoir off the frame.

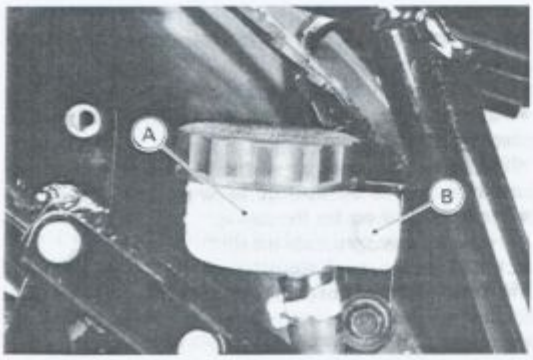

A. Reservoir B. Mounting Bolt

- Take off the reservoir cap and diaphragm, and empty the brake fluid into a suitable container.
- Slide the hose clamps, and pull the brake hose off the reservoir. Immediately wipe up any brake fluid that spills.

Reservoir Assembly Notes

- Install the clamps for the brake hose ends.
- Fill the reservoir with fresh brake fluid, and bleed the brake line (see Bleeding the Brake).

Brake Pedal

Brake Pedal Removal/Installation

- Remove the brake pedal bracket and remove the clevis at the rear master cylinder lower end (see Rear Master Cylinder Removal).
- Unhook the springs and unscrew the pivot arm mounting bolts.

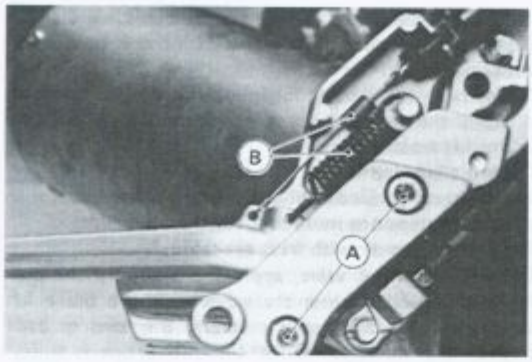

A. Mounting Bolts B. Springs

Discs

Disc wear

Measure the thickness of each disc at the point where it has worn the most. Replace the disc if it has worn past the service limit.

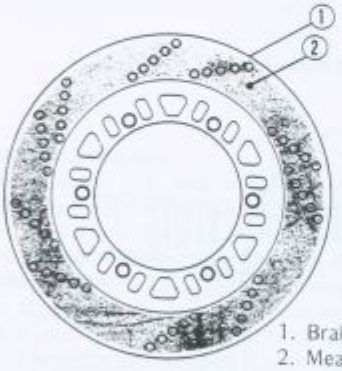

1. Brake Disc
2. Measuring Area

Front Disc Thickness	A1 ~ A8	A9
Standard	4.8 – 5.1 mm	4.3 – 4.6 mm
Service Limit	4.5 mm	4.0 mm

Rear Disc Thickness

Standard: 6.8 – 7.1 mm
Service Limit: 6.0 mm

Disc Cleaning

Poor braking can be caused by oil on the disc. Oil on the disc must be cleaned off with an oil-less cleaning fluid such as trichloroethylene or acetone.

WARNING

○These cleaning fluid are usually highly flammable and harmful if breathed for prolonged periods. Be sure to heed the fluid manufacturer's warnings.

Disc Warp

Jack up the motorcycle so that the front wheel is off the ground, and turn the handlebar fully to one side. Set up a dial gauge against the front disc as illustrated, and measure disc runout. Remove the jack, set the motorcycle up on its center stand, and then measure the rear disc runout. If runout exceeds the service limit, replace the disc.

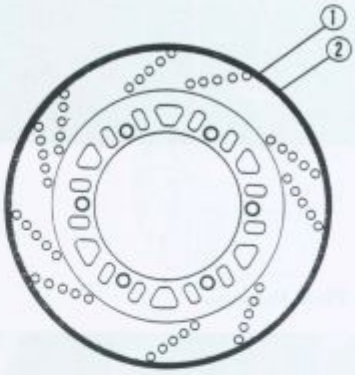

1. Brake Disc
2. Measuring Area

Disc Runout

Standard	**Under 0.15 mm**
Service Limit	**0.3 mm**

Brake Fluid

Fluid Level Inspection

In accordance with the Periodic Maintenance Chart, inspect the brake fluid level in the front and rear brake fluid reservoirs.

●Check the brake fluid level in the reservoir.

NOTE

○*Hold the reservoir horizontal when checking brake fluid level.*

★The fluid level must be kept above the lower level lines. If the fluid level is lower than the lower level line, fill the reservoir to the upper level line of the reservoir.

WARNING

○Change the brake fluid in the brake line completely if the brake fluid must be refilled but the type and brand of the brake fluid that already is in the reservoir are unidentified. After changing the fluid, use only the same type and brand of fluid thereafter. Mixing different types and brands of brake fluid lowers the brake fluid boiling point and could cause the brake to be ineffective. It may also cause the rubber brake parts to deteriorate.

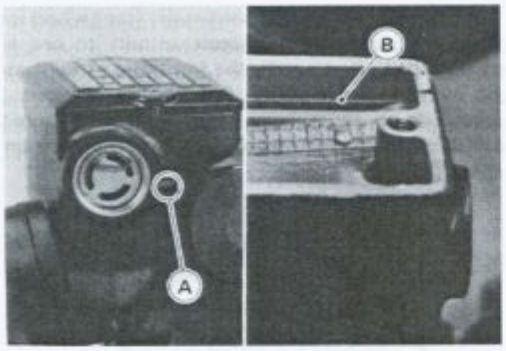

Rear Brake Fluid Reservoir

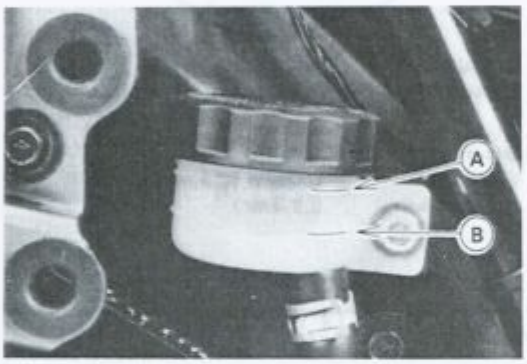

A. Lower Level Line B. Upper Level Line

Brake Fluid Change

In accordance with the Periodic Maintenance Chart, change the brake fluid. The brake fluid should also be changed if it becomes contaminated with dirt or water.

Brake Fluid Requirement:

Recommended fluids are given in the table below. If none of the recommended brake fluids are available, use extra heavy-duty brake fluid only from a container marked D.O.T.4.

Recommended Brake Fluid

Type	**D.O.T.4**
Brand	**Check Shock Premium Heavy Duty**
	Castrol Girling-Universal
	Castrol GT (LMA)
	Castrol Disc Brake Fluid

Changing Brake Fluid:

- Remove the reservoir cap, and remove the rubber cap on the bleed valve.
- Attach a clear plastic hose to the bleed valve on the caliper, and run the other end of the hose into a container.
- Open the bleed valve (counterclockwise to open), and pump the brake lever or pedal until all the fluid is drained from the line.
- Close the bleed valve.
- Front brake: Since a dual disc brake is used, repeat the above 4 steps one more time for the other side.
- Fill the reservoir with fresh brake fluid.
- Open the bleed valve, apply the brake by the brake lever or pedal, close the valve with the brake held applied, and then quickly release the lever or pedal. Repeat this operation until the brake line is filled and fluid starts coming out of the plastic hose.

NOTE

○*Replenish the fluid in the reservoir as often as necessary to keep it from running completely out.*

- Front brake: Repeat the above 2 steps one more time for the other side.
- Bleed the air from the lines (continue with Bleeding the Brake).

Filling up the Brake Line

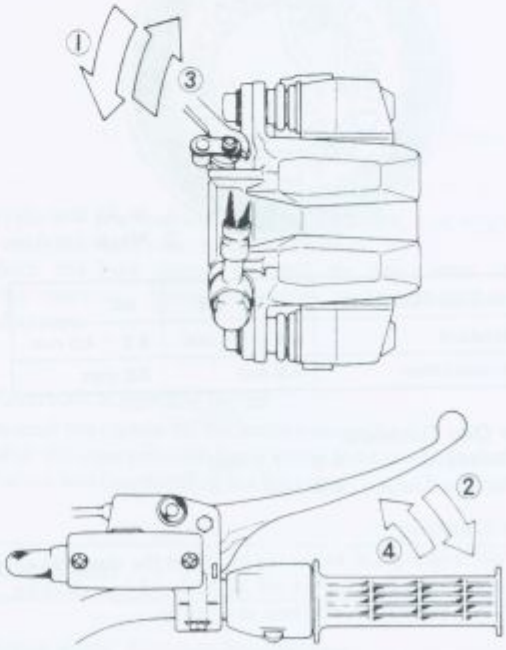

1. Open the bleed valve.
2. Apply the brake and hold it.
3. Close the bleed valve.
4. Then quickly release the brake.

Bleeding the Brake Line

The brake fluid has a very low compression coefficient so that almost all the movement of the brake lever or pedal is transmitted directly to the caliper for braking action. Air, however, is easily compressed. When air enters the brake lines, brake lever or pedal movement will be partially used in compressing the air. This will make the lever or pedal feel spongy, and there will be a loss in braking power.

Bleed the air from the brake whenever brake lever or pedal action feels soft or spongy, after the brake fluid is changed, or whenever a brake line fitting has been loosened for any reason.

- Remove the reservoir cap, and check that there is plenty of fluid in the reservoir. The fluid level must be checked several times during the bleeding operation and replenished as necessary. If the fluid in the reservoir runs completely out any time during bleeding, the bleeding operation must be done over again from the beginning since air will have entered the line.
- With the reservoir cap off, slowly pump the brake lever or pedal several times until no air bubbles can be seen rising up through the fluid from the holes at the bottom of the reservoir. This bleeds the air from the master cylinder end of the line.

Bleeding the Brake Line

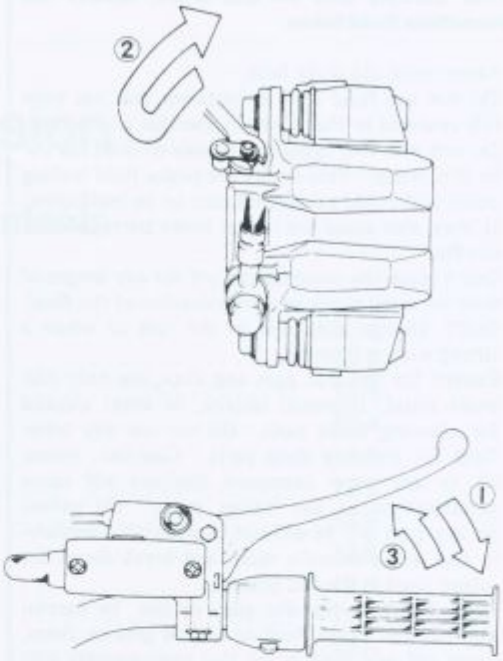

1. Hold the brake applied.
2. Quickly open and close the valve.
3. Release the brake.

Bleeding the rear brake line:

- Install the reservoir cap, and connect a clear plastic hose to the bleed valve at the caliper, running the other end of the hose into a container. Pump the brake pedal a few times until it becomes hard and then, holding the pedal pushed down, quickly open (turn counterclockwise) and close the bleed valve. Then release the pedal. Repeat this operation until no more air can be seen coming out into the plastic hose. Check the fluid level in the reservoir every so often, replenishing it as necessary.

Bleeding the front brake line:

- Bleed the air from the front brake line, first using the bleed valves on the brake calipers and the anti-dive units, and then using the bleed valves on the junction blocks.
- Repeat the previous step one more time for the other side.
- When air bleeding is finished, install the rubber cap(s) on the bleed valve, and check that the brake fluid is filled to the upper level line marked in the reservoir (handlebar turned so that the reservoir is level).

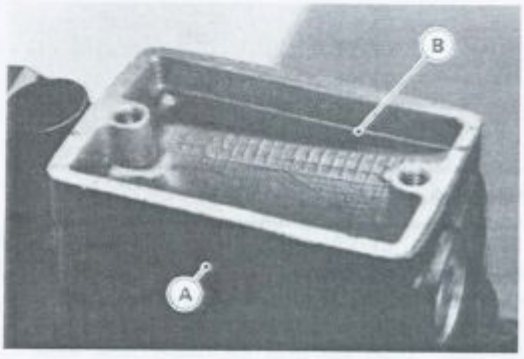

A. Front Brake Reservoir B. Upper Level Line

WARNING

○**When working with the disc brake, observe the precautions listed below.**

1. Never reuse old brake fluid.
2. Do not use fluid from a container that has been left unsealed or that has been open for a long time.
3. Do not mix two types and brands of fluid for use in the brake. This lowers the brake fluid boiling point and could cause the brake to be ineffective. It may also cause the rubber brake parts to deteriorate.
4. Don't leave the reservoir cap off for any length of time to avoid moisture contamination of the fluid.
5. Don't change the fluid in the rain or when a strong wind is blowing.
6. Except for the disc pads and discs, use only disc brake fluid, isopropyl alcohol, or ethyl alcohol for cleaning brake parts. Do not use any other fluid for cleaning these parts. Gasoline, motor oil, or any other petroleum distillate will cause deterioration of the rubber parts. Oil spilled on any part will be difficult to wash off completely and will eventually reach and break down the rubber used in the disc brake.
7. When handling the disc pads or disc, be careful that no disc brake fluid or any oil gets on them. Clean off any fluid or oil that inadvertently gets on the pads or disc with a high flash-point solvent. Do not use one which will leave an oily residue. Replace the pads with new ones if they cannot be cleaned satisfactorily.
8. Brake fluid quickly ruins painted surfaces; any spilled fluid should be completely wiped up immediately.
9. If any of the brake line fittings or the bleed valve is opened at any time, the **AIR MUST BE BLED FROM THE BRAKE.**

Brake Hoses

Brake Hose Inspection

- The high pressure inside the brake line can cause fluid to leak or the hose to burst if the line is not properly maintained. Bend and twist the rubber hose while examining it. Replace it if any cracks or bulges are noticed.

Brake Hose Replacement

- Pump the brake fluid out of the line (see Brake Fluid Change).
- Remove the banjo bolts at both ends of the brake hose, and pull the hose off the motorcycle. Especially, for the brake hose between the rear muster cylinder and the reservoir, loosen the clamps at both ends of the hose, and take off the hose.
- Install the new brake hose in its place, and tighten the banjo bolts to the specified torque, noting the following.

○Use a new flat washer for each side of the fittings.

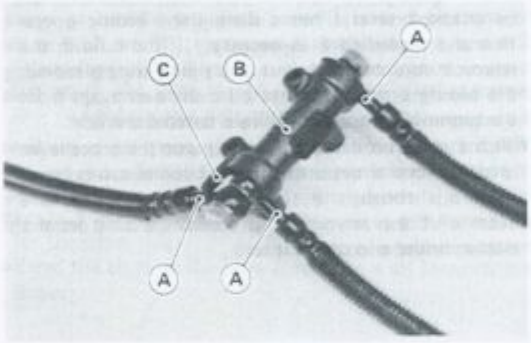

A. Metal Pipe
B. Joint
C. Notch

Suspension

Table of Contents

Exploded View

L Apply non-permanent locking agent to the threads.
LG: Apply liquid gasket.
M: Apply a thin coat of molybdenum disulfide grease.
T1: 1.5 N-m (0.15 kg-m, 13 in-lb)
T2: 12 N-m (1.2 kg-m, 104 lb)
T3: 16 N-m (1.6 kg-m, 11.5 ft-lb)
T4: A1 ~ A8 20 N-m (2.0 kg-m, 14.5 ft-lb)
On and after A9 35 N-m (3.6 kg-m, 26 ft-lb)
T5: 21 N-m (2.1 kg-m, 15.0 ft-lb)
T6: 23 N-m (2.3 kg-m, 16.5 ft-lb)
T7: 27 N-m (2.8 kg-m, 20 ft-lb)
T8: 39 N-m (4.0 kg-m, 29 ft-lb)
T9: 52 N-m (5.3 kg-m, 38 ft-lb)
T10: 59 N-m (6.0 kg-m, 43 ft-lb)

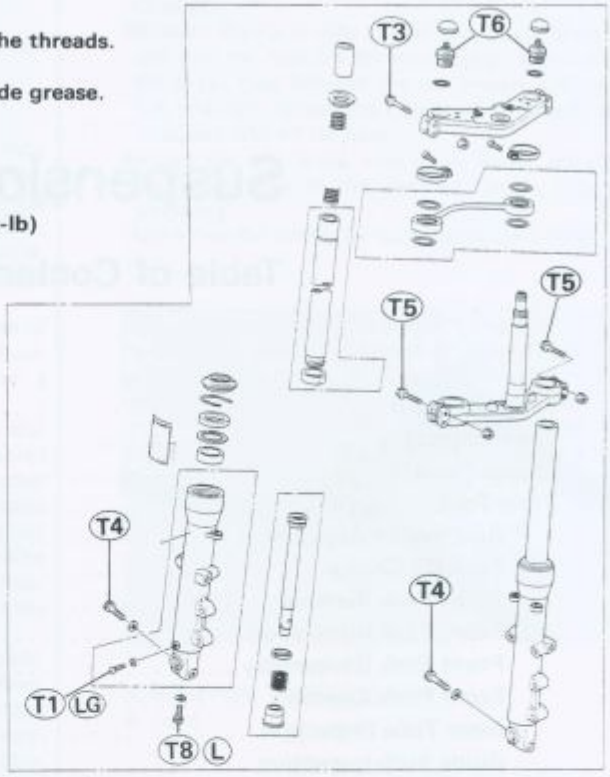

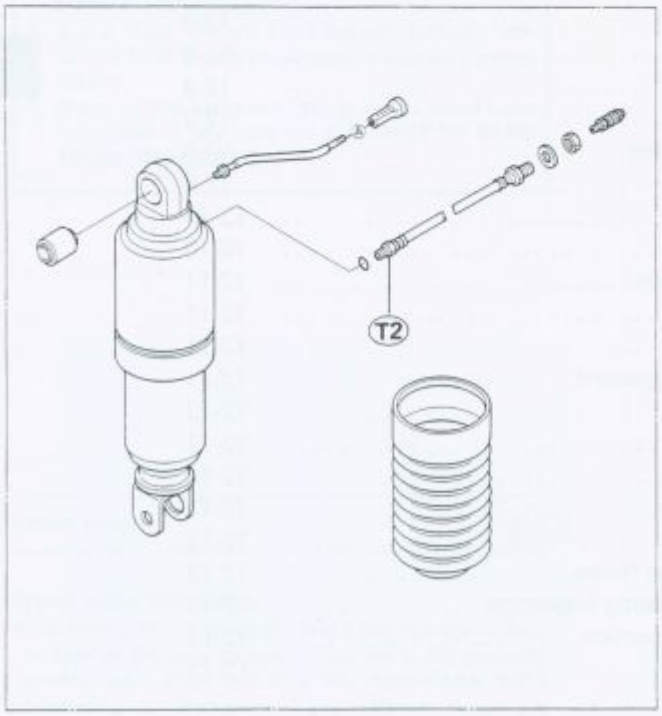

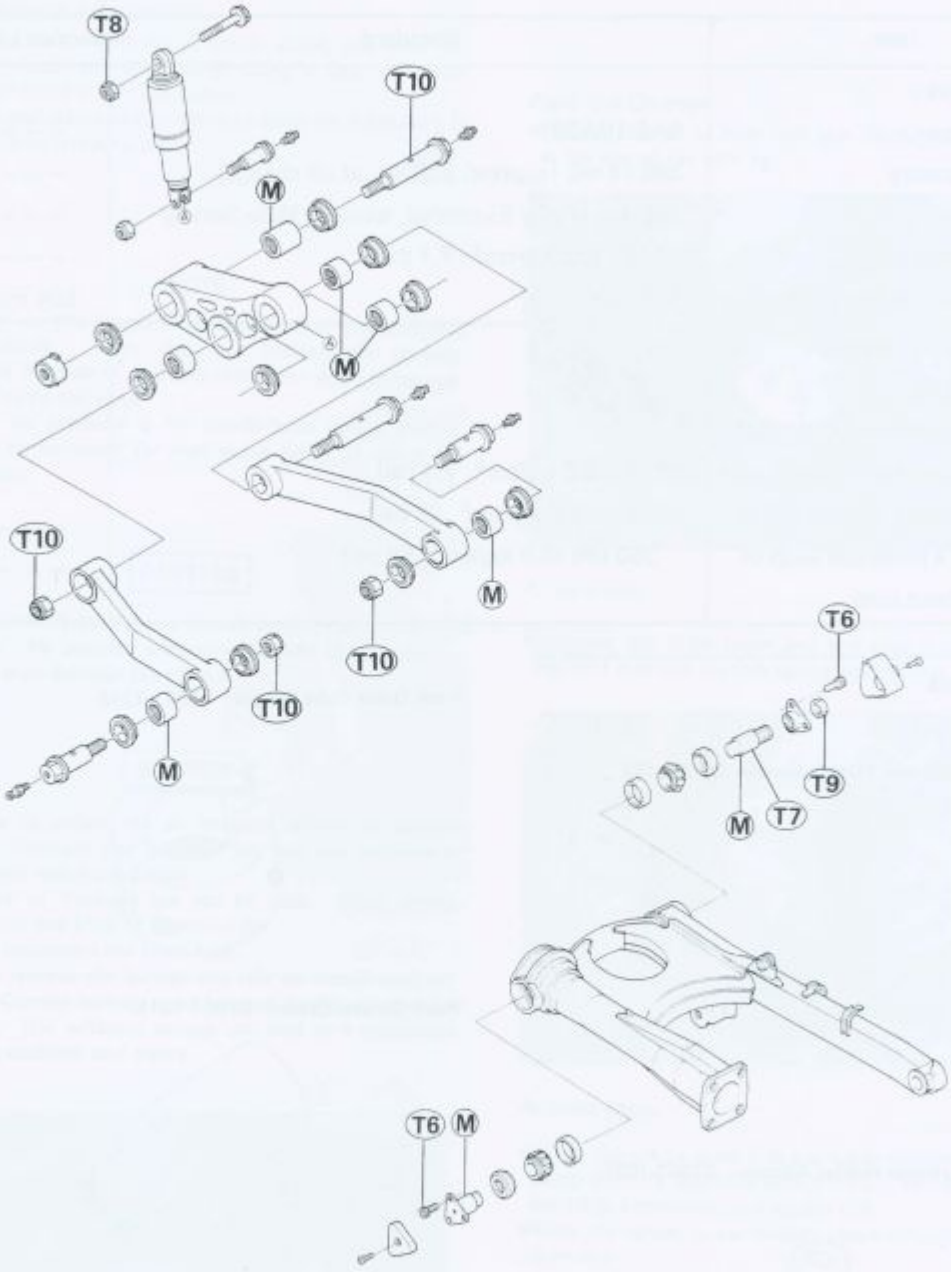
T8
T10
M
M
T10
M
T10
T10
M
T6
T9
M
T7
T6
M

Specifications

Item	Standard	Service Limit
Front Fork:		
Oil type	SAE 10W20	– – –
Oil capacity	388 ±4 mL (approx. 330 mL at oil change)	– – –
Oil level	355 mm (Fully Extended, without Main Spring)	– – –
Air pressure	50 kPa (0.5 kg/cm², 7.1 psi)	– – –
Fork spring free length	514 mm	504 mm
Rear Shock Absorber:		
Air pressure:		
an average-build rider with no passenger and no load	50 kPa (0.5 kg/cm², 7.1 psi)	
a rider with load or a rider and a passenger with or without load	200 kPa (2.0 kg/cm², 28 psi) – 350 kPa (3.5 kg/cm², 50 psi)	– – – – – –

Special Tools

Front Fork Cylinder Holder Handle: 57001-183

Front Fork Cylinder Holder Adapter: 57001-1057

Fork Outer Tube Weight: 57001-1218

Fork Oil Seal Driver: 57001-1219

Socket Wrench Holder: 57001-1225

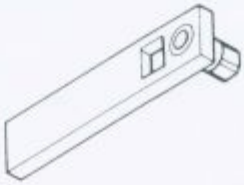

Front Fork

Air Pressure Adjustment

- Put the motorcycle on its center stand, and raise the front wheel off the ground using a jack or other suitable stand under the engine.
- Check and adjust the air pressure when the front fork is cold (room temperature).

NOTE

- *Do not use tire gauges for checking the air suspension's air pressure. They may not indicate the correct pressure because of air leaks that occur when the gauge is applied to the valve.*
- *Lower air pressure is for comfortable riding, but it should be increased for high speed riding, or riding on bad roads.*

CAUTION

- **Inject air little by little so that air pressure does not rise rapidly. Air pressure exceeding 250 kPa (2.50 kg/cm^2, 36 psi) may damage the oil seal.**

WARNING

- **Be sure to adjust the air pressure within the usable range. Pressure too high or too low can produce a hazardous riding condition.**
- **Only air or nitrogen gas can be used. Never inject oxygen or any kind of explosive gas.**
- **Do not incinerate the front fork.**
- **Do not remove the springs and rely on compressed air only. Correct springs must be used in this suspension system. Use without springs can lead to a condition causing accident and injury.**

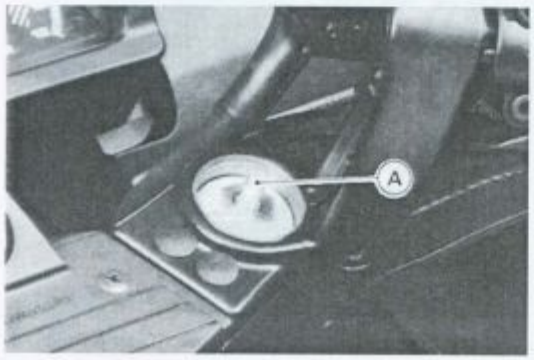

A. Air Valve

Front Fork Air Pressure

Standard	**50 kPa (0.5 kg/cm^2, 7.1 psi)**

Fork Oil Change

- Release the air in both fork legs through the air valve at the top of the fork leg.

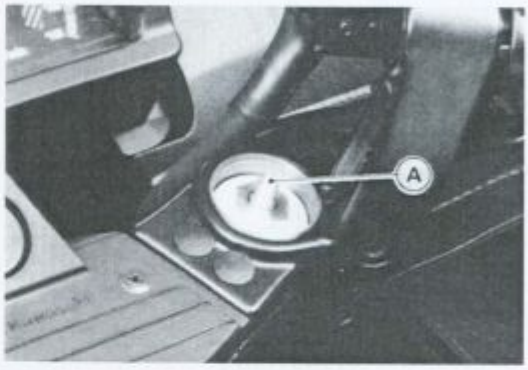

A. Air Valve

- Unscrew the drain screw and top plug from one fork leg, and pull out the fork spring, spring seat, and collar.

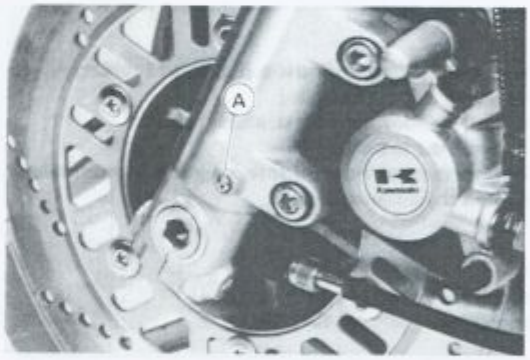

A. Drain Screw

- Allow the oil to drain into a suitable container. If you pump the fork legs to force out the oil, be sure to catch the oil in a container as it squirts out.
- Wash the drain screw threads clean of oil, and blow them dry.
- Apply a liquid gasket to the threads of the drain screw, and install the screw and gasket.
- Pour in the specified type and amount of oil.
- Pump the fork enough times to expel the air from the upper and lower chambers.
- With the fork fully extended insert a tape measure or rod in the inner tube, and measure the distance from the top of the inner tube to the oil.

★If the oil is above or below the specified level, remove or add oil and recheck the oil level.

Fork Oil Level Measurement

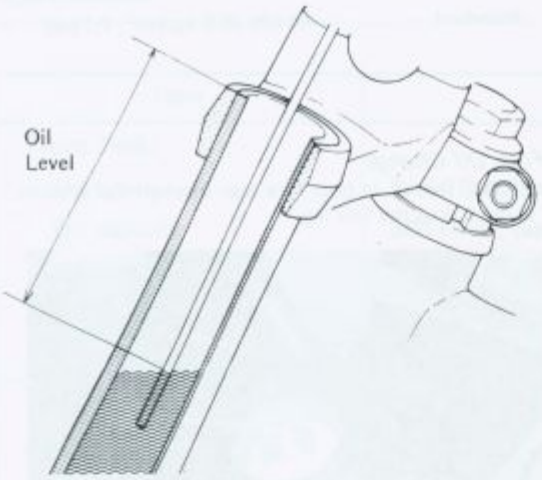

CAUTION

The operation of air front forks is especially dependent upon correct oil level. Higher level than specified may cause oil leakage and seal breakage. So be sure to maintain the specified level.

- Inspect the O-ring on the top plug, and replace it with a new one if it is damaged.
- Install the spring, spring seat, and collar.
- Tighten the top plug.
- Change the oil of the other fork leg in the same manner.
- Adjust the air pressure.

Front Fork Oil Viscosity: **SAE10W20**

Amount per side	A1 ~ A8	A9
When changing oil	330 mL	320 mL
After disassembly and completely dry	338 ± 4 mL	379 ± 4 mL
Level	355 mm	171 mm

Front Fork Removal

- Release the air pressure from the forks.
- Remove the fairing assembly (see Fairing Removal in the Frame chapter).
- Loosen the handlebar clamp and mounting bolts on both handlebars.
- Remove the front wheel (see Front Wheel Removal in Wheels/Tires chapter).

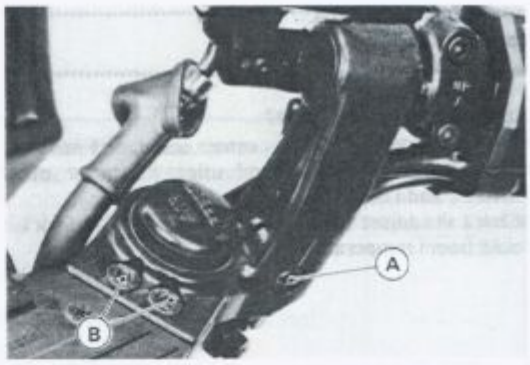

A. Clamp Bolts B. Mounting Bolts

- Remove the caliper from the fork leg to be removed, and rest the caliper on some kind of stand so that it does not dangle.
- Remove the front fender (see Front Fender Removal in the Frame chapter).
- Remove the speed meter cable clamp for the left hand front fork.

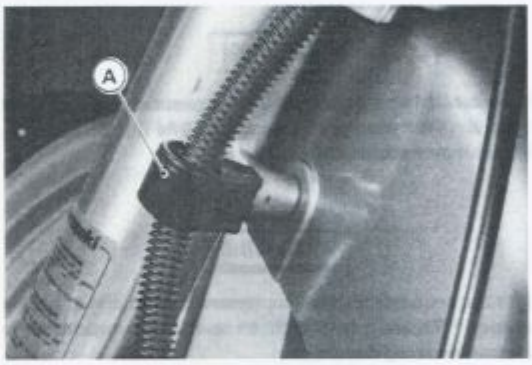

A. Clamp

- Loosen the upper and lower fork clamp bolts, and the connecting pipe clamp screw.
- With a twisting motion, work the fork leg down and out.

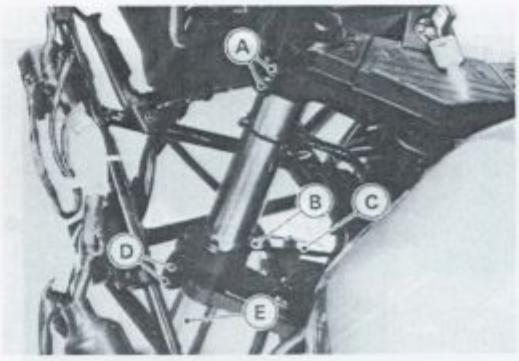

A. Upper Clamp Bolt
B. Clamp
C. Connecting Pipe
D. Lower Clamp Bolt
E. Fork Leg

•Stick a piece of tape over the air hole to keep the oil from running out of the fork.

Front Fork Installation

•When installing the fork leg, be careful of the following items.

○If the fork leg was disassembled, check the fork oil level. Then inject air through the air valve after installation.

○Route the brake and clutch hoses and the cables correctly (see Cable Routing in the General/Information chapter).

○Install the connecting pipe and clamps between the stem base and stem head.

○Tighten the lower and upper clamp bolts to the specified torque (see Exploded View).

○Set the connecting pipe on the steering stem.

○Clamp screws tightening .

○Tighten the handlebar clamp and mounting bolts to the specified torque (see Exploded View).

○Tighten the caliper mounting bolts to the specified torque (see Exploded View in the Brakes chapter).

○Check the front brake after installation.

Front Fork Disassembly

•Remove the front fork leg.

•Remove the axle clamp bolt(s).

•Remove the top plug, washer, and spring.

NOTE

○*The top plug should be loosened before the fork is removed.*

•Pour out the fork oil into a suitable container.

•Stop the cylinder from turning by using the front fork cylinder holder handle and adapter (special tools). Unscrew the Allen bolt and take the bolt, and gasket out of the bottom of the outer tube.

Front Fork Cylinder Removal

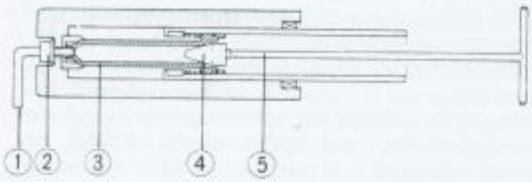

1. Allen Wrench
2. Allen Bolt
3. Cylinder
4. Adapter: 57001-1011
5. Handle: 57001-183

•Remove the piston and cylinder unit and the short spring from the top of the front fork tube.

•Separate the inner tube from the outer tube as follows.

○Remove the dust seal from the outer tube.

○Remove the retainer and washer from the outer tube.

○Mount the weight (special tool) on the top of the outer tube, by fitting the step of the weight (special tool) to the top corner of the outer tube.

Weight Mounting

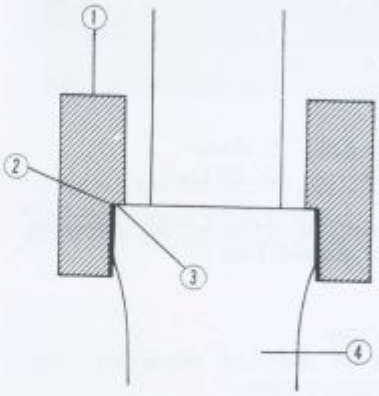

1. Fork Outer Tube Weight: 57001-1218
2. Step
3. Corner
4. Outer Tube

○Holding the inner tube by hand in a vertical position, stroke the outer tube several times and pull it down.

Front Fork Separation

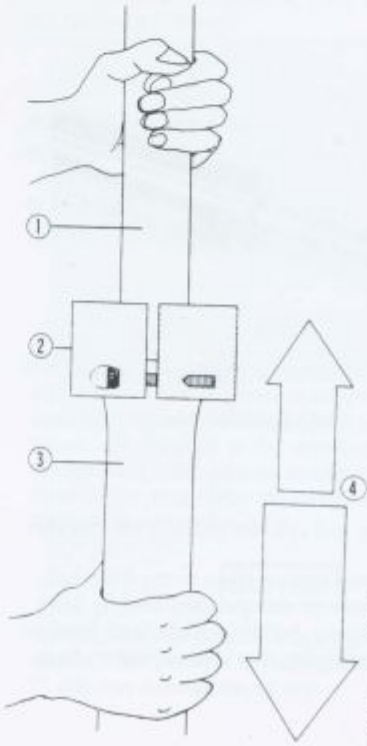

1. Inner Tube
2. Fork Outer Tube Weight: 57001-1218
3. Outer Tube
4. Stroke

○Remove the oil seal, washer and outer tube guide bush, from the inner tube.

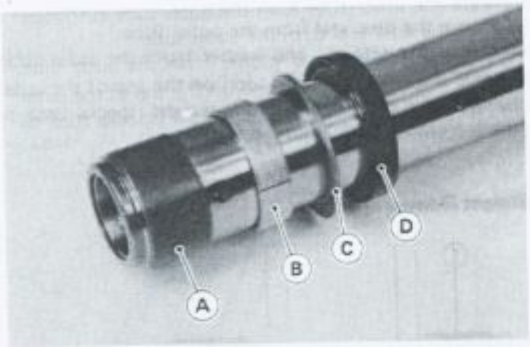

A. Inner Tube Guide Bush
B. Outer Tube Guide Bush
C. Washer
D. Oil Seal

●Remove the cylinder base, spring washers and washer from the bottom of the outer tube.

Front Fork Assembly

●Fork assembly is the reverse of disassembly. Pay attention to the following items.
○Check the top plug O-ring for damage. Replace it with new one if damaged.
○Replace the oil seal removed with a new one.
○Inspect the guide bushes (see Guide Bush Inspection), and replace them with new ones if necessary.
○Insert the piston and cylinder unit and the short spring in the inner tube, and put on the cylinder base.

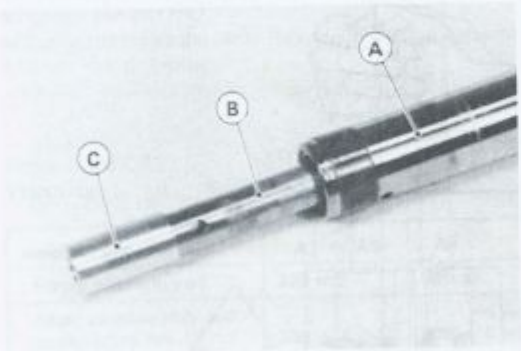

A. Inner Tube
B. Cylinder
C. Cylinder Base

○Insert the inner tube and cylinder unit as a set into the outer tube.
○Apply a non-permanent locking agent to the Allen bolt. Tighten the Allen bolt to the specified torque, using the front fork cylinder holder handle and holder adapter (special tools) to stop the cylinder from turning.

○Use the fork oil seal driver (special tool) to install the guide bush and the oil seal in the front fork.

Guide Bush Installation

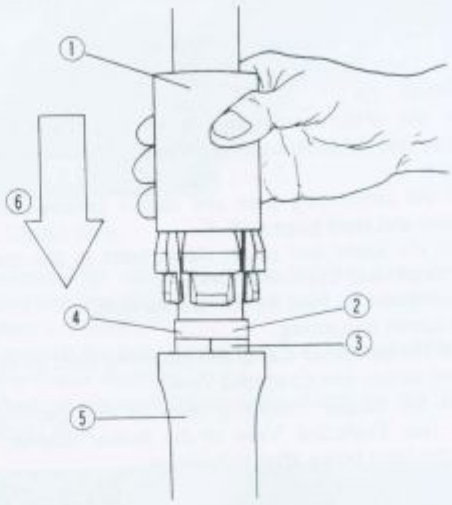

1. Driver: 57001-1219
2. Used Guide Bush
3. Slit
4. New Guide Bush
5. Outer Tube
6. Tap

○If the drain screw was removed, check the gasket for damage. Replace the damaged gasket with a new one. Before installing the drain screw, apply a liquid gasket to the threads of the screw, and tighten the screw securely.
○Pour in the type and amount of fork oil specified (see Specifications), and adjust the oil level.
○Tighten the top plug to the specified torque after fork installation.

Inner Tube Inspection

●Visually inspect the inner tube, and repair any damage.
●Nicks or rust damage can sometimes be repaired by using a wetstone to remove sharp edges or raised areas which cause seal damage.
★If the damage is not repairable, replace the inner tube. Since damage to the inner tube damages the oil seal, replace the oil seal whenever the inner tube is repaired or replaced.
●Temporarily assemble the inner and outer tubes, and pump them back and forth manually to check for smooth operation.

CAUTION

○If the inner tube is badly bent or creased, replace it. Excessive bending, followed by subsequent straightening, can weaken the inner tube.

Guide Bush Inspection

- Visually inspect the guide bushes, and replace them if necessary.

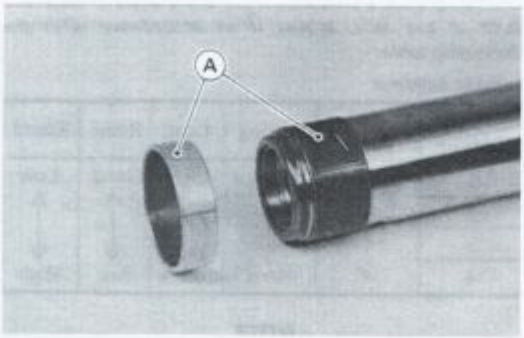

A. Guide Bushes

Oil Seal and Dust Seal Inspection

- Inspect the oil seal and dust seal for any signs of deterioration or damage.
- ★Replace them if necessary. Replace the oil seal with a new one whenever it has been removed.

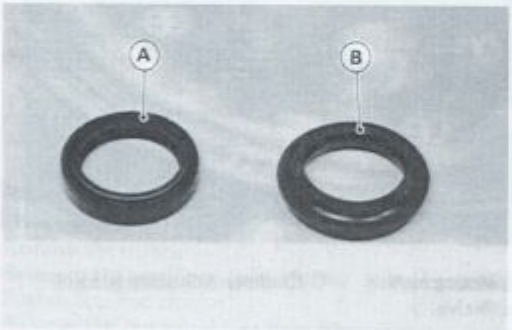

A. Oil Seal B. Dust Seal

Spring Tension

- Since the spring becomes shorter as it weakens, check its free length to determine its condition.
- ★If the spring of either fork leg is shorter than the service limit, it must be replaced. If the length of a replacement spring and that of the remaining spring vary greatly, the remaining spring should also be replaced in order to keep the fork legs balanced for motorcycle stability.

Fork Spring Free Length	A1 ~ A8	A9
Standard	514 mm	543.3 mm
Service Limit	504 mm	533 mm

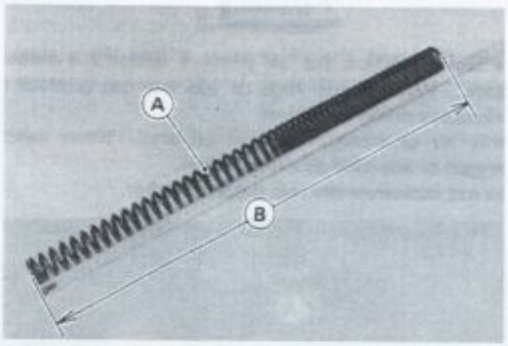

A. Fork Spring B. Free Length

Fork Oil Leak Inspection

- Visually inspect the fork oil leakage.
- ★If the fork oil leaks, replace the O-rings.

Rear Suspension (Uni-Trak)

Rear Shock Absorber:

Rear Shock Absorber Adjustment

The rear shock absorbers can be adjusted by changing the air pressure and damping force to suit various riding and loading conditions.

Air Pressure Inspection

- Put the motorcycle up on its center stand to raise the rear wheel off the ground.
- Check and adjust the air pressure when the rear shock absorber is cold (room temperature).

NOTE

- *Do not use tire gauges for checking air pressure. They may not indicate the correct air pressure because of air leaks that occur when the gauge is applied to the valve.*
- *Lower air pressure is for comfortable riding for an average-built rider with no accessories. Ordinarily, the heavier the total load becomes, the higher the air pressure should be set.*

CAUTION

- **Inject air little by little so that air pressure does not rise rapidly. Air pressure exceeding 490 kPa (5.0 kg/cm^2, 71 psi) may damage the oil seal.**

WARNING

- **Be sure to adjust the air pressure within the usable range. Pressure too high or too low can produce a hazardous riding condition.**
- **Only air or nitrogen gas can be used. Never inject oxygen or any kind of explosive gas.**
- **Do not incinerate the rear shock absorber.**

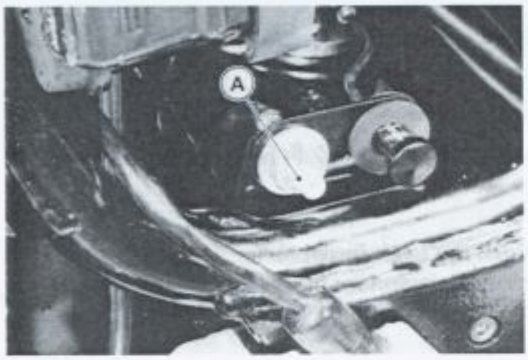

A. Air Valve

Rear Shock Absorber Air Pressure

Air Pressure Usable Range kPa (kg/cm², psi)	Setting	Load	Road
50 (0.5, 7.1)	Soft	Light	Good
	⇕	⇕	⇕
350 (3.5, 50)	Hard	Heavy	Bad

NOTE

- *The recommended air pressure is 50 kPa (0.5 kg/cm², 7.1 psi) for an average-build rider with no passenger and no load, and for a rider with load or a rider and a passenger with or without load is 200 – 350 kPa (2.0 – 3.5 kg/cm², 28 – 50 psi).*

Damping Force Adjustment

- Push and pull the adjusting stick to the desired number until you feel a click. The numbers on the adjusting stick show the setting position.

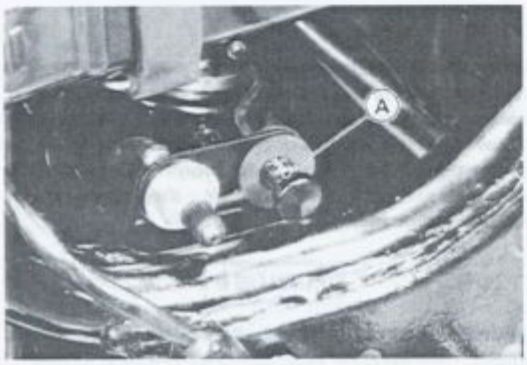

A. Adjusting Stick

NOTE

- *The damping force can be left soft for average riding. But it should be adjusted harder for high speed riding, or riding with a passenger. If the damping feels too soft or too stiff, adjust it in accordance with the following table:*

Damper Adjuster

Adjuster Position	Damping Force	Setting	Load	Road	Speed
1	Stronger	Soft	Light	Good	Low
2		↑	↑	↑	↑
3		↓	↓	↓	↓
4	↓	Hard	Heavy	Bad	High

NOTE

- *The recommended adjuster position is No. 2 for average rider with no accessories.*

Rear Shock Absorber Removal

- Remove the side covers.
- Remove the air valve mounting nut and the air hose.

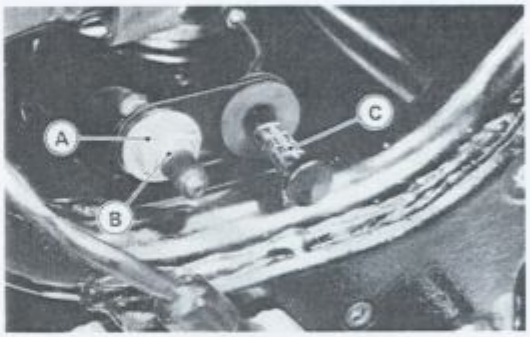

A. Mounting Nut
B. Air Valve
C. Damper Adjusting Stick

- Remove the damper adjusting stick.
- Loosen the locknut and remove the damper adjusting rod.

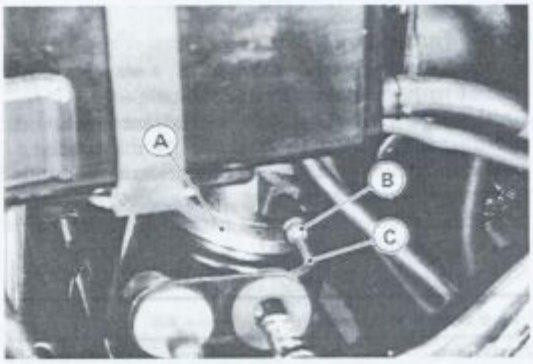

A. Rear Shock Absorber
B. Locknut
C. Rod

- Loosen the upper shock absorber nut. Do not remove it yet.
- Remove the lower shock absorber bolt, and the tie rod lower bolt.

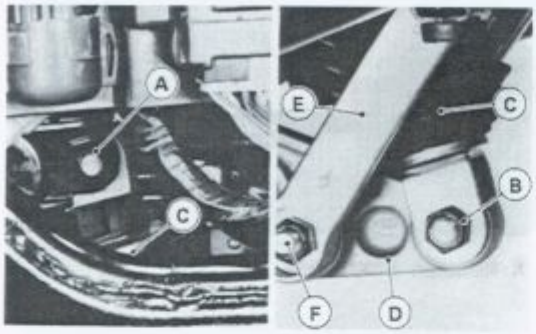

A. Upper Shock Absorber Nut
B. Lower Shock Absorber Nut
C. Shock Absorber
D. Uni-trak Rocker Arm
E. Uni-trak Tie Rod
F. Tie Rod Bolt

- Remove the upper shock absorber nut and bolt, then take off the rear shock absorber unit toward the ground.

Rear Shock Absorber Installation

- Installation is the reverse of removal. Note the following.
  - ○Tighten the upper and lower shock absorber bolts to the specified torque (see Exploded View).
  - ○Tighten the air valve hose end to the specified torque (see Exploded View).
  - ○Apply non-permanent locking agent to the damper adjusting rod when installing the damper adjusting stick.

Swing Arm:

Swing Arm Removal

- Remove the trunks.
- Remove the mufflers (see Muffler Removal in the Engine Top End chapter).
- Remove the rear wheel (see Rear Wheel Removal in the Wheels/Tires chapter).
- Remove the rear shock absorber (see Rear Shock Absorber Removal).
- Unscrew the mounting screws and remove the swing arm caps form both sides.

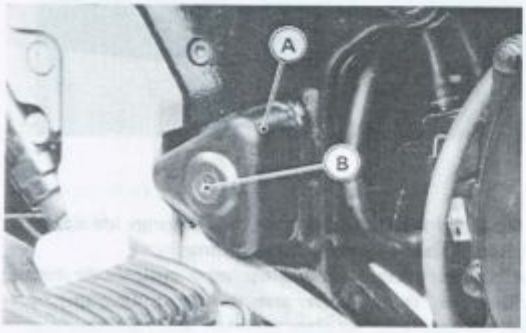

A. Cap
B. Mounting Screws

- Unscrew the swing arm pivot shaft mounting bolts from both sides.

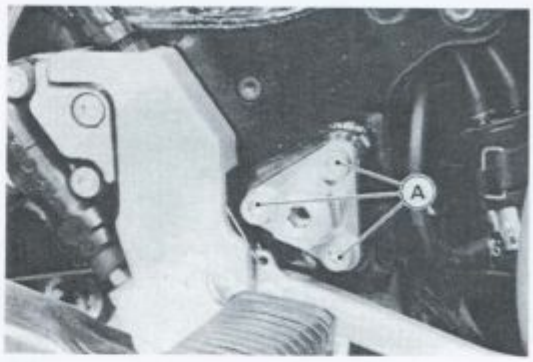

A. Mounting Bolts

- While holding the swing arm, pull out the swing arm pivot shafts using a suitable bolt or screw (ϕ6 x P1.0).

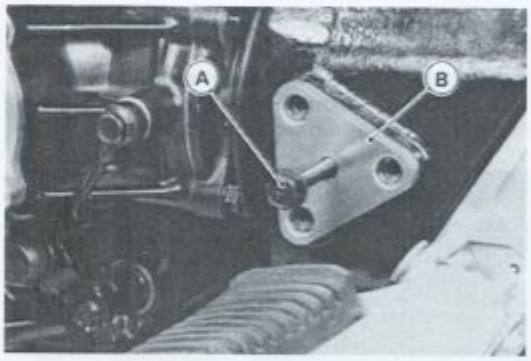

A. Suitable Bolt or Screw
B. Swing Arm Pivot Shaft

- Pull the swing arm out toward to back.
- Unscrew the mounting bolt, and remove the torque link.

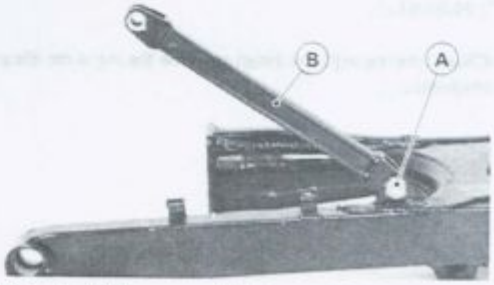

A. Mounting Bolt
B. Torque Link

Swing Arm Installation and Alignment

- Lubricate the swing arm shaft bearings before swing arm installation (see Swing Arm Lubrication).

•Grease the swing arm shaft with a molybdenum disulfide grease.

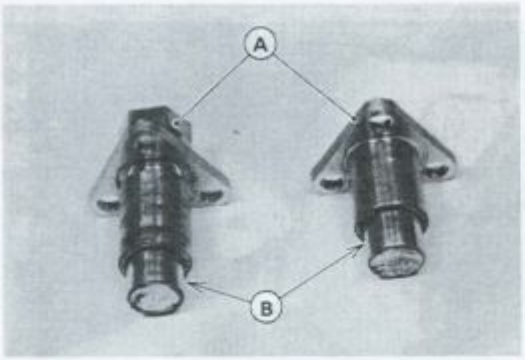

A. Swing Arm Shafts B. Apply grease.

•Install the swing arm shaft and swing arm.
•Adjust the swing arm left side clearance as follows.
○Tighten the pivot shaft mounting bolts to the specified torque (see Exploded View).
○Screw in the right pivot shaft and tighten it to the specified torque (see Exploded View).
○Using the socket wrench holder (special tool), tighten the pivot shaft locknut to the specified torque while holding the pivot shaft from turning.

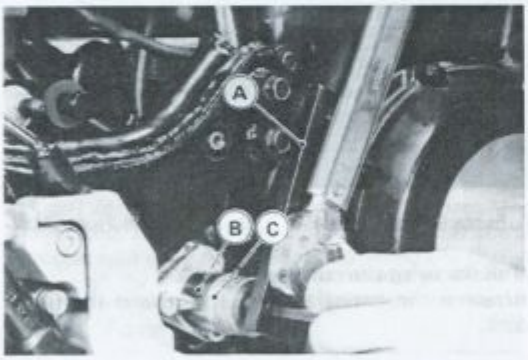

A. Socket Wrench Holder: 57001-1225
B. Locknut
C. Pivot Shaft

•Check the swing arm bearings (see Swing Arm Bearing Inspection).

Swing Arm Disassembly Notes

•Pull out the outer races of the tapered roller bearings using the bearing and oil seal remover and adapter (special tools).

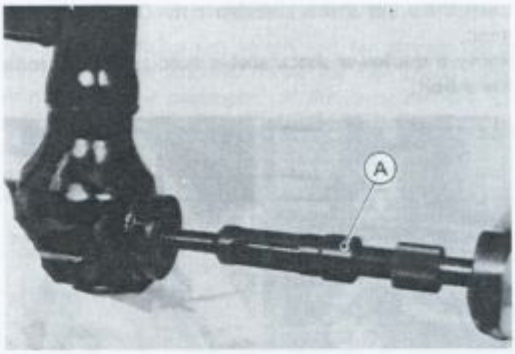

A. Remover: 57001-1058

Swing Arm Assembly Note

•Use a suitable bearing driver in the bearing driver set (special tool: 57001-1129) to press in the tapered roller bearing outer races and grease seals.

Swing Arm Bearing Inspection

•Remove the rear wheel, rear shock absorber, and the final gear case.
•Move the swing arm up and down to check abnormal friction, and push and pull it from side to side to check for bearing play.

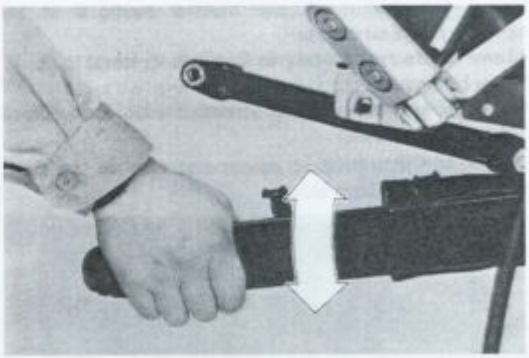

★If abnormal friction is felt, the bearings are damaged. Replace both the left and right bearings.
•The play developed during use may indicate bearing damage. In this case, remove the swing arm and inspect the bearings. Replace both left and right bearings if one of the bearings is damaged.

Swing Arm Lubrication

Grease the swing arm shaft bearings with a molybdenum disulfide chassis assembly grease in accordance with the Periodic Maintenance Chart.

- Remove the swing arm, and remove the grease seals from both sides of the swing arm (see Swing Arm Disassembly Notes).
- Clean the old grease out of the bearings, and apply fresh grease to them.

- Install new grease seals, smearing them with a thin coat of molybdenum disulfide grease.
- Install the swing arm (see Swing Arm Installation).

Tie-Rod/Rocker Arm:

Tie-Rod/Rocker Arm Installation Notes

- Installation is the reverse of removal. Note the following.

○Apply Molybdenum Disulfide Grease to the inside of the needle bearings as shown.

Uni-trak Needle Bearing

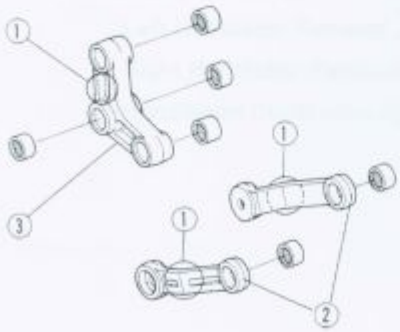

1. Arrow Mark
2. Tie-rod
3. Rocker Arm

○Install the rocker arm and tie-rod so that the arrow mark on them points to the front.

○Tighten the tie-rod lower nut to the specified torque (see Exploded View).

○Tighten the lower shock absorber nut to the specified torque (see Exploded View).

○Tighten the rocker arm pivot bolt to the specified torque (see Exploded View).

Tie-Rod/Rocker Arm Needle Bearing Inspection

- The rollers in the needle bearings wear so little that the wear is difficult to measure. Instead, inspect the needle bearings for abrasion, color change, or other damage.

★If there is any doubt as to the condition of either needle bearing, replace the bearing and sleeve as a set.

Tie-Rod/Rocker Arm Sleeve Inspection

★If there is visible damage, replace the sleeve and needle bearing as a set.

Uni-trak Linkage Lubrication

- Lubricate the uni-trak linkage in accordance with the Periodic Maintenance Chart.

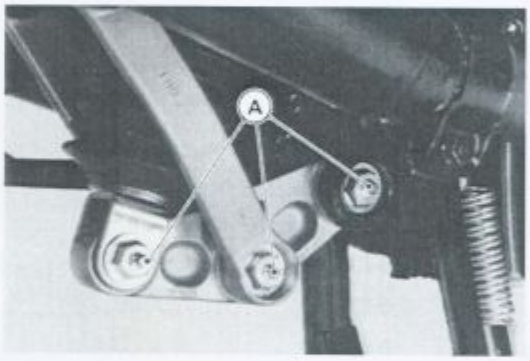

A. Grease Nipple

Steering

Table of Contents

Exploded View

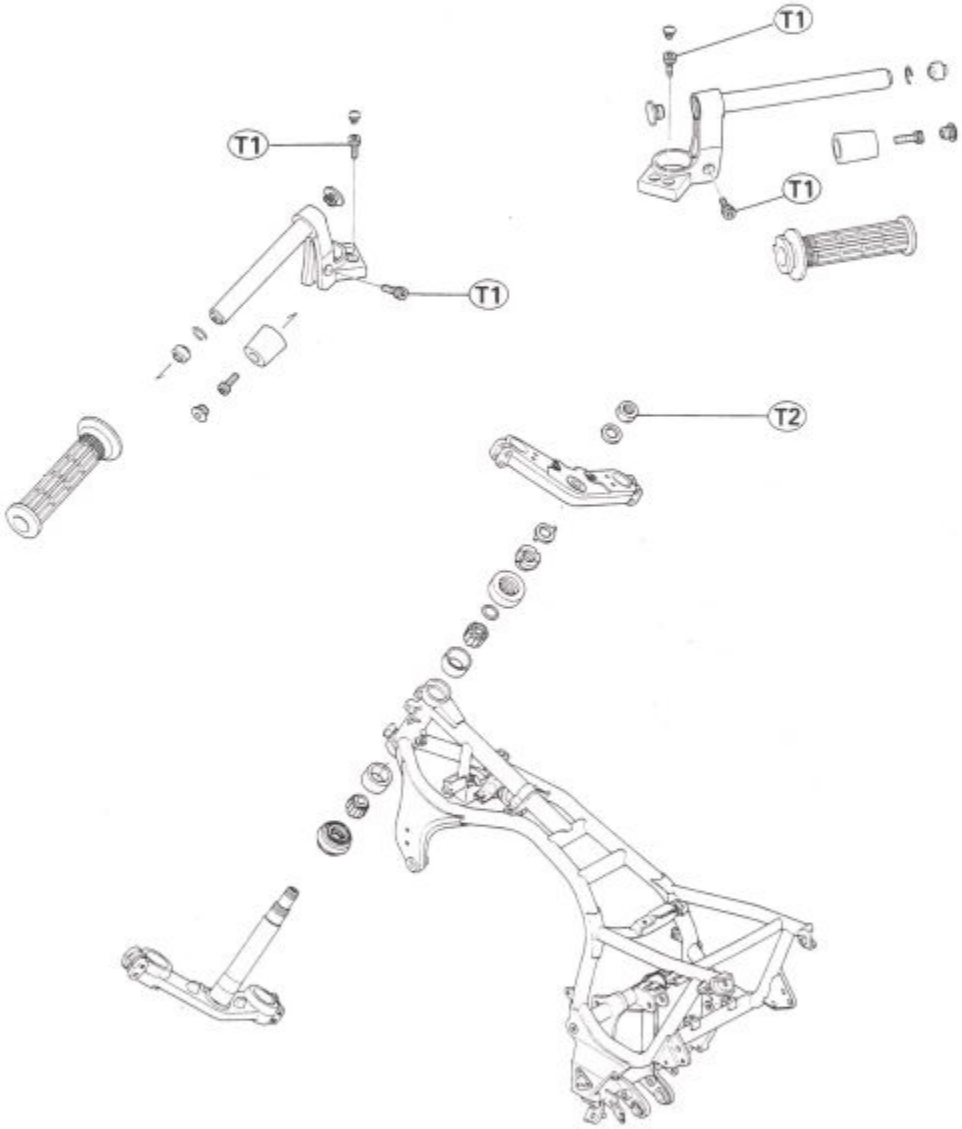

T1 : 19 N-m (1.9 kg-m, 13.5 ft-lb)
T2 : 39 N-m (4.0 kg-m, 29 ft-lb)

Special Tools

Bearing Puller: 57001-158

Bearing Puller Adapter: 57001-317

Bearing Puller Stud: 57001-1190

Stem Bearing Driver: 57001-137

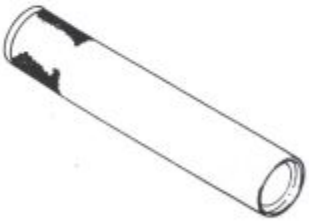

Steering Stem Bearing Driver Adapter: 57001-1074

Steering Stem Nut Wrench: 57001-1100

Head Pipe Outer Race Press Shaft: 57001-1075

Head Pipe Outer Race Driver: 57001-1106

Head Pipe Outer Race Driver: 57001-1076

Head Pipe Outer Race Remover: 57001-1107

NOTE

○*The studs (P/N 57001-1190) are included in the bearing puller (P/N 57001-158).*

Steering Adjustment

When the steering bearings are properly adjusted, the handlebar will turn freely from side to side with no looseness of the steering stem within the frame. In other words, the bearings will have little or no free play and absolutely no preload. Inspect the steering according to the Periodic Maintenance Chart or if the following symptoms are noticed.

Symptoms:

Tight

1. The motorcycle wanders while being ridden.
2. The steering feels tight.
3. The bearing races becomes notched.

Loose

1. The forks "clunk" or "click" when the brake is applied or when the motorcycle is ridden over a pothole.
2. The handlebars seem to vibrate more than normal.

Steering Inspection

- Set the motorcycle on its center stand.
- Remove the lower fairing. Use a jack under the engine to lift the front wheel off the ground.

Checking for Steering Too Tight:

- With the front wheel pointing straight ahead, alternately nudge each end of the handlebar. The front wheel should swing fully left and right from the force of gravity until the fork hits the stop.
- ★If the wheel binds or catches before the stop, the steering is too tight.

NOTE

○*The cables and wiring will have some effect on the motion of the fork which must be taken into account. Be sure the wires and cables are properly routed.*
○*The bearings must be in good condition and properly lubricated in order for any test to be valid.*

Checking for Steering Too Loose:

- Stand in front of the motorcycle and grasp the lower ends of the fork near the axle.
- Feel for steering looseness by pushing and pulling the forks.
- ★If you feel looseness, the steering is too loose.

Steering Adjustment

- Set the motorcycle up on its center stand.
- Remove the fairings.
- Remove the fuel tank to avoid damaging the painted surface.
- Remove the screws, and take off the stem head cover.
- Loosen the front fork lower clamp bolts and stem head nut.
- Using a jack under the engine, lift the front wheel off the ground.
- Loosen the stem locknut all the way with the steering stem nut wrench (special tool).

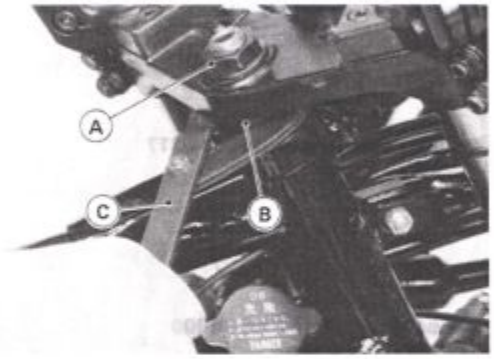

A. Stem Head Nut
B. Stem Locknut
C. Steering Stem Nut Wrench: 57001-1100

NOTE

○*Do not separate the upper and lower stem locknut.*
○*Loosen the steering by turning the lower stem locknut counterclockwise.*
○*Tighten the steering by turning the upper stem locknut clockwise.*

- If the steering is too tight, loosen the stem locknut a fraction of a turn; if the steering is too loose, tighten the locknut a fraction of a turn. Turn the locknut 1/8 turn at a time maximum.
- Tighten the steering stem head nut to the specified torque.
- Tighten the front fork lower clamp bolts to the specified torque.
- Check the steering again.
- ★If the steering is still too tight or too loose, repeat the adjustment.
- Install the removed parts.

Steering Removal/Installation

Steering Stem Removal

- Remove the following parts.
  - Fuel Tank
  - Front Wheel
  - Fairing
  - Handlebars
  - Front Fork Legs

- Remove the mounting bolts, free the brake hose joint from the stem base, and remove the front brake assembly as a set.
- Remove the stem head nut and flat washer.
- Remove the steering stem head.
- Take off the lockwasher.
- Push up on the stem base, and remove the steering stem locknut with the steering stem nut wrench (special tool), then remove the steering stem and stem base (single unit).
- Remove the steering stem cap and upper tapered roller bearing inner race.
- To remove the outer races pressed into the head pipe, install the head pipe outer race remover (special tool) as shown below, and hammer the stem bearing remover to drive it out.

NOTE

If either steering stem bearing is damaged, it is recommended that both the upper and lower bearings (including outer races) should be replaced with new ones.

Outer Race Removal

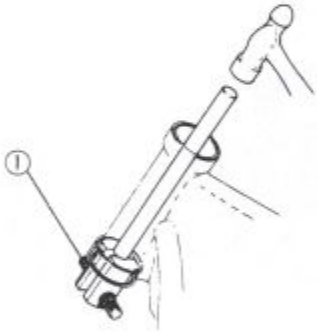

1. Head Pipe Outer Race Remover: 57001-1107

- Remove the lower inner race (with its grease seal) which is pressed onto the steering stem, with the steering stem bearing puller and adapters (special tools).

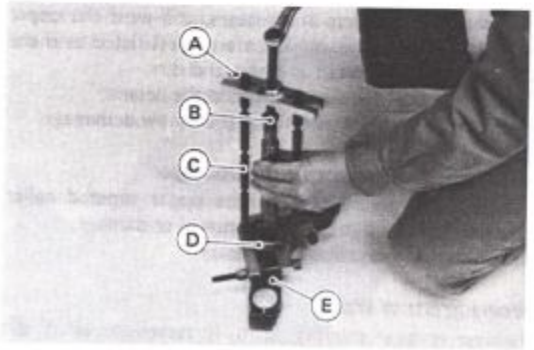

A. Bearing Puller: 57001-158
B. Adapter: 57001-317
C. Stud: 57001-1190
D. Bearing Inner Race
E. Stem Base

Steering Stem Installation

- Apply grease to the outer races, and then drive them into the head pipe using the head pipe outer race drivers and the head pipe outer race press shaft (special tools).

Outer Race Installation

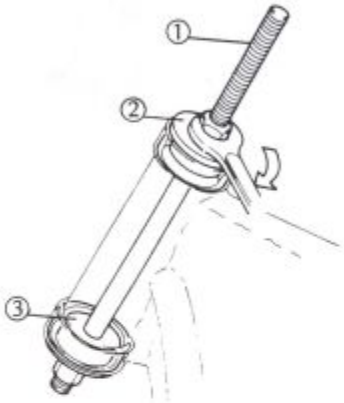

1. Head Pipe Outer Race Press Shaft: 57001-1075
2. Head Pipe Outer Race Driver: 57001-1106
3. Head Pipe Outer Race Driver: 57001-1076

- Apply grease to the tapered roller bearing, and drive it onto the steering stem using the stem bearing driver and adapter (special tools).

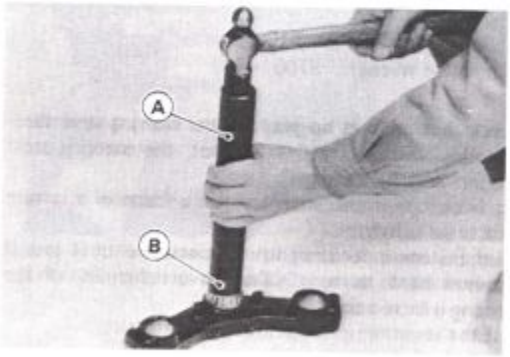

A. Stem Bearing Driver: 57001-137
B. Adapter: 57001-1074

- Lubricate the steering stem bearings with grease.
- Install the stem locknut so that the notched side faces down.
- Install the lockwasher, steering stem head, washer, and nut. Loosely install the nut at this time.

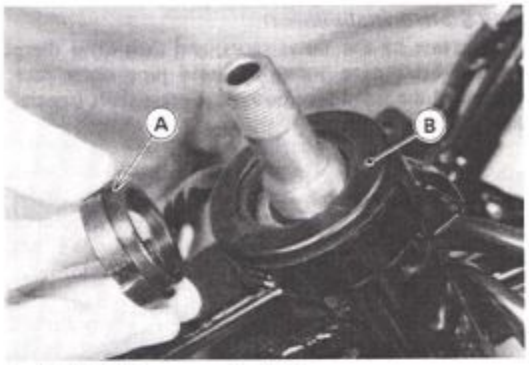

A. Notch Side B. Cap

The following four steps should be performed after steering bearing installation. This procedure settles the bearings in place.

○Using the steering stem nut wrench (special tool), tighten the stem locknut to 39 N-m (4.0 kg-m, 29 ft-lb) of torque. (To tighten the steering stem locknut to the specified torque, hook the wrench on the stem locknut, and pull the wrench at the hole by 22.2 kg force in the direction shown.)

Torquing Stem Locknut

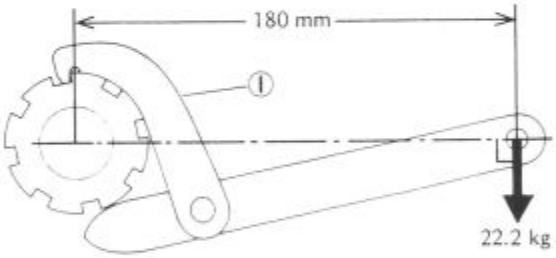

1. Stem Nut Wrench: 57001-1100

○Check that there is no play and the steering stem turns smoothly without rattles. If not, the steering stem bearings may be damaged.

○Again back out the stem locknut a fraction of a turn until it turns lightly.

○Turn the stem locknut lightly clockwise until it just becomes hard to turn. Do not overtighten, or the steering will be too tight.

●Adjust the steering (see Steering Adjustment).

●Reinstall the following parts.

Front Fork Legs
Handlebars
Fairing
Front Wheel
Fuel Tank

●Route the cables and harnesses correctly. The cables and wiring harnesses must not hinder handlebar movement (see Cable Routing in the General Information chapter).

●Check and adjust the following items.

Front Brake
Clutch
Throttle Cable
Rear View Mirrors

Steering Maintenance

Steering Stem Bearing Lubrication

In accordance with the Periodic Maintenance Chart, lubricate the steering stem bearings.

●Remove the steering stem.

●Using a high flash-point solvent, wash the upper and lower tapered roller bearings in the cages, and wipe the upper and lower outer races, which are press-fitted into the frame head pipe, clean of grease and dirt.

●Visually check the outer races and the rollers.

★Replace the bearing assemblies if they show wear or damage.

●Pack the upper and lower tapered roller bearings in the cages with grease, and apply a light coat of grease to the upper and lower outer races.

●Install the steering stem, and adjust the steering.

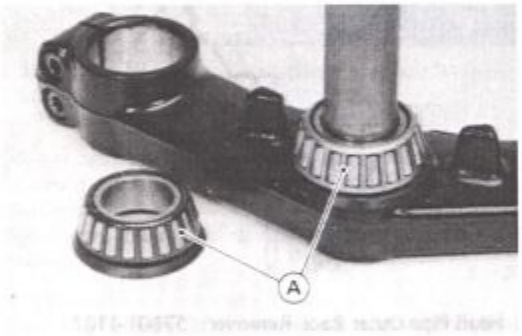

A. Steering Stem Bearings

Bearing Wear, Damage

●Using a high flash-point solvent, wash the upper and lower tapered rollers in the cages, and wipe the upper and lower outer races, which are press-fitted into the frame head pipe, clean of grease and dirt.

●Visually check the outer races and the rollers.

★Replace the bearing assemblies if they show damage.

Grease Seal Deterioration, Damage

●Inspect the grease seal on the upper tapered roller bearing for any signs of deterioration or damage.

★Replace the grease seal if necessary.

Steering Stem Warp

●Whenever the steering stem is removed, or if the steering cannot be adjusted for smooth action, check the steering stem for straightness.

★If the steering stem shaft is bent, replace the steering stem.

Handlebars

Left Handlebar Removal

- Remove the stem head cover.
- Remove the clutch master cylinder.
- Remove the screws, and open the left switch housing.
- Loosen the handlebar holder clamp bolt.
- Remove the handlebar mounting bolts and take off the handlebar.

Right Handlebar Removal

- Remove the front master cylinder.
- Remove the screws, open the right switch housing, and take off the throttle grip.
- Loosen the handlebar holder clamp bolt.
- Remove the handlebar mounting bolts and take off the handlebar.

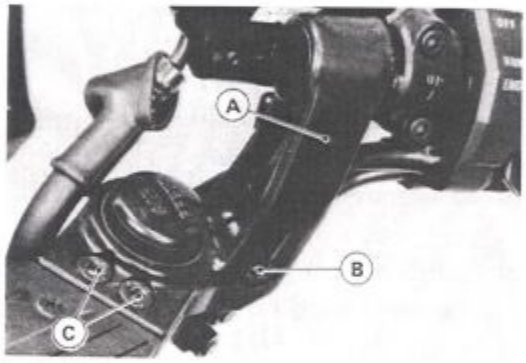

A. Handlebar
B. Clamp Bolt
C. Mounting Bolts

Handlebars Installation Notes

- Position the handlebar on the stem head, and tighten the mounting bolts to the specified torque.
  - The handlebar must fit squarely on the fork inner tube top without any clearance.

A. Handlebar
B. Fork Inner Tube
C. Clearance

- The front half of both the left and right switch housings has a small projection. Fit the projection into a small hole in the handlebar.

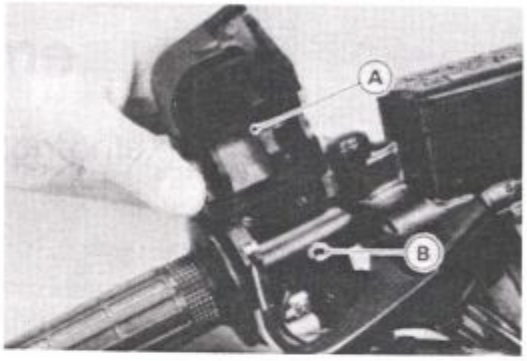

A. Projection
B. Small Hole

- The front brake and clutch master cylinder clamp must installed with the arrow mark upward. Tighten the upper clamp bolt first, and then the lower clamp bolt both to the specified torque. There will be a gap at the lower part of the clamp after tightening.

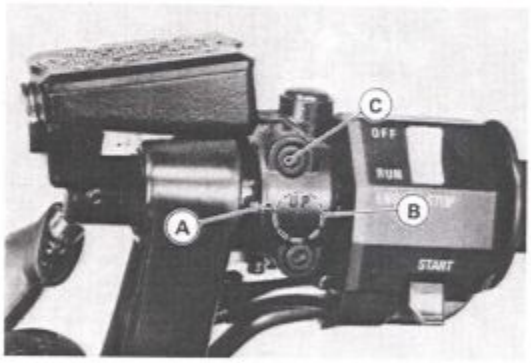

A. Clamp
B. Arrow Mark
C. Tighten upper clamp bolt first

- Check and adjust the following items:
  - Throttle grip
  - Clutch
  - Front brake

Frame

Table of Contents

Exploded View

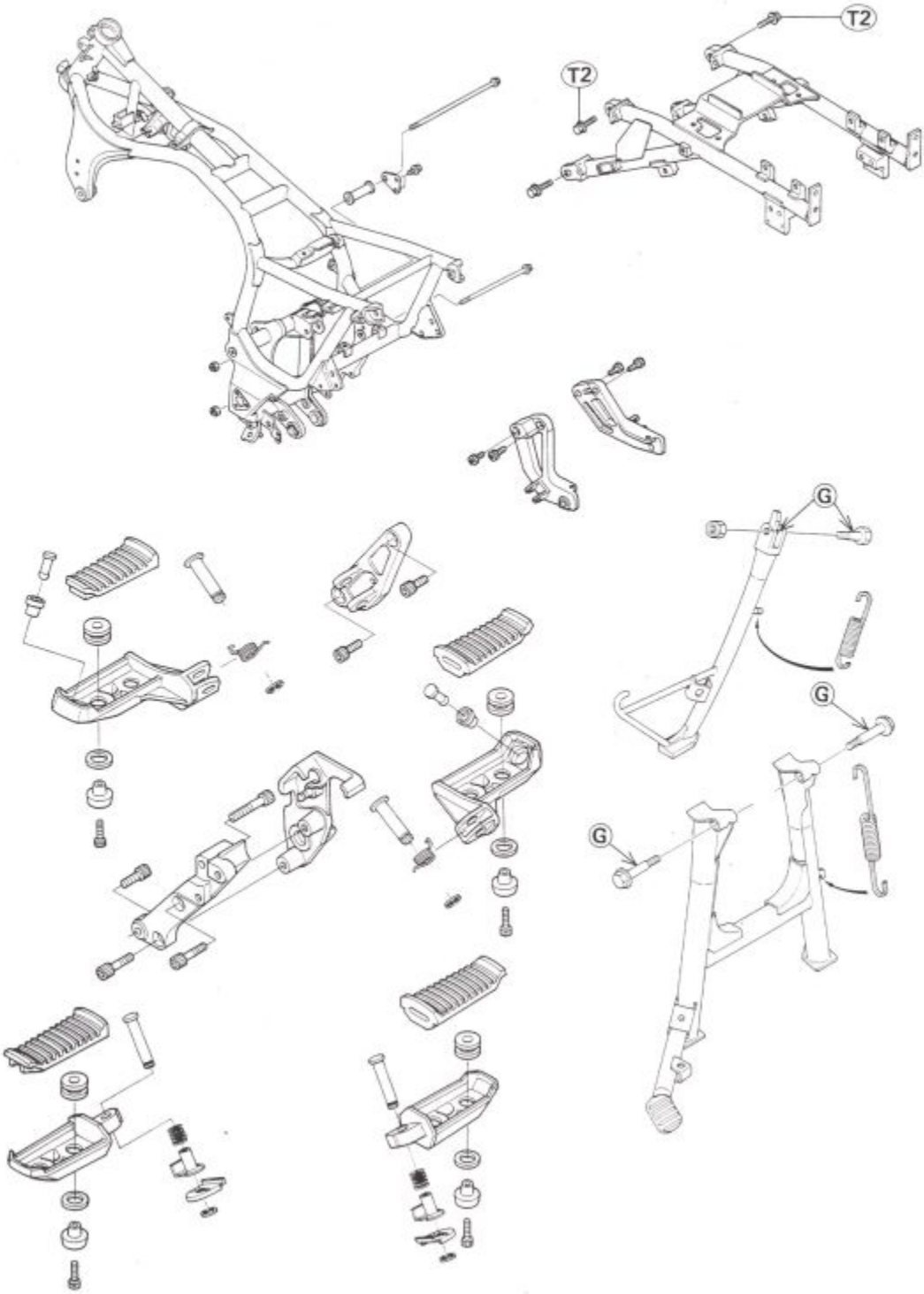

G : Apply a thin coat of grease.

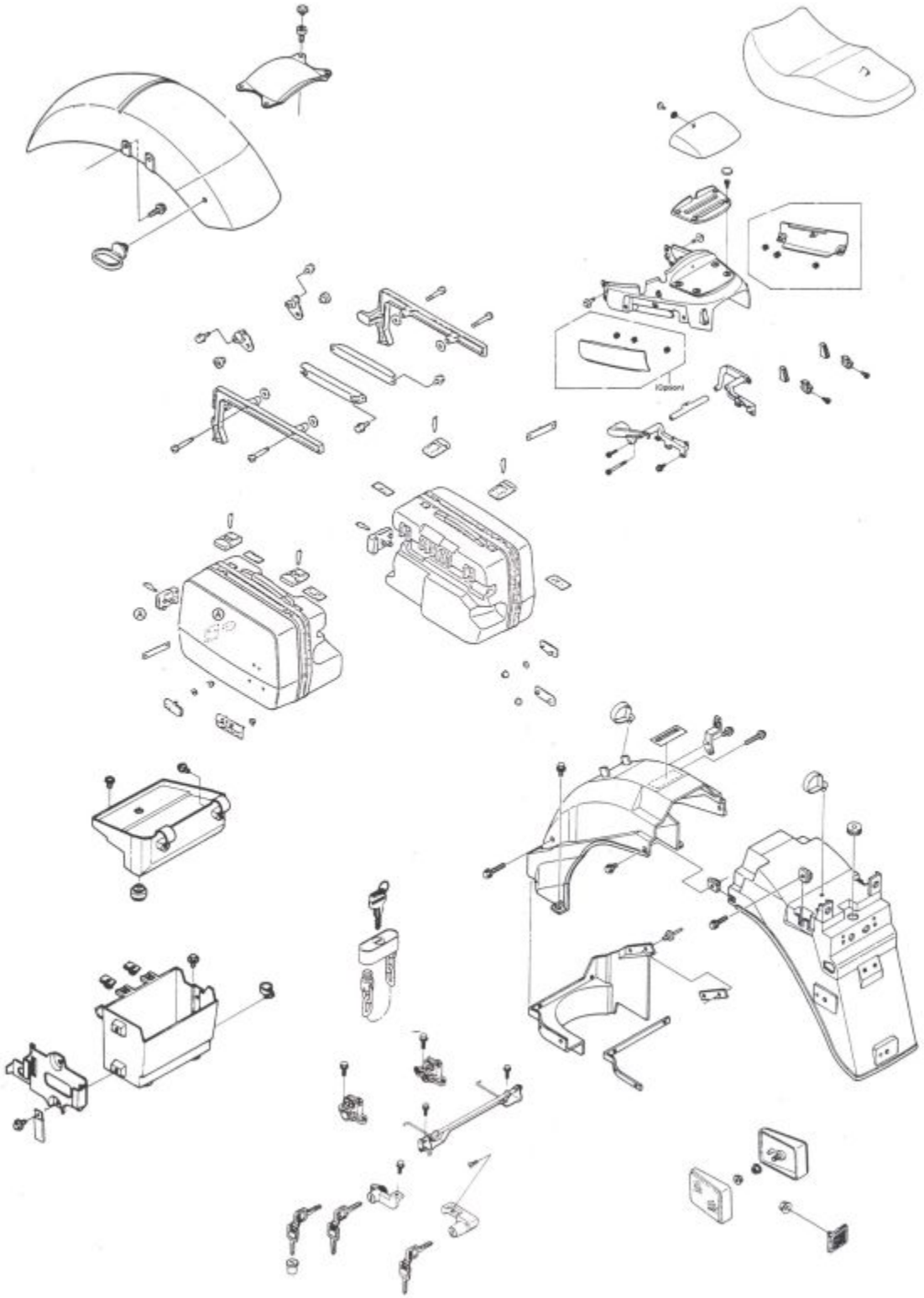
Kaiser

Rear Frame

Rear Frame Removal

- Remove the following parts before rear frame removal.
  - Seat
  - Side Covers
  - Seat Cover
  - Rear Fenders
- Unscrew the mounting bolts and remove the rear frame.

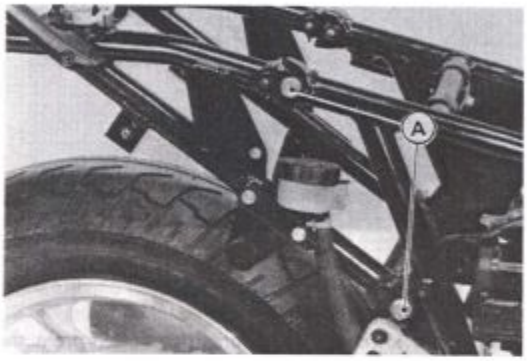

A. Mounting Bolts

Rear Frame Installation

- Installation is the reverse of removal. Note the following.

○Tighten the rear frame mounting bolts to the specified torque (see Exploded View).

Fenders

Front Fender Removal

- Remove the speedometer cable lower end.
- Remove the front fender brace mounting bolts.

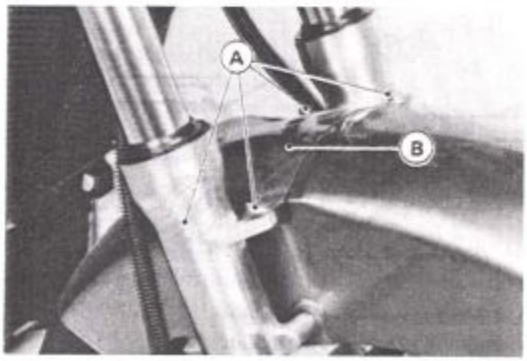

A. Mounting Bolts B. Brace

- Remove the front fender mounting bolts (left and right) and remove the front fender.

Front Fender Installation

- Installation is the reverse of removal. Note the following.

○Install the front fender brace as shown.

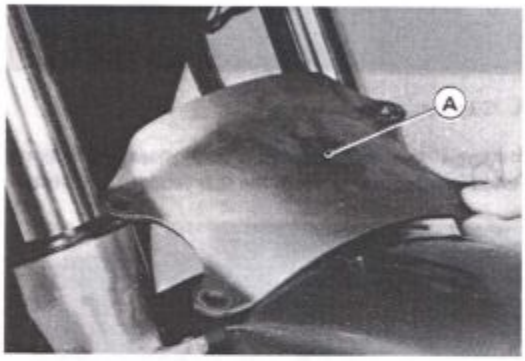

A. Front Fender Brace

Rear Fender Rear Section Removal/Installation

- Remove the seat cover (see Seat Cover Removal).
- Disconnect the brake/tail light lead connector.
- Unscrew the mounting bolts and the rear fender rear section.

A. Mounting Bolts

Rear Fender Front Section Removal

- Remove the rear fender rear section (see Rear Fender Rear Section Removal/Installation).
- Disconnect the IC Igniter connector.

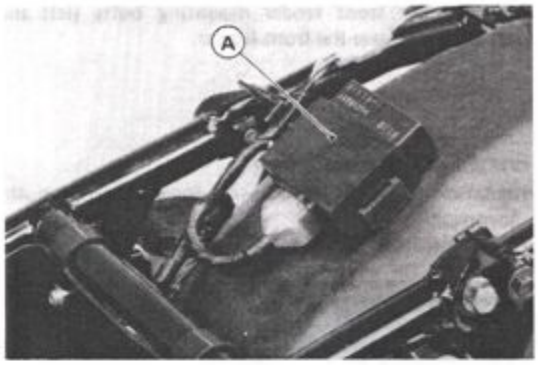

A. IC Igniter

•Unscrew the mounting bolt and disengage the rear brake reservoir tank from the rear fender front section.

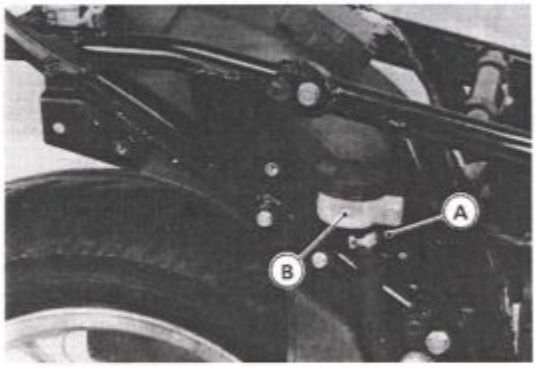

A. Mounting Bolt B. Rear Brake Reservoir Tank

•Unscrew the mounting bolts and remove the rear fender front section.

Rear Fender Front Section Installation

•Installation is the reverse of removal. Note the following.

○When installing the reservoir tank, fit the projection on the rear fender front section into the slit on the reservoir tank bracket.

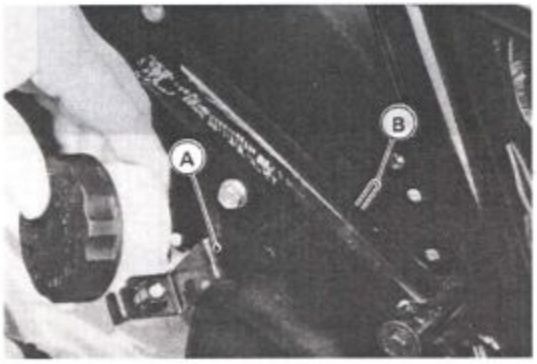

A. Reservoir Tank Bracket B. Projection

Fairings

Removal and Installation Precaution

•Install the damper rubber as shown.

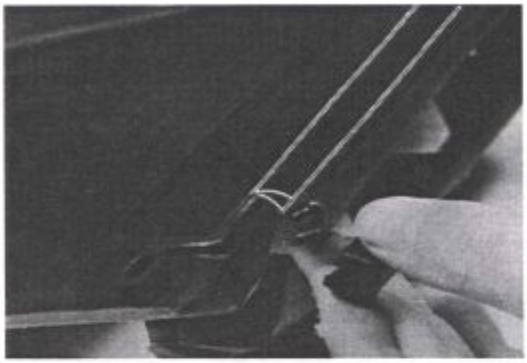

Lower Fairing Removal

•Remove the lower fairing mounting screws from the lower fairing.

Lower Fairing Removal

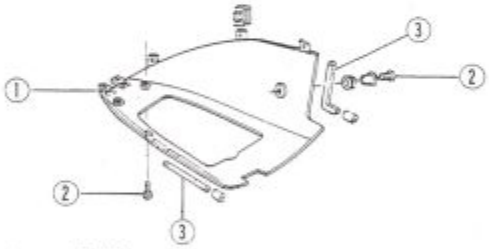

1. Lower Fairing
2. Mounting Screws
3. Damper Rubber

•Take off the lower fairing cover from both sides.

Lower Fairing Cover Removal

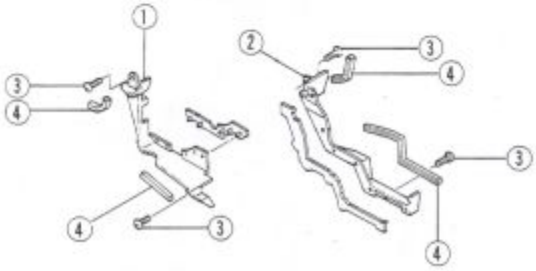

1. Lefthand Lower Fairing Cover
2. Righthand Lower Fairing Cover
3. Mounting Screws
4. Damper Rubber

Lower Fairing Installation

- Installation is the reverse of removal. Note the following.

○First, tighten the mounting screws loosely, and then tighten all the screws securely.

Middle Fairing Removal

- Remove the lower fairing (see Lower Fairing Removal).
- Remove the middle fairing covers from both sides.

Middle Fairing Cover Removal

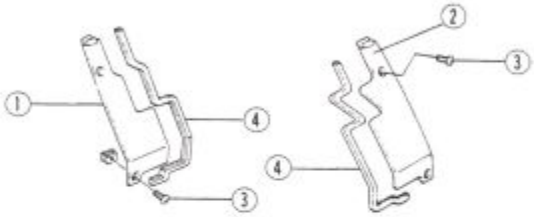

1. Lefthand Middle Fairing Cover
2. Righthand Middle Fairing Cover
3. Mounting Screws
4. Damper Rubber

- Unscrew the mounting bolts and screws, and remove the middle fairings from both sides.

Middle Fairing Removal

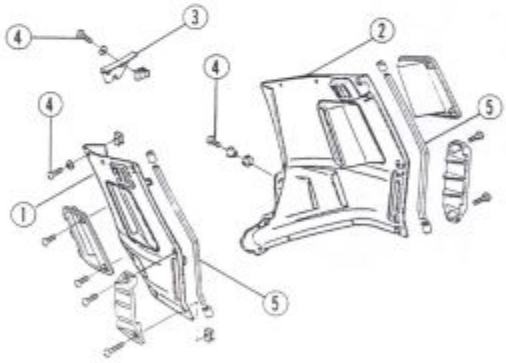

1. Lefthand Middle Fairing
2. Righthand Middle Fairing
3. Coolant Reserver Tank Cover
4. Mounting Screws
5. Damper Rubber

Middle Fairing Installation

- Installation is the reverse of removal. Note the following.

○First, tighten the mounting bolts screws loosely, and then tighten all the screws securely.

Upper Fairing Removal/Installation

- Remove the lower fairing (see Lower Fairing Removal).
- Remove the middle fairing (see Middle Fairing Removal).
- Disconnect the front turn signal light lead connectors.
- Remove the rear view mirrors.
- Unscrew the mounting bolts and remove the upper fairing.

Upper Fairing Removal

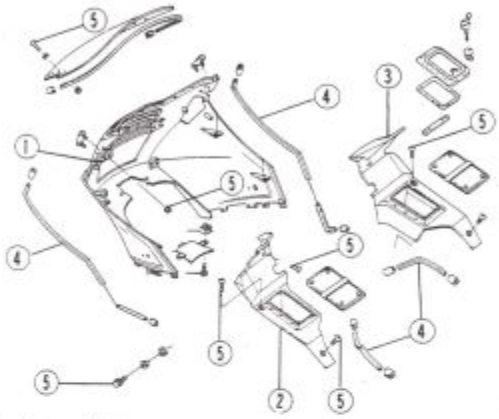

1. Upper Fairing
2. Lefthand Upper Fairing Cover
3. Righthand Upper Fairing Cover
4. Damper Rubber
5. Mounting Bolt/Screw/Nut

Fairing Stay Removal

- Remove the lower fairing (see Lower Fairing Removal).
- Remove the middle fairing (see Middle Fairing Removal).
- Remove the upper fairing (see Upper Fairing Removal).
- Remove the speedometer cable lower end.
- Unscrew the mounting and clamp bolts and remove the fairing stay with meter assembly.

Fairing Stay Removal

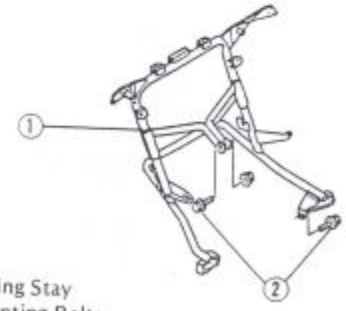

1. Fairing Stay
2. Mounting Bolts

CAUTION

○Place the meters so that they are upright. If a meter is left upside down or sideways for any length of time it will malfunction.

Fairing Stay Installation

- Installation is the reverse of removal. Note the following.
  - ○Do not forget to install the speedometer cable lower end to the speedometer gear housing.
  - ○Route the meter wiring properly (see Wiring Inspection in the Electrical System chapter).

Seat Cover

Seat Cover Removal/Installation

- Remove the rack cover.

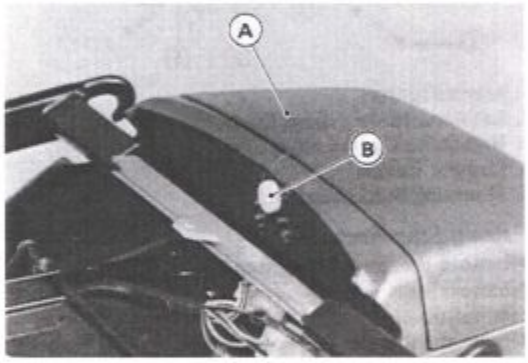

A. Rack Cover B. Mounting Bolt

- Unscrew the mounting bolts, and remove the rack.

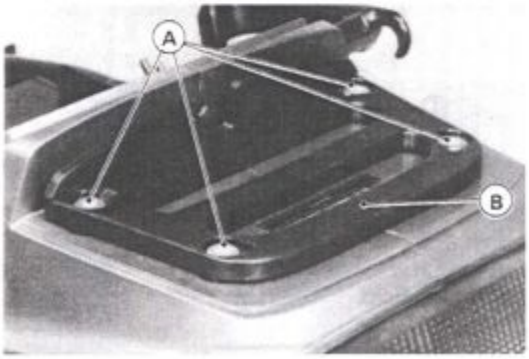

A. Mounting Bolts B. Rack

- Remove the holder rails from both sides.
  - ○Unscrew the mounting bolts, and remove the holder rails from the holder rail brackets.
  - ○Unscrew the mounting bolts, and remove the holder rail brackets from the frame.

Holder Rail Removal

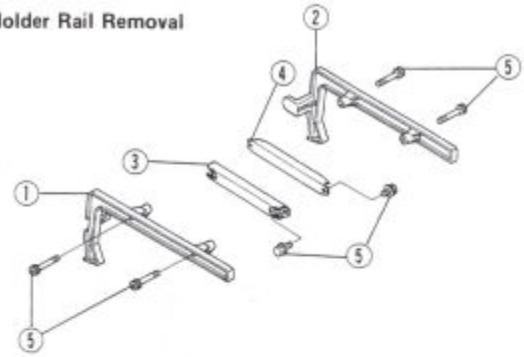

1. Lefthand Holder Rail
2. Righthand Holder Rail
3. Lefthand Holder Rail Bracket
4. Righthand Holder Rail Bracket
5. Mounting Bolts

- Unscrew the mounting bolts, and remove the seat cover.

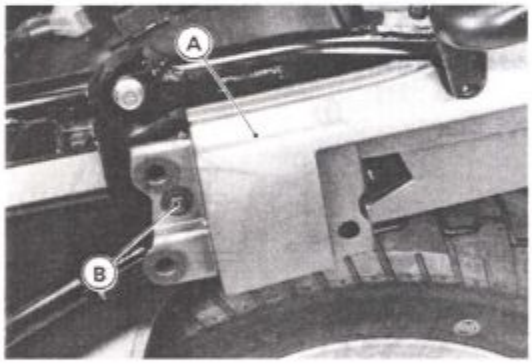

A. Seat Cover B. Mounting Bolts

Electrical System

Table of Contents

(Continued on next page)

Precautions

There are numbers of important precautions that are musts when servicing electrical systems. Learn and observe all the rules below.

- Do not reverse the battery lead connections. This will burn out the diodes in the electrical parts.
- Always check battery condition before condemning other parts of an electrical system. A fully charged battery is a must for conducting accurate electrical system tests.
- The electrical parts should never be struck sharply, as with a hammer, or allowed to fall on a hard surface. Such a shock to the parts can damage them.
- To prevent damage to electrical parts, do not disconnect the battery leads or any other electrical connections when the ignition switch is on, or while the engine is running.
- Because of the large amount of current, never keep the starter switch pushed when the starter motor will not turn over, or the current may burn out the starter motor windings.
- Do not use a meter illumination bulb rated for other than voltage or wattage specified in the wiring diagram, as the meter or gauge panel could be warped by excessive heat radiated from the bulb.
- Take care not to short the leads that are directly connected to the battery positive (+) terminal to the chassis ground.
- Troubles may involve one or in some cases all items. Never replace a defective part without determining what CAUSED the failure. If the failure was brough on by some other item or items, they too must be repaired or replaced, or the new replacement will soon fail again.
- Make sure all connectors in the circuit are clean and tight, and examine wires for signs of burning, fraying, etc. Poor wires and bad connections will affect electrical system operation.

- Electrical Connectors

Female Connectors

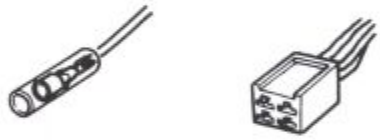

Male Connectors

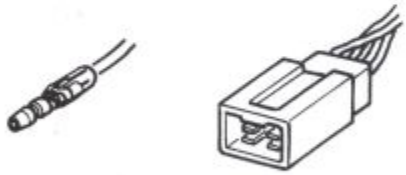

- Color Codes:

BK	Black
BL	Blue
BR	Brown
CH	Chocolate
DG	Dark green
G	Green
GY	Gray
LB	Light blue
LG	Light green
O	Orange
P	Pink
PU	Purple
R	Red
W	White
Y	Yellow

- Measure coil and winding resistance when the part is cold (at room temperature).

ZG1000A Wiring Diagram (US and Canada)

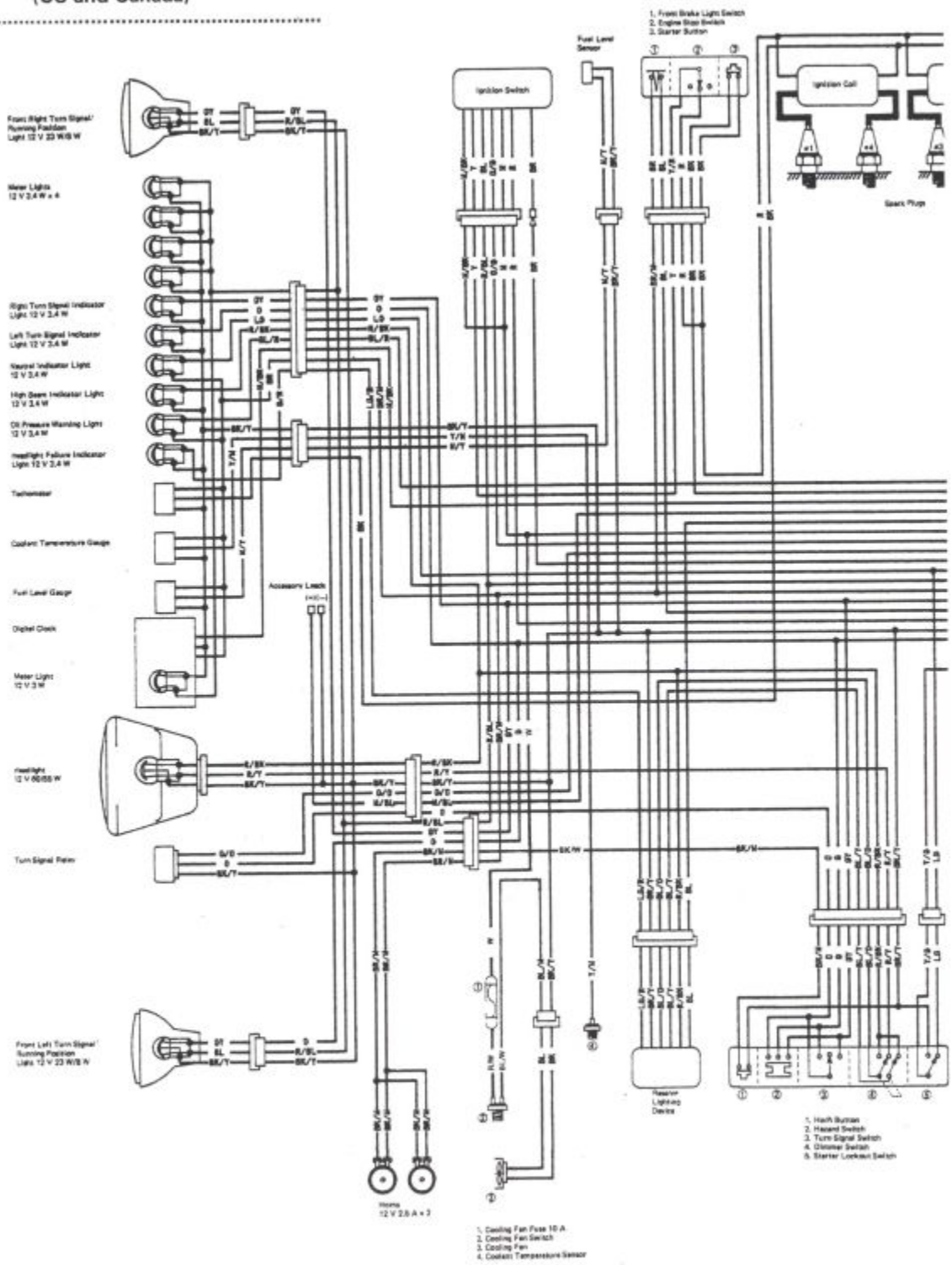

LEFT HANDLEBAR SWITCH CONNECTIONS

Starter Lockout Switch				Horn Button			Dimmer Switch					Turn Signal S	
Color	BL/Y	Y-G	LG	Color	BK/Y	BK/W	Color	R/BK	BL/Y	B/Y	BL-O	Color	GY
Received				ON (Push)			HI					R	
												W	
Pulled +							LO					L	

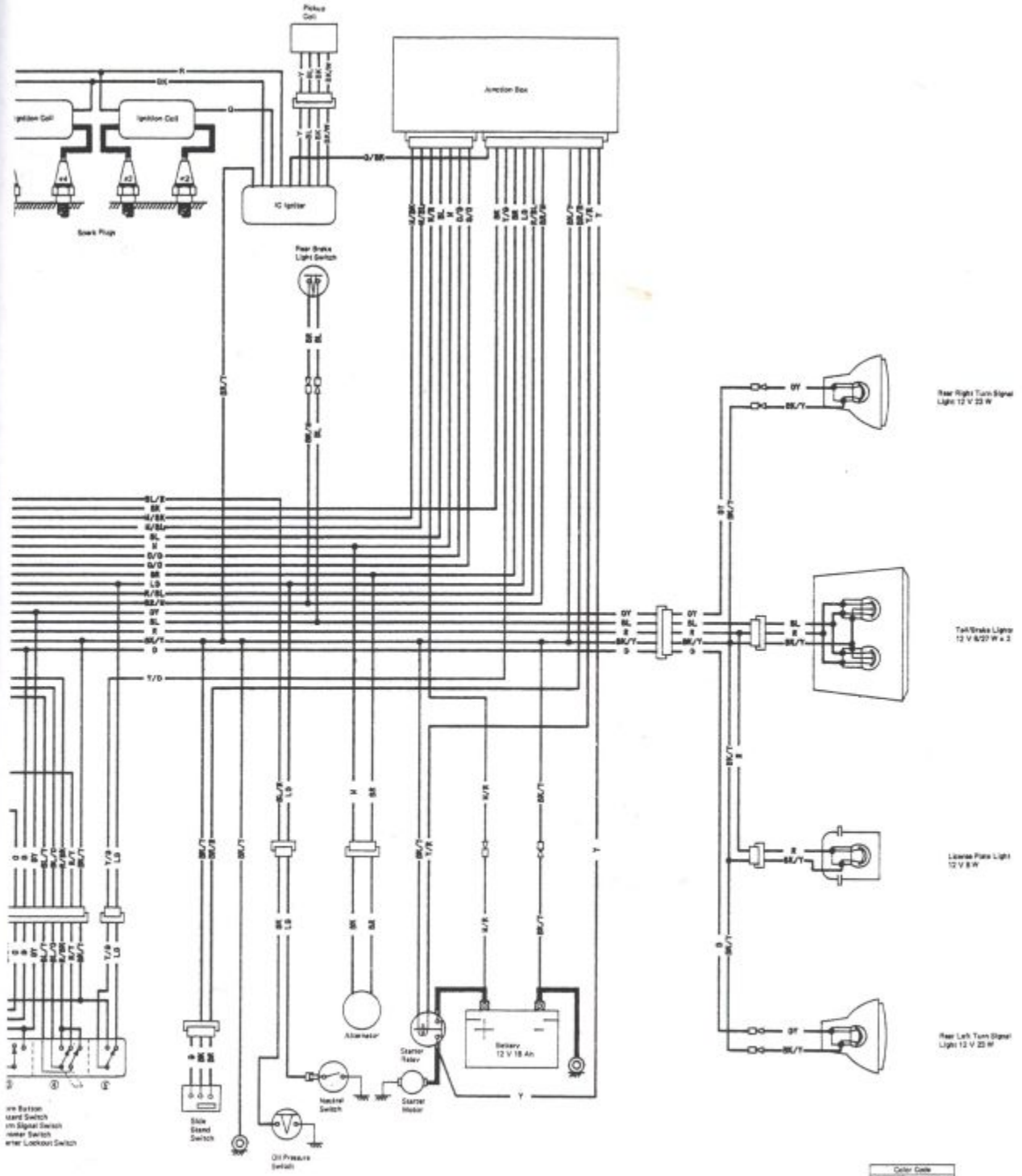
Pickup Coil
Junction Box
Ignition Coil
Ignition Coil
IC Igniter
Spark Plugs
Rear Brake Light Switch
Rear Right Turn Signal Light 12 V 23 W
Tail/Brake Lights 12 V 8/27 W x 2
License Plate Light 12 V 8 W
Rear Left Turn Signal Light 12 V 23 W
Alternator
Starter Relay
Battery 12 V 18 Ah
Neutral Switch
Starter Motor
Side Stand Switch
Oil Pressure Switch
Color Code
BK Black
BL Blue
BR Brown
CH Chocolate
DG Dark green
G Green
GY Gray
LB Light blue
LG Light green
O Orange
P Pink
PU Purple
R Red
W White
Y Yellow
SWITCH CONNECTIONS
IGNITION SWITCH CONNECTIONS
RIGHT HANDLEBAR SWITCH CONNECTIONS

ZG1000A Wiring Diagram
(Other than US and Canada)

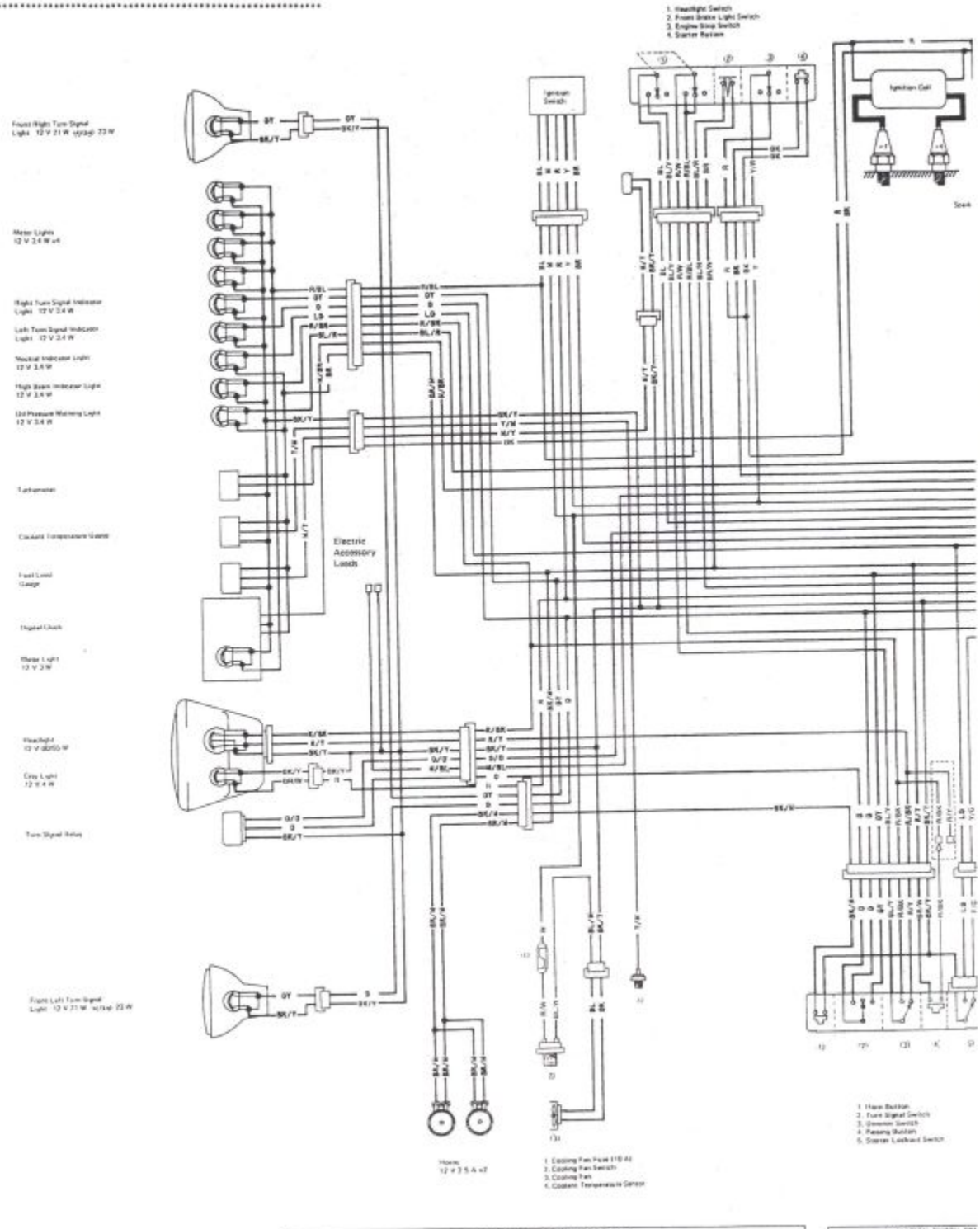

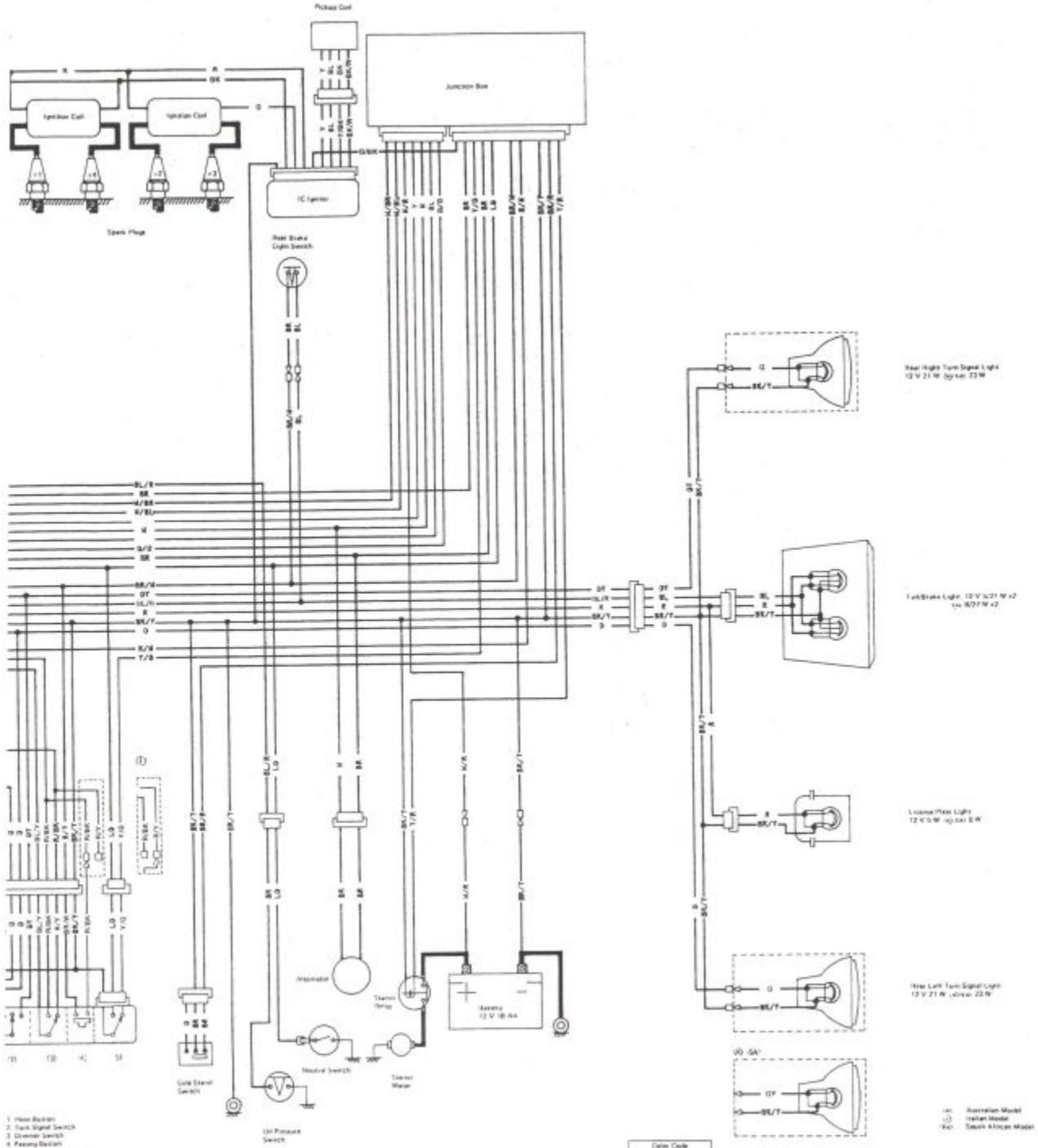
Pickup Coil
Junction Box
Ignition Coil
Ignition Coil
IC Igniter
Spark Plug
Rear Brake Light Switch
Rear Right Turn Signal Light
Tail/Brake Light
License Plate Light
Rear Left Turn Signal Light
Alternator
Starter Relay
Battery
Neutral Switch
Starter Motor
Side Stand Switch
Oil Pressure Switch
1. Horn Button
2. Turn Signal Switch
3. Dimmer Switch
4. Passing Button
5. Starter Lockout Switch
Cable Code
BK Black
BL Blue
BR Brown
CH Chocolate
DG Dark green
G Green
GY Gray
LB Light blue
LG Light green
O Orange
P Pink
PU Purple
R Red
W White
Y Yellow
IGNITION SWITCH CONNECTIONS
Ignition
Battery
Tail 1
Tail 2
OFF
ON
RIGHT HANDLEBAR SWITCH CONNECTIONS
Headlight Switch
Starter Button
Front Brake Light Switch
Color
Pushed
Released
OFF
ON
(1B0B, 1B7A, 1B7B, 1B8A)

Exploded View

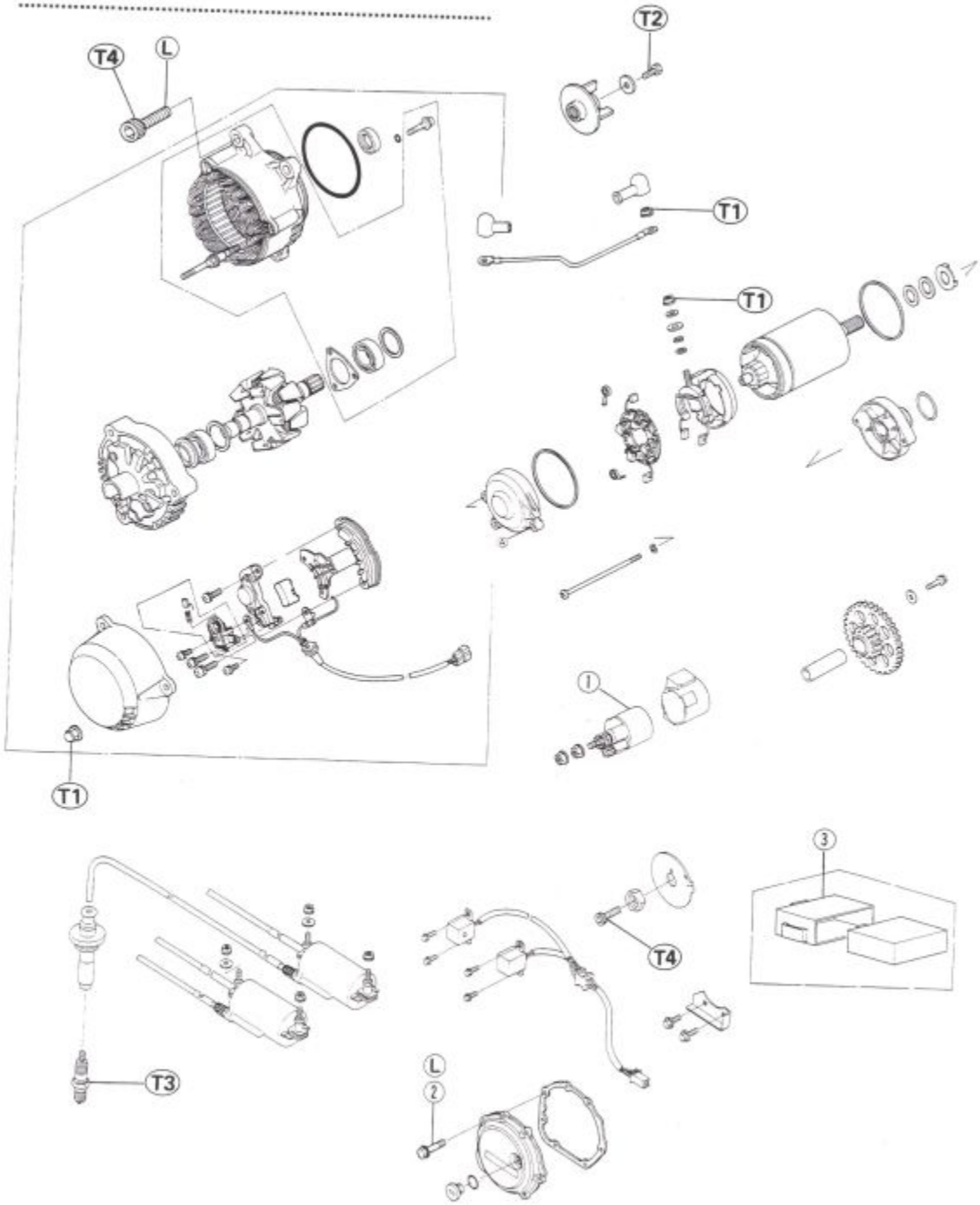

1. Starter Relay
2. Pickup Coil Cover Bolts: Two of them require locking agent (see Pickup Coil Removal/Installation Notes).
3. IC Igniter

L: Apply non-permanent locking agent to the threads.

T1: 4.9 N-m (0.50 kg-m, 43 in-lb)
T2: 9.8 N-m (1.0 kg-m, 87 in-lb)
T3: 14 N-m (1.4 kg-m, 10.0 ft-lb)
T4: 25 N-m (2.5 kg-m, 18.0 ft-lb)

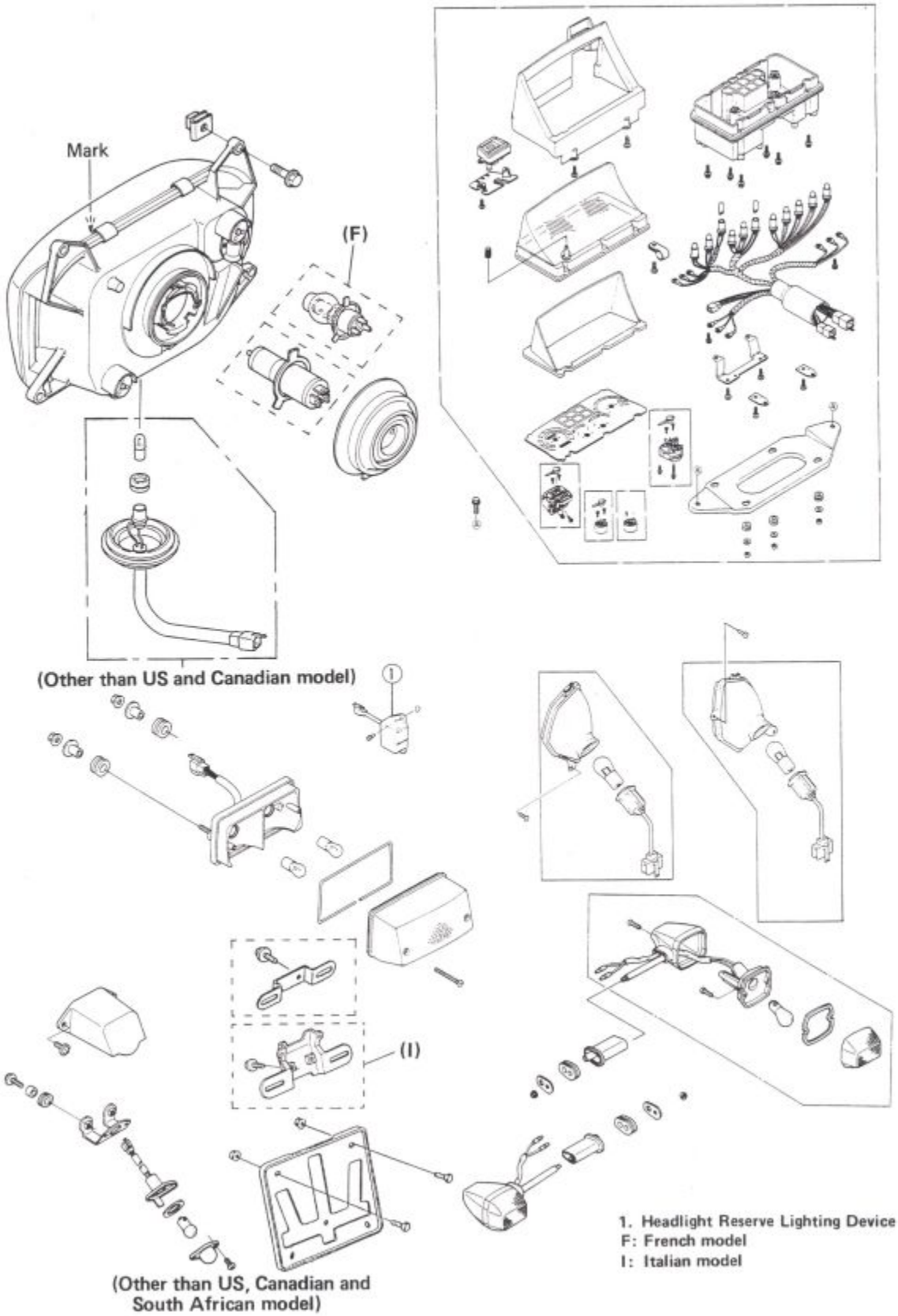

1. Headlight Reserve Lighting Device
F: French model
I: Italian model

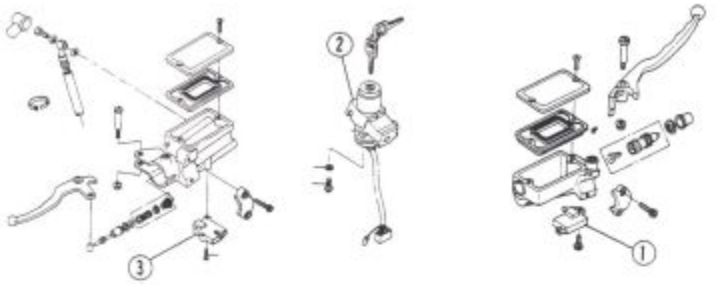

1. Front Brake Light Switch
2. Ignition Switch
3. Starter Lockout Switch
4. Water Temperature Sensor
5. Fan Switch
6. Rear Brake Light Switch
7. Neutral Switch
8. Oil Pressure Switch
9. Side Stnad Switch

L : Apply non-permanent locking agent to the threads.
SS : Apply silicone sealant (Kawasaki Bond: 56019-120) to the threads.
T1 : 7.8 N-m (0.80 kg-m, 69 in-lb)
T2 : 15 N-m (1.5 kg-m, 11.0 in-lb)
T3 : 27 N-m (2.8 kg-m, 20 ft-lb)

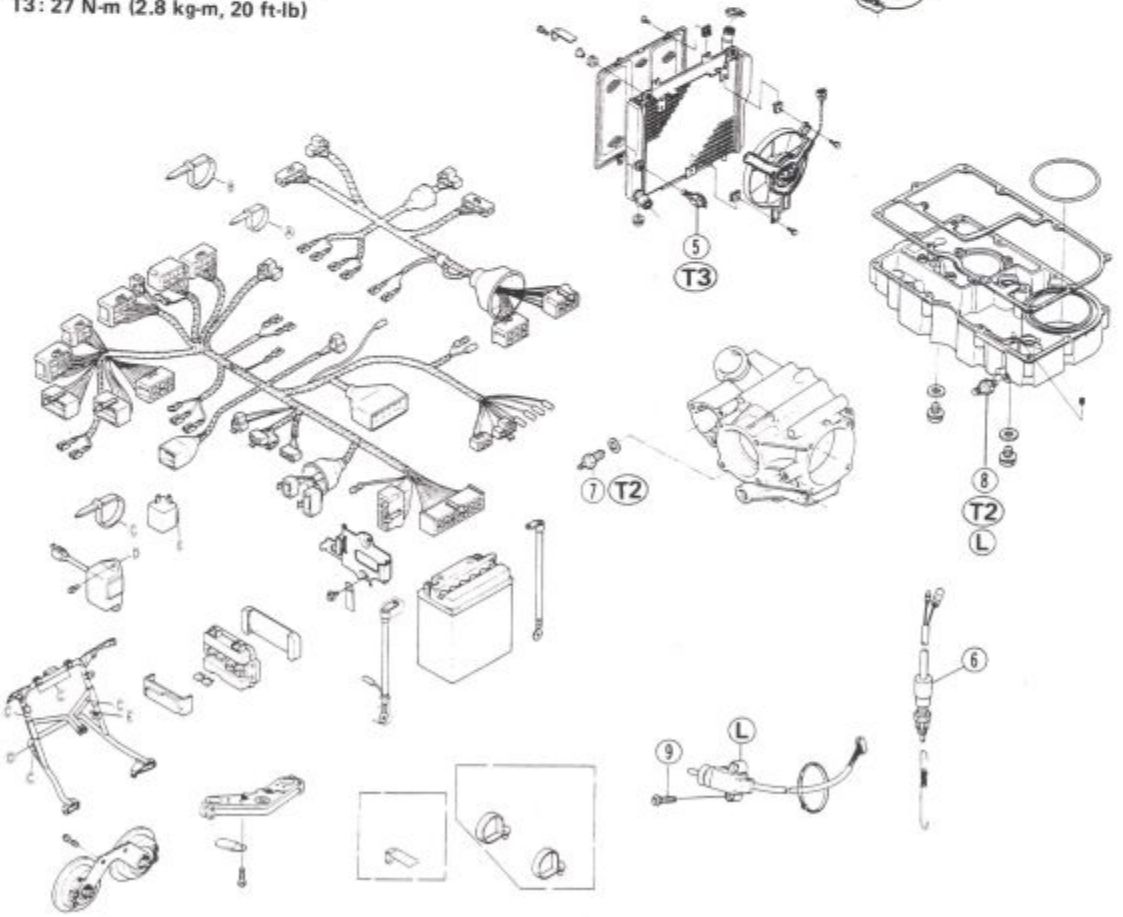

Specifications

Battery

Type:	12 V 18 Ah
Specific gravity:	1.280 @20°C (68°F)

Alternator

Type:	Three-phase AC, regulator and rectifier contained in one housing
Rated output:	28.6 A @6,000 r/min (rpm), 14 V
Charging voltage:	13.5 V @4,000 r/min (rpm) (with Headlight Switch ON if applicable)
Stator coil resistance:	Less than 1.0 Ω
Rotor coil resistance:	About 4 Ω
Slip ring diameter:	Standard: 14.4 mm Service Limit: 14.0 mm
Carbon brush length:	Standard: 10.5 mm Service Limit: 4.5 mm

Ignition System

Ignition timing: 10° BTDC @1,000 r/min (rpm) – 35° BTDC @3,500 r/min (rpm),
(Cal) 10° BTDC @1,200 r/min (rpm) – 35° BTDC @3,500 r/min (rpm)
Pickup coil resistance: 390 – 590 Ω
Pickup coil air gap: 0.5 – 0.9 mm
Ignition coil:
3 needle arcing distance: 7 mm or more
Primary winding resistance: 1.8 – 2.8 Ω
Secondary winding resistance: 10 – 16 kΩ
Spark plug gap: 0.6 – 0.7 mm

Starter System

Starter motor:	
Carbon brush length:	Standard: 12 – 12.5 mm Service Limit: 6 mm
Commutator diameter:	Standard: 28 mm Service Limit: 27 mm

Switches and Sensors

Rear brake light switch:	On after about 10 mm pedal travel
Fan switch	Off → On 93 ~ 103°C (199 ~ 217°F) On → Off 91 ~ 95°C (196 ~ 203°F)
Fuel level sensor resistance:	Full position 4 ~ 10 Ω Empty position 90 ~ 100 Ω
Water temperature sensor resistance:	80°C (176°F) about 52 Ω 100°C (212°F) about 27 Ω

Spark Plug

	Standard	Low Speed Riding	High Speed Riding
US	NGK D8EA or ND X24ES-U	NGK D7EA or ND X22 ES-U	NGK D9EA or ND X27ES-U
Canada	NGK DR8ES-L or ND X24ESR-U	NGK DR7ES or ND X22ESR-U	NGK DR8ES or ND X27ESR-U
Europe except below	NGK DR8ES or ND X27ESR-U	Same as standard	Same as standard
Italy and Other than above	NGK D9EA or ND X27ES-U	Same as standard	Same as standard

Special Tools

Along with common hand tools, the following more specialized tools are required for complete electrical system servicing.

Hand Tester: 57001-983

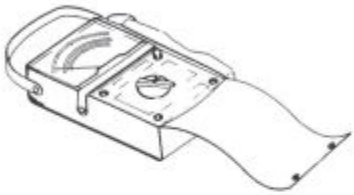

Spark Plug Wrench: 57001-1024

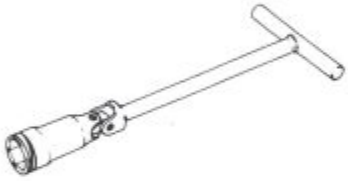

Bearing Driver Set: 57001-1129

Coil Tester: 57001-1242

Battery

Precautions:

Following a few simple rules will greatly extend the life of the battery.

○When the level of the electrolyte in the battery is low, add only distilled water to each cell, until the level is at the upper level line marked on the outside of the battery. Ordinary tap water is not a substitute for distilled water and will shorten the life of the battery.

○Never add sulphuric acid solution to the battery. This will make the electrolyte solution too strong and will ruin the battery within a very short time.

○Avoid quick-charging the battery. A quick-charge will damage the battery plates.

○Never let a good battery stand for more than 30 days without giving it a supplemental charge, and never let a discharged battery stand without charging it. If a battery stands for any length of time, it slowly self-discharges. Once it is discharged, the plates sulphate (turn white), and the battery will no longer take a charge.

○Keep the battery well-charged during cold weather so that the electrolyte does not freeze and crack open the battery. The more discharged the battery becomes, the more easily it freezes.

○Always keep the battery vent hose free of obstruction, and make sure it does not get pinched, crimped, or melted shut by contact with the hot muffler. If battery gases cannot escape through this hose, they will explode the battery.

○DON'T INSTALL THE BATTERY BACKWARDS. The negative side is grounded.

Electrolyte:

Electrolyte Level Inspection

- Remove the battery.
- Visually check the electrolyte level in the battery.

A. Level Lines

★If the level of electrolyte in any cell is below the lower level line on the battery case, add distilled water only to that cell.

- Install the battery.

Battery Charging:

Battery Condition

- Before charging, check battery condition by testing the specific gravity of the electrolyte in each cell.
- ○Draw a little fluid from the cell with a hydrometer.
- ○Read the level of the electrolyte on the floating scale. This is the specific gravity of the electrolyte.

Hydrometer

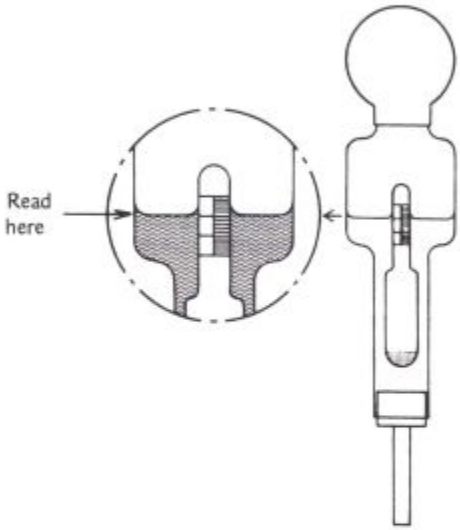

- Look for sediment and white sulfation inside the cells on the bottom of the plates.

A. Sulfation here B. Sediment here

- See the Battery Troubleshooting Guide in Battery Test Charging.
- ★If the specific gravity is below 1.200 the battery needs to be charged.

NOTE

- ○*The specific gravity of the electrolyte varies with changes in temperature, so the specific gravity reading must be corrected for the temperature of the electrolyte.*
- ○*Celsius: Add 0.007 points to reading for each 10°C above 20°C or subtract 0.007 points for each 10°C below 20°C.*
- ○*Fahrenheit: Add 0.004 points to reading for each 10°F above 68°F or subtract 0.004 points for each 10°F below 68°F.*

- ★If the specific gravity of any of the cells is more than 0.050 away from any other reading, the battery will probably not accept a charge. If it generally best to replace a battery in this condition.
- ★If the specific gravity of all the cells is 1.280 or more the battery is fully charged.

Battery Initial Charging

Before being placed in service, a new battery should be given an initial charging.

- Cut off the sealed end of the battery vent hose and remove the filler caps.
- Fill each cell to the upper level line on the battery case with fresh electrolyte at a temperature of 30°C (86°F) or less. Let the battery stand for about 30 minutes before charging.

NOTE

- ○*If the electrolyte level drops, add electrolyte to the upper level line before charging.*

- Leaving the caps off the cells, connect the battery to a charger, set the charging rate at 1/10 the battery capacity, and charge it for 10 hours. For example, if the battery is rated at 18 Ah, the charging rate would be 1.8 A.

WARNING

- ○**Keep the battery away from sparks and open flames during charging, since the battery gives off an explosive gas mixture of hydrogen and oxygen. When using a battery charger, connect the battery to the charger before turning on the charger. This procedure prevents sparks at the battery terminals which could ignite any battery gases.**

CAUTION

- ○**Do not use a high rate battery charger, as is typically employed at automotive service stations, unless the charger rate can be reduced to the level required. Charging the battery at a rate higher than specified may ruin the battery. Charging at a high rate causes excess heat which can warp the plates and cause internal shorting. Higher-than -normal charging rates also cause the plates to shed active material. Deposits will accumulate, and can cause internal shorting.**

○**If the temperature of the electrolyte rises above 45°C (115°F) during charging, reduce the charging rate to lower the temperature, and increase charging time proportionately.**

●Turn the charger off, then disconnect it from the battery.
●Check battery voltage. Battery voltage should be 12 – 13 V.
●Check the specific gravity of each cell with a hydrometer (see Battery Condition).
★If the voltmeter or hydrometer readings are below those specified, additional charging is necessary before the battery can be installed.

Battery Ordinary Charging

●Remove the battery from the motorcycle.

CAUTION

○**Always remove the battery from the motorcycle for charging. If the battery is charged while still installed, battery electrolyte may spill and corrode the frame or other parts of the motorcycle.**

●Clean off the battery using a baking soda-and-water solution.
○Mix one heaping tablespoon of baking soda in one cup of water.
○Be careful not to get any of the cleaning solution in the battery.
○The terminals must be especially clean.
●If any of the cells are low, fill them to the LOWER level line with distilled water only. The electrolyte will expand during charging, and the level will rise.
●Connect a charger to the battery BEFORE plugging it in or turning it on.

WARNING

○**Keep the battery away from sparks and open flames during charging, since the battery gives off an explosive gas mixture of hydrogen and oxygen. When using a battery charger, connect the battery to the charger before turning on the charger. This procedure prevents sparks at the battery terminals which could ignite any battery gases.**

●Set the charge rate and time according to the battery condition previously determined (see Battery Condition), using the table.

CAUTION

○**Do not use a high rate battery charger, as is typically employed at automotive service stations, unless the charger rate can be reduced to the level required. Charging the battery at a rate higher than specified may ruin the battery. Charging at a high rate causes excess heat which can warp the plates and cause internal shorting. Higher-than -normal charging rates also cause the plates to shed active material. Deposits will accumulate, and can cause internal shorting.**
○**If the temperature of the electrolyte rises above 45°C (115°F) during charging, reduce the charging rate to lower the temperature, and increase charging time proportionately.**

●Turn the charger off or unplug it, then disconnect it from the battery.
●Check battery condition (See Battery Condition).
★If the battery condition indicates that it is not fully charged, additional charging time is necessary.

Battery Test Charging

●If the battery is suspected of being defective, sulfated, or unable to take a charge, consult the table.

Battery Charging Rate/Time Table (12V 18Ah)

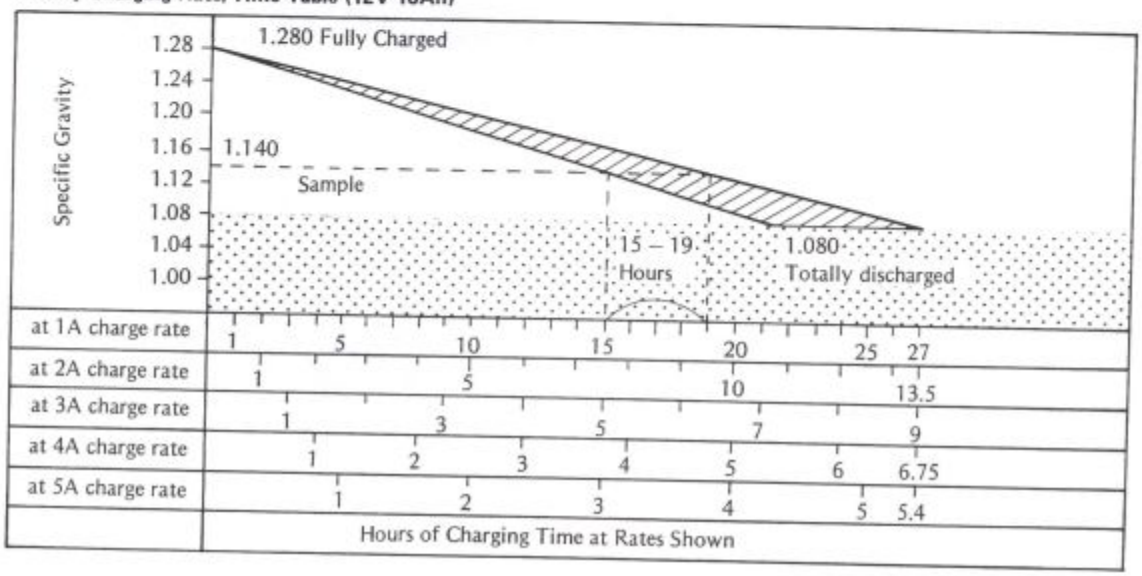

Battery Troubleshooting Guide

	Good Battery	Suspect Battery	Action
Plates	(+) chocolate color (−) gray	white (sulphated); + plates broken or corroded	Replace
Sediment	none, or small amount	sediment up to plates, causing short	Replace
Voltage	above 12 V	below 12 V	Test charge
Electrolyte Level	above plates	below top of plates	Fill and test charge
Specific Gravity	above 1.200 in all cells; no two cells more than 0.020 different	below 1.100, or difference of more than 0.020 between two cells	Test charge

●To test charge a battery, perform the ordinary charging procedure and monitor the battery voltage and other signs as mentioned below.

★If the battery voltage suddenly jumps to over 13 V just after the start of charging, the plates are probably sulfated. A good battery will rise to 12 V immeditely and then gradually go up to 12.5 or 13 V in about 30 min to and hour after the start of charging.

★If one cell produces no gas bubbles or has a very low specific gravity, it is probably shorted.

★If there does not appear to be enough sediment in a cell to short the plates, but that cell has a very low specific gravity after the battery is fully charged, the trouble may be that there is not enough acid in that one cell. In this case only, sulfuric acid solution may be added to correct the specific gravity.

★If a fully charged battery not in use loses its charge after 2 to 7 days; or if the specific gravity drops markedly, the battery is defective. The self-discharge rate of a good battery is only about 1% per day.

Alternator

The alternator contains the following electrical components in its compact housing:

Alternator stator and rotor
Rectifier
Regulator

Alternator Removal/Disassembly:

Alternator Removal

NOTE

○*Alternator removal is not necessary to remove the rectifier, regulator, and carbon brush assembly. They can be removed often removing the alternator end cover.*

●Remove the cam chain tensioner (see Chain Tensioner Removal in the Engine Top End chapter).

●Disconnect the alternator lead connector.

●Unscrew the alternator mounting bolts and pull the alternator out of the engine. Do not lose the alternator coupling dampers.

Alternator Installation Notes

●Check that the rubber dampers are in place before installing the alternator.

●Clean the alternator legs and crankcase where the alternator is grounded.

●Install the alternator.

○Apply a small amount of engine oil to the rubber dampers and the O-ring.

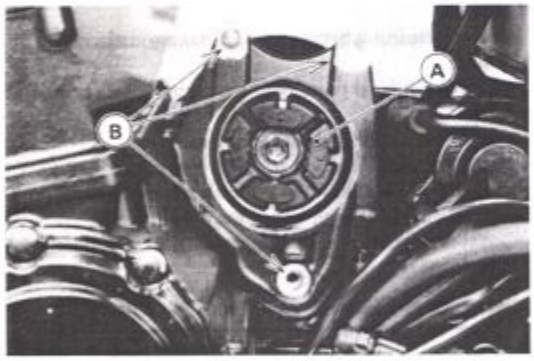

A. Rubber Damper B. Clean here.

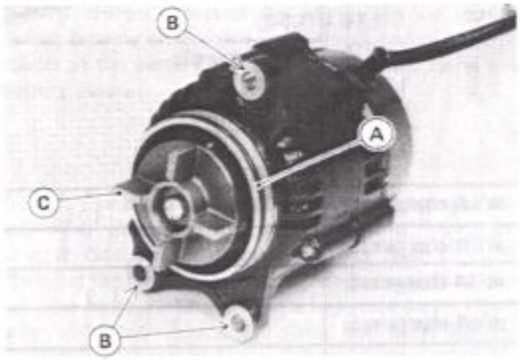

A. O-ring C. Coupling Blades
B. Clean here.

○Align the blades of the alternator coupling with the slots in the rubber dampers, and temporarily install the alternator with the mounting bolts finger tight.
○Apply a non-permanent locking agent to the threads of the alternator mounting bolts.
○Screw in the mounting bolts evenly to engage the couping with the rubber dampers.
○Tighten the bolts to the specified torque (see Exploded View)

CAUTION

○If any resistance is felt when tightening the mounting bolts, stop immediately, and check the alignment of the coupling blades with the slots in the rubber dampers.

Alternator Disassembly

●Remove the cap nuts and take off the end cover. The following parts can be removed.

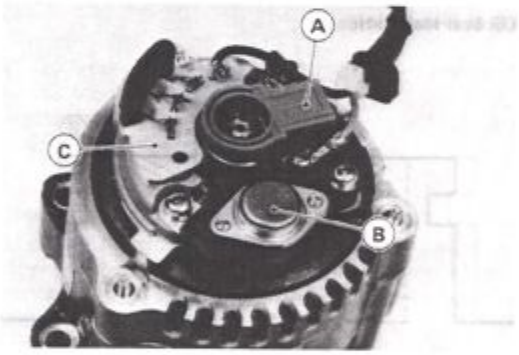

A. Brush Assembly
B. Regulator
C. Rectifier

○Carbon brush assembly and rubber seal with mounting screws removed.
○Regulator with mounting screws removed.
○Rectifier and cover with stator coil windings unsoldered.
○The alternator lead assembly can be separated from the rectifier by unsoldering the connections.
●Unscrew the bolt holding the alternator coupling, and take off the coupling.
●Cover the splined portion of the rotor shaft with a thin tape to prevent damaging the oil seal lip.
●Unscrew the bearing holder screws, and pull off the RH housing half with the oil seal and stator.
●Press out the rotor shaft from the LH housing half, and remove the rotor with the bearings.

Rotor Removal

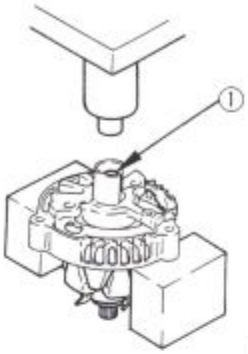

1. Rotor Shaft

●To remove the ball bearings, use a suitable puller.
○Pull out the RH ball bearing with the bearing holder.

Bearing Removal

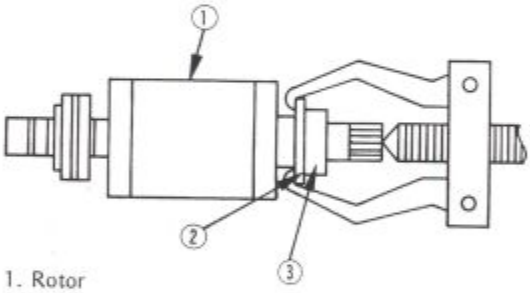

1. Rotor
2. Bearing Holder
3. RH Ball Bearing

Alternator Assembly Notes

●Assembly the parts in the following sequence.
○Position the RH housing half so that the RH bearing housing is seated on a suitable press fixture.

RH Bearing Installation

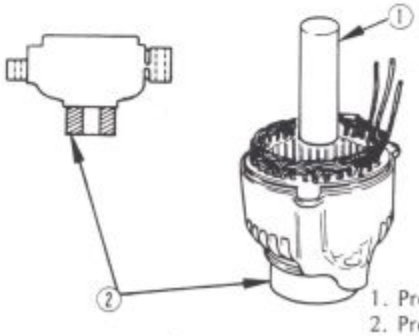

1. Press
2. Press Fixture

○Press the RH ball bearing into the RH housing half with bearing driver set (special tool: 57001-1129).
○Install the bearing holder with its mounting screws. If necessary, repair or replace the holder before installation.
○Position the RH ball bearing so that the inner race is seated on a suitable press fixture.

Rotor Installation

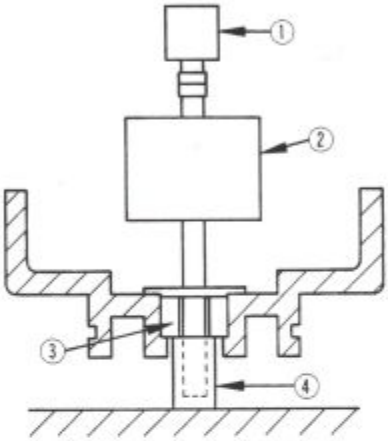

1. Press
2. Rotor
3. RH Ball Bearing
4. Press Fixture

○Press the rotor shaft into the RH ball bearing.
○Press the LH ball bearing and bearing covers onto the rotor shaft. The bearing long end from the circlip groove must be faced in.

LH Bearing Installation

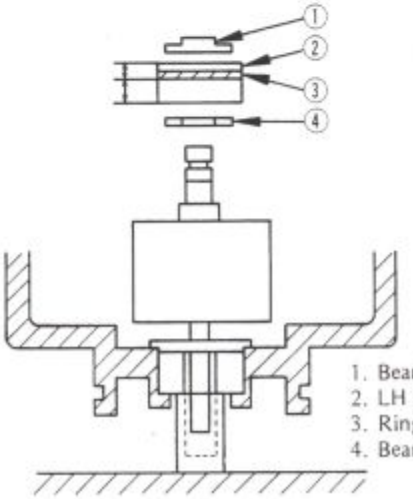

1. Bearing Cover
2. LH Ball Bearing
3. Ring
4. Bearing Cover

○Position the LH ball bearing ring so that the projections of it are aligned with the ring positioning groove, and install the LH housing half.

Ball Bearing Ring

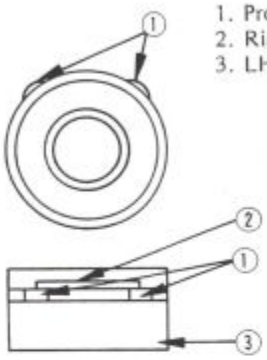

1. Projections of Ring
2. Ring Groove
3. LH Ball Bearing

○Install the oil seal to the RH housing half so that the spring band side of it faces out. Before inserting the rotor shaft right end into the oil seal, splined portion of the shaft must be covered with a thin tape to prevent damaging the oil seal lip.

Oil Seal Installation

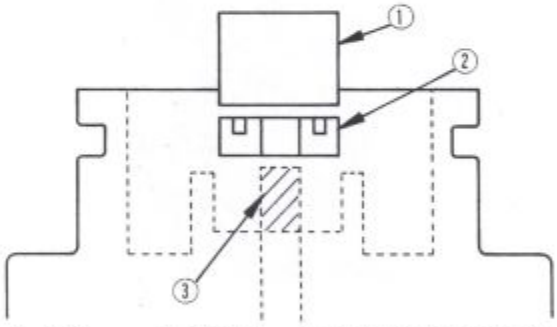

1. Press 2. Oil Seal 3. Shaft covered with tape

●Solder the carbon brush lead with the brush holder if they were disassembled.

Carbon Brush Installation

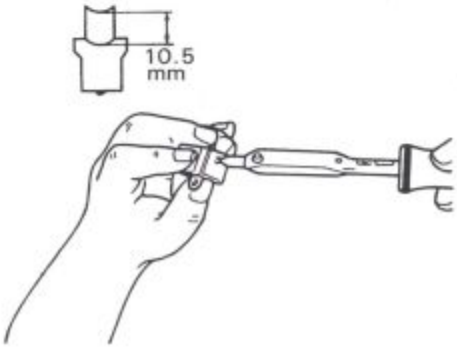

Charging System Wiring Diagram

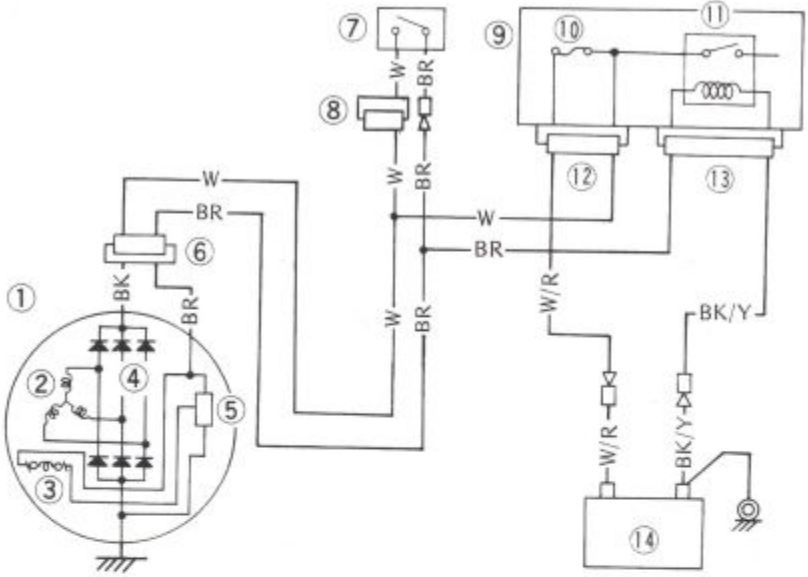

1. Alternator
2. Starter Coil
3. Rotor Coil
4. Rectifier
5. Regulator
6. 2-pin Connector
7. Ignition Switch
8. 6-pin Connector
9. Junction Box
10. Main Fuse 30A
11. Main Relay
12. 8-pin Connector
13. 14-pin Connector
14. Battery 12 V 18 Ah

- Be careful not to forget to install the rectifier cover and carbon brush rubber seal.
- Tighten the fasteners to the specified torque if required (see Exploded view).

Alternator Troubleshooting:

For any charging system problems, always check the charging system wiring first (see Wiring Inspection), and then check the system with the following tests shown in the troubleshooting guide.

Troubleshooting Guide

Test No.	Trouble	Symptoms
1	Battery discharged	Starter not turning
2	Battery overcharged	Electrolyte level lowering quickly
3	Noise	Alternator noise

Test No.1-Battery Discharged

- Remove the nuts holding the alternator cover, and take off the cover.
- Check that the alternator leads and connectors are in good condition.
- ★If not, repair or replace the damaged parts.
- Replace the discharged battery with a good battery.
- Check battery voltage with the engine running.
- ★If the battery voltage is higher than 13.5 V, the charging system is in good condition.
- ★If the battery voltage is lower than 13.5 V, check the following.
- Ground the F terminal of the regulator to the chassis with a auxiliary wire.

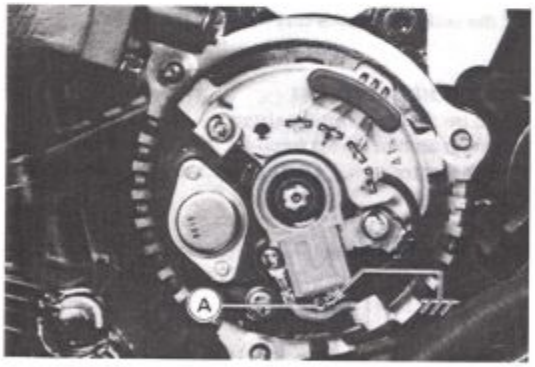

A. F Terminal

- Start the engine, and check the battery voltage with the engine running.
- ★If the battery voltage is higher than 13.5 V, check the following.
  Regualtor
- ★If the battery voltage is lower than 13.5 V, check the following.
  Carbon Brushes, Slip Rings
  Rectifier
  Stator Coil
  Rotor Coil

Test No.2-Battery Overcharged
- ●Check the regulator and/or rotor.
- ★Repair or replace the damaged parts.

Test No.3-Noise
- ●Check the ball bearings, stator coil, and/or rectifier if the alternator makes a noise.
- ★Repair or replace the damaged parts.

Alternator Inspection:

Ball Bearing Inspection
- ●Turn each bearing back and forth while checking for roughness or binding

Bearing Inspection

- ★If roughness or binding is found, replace the bearing.
- ●Examine the bearing seal for tears or leakage.
- ★If the seal is torn or is leaking, replace the bearing

Stator Coil Inspection
- ●Measure the stator coil resistance.
- ○Connect an ohmmeter between the coil wirings.
- ○Set the meter to the x 1 Ω range, and read the meter.

Stator Coil Resistance

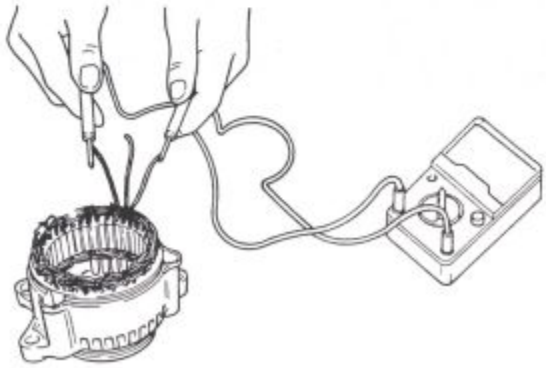

- ★If the meter does not read as specified, replace the stator coil.

Stator Coil Resistance
Less than 1.0 Ω

- ●Using the highest ohmmeter range, measure the resistance between the stator coil core and each of the coil windings.
- ★If there is any reading at all, the stator coil winding has a short and must be replaced.

Rotor Coil Inspection
- ●Measure the rotor coil resistance.
- ○Connect an ohmmeter between the slip rings.
- ○Set the meter to the x 1 Ω range, and read the meter.

Rotor Coil Resistance

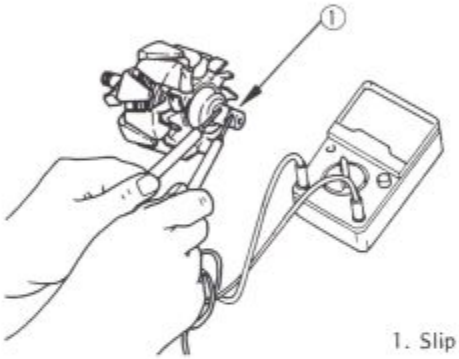

1. Slip Ring

- ★If the meter does not read as specified, replace the rotor.

Rotor Coil Resistance
About 4 Ω

- ●Using the highest ohmmeter range, measure the resistance between the rotor shaft and each of the slip rings.
- ★If there is any reading at all, the rotor coil has a short and must be replaced.

Slip Ring Cleaning
- ●Visually inspect the slip ring for dirt or pitting.
- ★If necessary, smooth the slip ring with No. 300 – No. 500 emery cloth.

Slip Ring Diameter
- ●Measure the diameter of the slip ring.
- ★If the measurement is less than the service limit, replace the rotor.

Slip Ring Diameter

Standard:	**14.4 mm**
Service Limit:	**14.0 mm**

Slip Ring Diameter

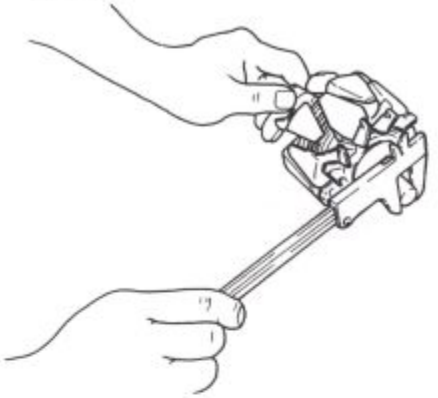

Carbon Brush Length

- Measure the length of both carbon brushes that stick out of the housing.

★If either one is worn down to less than the service limit, replace it.

Carbon Brush Length Measurement

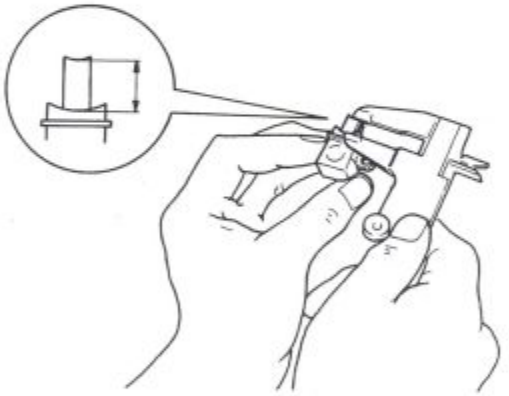

Carbon Brush Length (projected portion)
Standard: 10.5 mm
Service Limit: 4.5 mm

Rectifier Inspection

- Set an ohmmeter to the x 1 kΩ range.
- Connect the ohmmeter to the ends of each diode, and check the resistance in both direction. The resistance should be low in one direction and more than ten times as much in the other direction.

★If any diode shows low or high in both directions, the diode is defective and the rectifier must be replaced.

NOTE

○*The actual meter reading varies with the meter used and the individual diode, but, generally speaking, the lower reading should be from zero to the first 1/2 of the scale.*

Rectifier Inspection

CAUTION

○**If a megger or a meter with a large-capacity battery is used, the rectifier will be damaged.**

Regulator Inspection

- Prepare testing tools.

Test light:	Bulb rated 12 V 3.4 W
Batteries:	Two 12 V batteries
Test wires:	Three auxiliary wires

CAUTION

○**The test light works as an indicator and also a current limiter to protect the regulator from excessive current. Do not use an ammeter instead of a test light.**

- Connect the test light and the 12 V battery to the regulator as shown. The test light should go on at this time.

CAUTION

○**Do not contact the regulator metal case with the wires from the battery (+) or (−) terminal during the test.**

★If the test light does not go on, the regulator is damaged and must be replaced.

- Connect the test light and two 12 V batteries to the regulator as shown. The test light should not go on at this time.

★If the test light goes on, the regulator is damaged and must be replaced.

Regulator Inspection

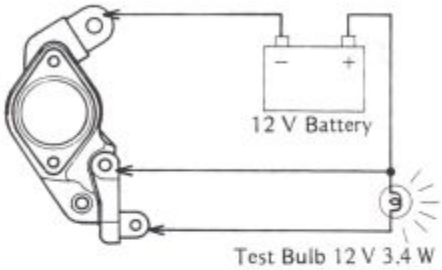

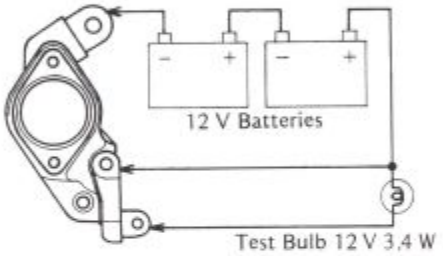

●Check the resistance in both directions between the terminals of the regulator with an ohmmeter as shown.

Regulator Insternal Resistance

Meter Range	Connections		Reading
	Meter (+) to	Meter (−) to	
x 100 Ω	F	E	200 ~ 650 Ω
x 1 kΩ	E	F	4.5 ~ 14.5 kΩ
x 100 Ω	IG	E	750 ~ 2,300 Ω
x 1 kΩ	E	IG	2 ~ 6.5 kΩ
x 1 kΩ	F	IG	2.5 ~ 8 kΩ
x 100 Ω	IG	F	200 ~ 600 Ω

★Meter readings should be nearly values shown in the table. If the resistance is infinity (no reading) or 0 Ω, the regulator is damaged and must be replaced.

Regulator Inspection

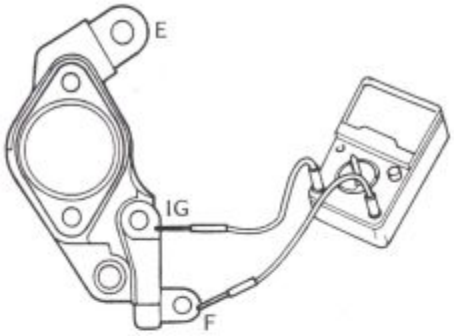

Ignition System

Safety Instructions:

WARNING

○**The ignition system produces extremely high voltage. Do not touch the spark plugs, high tension coils, or spark plug leads while the engine is running, or you could receive a severe electrical shock.**

CAUTION

○**Do not disconnect the battery leads or any other electrical connections when the ignition switch is on, or while the engine is running. This is to prevent IC igniter damage.**

○**Do not install the battery backwards. The negative side is grounded. This is to prevent damage to the diodes and IC igniter.**

Parts Removal:

Pickup Coil Removal/Installation Notes

●Install the pickup coils so that the air gaps (clearance between the timing rotor projection and the pickup coil core) of both pickup coils are equal.

Pickup Coil Air Gap
0.5 — 0.9 mm

Pickup Coil Air Gap

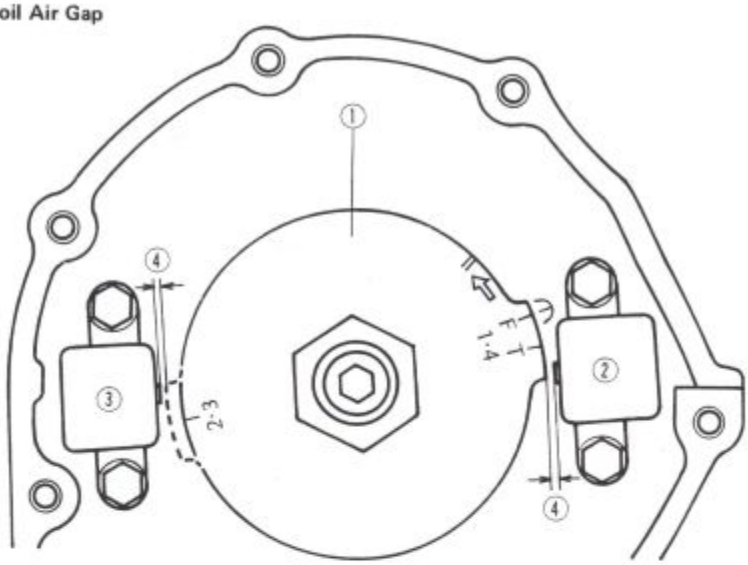

1. Timing Rotor
2. #1 & 4 Pickup Coil
3. #2 & 3 Pickup Coil
4. Air Gap

•Apply a non-permanent locking agent to the threads of two bolts holding the pickup coil cover.

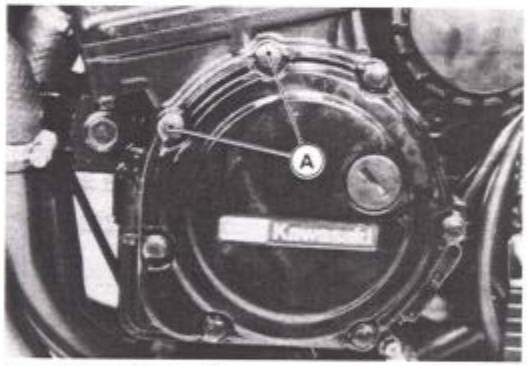

A. Bolts requiring locking agent

Ignition Coil Removal/Installation Notes

•Connect the primary wires to the primary coil terminals as follows:

○Black and red wires → No. 1 & 4 ignition coil

○Green and red wires → No. 2 & 3 ignition coil

•The + and – markings next to the primary coil terminals on the ignition coil body indicate the polarity of the terminals. The polarity of the two spark plug leads are as shown when the primary leads are connected as indicated in the figure. But both the primary wires (positive red, and negative black and green) can be connected with either terminal on the ignition coil without changing the engine performance.

Polarity of Ignition Coil

(–) #3 or #4 spark plug lead

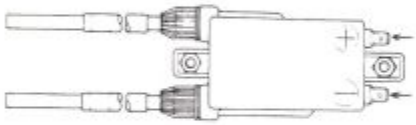

Connect red lead

Connect black or green lead

(+) #1 or #2 spark plug lead

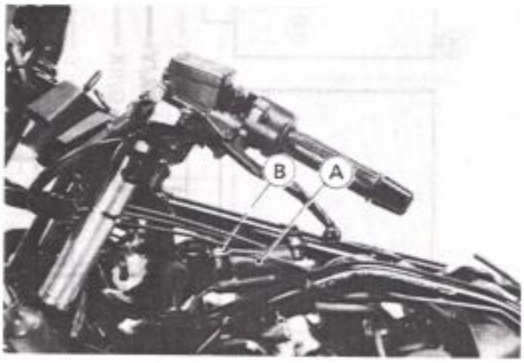

A. No. 1 & 4 Ignition Coil B. No. 2 & 3 Ignition Coil

Spark Plug Removal/Installation Notes

•Carefully pull the spark plug cap from the spark plug and the unscrew the spark plug.

○If necessary, use spark plug wrench (special tool: 57001-1024).

•Tighten the spark plug to the specified torque (see Exploded View).

Ignition System Wiring Diagram

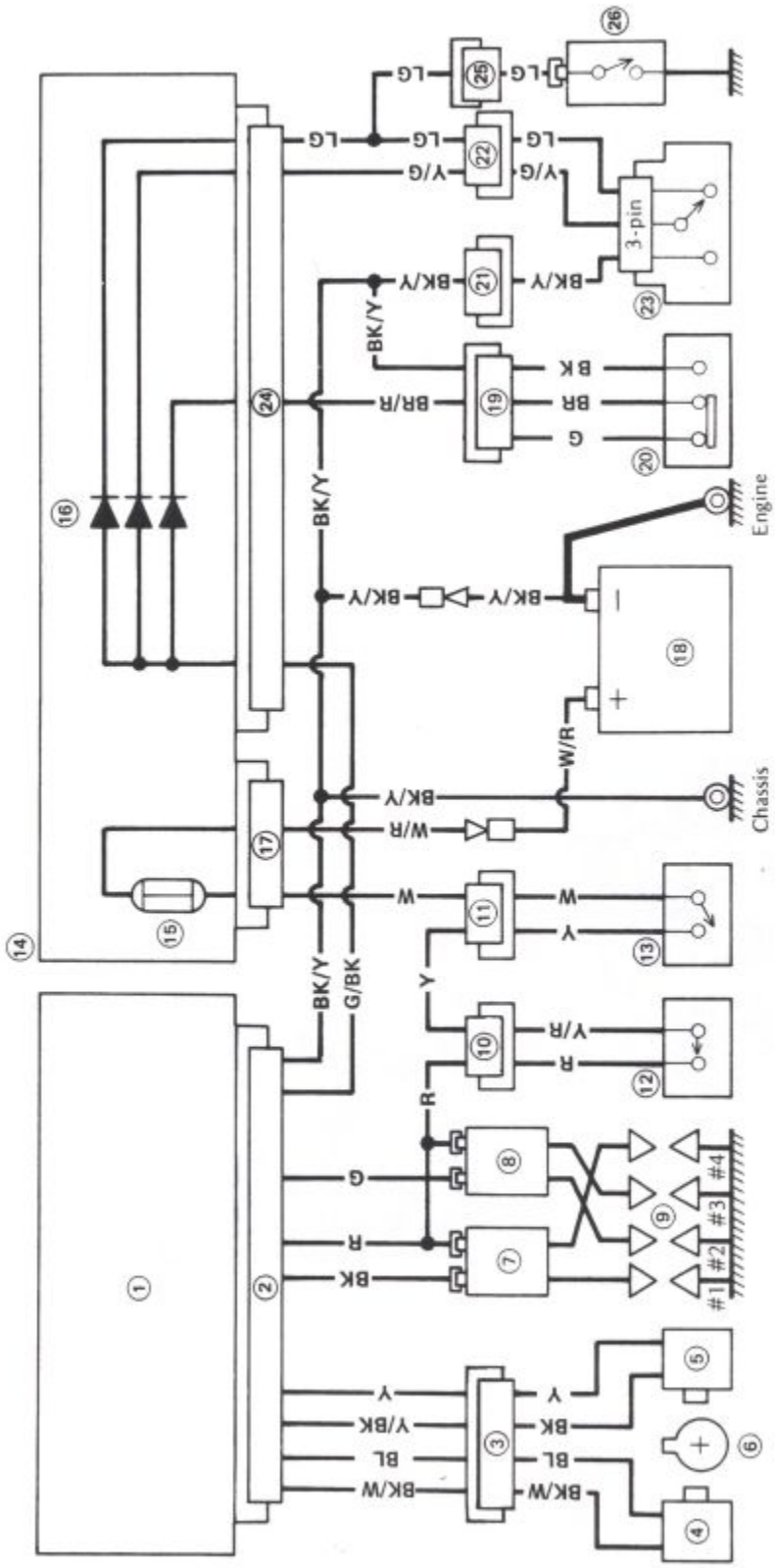

1. IC Igniter
2. IC Igniter 10-pin Connector
3. Pickup Coil 4-pin Connector
4. Pickup Coil for #2 and #3 Cylinder
5. Pickup Coil for #1 and #4 Cylinder
6. Timing Rotor
7. Ignition Coil for #1 and #4 Cylinders
8. Ignition Coil for #2 and #3 Cylinders
9. Spark Plugs
10. Engine Stop Switch 4-pin Connector (US Model : 6-pin Connector)
11. Ignition Switch 6-pin Connector
12. Engine Stop Switch
13. Ignition Switch
14. Junction Box
15. 30 A Fuse
16. Diodes
17. Junction Box 8-pin Connector
18. Battery
19. Side Stand Switch 3-pin Connector
20. Side Stand Switch
21. LH Switch 9-pin Connector
22. Starter Lockout Switch 2-pin Connector
23. Starter Lockout Switch
24. Junction Box 14-pin Connector
25. Neutral/Oil Pressure Switch 2-pin Connector
26. Neutral Switch

Ignition System Troubleshooting:

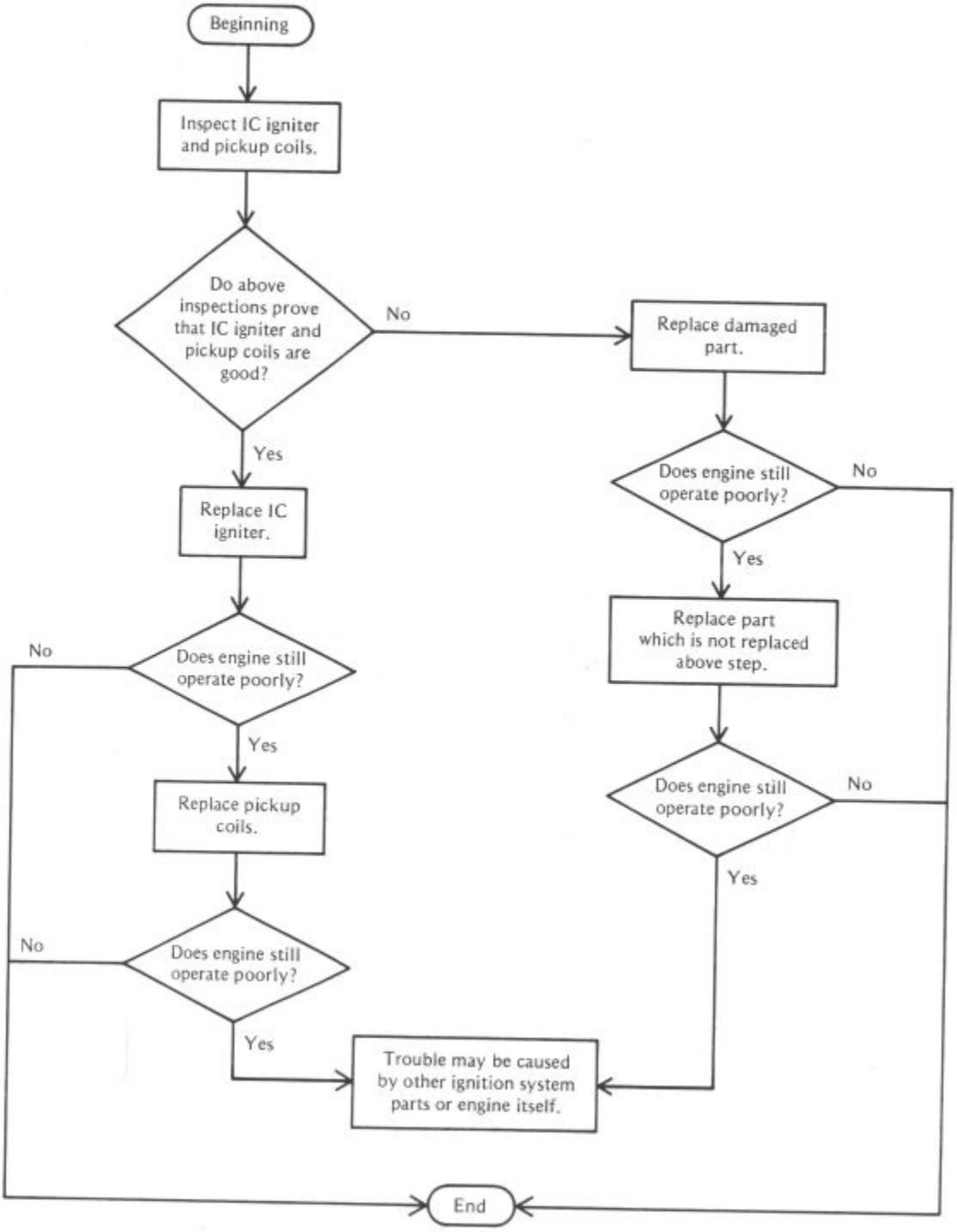

Ignition System Inspection:

For any ignition system problems, always check the ignition system wiring first (see Wiring Inspection).

IC Igniter Inspection

- Remove the IC igniter.
- Set the ohmmeter to the x 1 kΩ range and make the measurements shown in the table.
- ★If the meter readings are not as specified, replace the IC igniter.

CAUTION

- ○**Use only Hand Tester (special tool: 57001-983) for this test. A tester other than the Kawasaki Hand Tester may show different readings.**
- ○**If a megger or a meter with a large-capacity battery is used, the IC igniter will be damaged.**

Terminal No. of IC Igniter

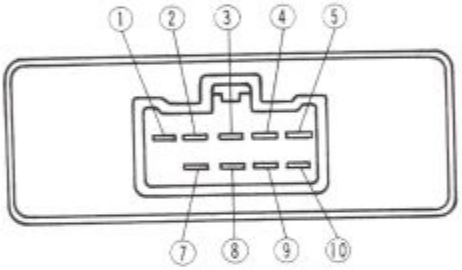

IC Igniter Intenal Resistance*

Tester (−) Lead Connection \ Tester (+) Lead Connection: Terminal Number	1	2	3	4	5	7	8	9	10
1		A	D	B	B	A	A	B	A
2	A		D	B	B	A	A	B	A
3	D	D		E	E	D	D	B	D
4	∞	∞	∞		∞	∞	∞	∞	∞
5	∞	∞	∞	∞		∞	∞	∞	∞
7	A	A	D	B	B		A	B	A
8	A	A	D	B	B	A		B	A
9	B	B	B	C	C	B	B		A
10	A	A	C	A	A	A	A	A	

Value (kΩ)	
∞	Infinity
A	2 – 6
B	5 – 11
C	9 – 20
D	15 – 28
E	25 – 55

*Measured with hand tester 57001-983. A tester other than the Kawasaki Hand Tester may show different readings.

Pickup Coil Inspection

- Disconnect the pickup coil connector.
- Zero the ohmmeter, and connect it to pickup coil leads.
- ★If there is more resistance than the specified value, the coil has an open lead and must be replaced. Much less than this resistance means the coil is shorted, and must be replaced.

Pickup Coil Resistance
390 – 590 Ω

- Using the highest resistance range of the ohmmeter, measure the resistance between the pickup coil leads and chassis ground.
- ★Any meter reading less than infinity (∞) indicates a short, necessitating replacement of the pickup coil assembly.
- Check the pickup coil air gaps (clearance between the timing rotor projection and the pickup coil core).
- ★If both air gaps are not equal, reposition the pickup coils.

Pickup Coil Air Gap
0.5 – 0.9 mm

Ignition Coil Inspection

Measuring arcing distance:

NOTE

- ○*The most accurate test for determining the condition of the ignition coil is made by measuring arcing distance with a coil tester (special tool) using the 3-needle method.*

●Remove the ignition coil.
●Connect the ignition coil (with the spark plug cap left installed at each of the spark plug leads) to the tester, and measure the arcing distance.

Ignition Coil Test

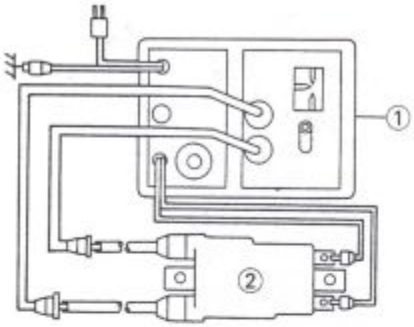

1. Coil Tester: 57001-1242
2. Ignition Coil

WARNING

○**To avoid extremely high voltage shocks, do not touch the coil or leads.**

★If the distance reading is less than the specified value, the ignition coil or spark plug caps are defective.

Ignition Coil Arcing Distance
7 mm or more

●To determine which part is defective, measure the arcing distance again with the spark plug caps removed from the ignition coil.
★If the arcing distance is subnormal as before, the trouble is with the ignition coil itself. If the arcing distance is now normal, the trouble is with the spark plug caps.

Measuring coil resistance:
If the arcing tester is not available, the coil can be checked for a broken or badly shorted winding with an ohmmeter. However, an ohmmeter cannot detect layer shorts and shorts resulting from insulation breakdown under high voltage.
●Disconnect the primary leads from the coil terminals.
●Measure the primary winding resistance.
○Connect an ohmmeter between the coil terminals.
○Set the meter to the x 1 Ω range, and read the meter.
●Measure the secondary winding resistance.
○Pull the spark plug cap off each lead.
○Connect an ohmmeter between the spark plug leads.
○Set the meter to the x 1 kΩ range, and read the meter.
★If the meter does not read as specified, replace the coil.

Ignition Coil Winding Resistance
Primary windings: 1.8 – 2.8 Ω
Secondary windings: 10 – 16 kΩ

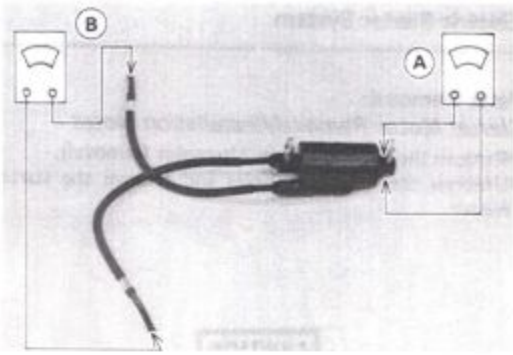

A. Measure primary winding resistance.
B. Measure secondary winding resistance.

★If the meter reads as specified, the ignition coil windings are probably good. However, if the ignition system still does not perform as it should after all other components have been checked, test replace the coil with one known to be good.
●Check the spark plug leads for visible damage.
★If any spark plug lead is damaged, replace the coil.

Spark Plug Cleaning and Inspection

●Remove the spark plug.
●Clean the spark plug, preferably in a sandblasting device, and then clean off any abrasive particles. The plug may also be cleaned using a high flash-point solvent and a wire brush or other suitable tool.
★If the spark plug electrodes are corroded or damaged, or if the insulator is cracked, replace the plug. Use the standard spark plug or its equivalent.

Spark Plug Gap

●Measure the gap with a wire-type thickness gauge.
★If the gap is incorrect, carefully bend the side electrode with a suitable tool to obtain the correct gap.

Spark Plug Gap

0.6 – 0.7 mm

Spark Plug Gap

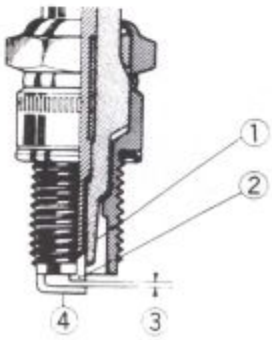

1. Insulator
2. Center Electrode
3. Plug Gap
4. Side Electrode

Electric Starter System

Parts Removal:

Starter Motor Removal/Installation Notes

- Remove the alternator (see Alternator Removal).
- Unscrew the mounting bolts and remove the starter motor.

CAUTION

○**Do not tap the starter motor shaft or body. Tapping on the shaft or body could damage the motor.**

- When installing the starter motor, clean the starter motor legs and crankcase where the starter motor is grounded.

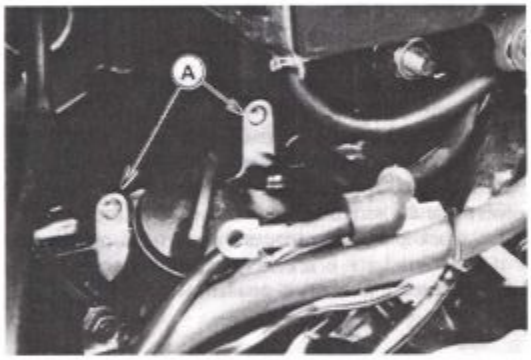

A. Clean here.

- Apply a small amount of engine oil to the O-ring.

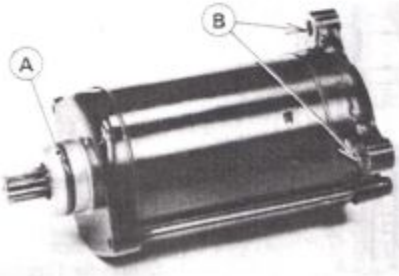

A. O-ring B. Clean here.

Starter Motor Disassembly/Assembly

- Remove both end covers, and take the armature out the pinion gear end.
- Remove the brush plate from the leads.

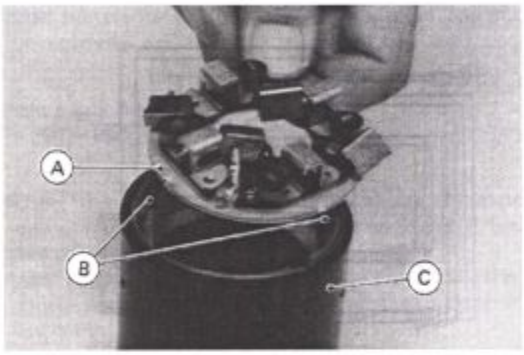

A. Brush Plate C. Yoke
B. Brush Lead

- Remove the brush springs from the brush plate. This makes armature installation easy.

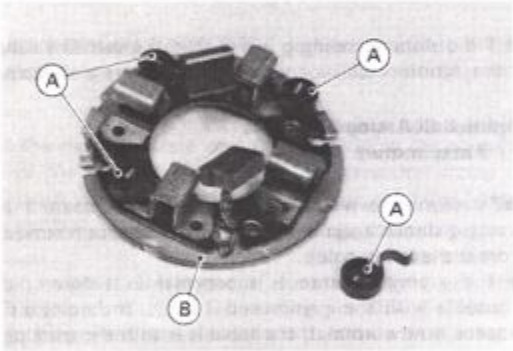

A. Springs B. Brush Plate

- Remove the nut and remove the terminal bolt, and then remove the brush with the plastic holder.

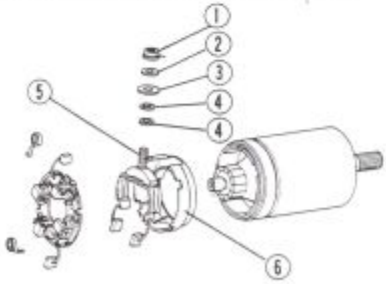

1. Nut
2. Washer
3. Large Washer (Plastic)
4. Small Washer (Plastic)
5. Terminal Bolt
6. Plastic Holder

•Install the terminal bolt as shown.

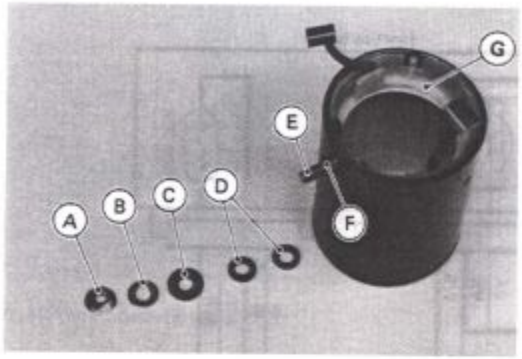

A. Nut
B. Washer
C. Large Washer (Plastic)
D. Small Washer (Plastic)
E. Terminal Bolt
F. O-ring
G. Plastic Holder

•Install the brush plate and armature as follows.

○Install the brush plate on the yoke fitting the brush leads into the notches in the plate. Fit the brush plate tongue into the yoke notch.

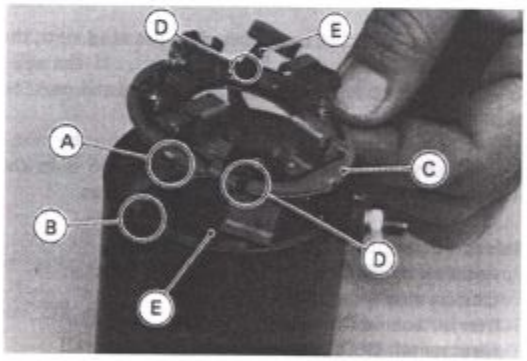

A. Tongue
B. Notch
C. Brush Plate
D. Notches
E. Brush Leads

○Keeping the motor upright, install the brush springs. Fit the spring on to the spring post halfway; the post must be positioned in the D-shaped end of the spring. Turn the other end of the spring a half turn clockwise, and fit the end into the brush groove. Push the spring all the way onto the post until it stops at the stepped portion.

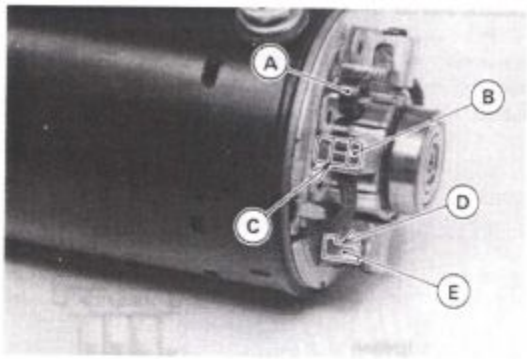

A. Spring
B. Brush
C. Brush Groove
D. Stepped Portion
E. Spring Post

•To install the end cover on the motor, fit the long tongue on the brush plate into the end cover groove.

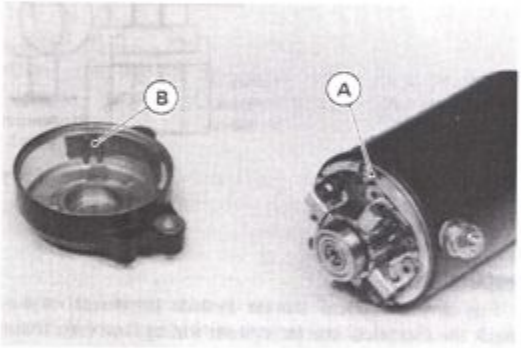

A. Tongue
B. Groove

•When the gear cover, internal gear, yoke, brush plate, and end cover are correctly assembled, the marks on the covers and yokes align with each other.

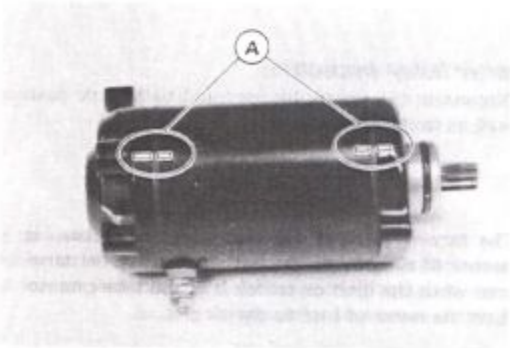

A. Marks

Electric Starter Circuit

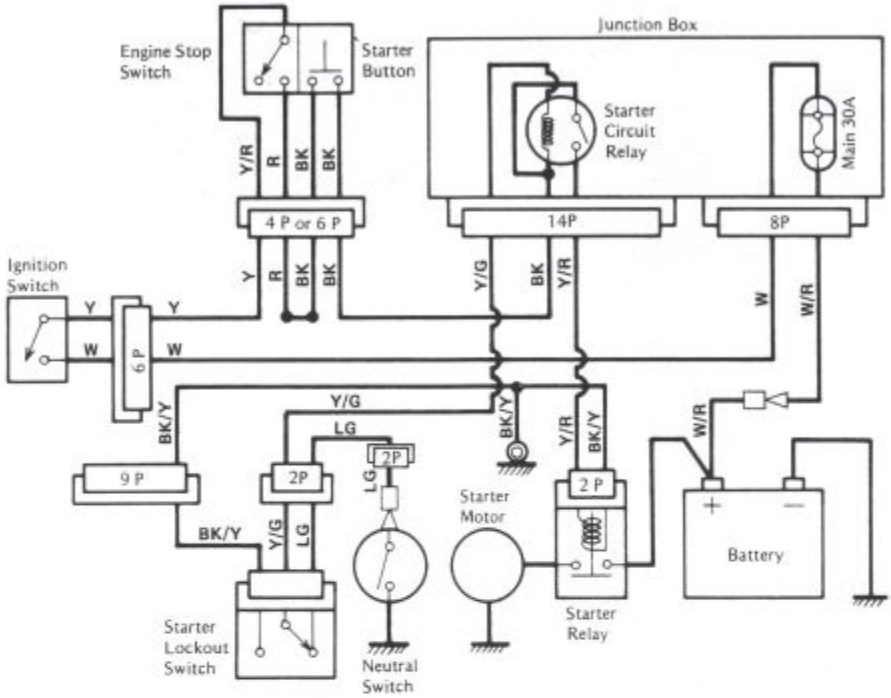

Inspection:

For any electrical starter system problems, always check the electrical starter system wiring first (see Wiring Inspection).

CAUTION

○**Because of the large amount of current, never keep the starter switch pushed any time that the starter motor will not turn over, or the current may burn to out the starter motor windings.**

Starter Relay Inspection

●Disconnect the starter motor lead and battery positive (+) lead from the starter rêlay.

CAUTION

○**The battery positive (+) lead with the rubber cap is connected directly to the battery positive (+) terminal even when the ignition switch is off, so take care not to short the removed lead to chassis ground.**

●Using the x 1 Ω ohmmeter range, measure the resistance across the relay terminals.

★If the relay clicks but the meter does not read zero, the relay is defective and must be replaced. If the relay does not click at all, the relay is defective and must be replaced.

★If the relay makes a single clicking sound and the meter reads zero the relay is good. The trouble is in the starter motor or the motor power supply wires.

Switch Position:

Ignition switch ON
Engine stop switch RUN
Starter button ON
Neutral switch ON (Transmission is in Neutral)

Meter Connection:

Location	**Starter relay terminals (Leads disconnected)**
Meter Range	**x 1 Ω**
Meter Reading:	**0 Ω and relay clicks when starter button is pushed.**

Brush Inspection

●Measure the length of each brush.

★If any is worn down to the service limit, replace all brushes.

Starter Motor Brush Length

Standard :	**12 – 12.5 mm**
Service Limit:	**6 mm**

A. Measure brush length.

Brush Spring Inspection

- Check that the brush springs are in place and snap the brushes firmly into place.

★If not, reinstall or replace the spring.

Commutator Cleaning and Inspection

- Smooth the commutator surface if necessary with fine emery cloth, and clean out the grooves as illustrated.

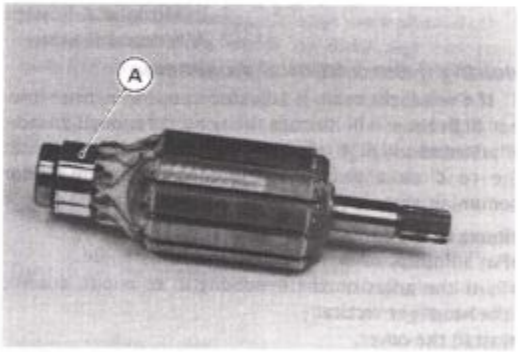

A. Commutator

- Measure the diameter of the commutator.

★Replace the starter motor with a new one if the commutator diameter is less than the service limit.

Commutator Diameter

Standard :	**28.0 mm**
Service Limit:	**27 mm**

Armature Inspection

- Using the x 1 Ω ohmmeter range, measure the resistance between any two commutator segments.

★If there is a high resistance or no reading (∞) between any two segments, a winding is open and the starter motor must be replaced.

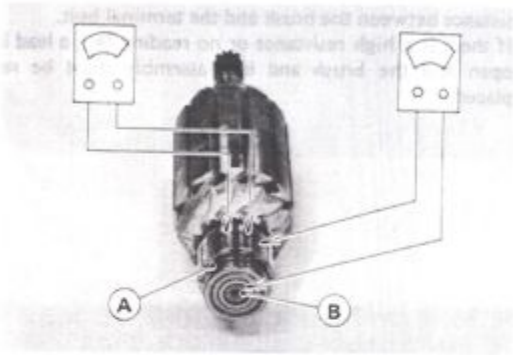

A. Segment B. Shaft

- Using the highest ohmmeter range, measure the resistance between the commutator and the shaft.

★If there is any reading at all, the armature has a short and the starter motor must be replaced.

Even if the foregoing checks show the armature to be good, it may be defective in some manner not readily detectable with an ohmmeter. If all other starter motor and starter motor circuit components check good, but the starter motor still does not turn over or only turns over weakly, replace the starter motor with a new one.

Brush Plate Inspection

- Using the x 1 Ω ohmmeter range, measure the resistance between the brush and the plate.

★If there is not close to zero ohms, the brush plate has an open and it must be replaced.

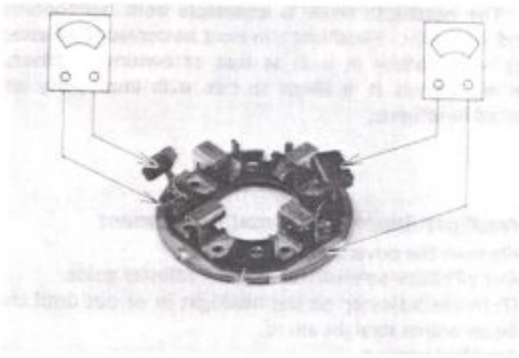

- Using the highest ohmmeter range, measure the resistance between the metal plate and the brush holders.
- ★If there is any reading at all, the brush holder has a short and the brush plate must be replaced.

Brush and Lead Assembly Inspection

- Using the x 1 Ω ohmmeter range, measure the resistance between the brush and the terminal bolt.
- ★If there is a high resistance or no reading (∞), a lead is open and the brush and lead assembly must be replaced.

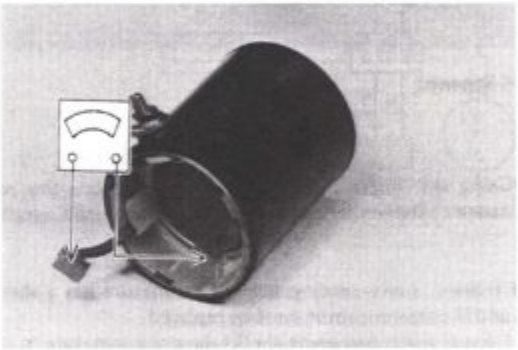

Lighting System

Adjustment:

The headlight beam is adjustable both horizontally and vertically. Headlight aim must be correctly adjusted for your safety as well as that of oncoming drivers. In most areas it is illegal to ride with improperly adjusted headlights.

Headlight Beam Horizontal Adjustment

- Remove the cover.
- Put a Phillips screwdriver into the adjuster guide.
- Turn the adjuster on the headlight in or out until the beam points straight ahead.
- Install the cover.

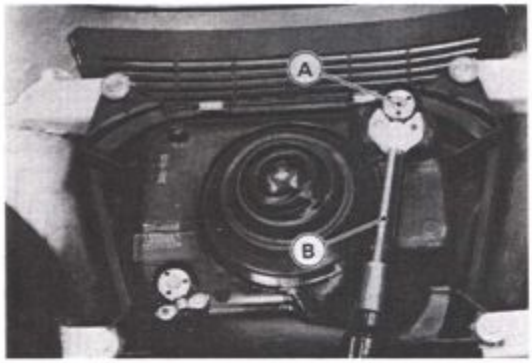

A. Adjuster B. Pillips Screwdriver

Headlight Beam Adjustment

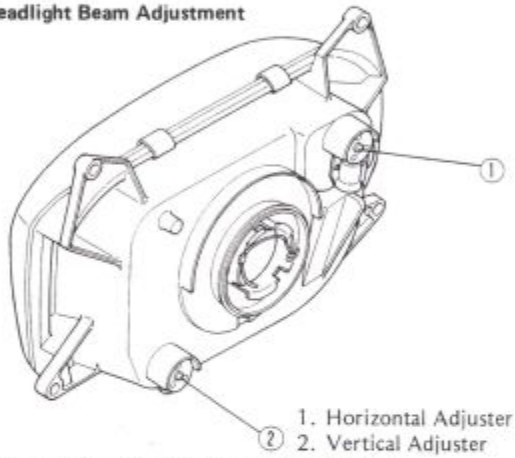

1. Horizontal Adjuster
2. Vertical Adjuster

Headlight Beam Vertical Adjustment

If the headlight beam is adjusted too low, neither low nor high beam will illuminate the road far enough ahead. If adjusted too high, the high beam will fail to illuminate the road close ahead, and the low beam will blind oncoming drivers.

- Remove the cover.
- Put a Phillips screwdriver into the adjuster guide.
- Turn the adjuster on the headlight in or out to adjust the headlight vertically.
- Install the cover.

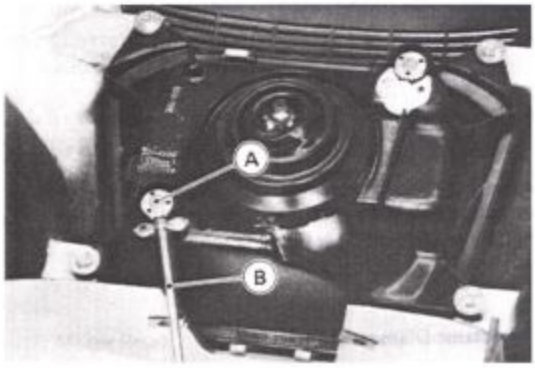

A. Adjuster B. Pillips Screwdriver

NOTE

○*On high beam, the brightest point should be slightly below horizontal with the motorcycle on its wheels and the rider seated. Adjust the headlight to the proper angle according to local regulations.*

Vertical Adjustment

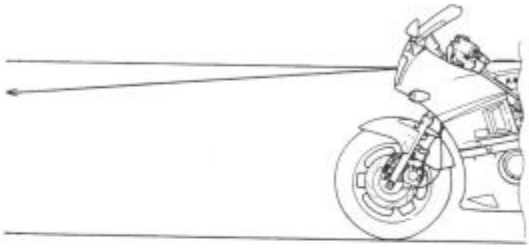

Parts Removal:
Headlight Bulb Replacement Notes

CAUTION

○**When handling quartz-halogen bulbs, never touch the glass with bare hands. Always use a clean cloth. Oil contamination from hands or dirty rags can reduce bulb life or cause the bulb to explode.**

•Fit the dust cover onto the bulb firmly as shown.

Dust Cover Installation

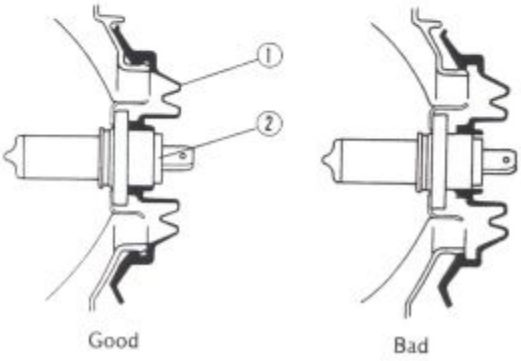

1. Dust Cover 2. Headlight Bulb

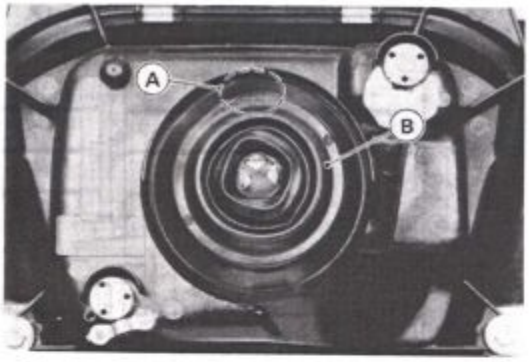

A. Top Mark B. Dust Cover

Tail/Brake Light Bulb Replacement Notes

•Insert the new bulb by aligning the pins with the grooves in the walls of the socket so that the pin closest to the bulb base is to the upper right.

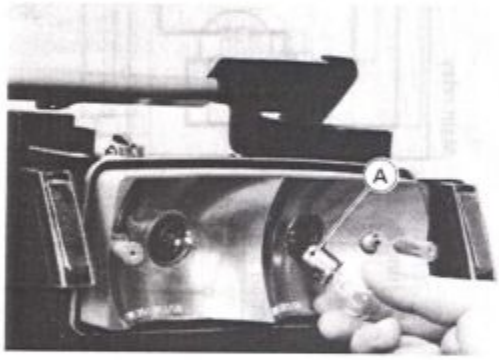

A. Pin Closest to Base.

•Be careful not to overtighten the lens.

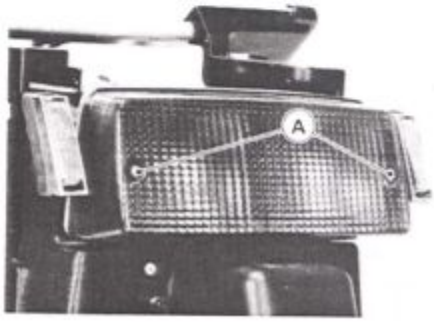

A. Screw

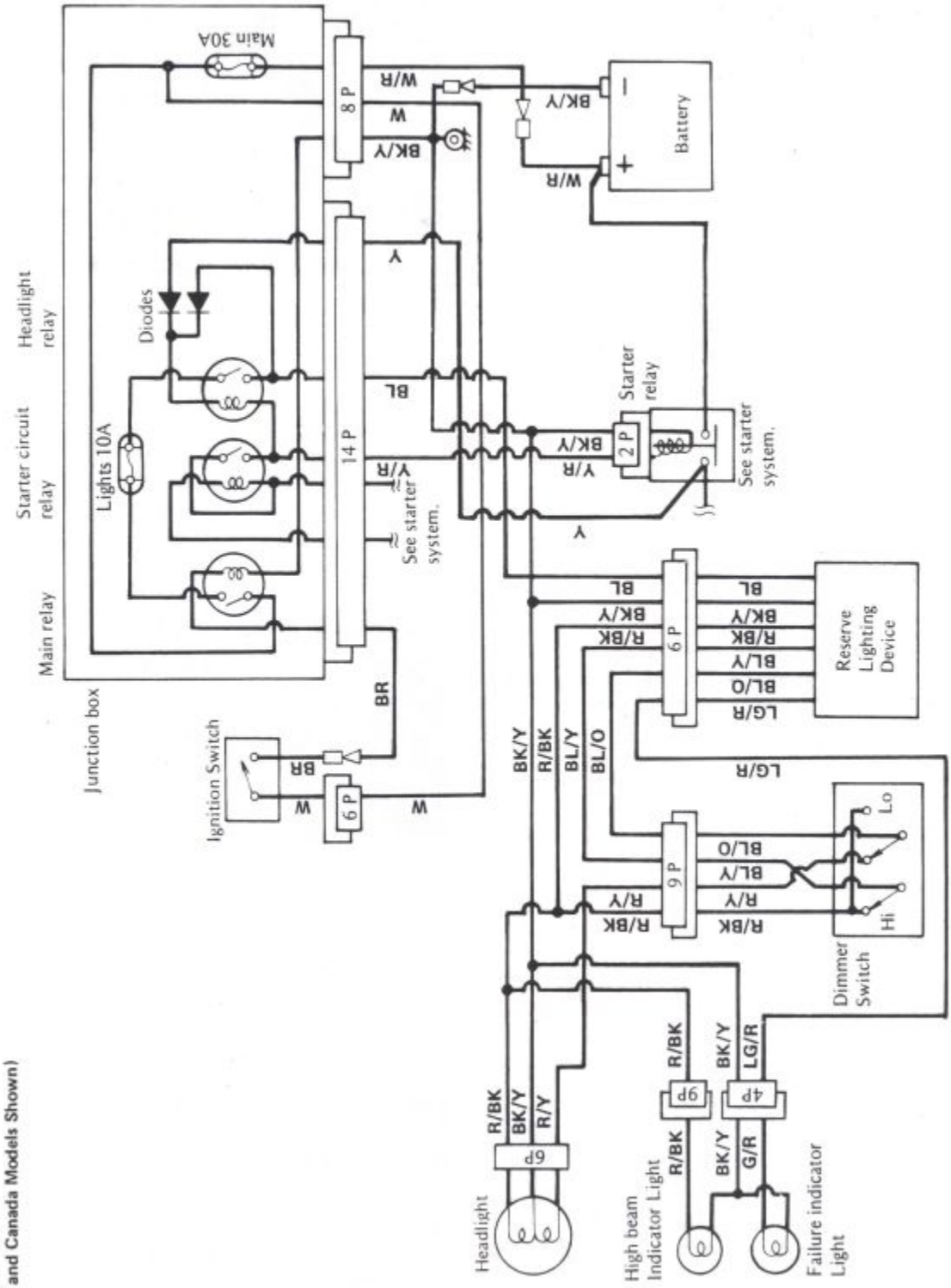

Headlight Circuit
(US and Canada Models Shown)

Tail/Brake Light Lens Removal/Installation Note

- Be careful not to overtighten the lens mounting screws.

Turn Signal Light Bulb Replacement Note

- Be careful not to overtighten the lens mounting screws.

License Plate Light Bulb Replacement Notes

- Install the bulb socket and lens so that the "TOP" mark on the lens points up.

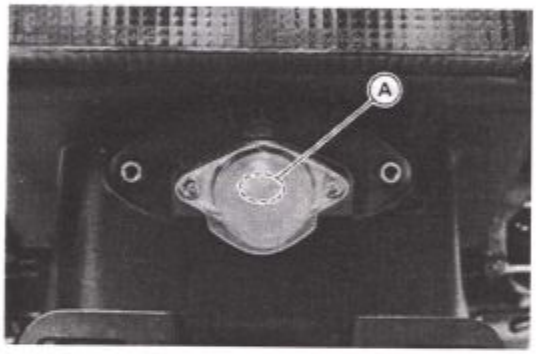

A. "TOP" Mark

- Be careful not to overtighten the lens and socket mounting screws.

Inspection:

For any lighting system problems, always check the lighting system wiring and the bulbs first (see Wiring Inspection).

Headlight Reserve Lighting System Inspection

The US and Canadian models contain a relay in the headlight circuit. In these models, the headlight does not go on when the ignition switch is first turned on, but the headlight goes on once the starter button is pushed to start the engine, and stays on until the ignition switch is turned off. But the headlight goes out whenever the starter button is pushed to restart the engine after engine stalling.

★If all wirings and components other than the reserve lighting device check out good, the device is defective.

Cooling Fan System

Fan System Circuit Inspection

- Disconnect the cooling fan switch leads from the cooling fan switch (Blue/white and Red/white wires).
- Using an auxiliary wire, connect the cooling fan switch leads.

★If the fan turns, inspect the following.
- Wires and Connectors
- Fan Switch

★If the fan does not turn, inspect the following.
- Wires and Connectors
- Cooling Fan Fuse
- Main Fuse in the Junction Box
- Junction Box Internal Circuit
- Fan

Fan Inspection

- Disconnect the 2-pin connector of the fan leads.
- Using two auxiliary wires, supply battery power to the fan.

Wire Connections

Blue Lead ⟷ Battery (+)
Black Lead ⟷ Battery (–)

★If the fan does not turn at this time, the fan is deffective and must be replaced.

Reserve Lighting System Operation

Headlight	Dimmer Switch Position	Headlight Failure Indicator Light	Reserve Lighting
Both high and low beam filaments are normal	HI	Goes on (hardly visible)	———
	LO	Goes on (hardly visible)	———
High beam filament burned out	HI	Goes on	Low beam comes on.
	LO	Goes on (hardly visible)	———
Low beam filament burned out	HI	Goes on (hardly visible)	———
	LO	Goes on	High beam comes on dimly.

Cooling Fan Circuit Wiring Diagram

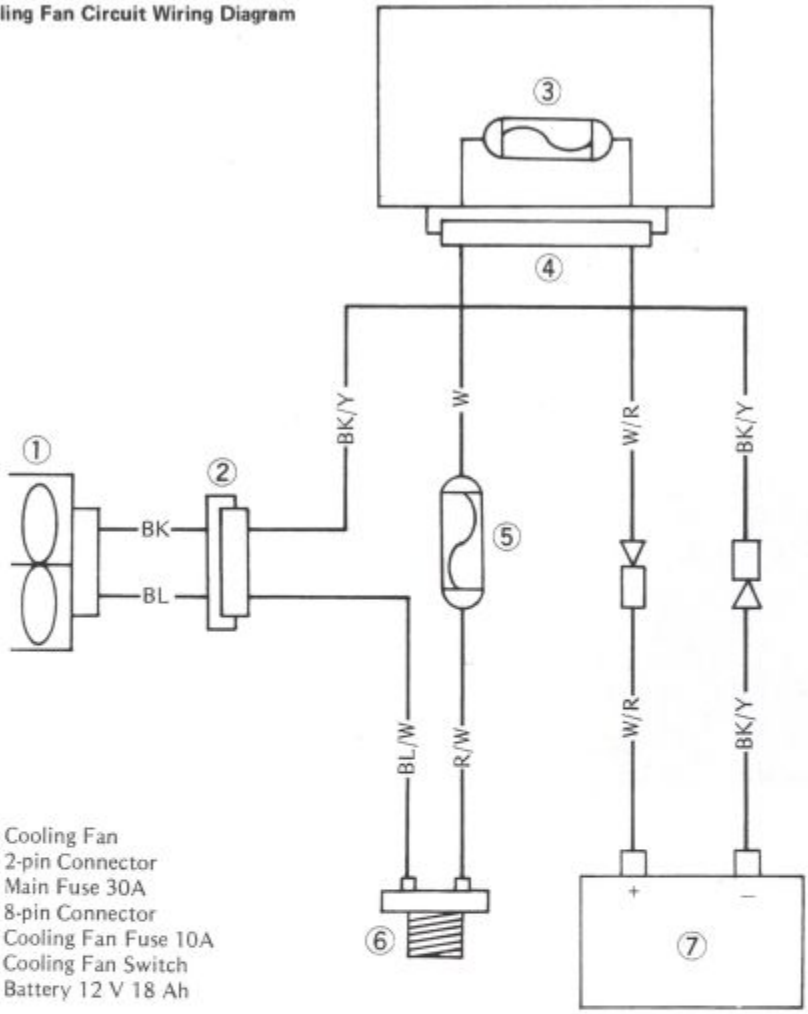

1. Cooling Fan
2. 2-pin Connector
3. Main Fuse 30A
4. 8-pin Connector
5. Cooling Fan Fuse 10A
6. Cooling Fan Switch
7. Battery 12 V 18 Ah

Cooling Fan Fuse Inspection

- Open the case and remove the fuse carefully.
- Inspect the fuse element.

★If it is blown out, replace the fuse. Before replacing a blown fuse, always check the amperage in the affected circuit. If the amperage is equal to or greater than the fuse rating, check the wiring and related components for a short circuit.

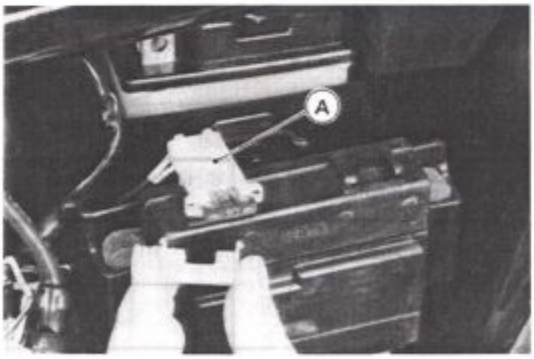

A. Fuse Case

CAUTION

○**When replacing a fuse, be sure the new fuse matches the specified fuse rating for that circuit. Installation of a fuse with a higher rating may cause damage to wiring and components.**

Meters, Gauges, and Digital Clock

Parts Removal:

Meter and Gauge Removal/Installation Note

CAUTION

○**Place the meter or gauge so that the face is up. If a meter or gauge is left upside down or sideways for any length of time it will malfunction.**

Meter Replacement Notes

CAUTION

○**Do not remove a meter pointer unless the meter is to be replaced. The pointers cannot be reinstalled. The pointer mounting is different from replacement meters.**

- To disassemble the meter case, remove all the screws and wiring from the back side of the case.
- Pull the pointer off the meter shaft of the bad meter only, and remove the meter unit from the dial face.
- After mounting the meter unit on the dial face, put on the pointer so that it fits on the meter shaft notch.
- Install the retainer, and tighten the cap while holding the pointer.

Meter's Pointer Installation

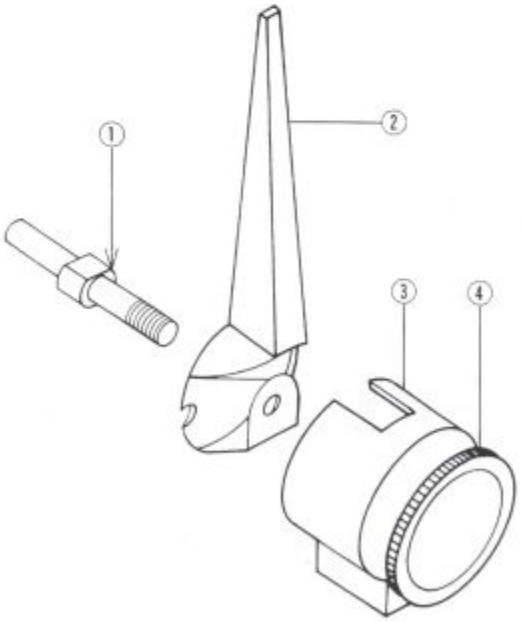

1. Notch
2. Pointer
3. Retainer
4. Cap

Bulb Replacement Notes

- To remove the wedge-base type bulbs (indicator and illumination), pull out the bulb sockets and pull the bulbs off the sockets.

CAUTION

○**Do not use bulbs rated for greater wattage than the specified value, as the meter or gauge panel could become warped by excessive heat radiated from the bulbs.**

Inspection:

Tachometer Inspection

NOTE

○*The tachometer inspection is explained on the assumption that the ignition system operates normally.*

- Check to see that the rubber dampers are installed at the meter mounting bracket.
- ★Install a new damper where it is absent.
- Check to see that the rubber dampers at the meter mounting bracket are in good condition they should not be hard or cracked.
- ★Replace any damaged rubber dampers with new ones.
- Check to see that all meter mounting bolts and nuts are tightened securely.
- ★Tighten the loose fasteners.

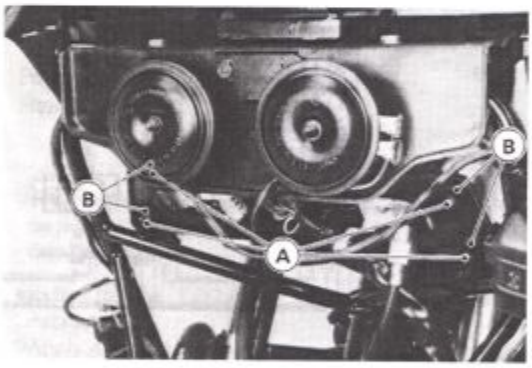

A. Mounting Bolts B. Rubber Damper

- Check the tach/voltmeter circuit wiring (see Wiring Inspection).
- ★If all wiring and components other than the tach/voltmeter unit check out good, the unit is defective.

Digital Clock Inspection

- Check the digital clock circuit wiring.
- ★If all wiring and components other than the digital clock check out good, the clock is defetive.
- Check the tach/voltmeter circuit wiring (see Wiring Inspection).
- ★If all wiring and components other than the tach/voltmeter unit check out good, the unit is defective.

Fuel Gauge Operation Inspection

- Prepare an auxiliary wire, and check the operation of the gauge.
- ★If the gauge readings are correct, the fuel level sensor is bad. If these readings are not obtained, the trouble is with the gauge and/or wiring.
- Check the fuel gauge circuit wiring (see Wiring Inspection).
- ★If all wiring and components other than the fuel gauge unit check out good, the unit is defective.

Fuel Gauge Operation Check

Ignition Switch Position: ON

Wire Location: Female 2-pin sensor connector (disconnected)

Results: Gauge should read E when connector wires are opened.
Gauge should read F when connector wires are shorted.

Tachometer Circuit

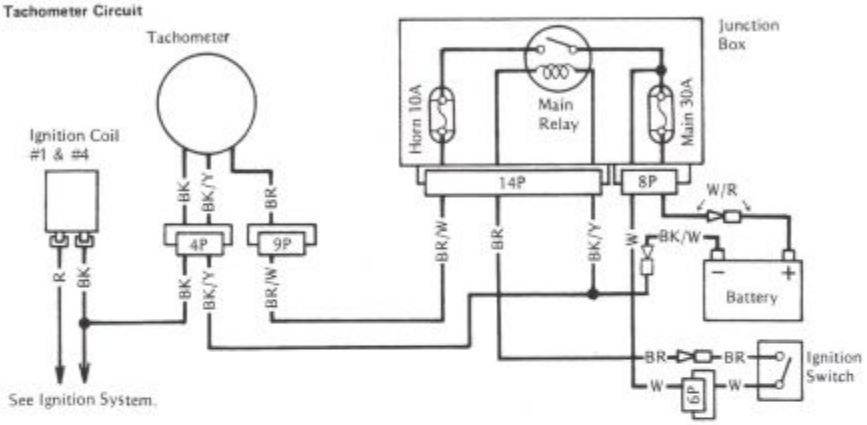

Fuel Gauge Circuit

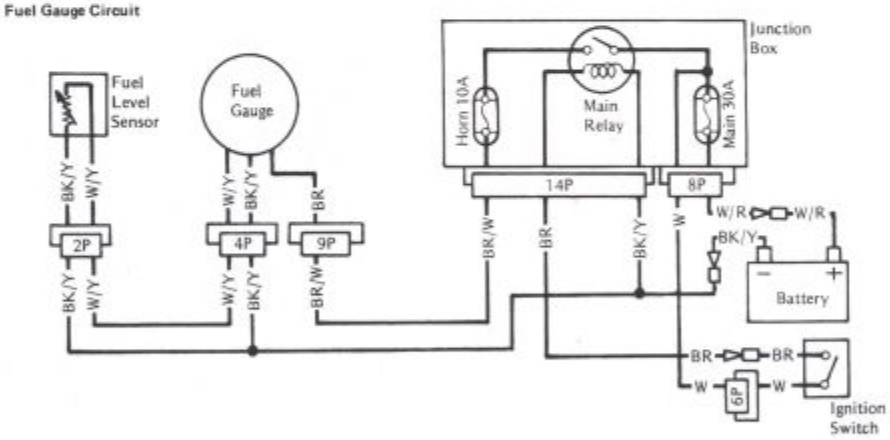

Water Temperature Gauge Circuit

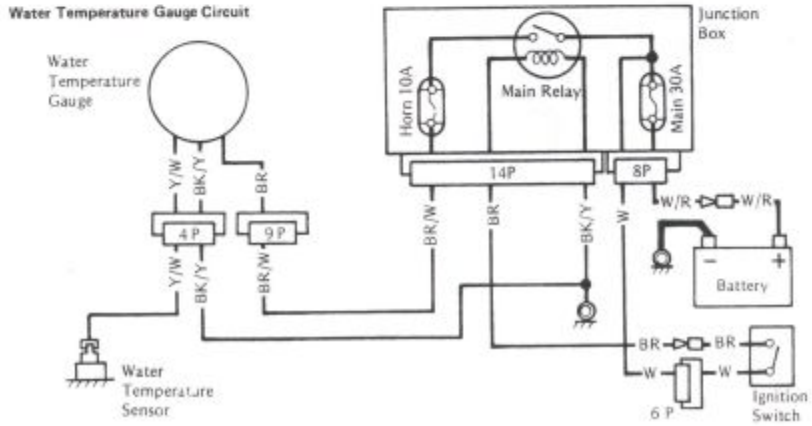

Water Temperature Gauge Operation Inspection

•Prepare an auxiliary wire, and check the operation of the gauge.

Gauge Operation Test

Ignition Switch Position: ON

Wire Location: Female, Sensor Connector (disconnected)

Results: Gauge should read C when connector wire is opened.
Gauge should read H when connector wire is grounded to engine.

CAUTION

○**Do not ground the wiring longer than necessary. After the needle swings to the H position, stop the test. Otherwise the gauge could be damaged.**

★If the gauge readings are correct, the water temperature sensor is bad. If these readings are not obtained, the trouble is with the gauge and/or wiring.

•Check the water temperature gauge circuit wiring (see Wiring Inspection).

★If all wiring and components other than the water temperature gauge unit check out good, the unit is defective.

Switches and Sensors

Adjustment:

Rear Brake Light Switch Inspection

•Turn on the ignition switch.

•Check the operation of the rear brake light switch by depressing the brake pedal. The brake light should go on after about 10 mm of pedal travel.

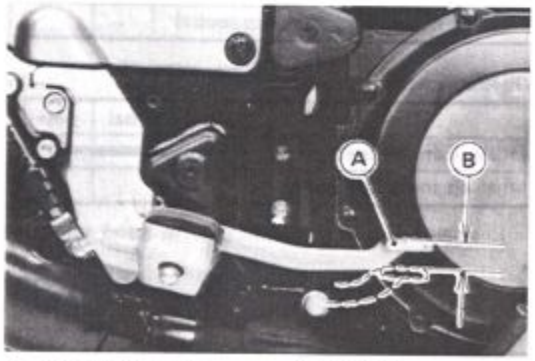

A. Rear Brake Pedal B. 10 mm

★If it does not, adjust the brake light switch.

Rear Brake Light Switch Adjustment

•Remove the right side cover.

•Turn the adjusting nut to adjust the switch.

CAUTION

○**To avoid damaging the electrical connections inside the switch, be sure that the switch body does not turn during adjustment.**

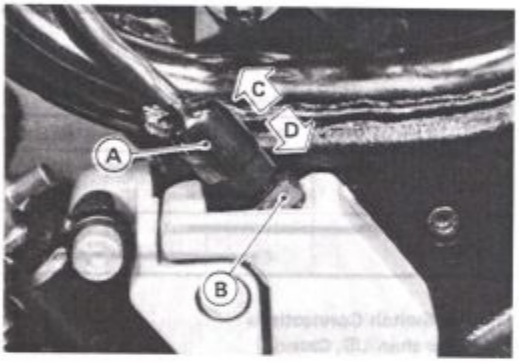

A. Rear Brake Light Switch
B. Adjusting Nut
C. Lights sooner.
D. Lights later.

Parts Removal:

Removal Note

CAUTION

○**The switches, or sensors should never be allowed to fall on a hard surface. Such a shock to these parts can damage them.**

•Refer to the Exploded View for removal and/or installation.

○Apply a non-permanent locking agent to the threads of the following parts.
Water Temperature Sensor
Oil Pressure Switch

○Tighten the following parts to the specified torque.
Water Temperature Sensor
Fan Switch
Neutral Switch
Oil Pressure Switch

Inspection:

Switch Inspection

•Using an ohmmeter, check to see that only the connections shown in the table have continuity (about zero ohms).

★If the switch has an open or short, repair it or replace it with new one.

Starter Lockout Switch Connections

	BK/Y	Y/G	LG
When clutch lever is pulled in	○	○	
When clutch lever is released		○	○

Ignition Switch Connections

	BR	W	Y	BL	R	W/BK	O/G
OFF, LOCK							
ON	○	○	○	○	○	○	○
P(Park)		○			○	○	○
						US, Canada	

Dimmer Switch Connections (US, Canada)

	BL/Y	BL/O	R/Y	R/BK
HI	○			○
		○	○	
LO	○		○	
		○		○

Dimmer Switch Connections (Other than US, Canada)

	R/BK	BL/Y	R/Y
HI	○	○	
LO		○	○

Turn Signal Switch Connections

	GY	O	G
R	○	○	
N			
L		○	○

Hazard Switch Connections

	GY	O	G
Off ■			
On ▬	○	○	○

Passing Button Connections

	BR	R/BK
Free		
Push on	○	○

Horn Button Connections

	BK/W	BK/Y
Free		
Push on	○	○

Engine Stop Switch Connections

	R	Y/R
OFF		
RUN	○	○

Headlight Switch Connections

	R/W	R/BL	BL	BL/Y
OFF				
■	○	○		
ON	○	○	○	○

Front Brake Light Switch Connections

	BR	BL
When brake lever is pulled in	○	○

Rear Brake Light Switch Connections

	BR	BL
When brake pedal is pushed down	○	○

Side Stand Switch Connections

	BR	BK	G
When side stand is up	○	○	
When side stand is down		○	○

Neutral Switch Connections

	LG	⏚
When transmission is in neutral	○	○
When transmission is not in neutral		

Oil Pressure Switch Connections*

	SW. Terminal	⏚
When engine is stopped	○	○
When engine is running		

* : Engine lubrication system is in good condition.

Starter Button Connections

	BK	BK
Free		
Push on	○	○

Fan Switch Connections

○ **Rising temperature:** **From OFF to ON at 93 ~ 103°C (199 ~ 217°F)**

○ **Falling temperature:** **From ON to OFF at 91 ~ 95°C (196 ~ 203°F)**

ON: Less than 0.5 Ω

OFF: More than 1 MΩ

Fan Switch Inspection

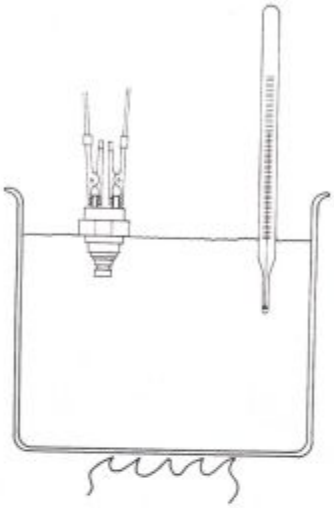

●Suspend the switch in a container of coolant so that the temperature-sensing projection and threaded portion are submerged.

●Suspend an accurate thermometer in the water.

NOTE

○*The switch and thermometer must not touch the container sides or bottom.*

●Place the container over a source of heat and gradually raise the temperature of the water while stirring the water gently.

●Using an ohmmeter, measure the internal resistance of the switch across the terminals at the temperatures shown in the table.

★If the ohmmeter does not show the specified values, replace the switch.

Fuel Level Sensor Inspection

●Remove the fuel level sensor.

●Check that the float moves up and down smoothly without binding. It should go down under its own weight.

★If the float does not move smoothly, replace the sensor.

Fuel Level Sensor

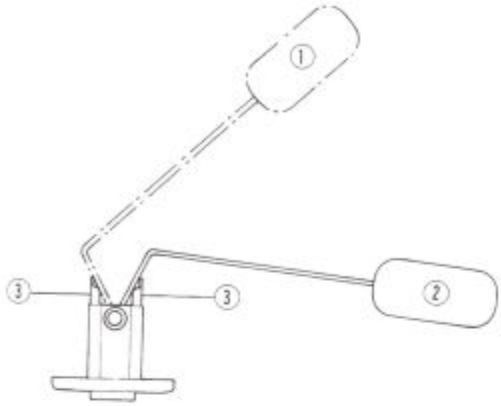

1. Float in full position
2. Float in empty position
3. Float arm stop

●Measure the resistance of the fuel level sensor with an ohmmeter.

★If the ohmmeter does not show the specified values, or the readings do not change smoothly as the float moves up and down, replace the sensor.

Fuel Level Sensor Resistance

Fuel Position:	**4 – 10 Ω**
Empty Position:	**90 – 100 Ω**

●Inspect the leads and 2-pin connector.

★If they show any signs of damage, replace the sensor.

Water Temperature Sensor Inspection

●Remove the water temperature sensor.

●Suspend the sensor in a container of water so that the temperature sensing projection and threaded portion are submerged. The sensor must not touch the container sides or bottom.

●Suspend an accurate thermometer in the water. It must not touch the container, either.

●Place the container over a source of heat and gradually raise the temperature of the water while stirring the water gently.

●Using an ohmmeter, measure the internal resistance of the sensor across the terminal and the body at the temperatures shown in the table.

★If the ohmmeter does not show the specified values, replace the sensor.

Internal Resistance of Water Temperature Sensor

80°C (176°F):	**About 52 Ω**
100°C (212°F):	**About 27 Ω**

Water Temperature Sensor Inspection

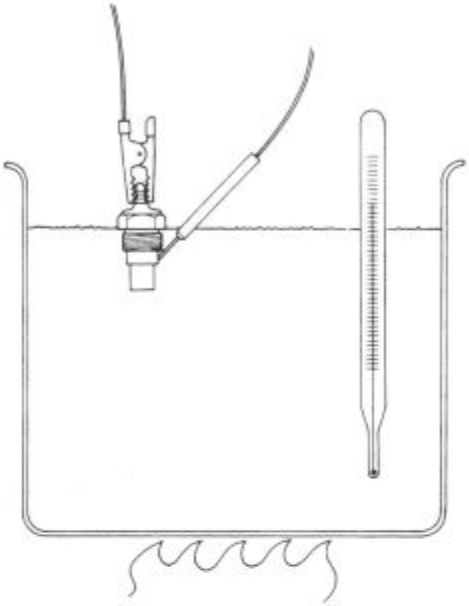

Junction Box

The junction box has fuses, relays and diodes. The relays and diodes can not be removed.

Junction Box Internal Circuit

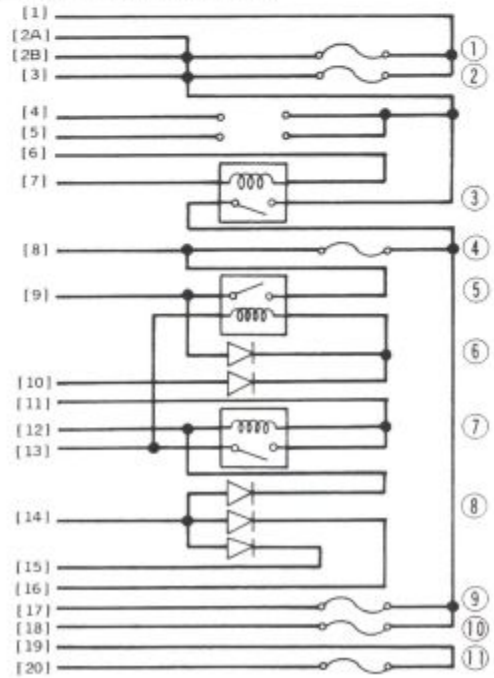

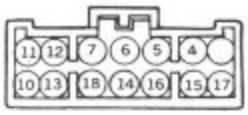

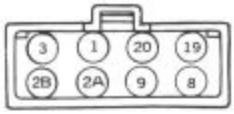

1. Accessory 10 A Fuse
2. Main 30 A Fuse
3. Main Relay
4. Headlight 10 A Fuse
5. Headlight Relay*
6. Diodes
7. Starter Relay
8. Diodes for Safety Device
9. Taillight 10 A Fuse
10. Horn 10 A Fuse
11. Turn Signal 10 A Fuse

* : for US/Canadian models

Fuse Removal

- Remove the side cover.
- Pull the fuse cover off from the junction box.

A. Pull B. Cover

- Pull the fuses straight off from the junction box with the fuse puller which is installed in the junction box.

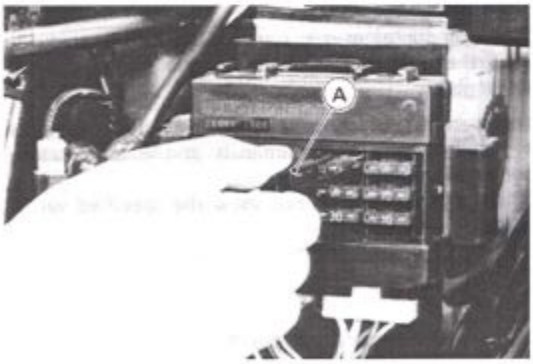

A. Fuse Puller

Fuse Installation Note

○Install the fuses on the original positions shown.

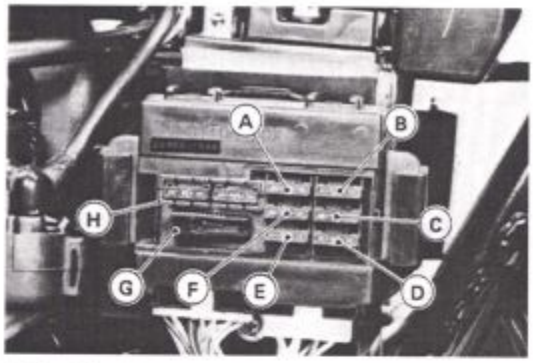

A. 10 A for Taillight
B. 10 A for Horn
C. 10 A for Headlight
D. 10 A for Turn Signal Light
E. 30 A Main Fuse
F. 10 A for Accessory
G. Fuse Puller
H. Spare Fuse

Fuse Inspection

- Remove the fuse from the junction box.
- Inspect the fuse element.
- ★If it is blown out, replace the fuse. Before replacing a blown fuse, always check the amperage in the affected circuit. If the amperage is equal to or greater than the fuse rating, check the wiring and related components for a short circuit.

CAUTION

□**When replacing a fuse, be sure the new fuse matches the speciifed fuse rating for that circuit. Installation of a fuse with a higher rating may cause damage to wiring and components.**

Fuse

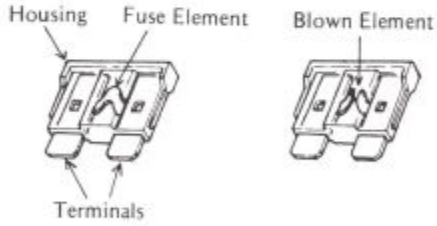

Junction Box Fuse Circuit Inspection

- Remove the junction box from the motorcycle.
- Pull off the connectors from the junction box.
- Make sure all connector terminals are clean and tight, and none of them have been bent.
- ★Clean the dirty terminals and, straighten slightly-bent terminals.
- Check conductivity of the numbered terminals with hand tester.
- ★If the meter does not read as specified, replace the junction box.

Fuse Circuit Inspection

Meter Connection	Meter Reading (Ω)
1 – 3	0
1 – 2B	0
3 – 8*	0
3 – 17*	0
3 – 18*	0
19 – 20	0

* : When 12 V direct current is applyed between No.6 and No. 7 terminal.

Fan, Starter Circuit and Headlight Relay Inspection

- Remove the junction box from the motorcycle.
- Check conductivity of the following numbered terminals by connecting an ohmmeter and one 12 V battery to the junction box as shown.
- ★If the meter does not read as specified, replace the junction box.

Relay Circuit Inspection (with the battery disconnected)

Meter Connection	Meter Reading (Ω)
3 – 8	∞
8 – 9*1	∞
11 – 13	∞
6 – 7	about 320
10 – 13*1	*2
11 – 12	about 320
3 – 7	∞
8 – 13*1	∞
12 – 13	∞

Relay Circuit Inspection (with the battery connected)

Meter Connection	Battery Connection + – –	Meter Reading (Ω)
3 – 8	6 – 7	0
8 – 9*1	10 – 13	0
11 – 13	11 – 12	0

*1: US, Canadian Models only
*2: The resistance should be low in one direction and more than ten times as much in the other direction.

Diode Circuit Inspection

- Remove the junction box from the motorcycle.
- Pull off the connectors from the junction box.
- Check conductivity of the following pair of terminals.

Terminals for Diode Circuit Inspection

9-13*, 10-13*, 14-12, 14-15, 14-16

*** US, Canadian Models Only**

★The resistance should be low in one direction and more than ten times as much in the other direction. If any diode shows low or high in both directions, the diode is defective and the junction box must be replaced.

NOTE

○*The actual meter reading varies with the meter used and the individual diode, but, generally speaking, the lower reading should be from zero to the first ⅓ of the scale.*

Electrical Wiring

Wiring Inspection

●Visually inspect the wiring for signs of burning, fraying, etc.

★If any wiring is poor, apart and inspect it for corrosion, dirt, and damage.

●Pull each connector apart and inspect it for corrosion, dirt, and damage.

★If the connector is corroded or dirty, clean it carefully. If it is damaged, replace it.

●Check the wiring for continuity.

○Use the wiring diagram to find the ends of the lead which is suspected of being a problem.

○Connect an ohmmeter between the ends of the leads.

○Set the meter to the x 1 Ω range, and read the meter.

★If the meter does not read 0 Ω, the lead is defective. Replace the lead or the wiring loom if necessary.

Wiring Installation Note

●Route the cable and harnesses correctly. The cables and wiring harnesses must not hinder handlebar movement (see Calbe Routing in the General Information chapter).

Appendix

Table of Contents

Additional Considerations for Racing

This motorcycle has been manufactured for use in a reasonable and prudent manner and as a vehicle only. However, some may wish to subject this motorcycle to abnormal operation, such as would be experienced under racing conditions. KAWASAKI STRONGLY RECOMMENDS THAT ALL RIDERS RIDE SAFELY AND OBEY ALL LAWS AND REGULATIONS CONCERNING THEIR MOTORCYCLE AND ITS OPERATION.

Racing should be done under supervised conditions, and recognized sanctioning bodies should be contacted for further details. For those who desire to participate in competitive racing or related use, the following technical information may prove useful. However, please note the following important points.

- You are entirely responsible for the use of your motorcycle under abnormal conditions such as racing, and Kawasaki shall not be liable for any damages which might arise from such use.
- Kawasaki's Limited Motorcycle Warranty and Limited Emission Control Systems Warranty specifically exclude motorcycles which are used in competitive or related uses. Please read the warranty carefully.
- Motorcycle racing is a very sophisticated sport, subject to many variables. The following information is theoretical only, and Kawasaki shall not be liable for any damages which might arise from alterations utilizing this information.
- When the motorcycle is operated on public roads, it **must** be in its original state in order to ensure safety and compliance with applicable regulations.

Carburetor:

Sometimes an alteration may be desirable for improved performance under special conditions when proper mixture is not obtained after the carburetor has been properly adjusted, and all parts cleaned and found to be functioning properly.

If the engine still exhibits symptoms of overly lean carburetion after all maintenance and adjustments are correctly performed, the main jet can be replaced with a smaller or larger one. A smaller numbered jet gives a leaner mixture and a larger numbered jet a richer mixture.

Spark Plug:

The spark plug ignites the fuel/air mixture in the combustion chamber. To do this effectively and at the proper time, the correct spark plug must be used, and the spark plug must be kept clean and adjusted.

Test have shown the plug listed in the "Electrical System" chapter to be the best plug for general use.

Since spark plug requirements change with the ignition and carburetion adjustments and with riding conditions, whether or not a spark plug of a correct heat range is used should be determined by removing and inspecting the plug.

When a plug of the correct heat range is being used, the electrodes will stay hot enough to keep all the carbon burned off, but cool enough to keep from damaging the engine and the plug itself. This temperature is about 400 – 800°C (750 – 1,450°F) and can be judged by noting the condition and color of the ceramic insulator around the center electrode. If the ceramic is clean and of a light brown color, the plug is operating at the right temperature.

A spark plug for higher operating temperatures is used for racing. Such a plug is designed for better cooling efficiency so that it will not overheat and thus is often called a "colder" plug. If a spark plug with too high a heat range is used – that is, a "cold" plug that cools iteself too well – the plug will stay too cool to burn off the carbon, and the carbon will collect on the electrodes and the ceramic insulator.

The carbon on the electrodes conducts electricity, and can short the center electrode to ground by either coating the ceramic insulator or bridging across the gap. Such a short will prevent an effective spark. Carbon build-up on the plug can also cause other troubles. It can heat up red-hot and cause preignition and knocking, which may eventually burn a hole in the top of the piston.

Spark Plug

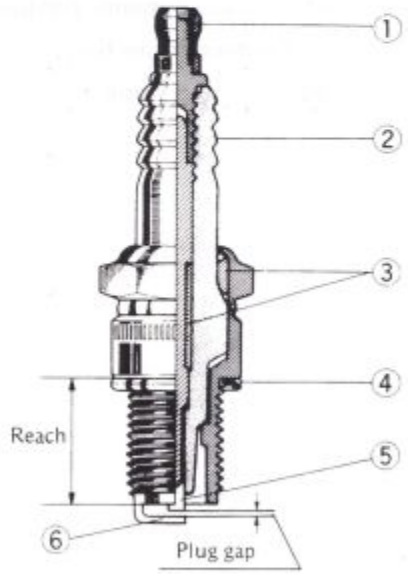

1. Terminal
2. Insulator
3. Cement
4. Gasket
5. Center electrode
6. Side electrode

Spark Plug Inspection

- Remove the spark plug and inspect the ceramic insulator.

Spark Plug Condition

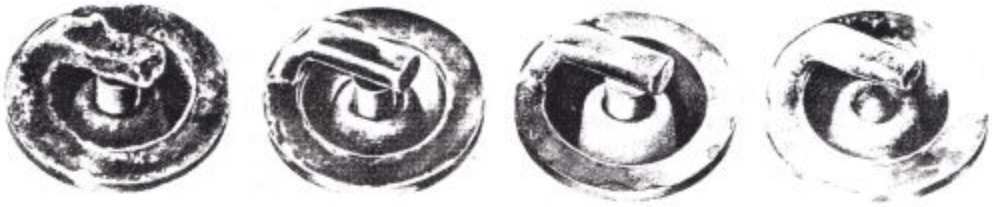

Carbon Fouling | Oil Fouling | Normal Operation | Overheating

★Whether or not the right temperature plug is being used can be ascertained by noting the condition of the ceramic insulator around the electrode. A light brown color indicates the correct plug is being used. If the ceramic is white, the plug is operating at too high a temperature and it should be replaced with the next colder type.

CAUTION

○**If the spark plug is replaced with a type other than the standard plug, make certain the replacement plug has the same thread pitch and reach (length of threaded portion) and the same insulator type (regular type or projected type) as the standard plug.**

○**If the plug reach is too short, carbon will build up on the plug hole threads in the cylinder head, causing overheating and making it very difficult to insert the correct spark plug later.**

○**If the reach is too long, carbon will build up on the exposed spark plug threads causing overheating, preigniton, and possibly burning a hole in the piston top. In addition, it may be impossible to remove the plug without damaging the cylinder head.**

NOTE

○*The heat range of the spark plug functions like a thermostat for the engine. Using the wrong type of spark plug can make the engine run too hot (resulting in engine damage) or too cold (with poor performance, misfiring, and stalling).*

Plug Reach

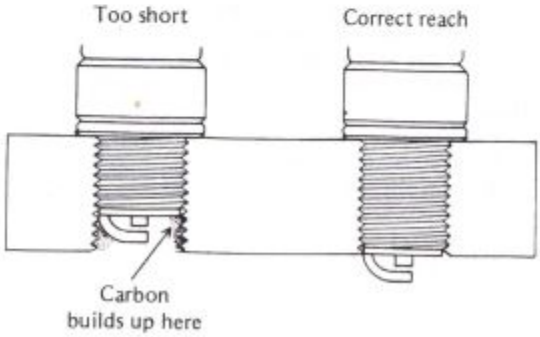

Standard Spark Plug Threads

Diameter:	**12 mm**
Pitch:	**1.25 mm**
Reach:	**19.0 mm**

Troubleshooting Guide

NOTE

○*This is not an exhaustive list, giving every possible cause for each problem listed. It is meant simply as a rough guide to assist the troubleshooting for some of the more common difficulties.*

Engine Doesn't Start, Starting Difficulty:

Starter motor not rotating:
- Starter lockout or neutral switch trouble
- Starter motor trouble
- Battery voltage low
- Relays not contacting or operating
- Starter button not contacting
- Wiring open or shorted
- Ignition switch trouble
- Engine stop switch trouble
- Fuse blown

Starter motor rotating but engine doesn't turn over:
- Starter motor clutch trouble

Engine won't turn over:
- Valve seizure
- Rocker arm seizure
- Cylinder, piston seizure
- Crankshaft seizure
- Connecting rod small end seizure
- Connecting rod big end seizure
- Transmission gear or bearing seizure
- Camshaft seizure
- Alternator shaft bearing seizure
- Balancer bearing seizure

No fuel flow:
- Fuel tap vacuum hose clogged
- Fuel tank air vent obstructed
- Fuel tap clogged
- Fuel line clogged
- Float valve clogged

Engine flooded:
- Fuel level in carburetor float bowl too high
- Float valve worn or stuck open
- Starting technique faulty
- (When flooded, crank the engine with the throttle fully open to allow more air to reach the engine.)

No spark; spark weak:
- Battery voltage low
- Spark plug dirty, broken, or maladjusted
- Spark plug cap or high tension wiring trouble
- Spark plug cap not in good contact
- Spark plug incorrect
- IC igniter trouble
- Neutral, starter lockout, or side stand switch trouble
- Pickup coil trouble
- Ignition coil trouble
- Ignition or engine stop switch shorted
- Wiring shorted or open
- Fuse blown

Compression Low:
- Spark plug loose
- Cylinder head not sufficiently tightened down
- No valve clearance
- Cylinder, piston worn
- Piston ring bad (worn, weak, broken, or sticking)
- Piston ring/land clearance excessive
- Cylinder head gasket damaged
- Cylinder head warped
- Valve spring broken or weak
- Valve not seating properly (valve bent, worn, or carbon accumulation on the seating surface)

Poor Running at Low Speed:

Spark weak:
- Battery voltage low
- Spark plug dirty, broken, or maladjusted
- Spark plug cap or high tension wiring trouble
- Spark plug cap shorted or not in good contact
- Spark plug incorrect
- IC igniter trouble
- Pickup coil trouble
- Ignition coil trouble

Fuel/air mixture incorrect:
- Pilot screw maladjusted
- Pilot jet, or air passage clogged
- Air bleed pipe bleed holes clogged
- Pilot passage clogged
- Air cleaner clogged, poorly sealed, or missing
- Starter plunger stuck open
- Fuel level in carburetor float bowl too high or too low
- Fuel tank air vent obstructed
- Carburetor holder loose
- Air cleaner duct loose

Compression low:
- Spark plug loose
- Cylinder head not sufficiently tightened down
- No valve clearance
- Cylinder, piston worn
- Piston ring bad (worn, weak, broken, or sticking)
- Piston ring/land clearance excessive
- Cylinder head warped
- Cylinder head gasket damaged
- Valve spring broken or weak
- Valve not seating properly (valve bent, worn, or carbon accumulation on the seating surface)

Other:
- IC igniter trouble
- Carburetors not synchronizing
- Vacuum piston doesn't slide smoothly
- Engine oil viscosity too high
- Drive train trouble
- Brake dragging
- Air suction valve trouble
- Vacuum switch valve trouble

Poor Running or No Power at High Speed:

Firing incorrect:
- Spark plug dirty, broken, or maladjusted
- Spark plug cap shorted or not in good contact

Spark plug incorrect
IC igniter trouble
Pickup coil trouble
Ignition coil trouble

Fuel/air mixture incorrect:
Starter plunger stuck open
Main jet clogged or wrong size
Jet needle or needle jet worn
Air jet clogged
Fuel level in carburetor float bowl too high or too low
Bleed holes of air bleed pipe or needle jet clogged
Air cleaner clogged, poorly sealed, or missing
Air cleaner duct poorly sealed
Water or foreign matter in fuel
Carburetor holder loose
Fuel tank air vent obstructed
Fuel tap clogged
Fuel line clogged

Compression low:
Spark plug loose
Cylinder head not sufficiently tightened down
No valve clearance
Cylinder, piston worn
Piston ring bad (worn, weak, broken, or sticking)
Piston ring/land clearance excessive
Cylinder head gasket damaged
Cylinder head warped
Valve spring broken or weak
Valve not seating properly (valve bent, worn, or carbon accumulation on the seating surface.)

Knocking:
Carbon built up in combustion chamber
Fuel poor quality or incorrect
Spark plug incorrect
IC igniter trouble

Miscellaneous:
Throttle valve won't fully open
Vaccum piston doesn't slide smoothly
Brake dragging
Clutch slipping
Overheating
Engine oil level too high
Engine oil viscosity too high
Drive train trouble
Air suction valve trouble
Vacuum switch valve trouble

Overheating:

Firing incorrect:
Spark plug dirty, broken, or maladjusted
Spark plug incorrect
IC igniter trouble

Fuel/air mixture incorrect:
Main jet clogged or wrong size
Fuel level in carburetor float bowl too low
Carburetor holder loose
Air cleaner poorly sealed, or missing
Air cleaner duct poorly sealed
Air cleaner clogged

Compression high:
Carbon built up in combustion chamber

Engine load faulty:
Clutch slipping
Engine oil level too high
Engine oil viscosity too high
Drive train trouble
Brake dragging

Lubrication inadequate:
Engine oil level too low
Engine oil poor quality or incorrect

Gauge incorrect:
Water temperature gauge broken
Water temperature sensor broken

Coolant incorrect:
Coolant level too low
Coolant deteriorated

Cooling system component incorrect:
Radiator clogged
Thermostat trouble
Radiator cap trouble
Thermostatic fan switch trouble
Fan relay trouble
Fan motor broken
Fan blade damaged
Water pump not turning
Water pump impeller damaged

Over Cooling:

Gauge incorrect:
Water temperature gauge broken
Water temperature sensor broken

Cooling system component incorrect:
Thermostatic fan switch trouble
Thermostat trouble

Clutch Operation Faulty:

Clutch slipping:
Friction plate worn or warped
Steel plate worn or warped
Clutch spring broken or weak
Clutch release mechanism trouble
Clutch hub or housing unevenly worn

Clutch not disengaging properly:
Clutch plate warped or too rough
Clutch spring tension uneven
Engine oil deteriorated
Engine oil viscosity too high
Engine oil level too high
Clutch housing frozen on drive shaft
Clutch release mechanism trouble
Clutch hub locknut loose
Air in the clutch fluid line
Clutch fluid leak
Clutch fluid deteriorated
Primary or secondary cup damaged
Master cylinder scratched inside

Gear Shifting Faulty:

Doesn't go into gear; shift pedal doesn't return:
Clutch not disengaging
Shift fork bent or seized
Gear stuck on the shaft

Gear positioning lever binding
Neutral positioning lever binding
Shift return spring weak or broken
Shift return spring pin loose
Shift mechanism arm spring broken
Shift mechanism arm broken
Shift pawl broken

Jumps out of gear:
Shift fork worn
Gear groove worn
Gear dogs and/or dog holes worn
Shift drum groove worn
Gear positioning lever spring weak or broken
Shift fork pin worn
Drive shaft, output shaft, and/or gear splines worn

Overshifts:
Gear positioning lever spring weak or broken
Shift mechanism arm spring broken

Abnormal Engine Noise:

Knocking:
IC igniter trouble
Carbon built up in combustion chamber
Fuel poor quality or incorrect
Spark plug incorrect
Overheating

Piston slap:
Cylinder/piston clearance excessive
Cylinder, piston worn
Connecting rod bent
Piston pin, piston holes worn

Valve noise:
Valve clearance incorrect
Valve spring broken or weak
Camshaft bearing worn

Other noise:
Connecting rod small end clearance excessive
Connecting rod big end clearance excessive
Piston ring worn, broken or stuck
Piston seizure, damage
Cylinder head gasket leaking
Exhaust pipe leaking at cylinder head connection
Crankshaft runout excessive
Engine mounts loose
Crankshaft bearing worn
Primary gear worn or chipped
Camshaft chain tensioner trouble
Camshaft chain, sprocket, guide worn
Air suction valve damaged
Vacuum switch valve damaged
Balancer gear worn or chipped
Balancer shaft position maladjusted
Balancer bearing worn
Balancer or alternator shaft coupling rubber damper damaged
Alternator shaft chain tensioner trouble
Alternator shaft chain, sprocket, guide worn

Abnormal Drive Train Noise:

Clutch noise:
Weak or damaged rubber damper
Clutch housing/friction plate clearance excessive
Clutch housing gear worn

Transmission noise:
Bearings worn
Transmission gears worn or chipped
Metal chips jammed in gear teeth
Engine oil insufficient

Drive line noise:
Bevel gear bearing worn
Bevel gears worn or chipped
Bevel gears maladjusted
Rear wheel coupling damaged
Insufficient lubricant

Abnormal Frame Noise:

Front fork noise:
Oil insufficient or too thin
Spring weak or broken

Rear shock absorber noise:
Shock absorber damaged

Disc brake noise:
Pad installed incorrectly
Pad surface glazed
Disc warped
Caliper trouble

Other noise:
Bracket, nut, bolt, etc. not properly mounted or tightened

Oil Pressure Warning Light Goes On:

Engine oil pump damaged
Engine oil screen clogged
Engine oil level too low
Engine oil viscosity too low
Camshaft bearings worn
Crankshaft bearings worn
Oil pressure switch damaged
Wiring damaged
Relief valve stuck open
O-ring at the oil pipe in the crankcase damaged

Exhaust Smokes Excessively:

White smoke:
Piston oil ring worn
Cylinder worn
Valve oil seal damaged
Valve guide worn
Engine oil level too high

Black smoke:
Air cleaner clogged
Main jet too large or fallen off
Starter plunger stuck open
Fuel level in carburetor float bowl too high

Brown smoke:
Main jet too small
Fuel level in carburetor float bowl too low
Air cleaner duct loose
Air cleaner poorly sealed or missing

Handling and/or Stability Unsatisfactory:

Handlebar hard to turn:

- Steering stem locknut too tight
- Bearing damaged
- Steering bearing lubrication inadequate
- Steering stem bent
- Tire air pressure too low

Handlebar shakes or excessively vibrates:

- Tire worn
- Swing arm pivot bearing worn
- Rim warped, or not balanced
- Wheel bearing worn
- Handlebar clamp loose
- Steering stem head nut loose

Handlebar pulls to one side:

- Frame bent
- Wheel misalignment
- Swing arm bent or twisted
- Steering maladjusted
- Front fork bent
- Right/left fork legs unbalanced (oil level, air pressure, anti-dive setting)

Shock absorption unsatisfactory:

(Too hard)

- Front fork oil excessive
- Front fork oil viscosity too high
- Front fork air pressure too high
- Rear shock absorber air pressure too high
- Tire air pressure too high
- Front fork anti-dive mechanism trouble
- Front fork bent

(Too soft)

- Front fork oil insufficient and/or leaking
- Front fork oil viscosity too low
- Front fork air pressure too low
- Rear shock absorber air pressure too low
- Front fork, rear shock absorber spring weak
- Rear shock absorber oil leaking
- Front fork anti-dive mechanism trouble

Brake Doesn't Hold:

- Air in the brake line
- Pad or disc worn
- Brake fluid leak
- Disc warped
- Contaminated pad
- Brake fluid deteriorated
- Primary or secondary cup damaged
- Master cylinder scratched inside

Battery Discharged:

- Battery faulty (e.g., plates sulphated, shorted through sedimentation, electrolyte level too low)
- Batterly leads making poor contact
- Load excessive (e.g., bulb of excessive wattage)
- Ignition switch trouble
- Alternator trouble
- Wiring faulty

Battery Overcharged:

- Alternator trouble

General Lubrication

Lubrication

- Before lubricating each part, clean off any rusty spots with rust remover and wipe off any grease, oil, dirt, or grime.
- Lubricate the points listed below with indicated lubricant.

NOTE

○*Whenever the vehicle has been operated under wet or rainy conditions, or especially after using a high-pressure spray water, perform the general lubrication.*

Pivots: Lubricate with Motor Oil.

Center Stand
Clutch Lever
Front Brake Lever
Rear Brake Pedal
Rear Brake Rod Joint
Shift Linkage
Shift Pedal
Side Stand

Points: Lubricate with Grease.

Handlebar Throttle Grip Portion
Speedometer Inner Cable*
Throttle Inner Cable Lower Ends
*Grease the lower part of the inner cable

Cables: Lubricate with Motor Oil.

Choke Cable
Throttle Cables

Cable Lubrication

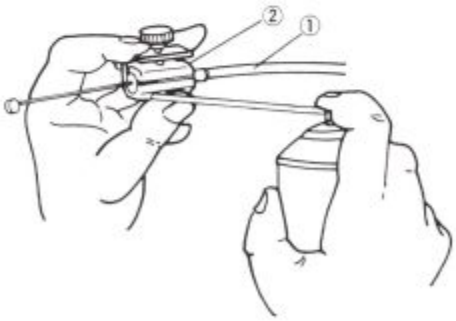

1. Cable
2. Pressure Cable Luber: K56019-021

Nut, Bolt, and Fastener Tightness

Tightness Inspection

- Check the tightness of the bolts and nuts listed here. Also, check to see that each cotter pin is in place and in good condition.

NOTE

○*For the engine fasteners, check the tightness of them when the engine is cold (at room temperature).*

★If there are loose fasteners, retorque them to the specified torque following the specified tightening sequence. Refer to the appropriate chapter for torque specifications. If torque specifications are not in the appropriate chapter, see the Standard Torque Table. For each fastener, first loosen it by ½ turn, then tighten it.

★If cotter pins are damaged, replace them with new ones.

Nut, Bolt, and Fastener to checked

Wheels:
- Front axle nut
- Front axle clamp bolt
- Rear axle nut

Brake:
- Master cylinder clamp bolts
- Caliper mounting bolts
- Torque link nuts
- Brake pedal bracket bolts
- Rear master cylinder mounting bolt
- Brake rod clevis pin cotter pin

Suspension:
- Front fork clamp bolts
- Front fork top bolts
- Swing arm pivot shaft nut
- Uni-trak nuts

Steering:
- Handlebar clamp bolts
- Handlebar holder mounting bolts
- Stem head nut

Engine:
- Muffler mounting nuts
- Muffler mounting bolts
- Exhaust pipe holder nuts
- Engine mounting bolts
- Engine mounting nuts
- Shift pedal bolt
- Muffler connecting pipe clamp bolts
- Cylinder head bolts

Others:
- Clutch lever holder bolts
- Side stand nut
- Front footpeg mounting bolts
- Rear footpeg mounting bolts
- Front footpeg safety clips
- Rear footpeg safety clips

Unit Conversion Table

Prefixes for Units:

Prefix	Symbol	Power
mega	M	x 1,000,000
kilo	k	x 1,000
centi	c	x 0.01
milli	m	x 0.001
micro	μ	x 0.000001

Units of Mass:

kg	x	2.205	=	lb
g	x	0.03527	=	oz

Units of Volume:

L	x	0.2642	=	gal (US)
L	x	0.2200	=	gal (imp)
L	x	1.057	=	qt (US)
L	x	0.8799	=	qt (imp)
L	x	2.113	=	pint (US)
L	x	1.816	=	pint (imp)
mL	x	0.03381	=	oz (US)
mL	x	0.02816	=	oz (imp)
mL	x	0.06102	=	cu in

Units of Force:

N	x	0.1020	=	kg
N	x	0.2248	=	lb
kg	x	9.807	=	N
kg	x	2.205	=	lb

Units of Length:

km	x	0.6214	=	mile
m	x	3.281	=	ft
mm	x	0.03937	=	in

Units of Torque:

N-m	x	0.1020	=	kg-m
N-m	x	0.7376	=	ft-lb
N-m	x	8.851	=	in-lb
kg-m	x	9.807	=	N-m
kg-m	x	7.233	=	ft-lb
kg-m	x	86.80	=	in-lb

Units of Pressure:

kPa	x	0.01020	=	kg/cm²
kPa	x	0.1450	=	psi
kPa	x	0.7501	=	cm Hg
kg/cm²	x	98.07	=	kPa
kg/cm²	x	14.22	=	psi
cm Hg	x	1.333	=	kPa

Units of Speed:

km/h	x	0.6214	=	mph

Units of Power:

kW	x	1.360	=	PS
kW	x	1.341	=	HP
PS	x	0.7355	=	kW
PS	x	0.9863	=	HP

Units of Temperature:

$$\frac{9\,(°C + 40)}{5} - 40 = °F \qquad \frac{5\,(°F + 40)}{9} - 40 = °C$$

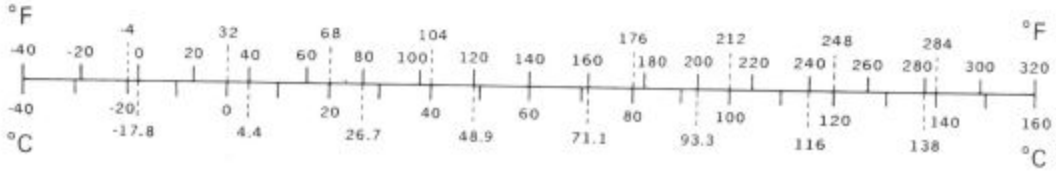

Supplement-1989 Model

This "Supplement — 1989 Model" chapter is designed to be used in conjunction with the front part of this manual (up to 16-9). The maintenance and repair procedures described in this chapter are only those that are unique to the 1989 ZG1000-A4 motorcycles. Most service operations for these models remain identical to those described in front of this chapter.

Complete and proper servicing of the 1989 ZG1000-A4 motorcycles, therefore requires mechanics to read both this chapter and the text in front of this chapter.

Table of Contents

General Information

Model Identification

ZG1000-A4:

General Specifications

Items	ZG1000-A4
Dimensions:	
Overall length	2,290 mm
Overall width	930 mm, (Fi)(N) 760 mm
Overall height	1,415 mm
Wheelbase	1,555 mm
Road clearance	140 mm
Seat height	815 mm
Dry weight	265 kg, (Fi)(N) 258 kg, (Cal) 265.5 kg
Curb weight: Front	142 kg
Rear	160 kg, (Cal) 160.5 kg
Fuel tank capacity	28.5 L
Performance:	
Climbing ability	30°
Braking distance	12.5 m from 50 km/h
Minimum turning radius	3.3 m
Engine:	
Type	4-stroke, DOHC, 4-cylinder
Cooling system	Liquid-cooled
Bore and stroke	74.0 x 58.0 mm
Displacement	997 mL
Compression ratio	10.2
Maximum horsepower	80.9 kW (110 PS) @9,500 r/min (rpm),
	(F) 75.1 kW (102 PS) @9,000 r/min (rpm)(UTAC's Norms),
	(A) 78.0 kW (106 PS) @8,500 r/min (rpm),
	(AR) 68.4 kW (93 PS) @9,000 r/min (rpm),
	(Swi) 52.2 kW (71 PS) @6,000 r/min (rpm),
	(Swe)(W) 73.6 kW (100 PS) @8,500 r/min (rpm)(DIN)
Maximum torque	98.0 N-m (10.0 kg-m, 72.3 ft-lb) @6,500 r/min (rpm),
	(F) ——, (A) 94.1 N-m (9.6 kg-m, 69.4 ft-lb) @6,500 r/min (rpm),
	(AR) 83.0 N-m (8.5 kg-m, 61 ft-lb) @6,500 r/min (rpm),
	(Swi) 85.3 N-m (8.7 kg-m, 62.9 ft-lb) @5,500 r/min (rpm)
	(Swe)(W) 90.2 N-m (9.2 kg-m, 66.5 ft-lb) @6,500 r/min (rpm)(DIN)
Carburetion system	Carburetors, Keihin CVK32 x 4
Starting system	Electric starter
Ignition system	Battery and coil (transistorized)
Timing advance	Electrically advanced

Items			ZG1000-A4
Ignition timing			From 10° BTDC @1,000 r/min (rpm) to 35° BTDC @3,500 r/min (rpm), (Cal) From 10° BTDC @1,200 r/min (rpm) to 35° BTDC @3,500 r/min (rpm), (Swi) From 10° BTDC @1,200 r/min (rpm) to 35° BTDC @3,500 r/min (rpm)
Spark plug			NGK DR8ES or ND X27ESR-U, (Cal) (U) NGK D8EA or ND X24ES-U, (A) (I) (SA) NGK D9EA or ND X27ES-U, (C) NGK DR8ES-L or ND X24ESR-U
Cylinder numbering method			Left to right, 1-2-3-4
Firing order			1-2-4-3
Valve timing:	Inlet	Open	37.5° BTDC
		Close	57.5° ABDC
		Duration	275°
	Exhaust	Open	57.5° BBDC
		Close	37.5° ATDC
		Duration	275°
Lubrication system			Forced lubrication (wet sump with cooler)
Engine oil:	Grade		SE or SF class
	Viscosity		SAE 10W40, 10W50, 20W40, or 20W50
	Capacity		3.7 L
Drive Train:			
Primary reduction system:			
	Type		Gear
	Reduction ratio		1.732 (97/56)
Clutch type			Wet multi disc
Transmission:	Type		6-speed, constant mesh, return shift
	Gear ratios:	1st	3.071 (43/14)
		2nd	2.055 (37/18)
		3rd	1.590 (35/22)
		4th	1.333 (32/24)
		5th	1.153 (30/26)
		6th	0.965 (28/29)
Final drive system:	Type		Shaft drive
	Reduction ratio		2.708 (16/21 x 32/9)
	Overall drive ratio		4.530 @ Top gear
Final gear case oil:	Type		API GL-5 Hypoid gear oil SAE90 (above 5°C) SAE80 (below 5°C)
	Capacity		220 mL

Items		ZG1000-A4
Frame:		
Type		Tubular, diamond
Caster (rake angle)		28.5°
Trail		123 mm
Front tire:	Type	Tubeless
	Size	110/80 VR 18 or 110/80 V18
Rear tire:	Type	Tubeless
	Size	150/80 VR 16 or 150/80 VB 16
Front suspension:	Type	Telescopic fork (pneumatic)
	Wheel travel	140 mm
Rear suspension:	Type	Swing arm (uni-trak)
	Wheel travel	140 mm
Brake type:	Front	Dual disc
	Rear	Single disc
Electrical Equipment:		
Battery		12 V 18 Ah
Headlight:	Type	Semi-sealed beam
	Bulb	12 V 60/55 W
Tail/brake light		12 V 5/21 W x 2, Ⓒ ⓈⒶ Ⓤ 12 V 8/27 W x 2
Alternator:	Type	Three-phase AC
	Rated output	28.6 A @6,000 r/min (rpm), 14 V

Specifications subject to change without notice, and may not apply to every country.

Ⓐ : Australian Model
Ⓒ : Canadian Model
ⒶⓇ: Austrian Model
Ⓒⓐ : California Model
Ⓕ : French Model
Ⓕⓘ : Finnish Model
Ⓘ : Italian Model
Ⓝ : Norwegian Model
ⓈⒶ : South African Model
Ⓢⓦⓔ : Swedish Model
Ⓢⓦⓘ : Swiss Model
Ⓤ : US Model
Ⓦ : West German Model

Fuel System

Specifications

The following specifications are only those that are unique to the ZG1000-A4 model.

Carburetor Specifications

Make/Type	Keihin/CVK32
Main Jet	125, (Cal) 130 [122, (Cal) 128]
Main Air Jet	130
Air Cut Valve Air Jet	#85
Jet Needle	N52M
Pilot Jet	35 [32]
Pilot Air Jet	85
Pilot Screw	2 turns out, (U) –, (AR) 1½, (Swi) 1¼
Starter Jet	55, (Cal) 45
Fuel Level	–0.5 mm [1.5 mm (above) ~ 0.5 mm (below from bottom edge of carburetor body]
Float Height	17 mm

(AR) : Austrian Model
(Cal) : Californian Model
(Swi) : Swiss Model
(U) : US Model
[ ] : High Altitude (US Model)

Idle Speed

Standard: 1,000 ±50 r/min (rpm),
(Cal) 1,200 ±50 r/min (rpm)
(Swi) 1,200 ±50 r/min (rpm)

Wheels/Tires

Special Tools

The following special tools are newly available.

Bearing Remover Shaft: 57001-1265

Bearing Remover Head: 57001-1267

Bearing Remover Head: 57001-1293

Tires

New air valves and wheels are used on the front and rear wheel ass'ys.

There are not interchangeable with that of the old models.

Tire Removal

Air valve installation procedures are only those that are unique to ZG1000-A4 model. For all other data refer to p. 9-8.

Installation

●Remove the air valve and discard it.

CAUTION

○**Replace the air valve whenever the tire is replaced.**
○**Do not reuse the air valve.**

Air Valve

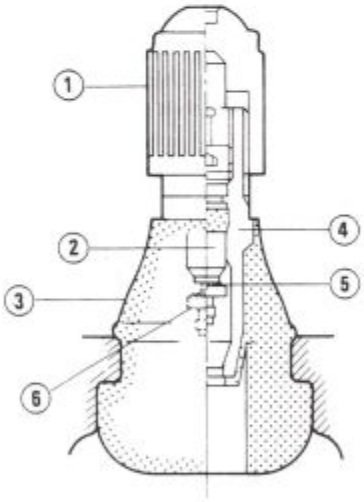

1. Plastic Cap
2. Valve Core
3. Stem Seal
4. Valve Stem
5. Valve Seat
6. Valve Opened

●Install a new valve in the rim.
○Remove the valve cap, lubricate the stem with a soap and water solution, and pull the stem through the rim from the inside out until it snaps into place.

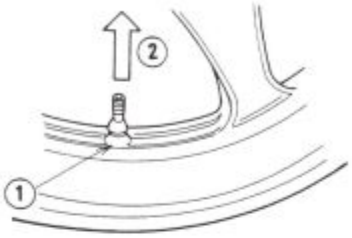

1. Apply soap and water solution.
2. Pull the stem out.

CAUTION

○**Do not use engine oil or petroleum distillates to lubricate the stem because they will deteriorate the rubber.**

Hub Bearings

Hub Bearing Removal

Refer to p. 9-11, noting the following.

●The bearing remover shaft and heads (special tools) can be used to remove the hub bearings.

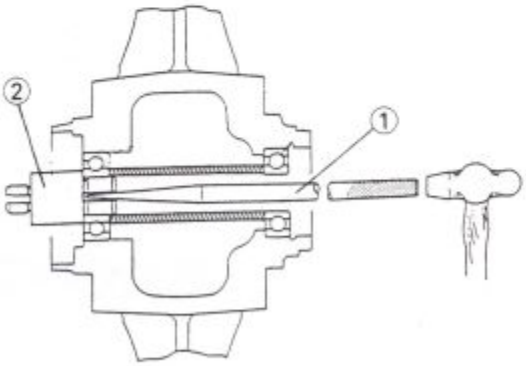

1. Bearing Remover Shaft: 57001-1265
2. Bearing Remover Head: 57001-1267, 1293

Supplement-1990-1993 Models

This "Supplement - 1990 — 1993 Models" chapter is designed to be used in conjunction with the front part of this manusl (up to P. 17-7). The maintenance and repair procedures described in this chapter are only those that are unique to the 1990 ZG1000-A5 through 1993 ZG1000-A8 motorcycle. Most service operations for these models remain identical to those described in front of this chapter. Complete and proper servicing of the 1990 ZG1000-A5 through 1993 ZG1000-A8 motorcycle, therefore requires mechanics to read both this chapter and the text in front of this chapter.

Table of Contents

Whenever you see these WARNING and CAUTION symbols, heed their instructions! Always follow safe operating and maintenance practices.

⚠WARNING

This warning symbol identifies special instructions or procedures which, if not correctly followed, could result in personal injury, or loss of life.

CAUTION

This caution symbol identifies special instructions or procedures which, if not strictly observed, could result in damage to or destruction of equipment.

General Information

Model Identification

ZG1000-A5/A6/A7/A8

General Specifications

Item	ZG1000-A5	A6,A7,A8
Dimensions:		
Overall length	2 290 mm	←
Overall width	930 mm, (Fi)(N) 760 mm	←
Overall height	1 415mm	←
Wheelbase	1 555 mm	←
Road clearance	140 mm	←
Seat height	815 mm	←
Dry weight	265 kg, (Cal) 265.5 kg, (Fi)(N) 258 kg	←
Curb weight: Front	142 kg	←
Rear	160 kg, (Cal) 160.5 kg, (Fi)(N) 152 kg	←
Fuel tank capacity	28.5 L	←
Performance:		
Climbing ability	(I) 30°	←
Braking distance	(As)(Fi)(I)(N) 12.5 m from 50 km/h	←
Minimum turning radius	3.3 m	←
Engine:		
Type	4-stroke, DOHC, 4-cylinder	←
Cooling system	Liquid-cooled	←
Bore and stroke	74.0 x 58.0 mm	←
Displacement	997 mL	←
Compression ratio	10.2	←
Maximum horsepower	67.7 kW (92 PS) @9 000 r/min (rpm),	(Fi) 67.7 kW (92 PS) @9 000 r/min (rpm),
	(As) 68.4 kW (93 PS) @9 000 r/min (rpm),	←
	(C)(Fi)(I)(N) 80.9 kW (110 PS) @9 500 r/min (rpm),	
	(F) 65.6 kW (–) @9 000 r/min (rpm)(UTAC's norms),	
	(S) 52.2 kW (71 PS) @6 000 r/min (rpm),	
	(W) 67.7 kW (92 PS) @9 000 r/min (rpm)(DIN)	
Maximum torque	81.4 N-m (8.3 kg-m, 60.0 ft-lb) @6 500 r/min (rpm),	(Fi) 81.4 N-m (8.3 kg-m, 60.0 ft-lb) @6 500 r/min (rpm),
	(As) 83.4 N-m (8.5 kg-m, 61.5 ft-lb) @6 500 r/min (rpm),	←
	(C)(Fi)(I)(N) 98.1 N-m, (10.0 kg-m, 72.3 ft-lb) @6 500 r/min (rpm),	
	(F) ---, (S) 85.3 N-m (8.7 kg-m, 62.9 ft-lb) @5 500 r/min (rpm),	
	(W) 81.4 N-m (8.3 kg-m, 60.0 ft-lb) @6 500 r/min (rpm)(DIN)	
Carburetion system	Carburetors, Keihin CVK32 x 4	←
Starting system	Electric starter	←
Ignition system	Battery and coil (transistorized)	←
Timing advance	Electronically advanced	←
Ignition timing	From 10° BTDC @1 000 r/min (rpm) to 35° BTDC @3 500 r/min (rpm),	←
	(Cal)(Sp) From 10° BTDC @1 200 r/min (rpm) to 35° BTDC @3 500 r/min (rpm)	
Spark plug	NGK DR8ES or ND X27ESR-U,	←
	(A) NGK D9EA or ND X27ES-U,	
	(C) NGK DR8ES-L or ND X27ESR-U,	
	(U) NGK D8EA or ND X24ES-U	

Item			ZG1000-A5,A6,A7,A8
Cylinder numbering method			Left to right, 1-2-3-4
Firing order			1-2-4-3
Valve timing:	Inlet:	Open	37.5° BTDC
		Close	57.5° ABDC
		Duration	275°
	Exhaust:	Open	57.5° BBDC
		Close	37.5° ATDC
		Duration	275°
Lubrication system			Forced lubrication (wet sump with cooler)
Engine oil:	Grade		SE or SF class
	Viscosity		SAE 10W-40, 10W-50, 20W-40, or 20W-50
	Capacity		3.7 L
Drive Train:			
Primary reduction system:			
	Type		Gear
	Reduction ratio		1.732 (97/56)
Clutch type			Wet multi disc
Transmission:	Type		6-speed, constant mesh, return shift
	Gear ratios:	1st	3.071 (43/14)
		2nd	2.055 (37/18)
		3rd	1.590 (35/22)
		4th	1.333 (32/24)
		5th	1.153 (30/26)
		6th	0.965 (28/29)
Final drive system:			
	Type		Shaft drive
	Reduction ratio		2.708 (16/21 x 32/9)
	Overall drive ratio		4.530 @Top gear
Final gear case oil:			
	Type		API GL-5 Hypoid gear oil SAE90 (above 5°C) SAE80 (below 5°C)
	Capacity		220 mL
Frame:			
Type			Tubular, diamond
Caster (rake angle)			28.5°
Trail			123 mm
Front tire:	Type		Tubeless
	Size		110/80 VR18 or 110/80 V18
Rear tire:	Type		Tubeless
	Size		150/80 VR16 or 150/80 VB16
Front suspension:	Type		Telescopic fork (pneumatic)
	Wheel travel		140 mm
Rear suspension:	Type		Swing arm (uni-trak)
	Wheel travel		140 mm
Brake type:	Front		Dual disc
	Rear		Single disc

Item		ZG1000-A5, A6, A7, A8
Electrical Equipment:		
Battery		12 V 18 Ah
Headlight:	Type	Semi-sealed beam
	Bulb	12 V 60/55 W
Tail/brake light		12 V 5/21 W × 2, (C)(U) 12 V 8/27 W × 2
Alternator:	Type	Three-phase AC
	Rated output	28.6 A @6 000 r/min (rpm), 14 V

Specifications subject to change without notice, and may not apply to every country.

(A): Australian Model
(As): Austrian Model
(C): Canadian Model
(Cal): California Model
(F): French Model
(Fi): Finnish Model
(I): Italian Model
(N): Norwegian Model
(S): Swiss Model
(Sp): Spanish Model
(U): U.S Model
(W): West German Model

Torque and Locking Agent

Refer to the front part of this manual, noting the following.

Fastener		Torque N-m	Torque kg-m	Torque ft-lb	Remarks
Crankshaft/Transmission					
Crankcase bolts:	9 mm dia.	32	3.3	24	S
	8 mm dia.	27	2.8	20	
	7 mm dia.	18	1.8	13.0	
	6 mm dia.	15	1.5	11.0	

Hose Routing (ZG1000-A8 ~)

Austria, Dutch, French, FR German, Swiss and UK Models

(Engine Left Side View) **(Engine Backside View)**

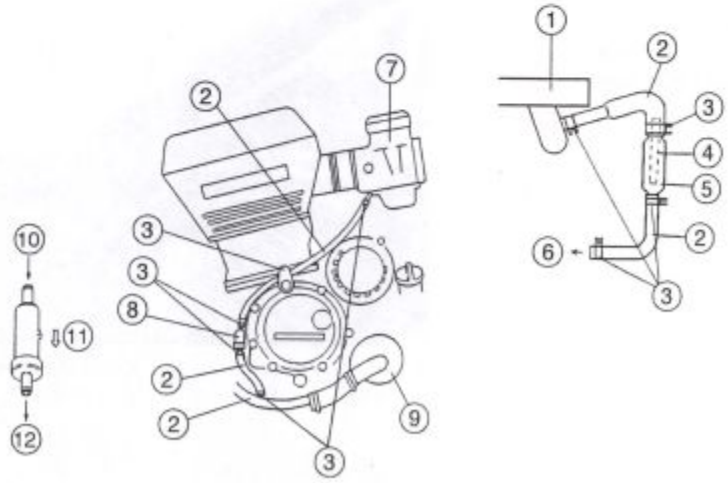

1. Water Pipe
2. Water Hose
3. Cramp
4. Water Filter
5. Water Filter Housing
6. To Carburetor Right Side
7. Carburetor
8. Water Valve
9. Water Pump
10. Carburetor Side
11. Water Flow
12. Water Pump Side

Fuel System

Specifications

The following specifications are only those that are unique to the ZG1000-A5~ models.

Carburetor Specifications

Make/Type	Keihin/CVK32
Main Jet	125, (Cal) 130 [122, (Cal) 128]
Main Air Jet	130
Air Cut Valve Air Jet	#85
Jet Needle	N52M (UK) N52H
Pilot Jet	35 [32]
Pilot Air Jet	85
Pilot Screw	2 turns out, (U) –, (AR) 1½, (Swi) 1¼
Starter Jet	55, (Cal) 45
Fuel Level	–0.5 mm [1.5 mm (above) ~ 0.5 mm (below from bottom edge of carburetor body]
Float Height	17 mm

(AR) : Austrian Model
(Cal) : Californian Model
(Swi) : Swiss Model
(U) : US Model
(UK) : UK Model
[ ] : High Altitude (US Model)

Idle Speed

Standard: **1,000 ±50 r/min (rpm)**
(Cal) 1,200 ±50 r/min (rpm)
(Swi) 1,200 ±50 r/min (rpm)

Engine Top End

Exploded View

Refer to the front part of this manual, noting the following.

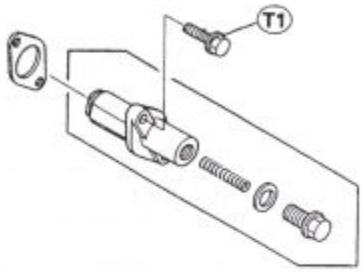

T1 : 9.8 N-m (1.0 kg-m, 87 in-lb)

Camshaft Chain Tensioner

Camshaft Chain Tensioner Removal

- Remove the following.
  - Tensioner Cap Bolt
  - Copper Washer
  - Spring
  - Tensioner Mounting Bolts
  - Camshaft Chain Tensioner

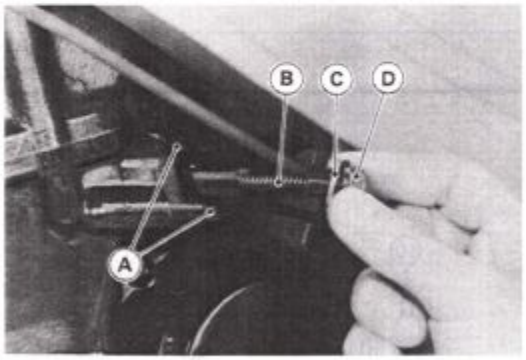

A. Mounting Bolts
B. Spring
C. Copper Washer
D. Cap Bolt

CAUTION

This is a non-return type cam chain tensioner. The push rod does not return to its original position once it moves out to take up cam chain slack. Observe all the rules listed below:
When removing the tensioner, do not take out the mounting bolts only halfway. Retightening the mounting bolts from this position could damage the tensioner and the camshaft chain. Once the bolts are loosened, the tensioner must be removed and reset as described in "Camshaft Chain Tensioner Installation."
Do not turn over the crankshaft while the tensioner is removed. This could upset the cam chain timing, and damage the valves.

Camshaft Chain Tensioner Installation

- Release the stopper and push into the rod.

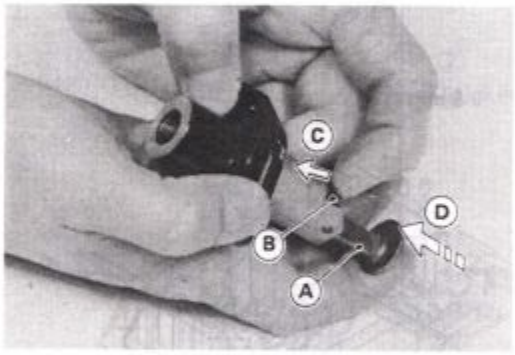

A. Push Rod
B. Stopper
C. Push.
D. Push into the rod.

- Install the tensioner body with the arrow on it pointing upwards.

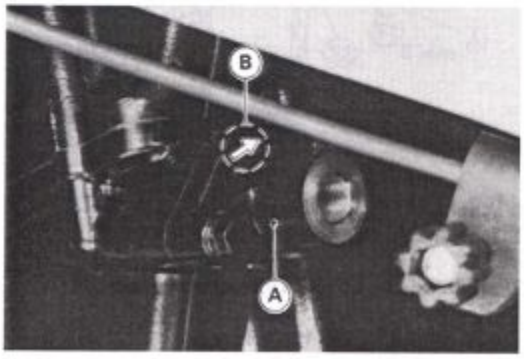

A. Tensioner Body
B. Arrow Mark

- Torque the following (see Exploded View).
  Tensioner Mounting Bolts

Clutch

Exploded View

Refer to the front part of this manual, noting the following.

Master Cylinder

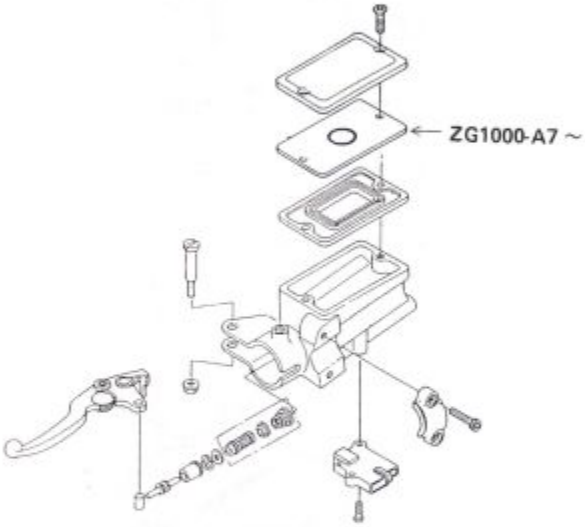

Engine Lubrication System

Oil Pan

Oil Pan Installation

Refer to the front part of this manual, noting the following.

●Apply a silicone sealant to the following.

Crankcase

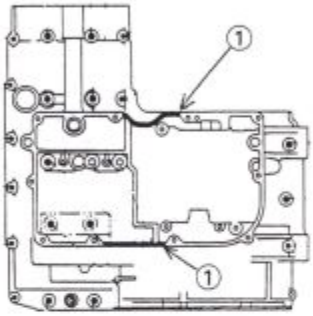

1. Silicone Sealant Applied Area

Oil Pan

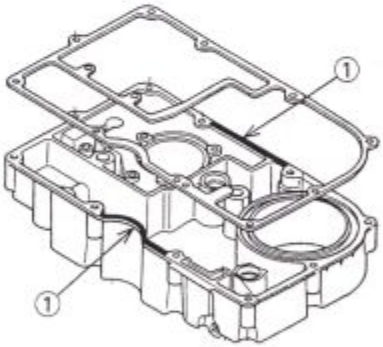

1. Silicone Sealant Applied Area

Crankshaft/Transmission

Exploded View ('90 Late Model)

Refer to the front part of this manual, noting the following.

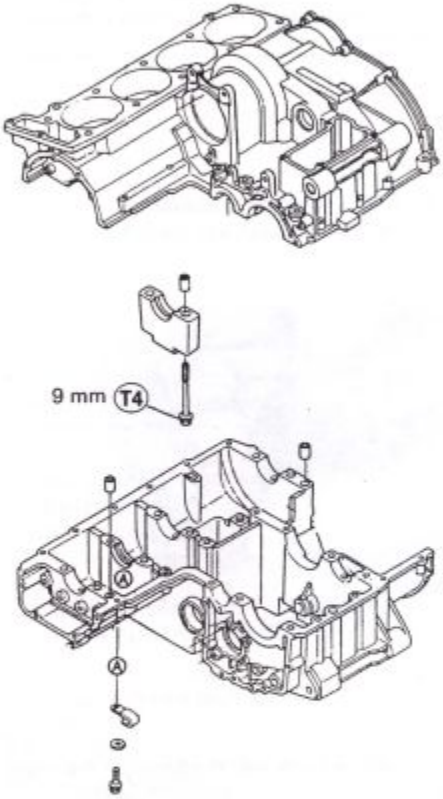

1. Washer
2. "11" mark on the bolt head.

S : Follow the specified tightening sequence.

T1: 15 N-m (1.5 kg-m, 11.0 ft-lb)
T2: 18 N-m (1.8 kg-m, 13.0 ft-lb)
T3: 27 N-m (2.8 kg-m, 20 ft-lb)
T4: 32 N-m (3.3 kg-m, 24 ft-lb)

NOTE

○ *The crankcases and crankcase bolts will be modified for larger diameter.*
○ *When using the modified crankcases and crankcase bolts, refer to the following.*

Engine No. ZGT00AE014832 ~

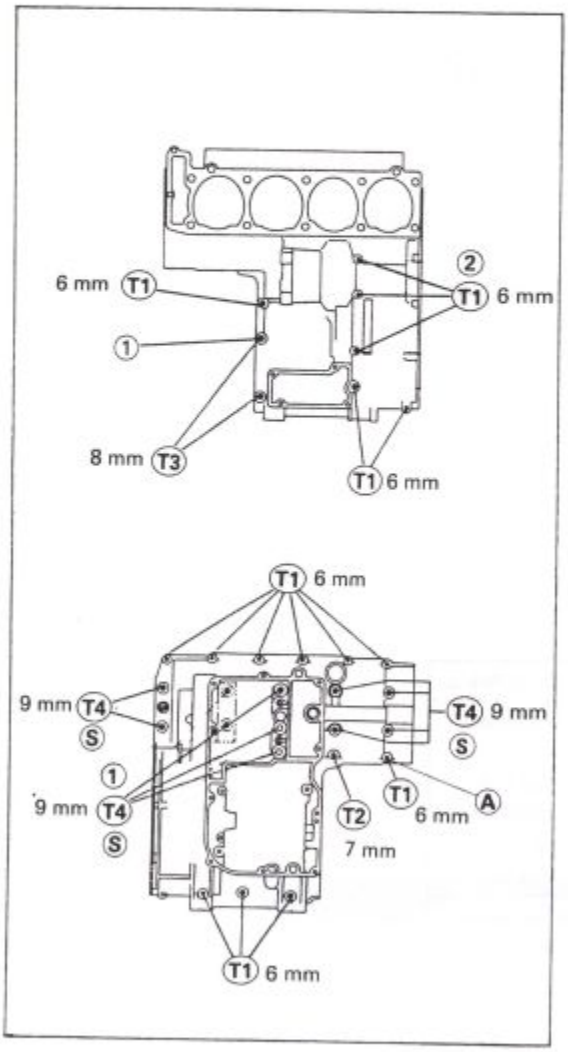

Crankcase Splitting ('90 Late Model)

Crankcase Assembly

Refer to the front part of this manual, noting the following.

NOTE

○ *The crankcases and crankcase bolts will be modified for larger diameter.*
○ *When using the modified crankcases and crankcase bolts, refer to the following.*

Engine No. ZGT00AE014832 ~

● Tighten the lower crankcase half bolts using the following 4 steps.
○ Lightly tighten all lower crankcase half bolts to a snug fit. The three 9 mm bolts (sequence numbered 1 through 3) have a flat washer.
○ Torque the 9 mm bolts. The sequence numbers on the lower crankcase half.

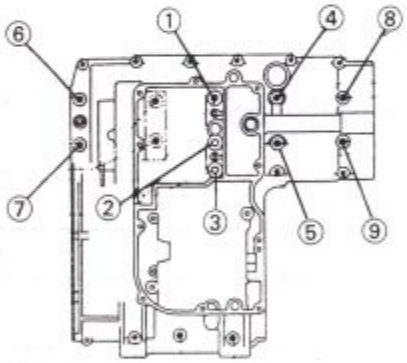

Torque Value for 9 mm Bolts

First:	**9.8 N-m (1.0 kg-m, 87 in-lb)**
Final:	**32 N-m (3.3 kg-m, 24 ft-lb)**

○ Torque the 7 mm bolt (see Exploded View).
○ Torque the 6 mm bolts (see Exploded View).

Brakes

Exploded View

Refer to the front part of this manual, noting the following.

Front Brake Master Cylinder

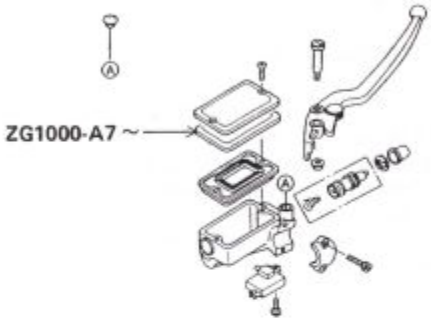

Electrical System

Specifications

Refer to the front part of this manual, noting the following.

Spark Plug

	Standard	Low Speed Riding	High Speed Riding
Australia	NGK D9EA or ND X27ES-U	Same as standard	Same as standard
Canada	NGK DR8ES-L or ND X24ESR-U	NGK DR7ES or ND X22ESR-U	NGK DR8ES or ND X27ESR-U
US	NGK D8EA or ND X24ES-U	NGK D7EA or ND X22ES-U	NGK D9EA or ND X27ES-U

Supplement-1994-1997 Models

This "Supplement – 1994-1997 Models" chapter is designed to be used in conjunction with the front part of this manual (up to P18-10). The maintenance and repair procedures described in this chapter are only those that are unique to the 1994 ZG1000-A9 through 1997 ZG1000-A12 motorcycle. Most service operations for this model remain idntical to those described in front of this chapter.

Complete and proper servicing of the 1994 ZG1000-A9 through 1997 ZG1000-A12 motorcycle, therefore requires mechanics to read both this chapter and the text infront of this chapter.

Table of Contents

Whenever you see these WARNING and CAUTION symbols, heed their instructions! Always follow safe operating and maintenance practices.

⚠WARNING

This warning symbol identifies special instructions or procedures which, if not correctly followed, could result in personal injury, or loss of life.

CAUTION

This caution symbol identifies special instructions or procedures which, if not strictly observed, could result in damage to or destruction of equipment.

General Information

Model Identification

ZG1000-A9 ~

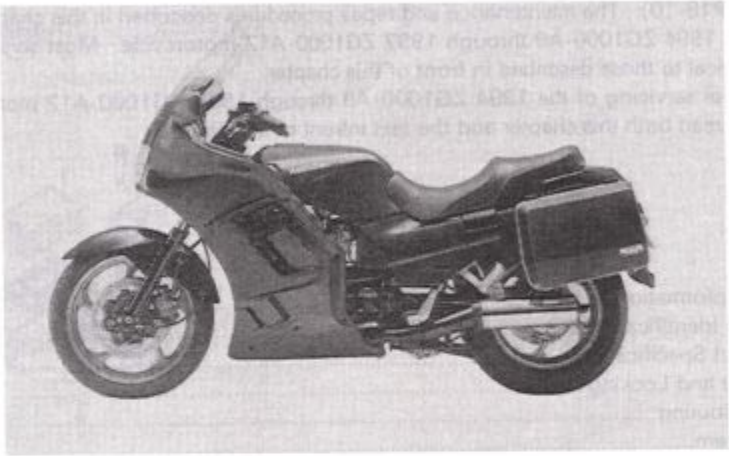

General Specifications

Item	ZG1000-A9 ~ A11	A12
Dimensiones:		
Overall length	2 290 mm	←
Overall width	930 mm, (Fi)(N) 760mm	←
Overall height	1 415 mm	←
Wheelbase	1 555 mm	←
Road clearance	130 mm	←
Seat height	790 mm	←
Dry weight	270 kg, (Cal) 270.5 kg	←
Curb weight: Front	144 kg	←
Rear	163 kg, (Cal) 163.5 kg	←
Fuel tank capacity	28.5 L	←
Performance:		
Climbing ability	– – –	
Braking distance	(As)(N) 12.5 m from 50 km/h	←
Minimum turning radius	3.3 m	←
Engine:		
Type	4-stroke, DOHC, 4-cylinder	←
Cooling system	Liquid-cooled	←
Bore and stroke	74.0 × 58.0 mm	←
Displacement	997 mL	←
Compression ratio	10.2	←
Maximum horsepower	67.7 kW (92 PS) @9 000 r/min (rpm),	←
	(As) 68.4 kW (93 PS) @9 000 r/min (rpm),	←
	(C)(U) 80.9 kW (110 PS) @9 500 r/min (rpm),	←
	(F) 65.6 kW (–) @9 000 r/min (rpm) (UTAC's norms),	←
	A11 ~: (F) 69 kW (–) @9 000 r/min (rpm) (UTAC's norm),	←
	(N) 68 kW (92.5 PS) @9 000 r/min (rpm),	←
	(S) 52.2 kW (71 PS) @6 000 r/min (rpm),	←
	(W) 68 kW (92.5 PS) @9 000 r/min (rpm) (DIN)	←
	A11 ~: (W)(B)(Ho)(I) 72 kW (97.8 PS) @9 000 r/min (rpm) (EEC)	←
Maximum Torque	81.4 N-m (8.3 kg-m, 60.0 ft-lb) @6 500 r/min (rpm),	←
	(As) 83.4 N-m (8.5 kg-m, 61.5 ft-lb) @6 500 r/min (rpm),	←
	(C)(U) 98.1 N-m (10.0 kg-m, 72.3 ft-lb) @6 500 r/min (rpm),	←
	(F) – – – (N) 81 N-m (8.3 kg-m, 59.7 ft-lb) @6 500 r/min (rpm)	←
	(S) 85.3 N-m (8.7 kg-m, 62.9 ft-lb) @5 500 r/min (rpm)	←
	(W) 81 N-m (8.3 kg-m, 59.7 ft-lb) @6 500 r/min (rpm) (DIN)	←
	A11 ~: (W)(B)(Ho)(I) 86 N-m (8.7 kg-m, 62.9 ft-lb) @6 500 r/min (rpm) (EEC)	←
Carburetion system	Carburetor, Keihin CVK 32 × 4	←
Starting system	Electric starter	←
Ignition system	Battery and coil (transistorized)	←
Timing advance	Electronically advanced	←
Ignition timing	From 10° BTDC @1 000 r/min (rpm) to	←
	35° BTDC @3 500 r/min (rpm),	←
	(Sp)(A11 ~:S) from 10° BTDC @1 200 r/min (rpm) to	←
	35° BTDC @3 500 r/min (rpm)	←
Spark plug	NGK DR9EA or ND X27ESR-U,	←
	(C) NGK DR8EA or ND X24 ESR-U, (U) NGK D8EA or ND X24 ES-U	(U)(C) NGK DR8EA or ND X24ESR-U

Item		ZG1000-A9 ~ A11	A12
Cylinder numbering method		Left to right, 1-2-3-4	←
Firing order		1-2-4-3	←
Valve timing:			
Inlet	Open	37.5° BTDC	←
	Close	57.5° ABDC	←
	Duration	275°	←
Exhaust	Open	57.5° BBDC	←
	Close	37.5° ATDC	←
	Duration	275°	←
Lubrication system		Forced lubrication (wet sump with cooler)	←
Engine oil:	Grade	SE, SF or SG class	←
	Viscosity	SAE10W-40, 10W-50, 20W-40, 20W-50	←
	Capacity	3.7 L (B)(I)(Ho)(W)(F) 3.0 L	
Drive Train:			
Primary reduction system:			
Type		Gear	←
Reduction ratio		1.732 (97/56)	←
Clutch type		Wet multi disc	←
Transmission			
Type		6-speed, constant mesh, return shift	←
Gear ratios:	1st	3.071 (43/14)	
	2nd	2.055 (37/18)	←
	3rd	1.590 (35/22)	←
	4th	1.333 (32/24)	←
	5th	1.153 (30/26)	←
	6th	0.965 (28/29)	←
Final drive system:			
Type		shaft drive	←
Reduction ratio		2.708 (16/21 × 32/9)	
Overall drive ratio		4.530 @Top gear	
Final gear case oil:			
Type		API GL-5 Hypoid gear oil	←
		SAE90 (above 5°C)	←
		SAE80 (below 5°C)	←
Capacity		220 mL	←
Frame:			
Type		Tubular, diamond	←
Caster (rake angle)		28.5°	←
Trail		123 mm	←
Front tire:	Type	Tubeless	←
	Size	120/70 R18	
Rear tire:	Type	Tubeless	←
	Size	150/80 R16	←
Front suspension:			
	Type	Telescopic fork (pneumatic)	←
	Wheel travel	140 mm	
Rear suspension:			
	Type	Swingarm (uni-trak)	←
	Wheel travel	140 mm	
Brake type:	Front	Dual disc	←
	Rear	Single disc	←

Item		ZG1000-A9 ~ A11	A12
Electrical Equipment:			
Battery		12 V 18 Ah	←
Headlight:	Type	Semi-sealed beam	←
	Bulb	12 V 60/55 W (quartz-halogen)	←
Tail/brake light		12 V 5/21 W × 2, (C)(U) 12 V 8/27 W × 2	←
Alternator	Type	Three-phase AC	←
	Rated output	28.6 A @6 000 r/min (rpm), 14 V	←

Specificatiosn are subject to change without notice, and may not apply to every country.

(A): Australian Model
(As): Austrian Model
(B): U.K. Model
(C): Canadian Model
(Cal): California Model
(F): French Model
(I): Italian Model
(Ho): Dutch Model
(N): Norwegian Model
(S): Swiss Model
(Sw): Swedish Model
(U): U.S. Model
(W): German Model

Torque and Locking Agent

Refer to the front part of this manual, noting the following.

Fastener	Torque			Remarks
	N-m	kg-m	ft-lb	
Final Drive:				
Front Bevel Gear Case Oil Pipe Banjo Bolts	12	1.2	104 in-lb	
Front Bevel Gear Case Oil Pipe Mounting Bolt	9.8	1.0	87 in-lb	

Wire Routing

1. Clock Lead
2. Meter
3. Clamp
4. Strap
5. Relay
6. Front Right Turn Signal Light Lead
7. Coupler Clock Lead
8. Head Light Lead
9. Horn Leads
10. Front Left Turn Signal Light Lead
11. Coupler Meter

(Viewed from right) (Viewed from front) (Viewed from left)

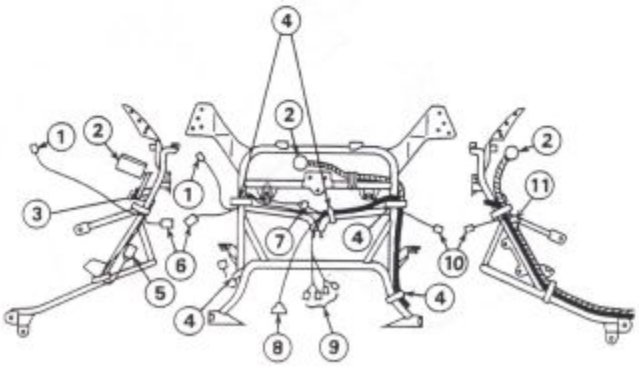

Fuel System

Specifications

The following specifications are only those that are unique to the ZG1000-A11 ~ Europe models (except for Swiss and Austria models).

Make/Type	Keihin/CVK32
Main Jet	115
Main Air Jet	130
Air Cut Valve Air Jet	85
Jet Needle	N1QM
Pilot Jet	35
Pilot Air Jet	85
Pilot Screw	1½ turns out
Starter Jet	55
Fuel Level	−0.5 mm [1.5 mm (above) ~ 0.5 mm (below from bottom edge of carburetor body]
Float Height	17 mm

Wheels / Tires

Specifications

Germany (Refer to the right, adding the following):

Front	110/80 V18 PIRELLI MT09, 120/70 ZR18 BRIDGESTONE BATTRAX BT54F
Rear	150/80 VB16 PIRELLI MT08, 150/80 VR16 V250 BRIDGSTONE BATTRAX BT53V R

Engine Top End

Exploded View

Germany A12 Model

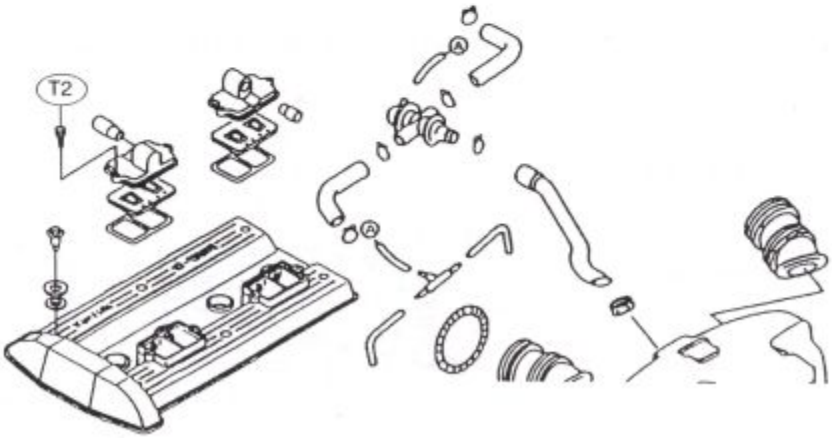

Item			Standard	Service Limit
Tire tread depth		Front	4.4 mm	1 mm
		Rear	6.9 mm	2 mm (Under 130 km/h) 3 mm (Over 130 km/h)
Standard tire		Front	120/70 R 18 59V DUNLOP K 701F, Tubeless	
		Rear	150/80 R 16 71V DUNLOP K 700J, Tubeless	
			Load	Air Pressure (when cold)
Tire air pressure	Front			250 kPa (2.50 kg/cm², 36 Psi)
	Rear	US, Canada, Australian, and South African Model	Up to 200 kg (441 lb)	290 kPa (2.90 kg/cm², 41 Psi)
		Other than above Model	Up to 97.5 kg (215 lb)	250 kPa (2.50 kg/cm², 36 Psi)
			97.5– 183 kg (215– 404 lb) *97.5– 191 kg (215– 421 lb)	290 kPa (2.90 kg/cm², 41 Psi)
Rim runout:		Axial Radial	--- ---	0.5 mm 0.8 mm
Axle runout / 100 mm			Under 0.05 mm	0.2 mm (0.7 mm: RL)

*Norwegian model

Brakes

Specifications

Item		Standard	Service Limit
Brakes:			
Pad lining thickness:	Front	4.5 mm	1 mm
	Rear	5.0 mm	1 mm
Brake fluid grade		D.O.T.4	---
Disc runout:	Front	Under 0.15 mm	0.3 mm
	Rear	Under 0.15 mm	0.3 mm
Disc thickness:	Front	4.3 – 4.6 mm	4.0 mm
	Rear	6.8 – 7.1 mm	6.0 mm

Recommended Brake Fluid

Castrol Girling-Universal
Castrol GT
Castrol Disc Brake Fluid
Check Shock Premium Heavy Duty

Suspension

Exploded View

L : Apply non-permanent locking agent to the threads.
M : Apply a thin coat of molybdenum disulfide grease.
T1: 12 N-m (1.2 kg-m, 104 lb)
T2: 16 N-m (1.6 kg-m, 11.5 ft-lb)
T3: 35 N-m (3.6 kg-m, 26 ft-lb)
T4: 21 N-m (2.1 kg-m, 15.0 ft-lb)
T5: 23 N-m (2.3 kg-m, 16.5 ft-lb)
T6: 27 N-m (2.8 kg-m, 20 ft-lb)
T7: 39 N-m (4.0 kg-m, 29 ft-lb)
T8: 52 N-m (5.3 kg-m, 38 ft-lb)
T9: 59 N-m (6.0 kg-m, 43 ft-lb)

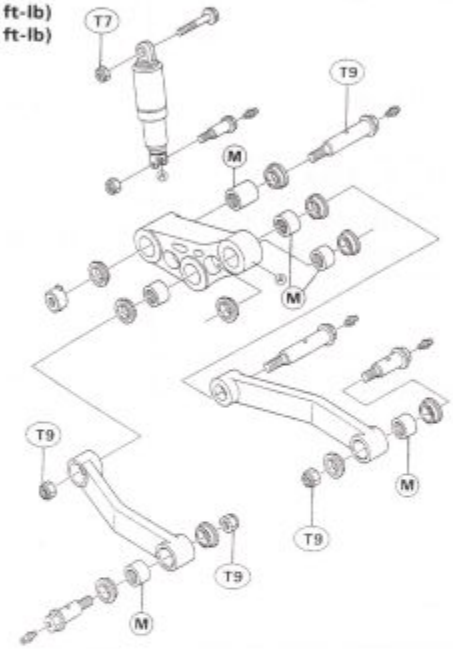

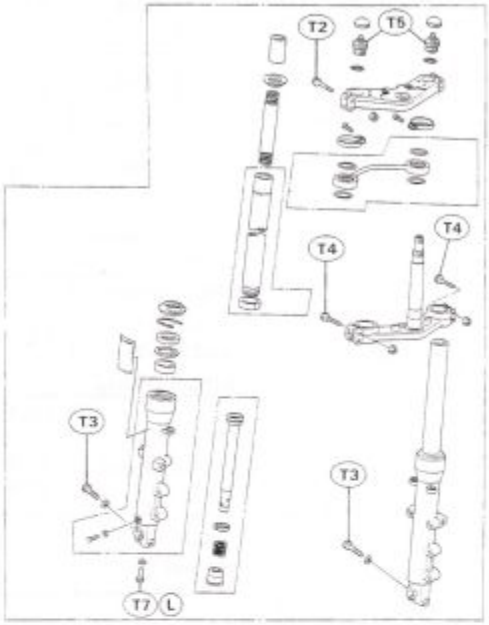

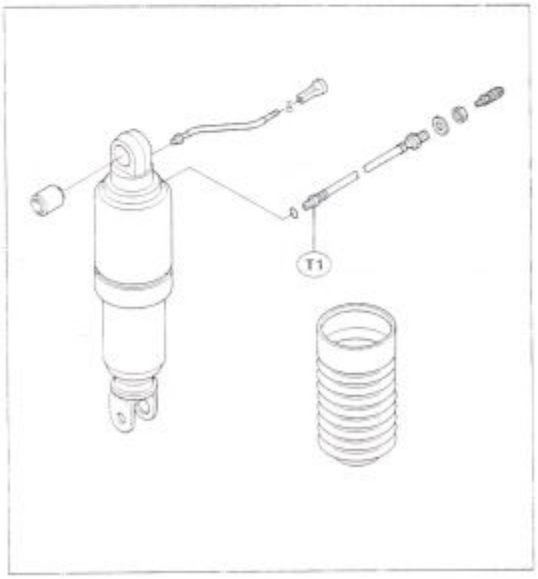

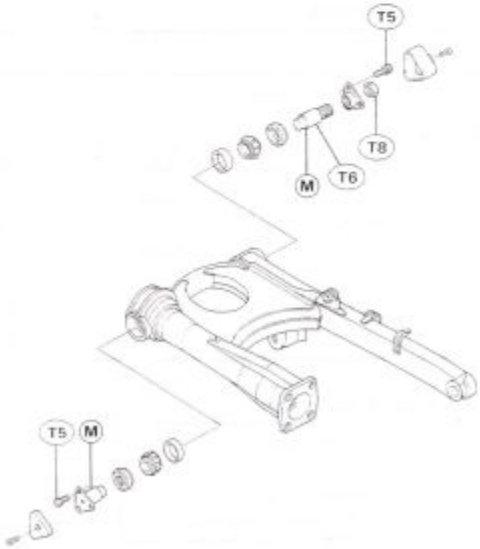

Specifications

Item	Standard	Service Limit
Front Fork:		
Oil type	SAE 10W20	---
Oil capacity	379 ± 4 mL (approx. 330 mL at oil change)	---
Oil level	171 mm (Fully compressed, without Main Spring)	---
Fork spring free length	543.3 mm	533 mm
Rear Shock Absorber:		
Air pressure:		
an average-build rider with no passenger and no load	50 kPa (0.5 kg/cm², 7.1 psi)	---
a rider with load or a rider and a passenger with or without load	200 kPa (2.0 kg/cm², 28 psi) ~ 350 kPa (3.5 kg/cm², 50 psi)	---

FINAL DRIVE

Exploded View

Refer to the front part of this manual, noting the following.

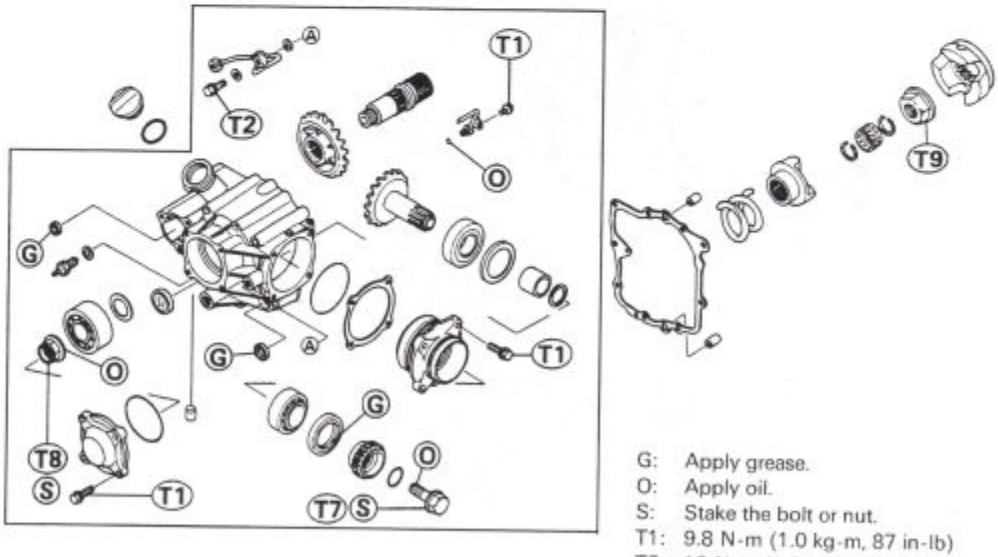

G: Apply grease.
O: Apply oil.
S: Stake the bolt or nut.
T1: 9.8 N-m (1.0 kg-m, 87 in-lb)
T2: 12 N-m (1.2 kg-m, 104 in-lb)
T7: 120 N-m (12.0 kg-m, 87 ft-lb)
T8: 195 N-m (20.0 kg-m, 145 ft-lb)
T9: 255 N-m (23.0 kg-m, 166 ft-lb)

Frame

Exploded View

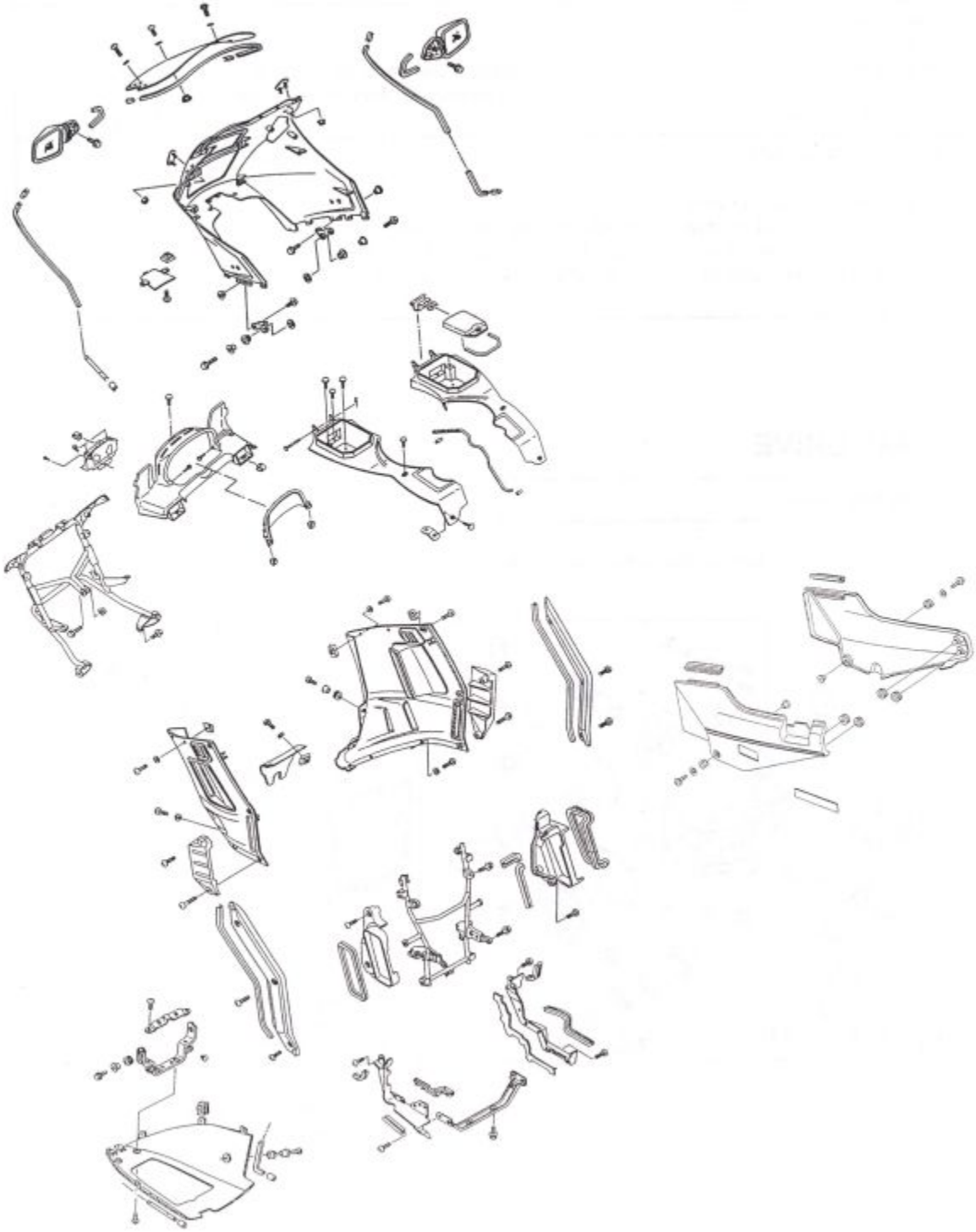

ZG1000-A9~ Wiring Diagram (US and Canada)

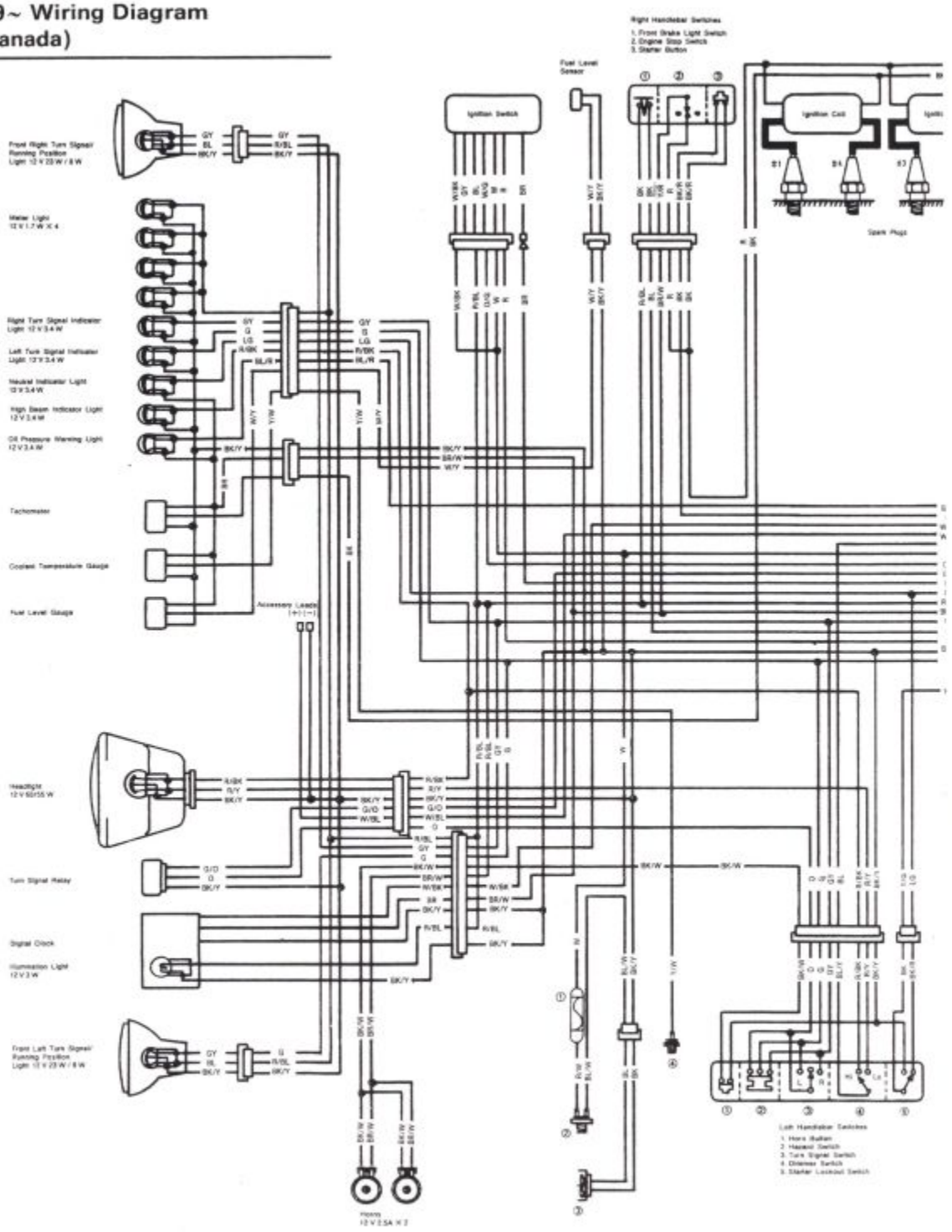

LEFT HANDLEBAR SWITCH CONNECTIONS

Starter Lockout Switch				Horn Button			Dimmer Switch					Turn Signal Switch			
Color	BK/Y	BK	BK/B	Color	GR/Y	BK/W	Color	R/BK	BL/Y	R/Y		Color	GY	G	LG
Released		○—●○		Un (Push)		○—●○	Hi	○—●○				R		○—●○	
												L			
Pushed in	○—●○						LO		○—●○			L			○—●○

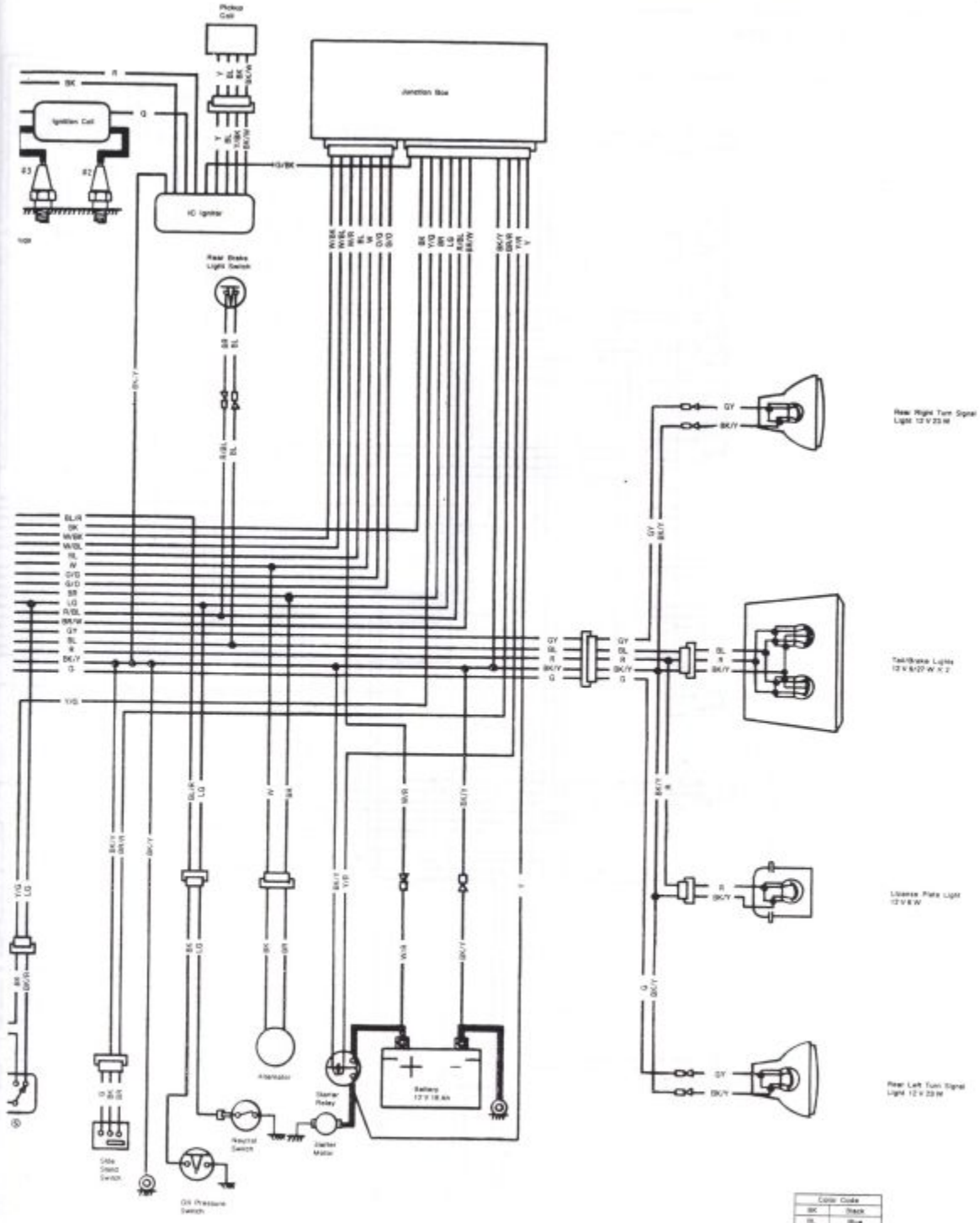

Signal Switch			Hazard Switch			
OFF	O	R	Color	OFF	O	G
			On			

IGNITION SWITCH CONNECTIONS

	Ignition	Battery	Ignition	Tail 1	Tail 2	Battery	Tail 3
Color	BR	W	GY	BL	R	W/BK	W/G
OFF, Lock							
ON			O				
P (Park)							

RIGHT HANDLEBAR SWITCH CONNECTIONS

Engine Stop Switch			Starter Button			Front Brake Light Switch		
Color	Y/R	B	Color	BK/W	BK/R	Color	BR	BR
OFF			Push			Released		
Run						Pulled in		

Color Code	
BK	Black
BL	Blue
BR	Brown
CH	Chocolate
DG	Dark green
G	Green
GY	Gray
LB	Light blue
LG	Light green
O	Orange
P	Pink
PU	Purple
R	Red
W	White
Y	Yellow

ZG1000-A9~ Wiring Diagram (Australian)

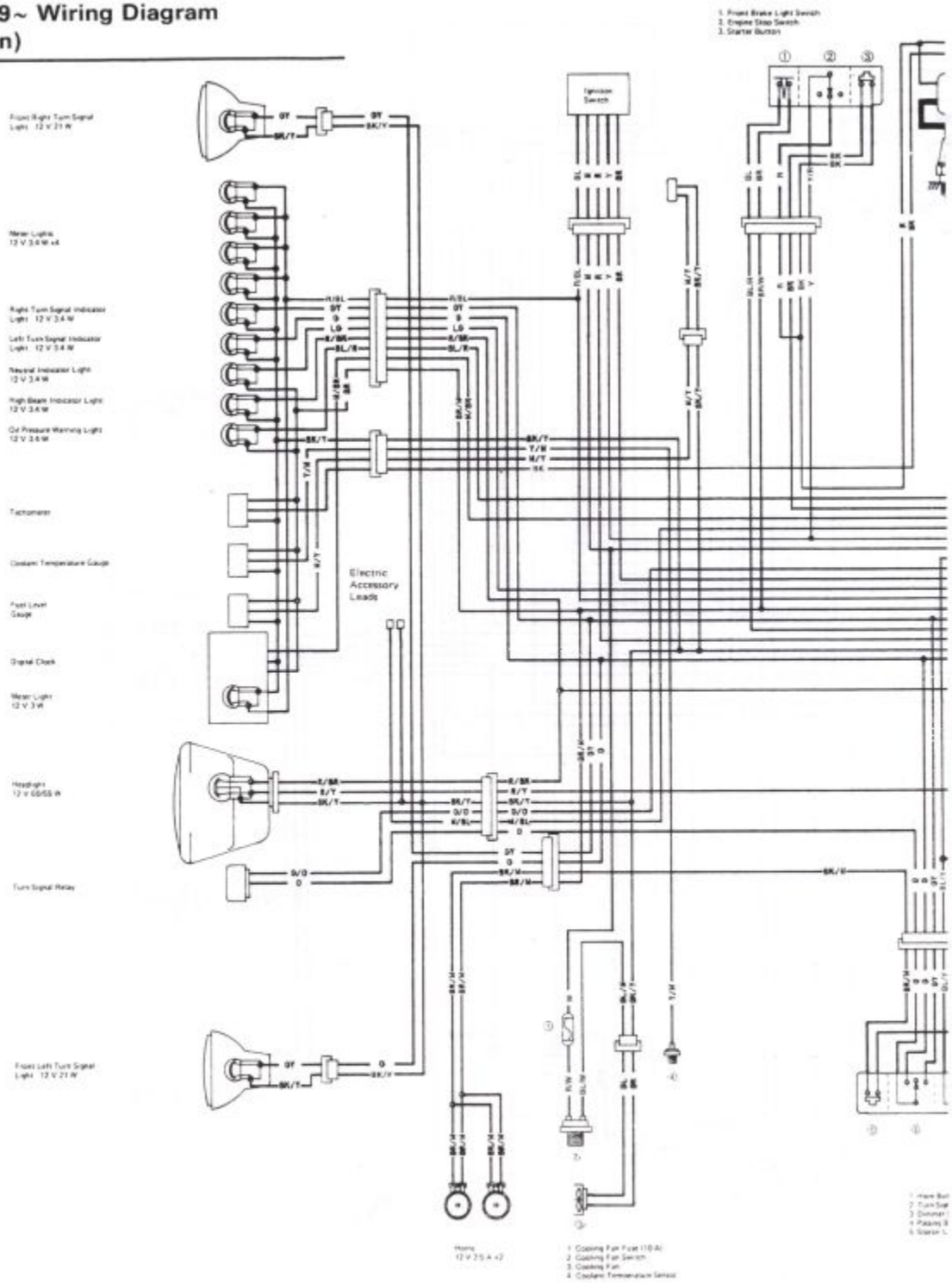

LEFT HANDLEBAR SWITCH CONNECTIONS

Starter Lockout Switch				Horn Button			Dimmer Switch				Turn Signal Switch				Passing Button	
Color	BK/Y	Y/G	LG	Color	BK/Y	BK/W	Color	R/BK	BL/Y	R/Y	Color	GY	O	G	Color	R/B
Released		—		ON (Push)		—	HI	—			R	—			ON (Push)	•
											N					
Pushed in	—						LO		—		L		—			

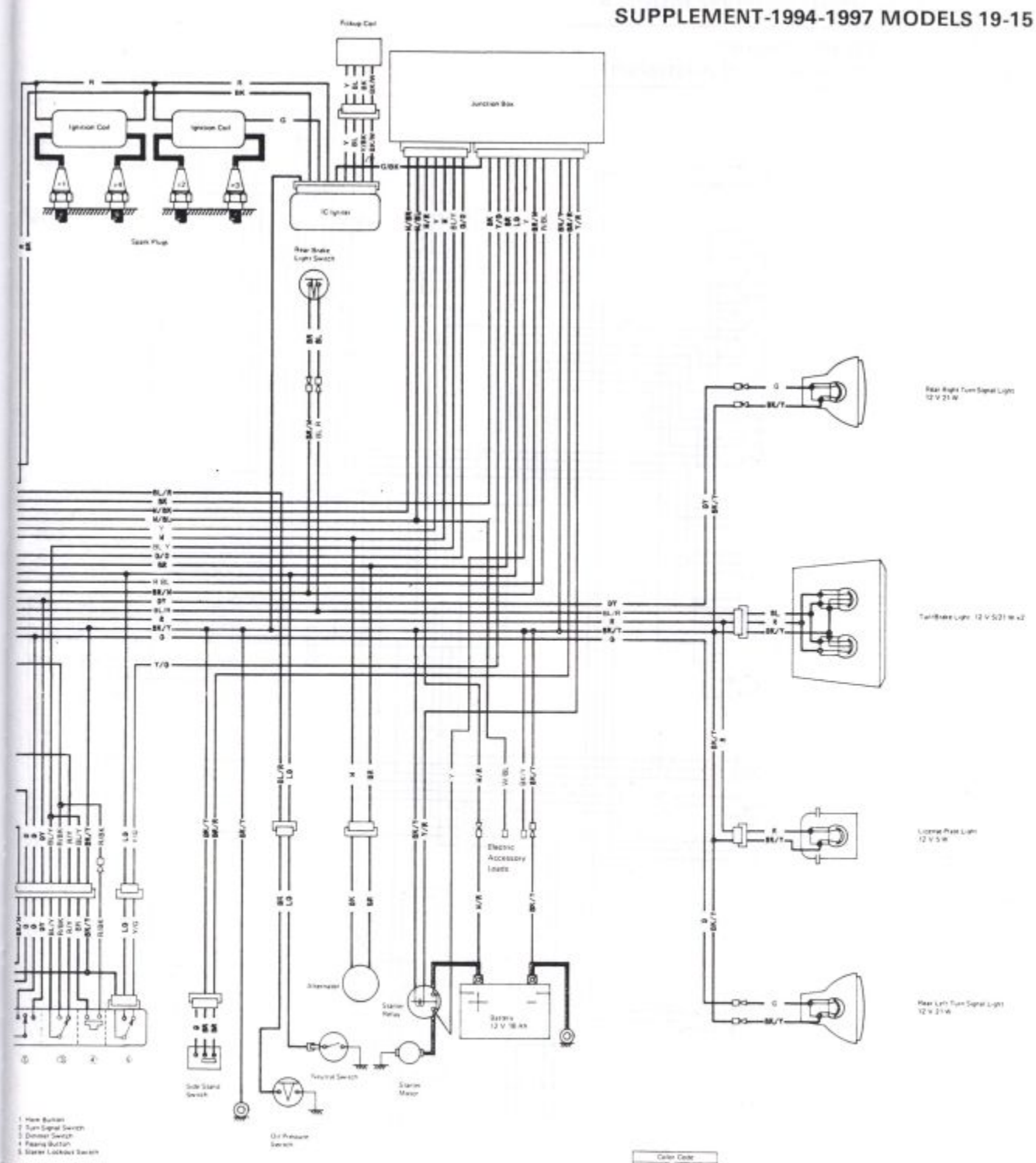

Passing Button		
DY	R/BK	BR
PUSH	—	

IGNITION SWITCH CONNECTIONS					
	Ignition	Battery	Ignition	Tail 1	Tail 2
Color	BR	W	Y	BL	R
OFF · LOCK					
ON	—	—	—	—	—
P (PARK)		—	—		—

RIGHT HANDLEBAR SWITCH CONNECTIONS									
Engine Stop Switch			Starter Button			Front Brake Light Switch			
Color	Y/R	R	Color	BK	BK	Color	BR	BL/R	
OFF			Push	—		Released			
RUN	—					Pulled in		—	

(9805-1305A)

Color Code	
BK	Black
BL	Blue
BR	Brown
CH	Chocolate
DG	Dark green
G	Green
GY	Gray
LB	Light blue
LG	Light green
O	Orange
P	Pink
PU	Purple
R	Red
W	White
Y	Yellow

ZG1000-A9~ Wiring Diagram (Other than US, Canada and Australian)

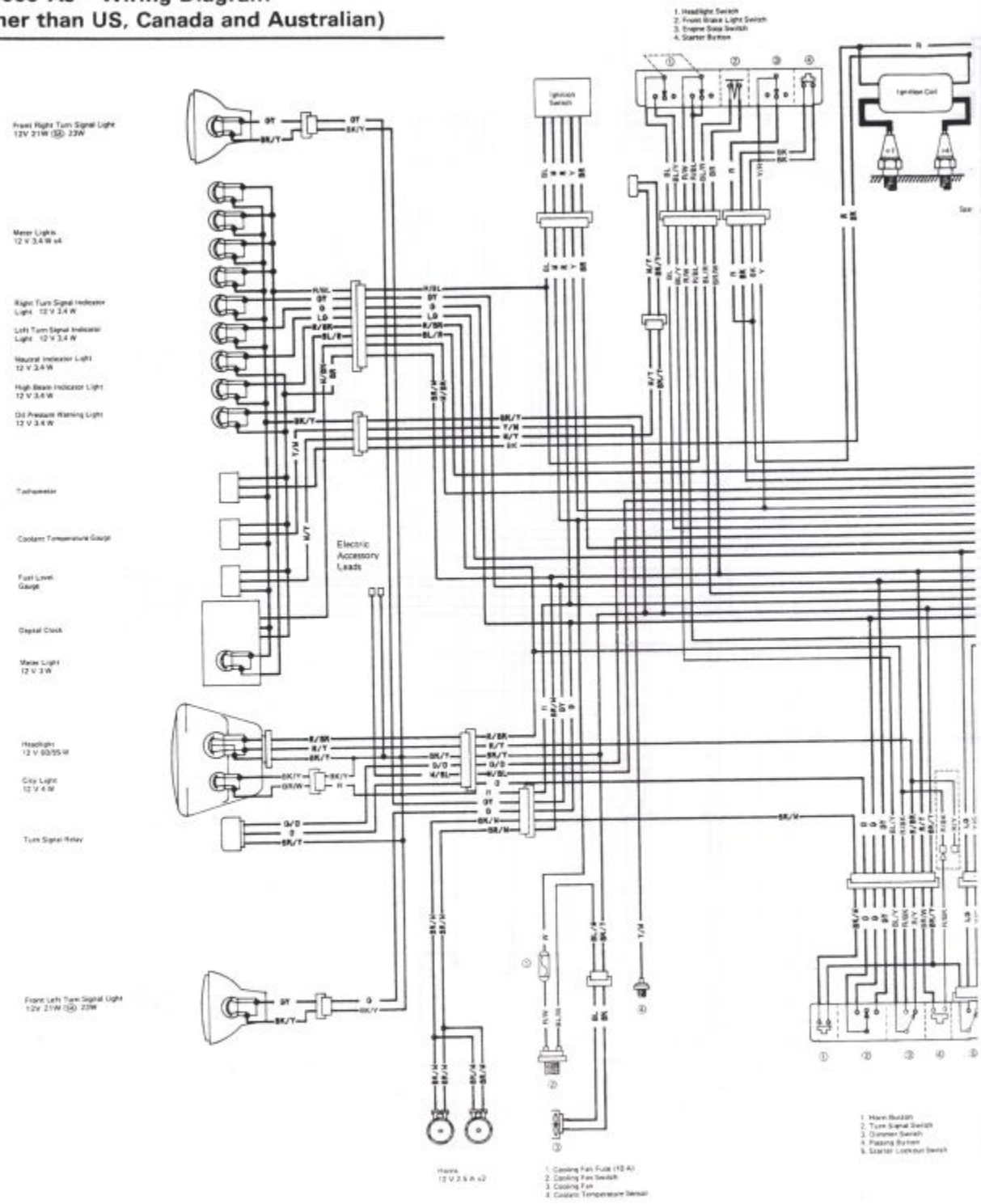

LEFT HANDLEBAR SWITCH CONNECTIONS																			
Starter Lockout Switch				Horn Button			Dimmer Switch				Turn Signal Switch				Passing Button		
Color	BK/Y	Y/B	LG	Color	BK/Y	BK/W	Color	R/BK	BL/Y	R/Y	Color	GY	O	G	Color	R/BK	BR
Released				ON (Push)			HI				R				ON (Push)		
											N						
Pushed in							LO				L						

IGNITION SWITCH CO		
	Ignition	Battery
Color	BR	R
OFF, LOCK		
ON		
P (PARK)		

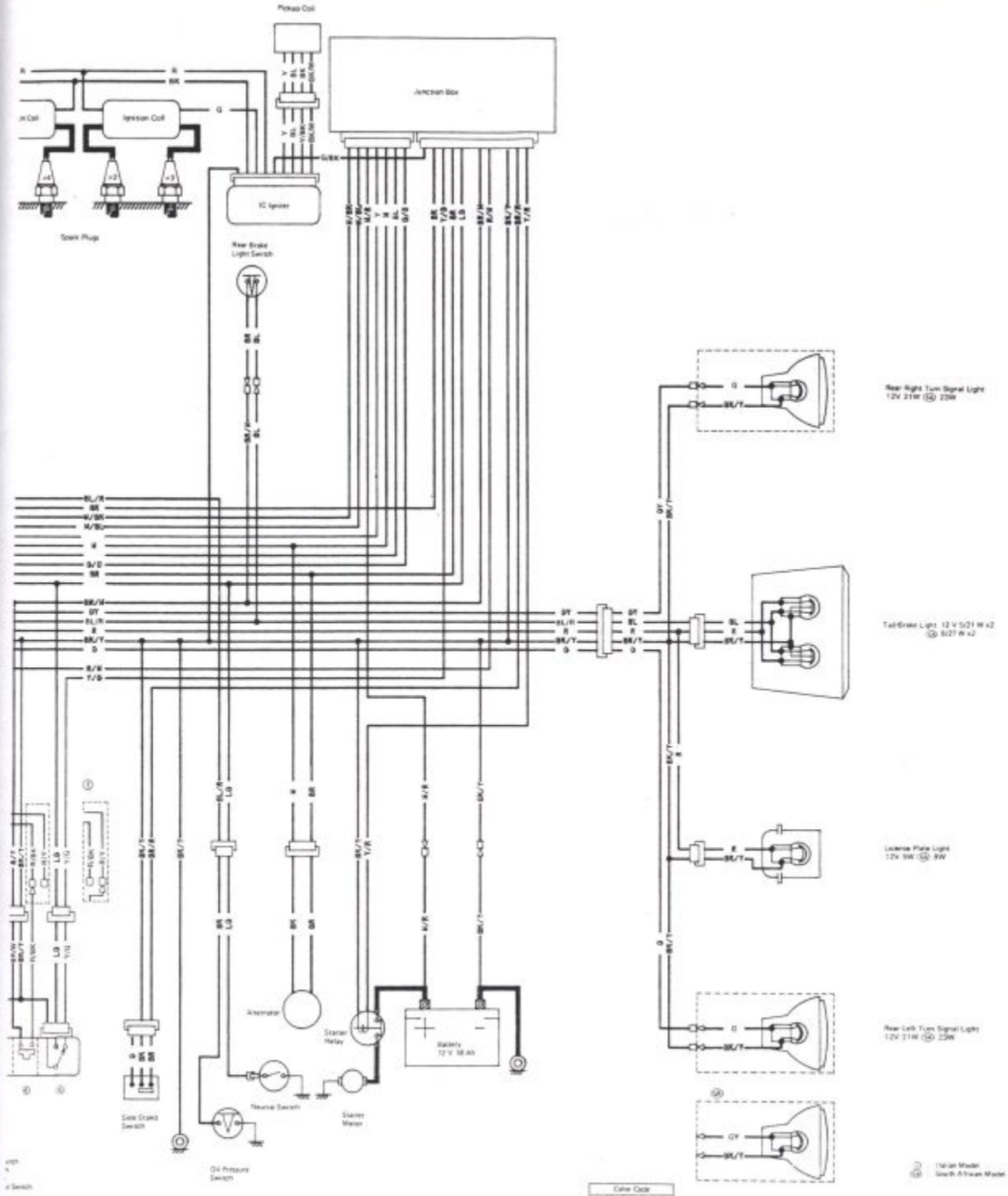

Color Code	
BK	Black
BL	Blue
BR	Brown
CH	Chocolate
DG	Dark green
G	Green
GY	Gray
LB	Light blue
LG	Light green
O	Orange
P	Pink
PU	Purple
R	Red
W	White
Y	Yellow

ON SWITCH CONNECTIONS			
	Battery	Ignition	Tail 1	Tail 2
	W	Y	BL	R

RIGHT HANDLEBAR SWITCH CONNECTIONS													
Engine Stop Switch				Headlight Switch					Starter Button			Front Brake Light Switch	
Color	Y/R	R	Color	R/W	R/BL	BL	BL/Y	Color	BK	BK	Color	BR	BL/R
OFF			OFF					Push			Released		
RUN			ON								Pulled in		

(1996B, 1997A, 1998A, 1999A)

Supplement - 2000Model

Table of Contents

How to Use this Manual

This "Supplement - 2000 Model " designed to be used in conjunction with the front part of this manual (up to 19 - 17).

The specifications and maintenance procedures described in this chapter are only those that are unique to the ZG1000-A15 model.

Complete and proper servicing of the ZG1000-A15 model therefore requires mechanics to read both this chapter and the front of this manual.

ZG1000-A15 Left Side View

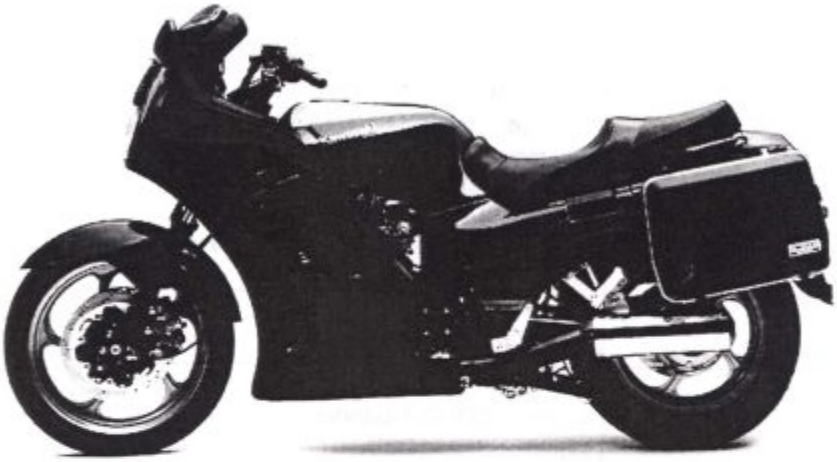

ZG1000-A15 Right Side View

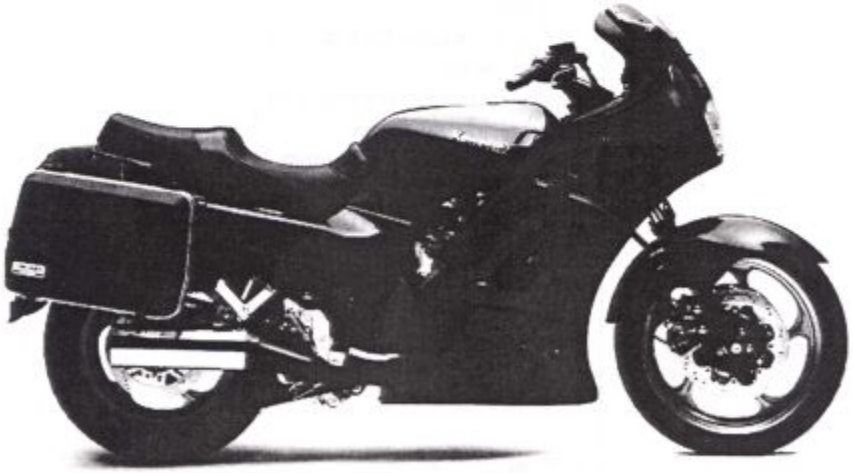

General Specifications

Item		ZG1000-A15
Dimensions:		
Overall length		2 290 mm
Overall width		930 mm
Overall height		1 415 mm
Wheelbase		1 555 mm
Road clearance		130 mm
Seat height		790 mm
Dry weight		270 kg, (CA) 270.5 kg, (EU) (FR) 273 kg
Curb weight:	Front	144 kg, (EU) (FR) 145 kg
	Rear	163 kg, (CA) 163.5 kg, (EU) (FR) 165 kg
Fuel tank capacity		28.5 L
Performance:		
Minimum turning radius		3.3 m
Engine:		
Type		4-stroke, DOHC,4-cylinder
Cooling system		Liquid-cooled
Bore and stroke		74.0 × 58.0 mm
Displacement		997mL
Compression ratio		10.2
Maximum horsepower		80.9 kW (110 PS) @9 500 r/min (rpm) (EU) (FR) 72 kW (97.8 PS) @9 000 r/min (rpm) (AS) 68 kW (92.5 PS) @ 9 000 r/min (rpm) (US) —
Maximum Torque		98 N-m (10.0 kg-m, 72.3 ft-lb) @6 500 r/min (rpm) (EU) 86 N-m(8.7 kg-m, 62.9 ft-lb) @6 500 r/min (rpm) (AS) 81.4 N-m(8.3 kg-m, 60.0 ft-lb) @6 500 r/min (rpm) (US) (FR) : —
Carburetion system		Carburetor, Keihin CVK 32 × 4
Starting system		Electric starter
Ignition system		Battery and coil (transistorized)
Timing advance		Electronically advanced
Ignition timing		From 10° BTDC @1 000 r/min (rpm) to 35° BTDC @3 500 r/min (rpm), (EU) (FR) from 10° BTDC @1 300 r/min (rpm) to 35° BTDC @3 500 r/min (rpm)
Spark plug		NGK DR9EA or ND X27ESR-U, (US) (CN) NGK DR8EA or ND X24ESR-U
Cylinder numbering method		Left to right, 1-2-3-4
Firing order		1-2-4-3
Valve timing:		
Inlet	Open	37.5° BTDC
	Close	57.5° ABDC
	Duration	275°
Exhaust	Open	57.5° BBDC
	Close	37.5° ATDC
	Duration	275°
Lubrication system		Forced lubrication (wet sump with cooler)

Item		ZG1000-A15
Engine oil:	Grade	SE, SF, or SG class
	Viscosity	SAE 10W-40, 10W-50, 20W-40, 20W-50
	Capacity	3.7 L
Drive Train:		
Primary reduction system:		
	Type	Gear
	Reduction ratio	1.732 (97/56)
Clutch type:		Wet multi disc
Transmission:	Type	6-speed, constant mesh, return shift
Gear ratios:	1st	3.071 (43/14)
	2nd	2.055 (37/18)
	3rd	1.590 (35/22)
	4th	1.333 (32/24)
	5th	1.153 (30/26)
	6th	0.965 (28/29)
Final drive system:		
Type		shaft drive
Reduction ratio		2.708 (16/21 × 32/9)
Overall drive ratio		4.530 @Top gear
Final gear case oil:	Type	API GL-5 Hypoid gear oil
	Viscosity	SAE90 (above 5°C), SAE80 (below 5°C)
	Capacity	220 mL
Frame:		
Type		Tubular, diamond
Caster (rake angle)		28.5°
Trail		123 mm
Front tire:	Type	Tubeless
	Size	120/70 R18 59V
Rear tire:	Type	Tubeless
	Size	150/80 R16 71V
Front suspension:	Type	Telescopic fork (pneumatic)
	Wheel travel	140 mm
Rear suspension:	Type	Swingarm (uni-trak)
	Wheel travel	140 mm
Brake type:	Front	Dual disc
	Rear	Single disc
Electrical Equipment:		
Battery		12 V 18 Ah
Headlight:	Type	Semi-sealed beam
	Bulb	12 V 60/55 W (quartz-halongen)
Tail/brake light:		12 V 5/21 W × 2,(CN)(US)12 V 8/27 W × 2
Alternator:	Type	Three-phase AC
	Rated output	28.6 A @6 000 r/min (rpm), 14 V

Specifications are subject to change without notice, and may not apply to every country.

(AS) : Australia Model
(CA) : California Model
(CN) : Canada Model
(EU) : EUROPE Model
(FR) : France Model
(US) : U.S.A. Model

Fuel System

specifications

carburetor specifications

Make / Type	:	Keihin CVK 32
idle Speed	:	1 000±50 r/min (rpm), (CA) 1 200±50 r/min (rpm), (EU) (FR) 1 300±50 r/min (rpm)
Main Jet	:	#115 (AS) (US) (CN) #125 (CA) #130
Main Air Jet	:	#130
Air Cut Valve		
Air Jet	:	#85
Jet Needle	:	N1 QM (AS) (US) (CN) (CA) N52M
Pilot Screw	:	1 1/2 Turns out (AS) 2.0 Turns out
	:	(CN) (US) (CA) —
Pilot Jet	:	#35
Pilot Air Jet	:	#85
Starter Jet	:	#55 (CA) #45
Needle Jet	:	#6
Fuel Level	:	0.5 mm (2.5 mm~0.5 mm above from bottom edge of carburetor body)
		(AS) (US) (CN) (CA) −0.5 mm (1.5 mm above to 0.5 mm below from bottom edge of carburetor body)
Float Level	:	17±2 mm

Wheels Tires

specifications

Item			Standard	Service Limit
Tire tread depth		Front	4.4 mm	1 mm
		Rear	6.9 mm	2 mm (Under 130 km/h) 3 mm (Over 130 km/h)
Standard tire		Front	120/70 R 18 59V DUNLOP K 701F, Tubeless	
		Rear	150/80 R 16 71V DUNLOP K 700J, Tubeless	
			Load	Air Pressure (when cold)
Tire air pressure	Front			250 kPa (2.50 kg/cm^2,36 Psi)
	Rear	US, Canada, and Australia Model	Up to 200 kg (441 lb)	290 kPa (2.90 kg/cm^2,41 Psi)
		Other than above Model	Up to 97.5 kg (215 lb)	250 kPa (2.50 kg/cm^2,36 Psi)
			Up to 97.5 kg~183 kg (215- 404 lb)	290 kPa (2.90 kg/cm^2,41 Psi)
Rim runout:		Axial Radial	--- ---	0.5 mm 0.8 mm
Axle runout/ 100 mm			Under 0.05 mm	0.2 mm (0.7 mm: RL)

Electrical System

specifications

Spark plug specifications

	Standard	Low Speed Riding	High Speed Riding
US, and Canada, Model	NGK DR8EA ND X24ESR-U	NGK DR7EA ND X22ESR-U	NGK DR9EA ND X27ESR-U
Other than above Model	NGK DR9EA ND X27ESR-U	Same as standard	Same as standard

ZG1000-A15 Wiring Diagram (Australia)

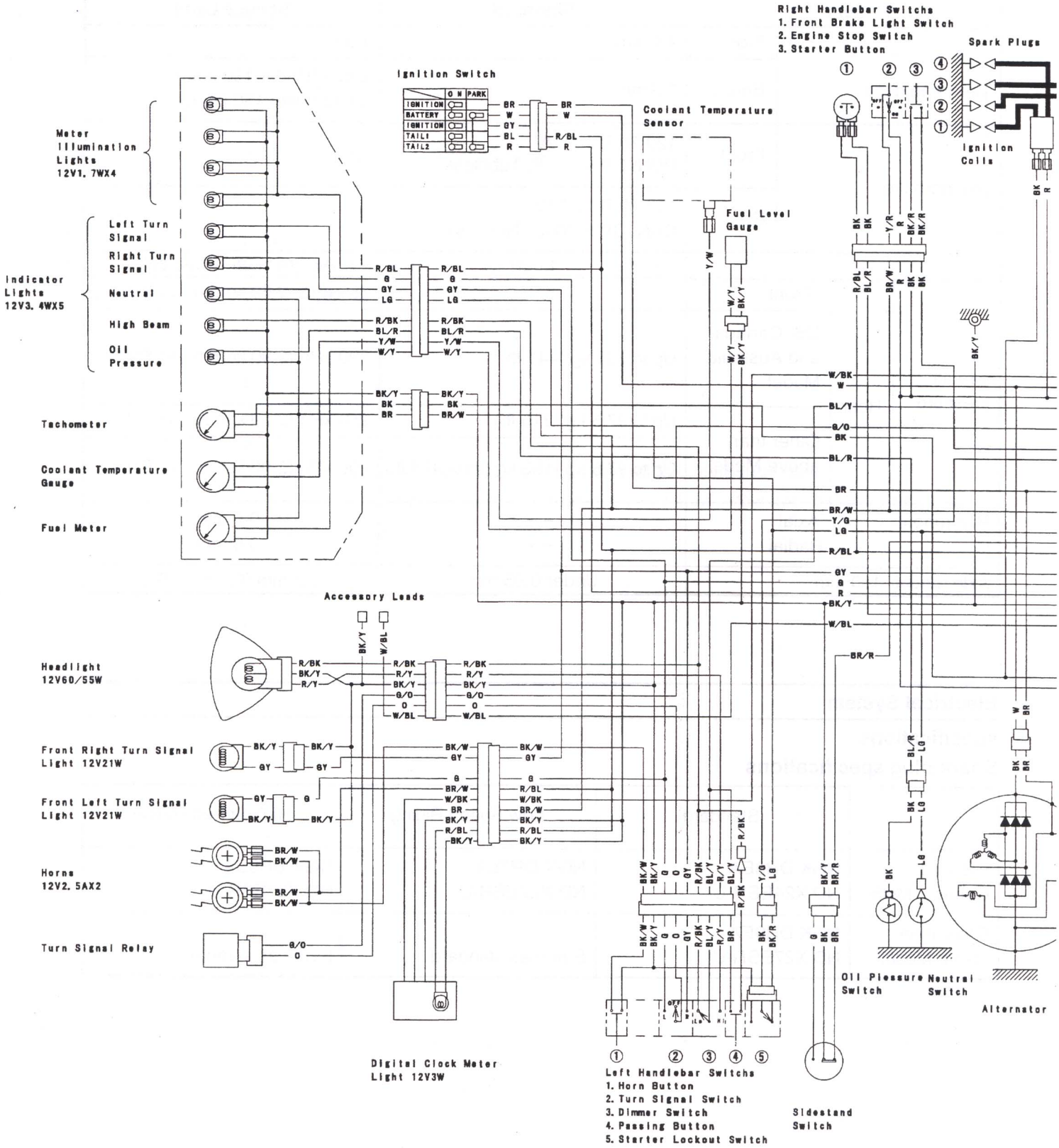

LEFT HANDLEBAR SWITCH CONNECTIONS														
Horn Button			Turn Signal Switch				Dimmer Switch				Passing Button			Starter Lock
Color	BK/W	BK/Y	Color	G	O	GY	Color	R/BK	BL/Y	R/Y	Color	BR	R/BK	Color	BK/
ON (Push)	●	●	R		●	●	HI	●	●		ON (Push)	●	●	Clutch Lever	
			N											Released	
			L	●	●		LO		●	●				Pulled In	●

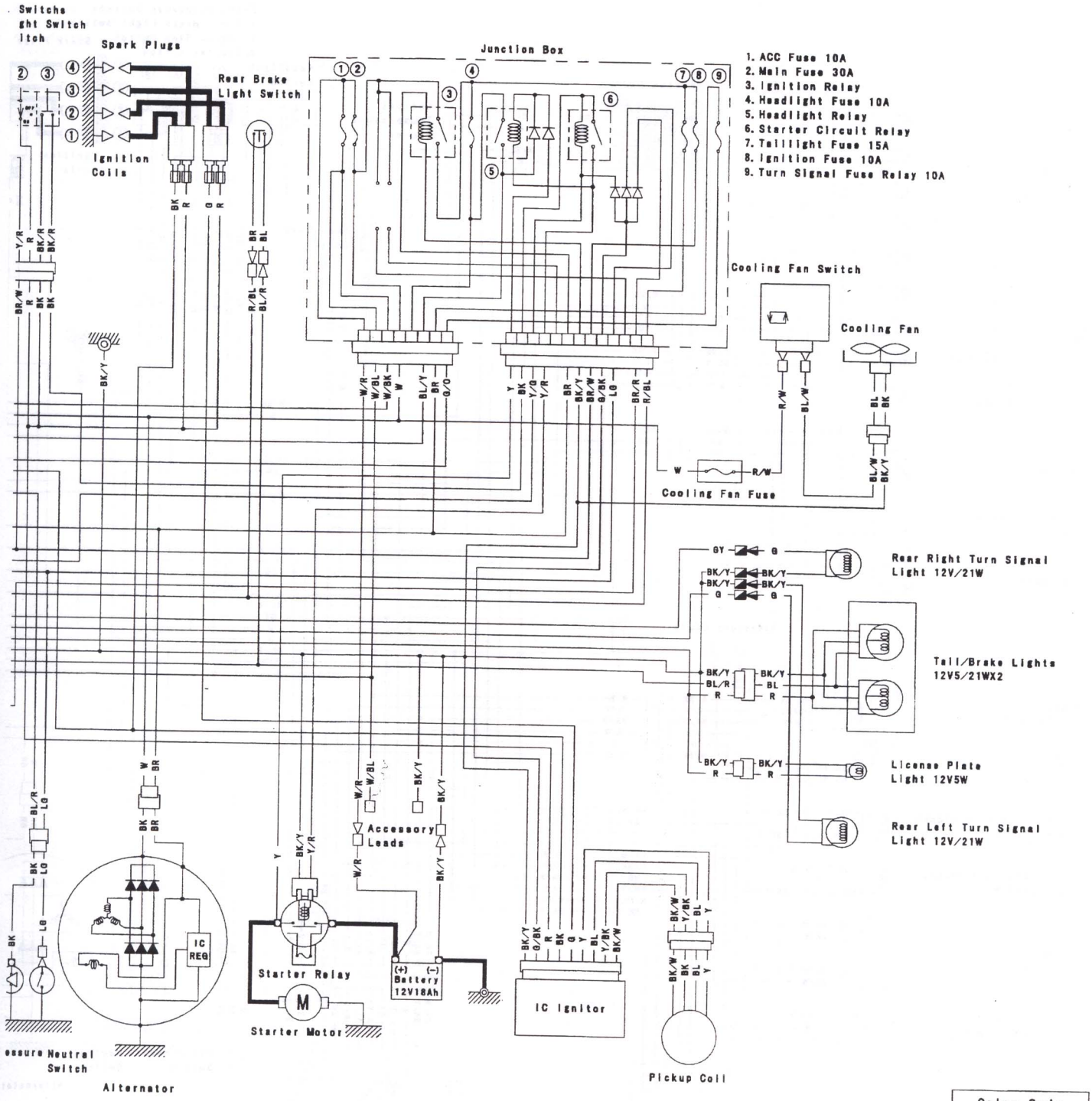

Color Code	
BK	Black
BL	Blue
BR	Brown
CH	Chocolate
DG	Dark Green
G	Green
GY	Gray
LB	Light Blue
LG	Light Green
O	Orange
P	Pink
PU	Purple
R	Red
W	White
Y	Yellow

(98051-1416B)

ZGT00A01A3 C

TIONS

ing Button			Starter Lockout Switch			
or	BR	R/BK	Color	BK/Y	BK	BK/R
sh)	○—●		Clutch Lever			
			Released		○—●	
			Pulled in	●—○		

IGNITION SWITCH CONNECTIONS

	Ignition	Battery	Ignition	Tail1	Tail2
Color	BR	W	GY	BL	R
ON	●—○		○	○—●	
P (PARK)		●—●	●—●	●—●	●—●

RIGHT HANDLEBAR SWITCH CONNECTIONS

Front Brake Light Switch			Engine Stop Switch			Starter Button		
Color	BK	BK	Color	Y/R	R	Color	BK/R	BK/R
Released			OFF			ON (Push)	●—○	
Pulled in	●—○		RUN	●—○		OFF		

ZG1000-A15 Wiring Diagram (Other than US, CANADA & Australia)

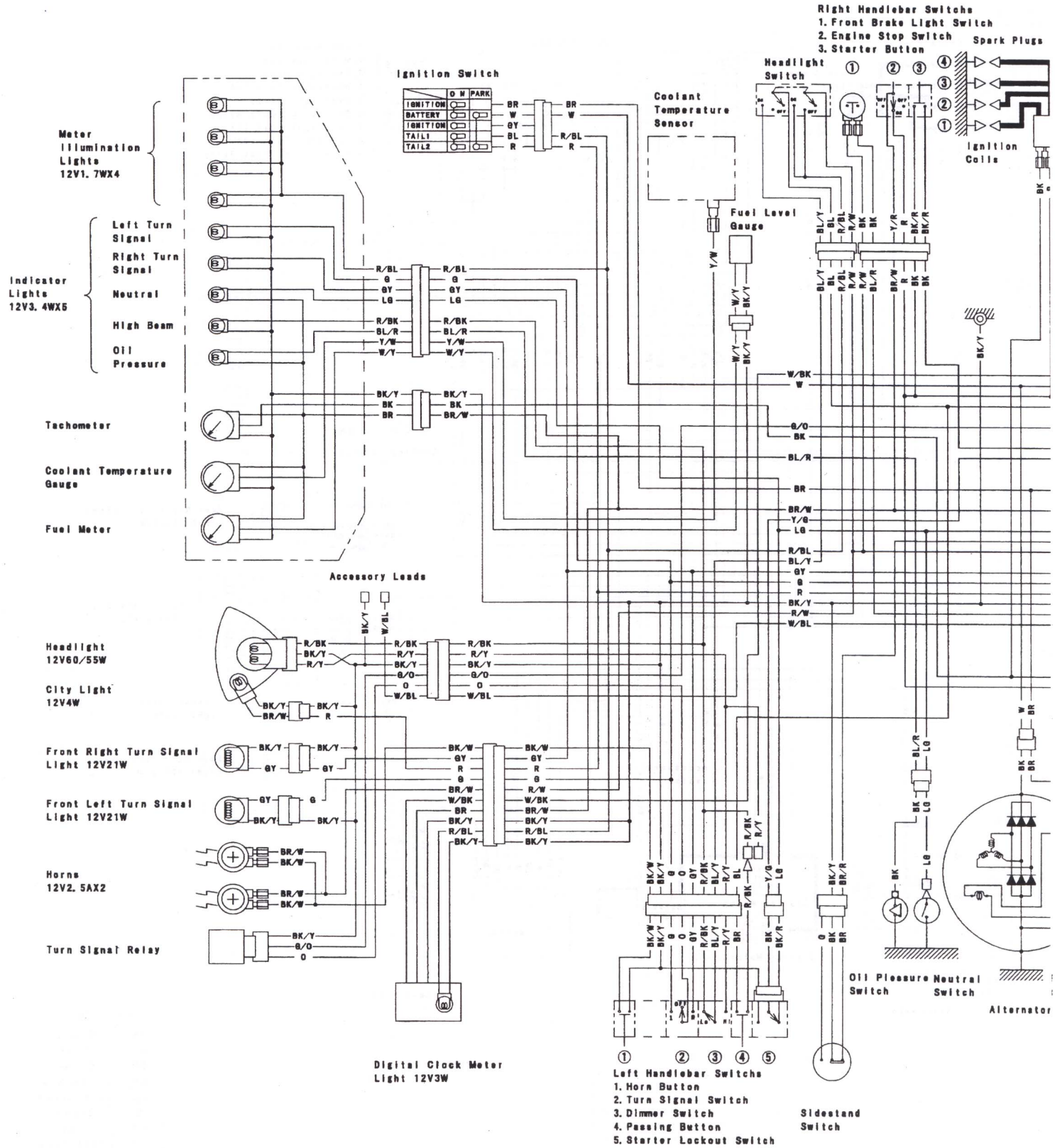

LEFT HANDLEBAR SWITCH CONNECTIONS

Horn Button			Turn Signal Switch				Dimmer Switch				Passing Button			Starter Lockout Switch			
Color	BK/W	BK/Y	Color	G	O	GY	Color	R/BK	BL/Y	R/Y	Color	BR	R/BK	Color	BK/Y	BK	BK/R
ON (Push)	○—●		R		○—●		HI	○—●			ON (Push)	○—●		Clutch Lever			
			N											Released		○—●	
			L	○—●			LO		○—●					Pulled In	○—●		

IGNITI	
	Igni
Color	B
ON	
P (PARK)	

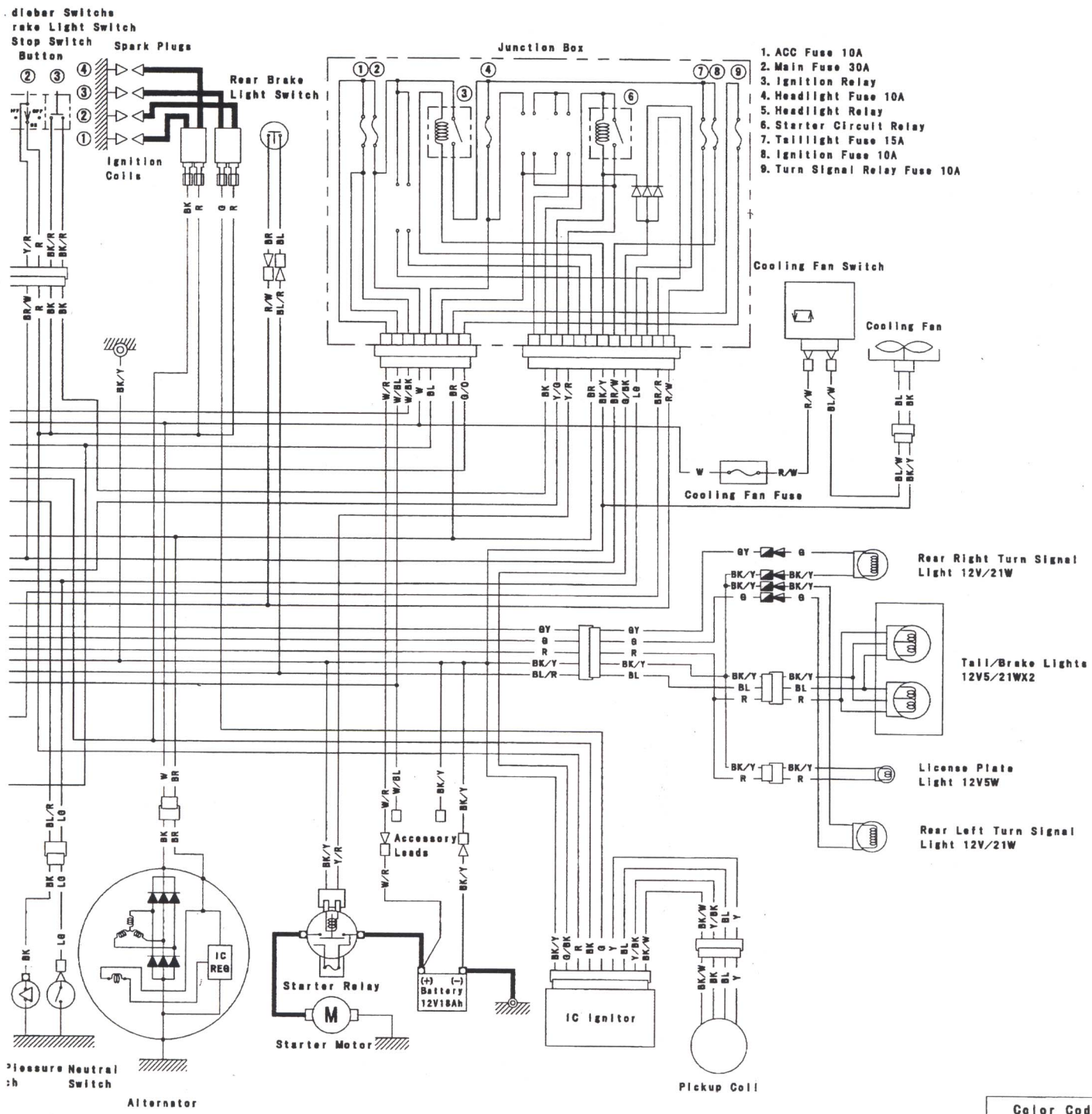

Color Code	
BK	Black
BL	Blue
BR	Brown
CH	Chocolate
DG	Dark Green
G	Green
GY	Gray
LB	Light Blue
LG	Light Green
O	Orange
P	Pink
PU	Purple
R	Red
W	White
Y	Yellow

(98051-1417B)

ockout Switch		
BK/Y	BK	BK/R
	●	
●		

IGNITION SWITCH CONNECTIONS					
	Ignition	Battery	Ignition	Tail1	Tail2
Color	BR	W	GY	BL	R
ON	○	●	○	●	●
P (PARK)		●	●	●	●

RIGHT HANDLEBAR SWITCH CONNECTIONS														
Headlight Switch					Front Brake Light Switch			Engine Stop Switch			Starter Button			
Color	BL/Y	BL	R/BL	R/W	Color	BK	BK	Color	Y/R	R	Color	BK/R	BK/R
ON	●		●		Released			OFF			ON (Push)	●	
○			●										
OFF					Pulled in	●		RUN	●		OFF		

MODEL APPLICATION

Year	Model	Beginning Frame No.
1986	ZG1000-A1	JKAZGCA1□GA000001,or JKAZGCA1□GB500001,or ZGT00A-000001
1987	ZG1000-A2	JKAZGCA1□HA005501,or JKAZGCA1□HB503401,or ZGT00A-005501
1988	ZG1000-A3 ZG1000-A3A	JKAZGCA1□JA006701,or JKAZGCA1□JB504901,or ZGT00A-006701
1989	ZG1000-A4	JKAZGCA1□KA008001,or ZGT00A-008001
1990	ZG1000-A5	JKAZGCA1□LA009001,or JKAZGCA1□LB505601,or ZGT00A-009001
1991	ZG1000-A6	JKAZGCA1□MA011401,or JKAZGCA1□MB506701,or ZGT00A-011401
1992	ZG1000-A7	JKAZGCA1□NA014001,or JKAZGCA1□NB506701,or ZGT00A-014001
1993	ZG1000-A8	JKAZGCA1□PA025001,or JKAZGCA1□PB507301
1994	ZG1000-A9	JKAZGCA1□RA035001,or JKAZGCA1□RB508001,or ZGT00A-035001
1995	ZG1000-A10	JKAZGCA1□SA038001,or JKAZGCA1□SB508651
1996	ZG1000-A11	JKAZGCA1□TA042001,or ZGT00A-042001
1997	ZG1000-A12	JKAZGCA1□VA046001,or ZGT00A-046001
2000	ZG1000-A15	JKAZGCA1□YA057001,or JKAZGCA1□YB513301

□: This digit in the frame number changes from one machine to another.

Kawasaki
KAWASAKI HEAVY INDUSTRIES, LTD.
Consumer Productu & Machinery Group

Part No. 99924-1065-10

Printed in Japan