⚠WARNING

Failure to follow these safety precautions may increase your risk of injury:

- **Wear a helmet, eye protection, and bright protective clothing.**
- **Don't ride after consuming alcohol or other drugs.**
- **Slow down when road is slippery or visibility is reduced.**
- **Read owner's manual carefully.**

VX800 03A

P

Part No. 99011-45C53-03A
July, 1992 ① EN
Printed in Japan

SUZUKI

OWNER'S MANUAL

This owner's manual contains important safety information. Please read it carefully.

VX800

IMPORTANT

WARNING/CAUTION/NOTE

Please read this manual and follow its instructions carefully. To emphasize special information, the symbol ⚠ and the words WARNING, CAUTION and NOTE have special meanings. Pay special attention to the messages highlighted by these signal words:

⚠WARNING

Indicates a potential hazard that could result in death or injury.

⚠CAUTION

Indicates a potential hazard that could result in motorcycle damage.

NOTE: Indicates special information to make maintenance easier or instructions clearer.

WARNINGs and CAUTIONs are arranged like this:

⚠WARNING-or-⚠CAUTION

The first part will describe a POTENTIAL HAZARD and WHAT CAN HAPPEN if you ignore the WARNING or CAUTION.

The second part will describe HOW TO AVOID THE HAZARD.

FOREWORD

Motorcycling is one of the most exhilarating sports and to ensure your riding enjoyment, you should become thoroughly familiar with the information presented in this Owner's Manual before riding the motorcycle.

The proper care and maintenance that your motorcycle requires is outlined in this manual. By following these instructions explicitly you will ensure a long trouble-free operating life for your motorcycle. This motorcycle also conforms to the U.S Environmental Protection Agency emission regulations which apply to new motorcycles. The proper adjustment of engine components is necessary for this motorcycle to comply with the EPA regulations. Therefore, please follow the maintenance instructions closely to ensure emission compliance. Your Suzuki dealer has experienced technicians that are trained to provide your machine with the best possible service with the right tools and equipment.

All information, illustrations, photographs and specifications contained in this manual are based on the latest product information available at the time of publication. Due to improvements or other changes, there may be some discrepancies in this manual. Suzuki reserves the right to make production changes at any time, without notice and without incurring any obligation to make the same or similar changes to vehicles previously built or sold.

Suzuki Motor Corporation believes in conservation and protection of Earth's natural resources. To that end, we encourage every vehicle owner to recycle, trade in, or properly dispose of, as appropriate, used motor oil, engine coolant, and other fluids: batteries, and tires.

SUZUKI MOTOR CORPORATION

TABLE OF CONTENTS

THE SPORT OF MOTORCYCLING

Your motorcycle and this owner's manual have been designed by people like you who enjoy motorcycling. People become motorcyclists for many reasons. For starters, street riding is fun and invigorating. But no matter why you became a motorcyclist, or how experienced you are, you will eventually face some challenging situations.

In preparing for these challenges, you will be fine-tuning your coordination, concentration, and attitude. Learning the skills and strategies associated with motorcycling is the basis for safely participating in this sport. Many motorcyclists find that as they become better riders, they also get more enjoyment from the freedom unique to motorcycling.

Please remember:

1. Most accidents can be avoided.

The most common type of motorcycle accident in the U.S. occurs when a car traveling towards a motorcycle turns left in front of the motorcycle. Is that because other drivers are out to get motorcyclists? No. Other drivers simply don't always notice motorcyclists. Ride defensively. Wise motorcyclists use a strategy of assuming they are invisible to other drivers, even in broad daylight. Pay careful attention to other motorists, especially at intersections, because they may not be paying attention to you. Select a lane position that gives you the best view

of others, and other motorists the best view of you. Wear bright, reflective clothing. Put reflective strips on your helmet.

2. **If you don't have a helmet: Buy a helmet, and wear it EVERY TIME YOU RIDE.**
Most accidents occur within a few miles of home, and almost half occur at speeds of less than 30 mph. So even if you're just going on a quick errand, be prepared – strap on your helmet before you take off.

Helmets do not reduce essential vision or hearing. Generally, helmets do not cause or intensify injury if you crash. Helmets simply help your skull protect your intelligence, your memory, your personality, and your life.

Your eyesight is equally valuable. Wearing suitable eye protection can help keep your vision unblurred by the wind and save your eyes from airborne hazards like bugs, dirt, or pebbles kicked up by tires.

3. **If a collision is imminent, DO SOMETHING!**
Many riders fear locking up their brakes or haven't learned to swerve to avoid an accident. Many inexperienced riders (and too many seasoned riders) use only their rear brake in an emergency, resulting in unnecessary impacts in some cases and unnecessarily high impact speeds in other cases. Your rear brake can only provide about 30% of your motorcycle's potential stopping power. The front and rear brakes can and should be used together to maximize braking effectiveness.

Experienced motorcyclists learn to "cover" the front brake lever by lightly resting a couple of fingers over the lever when riding in traffic and near intersections to give their reaction time a head start.

Emergency stopping and swerving are techniques that you should practice and master before you find yourself in an emergency situation. The best place to practice such techniques is in a controlled environment such as the Motorcycle Safety Foundation's (MSF) rider training courses. The MSF's Motorcycle RiderCourses (fundamental techniques) and Experienced RiderCourses (advanced strategies) present hands-on instruction of the basic principles of motorcycling and a variety of accident-avoidance maneuvers. Even a seasoned motorcyclist can improve his or her riding skills, and pick up a few new skills, through these courses. Some insurance companies even offer discounts to course graduates.

4. **Special situations require special care.**
Of course, there are some times when full-force braking is not the correct technique. When the road surface is wet, loose, or rough, you should brake with care. When you're leaned over in a corner, avoid braking. Straighten up before braking.

Better yet, slow down before entering the corner.

In these situations, the traction available between your tires and the road surface is limited. Overbraking when traction is limited will cause your tires to skid, possibly resulting in loss of directional control or causing you and your motorcycle to fall over.

5. **Know your limits.**
Always ride within the boundaries of your own skills. Knowing these limits and staying within them will help you avoid accidents.

A major cause of accidents involving only a motorcycle (and no cars) is going too fast through a turn. Before entering a turn, select an appropriately low cornering speed.

Even on straight roads, ride at a speed that is appropriate for the traffic, visibility and road conditions, your motorcycle, and your experience.

Riding a motorcycle safely requires that your mental and physical skills are fully part of the experience. You should not attempt to operate a motor vehicle, especially one with two wheels, if you are tired or under the influence of alcohol or other drugs. Alcohol, illegal drugs, and even some prescription and over-the-counter drugs can cause drowsiness, loss of coordination, loss of balance, and especially the loss of good judgment. If you are tired or under the influence of alcohol or other drugs, PLEASE DO NOT RIDE your motorcycle.

6. **Be extra safety-conscious on bad weather days.**
Riding on bad weather days, especially wet ones, requires extra caution. Braking distances increase on a rainy day. Stay off the painted surface marks, manhole covers, and greasy-appearing areas, as they can be especially slippery. Use extra caution at railway crossings and on metal gratings and bridges. When it starts to rain, any oil or grease on the road rises to the surface of the water. Pull over and wait a few minutes until this oil film is washed away before riding. Whenever in doubt about road conditions, slow down!

7. **Practice away from traffic.**
Your riding skill and your mechanical knowledge form the foundation for safe riding practices. We suggest that you practice riding your motorcycle in a non-traffic situation until you are thoroughly familiar with your machine and its controls. Again, consider taking one of the MSF's RiderCourses. Even experts will be pleased with the caliber of the information presented in these courses. As the MSF says: "The more you know, the better it gets!"

8. **Inspection before riding.**
Review the instructions in the "Inspection Before Riding" section of this manual. Perform an entire pre-ride inspection be-

fore you head out on the road. Spending a few minutes preparing your machine for a ride can help prevent accidents due to mechanical failure or costly, inconvenient breakdowns far from home.

9. **Accessories and Loading**
The accessories you use with your motorcycle and the manner in which you load your gear onto the bike might create hazards. Aerodynamics, handling, balance, and cornering clearance can suffer, and the suspension and tires can be overloaded. Read the "Accessory Use and Vehicle Loading" section.

10. **Motorcycle Safety Foundation's "Riding Tips and Practice Guide" Handbook (for owners in USA).**
This special handbook, supplied with your owner's manual, contains a variety of safety tips, helpful hints, and practice exercises. This manual can increase your riding enjoyment and safety. You should read it thoroughly.

11. **Be street smart**
Always heed speed limits. local laws, and the basic rules of the road. Set a good example for others by demonstrating a courteous attitude and a responsible riding style.

12. **Conclusion**
Traffic, road and weather conditions vary. Other motorists' actions are unpredictable. Your motorcycle's condition can change. These factors can best be dealt with by giving every ride your full attention.

Circumstances beyond your control could lead to an accident. You need to prepare for the unexpected by wearing a helmet and other protective gear, and learning emergency braking and swerving techniques to minimize the damage to you and your machine.

The best way to learn basic riding skills and evasive maneuvers or refresh your own riding skills is to take one of the courses offered by the Motorcycle Safety Foundation. Your Suzuki dealer can help you locate the fundamental or advanced riding skills course nearest you, or you can call toll-free 1-800-447-4700.

Good riding on your new Suzuki!

FUEL, OIL AND ENGINE COOLANT RECOMMENDATION

FUEL

Suzuki highly recommends that you use alcohol-free unleaded gasoline whenever possible, with a minimum pump octane rating of 87 ((R+M)/2 method) or 91 octane (Research method). In some areas,the only fuels that are available are oxygenated fuels. Oxygenated fuels which meet the minimum octane requirement and the requirements described below may be used in your motorcycle without jeopardizing the New Vehicle Limited Warranty or the Emission Control System Warranty.

NOTE: Oxygenated fuels are fuels which contain oxygen-carrying additives such as MTBE or alcohol.

Gasoline Containing MTBE

Unleaded gasoline containing MTBE (Methyl Tertiary Butyl Ether) may be used in your motorcycle if the MTBE content is not greater than 15%. This oxygenated fuel does not contain alcohol.

Gasoline/Ethanol Blends

Blends of unleaded gasoline and ethanol (grain alcohol), also known as gasohol, may be used in your vehicle if the ethanol content is not greater than 10%.

Gasoline/Methanol Blends

Avoid using blends of unleaded gasoline and methanol (wood alcohol) whenever possible. DO NOT USE fuels containing more than 5% methanol under any circumstances. Fuel system damage or motorcycle performance problems resulting from the use of such fuels are not the responsibility of Suzuki and may not be covered under the New Vehicle Limited Warranty or the Emission Control System Warranty.

Fuel containing 5% or less methanol may be suitable for use in your motorcycle if they contain cosolvents and corrosion inhibitors.

Fuel Pump Labeling

In some states, pumps that dispense oxygenated fuels are required to be labeled for the type and percentage of oxygenate, and whether important additives are present. Such labels may provide enough information for you to determine if a particular blend of fuel meets the requirements listed above. In other states, pumps may not be clearly labeled as to the content or type of oxygenate and additives. If you are not sure that the fuel you intend to use meets these requirements, check with the service station operator or the fuel suppliers.

NOTE:
- *Be sure that any oxygenated fuel blend you use has octane ratings of at least 87 pump octane ((R+M)/2 method).*
- *If you are not satisfied with the driveability or fuel economy of your motorcycle when you are using a gasoline/alcohol blend, you should switch back to unleaded gasoline containing no alcohol.*
- *If engine pinging is experienced, substitute another brand as there are differences between brands.*
- *Unleaded gasoline will extend spark plug life.*

⚠CAUTION

Spilling gasoline containing alcohol can harm your motorcycle. Alcohol can damage painted surfaces.

Be careful not to spill any fluid when filling the fuel tank. Wipe spilled gasoline up immediately.

ENGINE OIL

Suzuki recommends the use of SUZUKI PERFORMANCE 4 MOTOR OIL or an oil which is rated SE or SF under the API (American Petroleum Institute) classification system. The viscosity rating should be SAE 10W-40. If an SAE 10W-40 oil is not available, select an alternative according to the chart below.

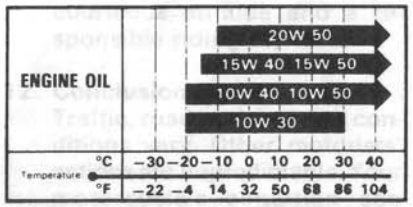

This is a very high performance SAE 10W-40 SF oil with special friction modifier added.

GEAR OIL

Use an SAE90 hypoid gear oil which is rated GL-5 under the API classification system. If you operate the motorcycle where ambient temperature is below 0°C (23°F), use SAE80 hypoid gear oil.

ENGINE COOLANT SOLUTION

Use engine coolant that is compatible with an aluminum radiator, mixed with distilled water at a 50:50 mixture ratio for engine coolant solution. A engine coolant mixture other than 50:50 can affect cooling efficiency or rust inhibiting performance.

Engine Coolant

Engine coolant should be used at all times in your motorcycle's radiator, even if the temperature in your area does not go down to the freezing point. Engine coolant acts as a rust inhibitor and water pump lubricant as well as an anti-freeze solution.

⚠WARNING

Engine coolant is harmful if swallowed or if it comes in contact with your skin or eyes.

Keep engine coolant away from children and pets. Call your doctor immediately if engine coolant is swallowed, and induce vomiting. Flush eyes or skin with water if engine coolant gets in eyes or comes in contact with skin.

⚠CAUTION

Spilled engine coolant can damage painted surfaces.

Be careful not to spill any fluid when filling the radiator. Wipe spilled engine coolant up immediately.

Water for Mixing

Use distilled water only. Water other than distilled water can corrode and clog the aluminum radiator.

Required Amount of Engine Coolant/Water

Solution capacity (total): 1 700 ml (3.60 US pt)

Engine Coolant	850 ml (1.80 US pt)
Water	850 ml (1.80 US pt)

LOCATION OF LABELS

Read and follow all of the warnings labeled on your motorcycle. Make sure you understand all of the labels. Keep the labels on your motorcycle. Do not remove them for any reason.

①

⚠WARNING

Failure to follow these safety precautions may increase your risk of injury:
- **Wear a helmet, eye protection, and bright protective clothing.**
- **Don't ride after consuming alcohol or other drugs.**
- **Slow down when road is slippery or visibility is reduced.**
- **Read owner's manual carefully.**

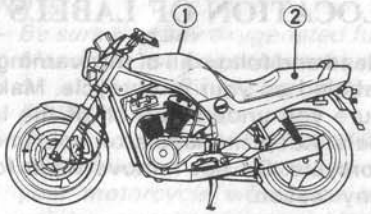

②

TIRE WARNING

- **This motorcycle is equipped with TUBELESS type tires.**
- **Suzuki recommends replacement only with the specified tubeless tires listed below.**
- **Check tire inflation and general tire condition frequently.**

Einzelheiten für Reifen.

- **Dies Motorrad ist mit schlauch losen Reifen ausgestattet.**
- **Suzuki empfiehlt, daß nur die unten aufgeführten schlauchlosen Reifen als Ersatzreifen benutzt werden.**
- **Prüfen Sie den Reifendruck und den Reifenzustand häufig.**

TIRE INFLATION PRESSURE Reifendruck		SOLO RIDING Alleinfahren			DUAL RIDING Fahren mit Beifahrer		
		KG/CM²	kPa	LB/IN²	KG/CM²	kPa	LB/IN²
TIRE SIZE & BRAND (TUBELESS ONLY) Reifengröße und Marke (nur schlauchlos)	FRONT Vorderrad	2.25	225	33	2.25	225	33
	REAR Hinterrad	2.50	250	36	2.80	280	41
	FRONT Vorderrad				REAR Hinterrad		
	110/80 - 18 58H				150/70 B17 69H 150/70 - 17 69H		
METZELER	ME33				ME55A		
DUNLOP	K505FG				K505G		

- TIRE PRESSURE SHOULD BE MEASURED WHEN THE TIRES ARE COLD.
- DER REIFENDRUCK MUß GEMESSEN WERDEN, WENN DIE REIFEN KALT SIND.

LOCATION OF PARTS

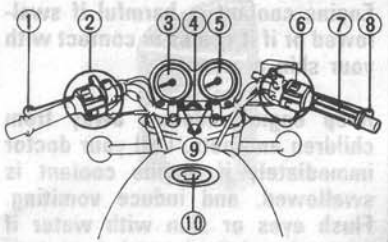

① Clutch lever
② Left handlebar switches
③ Speedometer
④ Ignition switch
⑤ Tachometer
⑥ Right handlebar switches
⑦ Throttle grip
⑧ Front brake lever
⑨ Indicator lights
⑩ Fuel tank cap

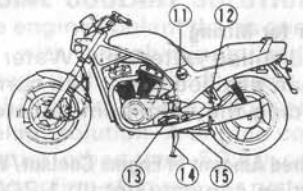

⑪ Fuelcock
⑫ Seat lock
⑬ Gearshift lever
⑭ Side stand
⑮ Center stand

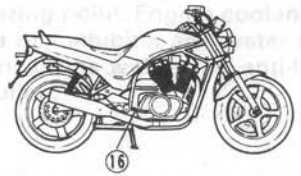

⑯ Rear brake pedal

CONTROLS, EQUIPMENT AND ADJUSTMENTS

KEY

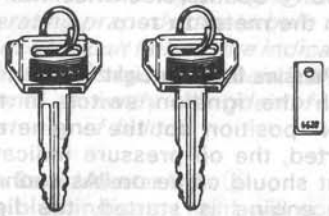

Two keys come with this motorcycle. Keep the spare key in a safe place. An identifying number is stamped on the plate. Use this number when making a replacement key.

Please write down your key number in the box provided for your future reference.

Key No:

IGNITION SWITCH

The ignition switch has 4 positions.

"OFF" position
All electrical circuits are off. The engine will not start.

"ON" position
The ignition circuit is completed and the engine can run. The headlight and taillight will automatically turn on. You cannot remove the key from the ignition switch in this position.

NOTE: Start the engine promptly after turning the ignition key to the "ON" position. The reason for this is that the headlight and taillight come on when the ignition is turned on and will cause the battery to lose power.

"LOCK" position
All electrical circuits are off. You can remove the key from the ignition switch and the steering will be locked. Turn the steering to the left and push down the key and turn it to the "LOCK" position.

"P" (PARKING) position
Taillight will come on to increase visibility for temporary road side parking at night. You can remove the ignition key and the steering will be locked.

⚠WARNING

Turning the ignition switch to the "P" (PARKING) or "LOCK" position while the motorcycle is moving can be hazardous. Moving the motorcycle while the steering is locked can be hazardous. You could lose your balance and fall, or you could drop the motorcycle.

Stop the motorcycle and place it on the center stand or side stand before locking the steering. Never attempt to move the motorcycle when the steering is locked.

INSTRUMENT PANEL

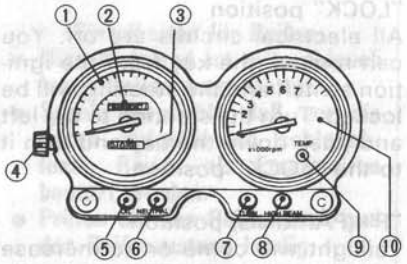

Speedometer ①
The speedometer indicates the road speed in kilometers per hour and miles per hour.

Odometer ②
The odometer registers the total distance that the motorcycle has been ridden.

Trip Meter ③
The trip meter is a resettable odometer located in the speedometer assembly. It can be used to indicate the distance traveled on short trips or between fuel stops. Turning **knob ④** counterclockwise will return the meter to zero.

Oil Pressure Indicator Light ⑤
With the ignition switch in the "ON" position but the engine not started, the oil pressure indicator light should come on. As soon as the engine is started, the light should go out.

⚠CAUTION

Riding the motorcycle with the oil pressure indicator light lit can damage the engine and transmission.

Whenever the oil pressure indicator lights up, indicating no oil pressure, stop the engine immediately. Check the oil level and determine if the proper amount of oil is in the engine. If the light still does not go out, then have your authorized Suzuki dealer inspect your motorcycle to determine the difficulty.

Neutral Indicator Light ⑥
The green indicator light will come on when the transmission is in neutral. The light will go out when you shift into any gear other than neutral.

Turn Signal Indicator Light ⑦
When either the right or left turn signals are being operated, the indicator light will flash intermittently.

NOTE: If a turn signal light is not operating properly due to bulb filament or circuit failure, the indicator light flickers more frequently than normal to notify the rider of the existance of failure.

High Beam Indicator Light ⑧
The blue indicator light will come on when the headlight high beam is turned on.

Engine Coolant Temperature Check Light ⑨
With the ignition switch in the "ON" position but the engine not started, the engine coolant temperature check light should come on. As soon as the engine is started, the light should go out. If this light comes on, it means that the engine coolant temperature is too high.

⚠CAUTION

Riding the motorcycle with the engine coolant temperature check light lit can overheat the engine.

If the check light comes on, stop the engine immediately and allow the engine to cool. Do not let the engine continue to run when the check light comes on.

Tachometer ⑩
The tachometer indicates the engine speed in revolutions per minute (r/min).

LEFT HANDLEBAR

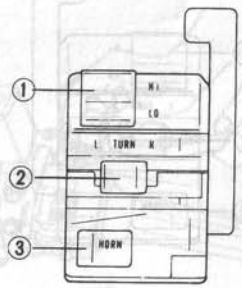

Dimmer Switch ①
"LO" position
The headlight low beam and taillight turn on.

"HI" position
The headlight high beam and taillight turn on. The high beam indicator light also turns on.

Turn Signal Switch ②
Moving the switch to the "L" position will flash the left turn signals. Moving the switch to the "R" position will flash the right turn signals. The indicator light will also flash intermittently. To cancel turn signal operation, push the switch in.

⚠WARNING

Failure to use the turn signals, and failure to turn off the turn signals can be hazardous. Other drivers may misjudge your course and this may result in an accident.

Always use the turn signals when you intend to change lanes or make a turn. Be sure to turn off the turn signals after completing the turn or lane change.

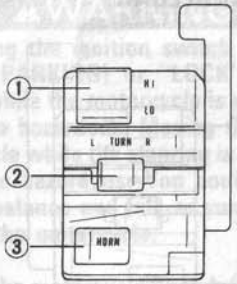

Horn Button ③
Press the button to operate the horn.

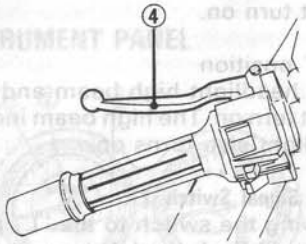

Clutch Lever ④
The clutch lever is used to disengage the drive to the rear wheel when starting the engine or shifting the transmission. Squeezing the lever disengages the clutch.

RIGHT HANDLEBAR

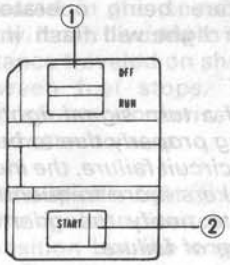

Engine Stop Switch ①
"OFF" position
The ignition circuit is off. The engine cannot start or run.

"RUN" position
The ignition circuit is on and the engine can run.

Electric Starter Button ②
Use this button to turn the starter motor. With the ignition switch and engine stop switch in the "RUN" position, and the transmission is in neutral, pull in the clutch lever and push the electric starter button to start the engine.

NOTE: This motorcycle has a starter interlock system for the ignition and starter circuit. The engine can only be started if:
(1) The transmission is in neutral and the clutch is disengaged, or
(2) The transmission is in gear, the side stand is fully up, and the clutch is disengaged.

⚠CAUTION

Engaging the starter motor for more than five seconds at a time can damage the motorcycle. The starter motor and wiring harness may overheat.

If the engine does not start after several attempts, check the fuel supply and ignition system. Refer to the TROUBLESHOOTING section in this manual.

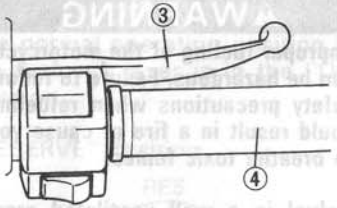

Front Brake Lever ③
Apply the front brake by squeezing the front brake lever towards the grip. The brake light will come on when the lever is squeezed.

Throttle Grip ④
Engine speed is controlled by the position of the throttle grip. Turn it toward you to increase engine speed. Turn it away from you to decrease engine speed.

Front Brake Lever Adjustment

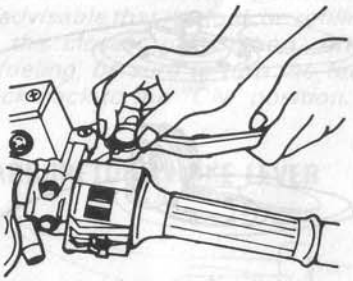

The distance between the throttle grip and the front brake lever is adjustable among four positions. To change the position, push the brake lever forward and turn the adjuster to the desired position. Be sure the adjuster stops in the proper position; a projection of the brake lever holder should fit into the depression of the adjuster. This motorcycle is delivered from the factory with its adjuster set on position 2.

⚠WARNING

Adjusting the front brake lever position while riding can be hazardous. Removing a hand from the handlebars can reduce your ability to control the motorcycle.

Always keep both hands on the handlebars during operation.

FUEL TANK CAP

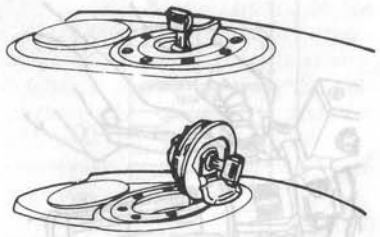

To open the fuel tank cap, insert the ignition key into the lock and turn it clockwise. With the key still held in position, lift up the cap. To replace the cap, push the cap down firmly with the key in the cap lock.

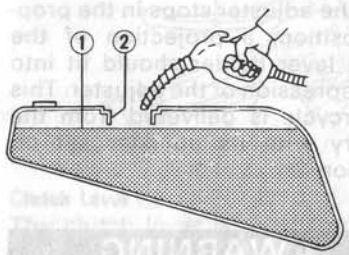

① Fuel level
② Filler tube

⚠WARNING

Overfilling the fuel tank can be hazardous. If you overfill the fuel tank, fuel may overflow when it expands. Fuel expands due to engine heat or heating by the sun. Overheated fuel can easily catch fire.

Stop adding fuel when the fuel level reaches the bottom of the filler tube.

⚠WARNING

Improper fueling of the motorcycle can be hazardous. Failure to follow safety precautions when refueling could result in a fire or cause you to breathe toxic fumes.

Refuel in a well ventilated area. Turn the engine off and avoid spilling fuel on a hot engine. Do not smoke, and make sure there are no open flames or sparks in the area. Avoid breathing gasoline vapors. Keep children away when you refuel the motorcycle.

FUELCOCK

This motorcycle has a manually operated fuelcock. There are two position: "ON" and "RESERVE."

"ON" Position

The normal operating position for the fuelcock lever is in the "ON" position.

"RESERVE" Position

If the fuel level in the fuel tank becomes too low for the engine to operate with the fuelcock lever in the "ON" position, turn the lever to the "RESERVE" position to use the reserve fuel supply.
Reserve fuel supply:4.0 L (1.1 US gal)

dial may be reversed. Remember Clockwise to "On"

NOTE: After turning the fuelcock lever to the "RESERVE" position, it is advisable that the tank be refilled at the closest gas station. After refueling, be sure to turn the fuelcock back to the "ON" position.

CARBURETOR CHOKE LEVER

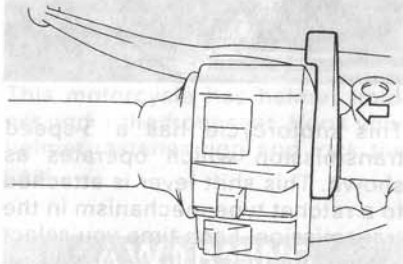

This motorcycle has a choke system to provide easy starting when the engine is cold. The choke works by pushing the choke lever down. The choke works best when the throttle is in the closed position. When the engine is warm, you do not need to use the choke for starting.

NOTE: Refer to the STARTING THE ENGINE section of the manual for the engine starting procedure.

GEARSHIFT LEVER

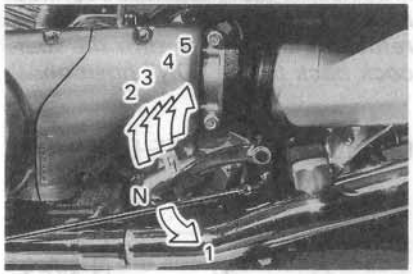

This motorcycle has a 5-speed transmission which operates as shown. This shift lever is attached to a ratchet type mechanism in the transmission. Each time you select a gear, the gearshift lever will return to its normal position ready to select the next gear. Engage first gear by depressing the lever downward from the neutral position. Shifting into the higher gears is accomplished by lifting up the shift lever once for each gear. The ratchet mechanism mades it impossible to upshift of downshift more than one gear at a time. When shifting from the low to 2nd gear or 2nd gear to low, neutral will be automatically skipped. When neutral is desired, press or lift the lever to a position halfway between low and 2nd gear.

NOTE:When the transmission is in neutral the green indicator light on the instrument panel will be lit. However, even though the light is lit, cautiously release the clutch lever slowly to determine whether the transmission is positively in neutral.

REAR BRAKE PEDAL

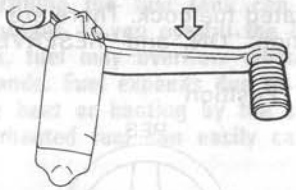

Pressing the rear brake pedal will apply the rear brake. The brake light will come on when the rear brake is operated.

SEAT LOCK AND HELMET HOLDERS

Seat Lock

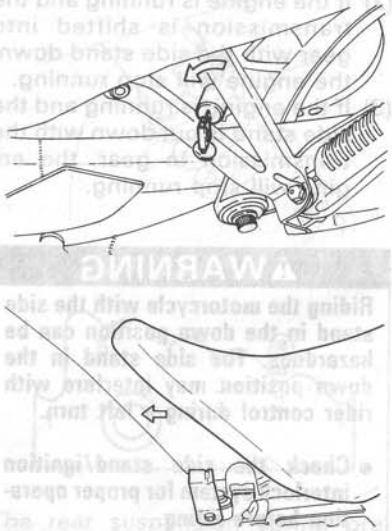

To remove the seat, insert the ignition key into the lock and turn it counterclockwise. Raise the rear end of the seat and slide it back. To lock the seat, slide the seat hook into the seat hook retainer and push down firmly.

⚠WARNING

Improperly installing the seat can be hazardous. Failure to install the seat properly could allow the seat to move and cause loss of rider control.

Make sure to properly position and securely attach the seat when you install it.

Helmet Holders

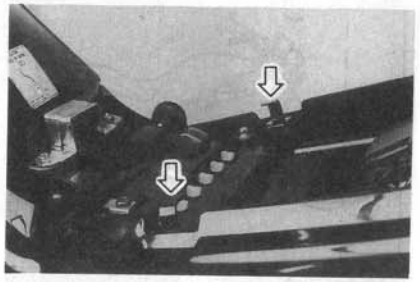

This motorcycle has helmet holders under the front seat. Hook your helmet fastener ring and lock the seat.

⚠WARNING

Operating the motorcycle with a helmet fastened to the helmet holder can be hazardous. A helmet may interfere with your control while riding.

Do not fasten helmets to the helmet holders before riding.

STANDS

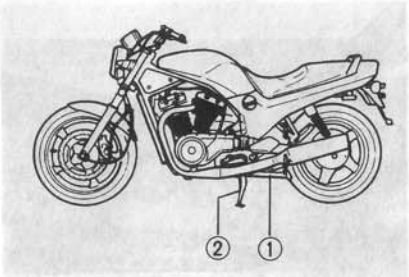

Center Stand ①
To place the motorcycle on the center stand, place your foot firmly on the stand extension and then rock the motorcycle to the rear and upward with the passenger hand rail with your right hand, while steadying the handlebars with your left hand.

Side Stand ②
The motorcycle has a side stand. To place the motorcycle on the side stand, place your right foot on the end of the side stand and push down firmly until the stand pivots fully through its arc and comes to rest against it stop.

An interlock system is provided to cut off the ignition circuit when the side stand is down and the transmission is in any gear other than neutral.

The side stand/ignition interlock system works as follows:
(1) If the side stand is down and the transmission is in gear, the engine cannot be started.
(2) If the engine is running and the transmission is shifted into gear with the side stand down, the engine will stop running.
(3) If the engine is running and the side stand is put down with the transmission in gear, the engine will stop running.

⚠WARNING

Riding the motorcycle with the side stand in the down position can be hazardous. The side stand in the down position may interfere with rider control during a left turn.

- **Check the side stand/ignition interlock system for proper operation before riding.**
- **Check that the side stand is returned to its full up position before starting off.**

⚠CAUTION

Improperly parking the motorcycle on an incline can be hazardous. The motorcycle can roll off the side stand if it is parked with the front end facing down an incline.

The front of the motorcycle should always face up the incline to avoid rolling forward off the side stand. Put the transmission into 1st gear to help prevent the motorcycle from rolling off the side stand.

REAR SUSPENSION

Spring Adjustment

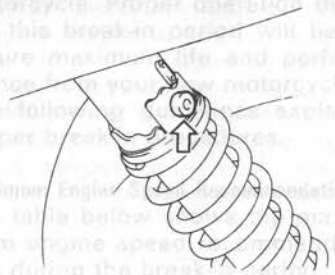

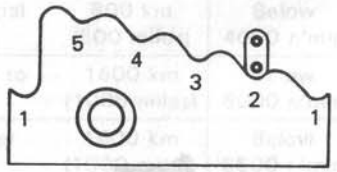

The rear suspension spring preload is adjustable. The adjustment can be performed by changing the adjuster position. Position 1 provides the softest spring preload and position 5 provides the stiffest. The spring preload is set on position 2 at the factory.

Damping Force Adjustment

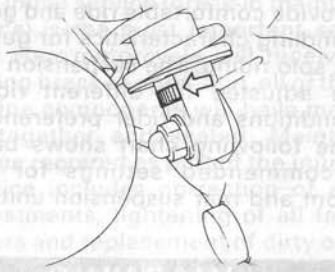

Damping adjustment positions are indicated by the numbers 1 through 4 engraved on the adjuster. As you turn the adjuster, you will notice a click as you reach numbered positions. When changing the damping force, always be sure that the adjuster stops in the proper position; a click should be heard, the adjuster should feel as if it were sitting in a detent or notch, and the position number should be visible. Position 1 (softest) provides for the smallest amount of damping force. Position 4 (stiffest) provides the greatest amount. The damping force is set on position 1 at the factory.

NOTE: If the adjuster is located between detented positions, the damper will provide the same damping force as number 4 (stiffest) position.

SUSPENSION SETTING

The standard suspension settings provide comfortable ride and good handling characteristics for general, solo riding. The suspension can be adjusted for different riding conditions and rider preferences. The following chart shows basic recommended settings for the front and rear suspension units.

⚠WARNING

Improper suspension settings can be hazardous. Improper combinations of spring preload and damping force may result in handling problems that can cause an accident.

Select the best settings for your riding by referring to the suspension setting chart.

	Spring preload	Damping force
Solo riding and carrying 30 kg load	2	1
Dual riding and carrying 30 kg load	4	3

BREAK-IN

The first 800 km (500 miles) is the most important in the life of your motorcycle. Proper operation during this break-in period will help assure maximum life and performance from your new motorcycle. The following guidelines explain proper break-in procedures.

Maximum Engine Speed Recommendation

The table below shows the maximum engine speed recommendation during the break-in period.

Initial	800 km (500 miles)	Below 4000 r/min
Up to	1600 km (1000 miles)	Below 6000 r/min
Over	1600 km (1000 miles)	Below 8500 r/min

Vary the Engine Speed

Vary the engine speed during the break-in period. This allows the parts to "load" (aiding the mating process) and then "unload" (allowing the parts to cool). Although it is essential to place some stress on the engine components during break-in, you must be careful not to load the engine too much.

Allow the Engine Oil to Circulate before Riding

Allow enough idling time after warm or cold engine start up before revving the engine or placing the transmission in gear. This allows time for the lubricating oil to reach all critical engine components.

Observe Your Initial and Most Critical Service

The initial service (break-in maintenance) is the most important service your motorcycle will receive. During break-in operation, all of the engine components will have mated together and seated. Maintenance required as part of the initial service includes correction of all adjustments, tightening of all fasteners and replacement of dirty oil. Timely performance of this service will help make sure you get the best service life and performance from the engine.

INSPECTION BEFORE RIDING

⚠WARNING

Failure to inspect the motorcycle before operating it can be hazardous. Failure to perform proper maintenance can also be hazardous. Failure to inspect and maintain your motorcycle increases the chance of an accident or equipment damage.

Always inspect your motorcycle each time you use it to make sure it is in safe operating condition. Refer to the INSPECTION AND MAINTENANCE section in this owner's manual.

⚠WARNING

Operating this motorcycle with improper tires can be hazardous. If you use improper tires, you may lose control of the motorcycle. This will increase your risk of an accident.

Always use the size and type tires specified in this owner's manual. Always maintain proper tire pressure as described in the INSPECTION AND MAINTENANCE section.

Check the condition of the motorcycle to help make sure that you do not have mechanical problems or get stranded somewhere when you ride. Before riding the motorcycle, be sure to check the following items. Be sure your motorcycle is in good condition for the personal safety of the rider, passenger and protection of the motorcycle.

⚠WARNING

Checking maintenance items when the engine is running can be hazardous. You could be severely injured if your hands or clothing get caught in moving parts.

Shut the engine off when performing maintenance checks, except when checking the engine stop switch and throttle.

WHAT TO CHECK	CHECK FOR
Steering	1) Smoothness 2) No restriction of movement 3) No play or looseness
Brakes	1) Correct fluid level 2) No fluid leakage 3) No "sponginess" 4) Proper pedal and lever play 5) Brake pad wear
Tires	1) Proper pressure 2) Enough tread depth 3) No cracks, rips, or other damage
Fuel tank	Tank cap locked securely
Lighting	Proper operation of all lights – Headlight, Tail-light, Brake light, Instrument lights, Turn signals, License plate light
Indicator lights	Proper operation of all lights – Oil pressure, High beam, Neutral, Turn signal
Engine stop switch	Proper operation
Horn	Correct function
Engine oil	Correct level
Gear oil	Correct level
Cooling system	1) Proper engine coolant level 2) No leaks or damage
Throttle	1) Proper play 2) Smooth response 3) Quick return to idle position

WHAT TO CHECK	CHECK FOR
Gearshift lever	1) No damage 2) Smooth operation
Side stand/ ignition interlock system	Proper operation
General condition	1) Bolts and nuts tightness 2) No rattle from any parts of machine with the engine running 3) No visible evidence of damage

RIDING TIPS

STARTING THE ENGINE

Before attempting to start the engine, make sure:

(1) The transmission is in neutral.
(2) The fuelcock is in the "ON" position.
(3) The engine stop switch is in the "RUN" position.

NOTE: This motorcycle has interlock switches for the ignition circuit and the starter circuit. The engine can only be started if:

(1) *The transmission is in neutral and the clutch is disengaged, or*
(2) *The transmission is in gear, the side stand is fully up, and the clutch is disengaged.*

When the Engine Is Cold:

(1) Turn the choke lever all the way towards you. Close the throttle completely.
(2) Push the electric starter button.
(3) Immediately after the engine starts, keep the engine speed at 2 000 r/min by varying the choke lever position.
(4) Move the choke lever to the "OFF" position approximately 30 seconds after engine starts. It may be necessary to use the choke longer than 30 seconds in extremely cold weather.

When the Engine Is Warm:

Use of the choke should not be necessary. Open the throttle 1/8 to 1/4 turn and push the electric starter button.

⚠WARNING

Never run the engine indoors or in a garage. Exhaust gas contains carbon monoxide, a gas that is colorless and odorless and can cause death or severe injury.

Only run the engine outdoors where there is fresh air.

⚠WARNING

This motorcycle can start moving as soon as you start the engine with the transmission in gear. Unexpected movement can cause you to lose control of the motorcycle.

Be sure to shift into neutral and disengage the clutch before you start the engine.

⚠CAUTION

Never run the engine indoors or in a garage. Exhaust gas contains carbon monoxode, a gas that is colorless and odorless and can cause death or severe injury.

Shut the engine off if you cannot begin your ride promptly.

STARTING OFF AND SHIFTING

⚠WARNING

Removing your hands from the handlebars or feet from the footrests during operation can be hazardous. If you remove even one hand or foot from the motorcycle, you can reduce your ability to control the motorcycle.

Always keep both hands on the handlebars and both feet on the footrests of your motorcycle during operation.

⚠WARNING

Riding in sudden side winds can be hazardous. Sudden side winds, which can occur when being passed by larger vehicles, at tunnel exists, or in hilly areas, can upset your control.

Reduce your speed and ride alertly in side winds.

Make sure that the side stand is in the fully up position. Pull the clutch lever in and pause momentarily. Engage first gear by depressing the gearshift lever downward. Turn the throttle grip toward you and at the same time release the clutch lever gently and smoothly. As the clutch engages, the motorcycle will start moving forward. To shift to the next higher gear, accelerate gently, then close the throttle and pull the clutch lever in simultaneously. Lift the gearshift lever upward to select the next gear and release the clutch lever as you open the throttle again. Select the gears in this manner until top gear is reached.

NOTE: This motorcycle has a side stand/ignition interlock switch. If you shift the transmission into gear when the side stand is down, the engine will stop running.

USING THE TRANSMISSION

The transmission is provided to keep the engine operating smoothly in its normal operating speed range. The gear ratios have been carefully chosen to meet the characteristics of the engine. The rider should always select the most suitable gear for the prevailing conditions. Never slip the clutch to control road speed, but rather downshift to allow the engine to run within its normal operational range. The table below shows the approximate speed range for each gear.

Shifting up schedule

Gear position	miles/h	km/h
1st → 2nd	12	20
2nd → 3rd	19	30
3rd → 4th	25	40
4th → 5th	31	50

Shifting down schedule

Gear position	miles/h	Km/h
5th → 4th	25	40
4th → 3rd	19	30

Disengage the clutch when the motorcycle speed drops below 20 km/h (12 miles/h).

⚠WARNING

Downshifting at too high a speed can

1) cause the rear wheel to skid and lose traction due to increased engine braking, resulting in an accident; or

2) force the engine to overrev in the lower gear, resulting in engine damage.

Reduce speed before downshifting.

⚠WARNING

Downshifting in a corner can be hazardous. Downshifting while the motorcycle is leaned over may cause your rear tire to skid. This may result in an accident.

Reduce your speed or downshift before entering the corner.

⚠CAUTION

Revving the engine into the red zone can cause severe engine damage.

Never allow the engine to rev into the red zone in any gear.

RIDING ON HILLS

- When climbing steep hills, the motorcycle may begin to slow down and show lack of power. At this point you should shift to a lower gear so that the engine will again be operating in its normal power range. Shift rapidly to prevent the motorcycle from losing momentum.
- When riding down a steep hill, the engine may be used for braking by shifting to a lower gear.
- Be careful, however, not to allow the engine to overrev.

STOPPING AND PARKING

- Turn the throttle grip away from you to close the throttle completely.
- Apply the front and rear brakes evenly and at the same time.
- Downshift through the gears as motorcycle speed decreases.
- Select neutral with the clutch lever squeezed towards the grip (disengaged position) just before the motorcycle stops. Neutral position can be confirmed by observing the neutral indicator light.

⚠WARNING

Inexperienced riders tend to underutilize the front brake. This can cause excessive stopping distance and lead to a collision. Using only the front or rear brake can cause skidding and loss of control.

Apply both brakes evenly and at the same time.

⚠WARNING

Braking while turning the motorcycle can be hazardous. Hard braking while turning could cause loss of control.

Use the brakes to slow down before you begin to turn.

⚠WARNING

Braking hard on wet, loose, rough, or other slippery surfaces can be hazardous. The motorcycle can skid and go out of control if you brake too hard.

Apply the brakes lightly and with care on slippery or irregular surfaces.

⚠WARNING

Following another vehicle too closely is hazardous. As vehicle speeds increase, stopping distance increases progressively.

Be sure you have a safe stopping distance between you and the vehicle in front of you.

- Park the motorcycle on a firm, flat surface.
- Turn the ignition switch to the "OFF" position.
- Lock the steering for security.
- Remove the key from the ignition switch.

⚠WARNING

A hot muffler can harm you. The muffler will still be hot for some time after stopping the engine. You can be burned if you touch a hot muffler.

Park the motorcycle where pedestrians or children are not likely to touch the muffler.

ACCESSORY USE AND MOTORCYCLE LOADING

There are a great variety of accessories available to Suzuki owners. Suzuki can not have direct control over the quality or suitability of accessories you may wish to purchase. The addition of unsuitable accessories can lead to unsafe operating conditions. It is not possible for Suzuki to test each accessory on the market or combinations of all the available accessories; however, your dealer can assist you in selecting quality accessories and installing them correctly.

Use extreme caution when selecting and installing the accessories for your Suzuki. We have developed some general guidelines which will aid you when deciding whether, and how to equip your motorcycle.

⚠WARNING

Operating this motorcycle with improper modifications can be hazardous. Improper installation of acces sories, or use of incorrect accesso ries, may cause changes in handling which could lead to an accident.

Never modify the motorcycle with improper installation of accessories, or use of incorrect accessories. All parts and accessories added to the motorcycle should be genuine Suzuki parts or equivalent designed for use on this motorcycle. Install and use them according to their instructions. If you have any questions, contact your Suzuki dealer.

(1) Never exceed the GVWR (Gross Vehicle Weight Rating) of this motorcycle. The GVWR is the combined weight of the machine, accessories, payload and riders. When selecting your accessories, keep in mind the weight of the riders as well as the weight of the accessories. The additional weight of the accessories may not only create an unsafe riding condition but may also affect the steering ease.

GVWR: 995 lbs (450 kg) at the tire pressure (cold)
Front: 33 psi (2.25 kg/cm²)
Rear: 41 psi (2.80 kg/cm²)

(2) Any time that additional weight or aerodynamic affecting accessories are installed, they should be mounted as low as possible, as close to the motorcycle and as near the center of gravity as is feasible. The mounting brackets and other attachment hardware should be carefully checked to ensure that they provide for a rigid mount. Weak mounts can allow the shifting of the weight and create a hazardous, unstable condition.

(3) Inspect for proper ground clearance and bank angle. An improperly mounted load could critically reduce these two safety factors. Also determine that the "load" does not interfere with the operation of the suspension, steering or other control operations.

(4) Accessories fitted to the handlebars or the front fork area can create serious stability problems. This extra weight will cause the motorcycle to be less responsive to your steering control. The weight may also cause oscillations in the front end and lead to instability problems. Accessories added to the handlebars or front fork of the machine should be as light as possible and kept to a minimum.

(5) Backrests, saddlebags, travel trunks, etc., may affect the stability of the motorcycle due to their aerodynamic effects. The motorcycle may be affected by a lifting condition or by an instability in cross winds or when being passed by or passing large vehicles. Improperly mounted or poorly designed accessories can result in an unsafe riding condition, therefore caution should be used when selecting and installing all accessories.

(6) Certain accessories displace the rider from his or her normal riding position. This limits the freedom of movement of the rider and may limit his or her control ability.

(7) Additional electrical accessories may overload the existing electrical system. Severe overloads may damage the wiring harness or create a hazardous situation due to the loss of electrical power during the operation of the motorcycle.

When carrying a load on the motorcycle, mount it as low as possible and as close as possible to the machine. An improperly mounted load can create a high center of gravity which is very hazardous and makes the motorcycle difficult to handle. The size of the "load" can also affect the aerodynamics of the motorcycle. Balance the load between the right and left sides of the motorcycle and fasten it securely.

MODIFICATION

Modification of the motorcycle, or removal of original equipment may render the vehicle unsafe or illegal. Obey all applicable equipment regulations in your area.

INSPECTION AND MAINTENANCE

NOTICE

MAINTENANCE, REPLACEMENT OR REPAIR OF THE EMISSION CONTROL DEVICES AND SYSTEMS MAY BE PERFORMED BY ANY MOTORCYCLE REPAIR ESTABLISHMENT OR INDIVIDUAL USING ANY MOTORCYCLE PART WHICH HAS BEEN CERTIFIED UNDER THE PROVISIONS IN THE CLEAN AIR ACT Sec. 207 (a)(2).

MAINTENANCE SCHEDULE

It is very important to inspect and maintain your motorcycle regularly. Follow the guidelines in the chart. The intervals between periodic services in kilometers, miles and months are shown. At the end of each interval, be sure to perform the maintenance listed.

⚠WARNING

Improper maintenance or failure to perform recommended maintenance can be hazardous. Poor maintenance increases the chance of an accident or equipment damage.

Keep your motorcycle in good condition. Ask your Suzuki dealer or a qualified mechanic to do the maintenance items marked with an asterisk (*). You may perform the unmarked maintenance items by referring to the instructions in this section, if you have mechanical experience. If you are not sure how to do any of the jobs, ask your Suzuki dealer to do the maintenance.

⚠WARNING

Never run the engine indoors or in a garage. Exhaust gas contains carbon monoxide, a gas that is colorless and odorless and can cause death or severe injury.

Only run the engine outdoors where there is fresh air.

⚠CAUTION

If you use your motorcycle under severe conditions, it will need maintenance more often than shown in the chart. Operating your motorcycle under severe conditions causes more wear on your motorcycle.

Perform maintenance more often than shown in the chart. If you have any questions regarding maintenance intervals, consult your Suzuki dealer.

⚠CAUTION

Using poor quality replacement parts can cause your motorcycle to wear more quickly and may shorten its useful life.

When replacing parts on your motorcycle, use only genuine Suzuki replacement parts or their equivalent.

MAINTENANCE CHART

This interval should be judged by odometer reading or months, whichever comes first.

Interval / Item	km	1000	6000	12000	18000	24000
	miles	600	4000	7500	11000	15000
	months	2	12	24	36	48
Battery (Specific gravity of electrolyte)		—	Inspect	Inspect	Inspect	Inspect
Air cleaner elements		Clean every 6000 km (4000 miles) and replace every 12000 km (7500 miles)				
*Valve clearance		—	Inspect	Inspect	Inspect	Inspect
Spark plugs		—	Inspect	Replace	Inspect	Replace
Fuel line		Inspect	Inspect	Inspect	Inspect	Inspect
Vapor hose (California model only)		*Replace every four years				
Engine oil and oil filter		Replace	Replace	Replace	Replace	Replace
Engine idle speed		Inspect	Inspect	Inspect	Inspect	Inspect
Final gear oil		Replace	—	Inspect	—	Inspect
*Engine coolant		Replace every two years				
Radiator hose		Inspect	—	Inspect	—	Inspect
		*Replace every four years				
Clutch		Inspect	Inspect	Inspect	Inspect	Inspect
*Brakes		Inspect	Inspect	Inspect	Inspect	Inspect
Brake hose		Inspect	Inspect	Inspect	Inspect	Inspect
		*Replace every four years				
Brake fluid		Inspect	Inspect	Inspect	Inspect	Inspect
		*Replace every two years				
Tires		Inspect	Inspect	Inspect	Inspect	Inspect
*Steering		Inspect	Inspect	Inspect	Inspect	Inspect
*Front forks		Inspect	—	Inspect	—	Inspect
*Rear suspension		Inspect	—	Inspect	—	Inspect
*Chassis bolts and nuts		Tighten	Tighten	Tighten	Tighten	Tighten

NOTE: Inspect=Inspect and clean, adjust, replace or lubricate as necessary.

TOOLS

A tool kit is provided with your motorcycle. It is located behind the rear seat.

GENERAL LUBRICATION

Proper lubrication is important for safe, smooth operation and a long life for your motorcycle. Be sure that all lubrication is performed during periodic maintenance on the motorcycle. Increase frequency when you use your motorcycle in severe conditions.

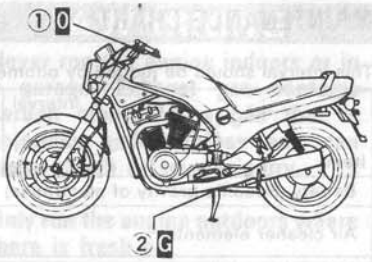

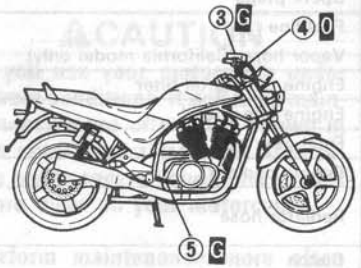

①.. Clutch lever holder and clutch cable
②... Side stand pivot and spring hook
③... Brake lever holder
④... Throttle cable
⑤... Brake pedal pivot

O... Motor oil
G... Grease

BATTERY

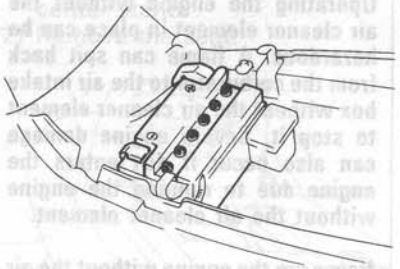

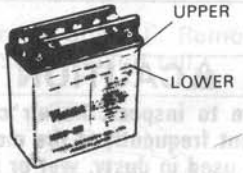

The battery is located under the seat. The level of the battery acid must be kept between the MAX (UPPER) and MIN (LOWER) level lines at all times. If the level drops below the MIN (LOWER) level line, add only distilled water until it reaches MAX (UPPER) level lines.

⚠WARNING

Battery acid can be hazardous. Battery acid is harmful if it contacts eyes, skin or clothing.

If battery acid gets in eyes or comes in contact with skin, flush eyes or skin with water and call your doctor immediately. Never add battery acid to your battery.

⚠WARNING

Hydrogen gas produced by batteries can explode if exposed to flames or sparks.

Keep flames and sparks away from the battery. Never smoke when working near the battery.

You should have your dealer inspect the charging condition of the battery. The standard charging rate is 1.6 A/10 hours.

⚠CAUTION

Exceeding the standard charging rate for the motorcycle battery can shorten its life.

Never exceed the standard charging rate.

NOTE: Check the specific gravity of the battery acid with a battery hydrometer. This will determine the exact condition of each of the cells.

⚠CAUTION

Reversing the battery lead wires can damage the charging system and the battery.

The red lead must go to the positive (+) terminal and the black (or black with white tracer) lead must go to the negative (−) terminal.

⚠CAUTION

If the battery breather pipe is not routed correctly, spilled battery acid through the battery breather pipe can corrode your motorcycle.

Route the battery breather pipe as shown. Make sure that the breather pipe is attached to the battery fitting, and that the opposite end is always open.

AIR CLEANER

The air cleaner element must be kept clean to provide good engine power and gas mileage. If you use your motorcycle under normal low-stress conditions, you should service the air cleaner at the intervals specified. If you ride in dusty, wet, or muddy conditions, you will need to inspect the air cleaner element much more frequently. Use the following procedure to remove the air cleaner element and inspect it.

⚠WARNING

Operating the engine without the air cleaner element in place can be hazardous. A flame can spit back from the carburetor to the air intake box without the air cleaner element to stop it. Severe engine damage can also occur if dirt enters the engine due to running the engine without the air cleaner element.

Never run the engine without the air cleaner element in place.

⚠CAUTION

Failure to inspect the air cleaner element frequently if the motorcycle is used in dusty, wet or muddy conditions can damage your motorcycle. The air cleaner element can become clogged under these conditions, and cause poor performance and fuel economy.

Always check the air cleaner element after riding in severe conditions. Clean or replace the air cleaner element as necessary. If water gets in the air cleaner case, immediately clean the air cleaner element and the inside of the case.

Removing the Air Cleaner Element

(1) Place the motorcycle on the center stand.

(2) Remove the seat.

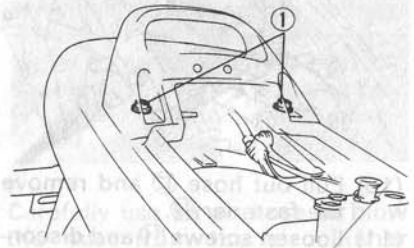

(3) Remove bolts ①. Remove the passenger hand rail.

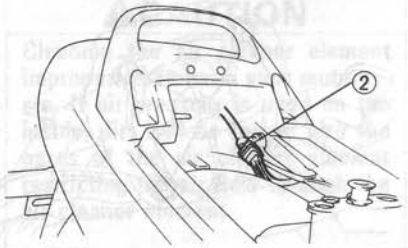

(4) Remove wiring harness connector ②.

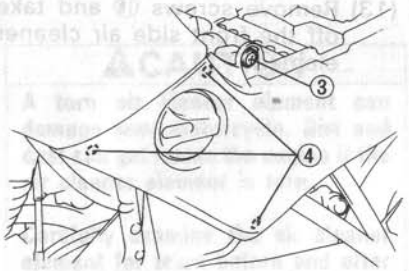

(5) Remove screws ③, unhook hooks ④ (right & left side) and remove the frame covers.

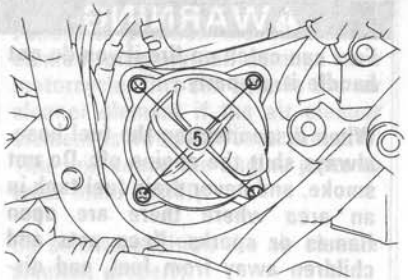

(6) Remove screws ⑤ and the rear side air cleaner element.

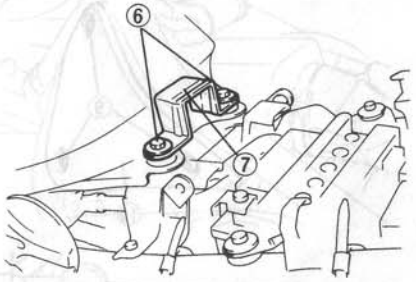

(7) Remove bolts ⑥ and the seat support bracket ⑦.

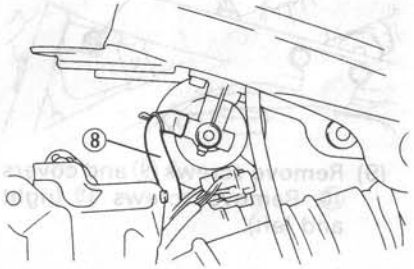

(8) Disconnect fuel hose ⑧ from the fuelcock.

⚠WARNING

Fuel can catch on fire if you do not handle it properly.

When disconnecting the fuel hose, always shut the engine off. Do not smoke, and never drain fuel tank in an area where there are open flames or sparks. Keep pets and children away from fuel, and dispose of fuel properly.

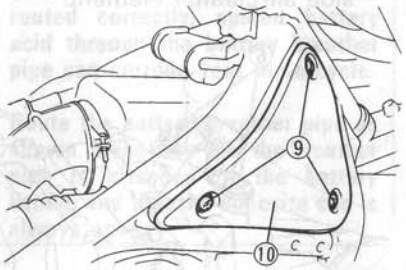

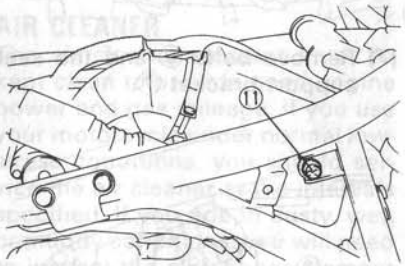

(9) Remove screws ⑨ and covers ⑩. Remove screws ⑪ (right and left).

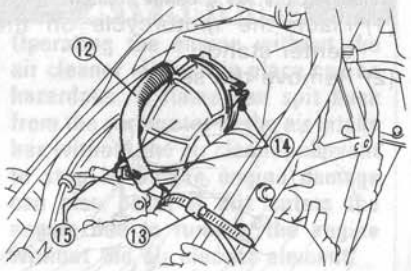

(10) Pull out hose ⑫ and remove the fastener ⑬.

(11) Loosen screws ⑭ and disconnect hose ⑮ from the carburetor.

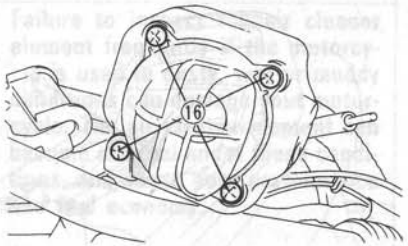

(12) Raise the front side air cleaner assembly.

(13) Remove screws ⑯ and take off the front side air cleaner element.

Cleaning the Air Cleaner Element

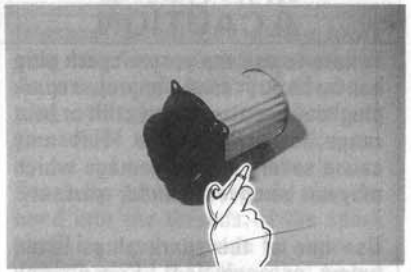

Carefully use an air hose to blow the dust from the air cleaner element.

⚠CAUTION

Cleaning the air cleaner element improperly can harm your motorcycle. If air pressure is used on the inside, dirt will be forced into the pores of the air cleaner element restricting the air flow through the air cleaner element.

Always apply air pressure to the outside of the air cleaner element only.

⚠CAUTION

A torn air cleaner element can damage your motorcycle. Dirt and dust can get inside the engine if the air cleaner element is torn.

Carefully examine the air cleaner element for tears before and after cleaning it. Replace the air cleaner element with a new one if it is torn.

⚠CAUTION

Failure to position the air cleaner element properly can damage your motorcycle. Dirt can bypass the air cleaner element if the air cleaner element is not positioned properly. This will cause the engine parts to wear more rapidly.

Be sure to position the air cleaner element properly.

SPARK PLUG

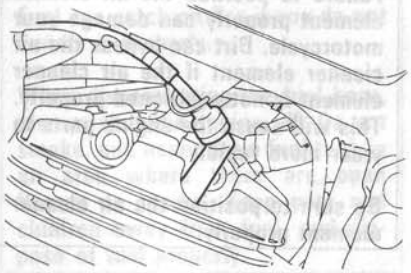

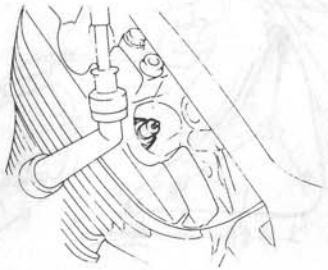

Your motorcycle comes equipped with NIPPONDENSO X24EPR-U9 or NGK DPR8EA-9 spark plugs. To determine if the standard spark plug is right for your usage, check the color of the plug's porcelain center electrode insulator after motorcycle operation. A light brown color indicates that the plug is correct. An overheated or fouled spark plug indicates that the engine may need adjustment, or another plug type may be needed. The overheated spark plug shows white or glazed insulator. The fouled spark plug shows wet or carboned insulator. Consult your Suzuki dealer or qualified mechanic if your plug insulator is not a light brown color.

⚠CAUTION

Failure to use the proper spark plug can be hazardous. An improper spark plug may have an incorrect fit or heat range for your engine. This may cause severe engine damage which may not be covered under warranty.

Use one of the spark plugs listed below or equivalent. Consult you Suzuki dealer if you are not sure which spark plug is correct for your type of usage.

NGK	NIPPONDENSO	Remarks
DPR7EA-9	X22EPR-U9	If the spark plug tends to foul, replace with this plug.
DPR8EA-9	X24EPR-U9	Standard
DPR9EA-9	X27EPR-U9	If the spark plug tends to overheat, replace with this plug.

NOTE: If the above-named plugs are not available, consult your Suzuki dealer.

⚠CAUTION

Improper installation of the spark plug can damage your motorcycle. An overly tight or cross threaded plug will damage the aluminum threads of the cylinder head.

Carefully turn the spark plug by hand into the threads. If the spark plug is new, tighten it with a wrench about 1/2 turn past finger tight. If you are reusing the old spark plug, tighten it with a wrench about 1/8 turn past finger tight.

⚠CAUTION

Dirt can damage your motorcycle if it enters an open spark plug hole. Dirt can damage the engine parts that move.

Cover the spark plug hole while the spark plug is removed.

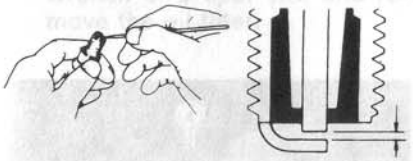

0.8 – 0.9 mm
(0.031 – 0.035 in)

To maintain a hot, strong spark, keep the plug free from carbon. Remove carbon deposits from the plug with a wire or pin, and adjust the gap to 0.8 – 0.9 mm (0.031 – 0.035 in) for good ignition. Use a thickness (feeler) gauge to check the gap.

ENGINE OIL

Engine life depends on engine oil amount and quality. Daily engine oil level checks and periodic changes are two of the most important maintenance items to be performed.

Engine Oil Level Check

Check the engine oil level as follows:

(1) Start the engine and allow it to idle for a few minutes.

(2) Stop the engine and wait approximately one minute.

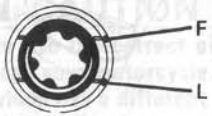

(3) Place the motorcycle on the center stand and check the engine oil level through the engine oil level inspection window. The engine oil level should be between "L" (low) and "F" (full) lines.

⚠CAUTION

Operating the motorcycle with too little or too much engine oil can damage your engine.

Place the motorcycle on level ground on its center stand. Check the engine oil level in the inspection window before each use of the motorcycle. Be sure the engine oil level is always above the "L" (low) line and not higher than the "F" (full) line.

Engine Oil and Filter Change

Change the engine oil and oil filter at the scheduled times. The engine should always be warm when the engine oil is changed so the engine oil will drain easily. The procedure is as follows:

(1) Place the motorcycle on level ground on its center stand.

(2) Remove the oil filler cap ①.

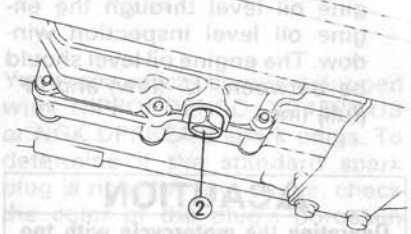

(3) Remove the drain plug ② from the bottom of the engine and drain the engine oil into a drain pan.

⚠WARNING

Engine oil and exhaust pipes can be hot enough to burn you.

Wait until the drain plug and exhaust pipes are cool enough to touch with bare hands before draining engine oil.

⚠WARNING

Oil can be hazardous. Children and pets may be harmed from contact with oil.

Keep children and pets away from oil. Dispose of used engine oil properly.

Oil filter wrench
(Part No. 09915-40611)

(4) Loosen the oil filter ③ with a Suzuki "cap type" oil filter wrench or a "strap type" filter wrench of proper size and remove the oil filter.

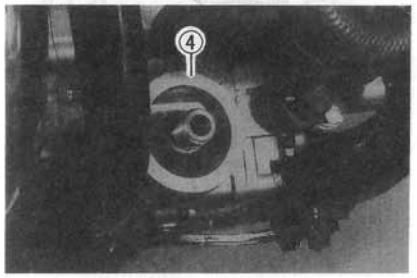

(5) Wipe off the mounting surface ④ on the engine where the new filter will be seated with a clean rag.

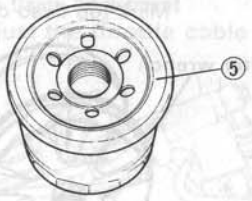

(6) Smear a little engine oil around the rubber gasket ⑤ of the new oil filter.

⚠CAUTION

Failure to use the correct oil filter can damage your motorcycle. Using a filter which has a different design or thread specifications can cause engine damage or engine oil leaks.

Use a genuine Suzuki motorcycle oil filter or an equivalent filter.

(7) Screw on the new filter by hand until the filter gasket contacts the mounting surface (a small resistance will be felt).

NOTE: To tighten the oil filter properly, it is important to accurately identify the position at which the filter gasket first contact the mounting surface.

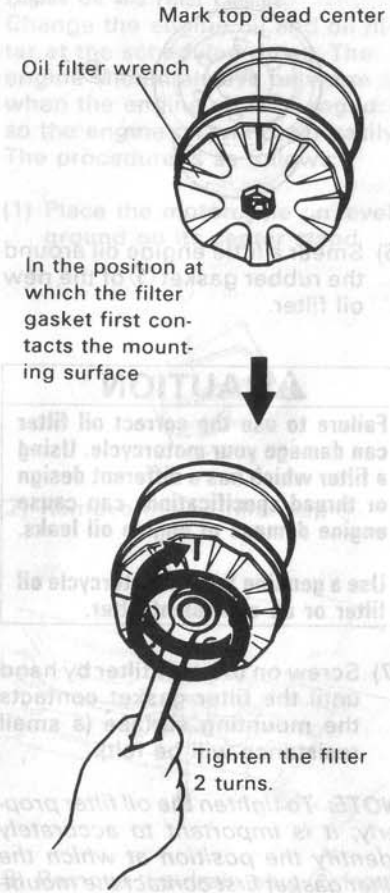

(8) Mark the top dead center position on the "cap" type filter wrench or on the oil filter. Use an oil filter wrench to tighten the filter 2 turns.

(9) Reinstall the drain plug and tighten it securely. Pour about 2 800 ml (3.0 US qt) of the specified engine oil in the filler hole. (See FUEL, OIL AND ENGINE COOLANT RECOMMENDATION section.)

⚠CAUTION

Engine damage may occur if you use oil that does not meet Suzuki's specifications.

Be sure to use the engine oil specified in the FUEL, OIL AND ENGINE COOLANT RECOMMENDATION section.

(10) Start the engine (while the motorcycle is outside on level ground) and allow it to idle for a few minutes.

(11) Turn the engine off and wait approximately one minute. Recheck the engine oil level in the engine oil inspection window. The oil level should be at the "F" (full) mark. If it is lower than the "F" mark, add engine oil until it reaches the "F" mark. Inspect the area around the drain plug and oil filter cover for leaks.

CARBURETOR

Undisturbed carburetion is the basis of the performance you ought to expect of your engine. The carburetor is factoryset for the best performance. Do not attempt to alter its setting. There are two items of adjustment, however, under your care: engine idle speed and throttle cable play.

Engine Idle Speed Adjustment

To adjust the idle speed:

(1) Start the engine and warm it up by running 2 000 r/min for 10 minutes in summer (where ambient temperature is 30°C (86°F) or thereabout) or for 20 minutes in winter (where ambient temperature is down to −5°C (23°F) or thereabout).

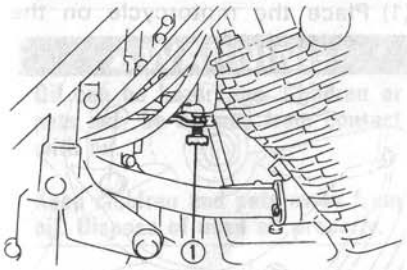

(2) Turn the throttle stop screw ① in or out so that the engine idles at 1 150 – 1 250 r/min.

Throttle Cable Adjustment

To adjust the throttle cable play:

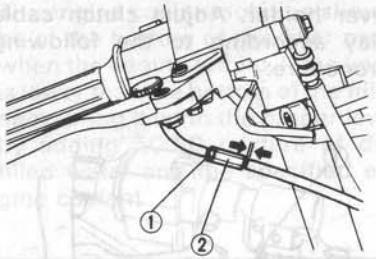

(1) Loosen the lock nut ①.

(2) Turn the adjuster ② in or out to obtain the proper amount of outer cable free play: 0.5 – 1.0 mm (0.02 – 0.04 in). Measure throttle cable free play by pulling on the outer cable.

(3) Tighten the lock nut ①.

(4) Recheck the throttle cable play. Readjust it if it is not within the correct limits.

⚠WARNING

Incorrect throttle cable adjustment can be hazardous. Inadequate outer cable play can raise engine speed when you turn the handlebars to the right or left. This could lead to loss of rider control.

Check that engine idle speed is not increased due to handlebars movement.

CLUTCH ADJUSTMENT

Clutch cable play should be 4 mm (0.16 in) measured at the clutch lever holder. Adjust clutch cable play according to the following procedure:

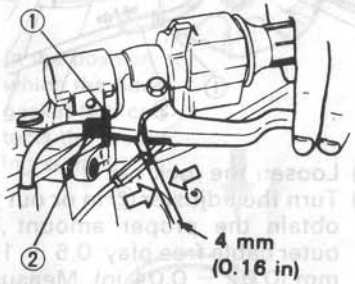

Minor Adjustment

(1) Loosen the clutch cable adjuster lock nut ①.
(2) Turn the clutch cable adjuster ② to provide the specified play.
(3) Tighten the lock nut ①.

Major Adjustment

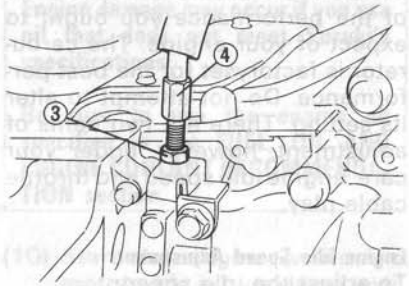

(1) Loosen the clutch cable adjuster lock nut ③.
(2) Turn the clutch cable adjuster ④ to provide the specified play.
(3) Tighten the lock nut ③.

FINAL GEAR OIL

Change the gear oil as follows:

(1) Place the motorcycle on the center stand.

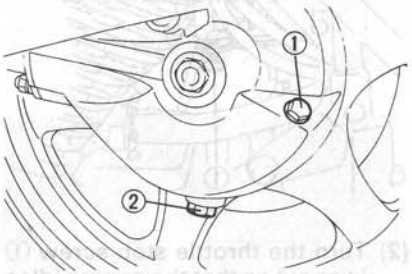

(2) Remove the oil filler cap ①.
(3) Drain the oil by removing the drain plug ② from the bottom of the final gear case.

(4) Reinstall the drain plug and tighten it securely after all the oil has been drained out. Pour fresh oil through the filler hole until the oil level reaches the oil filler hole. Approximately 200 −220 ml (6.8 −7.4 US oz) of oil will be required.
(5) Reinstall the oil filler cap.

⚠WARNING

Operating the motorcycle with too little final gear oil can be hazardous. The final drive unit can lock up and cause an accident if there is not enough gear oil.

Check the final gear oil level per the INSPECTION BEFORE RIDING section. Be sure to securely tighten the drain plug after changing the gear oil.

⚠WARNING

Oil can be hazardous. Children or pets may be harmed from contact with oil.

Keep children and pets away from oil. Dispose of used oil properly.

ENGINE COOLANT

Engine Coolant Level

The engine coolant solution should be at the bottom of the filler neck when the engine is cold. If the level is lower than the bottom of the filler neck, bring it up to the proper level by adding 50:50 mixture of distilled water and the specified engine coolant.

⚠WARNING

Engine coolant is harmful if swallowed or if it comes in contact with your skin or eyes.

Keep engine coolant away from children and pets. Call your doctor immediately if engine coolant is swallowed, and induce vomiting. Flush eyes or skin with water if engine coolant gets in eyes or comes in contact with skin.

(1) Place the motorcycle on the center stand.

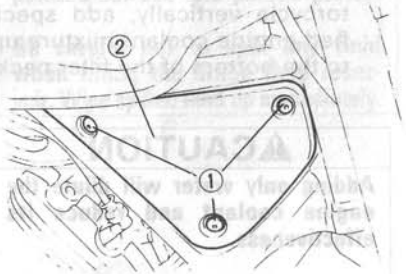

(2) Loosen three screws ① and remove cover ②.

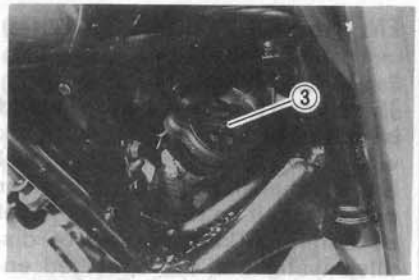

(3) Wait until the engine is cool, slowly turn radiator cap ③ and remove it. When the pressure has been released, it is safe to remove the cap.

⚠WARNING

You can be injured by scalding fluid or steam if you open the radiator cap when the engine is hot.

Wait until the engine cools before opening the radiator cap.

(4) If the engine coolant is not filled to the bottom of the filler neck while holding at the motorcycle vertically, add specified engine coolant mixture up to the bottom of the filler neck.

⚠CAUTION

Adding only water will dilute the engine coolant and reduce its effectiveness.

Add 50:50 mixture of engine coolant and water.

BRAKES

This motorcycle has front and rear disc brakes.

⚠WARNING

Failure to properly inspect and maintain your motorcycle's brake system can be hazardous. Improper maintenance of the brakes increases your chances of having an accident.

Be sure to inspect the brake system before each use of the motorcycle according to the INSPECTION BEFORE RIDING section. Always maintain or replace your brakes, brake hose, and brake fluid according to the MAINTENANCE SCHEDULE.

NOTE: Operating in mud, water, sand or other extreme conditions can cause accelerated brake wear. If you operate your motorcycle under these conditions, the brakes must be inspected more often than recommended in the MAINTENANCE SCHEDULE.

Brake Fluid

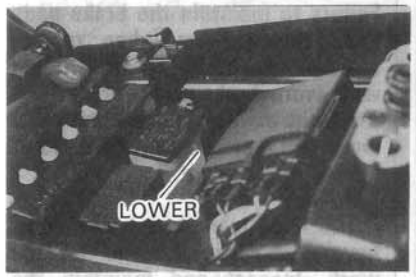

Be sure to check the brake fluid level in both the front and rear brake fluid reservoirs. If the level in either reservoir is below the lower mark, add DOT 4 brake fluid. Make sure you do not fill the rear reservoir above the upper level mark.

⚠WARNING

Brake fluid can be hazardous to humans and pets. Brake fluid is harmful or fatal if swallowed, and harmful if it comes in contact with your skin or eyes.

Keep brake fluid away from children. Call your doctor immediately if brake fluid is swallowed, and induce vomiting. Flush eyes or skin with water if brake fluid gets in eyes or comes in contact with skin.

⚠WARNING

Failure to use proper brake fluid can be hazardous. The use of any fluid except DOT4 brake fluid from a sealed container can damage the brake system and lead to an accident.

Use only DOT 4 brake fluid from a sealed container. Never use or mix different types of brake fluid.

⚠WARNING

Failure to keep the brake fluid reservoir full can be hazardous. The brakes may not work correctly without the proper amount of brake fluid. This could lead to an accident.

Inspect the brake fluid level before each use. If there is frequent loss of fluid, take your motorcycle to a Suzuki dealer for inspection.

⚠CAUTION

Spilled brake fluid can damage painted surface and plastic parts.

Be careful not to spill any fluid when filling the brake fluid reservoir. Wipe spilled fluid up immediately.

Brake Pads

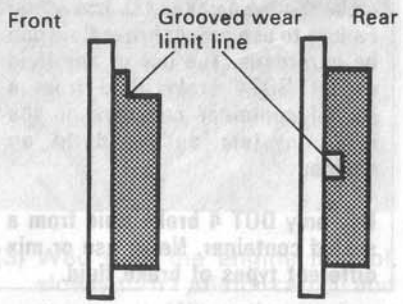

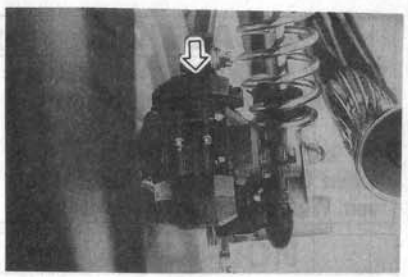

Inspect the front and rear brake pads to see if they are worn down to the grooved wear limit line. If a pad is worn to the grooved wear limit line, it must be replaced with a new one. After replacing either the front or rear brake pads, the brake lever or pedal must be pumped several times. This will extend the pads to their proper position.

⚠WARNING

Failure to maintain the brake pads and replace them when recommended can be hazardous. Riding with worn brake pads, or pads in the front or rear that are unevenly worn will increase your chances of having an accident.

If you need to replace brake pads, have your Suzuki dealer do the work. Inspect and maintain the brake pads as recommended.

⚠WARNING

Failure to extend the brake pads after repair or replacement can be hazardous. Inadequate braking performance could result in an accident.

Before riding "pump" the brake lever/pedal several times to extend the pads and restore the proper lever/pedal stroke and firm feel.

NOTE: Do not squeeze/depress the brake lever/pedal when the pads are not in their positions. It is difficult to push the pistons back into position.

Rear Brake Adjustment

The rear brake pedal must be adjusted to set the clearance between the pedal and the footrest. Adjust the brake pedal as follows:

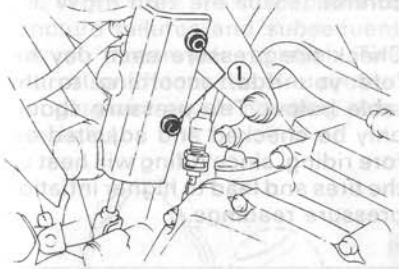

(1) Remove two screws ① and cover.

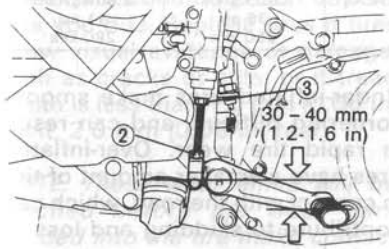

(2) Loosen the lock nut ②, and turn the push rod ③ to locate the pedal 30 – 40 mm (1.2 – 1.6 in) below the top face of the foot rest.
(3) Retighten the lock nut ② to lock the push rod ③ in the proper position.

⚠CAUTION

Failure to adjust the rear brake pedal properly can damage your motorcycle. If the pedal is incorrectly adjusted, the disc pads may rub against the disc, causing damage to the pads and disc.

Follow the procedure above to adjust the rear brake pedal.

Rear Brake Light Switch

The rear brake light switch is located under the right frame cover. To adjust the brake light switch, hold the switch body and turn the adjuster so that the brake light will come on just before a pressure rise is felt when the brake pedal is depressed.

TIRES

⚠WARNING

Failure to follow these warnings may result in an accident due to tire failure. The tires on your motorcycle form the crucial link between your motorcycle and the road.

Proper tire inflation pressure, condition, loading, and tire type are important conditions for you to monitor. Follow the instructions below:

- **Check tire pressure and condition each time before you ride**
- **Do not overload your tires**
- **Replace tires when tread is worn to specified limit, or if tires show visual evidence of damage, such as cracks or cuts**
- **When replacing tires, use only tires of the specified size and type, and balance the wheel after installing a new tire**
- **Do not use external tire repair plugs to repair tubeless tires**
- **Read the following sections carefully**

Tire Pressure and Loading

Proper tire pressure and proper tire loading are important factors. Overloading your tires can lead to tire failure and loss of motorcycle control.

Check tire pressure each day before you ride, according to the table below. Tire pressure should only be checked and adjusted before riding, since riding will heat up the tires and lead to higher inflation pressure readings.

LOAD / TIRE	SOLO RIDING WITH LIGHT OR LITTLE CARGO	DUAL RIDING OR SOLO RIDING WITH HEAVY CARGO
FRONT	2.25 kg/cm² 33 psi 225 kPa	2.25 kg/cm² 33 psi 225 kPa
REAR	2.50 kg/cm² 36 psi 250 kPa	2.80 kg/cm² 41 psi 280 kPa

Under-inflated tires make smooth cornering difficult, and can result in rapid tire wear. Over-inflated tires have a smaller amount of tire in contact with the road, which can contribute to skidding and loss of control.

NOTE: When you detect drops in tire pressure, check the tire for nails or other punctures, or a damaged wheel rim. Tubeless tires sometimes lose pressure gradually when punctured.

Tire Condition and Type

Tire condition and tire type affect motorcycle performance. Cuts or cracks in the tires can lead to tire failure and loss of motorcycle control. Worn tires are susceptible to puncture failures and subsequent loss of motorcycle control. Tire wear also affects the tire profile, changing motorcycle handling characteristics.

Check tire condition each day before you ride. Replace tires if tires show visual evidence of damage, such as cracks or cuts, or if tread depth is less than 1.6 mm (0.06 in) front, 2.0 mm (0.08 in) rear.

NOTE: These wear limits will be reached before the wear bars molded into the tire make contact with the road.

When you replace a tire, be sure to replace it with a tire of the size and type listed below. If you use a different size or type of tire, motorcycle handling may be adversely affected, possibly resulting in loss of motorcycle control.

	FRONT	REAR
SIZE	110/80-18 58H	150/70B17 69H
TYPE	METZELER ME33 Laser DUNLOP K505FG	METZELER ME55A Metronic DUNLOP K505G

Be sure to balance the wheel after repairing a puncture or replacing the tire. Proper wheel balance is important to avoid variable wheel-to-road contact, and to avoid uneven tire wear.

⚠WARNING

Improperly repairing or replacing tires is hazardous. Improperly repaired or balanced tires could cause uneven tire wear or poor riding stability.

We recommend that you have an authorized Suzuki dealer or qualified mechanic perform these procedures because proper tools and experience are required.

⚠WARNING

Using tires that have been installed incorrectly can be hazardous. The motorcycle may have unusual handling if the tires are installed incorrectly.

The tires are intended to rotate in a specified direction, as indicated by the arrows on the sidewall of each tire. Install tires so they rotate in the proper direction.

⚠WARNING

Failure to follow instructions about tubeless tires can be hazardous. Tubeless tires require different service procedures than tube type tires.

Follow the procedures below:

- **Tubeless tires require an air-tight seal between the tire bead and wheel rim. Damage to the tire bead surface or the wheel rim inner surface will result in an air leak. Therefore, special care must be taken when removing or installing the tire. Special tire irons and rim protectors or a specialized tire mounting machine, must be used to prevent damage.**
- **Repair punctures in tubeless tires by removing the tire and applying an internal patch.**
- **Do not use an external repair plug to repair a puncture since the plug may work loose as a result of the cornering forces experienced in a motorcycle tire.**
- **After reinstalling a repaired tire, do not exceed 50 mph (80 km/h) for the first 24 hours, 80 mph (130 km/h) thereafter. This will help avoid excessive heat buildup which could lead to tire repair failure and subsequent tire deflation.**
- **Replace the tire if it is punctured in the sidewall area, or if a puncture in the tread area is larger than 6 mm (3/16 in). These punctures cannot be repaired adequately.**

SIDE STAND/IGNITION INTERLOCK SYSTEM

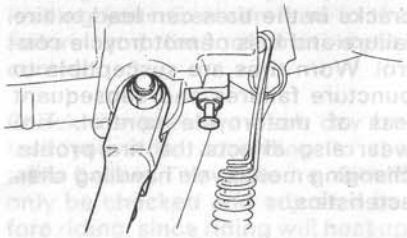

Check the side stand/ignition interlock system for proper operation as follows:

(1) Sit on the motorcycle in the normal riding position, with the side stand up.
(2) Shift into first gear, hold the clutch in, and start the engine.
(3) While continuing to hold the clutch in, move the side stand to the down position.

If the engine stops running when the side stand is moved to the down position, then the side stand /ignition interlock system is working properly. If the engine continues to run with the side stand down and the transmission in gear, then the side stand/ignition interlock system is not working properly. Have your motorcycle inspected by an authorized Suzuki dealer or some other qualified service mechanic.

⚠WARNING

If the side stand/ignition interlock system is not working properly, it is possible to ride the motorcycle with the side stand in the down position. This may interfere with rider control during a left turn.

Check the side stand/ignition interlock system for proper operation before riding.

FRONT WHEEL REMOVAL

(1) Place the motorcycle on the center stand.

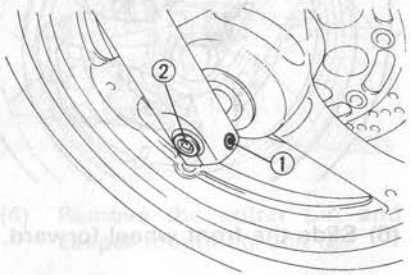

(2) Loosen the axle holder bolt ①.
(3) Loosen the axle shaft ② temporarily.
(4) Lift the front end of the motorcycle up and place a jack or a block under the chassis tubes.

⚠CAUTION

Improper jacking may cause damage to the oil filter.

Do not apply the jack head to the oil filter when jacking up the motorcycle.

(5) Remove the axle shaft.

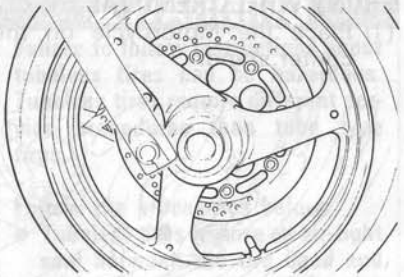

(6) Slide the front wheel forward.

NOTE: Never squeeze the front brake lever with the wheel removed. It is very difficult to force the pads back into the caliper assembly.

(7) To reinstall the wheel assembly, reverse the sequence as described.
(8) After installing the wheel, apply the brake several times to restore the proper lever stroke.

⚠WARNING

Failure to extend the brake pads after installing the front wheel can be hazardous. Inadequate braking performance could result in an accident.

Before riding, "pump" the brake lever several times to extend the pads and restore the proper lever stroke and firm feel.

⚠WARNING

Failure to torque bolts and nuts properly could lead to an accident.

Bolts and nuts must be torqued to the proper specifications. We strongly recommend that this be done by your authorized Suzuki dealer or qualified mechanic.

Front axle shaft tightening torque
36 – 52 N-m
[3.6 – 5.2 kg-m
26.0 – 37.5 lb-ft]

Axle holder bolt tightening torque
18 – 28 N-m
[1.8 – 2.8 kg-m
13.0 – 20.0 lb-ft]

REAR WHEEL REMOVAL

(1) Place the motorcycle on the center stand.

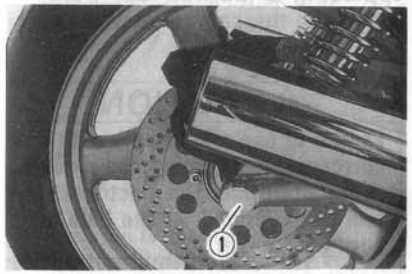

(2) Remove the axle cap ①.

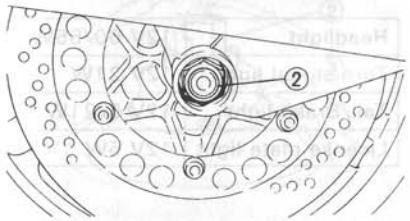

(3) Remove the axle nut ②.

⚠WARNING

A hot muffler can harm you. You can be burned if you touch a hot muffler.

Wait until the muffler cools to avoid burns.

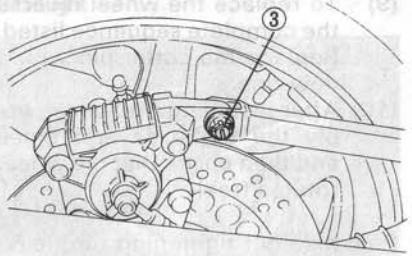

(4) Remove the cotter pin and caliper mounting bolt ③.

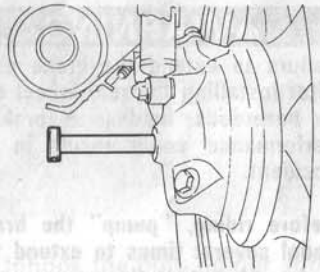

(5) Remove axle shaft.
(6) Remove the spacer and brake caliper mounting bracket. Slide off the caliper from the brake disc.
(7) Remove the wheel from the splined drive gear and set the wheel assembly on the ground.
(8) Remove the rear wheel assembly.

NOTE: Never depress the rear brake pedal with the rear wheel removed. It is very difficult to force the pads back into the caliper assembly.

(9) To replace the wheel reverse the complete sequence listed. Replace the cotter pin with a new one.

(10) After installing the wheel, apply the brake several times and then check that the wheel rotates freely.

Real axle nut tightening torque
50 – 90 N-m
[6.0 – 9.0 kg-m
43.5 – 69.5 lb-ft]

⚠WARNING

Failure to extend the brake pads after installing the rear wheel can be hazardous. Inadequate braking performance could result in an accident.

Before riding, "pump" the brake pedal several times to extend the pads and restore the proper pedal stroke and firm feel.

LIGHT BULB REPLACEMENT

The wattage rating of each bulb is shown in the following chart. When replacing a burned out bulb, always use the same wattage rating.

⚠CAUTION

Failure to use a light bulb with the correct wattage rating can damage your motorcycle. The electrical system can overload, or the bulb may burn out sooner.

Use only the light bulbs shown in the chart as replacement bulbs.

Headlight	12V 60/55W
Turn signal light	12V 21W
Tail/Brake light	12V 5/21W
License plate light	12V 5W

Headlight

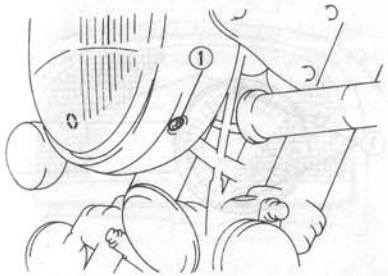

(1) Remove two screws ①. Remove the headlight assembly.

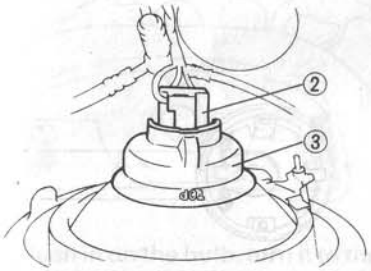

(2) Disconnect socket ② from the headlight and remove the rubber cap ③.

⚠CAUTION

Touching the headlight bulb glass may damage the bulb. The bulb's life may be shortened by oil from your skin if you touch it.

When replacing the headlight bulb, do not touch the glass. Grasp the new bulb with a clean cloth.

Headlight

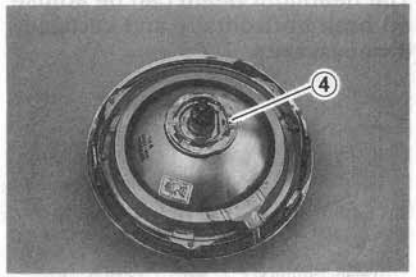

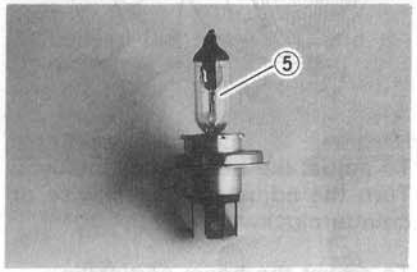

(3) Unhook the bulb holder spring ④, and pull out bulb ⑤.

Headlight Beam Adjustment

The headlight beam can be adjusted both horizontally and vertically if necessary.

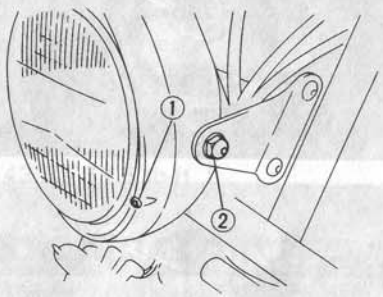

To adjust the beam horizontally: Turn the adjuster ① clockwise or counterclockwise.

To adjust the beam vertically: Loosen the headlight housing fitting bolts ② and move the headlight housing up and down as required.

Turn Signal Light

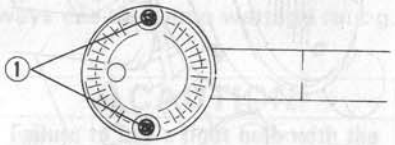

(1) Remove the screws ① and the lens.

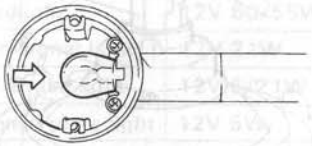

(2) Push in on the bulb, turn it to the left, and pull it out.

⚠CAUTION

Overtightening the screws may cause the lens to crack.

Tighten the lens screws only until they are snug.

Tail/Brake Light

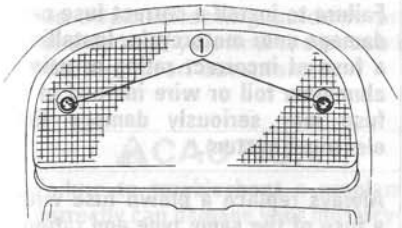

(1) Loosen the screws ① and remove the lens.

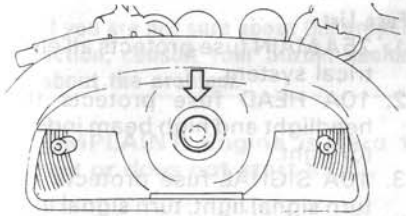

(2) Push in on the bulb, turn it to the left, and pull it out.

License Plate Light

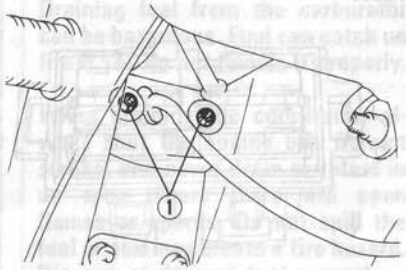

(1) Loosen the screws ① and remove the lens.

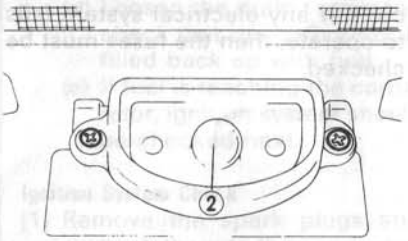

(2) Push in on the bulb ②, turn it to the left and pull it out.

FUSE

Fuses

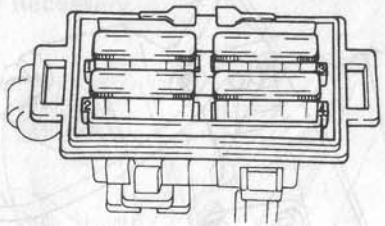

The fuses are located under the seat. The fuses are designed to open when a circuit overload exists in individual electrical system circuits. If any electrical system fails to operate, then the fuses must be checked.

⚠CAUTION

Failure to install a correct fuse can damage your motorcycle. Installing a fuse of incorrect rating or using aluminum foil or wire instead of a fuse may seriously damage the electrical system.

Always replace a blown fuse with a fuse of the same type and rating. If the new fuse blows in a short time, consult your Suzuki dealer immediately.

Fuse List

1. 25A MAIN fuse protects all electrical system.
2. 10A HEAD fuse protects the headlight and high beam indicator light.
3. 10A SIGNAL fuse protects the turn signal light, turn signal indicator lights and brakelight.
4. 10A IGNITION fuse protects the ignition system and electrical start system

TROUBLESHOOTING

This troubleshooting guide is provided to help you find the cause of some common complaints.

⚠CAUTION

Failure to troubleshoot a problem correctly can damage your motorcycle. Improper repairs or adjustments may damage the motorcycle instead of fixing it. Such damage may not be covered under warranty.

If you are not sure about the proper action, consult your Suzuki dealer about the problem.

COMPLAINT: Engine is hard to start or does not start at all.

Something is probably wrong with the fuel system or ignition system.

Fuel System Check

(1) Make sure there is enough fuel in the fuel tank.
(2) Check that the fuelcock is in the "ON" position.
(3) Make sure there is enough fuel reaching the carburetor from the fuelcock.
  (a) Loosen the drain screw located under the carburetor. Drain the fuel from the carburetor into a container.

⚠WARNING

Draining fuel from the carburetor can be hazardous. Fuel can catch on fire if you do not handle it properly.

When draining the carburetor, always shut the engine off. Do not smoke, and never drain or refuel in an area where there are open flames or sparks. Do not spill the fuel or you may create a fire hazard. Dispose of drained fuel properly.

  (b) Tighten the drain screw.
  (c) Push the electric starter button for a several seconds.
  (d) Loosen the drain screw and check that the carburetor is filled back up with fuel.
  (e) If fuel is reaching the carburetor, ignition system should be checked next.

Ignition System Check

(1) Remove the spark plugs and reattach them to the spark plug leads.
(2) Put the engine stop switch in the "RUN" position and ignition switch in the "ON" position. While holding the spark plug with its base firmly against the engine, push the electric starter button. If the ignition system is operating properly, a blue spark should jump across the spark plug gap. If there is no spark, take your machine to your authorized Suzuki dealer.

⚠WARNING

Performing the spark test improperly can be hazardous. You could get a high voltage electrical shock if you are not familiar with this procedure.

Do not perform this check if you are not familiar with the procedure. Do not point the spark plug near the spark plug hole during this test. Do not do this test if your have a heart condition or wear a pacemaker.

COMPLAINT: Engine Stalls

(1) Make sure there is enough fuel in the fuel tank.
(2) Check to see that the spark plug is not fouled. Remove the plug and clean it. Replace it, if necessary.
(3) Make sure the fuelcock is not clogged. Also check that the air vent hose connected to the fuel tank is not clogged.
(4) Check the engine idle speed. If necessary, adjust it using a tachometer. The correct idle speed is 1 150 – 1 250 r/min.

STORAGE PROCEDURE

If your motorcycle is to be left unused for an extended period of time, it needs special servicing requiring appropriate materials, equipment and skill. For this reason, Suzuki recommends that you trust this maintenance work to your Suzuki dealer. If you wish to service the machine for storage yourself, follow the general guidelines below:

MOTORCYCLE

Place the motorcycle on the center side stand and thoroughly clean the entire motorcycle.

FUEL

- Fill the fuel tank to the top with fuel mixed with the amount of gasoline stabilizer recommended by the stabilizer manufacturer.
- Drain the carburetor or run the engine for a few minutes until the stabilized gasoline fills the carburetor.

⚠WARNING

Draining the carburetor can be hazardous. Fuel can catch on fire if you do not handle it properly.

When draining the carburetor, always shut the engine off. Do not smoke, and never drain fuel in an area where there are open flames or sparks. Keep pets and children away from fuel, and dispose of fuel properly.

ENGINE

- Pour one tablespoon of motor oil into each spark plug hole. Reinstall the spark plugs and crank the engine a few times.
- Drain the engine oil thoroughly and refill the crankcase with fresh engine oil all the way up to the filler hole.
- Cover the air cleaner intake and the muffler outlet with oily rags to prevent humidity from entering.

BATTERY

- Remove the battery from the motorcycle.
- Clean the outside of the battery with a mild soap and remove corrosion from the terminals and wiring harness.
- Store the battery in a room above freezing.

TIRES

Inflate tires to the normal pressure.

EXTERNAL

- Spray all vinyl and rubber parts with rubber protectant.
- Spray unpainted surfaces with rust preventative.
- Coat painted surfaces with car wax.

MAINTENANCE DURING STORAGE

Once a month, recharge the battery. The standard charging rate is 1.6 A × 10 hours.

PROCEDURE FOR RETURNING TO SERVICE

- Clean the entire motorcycle.
- Remove the oily rags from the air cleaner intake and muffler outlet.
- Drain all the engine oil. Install a new oil filter and fill the engine with fresh oil as outlined in this manual.
- Remove the spark plugs. Turn the engine a few times. Reinstall the spark plugs.
- Reinstall the battery.
- Make sure that the motorcycle is properly lubricated.
- Perform the INSPECTION BEFORE RIDING as listed in this manual.
- Start the motorcycle as outlined in this manual.

APPEARANCE CARE

CORROSION PREVENTION

It is important to take good care of your motorcycle to protect it from corrosion.

Listed below are instructions for how to maintain your motorcycle to prevent corrosion and keep it looking new for years to come.

Important Information About Corrosion

Common cause of corrosion

(1) Accumulation of road salt, dirt, moisture, or chemicals in hard to reach areas.

(2) Chipping, scratches and any damage to treated or painted metal surfaces resulting from minor accidents or impact from stones and gravel.

Road salt, dust-control chemicals, sea air, industrial pollution and high humidity will all contribute to, or accelerate, corrosion.

The above signifies the necessity of keeping your motorcycle as clean and dry as possible. It is equally important to repair any damage to the paint or protective coatings as soon as possible.

How to Help Prevent Corrosion

(1) Wash your motorcycle frequently

The best way to preserve the finish on your motorcycle and to help avoid corrosion is to keep it clean with frequent washing. Wash your motorcycle at least once a month. Keep your motorcycle as dry and clean as possible.

(2) Remove foreign material deposits

Foreign material such as salt, chemicals, road oil or tar, tree sap, bird droppings and industrial fall-out may damage the finish of your motorcycle if it is left on painted surfaces. Remove these types of deposits as quickly as possible. If these deposits are difficult to wash off, an additional cleaner may be required. Be sure that any cleaner you use is not harmful to painted surfaces and is specifically intended for your purposes. Follow the manufacturer's directions when using these special cleaners.

(3) Repair finish damage

Carefully examine your motorcycle for damage to the painted surfaces. Should you find any chips or scratches in the paint, touch them up immediately to prevent corrosion from starting. If the chips or scratches have gone through to the bare metal, have a Suzuki dealer make the repair.

(4) Store your motorcycle in a dry, well-ventilated area

Do not park your motorcycle in a damp, poorly ventilated area. If you often wash your motorcycle in the garage or if you frequently drive it in when wet, your garage may be damp. The high humidity in the garage may cause or accelerate corrosion. A wet motorcycle may corrode even in a heated garage if the ventilation is poor.

(5) Cover your motorcycle

Years of exposure to mid-day sun can cause the colors in paint, plastic parts, and instrument faces to fade. Covering your motorcycle with a high-quality, "breathable" motorcycle cover can help protect the finish from the harmful UV rays in sunlight, and can reduce the amount of dust and air pollution reaching the surface. Your Suzuki dealer can help you select the right cover for your motorcycle.

MOTORCYCLE CLEANING

Washing the Motorcycle

When washing the motorcycle, follow the instructions below:

(1) Remove dirt and mud from the motorcycle with running water. You may use a soft sponge or brush. Do not use hard materials which can scratch the paint.

(2) Wash the entire motorcycle with a mild detergent or car wash soap using a sponge or soft cloth. The sponge or cloth should be frequently soaked in the soap solution.

⚠CAUTION

Radiator fins can be damaged by spraying high pressure water on them.

Do not spray high pressure water on the radiator fins.

NOTE: Avoid spraying or allowing water to flow over the following places:

- *Ignition switch*
- *Spark plugs*
- *Fuel tank cap*
- *Carburetors*
- *Brake master cylinders*

(3) Once the dirt has been completely removed, rinse off the detergent with running water.

(4) After rinsing, wipe off the motorcycle with a wet chamois or cloth and allow it to dry in the shade.

(5) Check carefully for damage to painted surfaces. If there is any damage, obtain "touch-up" paint and "touch-up" the damage following the procedure below:
a) Clean all damaged spots and allow them to dry.
b) Stir the paint and "touch-up" the damaged spots lightly with a small brush.
c) Allow the paint to dry completely.

Waxing the Motorcycle

After washing the motorcycle, waxing and polishing are recommended to further protect and beautify the paint.

- Only use waxes and polishes of good quality.
- When using waxes and polishes, observe the precautions specified by the manufacturers.

INSPECTION AFTER CLEANING

For extended life of your motorcycle, lubricate according to "GENERAL LUBRICATION" section.

⚠WARNING

Operating the motorcycle with wet brakes can be hazardous. Wet brakes may not provide as much stopping power as dry brakes. This could lead to an accident.

Test your brakes after washing the motorcycle, while riding at slow speed. If necessary, apply brakes several times to let friction dry out the lining.

Follow the procedures in the "INSPECTION BEFORE RIDING" section to check your motorcycle for any problems that may have arisen during your last ride.

CONSUMER INFORMATION

EMISSION CONTROL WARRANTY

Suzuki Motor Corporation warrants to the ultimate purchaser and each subsequent purchaser that this motorcycle is designed, built, and equipped so as to conform at the time of sale with all U.S. emission standards applicable at the time of manufacture, and that it is free from defects in materials and workmanship which would cause it not to meet these standards within its useful life. Useful life is defined for each class of motorcycle as 5 years or the corresponding number of kilometers (miles) shown in the chart below, whichever occurs first.

Vehicle class	Engine displacement	Useful Life Distance
Class I	50 to 169 cc	12 000 km (7 456 miles)
Class II	170 to 279 cc	18 000 km (11 185 miles)
Class III	280 cc and over	30 000 km (18 641 miles)

Failure, other than those resulting from defects in material or workmanship, which arise solely as a result of owner abuse and/or lack of proper maintenance are not covered by the warranty.

REPORTING SAFETY DEFECTS

If you believe that your vehicle has a defect which could cause a crash or could cause injury or death, you should immediately inform the National Highway Traffic Safety Administration (NHTSA) in addition to notifying American Suzuki Motor Corp.

If NHTSA receives similar complaints, it may open an investigation, and if it finds that a safety defect exists in a group of vehicles, it may order a recall and remedy campaign. However, NHTSA cannot become involved in individual problems between you, your dealer, or American Suzuki Motor Corp.

To contact NHTSA, you may either call the Auto Safety Hotline toll-free at 1-800-424-9393 (or 366-0123 in Washington, D.C. area) or write to: NHTSA, U.S. Department of Transportation, Washington, D.C. 20590. You can also obtain other information about motor vehicle safety from the Hotline.

To contact American Suzuki, owners in the continental United States can call toll-free 1-800-444-5077, or write to: American Suzuki Motor Corporation Motorcycle Customer Service P.O. Box 1100, Brea, CA 92622-1100

For owners outside the continental United States, please refer to the distributor's address listed on your Warranty Information brochure.

TAMPERING WITH NOISE CONTROL SYSTEM PROHIBITED

Federal law prohibits the following acts or the causing thereof; (1) the removal or rendering inoperative by any person other than for purposes of maintenance, repair, or replacement, of any device or element of design incorporated into any new vehicle for the purpose of noise control prior to its sale or delivery to the ultimate purchaser or while it is in use, or (2) the use of the vehicle after such device or element of design has been removed or rendered inoperative by any person.

Among those acts presumed to constitute tampering are the acts listed below:

- removing or puncturing the muffler, baffles, header pipes, or any other component which conducts exhaust gases
- replacing the exhaust system or muffler with a system or muffler not marked with the same model specific code as the code listed on the Motorcycle Noise Emission Control Information label, and certified to appropriate EPA noise standards
- removing or puncturing the air cleaner case, air cleaner cover, baffles, or any other component which conducts intake air.

Whenever replacing parts on your motorcycle, Suzuki recommends that you use genuine Suzuki replacement parts or their equivalent.

SERIAL NUMBER LOCATION

You need to know the frame and engine serial numbers to get title documents for your motorcycle. You also need these numbers to help your dealer when you order parts.

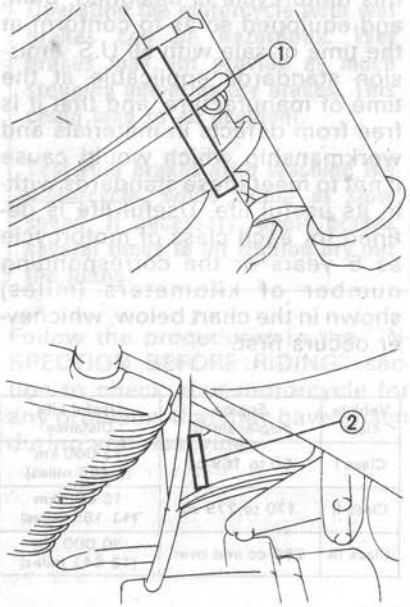

The frame number ① is stamped on the steering head tube as shown in the photograph. The engine serial number ② is stamped on the crankcase assembly.

Write down the serial numbers here for your future reference.

Frame No:

Engine No:

SPECIFICATION

DIMENSIONS AND DRY MASS

Overall length	2265 mm (89.2 in)
Overall width	805 mm (31.7 in)
Overall height	1115 mm (43.9 in)
Wheelbase	1565 mm (61.6 in)
Ground clearance	145 mm (5.7 in)
Seat height	800 mm (31.5 in)
Dry mass (weight)	213 kg (470 lbs)
	214 kg (472 lbs) ..... For California model

ENGINE

Type	Four-stroke, water-cooled, OHC, TSCC, 45-degree V-twin
Valve clearance	0.08 – 0.13 mm (0.003 – 0.005 in)
Number of cylinders	2
Bore	83.0 mm (3.263 in)
Stroke	74.4 mm (2.929 in)
Piston displacement	805 cm^3 (49.12 cu.in)
Compression ratio	10.0 : 1
Carburetor, front	MIKUNI BDS36SS, Single
rear	MIKUNI BS36SS, Single
Air cleaner	Polyester fiber element
Starter system	Electric starter motor
Lubrication system	Wet sump

TRANSMISSION

Clutch	Wet multi-plate type
Transmission	5-speed constant mesh
Gearshift pattern	1-down, 4-up
Primary reduction ratio	1.690 (71/42)
Secondary reduction	1.096 (17/15 × 30/31)
Final reduction ratio	3.090 (34/11)
Gear ratios, Low	2.285 (32/14)
2nd	1.631 (31/19)
3rd	1.227 (27/22)
4th	1.000 (25/25)
Top	0.851 (23/27)
Drive chain	Shaft drive

CHASSIS

Front suspension	Telescopic, coil spring, oil damped
Rear suspension	Swinging arm, coil spring, oil damped, spring preload 5-way adjustable, damping force 4-way adjustable
Steering angle	35° (right & left)
Caster	59°20'
Trail	129 mm (5.1 in)
Turning radius	3.2 m (10.5 ft)
Front brake	Disc
Rear brake	Disc
Front tire size	110/80-18 58H
Rear tire size	150/70 B17 69H

ELECTRICAL

Ignition type	Fully transistorized
Ignition timing	5° B.T.D.C. below 1625 r/min and 32° B.T.D.C above 3750 r/min
Spark plug	NGK DPR8EA-9 or NIPPONDENSO X24EP-U9
Battery	12V 57.6 kC (16 Ah)/10HR
Generator	Three-phase A.C. generator
Fuse	25/10/10/10 A
Headlight	12V 60/55W
Tail/brake light	12V 5/21W
Turn signal light	12V 21W
License plate light	12V 5W
Speedometer light	12V 3.4W
Tachometer light	12V 1.7W × 2
Neutral indicator light	12V 3.4W
High beam indicator light	12V 1.7W
Turn signal indicator light	12V 3.4W
Oil pressure indicator light	12V 3.4W
Engine coolant temperature check light	12V 3W

CAPACITIES

Fuel tank, including reserve	19.0 L (5.0 US gal)
	18.0 L (4.7 US gal) ..... For California model
Reserve	4.0 L (1.1 US gal)
Engine oil, without filter change	2400 ml (2.5 US qt)
with filter change	2800 ml
Final gear oil	200 – 220 ml (6.8 – 7.4 usoz)
Coolant	1.7 L (1.8/1.5 us qt)

WIRING DIAGRAM

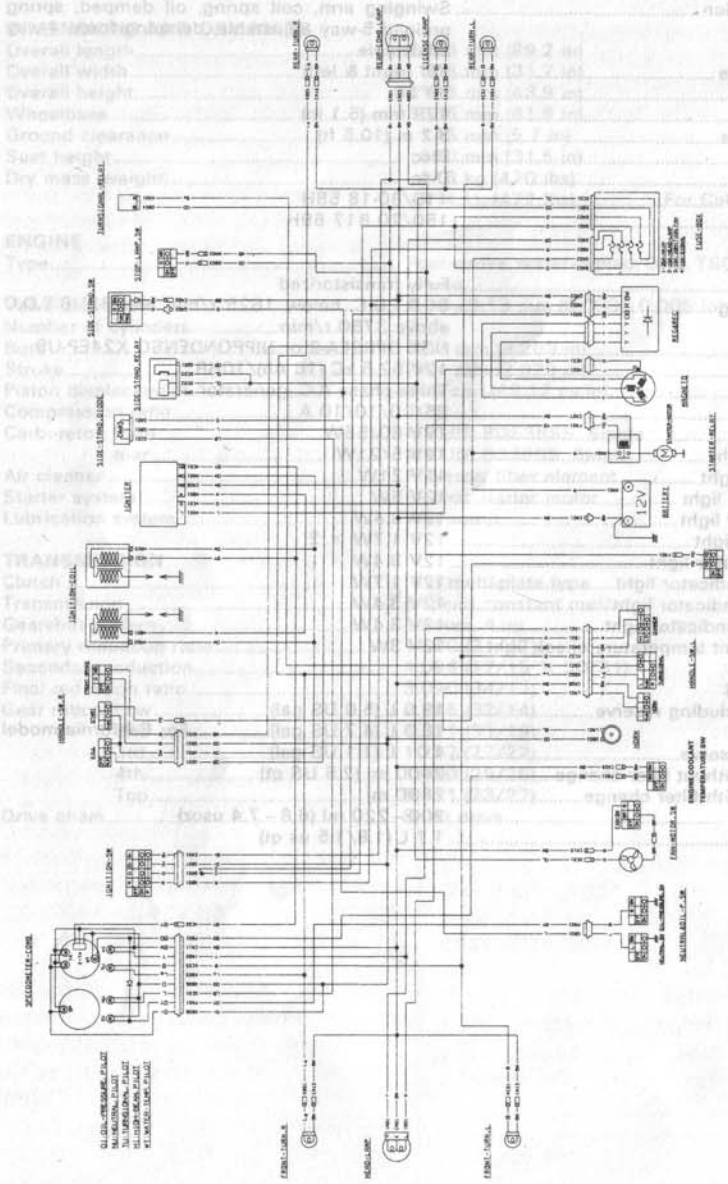

WIRE COLOR

B	Black
Bl	Blue
Br	Brown
G	Green
Gr	Gray
Lbl	Light blue
Lg	Light green
O	Orange
R	Red
W	White
Y	Yellow
B/W	Black with White tracer
B/Y	Black with Yellow tracer
G/W	Green with White tracer
G/Y	Green with Yellow tracer
O/B	Orange with Black tracer
O/Bl	Orange with Blue tracer
O/G	Orange with Green tracer
O/R	Orange with Red tracer
O/W	Orange with White tracer
W/B	White with Black tracer
Y/B	Yellow with Black tracer
Y/G	Yellow with Green tracer
Y/W	Yellow with White tracer

Prepared by

SUZUKI MOTOR CORPORATION

Motorcycle Technical Service Department

July, 1992

Part No. 99011-45C53-03A

Printed in Japan

FOREWORD

The SUZUKI VX800 has been developed as a new generation motorcycle. It is packed with highly advanced design concepts including a V-2 engine, a liquid cooling system, a new highly efficient combustion system (TSCC), a fully transistorized ignition system and a shaft drive mechanism. Combined with precise control and easy handling the VX800 provides excellent performance and outstanding riding comfort.

This service manual has been produced primarily for experienced mechanics whose job is to inspect, adjust, repair and service SUZUKI motorcycles. Apprentice mechanics and do-ti-yourself mechanics, will also find this manual an extremely useful repair guide. This manual contains the most up-to-date information at the time of publication. The rights are reserved to update or make corrections to this manual at any time.

IMPORTANT

All street-legal SUZUKI motorcycles with engine displacement of 50cc or greater are subject to Environmental Protection Agency emission regulations. These regulations set specific standards for exhaust emission output levels as well as particular servicing requirements. This manual includes specific information required to properly inspect and service VX800 in accordance with all EPA regulations. It is strongly recommended that the chapter on Emission Control, Periodic Servicing and Carburetion be thoroughly reviewed before any type of service work is performed.

Further information concerning the EPA emission regulations and U.S. SUZUKI's emission control program can be found in the U.S. SUZUKI EMISSION CONTROL PROGRAM MANUAL/SERVICE BULLETIN.

SUZUKI MOTOR CORPORATION

Motorcycle Technical
Service Department

GROUP INDEX

VIEW OF SUZUKI VX800L

LEFT SIDE

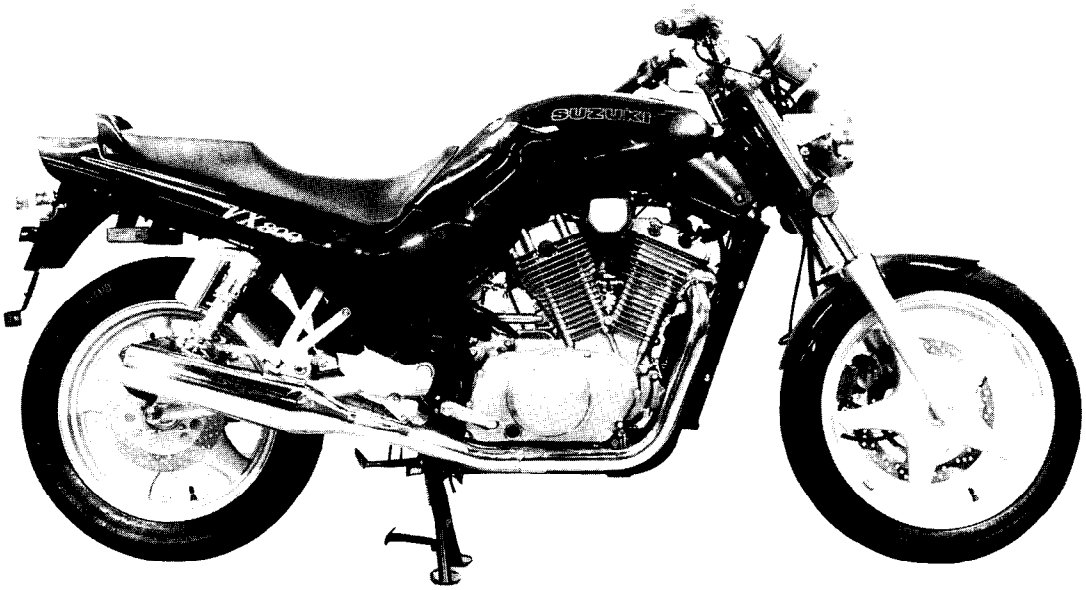

RIGHT SIDE

GENERAL INFORMATION

1

CONTENTS

SERIAL NUMBER LOCATION

The frame serial number or V.I.N. (Vehicle Identification Number) ① is stamped on the steering head pipe. The engine serial number ② is located on the rear side of the crankcase. These numbers are required especially for registering the machine and ordering spare parts.

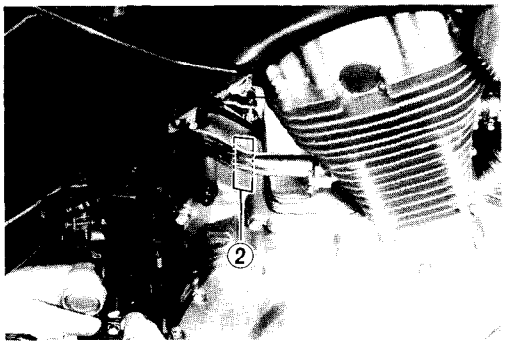

FUEL, OIL AND COOLANT RECOMMENDATION

FUEL (For U.S.A. model)

1. Use only unleaded gasoline of at least 87 pump octane by the $\frac{R+M}{2}$ method or 91 octane or higher rated by the Research method.
2. Suzuki recommends that customers use alcohol-free, unleaded gasoline whenever possible.
3. Use of blended gasoline containing MTBE (Methyl Tertiary Butyl Ether) is permitted.
4. Use of blended gasoline/alcohol fuel is permitted, provided that the fuel contains not more than 10% ethanol. Gasoline/alcohol fuel may contain up to 5% methanol if appropriate cosolvents and corrosion inhibitors are present in it.
5. If the performance of the vehicle is unsatisfactory while using blended gasoline/alcohol fuel, you should switch to alcohol-free unleaded gasoline.
6. Failure to follow these guideline could possibly void applicable warranty coverage. Check with your fuel supplier to make sure that the fuel you intend to use meets the requirements listed above.

FUEL (For Canadian model)

Use only unleaded gasoline of at least 87 pump octane by the $\frac{R+M}{2}$ method or 91 octane or higher rated by the Research method.

FUEL (For the other models)

Gasoline used should be graded 85 – 95 octane by the Research method or higher. An unleaded gasoline is recommended.

ENGINE OIL (For U.S.A. model)

Suzuki recommends the use of SUZUKI PERFORMANCE 4 MOTOR OIL or an oil which is rated SE or SF under the API (American Petroleum Institute) classification system. The viscosity rating is SAE 10W/40. If an SAE 10W/40 motor oil is not available, select an alternate according to the following chart.

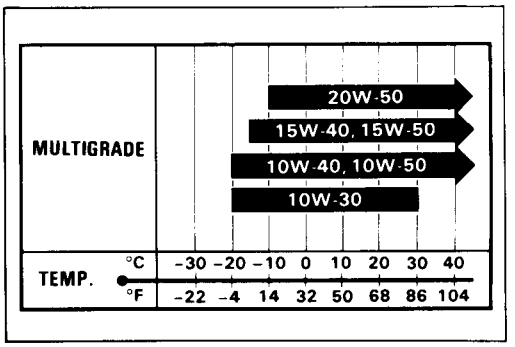

ENGINE OIL (For the other models)

Make sure that the engine oil you use comes under API classification of SE or SF and that its viscosity rating is SAE 10W/40. If an SAE 10W/40 motor oil is not available, select an alternate according to the following chart.

GEAR OIL (FINAL DRIVE GEAR BOX)

Use SAE 90 hypoid gear oil which is rated GL-5 under API classification system. If you operate the motorcycle where ambient temperature is below 0°C (32°F), use SAE 80 hypoid gear oil.

BRAKE FLUID

Specification and classification: DOT4

WARNING:

* **Since the brake system of this motorcycle is filled with a glycol-based brake fluid by the manufacturer, do not use or mix different types of fluid such as silicone-based and petroleum-based fluid for refilling the system, otherwise serious damage will result.**
* **Do not use any brake fluid taken from old or used or unsealed containers.**
* **Never reuse brake fluid left over from a previous servicing, which has been stored for a long period.**

FRONT FORK OIL

Use fork oil #10.

COOLANT

Use an anti-freeze/coolant compatible with an aluminum radiator, mixed with distrilled water only.

WATER FOR MIXING

Use distrilled water only. Water other than distrilled water can corrode and clog the aluminum radiator.

ANTI-FREEZE/COOLANT

The coolant perform as a corrosion and rust inhabit as well as anti-freeze. Therefore, the coolant should be used at all times even though the atomospheric temperature in your area does not go down to freezing point.

Suzuki recommends the use of SUZUKI GOLDEN CRUISER 1200NA anti-freeze/coolant. If this is not available, use an equivalent which is compatible with an aluminum radiator.

LIQUID AMOUNT OF WATER/COOLANT

Solution capacity (total): 1700 ml (1.8/1.5 US/Imp. qt)

For coolant mixture information, refer to cooling system section, page 5-2.

CAUTION:
Mixing of anti-freeze/coolant should be limited to 60%. Mixing beyond it would reduce its efficiency. If the anti-freeze/coolant mixing ratio is below 50%, rust inhabiting performance is greatly reduced. Be sure to mix it above 50% even though the atmospheric temperature does not go down to the freezing point.

BREAK-IN PROCEDURES

During manufacture only the best possible materials are used and all machined parts are finished to a very high standard but it is still necessary to allow the moving parts to "BREAK-IN" before subjecting the engine to maximum stresses. The future performance and reliability of the engine depends on the care and restraint exercise during its early life. The general rules are as follows.

- Keep to these break-in engine speed limits:

Initial 800 km (500 miles) : Below 4000 r/min
Up to 1600 km (1000 miles) : Below 6000 r/min
Over 1600 km (1000 miles) : Below 8500 r/min

- Upon reaching an odometer reading of 1600 km (1000 miles) you can subject the motorcycle to full throttle operation. However, do not exceed 8500 r/min at any time.

CYLINDER IDENTIFICATION

The two cylinders of this engine are identified as No. 1, and No. 2 cylinder, as counted from rear to front (as viewed by the rider on the seat).

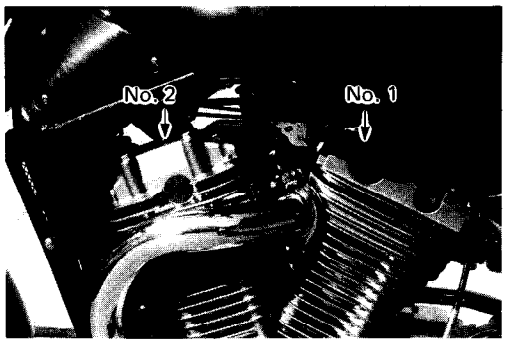

SPECIAL MATERIALS

The materials listed below are needed for maintenance work on the VX800, and should be kept on hand for ready use. They supplement such standard materials as cleaning fluids, lubricants, emery cloth and the like. How to use them and where to use them are described in the text of this manual.

MATERIAL		PART	PAGE
For U.S.A. model	For other models		
 SUZUKI BRAKE FLUID DOT3 & DOT4 99000-23110	 SUZUKI BRAKE FLUID DOT3 & DOT4 99000-23110	• Brakes	2-12
 SUZUKI GOLDEN CRUISER 1200NA 99000-99032-10X	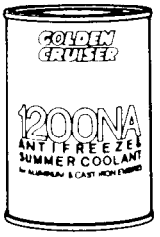 SUZUKI GOLDEN CRUISER 1200NA 99000-99032-10X	• Coolant	2-10
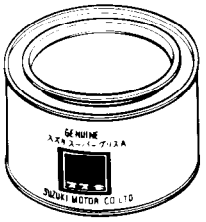 SUZUKI SUPER GREASE "A" 99000-25030	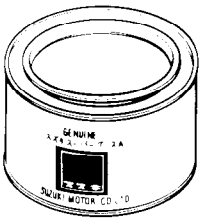 SUZUKI SUPER GREASE "A" 99000-25010	• Brake pedal pivot • Footrest pivot • Gearshift lever pivot • Side-stand pivot and spring hook • Center stand pivot and spring hook • O-ring of oil jet • Secondary bevel gear case oil seal and O-ring • Final driven gear oil seal • Final driven bevel gear coupling • Starter motor armature bearing and dust seal • Wheel bearing • Speedometer gear box dust seal • Steering stem bearing and dust seal • Brake pedal boss • Final driven gear spline and O-ring • Swingarm spacer, bearing and dust seal	2-2 2-2 2-2 2-2 2-2 3-17 4-4 4-15 4-19 7-12 8-3, 29 8-4 8-17 8-25 8-30 8-39

MATERIAL		PART	PAGE
For U.S.A. model	For other models		
 SUZUKI SILICONE GREASE 99000-25100	 SUZUKI SILICONE GREASE 99000-25100	• Brake caliper axle	8-5
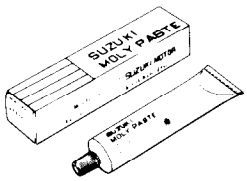 SUZUKI MOLY PASTE 99000-25140	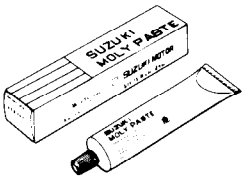 SUZUKI MOLY PASTE 99000-25140	• Valve stem • Conrod big end bearing • Countershaft and driveshaft • Piston pin • Crankshaft journal bearing • Camshaft journal and cam face • Rocker arm and shaft • Starter motor housing end bushing	3-30 3-37 3-43 3-56 3-45 3-58 3-60 7-12
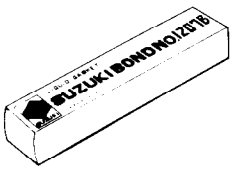 SUZUKI BOND NO. 1207B 99104-31140	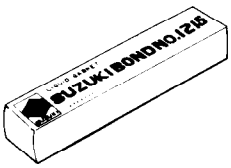 SUZUKI BOND NO. 1215 99000-31110	• Oil pressure switch • Mating surface of right and left crankcases • Generator lead wire grommet • Mating surface of secondary bevel gear case • Mating surface between swingarm and final bevel gear case	3-17 3-46 3-47 3-48 4-20 8-39
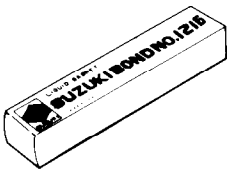 SUZUKI BOND NO. 1216 99104-31160	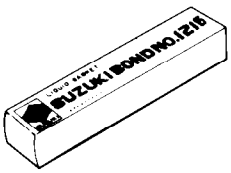 SUZUKI BOND NO. 1216 99000-31160	• Cylinder head cover	3-60
 THREAD LOCK SUPER "1303" 99000-32030	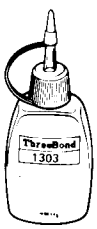 THREAD LOCK SUPER "1303" 99000-32030	• Secondary driven bevel gear housing bolt • Gearshift and stopper • Cam sprocket bolt • Final driven gear bearing retainer screw • Final driven joint stopper bolt	3-49 3-50 3-58 4-14 8-30

MATERIAL		PART	PAGE
For U.S.A. model	For other models		
 THREAD LOCK "1342" 99000-32050	 THREAD LOCK "1342" 99000-32050	• Generator stator mounting screw • Generator lead wire guide screw • Final gear case securing bolt • Starter motor housing screw • Front fork damper rod bolt	3-41 3-41 4-19 7-12 8-12
 THREAD LOCK SUPER "1333B" 99000-32020	 THREAD LOCK SUPER "1322" 99000-32110	• Oil pipe retainer bolt • Gearshift cam stopper bolt • Gearshift cam driven gear bolt • Gearshift cam guide nut and pawl lifter screw • Oil pump securing bolt • Brake pedal boss bolt • Front footrest bolt	3-45 3-49 3-50 3-50 3-51 8-25 8-39
 THREAD LOCK SUPER "1303" 99000-32030	 THREAD LOCK SUPER "1324" 99000-32120	• Crankcase bearing retainer screw and bolt	3-18
 THREAD LOCK SUPER "1360" 99000-32130	 THREAD LOCK SUPER "1360" 99000-32130	• Brake disc mounting bolt	8-3 8-30

MATERIAL		PART	PAGE
For U.S.A. model	For other models		
 THREAD LOCK SUPER "1303" 99000-32030	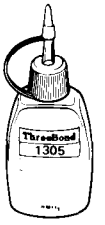 THREAD LOCK SUPER "1305" 99000-32100	• Generator rotor mounting bolt • Starter clutch allen bolt	3-47 3-41
 SUZUKI FORK OIL # 10 99000-99044-10G	 SUZUKI FORK OIL # 10 99000-99044-10G	• Front fork	8-13

PRECAUTIONS AND GENERAL INSTRUCTIONS

Observe the following items without fail when servicing, disassembling and reassembling motorcycles.

☐ Do not run engine indoors with little or no ventilation.

☐ Be sure to replace packings, gaskets, circlips, O-rings and cotter pins with new ones.

CAUTION:

* **Never reuse a circlip. After a circlip has been removed from a shaft, it should be discarded and a new circlip must be installed.**
* **When installing a new circlip, care must be taken not to expand the end gap larger than required to slip the circlip over the shaft.**
* **After installing a circlip, always insure that it is completely seated in its groove and securely fitted.**

☐ Tighten cylinder head and case bolts and nuts, beginning with larger diameter and ending with smaller diameter, from inside to out-side diagonally, to the specified tightening torque.

☐ Use special tools where specified.

☐ Use genuine parts and recommended oils.

☐ When 2 or more persons work together, pay attention to the safety of each other.

☐ After the reassembly, check parts for tightness and operation.

- Treat gasoline, which is extremely flammable and highly explosive, with greatest care. Never use gasoline as cleaning solvent.

Warning, Caution and Note are included in this manual occasionally, describing the following contents.

WARNING ..... The personal safety of the rider or bystanders may be involved. Disregarding this information could result in personal injury.

CAUTION ..... These instructions point out special service procedures or precautions that must be followed to avoid damaging the machine.

NOTE ..... This provides special information to make maintenance easier or important instructions clearer.

REPLACEMENT PARTS

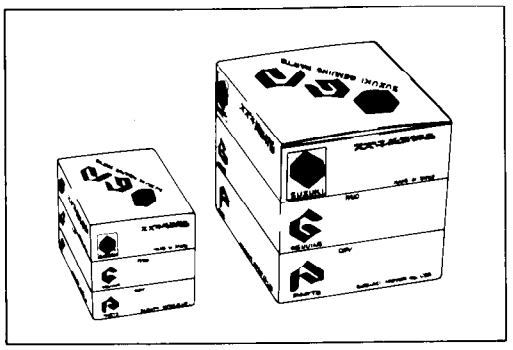

When you replace any parts, use only genuine SUZUKI replacement parts, or their equivalent. Genuine SUZUKI parts are high quality parts which are designed and built specifically for SUZUKI vehicles.

CAUTION:
Use of replacement parts which are not equivalent in quality to genuine SUZUKI parts can lead to performance problems and damage.

ASBESTOS INFORMATION

Note the following when handling a supply part with this WARNING LABEL, or any part in the parts list which contains asbestos.

- Operate if possible out of doors in a well ventilated place.
- Preferably use hand tools or low speed tools equipped, if necessary, with an appropriate dust extractor facility. If high speed tools are used, they should always be so equipped.
- If possible, dampen before cutting or drilling.
- Dampen dust and place it in a properly closed receptacle and dispose of it safely.

Any domestic asbestos product to which the above does not apply, but which is likely to release fibres during use should be replaced by new one when worn.

1.	Cylinder head breather cover gasket
2.	Clutch cover gasket
3.	Exhaust pipe gasket
4.	Generator cover gasket
5.	Water pump gasket

NOTE:
Refer to the VX800 parts catalogue for details.

SPECIFICATIONS

DIMENSIONS AND DRY MASS

Overall length	2280 mm (89.8 in) . . . E15, 16, 17, 22, 25, 39
	2355 mm (92.7 in) . . . E18
	2255 mm (88.8 in) . . . Others
Overall width	805 mm (31.7 in)
Overall height	1115 mm (43.9 in) . . . E03, 28, 33
	1085 mm (42.7 in) . . . Others
Wheelbase	1565 mm (61.6 in) . . . E03, 33
	1555 mm (61.2 in) . . . Others
Ground clearance	145 mm (5.7 in)
Seat height	800 mm (31.5 in) . . . E01, 03, 28, 33
	795 mm (31.3 in) . . . Others
Dry mass	214 kg (472 lbs) . . . E33
	213 kg (470 lbs) . . . Others

ENGINE

Type	Four-stroke, water-cooled, OHC, TSCC, 45° V-twin
Valve clearance	0.08 – 0.13 mm (0.003 – 0.005 in)
Number of cylinders	2
Bore	83.0 mm (3.268 in)
Stroke	74.4 mm (2.929 in)
Piston displacement	805 cm^3 (49.12 cu. in)
Compression ratio	10.0 : 1
Carburetor, Front	MIKUNI BDS36SS, single
Rear	MIKUNI BS36SS, single
Air cleaner	Polyester fiber element
Starter system	Electric starter motor
Lubrication system	Wet sump

TRANSMISSION

Clutch	Wet multi-plate type
Transmission	5-speed constant mesh
Gearshift pattern	1-down, 4-up
Primary reduction ratio	1.690 (71/42)
Gear ratios, Low	2.285 (32/14)
2nd	1.631 (31/19)
3rd	1.227 (27/22)
4th	1.000 (25/25)
Top	0.851 (23/27)
Secondary reduction ratio	1.133 (17/15 x 30/30) . . . E03, 33
	1.096 (17/15 x 30/31) . . . Others
Final reduction ratio	3.090 (34/11)
Drive system	Shaft drive

CHASSIS

Front suspension	Telescopic, coil spring, oil damped
Rear suspension	Swingarm, coil spring, gas/oil damped, spring preload 5-way adjustable; rebound damping force 4-way adjustable . . . E01, 03, 28, 33; compression damping force 4-way adjustable and rebound damping force 4-way adjustable . . . Others
Front suspension stroke	150 mm (5.9 in)
Rear wheel travel	118 mm (4.6 in) . . . E01, 03, 28, 33 119 mm (4.7 in) . . . Others
Caster	59°
Trail	143 mm (5.63 in) . . . E01, 03, 28, 33 142 mm (5.59 in) . . . Others
Steering angle	35° (right & left)
Turning radius	3.2 m (10.5 ft)
Front brake	Disc
Rear brake	Disc
Front tire size	110/80-18 58H, tubeless
Rear tire size	150/70B17 69H, tubeless

ELECTRICAL

Ignition type	Fully transistorized
Ignition timing	5° B.T.D.C. below 1650 r/min and 30° B.T.D.C. above 3500 r/min . . . E03, 33 T.D.C. below 1625 r/min and 30° B.T.D.C. above 3500 r/min . . . E18 5° B.T.D.C. below 1625 r/min and 32° B.T.D.C. above 3750 r/min . . . Others
Spark plug	NGK DPR8EA-9 or NIPPON DENSO X24EPR-U9
Battery	12V 57.6 kC (16Ah)/10HR
Fuse	25/10/10/10A
Headlight	12V 60/55W
Position light	12V 4W . . . except E03, 28, 33
Turn signal light	12V 21W
Tail/Brake light	12V 5/21W
License plate light	12V 5W
Speedometer light	12V 3.4W
Tachometer light	12V 1.7W
Neutral indicator light	12V 3.4W
High beam indicator light	12V 1.7W
Turn signal light indicator light	12V 3.4W
Oil pressure indicator light	12V 3.4W
Coolant temperature check light	12V 3W

CAPACITIES

Fuel tank, including reserve	18.0 L (4.8/4.0 US/Imp. gal) . . . E33
	19.0 L (5.0/4.2 US/Imp. gal) . . . Others
Reserve	4.0 L (1.1/0.9 US/Imp. gal)
Engine oil, oil change	2400 ml (2.5/2.1 US/Imp. qt)
with filter change	2800 ml (3.0/2.5 US/Imp. qt)
overhaul	3300 ml (3.5/2.9 US/Imp. qt)
Final gear oil	200 – 220 ml (6.8/7.0 – 7.4/7.7 US/Imp. oz)
Coolant (including reserve)	1700 ml (1.8/1.5 US/Imp. qt)
Front fork oil (each leg)	388 ml (13.1/13.7 US/Imp. oz) . . . E01, 03, 28, 33
	392 ml (13.2/13.8 US/Imp. oz) . . . Others

These specifications are subject to change without notice.

COUNTRY OR AREA

The series of symbols on the left stand for the countries and areas on the right.

SYMBOL	COUNTRY or AREA
E-01	General market (Export standard model)
E-02	England
E-03	U.S.A. (except California)
E-04	France
E-15	Finland
E-16	Norway
E-17	Sweden
E-18	Switzerland
E-21	Belgium
E-22	West Germany
E-24	Australia
E-25	Netherlands
E-28	Canada
E-33	California (U.S.A.)
E-34	Italy
E-39	Austria
E-53	Spain

ENGINE

CONTENTS

COMPRESSION CHECK

The compression of a cylinder is good indicator of its internal condition. The decision to overhaul the cylinders is often based on the results of a compression test. Periodic maintenance records kept at your dealership should include compression readings for each maintenance service.

COMPRESSION

Standard	Limit	Difference in cylinders
1300 – 1600 kPa (13 – 16 kg/cm^2 184 – 227 psi)	1100 kPa (11 kg/cm^2 156 psi)	200 kPa (2 kg/cm^2 28 psi)

Low compression pressure can indicate any of the following conditions:

* Excessively worn cylinder wall
* Worn-down piston or piston rings
* Piston rings stuck in the grooves
* Poor seating of valves
* Ruptured or otherwise defective cylinder head gasket
* Valve clearance out of adjustment
* Starter motor cranks too slowly

Overhaul the engine in the following cases:

* Compression pressure in one of the cylinders is less than 1100 kPa (11 kg/cm^2, 156 psi).
* Difference in compression pressure between two cylinders is more than 200 kPa (2 kg/cm^2, 28 psi).
* All compression pressure are below 1300 kPa (13 kg/cm^2, 184 psi) even when they measure more than 1100 kPa (11 kg/cm^2, 156 psi).

COMPRESSION TEST PROCEDURE

NOTE:

* *Before testing the compression of the engine, make sure that the cylinder head bolts and nuts are tightened to specified torque values.*
* *Warm up the engine before testing.*

- Remove all the spark plugs.
- Fit the compression gauge ① in one of the plug holes, while taking care that the connection is tight.
- Twist the throttle grip full open.
- Crank the engine a few seconds with the starter, and record the maximum gauge reading as the compression of the cylinder.
- Repeat this procedure with the other cylinder.

09915-64510 : Compression gauge
09918-03810 : Adaptor

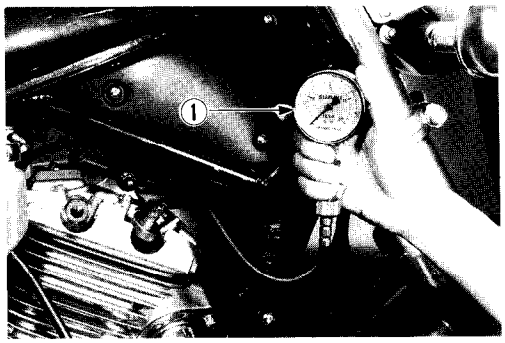

ENGINE COMPONENTS REMOVABLE WITH THE ENGINE IN PLACE

The parts listed below can be removed and reinstalled without removing the engine from the frame. Refer to the page listed in this section for removal and reinstallation instructions.

ENGINE LEFT SIDE

	See page
Secondary bevel gear case cover	3-3
Secondary bevel gear case	3-14
Gearshift lever	3-3
Generator cover	3-12
Generator rotor	3-13
Neutral indicator switch body	3-14
Generator stator	7-7
Pick-up coil	7-7
Secondary driven bevel gear	3-15
Water pump case	3-3
Water pump assembly	5-7

ENGINE CENTER

	See page
Radiator	3-3
Exhaust pipe and muffler	3-3
Oil filter	3-12
Carburetor	3-3
Oil sump filter	3-12
Oil pressure switch	3-17
Starter motor assembly	3-12

ENGINE RIGHT SIDE

	See page
Clutch cover	3-9
Clutch pressure, drive and driven plates	3-9
Oil pump driven gear	3-10
Oil pump drive chain	3-10
Primary drive gear	3-10
Oil pump assembly	3-11
Gearshift shaft	3-11

ENGINE REMOVAL AND REINSTALLATION

ENGINE REMOVAL

Before taking the engine out of the frame, thoroughly clean the engine with a suitable cleaner. The procedure of engine removal is sequentially explained in the following steps.

1. Remove the oil drain plug to drain out engine oil.
2. Remove the frame head cover and radiator cap.
3. Remove the water drain plug to drain out coolant.
4. Remove the seat.
5. Disconnect the battery ⊖ and ⊕ lead wires from the battery terminals, remove the battery.

CAUTION: Be sure to disconnect the ⊖ lead wire first.

6. Remove all the frame covers.
7. Turn the fuel cock "OFF" position and remove the fuel tank mounting bolts, remove the fuel tank by disconnecting the fuel hose.
8. Remove the left and right mufflers.
9. Disconnect the following lead wires.
   * Side stand switch
   * Generator
   * Pick-up coil
   * Starter motor
   * Starter relay
   * Water temperature gauge
   * Cooling fan motor lead
   * Neutral indicator
   * Ground lead
   * Oil pressure indicator
10. Remove the secondary bevel gear case cover.
11. Remove the clutch release cam assembly.
12. Remove the radiator by removing the radiator protector, radiator hose clamps and radiator cooling fan.
13. Remove the left-footrest.
14. Remove the gearshift lever.
15. Remove the water pump case.
16. Loosen the shaft drive boot clamp.
17. Remove the coolant reservoir tank.
18. Disconnect the choke cables and throttle cables.
19. Disconnect the rear carburetor fuel hose.
20. Disconnect the breather hose from the rear cylinder head.
21. Disconnect the fuel pump vacuum hose from the front carburetor intake pipe.
22. Loosen the front and rear carburetor clamps.
23. Remove the rear carburetor air cleaner mounting bolts and slide the air cleaner backward.
24. Remove the front and rear carburetors.
25. Remove the rear brake pedal mounting bolts and rear brake master cylinder mounting bolts, remove the brake pedal and master cylinder.
26. Support the engine with a proper jack.
27. Remove the engine mounting bolts, nuts, spacer, brackets and right frame down tube securing bolts.

CAUTION: When holding the engine with a jack, place a wooden piece on a jack or oil pan may be damaged.

28. Dismount the engine by pulling slightly forward and to right-side.

ENGINE REINSTALLATION

Reinstall the engine in the reverse order of engine removal.

- Install the brackets, spacer, bolts and nuts properly, as shown in the following illustration.

NOTE:

The engine mounting nuts are self-locking. Once the nut has been removed, it is no longer of any use. Be sure to use new nuts and tighten them to the specified torque.

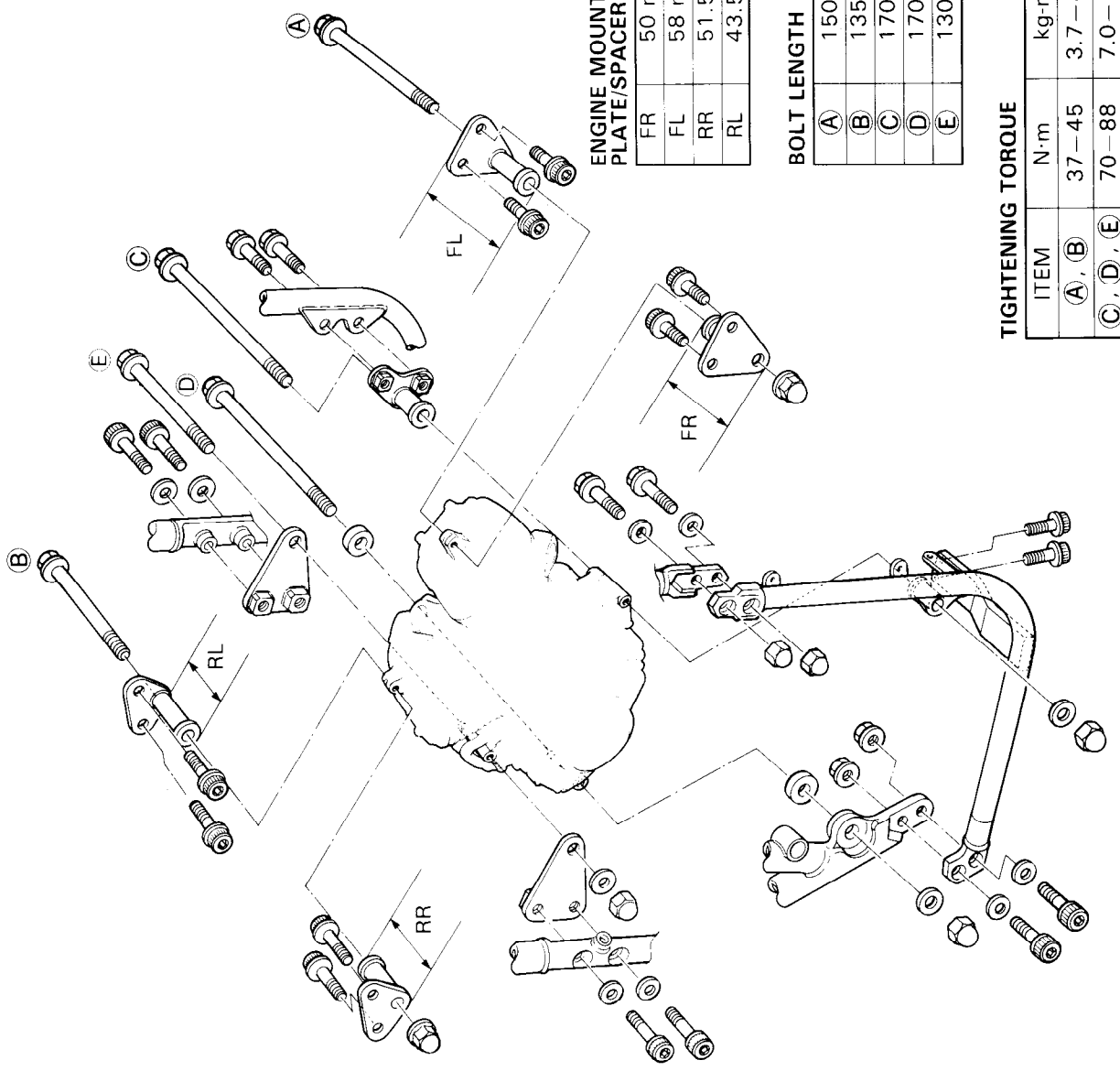

ENGINE MOUNTING PLATE/SPACER LENGTH

FR	50 mm
FL	58 mm
RR	51.5 mm
RL	43.5 mm

BOLT LENGTH

Ⓐ	150 mm (5.9 in)
Ⓑ	135 mm (5.3 in)
Ⓒ	170 mm (6.7 in)
Ⓓ	170 mm (6.7 in)
Ⓔ	130 mm (5.1 in)

TIGHTENING TORQUE

ITEM	N·m	kg-m	lb-ft
Ⓐ, Ⓑ	37–45	3.7–4.5	27.0–32.5
Ⓒ, Ⓓ, Ⓔ	70–88	7.0–8.8	50.5–63.5
Other bolts	25–38	2.5–3.8	18.0–27.5

- After remounting the engine, route wiring harness, cables and hoses properly by referring to the sections, for wire routing, cable routing and hose routing. (See pages 9-12 through 23.)

- Adjust the following items to the specification.

- Pour 3.3 L (3.5/2.9 US/Imp qt) of engine oil SAE 10W/40 graded SE or SF into the engine after overhauling engine.
- Start up the engine and allow it run for several minutes at idle speed. About several minutes after stopping engine, check that the oil level remains between the marks of oil level inspection window.

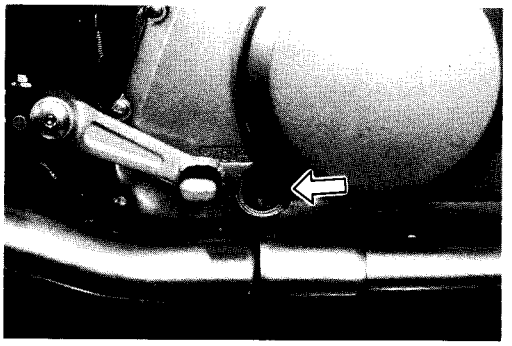

Change	2400 ml (2.5/2.1 US/Imp qt)
Filter change	2800 ml (3.0/2.5 US/Imp qt)
Overhaul	3300 ml (3.5/2.9 US/Imp qt)

ENGINE DISASSEMBLY

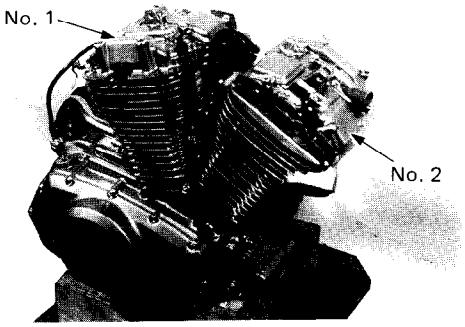

CAUTION:
Be sure to identify each removed part such as intake pipe, camshaft, piston, conrod etc. as to its location and lay the parts out in groups so that each will be restored to the original location during assembly.

- Remove the valve inspection caps.

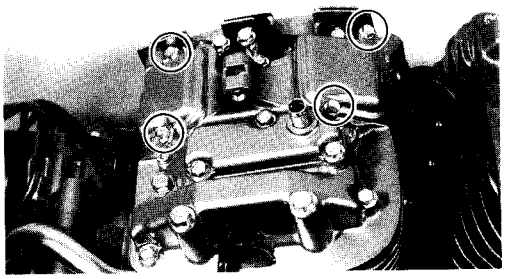

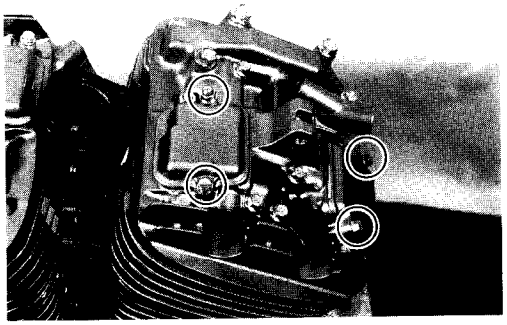

- Remove the cylinder head covers.

NOTE:
When removing the cylinder head covers, the piston must be at top dead center on the compression stroke.

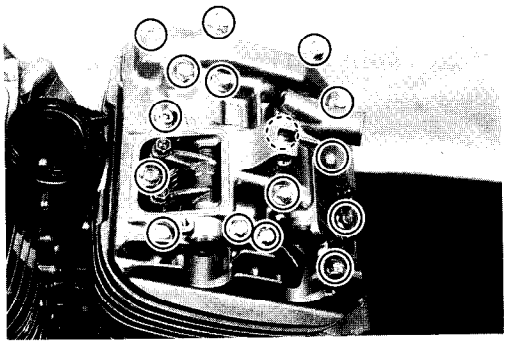

No. 2 (FRONT)

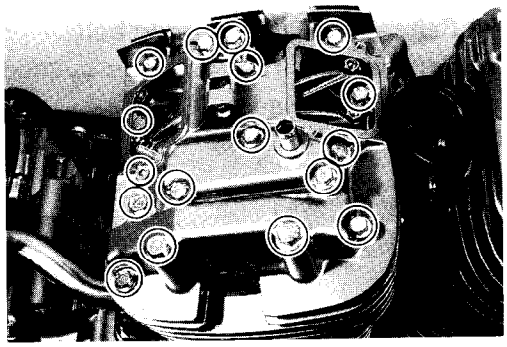

No. 1 (REAR)

- Flatten the lock washers and remove the camshaft sprocket bolts.
- Remove the camshafts and sprockets.

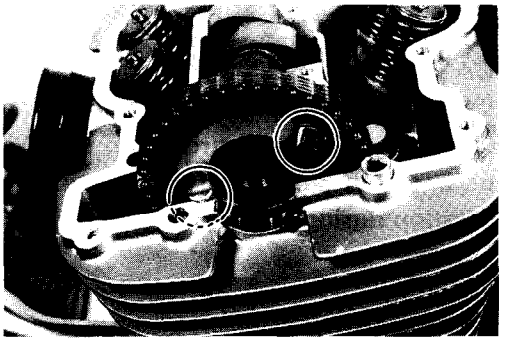

- Remove the front intake pipe.
- Loosen the water hose clamp screws.

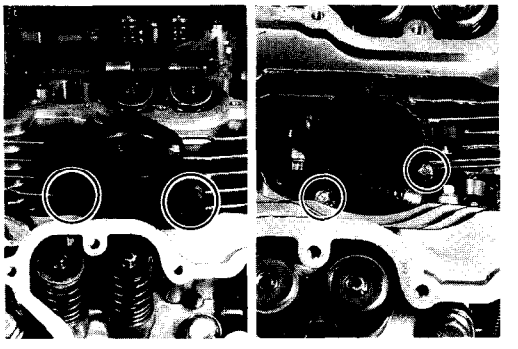

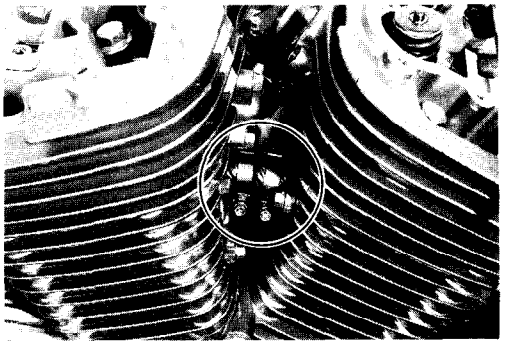

- Remove the water pipe/water hose by removing the water pipe bolts and loosening the water hose clamp screw.

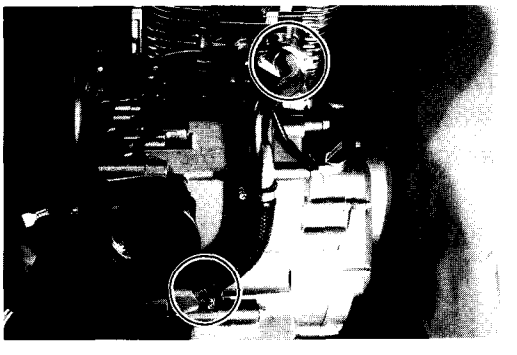

- Remove the cylinder head bolts.
- Remove the front and rear cylinder heads along with the respective cylinders.

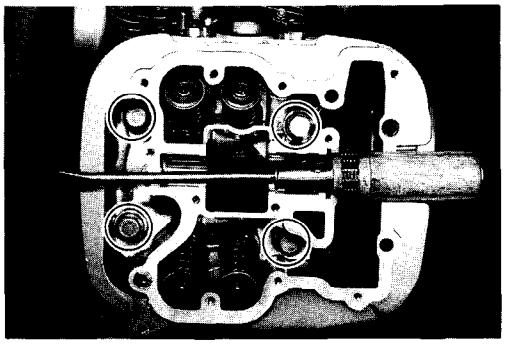

- Remove the cylinder head nuts and bolts.

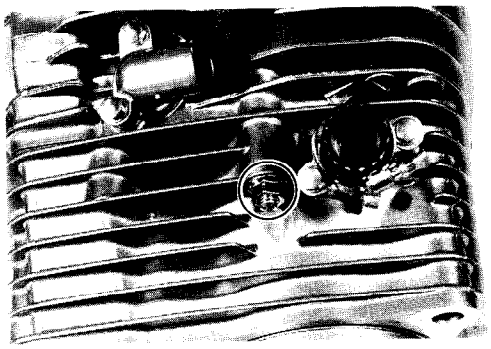

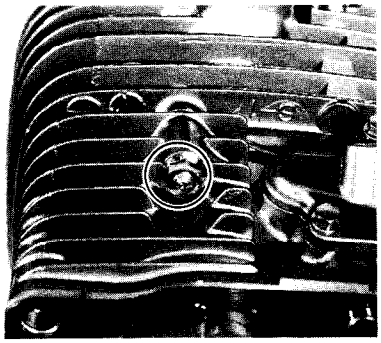

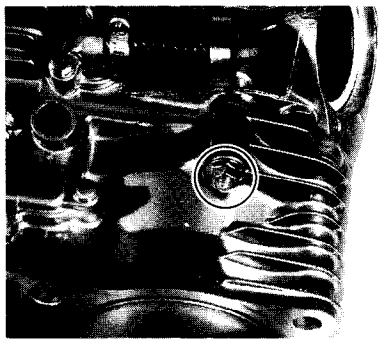

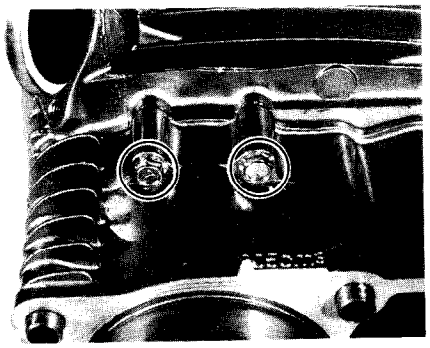

- After releasing the ratchet, push the chain tensioner rod and insert a screwdriver between ratchet and chain tensioner body.
- Separate the respective cylinder heads and cylinders.

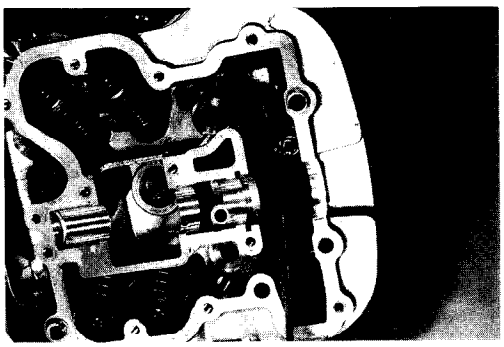

- Check the "F" and "R" piston marks.

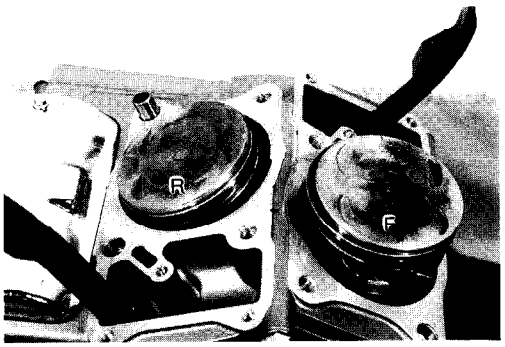

- Place a clean rag over the cylinder base to prevent piston pin circlips from dropping into crankcase. Remove the piston pin circlips with long-nose pliers.
- Drive out the piston pins by using proper drift.

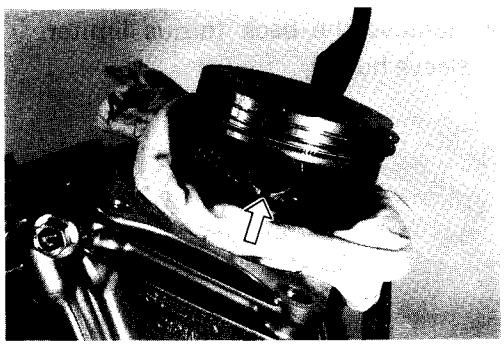

- After removing the clutch cover bolts, remove the clutch cover by tapping with a plastic hammer.

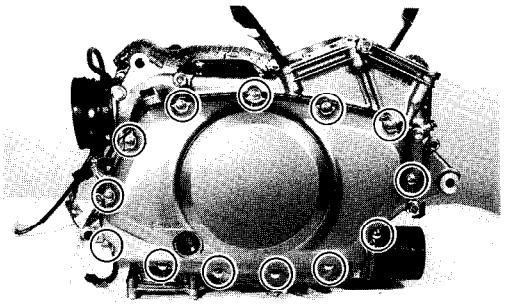

- Remove the clutch spring mounting bolts diagonally.
- Remove the pressure plate.

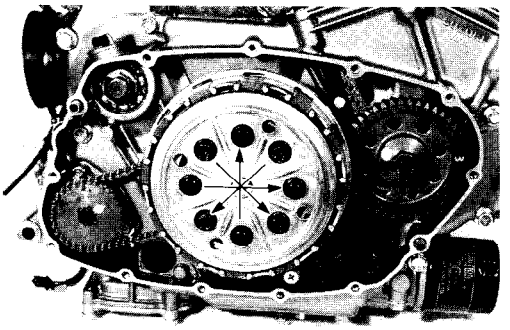

- Remove the clutch push piece, thrust washer, bearing and push rod.
- Remove the clutch drive and driven plates.

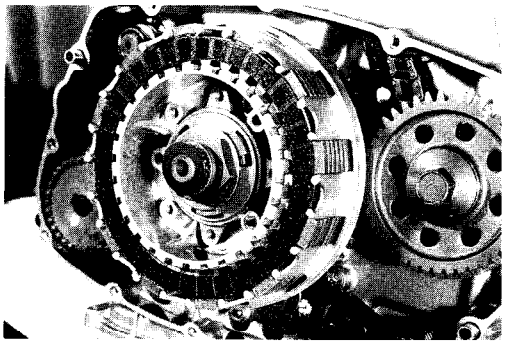

- Remove the clutch sleeve hub nut by using the special tool.

09920-50710 : Clutch sleeve hub holder

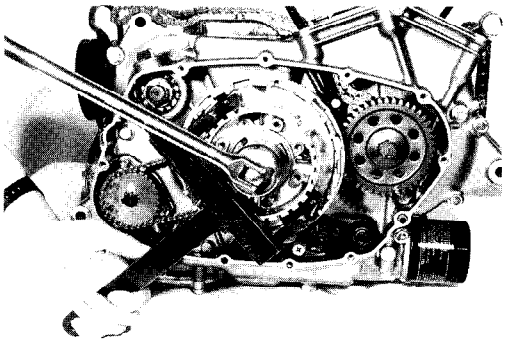

- Remove the back torque limiter ① along with the clutch sleeve hub ②.

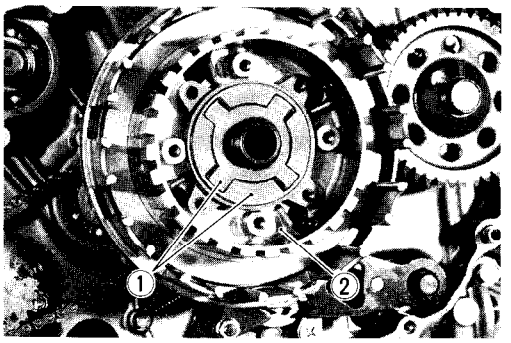

- Remove the thrust washer.

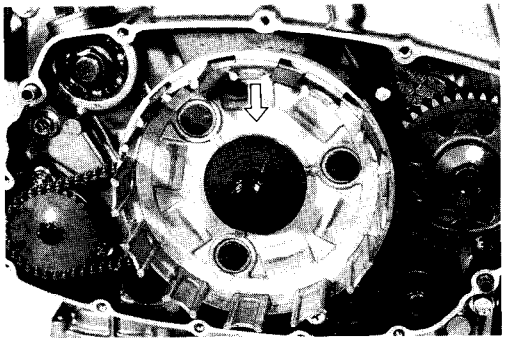

- Remove the oil pump driven gear circlip.

09900-06107 : Snap ring pliers

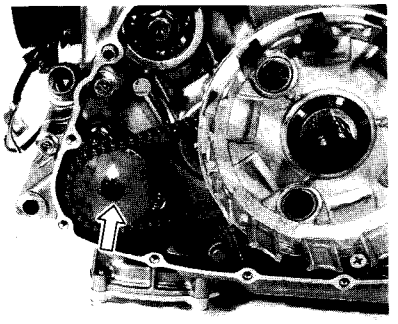

- Remove the primary driven gear assembly, oil pump drive chain and oil pump driven gear.

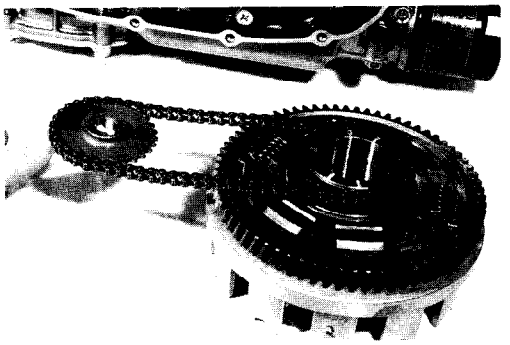

- Remove the thrust washer and spacer.

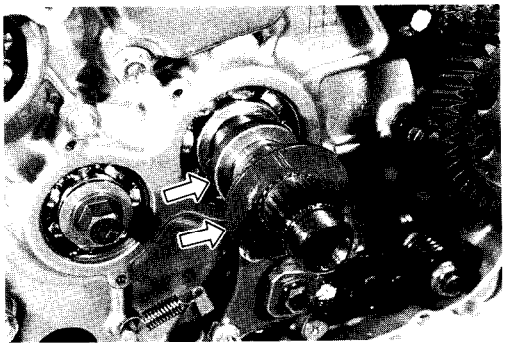

- Remove the primary drive gear bolt while holding the primary drive gear with the special tool and remove the primary drive gear.

09930-40113 : Rotor holder

CAUTION:
This bolt has left-hand thread. Turning it counter-clockwise it may cause damage.

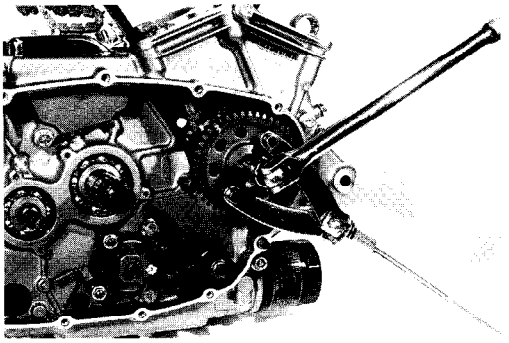

- Remove the cam chain guide and cam chain.
- Remove the camshaft drive sprocket and thrust washer.

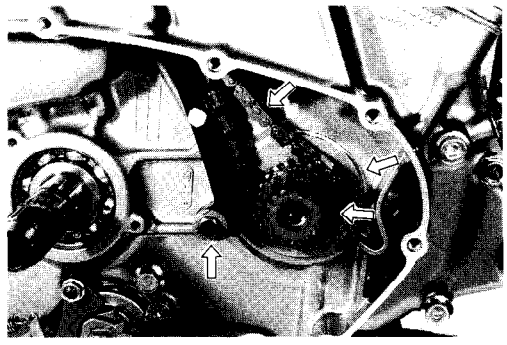

- Remove the oil pump by removing the bolts.

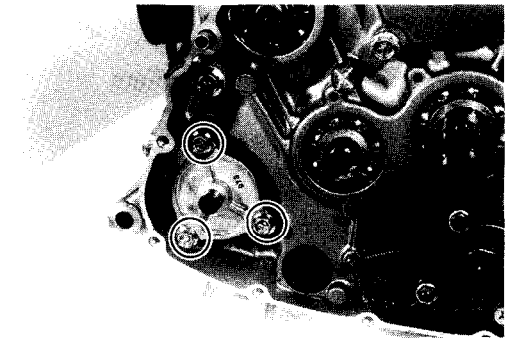

- Remove the gearshift shaft ①.
- Remove the pawl lifter and cam guide by removing the nuts ② and screws ③.

09900-09003 : Impact driver set

- Remove the gearshift cam driven gear retaining bolt ④.

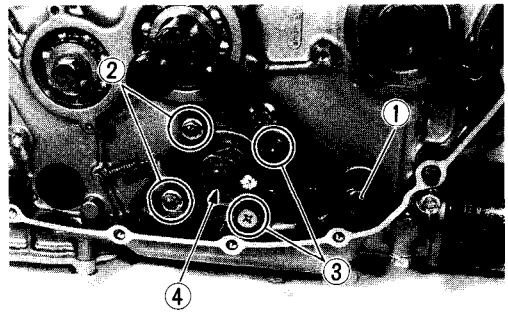

- Remove the gearshift cam driven gear ⑤.

NOTE:
When removing the gearshift cam driven gear, do not lose gearshift pawl Ⓐ, pin Ⓑ and spring Ⓒ.

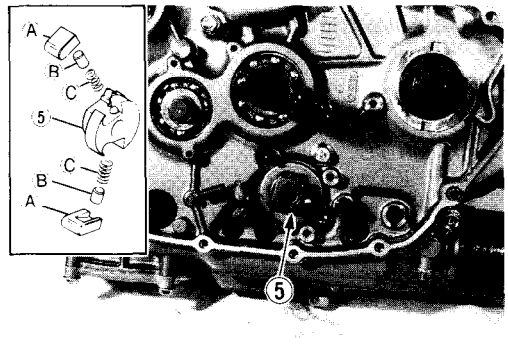

- Unhook the gearshift cam stopper spring ⑥, gearshift cam stopper plate ⑦ and washer ⑧.

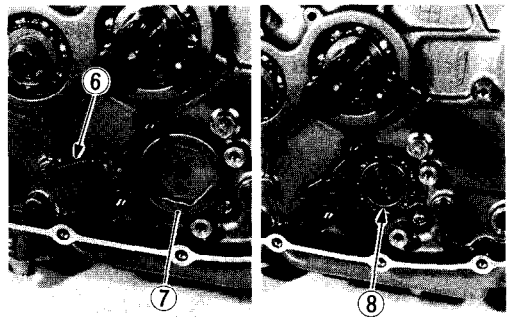

- Remove the oil sump filter cap and oil sump filter.

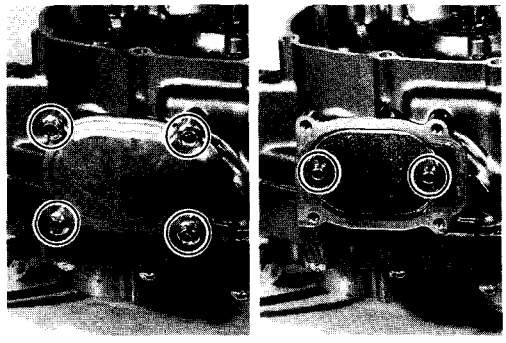

- Remove the oil filter by using the special tool.

09915-40611 : Oil filter wrench

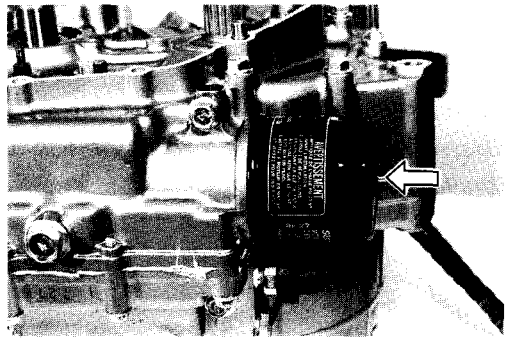

- Remove the starter motor cover.

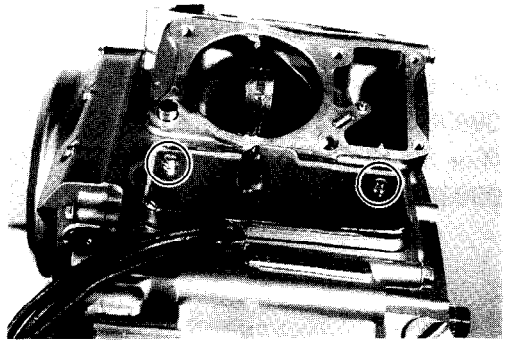

- Remove the starter motor.

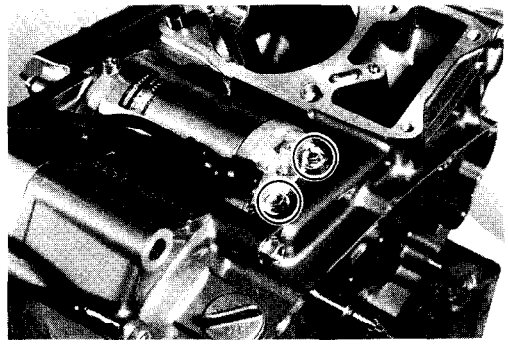

- Remove the generator cover.

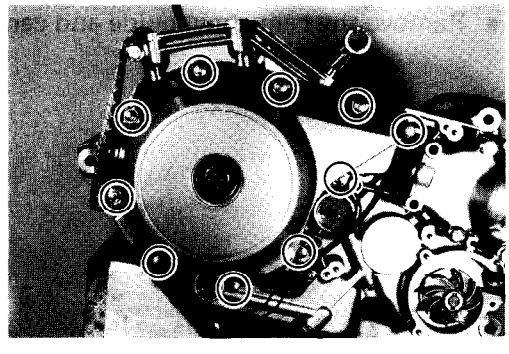

- Remove the starter driven gear and its idle gear.

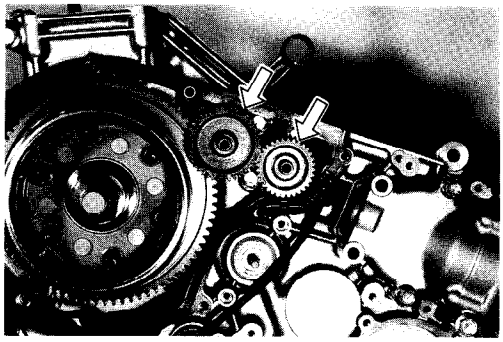

- Loosen the rotor bolt.

NOTE:
When removing the rotor, do not remove the rotor bolt after loosening the bolt. The rotor bolt is used in conjunction with the rotor remover.

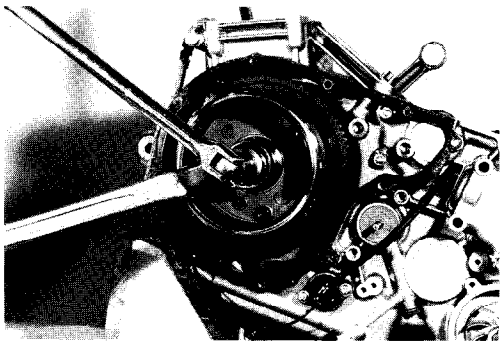

- Remove the rotor by using the special tool.

(For U.S.A. models)
09930-30720 : Rotor remover
(For the other models)
09930-34970 : Rotor remover

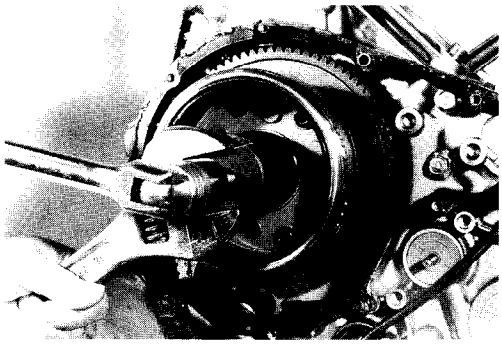

- Remove the key ①.
- Remove the starter driven gear.

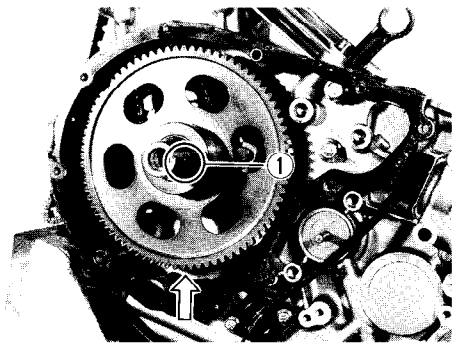

- Remove the cam chain guide and cam chain.

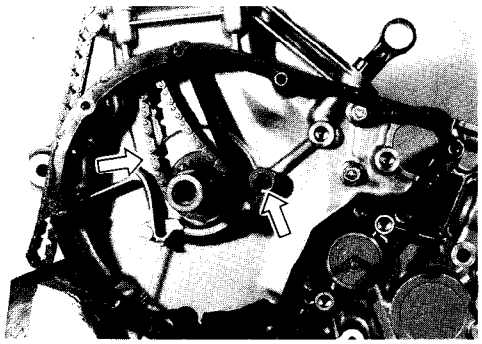

- Remove the neutral switch assembly.

NOTE:
Do not lose the neutral switch contact and its spring.

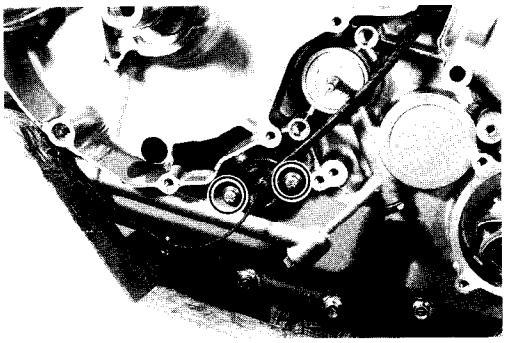

- Disconnect the oil pressure switch lead wire.

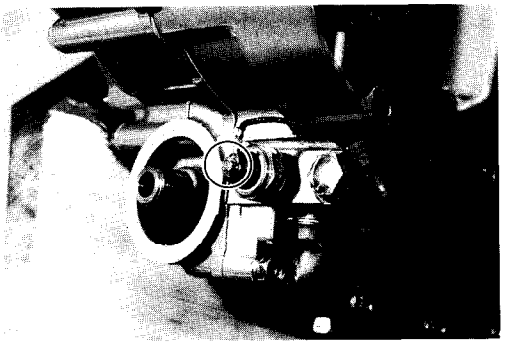

- Install the universal joint into the secondary driven bevel gear.
- Remove the driveshaft bolt ① and secondary drive bevel gear shaft nut ② while holding the universal joint.

CAUTION:
Driveshaft bolt ① has left-hand thread.

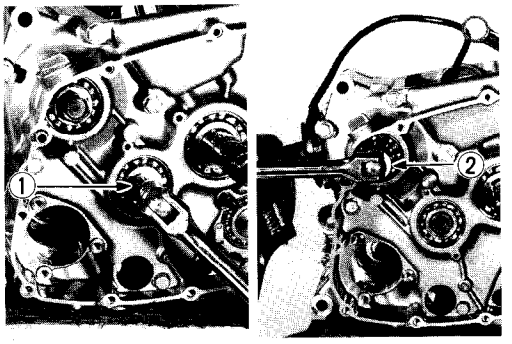

- Remove the secondary driven bevel gear housing bolts and secondary bevel gear case bolts.

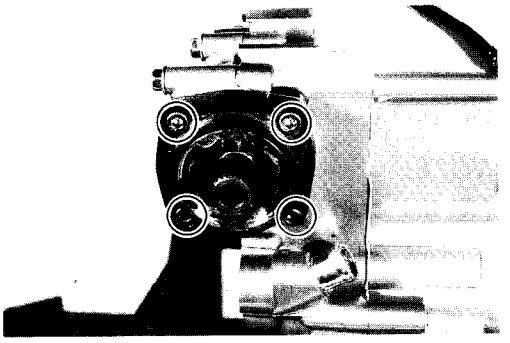

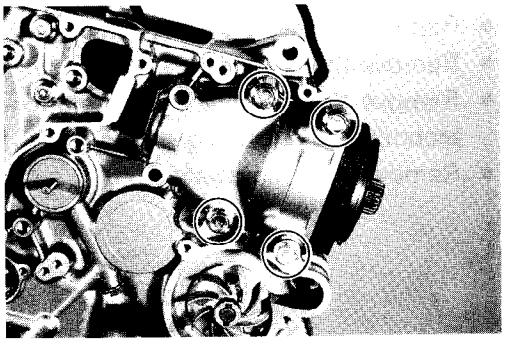

- Remove the secondary driven bevel gear assembly and bearing.

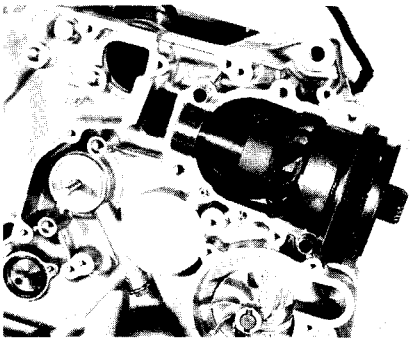

- Remove the crankcase securing bolts.

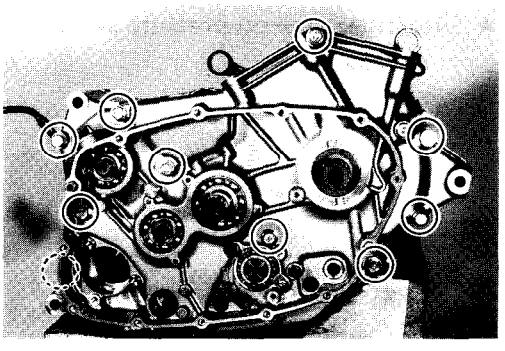

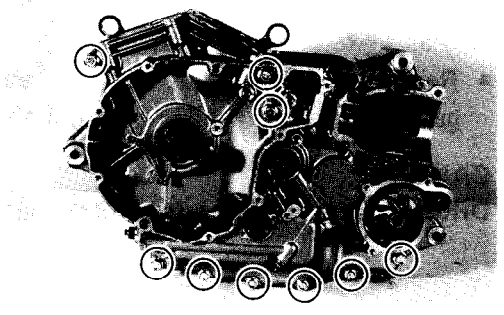

- Separate the crankcase into 2 parts, right and left with a crankcase separating tool.

09920-13120 : Crankcase separating tool

NOTE:
Fit the crankcase separating tool, so that the tool plate is parallel with the end face of the crankcase. The crankshaft and transmission components must remain in the left crankcase half.

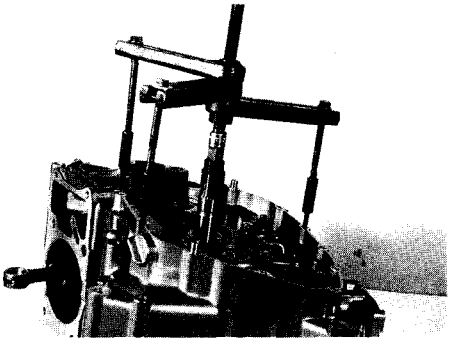

- Remove the gearshift fork shafts and gearshift forks.
- Remove the gearshift cam.
- Remove the driveshaft assembly, countershaft assembly and secondary reduction gear.
- Remove the crankshaft.

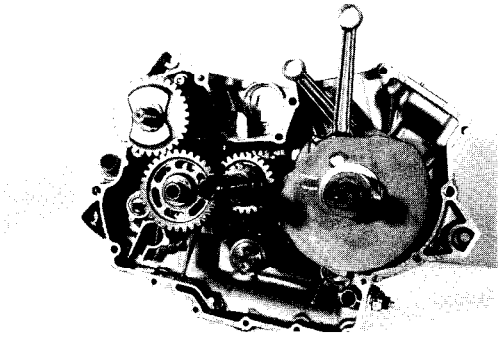

- Loosen the secondary drive bevel gear housing bolts and remove the secondary drive bevel gear assembly.

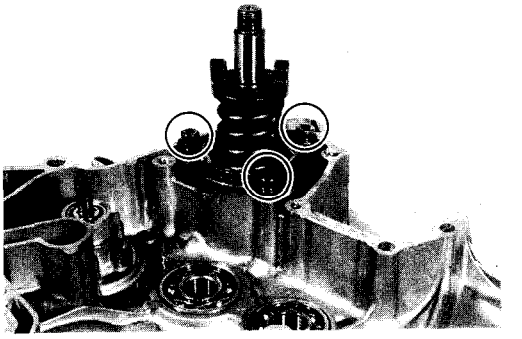

TRANSMISSION

DISASSEMBLY

- Disassemble the transmission gears as shown in the illustration.

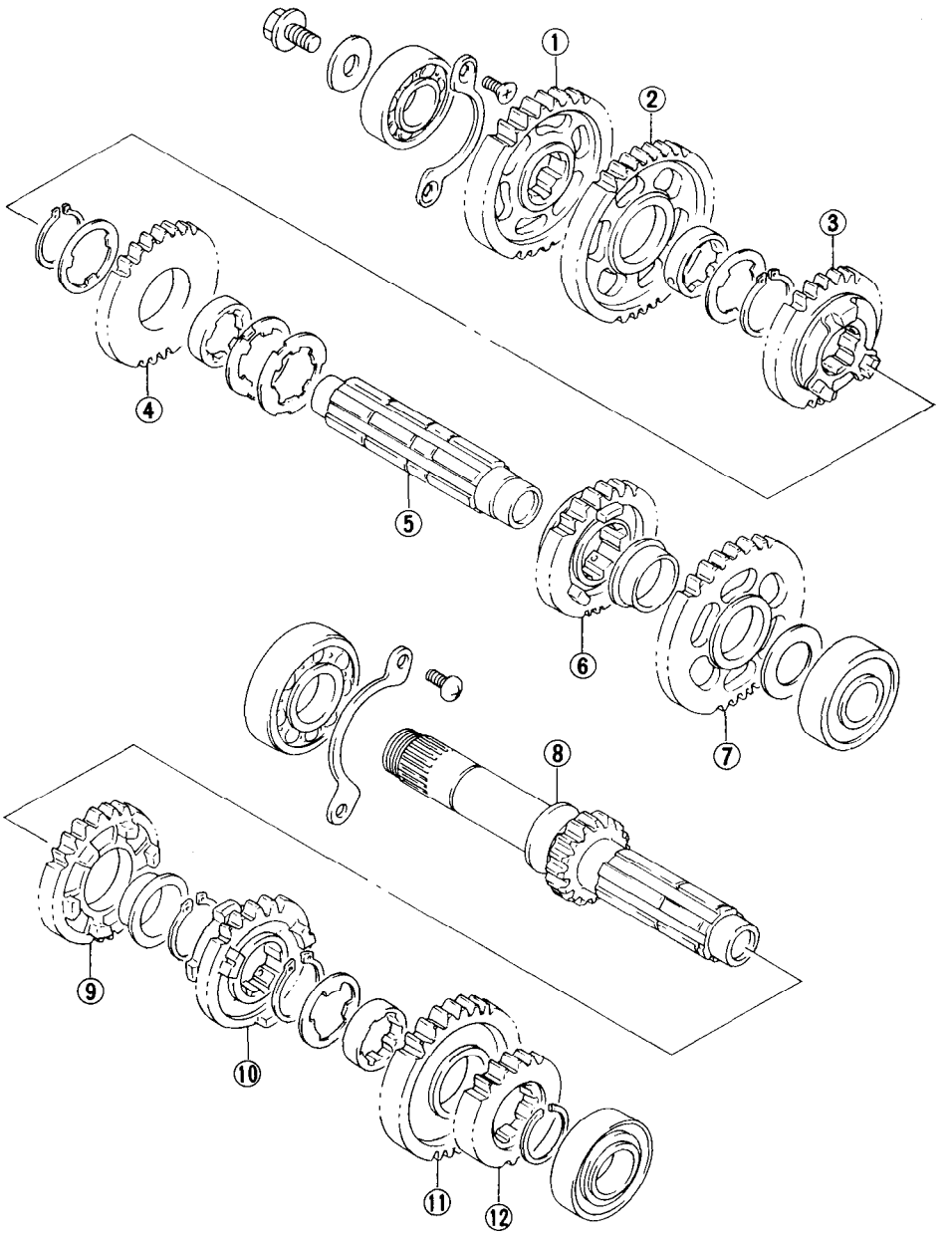

① Reduction drive gear
② Low driven gear
③ 4th driven gear
④ 3rd driven gear
⑤ Driveshaft
⑥ Top driven gear
⑦ 2nd driven gear
⑧ Countershaft/Low drive gear
⑨ 4th drive gear
⑩ 3rd drive gear
⑪ Top drive gear
⑫ 2nd drive gear

LUBRICATION RELATED PARTS

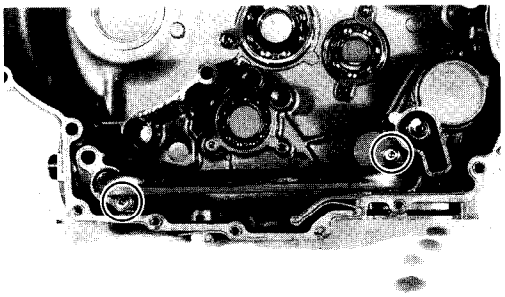

- Remove the oil pipe and O-rings.

CAUTION:
The removed O-ring should be replaced with a new one.

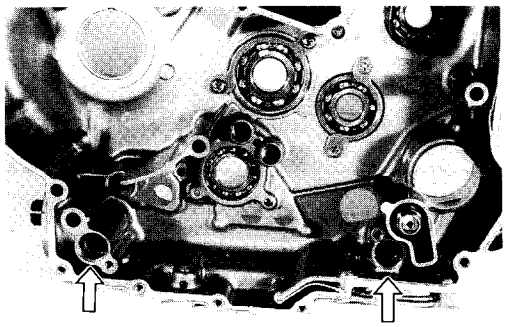

- Remove the oil pressure regulator.

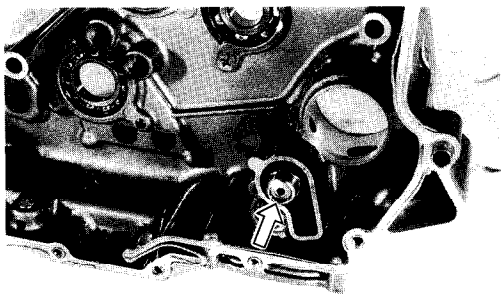

- Remove the oil pressure switch.

NOTE:
When reinstalling the oil pressure switch, apply the SUZUKI BOND NO. 1207B/NO. 1215 to thread part.

(For U.S.A. model)
99104-31140 : SUZUKI BOND NO. 1207B
(For the other models)
99000-31110 : SUZUKI BOND NO. 1215

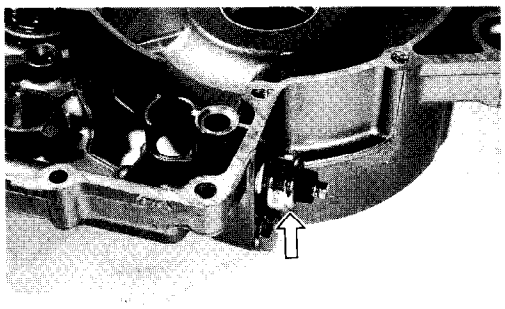

- Check the oil jet fitted on the crankcase for clogging.

NOTE:
When installing the oil jet, apply the motor oil to the oil jet O-ring.

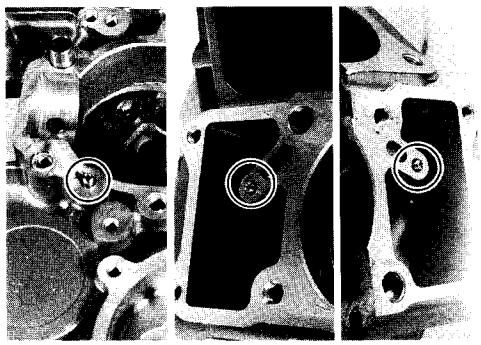

CRANKCASE BEARING OIL AND SEAL

- Remove the bearing retainer screws.

NOTE:
When reinstalling the bearing retainers, apply THREAD LOCK SUPER "1303"/"1324" to bearing retainer bolts or screws.

(For U.S.A. model)
99000-32030 : THREAD LOCK SUPER "1303"
(For the other models)
99000-32120 : THREAD LOCK SUPER "1324"

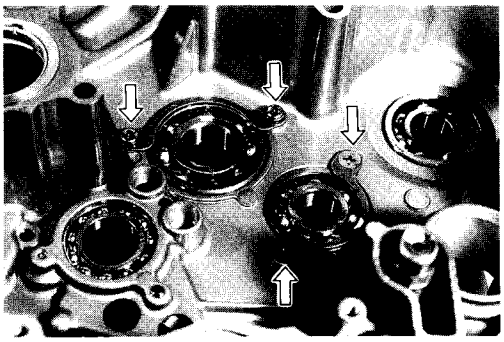

- Remove the bearings and oil seal by using the special tools.

09914-79610 : Bearing remover
09923-73210 : Bearing remover
09930-30102 : Sliding shaft

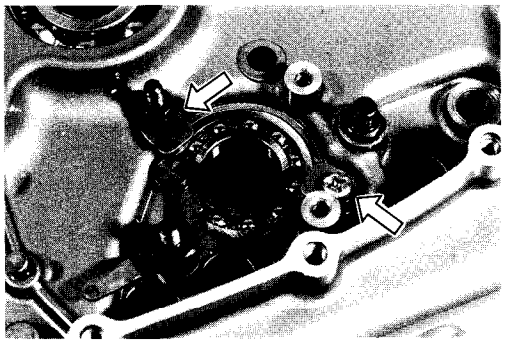

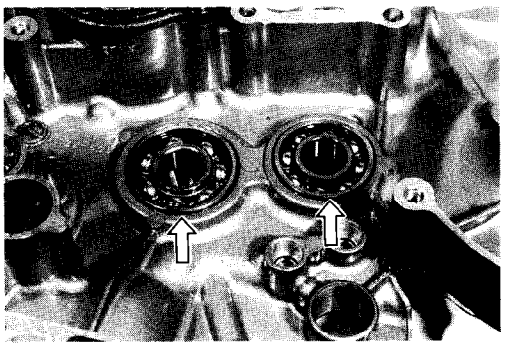

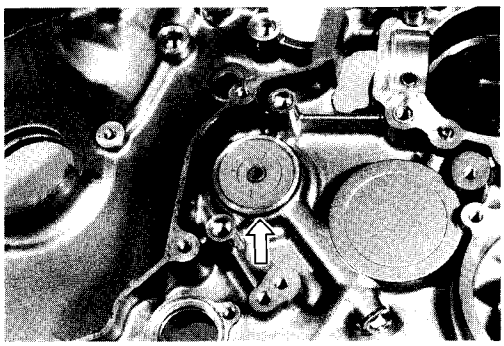

COOLING SYSTEM RELATED PARTS

NOTE:
When reinstalling each cover, check that the O-ring is installed.

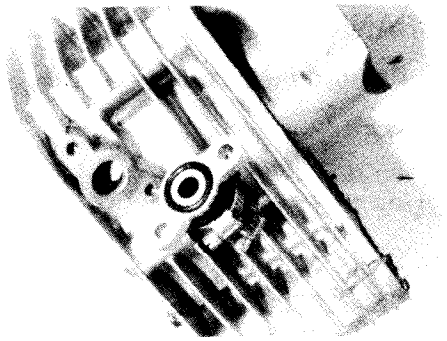

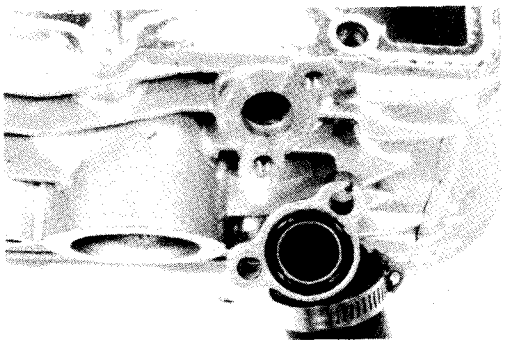

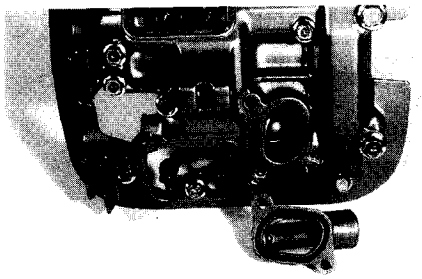

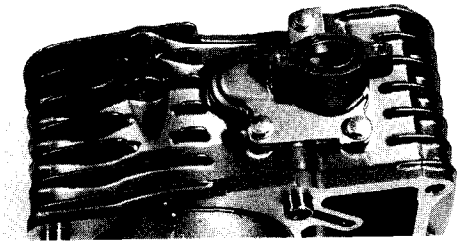

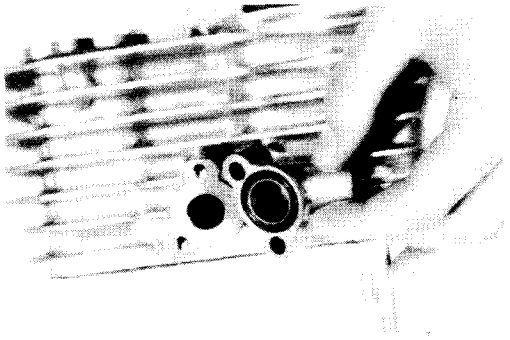

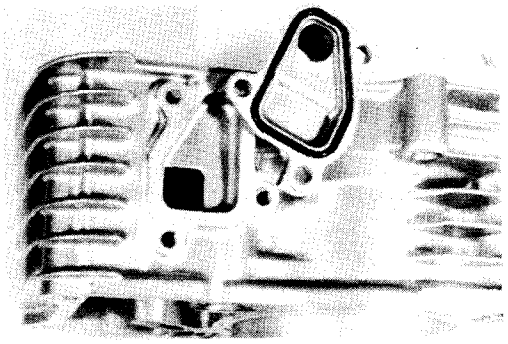

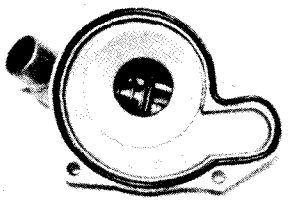

ENGINE COMPONENTS INSPECTION AND SERVICING

CYLINDER HEAD COVER

DISASSEMBLY

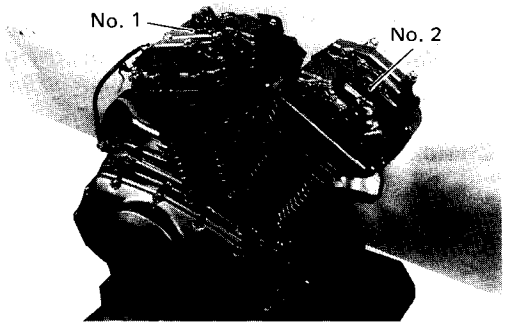

CAUTION:
Be sure to identify each removed part as to its location, and lay the parts out in groups designated as "No. 1 cylinder", "No. 2 cylinder", "Exhaust", "Inlet", so that each will be restored to the original location during assembly.

- Loosen the rocker arm shafts and pull out the rocker arm shafts.
  (Refer to page 3-60 for reassembly)

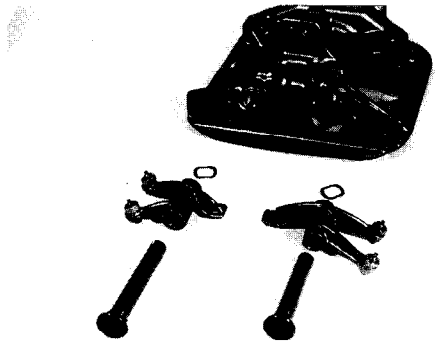

CYLINDER HEAD COVER DISTORTION

After removing sealant (SUZUKI BOND NO. 1216) from the fitting surface of the cylinder head cover, place the cylinder head cover on a surface plate and check for distortion with a thickness gauge. Check points are shown in Fig.

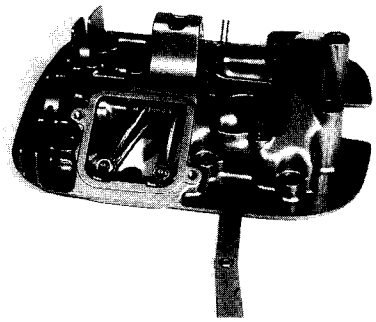

Service Limit : 0.05 mm (0.002 in)

09900-20803 : Thickness gauge

If the distortion exceeds the limit, replace the cylinder head cover.

ROCKER ARM SHAFT O.D.

Measure diameter of rocker arm shaft.

Standard : 11.966 – 11.984 mm
(0.4711 – 0.4718 in)

09900-20205 : Micrometer (0 – 25 mm)

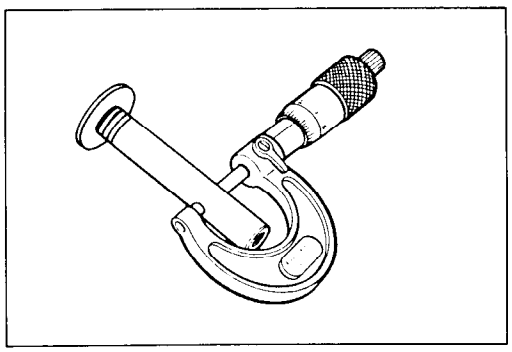

ROCKER ARM I.D.

When checking the valve rocker arm, the inside diameter of the valve rocker arm and wear of the camshaft contacting surface should be checked.

Standard : 12.000 – 12.018 mm
(0.4725 – 0.4731 in)

09900-20605 : Dial calipers

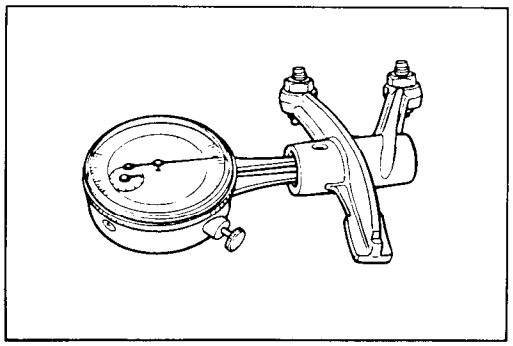

CAMSHAFT

The camshafts should be checked for wear and also for runout of cams and journals if the engine has been noted to produce abnormal noise or vibration or to lack output power. Any of these malconditions could be caused by a worn camshafts.
The camshaft can be distinguished by the embossed-letters, "F" and "R", on the camshaft.
"F" : Front (No. 2) camshaft
"R" : Rear (No. 1) camshaft

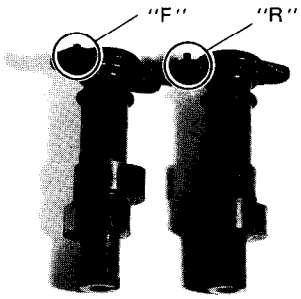

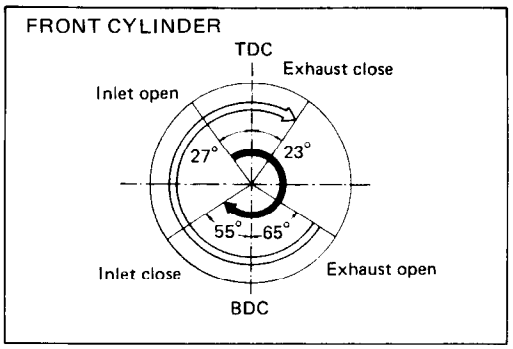

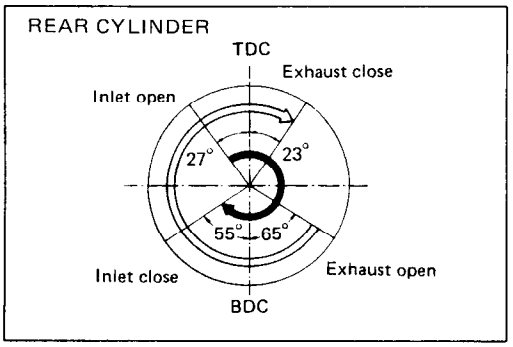

CAMSHAFT CAM WEAR

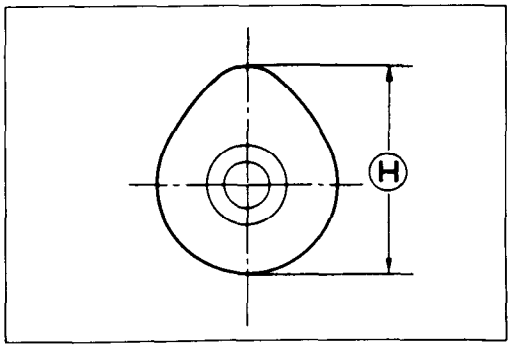

Worn-down cams are often the cause of mistimed valve operation resulting in reduced output power. The limit of cam wear is specified for both intake and exhaust cams in terms of cam height Ⓗ, which is to be measured with a micrometer. Replace camshafts if found worn down to the limit.

Cam height Ⓗ

Service Limit	**Intake cam**	**: 35.660 mm (1.4039 in)**
	Exhaust cam	**: 36.620 mm (1.4417 in)**

09900-20202 : Micrometer (25 – 50 mm)

CAMSHAFT JOURNAL WEAR

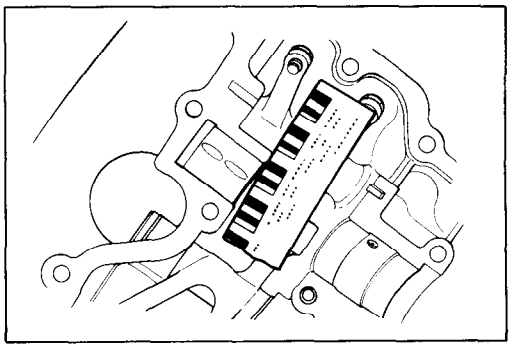

Determine whether each journal is worn down to the limit or not by measuring camshaft journal oil clearance with the camshaft installed. Use plastigauge to read the clearance, which is specified as follows:

Camshaft journal oil clearance
Service Limit : 0.15 mm (0.006 in)

- Tighten the cylinder head cover bolts evenly and diagonally to the specified torque.

Cylinder head cover tightening torque

Length	N·m	kg-m	lb-ft
140 mm 235 mm	21 – 25	2.1 – 2.5	15.0 – 18.0
The others	9 – 11	0.9 – 1.1	6.5 – 8.0

09900-22301 : Plastigauge

NOTE:
To properly measure the oil clearance with plastigauge, all gasket material must be removed from fitting surfaces of cylinder head and cover. Do not apply SUZUKI BOND NO. 1216 until after the oil clearance has been determined.

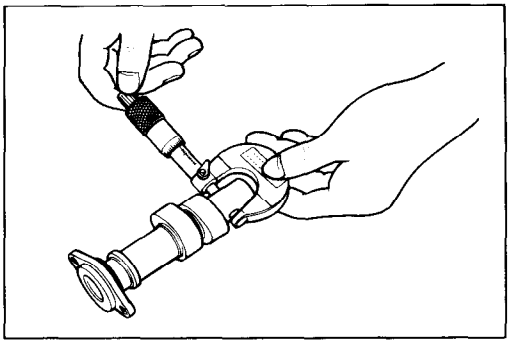

If the camshaft journal oil clearance measured exceeds the limit, measure the outside diameter of camshaft.
Replace either the cylinder head set or the cam shaft if the clearance is incorrect.

09900-20205 : Micrometer (0 – 25 mm)

Camshaft journal O.D.	24.959 – 24.980 mm (0.9826 – 0.9835 in)
	19.959 – 19.980 mm (0.7858 – 0.7866 in)

CAMSHAFT RUNOUT

Measure the runout with a dial gauge. Replace the camshaft if the runout exceeds the limit.

09900-20701 : Magnetic stand
09900-20606 : Dial gauge (1/100 mm)
09900-21304 : V-block (100 mm)

Service Limit : 0.1 mm (0.004 in)

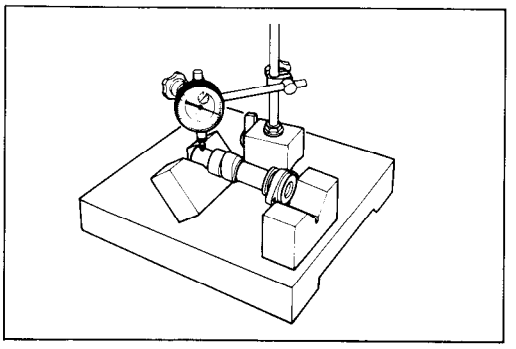

CAM CHAIN TENSIONER

For driving the camshafts, two cam chain tensioners are used on the respective cam drive chains. Unlock the ratchet mechanism, and move the push rod in place to see if it slides smoothly. If any stickiness is noted or ratchet mechanism is faulty, replace the chain tensioner assembly with a new one.
The cam chain tensioner can be distinguished by the embossed-letters, "F" and "R", on the cam chain tensioners.
"F" : Front (No. 2) cam chain tensioner
"R" : Rear (No. 1) cam chain tensioner

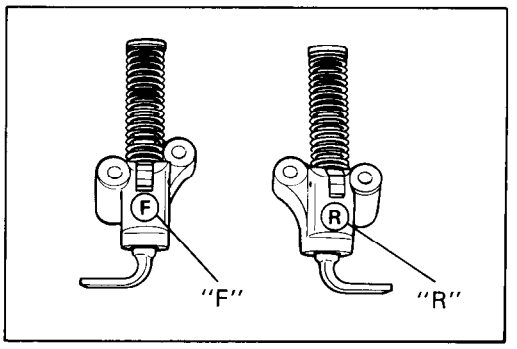

CAM CHAIN GUIDE

Two kinds of cam chain guide are used on the respective cam drive chains.
"F" : Front (No. 2) cam chain guide
"R" : Rear (No. 1) cam chain guide

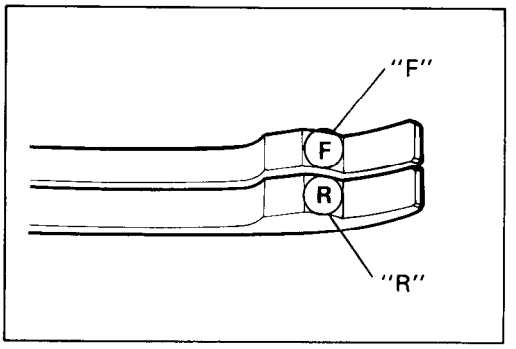

CAM CHAIN 20-PITCH LENGTH

Pull the chain tight to remove any slack, then using vernier calipers, measure the 20-pitch length of cam chain. If it measures more than limit, replace the cam chain.

Service Limit : 128.9 mm (5.07 in)

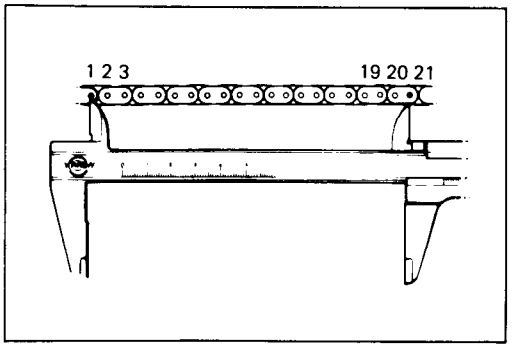

VALVE AND VALVE SPRING DISASSEMBLY

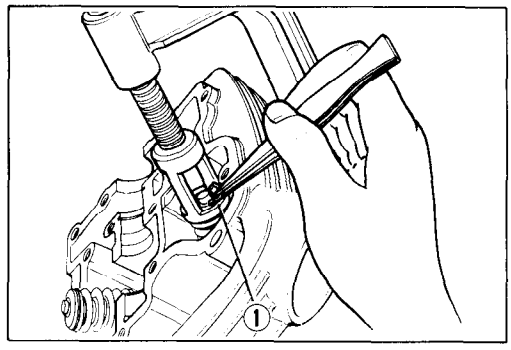

- Using special tools, compress the valve springs and remove the two cotter halves ① from valve stem.

09916-14510 : Valve spring compressor
09916-14910 : Valve spring compressor attachment
09916-84510 : Tweezers

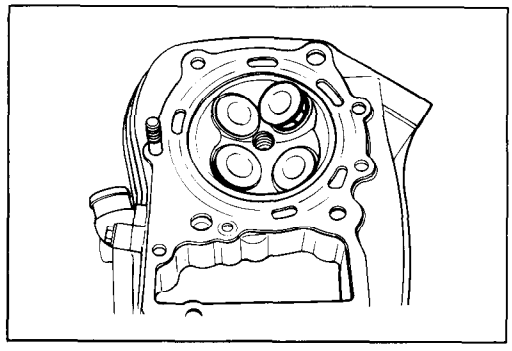

- Remove the valve spring retainer, inner spring and outer spring.
- Pull out the valve from the other side.

NOTE:
Removal of valves completes ordinary disassembling work. If valve guides have to be removed for replacement after inspecting related parts, carry out the steps shown in valve guide servicing.
(Refer to page 3-30 for reassembly.)

CYLINDER HEAD DISTORTION

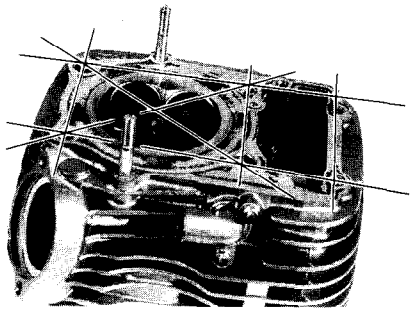

- Decarbonize the combustion chambers.

Check the gasketed surface of the cylinder head for distortion with a straightedge and thickness gauge, taking a clearance reading at several places indicated. If the largest reading at any position of the straightedge exceeds the limit, replace the cylinder head.

09900-20803 : Thickness gauge

Service Limit : 0.05 mm (0.002 in)

VALVE FACE WEAR

Visually inspect each valve for wear of its seating face. Replace any valve with an abnormally worn face.
The thickness Ⓣ decreases as the wear of the face advances. Measure the thickness and, if the thickness is found to have been reduced to the limit, replace it.

Service Limit : 0.5 mm (0.02 in)

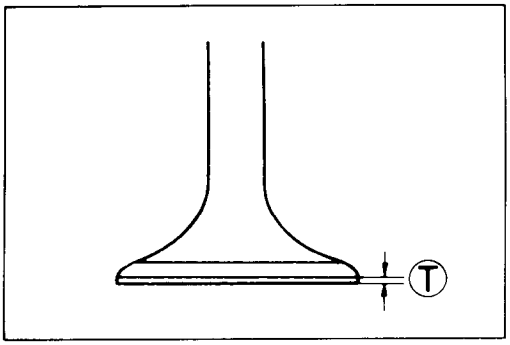

VALVE STEM RUNOUT

Support the valve with "V" blocks, as shown, and check its runout with a dial gauge.
The valve must be replaced if the runout exceeds the limit.

Service Limit : 0.05 mm (0.002 in)

09900-20701 : Magnetic stand
09900-20606 : Dial gauge (1/100 mm)
09900-21304 : V-block

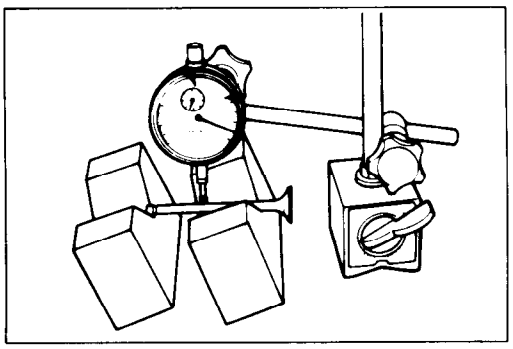

VALVE HEAD RADIAL RUNOUT

Place the dial gauge at right angles to the valve head face, and measure the valve head radial runout.
If it measures more than limit, replace the valve.

Service Limit : 0.03 mm (0.001 in)

09900-20701 : Magnetic stand
09900-20606 : Dial gauge (1/100 mm)
09900-21304 : V-block

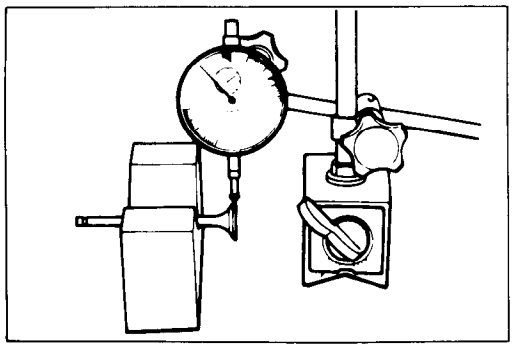

VALVE GUIDE TO VALVE STEM CLEARANCE

Measure the clearance in two directions "X" and "Y", perpendicular to each other, by rigging up the dial gauge as shown. If the clearance measured exceeds the limit, specified below, then determine whether the valve or the guide should be replaced to reduce the clearance to within the standard range:

Service Limit **IN. : 0.35 mm (0.014 in)**
EX. : 0.35 mm (0.014 in)

09900-20701 : Magnetic stand
09900-20606 : Dial gauge (1/100 mm)

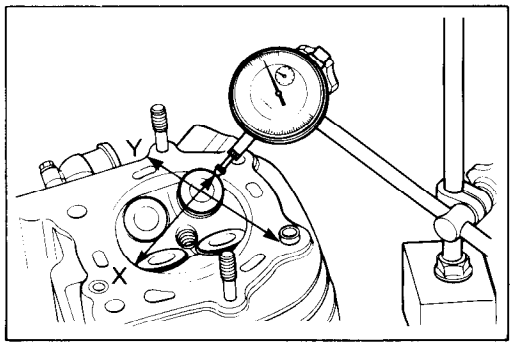

VALVE STEM WEAR

If the valve stem is worn down to the limit, as measured with a micrometer, where the clearance is found to be in excess of the limit indicated replace the valve, if the stem is within the limit, then replace the guide. After replacing valve or guide, be sure to re-check the clearance.

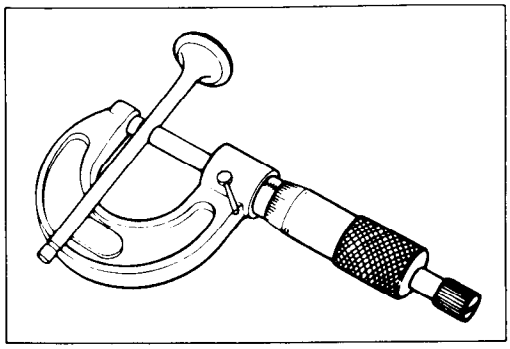

09900-20205 : Micrometer (0 – 25 mm)

Valve stem O.D.

Standard	**IN.**	**: 5.465 – 5.480 mm (0.2152 – 0.2157 in)**
	EX.	**: 5.450 – 5.465 mm (0.2146 – 0.2152 in)**

VALVE GUIDE SERVICING

- Using the valve guide remover ①, drive the valve guide out toward intake or exhaust rocker arm side.

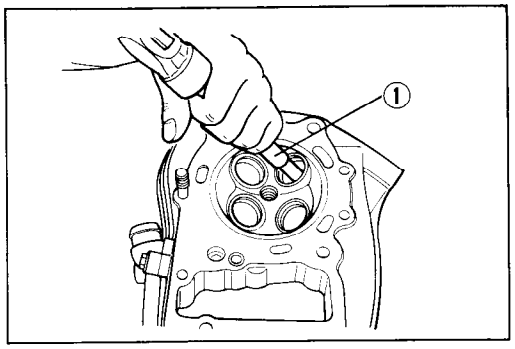

09916-44910 : Valve guide remover/installer

- Re-finish the valve guide holes in cylinder head with a 10.8 mm reamer and handle.

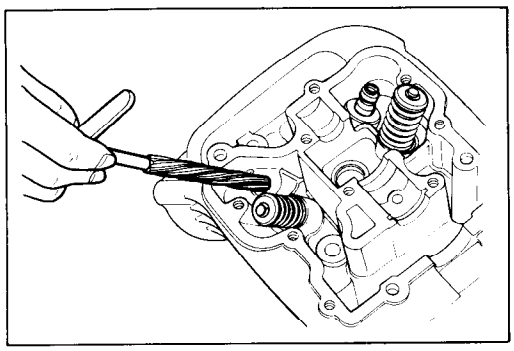

09916-34580 : Valve guide hole reamer
09916-34541 : Reamer handle

NOTE:
* *Discard the removed valve guide subassemblies.*
* *Only oversized valve guide is available.*

- Lubricate each valve guide with engine oil and drive the guide into the guide hole using the valve guide installer and attachment.

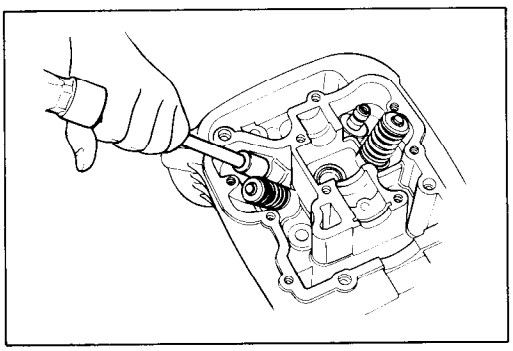

09916-44910 : Valve guide remover/installer
09916-44920 : Valve guide installer attachment

- After fitting all valve guides, re-finish their guiding bores with a 5.5 mm reamer. Be sure to clean and oil the guide after reaming.

09916-34550 : Valve guide reamer
09916-34541 : Reamer handle

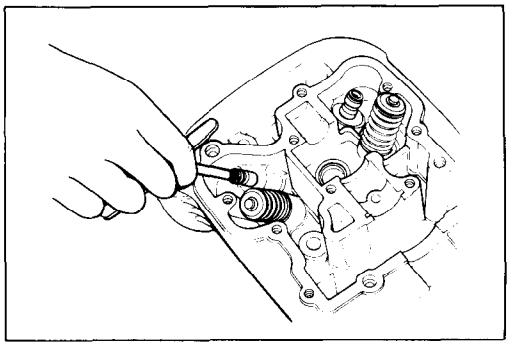

- Fit the valve spring lower seats.
- Lubricate each oil seal with engine oil, and press-fit the oil seal into position with the finger tip.

CAUTION:
Do not reuse the oil seal.

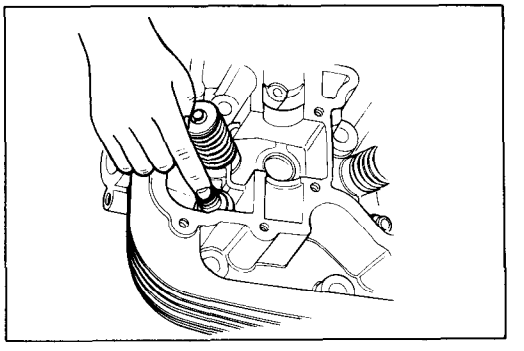

VALVE SEAT WIDTH

Coat the valve seat with prussian blue uniformly. Fit the valve and tap the coated seat with the valve face in a rotating manner, in order to obtain a clear impression of the seating contact. In this operation, use the valve lapper to hold the valve head.
The ring-like dye impression left on the valve face must be continuous – without any break. In addition, the width of the dye ring, which is the visualized seat "width", must be within the following specification:

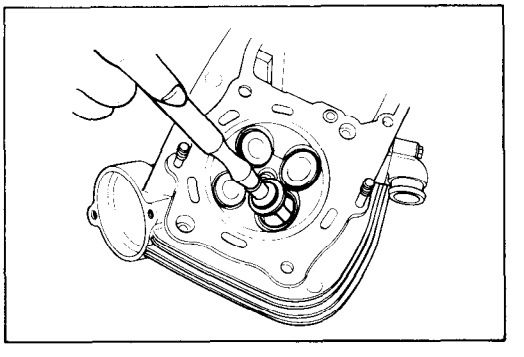

Valve seat width
STD. Ⓦ : 0.9 – 1.1 mm (0.035 – 0.043 in)

If either requirement is not met, correct the seat by servicing it as follows:

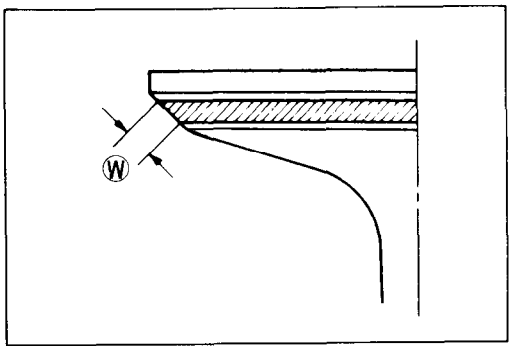

VALVE SEAT SERVICING

The valve seats for both intake and exhaust valves are machined to two different angles. The seat contact surface is cut 45° and the area above the contact surface (closest to the combustion chamber) is cut to 15°.

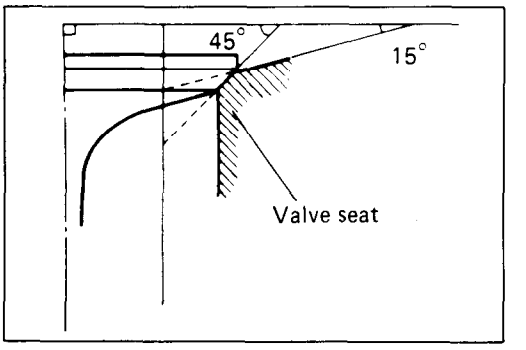

Parts list of valve seat servicing tools (For U.S.A. model)

Valve seat cutter head	N-116 (15° x 45° cutter) for both IN. and EX. (45°) and for EX. (15°)
	N-212 and Blade (N-635) for IN. 15°
Solid pilot	N-140-5.5
Adapter	N-503-1
T-handle	N-503

NOTE:
The valve seat contact area must be inspected after each cut.

- Insert the solid pilot ① with a slight rotation. Seat the pilot snugly. Install the 45° cutter, attachment and T-handle.
- Using the 45° cutter, descale and cleanup the seat with one or two turns.
- Inspect the seat by the previous seat width measurement procedure. If the seat is pitted or burned, additional seat conditioning with the 45° cutter is required.

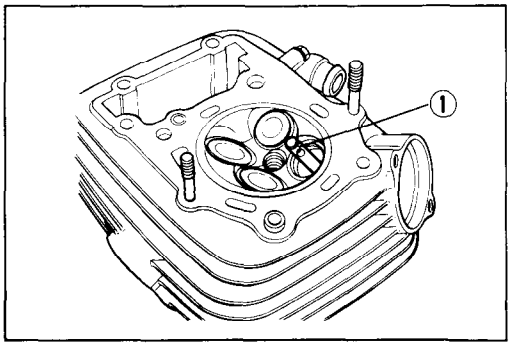

CAUTION:
Cut only the minimum amount necessary from the seat to prevent the possibility of the valve stem becoming too close to the cam for correct valve clearance adjustment.

Parts list of valve seat servicing tools (For the other models)
09916-24420 : Valve seat cutter (N-116)
09916-24910 : Valve seat cutter (N-212)
09916-24480 : Solid pilot (N-140-5.5)
09916-21110 : Valve seat cutter set

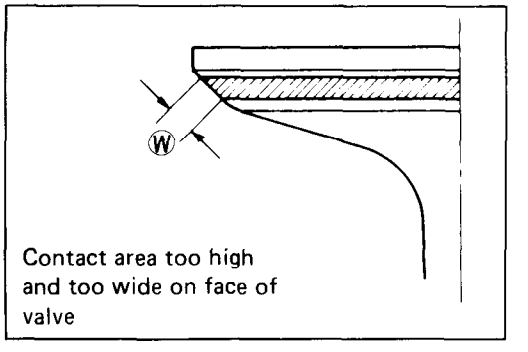

If the contact area is too high on the valve, or if it is too wide, use a 15° cutter to lower and narrow the contact area.

- After the desired seat position and width is achieved, use the 45° cutter very lightly to clean up any burrs caused by the previous cutting operations. DO NOT use lapping compound after the final cut is made. The finished valve seat should have a velvety smooth finish and not a highly polished or shiny finish. This will provide a soft surface for the final seating of the valve which will occur during the first few seconds of engine operation.
- Clean and assemble the head and valve components. Fill the intake and exhaust ports with gasoline to check for leaks. If any leaks occur, inspect the valve seat and face for burrs or other things that could prevent the valve from sealing.

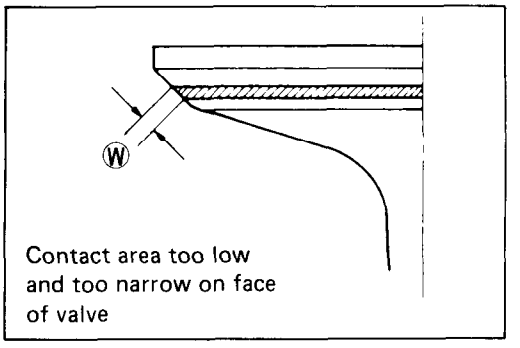

If the contact area is too low or too narrow, use the 45° cutter to raise and widen the contact area.

WARNING:
Always use extreme caution when handling gasoline.

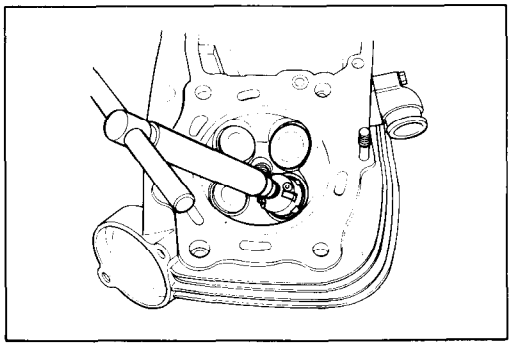

VALVE STEM END CONDITION

Inspect the valve stem end face for pitting and wear. If pitting or wear of the stem end face are present, the valve stem end may be resurfaced, providing that the length ① will not be reduced to less than 4.0 mm (0.15 in). If this length becomes less than 4.0 mm (0.15 in), the valve must be replaced. After installing a valve whose stem end has been ground off as above, check to ensure that the face ② of the valve stem end is above the cotters ③.

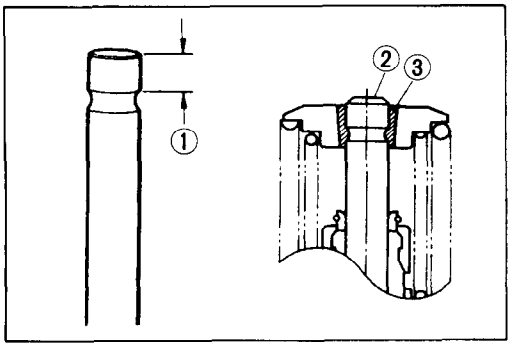

VALVE SPRING

The force of the two coil springs keeps the valve seat tight. Weakened springs result in reduced engine power output, and often account for the chattering noise coming from the valve mechanism.

Check the springs for strength by measuring their free lengths and also the force required to compress them. If the limit indicated is exceeded by the free length reading or if the measured force does not fall within the range specified, replace both inner and outer springs as a set.

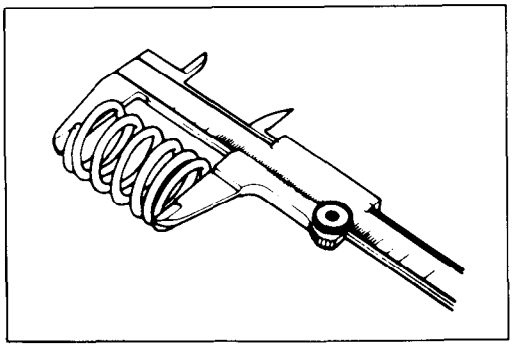

Valve spring free length limit **Unit: mm (in)**

INNER	OUTER
38.3 (1.51)	40.1 (1.58)

Valve spring tension

Spring	Standard
INNER	6.51 – 7.49 kg/32.5 mm (14.35 – 16.51 lbs/1.28 in)
OUTER	12.09 – 13.91 kg/36.0 mm (26.65 – 30.67 lbs/1.42 in)

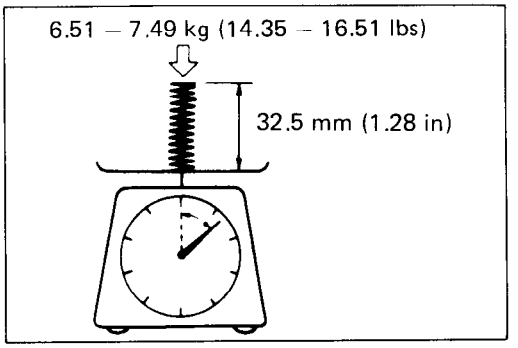

VALVE AND VALVE SPRING REASSEMBLY

- Insert the valves, with their stems coated with high quality molybdenum disulfide lubricant (SUZUKI MOLY PASTE) all around and along the full stem length without any break.

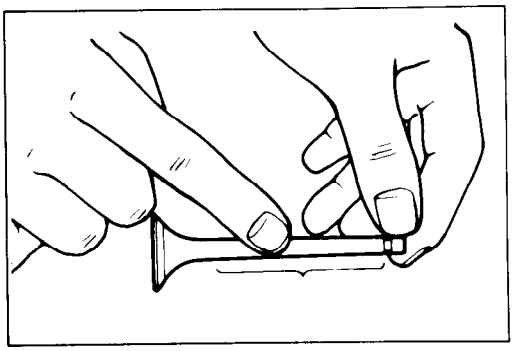

CAUTION:
When inserting each valve, take care not to damage the lip of the stem seal.

99000-25140 : SUZUKI MOLY PASTE

- Install the valve springs with the small-pitch portion Ⓐ facing cylinder head.
  Ⓑ : Large-pitch portion.
- Put on the spring retainer and, using the valve spring compressor, press down the spring, fit the two cotter halves to the stem end, and release the compressor to allow the cotter ① to wedge in between seat and stem. Be sure that the rounded lip ② of the cotter fits snugly into the groove ③ in the stem end.

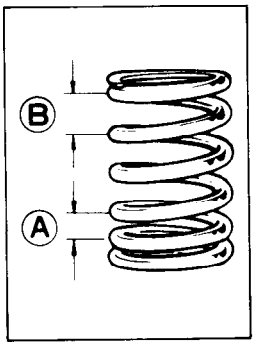

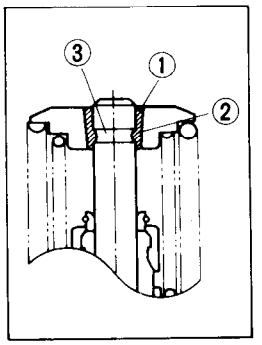

CAUTION:
Be sure to restore each spring, valve and spring retainer to their original positions.

CYLINDER DISTORTION

Check the gasketed surface of the cylinder for distortion with a straightedge and thickness gauge, taking a clearance reading at several places as indicated. If the largest reading at any position of the straightedge exceeds the limit, replace the cylinder.

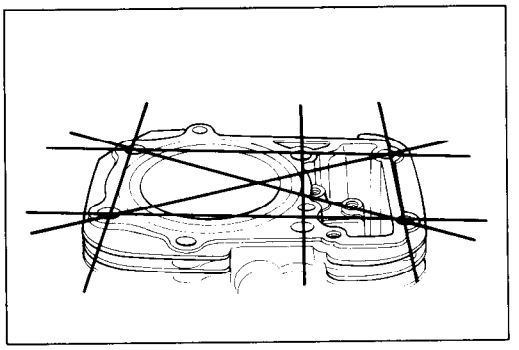

Cylinder distortion
Service Limit : 0.05 mm (0.002 in)

CYLINDER BORE

Measure the cylinder bore diameter at six places. If any one of the measurements exceeds the limit, overhaul the cylinder and replace the piston with an oversize, or replace the cylinder. Once the reboring is done on any one cylinder which measurements is beyond the limit, the remaining cylinders must be also rebored accordingly. Otherwise the imbalance might causes excess vibration.

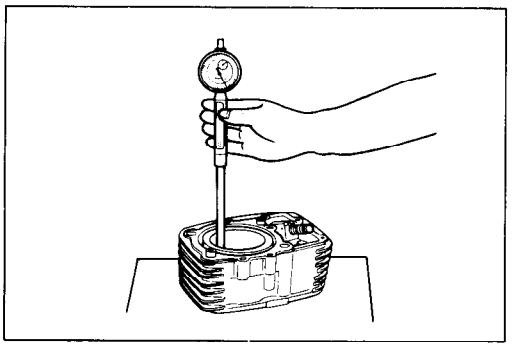

Cylinder bore
Service Limit : 83.085 mm (3.2711 in)

09900-20508 : Cylinder gauge set

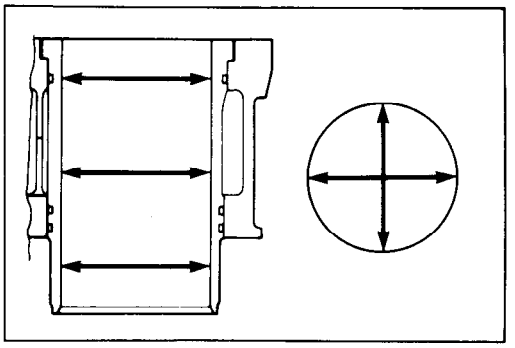

PISTON DIAMETER

Using a micrometer, measure the piston outside diameter at the place shown in Fig. If the measurement is less than the limit, replace the piston.

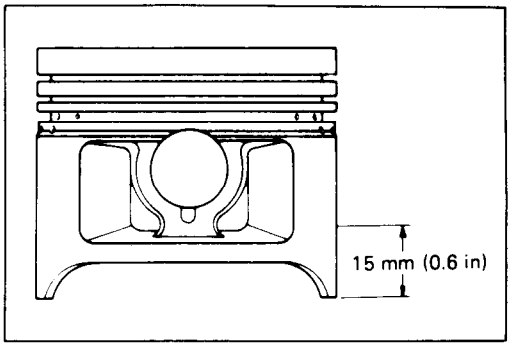

Piston oversize : 0.5, 1.0 mm

Service Limit : 82.880 mm (3.2630 in)

09900-20204 : Micrometer (75 – 100 mm)

PISTON TO CYLINDER CLEARANCE

As a result of the above measurement, if the piston to cylinder clearance exceeds the following limit, overhaul the cylinder and use an oversize piston, or replace both cylinder and piston.

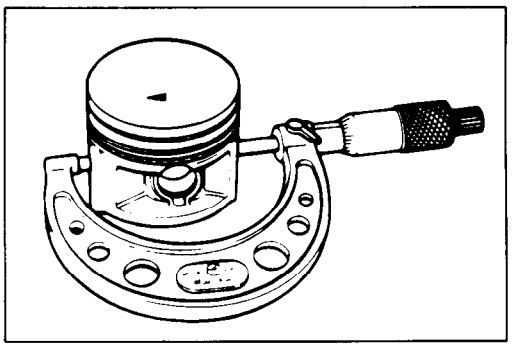

Service Limit : 0.120 mm (0.0047 in)

PISTON RING TO GROOVE CLEARANCE

Using a thickness gauge, measure the side clearances of the 1st and 2nd rings. If any one of the clearances exceeds the limit, replace both piston and piston rings.

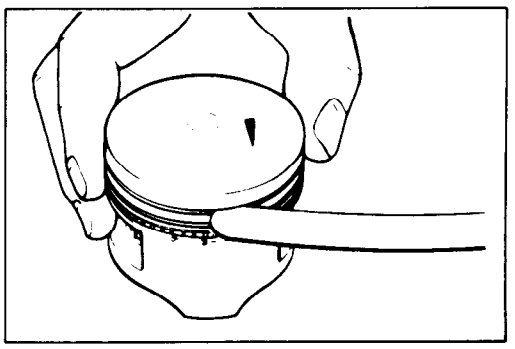

09900-20803 : Thickness gauge

Piston ring to groove clearance

Piston ring	Service Limit
1st	0.18 mm (0.007 in)
2nd	0.15 mm (0.006 in)

Piston ring groove width

Piston ring	Standard
1st	1.01 – 1.03 mm (0.0398 – 0.0406 in)
2nd	1.21 – 1.23 mm (0.0476 – 0.0484 in)
Oil	2.51 – 2.53 mm (0.0988 – 0.0996 in)

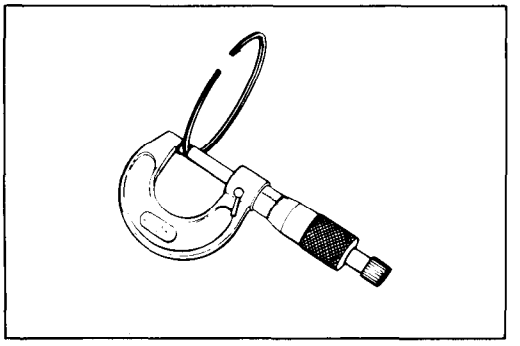

Piston ring thickness

Piston ring	Standard
1st	0.970 – 0.990 mm (0.0382 – 0.0390 in)
2nd	1.170 – 1.190 mm (0.0461 – 0.0469 in)

PISTON RING FREE END GAP AND END GAP

Before installing piston rings, measure the free end gap of each ring using vernier calipers. Next, fit the ring in the cylinder, and measure each ring end gap using a thickness gauge.
If any ring has an excess end gap, replace the ring.

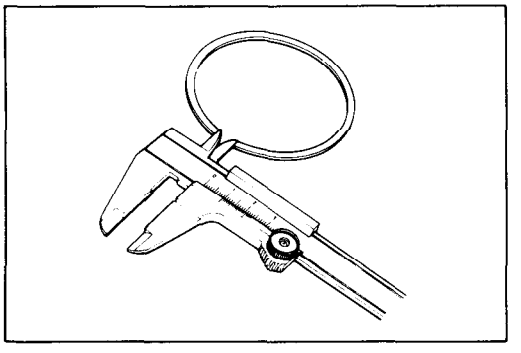

Piston ring free end gap

Piston ring		Service Limit
1st	R	8.4 mm (0.33 in)
2nd	R	9.4 mm (0.37 in)

09900-20101 : Vernier calipers

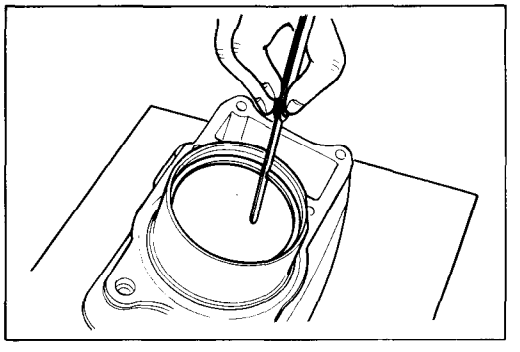

Piston ring end gap

Piston ring	Service Limit
1st & 2nd	0.70 mm (0.028 in)

09900-20803 : Thickness gauge

- **Oversize piston ring**
  The following two types of oversize piston rings are used. They bear the following identification numbers.

SIZE	1st	2nd
0.5 mm O.S.	50	50
1.0 mm O.S.	100	100

- **Oversize oil ring**
  The following two types of oversize oil rings are available as optional parts. They bear the following identification marks.

SIZE	COLOR
STD	NIL
0.5 mm O.S.	Painted Red
1.0 mm O.S.	Painted Yellow

- **Oversize side rail**
  Just measure outside diameter to identify the side rail as there is no mark or numbers on it.

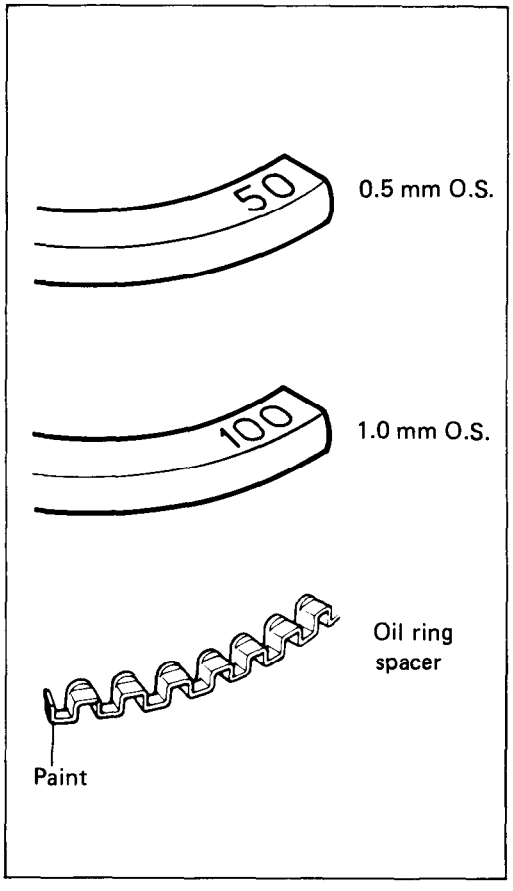

PISTON PIN AND PIN BORE

Using a small bore gauge, measure the piston pin bore inside diameter, and using a micrometer, measure the piston pin outside diameter. If the reading exceeds the following limit, replace both piston and piston pin.

Piston pin bore I.D.
Service Limit : 20.030 mm (0.7886 in)

09900-20602 : Dial gauge (1/1000 mm, 1 mm)
09900-22403 : Small bore gauge (18 – 35 mm)

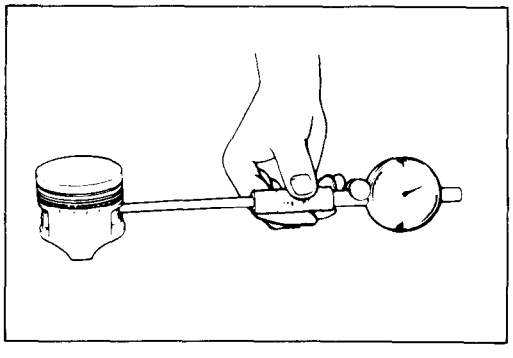

Using a micrometer, measure the piston pin outside diameter at three positions.

Piston pin O.D.
Service Limit : 19.980 mm (0.7866 in)

09900-20205 : Micrometer (0 – 25 mm)

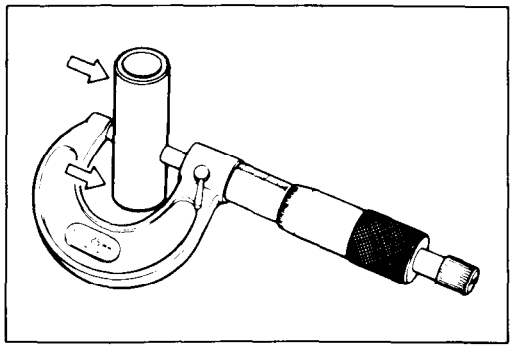

CONROD SMALL END I.D.

Using a small bore gauge, measure the conrod small end inside diameter.

Conrod small end I.D.
Service Limit : 20.040 mm (0.7890 in)

If the conrod small end inside diameter exceeds the above mentioned limit, replace conrod.

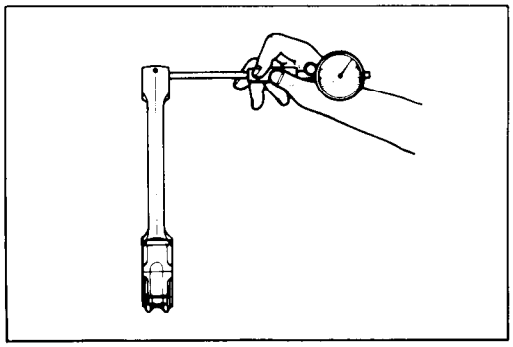

CONROD BIG END THRUST CLEARANCE

Check the conrod thrust clearance by using a thickness gauge. If the clearance exceeds the limit, replace the conrod or crankshaft.

Service Limit : 0.30 mm (0.012 in)

09900-20803 : Thickness gauge

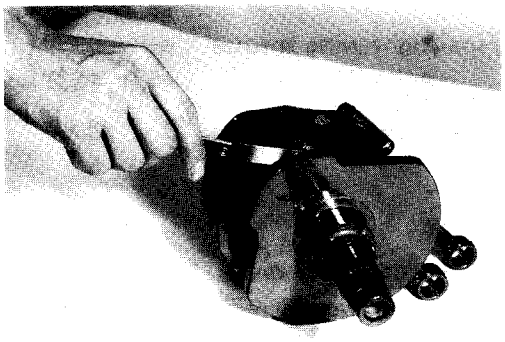

	Standard
Big end width	21.95 – 22.00 mm (0.864 – 0.866 in)
Crank pin width	22.10 – 22.15 mm (0.870 – 0.872 in)

09900-20205 : Micrometer (0 – 25 mm)
09900-20605 : Dial calipers (10 – 34 mm)

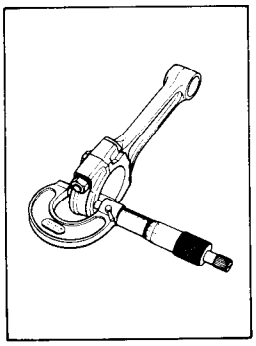

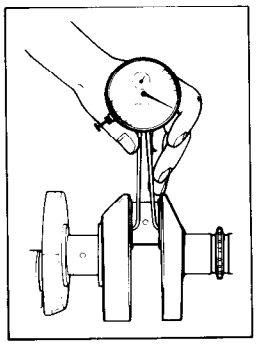

CONROD-CRANK PIN BEARING SELECTION

- Loosen the bearing cap nuts and tap the bolt end lightly with plastic hammer to remove the bearing cap.

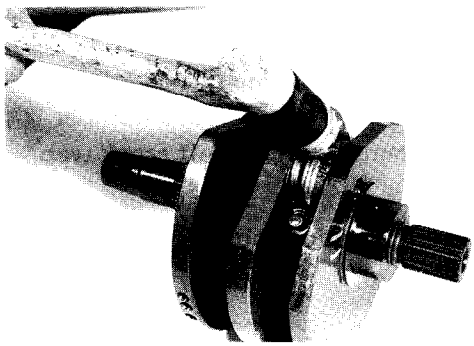

- Remove the rods and mark them to identify the cylinder position.
- Inspect the bearing surfaces for any sign of fusion, pitting, burn or flaws. If any, replace them with a specified set of bearings.

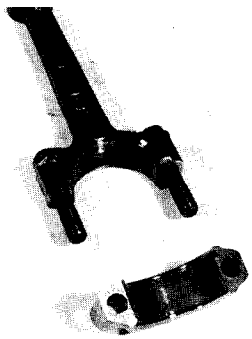

NOTE:
Never try to remove or loosen the conrod cap bolts due to their possible loosening in the rod. Once displaced, the bearing cap will not be fitted properly.

- Place plastigauge axially on the crank pin avoiding the oil hole, at TDC or BDC side as shown.
- Tighten the bearing cap with two-step torque values.

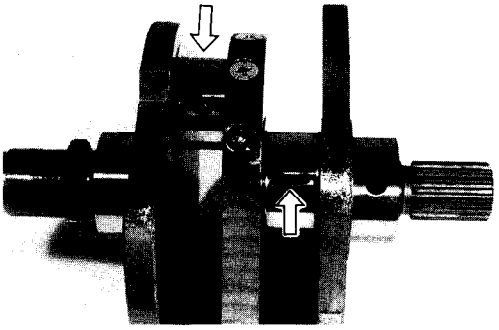

NOTE:
When fitting the bearing cap to crank pin, be sure to discriminate between its two ends, I.D. code side and the other.
I.D. code always faces intake valve side.

Initial tightening torque : 22 – 28 N·m
(2.2 – 2.8 kg-m, 16.0 – 20.0 lb-ft)
Final tightening torque : 49 – 53 N·m
(4.9 – 5.3 kg-m, 35.5 – 38.5 lb-ft)

09900-22301 : Plastigauge

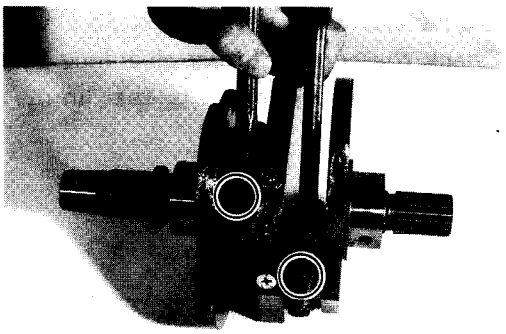

NOTE:
Never rotate the crankshaft or conrod when a piece of plastigauge is in the clearance.

- Remove the caps and measure the width of compressed plastigauge with envelope scale. This measurement should be taken at the widest part.

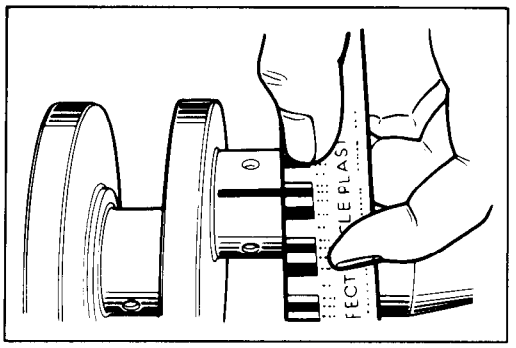

Crank pin bearing oil clearance
Service Limit : 0.080 mm (0.0031 in)

- If oil clearance exceeds the service limit, select the specified bearings from the following table.
- Check the corresponding conrod I.D. code number ①, "1", "2" or "3".
- Check the corresponding crank pin O.D. code number ②, "1", "2" or "3".
- The crank pin O.D. code number ②, "1", "2" or "3" which are stamped on the left crank web.

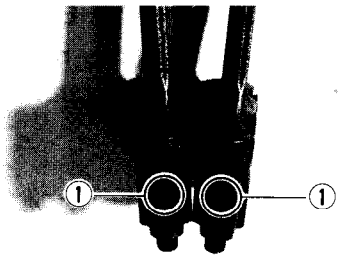

Bearing selection table

		Crank pin O.D. code ②		
	Code	1	2	3
Conrod I.D. code ①	1	Green	Black	Brown
	2	Black	Brown	Yellow
	3	Brown	Yellow	Blue

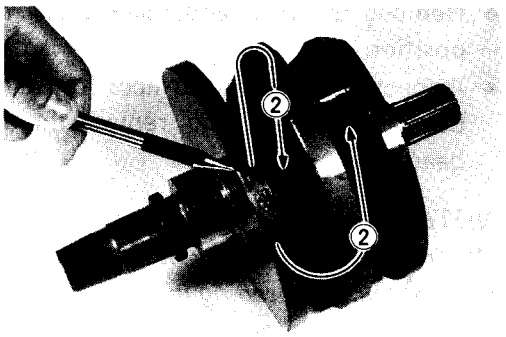

Oil clearance
Standard : 0.024 – 0.042 mm (0.0009 – 0.0017 in)

Conrod I.D. specification

Code ①	I.D. specification
1	44.000 – 44.006 mm (1.7323 – 1.7325 in)
2	44.006 – 44.012 mm (1.7325 – 1.7328 in)
3	44.012 – 44.018 mm (1.7328 – 1.7330 in)

Crank pin O.D. specification

Code ②	O.D. specification
1	40.994 – 41.000 mm (1.6139 – 1.6142 in)
2	40.988 – 40.994 mm (1.6137 – 1.6139 in)
3	40.982 – 40.988 mm (1.6135 – 1.6137 in)

09900-20202 : Micrometer (25 – 50 mm)

CAUTION:
Bearing should be replaced as a set.

Bearing thickness

Color (Part No.)	Thickness
Green (12164-45C00-0A0)	1.485 – 1.488 mm (0.0585 – 0.0586 in)
Black (12164-45C00-0B0)	1.488 – 1.491 mm (0.0586 – 0.0587 in)
Brown (12164-45C00-0C0)	1.491 – 1.494 mm (0.0587 – 0.0588 in)
Yellow (12164-45C00-0D0)	1.494 – 1.497 mm (0.0588 – 0.0589 in)
Blue (12164-45C00-0E0)	1.497 – 1.500 mm (0.0589 – 0.0590 in)

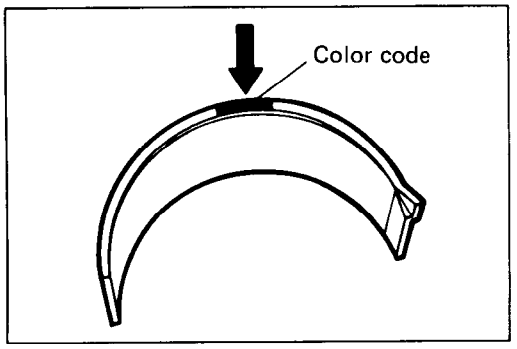

CONROD-CRANK PIN BEARING ASSEMBLY

- When fitting the bearing to the bearing cap and conrod, be sure to fix the stopper part ① first and press in the other end.

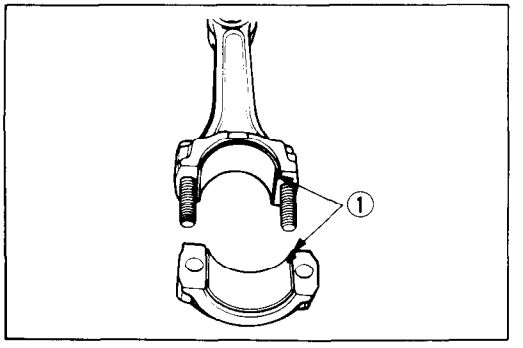

- Apply engine oil or SUZUKI MOLY PASTE to the crank pin and bearing surface.

99000-25140 : SUZUKI MOLY PASTE

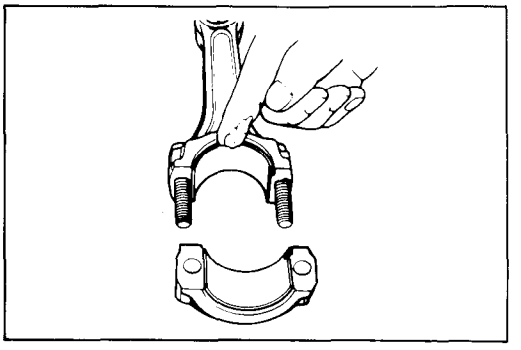

- When mounting the conrod on the crankshaft, make sure that I.D. code ② of the conrod faces rearward.
- Tighten the conrod fitting nuts with specified torque after applying engine oil to the nut thread.

Tightening torque
Initial : 22 – 28 N·m (2.2 – 2.8 kg-m, 16.0 – 20.0 lb-ft)
Final : 49 – 53 N·m (4.9 – 5.3 kg-m, 35.5 – 38.5 lb-ft)

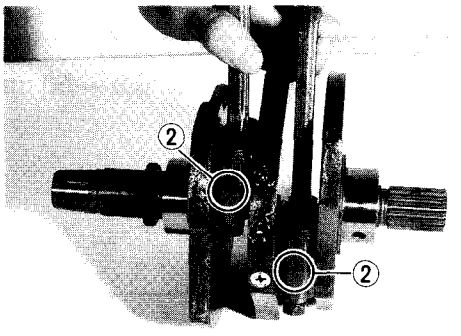

- Check the conrod movement for smooth turning.

CRANKCASE-CRANKSHAFT BEARING SELECTION

- Inspect the crankshaft and crankshaft journal bearings for any damage.

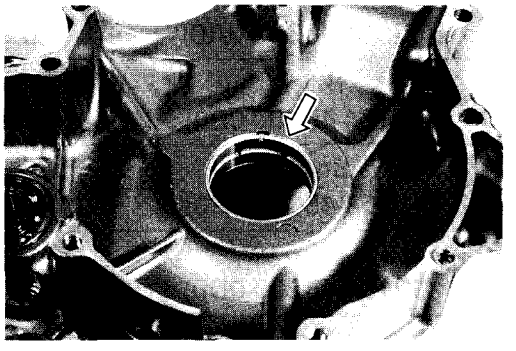

- Measure the crankshaft journal O.D. ① by using the special tool.

09900-20202 : Micrometer (25 – 50 mm)

Crankshaft journal O.D. ①
Standard : 47.965 – 47.980 mm (1.8884 – 1.8890 in)

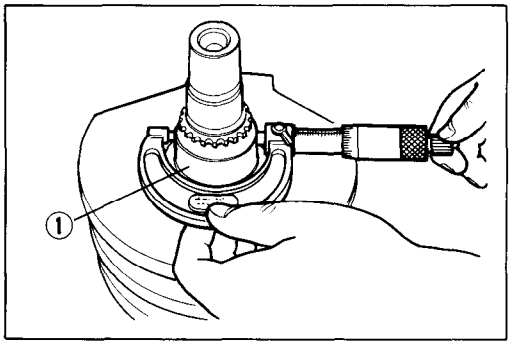

- Measure the crankshaft journal bearing I.D. ② by using the special tool.

09900-20508 : Cylinder gauge set

Crankshaft journal bearing I.D. ②
Standard : 48.000 – 48.015 mm (1.8898 – 1.8904 in)

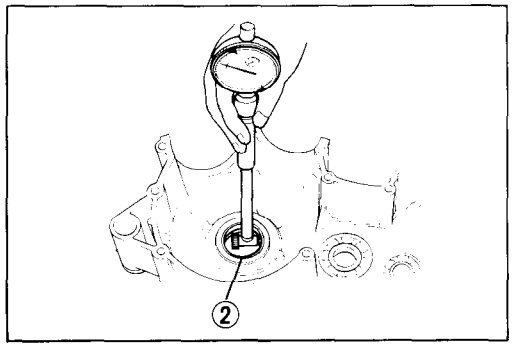

If each crankshaft journal bearing I.D. is not within the standard range, replace them with new ones.

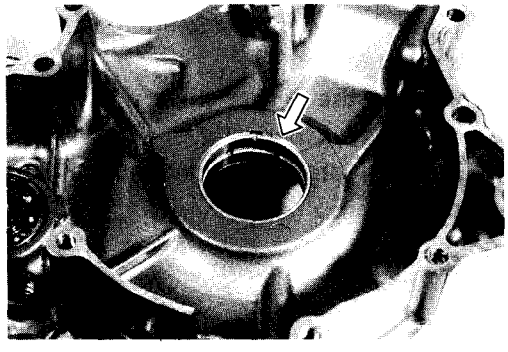

- Remove the crankshaft bearing with taking care not to damage the crankcase journal bearing hole.
- Inspect the journal bearing hole of crankcase for any sign of pitting or flaw.
  If any, repair it with emery paper.
- Install the new journal bearings into the crankcases by hydraulic press.
- Hone the new journal bearings with the specified value by honing machine.

CAUTION:
When honing the new journal bearings, be sure to mate the left and right crankcases.

Crankshaft journal bearing I.D. : 48.000 – 48.015 mm (1.8898 – 1.8904 in)

CRANKSHAFT THRUST CLEARANCE

Install the crankshaft in the right crankcase half after installing the thrust shim on the crankshaft.

NOTE:
The oil grooved face of thrust shim ① is faced to crankshaft web side.

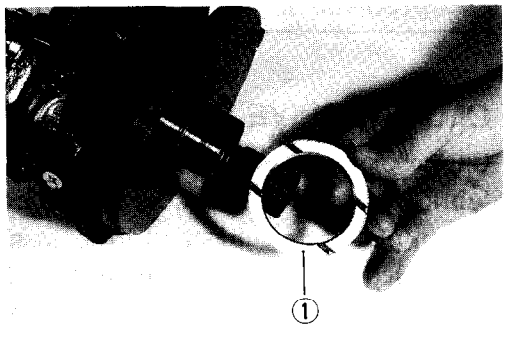

Place the thrust washer, camshaft drive sprocket and primary drive gear on the right end of the crankshaft and tighten primary drive gear bolt to the specified torque. Use a thickness gauge to measure the thrust clearance between right crankcase and thrust washer.

Tightening torque : 80 – 110 N·m
(8.0 – 11.0 kg-m, 58.0 – 79.5 lb-ft)

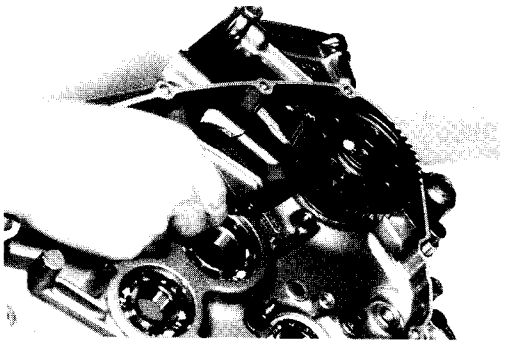

Crankshaft thrust clearance
Standard : 0.05 – 0.10 mm (0.002 – 0.004 in)

09900-20803 : Thickness gauge

If the thrust clearance exceeds the standard range, adjust the thrust clearance by the following procedures.

- Remove the thrust shim, and measure its thickness with a micrometer.
- Change the thrust shim with the other shim if the thrust clearance is incorrect.
- Perform the thrust clearance measurement described above once again.

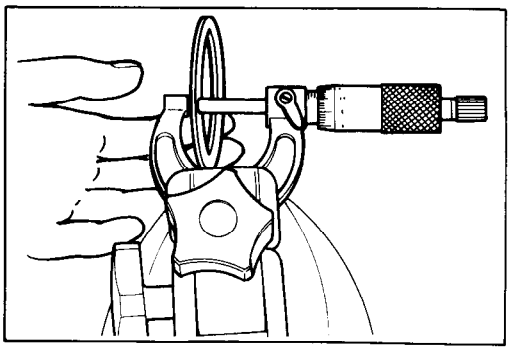

09900-20205 : Micrometer (0 – 25 mm)

Checking to make sure it is within standard

Unit: mm (in)

Part number	Thrust shim thickness
09160-48001	1.925 – 1.950 (0.0758 – 0.0768)
09160-48002	1.950 – 1.975 (0.0768 – 0.0778)
09160-48003	1.975 – 2.000 (0.0778 – 0.0787)
09160-48004	2.000 – 2.025 (0.0787 – 0.0797)
09160-48005	2.025 – 2.050 (0.0797 – 0.0807)
09160-48006	2.050 – 2.075 (0.0807 – 0.0817)
09160-48007	2.075 – 2.100 (0.0817 – 0.0827)
09160-48008	2.100 – 2.125 (0.0827 – 0.0837)
09160-48009	2.125 – 2.150 (0.0837 – 0.0847)
09160-48010	2.150 – 2.175 (0.0847 – 0.0856)

CLUTCH DRIVE PLATE AND DRIVEN PLATE

Clutch plates in service remain in oily condition as they were lubricated with oil. Because of this condition, both drive and driven plates are subject to little wearing action and therefore last much longer. Their life depends largely on the quality of oil used in the clutch and also on the way the clutch is operated.

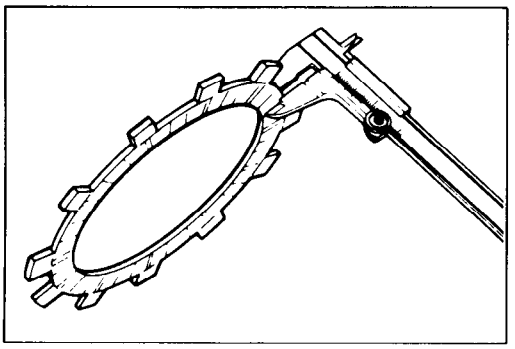

These plates are expendable: they are meant to be replaced when found worn down or distorted to the respective limit: use a caliper to check thickness and a thickness gauge and surface plate to check distortion.

09900-20101 : Vernier calipers
09900-20803 : Thickness gauge

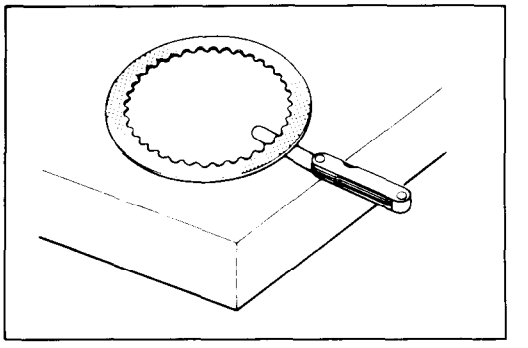

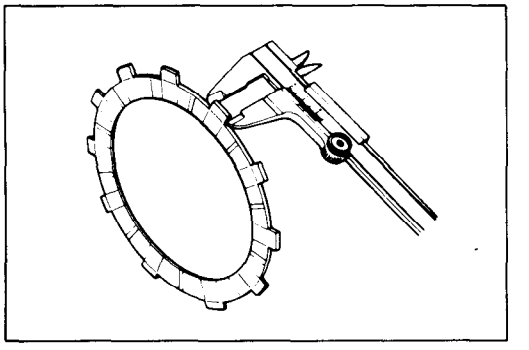

Unit: mm (in)

Service Limit	Drive plate		Driven plate
	No. 1	No. 2	
Thickness	2.35 (0.093)	3.15 (0.124)	–
Distortion	–	–	0.1 (0.004)
Claw width	15.0 (0.59)	15.0 (0.59)	–

CLUTCH SPRING FREE LENGTH

Measure the free length of each coil spring with a vernier calipers, and compare the elastic strength of each with the specified limit. Replace all the springs if any spring is not within the limit.

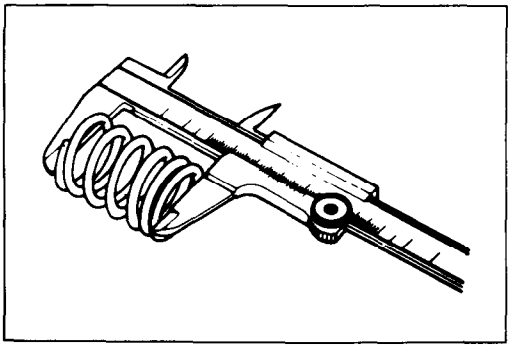

Clutch spring free length

Service Limit **No. 1 : 24.6 mm (0.97 in)**
No. 2 : 23.3 mm (0.92 in)

CLUTCH BEARING

Inspect clutch push piece bearing for any abnormality, particularly cracks, upon removal from the clutch, to decide whether it can be reused or should be replaced.
Smooth engagement and disengagement of the clutch depends much on the condition of this bearing.

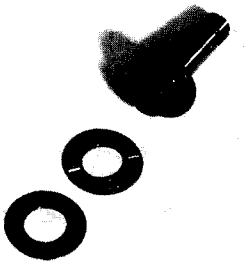

NOTE:
Thrust washer is located between the pressure plate and thrust bearing.

GENERATOR AND SIGNAL GENERATOR SERVICING

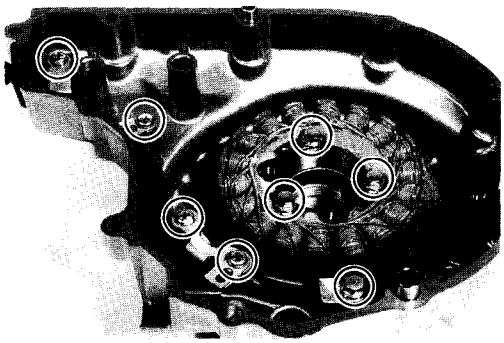

- When replacing the generator coil or signal generator coil, apply THREAD LOCK "1342" (99000-32050) to the stator set screws and its lead wire guide screws.

NOTE:
Wipe off oil or grease on screw completely, and then apply THREAD LOCK "1342".

STARTER CLUTCH SERVICING

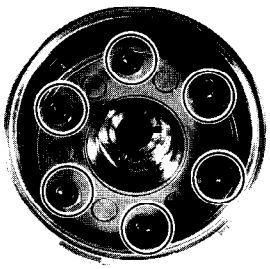

- Hold the rotor with off-set wrench and remove the starter clutch securing bolts.

09914-25811 : "T" type hexagon wrench (6 mm)

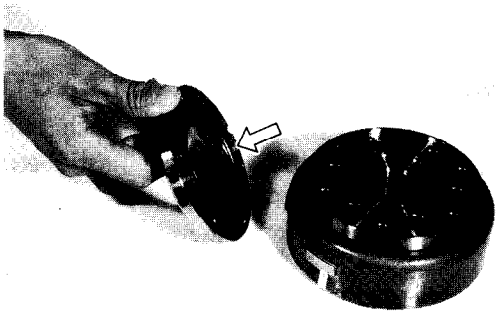

- When fitting the one way clutch to the guide, position flange side of one way clutch to the rotor side.

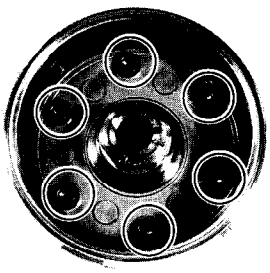

- Apply THREAD LOCK SUPER "1303"/"1305" to the securing bolts and tighten them to the specified torque while holding the rotor with off-set wrench.

(For U.S.A. model)
99000-32030 : THREAD LOCK SUPER "1303"
(For the other models)
99000-32100 : THREAD LOCK SUPER "1305"

09914-25811 : "T" type hexagon wrench

Tightening torque : 23 – 28 N·m
(2.3 – 2.8 kg-m, 16.5 – 20.0 lb-ft)

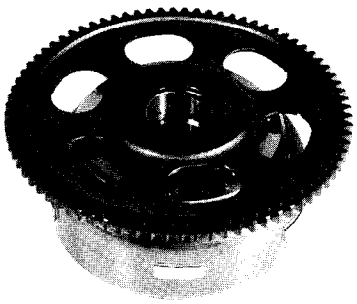

Check the operation of starter clutch by turning the starter driven gear.

NOTE:
The gear turns one direction only.

OIL PUMP

CAUTION:

Do not attempt to disassemble the oil pump assembly. The oil pump is available only as an assembly.

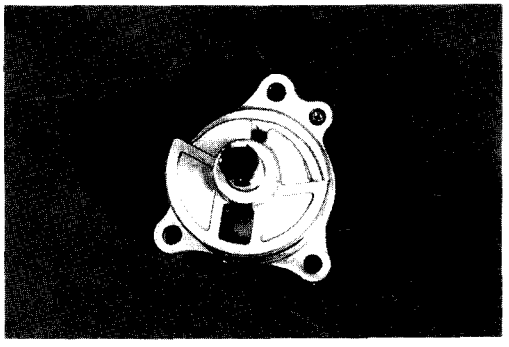

TRANSMISSION

TRANSMISSION GEARS AND RELATED PARTS

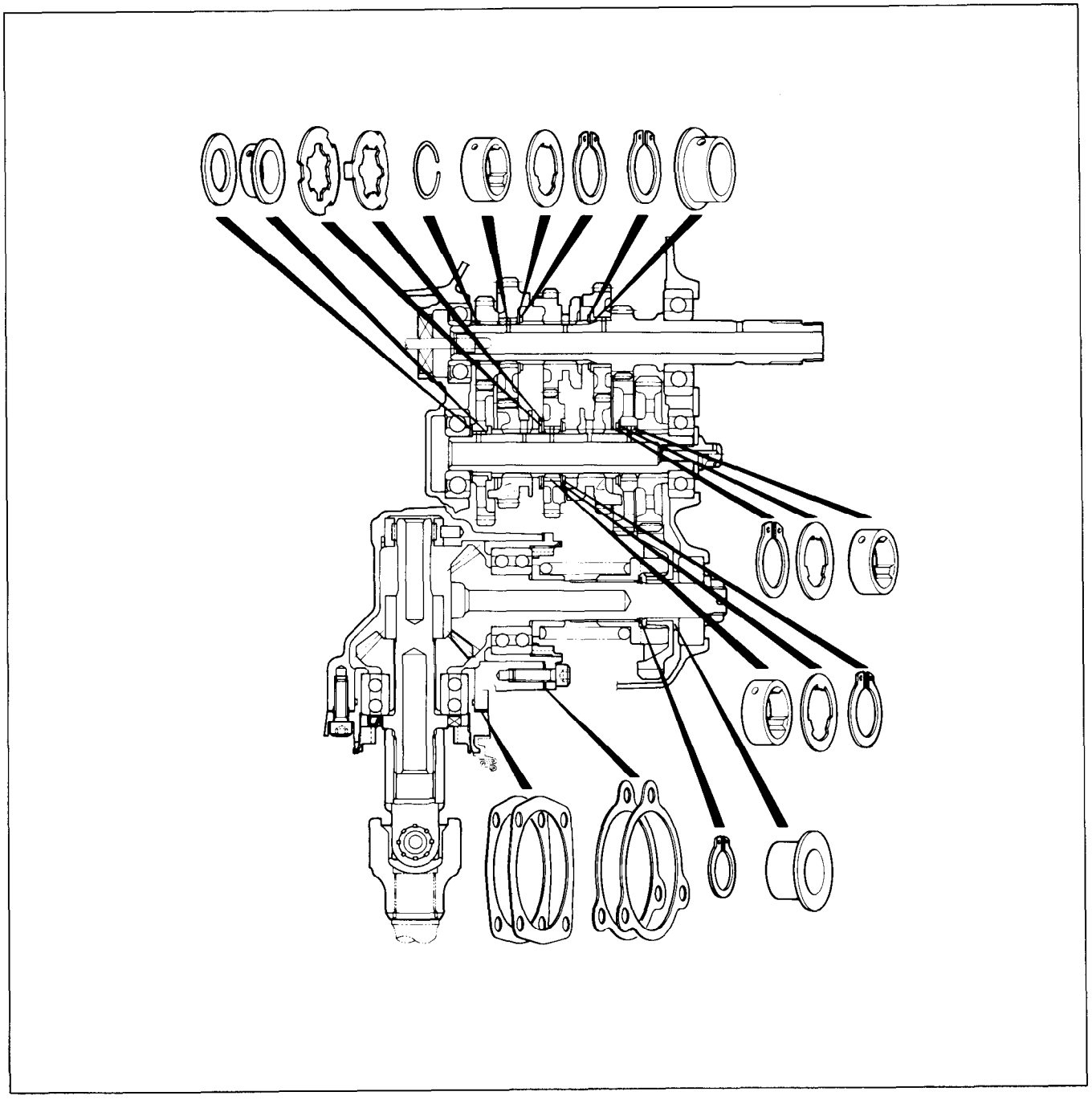

GEAR-SHIFTING FORK CLEARANCE

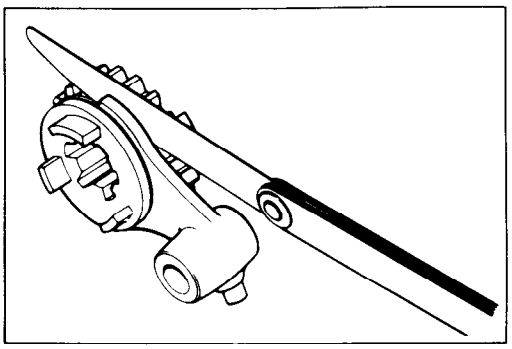

Using a thickness gauge, check the shifting fork clearance in the groove of its gear.
The clearance for each of the three shifting forks plays an important role in the smoothness and positiveness of shifting action.
If the clearance checked is noted to exceed the limit specified, replace the fork or its gear, or both.

09900-20803 : Thickness gauge
09900-20101 : Vernier calipers

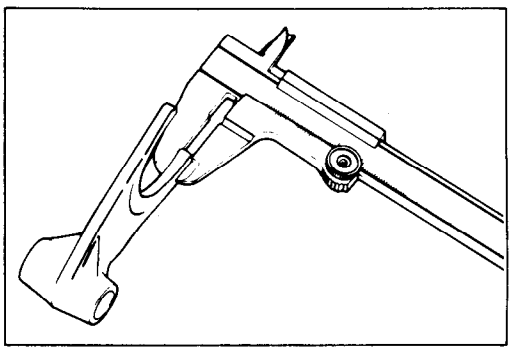

Shift fork – Groove clearance
Standard : 0.10 – 0.30 mm (0.004 – 0.012 in)
Service Limit : 0.50 mm (0.020 in)

Shift fork groove width
Standard No. 1 : 5.50 – 5.60 mm (0.217 – 0.220 in)
No. 2 : 4.50 – 4.60 mm (0.177 – 0.181 in)

Shift fork thickness
Standard No. 1 : 5.30 – 5.40 mm (0.209 – 0.213 in)
No. 2 : 4.30 – 4.40 mm (0.169 – 0.173 in)

COUNTERSHAFT AND DRIVESHAFT

REASSEMBLY

Assemble the countershaft and driveshaft, in the reverse order of disassembly. Pay attention to following points:

NOTE:
Always use new circlips.

NOTE:
Before installing the gears, coat lightly moly paste or engine oil to the driveshaft and countershaft.

99000-25140 : SUZUKI MOLY PASTE

CAUTION:
* **Never reuse a circlip. After a circlip has been removed from a shaft, it should be discarded and a new circlip must be installed.**
* **When installing a new circlip, care must be taken not to expand the end gap larger than required to slip the circlip over the shaft.**
* **After installing a circlip, always insure that it is completely seated in its groove and securely fitted.**

- When installing a new circlip, pay attention to the direction of the circlip. Fit it to the side where the thrust is as shown in figure.

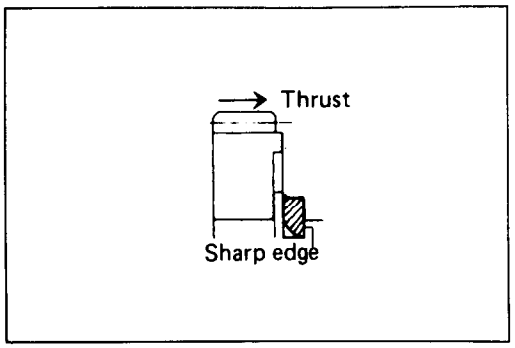

TOP DRIVE GEAR BUSHING

- When installing the top drive gear bushing, align the bushing oil hole ① with the countershaft oil hole ②.

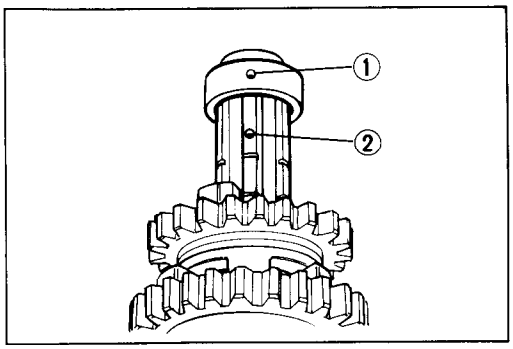

LOW AND 3RD DRIVEN GEAR BUSHINGS

- When installing the low and 3rd driven gear bushings, align the bushing oil hole ① with the driveshaft oil hole ②.

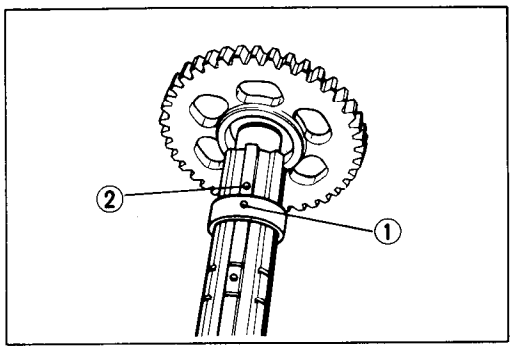

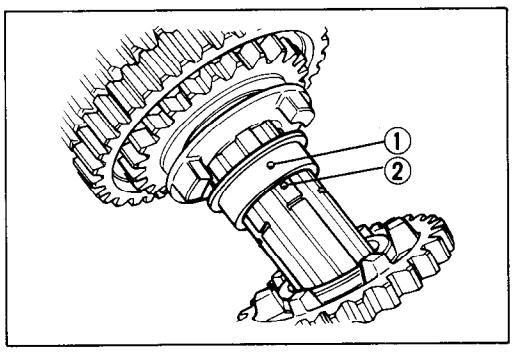

3RD DRIVEN GEAR LOCK WASHERS

- When installing the 3rd driven gear onto the driveshaft, install the lock washer No. 2 ① onto the driveshaft, and turn and fit it into the groove.
- Then, fit the lock washer No. 1 ② in the lock washer No. 2 ①.

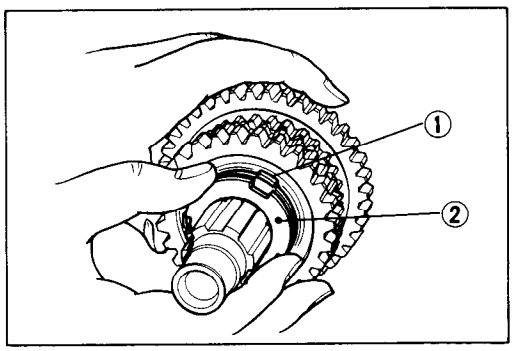

ENGINE REASSEMBLY

This engine is reassembled by carrying out the steps of disassembly in the reverse order, but there are a number of steps which demand special descriptions or precautionary measures.

NOTE:
Apply engine oil to each running and sliding part before reassembling.

- Install the thrust shim on the crankshaft.

NOTE:
The oil grooved face of thrust shim ① is faced to crankshaft web side.

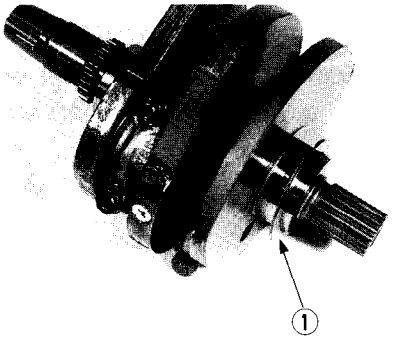

- Install the crankshaft into the left crankcase half.

NOTE:
Coat lightly moly paste to the crankshaft journal bearings.

99000-25140 : SUZUKI MOLY PASTE

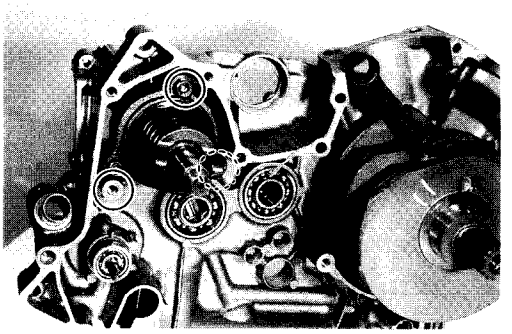

CAUTION:
Never fit the crankshaft into the crankcase by striking it with a plastic hammer.
It is easy to install the crankshaft to left crankcase.

- Install the secondary drive bevel gear assembly.
  Tighten the secondary drive bevel gear housing bolts to the specified torque.

WARNING:
Never hit the secondary drive bevel gear. Maybe, secondary drive bevel gear circlip will be detached.

Tightening torque : 18 – 28 N·m
(1.8 – 2.8 kg-m, 13.0 – 20.0 lb-ft)

- Install the countershaft assembly, driveshaft assembly and reduction driven gear.
- Install the gearshift forks, gearshift fork shafts and gearshift cam.
- Install a new O-ring ①.

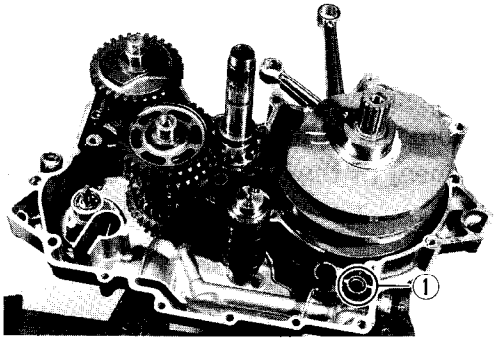

- Install the new O-rings ②.
- Apply engine oil to the oil pipe end.
- Tighten the oil pipe bolts with the specified torque after applying THREAD LOCK SUPER "1322"/"1333B" to securing bolts.

Tightening torque : 8 – 12 N·m
(0.8 – 1.2 kg-m, 6.0 – 8.5 lb-ft)

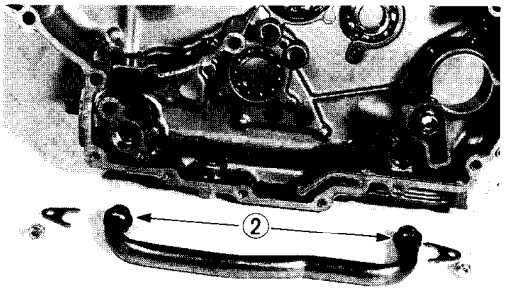

(For U.S.A. model)
99000-32020 : THREAD LOCK SUPER "1333B"
(For the other models)
99000-32110 : THREAD LOCK SUPER "1322"

- Clean the mating surfaces of the left and right crankcases.
- Fit the dowel pins on the left crankcase.
- Apply SUZUKI BOND NO. 1215/No. 1207B to the mating surface of the right crankcase.

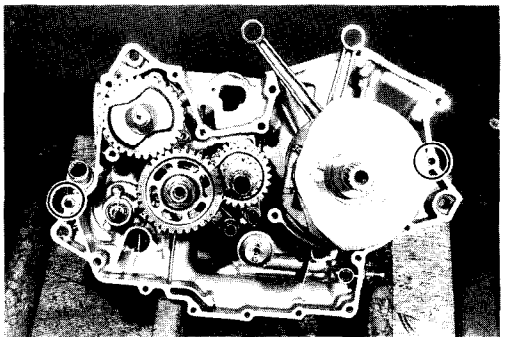

(For U.S.A. model)
99104-31140 : SUZUKI BOND NO. 1207B
(For the other models)
99000-31110 : SUZUKI BOND NO. 1215

NOTE:
Use of SUZUKI BOND NO. 1215/NO. 1207B is as follows:
* *Make surfaces free from moisture, oil, dust and other foreign materials.*
* *Spread on surfaces thinly to form an even layer, and assemble the crankcases within few minutes.*
* *Take extreme care not to apply any BOND NO. 1215/No. 1207B to the oil hole, oil groove and bearing.*
* *Apply to distorted surfaces as it forms a comparatively thick film.*

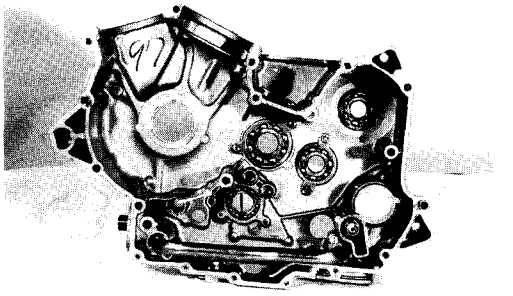

- Place the gaskets ① as shown in Fig.
- Fit the engine ground wire to the correct position as shown in Fig.
- Check that shafts turn smoothly.

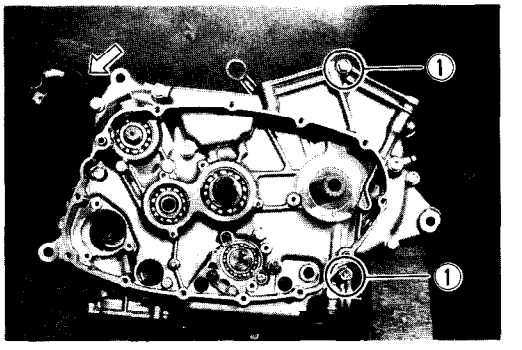

CAUTION:
Use new gasket to prevent oil leakage.

- When securing the right and left crankcases, tighten each bolt a little at a time to equalize the pressure. Tighten all the securing bolts to the specified torque values.

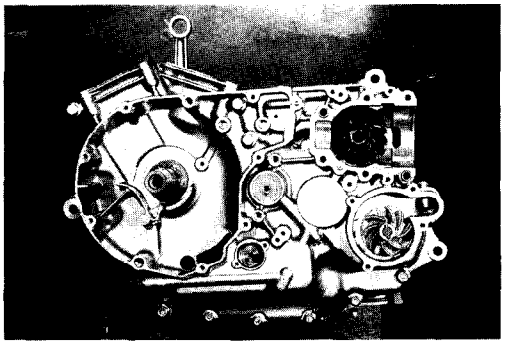

Tightening torque		6 mm bolt	8 mm bolt
Initial	N·m		12 – 18
	kg-m		1.2 – 1.8
	lb-ft		8.5 – 13.0
Final	N·m	9 – 13	20 – 24
	kg-m	0.9 – 1.3	2.0 – 2.4
	lb-ft	6.5 – 9.5	14.5 – 17.5

- Install the oil sump filter.
- Fit the O-ring to the oil sump filter cap.

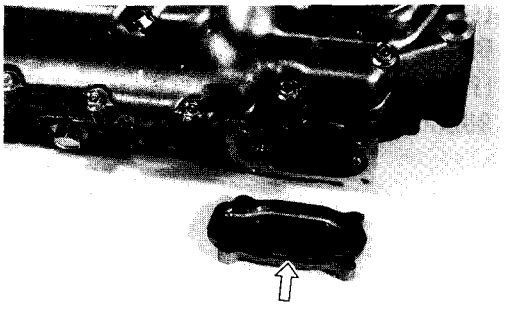

CAUTION:
Use new O-ring to prevent oil leakage.

- Coat grease to the O-ring and install the oil sump filter cap.

- Connect the oil pressure switch lead wire and install the neutral switch.

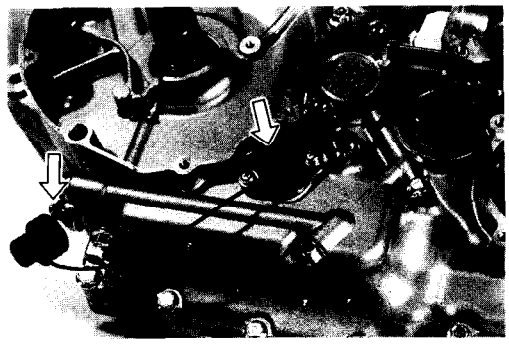

- Install the cam chain and cam chain guide.
- Tighten the cam chain guide set bolt to the specified torque.

Tightening torque : 8 – 12 N·m
(0.8 – 1.2 kg-m, 6.0 – 8.5 lb-ft)

- Fit the key in the key slot on the crankshaft.

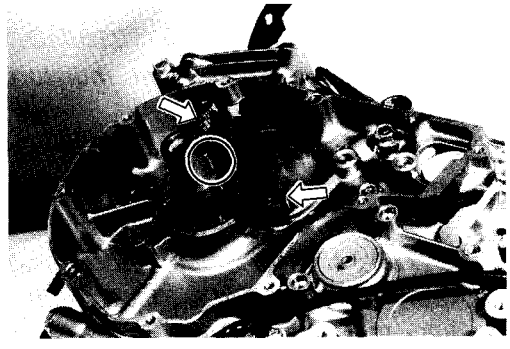

- Degrease the tapered portion of the rotor and also the crankshaft. Use nonflammable cleaning solvent to wipe off the oily or greasy matter to make these surfaces completely dry.
- Install the rotor onto the crankshaft.
- Apply THREAD LOCK SUPER "1303"/"1305" to the rotor bolt and tighten it to the specified torque.

Tightening torque : 140 – 160 N·m
(14.0 – 16.0 kg-m, 101.5 – 115.5 lb-ft)

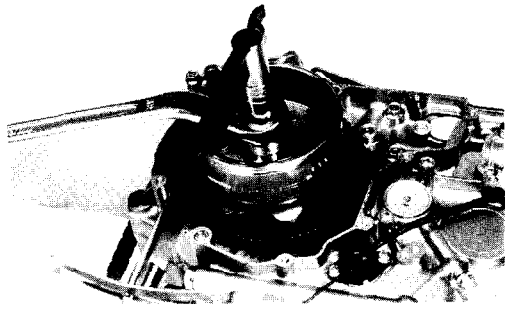

(For U.S.A. model)
99000-32030 : THREAD LOCK SUPER "1303"
(For the other models)
99000-32100 : THREAD LOCK SUPER "1305"

- Install the starter driven gear and its idle gear.
- Fit the dowel pins and attach new gasket.
- Apply SUZUKI BOND NO. 1207B/NO. 1215 to the groove of generator lead wire grommet.

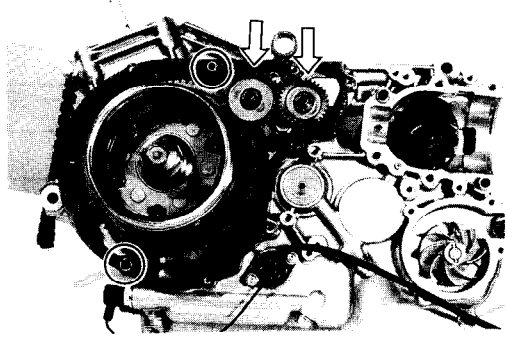

(For U.S.A. model)
99104-31140 : SUZUKI BOND NO. 1207B
(For the other models)
99000-31110 : SUZUKI BOND NO. 1215

- Install the generator cover.

NOTE:
Fit the new gaskets ① to the correct positions as shown in Fig.

CAUTION:
Use new gasket to prevent oil leakage.

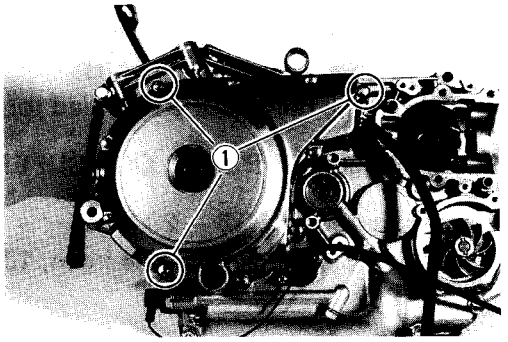

- Mount the starter motor to the crankcase and route the starter motor lead wire properly.

NOTE:
Pass the generator lead wire through the crankcase hole before installing the starter motor.

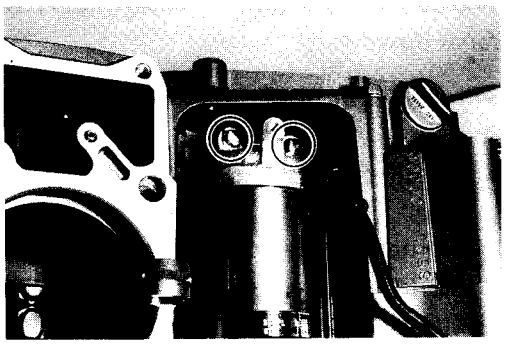

- Install the dowel pins.
- Check the oil jet ① for clogging.
- Install the secondary driven bevel gear assembly, correct shims and a new O-ring.
- Apply engine oil to the bearing and gears.

NOTE:
Be sure to align the bearing pin ② with the bearing pin hole.

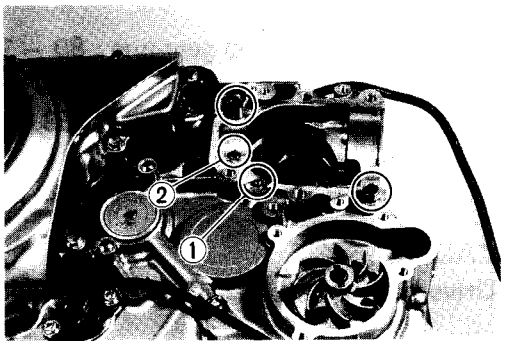

- Apply SUZUKI BOND NO. 1207B/NO. 1215 to the secondary bevel gear case.

CAUTION:
Be careful not to block the oil passage ③.

(For U.S.A. model)
99104-31140 : SUZUKI BOND NO. 1207B
(For other models)
99000-31110 : SUZUKI BOND NO. 1215

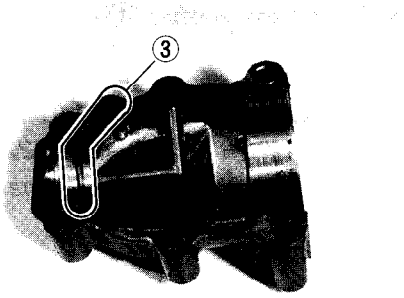

- Tighten the secondary bevel gear case bolts to the specified torque.

	ITEM	Initial	Final
Tightening torque	N·m	12 – 18	20 – 24
	kg-m	1.2 – 1.8	2.0 – 2.4
	lb-ft	8.5 – 13.0	14.5 – 17.5

- Apply THREAD LOCK SUPER "1303" to the secondary driven bevel gear housing bolts.
- Tighten the bolts to the specified torque.

99000-32030 : THREAD LOCK SUPER "1303"

Tightening torque : 18 – 28 N·m
(1.8 – 2.8 kg-m, 13.0 – 20.0 lb-ft)

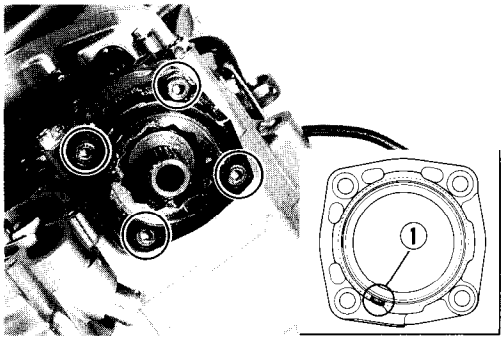

NOTE:
The cutaway portion ① of secondary driven bevel gear housing faces downward.

- Install the washer ② onto the secondary drive bevel gear shaft.
- Install the universal joint into the secondary driven bevel gear.
- Tighten the secondary drive bevel gear shaft nut ③ and driveshaft bolt ④ to the specified torque while holding the universal joint.

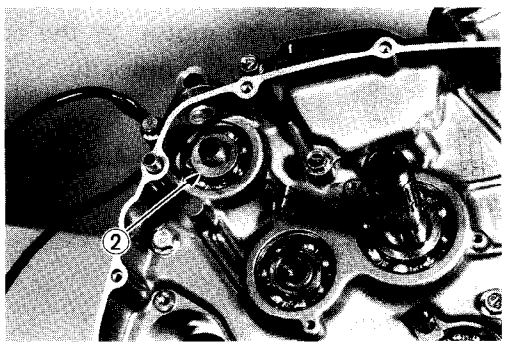

Tightening torque
Secondary drive bevel gear nut : 80 – 110 N·m
(8.0 – 11.0 kg-m,
58.0 – 79.5 lb-ft)
Driveshaft bolt : 60 – 70 N·m
(6.0 – 7.0 kg-m, 43.5 – 50.5 lb-ft)

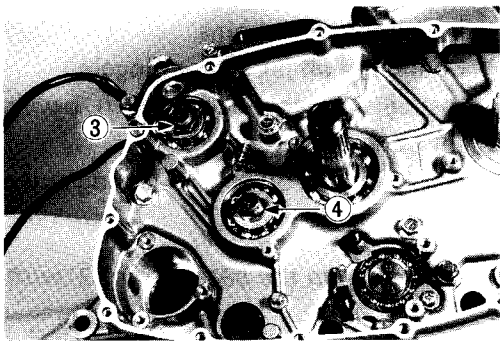

CAUTION:
Driveshaft bolt ④ has left-hand thread.

- Install the washer ① on the gearshift cam.

NOTE:
When replacing the gearshift cam stopper ②, apply THREAD LOCK SUPER "1333B"/"1322" to the thread of bolt.
After tightening the bolt, make sure that the gearshift cam stopper moves properly.

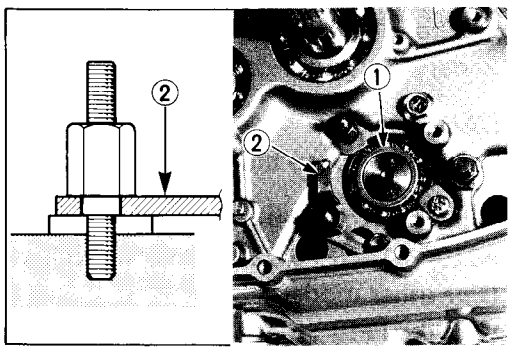

(For U.S.A. model)
99000-32020 : THREAD LOCK SUPER "1333B"
(For the other models)
99000-32110 : THREAD LOCK SUPER "1322"

- Check the neutral position.
- Install the gearshift cam stopper plate ③ after aligning the gearshift cam pins Ⓐ with the gearshift cam stopper plate holes Ⓑ.

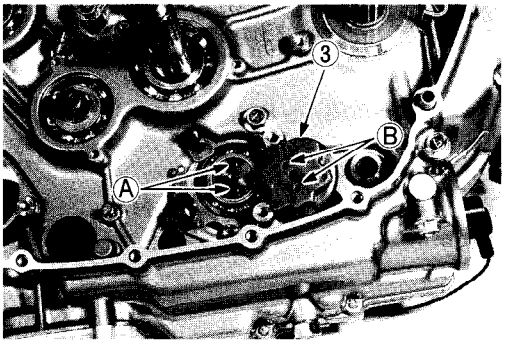

- Install the gearshift pawls into the cam driven gear. The large shoulder Ⓒ must face to the outside as shown in the illustration.
- Apply THREAD LOCK SUPER "1333B"/"1322" to the bolt ④, nuts ⑤ and screws ⑥.

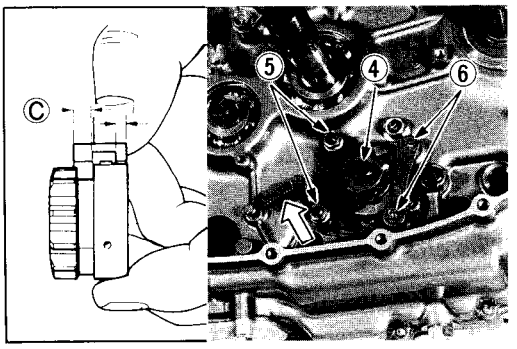

(For U.S.A. model)
99000-32020 : THREAD LOCK SUPER "1333B"
(For the other models)
99000-32110 : THREAD LOCK SUPER "1322"

- Hook the gearshift cam stopper spring.

- Install the gearshift shaft return spring properly.

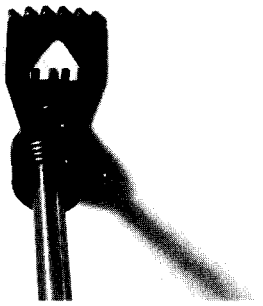

- Install the gearshift shaft. Match the center teeth of the gear on the gearshift shaft with the center teeth on the cam driven gear as shown.

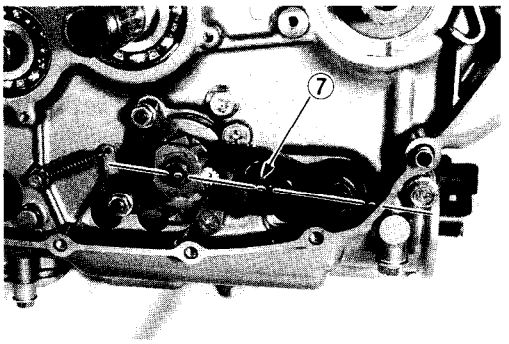

NOTE:
When replacing the gearshift arm stopper ⑦, apply a small quantity of THREAD LOCK SUPER "1303" to its threaded part and tighten it to the specified torque.

99000-32030 : THREAD LOCK SUPER "1303"

Tightening torque
Gearshift arm stopper : 15 – 23 N·m
(1.5 – 2.3 kg-m, 11.0 – 16.5 lb-ft)

- Install the oil pump to the crankcase.
- Apply THREAD LOCK SUPER "1333B"/"1322" to the oil pump securing bolts.

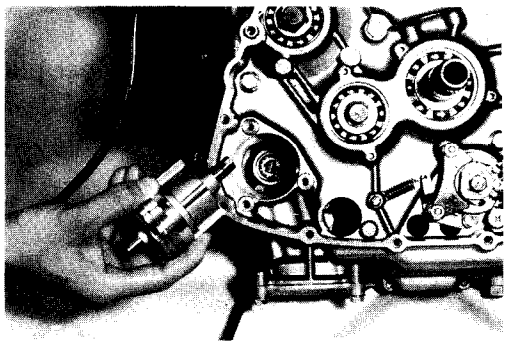

Oil pump bolt
Tightening torque : 9 – 13 N·m
(0.9 – 1.3 kg-m, 6.5 – 9.5 lb-ft)

(For U.S.A. model)
99000-32020 : THREAD LOCK SUPER "1333B"
(For the other models)
99000-32110 : THREAD LOCK SUPER "1322"

- Install the thrust washer onto the crankshaft.

NOTE:
The chamfer side of thrust washer ① faces crankcase side.

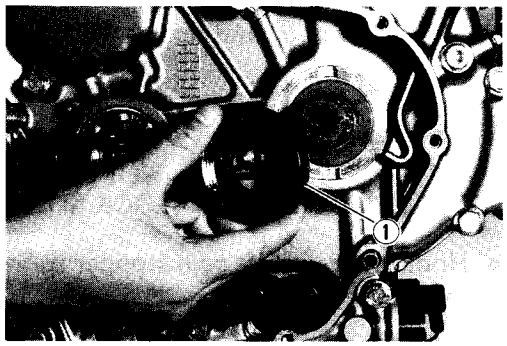

- Align the punch mark ② on the crankshaft with the punch mark ③ on the camshaft drive sprocket.

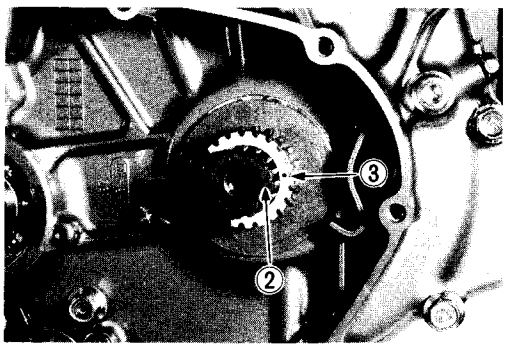

- Install the cam chain and cam chain guide.
- Tighten the cam chain guide set bolt.

Cam chain guide set bolt
Tightening torque : 8 – 12 N·m
(0.8 – 1.2 kg-m, 6.0 – 8.5 lb-ft)

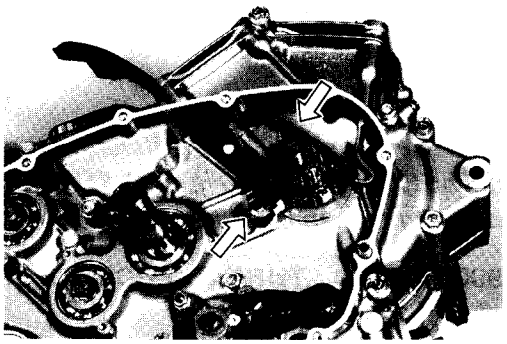

- Tighten the primary drive gear bolt to the specified torque.

09930-40113 : Rotor holder

Tightening torque : 80 – 110 N·m
(8.0 – 11.0 kg-m, 58.0 – 79.5 lb-ft)

NOTE:
This bolt has left-hand thread.

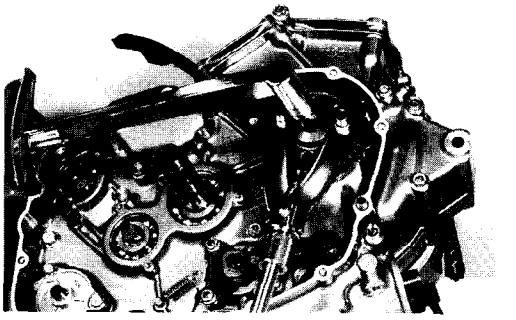

- Install the spacer and washer onto the countershaft.

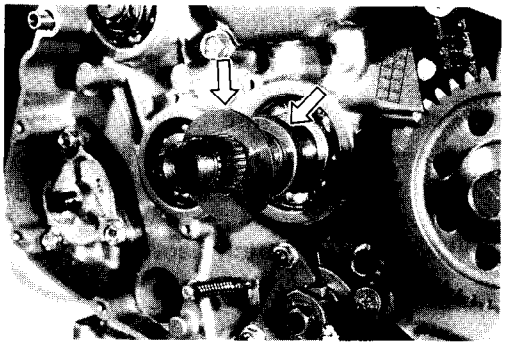

- Apply engine oil to the primary driven gear bearing and spacer.
- Engage the oil pump drive chain onto the oil pump drive gear.
- Install the primary driven gear assembly onto the countershaft.

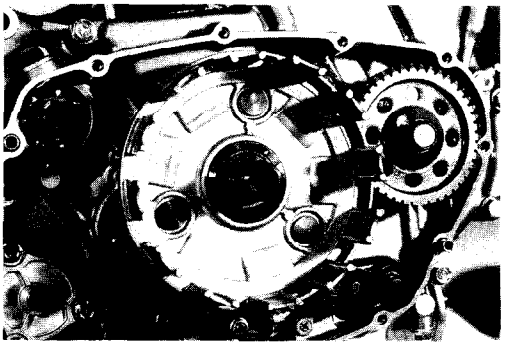

- Engage the oil pump drive chain onto the oil pump driven gear and fix the oil pump driven gear with circlip.

09900-06107 : Snap ring pliers

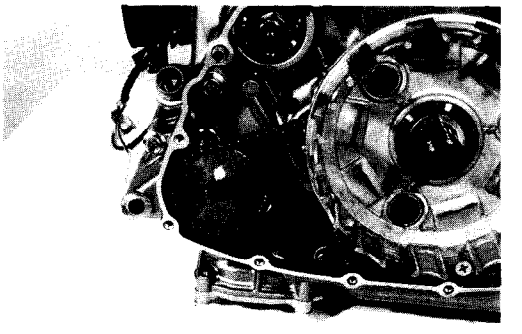

- Install the thrust washer onto the countershaft.

NOTE:
The groove of thrust washer faces outside.

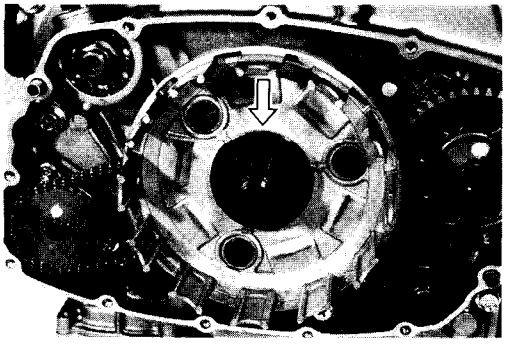

- Install the clutch sleeve hub onto the countershaft.
- Install the back torque limiter (clutch cam No. 2 ② and clutch cam No. 1 ①) onto the clutch sleeve hub.

NOTE:
The chamfer side Ⓐ of clutch cam No. 1 faces clutch cam No. 2.

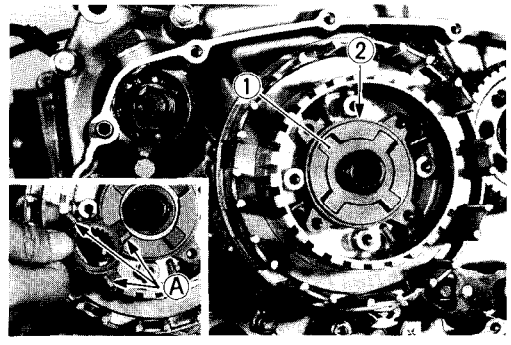

- Tighten the clutch sleeve hub nut to the specified torque by using the special tool.

Clutch sleeve hub nut
Tightening torque : 50 – 70 N·m
(5.0 – 7.0 kg-m, 36.0 – 50.5 lb-ft)

09920-50710 : Clutch sleeve hub holder

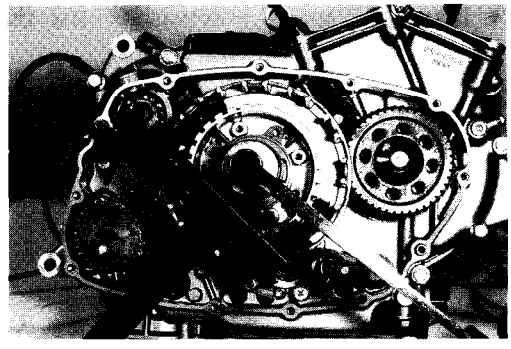

- Install the clutch push rods into the countershaft so that the long push rod touches clutch push piece.
- Install the clutch push piece, bearing and thrust washer in that order.
- Apply engine oil to the bearing.
- Install the wave washer seat ①, wave washer ② and drive plate No. 2 ③ (thicker plate as shown in the figure.)

NOTE:
Install the clutch drive plate and driven plate one by one into the clutch sleeve hub in the prescribed order, drive plate No. 2 first.

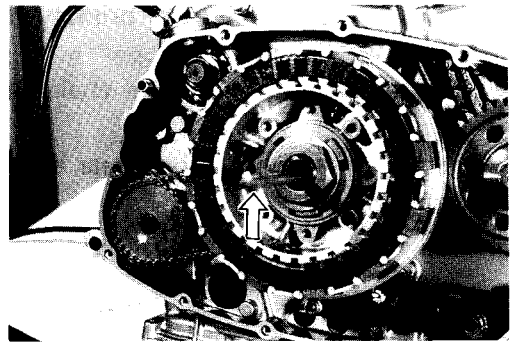

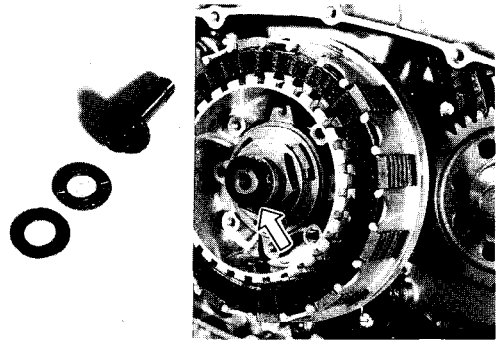

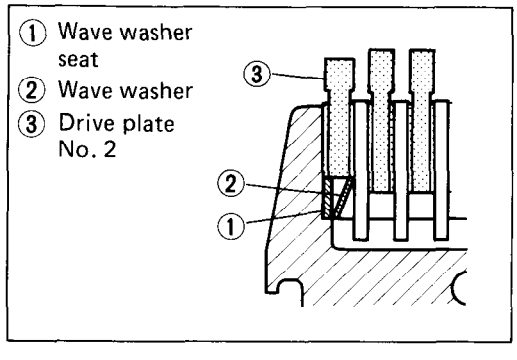

- Install the pressure plate and tighten the clutch spring mounting bolts.

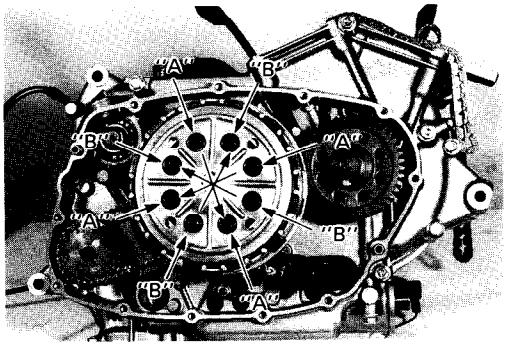

NOTE:
Tighten the clutch spring mounting bolts in the criss-cross manner, tightening them by degrees until they attain a uniform tightness.

Clutch spring mounting bolt
Tightening torque : 11 – 13 N·m
(1.1 – 1.3 kg-m, 8.0 – 9.5 lb-ft)

- Set "A" is used for clutch sleeve hub side.
  Set "B" is used for back torque limiter side.
  "A" : bolt L: 40 mm (1.6 in)
  Spring L: 25.85 mm (1.02 in)
  Spacer L: 24.1 mm (0.95 in)
  "B" : bolt L: 35 mm (1.4 in)
  Spring L: 24.5 mm (0.96 in)
  Spacer L: 24.1 mm (0.95 in)

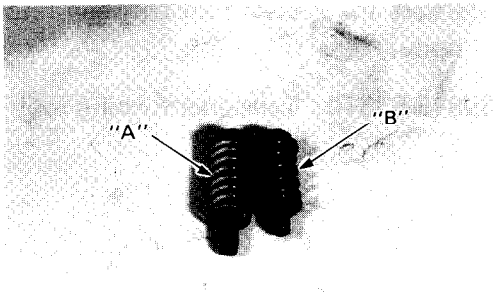

- Fit the new clutch cover gasket and dowel pins.
- Install the clutch cover.

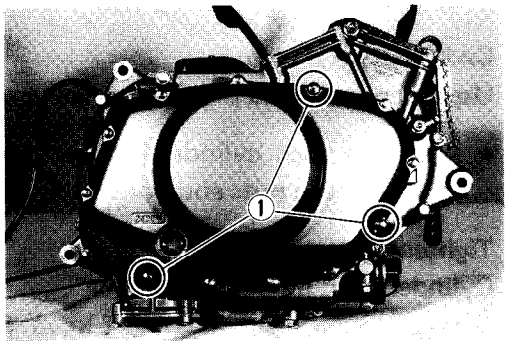

NOTE:
Fit the new gaskets ① to the correct positions as shown in Fig.

CAUTION:
Use a new gasket to prevent oil leakage.

- Apply engine oil lightly to the gasket of the new filter before installation.
- Install the new filter turning it by hand until you feel that the filter gasket contacts the mounting surface. Then tighten it 2 turns using the oil filter wrench.

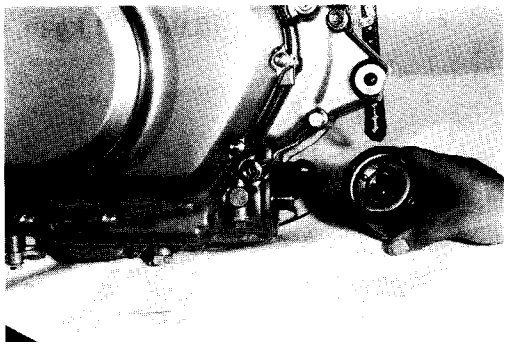

09915-40611 : Oil filter wrench

NOTE:
To properly tighten the filter, use the special tool. Never tighten the filter by hand.

- Install the front and rear cam chain tensioners and chain guides on each cylinder.

Chain tensioner mounting bolt
Tightening torque : 8 – 12 N·m
(0.8 – 1.2 kg-m, 6.0 – 8.5 lb-ft)

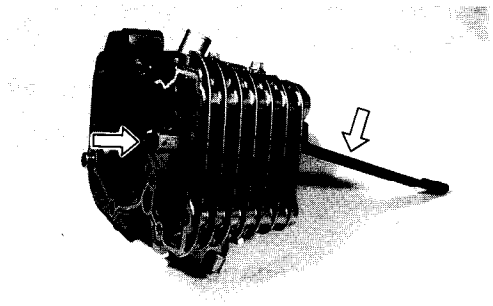

- Compress the chain tensioner spring by releasing ratchet. Insert the special tool between ratchet and chain tensioner body.

09918-53810 : Tensioner locking tool

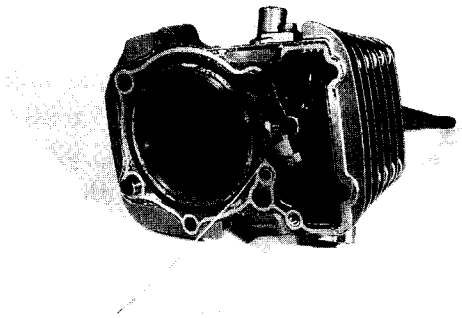

- Fit the dowel pins and new cylinder head gaskets to each cylinder.

CAUTION:
Use a new gasket to prevent gas leakage.

- Assemble each cylinder head and cylinder, and tighten the cylinder head nuts and bolts to the specified torque.

Tightening torque
Cylinder head nuts : 8 – 12 N·m
(0.8 – 1.2 kg-m, 6.0 – 8.5 lb-ft)
Cylinder head bolts : 9 – 11 N·m
(0.9 – 1.1 kg-m, 6.5 – 8.0 lb-ft)

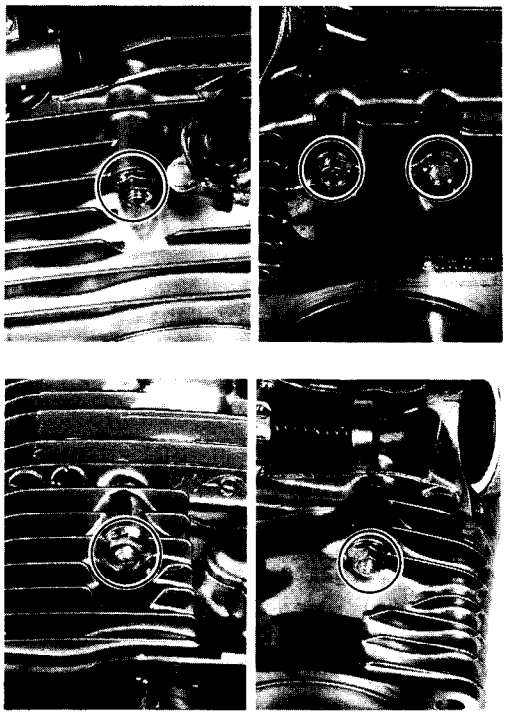

- Install the piston rings in the order of oil ring, 2nd ring and top ring.
- Top ring and 2nd (middle) ring differ in the shape of the ring face, and the face of top ring is chrome-plated whereas that of 2nd ring is not. The color of 2nd ring appears darker than that of the top one.

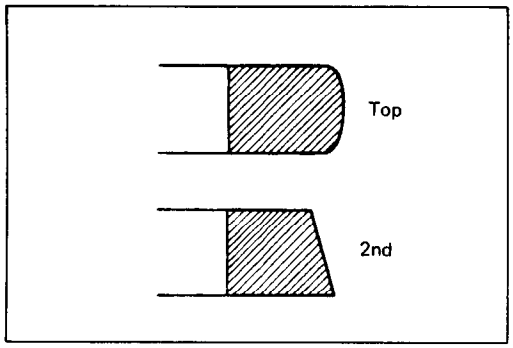

- Top and 2nd (middle) rings have a letter "R" marked on the side. Be sure to bring the marked side to top when fitting them to the piston.

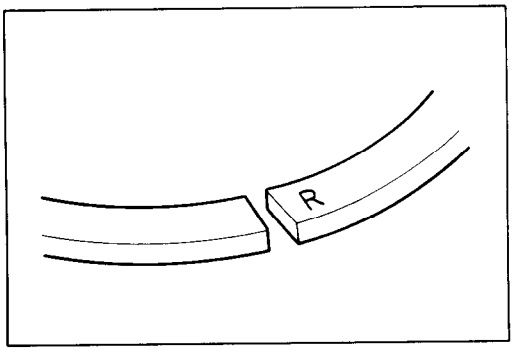

- The first member to go into the ring groove is spacer ①. After placing the spacer, fit the two side rails ②. Side designations, top and bottom, are not applied to the spacer and side rails: you can position each either way.

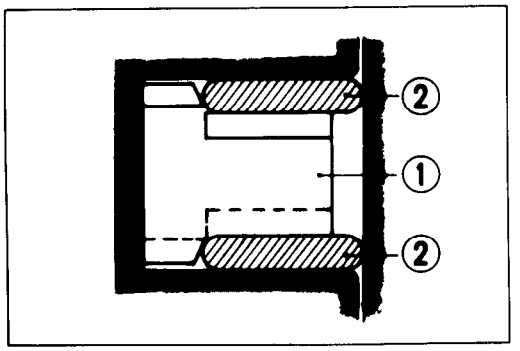

- Position the gaps of the three rings as shown. Before inserting each piston into the cylinder, check that the gaps are so located.

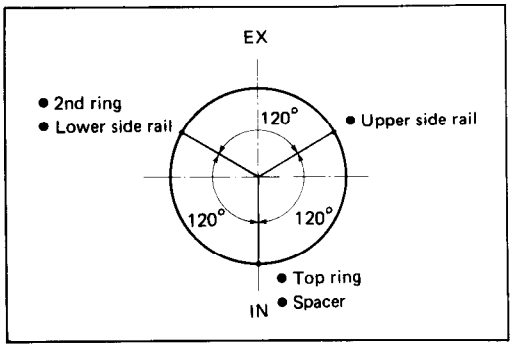

- Rub a small quantity of SUZUKI MOLY PASTE onto the piston pin.

99000-25140 : SUZUKI MOLY PASTE

- Place a clean rag over the cylinder base to prevent the piston pin circlips from dropping into the crankcase.
- When fitting the piston, turn the triangle mark on the piston head to exhaust side.
- Fit the piston pin circlips with long-nose pliers.

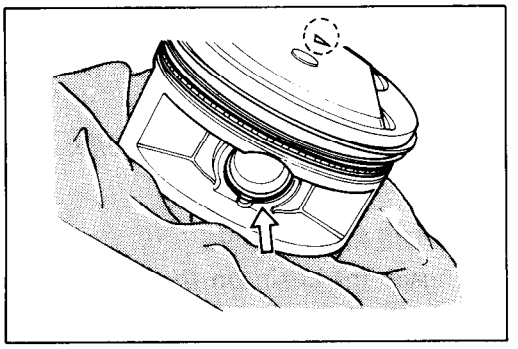

CAUTION:
Use new piston pin circlip to prevent circlip failure which will occur with a bent one.

- Apply engine oil to the sliding surface of the piston.
- Fit the dowel pins ① and new gaskets to the crankcase.

CAUTION:
Use a new gasket to prevent oil leakage.

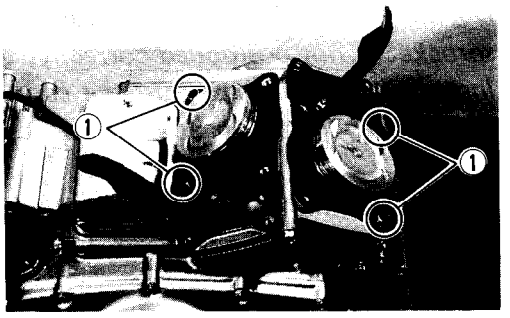

- Hold each piston ring with properly position, and insert each piston into the respective cylinders.
- Tighten the water hose clamp screws.

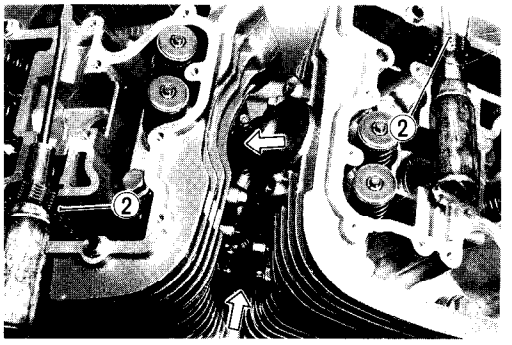

NOTE:
When mounting the cylinders, keep the camshaft drive chains ② taut. The camshaft drive chain must not be caught between cam drive chain sprocket and crankcase when crankshaft is rotated.
There is a holder for the bottom end of the cam chain guide cast in the crankcase. Be sure that the cam chain guide is inserted properly. (Refer to page 3-59.)

- Tighten the cylinder head bolts diagonally to the specified torque.

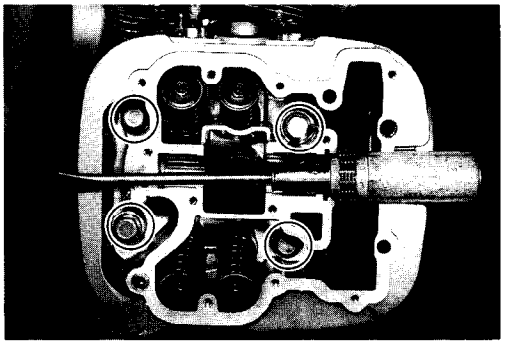

Cylinder head bolts
Tightening torque : 35 – 40 N·m
(3.5 – 4.0 kg-m, 25.5 – 29.0 lb-ft)

CAMSHAFT TIMING

- Turn the crankshaft counterclockwise with the box wrench and align "T" line ① on the magneto rotor with the center of generator cover hole keeping the camshaft drive chain pulled upward.

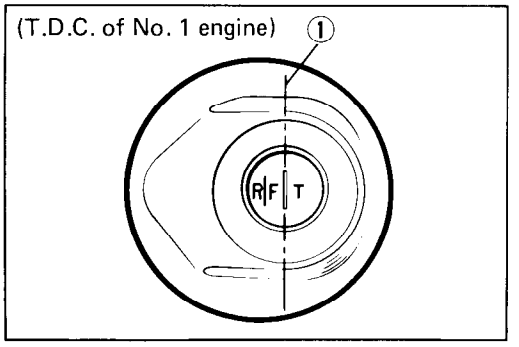

CAUTION:
If crankshaft is turned without drawing the camshaft drive chain upward, the chain will be caught between crankcase and cam chain drive sprocket.

NOTE:
Apply grease on the cam sprocket locating pin and install the pin into the camshaft.

No. 1 (REAR) ENGINE

- Engage the chain on the cam sprocket with the locating pin hole ② at the one o'clock position.

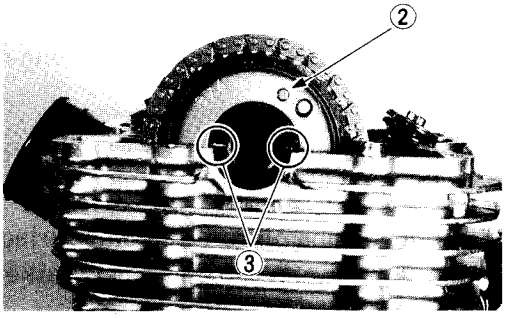

NOTE:
Do not rotate the magneto rotor while doing this. When the sprocket is not positioned correctly, turn the sprocket. When installing the camshaft into the cam sprocket, pay attention not to dislodge the locating pin or it may fall into the crankcase.

- Align the mark ③ on the camshaft so it is parallel with the surface of the cylinder head.

NOTE:
Arrow mark is located to forward.

- Fit the lock washer so that it is covering the locating pin.
- Apply THREAD LOCK SUPER "1303" to the bolts and tighten them.

Tightening torque : 14 – 16 N·m
(1.4 – 1.6 kg-m, 10.0 – 11.5 lb-ft)

99000-32030 : THREAD LOCK SUPER "1303"

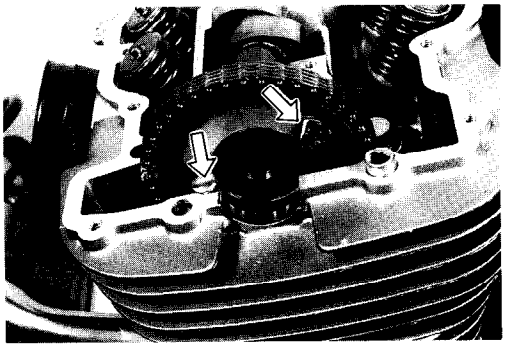

- Bend up the washer tongue positively to lock the bolts.
- Remove the cam chain tensioner locking tools.

NOTE:
Click sound is heard when the cam chain tensioner is released.

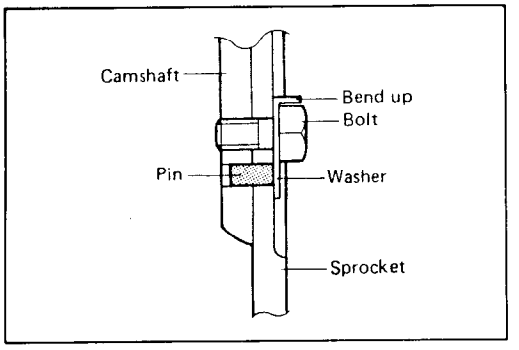

- Apply SUZUKI MOLY PASTE to the camshaft journals and cam faces.

99000-25140 : SUZUKI MOLY PASTE

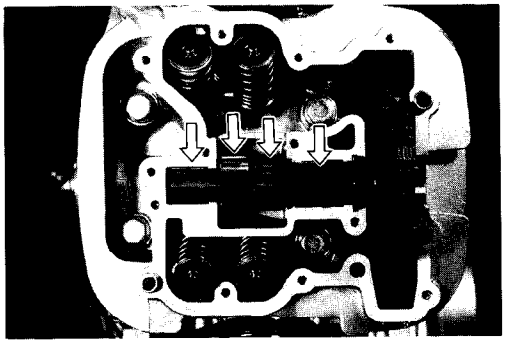

No. 2 (FRONT) ENGINE

- At this position, engage the chain on the cam sprocket with the locating pin hole at the nine half o'clock position.

NOTE:
Do not rotate the magneto rotor while doing this. When the sprocket is not positioned correctly, turn the sprocket. When installing the camshaft into the cam sprocket, pay attention not to dislodge the locating pin or it may fall into the crankcase.

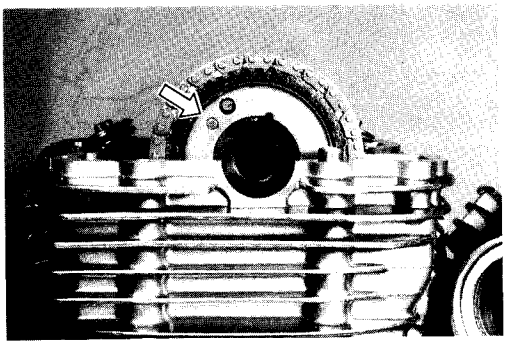

- Other procedures are the same manner of No. 1 (REAR) engine.

CAM SHAFT TIMING

- Turn the crankshaft so that the No. 1 (REAR) engine position is positioned at T.D.C.

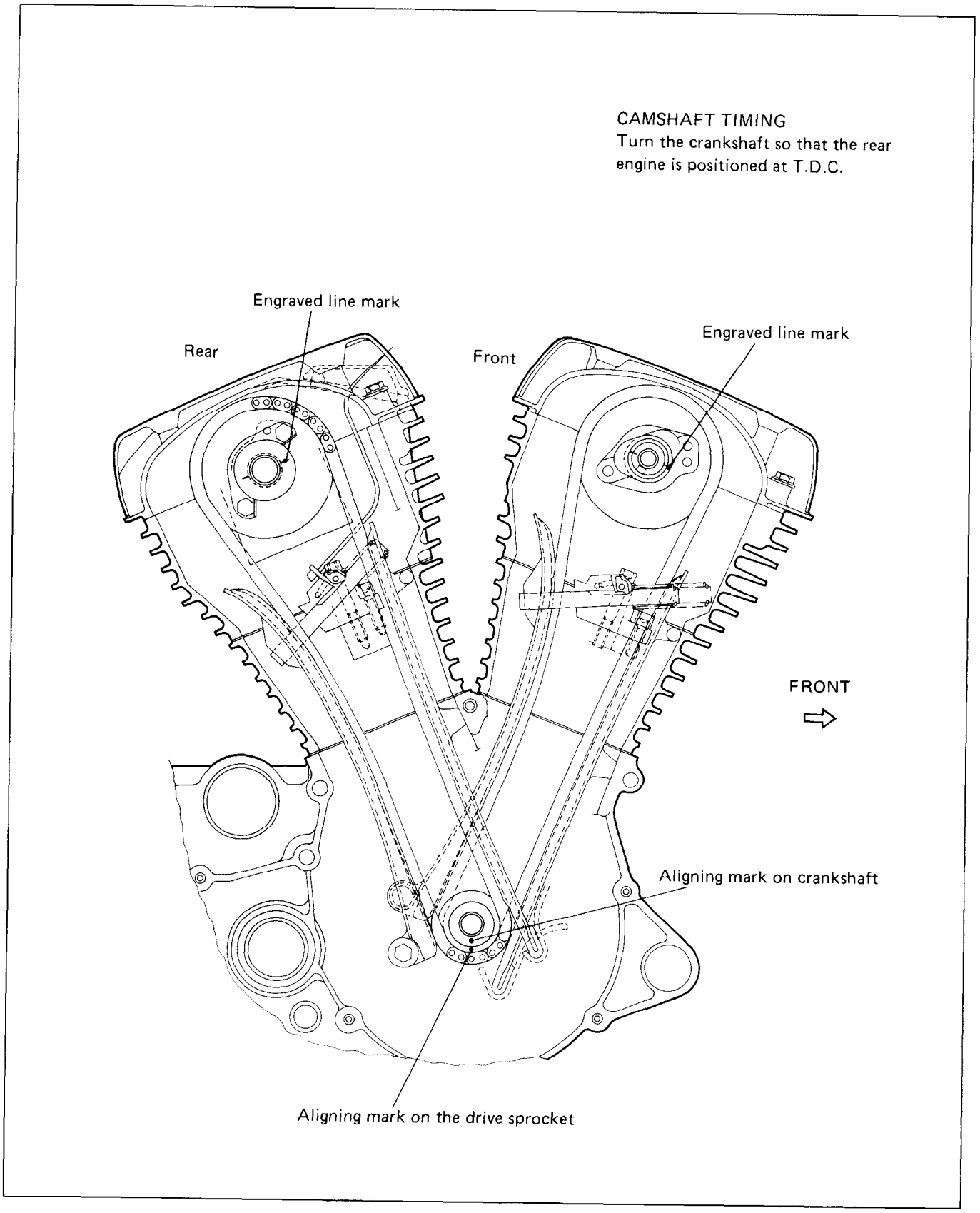

- Apply SUZUKI MOLY PASTE to the rocker arms and shafts.
- After inserting the shafts, tighten the shafts.

Tightening torque : 25 – 30 N·m
(2.5 – 3.0 kg-m, 18.0 – 21.5 lb-ft)

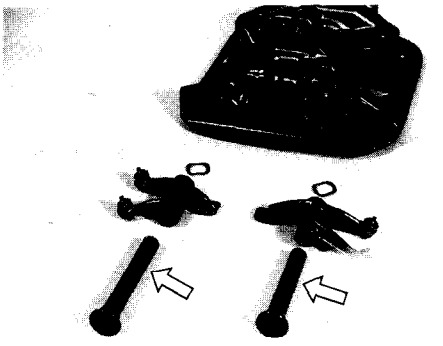

CAUTION:
* **Do not forget the wave washer.**
* **Use a new gasket on the rocker arm shaft to prevent oil leakage.**

- Thoroughly wipe off oil from the mating surfaces of cylinder head and cover.
- Fit the two dowel pins to the cylinder head side.
- Uniformly apply SUZUKI BOND NO. 1216 to the cylinder head surface.

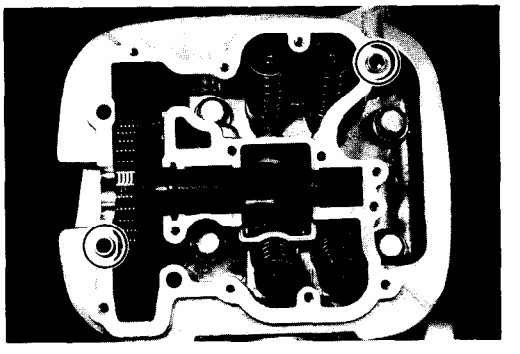

(For U.S.A. model)
99104-31160 : SUZUKI BOND NO. 1216
(For the other models)
99000-31160 : SUZUKI BOND NO. 1216

NOTE:
Do not apply SUZUKI BOND NO. 1216 to the camshaft end cap.

NOTE:
When tightening the cylinder head cover bolts, the piston must be at top dead center on the compression stroke.

NOTE:
Do not forget the plate ① on No. 1 (rear) cylinder head cover.

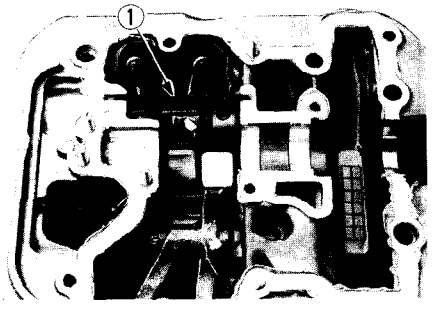

- Lightly tighten the cylinder head cover bolts diagonally, and then if everything is satisfactory, tighten securely with a torque wrench to the specified torque.

Tightening torque
6 mm : 9 – 11 N·m (0.9 – 1.1 kg-m, 6.5 – 8.0 lb-ft)
8 mm : 21 – 25 N·m (2.1 – 2.5 kg-m, 15.0 – 18.0 lb-ft)

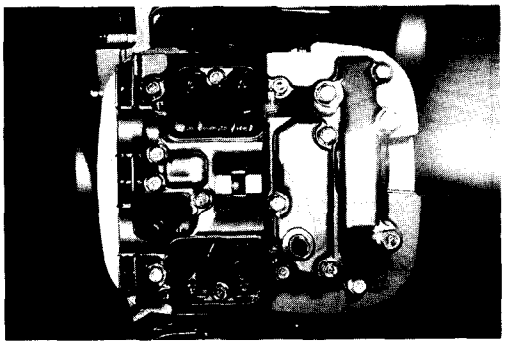

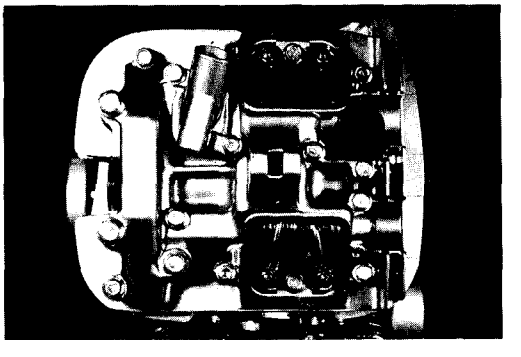

LOCATION OF CYLINDER HEAD BOLT

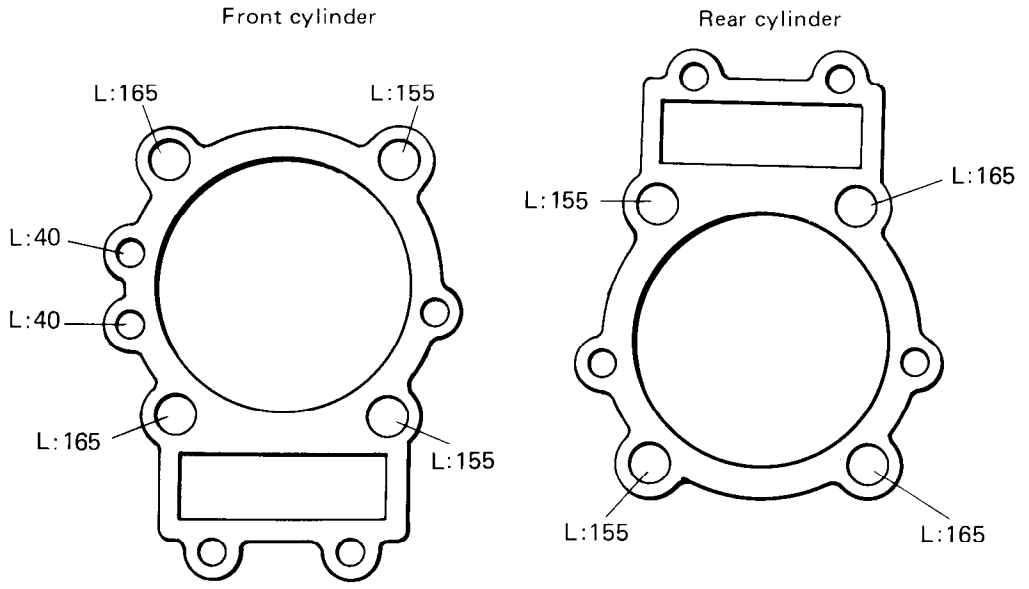

L: Length
Unit: mm

LOCATION OF CYLINDER HEAD COVER BOLT

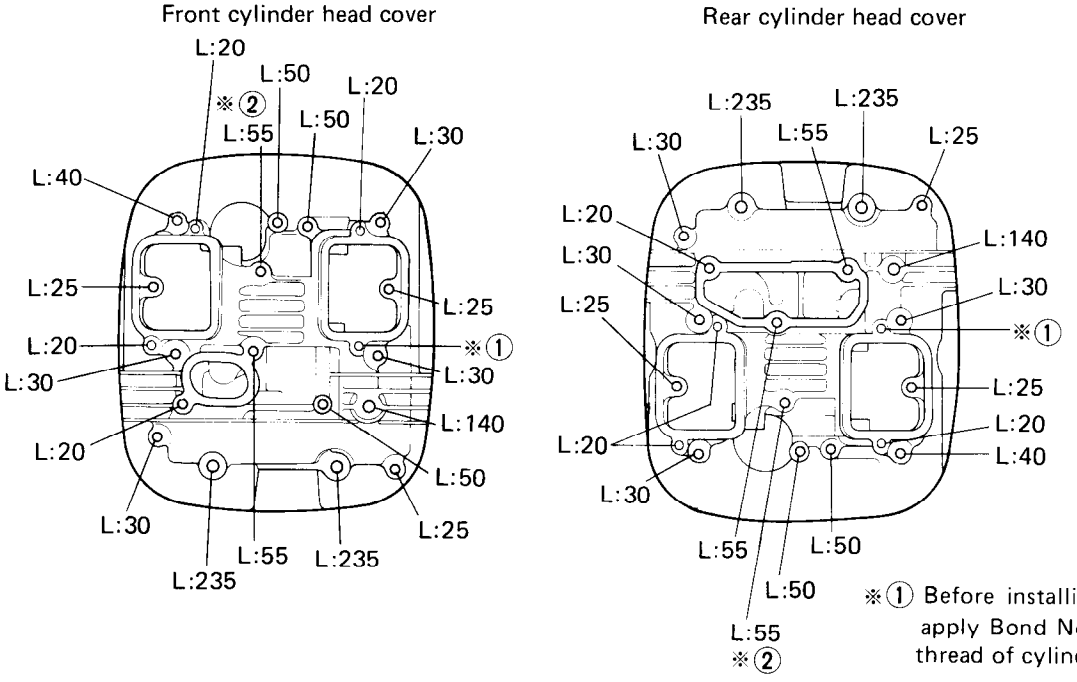

※① Before installing the stud bolt apply Bond No. 1216 to the thread of cylinder head cover side.

※② Apply Bond No. 1215 to the thread of bolt.

L : Length Unit : mm

VALVE CLEARANCE

- Check and adjust the valve clearance. (Refer to page 2-5 for procedures.)

INTAKE PIPE

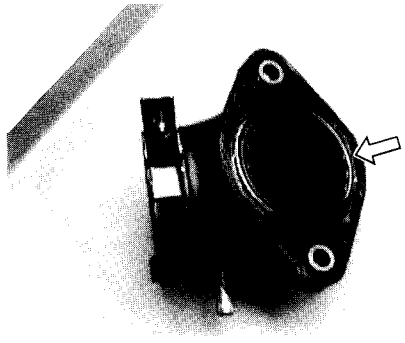

CAUTION:

When replacing the intake pipe, use a new O-ring to prevent sucking air from the joint.

- Coat the O-ring with grease.

VALVE INSPECTION CAP AND CAM TIMING INSPECTION CAP

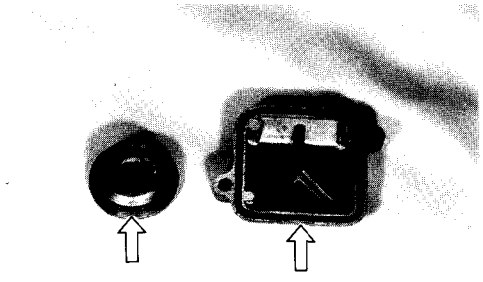

- Before installing the valve inspection caps and cam timing inspection cap, coat the respective O-rings with grease.

CAUTION:

Replace the respective O-rings with new ones.

SHAFT DRIVE

CONTENTS

SHAFT DRIVE

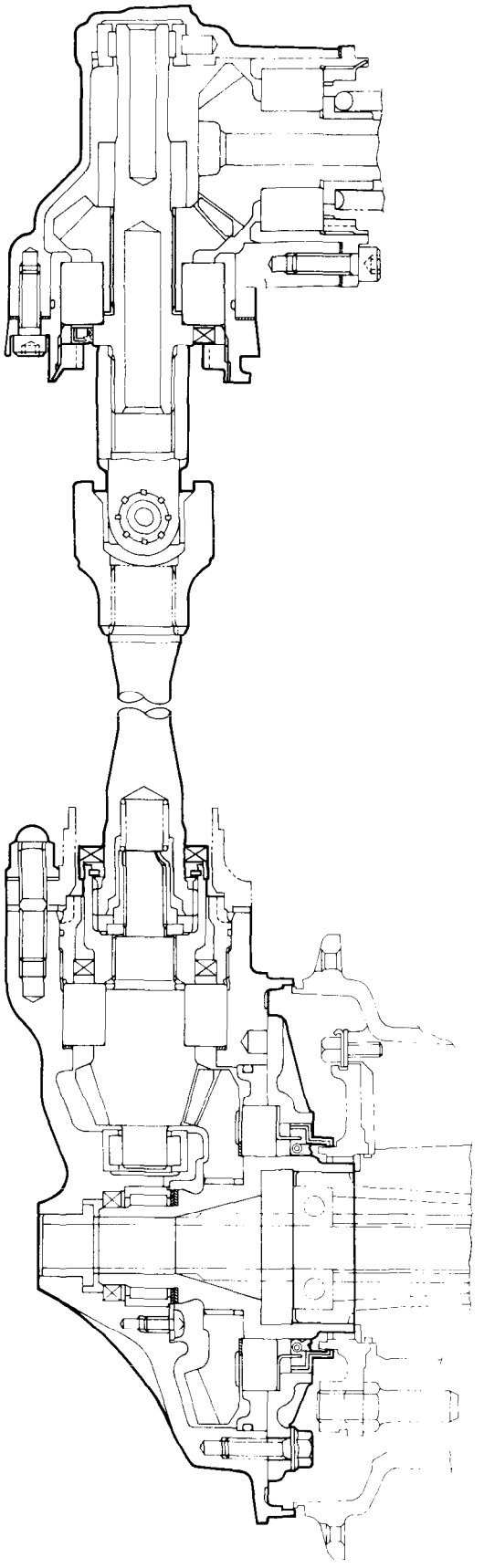

SECONDARY BEVEL GEARS CONSTRUCTION

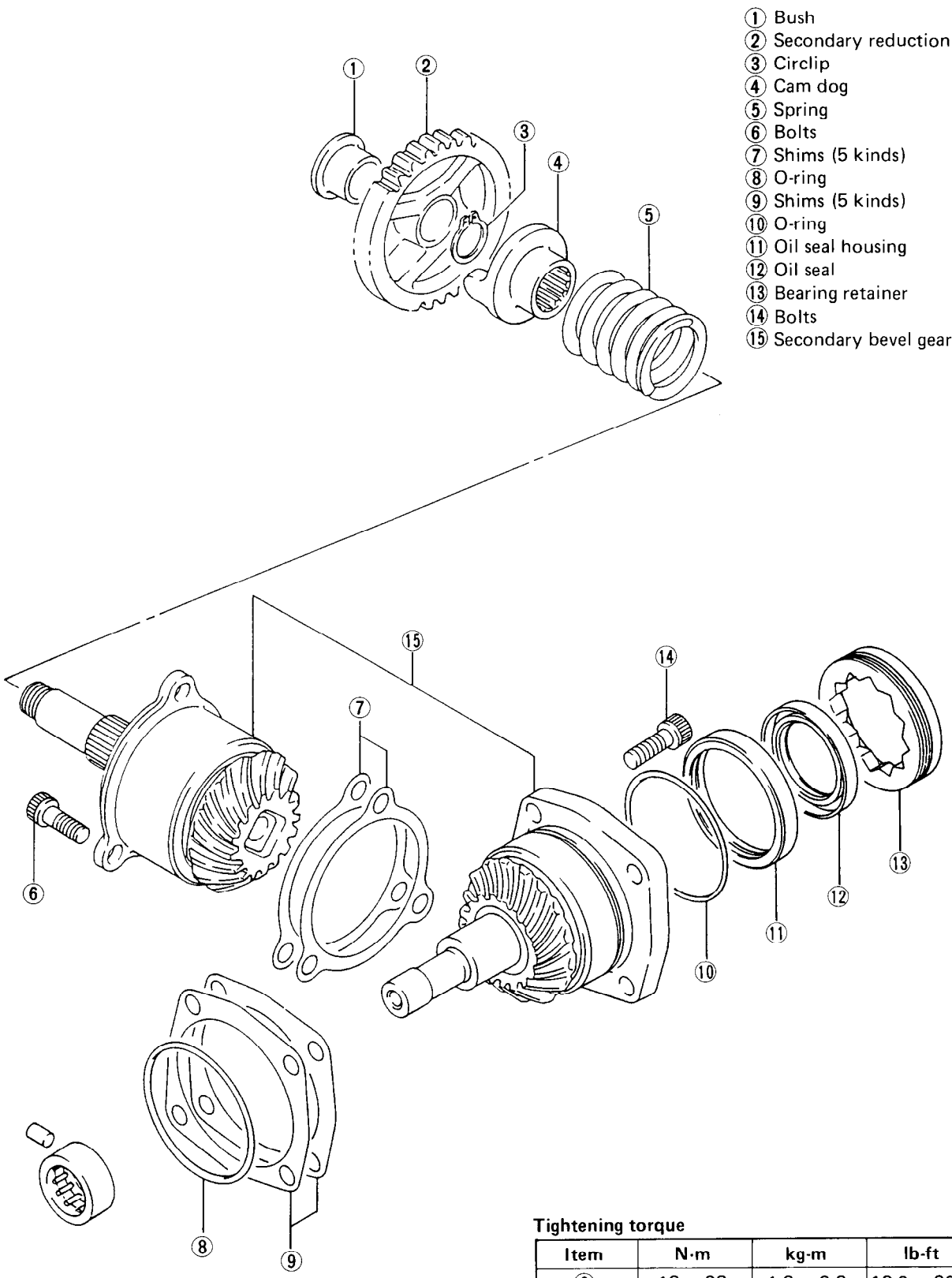

Tightening torque

Item	N·m	kg·m	lb-ft
⑥	18 – 28	1.8 – 2.8	13.0 – 20.0
⑭	18 – 28	1.8 – 2.8	13.0 – 20.0
⑬	90 – 120	9.0 – 12.0	65.0 – 87.0

REMOVAL AND DISASSEMBLY

SECONDARY DRIVE BEVEL GEAR

- Remove the engine. (See page 3-3.)
- Remove the secondary drive bevel gear assembly. (See page 3-16.)
- Compress the damper spring with a vice, and remove the circlip with the special tool.

09900-06107 : Snap ring pliers

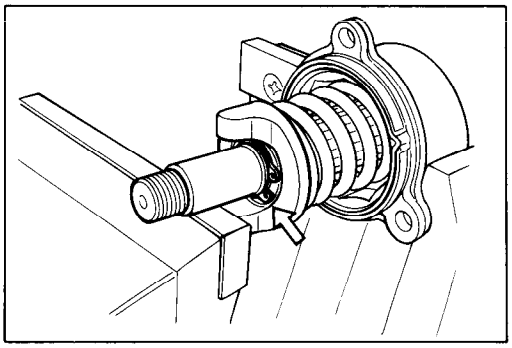

- Remove the cam dog ① and damper spring ②.

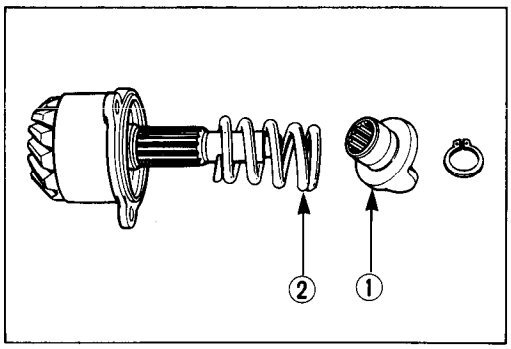

SECONDARY DRIVEN BEVEL GEAR

- Remove the secondary driven bevel gear assembly. (See page 3-15.)
- Remove the bearing retainer with the special tool.

09921-21820 : Bearing retainer wrench

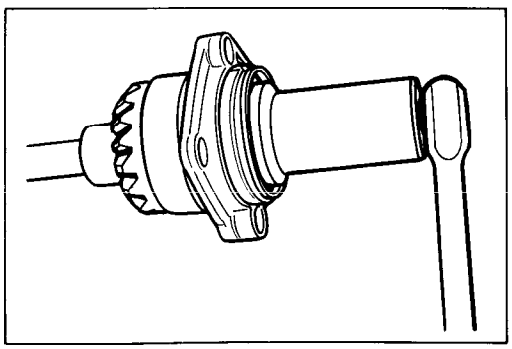

- Remove the oil seal ③, oil seal housing ④ and O-ring ⑤.

CAUTION:
The removed oil seal and O-ring should be replaced with new ones.

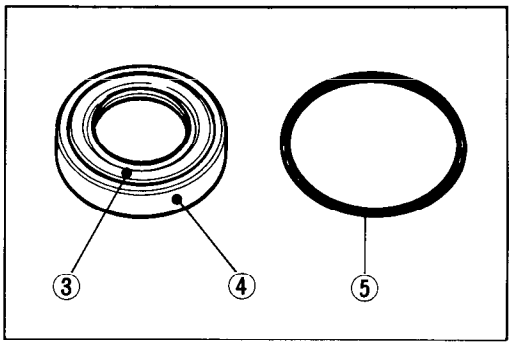

INSPECTION

Inspect the removed parts for the following abnormalities.

* The drive and driven bevel gears must be inspected thoroughly for excessive wear or damage. It is important that both gears be in good condition to maintain proper tooth contact.
* Abnormal noise of bearings
* Bearing damage or wear.

REASSEMBLY

Reassemble the secondary bevel gears in the reverse order of disassembly and also carry out the following steps:

NOTE:
Before reassembly, thoroughly clean all parts in cleaning solvent.

- Apply grease to the lip of oil seal and O-ring.

(For U.S.A. model)
99000-25030 : SUZUKI SUPER GREASE "A"
(For the other models)
99000-25010 : SUZUKI SUPER GREASE "A"

CAUTION:
Always use a new oil seal and O-ring.

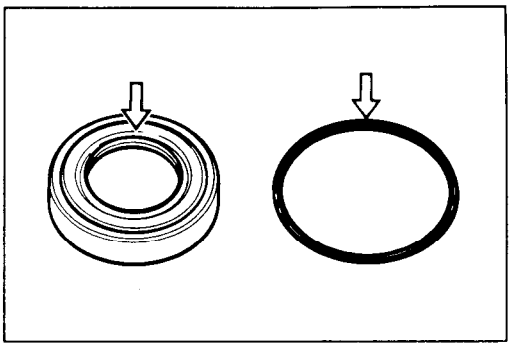

- Tighten the bearing retainer to the specified torque.

Tightening torque : 90 – 120 N·m
(9.0 – 12.0 kg-m, 65.0 – 87.0 lb-ft)

09921-21820 : Bearing retainer wrench

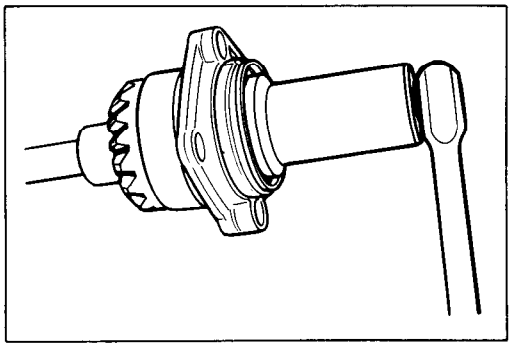

SECONDARY GEARS SHIM ADJUSTMENT

BACKLASH

- Install the secondary drive bevel gear assembly and removed shims, and tighten the three bolts ① to the specified torque.

Tightening torque : 18 – 28 N·m
(1.8 – 2.8 kg-m, 13.0 – 20.0 lb-ft)

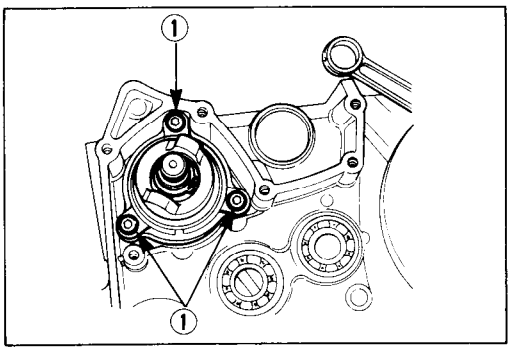

- Install the secondary driven bevel gear assembly and removed shims, and tighten the two bolts ② to the specified torque.

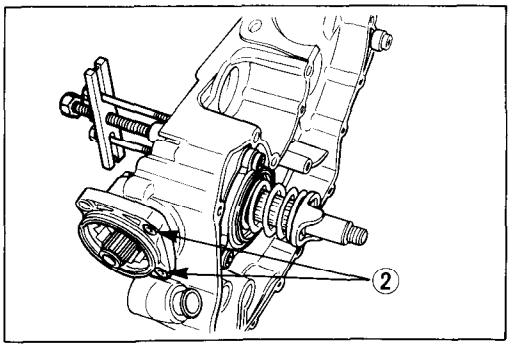

NOTE:
Do not install the O-ring on the driven gear housing at this point. O-ring is installed after backlash and tooth contact are correct.

- Hold the bearing with the special tool or secondary bevel gear case.

09921-21810 : Bearing holder

Tightening torque : 18 – 28 N·m
(1.8 – 2.8 kg-m, 13.0 – 20.0 lb-ft)

- Install the backlash measuring tool on the drive bevel gear cam dog, and set-up a dial gauge as shown in the illustration.

09924-34510 : Backlash measuring tool (27 – 50 mm)

Secondary gear backlash	**0.05 – 0.32 mm (0.002 – 0.013 in)**

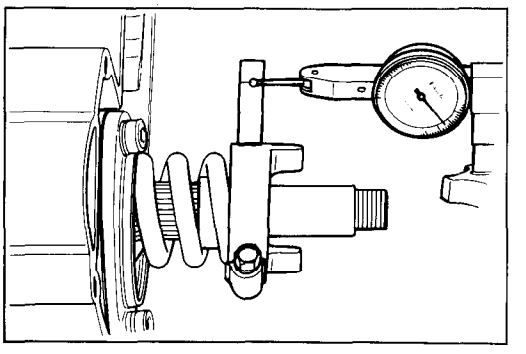

- Adjust the dial gauge so that it touches the backlash measuring tool arm at the mark; hold the driven bevel gear securely, and turn the drive bevel gear in each direction, reading the total backlash on the dial gauge.
- If the backlash is not within specification, the shims must be changed and the backlash should be re-checked until correct.
  Refer to the right chart for appropriate changes.

Backlash	Shim adjustment
Under 0.05 mm (0.002 in)	Increase shim thickness
0.05 – 0.32 mm (0.002 – 0.013 in)	Correct
Over 0.32 mm (0.013 in)	Decrease shim thickness

NOTE:
When changing the shims, measure the thickness of old shims. Using the thickness of the old shims as a guide, adjust the backlash by referring to the right chart.

List of shims Ⓐ (Refer to page 4-7)

Part No.	Shim thickness
24945 - 05A00 - 0A0	0.30 mm
24945 - 05A00 - 0B0	0.35 mm
24945 - 05A00 - 0C0	0.40 mm
24945 - 05A00 - 0D0	0.50 mm
24945 - 05A00 - 0E0	0.60 mm

TOOTH CONTACT

- After bringing the backlash within specification by changing the secondary driven bevel gear shims, it will be necessary to check tooth contact.
- Remove the drive bevel gear assembly from the crankcase.
- Clean and degrease the secondary drive bevel gear teeth, and apply a coating of machinist's layout dye or paste to several teeth.
- Reinstall the secondary drive bevel gear assembly, with correct shim, onto the secondary gear housing.
- Rotate the secondary driven bevel gear several turns in both directions.
- Remove the secondary drive bevel gear from the crankcase, and observe the tooth contact pattern made in the dye or paste.
- Compare the tooth contact pattern to the examples as shown in ①, ② and ③.
- If tooth contact is found to be correct, go to the Final Assembly (See page 3-45).
- If tooth contact is found to be incorrect, the shims of the secondary drive bevel gear and secondary driven bevel gear must be changed, tooth contact should be re-checked until correct.

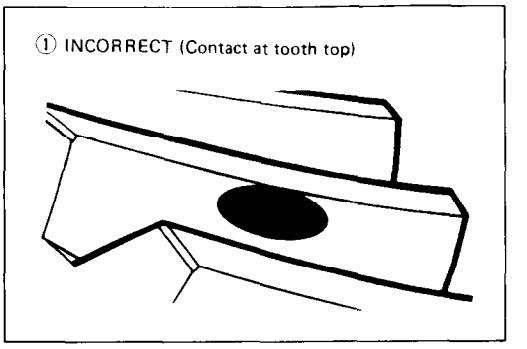

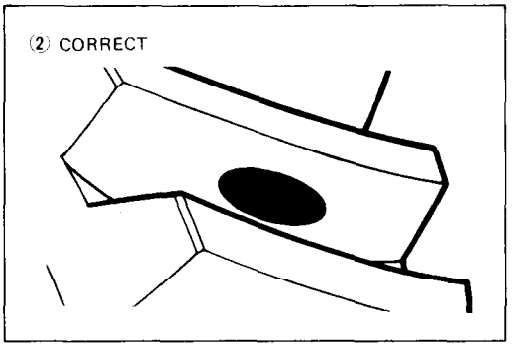

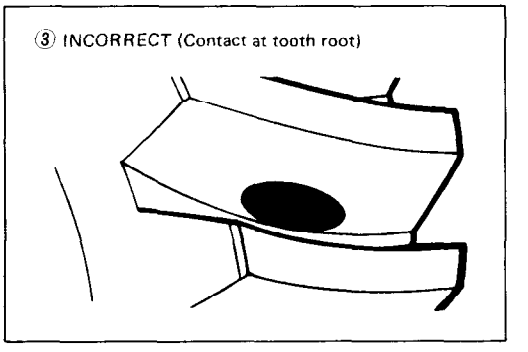

CAUTION:

After the tooth contact adjustment has been performed, the backlash must be re-checked, because it may have changed. Refer to the backlash check sub-section, and readjust until tooth contact and backlash are both within the specifications. If you can not maintain the correct tooth contact when adjusting backlash, both the drive and driven bevel gears should be replaced.

Tooth contact	Shim adjustment
Contact at tooth top ①	Decrease thickness of shims Ⓐ or Ⓑ
Contact at tooth root ③	Increase thickness of shims Ⓐ or Ⓑ

List of shim Ⓐ

Part No.	Shim thickness
24945 - 05A00 - 0A0	0.30 mm
24945 - 05A00 - 0B0	0.35 mm
24945 - 05A00 - 0C0	0.40 mm
24945 - 05A00 - 0D0	0.50 mm
24945 - 05A00 - 0E0	0.60 mm

List of shims Ⓑ

Part No.	Shim thickness
24935 - 38A00 - 030	0.30 mm
24935 - 38A00 - 035	0.35 mm
24935 - 38A00 - 040	0.40 mm
24935 - 38A00 - 050	0.50 mm
24935 - 38A00 - 060	0.60 mm

FINAL ASSEMBLY AND REMOUNTING

- See pages 3-45, 3-48 and 3-49.

REASSEMBLY INFORMATION

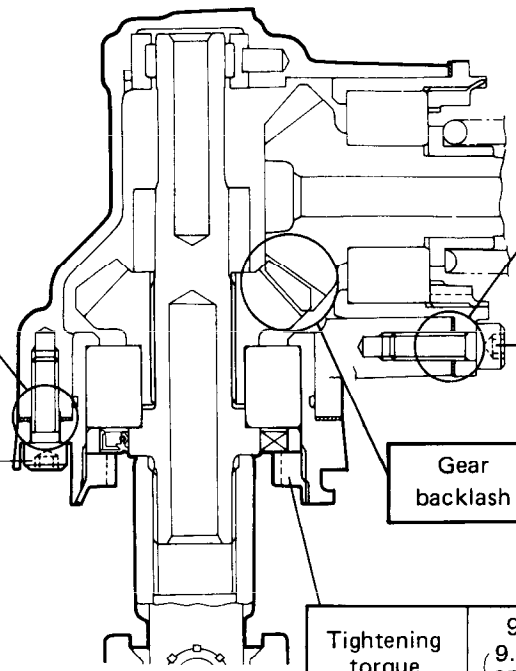

List of shims Ⓐ

Part No.	Shim thickness
24945-05A00-0A0	0.30mm
24945-05A00-0B0	0.35mm
24945-05A00-0C0	0.40mm
24945-05A00-0D0	0.50mm
24945-05A00-0E0	0.60mm

List of shims Ⓑ

Part No.	Shim thickness
24935-38A00-030	0.30mm
24935-38A00-035	0.35mm
24935-38A00-040	0.40mm
24935-38A00-050	0.50mm
24935-38A00-060	0.60mm

Tightening torque	18-28 N·m (1.8-2.8 kg-m / 13.0-20.0 lb-ft)

Tightening torque	18-28 N·m (1.8-2.8 kg-m / 13.0-20.0 lb-ft)

Gear backlash	0.05-0.32 mm (0.002-0.013 in)

Tightening torque	90-120 N·m (9.0-12.0 kg-m / 65.0-87.0 lb-ft)

FINAL BEVEL GEARS CONSTRUCTION

Tightening torque

Item	N·m	kg-m	lb-ft
②	20 – 26	2.0 – 2.6	14.5 – 19.0
⑨	8 – 10	0.8 – 1.0	6.0 – 7.0
⑳	35 – 45	3.5 – 4.5	25.5 – 32.5
㉗	90 – 120	9.0 – 12.0	65.0 – 87.0
㉝	90 – 110	9.0 – 11.0	65.0 – 79.5

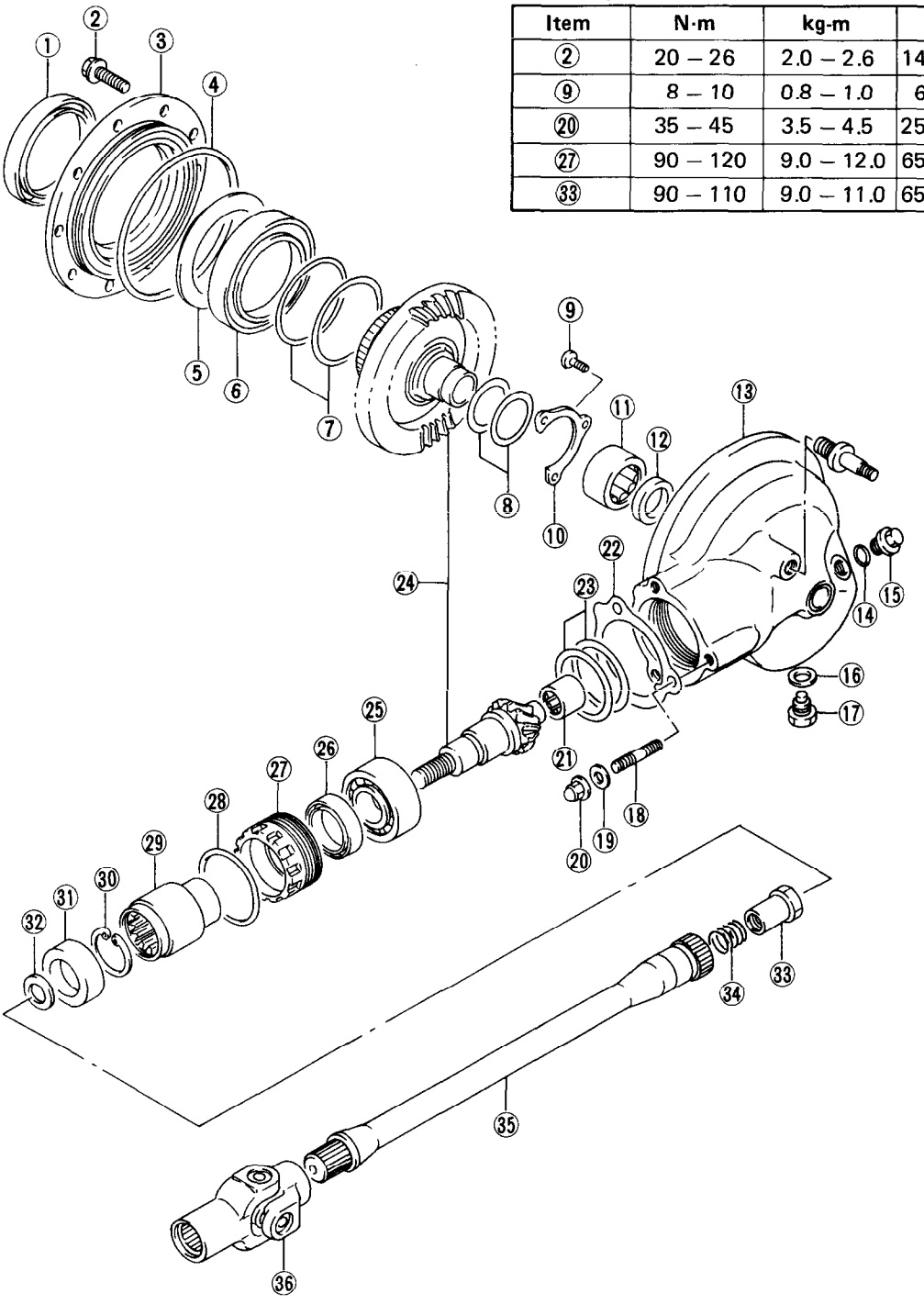

① Oil seal
② Bolts
③ Final gear bearing case
④ O-ring
⑤ Bearing plate
⑥ Bearing
⑦ Shims (4 kinds)
⑧ Shims (8 kinds)
⑨ Screws
⑩ Bearing retainer plate
⑪ Needle bearing
⑫ Oil seal
⑬ Final gear case
⑭ O-ring
⑮ Oil filler plug
⑯ Gasket
⑰ Oil drain plug
⑱ Stud bolts
⑲ Lock washer
⑳ Nuts
㉑ Pilot bearing
㉒ Bearing retainer stopper plate (2 kinds)
㉓ Shims (5 kinds)
㉔ Final bevel gear set
㉕ Bearing
㉖ Oil seal
㉗ Bearing retainer
㉘ O-ring
㉙ Final drive coupling
㉚ Circlip
㉛ Oil seal
㉜ Washer
㉝ Nut
㉞ Spring
㉟ Propeller shaft
㊱ Propeller shaft coupling

FINAL GEAR CASE BREATHER CIRCUIT

AIR AND GEAR OIL FLOW IN FINAL GEAR CASE BREATHER CIRCUIT

BREATHER CIRCUIT

Final gear case breather circuit (passage) consists of the final gear case and final gear bearing case. Air/oil mixed gas flows through the following routes.

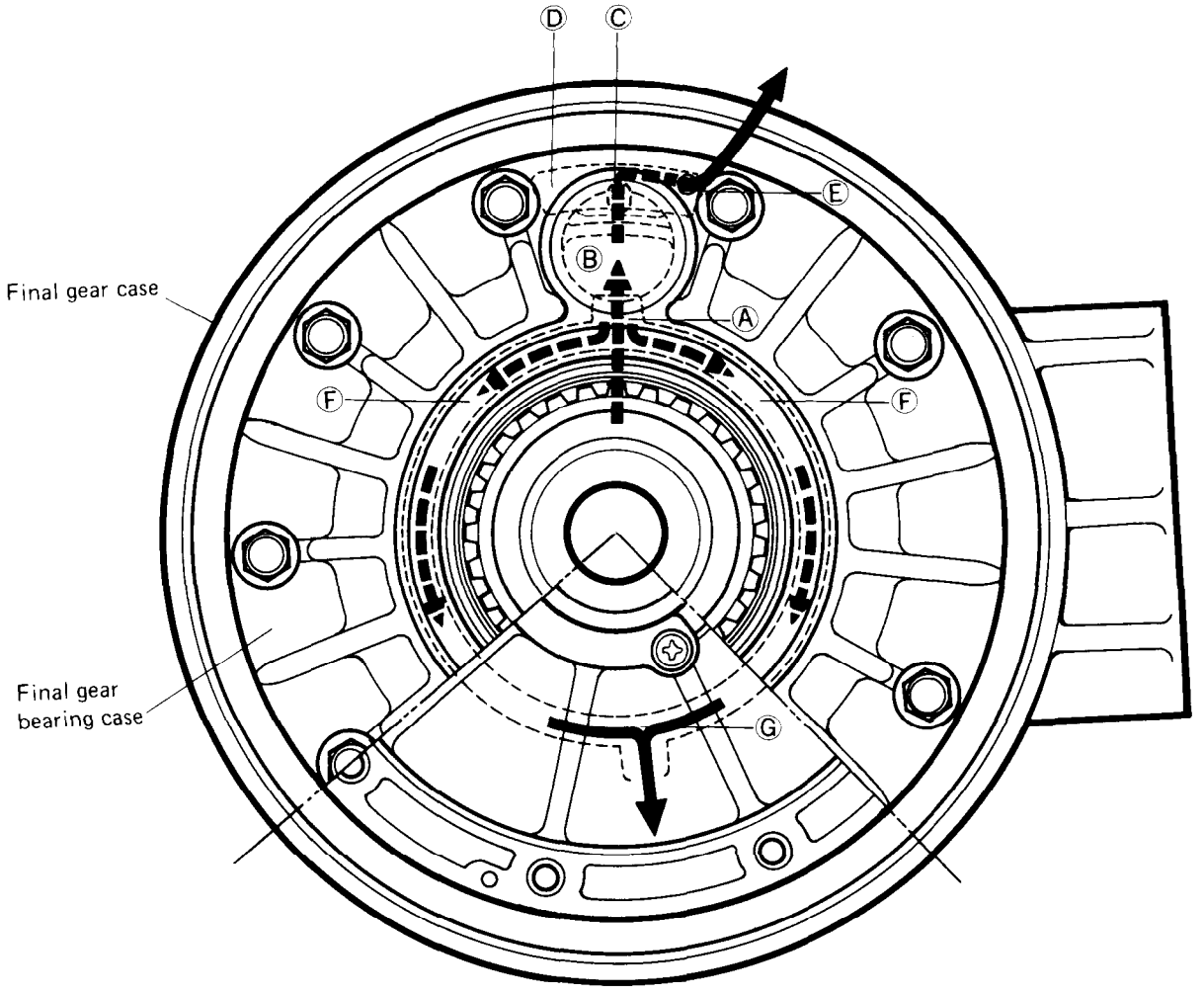

AIR PASSAGE

When the air pressure in the final gear case becomes higher than atmospheric pressure, both air and oil flow in the following passages.

- Air flows from hole Ⓐ to chamber Ⓑ and passes through the hole Ⓒ and chamber Ⓓ to the atmosphere through the breather hole Ⓔ.

OIL PASSAGE

When the final gear case pressure rises abruptly or when the gear case oil level changes during cornering, the gear oil may sometime flow out into the air passage.

- In this case, the gear oil which has traveled into hole Ⓐ goes into chamber Ⓑ, where the oil is separated from the air.
- The air flows through the hole Ⓒ and chamber Ⓓ, and goes out through the breather hole Ⓔ.
- The gear oil, however, flows through the passage Ⓕ and returns to the gear case from gear oil return port Ⓖ.

REMOVAL AND DISASSEMBLY

FINAL GEAR CASE

- Place an oil pan under the final gear case and remove the drain plug to drain out gear oil.
- Remove the rear wheel. (See page 8-26.)

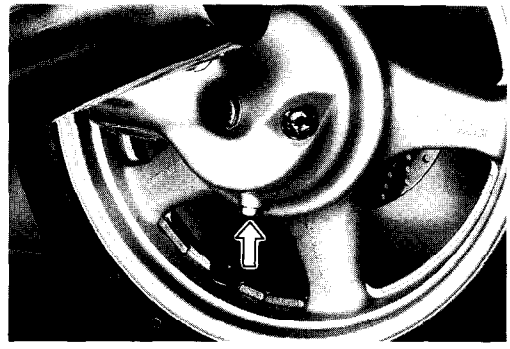

- Remove the final gear case from the swingarm by removing the three nuts and shock absorber mounting nut.

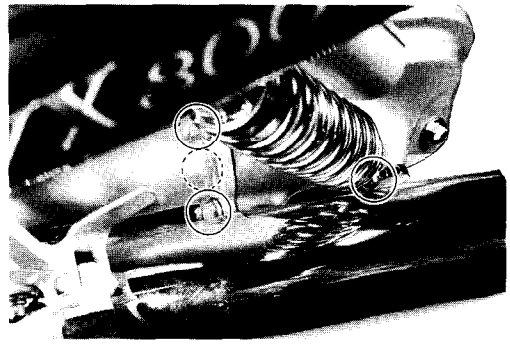

PROPELLER SHAFT

- Remove the oil seal.

CAUTION:

The removed oil seal should be replaced with a new one.

- Remove the circlip with the special tool and take off the propeller shaft and spring.

09900-06108 : Snap ring pliers

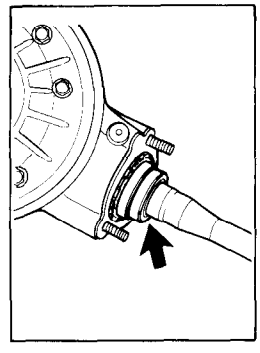

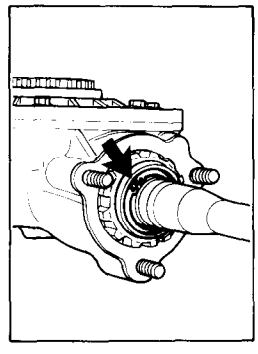

DRIVEN BEVEL GEAR

- Remove the final gear bearing case bolts.

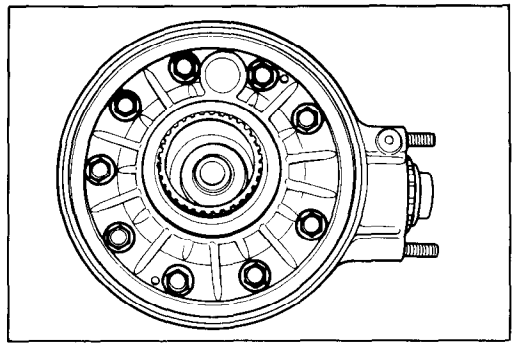

- To remove the final gear bearing case from the final gear case, use two 5 mm screws.

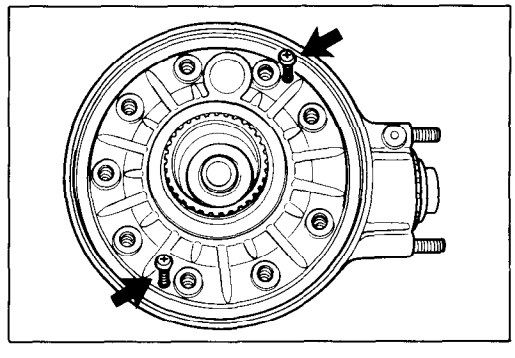

- Remove the oil seal from the final gear bearing case with the special tool.

09913-50121 : Oil seal remover

CAUTION:
The removed oil seal should be replaced with a new one.

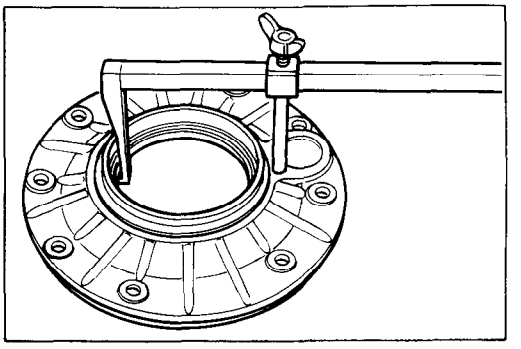

- Remove the bearing plate along with the bearing by using the special tools.

09924-74570 : Final driven gear bearing installer and remover Ⓐ
09924-74510 : Handle Ⓑ
09924-74520 : Oil seal installer and remover Ⓒ

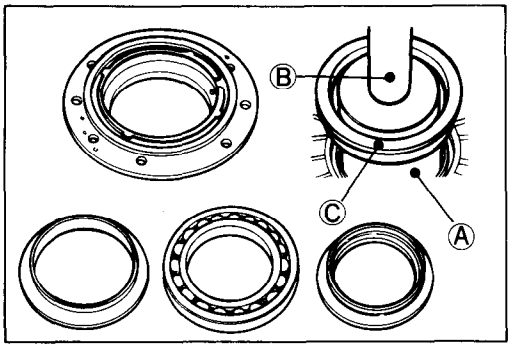

- Remove the final driven bevel gear from the final gear case.
- Remove the shims which are located at both sides of final driven bevel gear.

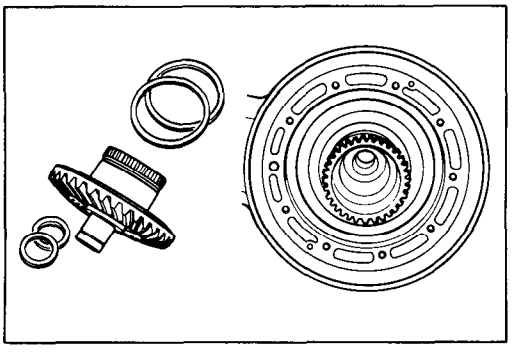

DRIVE BEVEL GEAR

- Loosen the bearing retainer with the special tool.

09924-62410 : Final drive gear bearing retainer wrench

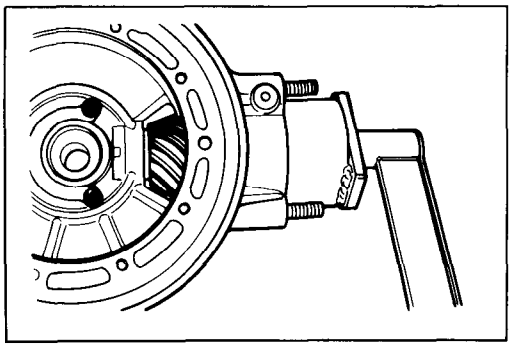

- Remove the drive bevel gear assembly and shims.

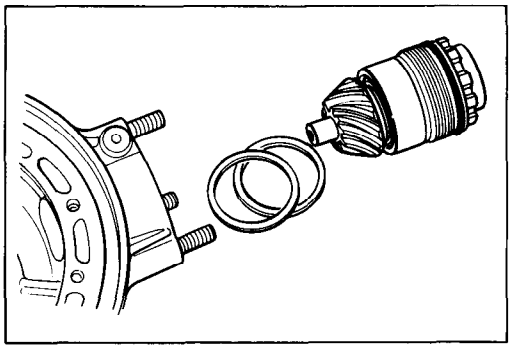

- Remove the drive bevel gear nut with the special tools and remove the coupling and bearing retainer.

09924-62420 : 22 mm long socket wrench
09924-64510 : Final drive gear coupling holder

① Nut
② Washer
③ Coupling
④ Bearing retainer
⑤ Bearing
⑥ Drive bevel gear

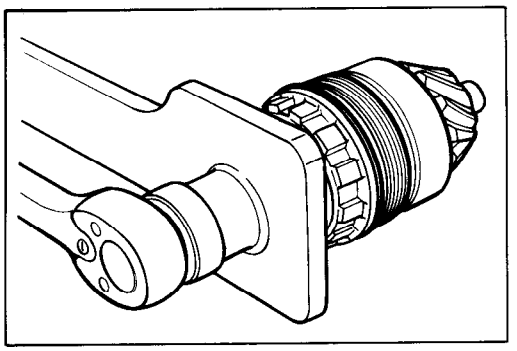

- Remove the bearing ⑤ from the drive bevel gear with the bearing remover.

09941-84510 : Bearing race remover

NOTE:
The removed bearing ⑤ should be replaced with a new one.

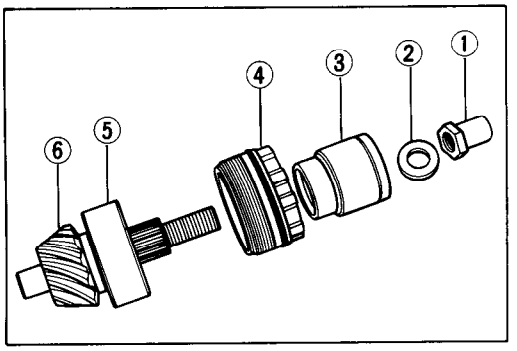

- Remove the oil seal ① and O-ring ②.

CAUTION:
The removed oil seal and O-ring should be replaced with new ones.

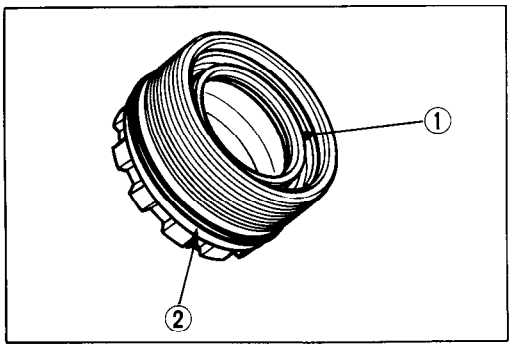

- Remove the bearing retainer by removing the three screws.

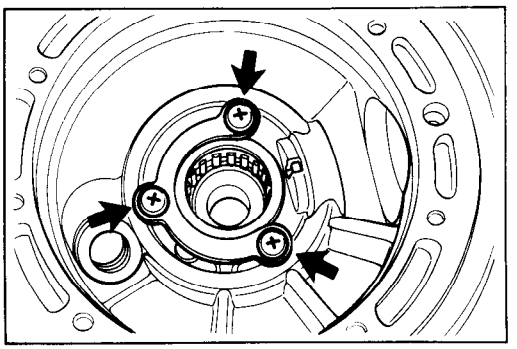

- Remove the needle roller bearing and oil seal from the final case with the special tools.

09941-64510 . Bearing and oil seal remover
09930-30102 : Sliding shaft

CAUTION:
The removed bearing and oil seal should be replaced with new ones.

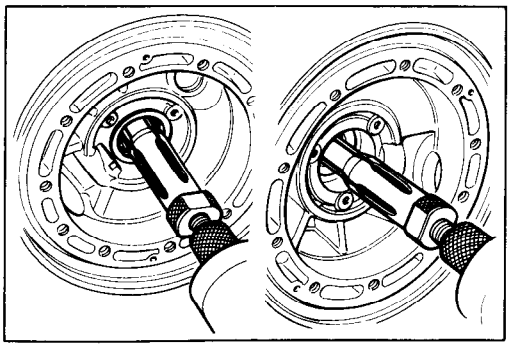

- Remove the needle roller bearing of drive bevel gear side with the special tools.

09930-30102 : Sliding shaft
09923-73210 : Bearing remover

CAUTION:
The removed bearing should be replaced with a new one.

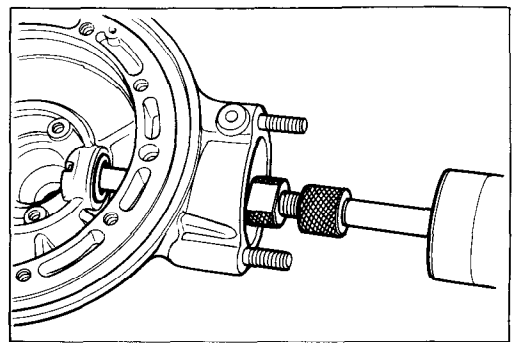

INSPECTION

Inspect the removed parts for the following abnormalities.

* The drive and driven bevel gears must be inspected thoroughly for excessive wear or damage. It is important that both gears be in good condition to maintain proper tooth contact.
* Abnormal noise of bearings
* Bearing damage or wear

REASSEMBLY

Reassemble the final bevel gears in the reverse order of disassembly, and also carry out the following steps:

NOTE:
Before reassembly, thoroughly clean all parts in cleaning solvent.

DRIVE BEVEL GEAR

- Install the bearing ① to the drive bevel gear by using the special tool.
- Install the oil seal ② to the bearing retainer.

09941-74910 : Bearing installer

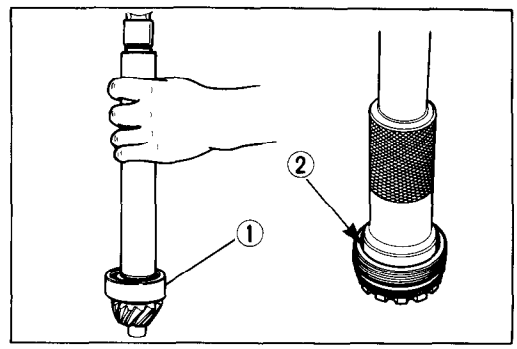

- Apply THREAD LOCK SUPER "1303" to the nut and tighten it with the specified torque by using the special tools.

99000-32030 : THREAD LOCK SUPER "1303"

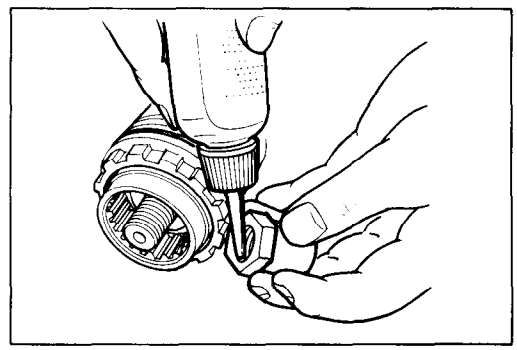

09924-62420 : 22 mm long socket wrench
09924-64510 : Final drive gear coupling holder

Tightening torque : 90 – 110 N·m
(9.0 – 11.0 kg-m, 65.0 – 79.5 lb-ft)

- Bend the collar of the nut over into the notch in the drive bevel gear shaft.

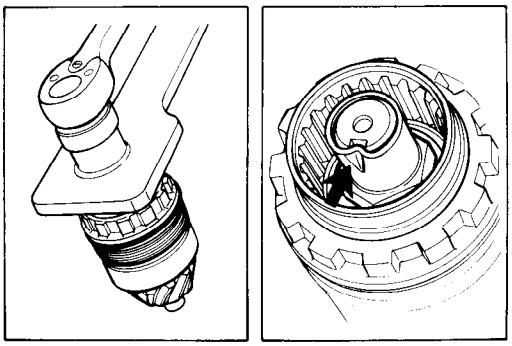

FINAL GEAR CASE AND BEARING CASE

- Install the oil seal into the final gear case with the special tools.

09924-74550 : Bearing installer
09924-74510 : Handle

NOTE:
The lip of oil seal faces driven bevel gear side.

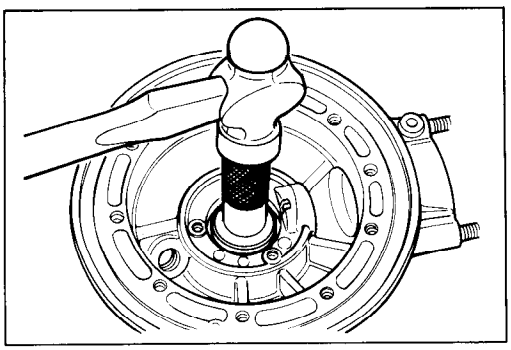

- Install the needle roller bearing into the final gear case with the special tools.

09924-74510 : Handle
09924-74550 : Bearing installer

NOTE:
The bearing case has a stamped mark on its one end, which must face inside.

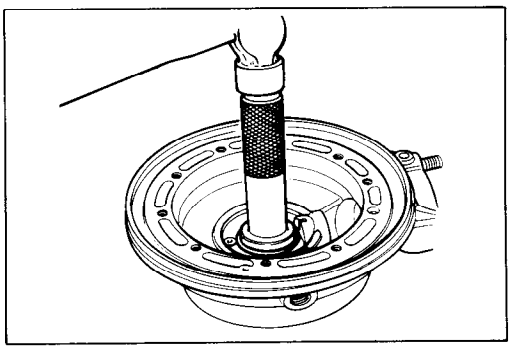

- Install the bearing retainer. Apply THREAD LOCK SUPER "1303" to the screws and tighten them to the specified torque.

99000-32030 : THREAD LOCK SUPER "1303"

Tightening torque : 8 – 10 N·m
(0.8 – 1.0 kg-m, 6.0 – 7.0 lb-ft)

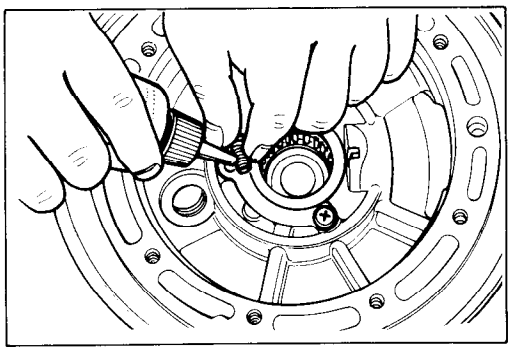

- Install the needle roller bearing for the final drive bevel gear into the final gear case with the special tool.

09913-75820 : Bearing installer

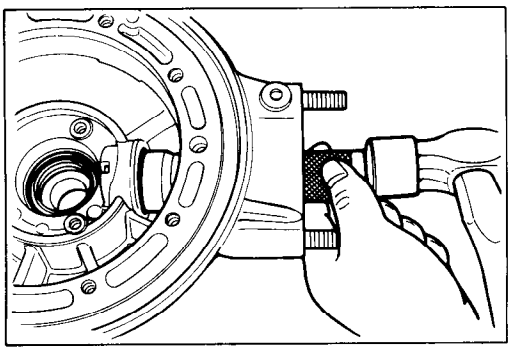

- Install the removed shims and drive bevel gear assembly to the final case.

NOTE:
Do not install the O-ring at this point. O-ring is installed after backlash and tooth contact are correct.

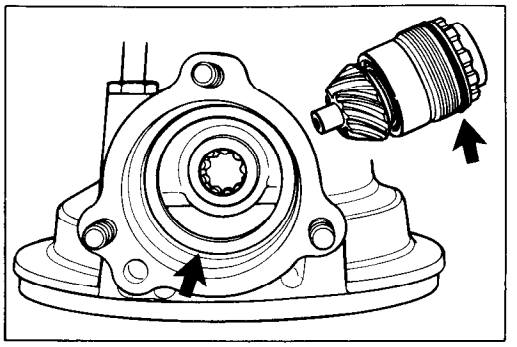

- Tighten the bearing retainer to the specified torque with the special tool.

09924-62410 : Final drive gear bearing retainer wrench

Tightening torque : 90 – 120 N·m
(9.0 – 12.0 kg-m, 65.0 – 87.0 lb-ft)

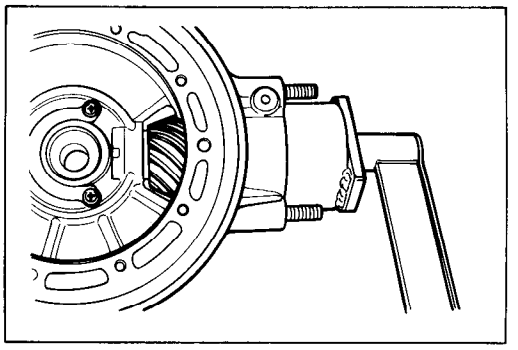

- Install the driven bevel gear shims, ① and ②, removed during disassembly on the needle bearing and driven bevel gear.

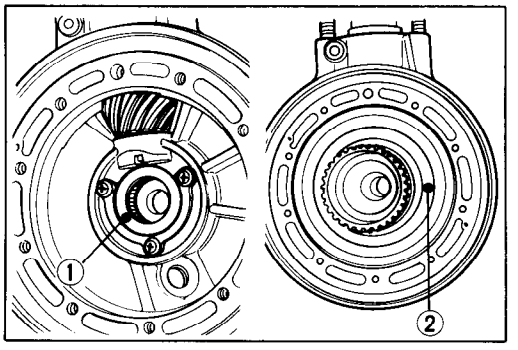

- After installing the bearing plate into the final gear bearing case, install the bearing with the special tools.

09924-74510 : Handle
09924-74520 : Bearing installer

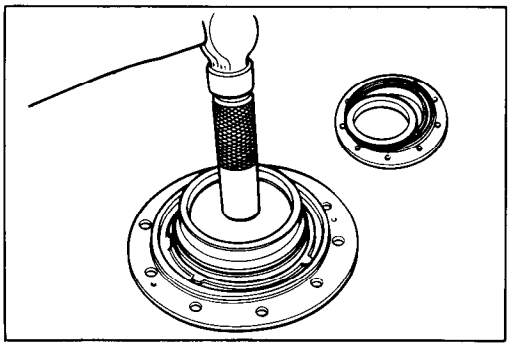

- Install a new oil seal into the final gear bearing case with the special tools.

09924-74510 : Handle
09924-74520 : Bearing installer

- Apply grease to the lip of oil seal.

(For U.S.A. model)
99000-25030 : SUZUKI SUPER GREASE "A"
(For the other models)
99000-25010 : SUZUKI SUPER GREASE "A"

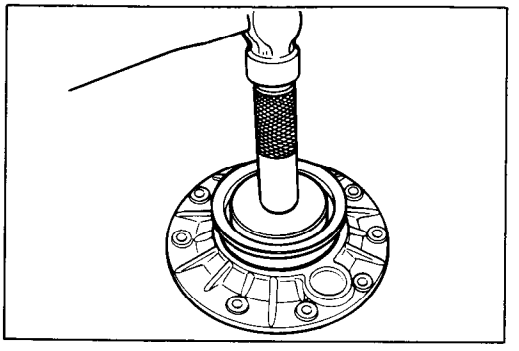

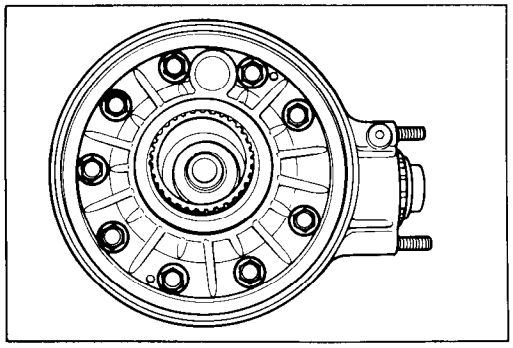

- Place the plastigauge on the final driven bevel gear shim.

09900-22302 : Plastigauge (Not available in U.S.A.)

- Tighten the bearing case bolts to the specified torque.

Tightening torque : 20 – 26 N·m
(2.0 – 2.6 kg-m, 14.5 – 19.0 lb-ft)

NOTE:
Do not rotate the final driven bevel gear when plastigauge is in place.
Do not install the bearing case O-ring at this point. O-ring is installed after backlash and tooth contact are correct.

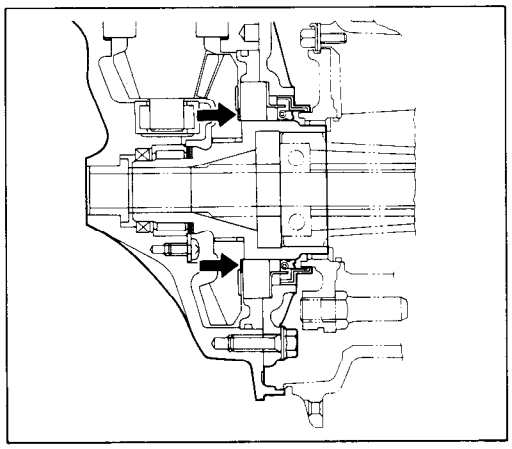

"FINAL GEAR SHIM ADJUSTMENT" is necessary
(See pages 4-16 to 4-18).

FINAL GEAR SHIM ADJUSTMENT

FINAL GEAR BEARING CASE SHIM CLEARANCE

- Remove the final gear bearing case and measure the clearance between the shims and bearing with the compressed plastigauge. If it is not within the specification, the shims must be changed.

Final gear bearing case shim clearance : 0.10 mm
(0.004 in)

09900-22302 : Plastigauge (Not available in U.S.A.)

List of shims Ⓐ (Refer to page 4-21)

Part No.	Shim thickness
27327-34200	0.35 mm
27327-34210	0.40 mm
27327-34220	0.50 mm
27327-34230	0.60 mm

BACKLASH

- Install the backlash measuring tool on the drive bevel gear coupling, and set-up a dial gauge as shown in the illustration.

09924-34510 : Backlash measuring tool (27 – 50 mm)

Final gear backlash : 0.03 – 0.64 mm
(0.001 – 0.025 in)

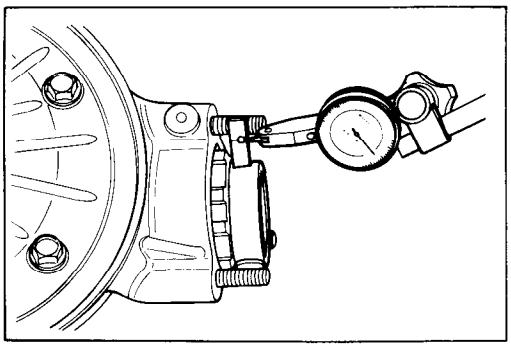

- Adjust the dial gauge so that it touches the backlash measuring tool arm at the mark; hold the final driven bevel gear securely, and turn the final drive bevel gear coupling slightly in each direction, reading the total backlash on the dial gauge.

NOTE:
If the backlash is not within specification, adjust the shim thickness as follows:

- Remove shims from final gear bearing case and final gear case, and measure total thickness.
- In order not to change the clearance between final driven bevel gear and bearing, the total thickness of the shims installed after a change is made must equal the original total thickness of shims.
- If backlash is too large:
  a) Install a thinner shim pack Ⓑ between final driven bevel gear and final gear case.
  b) Increase thickness of shims Ⓐ between final driven bevel gear and bearing by an amount equal to decrease above.
- If backlash is too small:
  a) Install a thicker shim pack Ⓑ between final driven bevel gear and final gear case.
  b) Decrease thickness of shims Ⓐ between final driven gear and bearing by an amount equal to increase above.

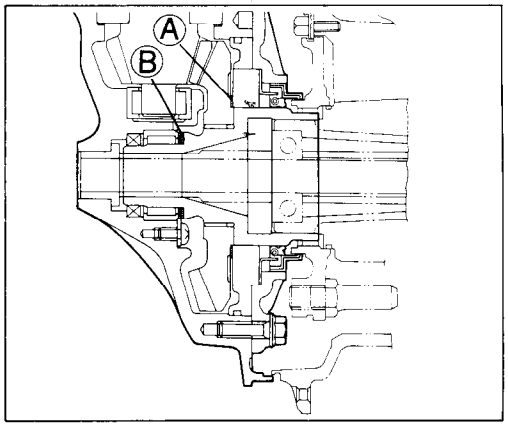

List of shims Ⓑ (Refer to page 4-21)

Part No.	Shim thickness
27326-34201	1.05 mm
27326-34211	1.10 mm
27326-34221	1.20 mm
27326-34231	1.25 mm
27326-34241	1.35 mm
27326-34201-140	1.40 mm
27326-34201-145	1.45 mm
27326-34201-150	1.50 mm

List of shims Ⓐ (Refer to page 4-21)

Part No.	Shim thickness
27327-34200	0.35 mm
27327-34210	0.40 mm
27327-34220	0.50 mm
27327-34230	0.60 mm

EXAMPLE:
Ⓑ Final gear to case shims;
1.35 mm + 1.05 mm = 2.40 mm
Ⓐ Final gear to bearing shims;
0.50 mm + 0.40 mm = 0.90 mm
Original total measurement = 3.30 mm

Backlash too large:
Ⓑ Final gear to case shims;
1.25 mm + 1.10 mm = 2.35 mm
Ⓐ Final gear to bearing shims;
0.60 mm + 0.35 mm = 0.95 mm
Total thickness = 3.30 mm

Backlash too small:
Ⓑ Final gear to case shims;
1.35 mm + 1.10 mm = 2.45 mm
Ⓐ Final gear to bearing shims;
0.50 mm + 0.35 mm = 0.85 mm
Total thickness = 3.30 mm

TOOTH CONTACT

- After backlash adjustment is carried out, the tooth contact must be checked.
- Remove the 9 bolts from the final gear bearing case, and remove the case, using the two 5 mm screws (see page 4-10). Do not misplace the shims. Remove the final driven bevel gear.
- Clean and de-grease several teeth on the final driven bevel gear. Coat these teeth with machinist's dye or paste, preferably of a light color.
- Re-install the final driven bevel gear with shims in place, positioning the coated teeth so that they are centered on the final drive bevel gear.
- Re-install the final gear bearing case and tighten the bolts to the specified torque.

Final gear bearing case bolt
Tightening torque : 20 – 26 N·m
(2.0 – 2.6 kg-m, 14.5 – 19.0 lb-ft)

- Using a long socket wrench and handle on the final drive bevel gear coupling nut, rotate the final drive bevel gear several turns in each direction, while loading the final driven bevel gear. This will provide a contact pattern on the coated teeth of the driven bevel gear.
- Remove the final gear bearing case and final driven bevel gear, and inspect the coated teeth of the driven bevel gear. The contact patch should be as shown at right:
- If the tooth contact pattern is correct, as shown in Fig. ②, go to the Final Assembly sub-section.
- If the tooth contact pattern is incorrect, as shown in Fig. ①, a thinner shim is needed between the final drive bevel gear bearing and final gear case.
- If the tooth contact pattern is incorrect, as shown in Fig. ③, a thicker shim is needed between the final drive bevel gear bearing and final gear case.
- If the tooth contact pattern is incorrect for either reason, the appropriate shim must be installed, and the tooth contact pattern rechecked by repeating the tooth coating procedure above.

NOTE:
If it is necessary to adjust the shim thickness between final drive bevel gear bearing and final gear case, the final gear backlash may change, and should be re-checked according to the procedure outlined under the Backlash Measurement sub-section. Both adjustments may be needed until both backlash and tooth contact are correct.

CAUTION:
Refer to page 4-21.

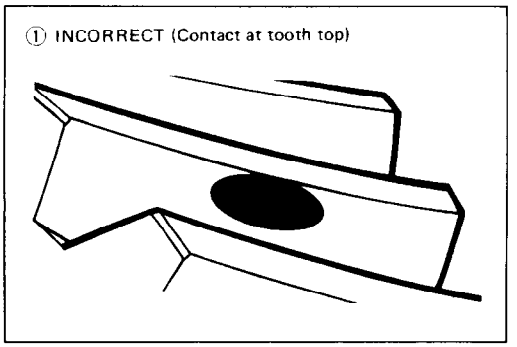

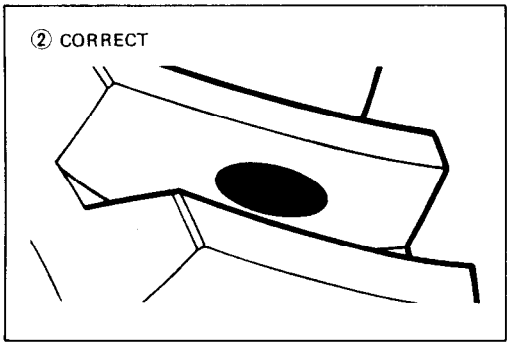

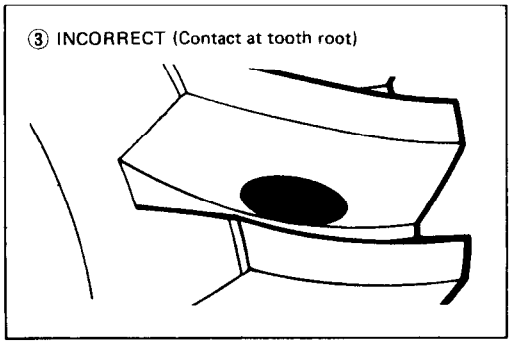

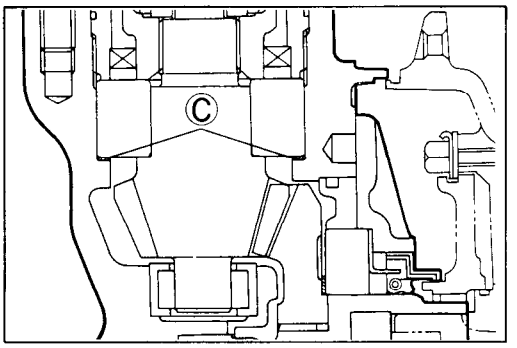

List of shims Ⓒ (Refer to page 4-21)

Part No.	Shim thickness
27445 - 38A00 - 030	0.30 mm
27445 - 38A00 - 035	0.35 mm
27445 - 38A00 - 040	0.40 mm
27445 - 38A00 - 050	0.50 mm
27445 - 38A00 - 060	0.60 mm

FINAL ASSEMBLY AND REMOUNTING

- After adjusting the backlash, tooth contact and clearance between the bearing case and the bearing, remove the final gear bearing case and final drive bevel gear assembly from the final gear case.
- Clean off any machinist's dye or paste from the gear teeth, and lubricate the teeth with Hypoid gear oil.
- Install the new O-rings to the final gear bearing case and final drive bevel gear bearing retainer. Coat the O-rings with grease.
- Install the final drive bevel gear assembly into the final gear case.

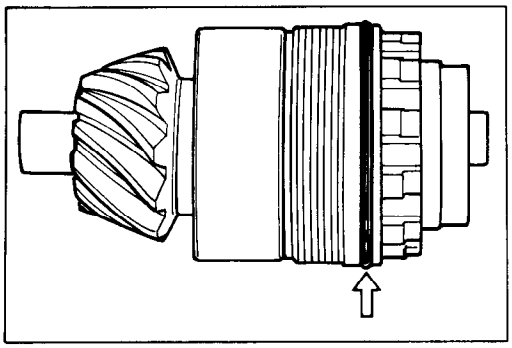

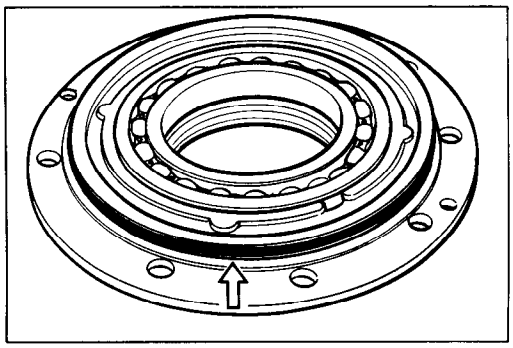

- Install the final gear bearing case to the final gear case and apply a small quantity of THREAD LOCK "1342" to the 9 bolts and tighten them to the specified torque.

99000-32050 : THREAD LOCK "1342"

Tightening torque : 20 – 26 N·m
(2.0 – 2.6 kg-m, 14.5 – 19.0 lb-ft)

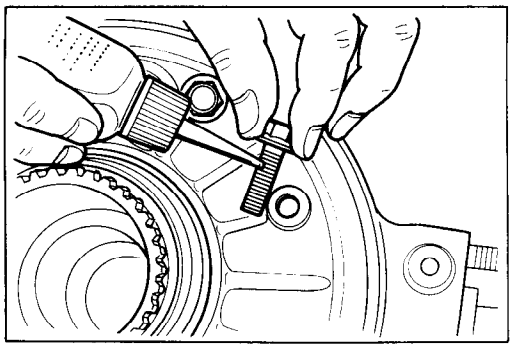

- Apply grease to the final driven bevel gear coupling.

(For U.S.A. model)
99000-25030 : SUZUKI SUPER GREASE "A"
(For the other models)
99000-25010 : SUZUKI SUPER GREASE "A"

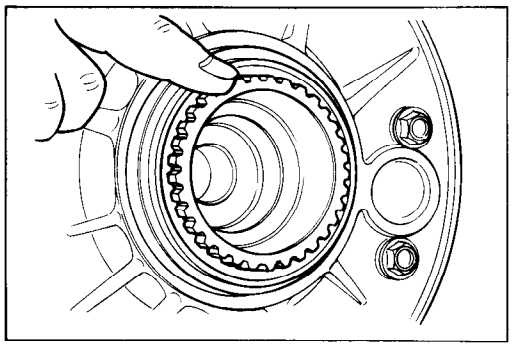

- Apply Lithium Base Molybdenum grease (NLGI # 2) to the propeller shaft splines and universal joint coupling.

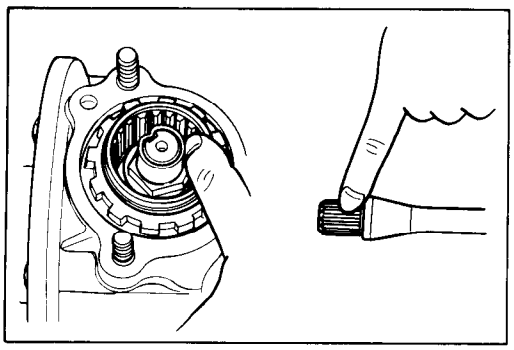

- Install the spring, propeller shaft and circlip.
- Install the bearing retainer stopper plate ①.

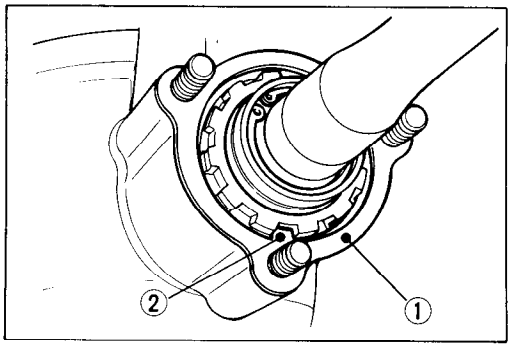

CAUTION:
When installing the plate ①, align the lug ② of plate to the bearing retainer stopper groove.

NOTE:
There are two kinds of plate.

- Install the new oil seal.

- Apply SUZUKI BOND NO. 1207B/NO. 1215 to the mating surface of swingarm and final gear case.

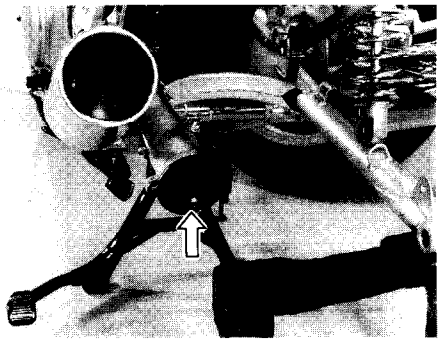

(For U.S.A. model)
99104-31140 : SUZUKI BOND NO. 1207B
(For the other models)
99000-31110 : SUZUKI BOND NO. 1215

- Tighten the three nuts ③ and shock absorber mounting nut ④ to the specified torque.

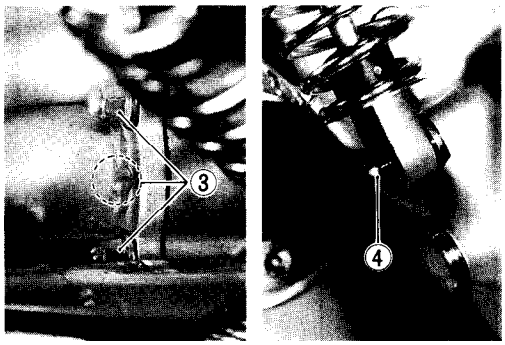

Tightening torque ③ : 35 – 45 N·m
(3.5 – 4.5 kg-m, 25.5 – 32.5 lb-ft)
④ : 22 – 35 N·m
(2.2 – 3.5 kg-m, 16.0 – 25.5 lb-ft)

NOTE:
After remounting the final gear case, the following service is necessary.
* *Fill the final gear case with Hypoid gear oil.*
Specified capacity : 200 – 220 ml
(6.8/7.0 – 7.4/7.7 US/Imp oz)

REASSEMBLY INFORMATION

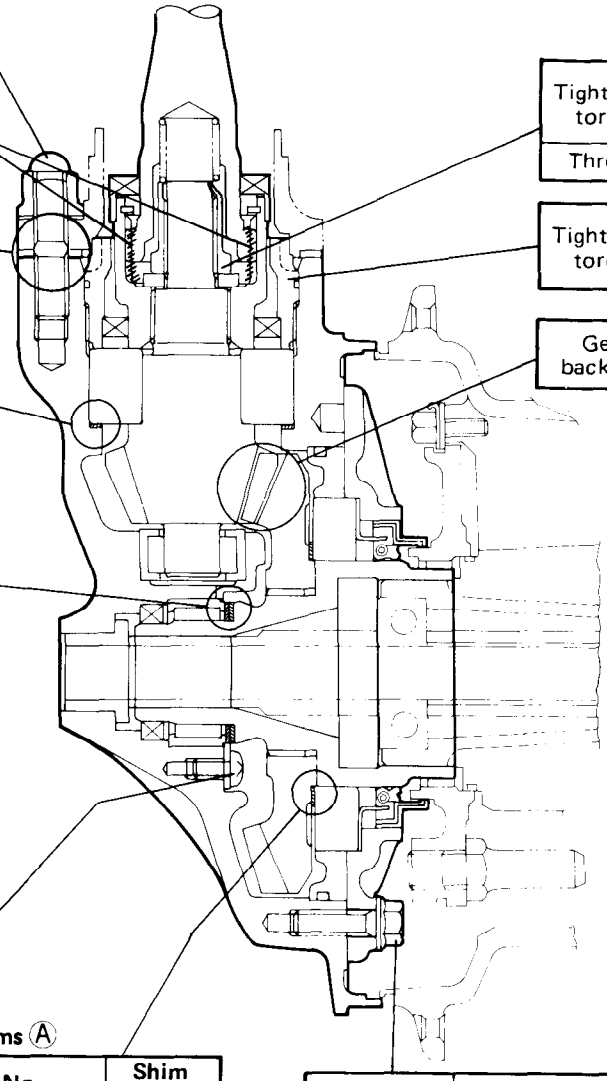

Tightening torque	35-45 N·m (3.5-4.5 kg-m / 25.5-32.5 lb-ft)

Lithium Base Molybdenum grease (NLGI #2)

SUZUKI Bond No. 1207B/No. 1215

List of shims Ⓒ

Part No.	Shim thickness
27445-38A00-030	0.30mm
27445-38A00-035	0.35mm
27445-38A00-040	0.40mm
27445-38A00-050	0.50mm
27445-38A00-060	0.60mm

List of shims Ⓑ

Part No.	Shim thickness
27326-34201	1.05 mm
27326-34211	1.10 mm
27326-34221	1.20 mm
27326-34231	1.25 mm
27326-34241	1.35 mm
27326-34201-140	1.40 mm
27326-34201-145	1.45 mm
27326-34201-150	1.50 mm

Tightening torque	8-10 N·m (0.8-1.0 kg-m / 6.0-7.0 lb-ft)
Thread Lock Super "1303"	

List of shims Ⓐ

Part No.	Shim thickness
27327-34200	0.35mm
27327-34210	0.40mm
27327-34220	0.50mm
27327-34230	0.60mm
Shim clearance	0.10mm (0.004in)

Tightening torque	90-110 N·m (9.0-11.0 kg-m / 65.0-79.5 lb-ft)
Thread Lock Super "1303"	

Tightening torque	90-120 N·m (9.0-12.0 kg-m / 65.0-87.0 lb-ft)

Gear backlash	0.03-0.64 mm (0.001-0.025 in)

Tightening torque	20-26 N·m (2.0-2.6 kg-m / 14.5-19.0 lb-ft)
Thread Lock "1342"	

CAUTION:

After the tooth contact adjustment has been performed, the backlash must be re-checked, because it may have changed. Refer to the backlash check sub-section, and readjust until tooth contact and backlash are both within the specifications. If you can not maintain the correct tooth contact when adjusting backlash, both the drivn and driveb bevel gears should be replaced.

COOLING SYSTEM

CONTENTS

COOLING SYSTEM

DESCRIPTION

The engine is cooled by coolant set in forced recirculation through jackets formed in the cylinder and head, and through the radiator. For the water pump, a high-capacity centrifugal pump is used. The radiator is a tube-and-fin type made of aluminum material, which is characterized by lightness in weight and good head dissipation.

The thermostat is of wax pellet type, complete with a valve as the means of temperature-dependent control over the flow of coolant through the radiator. The valve is actuated by the temperature-sensitive wax contained in the pellet.

Referring to the following illustration, the thermostat is in the closed condition, so that water recirculates through the route comprising pump, engine, by-pass holes of the thermostat and radiator in the regulated condition.

As the coolant temperature rises to 75°C and the thermostat valve unseats, the normal coolant flow is established. At about 90°C of coolant temperature, the thermostat becomes completely open and most of heat is released to the atmosphere through the radiator core.

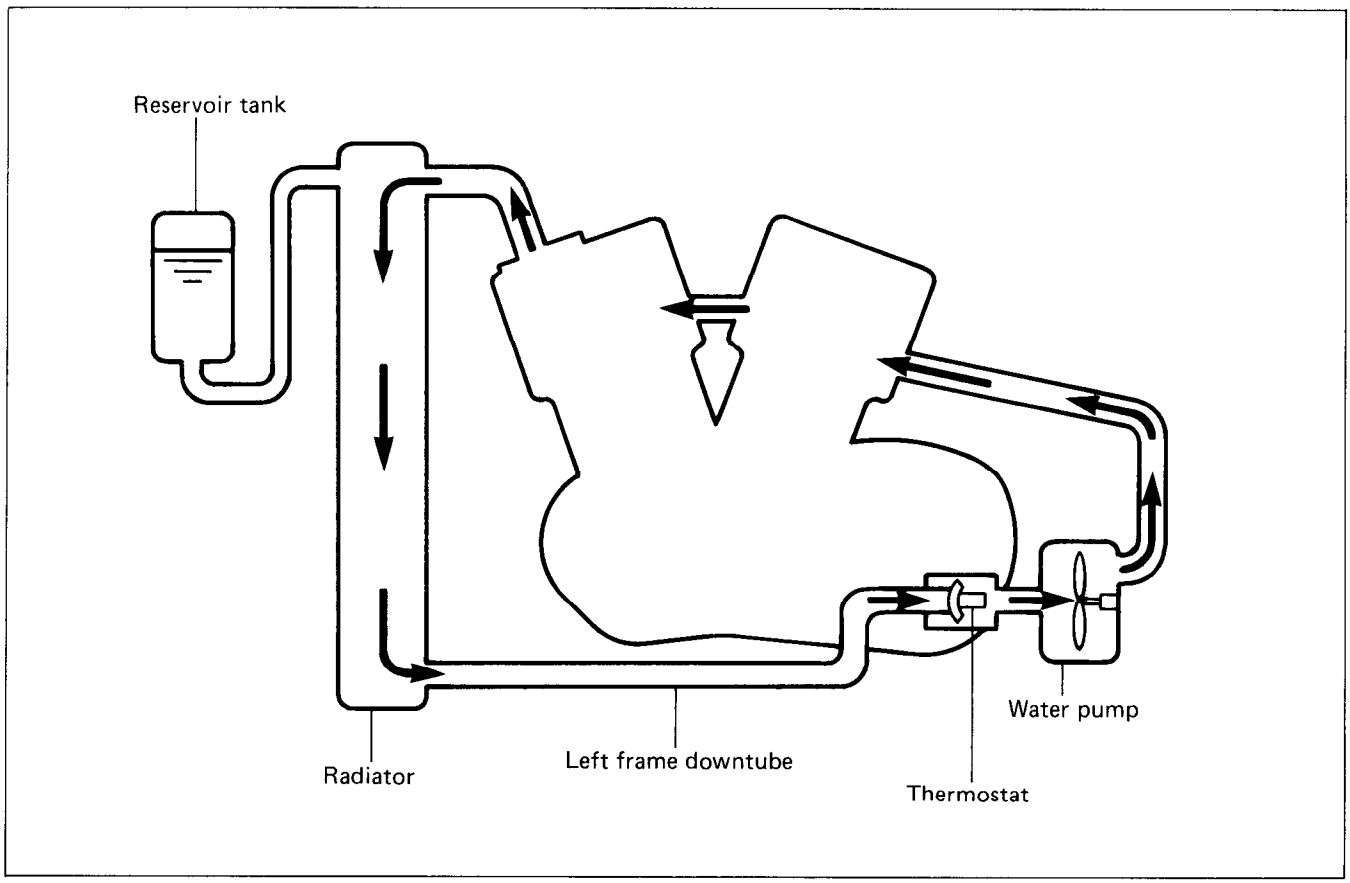

COOLING SOLUTION

50%	Water	850 ml (1.8/1.5 US/Imp. pt)
	Coolant	850 ml (1.8/1.5 US/Imp. pt)

At the time of manufacture, the cooling system is filled with a 50 : 50 solution of distilled water and anti-freeze/summer coolant. This 50 : 50 mixture will provide excellent heat protection, and will protect the cooling system from freezing at temperatures above –31°C (–24°F).

If the motorcycle is to be exposed to temperatures below –31°C (–24°F), this mixing ratio should be increased up to 55% or 60% according to the Fig. 2.

NOTE:

The characteristics of different anti-freezes vary. Read the label to know the protection you will have.

CAUTION:

Do not put in more than 60% anti-freeze or less than 50%. Do not mix different brands of anti-freeze.

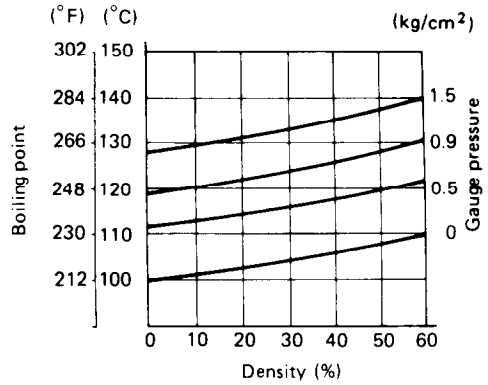

Fig. 1 Coolant density-boiling point curve.

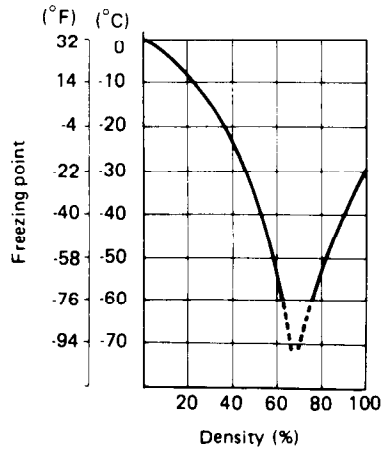

Fig. 2 Coolant density-freezing point curve.

RADIATOR AND WATER HOSES

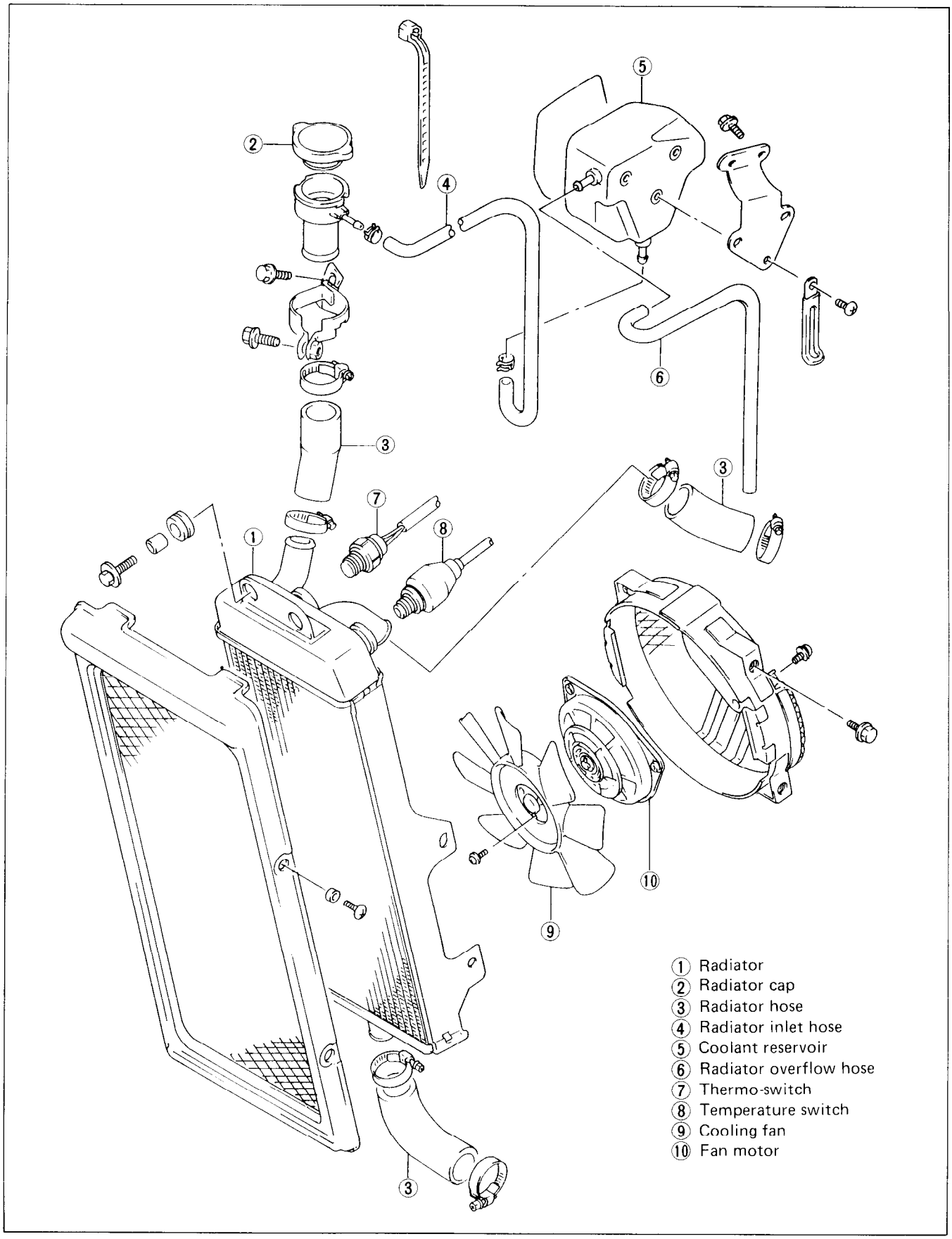

INSPECTION

Before removing the radiator and draining the cooling solution, inspect the following items.

1. Test the cooling system for tightness by using the radiator tester as follows: Remove the radiator cap, and connect the tester to the filler. Give a pressure of about 1.2 kg/cm^2 (17 psi, 120 kPa) and see if the system holds this pressure for 10 seconds. If the pressure should fall during this 10-second interval, it means that there is a leaking point in the system. In such a case, inspect the entire system and replace the leaking component or part.
2. Test the radiator cap for relieving pressure by using the radiator tester in the following manner: Fit the cap to the tester, as shown, and build up pressure slowly by operating the tester. Make sure that the pressure build-up stops at 1.1 ± 0.15 kg/cm^2 (15.6 ± 2.1 psi, 110 ± 15 kPa) and that, with the tester held standstill, the cap is capable of that pressure for at least 10 seconds. Replace the cap if it is found not to satisfy either of these two requirements.

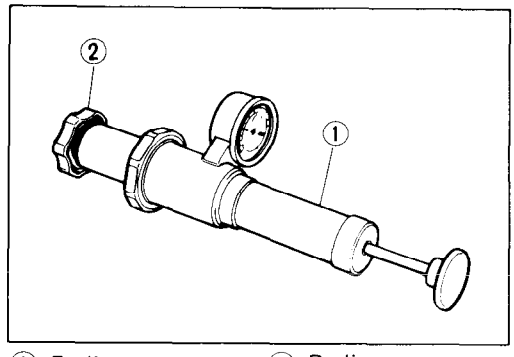

① Radiator cap tester ② Radiator cap

Radiator cap valve release pressure : 1.1 ± 0.15 kg/cm^2 (15.6 ± 2.1 psi, 110 ± 15 kPa)

3. Road dirt or trash stuck to the fins must be removed. Use of compressed air is recommended for this cleaning. Fins bent down or dented can be repaired by straightening them with the blade of a small screwdriver.
4. Any water hose found in a cracked condition or flattened must be replaced. Any leakage from the connecting section should be corrected by proper tightening.

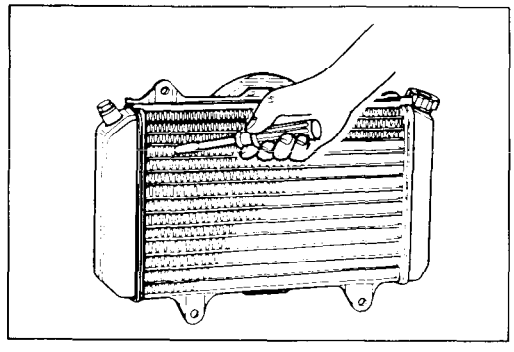

REMOVAL

1. Drain the cooling solution by removing the drain plug ①.
2. Remove the radiator hoses, radiator and reservoir tank.

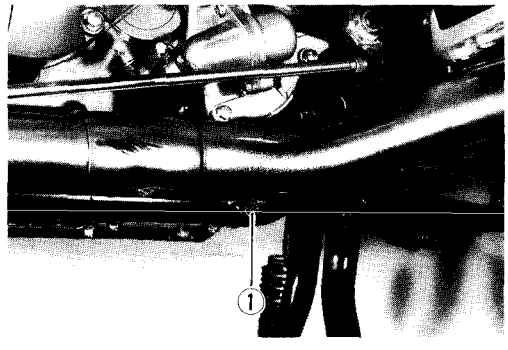

INSTALLATION

The radiator is to be installed in the reverse order of the removal procedure. After installing the radiator, be sure to add coolant: refer to page 2-10 for refilling information.

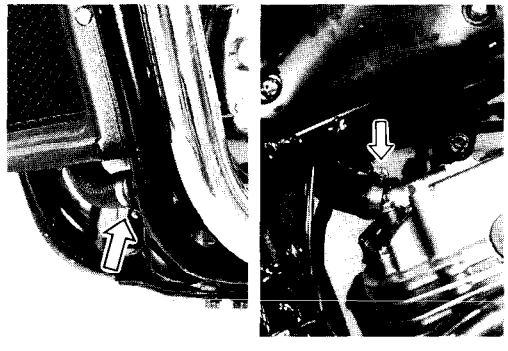

REASSEMBLY INFORMATION

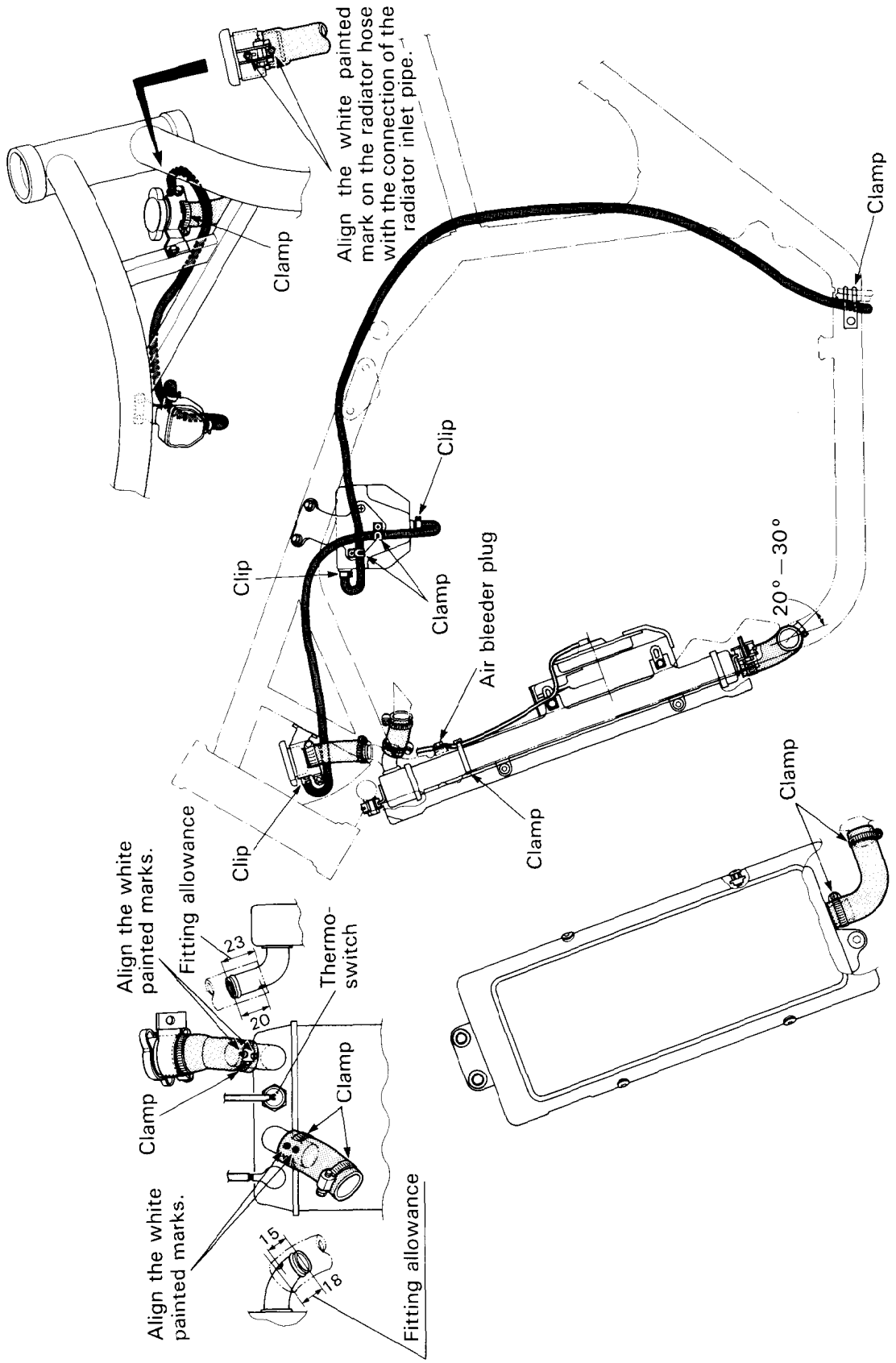

Tightening torque

ITEM	N·m	kg·m	lb-ft
Air bleeder plug	10–12	1.0–1.2	7.0–8.5
Thermo-switch	9–14	0.9–1.4	6.5–10.0

THERMOSTAT

REMOVAL

1. Drain the coolant.
2. Remove the secondary case cover.
3. Remove the gearshift lever by removing the snap ring.

09900-06107 : Snap ring pliers

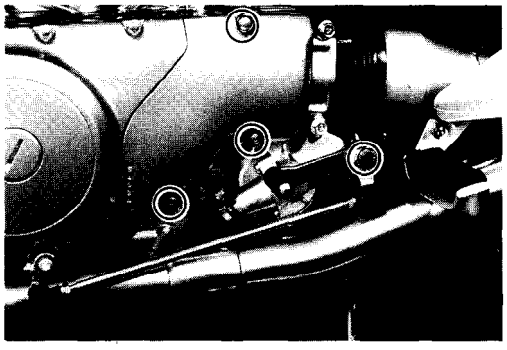

4. Disconnect the radiator hose and remove the water pump cover assembly.
5. Disassemble the cover assembly. The thermostat will then be free.

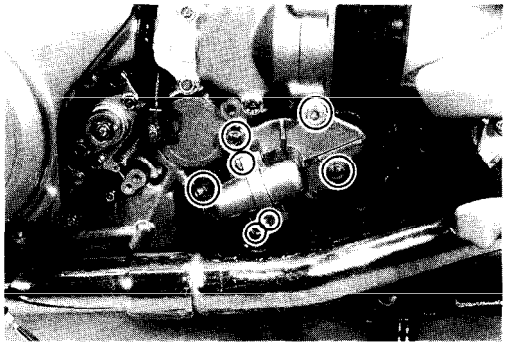

INSPECTION

Inspect the thermostat pellet for signs of cracking.

Test the thermostat at the bench for control action, in the following manner.

- Pass a string between flange, as shown in the illustration.
- Immerse the thermostat in the water contained in a beaker, as shown in the illustration. Note that the immersed thermostat is in suspension. Heat the water by placing the beaker on a stove and observe the rising temperature on a thermometer.
- Read the thermometer just when the thermostat drops to the bottom of the pan. This reading, which is the temperature level at which the thermostat valve begins to open, should be anywhere between 73.5°C (164.3°F) and 76.5°C (169.7°F).

Thermostat valve opening temperature : 75.0 ± 1.5°C (167 ± 2.7°F)

- Keep on heating the water to raise its temperature to and beyond 90°C (194°F).
- Just when the water reaches 90°C (194°F), the thermostat valve should have lifted by at least 6.0 mm (0.24 in).

Thermostat valve lift : Over 6.0 mm at 90°C (Over 0.24 in at 194°F)

- A thermostat failing to satisfy either of the two requirements (start-to-open temperature and valve lift) must be replaced.

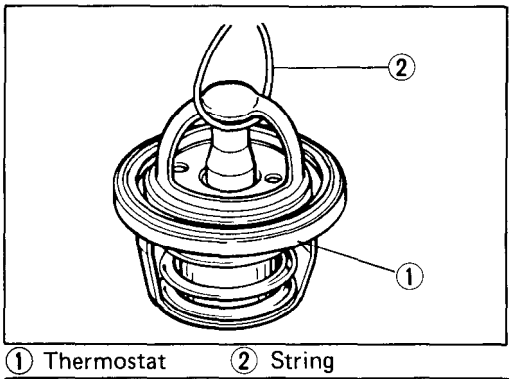

① Thermostat ② String

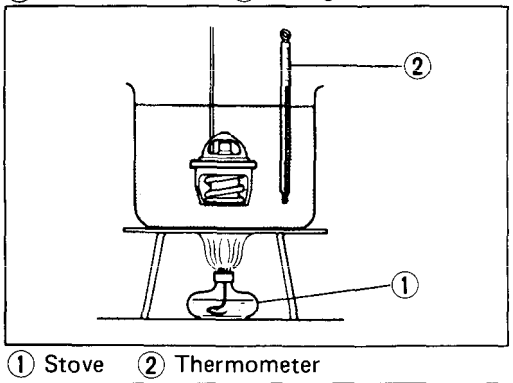

① Stove ② Thermometer

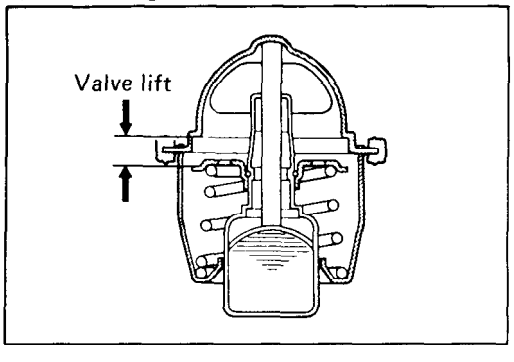

WATER PUMP

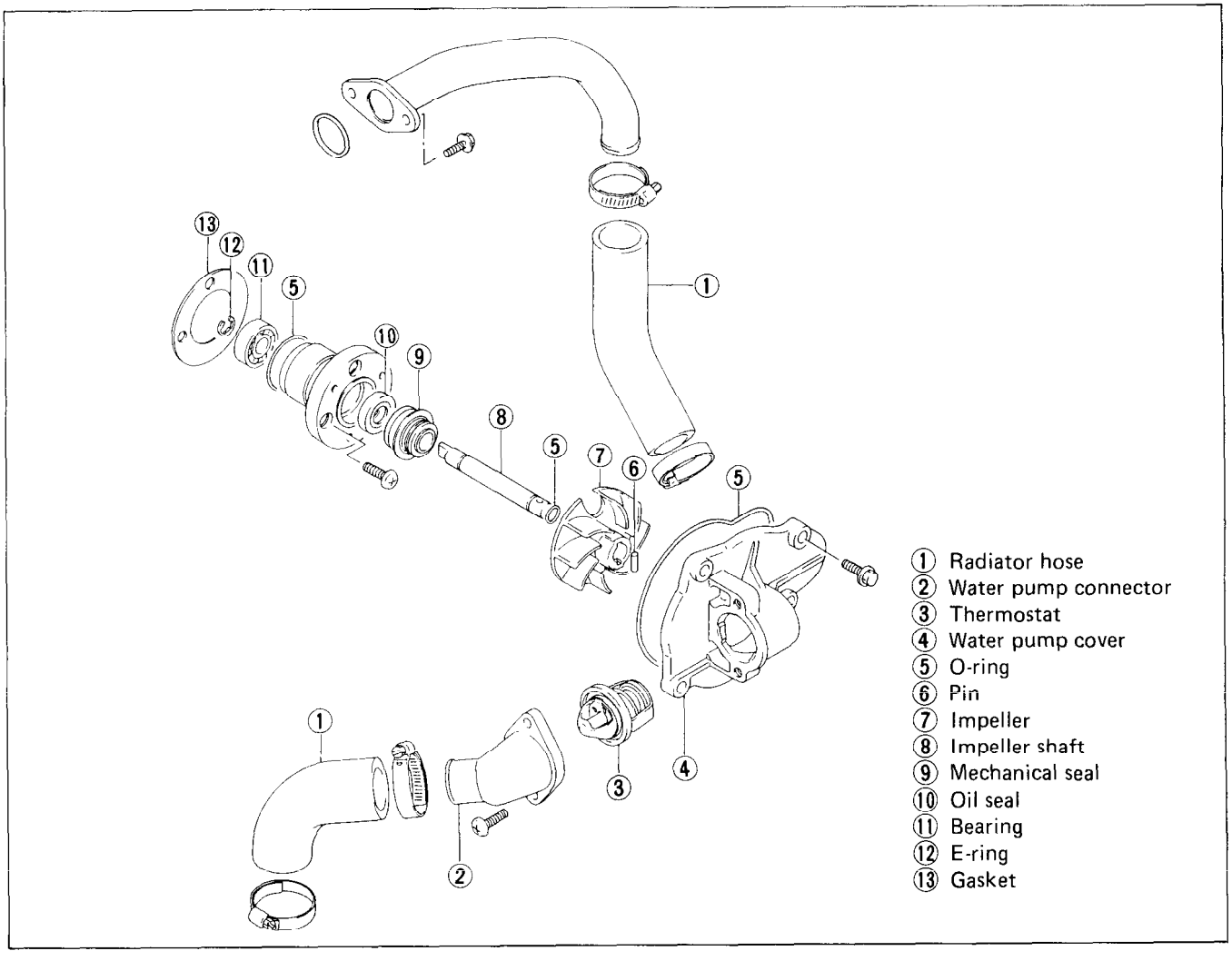

REMOVAL

1. Refer to page 5-6 for the water pump removal procedures.
2. Remove the water pump cover.
3. Remove the magneto cover plug, then set the three openings of the impeller to the three screws by rotating the generator rotor.
4. Remove the three screws securing water pump assembly.

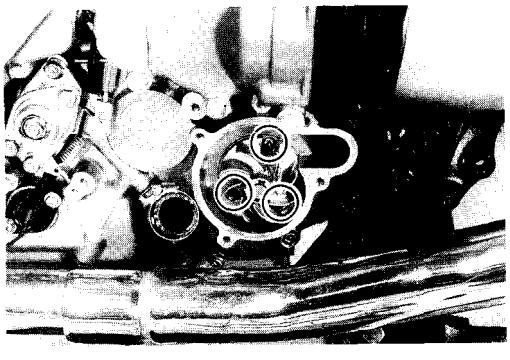

5. Set one of the openings to an unused female screw by rotating the generator rotor.

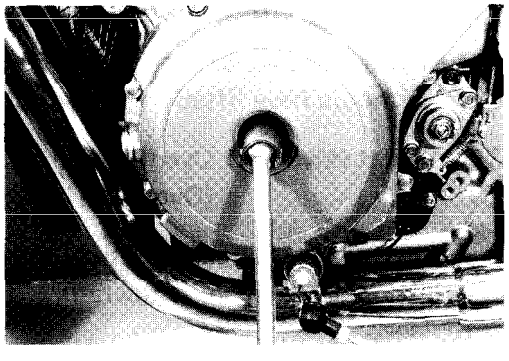

6. Drive out the water pump assembly by threading a removed screw into the female screw.

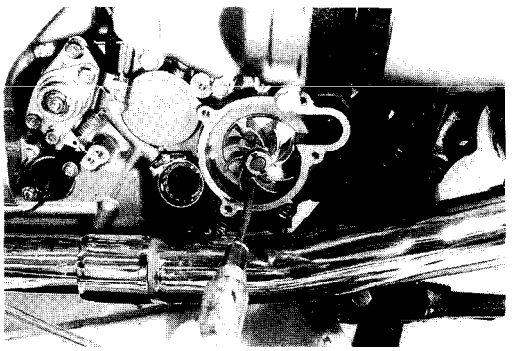

INSPECTION AND DISASSEMBLY

WATER PUMP BEARING

Turn the impeller and check the bearing play. If abnormal noise occurs or any sign of stickiness is noted, replace the bearing with a new one.

- Remove the E-ring.

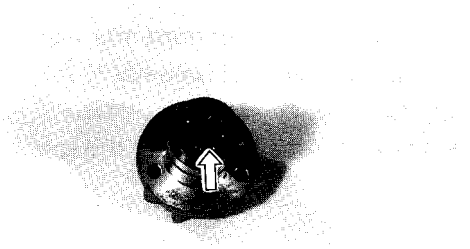

- Pull out the impeller shaft.
- Remove the impeller from the impeller shaft.

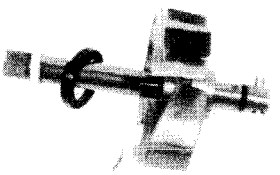

- Remove the water pump bearing by using the special tools.

09930-30102 : Sliding shaft
09921-20200 : Bearing remover

CAUTION:
The removed bearing should be replaced with a new one.

MECHANICAL SEAL

Visually inspect the mechanical seal for damage, with particular attention given to the sealing face. Replace the mechanical seal that shows indications of leakage. Also replace the oil seal if necessary.

- Gouge out the mechanical seal with care to prevent damage to the stuffing box.

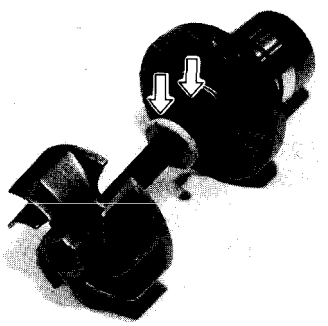

- Gouge out the oil seal.

CAUTION:
The removed mechanical seal or oil seal should be replaced with a new one.

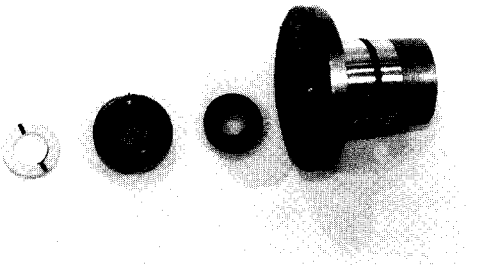

REASSEMBLY

Reassemble and remount the water pump in the reverse order of removal and disassembly. Pay attention to the following points:

- Install the bearing using the special tool.

- Apply grease to the oil seal lip before installing.

(For U.S.A. model)
99000-25030 : SUZUKI SUPER GREASE "A"
(For the other models)
99000-25010 : SUZUKI SUPER GREASE "A"

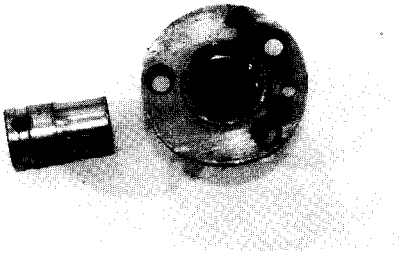

- Press the oil seal into the stuffing box using a suitable size sleeve etc.

- Press the mechanical seal into the stuffing box using a suitable size sleeve etc.

- Replace O-rings with new ones when reassembling the water pump.

NOTE:
Seat ring of the mechanical seal must be assembled with marked face of the ring toward the impeller.

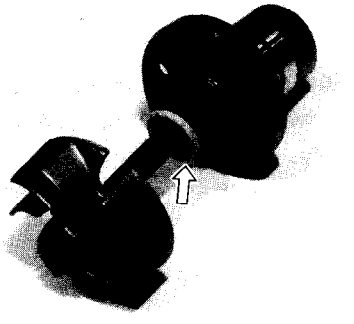

THERMO-SWITCH

The cooling fan, being located behind the radiator, is secured to the radiator by three bolts. The fan drive motor is automatically controlled by the thermo-switch. This switch remains open when the temperature of coolant is low, but it closes at about 105°C (221°F) of rising water temperature to set the fan in motion.

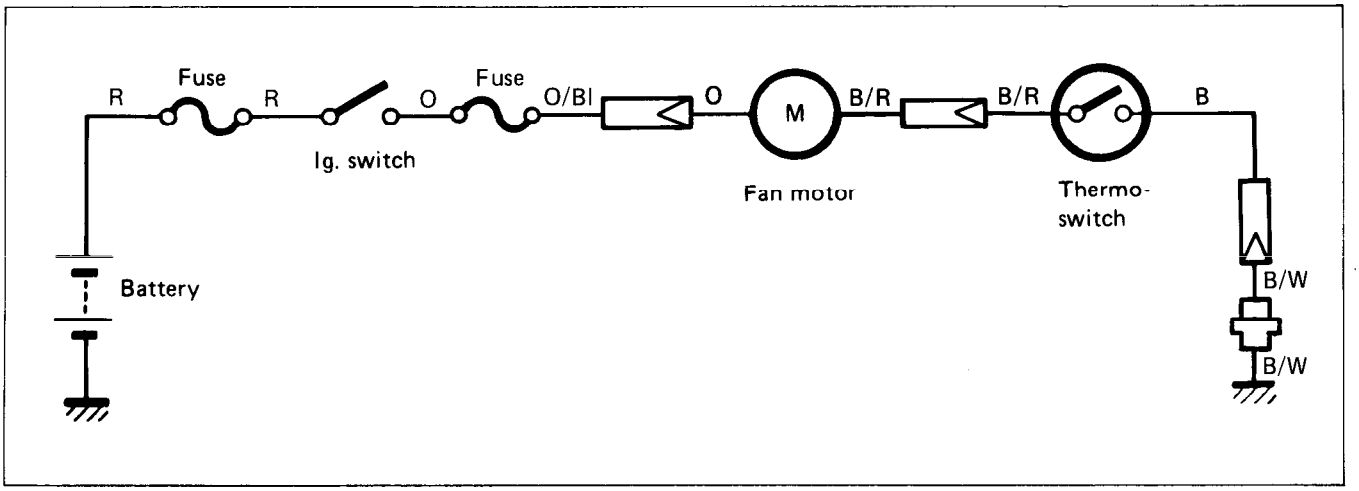

INSPECTION

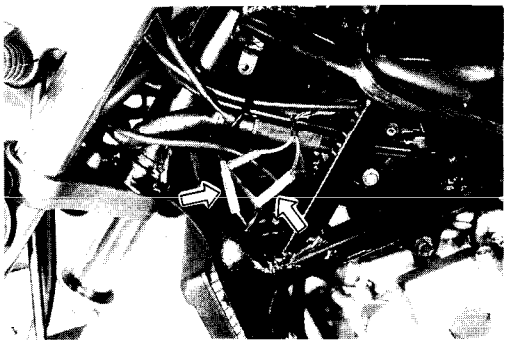

THERMO-SWITCH

- Disconnect the thermo-switch lead wires and remove the thermo-switch from the radiator.
- The thermo-switch must be checked for its temperature-initiated closing action at the specification value of 105°C (221°F) by testing it at the bench as shown in the figure. Connect the switch to a circuit tester and raise the temperature of the oil in the pan, and read the column thermometer when the switch closes.

Thermo-switch specification

OFF → ON	Approx. 105°C (221°F)
ON → OFF	Approx. 100°C (212°F)

NOTE:
Do not forget the O-ring.

Tightening torque
Thermo-switch : 9.0 – 14 N·m
(0.9 – 1.4 kg-m, 6.5 – 10.0 lb-ft)

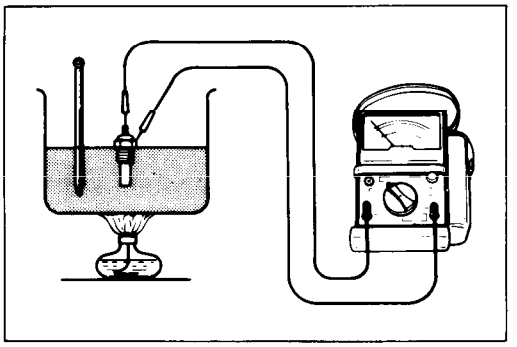

CAUTION:
Take special care when handling the thermo-switch. It may cause damage if thermo-switch gets a sharp impact.

FAN MOTOR

Test the cooling fan drive motor for load current with a voltmeter and an ammeter connected as shown in the illustration. The voltmeter is for making sure that the battery applies 12 volts to the motor. With the motor with electric motor fan running at full speed, the ammeter should be indicating not more than 5 amperes.
If the fan motor does not turn, replace the motor assembly with a new one.

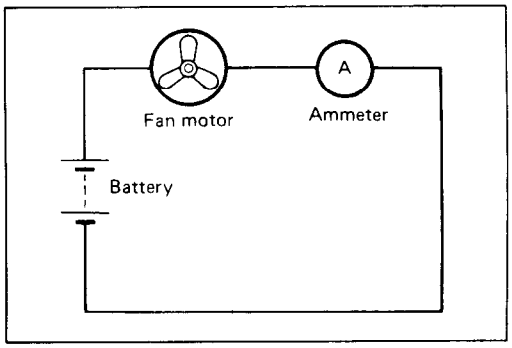

TEMPERATURE SWITCH

REMOVAL

- Remove the temperature switch after disconnecting the lead wires in the headlight housing.

INSPECTION

The temperature switch must be checked for its temperature-initiated closing action at the specification value of 117°C (243°F) by testing it at the bench as shown in the illustration. Connect the switch to the pocket tester and raise the temperature of the oil in the pan, and read the column thermometer when the switch closes.

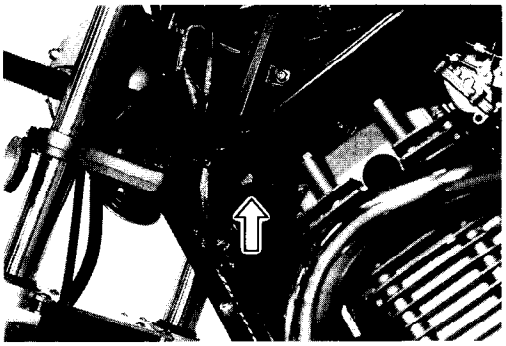

09900-25002 : Pocket tester

Temperature switch specification

OFF → ON	Approx. 117°C (243°F)
ON → OFF	Approx. 110°C (230°F)

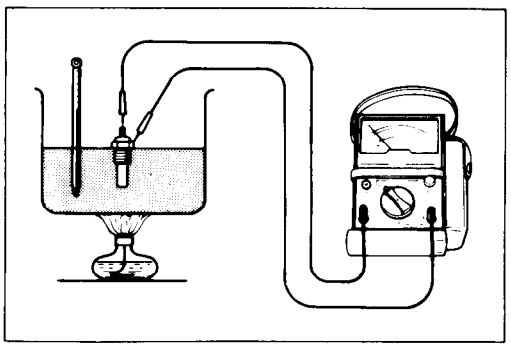

REASSEMBLY

NOTE:
Do not forget the O-ring.

Tightening torque
Temperature switch : 10 – 15 N·m
(1.0 – 1.5 kg-m, 7.0 – 11.0 lb-ft)

CAUTION:
Take special care when handling the temperature switch. It may cause damage if temperature switch gets a sharp impact.

- Fill the specified coolant (See page 2-10).

FUEL AND LUBRICATION SYSTEM

CONTENTS

FUEL SYSTEM

A vacuum operated fuel pump is used to supply fuel from the fuel tank to the carburetor. The pump is necessary as the fuel cock is mounted lower than the carburetor fuel bowl. In addition, the pump assures an adequate supply of fuel to the engine under the steepest climbing conditions as well as while running across rough terrain.

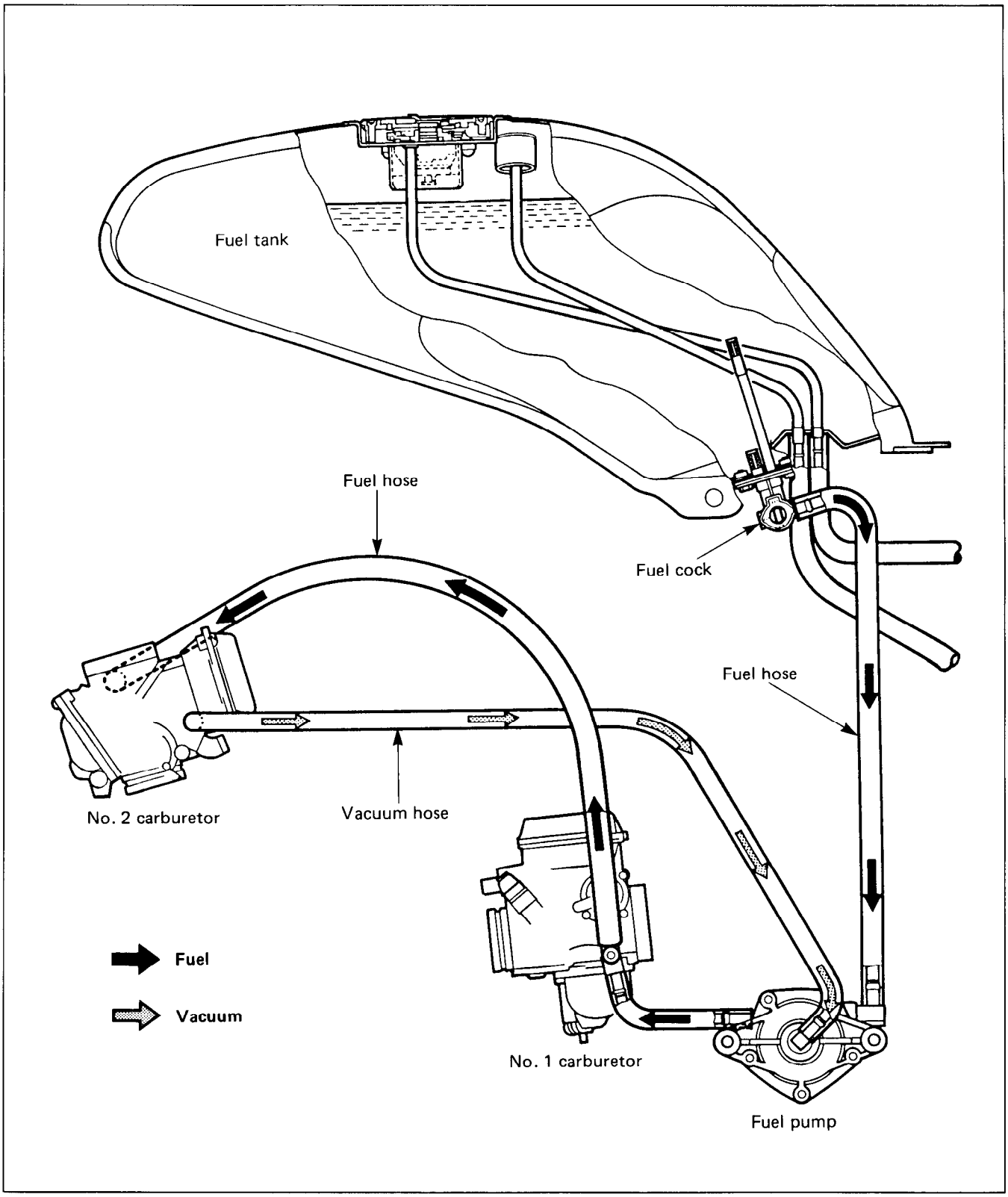

FUEL COCK

A valve is provided at the top of the fuel cock lever and can switch over to "OFF", "ON" and "RES". With the valve "ON" (normal), the main passage opens. With the valve "OFF", both holes close.

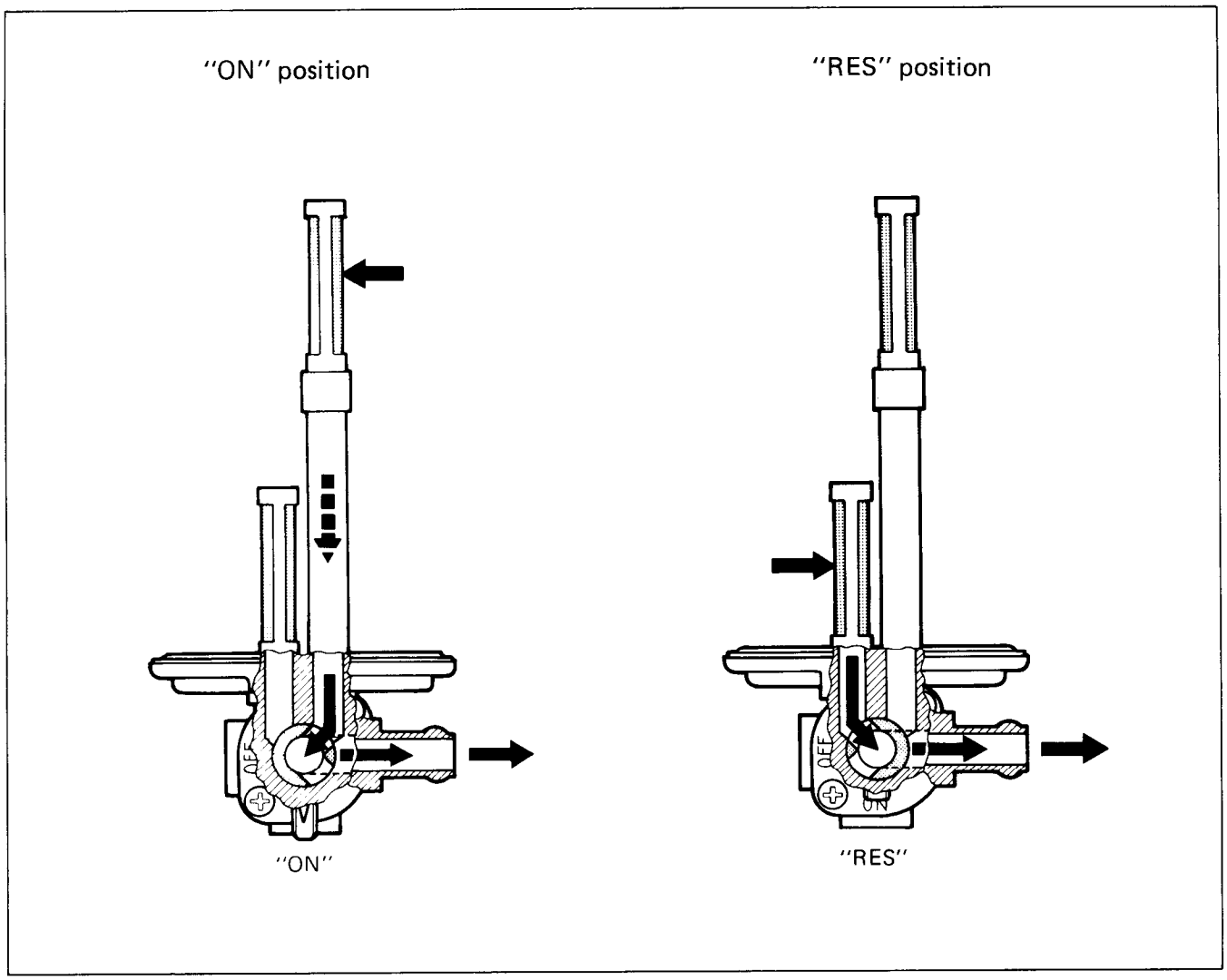

WARNING:
Gasoline is very explosive. Extreme care must be taken.
Gaskets must be replaced with new ones to prevent fuel leakage.

INSPECTION AND CLEANING

If the fuel strainer is dirty with sediment or rust, fuel will not flow smoothly and loss in engine power may result. Clean the fuel strainer with compressed air.

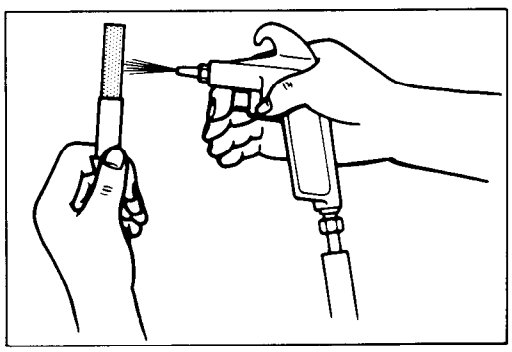

FUEL PUMP

Vacuum pulsations from the carburetor intake tract are used to operate the pump diaphragm. When vacuum is applied to the diaphragm, fuel is drawn from the tank into the diaphragm's chamber. As positive pressure is applied, the spring forces the diaphragm back, pushing the fuel through the outlet to the carburetor.
A series of check valves is used in the fuel flow route to allow the fuel to move in only one direction, through the pump body.

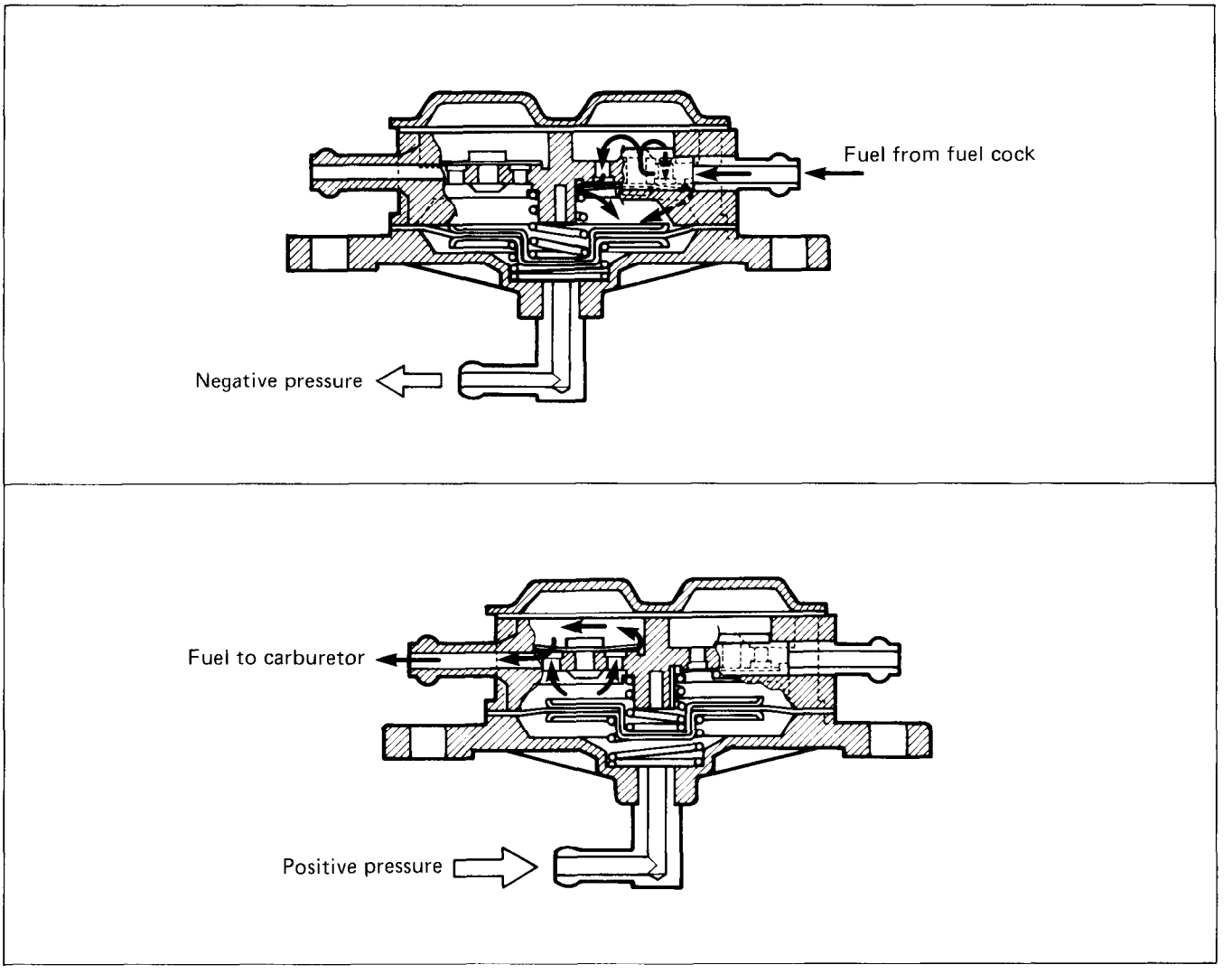

FUEL PUMP INSPECTION

In case of fuel leak at fuel pump or air leak into the fuel line, check the following items:

* Broken diaphragm
* Malfunction of check valve
* Loose screws on fuel pump

If any defect is found, replace the fuel pump assembly with a new one.

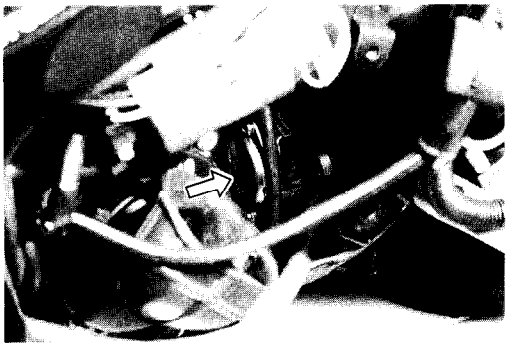

CARBURETOR

CARBURETOR CONSTRUCTION

No. 2 (FRONT) CARBURETOR

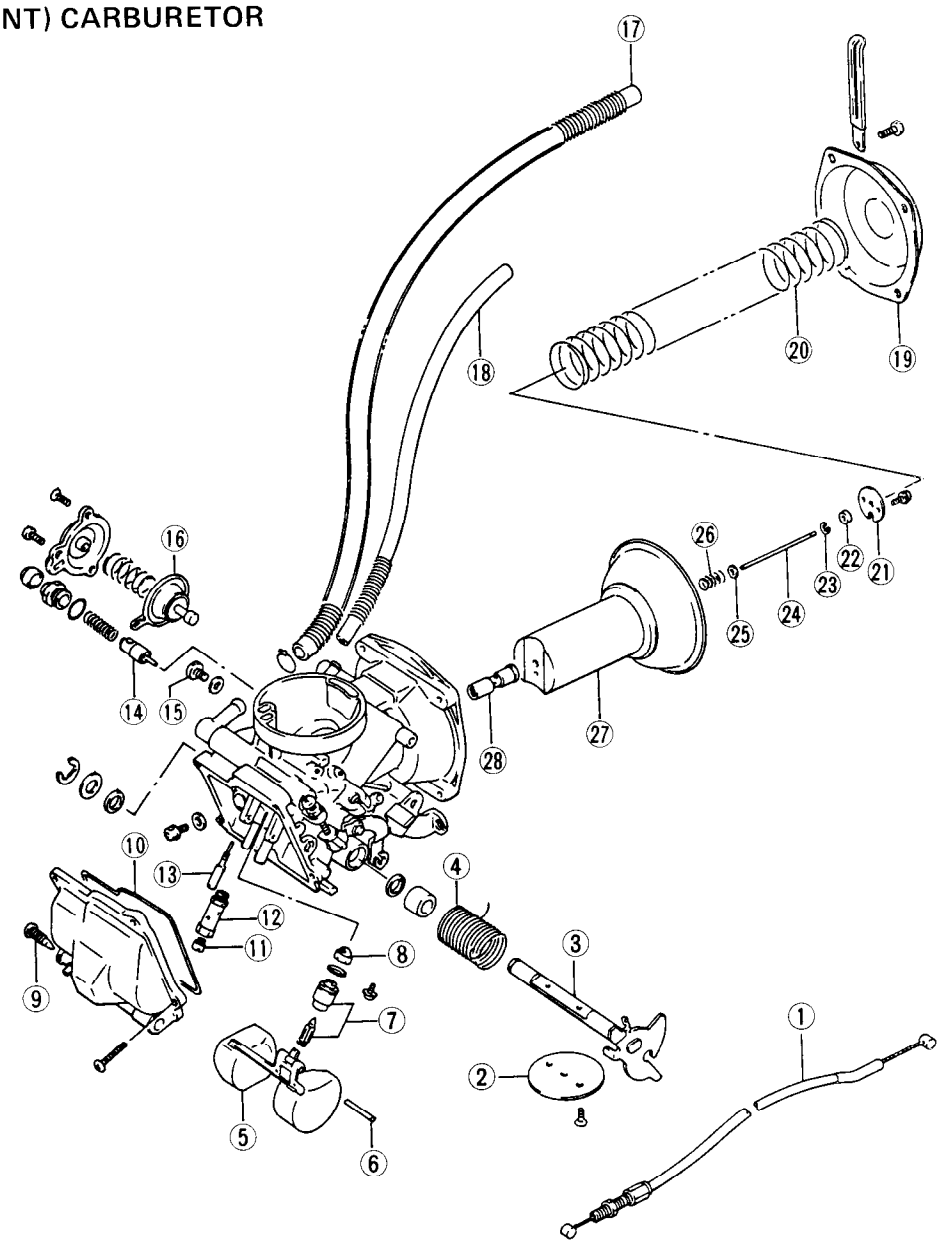

① Syncronizing cable
② Throttle valve
③ Throttle valve shaft
④ Throttle valve return spring
⑤ Float
⑥ Float pin
⑦ Needle valve
⑧ Filter
⑨ Drain screw
⑩ Seal ring
⑪ Main jet
⑫ Main jet holder
⑬ Pilot jet
⑭ Starter plunger
⑮ Balance screw
⑯ Coasting valve
⑰ Fuel hose
⑱ Breather hose
⑲ Carburetor top cap
⑳ Piston valve spring
㉑ Jet needle stopper plate
㉒ Spacer
㉓ E-ring
㉔ Jet needle
㉕ Washer
㉖ Spring
㉗ Piston valve
㉘ Needle jet

No. 1 (REAR) CARBURETOR

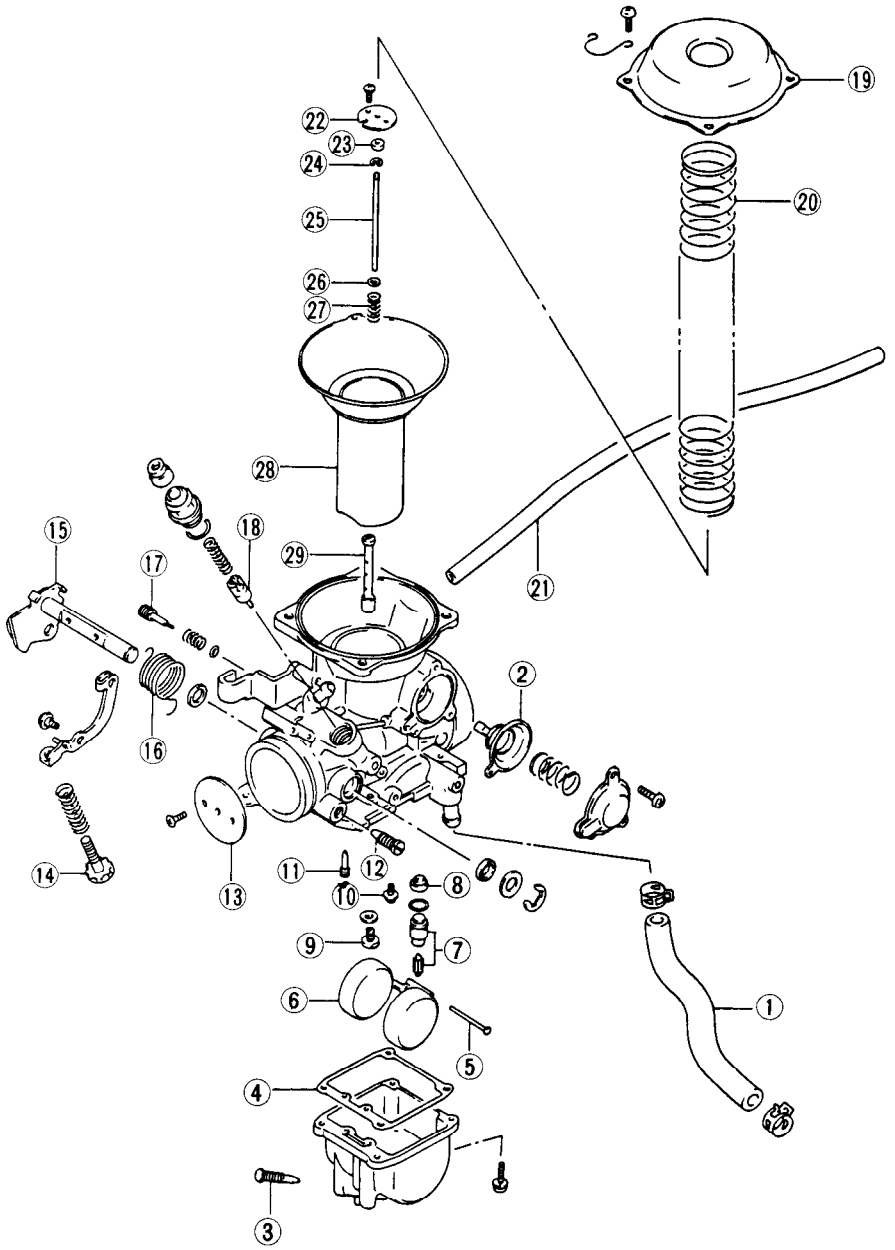

① Fuel hose
② Coasting valve
③ Drain screw
④ Gasket
⑤ Float pin
⑥ Float
⑦ Needle valve
⑧ Filter
⑨ Main jet
⑩ Needle valve stopper screw
⑪ Pilot jet
⑫ Balance screw
⑬ Throttle valve
⑭ Throttle stop screw
⑮ Throttle valve shaft
⑯ Throttle valve return spring
⑰ Pilot screw
⑱ Starter plunger
⑲ Carburetor top cap
⑳ Piston valve spring
㉑ Breather hose
㉒ Jet needle stopper plate
㉓ Spacer
㉔ E-ring
㉕ Jet needle
㉖ Washer
㉗ Spring
㉘ Piston valve
㉙ Needle jet

SPECIFICATIONS

CARBURETOR

ITEM	SPECIFICATION	
	E-02, 04, 15, 21, 25, 28, 34	
Carburetor type	MIKUNI BS36SS (No. 1)	MIKUNI BDS36SS (No. 2)
Bore size	36 mm	←
I.D. No.	45C00	←
Idle r/min.	1100 ± 100 r/min.	←
Float height	27.7 ± 1.0 mm (1.09 ± 0.04 in)	9.1 ± 1.0 mm (0.36 ± 0.04 in)
Main jet (M.J.)	# 132.5	# 120
Main air jet (M.A.J.)	1.8 mm	←
Jet needle (J.N.)	5F108-3rd	5D49-3rd
Needle jet (N.J.)	P-4	←
Throttle valve (Th.V.)	# 115	←
Pilot jet (P.J.)	# 47.5	# 40
By-pass (B.P.)	0.8 mm x 2PCS	0.8 mm x 3 PCS
Pilot outlet (P.O.)	0.8 mm	1.0 mm
Valve seat (V.S.)	1.5 mm	←
Starter jet (G.S.)	# 25	# 22.5
Pilot screw (P.S.)	(PRE-SET) 1-3/8 turns back	(PRE-SET) 1-1/8 turns back
Pilot air jet (P.A.J.)	No.1: (# 70), No.2: (2.0 mm)	No.1: (# 65), No.2: (1.2 mm)
Throttle cable play	0.5 – 1.0 mm (0.02 – 0.04 in)	←
Choke cable play	0.5 – 1.0 mm (0.02 – 0.04 in)	←

CARBURETOR

ITEM	SPECIFICATION	
	E-33	
Carburetor type	MIKUNI BS36SS (No. 1)	MIKUNI BDS36SS (No. 2)
Bore size	36 mm	←
I.D. No.	45C20	←
Idle r/min.	1200 ± 50 r/min.	←
Float height	27.7 ± 1.0 mm (1.09 ± 0.04 in)	9.1 ± 1.0 mm (0.36 ± 0.04 in)
Main jet (M.J.)	# 132.5	# 122.5
Main air jet (M.A.J.)	1.8 mm	←
Jet needle (J.N.)	5E72-1st	5D47-1st
Needle jet (N.J.)	P-7	P-2
Throttle valve (Th.V.)	# 125	# 110
Pilot jet (P.J.)	# 45	# 40
By-pass (B.P.)	0.8 mm x 2PCS	0.8 mm x 3PCS
Pilot outlet (P.O.)	0.8 mm	1.0 mm
Valve seat (V.S.)	1.5 mm	←
Starter jet (G.S.)	# 25	# 22.5
Pilot screw (P.S.)	(PRE-SET)	(PRE-SET)
Pilot air jet (P.A.J.) Thr	No. 1: (# 65), No. 2: (2.0 mm)	No. 1: (# 65), No. 2: (1.2 mm)
Throttle cable play	0.5 – 1.0 mm (0.02 – 0.04 in)	←
Choke cable play	0.5 – 1.0 mm (0.02 – 0.04 in)	←

CARBURETOR

ITEM	SPECIFICATION	
	E-03	
Carburetor type	MIKUNI BS36SS (No. 1)	MIKUNI BDS36SS (No. 2)
Bore size	36 mm	←
I.D. No.	45C10	←
Idle r/min.	1200 ± 50 r/min.	←
Float height	27.7 ± 1.0 mm (1.09 ± 0.04 in)	9.1 ± 1.0 mm (0.36 ± 0.04 in)
Main jet (M.J.)	# 132.5	# 122.5
Main air jet (M.A.J.)	1.8 mm	←
Jet needle (J.N.)	5E72-1st	5D47-1st
Needle jet (N.J.)	P-7	P-2
Throttle valve (Th.V.)	# 125	# 110
Pilot jet (P.J.)	# 45	# 40
By-pass (B.P.)	0.8 mm x 2PCS	0.8 mm x 3 PCS
Pilot outlet (P.O.)	0.8 mm	1.0 mm
Valve seat (V.S.)	1.5 mm	←
Starter jet (G.S.)	# 25	# 22.5
Pilot screw (P.S.)	(PRE-SET)	(PRE-SET)
Pilot air jet (P.A.J.)	No. 1: (# 65), No. 2: (2.0 mm)	No. 1: (# 65), No. 2: (1.2 mm)
Throttle cable play	0.5 – 1.0 mm (0.02 – 0.04 in)	←
Choke cable play	0.5 – 1.0 mm (0.02 – 0.04 in)	←

CARBURETOR

ITEM	SPECIFICATION	
	E-18	
Carburetor type	MIKUNI BS36SS (No. 1)	MIKUNI BDS36SS (No. 2)
Bore size	36 mm	←
I.D. No.	45C30	←
Idle r/min.	1200 $\pm^{100}_{50}$ r/min.	←
Float height	27.7 ± 1.0 mm (1.09 ± 0.04 in)	9.1 ± 1.0 mm (0.36 ± 0.04 in)
Main jet (M.J.)	# 135	# 125
Main air jet (M.A.J.)	1.8 mm	←
Jet needle (J.N.)	5F107-3rd	5D48-3rd
Needle jet (N.J.)	P-4	P-2
Throttle valve (Th.V.)	# 115	←
Pilot jet (P.J.)	# 45	# 40
By-pass (B.P.)	0.8 mm x 2PCS	0.8 mm x 3PCS
Pilot outlet (P.O.)	0.8 mm	1.0 mm
Valve seat (V.S.)	1.5 mm	←
Starter jet (G.S.)	# 25	# 22.5
Pilot screw (P.S.)	(PRE-SET) 2 turns back	(PRE-SET) 1-1/4 turns back
Pilot air jet (P.A.J.)	No. 1: (# 55), No. 2: (1.85 mm)	No. 1: (# 65), No. 2: (1.2 mm)
Throttle cable play	0.5 – 1.0 mm (0.02 – 0.04 in)	←
Choke cable play	0.5 – 1.0 mm (0.02 – 0.04 in)	←

CARBURETOR

ITEM	SPECIFICATION	
	E-01, 16	
Carburetor type	MIKUNI BS36SS (No. 1)	MIKUNI (BDS36SS (No. 2)
Bore size	36 mm	←
I.D. No.	45C40	←
Idle r/min.	1100 ± 100 r/min.	←
Float height	27.7 ± 1.0 mm (1.09 ± 0.04 in)	9.1 ± 1.0 mm (0.36 ± 0.04 in)
Main jet (M.J.)	# 135	# 122.5
Main air jet (M.A.J.)	1.8 mm	←
Jet needle (J.N.)	5F108-3rd	5D49-3rd
Needle jet (N.J.)	P-4	←
Throttle valve (Th.V.)	# 115	←
Pilot jet (P.J.)	# 47.5	# 40
By-pass (B.P.)	0.8 mm x 2PCS	0.8 mm x 3PCS
Pilot outlet (P.O.)	0.8 mm	1.0 mm
Valve seat (V.S.)	1.5 mm	←
Starter jet (G.S.)	# 25	# 22.5
Pilot screw (P.S.)	(PRE-SET) 1-1/2 turns back	(PRE-SET) 1-1/8 turns back
Pilot air jet (P.A.J.)	No. 1: (# 70), No. 2: (2.0 mm)	No. 1: (# 65), No. 2: (1.2 mm)
Throttle cable play	0.5 – 1.0 mm (0.02 – 0.04 in)	←
Choke cable play	0.5 – 1.0 mm (0.02 – 0.04 in)	←

CARBURETOR

ITEM	SPECIFICATION	
	U-type of E-22	
Carburetor type	MIKUNI BS36SS (No. 1)	MIKUNI BDS36SS (No. 2)
Bore size	36 mm	←
I.D. No.	45C60	←
Idle r/min.	1100 ± 100 r/min.	←
Float height	27.7 ± 1.0 mm (1.09 ± 0.04 in)	9.1 ± 1.0 mm (0.36 ± 0.04 in)
Main jet (M.J.)	# 135	# 122.5
Main air jet (M.A.J.)	1.8 mm	←
Jet needle (J.N.)	5F108-3rd	5D49-3rd
Needle jet (N.J.)	P-4	P-6
Throttle valve (Th.V.)	# 115	←
Pilot jet (P.J.)	# 47.5	# 40
By-pass (B.P.)	0.8 mm x 2PCS	0.8 mm x 3PCS
Pilot outlet (P.O.)	0.8 mm	1.0 mm
Valve seat (V.S.)	1.5 mm	←
Starter jet (G.S.)	# 25	# 22.5
Pilot screw (P.S.)	(PRE-SET) 1-1/8 turns back	(PRE-SET) 1-1/16 turns back)
Pilot air jet (P.A.J.)	No. 1: (# 70), No. 2: (2.0 mm)	No. 1: (# 65), No. 2: (1.2 mm)
Throttle cable play	0.5 – 1.0 mm (0.02 – 0.04 in)	←
Choke cable play	0.5 – 1.0 mm (0.02 – 0.04 in)	←

CARBURETOR

ITEM	SPECIFICATION	
	E-22, 24, 39	
Carburetor type	MIKUNI BS36SS (No. 1)	MIKUNI BDS36SS (No. 2)
Bore size	36 mm	←
I.D. No.	45C50	←
Idle r/min.	1100 ± 100 r/min.	←
Float height	27.7 ± 1.0 mm (1.09 ± 0.04 in)	9.1 ± 1.0 mm (0.36 ± 0.04 in)
Main jet (M.J.)	# 132.5	# 120
Main air jet (M.A.J.)	1.8 mm	←
Jet needle (J.N.)	5F108-3rd	5D49-3rd
Needle jet (N.J.)	P-4	←
Throttle valve (Th.V.)	# 115	←
Pilot jet (P.J.)	# 47.5	# 40
By-pass (B.P.)	0.8 mm x 2PCS	0.8 mm x 3PCS
Pilot outlet (P.O.)	0.8 mm	1.0 mm
Valve seat (V.S.)	1.5 mm	←
Starter jet (G.S.)	# 25	# 22.5
Pilot screw (P.S.)	(PRE-SET) 1-1/8 turns back	(PRE-SET) 1 turn back
Pilot air jet (P.A.J.)	No. 1: (# 70), No. 2: (2.0 mm)	No. 1: (# 65), No. 2: (1.2 mm)
Throttle cable play	0.5 – 1.0 mm (0.02 – 0.04 in)	←
Choke cable play	0.5 – 1.0 mm (0.02 – 0.04 in)	←

CARBURETOR

ITEM	SPECIFICATION	
	E-17	
Carburetor type	MIKUNI BS36SS (No. 1)	MIKUNI BDS36SS (No. 2)
Bore size	36 mm	←
I.D. No.	45C70	←
Idle r/min.	1100 ± 100 r/min.	←
Float height	27.7 ± 1.0 mm (1.09 ± 0.04 in)	9.1 ± 1.0 mm (0.36 ± 0.04 in)
Main jet (M.J.)	# 135	# 122.5
Main air jet (M.A.J.)	1.8 mm	←
Jet needle (J.N.)	5F108-3rd	5D49-3rd
Needle jet (N.J.)	P-4	P-6
Throttle valve (Th.V.)	# 115	←
Pilot jet (P.J.)	# 47.5	# 40
By-pass (B.P.)	0.8 mm x 2PCS	0.8 mm x 3PCS
Pilot outlet (P.O.)	0.8 mm	1.0 mm
Valve seat (V.S.)	1.5 mm	←
Starter jet (G.S.)	# 25	# 22.5
Pilot screw (P.S.)	(PRE-SET) 1-3/8 turns back	(PRE-SET) 1-1/4 turns back
Pilot air jet (P.A.J.)	No. 1: (# 70), No. 2: (2.0 mm)	No. 1: (# 65), No. 2: (1.2 mm)
Throttle cable play	0.5 – 1.0 mm (0.02 – 0.04 in)	←
Choke cable play	0.5 – 1.0 mm (0.02 – 0.04 in)	←

I.D. NO. LOCATION

Each carburetor has I.D. Number ① stamped on the carburetor body according to its specifications.

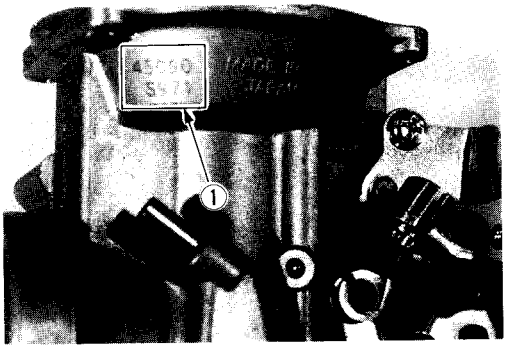

DIAPHRAGM AND PISTON OPERATION

The carburetor is a variable-venturi type, whose venturi cross section area is increased or decreased automatically by the piston valve ① which moves according to the negative pressure present on the downstream side of the venturi Ⓐ. Negative pressure is admitted into the diaphragm chamber ② through an orifice ③ provided in the piston valve ①.

Rising negative pressure overcomes the spring ④ force, causing the piston valve ① to rise to increase the said area and thus prevent the air velocity from increasing. Thus, air velocity in the venturi passage is kept relatively constant for improved fuel atomization and for securing optimum ratio of fuel/air mixture.

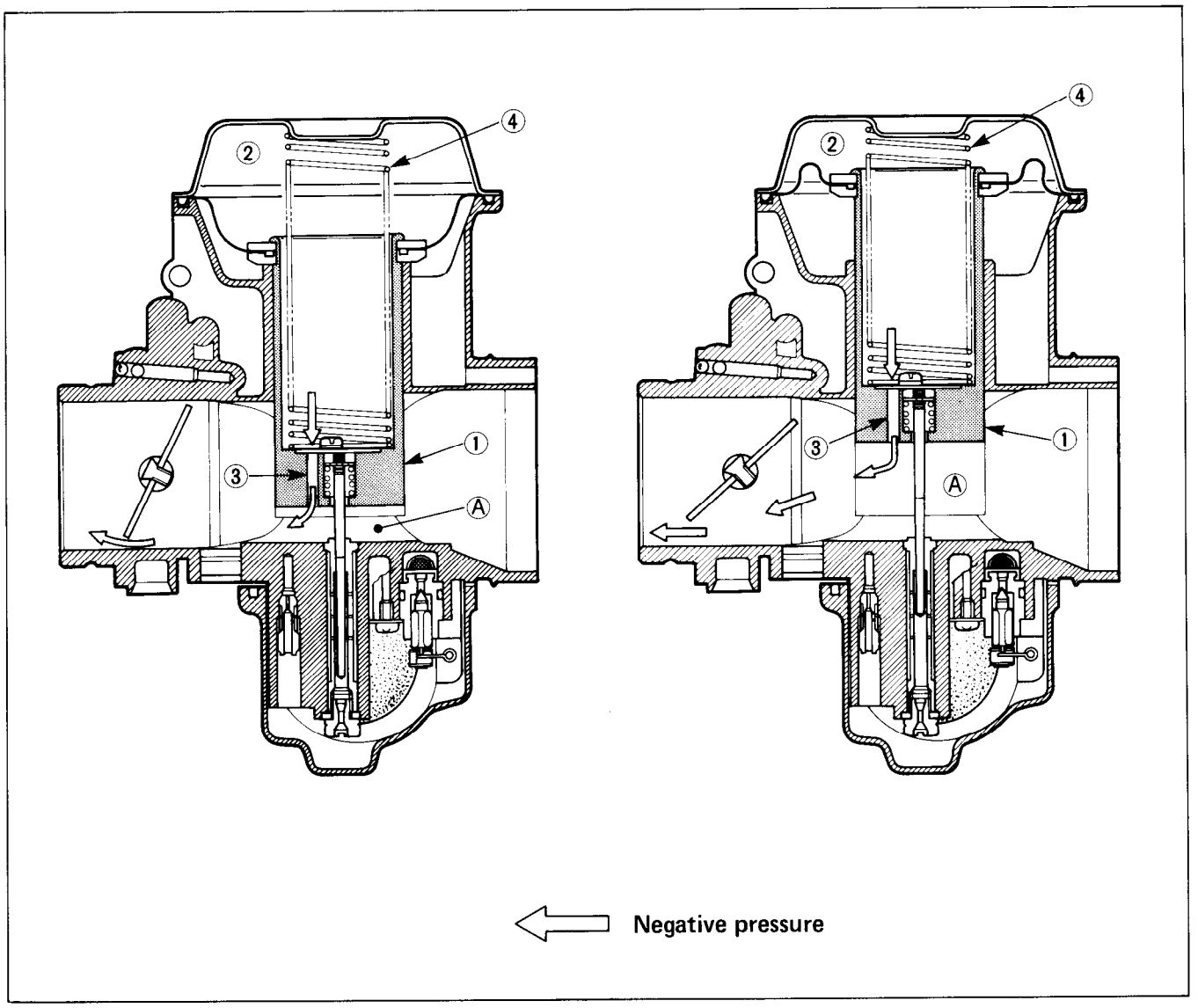

SLOW SYSTEM

This system supplies fuel during engine operation with throttle valve ① closed or slight opened. The fuel from float chamber ② is metered by pilot jet ③ where it mixes with air coming in through pilot air jets (#1 and #2) ④. This mixture, rich with fuel, then goes up through pilot passage to pilot screw ⑤. A part of the mixture is discharged into the main bore out of by-pass ports ⑥. The remainder is then metered by pilot screw ⑤ and sprayed out into the main bore through pilot outlet ⑦.

TRANSIENT ENRICHMENT SYSTEM

This transient enrichment system is a device which keeps fuel/air mixture ratio constant in order not to generate unstable combustion when the throttle grip is returned suddenly during high speed driving. For normal operation, joining of the air from upper part of carburetor inlet side to pilot air passage obtains proper fuel/air mixture ratio. But if the throttle valve is suddenly closed, a large negative pressure generated on cylinder side is applied to a diaphragm. The valve Ⓐ which interlocks with the diaphragm closes an air passage, thus, the pressure flows out to the pilot air passage.
This is system to keep the combustion condition constant by varying the fuel/air mixture ratio by controling air flow in the pilot circuit.

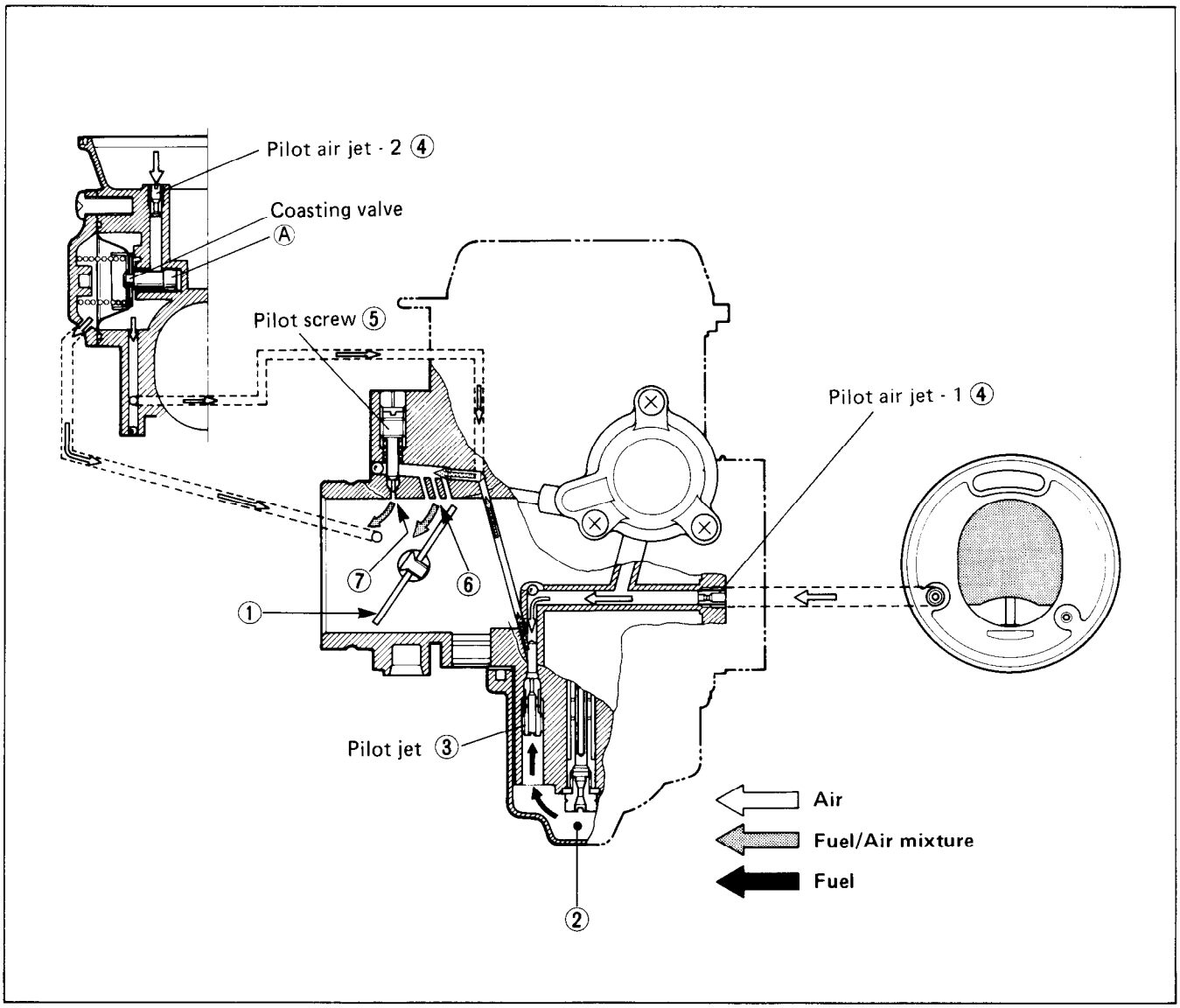

MAIN SYSTEM

As throttle valve ① is opened, engine speed rises, and this increases negative pressure in the venturi Ⓐ. Consequently the piston valve ② moves upward.

Meanwhile, the fuel in float chamber ③ is metered by main jet ④, and the metered fuel enters needle jet ⑤, in which it mixes with the air admitted through main air jet ⑥ to form an emulsion.

The emulsified fuel then passes through the clearance between needle jet ⑤ and jet needle ⑦, and is discharged into the venturi Ⓐ, in which it meets main air stream being drawn by the engine.

Mixture proportioning is accomplished in needle jet ⑤; the clearance through which the emulsified fuel must flow in large or small, depending ultimately on throttle position.

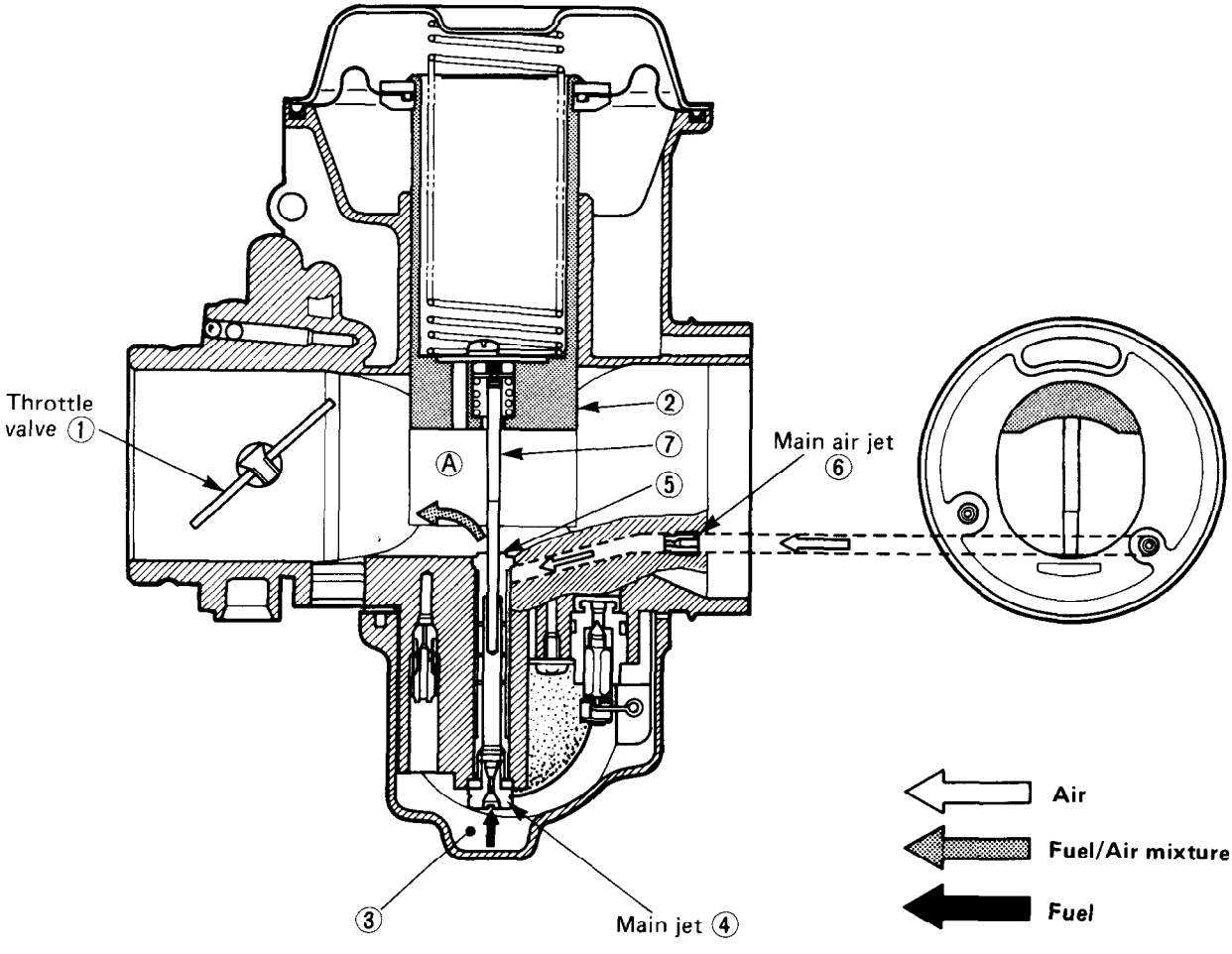

STARTER SYSTEM

Pulling up the starter shaft ①, fuel is drawn into the starter circuit from the float chamber ②.
Starter jet ③ meters this fuel, which then flows into starter pipe ④ and mixes with the air coming from the float chamber ② . The mixture, rich in fuel content, reaches starter plunger ⑤ and mixes again with the air coming through a passage extending from main bore.
The two successive mixings of fuel with air are such that proper fuel/air mixture for starting is produced when the mixture is sprayed out through starter outlet ⑥ into the main bore.

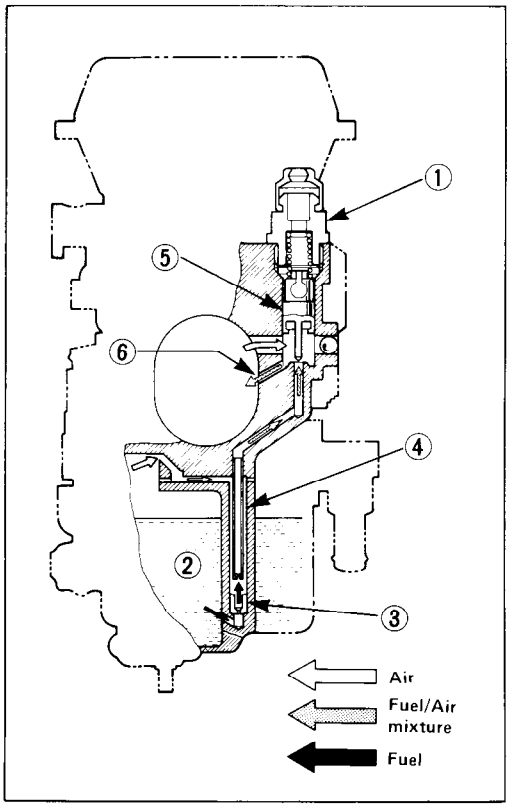

FLOAT SYSTEM

Floats ① and needle valve ② are associated with the same mechanism, so that, as the floats ① move up and down, the needle valve ② too moves likewise.
When fuel level is up in float chamber ③, floats ① are up and needle valve ② remains pushed up against valve seat. Under this condition, no fuel enters the float chamber ③. As the fuel level falls, floats ① go down and needle valve ② unseats itself to admit fuel into the chamber ③.
In this manner, needle valve ② admits and shuts off fuel alternately to maintain a practically constant fuel level inside the float chamber ③.

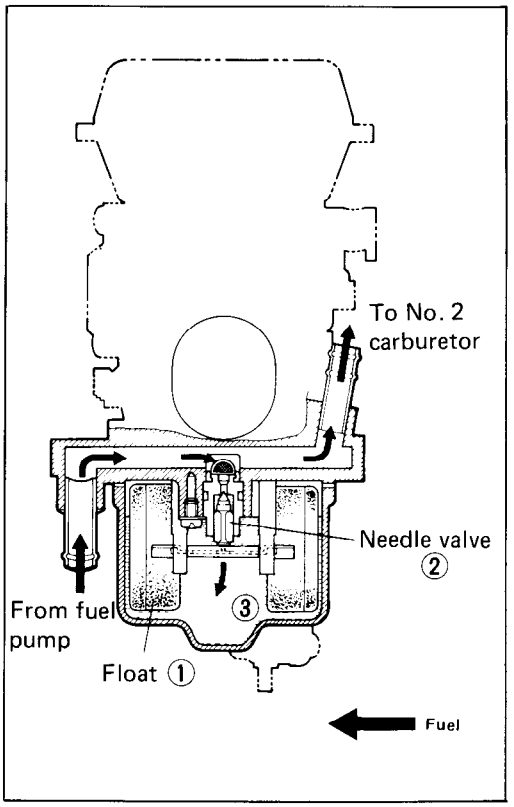

REMOVAL

- Refer to page 3-3.

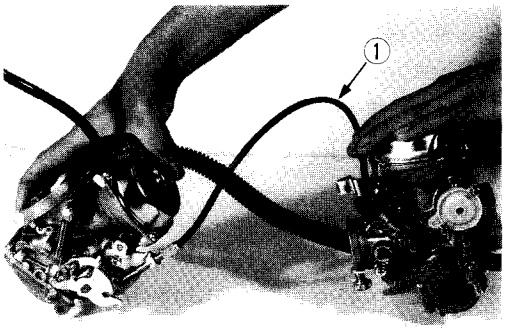

- Remove the No. 1 and No. 2 carburetors along with the synchronizing cable ① attached to the carburetors.

CAUTION:
Be sure to identify each removed parts as to its location, and lay the parts out in groups designated as "No. 1 carburetor", "No. 2 carburetor", so that each will be restored to the original location during assembly.

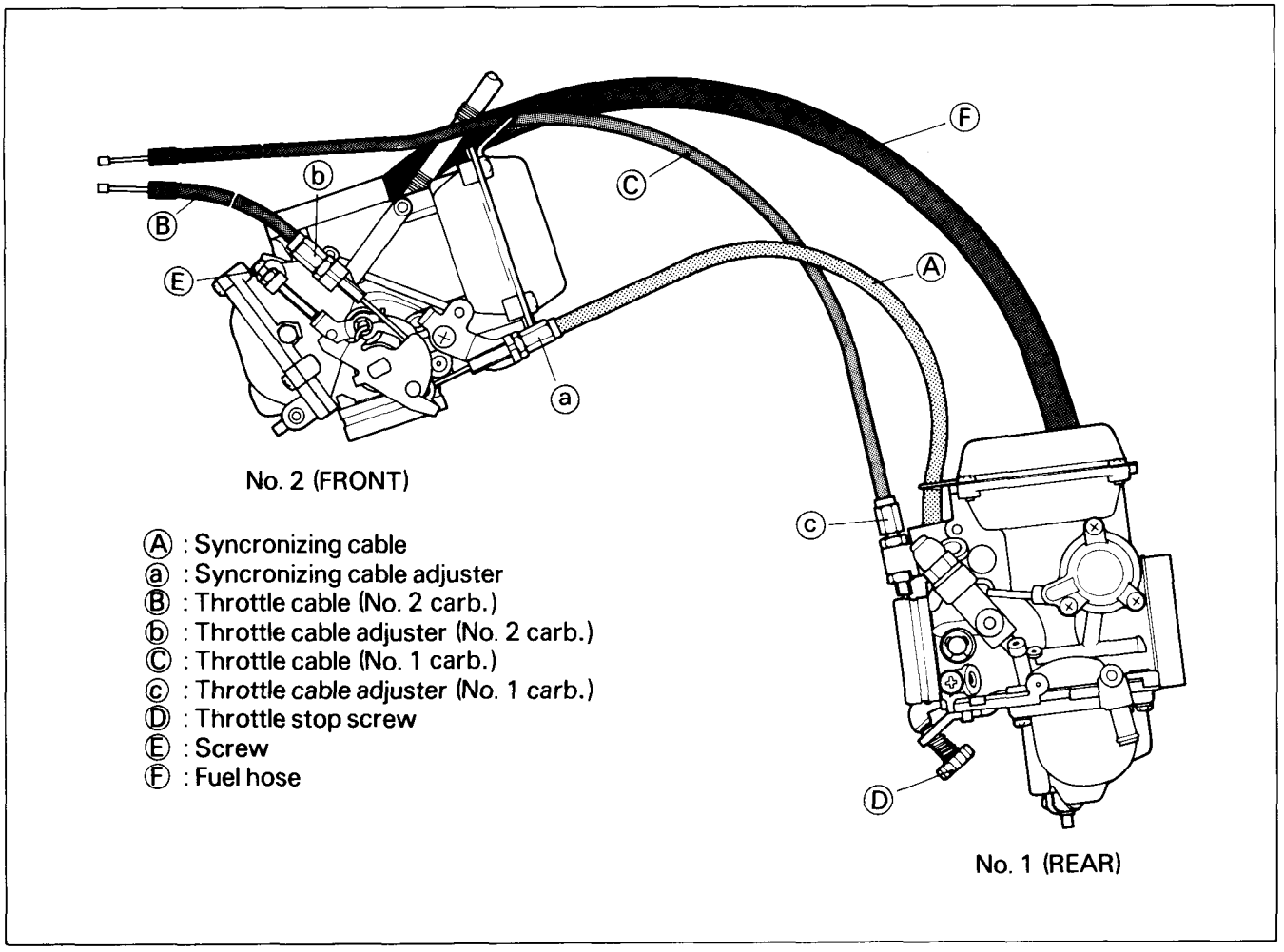

NOTE:
Do not turn the throttle cable adjusters ⓑ , ⓒ and the synchronizing cable adjuster ⓐ .

CAUTION:
Do not turn the screw Ⓔ of the No. 2 carburetor.
Once removing a throttle cable or the synchronizing cable or a carburetor body, it is necessary to balance the two carburetors.

DISASSEMBLY

- Disassemble the carburetors as shown in the illustrations on pages 6-4 and 5.

Check following items for any damage or clogging.

* Pilot jet
* Main jet
* Main air jet
* Pilot air jet
* Needle jet air bleeding hole
* Float
* Needle valve mesh and O-ring
* Diaphragm
* Gasket
* Throttle valve shaft oil seals
* Pilot outlet and by-pass holes
* Fuel hose
* Coasting valve
* Starter jet

NEEDLE VALVE INSPECTION

If foreign matter is caught between the valve seat and the needle, the gasoline will continue flowing and cause it to overflow. If the seat and needle are worn beyond the permissible limits, similar trouble will occur. Conversely, if the needle sticks, the gasoline will not flow into the float chamber. Clean the float chamber and float parts with gasoline. If the needle is worn as shown in the illustration, replace it together with available seat. Clean the fuel passage of the mixing chamber with compressed air.

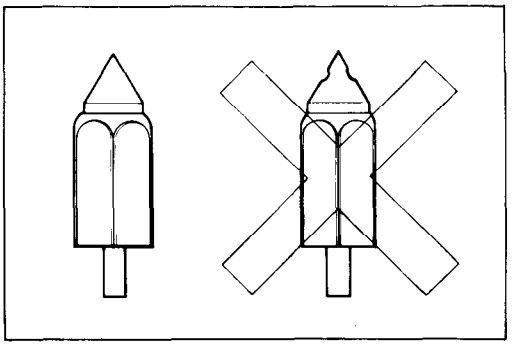

FLOAT HEIGHT ADJUSTMENT

To check the float height, invert the carburetor body, with the float arm kept free, measure the height Ⓐ while float arm is just in contact with needle valve by using calipers.

Float height Ⓐ	No. 1	27.7 ± 1.0 mm (1.09 ± 0.04 in)
	No. 2	9.1 ± 1.0 mm (0.36 ± 0.04 in)

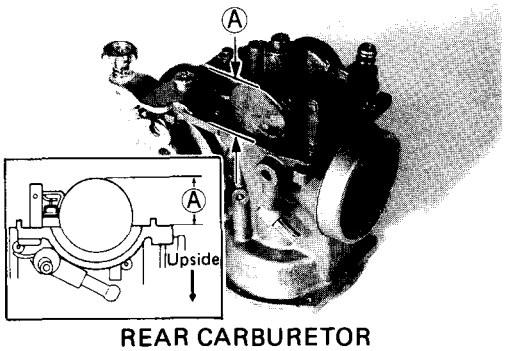

REAR CARBURETOR

09900-20102 : Vernier calipers

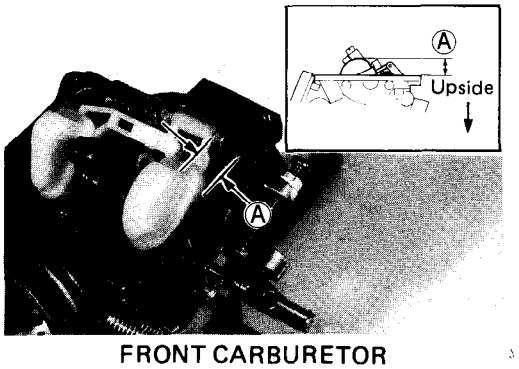

FRONT CARBURETOR

Bend the tongue ① as necessary to bring the height Ⓐ to this value.

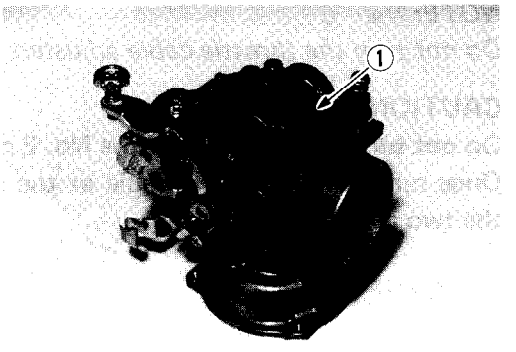

REASSEMBLY AND REMOUNTING

Reassemble and remount the carburetors in the reverse order of disassembly and remounting.

Pay attention to the following points:

- Align the groove ① of the needle jet with the pin ② and replace it.

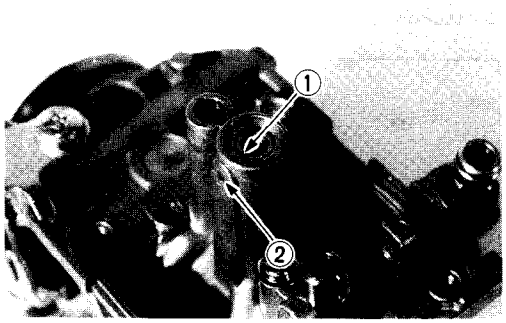

- Place the tongue ① of diaphragm to the carburetor body properly.

- When installing the coasting valve to the body, align the holes.

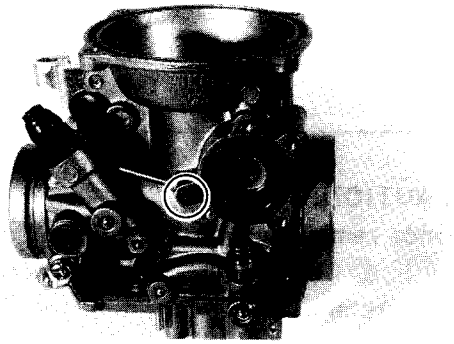

- Set each throttle valve in such a way that its top end Ⓐ meets the foremost by-pass Ⓑ.

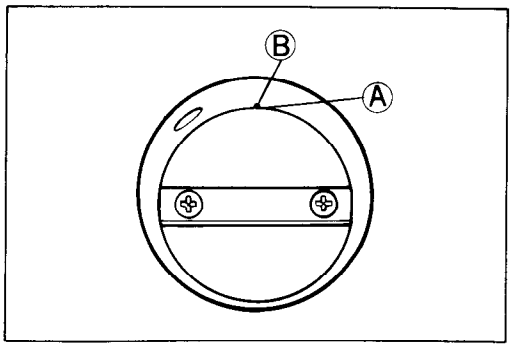

BALANCING CARBURETORS

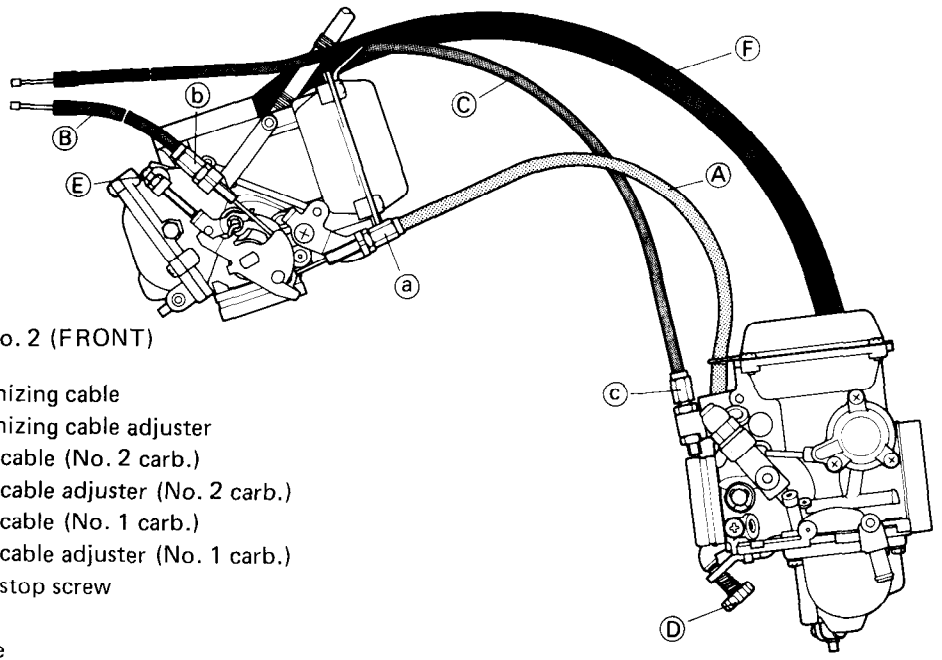

Ⓐ : Synchronizing cable
ⓐ : Synchronizing cable adjuster
Ⓑ : Throttle cable (No. 2 carb.)
ⓑ : Throttle cable adjuster (No. 2 carb.)
Ⓒ : Throttle cable (No. 1 carb.)
ⓒ : Throttle cable adjuster (No. 1 carb.)
Ⓓ : Throttle stop screw
Ⓔ : Screw
Ⓕ : Fuel hose

CAUTION:

Once removing the synchronizing cable Ⓐ or throttle cables Ⓑ , Ⓒ or carburetors, it is necessary to balance the two carburetors.

IN CASE OF CHANGING THE SYNCHRONIZING CABLE Ⓐ :

As the first step, calibrate the carburetor balancer gauge, as follows:

09913-13121 : Carburetor balancer
09913-13140 : Adapter

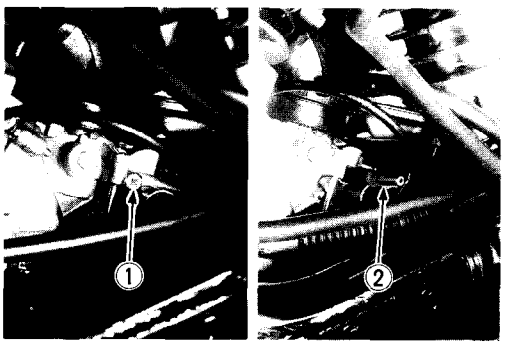

- Start up the engine and run it in idling condition for warming up.
- Stop the warm-up engine. Remove the vacuum inspection screw ① for No. 2 carburetor and install the adapter ② with gasket.
- Connect one of the four rubber hoses of the balancer gauge to this adapter, and start up the engine, and keep it running at idle speed by turning throttle stop screw Ⓓ.

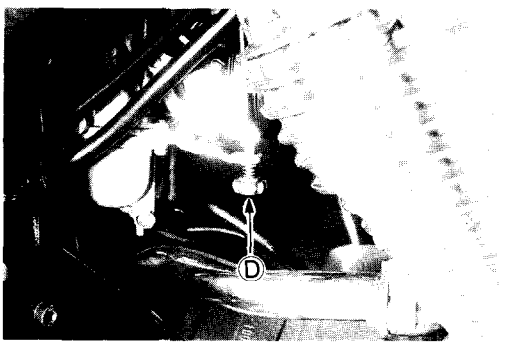

NOTE:
The idle speed is different among the countries. (See pages 6-6 and 7.)

- Turn the air screw ③ of the gauge so that the vacuum acting on the tube of that hose will bring the steel ball ④ in the tube to the center line ⑤.

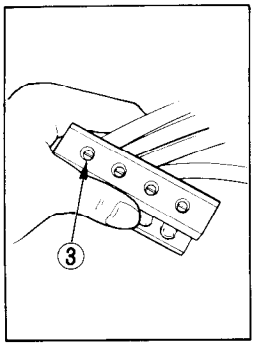

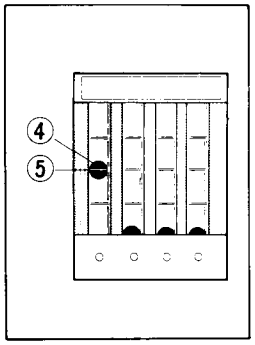

- After making sure that the steel ball stays steady at the center line, disconnect the hose from the adapter and connect the next hose to the adapter. Turn air screw to bring the other steel ball to the center line. Now the balancer has been calibrated.

- Remove the vacuum inspection screw ⑥ for No. 1 carburetor and install the adapter with gasket.
- Connect each calibrated balancer gauge hose to their respective adapters.

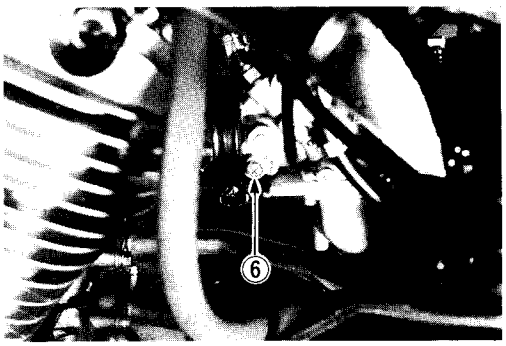

- Warm up the engine, and keep it running at idle speed.
- Under this condition, see if the two steel balls stay equally at the center level line, as they should, to signify that the two carburetors are in balance: if not, loosen the lock nut and turn the synchronizing adjuster ⓐ and the throttle stop screw Ⓓ to bring the steel balls to the center level line by keeping the engine running at idle speed.

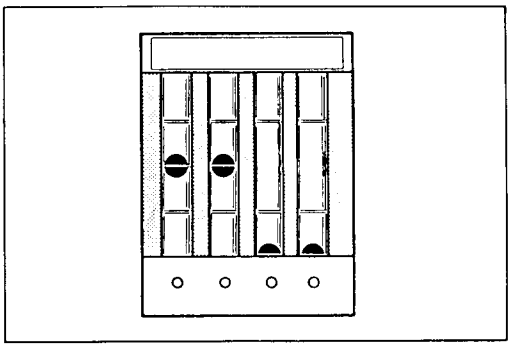

IN CASE OF CHANGING THE THROTTLE CABLE Ⓑ, Ⓒ:

As the first step, calibrate the carburetor balancer gauge at 1500 r/min, as the same manners of the case of changing the synchronizing cable.

- Temporarily remove the No. 1 carburetor.
- Equalize the throttle cables' inner length at the connector by turning the adjusters ⓑ , ⓒ after loosening the lock nuts.

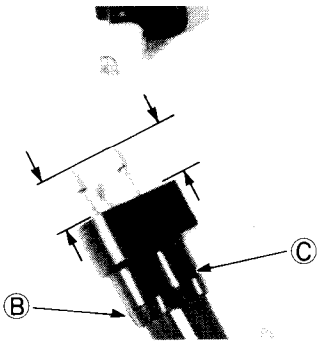

NOTE:

* *Be careful not to twist the throttle cables Ⓑ, Ⓒ.*
* *Throttle cable adjuster ⓒ can not be turned when the No. 1 carburetor is installed to the engine.*
* *The idle speed is different among the countries. (See pages 6-6 and 7.)*

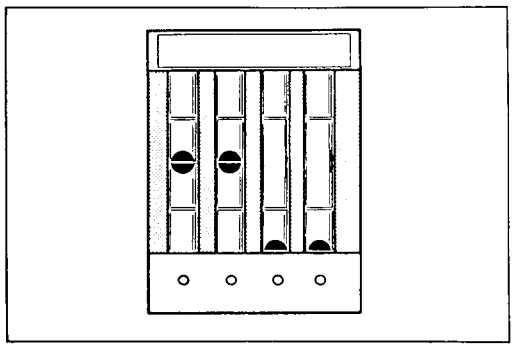

- Install the No. 1 carburetor and set the carburetor balancer which is calibrated at 1500 r/min.
- Warm up the engine, and keep it running at 1500 r/min by turning the throttle grip.
- Under this condition, see if the two steel balls stay equally at the center level line, as they should, to signify the two carburetors are in balance: if not, loosen the lock nut and turn the throttle cable adjuster ⓑ to adjust the throttle valve setting to bring the steel balls to the center level line.

NOTE:
When equalizing the throttle cables' inner length, make sure that each throttle cable have enough play.

IN CASE OF CHANGING THE CARBURETORS

When changing the carburetors, it is necessary to remove the synchronizing cable and throttle cables. So once removing the carburetor, it becomes necessary to adjust the cables by performing above two steps (i.e. IN CASE OF CHANGING THE SYNCHRONIZING CABLE and IN CASE OF CHANGING THE THROTTLE CABLE).

CAUTION:
In this case first adjust the synchronizing cable.

LUBRICATION SYSTEM

OIL PRESSURE

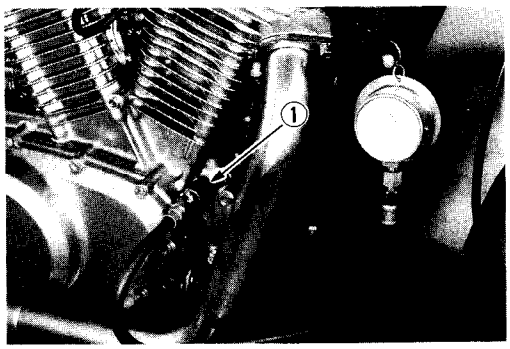

Check the oil level in the inspection window and check the oil pressure in the following manner:

- Remove the oil pressure inspection bolt.
- Install the oil pressure adapter ①.
- Install the oil pressure gauge in the position shown in the figure.
- Warm up the engine as follows:
- Summer 10 min. at 2000 r/min.
  Winter 20 min. at 2000 r/min.
- After warming up operation, increase the engine speed to 3000 r/min, and read the oil pressure gauge.
- The oil pump pressure is specified below:

OIL PRESSURE SPECIFICATION

Above 350 kPa (3.5 kg/cm^2, 50 psi)
Below 650 kPa (6.5 kg/cm^2, 92 psi) at 3000 r/min
Oil temp. at 60°C (140°F)

CAUTION:
The recommended engine oil is, API classification SE or SF, 10W-40 motor oil.

09915-74510 : Oil pressure gauge
09915-77330 : Oil pressure gauge (meter)
09915-74530 : Oil pressure gauge adapter

NOTE:
Engine oil must be warmed up to 60°C (140°F) when checking the oil pressure.

If the oil pressure is lower or higher than the specifications, several causes may be considered.

* Low oil pressure is usually the result of clogged oil filter, oil leakage from the oil passage way, damaged oil seal, a defective oil pump or a combination of these items.
* High oil pressure is usually caused by a engine oil which is too heavy a weight, a clogged oil passage, improper installation of the oil filter or a combination of these items.

OIL FILTER

Refer to page 2-8 for installation procedures.

OIL SUMP FILTER

At the same time wash the oil sump filter cap. Check to be sure that the strainer screen is free from any sign of rupture and wash the strainer clean periodically.
Refer to page 3-46 for installation procedures.

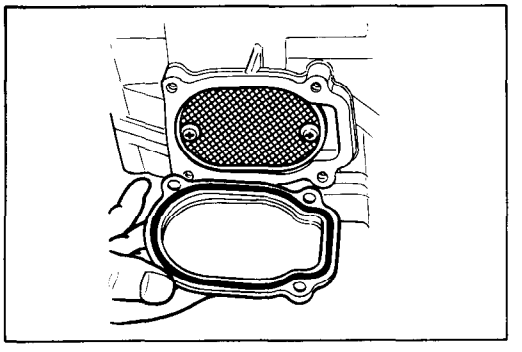

LUBRICATION SYSTEM CHART

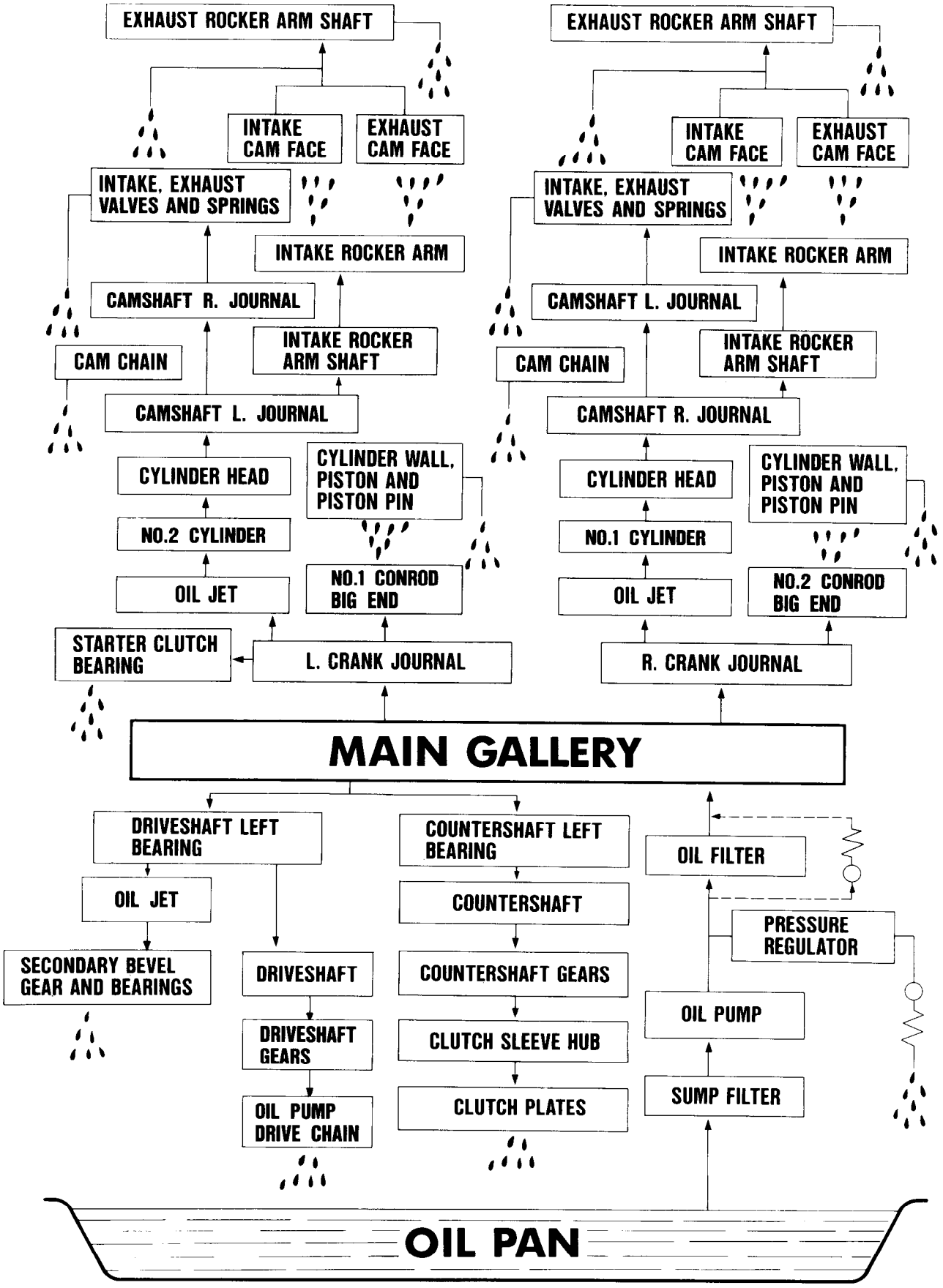

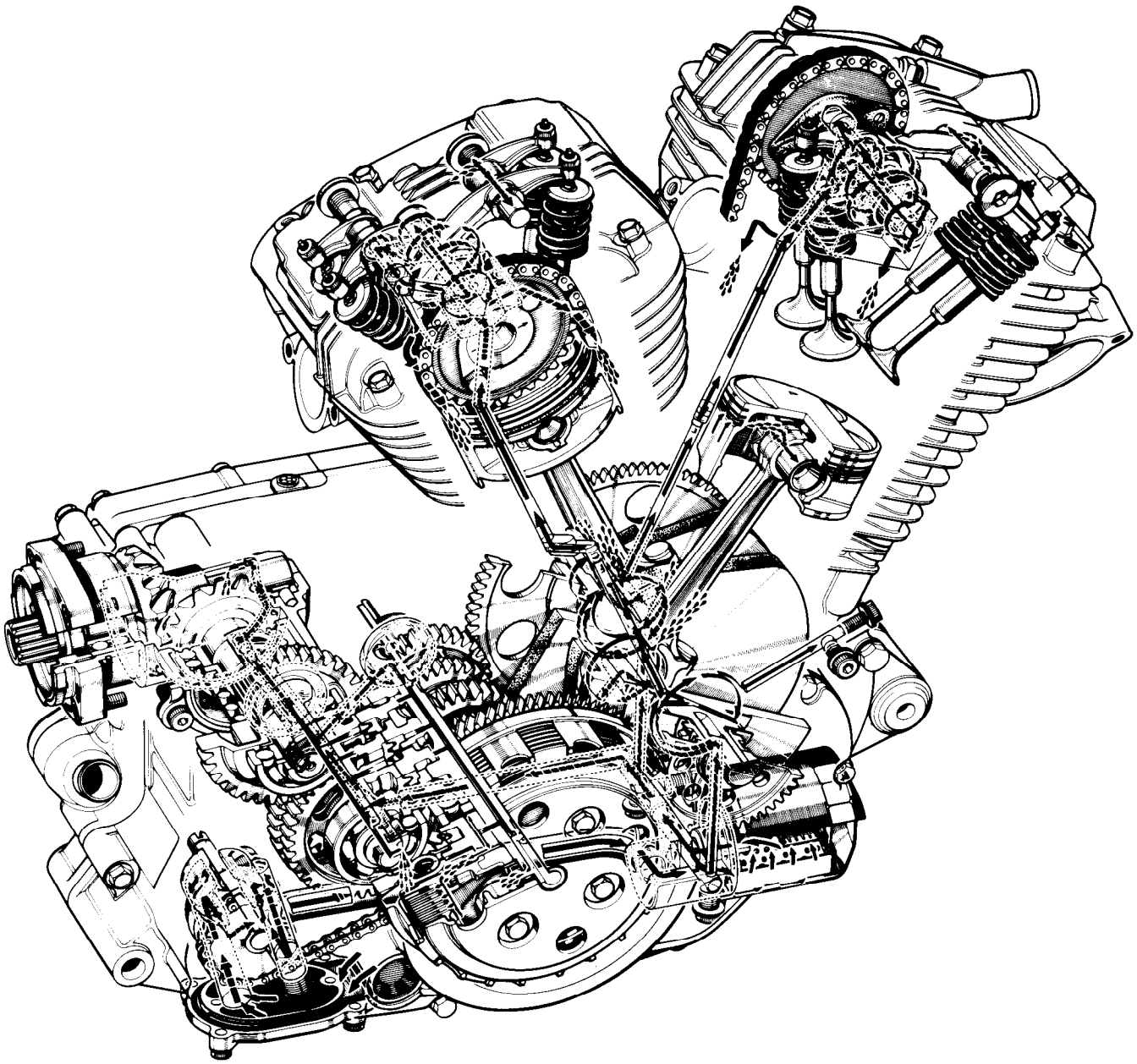

ELECTRICAL SYSTEM

CONTENTS

CHARGING SYSTEM

DESCRIPTION

The circuit of the charging system is indicated in the figure, which is composed of an AC generator, regulator/rectifier unit and battery.

The AC current generated from the AC generator is rectified by the rectifier and is turned into DC current, then it charges the battery.

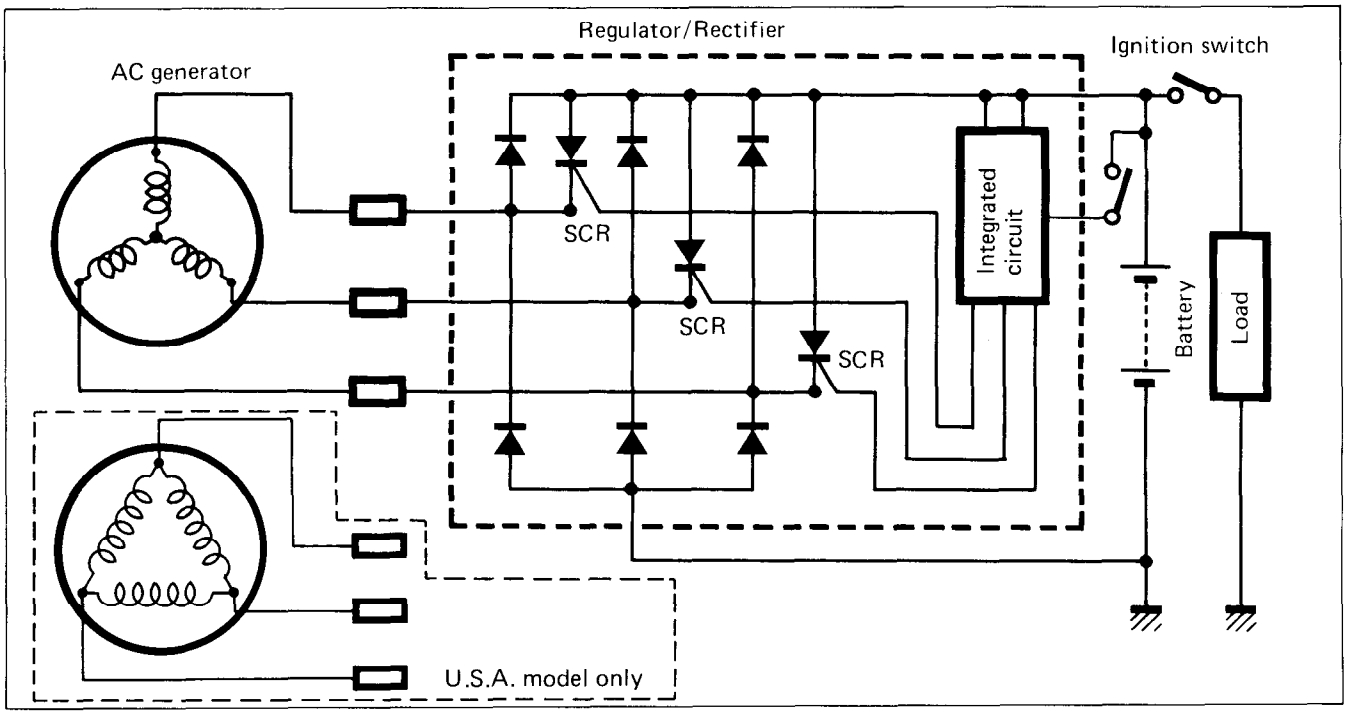

FUNCTION OF REGULATOR

While the engine r/min is low and the generated voltage of the AC generator is lower than the adjusted voltage of regulator, the regulator does not function. However, the generated current charges the battery directly at this time.

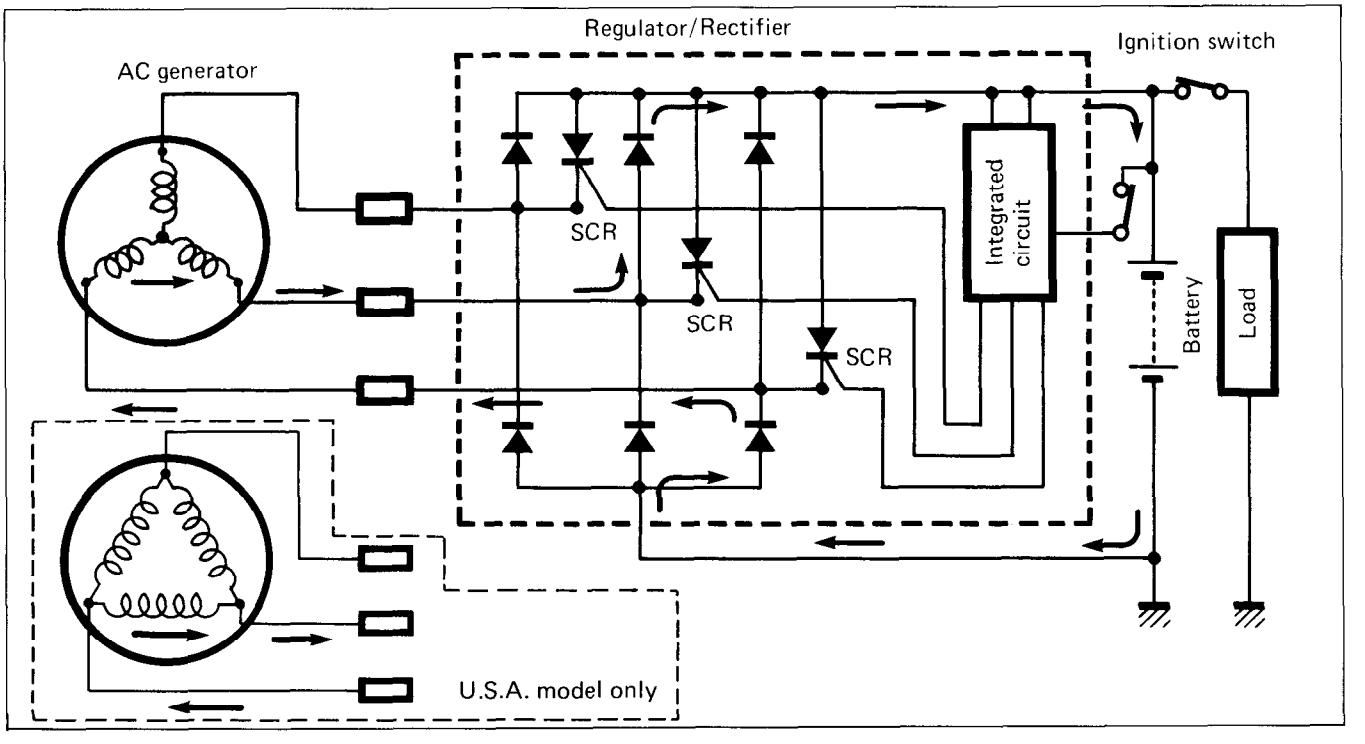

When the engine r/min becomes higher, the generated voltage of the AC generator also becomes higher and the voltage between the battery terminals becomes high accordingly. When it reaches the adjusted voltage of the I.C. (Integrated Circuit) and it is turned "ON", a signal will be sent to the SCR (Thyristor) gate probe and the SCR will be turned "ON".
Then, the SCR becomes conductive in the direction from point Ⓐ to point Ⓑ. At this time, the current generated from the AC generator gets through the SCR without charging the battery and returns to AC generator again. At the end of this state, since the AC current generated from AC generator flows to point Ⓑ , the reverse current tends to flow to SCR. Then, the circuit of SCR turns to the OFF mode and begins to charge the battery again. Thus these repetitions maintain charging voltage and current to the battery constant and protect it from overcharging.

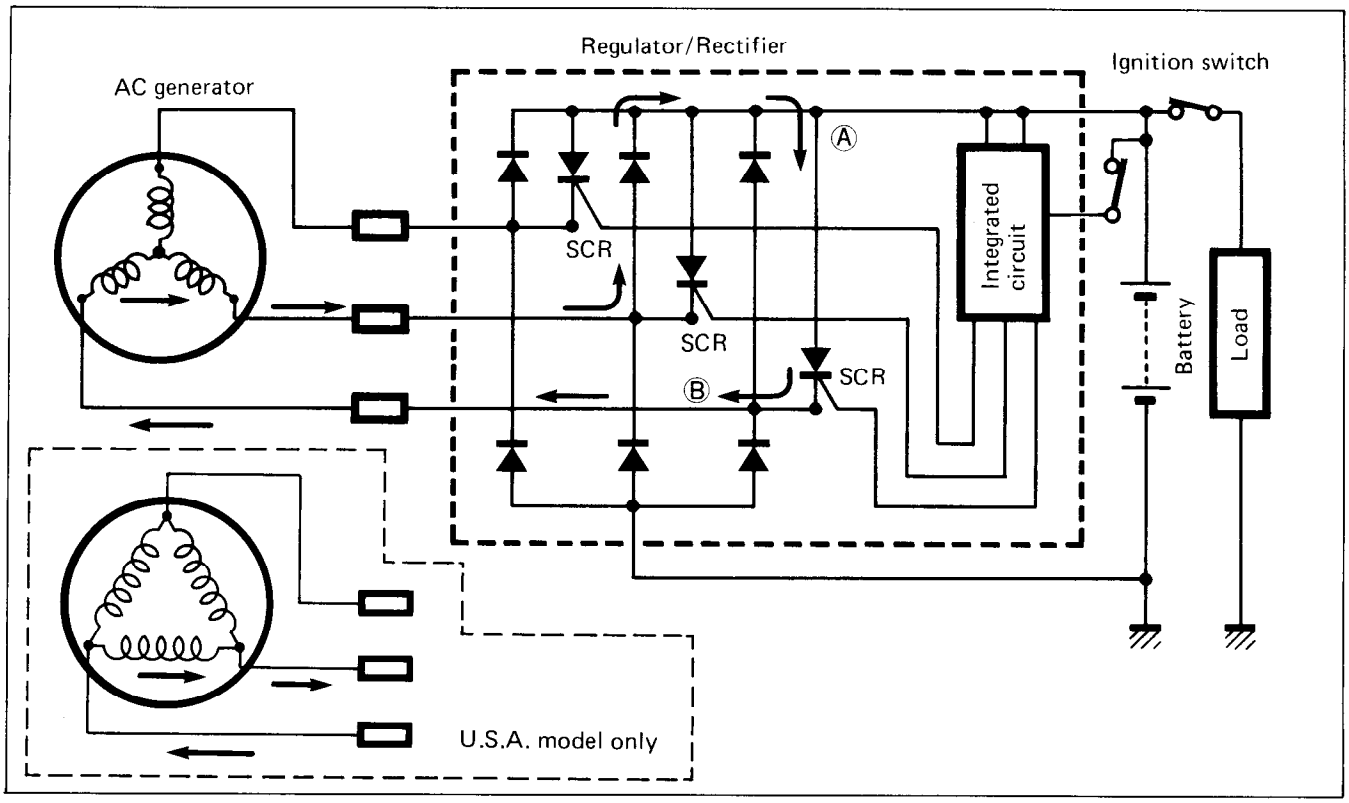

INSPECTION

CHARGING OUTPUT CHECK

- Remove the seat.
- Start the engine and keep it running at 5 000 r/min with lighting switch turned ON and dimmer switch turned HI position.
- Using the pocket tester, measure the DC voltage between the battery terminals, ⊕ and ⊖.
  If the tester reads under 13.5V or over 15.5V, check the AC generator no-load performance and regulator/rectifier.

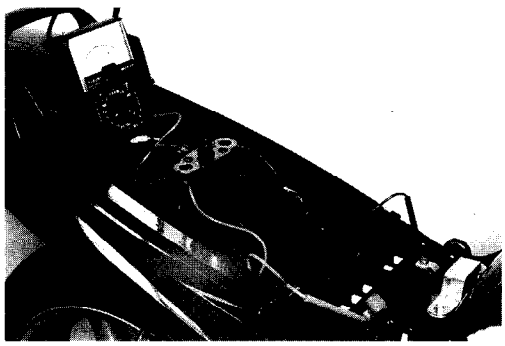

NOTE:
When making this test, be sure that the battery is fully-charged condition.

STD charging output : 13.5 – 15.5V (DC) at 5 000 r/min

09900-25002 : Pocket tester

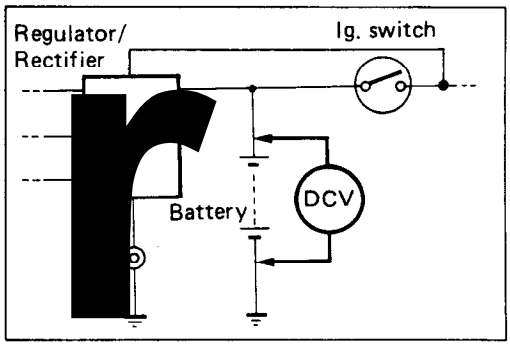

AC GENERATOR NO-LOAD PERFORMANCE

- Remove the seat and lift the backside of fuel tank.
- Disconnect the AC generator lead wire coupler.
- Start the engine and keep it running at 5 000 r/min.
- Using the pocket tester, measure the AC voltage between the three lead wires.
  If the tester reads under the specified voltage, the AC generator is faulty.

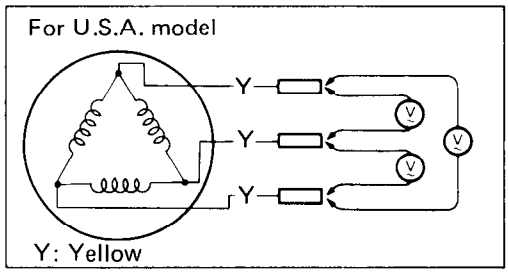

For U.S.A. model

STD no-load performance: More than 65V (AC) at 5000 r/min (When engine cold.)

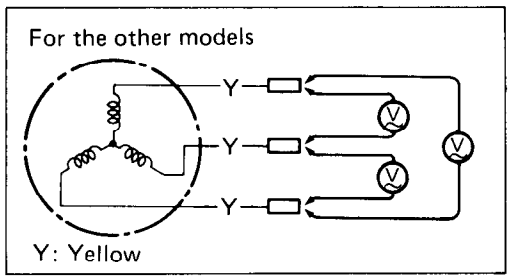

For the other models

STD no-load performance: More than 75V (AC) at 5000 r/min (When engine cold.)

09900-25002 : Pocket tester

AC GENERATOR CONTINUITY CHECK

- Using the pocket tester, check the continuity between the three lead wires.
  Check that there is no continuity between the lead wires and ground.

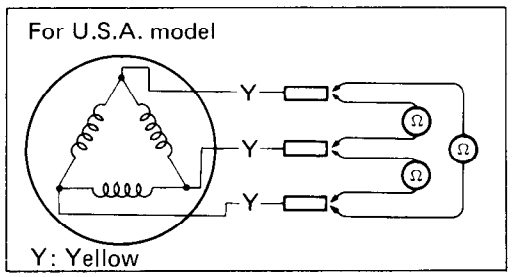

09900-25002 : Pocket tester

NOTE:
When making above test, it is not necessary to remove the AC generator.

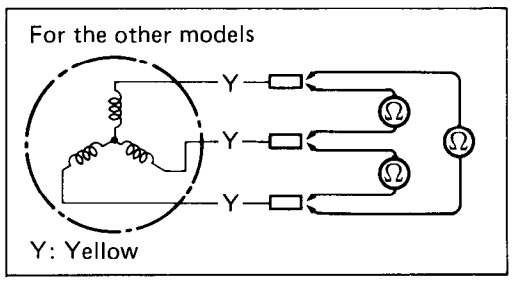

REGULATOR/RECTIFIER

- Remove the seat and lift the backside of fuel tank.
- Using the pocket tester (x 1 kΩ range), measure the resistance between the lead wires in the following table.
  If the resistance checked is incorrect, replace the regulator/rectifier.

09900-25002 : Pocket tester

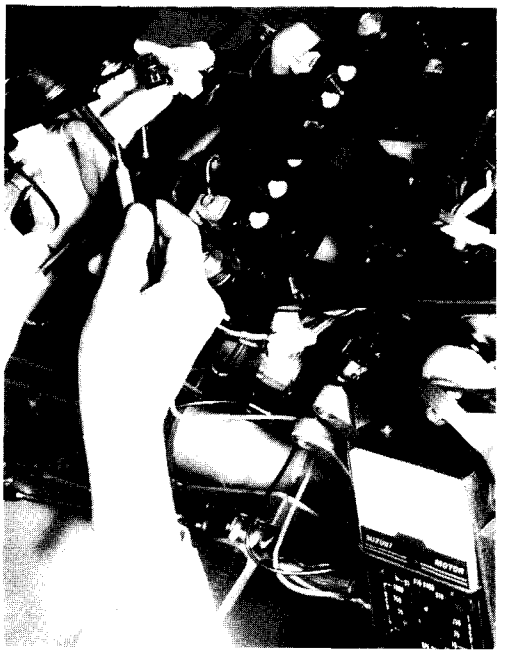

Unit: Approx. kΩ

⊖ Probe of tester to:	⊕ Probe of tester to: Y_1	Y_2	Y_3	R	O/B	B/W
Y_1		∞	∞	3.0	∞	∞
Y_2	∞		∞	3.0	∞	∞
Y_3	∞	∞		3.0	∞	∞
R	∞	∞	∞		∞	∞
O/B	40	40	40	60		28
B/W	3.0	3.0	3.0	7.5	6	

Y: Yellow, R: Red, O/B: Orange with Black tracer, B/W: Black with White tracer, ∞ : Infinity

NOTE:
As transistors, capacitors, Zener diodes, etc. are used inside this regulator/rectifier, the resistance values will differ when an ohmmeter other than the SUZUKI pocket tester is used.

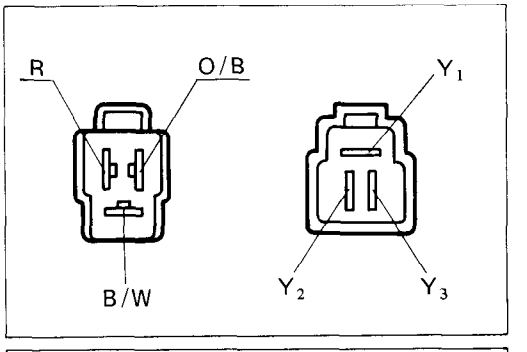

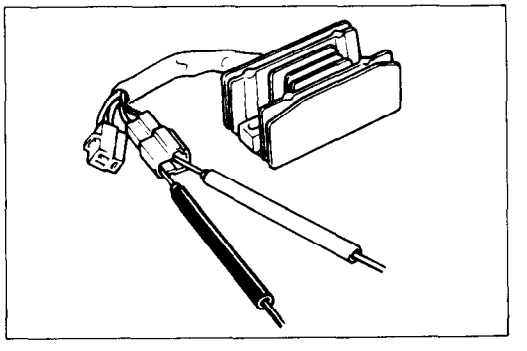

IGNITION SYSTEM

DESCRIPTION

The fully transistorized ignition system consists of a signal generator, ignitor, ignition coils, and spark plugs. The signal generator comprises rotor tip and pick-up coil.

The signal generator is mounted at the generator and rotor. The induced signal in the signal generator is sent to wave-form arrangement circuit, and CPU receives this signal and calculates the best ignition timing from the signal of ceramic vibrator and data stored in the ROM. The CPU outputs signal to the transistor of the I.G. coil output circuit which is connected to the primary windings of the ignition coil which is turned OFF and ON accordingly, thus it induces the secondary current on the ignition coil secondary windings and produce the spark between spark plug gaps.

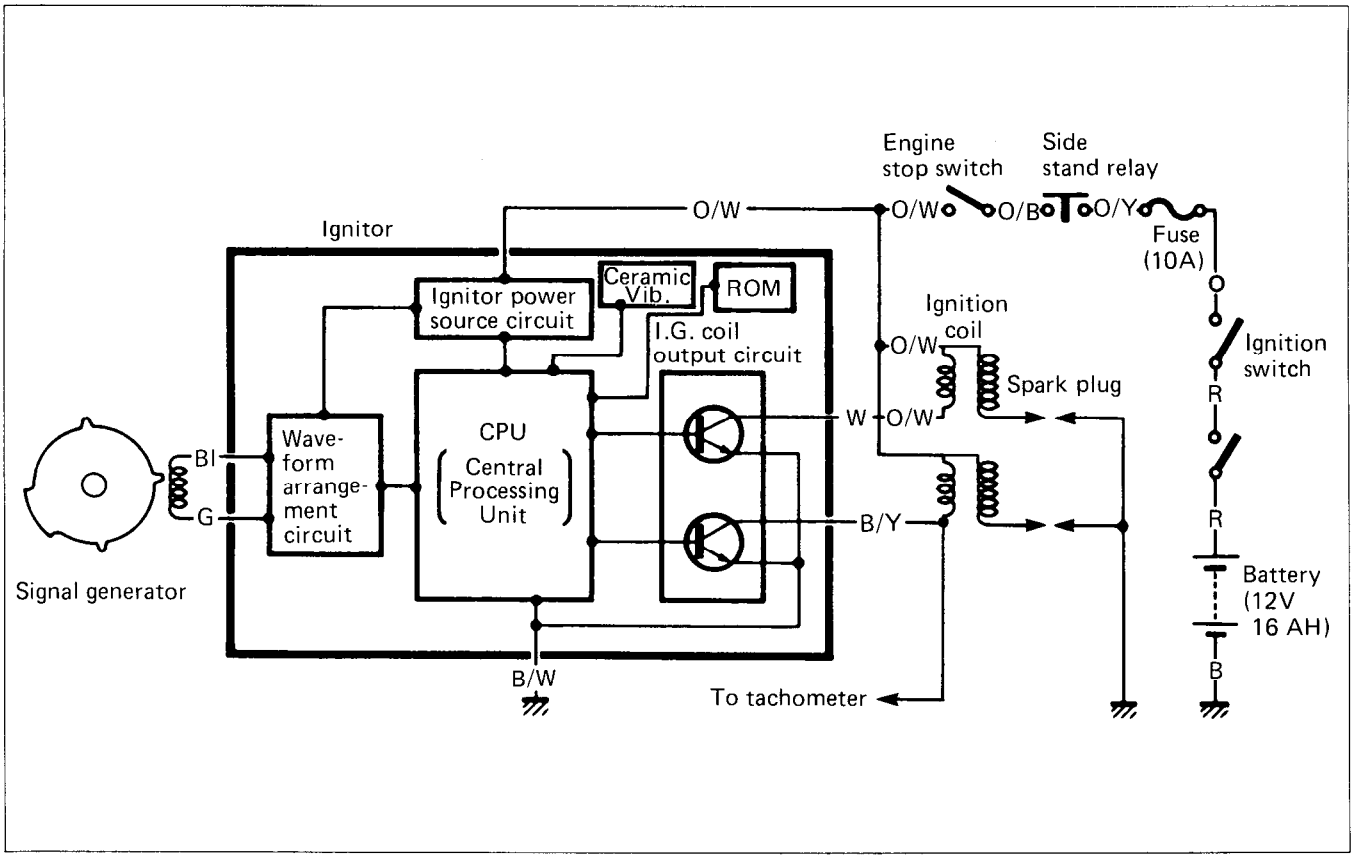

NOTE:
The ignition cut-off circuit is not incorporated in this ignitor unit.

INSPECTION

IGNITION COIL (Checking with Electro Tester)

- Remove the ignition coils from the frame.
- Using the electro tester, test each ignition coil for sparking performance. The test connection is as indicated. Make sure that the three-needle sparking distance is at least 8 mm.
  If no sparking or orange color sparking occurs with this much gap, then it is defective and must be replaced.

09900-28106 : Electro tester

STD Spark performance : 8 mm (0.3 in)

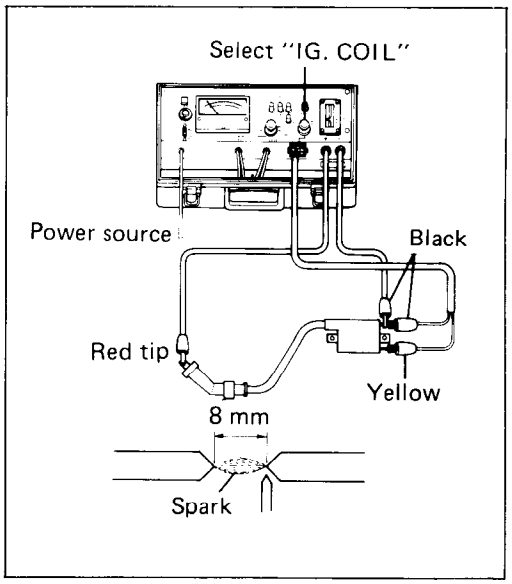

IGNITION COIL (Checking with Pocket Tester)

- A SUZUKI pocket tester or an ohmmeter may be used, instead of the electro tester. In either case, the ignition coil is to be checked for continuity in both primary and secondary windings.
  Exact ohmic readings are not necessary, but, if the windings are in sound condition, their continuity will be noted with these approximate ohmic values.

09900-25002 : Pocket tester

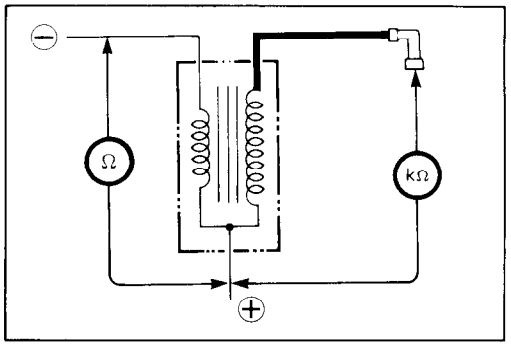

Ignition coil resistance

Primary : ⊕ tap – ⊖ tap 2 – 6 Ω
Tester range: (x 1 Ω)

Secondary : ⊕ tap – Plug cap 19 – 27 kΩ
Tester range: (x 1 kΩ)

SIGNAL GENERATOR (Checking with Pocket Tester)

- Remove the seat and left frame cover.
- Measure the resistance between lead wires. If the resistance is infinity or less than the specification, the signal generator must be replaced.

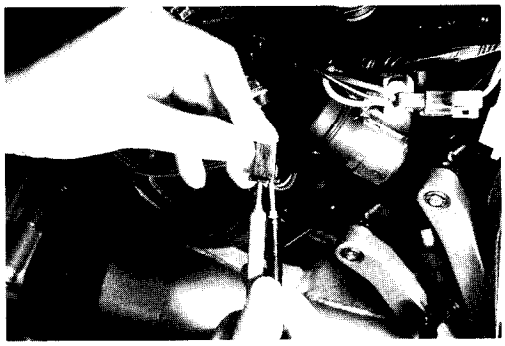

09900-25002 : Pocket tester

(For U.S.A. model)

Signal coil resistance : (G – Bl)
Approx. 117 Ω
Tester range: (x 100 Ω)

(For the other models)

Signal coil resistance : (G – Bl)
Approx. 230 Ω
Tester range: (x 100 Ω)

Wire color

G : Green
Bl : Blue

CAUTION:
When replacing the generator coil, apply a small quantity of THREAD LOCK "1342" to its mounting bolts and lead wire guide screws.

99000-32050 : THREAD LOCK "1342"

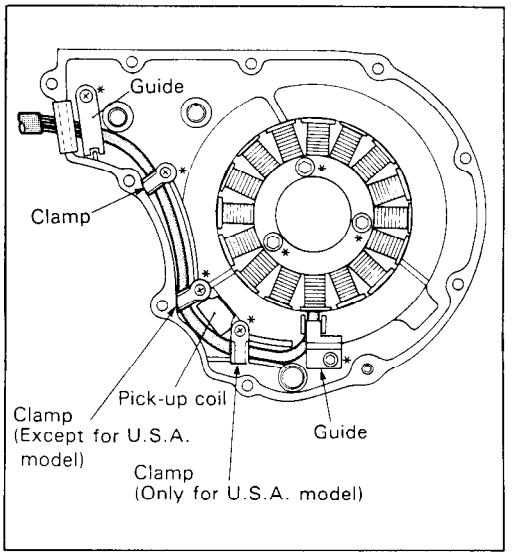

SPARK PLUG

- Clean the plug with a wire brush and pin. Use the pin to remove carbon, taking care not to damage the porcelain.

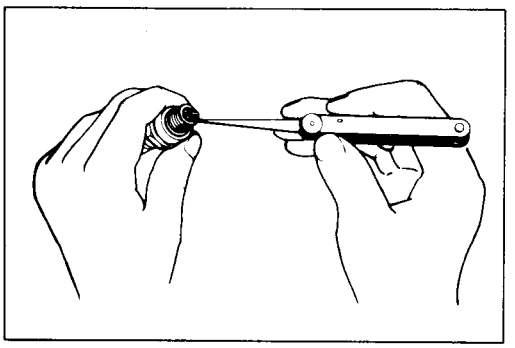

- Check the gap with a thickness gauge.

Spark plug gap : 0.8 – 0.9 mm (0.031 – 0.035 in)

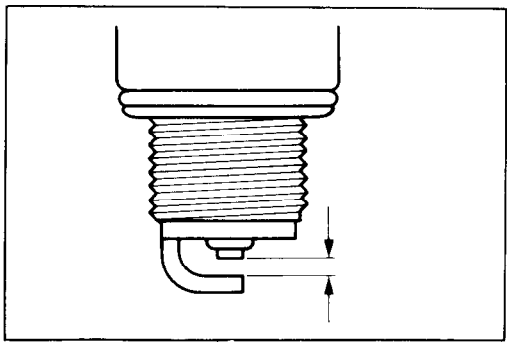

Recommended spark plug

ND: X24EPR-U9 . . . . . Standard
ND: X22EPR-U9 . . . . . Hot type
ND: X27EPR-U9 . . . . . Cold type
NGK: DPR8EA-9 . . . . . Standard
NGK: DPR7EA-9 . . . . . Hot type
NGK: DPR9EA-9 . . . . . Cold type

NOTE:
"R" type spark plug is installed for some specifications. "R" type spark plug has a resister located at the center electrode to prevent radio noise.

IGNITOR UNIT (Checking with Digital Ignitor Checker)

This section explains the checking procedure for the ignitor unit using Digital Ignitor Checker (special tool). With this checker, the ignitor unit can be checked either on the machine or off the machine. The following explains the checking procedure on the machine.

09931-94430 : Digital ignitor checker

WIRING PROCEDURE:

- Remove the seat.
- Disconnect two ignitor lead wire couplers ① at the ignitor unit.

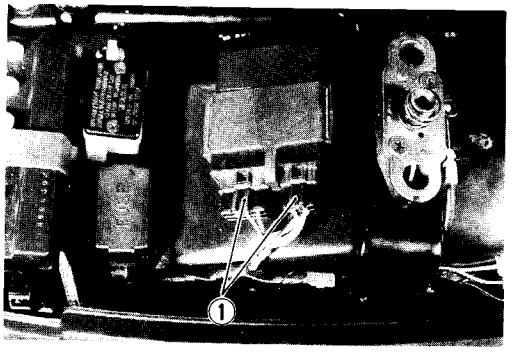

- Prepare the ignitor checker lead wire "MODE 1" ② which comes supplied with the ignitor checker and connect its end to the ignitor unit and another end to the checker.
- Connect the power source leads ③ to the battery.

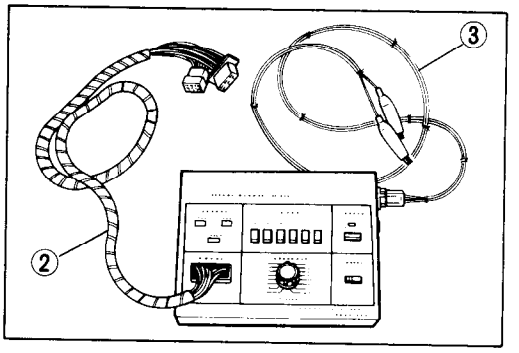

CAUTION:

* **Be sure that the BLACK lead is connected to the battery ⊖ terminal and RED lead to the ⊕ terminal.**
* **Before connecting the power source leads, make sure that both "POWER" button and "START" switch are in "off" position (POWER button not depressed).**

NOTE:

Be sure that the battery used is in fully-charged condition.

CHECK PROCEDURE:

With all the lead wires properly connected, check the ignitor unit in the following three steps.

First Step:

Depress "MODE 6" button then "POWER" button. This time, "POWER" lamp should come on, if not, battery is under-charged.

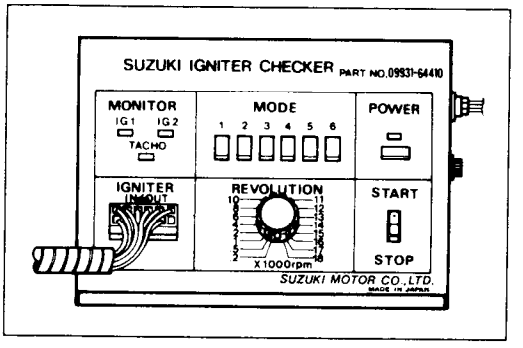

NOTE:

Only for U.S.A. model

Be sure to depress "MODE 1" button.

Second Step:
Set "REVOLUTION" dial pointer to ".2" position in which the checker produces the ignition primary current pulses simulating 200 r/min of engine revolution when "START" switch is turned on. With "START" switch is turned to ON position, check that two "MONITOR" lamps turn on and off in slow frequency in order of ① – ② as illustrated.
If these lamps do not turn on and off, the ignitor unit should be replaced.

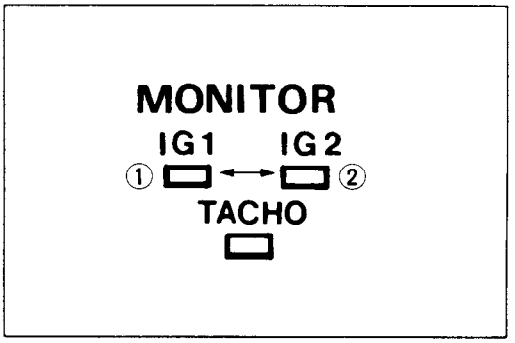

Third Step:
Turn "REVOLUTION" Dial up gradually (assuming the engine is gradually revved up) and check that the MONITOR lamps flash frequency as explained in the second step above increases. As the dial pointer passes beyond the graduation "4" (4 000 r/min), the two lamps should show continuously lighted. If the lamps go off at the graduation below "10", the engine can not perform properly and therefore the ignitor unit must be replaced.

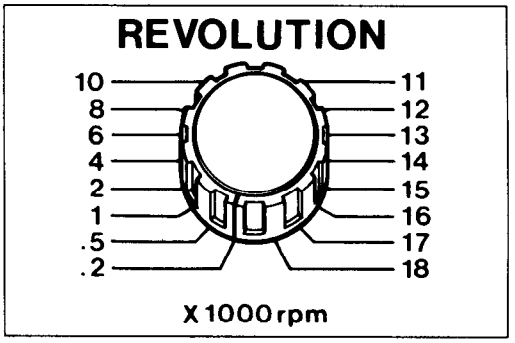

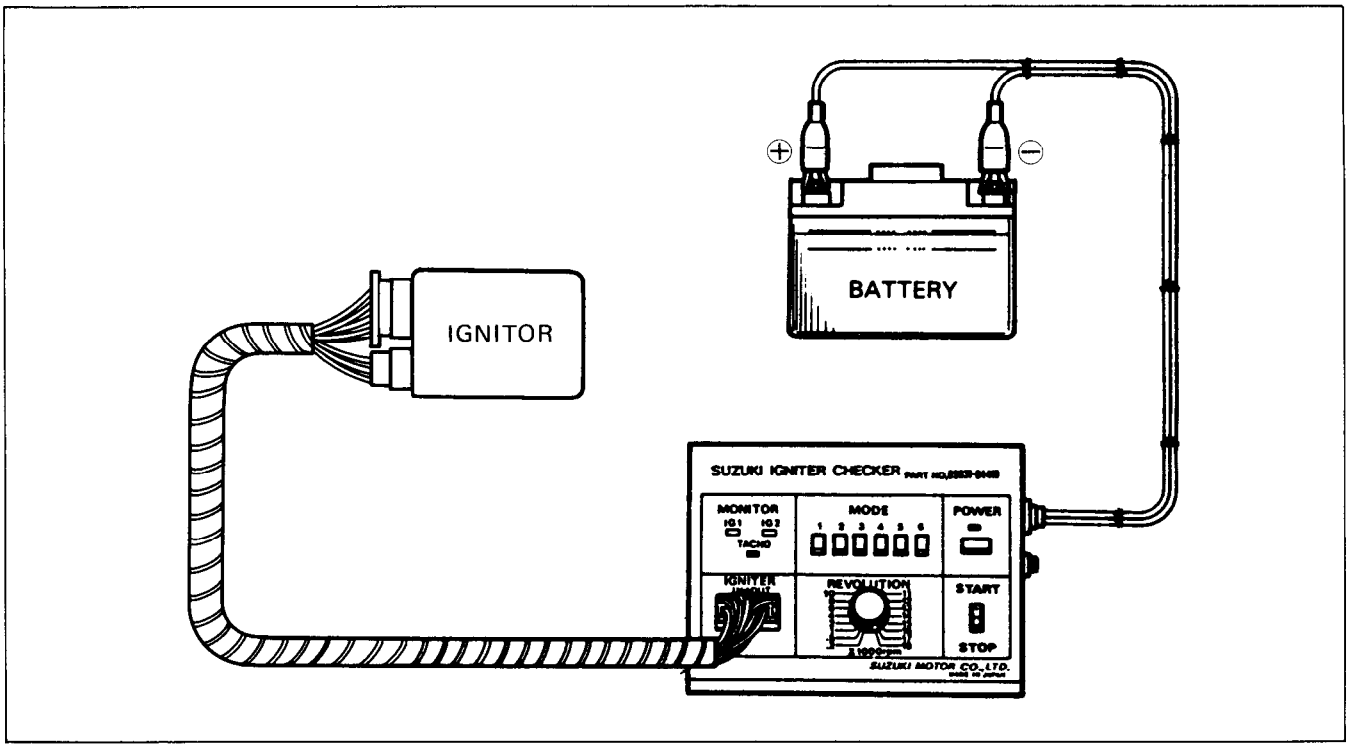

STARTER SYSTEM

DESCRIPTION

The starter system is shown in the diagram below: namely, the starter motor, starter relay, side stand relay, clutch switch, starter button, engine stop switch, side stand switch, IG switch and battery. Depressing the starter button (on the right handlebar switch box) energizes the relay, causing the contact points to close which connects the starter motor to the battery. The motor draws about 80 amperes to start the engine.

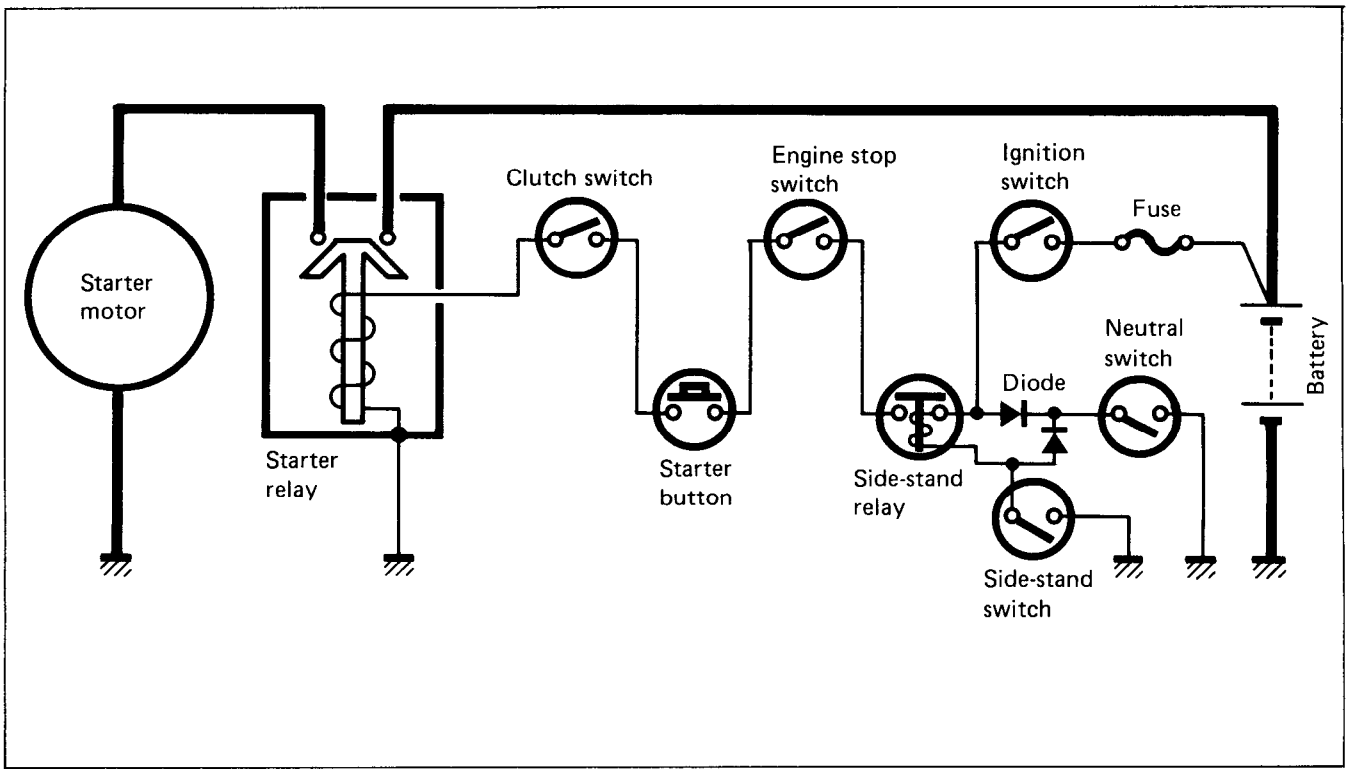

REMOVAL AND DISASSEMBLY

- Remove the water pipe. (See page 3-7.)
- Remove the starter motor cover.
- Disconnect the starter motor lead wire and remove the starter motor. (Refer to page 3-12.)

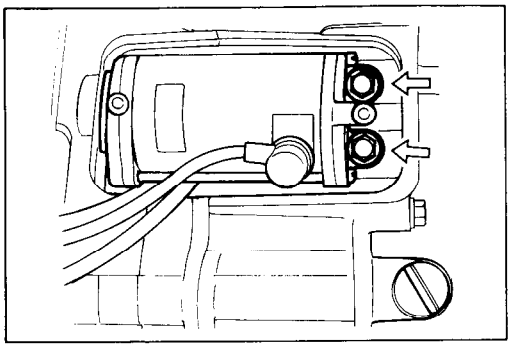

- Disassemble the starter motor as shown in the illustration.

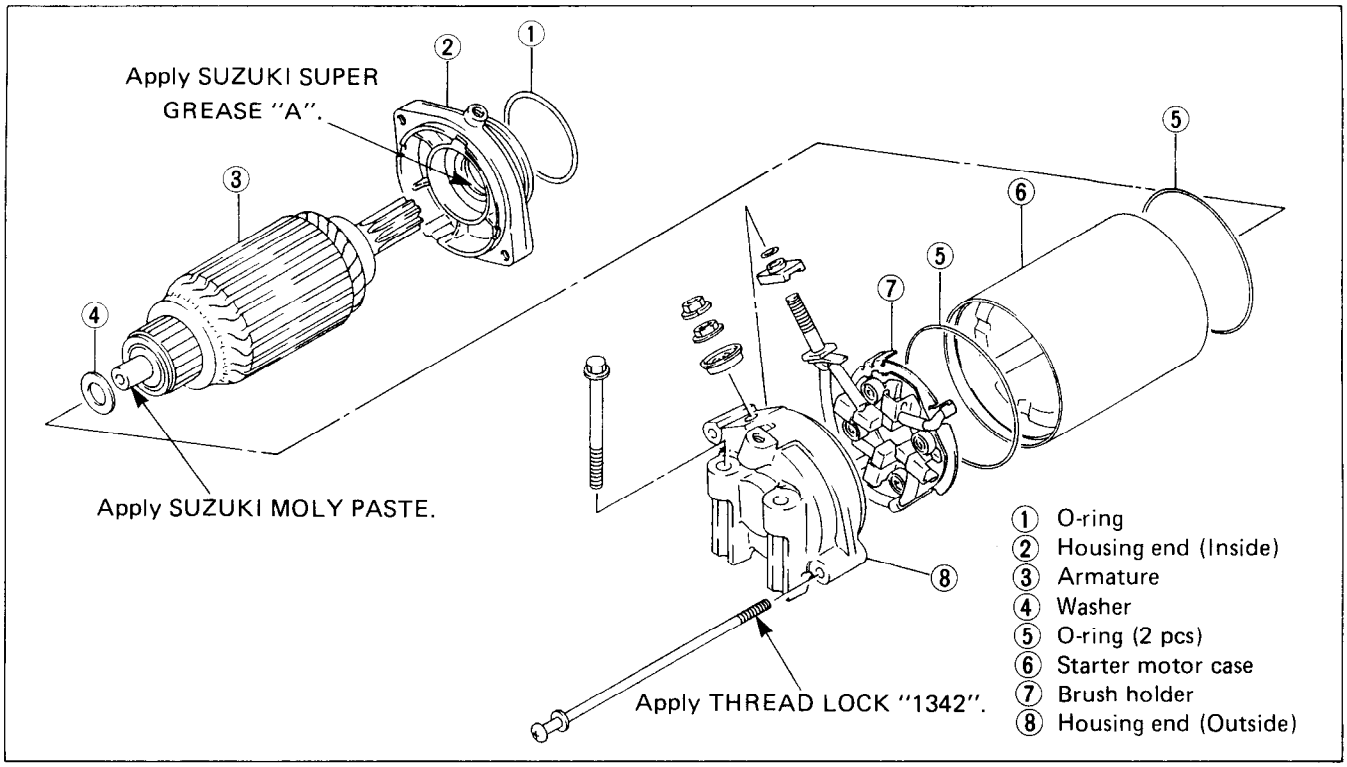

INSPECTION

CARBON BRUSH

When the brushes are worn, the motor will be unable to produce sufficient torque, and the engine will be difficult to turn over. To prevent this, periodically, measure the length of the brushes with a vernier calipers, replacing them when they are too short or chipping.

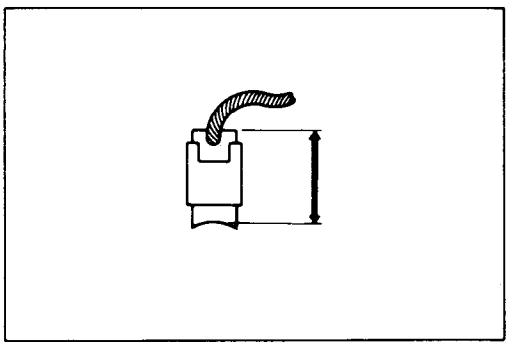

09900-20102 : Vernier calipers (200 mm)

Brush length	Service Limit
	9 mm (0.35 in)

COMMUTATOR

If the commutator surface is dirty, starting performance decreases. Polish the commutator with #400 or similar fine emery paper when it is dirty. After polishing it, wipe the commutator with a clean dry cloth.

Measure the commutator undercut ① with a vernier calipers.

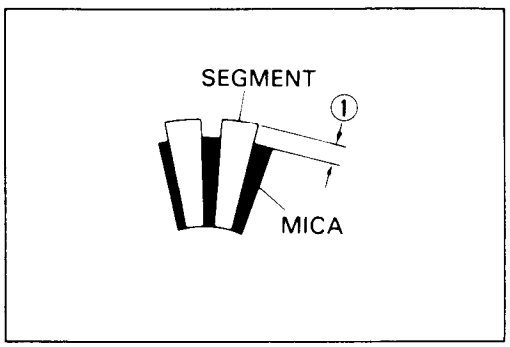

09900-20102 : Vernier calipers (200 mm)

Commutator undercut	Service Limit
	0.2 mm (0.008 in)

ARMATURE COIL

Using a pocket tester, check the coil for open and ground by placing probe pins on each commutator segment and rotor core (to test for ground) and on any two segments at various places (to test for open), with the brushes lifted off the commutator surface.
If the coil is found to be open-circuited or grounded replace the armature. Continuous use of a defective armature will cause the starter motor to suddenly fail.

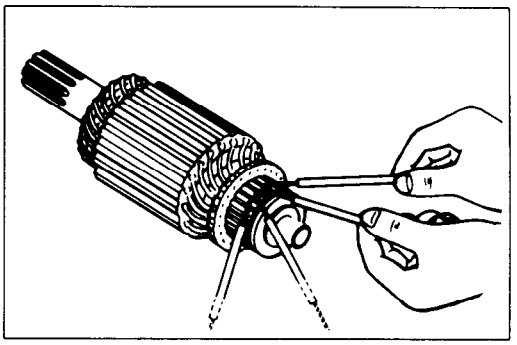

09900-25002 : Pocket tester

Tester knob indication : × 1Ω range

OIL SEAL

Check the seal lip for damage or oil leakage. If any damage is found, replace it.

REASSEMBLY

Reassemble the starter motor in the reverse order of disassembly. Pay attention to the following points:

O-RING

CAUTION:
Replace the O-rings with new ones to prevent oil leakage and moisture.

HOUSING END (Inside)

- Apply grease to the lip of oil seal. (Refer to page 7-11.)

(For U.S.A. model)
99000-25030 : SUZUKI SUPER GREASE "A"
(For the other models)
99000-25010 : SUZUKI SUPER GREASE "A"

HOUSING END (Outside)

- Apply a small quantity of SUZUKI MOLY PASTE to the armature end. (Refer to page 7-11.)

99000-25140 : SUZUKI MOLY PASTE

- Apply a small quantity of THREAD LOCK "1342" to the starter motor housing screws. (Refer to page 7-11.)

99000-32050 : THREAD LOCK "1342"

STARTER RELAY INSPECTION

- Disconnect the lead wire of starter motor at starter relay which is located battery holder of left side.
- Turn on the ignition switch, inspect the continuity between the terminals, positive and negative, when squeezing the clutch lever and pushing the starter button.
  If the starter relay is in sound condition, continuity is found.

09900-25002 : Pocket tester

Tester knob indication : × 1Ω range

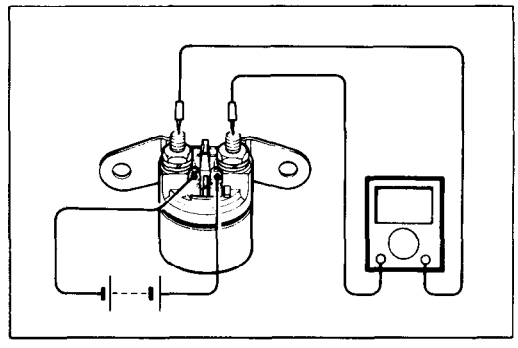

- Disconnect the lead wires from the starter relay.
- Check the coil for "open", "ground" and ohmic resistance. The coil is in good condition if the resistance is as follows.

09900-25002 : Pocket tester

Tester knob indication : × 1Ω range

	Standard
Starter relay resistance	2 – 6 Ω

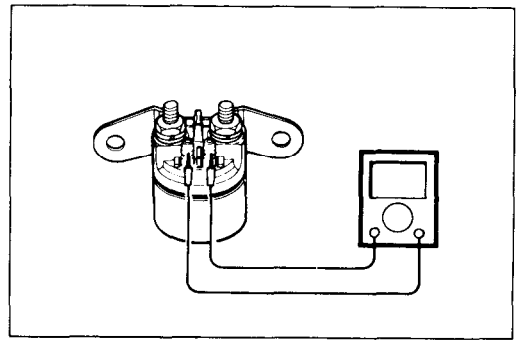

SIDE-STAND/IGNITION INTERLOCK SYSTEM

DESCRIPTION

This side-stand/ignition interlock system is to prevent starting the motorcycle with the side-stand left down. The system is operated by an electric circuit provided between the battery and ignition coil.

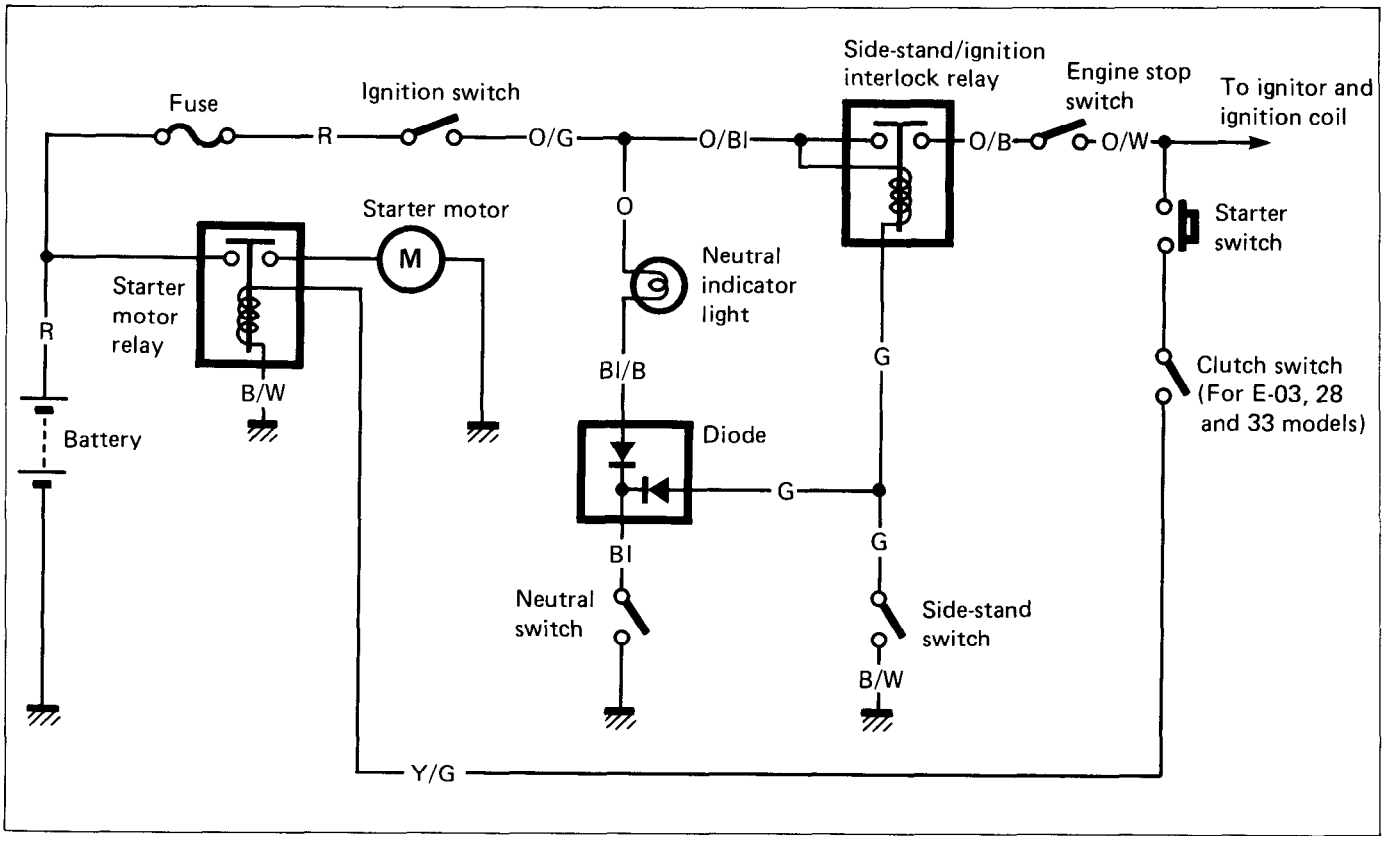

The circuit consists of relay, lamp, diode and switches and decides to live the ignition coil depending on the position of the TRANSMISSION and SIDE-STAND with the neutral and side-stand switches working mutually.
The ignition coil lives only in two situations as follows:

1. Transmission: "NEUTRAL (ON)" Side-stand: "DOWN (OFF)"
   The current flow Ⓐ turns "ON" the relay and the ignition coil lives even the side-stand is kept down. This is for warming up the engine.

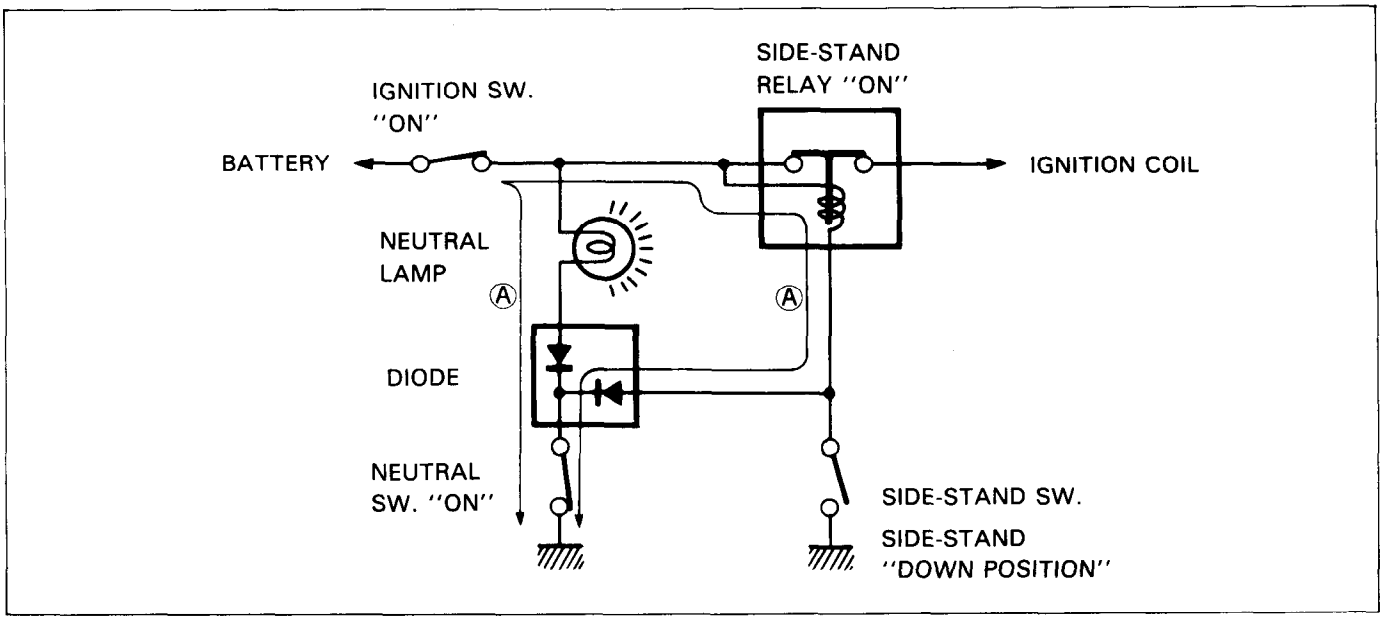

2. Side-stand: "UP-RIGHT (ON)"
   The current flow Ⓑ turns "ON" the relay and the ignition coil lives. The engine can be easily started at any transmission position.

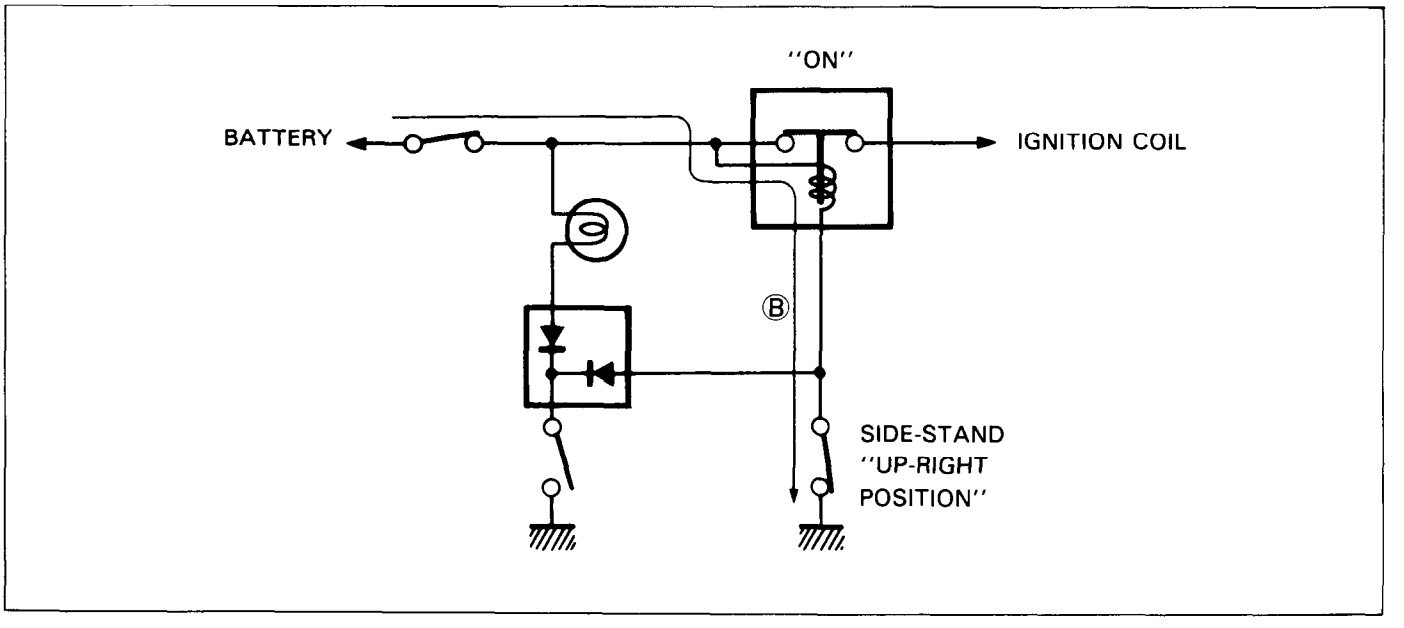

INSPECTION

If the interlock system does not operate properly, check each component. If any abnormality is found, replace the component with a new one.

09900-25002 : Pocket tester

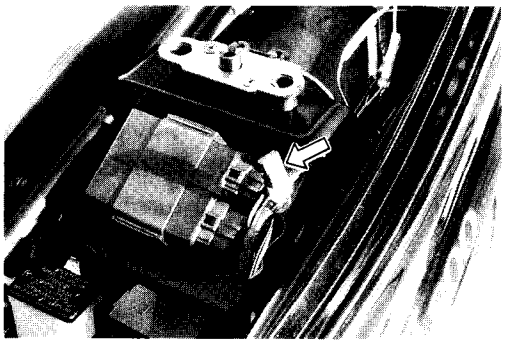

Diode

The diode is located behind the ignitor unit.
The diode can pass current only in one direction.

- Check the continuity between ① and ②. If one way continuity the diode is in good condition.
- Also check the continuity between ② and ③ as required.

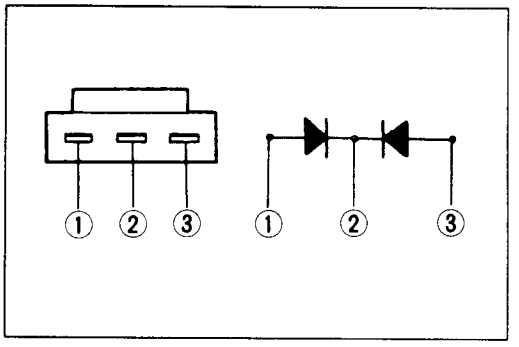

Neutral switch

The neutral lead wire coupler is located behind the left frame cover.

- Disconnect the neutral switch lead and check the continuity between BI and ground with the transmission in "NEUTRAL".

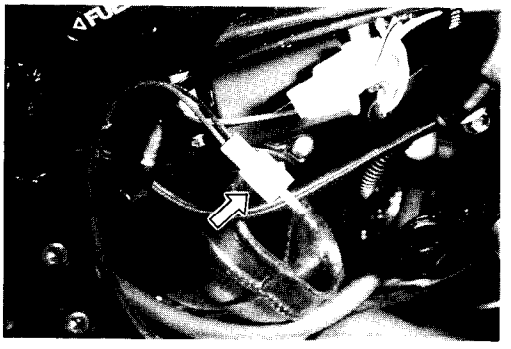

Side-stand switch

	G	B/W
ON (UP-right position)	○———	———○
OFF (Down position)		

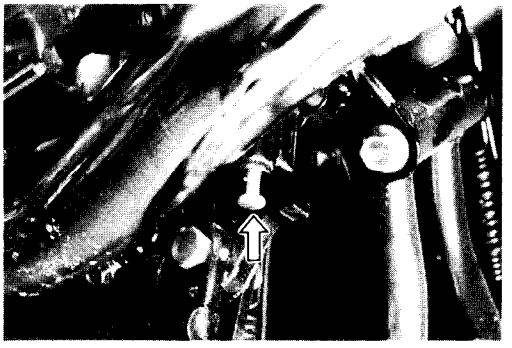

Side-stand/ignition interlock relay

The side-stand/ignition interlock relay is located battery holder of the right side.

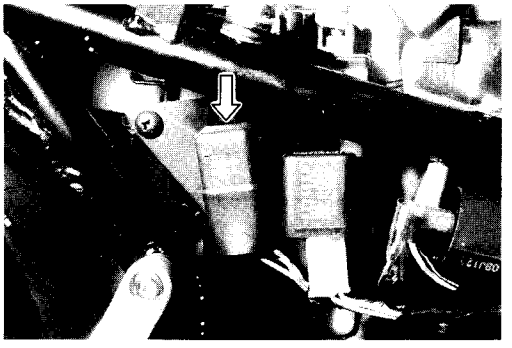

First, check the insulation between ① and ② terminals with pocket tester. Then apply 12 volts to ③ and ④ terminals, ⊕ to ③ and ⊖ to ④, and check the continuity between ① and ②.
If there is no continuity, replace it with a new one.

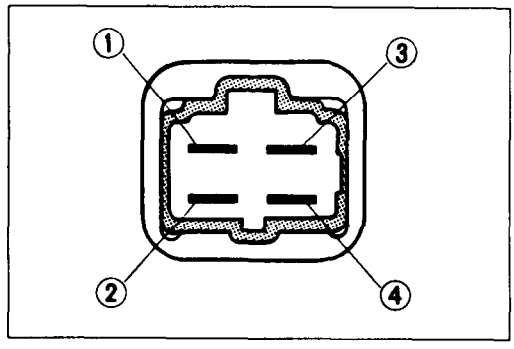

COMBINATION METER

REMOVAL AND DISASSEMBLY

- Disassemble the combination meter as follows.

INSPECTION

Using the pocket tester, check the continuity between lead wires in the diagram as shown below.
If the continuity measured is incorrect, replace the respective parts.

09900-25002 : Pocket tester

Tester knob indication : × 1Ω range

NOTE:
When making this test, it is not necessary to remove the combination meter.

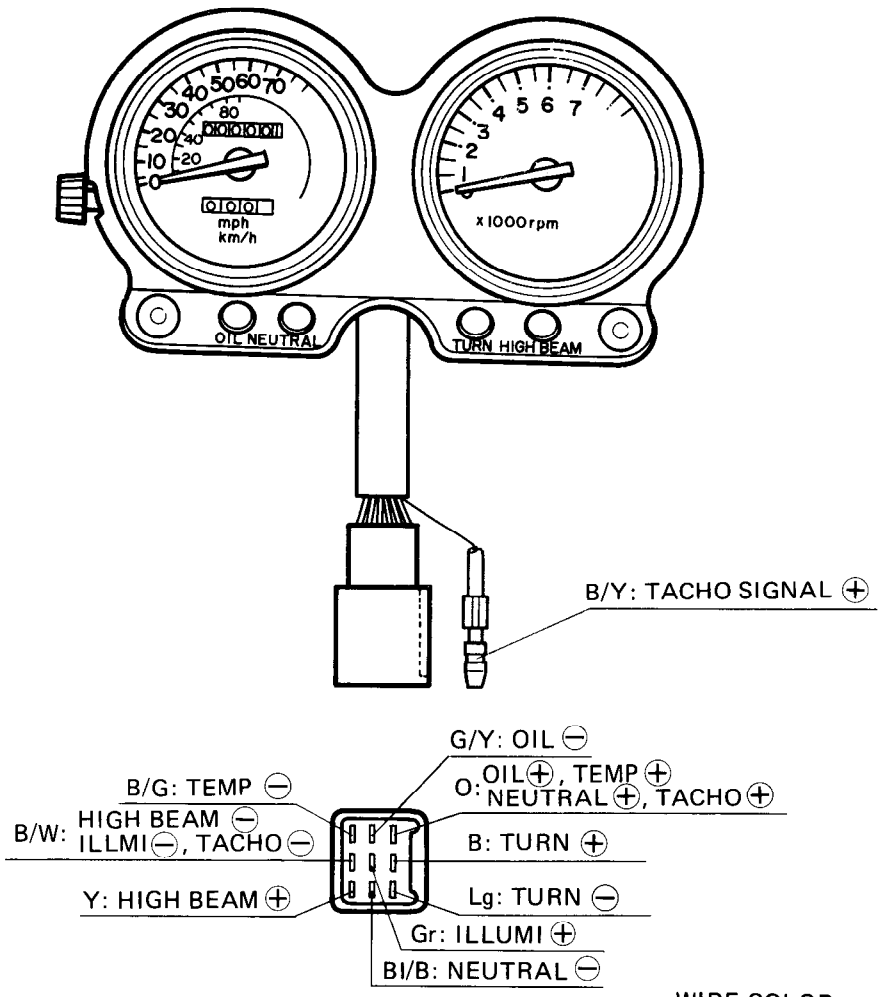

ITEM	⊕ Probe of tester to:	⊖ Probe of tester to:
TURN SIGNAL	B	Lg
ILLUMI.	Gr	B/W
HIGH BEAM	Y	B/W
OIL	O	G/Y
NEUTRAL	O	Bl/B
TEMP	O	B/G
TACHO	O and B/Y	B/W

WIRE COLOR
B : Black
Lg : Light green
O : Orange
Gr : Gray
Y : Yellow
Bl/B: Blue with Black tracer
B/W: Black with White tracer
B/G : Black with Green tracer
B/Y : Black with Yellow tracer
G/Y : Green with Yellow tracer

LAMPS

HEADLIGHT

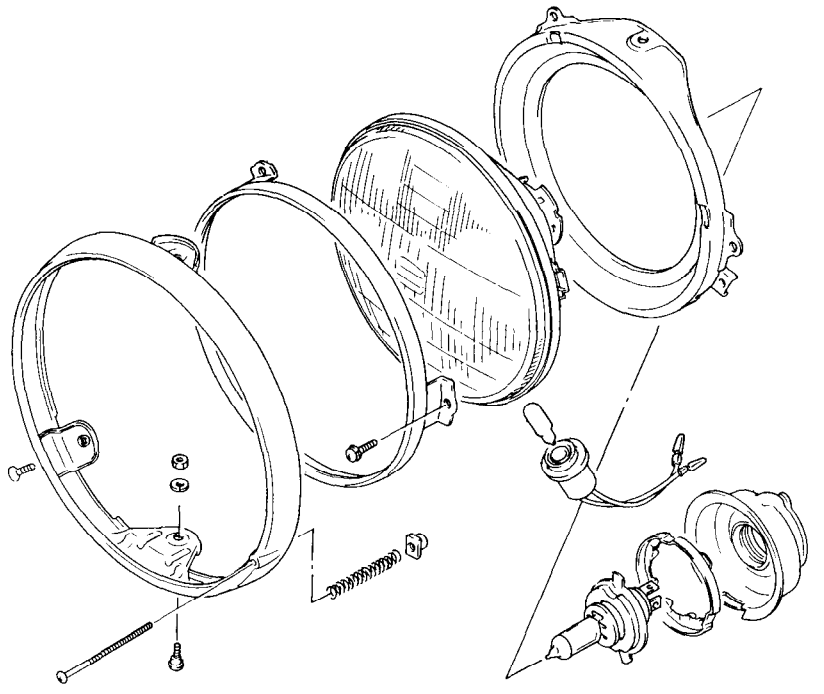

NOTE:
Adjust the headilight, both vertical and horizontal, after reassembling.

TAIL/BRAKE LIGHT

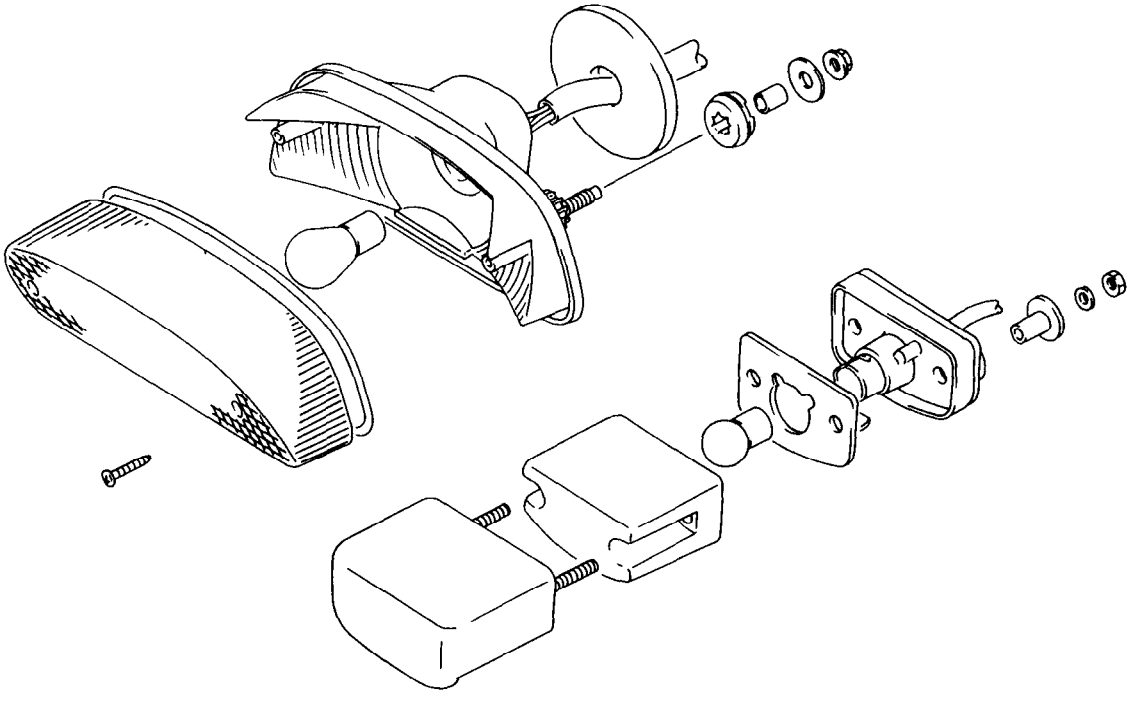

TURN SIGNAL LIGHT

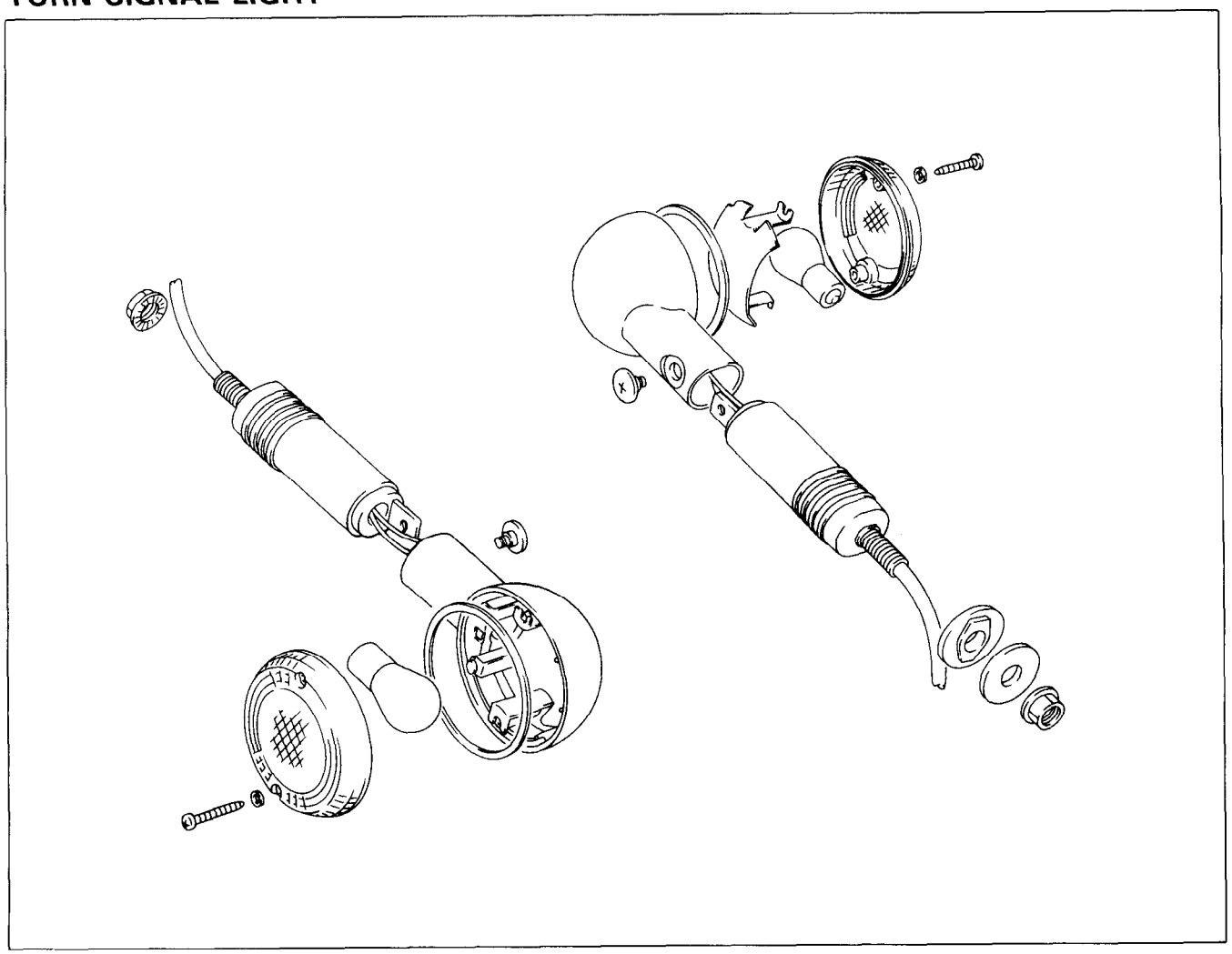

SWITCHES

Inspect each switch for continuity with the pocket tester referring to the wiring diagram. If any abnormality is found, replace the respective switch assemblies with new ones. (Refer to the chapter 9 of wiring diagram.)

09900-25002 : Pocket tester

Tester knob indication : × 1Ω range

OIL PRESSURE SWITCH

- Continuity, when engine is stopped.
- No continuity, when engine is running.

	B	Ground
ON	○	○
OFF		

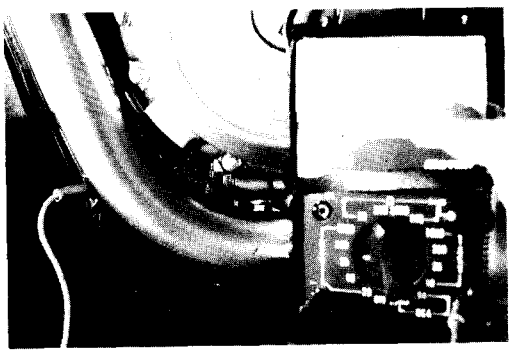

NOTE:
Before inspecting the oil pressure switch, check if the engine oil level is enough.

RELAY

STARTER RELAY

The starter relay is located on the battery holder of left side.
(Refer to page 7-13 for details.)

SIDE-STAND RELAY

The side-stand relay is located behind the right frame cover.
(Refer to page 7-13 for details.)

TURN SIGNAL RELAY

The turn signal relay is located behind the right frame cover.
If the turn signal light does not light, inspect the bulb or repair the circuit connection.
If the bulb and circuit connection checked are correct, the turn signal relay may be faulty, replace it with a new one.

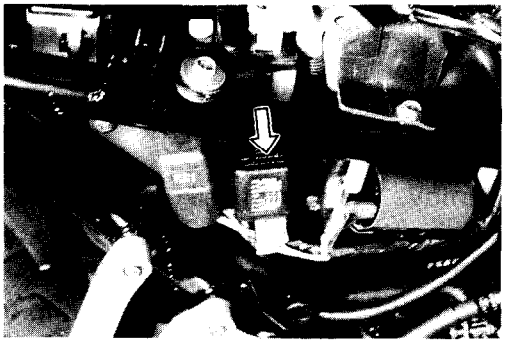

NOTE:
Be sure that the battery used is in fully-charged condition.

BATTERY

SPECIFICATIONS

Type designation	YB16B-A
Capacity	12V, 57.6 kC (16 Ah)/10HR
Standard electrolyte S.G.	1.28 at 20°C (68°F)

In fitting the battery to the motorcycle, connect the breather hose to the battery vent.

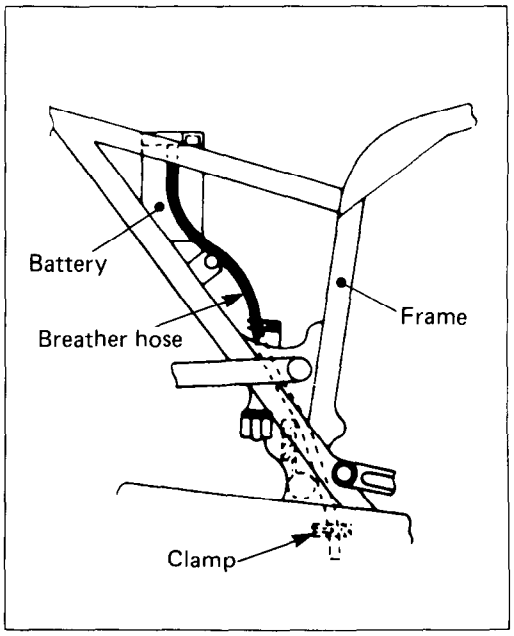

INITIAL CHARGING

FILLING ELECTROLYTE

Remove the short sealed tube Ⓐ before filling electrolyte. Fill the battery with electrolyte (dilute sulfuric acid solution with acid concentration of 35.0% by weight, having a specific gravity of 1.28 at 20°C (68°F)) up to indicated MAX. LEVEL. Electrolyte should be always cooled below 30°C (86°F) before filling into battery. Leave battery standing for half an hour after filling. Add additional electrolyte if necessary. Charge battery with current as described in the table shown below.

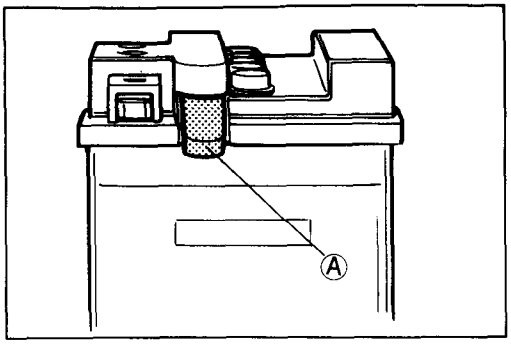

Maximum charging current	1.6A

CHARGING TIME

The charging time for a new battery is determined by the number of months that have elapsed since the date of manufacture.

CONFIRMATION FOR DATE OF MANUFACTURE

Date of manufacture is indicated by a three-part number ①, as shown in the illustration, each indicating month, date and year.

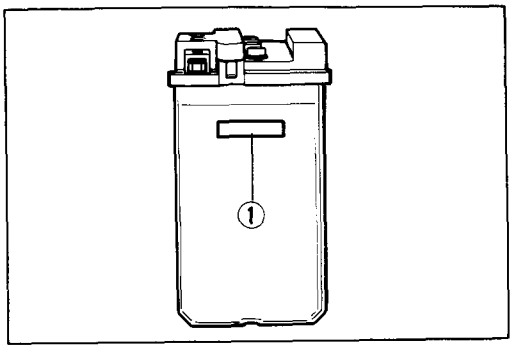

Near the end of charging period, adjust the specific gravity of electrolyte to value specified. After charging, adjust the electrolyte level to the MAX. LEVEL with DISTILLED WATER.

SERVICING

Visually inspect the surface of the battery container. If any signs of cracking or electrolyte leakage from the sides of the battery have occurred, replace the battery with a new one. If the battery terminals are found to be coated with rust or an acidic white powdery substance, then this can be cleaned away with sandpaper.

Check the electrolyte level and add distilled water, as necessary to raise the electrolyte to each cell's MAX. level.
Check the battery for proper charge by taking an electrolyte S.G. reading. If the reading is 1.22 or less, as corrected to 20°C (68°F), it means that the battery is still in a run-down condition and needs recharging.

NOTE:
First, remove the ⊖ lead wire.

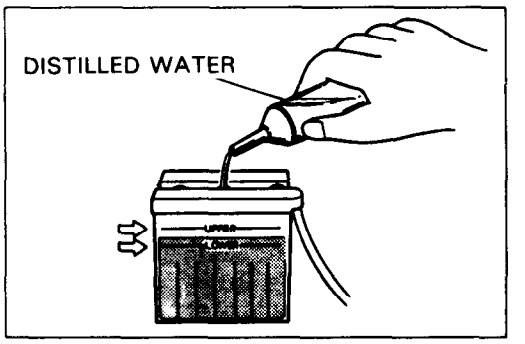

Months after manufacturing	Within 6	Within 9	Within 12	Over 12
Necessary charging hours	20	30	40	60

RECHARGING OPERATION BASED ON S.G. READING

To read the S.G. on the hydrometer, bring the electrolyte in the hydrometer to eye level and read the graduation on the float scale bordering on the meniscus (curved-up portion of electrolyte surface), as shown in figure.

09900-28403 : Hydrometer

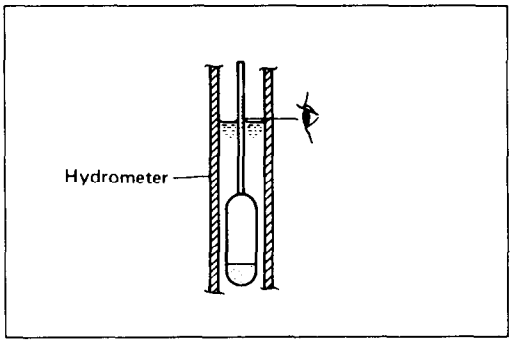

Check the reading (as corrected to 20°C) with chart to determine the recharging time in hour by constant-current charging at a charging rate of 1.6 amperes (which is tenth of the capacity of the present battery).

Electrolyte specific gravity	1.28 at 20°C (68°F)

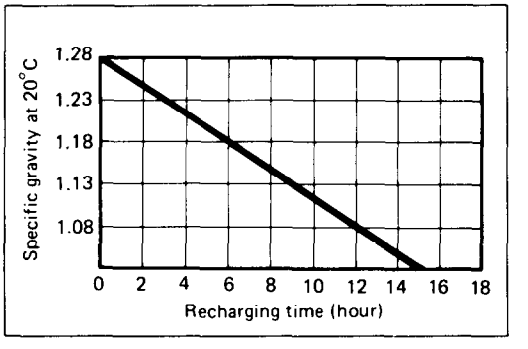

Be careful not to permit the electrolyte temperature to exceed 45°C (113°F), at any time, during the recharging operation. Interrupt the operation, as necessary, to let the electrolyte cool down. Recharge the battery to the specification.

CAUTION:
Constant-voltage charging, otherwise called "quick" charging, is not recommendable for it could shorten the life of the battery.

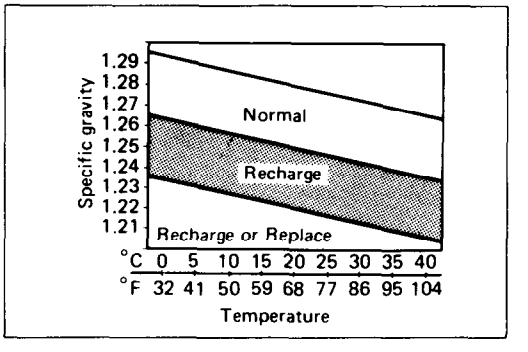

SERVICE LIFE

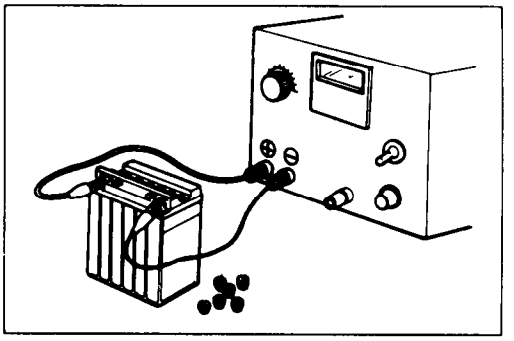

Lead oxide is applied to the pole plates of the battery which will come off gradually during the service. When the bottom of the battery case becomes full of the sediment, the battery cannot be used any more. If the battery is not charged for a long time, lead sulfate is generated on the surface of the pole plates and will deteriorate the performance (sulfation). Replace the battery with new one in such a case.
When a battery is left for a long term without using, it is apt to subject to sulfation. When the motorcycle is not used for more than 1 month (especially during the winter season), recharge the battery once a month at least.

WARNING:

* **Before charging a battery, remove the seal cap from each cell.**
* **Keep fire and sparks away from a battery being charged.**
* **When removing a battery from the motorcycle, be sure to remove the ⊖ terminal first.**

CHASSIS

CONTENTS

FRONT WHEEL

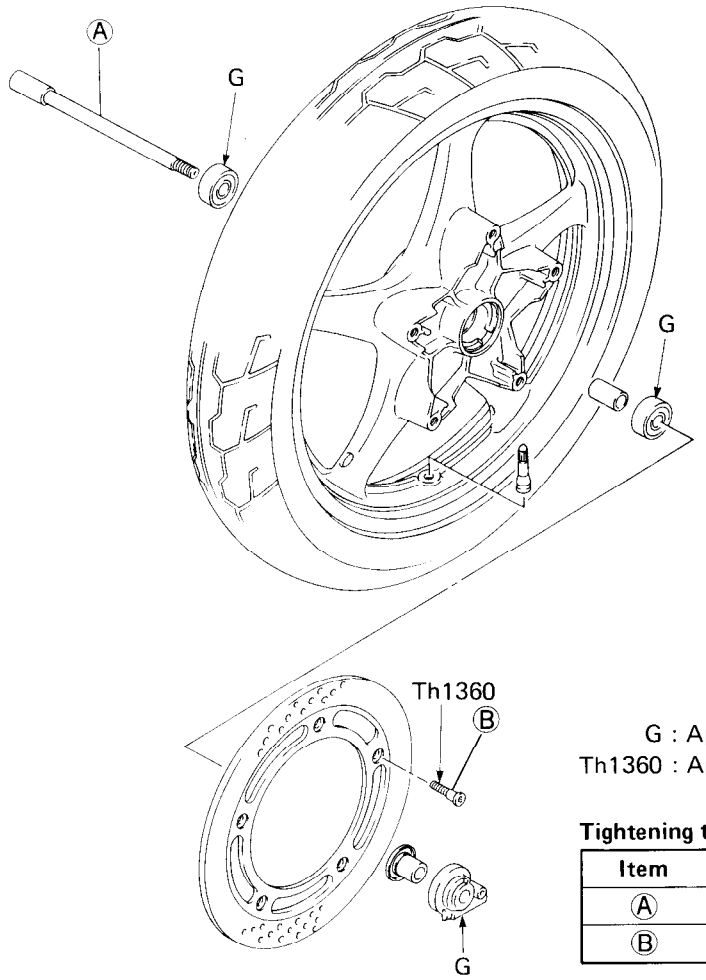

G : Apply SUPER GREASE "A."
Th1360 : Apply THREAD LOCK SUPER "1360."

Tightening torque

Item	N·m	kg-m	lb-ft
A	36 – 52	3.6 – 5.2	26.0 – 37.5
B	18 – 28	1.8 – 2.8	13.0 – 20.0

REMOVAL

1. Support the motorcycle with the center stand and a jack.
2. Loosen the axle pinch bolt.

09900-00410 : Hexagon wrench set

3. Remove the axle shaft and the front wheel.

09900-18710 : 12 mm hexagon socket

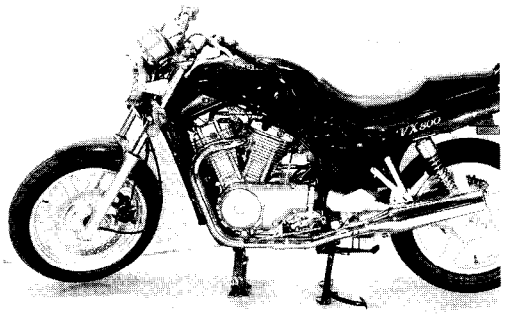

CAUTION:
Do not operate the brake lever while dismounting the front wheel.

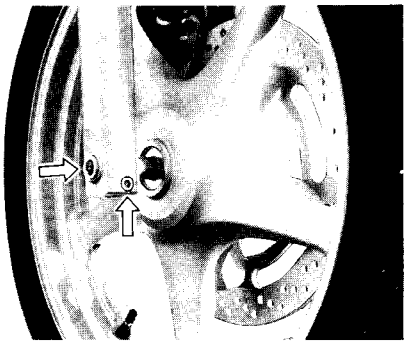

INSPECTION AND DISASSEMBLY

SPEEDOMETER GEAR BOX DUST SEAL

Inspect the lip of dust seal for damage.

TIRE

Refer to page 8-31.

WHEEL BEARINGS

Inspect the play of the wheel bearings by hand while they are in the wheel. Rotate the inner race by hand to inspect for abnormal noise and smooth rotation. Replace the bearing if there is anything unusual.

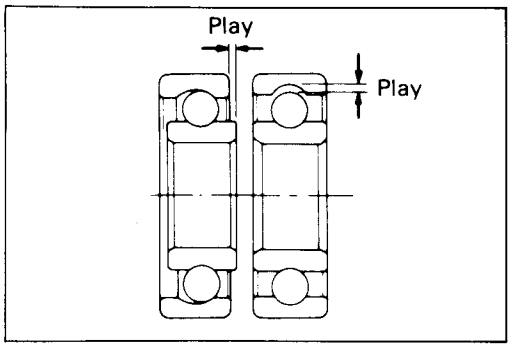

To remove the wheel bearings, use the special tool in the following procedures:

09941-50110 : Bearing remover

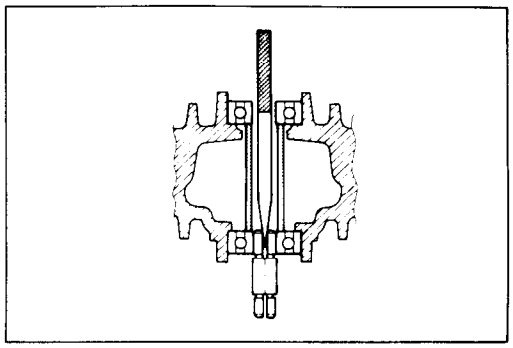

1) Insert the adaptor into the wheel bearing.
2) After inserting the wedge bar from the opposite side, lock the wedge bar in the slit of the adaptor.
3) Drive out the wheel bearing by knocking the wedge bar.

CAUTION:
The removed bearings should be replaced with new ones.

AXLE SHAFT

Using a dial gauge, check the axle shaft for runout and replace it if the runout exceeds the limit.

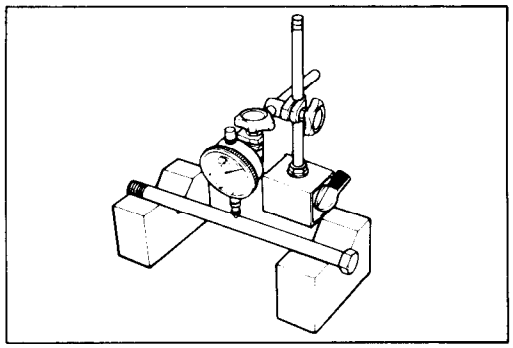

09900-20606 : Dial gauge (1/100)
09900-20701 : Magnetic stand
09900-21304 : V-block set (100 mm)

Service limit : 0.25 mm (0.010 in)

WHEEL

Make sure that the wheel runout checked as shown does not exceed the service limit. An excessive runout is usually due to worn or loosen wheel bearings. If bearing replacement fails to reduce the runout, replace the wheel.

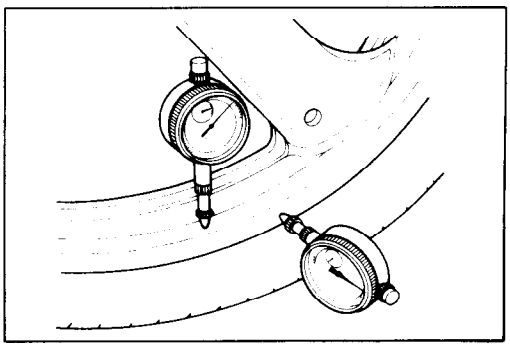

Service limit (Axial and Radial) : 2.0 mm (0.08 in)

REASSEMBLY AND REMOUNTING

Reassemble and remount the front wheel in the reverse order of removal and disassembly. Pay attention to the following points:

WHEEL BEARING

- Apply grease to the bearing before installing.

(For U.S.A. model)
99000-25030 : SUZUKI SUPER GREASE "A"
(For the other models)
99000-25010 : SUZUKI SUPER GREASE "A"

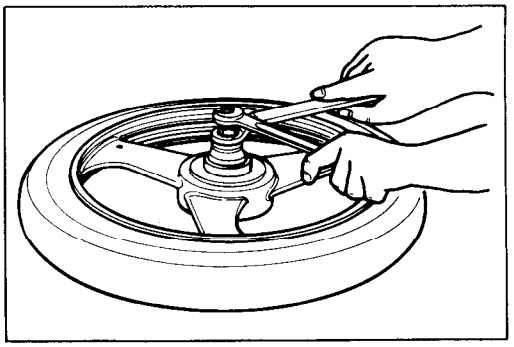

- Install the wheel bearings as follows by using the special tool.

09924-84510 : Bearing installer set

NOTE:
First install the left wheel bearing, then install the right wheel bearing. The sealed cover on the bearing is positioned outside.

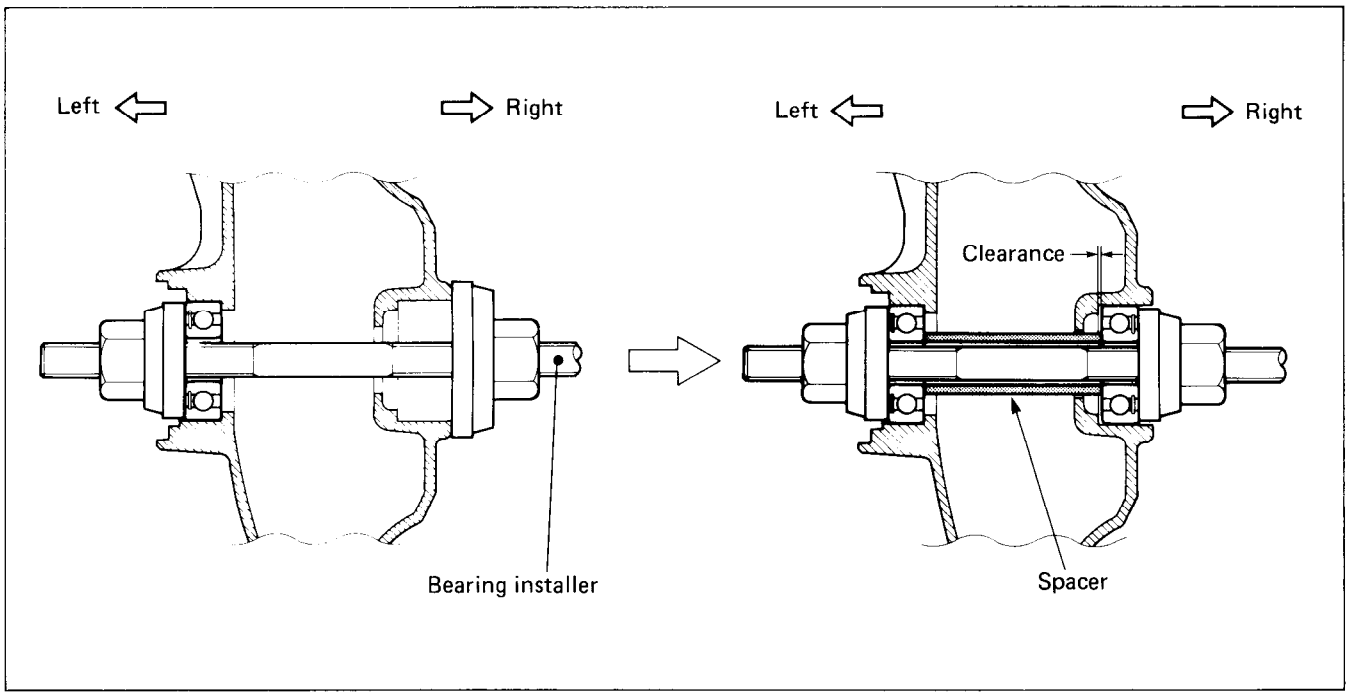

BRAKE DISC

Make sure that the brake disc is clean and free of any greasy matter. Apply THREAD LOCK SUPER "1360" to the disc mounting bolts and tighten them to the specified torque.

99000-32130 : THREAD LOCK SUPER "1360"

Tightening torque : 18 – 28 N·m
(1.8 – 2.8 kg-m, 13.0 – 20.0 lb-ft)

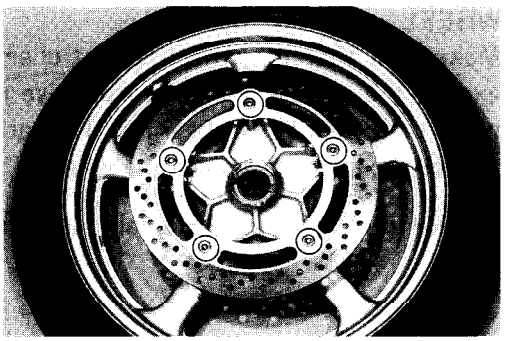

SPEEDOMETER GEARBOX

- Before installing the speedometer gearbox, apply grease to its dust seal lip.

(For U.S.A. model)
99000-25030 : SUZUKI SUPER GREASE "A"
(For the other models)
99000-25010 : SUZUKI SUPER GREASE "A"

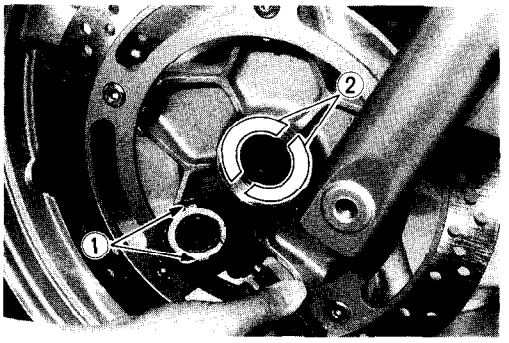

- Fit two drive lugs ① into recesses ② of the wheel hub.

- Set the stopper on the speedometer gearbox to lug on the left front fork.
- When tightening the front axle, make sure that the speedometer gearbox is in position and the speedometer cable does not bend sharply.

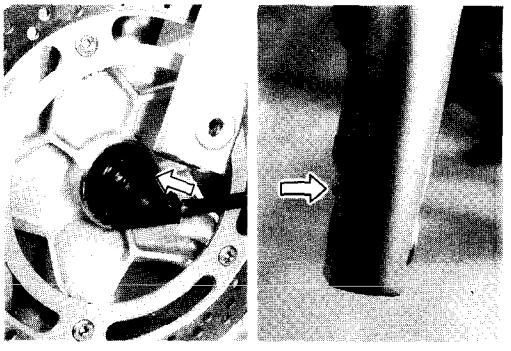

AXLE SHAFT

- Tighten the axle shaft to the specified torque.

Tightening torque : 36 – 52 N·m
(3.6 – 5.2 kg-m, 26.0 – 37.5 lb-ft)

- Tighten the axle pinch bolt to the specified torque.

Tightening torque : 18 – 28 N·m
(1.8 – 2.8 kg-m, 13.0 – 20.0 lb-ft)

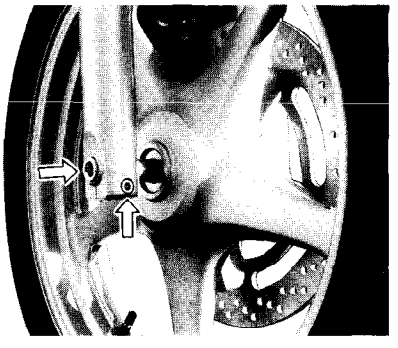

FRONT BRAKE

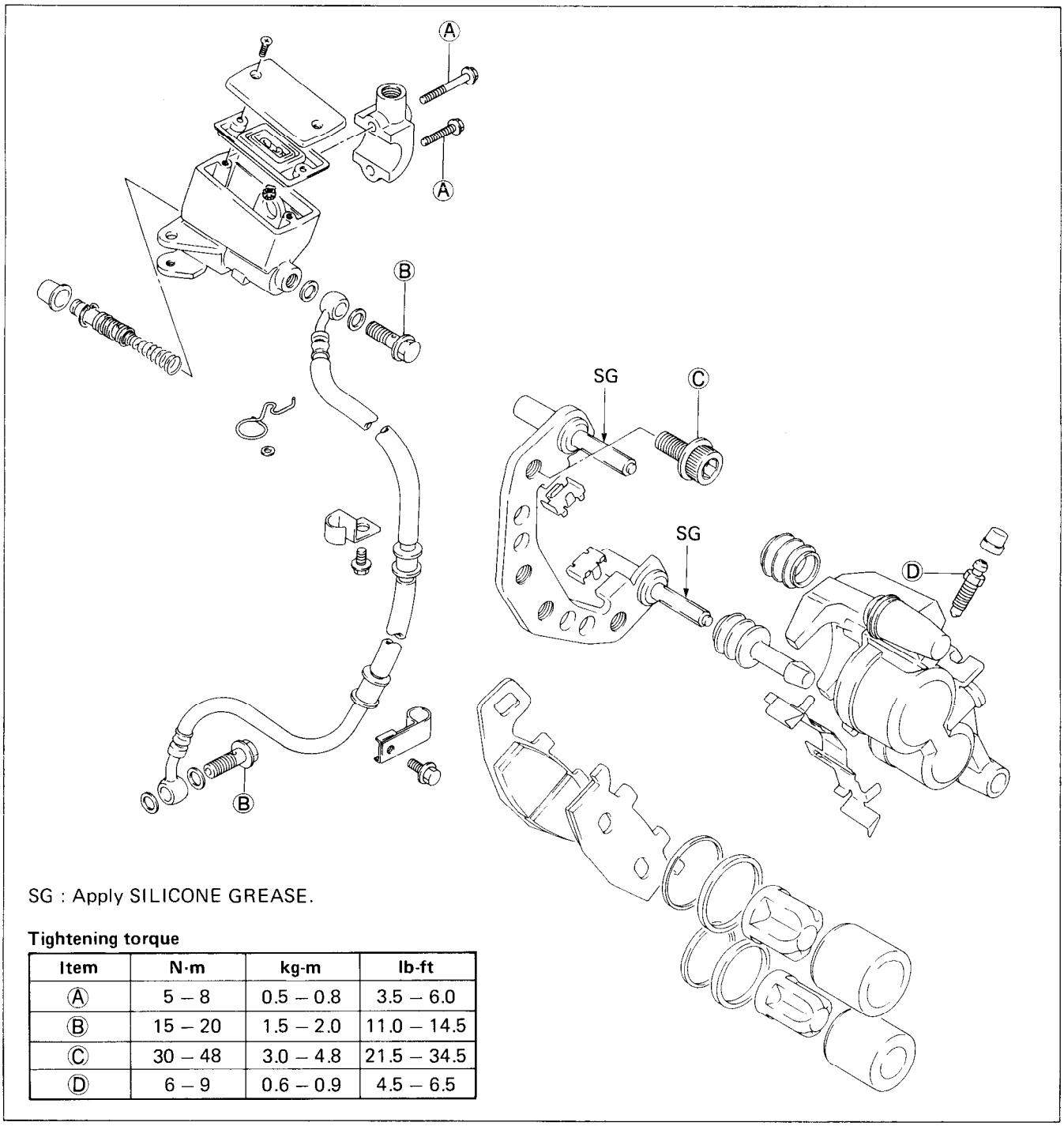

SG : Apply SILICONE GREASE.

Tightening torque

Item	N·m	kg-m	lb-ft
Ⓐ	5 – 8	0.5 – 0.8	3.5 – 6.0
Ⓑ	15 – 20	1.5 – 2.0	11.0 – 14.5
Ⓒ	30 – 48	3.0 – 4.8	21.5 – 34.5
Ⓓ	6 – 9	0.6 – 0.9	4.5 – 6.5

BRAKE PAD REPLACEMENT

1. Remove the brake caliper by removing the mounting bolts.

09900-00410 : Hexagon wrench set

2. Remove the pads.

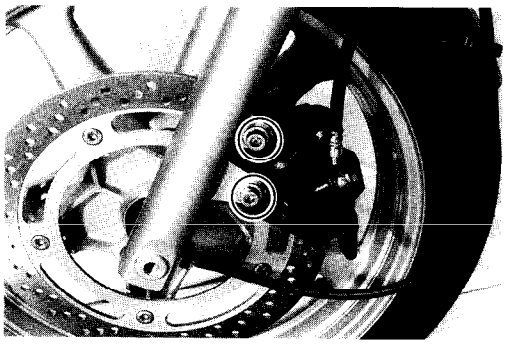

CAUTION:

* **Do not operate the brake lever while dismounting the pads.**
* **Replace the brake pads as a set, otherwise braking performance will be adversely affected.**

CALIPER REMOVAL AND DISASSEMBLY

1. Disconnect the brake hose from the caliper by removing the union bolt and catch the brake fluid in a suitable receptacle.

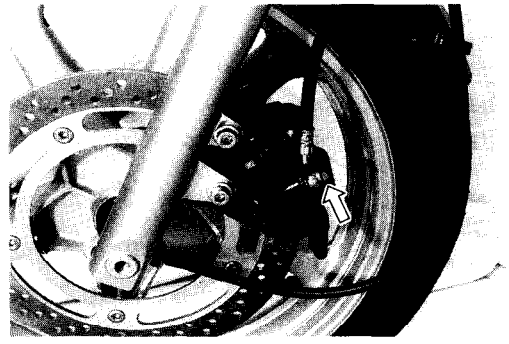

CAUTION:
Never reuse the brake fluid left over from servicing and stored for long periods.

WARNING:
Brake fluid, if it leaks, will interfere with safe running and discolor painted surfaces. Check the brake hose and hose joint for cracks and oil leakage.

2. Remove the caliper mounting bolts and take off the caliper.

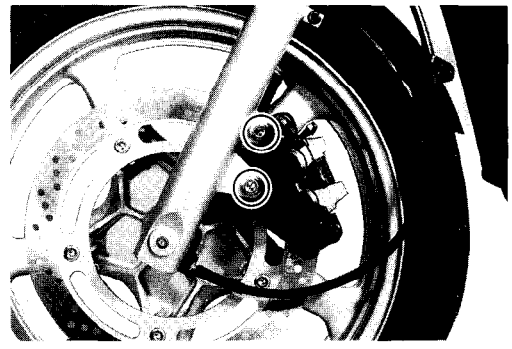

3. Remove the pads.

4. Place a rag over the pistons to prevent them from popping out and push out the pistons by using the air gun.

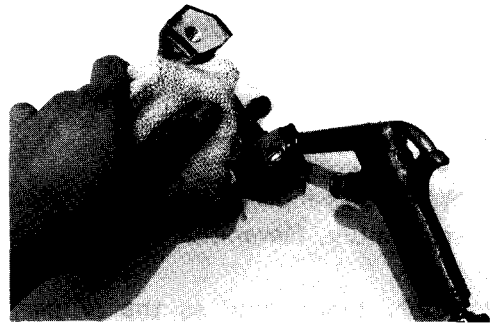

CAUTION:
Do not use high pressure air to prevent piston damage.

5. Remove the pistons ①, dust seals ② and piston seals ③ out of the caliper.

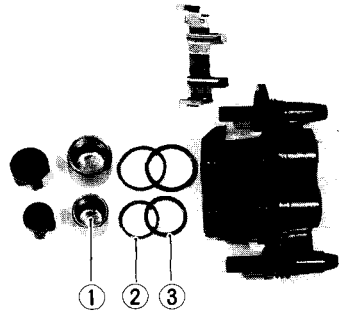

CALIPER AND DISC INSPECTION

CALIPER

Inspect the caliper bore wall for nicks, scratches or other damage.

PISTON

Inspect the piston surface for any scratches or other damage.

RUBBER PARTS

Inspect each rubber part for damage and wear.

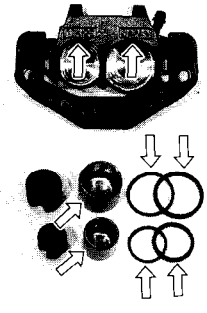

DISC

Using a micrometer, check the disc for wear, its thickness can be checked with disc and wheel in place. The service limits for the thickness of the discs are shown below.

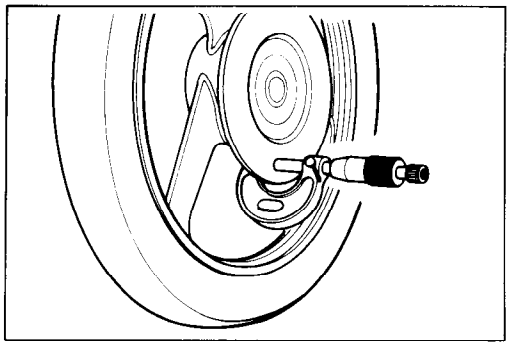

09900-20205 : Micrometer (0 – 25 mm)

Service limit (Front) : 5.0 mm (0.20 in)
(Rear) : 5.5 mm (0.22 in)

With the disc mounted on the wheel, check the disc for face runout with a dial gauge, as shown.

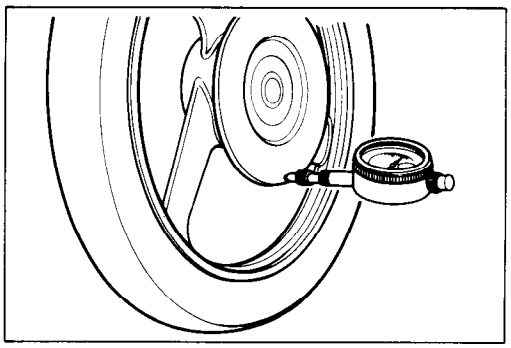

09900-20606 : Dial gauge (1/100 mm)
09900-20701 : Magnetic stand

Service limit : 0.30 mm (0.012 in)

CALIPER REASSEMBLY AND REMOUNTING

Reassemble the caliper in the reverse order of removal and disassembly. Pay attention to the following points:

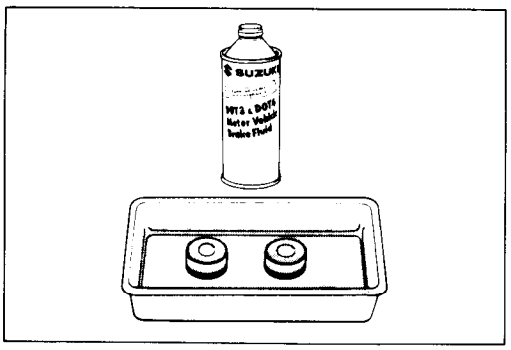

CAUTION:

* **Wash the caliper components with fresh brake fluid before reassembly. Never use cleaning solvent or gasoline to wash them.**
* **Apply brake fluid to the caliper bore and piston to be inserted into the bore.**

CALIPER BOLTS

- Tighten each bolt to the specified torque.

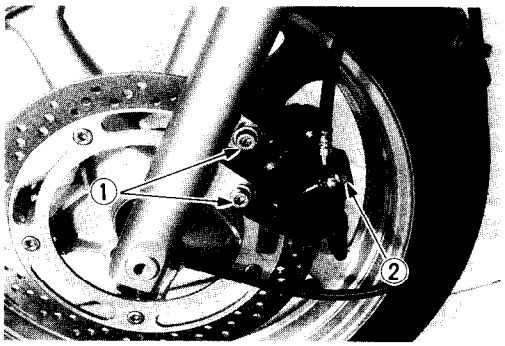

Tightening torque
Front brake caliper
mounting bolt ① : 30 – 48 N·m
(3.0 – 4.8 kg-m, 21.5 – 34.5 lb-ft)
Brake hose
union bolt ② : 15 – 20 N·m
(1.5 – 2.0 kg-m, 11.0 – 14.5 lb-ft)

CAUTION:
Bleed air after reassembling the caliper. (Refer to page 2-13).

NOTE:
Before remounting the caliper, push the piston all the way into the caliper.

MASTER CYLINDER REMOVAL AND DISASSEMBLY

1. Remove the front brake light switch lead wires.

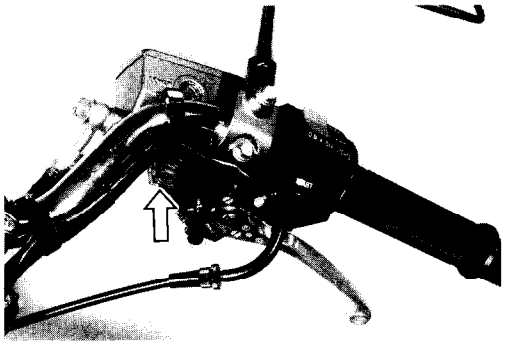

2. Place a rag underneath the union bolt on the master cylinder to catch the spilled drops of brake fluid. Remove the union bolt and disconnect the brake hose/master cylinder joint.

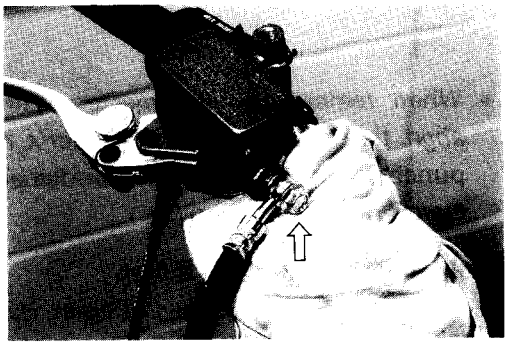

CAUTION:
Immediately and completely wipe off any brake fluid contacting any part of the motorcycle. The fluid reacts chemically with paint, plastics and rubber materials, etc. and will damage them severely.

3. Remove the master cylinder assembly.
4. Remove the front brake lever, reservoir cap and diaphragm.
5. Drain brake fluid.

6. Remove the dust seal, then remove the circlip by using the special tool.

09900-06108 : Snap ring pliers

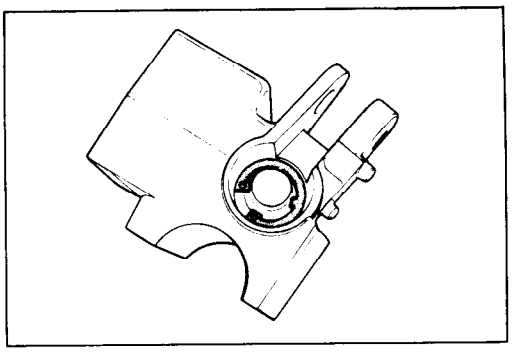

- Remove the piston/secondary cup, primary cup and spring.
  ① Secondary cup
  ② Piston
  ③ Primary cap
  ④ Return spring

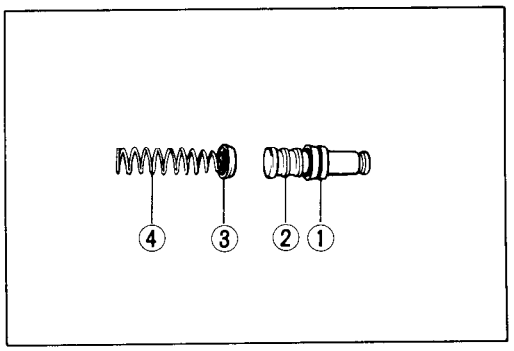

MASTER CYLINDER INSPECTION

- Inspect the master cylinder bore for any scratches or other damage.
- Inspect the piston surface for any scratches or other damage.
- Inspect the primary cup, secondary cup and dust seal for wear or damage.

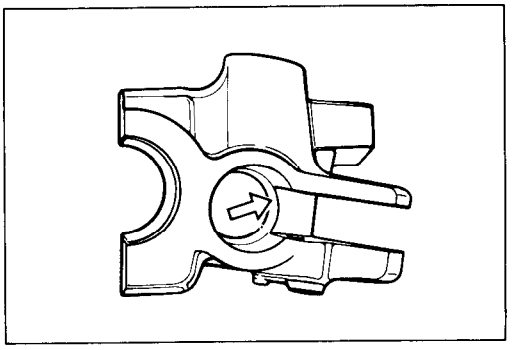

MASTER CYLINDER REASSEMBLY AND REMOUNTING

Reassemble the master cylinder in the reverse order of removal and disassembly. Pay attention to the following points:

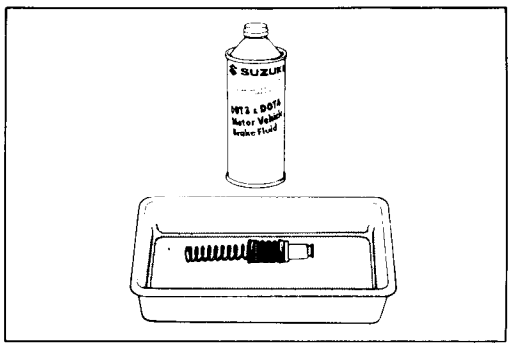

CAUTION:

* **Wash the master cylinder components with fresh brake fluid before reassembly. Never use cleaning solvent or gasoline to wash them.**
* **Apply brake fluid to the cylinder bore and all the component to be inserted into the bore.**

- When remounting the master cylinder on the handlebar, align the master cylinder holder's mating surface ① with punched mark ② on the handlebar and tighten the upper clamp bolt first as shown.

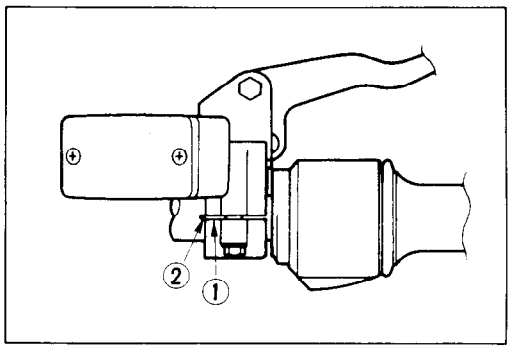

Tightening torque : 5 – 8 N·m
(0.5 – 0.8 kg-m, 3.5 – 6.0 lb-ft)

CAUTION:

Bleed air after reassembling master cylinder.
(Refer to page 2-13).

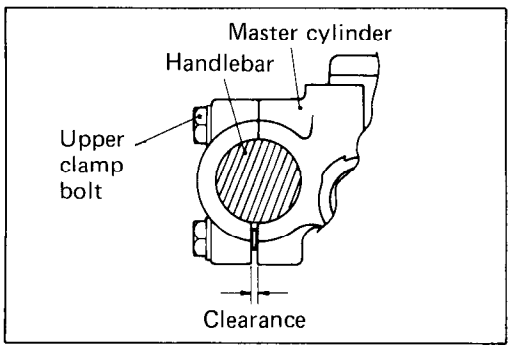

FRONT FORK

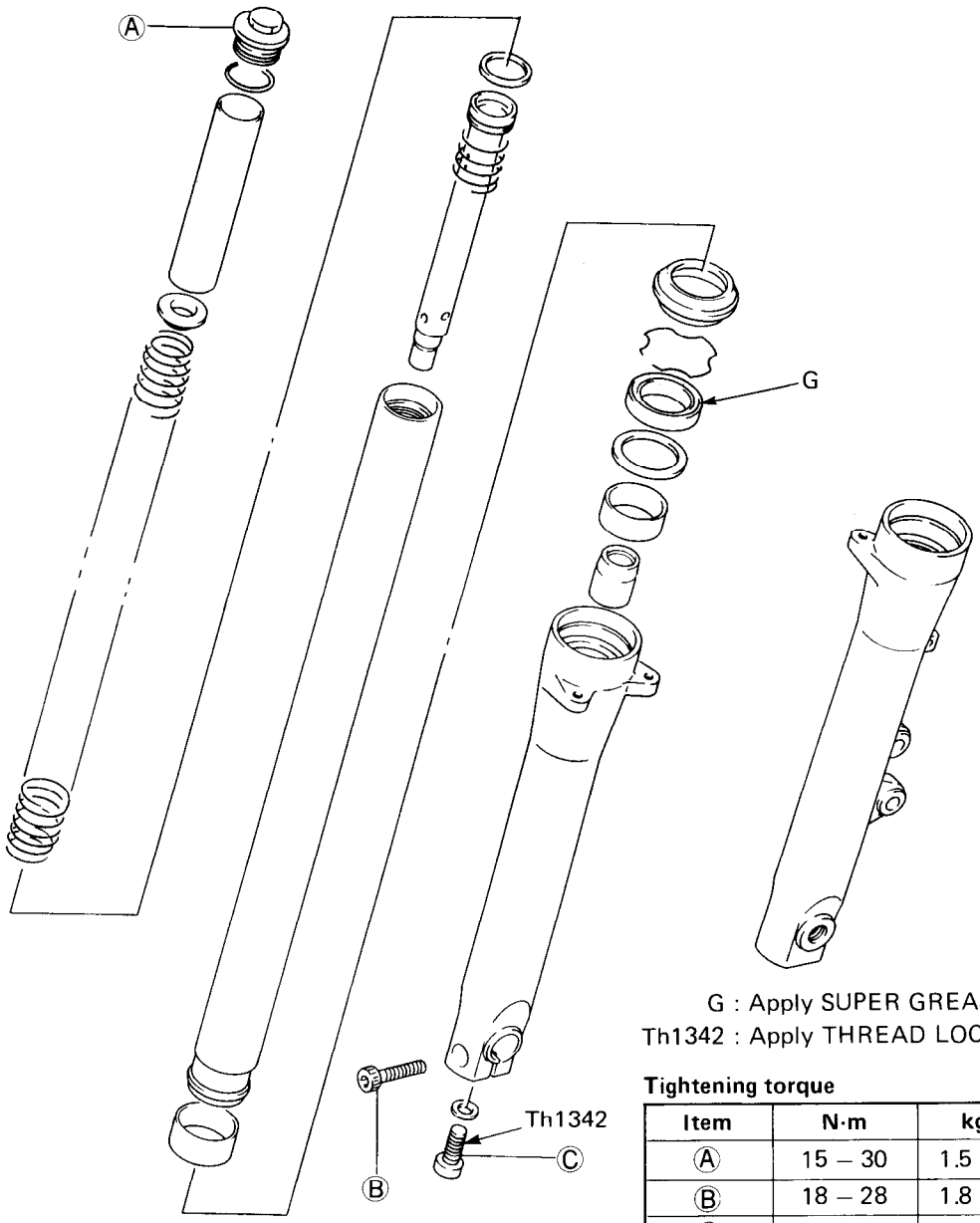

G : Apply SUPER GREASE "A."
Th1342 : Apply THREAD LOCK "1342."

Tightening torque

Item	N·m	kg-m	lb-ft
Ⓐ	15 – 30	1.5 – 3.0	11.0 – 21.5
Ⓑ	18 – 28	1.8 – 2.8	13.0 – 20.0
Ⓒ	25 – 35	2.5 – 3.5	18.0 – 25.5

REMOVAL

1. Support the motorcycle with the center stand and a jack.
2. Remove the front wheel. (Refer to page 8-1.)
3. Remove the brake caliper.

09900-00401 : "L" type hexagon wrench set

CAUTION:
Hang the brake caliper from the motorcycle frame by using a string, etc., taking care not to bend the brake hose.

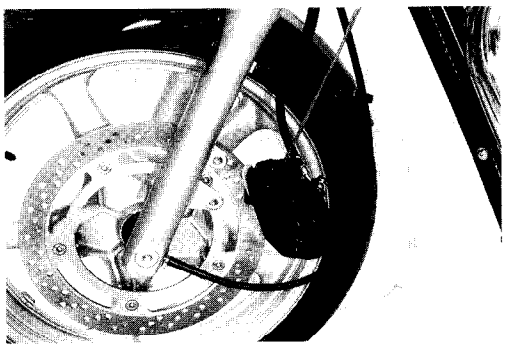

4. Disconnect the speedometer cable from the speedometer and remove the front fender.
5. Remove the fender brace.

NOTE:
Slightly loosen the front fork cap bolts ① to facilitate later disassembly before loosening the front fork clamp bolts.

6. Loosen the front fork upper and lower clamp bolts.
7. Remove the front forks.

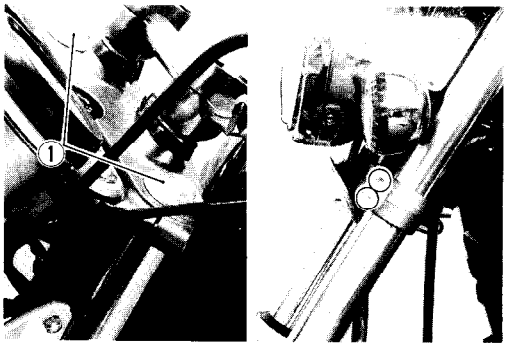

DISASSEMBLY

1. Remove the front fork cap bolt.
2. Remove the spacer, spring seat and spring out of the inner tube.
3. Turn the fork upside down and stroke it several times to let out fork oil.
4. Hold the fork upside down for a few minutes to drain oil.

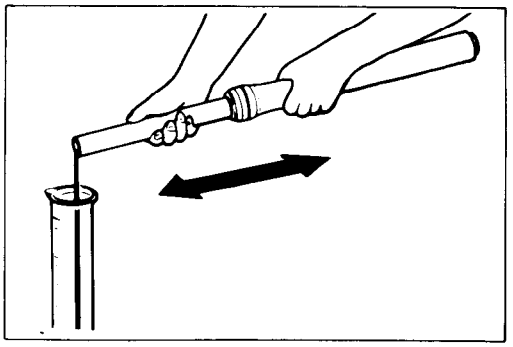

5. While holding the caliper mounting portion ① by vise and remove the damper rod with the special tool and the hexagon wrench.

09900-00401 : "L" type hexagon wrench set
09940-34520 : T-handle
09940-34592 : Attachment "G"

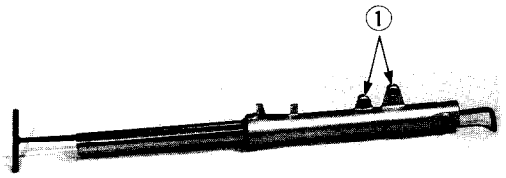

6. Remove the dust seal and the oil seal stopper ring.
7. Pull the inner tube out of the outer tube.

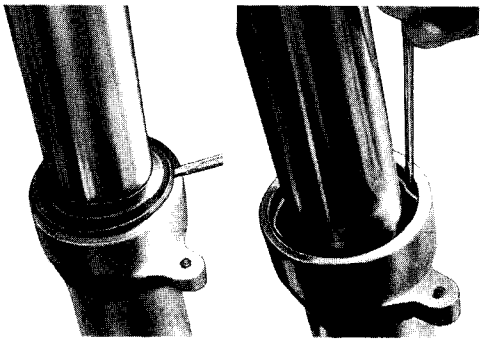

CAUTION:
The outer tube and inner tube "anti-friction" metals must be replaced along with the oil seal and dust seal.

8. Remove the damper rod and the rebound spring out of the inner tube.

Ⓐ Dust seal
Ⓑ Oil seal stopper ring
Ⓒ Oil seal
Ⓓ Oil seal retainer
Ⓔ Anti-friction metal (Outer tube metal)
Ⓕ Anti-friction metal (Inner tube metal)

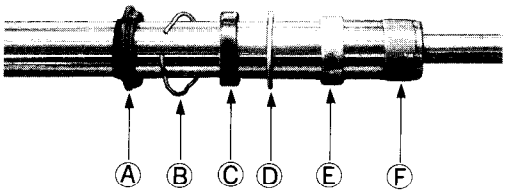

INSPECTION

DAMPER ROD RING

Inspect the damper rod ring for wear or damage.

INNER AND OUTER TUBE

Inspect the inner tube sliding surface and outer tube sliding surface for any scuffing.

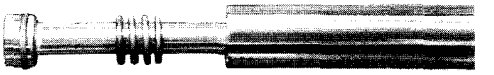

FORK SPRING

Measure the fork spring free length. If it is shorter than the service limit, replace it with a new one.

Service limit :

For E-01, 03, 28, 33 models	353 mm (13.9 in)
For the other models	348 mm (13.7 in)

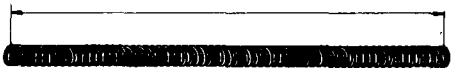

REASSEMBLY AND REMOUNTING

Reassemble and remount the front fork in the reverse order of removal and disassembly. Pay attention to the following points:

INNER TUBE METAL

- Hold the inner tube vertically and clean the metal groove and install the metal by hand as shown.

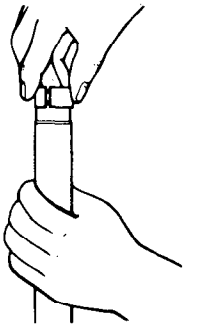

CAUTION:

Use special care to prevent damage to the "Teflon" coated surface of the "anti-friction" metal when mounting it.

DAMPER ROD BOLT

- Replace the gasket with a new one. Apply THREAD LOCK "1342" to the damper rod bolt and tighten it to the specified torque.

99000-32050 : THREAD LOCK "1342"

Tightening torque : 25 – 35 N·m
(2.5 – 3.5 kg-m, 18.0 – 25.5 lb-ft)

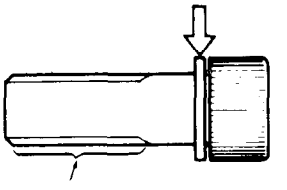

OUTER TUBE METAL, OIL SEAL AND DUST SEAL

- Clean the metal groove of outer tube and metal outer surface.
- Install the outer tube metal, oil seal retainer and oil seal.

09940-50113 : Front fork oil seal installer

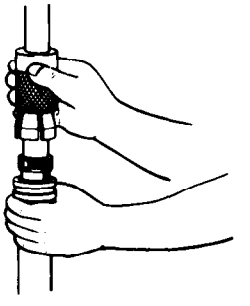

CAUTION:

Use special care to prevent damage to the "Teflon" coated surface of the "anti-friction" metal when installing it.

- After installing the oil seal, install the oil stopper ring and the dust seal.
  ① "Anti-friction" metal (Outer tube metal)
  ② Oil seal retainer
  ③ Oil seal
  ④ Oil seal stopper ring
  ⑤ Dust seal

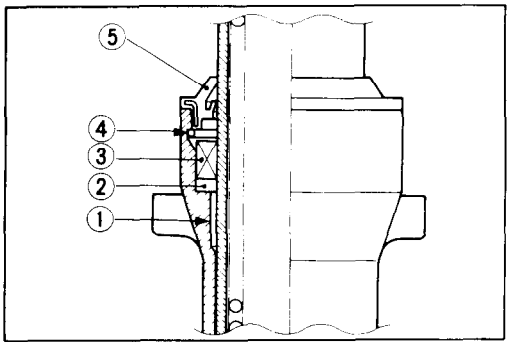

FORK OIL

- Use fork oil whose viscosity rating meet specifications below.

Fork oil type	Fork oil #10
Fork oil capacity (each leg) for E-01, 03, 28, 33 models	**388 ml (13.1/13.7 US/Imp. oz)**
Fork oil capacity (each leg) for the other models	**392 ml (13.2/13.8 US/Imp. oz)**

99000-99044-10G : SUZUKI FORK OIL #10

- Hold the front fork vertically and adjust the fork oil level with the special tool.

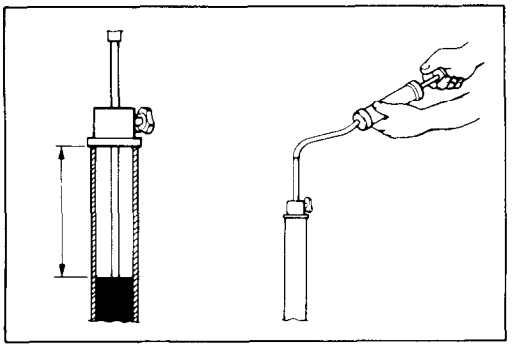

NOTE:
When adjusting oil level, remove the fork springs and compress the inner tube fully.

09943-74111 : Fork oil level gauge

Standard oil level :

For E-01, 03, 28, 33 models	**142 mm (5.59 in)**
For the other models	**138 mm (5.43 in)**

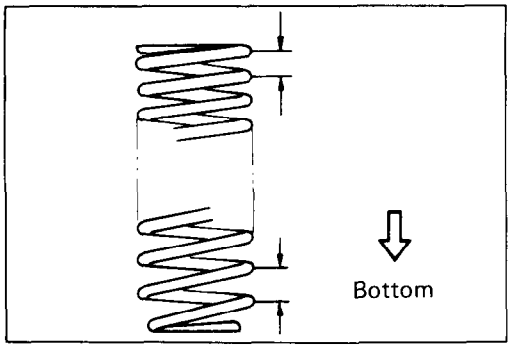

FORK SPRING

- When installing the fork spring, its large pitch end should position in bottom.

FRONT FORK REMOUNTING

- When remounting the front fork assembly, set the upper surface of the inner tube to Ⓐ height from that of the steering stem upper bracket.

Height Ⓐ :

For E-01, 03, 28, 33 models	**0 mm (0 in)**
For the other models	**5.0 mm (0.20 in)**

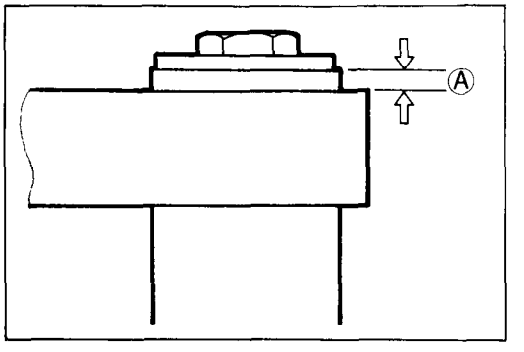

CLAMP BOLTS

- Tighten the upper and lower clamp bolts to the specified torque.

09900-00410 : Hexagon wrench set

Tightening torque (① & ②) : 18 – 20 N·m (1.8 – 2.8 kg-m, 13.0 – 20.0 lb-ft)

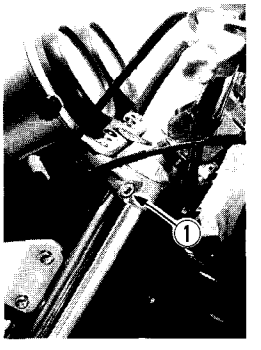

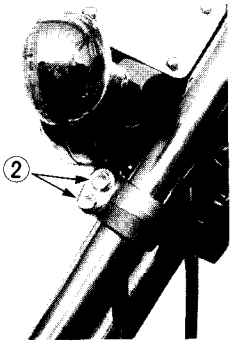

- Set the front fender brace in the direction as shown in the photograph.

NOTE:
Before tightening the fender brace mounting screws, move the front fork up and down 4 or 5 times.

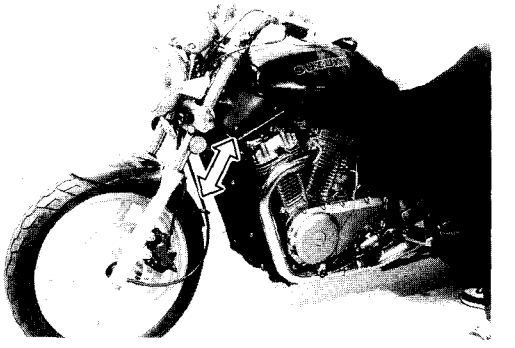

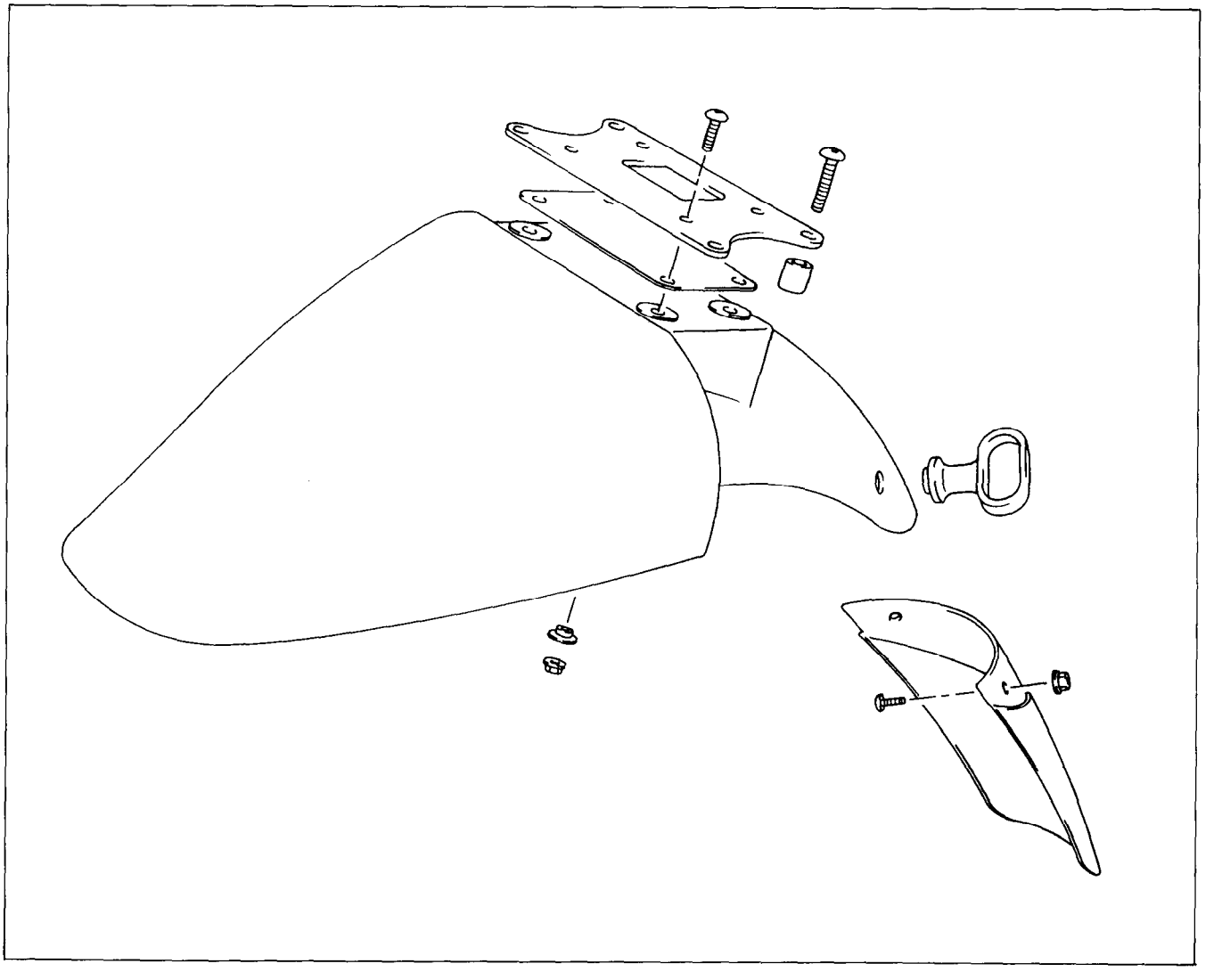

STEERING

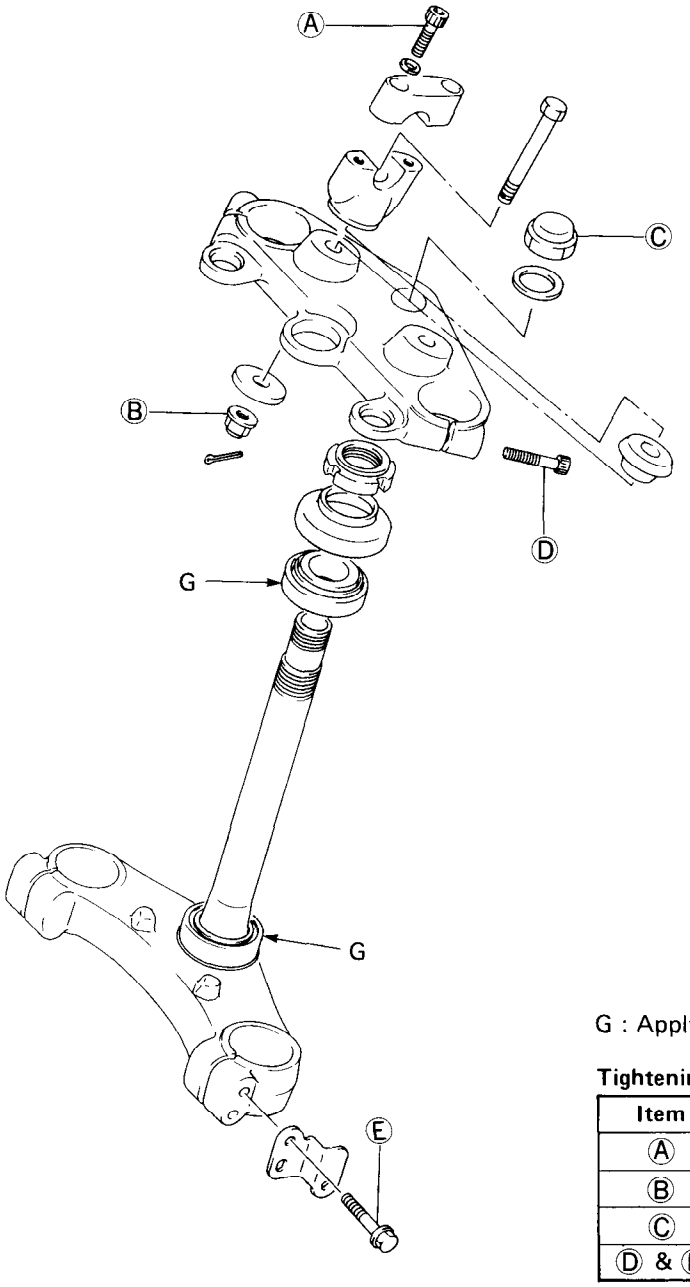

G : Apply SUPER GREASE "A."

Tightening torque

Item	N·m	kg-m	lb-ft
Ⓐ	18 – 28	1.8 – 2.8	13.0 – 20.0
Ⓑ	20 – 30	2.0 – 3.0	14.5 – 21.5
Ⓒ	50 – 80	5.0 – 8.0	36.0 – 58.0
Ⓓ & Ⓔ	18 – 28	1.8 – 2.8	13.0 – 20.0

REMOVAL

1. Disconnect lead wires in the headlight housing and remove the headlight.
2. Remove the horn.
3. Disconnect the speedometer cable and remove the tachometer and speedometer.
4. Remove the front wheel. (Refer to page 8-1.)
5. Remove the brake hose clamp bolt from the steering lower bracket.
6. Remove the front forks. (Refer to page 8-10.)
7. Remove the handlebar clamp bolts.

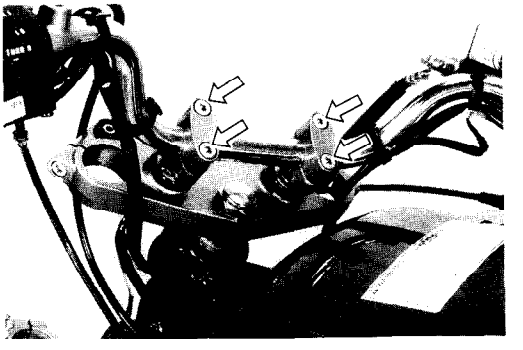

8. Remove the steering stem head nut.
9. Remove the steering stem head by disconnecting the ignition switch lead wire coupler.
10. Remove the steering stem nut by using the special tool, then remove the steering stem lower bracket.

09940-14911 : Steering stem nut wrench

NOTE:
Hold the steering stem lower bracket by hand to prevent it from falling.

11. Disassemble the handlebar holders.

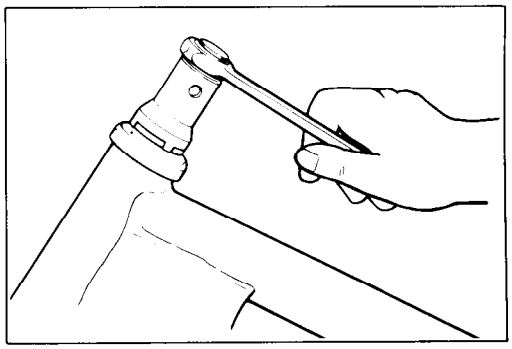

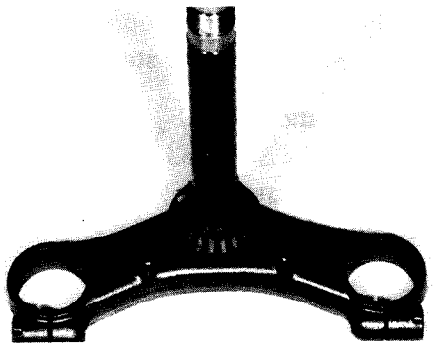

INSPECTION

Inspect the removed parts for the following abnormalities.

* Handlebar distortion
* Handlebar clamp wear
* Race wear and brinelling
* Bearing wear or damage
* Abnormal noise of bearing
* Distortion of steering stem

DISASSEMBLY

1. Remove the steering stem upper bearing.
2. Remove the steering stem lower bearing by using the special tool.

09941-84510 : Bearing remover

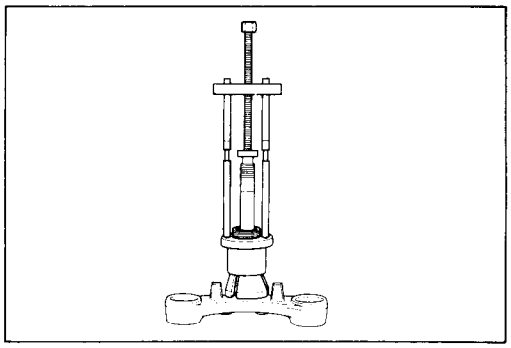

CAUTION:
The removed bearing should be replaced with a new one.

3. Drive out the steering stem bearing races, upper and lower, by using the special tools.

09941-54911 : Bearing outer race remover
09941-74910 : Steering bearing installer

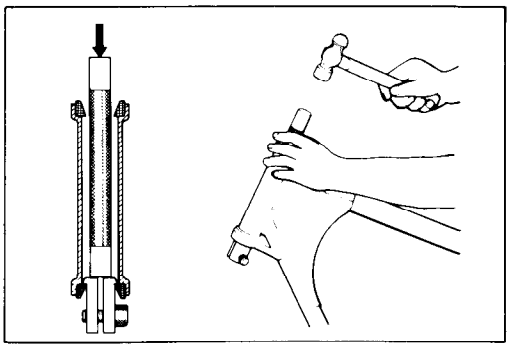

REASSEMBLY AND REMOUNTING

Reassemble and remount the steering stem in the reverse order of removal and disassembly. Pay attention to the following points:

OUTER RACES

- Press in the upper and lower outer races by using the special tool.

09941-34513 : Steering outer race installer

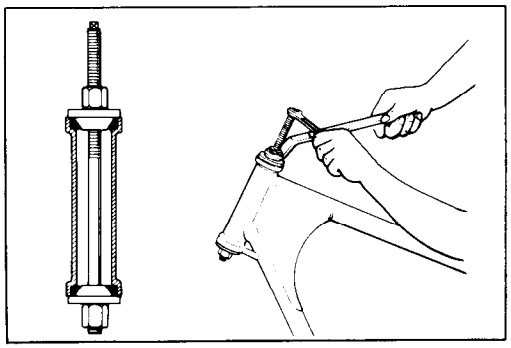

BEARING

- Place a washer on the bearing and press in the lower bearing by using the special tool.

09941-74910 : Steering bearing installer

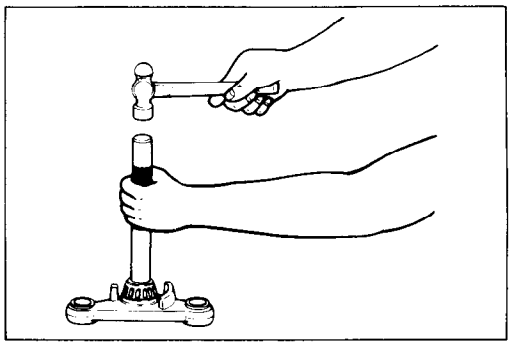

- Apply grease to the upper and lower bearings before remounting the steering stem.

(For U.S.A. model)
99000-25030 : SUZUKI SUPER GREASE "A"
(For the other models)
99000-25010 : SUZUKI SUPER GREASE "A"

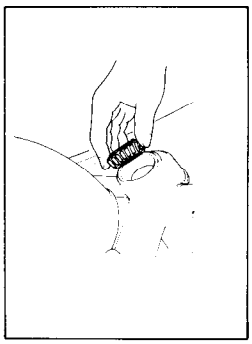

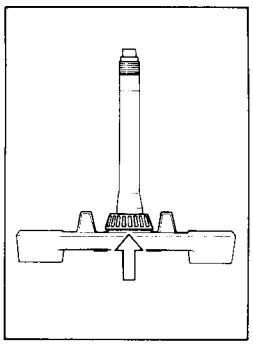

STEM NUT

- Tighten the steering stem nut to the specified torque.

09940-14911 : Steering stem nut wrench

Tightening torque : 40 – 50 N·m
(4.0 – 5.0 kg-m, 29.0 – 36.0 lb-ft)

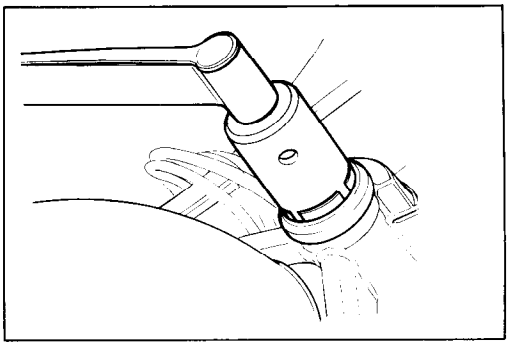

- Turn the steering stem lower bracket about five or six times to the left and right so that the taper roller bearing will be seated properly.
- Turn back the stem nut by 1/4 – 1/2 turn.

NOTE:
This adjustment will vary from motorcycle to motorcycle.

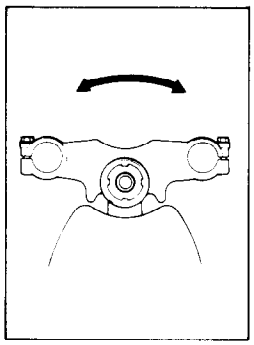

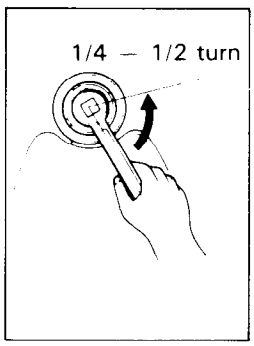

HANDLEBAR HOLDER

- Tighten the handlebar holder mounting nuts to the specified torque.

Tightening torque : 20 – 30 N·m
(2.0 – 3.0 kg-m, 14.5 – 21.5 lb-ft)

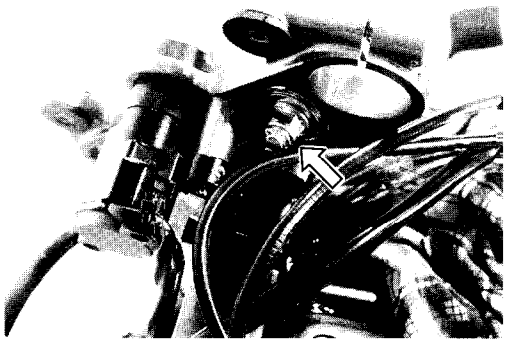

HANDLEBAR

- Set the handlebar to match its punched mark to the mating face of the holder.
- Secure the each handlebar clamp in such a way that the clearances Ⓐ ahead and behind the handlebar are equalized.

Tightening torque : 18 – 28 N·m
(1.8 – 2.8 kg-m, 13.0 – 20.0 lb-ft)

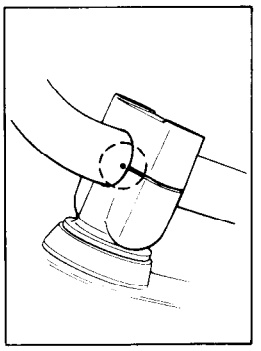

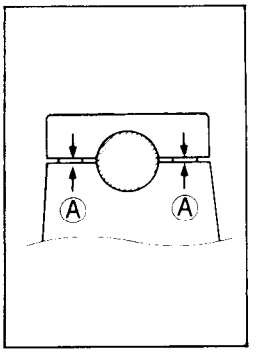

STEERING TENSION ADJUSTMENT

Check the steering movement in the following procedure.

- By supporting the motorcycle with the center stand and a jack, lift the front wheel until it is off the floor by 20 – 30 mm (0.8 – 1.2 in).
- Check to make sure that the cables and wire harnesses are properly routed.
- With the front wheel in the straight ahead state, hitch the spring scale (special tool) on one handlebar grip end as shown in the figure and read the graduation when the handlebar starts moving. Do the same on the other grip end.

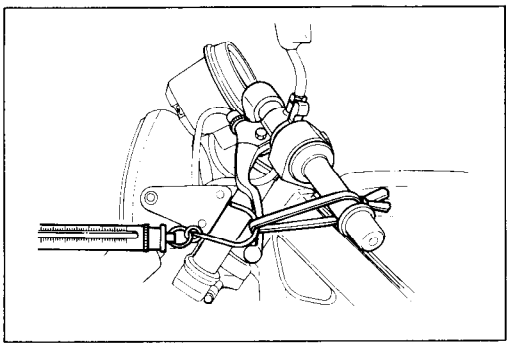

Initial force : 200 – 500 grams

09940-92710 : Spring scale

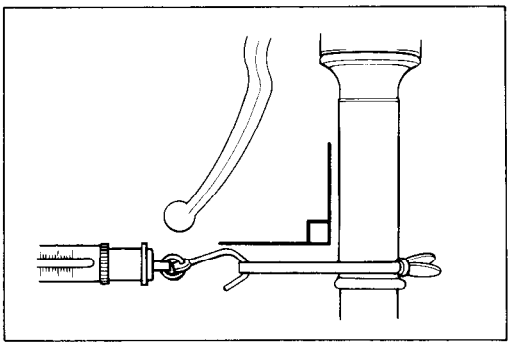

- If the initial force read on the scale when the handlebar starts turning is either too heavy or too light, adjust it till it satisfies the specification.
  1) First, loosen the front fork upper clamp bolts and steering stem head nut, and then adjust the steering stem nut by loosening or tightening it.
  2) Tighten the head nut and clamp bolts to the specified torque and re-check the initial force with the spring scale according to the previously described procedure.

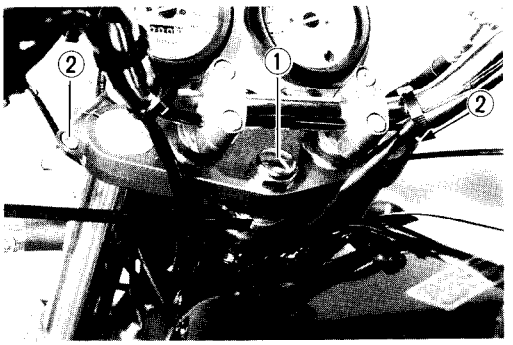

Tightening torque

Stem head nut ① : **50 – 80 N·m**
(5.0 – 8.0 kg-m, 36.0 – 58.0 lb-ft)

Front fork upper clamp bolt ② : **18 – 28 N·m**
(1.8 – 2.8 kg-m, 13.0 – 20.0 lb-ft)

  3) If the initial force is found within the specified range, adjustment has been completed.

NOTE:
Hold the front fork legs, move them back and forth and make sure that the steering is not loose.

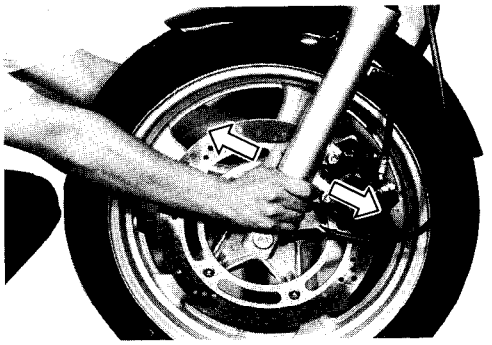

- Lower the jack.

IGNITION SWITCH

- To remove the ignition switch, remove the bolt to detach the ignition switch from the steering stem upper bracket by using a center punch and hummer.

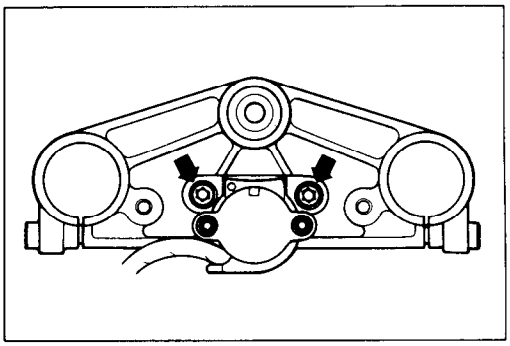

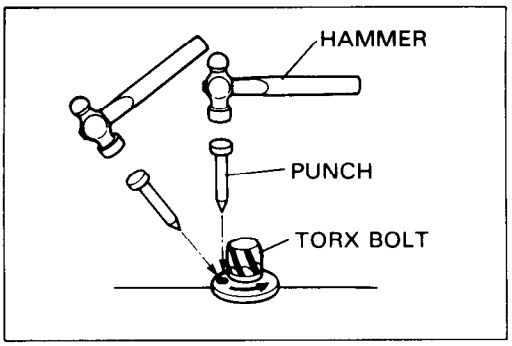

- To install the ignition switch, always use the new special bolt and follow the procedures below:

NOTE:
The spare ignition switch comes equipped with the special bolts, however, the bolt is also individually available as spare parts.

- Using the special bolts, attach the ignition switch on the steering stem upper bracket in place and run in the bolts with the special tool.

09930-11910 : Torx wrench

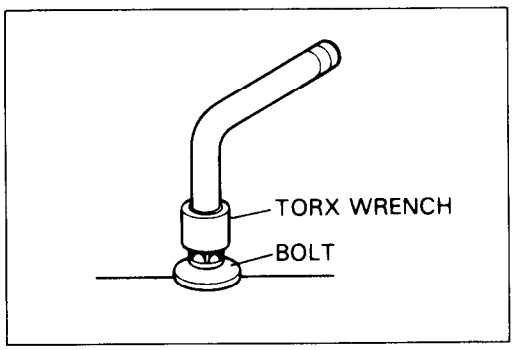

- Continue turning the tool until the tool slips from the bolt head or the bolt head breaks off, then the bolt has become tightened to the proper specification.

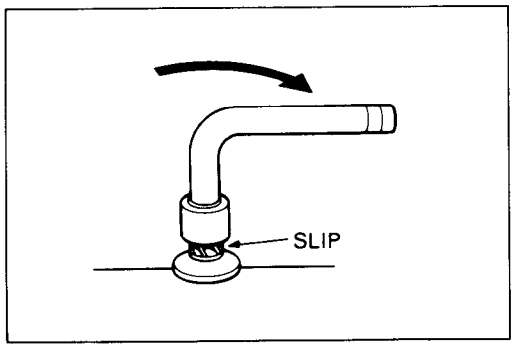

REAR BRAKE

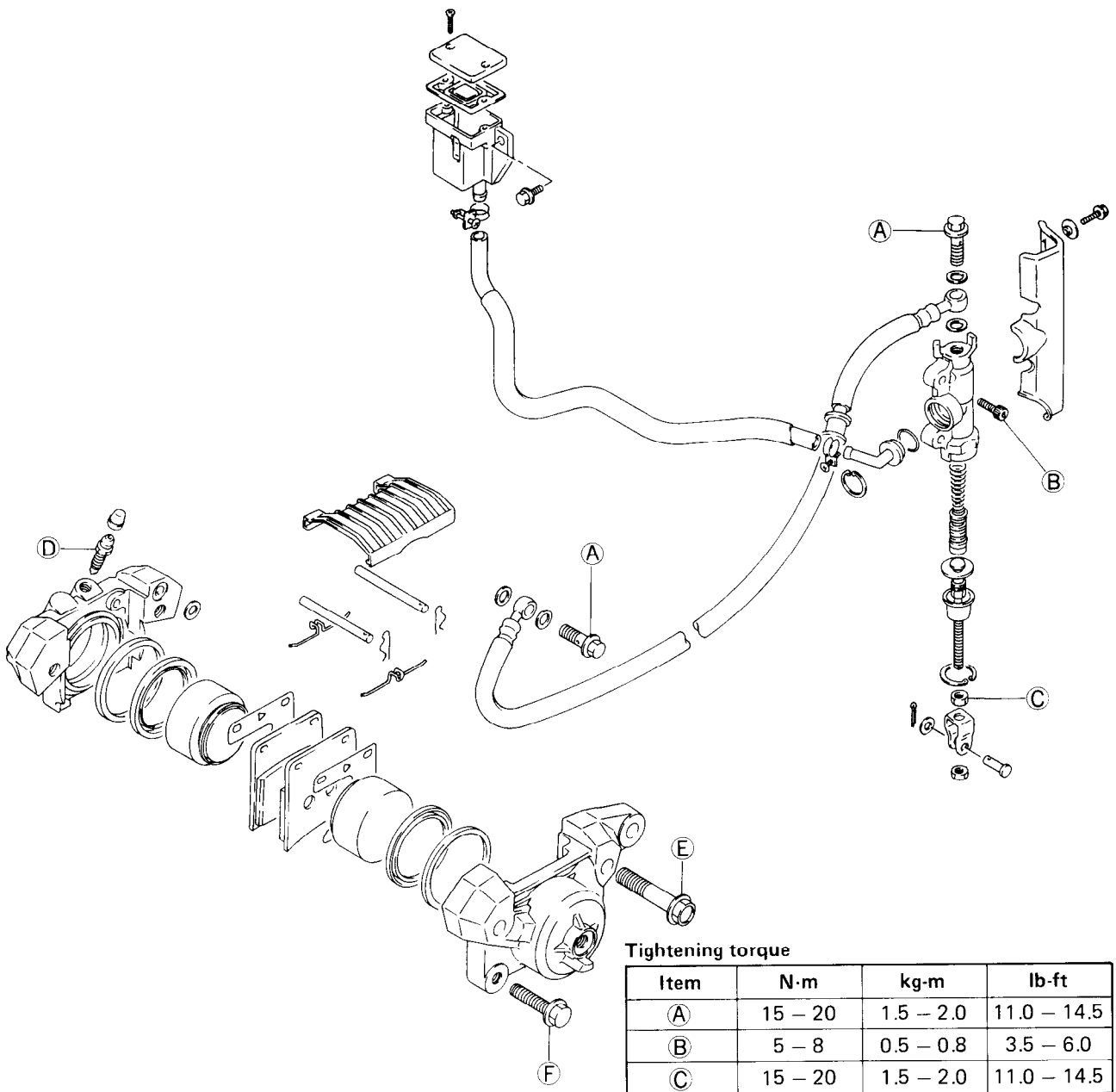

Tightening torque

Item	N·m	kg-m	lb-ft
Ⓐ	15 – 20	1.5 – 2.0	11.0 – 14.5
Ⓑ	5 – 8	0.5 – 0.8	3.5 – 6.0
Ⓒ	15 – 20	1.5 – 2.0	11.0 – 14.5
Ⓓ	6 – 9	0.6 – 0.9	4.5 – 6.5
Ⓔ	30 – 36	3.0 – 3.6	21.5 – 26.0
Ⓕ	20 – 31	2.0 – 3.1	14.5 – 22.5

BRAKE PAD REPLACEMENT

1. Remove the dust seal cover.
2. Remove the clips, pins and springs.
3. Remove the pads.

CAUTION:

* **Do not operate the brake pedal while dismounting the pads.**
* **Replace the brake pads as a set, otherwise braking performance will be adversely affected.**

CALIPER REMOVAL AND DISASSEMBLY

1. Remove the union bolt and catch the brake fluid in a suitable receptacle.

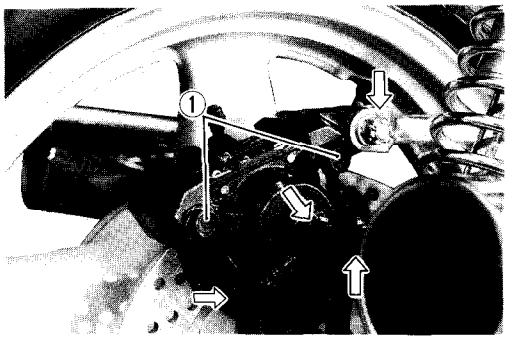

CAUTION:
Never reuse the brake fluid left over from servicing and stored for long periods.

WARNING:
Brake fluid, if it leaks, will interfere with safe running and discolor painted surfaces. Check the brake hose and hose joint for cracks and oil leakage.

2. Remove the caliper mounting bolts.
3. Remove the torque link bolt and nut, and take off the caliper.

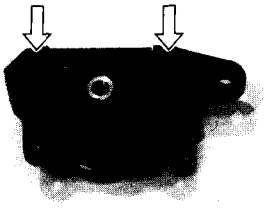

NOTE:
Slightly loosen the caliper housing bolts ① to facilitate later disassembly before removing the caliper mounting bolts.

4. Remove the pads.
5. Remove the caliper housing bolts and separate the caliper halves.
6. Remove the O-ring.

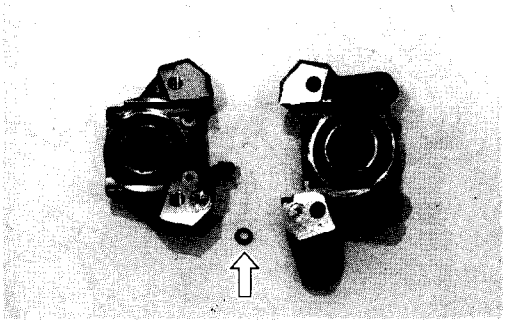

NOTE:
Once separate the caliper halves, replace the O-ring with a new one.

7. Place a rag over the piston to prevent it from popping out and push out the piston by using air gun.

CAUTION:
Do not use high pressure air to prevent piston damage.

8. Remove the dust seal, piston and piston seal out of the caliper.

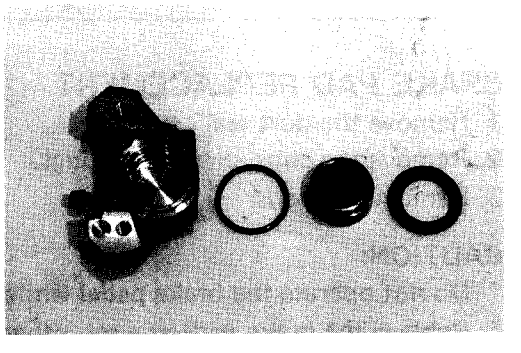

CALIPER AND DISC INSPECTION

CALIPER ..... Refer to page 8-6.
PISTON ..... Refer to page 8-6.
RUBBER PARTS ..... Refer to page 8-6.
DISC ..... Refer to page 8-7.

CALIPER REASSEMBLY AND REMOUNTING

Reassemble and remount the caliper in the reverse order of removal and disassembly. Pay attention to the following points:

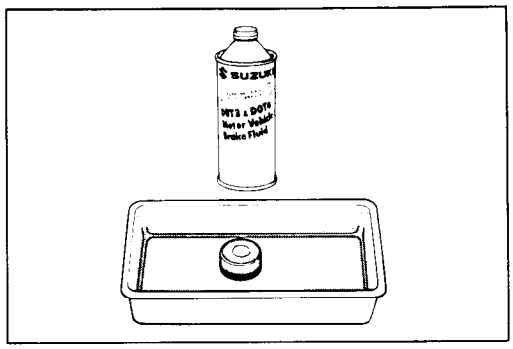

CAUTION:

* **Wash the caliper components with fresh brake fluid before reassembly. Never use cleaning solvent or gasoline to wash them.**
* **Apply brake fluid to the caliper bore and piston to be inserted into the bore.**

- Tighten each bolt to the specified torque.

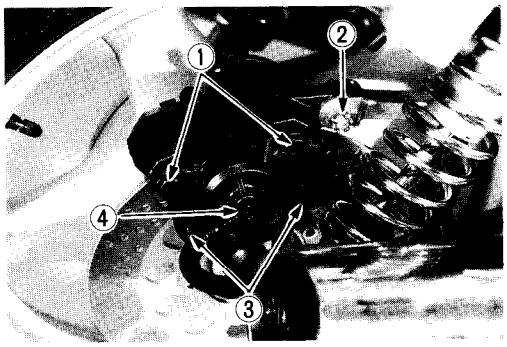

Tightening torque

Rear brake caliper housing bolt ①	**: 30 – 36 N·m (3.0 – 3.6 kg-m, 21.5 – 26.0 lb-ft)**
Torque link nut ②	**: 22 – 35 N·m (2.2 – 3.5 kg-m, 16.0 – 25.5 lb-ft)**
Rear brake caliper mounting bolt ③	**: 20 – 31 N·m (2.0 – 3.1 kg-m, 14.5 – 22.5 lb-ft)**
Brake hose union bolt ④	**: 15 – 20 N·m (1.5 – 2.0 kg-m, 11.0 – 14.5 lb-ft)**

CAUTION:

Bleed air after reassembling the caliper.
(Refer to page 2-13.)

MASTER CYLINDER REMOVAL AND DISASSEMBLY

1. Remove the seat.
2. Remove the master cylinder cover and brake pedal boss bolt.

09900-00401 : "L" type hexagon wrench set

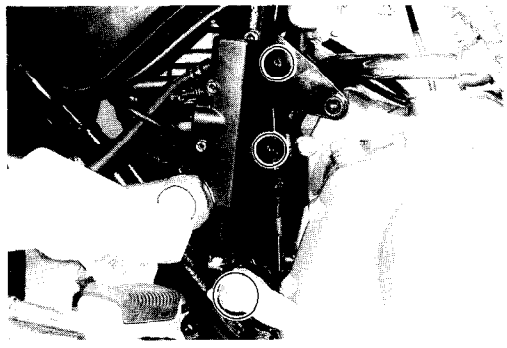

3. Place a rag underneath the union bolt on the master cylinder to catch spilled drops of brake fluid. Unscrew the union bolt and disconnect the brake hose from the master cylinder joint.

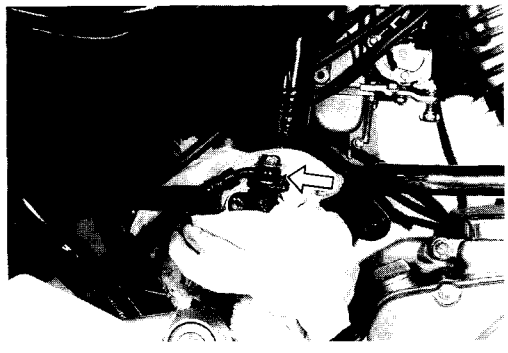

CAUTION:
Immediately and completely wipe off any brake fluid contacting any part of the motorcycle. The fluid reacts chemically with paint, plastics and rubber materials, etc. and will damage them severely.

4. Remove the master cylinder mounting bolts.

5. Disconnect the reservoir tank hose from the master cylinder by loosening the clamp screw and catch the brake fluid in a suitable receptacle.
6. Remove the master cylinder assembly.

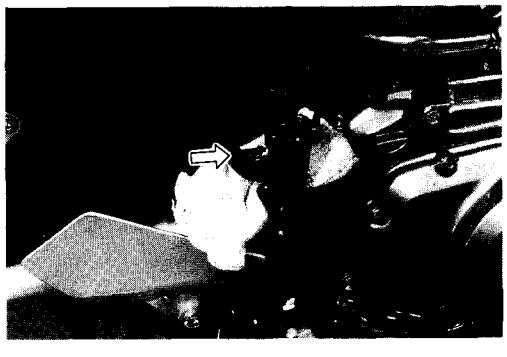

7. Remove the reservoir tank cap and drain brake fluid from the reservoir tank.

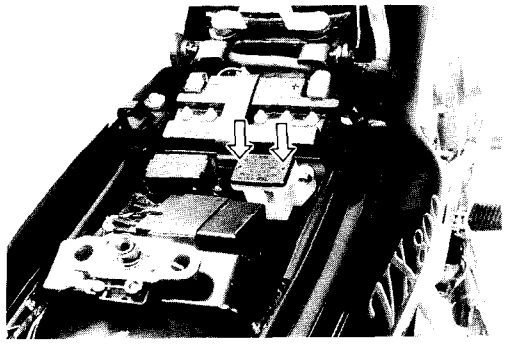

8. Remove the dust seal, then remove the circlip by using the special tool.

09900-06105 : Snap ring pliers

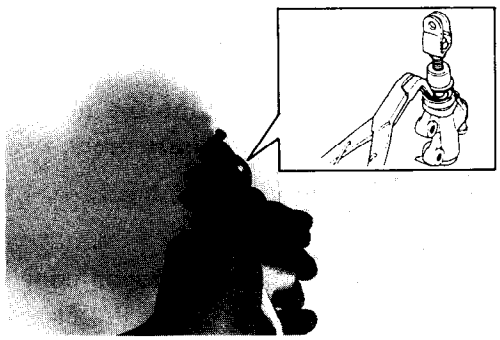

9. Remove the push rod, piston, primary cup and spring.

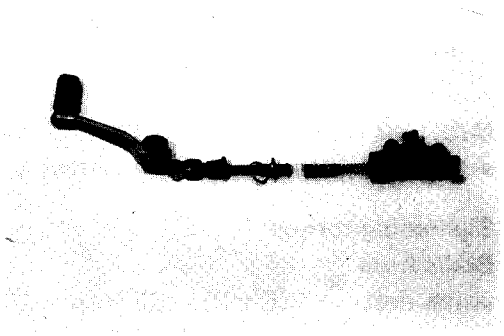

10. Remove the connector and O-ring.

CAUTION:
The removed O-ring should be replaced with a new one.

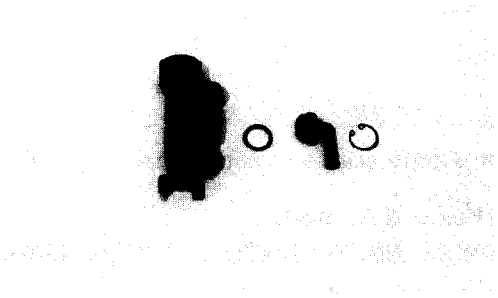

MASTER CYLINDER INSPECTION

CYLINDER, PISTON AND CUP SET

- Inspect the cylinder bore wall for any scratches or other damage.
- Inspect the piston surface for any scratches or other damage.
- Inspect the cup set and each rubber part for wear or damage.

MASTER CYLINDER REASSEMBLY AND REMOUNTING

Reassemble and remount the master cylinder in the reverse order of removal and disassembly. Pay attention to the following points:

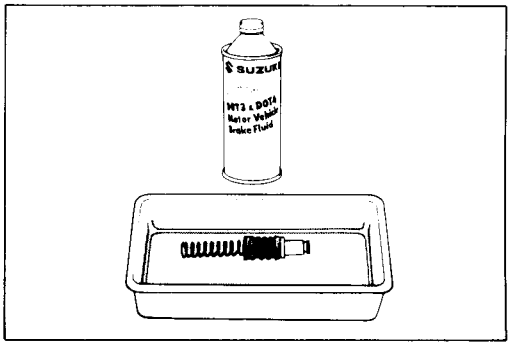

CAUTION:

* **Wash the master cylinder components with fresh brake fluid before reassembly. Never use cleaning solvent or gasoline to wash them.**
* **Apply brake fluid to the cylinder bore and all the internals to be inserted into the bore.**

MASTER CYLINDER BOLTS

- Tighten each bolt to the specified torque.

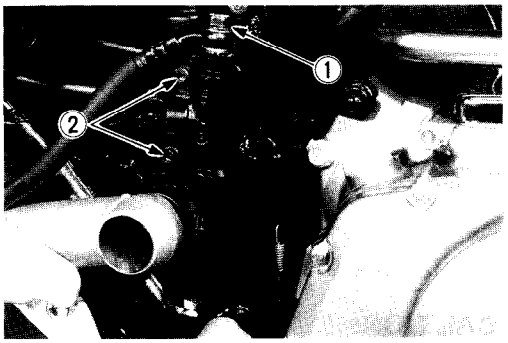

Tightening torque

Brake hose union bolt	① :	**15 – 20 N·m (1.5 – 2.0 kg-m, 11.0 – 14.5 lb-ft)**
Master cylinder mounting bolt	② :	**5 – 8 N·m (0.5 – 0.8 kg-m, 3.5 – 6.0 lb-ft)**

BRAKE PEDAL BASS BOLT

- Apply grease to sliding surface of the brake pedal boss.

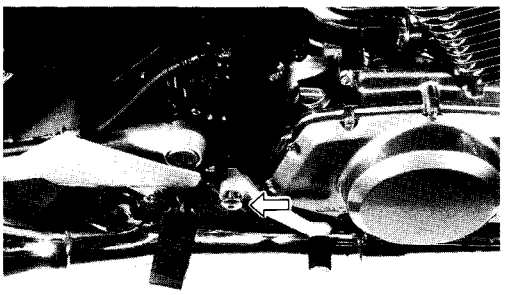

(For U.S.A. model)
99000-25030 : SUZUKI SUPER GREASE "A"
(For the other models)
99000-25010 : SUZUKI SUPER GREASE "A"

- Apply THREAD LOCK SUPER "1333B"/"1322" to the brake pedal boss bolt and tighten it to the specified torque with the hexagon wrench.

(For U.S.A. model)
99000-32020 : THREAD LOCK SUPER "1333B"
(For the other models)
99000-32110 : THREAD LOCK SUPER "1322"

Tightening torque : 18 – 28 N·m (1.8 – 2.8 kg-m, 13.0 – 20.0 lb-ft)

CAUTION:

* **Bleed air after reassembling master cylinder. (Refer to page 2-13.)**
* **Adjust the rear brake light switch and brake pedal height after installation. (Refer to page 2-13.)**

REAR WHEEL

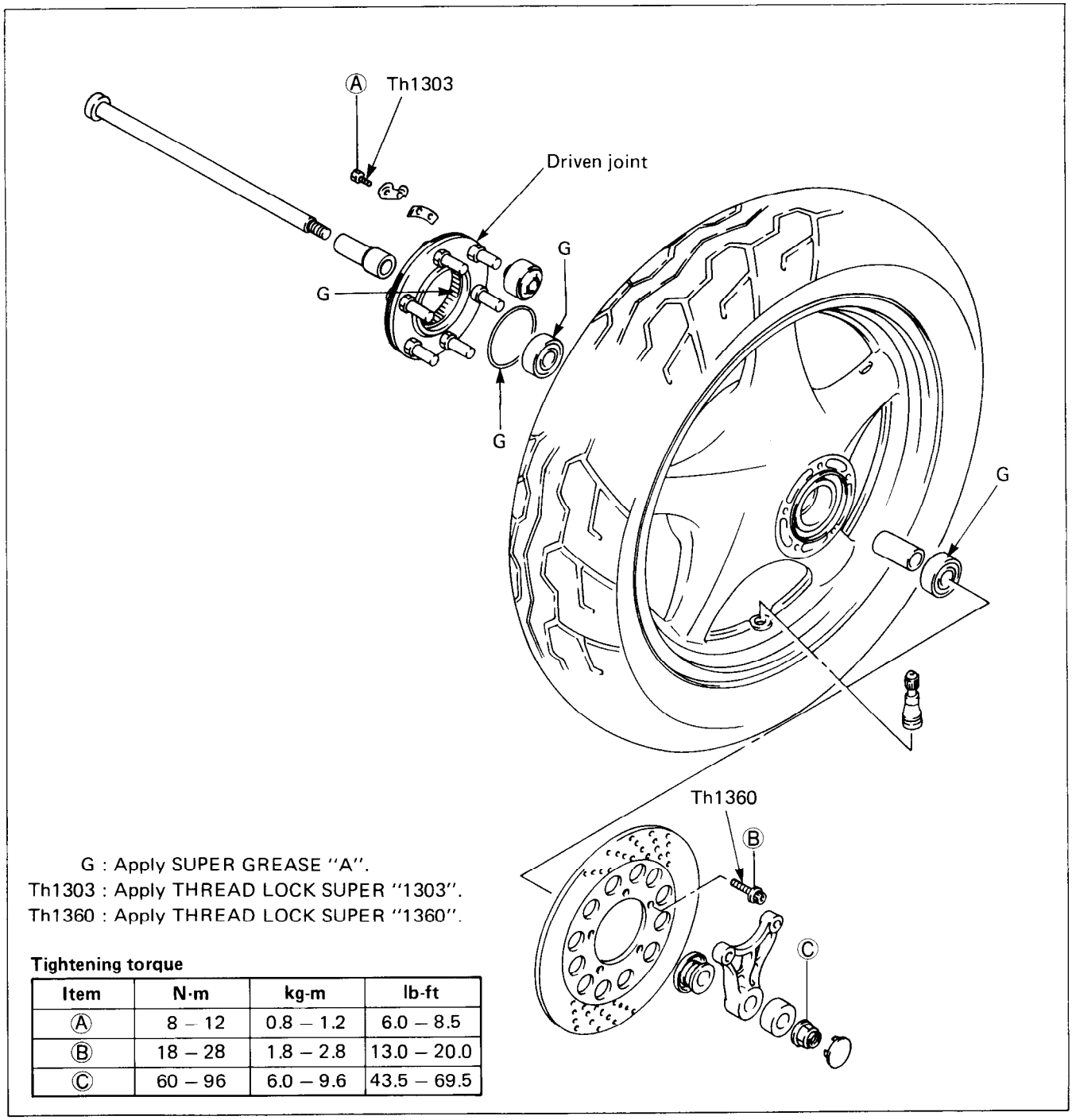

G : Apply SUPER GREASE "A".
Th1303 : Apply THREAD LOCK SUPER "1303".
Th1360 : Apply THREAD LOCK SUPER "1360".

Tightening torque

Item	N·m	kg-m	lb-ft
Ⓐ	8 – 12	0.8 – 1.2	6.0 – 8.5
Ⓑ	18 – 28	1.8 – 2.8	13.0 – 20.0
Ⓒ	60 – 96	6.0 – 9.6	43.5 – 69.5

REMOVAL AND DISASSEMBLY

1. Support the motorcycle by the center stand.
2. Remove the rear torque link nut.
3. Remove the axle nut cap and remove the axle nut.
4. Draw out the rear axle shaft and remove the rear wheel.

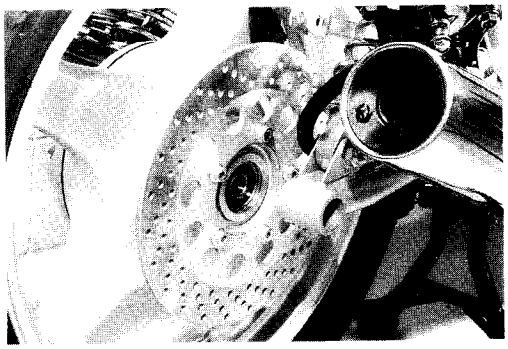

CAUTION:

Do not operate the brake pedal while dismounting the brake caliper.

5. Remove the brake disc by removing the mounting bolts.

09900-00410 : Hexagon wrench set

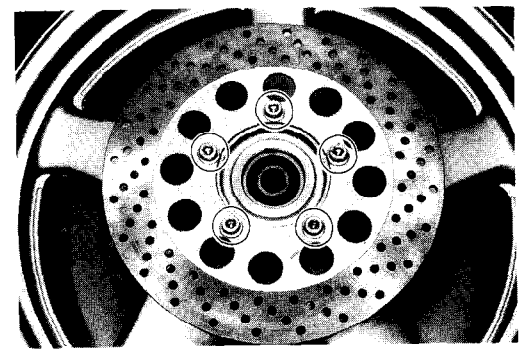

6. Flatten the lock washers and remove the fitting bolts.

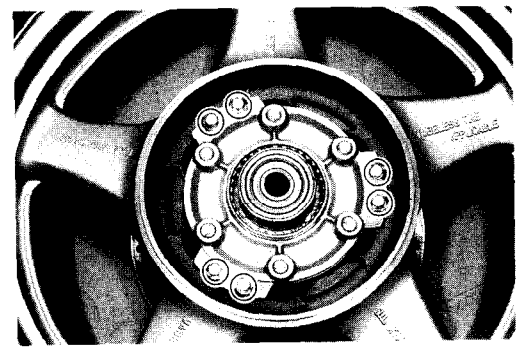

7. Pull off the driven joint.

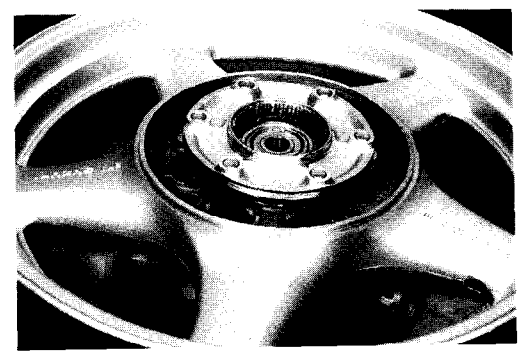

8. Remove the O-ring ①.

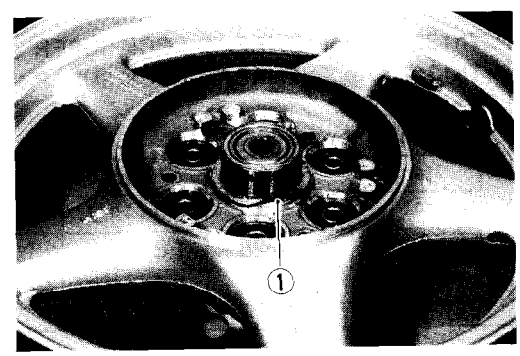

9. Take off the dampers by using the special tools.

09921-20210 : Bearing remover
09930-30102 : Sliding shaft

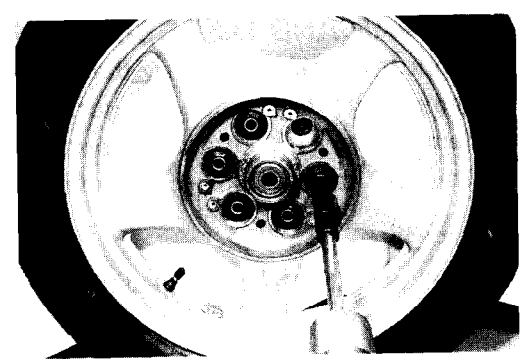

INSPECTION AND DISASSEMBLY

TIRE ..... Refer to page 8-31.

WHEEL BEARINGS

Inspect the play of the wheel bearings by hand while they are in the wheel. Rotate the inner race by hand to inspect for abnormal noise and smooth rotation. Replace the bearing if there is anything unusual.

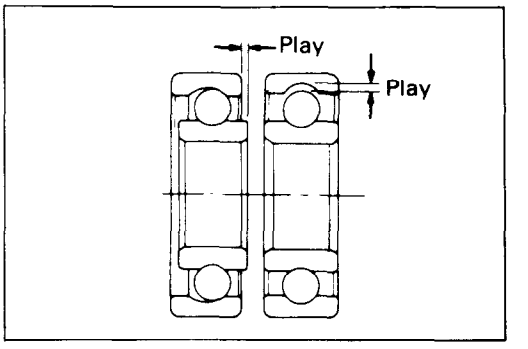

- Drive out the wheel bearings by using a proper tool. (Refer to page 8-2.)

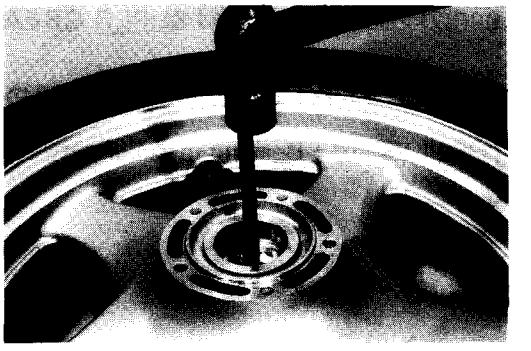

CAUTION:
The removed bearings should be replaced with new ones.

AXLE SHAFT

Using a dial gauge, check the axle shaft for runout and replace it if the runout exceeds the limit.

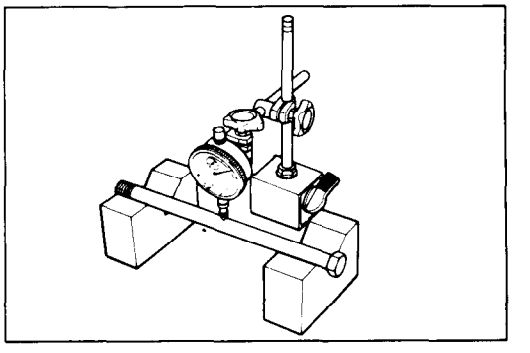

09900-20606 : Dial gauge (1/100)
09900-20701 : Magnetic stand
09900-21304 : V-block set (100 mm)

Service limit : 0.25 mm (0.010 in)

WHEEL

Make sure that the wheel runout checked as shown does not exceed the service limit. An excessive runout is usually due to worn or loose wheel bearings and can be reduced by replacing the bearings. If bearing replacement fails to reduce the runout, replace the wheel.

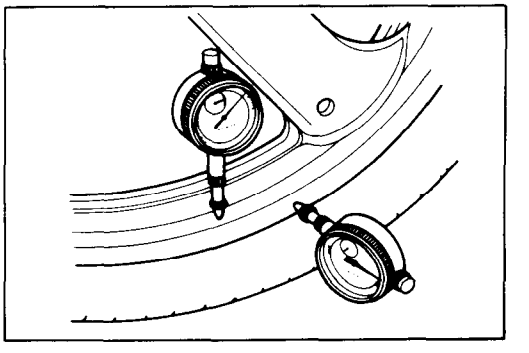

Service limit (Axial and Radial) : 2.0 mm (0.08 in)

WHEEL DAMPER AND O-RING

Inspect the wheel dampers and driven joint O-ring for damage or wear.

REASSEMBLY AND REMOUNTING

Reassemble and remount the rear wheel in the reverse order of removal and disassembly. Pay attention to the following points:

WHEEL BEARING

- Apply grease to the bearings before installing.

(For U.S.A. model)
99000-25030 : SUZUKI SUPER GREASE "A"
(For the other models)
99000-25010 : SUZUKI SUPER GREASE "A"

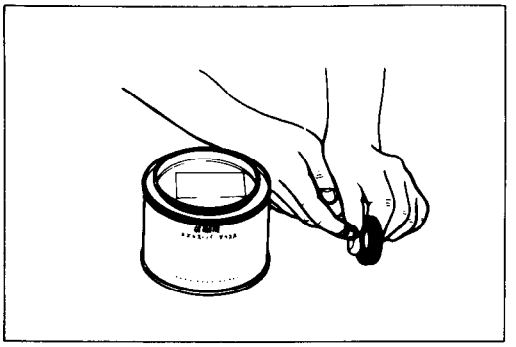

- Install the wheel bearings by using the special tool.

09924-84510 : Bearing installer set

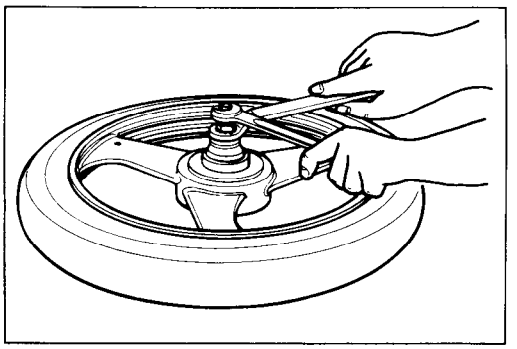

NOTE:
First install the right wheel bearing, then install the left wheel bearing. The sealed cover on the bearing is positioned outside.

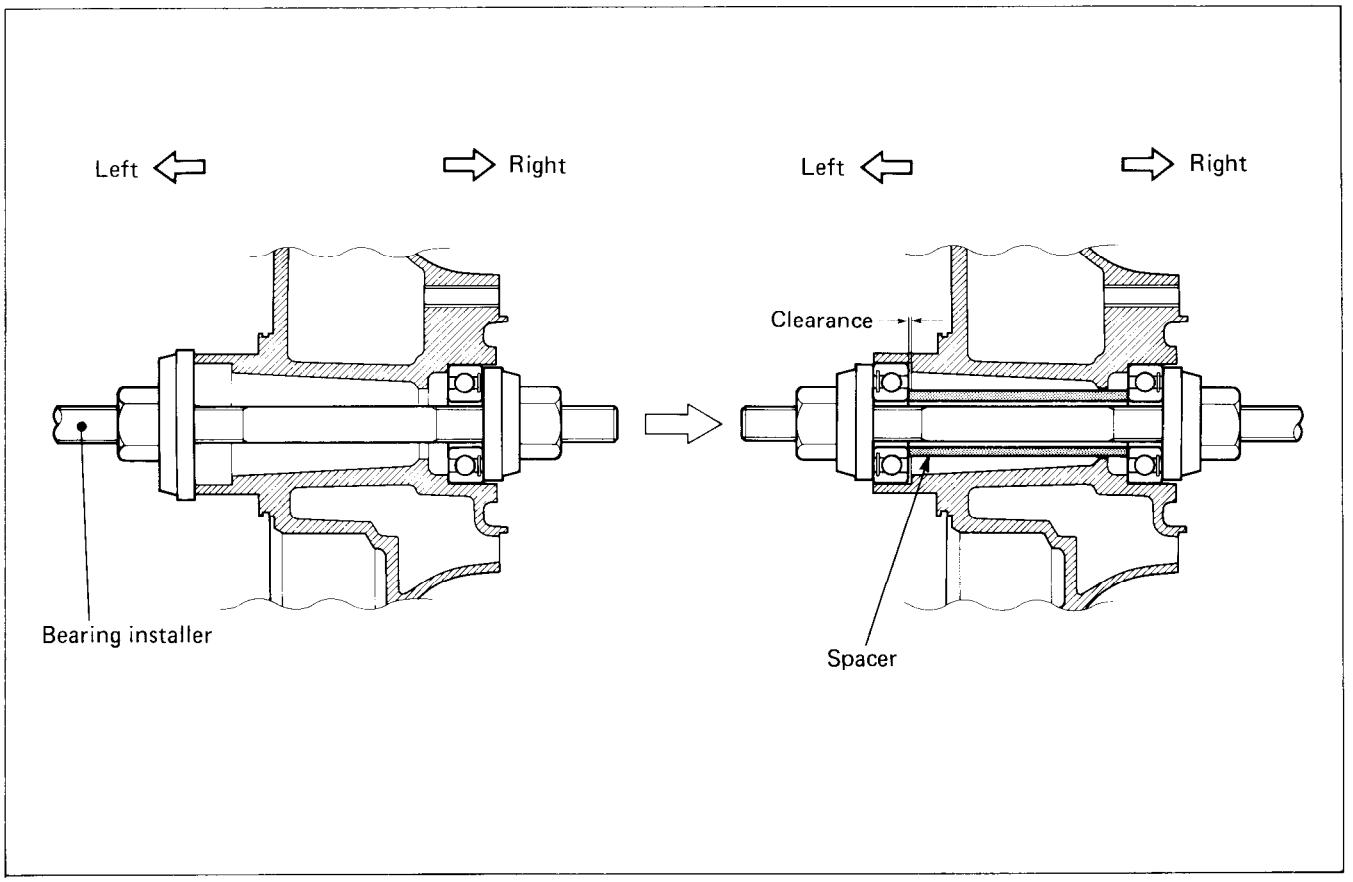

WHEEL DAMPER AND O-RING

- Install the dampers.

NOTE:
If soap water is applied around the damper, it makes the job easier.

- Apply grease to the O-ring before installing the driven joint.

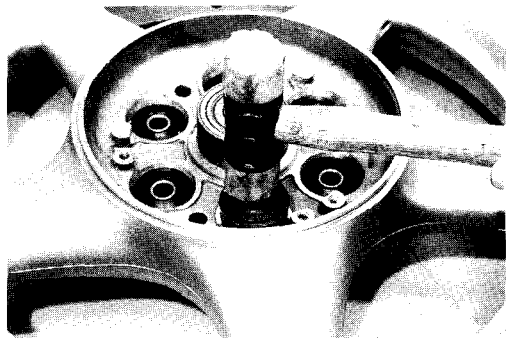

DRIVEN JOINT

- Apply THREAD LOCK SUPER "1303" to the driven joint stopper bolts and tighten them to the specified torque.

99000-32030 : THREAD LOCK SUPER "1303"

Tightening torque : 8 – 12 N·m
(0.8 – 1.2 kg-m, 6.0 – 8.5 lb-ft)

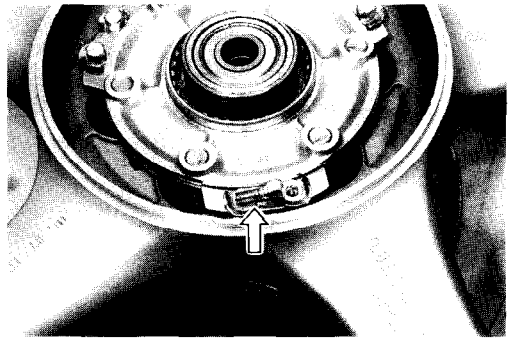

BRAKE DISC

- Make sure that the brake disc is clean and free of any greasy matter.
- Apply THREAD LOCK SUPER "1360" to the disc bolts and tighten them to the specified torque.

99000-32130 : THREAD LOCK SUPER "1360"

Tightening torque : 18 – 28 N·m
(1.8 – 2.8 kg-m, 13.0 – 20.0 lb-ft)

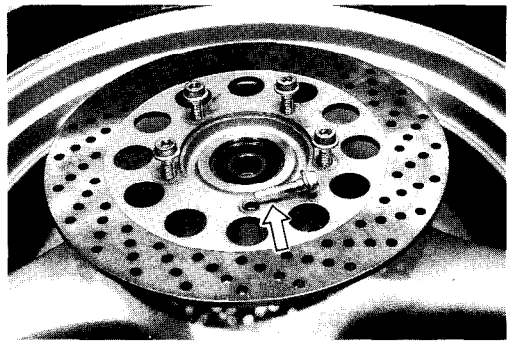

FINAL GEAR SPLINE

- Apply grease to the final gear spline before installing the rear wheel. G : Grease

(For U.S.A. model)
99000-25030 : SUZUKI SUPER GREASE "A"
(For the other models)
99000-25010 : SUZUKI SUPER GREASE "A"

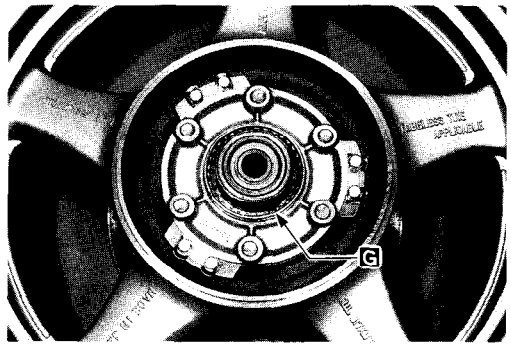

Tightening torque
Axle nut : 60 – 96 N·m
(6.0 – 9.6 kg-m, 43.5 – 69.5 lb-ft)
Rear torque link nut : 22 – 35 N·m
(2.2 – 3.5 kg-m, 16.0 – 25.5 lb-ft)

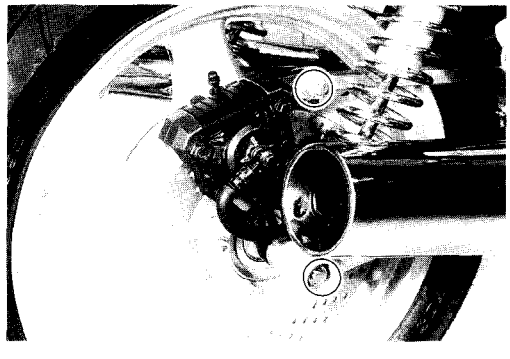

TIRE AND WHEEL

TIRE REMOVAL

The most critical factor of a tubeless tire is the seal between the wheel rim and the tire bead. Because of this, we recommend using a tire changer which is also more efficient than tire levers.
For tire removal the following tools are required.

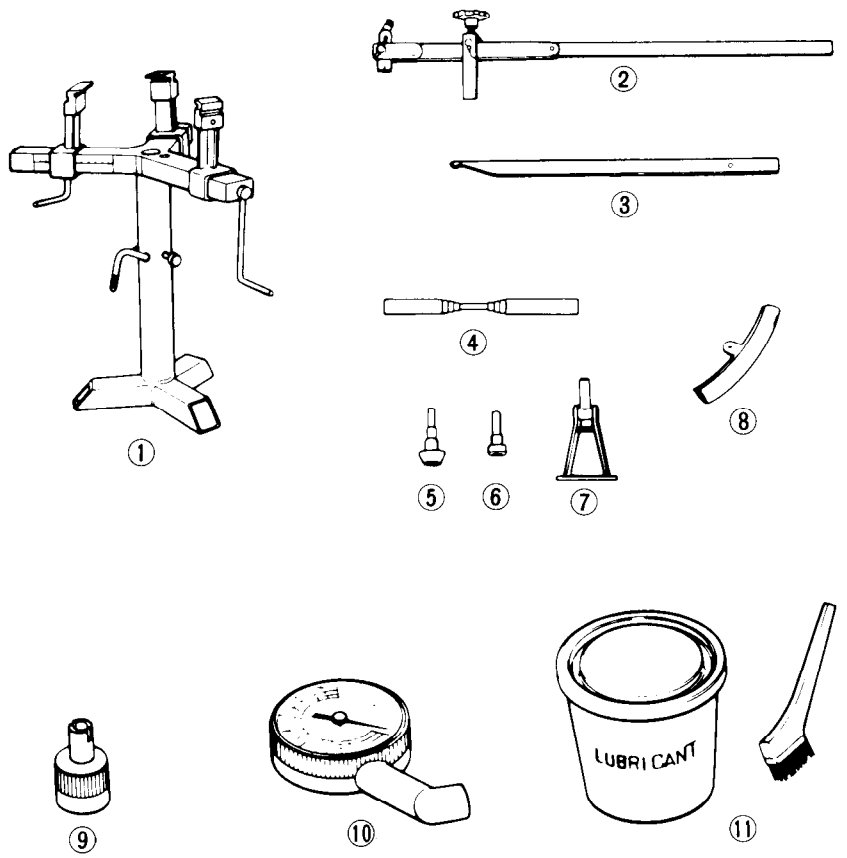

① Tire changer stand
② Operation arm
③ Tire lever
④ Center shaft
⑤ Bead pushing roller
⑥ Rim guide roller
⑦ Bead breaker
⑧ Rim protector
⑨ Core remover
⑩ Air pressure gauge
⑪ Tire lubricant

- Remove the valve core from the valve stem, and deflate the tire completely.

NOTE:
Mark the tire with chalk to note the position ① of the valve and rotational direction ② of the tire.

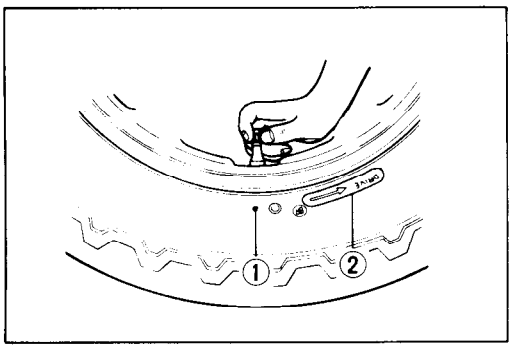

- Place the center shaft ① to the wheel, and fix the wheel with the rim holder ②.

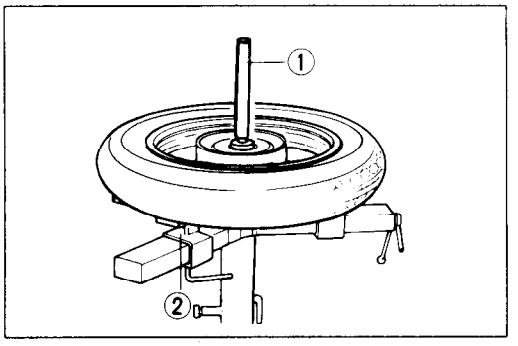

- Attach the operation arm ③ to the center shaft.

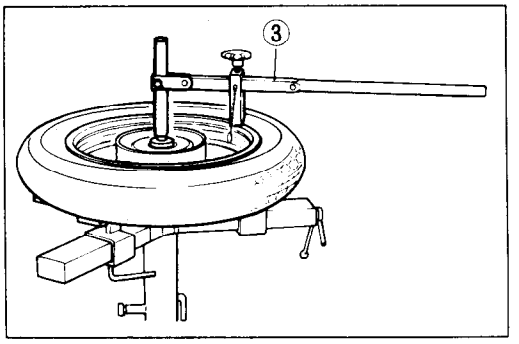

- Attach the bead breaker ④ to the operation arm, and dismount the bead from the rim. Turn the wheel over and dismount the other bead from the rim.

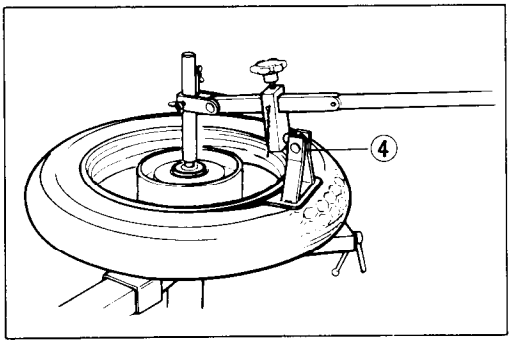

- Install the rim guide roller ⑤.
- Install the rim protector ⑥, and raise the tire bead with the tire lever ⑦.

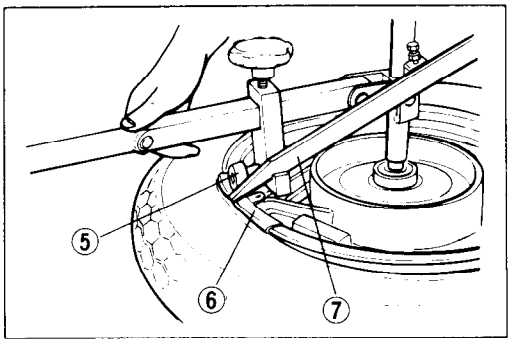

- Set the tire lever against the operation arm, and rotate the lever around the rim. Repeat this procedure to remove the other bead from the rim.

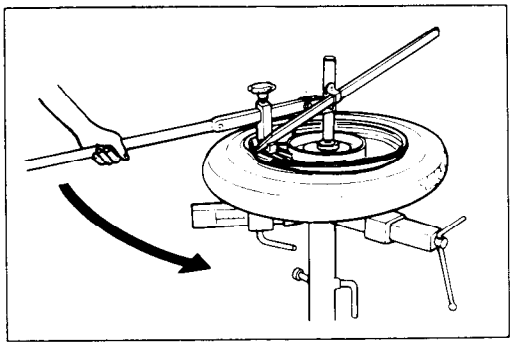

INSPECTION

WHEEL

Wipe off any rubber substance or rust from the wheel, and inspect the wheel rim. If any one of the following items is observed, replace it with a new wheel.

* A distortion or crack.
* Any scratches or flaws in the bead seating area.
* Wheel runout (Axial & Radial) of more than 2.0 mm (0.08 in).

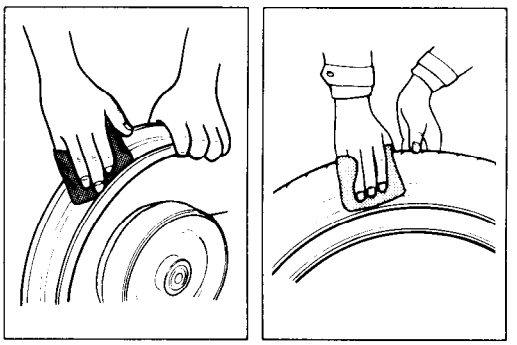

TIRE

Thoroughly inspect the removed tire, and if any one of the following items is observed, do not repair the tire. Replace with a new one.

* A puncture or a split whose total length or diameter exceeds 6.0 mm (0.24 in).
* A scratch or split at the side wall.
* Tread depth less than 1.6 mm (0.06 in) in the front tire and less than 2.0 mm (0.08 in) in the rear tire.
* Ply separation.
* Tread separation.
* Tread wear is extraordinarily deformed or distributed around the tire.
* Scratches at the bead.
* Cord is cut.
* Damage from skidding (flat spots).
* Abnormality in the inner liner.

NOTE:
When repairing a flat tire, follow the repair instructions and use only recommended repairing materials.

VALVE INSPECTION

Inspect the valve after the tire is removed from the rim, and replace with a new valve if the seal rubber has any splits or scratches.

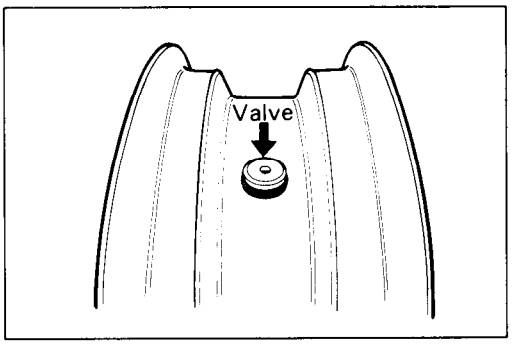

Inspect the removed valve core and replace with the new one if the seal rubber is abnormally deformed or worn.

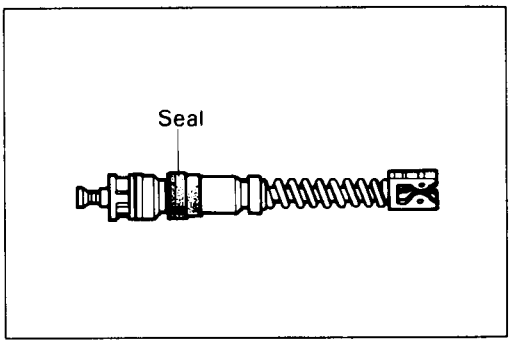

VALVE INSTALLATION

Any dust or rust around the valve hole must be cleaned off. Then install the valve in the rim.

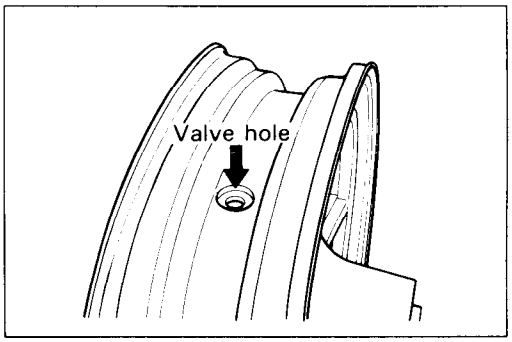

CAUTION:

When installing the valve, tighten the nut ① by hand as much as possible. Holding the nut ① under this condition, tighten the lock nut ②. Do not overtighten the nut ① as this may distort the rubber packing and cause an air leak.

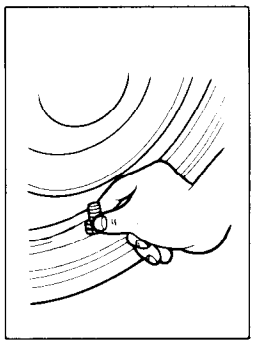

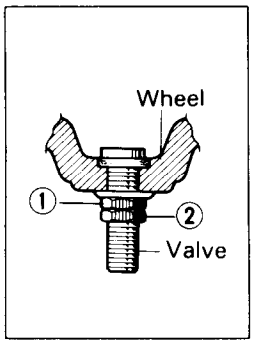

TIRE MOUNTING

- Apply a special tire lubricant or neutral soapy liquid to the tire bead.

CAUTION:

Never apply grease, oil or gasoline to the tire bead.

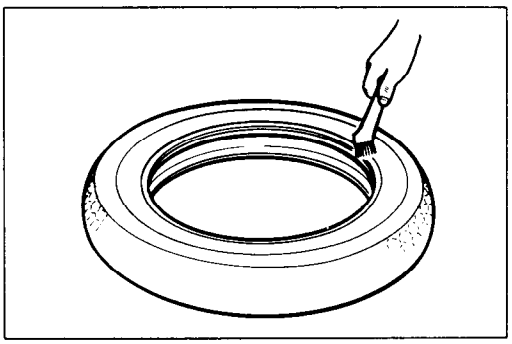

- When installing the tire, make certain that the directional arrow faces the direction of wheel rotation and align the balancing mark of the tire with the valve as shown.

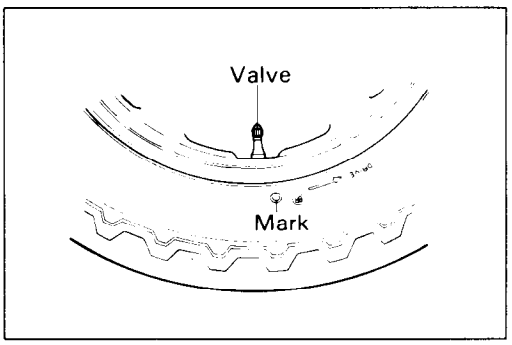

- Set the bead pushing roller ③.
- Rotate the operation arm around the rim to mount the bead completely. Do the bottom bead first, then the upper bead.
- Remove the wheel from the tire changer, and install the valve core in the valve stem.

NOTE:
Before installing the valve core, inspect the core.

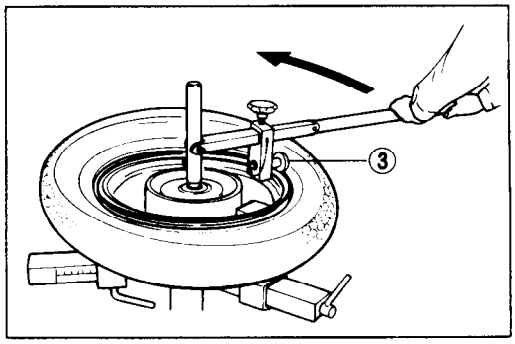

- Bounce the tire several times while rotating. This makes the tire bead expand outwards, and thus makes inflation easier.

NOTE:
Before inflating, confirm that the balance mark lines up with the valve stem.

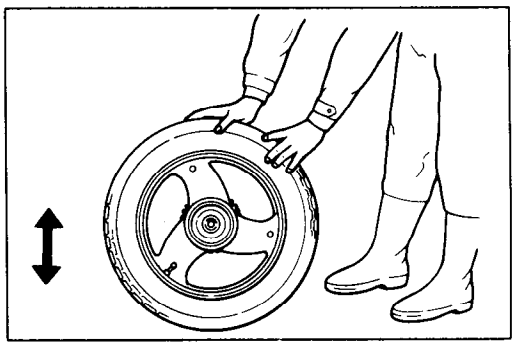

- Pump up the tire with air.

WARNING:
Do not inflate the tire to more than 400 kPa (4.0 kg/cm², 56 psi). The tire could burst with sufficient force to cause severe injury. Never stand directly over the tire while inflating it.

NOTE:
Check the "rim line" cast on the tire side walls. It must be equidistant from the wheel rim all the way around. If the distance between the rim line and wheel rim varies, this indicates that the bead is not properly seated. If this is so, deflate the tire completely, and unseat the bead for both sides. Coat the bead with lubricant, and try again.

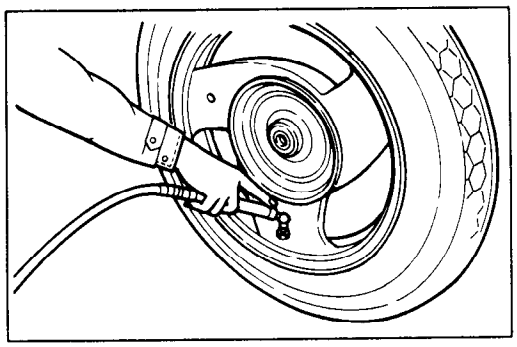

- After tire is properly seated to the wheel rim, adjust the air-pressure to the recommended pressure. Correct the wheel balance if necessary.

WARNING:
* **Do not run a repaired tire more than 50 km/h (30 mph) within 24 hours after tire repairing, since the patch may not be completely cured.**
* **Do not exceed 130 km/h (80 mph) with a repaired tire.**

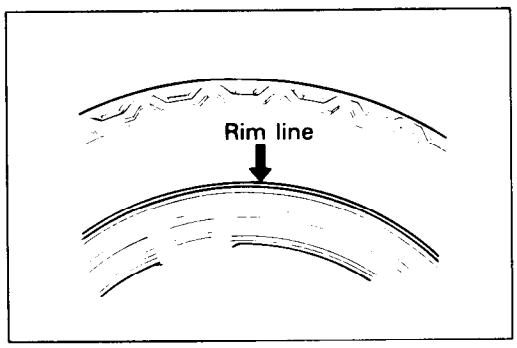

REAR SHOCK ABSORBERS AND SWINGARM

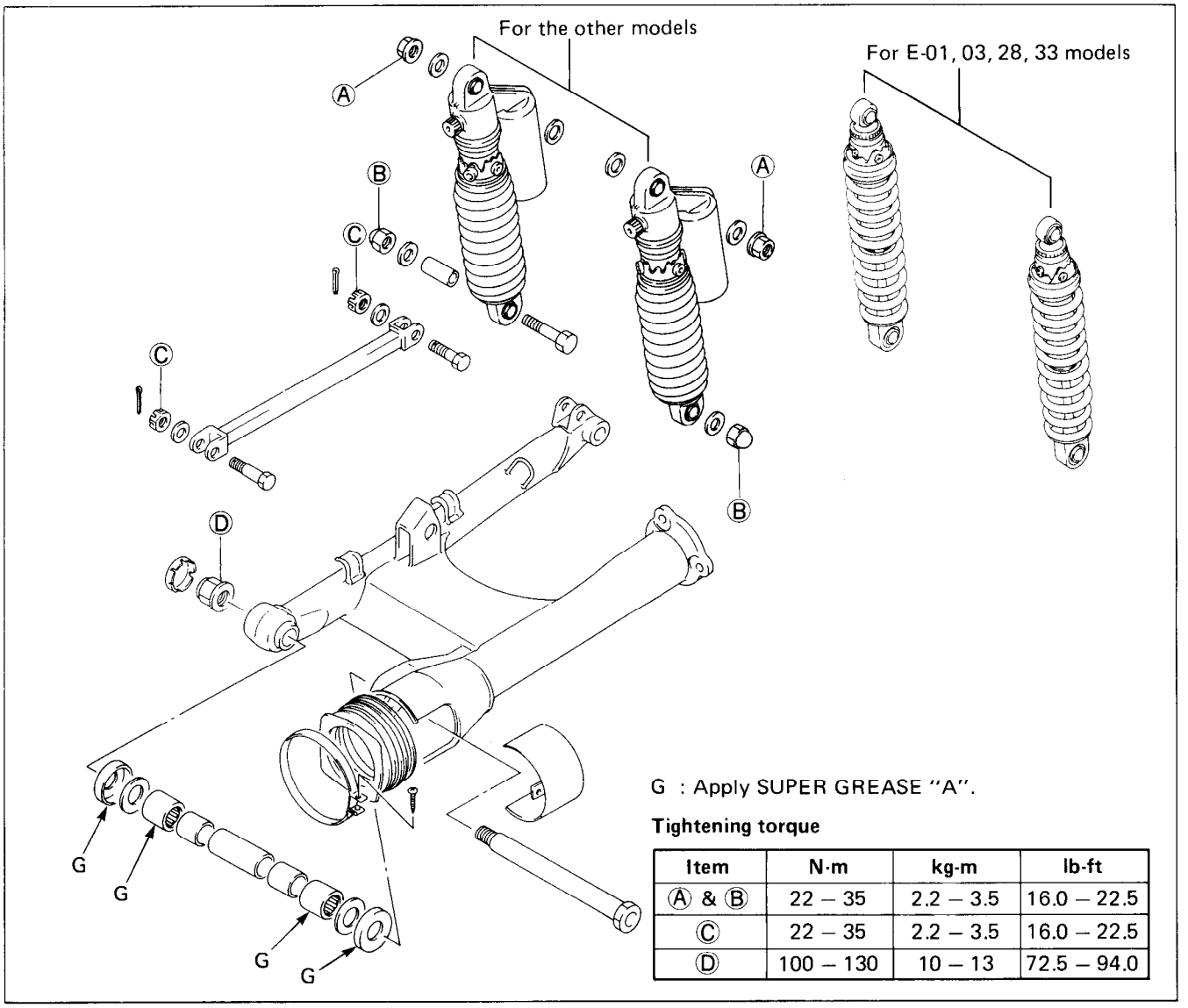

G : Apply SUPER GREASE "A".

Tightening torque

Item	N·m	kg-m	lb-ft
Ⓐ & Ⓑ	22 – 35	2.2 – 3.5	16.0 – 22.5
Ⓒ	22 – 35	2.2 – 3.5	16.0 – 22.5
Ⓓ	100 – 130	10 – 13	72.5 – 94.0

REMOVAL

1. Remove the seat and frame covers.
2. Remove the rear wheel. (Refer to page 8-26.)
3. Disconnect the brake hose from the caliper by removing the union bolt and catch the brake fluid in a suitable receptacle.

NOTE:
Hang the open end of the brake hose to the upper part of the frame by using a string, etc. to stop spilling of brake fluid.

CAUTION:
Immediately and completely wipe off any brake fluid contacting to any part of the motorcycle. The fluid reacts chemically with paint, plastics and rubber materials, etc. and will damage them severely.

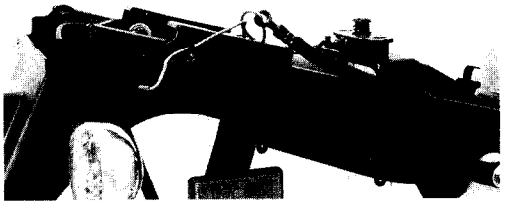

4. Remove the right and left rear shock absorbers.

5. Remove the final gear case along with the propeller shaft by removing the three nuts.

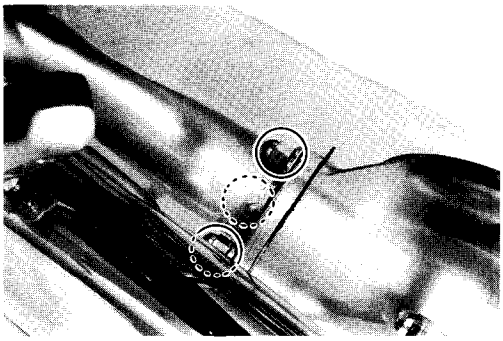

NOTE:
When reinstalling the final gear case apply SUZUKI BOND NO. 1207B/NO. 1215 to the mating surface between rear swingarm and final gear case.

(For U.S.A. model)
99104-31140 : SUZUKI BOND NO. 1207B
(For the other models)
99000-31110 : SUZUKI BOND NO. 1215

Tightening torque : 35 – 45 N·m
(3.5 – 4.5 kg-m, 25.5 – 32.5 lb-ft)

6. Remove the right and left footrest guards along with the footrests.

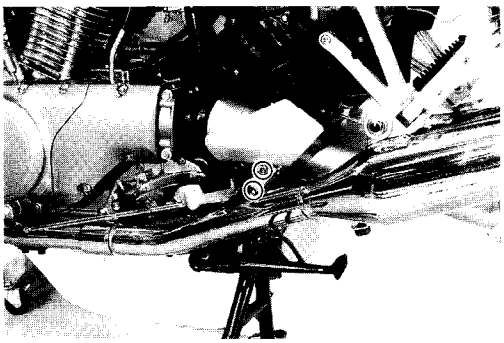

7. Loosen the shaft drive boot clamp screw and slide the boot forward. Remove the swingarm pivot cover and take out the universal joint from the swingarm.

8. Remove the right side swingarm pivot cover and remove the swingarm pivot shaft nut.

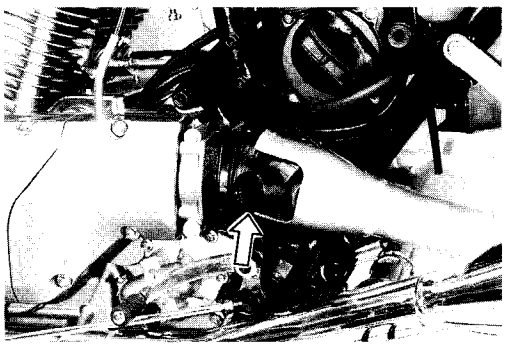

9. Draw out the swingarm pivot shaft.

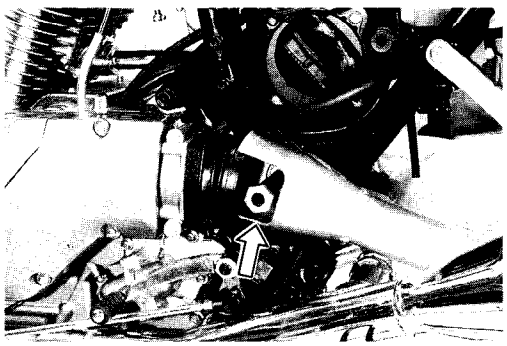

10. Remove the rear swingarm from the chassis.

11. Remove the swingarm dust seals and washers, left and right.

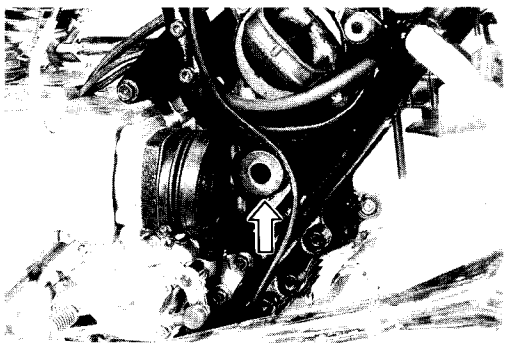

INSPECTION

SWINGARM PIVOT BEARINGS

Inspect the swingarm pivot bearings for wear while they are in the frame. Rotate the spacer by hand to inspect for abnormal noise and smooth rotation. Replace the bearings if there is anything unusual. Also replace the spacer if necessary.

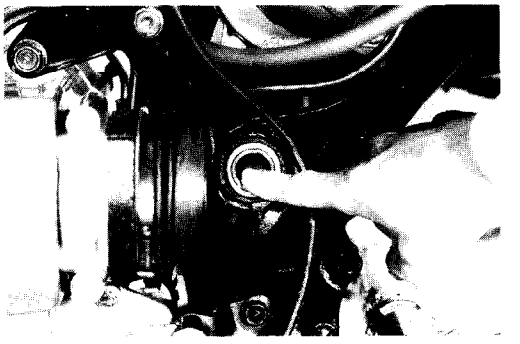

To remove the bearings:

- Remove the right and left spacers and center spacer.
- Using the special tools, remove the swingarm bearings from the pivoting hole.

09930-30102 : Sliding shaft
09923-74510 : Bearing remover

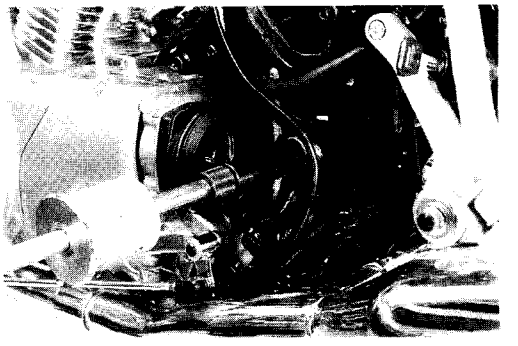

CAUTION:
The removed bearings should be replaced with new ones.

DUST SEAL

Inspect the dust seals, if they are found to be damaged, replace them with new ones.

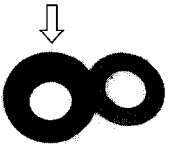

REAR SHOCK ABSORBER

Inspect the rear shock absorber unit for oil leakage or damage. If there is any defect, replace the unit with a new one.

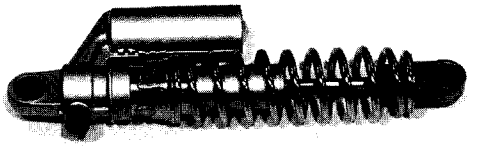

REASSEMBLY AND REMOUNTING

Reassemble and remount the swingarm and rear shock absorbers in the reverse order of disassembly and removal, and also carry out the following steps:

SWINGARM BEARING

- Press the bearings into the swingarm pivot by using the special tool.

09941-34513 : Steering race installer

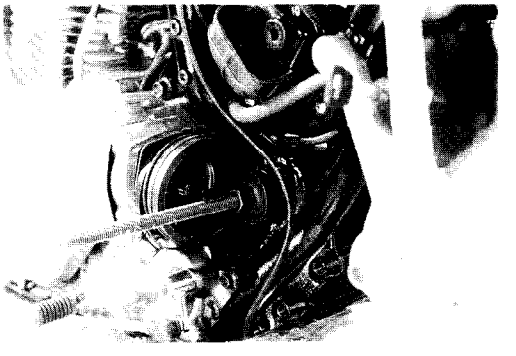

NOTE:
When reinstalling the bearing, stamped mark of bearing is positioned outside.

- Apply grease to the spacers, bearings, washers and dust seals.

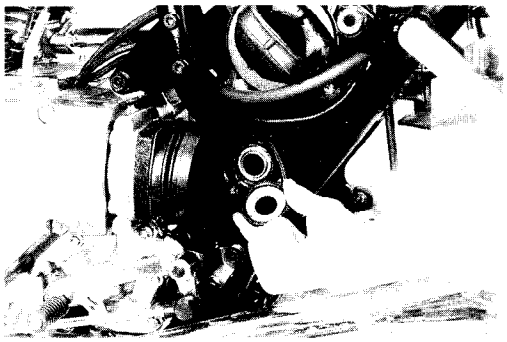

(For U.S.A. model)
99000-25030 : SUZUKI SUPER GREASE "A"
(For the other models)
99000-25010 : SUZUKI SUPER GREASE "A"

- Tighten the swingarm pivot nut to the specified torque.

Tightening torque : 100 – 130 N·m
(10 – 13 kg-m, 72.5 – 94.0 lb-ft)

FOOTREST GUARDS

- Apply THREAD LOCK SUPER "1333B"/"1322" to the footrest bracket mounting bolts and tighten them to the specified torque.

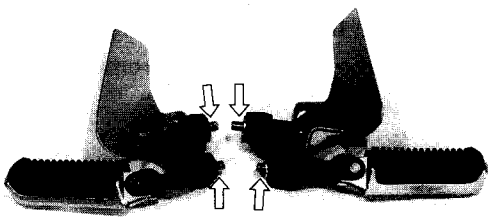

Tightening torque : 27 – 43 N·m
(2.7 – 4.3 kg-m, 19.5 – 31.0 lb-ft)

(For U.S.A. model)
99000-32020 : THREAD LOCK SUPER "1333B"
(For the other models)
99000-32110 : THREAD LOCK SUPER "1322"

FINAL BEVEL GEAR CASE

- Apply SUZUKI BOND NO. 1207B/NO. 1215 to the mating surface.

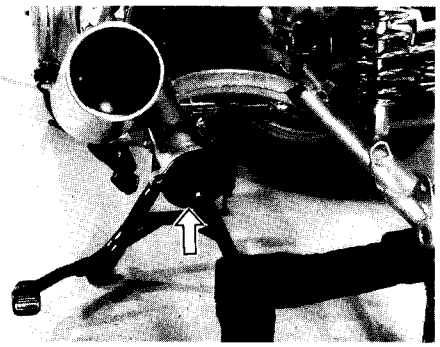

(For U.S.A. model)
99104-31140 : SUZUKI BOND NO. 1207B
(For the other models)
99000-31110 : SUZUKI BOND NO. 1215

- Apply Lithium Base Molybdenum grease to the joint part of universal joint and propeller shaft.
- Install the propeller shaft and final gear case.

Final gear case mounting nut
Tightening torque : 35 – 45 N·m
(3.5 – 4.5 kg-m, 25.5 – 32.5 lb-ft)

FINAL INSPECTION AND ADJUSTMENT

After installing the rear suspension and rear wheel, the following adjustments are required before driving motorcycle.

* Rear brake
* Tire pressure
* Shock absorbers

REASSEMBLY INFORMATION

REAR SWINGARM PIVOT

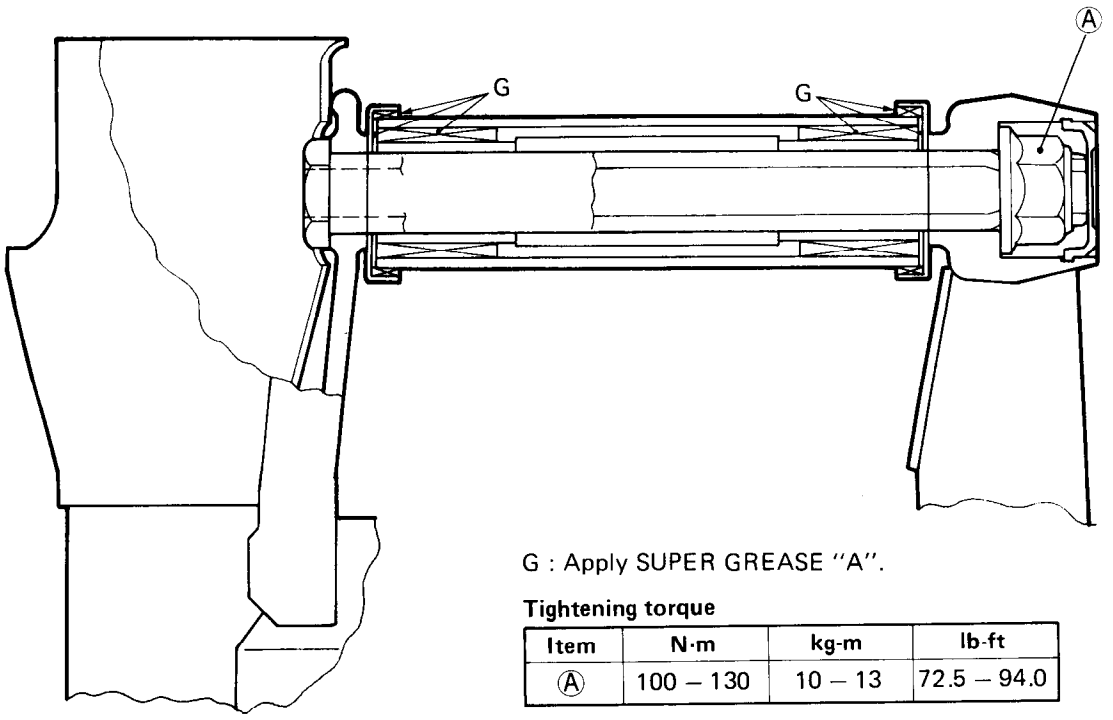

G : Apply SUPER GREASE "A".

Tightening torque

Item	N·m	kg-m	lb-ft
Ⓐ	100 – 130	10 – 13	72.5 – 94.0

REAR SHOCK ABSORBERS

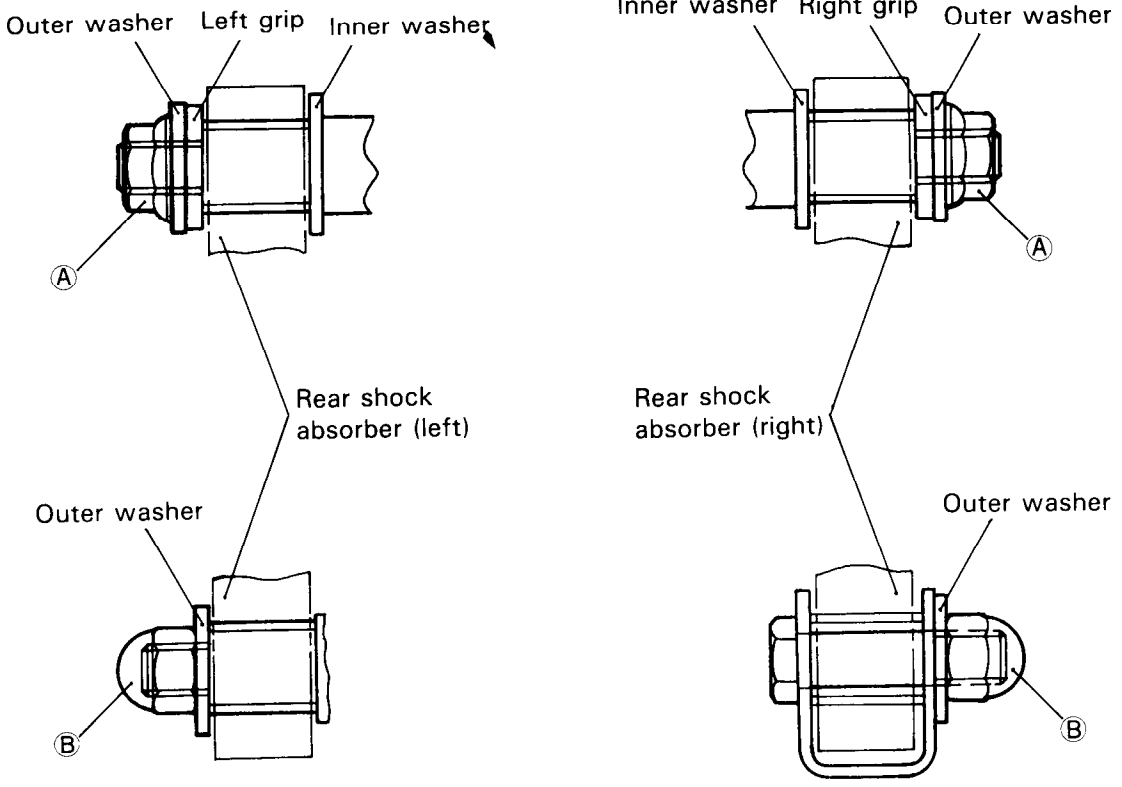

Tightening torque

Item	N·m	kg-m	lb-ft
Ⓐ & Ⓑ	22 – 35	2.2 – 3.5	16.0 – 25.5

NOTE:
Inner washer OD : 30.0 mm (1.2 in)
Outer washer OD : 24.0 mm (0.95 in)

SUSPENSION SETTING

- When reinstalling the rear shock absorbers, make sure that both spring preload and damping force should be equalized.
- Rear shock absorbers are adjustable according to the rider's requirement. Use the following table to adjust the rear shock absorbers.

REAR SHOCK ABSORBER SETTING TABLE

For E-01, 03, 28, 33 models

Item	Spring preload	Damping force (rebound)
Solo riding	2	1
Dual riding	4	3

For the other models

Item	Spring preload	Damping force	
		Rebound	Compression
Solo riding	2	1	1
Dual riding	3	2	2
Solo riding and carring load (30 kg, 66 lbs)	5	4	3
Dual riding and carring load (30 kg, 66 lbs)	5	4	3

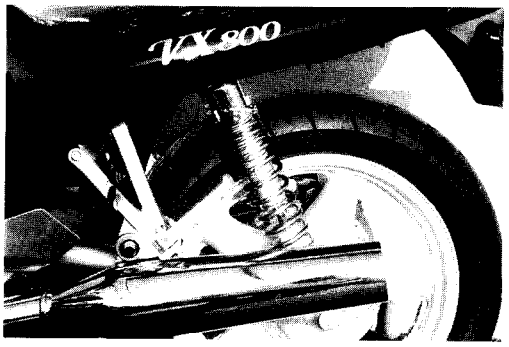

For E-01, 03, 28, 33 models

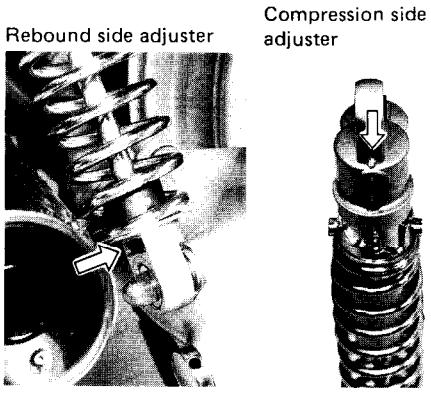

For the other models

SERVICING INFORMATION

CONTENTS

TROUBLESHOOTING

ENGINE

Complaint	Symptom and possible causes	Remedy
Engine will not start, or is hart to start.	**Compression too low**	
	1. Valve clearance out of adjustment.	Adjust.
	2. Worn valve guides or poor seating of valves.	Repair or replace.
	3. Valves mistiming.	Adjust.
	4. Piston rings excessively worn.	Replace.
	5. Worn-down cylinder bores.	Replace, or rebore.
	6. Starter motor cranks too slowly.	Consult "electrical complaints".
	Plugs not sparking	
	1. Fouled spark plugs.	Clean.
	2. Wet spark plug.	Clean and dry.
	3. Defective ignition coil.	Replace.
	4. Open or short in high-tension cord.	Replace.
	5. Defective pick-up coil or ignitor unit.	Replace.
	No fuel reaching the carburtors	
	1. Clogged hole in the fuel tank cap.	Clean.
	2. Clogged or defective fuel cock.	Clean or replace.
	3. Defective fuel pump.	Replace.
	4. Defective carburetor float valve.	Replace.
	5. Clogged fuel pipe or suction pipe.	Clean.
	6. Defective pick-up coil, ignition coil/ignitor.	Replace.
Engine stalls easily.	1. Fouled spark plugs.	Clean.
	2. Defective pick-up coil or ignitor unit.	Replace.
	3. Clogged fuel pipe.	Replace.
	4. Defective fuel pump/fuel pump relay	Replace.
	5. Clogged jets in carburetors.	Clean.
	6. Vave clearance out of adjustment.	Adjust.
Noisy engine.	**Excessive valve chatter**	
	1. Valve clearance too large.	Adjust.
	2. Weakened or broken valve springs.	Replace.
	3. Camshaft journal worn and burnt.	Replace.
	Noise appears to come from pistons	
	1. Pistons or cylinders worn down.	Replace.
	2. Combustion chambers fouled with carbon.	Clean.
	3. Piston pins or piston pin bore worn.	Replace.
	4. Piston rings or ring grooves worn.	Replace.
	Noise seems to come from timing chain	
	1. Stretched chain.	Replace.
	2. Worn sprockets.	Replace.
	3. Tension adjuster not working.	Replace.
	Noise seems to come from clutch	
	1. Worn splines of countershaft or hub.	Replace.
	2. Worn teeth of clutch plates.	Replace.
	3. Distorted clutch plates, driven and drive.	Replace.
	4. Worn/Damaged clutch push rod bearing	Replace.

Complaint	Symptom and possible causes	Remedy
Noisy engine.	**Noise seems to come from crankshaft**	
	1. Rattling bearings due to wear.	Replace.
	2. Big-end bearings worn and burnt.	Replace.
	3. Journal bearing worn and burnt.	Replace.
	4. Thrust clearance too large.	Adjust.
	Noise seems to come from transmission	
	1. Gears worn or rubbing.	Replace.
	2. Badly worn splines.	Replace.
	3. Primary gears worn or rubbing.	Replace.
	4. Badly worn bearings.	Replace.
	Noise seems to come from water pump.	
	1. Too much play on pump drive chain	Adjust.
	2. Worn or damaged drive chain/sprocket.	Replace.
	3. Impeller touches crankcase.	Replace.
Slipping clutch	1. Weakened clutch springs.	Replace
	2. Worn or distorted pressure plate.	Replace.
	3. Distorted clutch plates, driven and drive.	Replace.
Dragging clutch	1. Leakage of clutch fluid.	Repair.
	2. Worn or damaged master cylinder/clutch cylinder.	Replace.
	3. Damaged oil seal/clutch hose.	Replace.
	4. Some clutch springs weakened while others are not.	Replace.
	5. Distorted pressure plate or clutch plates.	Replace.
Transmission will not shift	1. Broken gearshift cam.	Replace.
	2. Distorted gearshift forks.	Replace.
	3. Too much play on gearshift lever.	Adjust.
	4. Worn gearshift pawl/guide.	Replace.
Transmission will not shift back.	1. Broken return spring on shift shaft.	Replace.
	2. Shift shafts are rubbing or sticky.	Repair or replace.
	3. Distorted or worn gearshift forks.	Replace.
Transmission jumps out of gear.	1. Worn shifting gears on drive shaft or countershaft.	Replace.
	2. Distorted or worn gearshift forks.	Replace.
	3. Weakened stopper spring on gearshift stopper.	Replace.
Engine idles poorly.	1. Valve clearance out of adjustment.	Adjust.
	2. Poor seating of valves.	Repair or replace.
	3. Defective valve guides.	Replace.
	4. Spark plug gaps too wide.	Adjust.
	5. Defective ignition coil.	Replace.
	6. Defective pick-up coil or ignitor unit.	Replace.
	7. Float-chamber fuel level out of adjustment in carbs.	Adjust.
	8. Clogged jets or imbalance of carburetors.	Clean or adjust.
	9. Defective fuel pump/fuel pump relay.	Replace.
Engine runs poorly in high-speed range.	1. Valve springs weakened.	Replace.
	2. Valve timing out of adjustment.	Adjust.
	3. Spark plug gaps too narrow.	Adjust.
	4. Clogged jets or imbalance of carburetors.	Clean or adjust.
	5. Defective ignition coil.	Replace.

Complaint	Symptom and possible causes	Remedy
Engine runs poorly in high-speed range.	6. Defective pick-up coil or ignitor unit.	Replace.
	7. Float-chamber fuel level too low.	Adjust.
	8. Clogged air cleaner element.	Clean.
	9. Clogged fuel pipe, resulting in inadequate fuel supply to carburetors.	Clean, and prime.
	10. Defective fuel pump.	Replace.
Dirty or heavy exhaust smoke.	1. Too much engine oil in the engine.	Check with level inspection window, drain out excess oil.
	2. Worn piston rings or cylinders.	Replace.
	3. Worn valve guides.	Replace.
	4. Cylinder walls scored or scuffed.	Rebore or replace.
	5. Worn valves stems.	Replace.
	6. Defective stem seal.	Replace.
Engine lacks power.	1. Loss of valve clearance.	Adjust.
	2. Weakened valve springs.	Replace.
	3. Valve timing out of adjustment.	Adjust.
	4. Worn piston rings or cylinders.	Replace.
	5. Poor seating of valves.	Repair.
	6. Spark plug gaps incorrect.	Adjust or replace.
	7. Clogged jets in carburetors.	Clean.
	8. Float-chamber fuel level out of adjustment.	Adjust.
	9. Clogged air cleaner element.	Clean.
	10. Carburetor balancing adjuster loose.	Retighten and balance the carbs.
	11. Sucking air from intake pipe.	Retighten or replace.
	12. Too much engine oil in the engine.	Drain out excess oil.
	13. Defective fuel pump.	Replace.
	14. Defective pick-up coil/ignitor unit/ignition coil.	Replace.
Engine overheats.	1. Heavy carbon deposit on piston crowns.	Clean.
	2. Not enough oil in the engine.	Add oil.
	3. Defective oil pump or clogged oil circuit.	Replcae or clean.
	4. Fuel level too low in float chambers.	Adjust.
	5. Suck air from intake pipes.	Retighten or replace.
	6. Use incorrect engine oil.	Change.
	7. Defective cooling system.	See radiator section.

SHAFT DRIVE

Complaint	Symptom and possible causes	Remedy
Noisy shaft drive	**Noise seems to come from secondary bevel gear and final bevel gear assemblies.**	
	1. Oil level too low.	Refill. (Check oil jet/replace oil seal)
	2. Drive and driven bevel gears damaged or worn.	Replace.
	3. Excessive backlash.	Adjust.
	4. Improper tooth contact.	Adjust.
	5. Damage to bearings.	Replace.
	Noise seems to come from propeller shaft area.	
	1. Propeller shaft universal joint damaged.	Replace.
	2. Propeller shaft splines damaged or worn.	Replace.
	3. Insufficient lubricant.	Refill. (Replace oil seal)
	4. Cam dog contacting surface damaged or worn.	Replace.

Complaint	Symptom and possible causes	Remedy
No power transmitted from engine to rear wheel.	1. Broken propeller shaft. 2. Broken gear teeth. 3. Broken or damaged input/output cam dog.	Replace. Replace. Replace.
Secondary bevel gear and final bevel gear assemblies oil leak.	1. Damage to oil seals. 2. Damage to O-rings. 3. Loose bolts on secondary gear case and final gear bearing case.	Replace. Replace. Retighten.

CARBURETOR

Complaint	Symptom and possible causes	Remedy
Trouble with starting.	1. Starter jet is clogged. 2. Starter pipe is clogged. 3. Air leaking from a joint between starter body and carburetor. 4. Air leaking from carburetor's joint or vacuum gauge joint. 5. Starter plunger is not operating properly.	Clean. Clean. Check starter body and carburetor for tightness, adjust and replace gasket. Check and adjust. Check and adjust.
Idling or low-speed trouble	1. Pilot jet, pilot air jet are clogged or loose. 2. Air leaking from carburetor's joint, vacuum gauge joint, or starter. 3. Pilot outlet or bypass is clogged. 4. Starter plunger is not fully closed.	Check and clean. Check and adjust. Check and clean. Check and adjust.
Medium- or high-speed trouble.	1. Main jet or main air jet is clogged. 2. Needle jet is clogged. 3. Throttle valve not operating properly. 4. Filter is clogged. 5. Carburetor balancing adjuster loose.	Check and clean. Check and clean. Check throttle valve for operation. Check and clean. Retighten and balance the carbs.
Overflow and fuel level fluctuations.	1. Needle valve is worn or damaged. 2. Spring in needle vavle is broken. 3. Float is not working properly. 4. Foreign matter has adhered to needle valve. 5. Fuel level is too high or low. 6. Clogged carburetor air vent pipe. 7. Defective fuel pump. 8. Defective pick-up coil/ignitor unit/ignition coil.	Replace. Replace. Check and adjust. Clean. Adjust float height. Clean. Replace. Replace.

RADIATOR

Complaint	Symptom and possible causes	Remedy
Engine overheats.	1. Not enough cooling water. 2. Radiator core is clogged with dirt or trashes. 3. Erratic thermostat, stuck in closed position. 4. Faulty cooling fan. 5. Defective thermo-switch. 6. Clogged water passage. 7. Air trapped in the cooling circuit. 8. Defective water pump/pump drive chain. 9. Use incorrect cooling water.	Add coolant. Clean. Replace. Repair or replace. Replace. Clean. Bleed out air. Replace. Replace.
Engine overcools.	1. Erratic thermostat, stuck in full-open position. 2. Defective thermo-switch. 3. Extremely cold weather.	Replace. Replace. Put on the radiator cover.

ELECTRICAL

Complaint	Symptom and possible causes	Remedy
No sparking or poor sparking.	1. Defective ignition coil. 2. Defective spark plugs. 3. Defective pick-up coil or ignitor unit.	Replace. Replace. Replace.
Spark plugs soon become fouled with carbon.	1. Mixture too rich. 2. Idling speed set too high. 3. Incorrect gasoline. 4. Dirty element in air cleaner. 5. Spark plugs too cold.	Adjust carburetors. Adjust carburetors. Change. Clean. Replace with hot type plugs.
Spark plugs become fouled too soon.	1. Worn piston rings. 2. Pistons or cylinders worn. 3. Excessive clearance of valve stems in valve guides. 4. Worn stem oil seal.	Replace. Replace. Replace. Replace.
Spark plug electrodes overheat or burn.	1. Spark plugs too hot. 2. The engine overheats. 3. Defective pick-up coil or ignitor unit. 4. Spark plugs loose. 5. Mixture too lean.	Replace with cold type plugs. Tune up. Replace. Retighten. Adjust carburetors.
Generator does not charge.	1. Open or short in lead wires, or loose lead connections. 2. Shorted, grounded or open generator coils. 3. Shorted or panctured regulator/rectifier.	Repair or replace or retighten. Replace. Replace.
Generator charge, but charging rate is below the specification.	1. Lead wires tend to get shorted or open-circuited or loosely connected at terminals. 2. Grounded or open-circuited stator coils of generator. 3. Defective regulator/rectifier. 4. Not enough electrolyte in the battery. 5. Defective cell plates in the battery.	Repair, or retighten. Replace. Replace. Add distilled water between the level lines. Replace the battery.

Complaint	Symptom and possible causes	Remedy
Generator overcharges.	1. Internal short-circuit in the battery. 2. Resistor element in the regulator/rectifier damaged or defective. 3. Regulator/rectifier poorly grounded.	Replace the battery. Replace. Clean and tighten ground connection.
Unstable charging.	1. Lead wire insulation frayed due to vibration, resulting in intermittent shorting. 2. Generator internally shorted. 3. Defective regulator/rectifier.	Repair or replace. Replace. Replace.
Starter button is not effective.	1. Battery run down. 2. Defective switch contacts. 3. Brushes not seating properly on commutator in starter motor. 4. Defective starter relay/starter interlock switch.	Recharge or replace. Replace. Repair or replace. Replace.

BATTERY

Complaint	Symptom and possible causes	Remedy
"Sulfation", acidic white powdery substance or spots on surfaces of cell plates.	1. Not enough electrolyte. 2. Battery case is cracked. 3. Battery has been left in a run-down condition for a long time. 4. Contaminated electrolyte (Foreign matter has enteres the battery and become mixed with the electrolyte.)	Add distilled water, if the battery has not been damaged and "sulfation" has not advanced too far, and recharge. Replace the battery. Replace the battery. If "sulfation" has not advanced too far, try to restore the battery by replacing the electrolyte, recharging it fully with the battery detached from the motorcycle and then adjusting electrolyte S.G.
Battery runs down quickly.	1. The charging method is not correct. 2. Cell plates have lost much of their active material as a result of over-charging. 3. A short-circuit condition exists within the battery due to excessive accumulation of sediments caused by the high electrolyte S.G. 4. Electrolyte S.G. is too low. 5. Contaminated electrolyte. 6. Battery is too old.	Check the generator, regulator/rectifier and circuit connections, and make necessary adjustments to obtain specified charging operation. Replace the battery, and correct the charging system. Replace the battery. Recharge the battery fully and adjust electrolyte S.G. Replace the electrolyte, recharge the battery and then adjust S.G. Replace the battery.

Complaint	Symptom and possible causes	Remedy
Reversed battery polarity.	The battery has been connected the wrong way round in the system, so that it is being charged in the reverse direction.	Replace the battery and be sure to connect the battery properly.
Battery. "sulfation"	1. Charging rate too low or too high. (When not in use, batteries should be recharged at least once a month to avoid sulfation.) 2. Battery electrolyte excessive or insufficient, or its specific gravity too high or too low. 3. The battery left unused for too long in cold climate.	Replace the battery. Keep the electrolyte up to the prescribed level, or adjust the S.G. by consulting the battery maker's direction. Replace the battery, if badly sulfated.
Battery discharges too rapidly.	1. Dirty container top and sides. 2. Impurities in the electrolyte or electrolyte S.G. is too high.	Clean. Change the electrolyte by consulting the battery maker's directions.

CHASSIS

Complaint	Symptom and possible causes	Remedy
Handling feels too heavy.	1. Steering stem nut overtightened. 2. Worn roller bearing or race in steering stem. 3. Distorted steering stem. 4. Not enough pressure in tires. 5. Overtightened steering races.	Adjust. Replace. Replace. Adjust. Adjust.
Steering oscillation.	1. Loss of balance between right and left suspensions. 2. Bent front fork. 3. Bent front axle or crooked tire. 4. Loose steering stem bearings. 5. Worn or incorrect tires or wrong tire pressure.	Adjust. Repair or replace. Replace. Adjust. Adjust or replace.
Wobbly front wheel.	1. Distorted wheel. 2. Worn front wheel bearings. 3. Defective or incorrect tire. 4. Loose nut on axle. 5. Loose nuts on rear shock. 6. Worn swingarm bearings.	Replace. Replace. Replace. Retighten. Retighten. Replace.
Front suspension too soft.	1. Weakened springs. 2. Not enough fork oil. 3. Wrong weight fork oil.	Replace. Refill. Replace.
Front suspension too stiff.	1. Fork oil too viscous. 2. Too much fork oil. 3. Front axle bent. 4. Fork tubes not adjusted evenly in forks stem and steering stem head.	Replace. Remove excess oil. Replace. Adjust.
Noisy front suspension.	1. Not enough fork oil. 2. Loose nuts on suspension.	Refill. Retighten.

Complaint	Symptom and possible causes	Remedy
Wobbly rear wheel.	1. Distorted wheel rim. 2. Worn rear wheel bearings or swingarm bearings. 3. Defective or incorrect tire. 4. Worn swingarm bearings. 5. Loose nuts on rear suspension.	Replace. Replace. Replace. Replace. Retighten.
Rear suspension too soft.	1. Weakened spring. 2. Rear suspension adjuster improperly set. 3. Oil leakage of rear shock absorber.	Replace. Reset. Replace.
Rear suspension too stiff.	1. Rear suspension adjuster improperly set. 2. Shock absorber shaft bent. 3. Swingarm bent. 4. Worn swingarm bearings.	Adjust. Replace. Replace. Replace.
Noisy rear suspension.	1. Loose nut on rear suspension. 2. Worn swingarm bearings.	Retighten. Replace.

BRAKES

Complaint	Symptom and possible causes	Remedy
Poor braking.	1. Not enough brake fluid in the reservoir. 2. Air trapped intake fluid circuit. 3. Pads/shoe worn down. 4. Too much play on brake lever/pedal.	Refill to level mark. Bleed air out. Replace. Adjust.
Insufficient brake power.	1. Leakage of brake fluid from hydraulic system. 2. Worn pads/shoe. 3. Oil adhesion on engaging surface of pads/shoe. 4. Worn disc. 5. Air entered into hydraulic system.	Repair or replace. Replace. Clean disc and pads. Replace. Bleed air.
Brake squeaking.	1. Carbon adhesion on pad/shoe surface. 2. Tilted pad. 3. Damaged wheel bearing. 4. Loose front-wheel axle or rear-wheel axle. 5. Worn pads/shoe. 6. Foreign material in brake fluid. 7. Clogged return port of master cylinder. 8. Wrongly fixed pad shims. 9. Calipers binding no caliper axles.	Repair surface with sandpaper. Modify pad fitting. Replace. Tighten to specified torque. Replace. Replace brake fluid. Disassemble and clean master cylinder. Set correctly. Clean and lubricate.
Excessive brake lever stroke.	1. Air entered into hydraulic system. 2. Insufficient brake fluid. 3. Improper quality of brake fluid.	Bleed air. Replenish fluid to specified level; bleed air. Replace with correct fluid.
Leakage of brake fluid.	1. Insufficient tightening of connection joints. 2. Cracked hose. 3. Worn piston and/or cup.	Tighten to specified torque. Replace. Replace piston and/or cup.

WIRING DIAGRAM

FOR U.S.A. AND CANADA MODELS

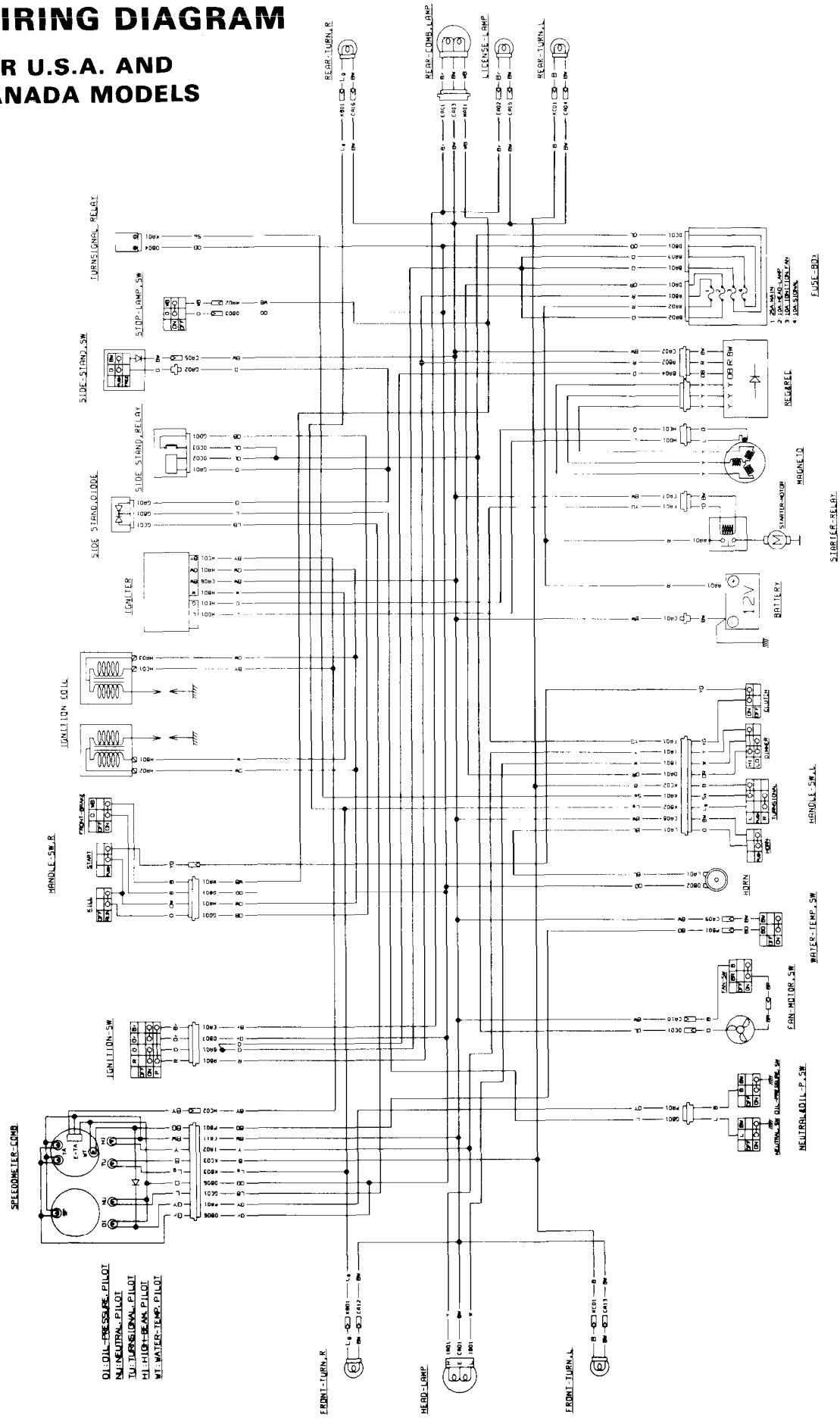

WIRE COLOR

B	Black	O	Orange	B/W	Black with White tracer	O/R	Orange with Red tracer
Bl	Blue	R	Red	B/Y	Black with Yellow tracer	O/W	Orange with White tracer
Br	Brown	W	White	Bl/W	Blue with White tracer	O/Y	Orange with Yellow tracer
G	Green	Y	Yellow	G/Y	Green with Yellow tracer	R/W	Red with White tracer
Gr	Gray	B/Br	Black with Grown tracer	O/B	Orange with Black tracer	W/B	White with Black tracer
Lbl	Light blue	B/G	Black with Green tracer	O/Bl	Orange with Blue tracer	Y/G	Yellow with Green tracer
Lg	Light green	B/R	Black with Red tracer	O/G	Orange with Green tracer		

FOR W-GERMANY MODEL

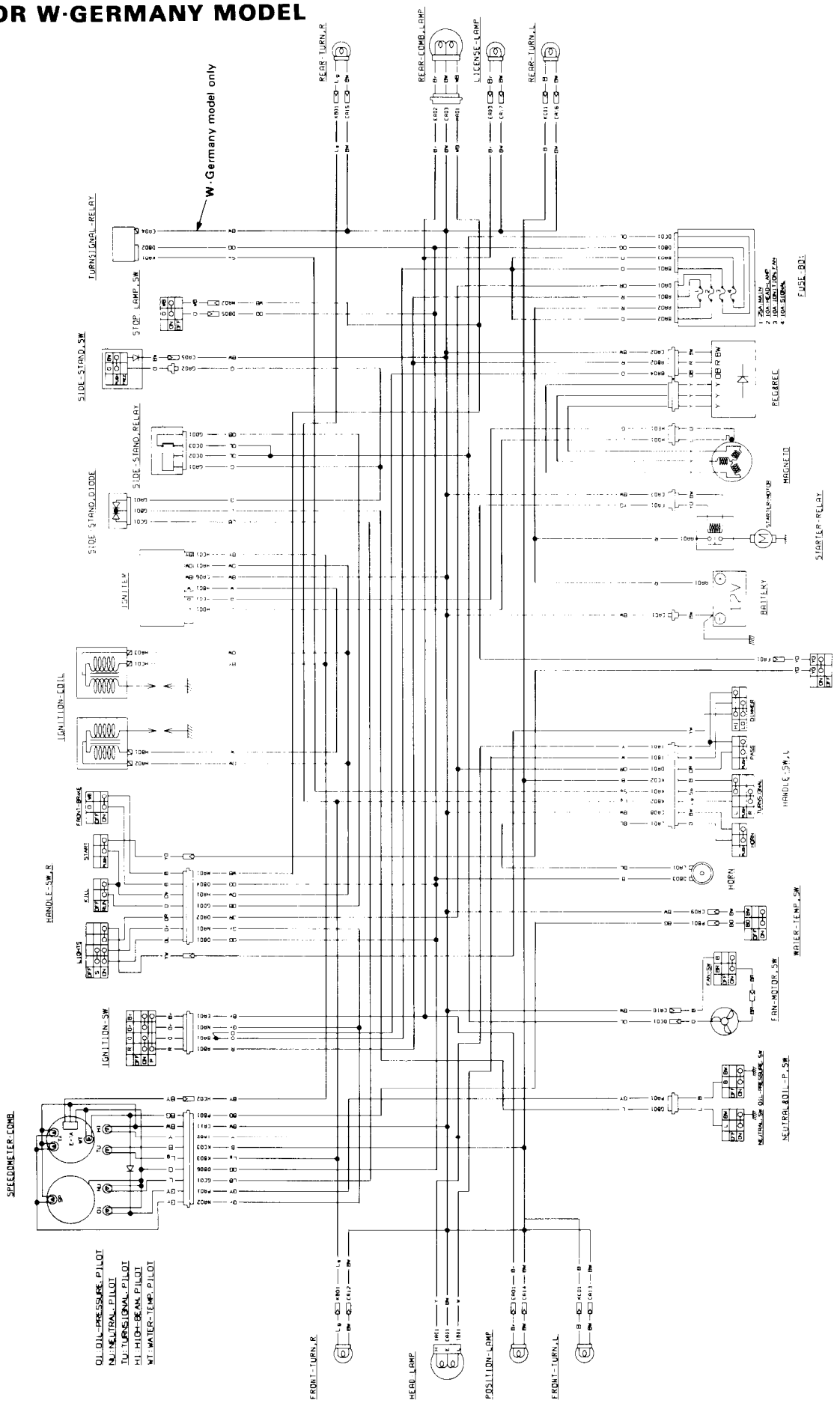

WIRE COLOR

B	Black	O	Orange	B/W	Black with White tracer	O/R	Orange with Red tracer
Bl	Blue	R	Red	B/Y	Black with Yellow tracer	O/W	Orange with White tracer
Br	Brown	W	White	Bl/W	Blue with White tracer	O/Y	Orange with Yellow tracer
G	Green	Y	Yellow	G/Y	Green with Yellow tracer	R/W	Red with White tracer
Gr	Gray	B/Br	Black with Grown tracer	O/B	Orange with Black tracer	W/B	White with Black tracer
Lbl	Light blue	B/G	Black with Green tracer	O/Bl	Orange with Blue tracer	Y/G	Yellow with Green tracer
Lg	Light green	B/R	Black with Red tracer	O/G	Orange with Green tracer		

FOR THE OTHER MODELS

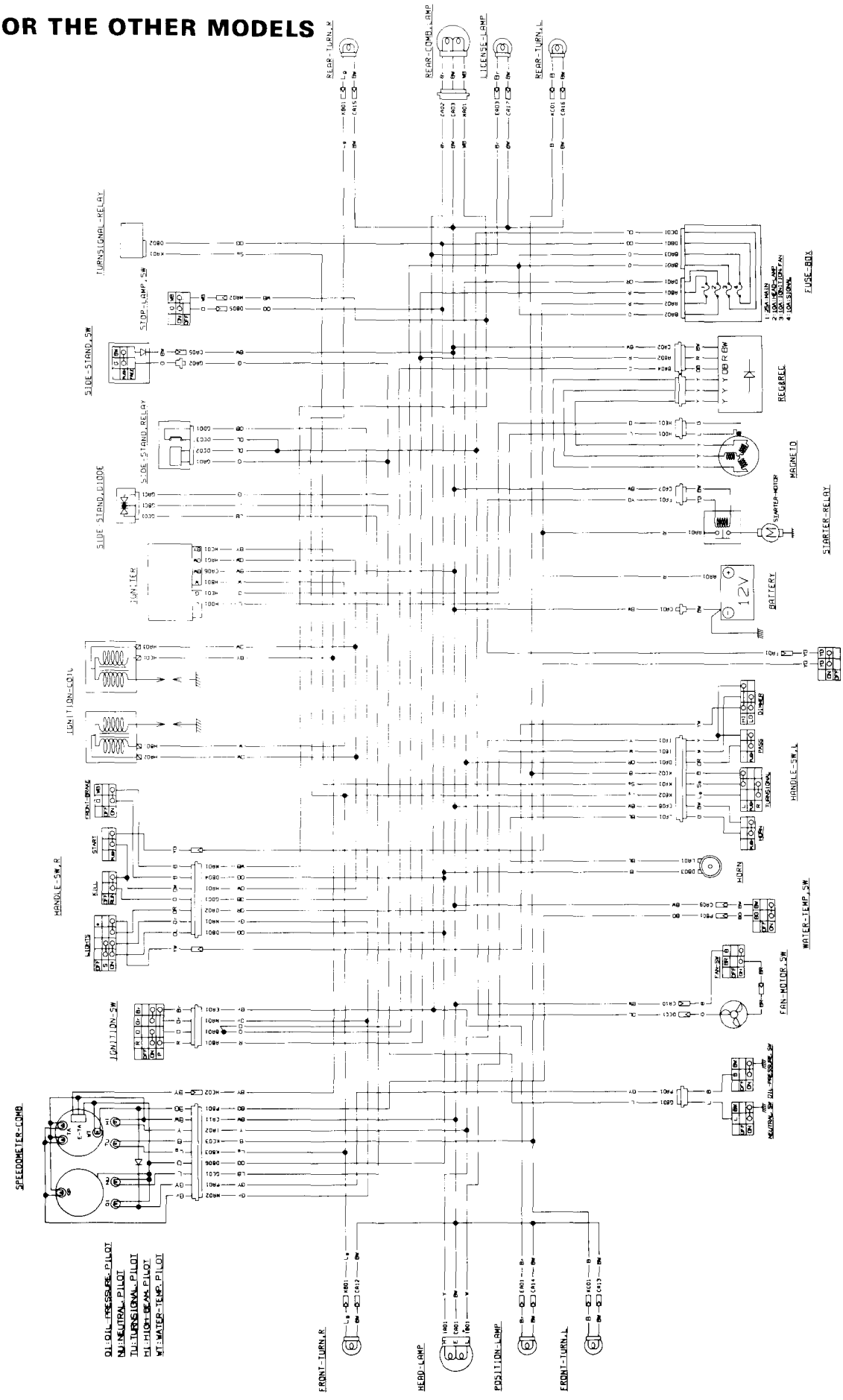

WIRE COLOR

B	Black	O	Orange	B/W	Black with White tracer	O/R	Orange with Red tracer
Bl	Blue	R	Red	B/Y	Black with Yellow tracer	O/W	Orange with White tracer
Br	Brown	W	White	Bl/W	Blue with White tracer	O/Y	Orange with Yellow tracer
G	Green	Y	Yellow	G/Y	Green with Yellow tracer	R/W	Red with White tracer
Gr	Gray	B/Br	Black with Grown tracer	O/B	Orange with Black tracer	W/B	White with Black tracer
Lbl	Light blue	B/G	Black with Green tracer	O/Bl	Orange with Blue tracer	Y/G	Yellow with Green tracer
Lg	Light green	B/R	Black with Red tracer	O/G	Orange with Green tracer		

CABLE, HARNESS AND HOSE ROUTING

CABLE AND HOSE ROUTING

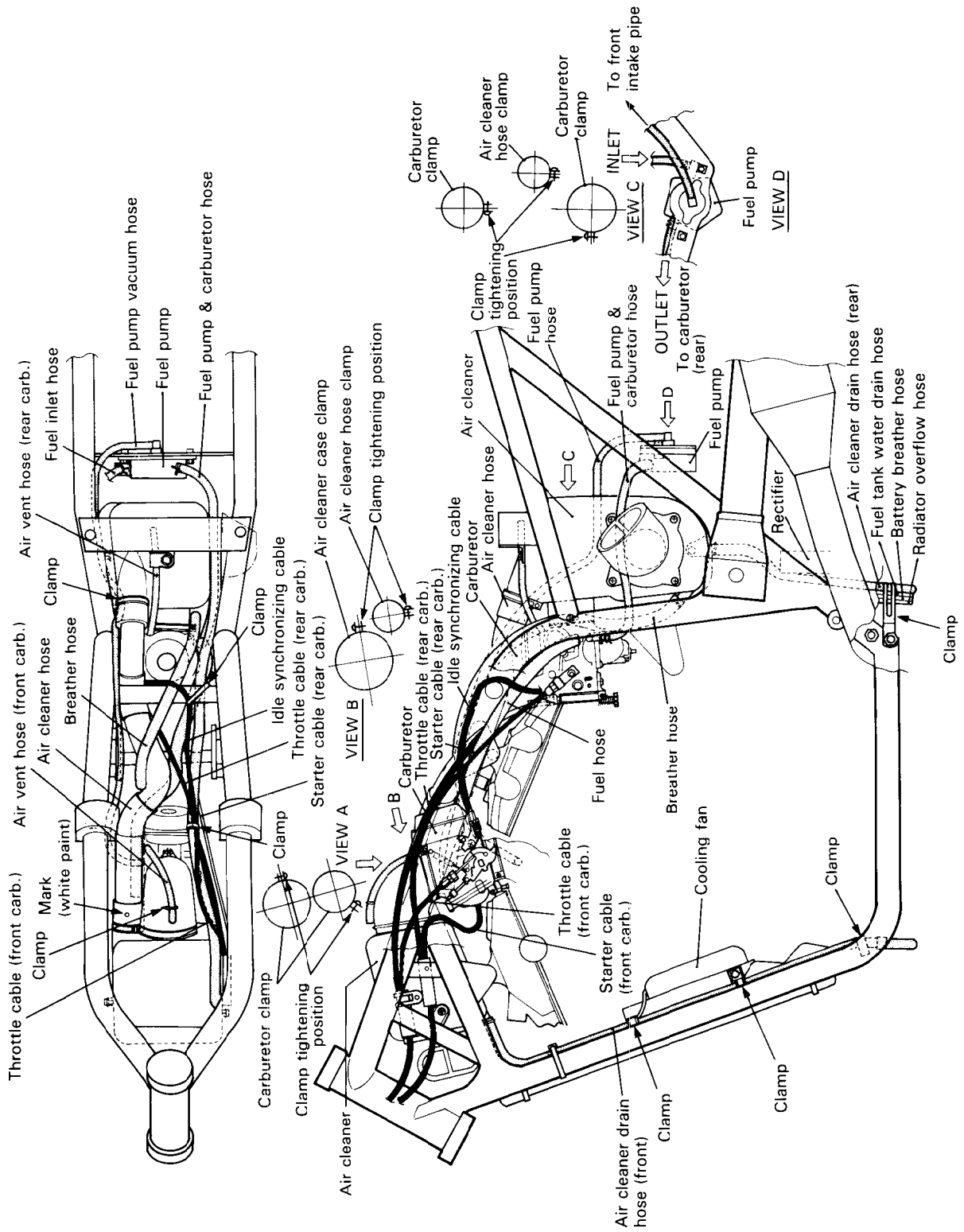

WIRE ROUTING

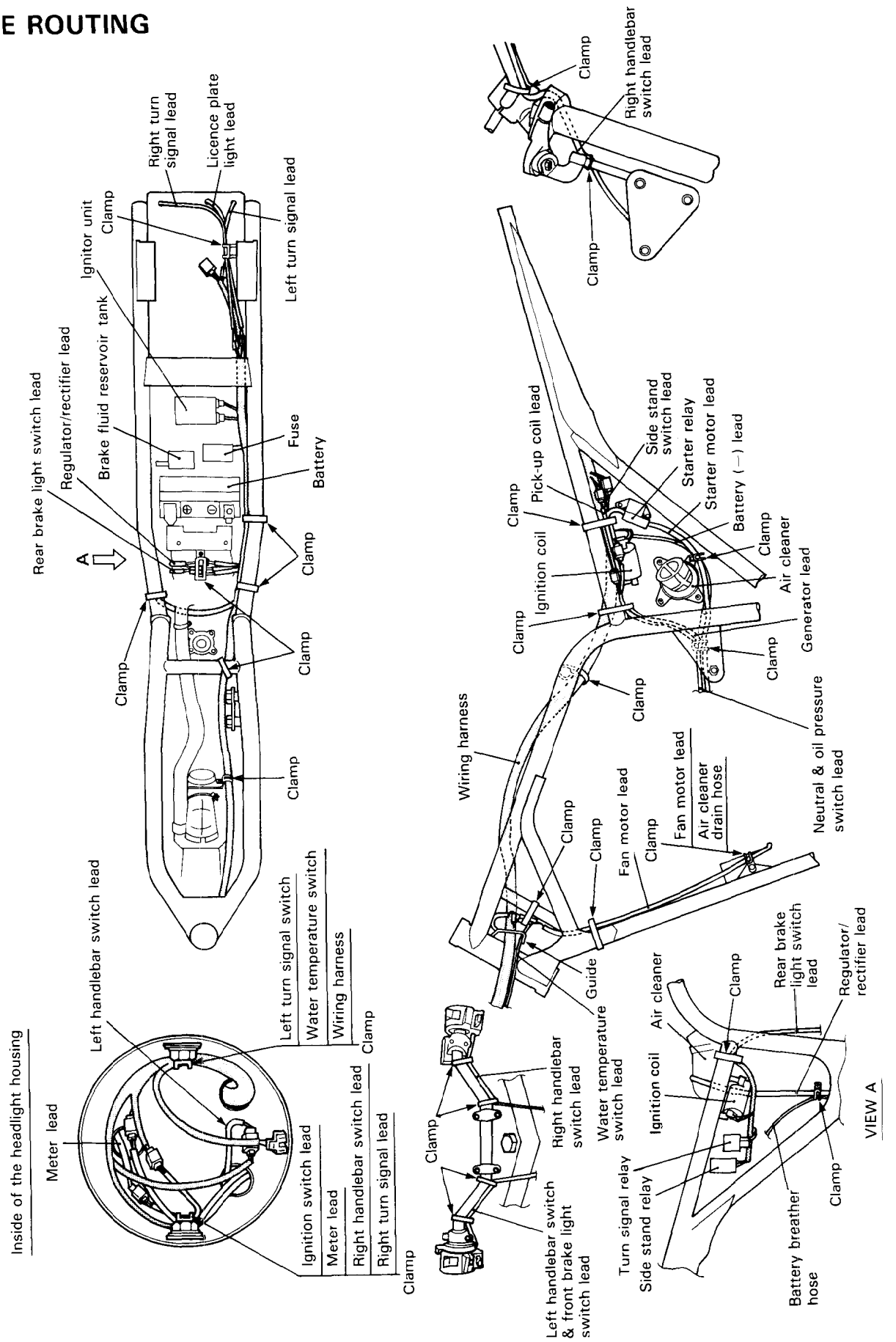

WIRE ROUTING

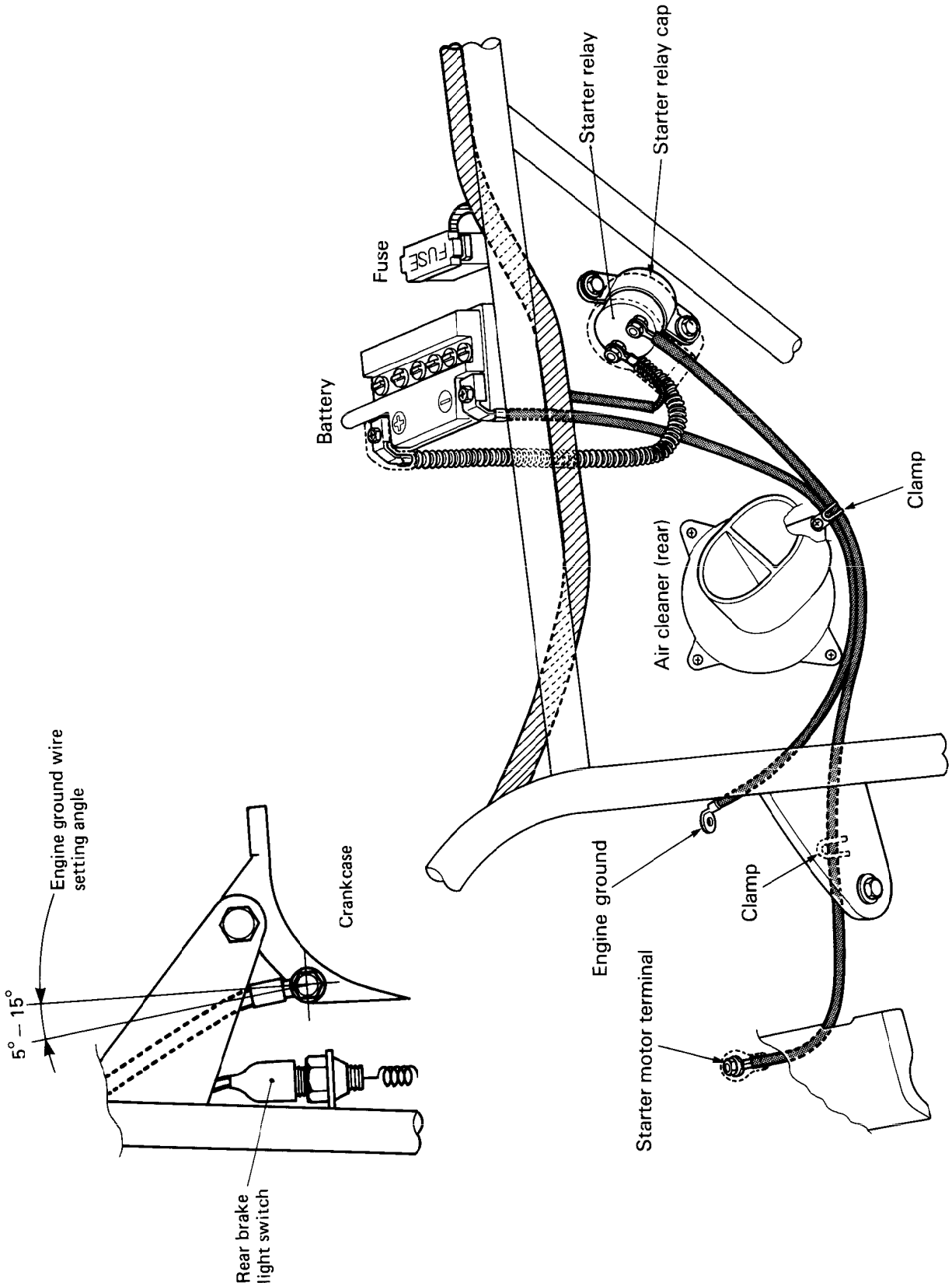

CABLE ROUTING

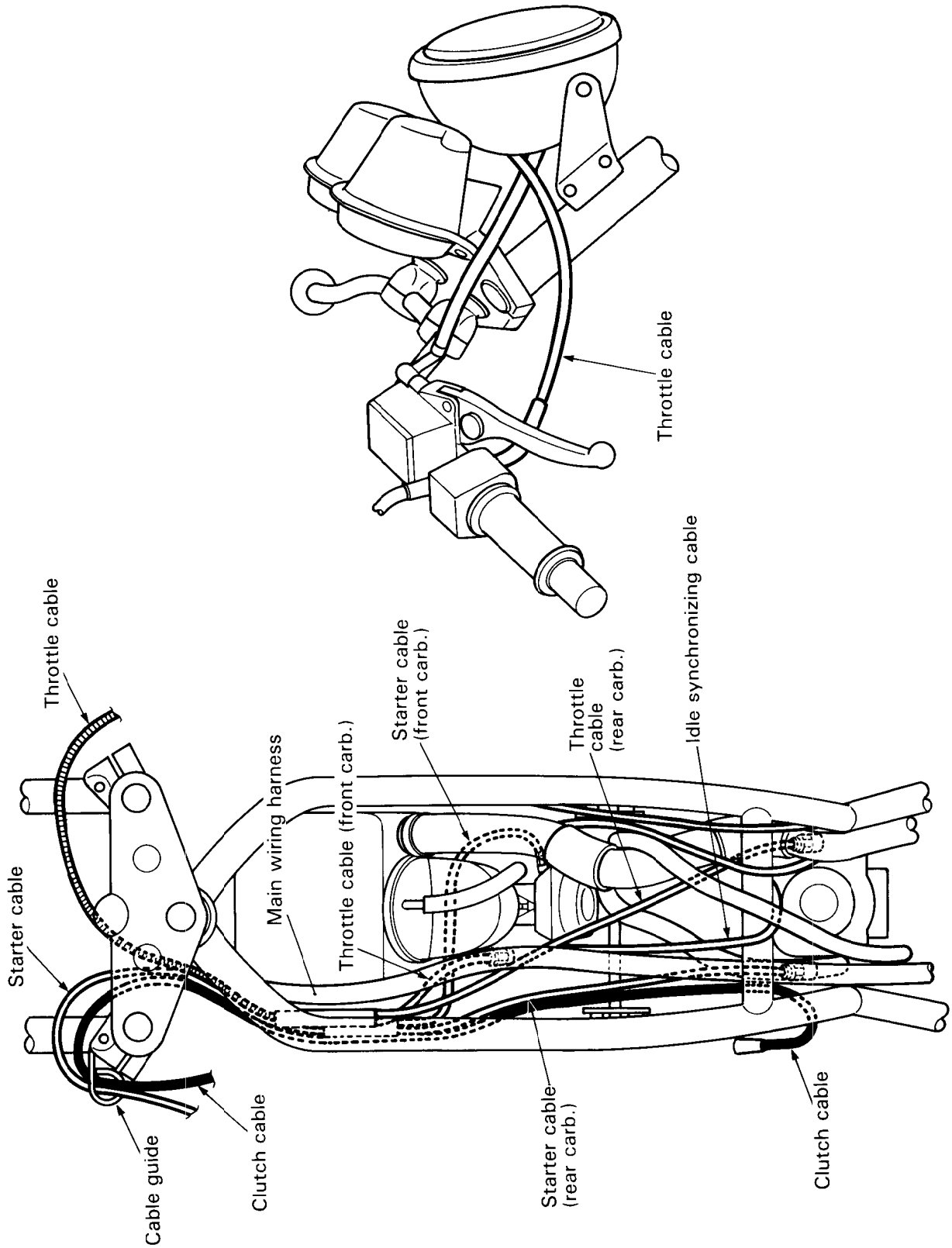

GENERATOR, NEUTRAL SWITCH AND OIL PRESSURE SWITCH LEAD WIRES

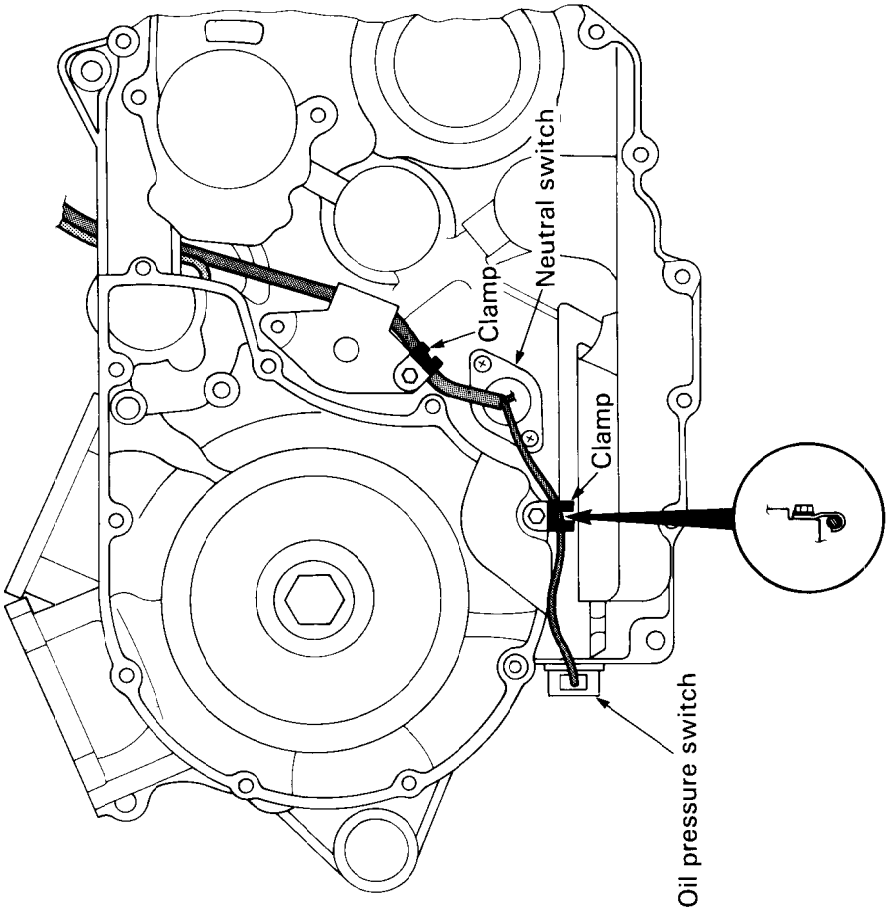

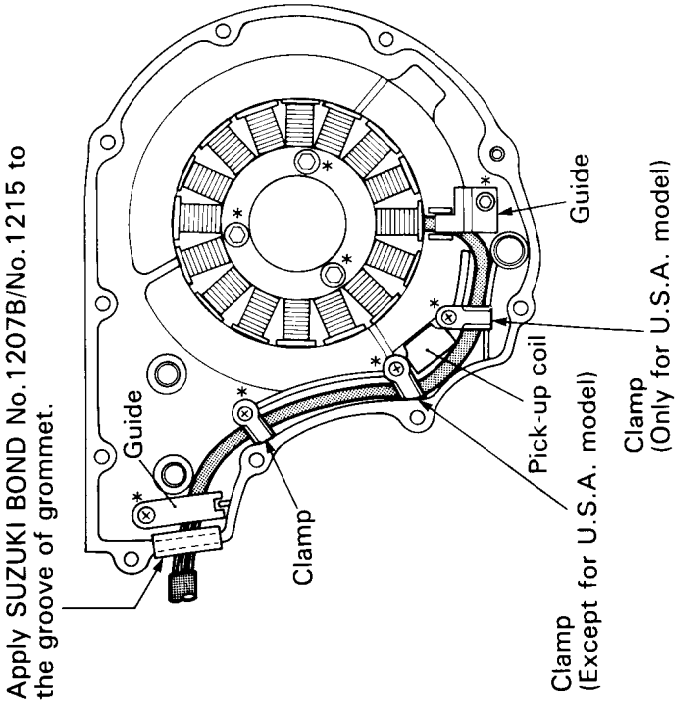

NOTE:
(*) Apply a small quantity of THREAD LOCK "1342" to the respective securing screws and bolts.

HIGH TENSION CORD ROUTING

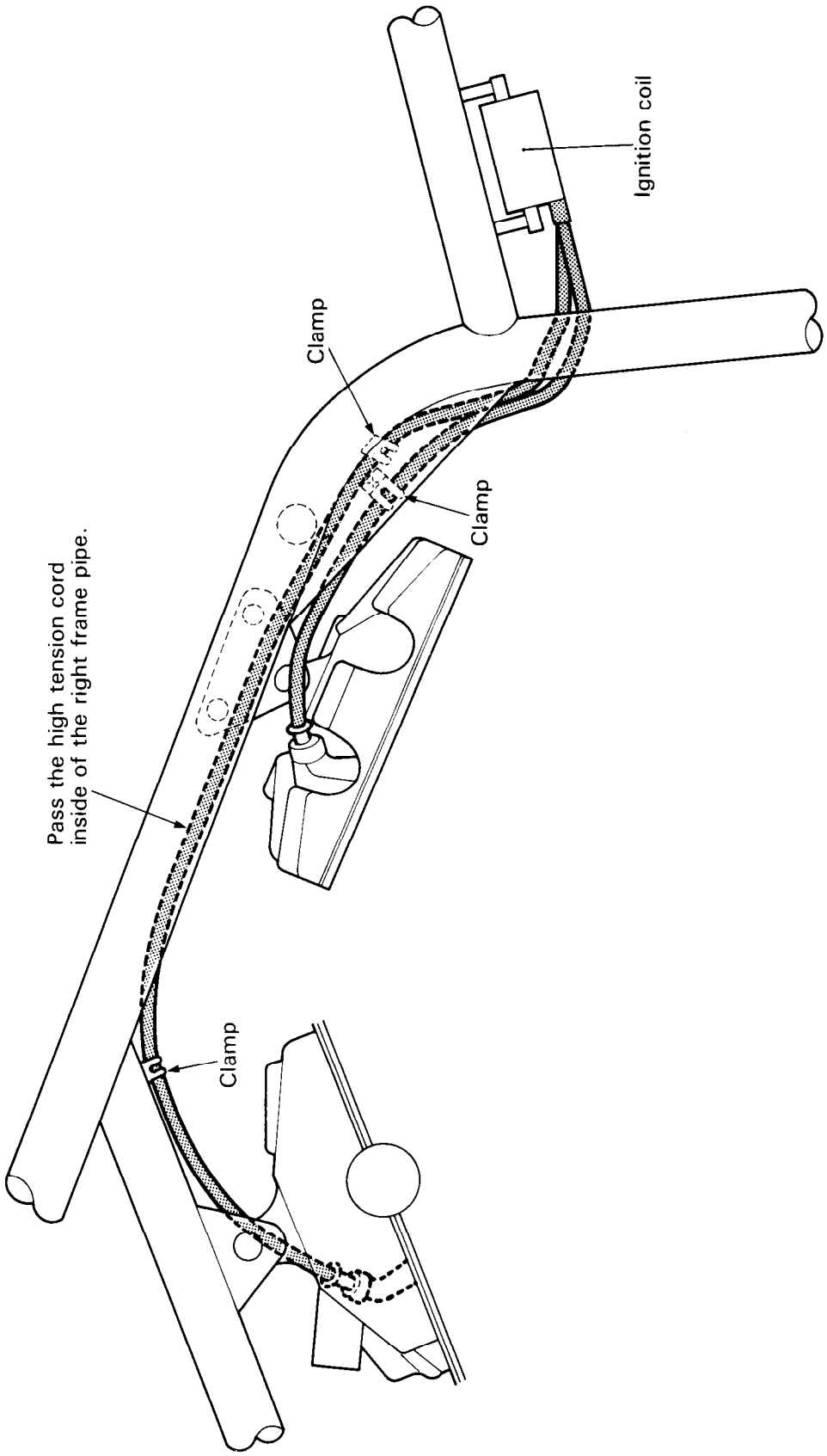

SPEEDOMETER CABLE ROUTING

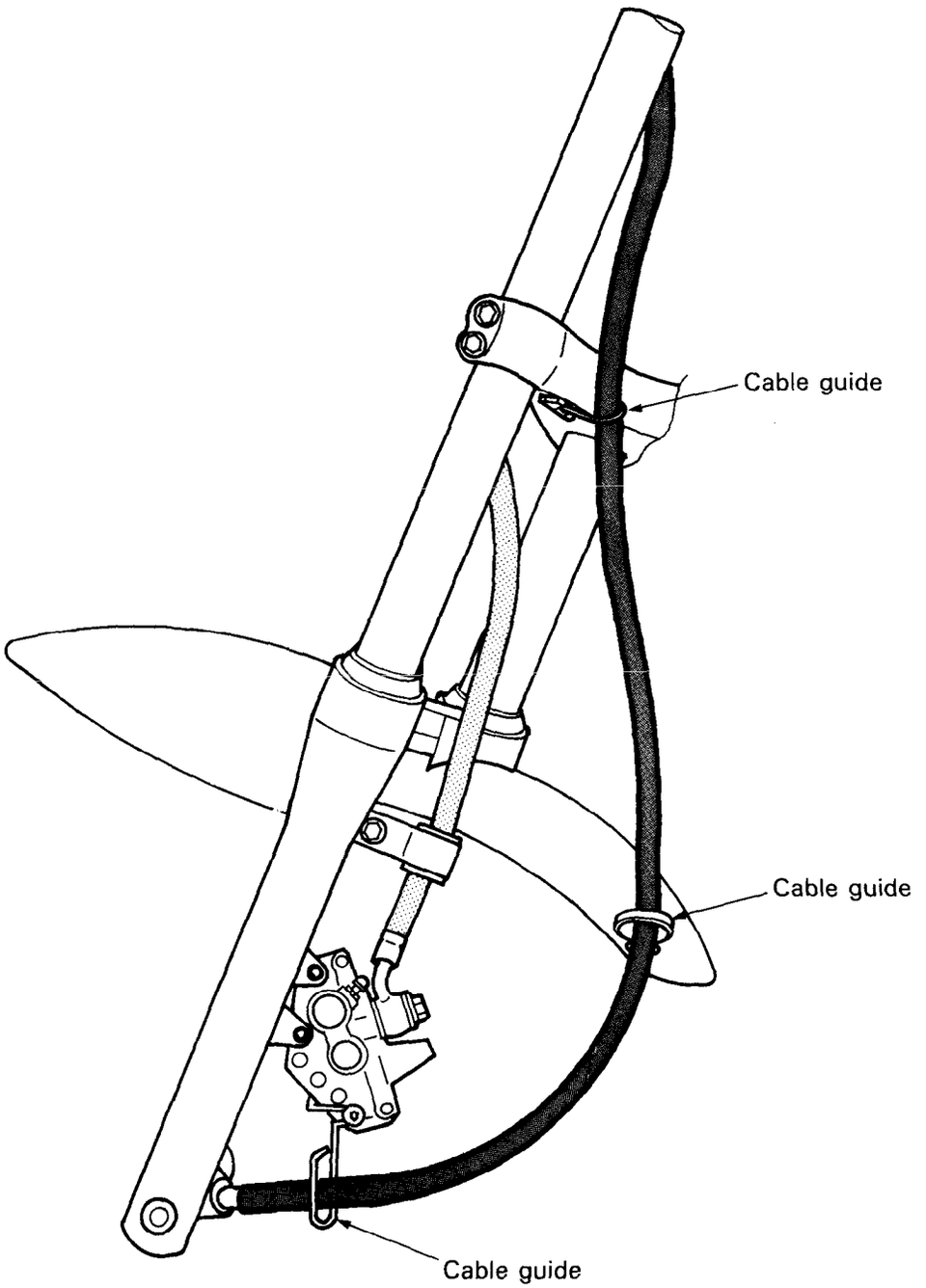

FRONT BRAKE HOSE ROUTING

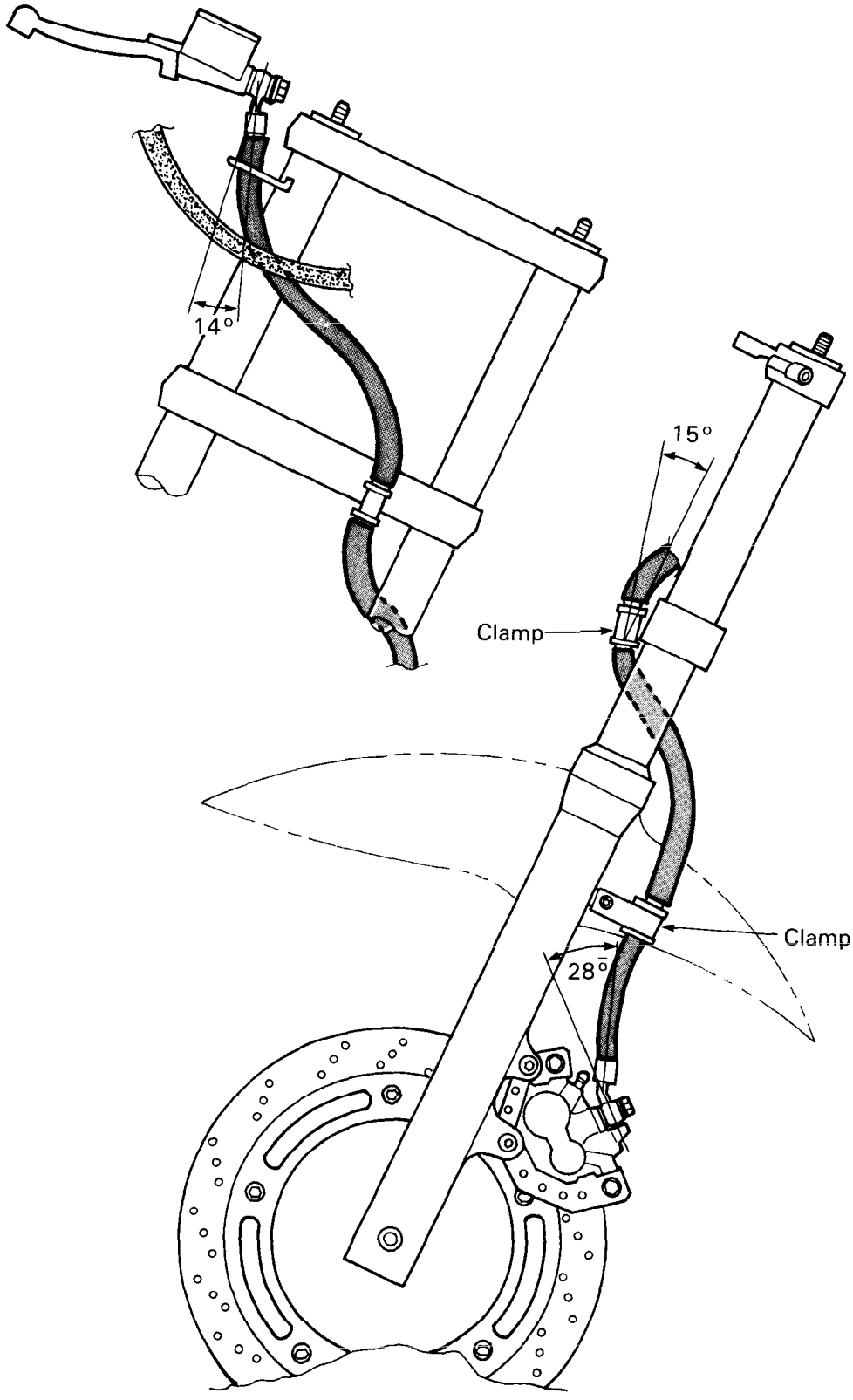

REAR BRAKE HOSE ROUTING

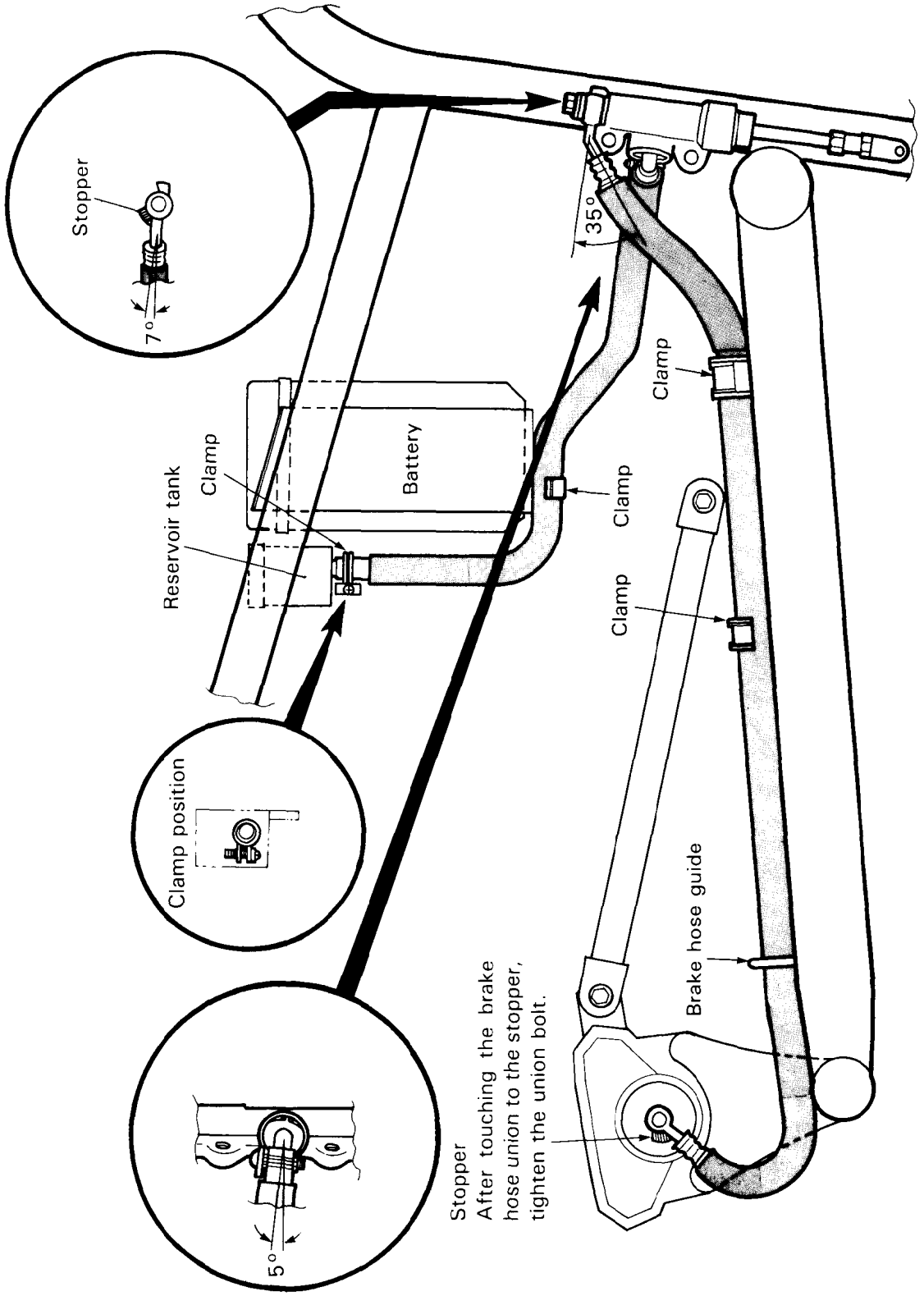

SEAT LOCK CABLE ROUTING

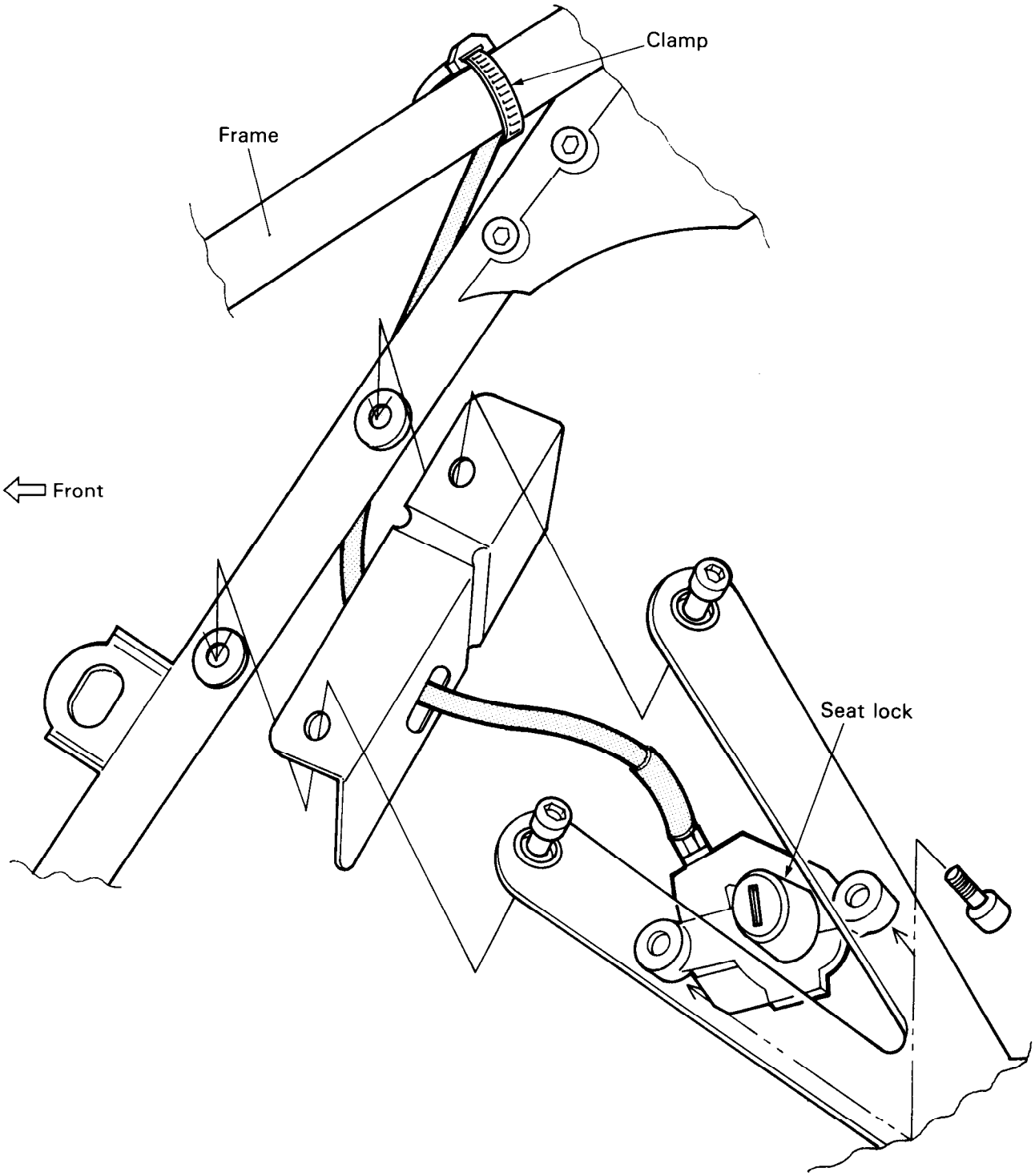

FUEL HOSE ROUTING

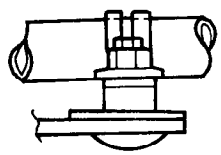

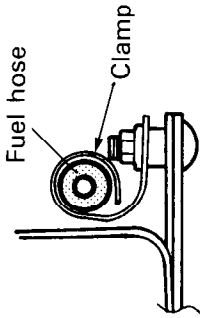

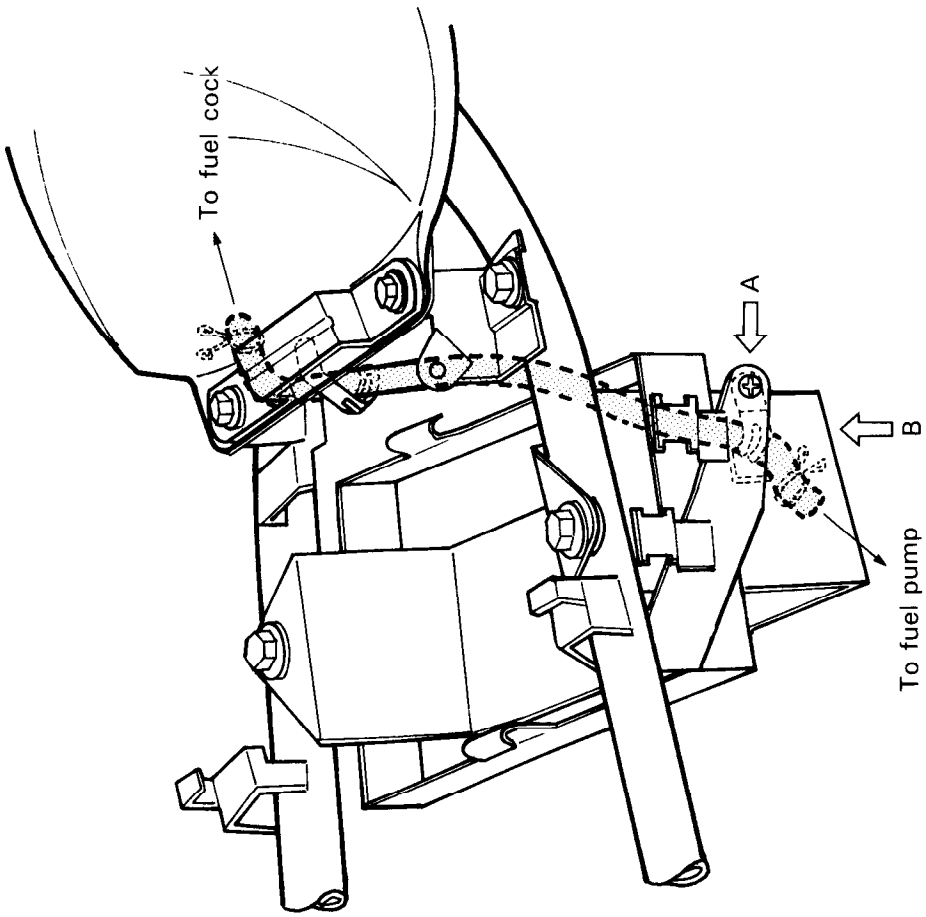

RADIATOR HOSE ROUTING

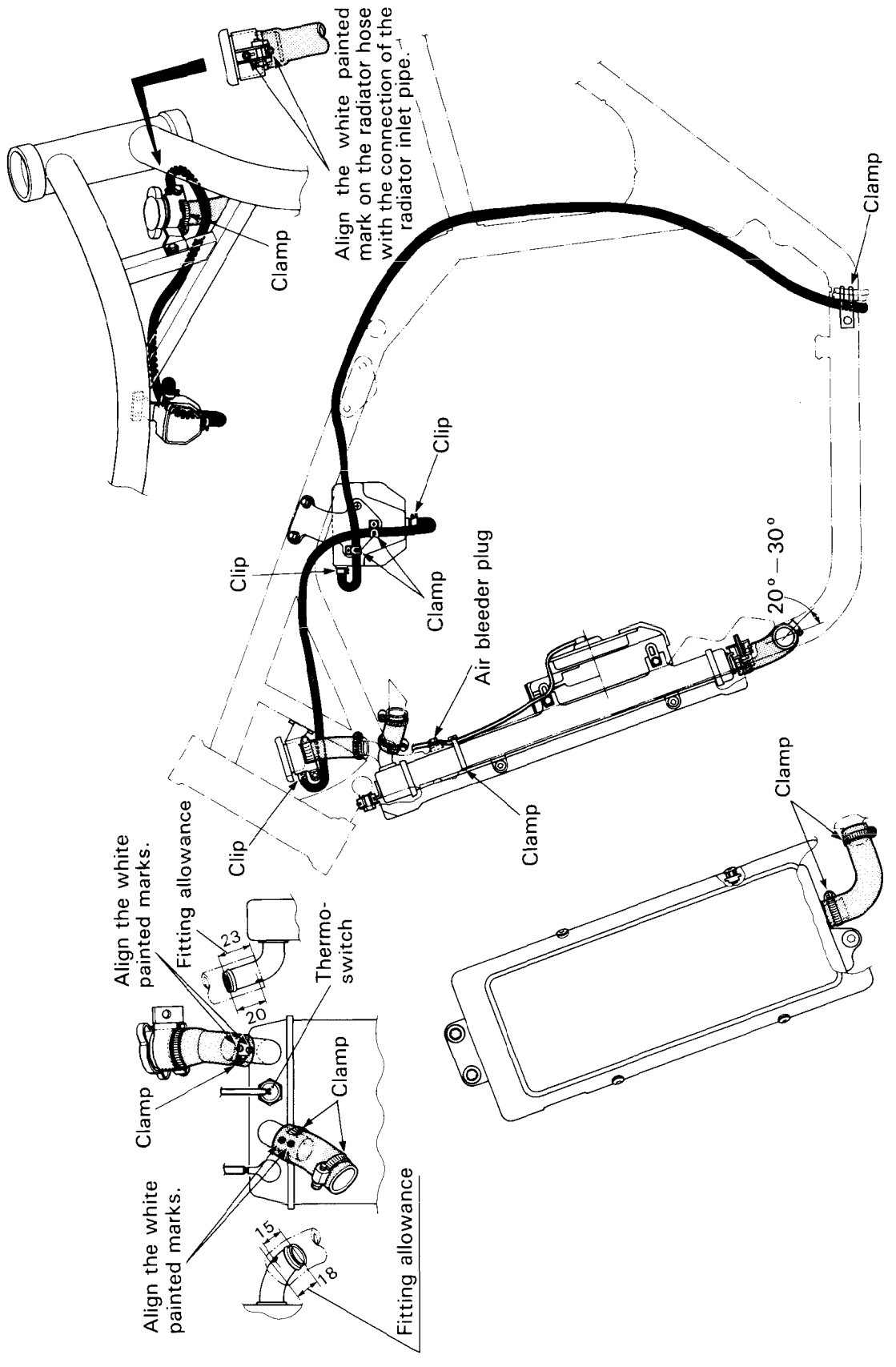

Tightening torque

ITEM	N·m	kg-m	lb-ft
Air bleeder plug	10—12	1.0—1.2	7.0—8.5
Thermo-switch	9—14	0.9—1.4	6.5—10.0

CENTER STAND SPRING

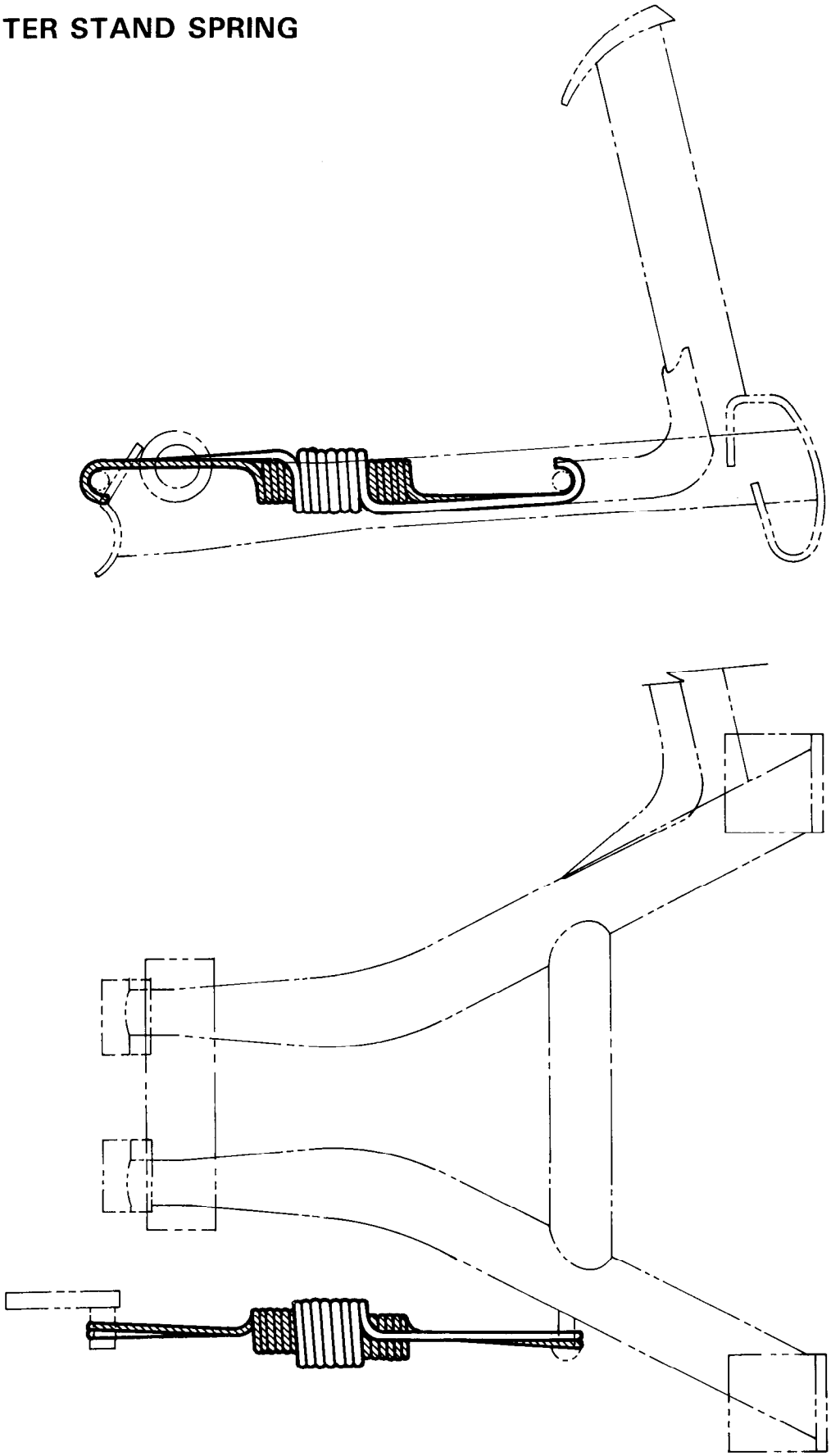

NOTE:
* Apply SUZUKI SUPER GREASE "A" to the center stand pivot.
* Be sure to bring the long arm side of the spring to top when fitting.

SIDE-STAND SPRING

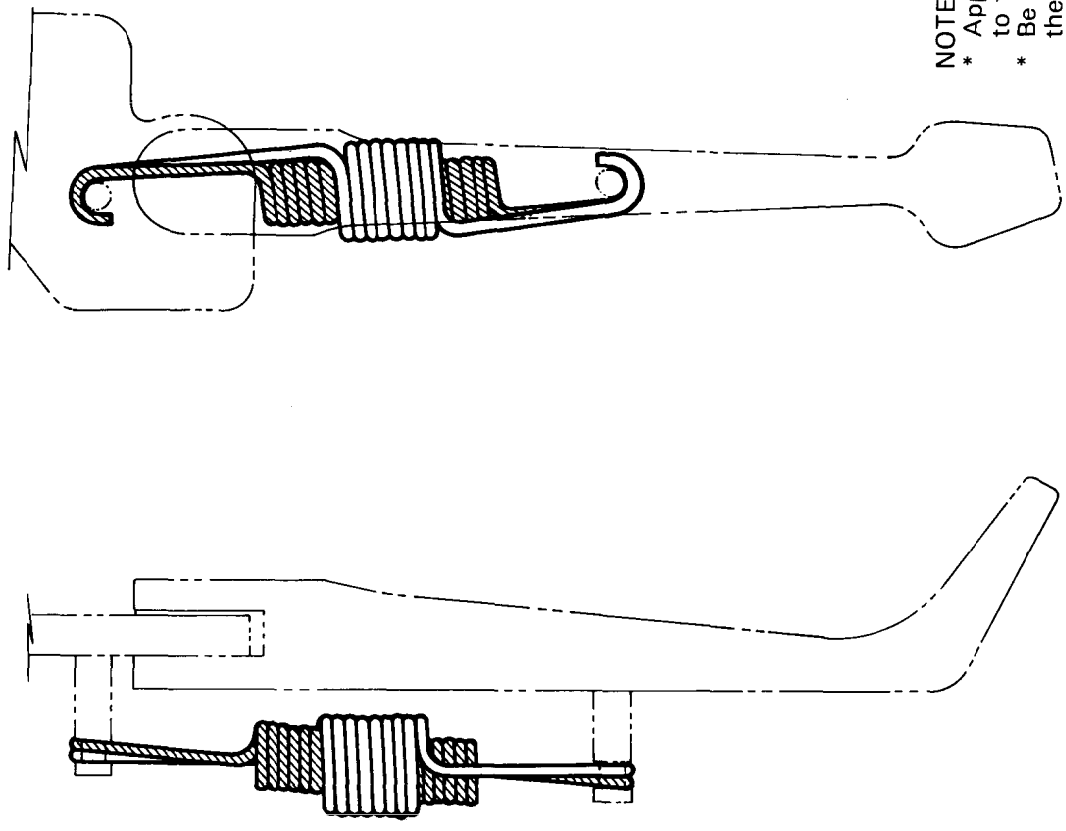

NOTE:
* Apply SUZUKI SUPER GREASE "A" to the side-stand pivot.
* Be sure to bring the long arm side of the spring to top when fitting.

SPECIAL TOOLS

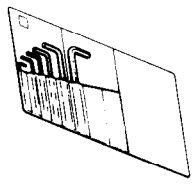 09900-00401 "L" type hexagon wrench set	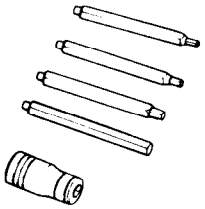 09900-00410 Hexagon bit wrench set	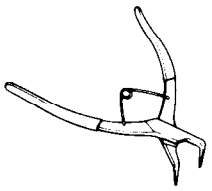 09900-06105 Snap ring pliers	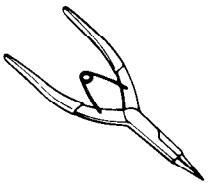 09900-06107 Snap ring pliers	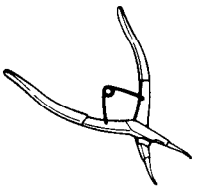 09900-06108 Snap ring pliers
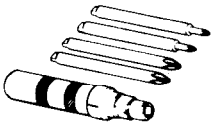 09900-09003 Impact driver set	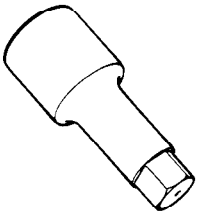 09900-18710 12 mm Hexagon wrench	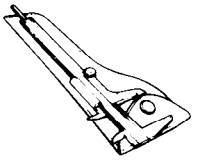 09900-20101 or 09900-20102 Vernier calipers	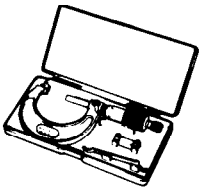 09900-20202 Micrometer (25 – 50 mm)	 09900-20204 Micrometer (75 – 100 mm)
 09900-20205 Micrometer (0 – 25 mm)	 09900-20508 Cylinder bore gauge set	 09900-20602 Dial gauge (1/1000 mm, 1 mm)	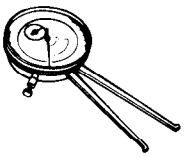 09900-20605 Dial calipers	 09900-20606 Dial gauge (1/100 mm, 10 mm)
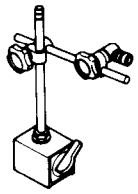 09900-20701 Magnetic stand	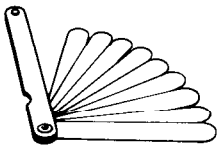 09900-20803 09900-20804 09900-20806 Thickness gauge	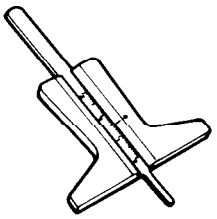 09900-20805 Tire depth gauge	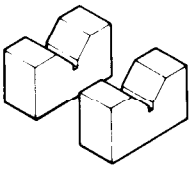 09900-21304 V-block (100 mm)	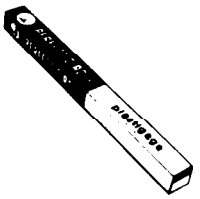 09900-22301 09900-22302 Plastigauge
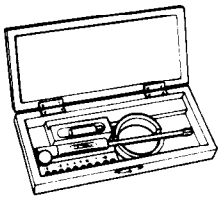 09900-22403 Small bore gauge (18 – 35 mm)	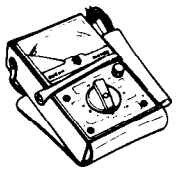 09900-25002 Pocket tester	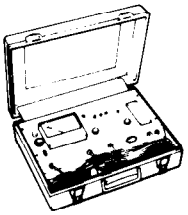 09900-28106 Electro tester	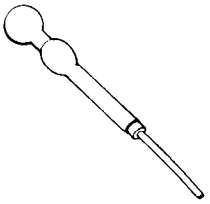 09900-28403 Hydrometer	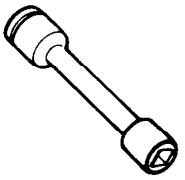 09911-74510 Long socket wrench
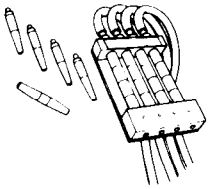 09913-13121 Carburetor balancer gauge	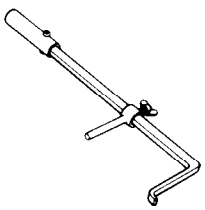 09913-50121 Oil seal remover	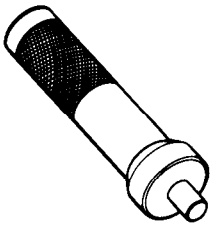 09913-75820 Bearing installer	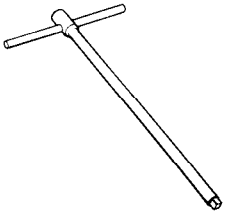 09914-24510 T-handle	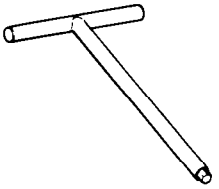 09914-25811 6 mm "T" type hexagon wrench

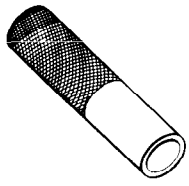 09914-79610 Bearing and oil seal installer	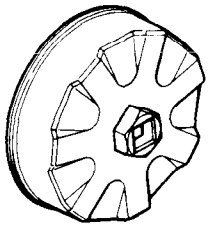 09915-40611 Oil filter wrench	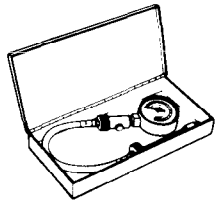 09915-64510 Compression gauge	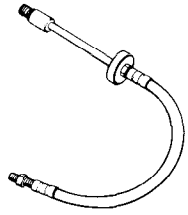 09918-03810 Compression gauge adaptor	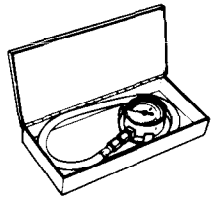 09915-74510 Oil pressure gauge
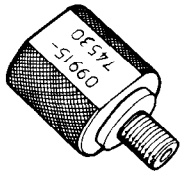 09915-74530 Oil pressure gauge adaptor	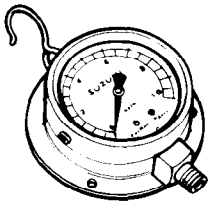 09915-77330 Meter (for high pressure)	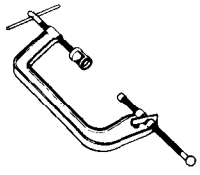 09916-14510 Valve lifter	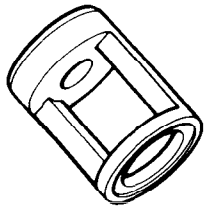 09916-14910 Valve lifter attachment	 09916-24480 Solid pilot (N-140-5.5)
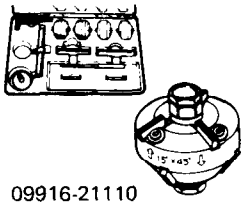 09916-21110 Valve seat cutter set Valve seat cutter head N-116, N-212 * See page 3-28	 09916-34541 Reamer handle	 09916-34550 Valve guide reamer (5.5 mm)	 09916-34580 Valve guide reamer (10.8 mm)	 09916-44910 Valve guide remover/ installer
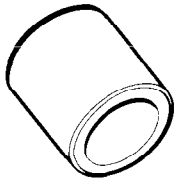 09916-44920 Attachment	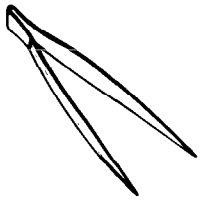 09916-84510 Tweezers	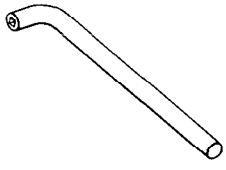 09917-10410 Valve adjuster driver	 09918-53810 Tensioner lock tool	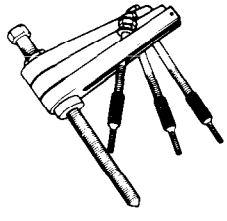 09920-13120 Crankcase separating tool
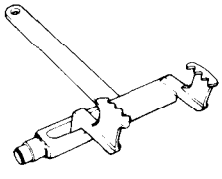 09920-50710 Clutch sleeve hub holder	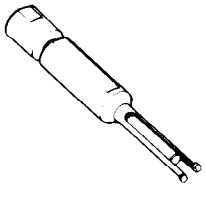 09921-20200 Bearing remover	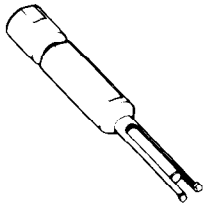 09921-20210 Bearing remover	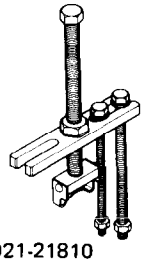 09921-21810 Bearing holder	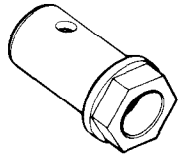 09921-21820 Bearing retainer wrench
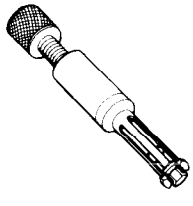 09923-73210 Bearing remover	 09923-74510 Bearing puller	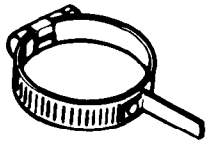 09924-34510 Backlash measuring tool	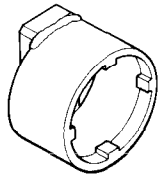 09924-62410 Final drive gear bearing holder wrench	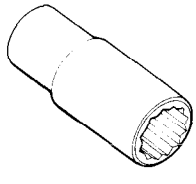 09924-62420 22 mm Long socket

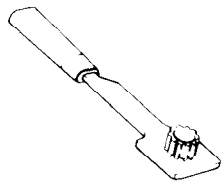 09924-64510 Final drive gear coupling holder	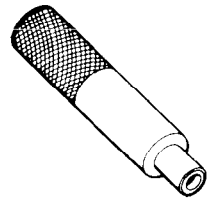 09924-74510 Handle	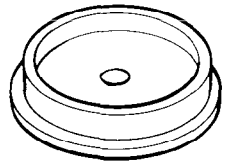 09924-74520 Oil seal remover	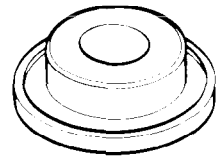 09924-74550 Bearing installer	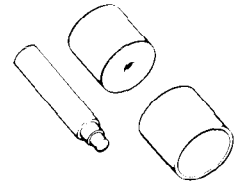 09924-74570 Final driven gear bearing installer and remover
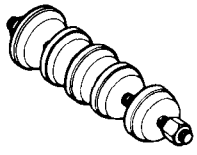 09924-84510 Bearing installer set	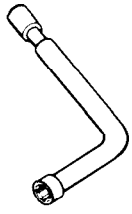 09930-11910 Torx wrench	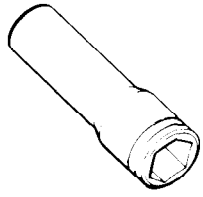 09930-13210 Socket wrench	 09930-14530 Universal joint	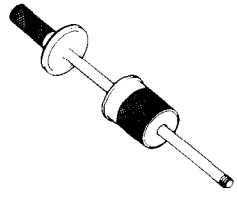 09930-30102 Sliding shaft
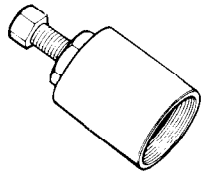 09930-30720 Rotor remover (For U.S.A. model)	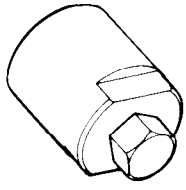 09930-34970 Rotor remover	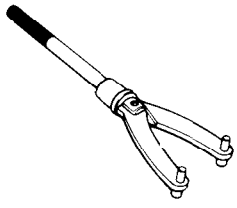 09930-40113 Rotor holder	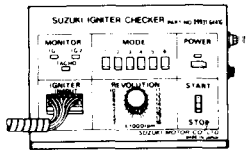 09931-94430 Ignitor checker (Digital type)	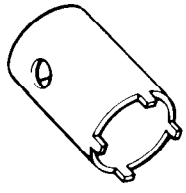 09940-14911 Steering stem nut wrench
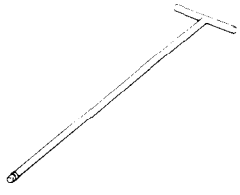 09940-34520 T-handle (Front fork disassembler)	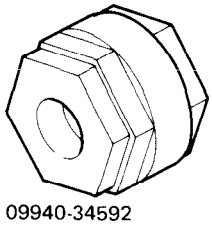 09940-34592 Attachment G (Front fork disassembler)	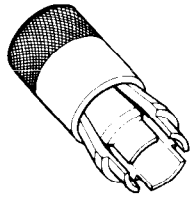 09940-50113 Front fork oil seal installer	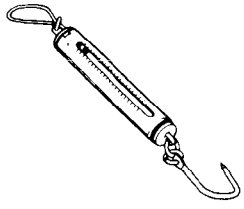 09940-92710 Spring scale	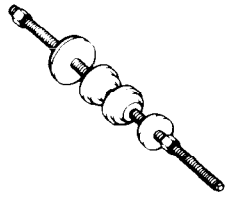 09941-34513 Steering race installer
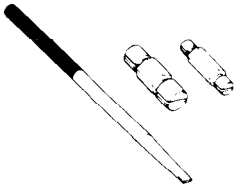 09941-50110 Bearing remover	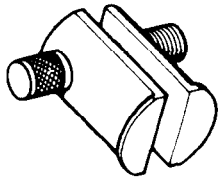 09941-54911 Bearing outer race remover	 09941-64510 Bearing and oil seal remover	 09941-74910 Steering bearing installer	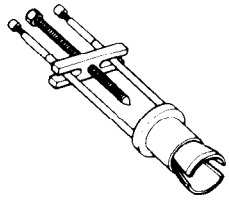 09941-84510 Bearing remover
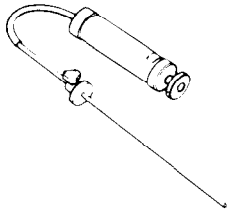 09943-74111 Fork oil level gauge				

NOTE:
When order the special tool, please confirm whether it is available or not.

TIGHTENING TORQUE

ENGINE

ITEM		N·m	kg·m	lb·ft
Cylinder head cover bolt	M6	9 – 11	0.9 – 1.1	6.5 – 8.0
	M8	21 – 25	2.1 – 2.5	15.0 – 18.0
Cylinder head bolt and nut	M10	35 – 40	3.5 – 4.0	25.5 – 29.0
	M8	8 – 12	0.8 – 1.2	6.0 – 8.5
	M6	9 – 11	0.9 – 1.1	6.5 – 8.0
Primary drive gear bolt		80 – 110	8.0 – 11.0	58.0 – 79.5
Clutch sleeve hub nut		50 – 70	5.0 – 7.0	36.0 – 50.5
Rocker arm bolt		25 – 30	2.5 – 3.0	18.0 – 21.5
Chain guide bolt		8 – 12	0.8 – 1.2	6.0 – 8.5
Chain tensioner bolt		8 – 12	0.8 – 1.2	6.0 – 8.5
Cam chain sprocket bolt		14 – 16	1.4 – 1.6	10.0 – 11.5
Tappet adjuster lock nut		13 – 16	1.3 – 1.6	9.5 – 11.5
Crankcase bolt	M6	9 – 13	0.9 – 1.3	6.5 – 9.5
	M8	20 – 24	2.0 – 2.4	14.5 – 17.5
Secondary gear case bolt		20 – 24	2.0 – 2.4	14.5 – 17.5
Oil gallery plug	M6	4 – 7	0.4 – 0.7	3.0 – 5.0
	M8	8 – 12	0.8 – 1.2	6.0 – 8.5
	M10	12 – 18	1.2 – 1.8	8.5 – 13.0
	M14	20 – 25	2.0 – 2.5	14.5 – 18.0
	M16	20 – 25	2.0 – 2.5	14.5 – 18.0
Oil pipe clamp bolt		8 – 12	0.8 – 1.2	6.0 – 8.5
Magneto cover hole plug		12 – 18	1.2 – 1.8	8.5 – 13.0
T.D.C. Inspection plug		20 – 25	2.0 – 2.5	14.5 – 18.0
Oil drain plug		18 – 23	1.8 – 2.3	13.0 – 16.5
Oil pump bolt		9 – 13	0.9 – 1.3	6.5 – 9.5
Oil relief valve		25 – 30	2.5 – 3.0	18.0 – 21.5
Oil filter union bolt		12 – 18	1.2 – 1.8	8.5 – 13.0
Engine mounting bolt	M8, L135	37 – 45	3.7 – 4.5	50.5 – 63.5
	M8, L150	37 – 45	3.7 – 4.5	50.5 – 63.5
	M10,L130	70 – 88	7.0 – 8.8	50.5 – 63.5
	M10,L170	70 – 88	7.0 – 8.8	50.5 – 63.5

ITEM		N·m	kg-m	lb-ft
Driveshaft bolt		60 – 70	6.0 – 7.0	43.5 – 50.5
Secondary drive bevel gear shaft nut		80 – 110	8.0 – 11.0	58.0 – 79.5
Magneto rotor bolt		140 – 160	14.0 – 16.0	101.5 – 115.5
Frame mounting bolt		40 – 60	4.0 – 6.0	29.0 – 43.5
Engine mounting bracket bolt	M8	18 – 28	1.8 – 2.8	13.0 – 20.0
	M6	8 – 12	0.8 – 1.2	6.0 – 8.5
Con-rod nut		49 – 53	4.9 – 5.3	35.5 – 38.5

COOLING

ITEM		N·m	kg-m	lb-ft
Radiator mounting bolt	M10	50 – 65	5.0 – 6.5	36.0 – 47.0
Fan switch		9 – 14	0.9 – 1.4	6.5 – 10.0
Temperature gauge		10 – 15	1.0 – 1.5	7.0 – 11.0

SHAFT DRIVE

ITEM	N·m	kg-m	lb-ft
Secondary drive bevel gear housing bolt	18 – 28	1.8 – 2.8	13.0 – 20.0
Secondary driven bevel gear housing bolt	18 – 28	1.8 – 2.8	13.0 – 20.0
Final drive bevel gear shaft nut	90 – 110	9.0 – 11.0	65.0 – 79.5
Final drive bevel gear bearing stopper	90 – 120	9.0 – 12.0	65.0 – 87.0
Final driven gear bearing retainer screw	8 – 10	0.8 – 1.0	6.0 – 7.0
Final gear bearing case bolt	20 – 26	2.0 – 2.6	14.5 – 19.0

CHASSIS

ITEM	N·m	kg-m	lb-ft
Steering stem head nut	50 – 80	5.0 – 8.0	36.0 – 58.0
Front fork upper clamp bolt	18 – 28	1.8 – 2.8	13.0 – 20.0
Front fork lower clamp bolt	18 – 28	1.8 – 2.8	13.0 – 20.0
Front axle shaft	36 – 52	3.6 – 5.2	26.0 – 37.5
Front axle pinch bolt	18 – 28	1.8 – 2.8	13.0 – 20.0
Handlebar clamp bolt	18 – 28	1.8 – 2.8	13.0 – 20.0
Handlebar holder mounting nut	20 – 30	2.0 – 3.0	14.5 – 21.5
Front brake master cylinder mounting bolt	5 – 8	0.5 – 0.8	3.5 – 6.0
Front brake caliper mounting bolt	30 – 48	3.0 – 4.8	21.5 – 34.5
Brake hose union bolt	15 – 20	1.5 – 2.0	11.0 – 14.5
Air bleeder valve	6 – 9	0.6 – 0.9	4.5 – 6.5
Front and rear disc bolt	18 – 28	1.8 – 2.8	13.0 – 20.0
Front footrest bracket mounting bolt	27 – 43	2.7 – 4.3	19.5 – 31.0
Swingarm pivot nut	100 – 130	10 – 13	72.5 – 94.0

ITEM	N·m	kg-m	lb-ft
Rear shock absorber upper/lower mounting nut	22 – 35	2.2 – 3.5	16.0 – 25.5
Rear brake pedal boss bolt	18 – 28	1.8 – 2.8	13.0 – 20.0
Rear brake caliper mounting bolt	20 – 31	2.0 – 3.1	14.5 – 22.5
Rear brake caliper housing bolt	30 – 36	3.0 – 3.6	21.5 – 26.0
Torque link nut (Front & Rear)	22 – 35	2.2 – 3.5	16.0 – 25.5
Rear brake master cylinder mounting bolt	8 – 12	0.8 – 1.2	6.0 – 8.5
Rear brake rod lock nut	15 – 20	1.5 – 2.0	11.0 – 14.5
Rear axle nut	60 – 96	6.0 – 9.6	43.5 – 69.5
Final bevel gear case joint nut	35 – 45	3.5 – 4.5	25.5 – 32.5

TIGHTENING TORQUE CHART

For other bolts and nuts not listed above, refer to this chart:

Bolt Diameter Ⓐ (mm)	Conventional or "4" marked bolt			"7" marked bolt		
	N·m	kg-m	lb-ft	N·m	kg-m	lb-ft
4	1.0 – 2.0	0.1 – 0.2	0.7 – 1.5	1.5 – 3.0	0.15 – 0.3	1.0 – 2.0
5	2.0 – 4.0	0.2 – 0.4	1.5 – 3.0	3.0 – 6.0	0.3 – 0.6	2.0 – 4.5
6	4.0 – 7.0	0.4 – 0.7	3.0 – 5.0	8.0 – 12.0	0.8 – 1.2	6.0 – 8.5
8	10.0 – 16.0	1.0 – 1.6	7.0 – 11.5	18.0 – 28.0	1.8 – 2.8	13.0 – 20.0
10	22.0 – 35.0	2.2 – 3.5	16.0 – 25.5	40.0 – 60.0	4.0 – 6.0	29.0 – 43.5
12	35.0 – 55.0	3.5 – 5.5	25.5 – 40.0	70.0 – 100.0	7.0 – 10.0	50.5 – 72.5
14	50.0 – 80.0	5.0 – 8.0	36.0 – 58.0	110.0 – 160.0	11.0 – 16.0	79.5 – 115.5
16	80.0 – 130.0	8.0 – 13.0	58.0 – 94.0	170.0 – 250.0	17.0 – 25.0	123.0 – 181.0
18	130.0 – 190.0	13.0 – 19.0	94.0 – 137.5	200.0 – 280.0	20.0 – 28.0	144.5 – 202.5

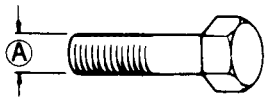

Conventional bolt

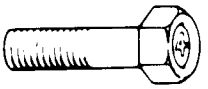
"4" marked bolt

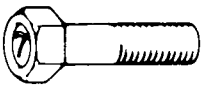
"7" marked bolt

SERVICE DATA

VALVE + GUIDE

Unit: mm (in)

ITEM	STANDARD		LIMIT
Valve diam.	IN.	30 (1.18)	—
	EX.	26 (1.02)	—
Valve lift	IN.	8.5 (0.33)	—
	EX.	8.5 (0.33)	—
Valve clearance (when cold)	IN. & EX	0.08–0.13 (0.003–0.005)	—
Valve guide to valve stem clearance	IN.	0.020–0.047 (0.0008–0.0019)	0.35 (0.014)
	EX.	0.035–0.062 (0.0014–0.0024)	0.35 (0.014)
Valve guide I.D.	IN. & EX.	5.500–5.512 (0.2165–0.2170)	—
Valve stem O.D.	IN.	5.465–5.480 (0.2152–0.2157)	—
	EX.	5.450–5.465 (0.2146–0.2152)	—
Valve stem runout	IN. & EX.	—	0.05 (0.002)
Valve head thickness	IN. & EX.	—	0.5 (0.02)
Valve stem end length	IN. & EX.	—	4.0 (0.16)
Valve seat width	IN. & EX.	0.9–1.1 (0.035–0.043)	—
Valve head radial runout	IN. & EX.	—	0.03 (0.001)
Valve spring free length	INNER	—	38.3 (1.51)
	OUTER	—	40.1 (1.58)
Valve spring tension	INNER	6.51–7.49 kg (14.35–16.51 lbs) at length 32.5 mm (1.28 in)	—
	OUTER	12.09–13.91 kg (26.65–30.67 lbs) at length 36.0 mm (1.42 in)	—

CAMSHAFT + CYLINDER HEAD

Unit: mm (in)

ITEM	STANDARD		LIMIT
Cam height	IN.	35.954–35.994 (1.4155–1.4171)	35.660 (1.4039)
	EX.	36.919–36.959 (1.4535–1.4551)	36.620 (1.4417)
Camshaft journal oil clearance	0.032–0.066 (0.0013–0.0026)		0.150 (0.0059)

ITEM	STANDARD		LIMIT
Camshaft journal holder I.D.	No.1 Left side No.2 Right side	20.012–20.025 (0.7879–0.7884)	——
	No.1 Right side No.2 Left side	25.012–25.025 (0.9847–0.9852)	——
Camshaft journal O.D.	No.1 Left side No.2 Right side	19.959–19.980 (0.7858–0.7866)	——
	No.1 Right side No.2 Left side	24.959–24.980 (0.9826–0.9835)	——
Camshaft runout	——		0.10 (0.004)
Cam chain 20-pitch length	——		128.9 (5.07)
Rocker arm I.D.	IN. & EX.	12.000–12.018 (0.4724–0.4731)	——
Rocker arm shaft O.D.	IN. & EX.	11.966–11.984 (0.4711–0.4718)	——
Cylinder head distortion	——		0.05 (0.002)
Cylinder head cover distortion	——		0.05 (0.002)

CYLINDER + PISTON + PISTON RING

Unit: mm (in)

ITEM	STANDARD			LIMIT
Compression pressure	1 300–1 600 kPa (13–16 kg/cm²) (185–228 psi)			1100 kPa (11 kg/cm²) (156 psi)
Compression pressure difference	——			200 kPa (2 kg/cm²) (28 psi)
Piston to cylinder clearance	0.045–0.055 (0.0018–0.0022)			0.120 (0.0047)
Cylinder bore	83.000–83.015 (3.2677–3.2683)			83.085 (3.2711)
Piston diam	82.950–82.965 (3.2657–3.2663) Measure at 15 mm (0.6 in) from the skirt end.			82.880 (3.2630)
Cylinder distortion	——			0.05 (0.002)
Piston ring free end gap	1st	R	Approx. 10.5 (0.413)	8.4 (0.331)
	2nd	R	Approx. 11.8 (0.465)	9.4 (0.370)
Piston ring end gap	1st		0.20–0.35 (0.008–0.014)	0.70 (0.028)
	2nd		0.20–0.35 (0.008–0.014)	0.70 (0.028)
Piston ring groove clearance	1st		——	0.180 (0.007)
	2nd		——	0.150 (0.006)

ITEM	STANDARD		LIMIT
Piston ring groove width	1st	1.01–1.03 (0.0398–0.0406)	——
	2nd	1.21–1.23 (0.0476–0.0484)	——
	Oil	2.51–2.53 (0.0988–0.0996)	——
Piston ring thickness	1st	0.970–0.990 (0.0382–0.0390)	——
	2nd	1.170–1.190 (0.0461–0.0469)	——
Piston pin bore	20.002–20.008 (0.7875–0.7877)		20.030 (0.7886)
Piston pin O.D.	19.996–20.000 (0.7827–0.7874)		19.980 (0.7866)

CONROD + CRANKSHAFT

Unit: mm (in)

ITEM	STANDARD	LIMIT
Corod small end I.D.	20.010–20.018 (0.7878–0.7881)	20.040 (0.7890)
Conrod big end side clearance	0.10–0.20 (0.004–0.010)	0.30 (0.012)
Conrod big end width	21.95–22.00 (0.864–0.866)	——
Crank pin width	22.10–22.15 (0.870–0.872)	——
Conrod big end oil clearance	0.024–0.042 (0.0009–0.0017)	0.080 (0.0031)
Crank pin O.D.	40.982–41.000 (1.6135–1.6142)	——
Crankshaft journal oil clearance	0.020–0.050 (0.0008–0.0020)	0.080 (0.0031)
Crankshaft journal O.D.	47.965–47.980 (1.8884–1.8890)	——
Crankshaft thrust bearing thickness	1.925–2.175 (0.0758–0.0856)	——
Crankshaft thrust clearance	0.05–0.10 (0.0020–0.0040)	——
Crankshaft runout	——	0.05 (0.002)

OIL PUMP

ITEM	STANDARD	LIMIT
Oil pump reduction ratio	1.859 (71/42 x 32/29)	——
Oil pressure (at 60°C,140°F)	Above 350 kPa (3.5 kg/cm², 50 psi) Below 650 kPa (6.5 kg/cm², 92 psi) at 3 000 r/min.	——

CLUTCH

Unit: mm (in)

ITEM		STANDARD	LIMIT
Clutch cable play		4 (0.2)	—
Clutch release screw		¼ – ½ turn back	—
Drive plate thickness	No.1	2.65 – 2.95 (0.104 – 0.116)	2.35 (0.093)
	No.2	3.45 – 3.55 (0.136 – 0.140)	3.15 (0.124)
Drive plate claw width		15.8 – 16.0 (0.62 – 0.63)	15.0 (0.59)
Driven plate thickness		1.60 ± 0.05 (0.063 ± 0.002)	—
Driven plate distortion		—	0.10 (0.004)
Clutch spring free length	No.1	—	24.6 (0.97)
	No.2	—	23.3 (0.92)

TRANSMISSION

Unit: mm (in) Except ratio

ITEM			STANDARD	LIMIT
Primary reduction ratio			1.690 (71/42)	—
Secondary reduction ratio		U.S.A. model	1.133 (30/30 x 17/15)	—
		Other models	1.096 (30/31 x 17/15)	—
Final reduction ratio			3.090 (34/11)	—
Gear ratios	Low		2.285 (32/14)	—
	2nd		1.631 (31/19)	—
	3rd		1.227 (27/22)	—
	4th		1.000 (25/25)	—
	Top		0.851 (23/27)	—
Shift fork to groove clearance		No.1	0.10 – 0.30 (0.004 – 0.012)	0.50 (0.020)
		No.2	0.10 – 0.30 (0.004 – 0.012)	0.50 (0.020)
Shift fork groove width		No.1	5.50 – 5.60 (0.217 – 0.220)	—
		No.2	4.50 – 4.60 (0.177 – 0.181)	—
Shift fork thickness		No.1	5.30 – 5.40 (0.209 – 0.213)	—
		No.2	4.30 – 4.40 (0.169 – 0.173)	—

SHAFT DRIVE

Unit: mm (in)

ITEM	STANDARD		LIMIT
Secondary bevel gear backlash	0.05–0.32 (0.002–0.013)		——
Final bevel gear backlash	Drive side	0.03–0.064 (0.001–0.025)	——

CARBURETOR

ITEM	SPECIFICATION	
	E-02,04,15,21,25,28,34	
Carburetor type	MIKUNI BS36SS (No.1)	MIKUNI BDS36SS (No.2)
Bore size	36 mm	←
I.D. No.	45C00	←
Idle r/min.	1100±100 r/min.	←
Float height	27.7±1.0 mm (1.09±0.04 in)	9.1±1.0 mm (0.36±0.04 in)
Main jet (M.J.)	#132.5	#120
Main air jet (M.A.J.)	1.8 mm	←
Jet needle (J.N.)	5F108-3rd	5D49-3rd
Needle jet (N.J.)	P-4	←
Throttle valve (Th.V.)	#115	←
Pilot jet (P.J.)	#47.5	#40
By-pass (B.P.)	0.8 mm x 2PCS	0.8 mm x 3PCS
Pilot outlet (P.O.)	0.8 mm	1.0 mm
Valve seat (V.S.)	1.5 mm	←
Starter jet (G.S.)	#25	#22.5
Pilot screw (P.S.)	(PRE-SET) 1⅜ turns back	(PRE-SET) 1⅛ turns back
Pilot air jet (P.A.J.)	No.1:(#70), No.2:(2.0 mm)	No.1:(#65), No.2:(1.2 mm)
Throttle cable play	0.5–1.0 mm (0.02–0.04 in)	←
Choke cable play	0.5–1.0 mm (0.02–0.04 in)	←

CARBURETOR

ITEM	SPECIFICATION	
	E-03	
Carburetor type	MIKUNI BS36SS (No.1)	MIKUNI BDS36SS (No.2)
Bore size	36 mm	←
I.D. No.	45C10	←
Idle r/min.	1200±50 r/min.	←
Float height	27.7±1.0 mm (1.09±0.04 in)	9.1±1.0 mm (0.36±0.04 in)
Main jet (M.J.)	#132.5	#122.5
Main air jet (M.A.J.)	1.8 mm	←
Jet needle (J.N.)	5E72-1st	5D47-1st
Needle jet (N.J.)	P-7	P-2
Throttle valve (Th.V.)	#125	#110
Pilot jet (P.J.)	#45	#40
By-pass (B.P.)	0.8 mm x 2PCS	0.8 mm x 3PCS
Pilot outlet (P.O.)	0.8 mm	1.0 mm

ITEM		SPECIFICATION	
		E-03	
Valve seat	(V.S.)	1.5 mm	←
Starter jet	(G.S.)	#25	#22.5
Pilot screw	(P.S.)	(PRE-SET)	(PRE-SET)
Pilot air jet	(P.A.J)	No.1:(#65), No.2:(2.0 mm)	No.1:(#65), No.2:(1.2 mm)
Throttle cable play		0.5–1.0 mm (0.02–0.04 in)	←
Choke cable play		0.5–1.0 mm (0.02–0.04 in)	←

CARBURETOR

ITEM		SPECIFICATION	
		E-33	
Carburetor type		MIKUNI BS36SS (No.1)	MIKUNI BDS36SS (No.2)
Bore size		36 mm	←
I.D. No.		45C20	←
Idle r/min.		1200±50 r/min.	←
Float height		27.7±1.0 mm (1.09±0.04 in)	9.1±1.0 mm (0.36±0.04 in)
Main jet	(M.J.)	#132.5	#122.5
Main air jet	(M.A.J.)	1.8 mm	←
Jet needle	(J.N.)	5E72-1st	5D47-1st
Needle jet	(N.J.)	P-7	P-2
Throttle valve	(Th.V.)	#125	#110
Pilot jet	(P.J.)	#45	#40
By-pass	(B.P.)	0.8 mm x 2PCS	0.8 mm x 3PCS
Pilot outlet	(P.O.)	0.8 mm	1.0 mm
Valve seat	(V.S.)	1.5 mm	←
Starter jet	(G.S.)	#25	#22.5
Pilot screw	(P.S.)	(PRE-SET)	(PRE-SET)
Pilot air jet	(P.A.J.)	No.1:(#65), No.2:(2.0 mm)	No.1:(#65), No.2:(1.2 mm)
Throttle cable play		0.5–1.0 mm (0.02–0.04 in)	←
Choke cable play		0.5–1.0 mm (0.02–0.04 in)	←

CARBURETOR

ITEM		SPECIFICATION	
		E-18	
Carburetor type		MIKUNI BS36SS (No.1)	MIKUNI BDS36SS (No.2)
Bore size		36 mm	←
I.D. No.		45C30	←
Idle r/min.		$1200 \pm {}^{100}_{50}$ r/min.	←
Float height		27.7±1.0 mm (1.09±0.04 in)	9.1±1.0 mm (0.36±0.04 in)
Main jet	(M.J.)	#135	#125
Main air jet	(M.A.J.)	1.8 mm	←
Jet needle	(J.N.)	5F107-3rd	5D48-3rd

ITEM		SPECIFICATION	
		E-18	
Needle jet	(N.J.)	P-4	P-2
Throttle valve	(Th.V.)	#115	←
Pilot jet	(P.J.)	#45	#40
By-pass	(B.P.)	0.8 mm x 2PCS	0.8 mm x 3PCS
Pilot outlet	(P.O.)	0.8 mm	1.0 mm
Valve seat	(V.S.)	1.5 mm	←
Starter jet	(G.S.)	#25	#22.5
Pilot screw	(P.S.)	(PRE-SET) 2 turns back	(PRE-SET) 1¼ turns back
Pilot air jet	(P.A.J.)	No.1:(#55), No.2:(1.85 mm)	No.1:(#65), No.2:(1.2 mm)
Throttle cable play		0.5–1.0 mm (0.02–0.04 in)	←
Choke cable play		0.5–1.0 mm (0.02–0.04 in)	←

CARBURETOR

ITEM		SPECIFICATION	
		E-01,16	
Carburetor type		MIKUNI BS36SS (No.1)	MIKUNI BDS36SS (No.2)
Bore size		36 mm	←
I.D. No.		45C40	←
Idle r/min.		1100±100 r/min.	←
Float height		27.7±1.0 mm (1.09±0.04 in)	9.1±1.0 mm (0.36±0.04 in)
Main jet	(M.J.)	#135	#122.5
Main air jet	(M.A.J.)	1.8 mm	←
Jet needle	(J.N.)	5F108-3rd	5D49-3rd
Needle jet	(N.J.)	P-4	←
Throttle valve	(Th.V.)	#115	←
Pilot jet	(P.J.)	#47.5	#40
By-pass	(B.P.)	0.8 mm x 2PCS	0.8 mm x 3PCS
Pilot outlet	(P.O.)	0.8 mm	1.0 mm
Valve seat	(V.S.)	1.5 mm	←
Starter jet	(G.S.)	#25	#22.5
Pilot screw	(P.S.)	(PRE-SET) 1½ turns back	(PRE-SET) 1⅛ turns back
Pilot air jet	(P.A.J.)	No.1:(#70), No.2:(2.0 mm)	No.1:(#65), No.2:(1.2 mm)
Throttle cable play		0.5–1.0 mm (0.02–0.04 in)	←
Choke cable play		0.5–1.0 mm (0.02–0.04 in)	←

CARBURETOR

ITEM	SPECIFICATION	
	E-22,24,39	
Carburetor type	MIKUNI BS36SS (No.1)	MIKUNI BDS36SS (No.2)
Bore size	36 mm	←
I.D. No.	45C50	←
Idle r/min.	1100±100 r/min.	←

ITEM		SPECIFICATION	
		E-22,24,39	
Float height		27.7 ± 1.0 mm (1.09 ± 0.04 in)	9.1 ± 1.0 mm (0.36 ± 0.04 in)
Main jet	(M.J.)	#132.5	#120
Main air jet	(M.A.J.)	1.8 mm	←
Jet needle	(J.N.)	5F108-3rd	5D49-3rd
Needle jet	(N.J.)	P-4	←
Throttle valve	(Th.V.)	#115	←
Pilot jet	(P.J.)	#47.5	#40
By-pass	(B.P.)	0.8 mm x 2PCS	0.8 mm x 3PCS
Pilot outlet	(P.O.)	0.8 mm	1.0 mm
Valve seat	(V.S.)	1.5 mm	←
Starter jet	(G.S.)	#25	#22.5
Pilot screw	(P.S.)	(PRE-SET) 1⅛ turns back	(PRE-SET) 1 turn back
Pilot air jet	(P.A.J.)	No.1:(#70), No.2:(2.0 mm)	No.1:(#65), No.2:(1.2 mm)
Throttle cable play		0.5—1.0 mm (0.02—0.04 in)	←
Choke cable play		0.5—1.0 mm (0.02—0.04 in)	←

CARBURETOR

ITEM		SPECIFICATION	
		U-type of E-22	
Carburetor type		MIKUNI BS36SS (No.1)	MIKUNI BDS36SS (No.2)
Bore size		36 mm	←
I.D. No.		45C60	←
Idle r/min.		1100 ± 100 r/min.	←
Float height		27.7 ± 1.0 mm (1.09 ± 0.04 in)	9.1 ± 1.0 mm (0.36 ± 0.04 in)
Main jet	(M.J.)	#135	#122.5
Main air jet	(M.A.J.)	1.8 mm	←
Jet needle	(J.N.)	5F108-3rd	5D49-3rd
Needle jet	(N.J.)	P-4	P-6
Throttle valve	(Th.V.)	#115	←
Pilot jet	(P.J.)	#47.5	#40
By-pass	(B.P.)	0.8 mm x 2PCS	0.8 mm x 3PCS
Pilot outlet	(P.O.)	0.8 mm	1.0 mm
Valve seat	(V.S.)	1.5 mm	←
Starter jet	(G.S.)	#25	#22.5
Pilot screw	(P.S.)	(PRE-SET) 1⅛ turns back	(PRE-SET) 1 1/16 turns back
Pilot air jet	(P.A.J.)	No.1:(#70), No.2:(2.0 mm)	No.1:(#65), No.2:(1.2 mm)
Throttle cable play		0.5—1.0 mm (0.02—0.04 in)	←
Choke cable play		0.5—1.0 mm (0.02—0.04 in)	←

CARBURETOR

ITEM		SPECIFICATION	
		E-17	
Carburetor type		MIKUNI BS36SS (No.1)	MIKUNI BDS36SS (No.2)
Bore size		36 mm	←
I.D. No.		45C70	←
Idle r/min.		1100 ± 100 r/min.	←
Float height		27.7 ± 1.0 mm (1.09 ± 0.04 in)	9.1 ± 1.0 mm (0.36 ± 0.04 in)
Main jet	(M.J.)	#135	#122.5
Main air jet	(M.A.J.)	1.8 mm	←
Jet needle	(J.N.)	5F108-3rd	5D49-3rd
Needle jet	(N.J.)	P-4	P-6
Throttle valve	(Th.V.)	#115	←
Pilot jet	(P.J.)	#47.5	#40
By-pass	(B.P.)	0.8 mm x 2PCS	0.8 mm x 3PCS
Pilot outlet	(P.O.)	0.8 mm	1.0 mm
Valve seat	(V.S.)	1.5 mm	←
Starter jet	(G.S.)	#25	#22.5
Pilot screw	(P.S.)	(PRE-SET) 1⅜ turns back	(PRE-SET) 1¼ turns back
Pilot air jet	(P.A.J.)	No.1:(#70), No.2:(2.0 mm)	No.1:(#65), No.2:(1.2 mm)
Throttle cable play		0.5 – 1.0 mm (0.02 – 0.04 in)	←
Choke cable play		0.5 – 1.0 mm (0.02 – 0.04 in)	←

ELECTRICAL

Unit: mm (in)

ITEM		SPECIFICATION	NOTE
Ignition timing		T.D.C. Below 1 625 r/min. and 30° B.T.D.C. Above 3 500 r/min.	E-18 model
		5° B.T.D.C. Below 1 650 r/min. and 30° B.T.D.C. Above 3 500 r/min.	U.S.A. model
		5° B.T.D.C. Below 1 625 r/min. and 32° B.T.D.C. Above 3 750 r/min.	Other models
Firing order		1-2	
Spark plug	Type	N.D.: DPR8EA-9 N.G.K.: X24EPR-U9	
	Gap	0.8 – 0.9 (0.031 – 0.035)	
Spark performance		Over 8 (0.3) at 1 atm.	
Signal coil resistance		Approx. 117 Ω (G – Bl)	U.S.A. model
		Approx. 230 Ω (G – Bl)	Other models
Ignition coil resistance	Primary	2 – 6 Ω	⊕ tap – ⊖ tap
	Secondary	19 – 27 kΩ	Plug cap – ⊕ tap
Generator no-load voltage (When engine cold)		More than 65V (AC) at 5 000 r/min.	U.S.A. model
		More than 75 V (AC) at 5 000 r/min.	Other models
Regulated voltage		13.5 – 15.5 V at 5 000 r/min.	
Starter motor brush length		Limit: 9 (0.35)	N.D.

ITEM	STANDARD		NOTE
Commutator under-cut	Limit: 0.2 (0.008)		
Starter relay resistance	2–6 Ω		
Battery	Type designation	YB16B-A	
	Capacity	12V57.6kC (16Ah)/10HR	
	Standard electrolyte S.G.	1.28 at 20°C (68°F)	
Fuse size	Headlight	10 A	
	Ignition/Fan	10 A	
	Signal	10 A	
	Main	25 A	

WATTAGE

Unit:W

ITEM		SPECIFICATION
Headlight	HI	60
	LO	55
Tail/Brake light		5/21
Turn signal light		21
Speedometer light		3.4
Tachometer light		1.7 x 2PCS
Water temp. indicator light		3
Turn signal indicator light		3.4
High beam indicator light		1.7
Neutral indicator light		3.4
Oil pressure indicator light		3.4
License light		5
Position light		4 (Execpt E-03,28,33 models)

BRAKE + WHEEL

Unit: mm (in)

ITEM	STANDARD		LIMIT
Rear brake pedal height	35 (1.4)		—
Brake disc thickness	Front	5.5 ± 0.2 (0.197 ± 0.008)	5.0 (0.20)
	Rear	6.0 ± 0.2 (0.236 ± 0.008)	5.5 (0.22)
Brake disc runout	Front	—	0.30 (0.012)
	Rear		
Master cylinder bore	Front	12.700–12.743 (0.5000–0.5017)	—
	Rear		
Master cylinder piston diam.	Front	12.657–12.684 (0.4983–0.4993)	—
	Rear		
Brake caliper cylinder bore	Front	33.960–34.036 (1.3370–1.3400)	—
		27.000–27.076 (1.0630–1.0660)	—
	Rear	42.850–42.926 (1.6870–1.6900)	—

ITEM		STANDARD	NOTE
Brake caliper piston diam.	Front	33.884–33.934 (1.3340–1.3360)	—
		26.920–26.970 (1.0598–1.0618)	—
	Rear	42.770–42.820 (1.6839–1.6858)	—
Wheel rim runout	Axial	—	2.0 (0.08)
	Radial	—	2.0 (0.08)
Wheel axle runout	Front	—	0.25 (0.010)
	Rear	—	0.25 (0.010)
Tire size	Front	110/80-18 58H	—
	Rear	150/70-B17 69H	—
Tire tread depth	Front	—	1.6 (0.06)
	Rear	—	2.0 (0.08)

SUSPENSION

Unit: mm (in)

ITEM	STANDARD	LIMIT	NOTE
Front fork stroke	150 (5.9)	—	
Front fork spring free length	—	353 (13.9)	E-01,03,28,33 models
	—	348 (13.7)	Other models
Front fork oil level	142 (5.59)	—	E-01,03,28,33 models
	138 (5.43)	—	Other models
Rear wheel travel	118 (4.64)	—	E-01,03,28,33 models
	119 (4.68)	—	Other models
Swingarm pivot shaft runout	—	0.30 (0.012)	

TIRE PRESSURE

COLD INFLATION TIRE PRESSURE	NORMAL RIDING					
	SOLO RIDING			DUAL RIDING		
	kPa	kg/cm²	psi	kPa	kg/cm²	psi
FRONT	225	2.25	33	225	2.25	33
REAR	250	2.50	36	280	2.80	41

FUEL + OIL + COOLANT

ITEM	SPECIFICATION		NOTE
Fuel type	Use only unleaded gasoline of at least 87 pump octane ($\frac{R+M}{2}$) or 91 octane or higher rated by the research method. Gasoline containing MTBE (Methyl Tertiary Butyl Ether), less than 10% ethanol, or less than 5% methanol with appropriate cosolvents and corrosion inhibitor is permissible.		U.S.A.model
	Use only unleaded gasoline of at least 87 pump octane ($\frac{R+M}{2}$ method) or 91 octane or higher rated by the Research Method.		Canada model
	Gasoline used should be graded 85-95 octane or higher. An unleaded gasoline is recommended.		Other models
Fuel tank including reserve	18.0 L (4.8/4.0 US/Imp gal		California model only
	19.0 L (5.0/4.2 US/Imp gal)		Other models
reserve	4.0 L (1.1/0.9 US/Imp gal)		
Engine oil type	SAE 10W/40, API SE or SF		
Engine oil capacity	Change	2 400 ml (2.5/2.1 US/Imp qt)	
	Filter change	2 800 ml (3.0/2.5 US/Imp qt)	
	Overhaul	3 300 ml (3.5/2.9 US/Imp qt)	
Front fork oil type	Fork oil #10		
Front fork oil capacity (each leg)	388 ml (13.1/13.7 US/Imp oz)		E-01,03,28,33, models
	392 ml (13.2/13.8 US/Imp oz)		Other models
Final bevel gear oil type	SAE 90 hypoid gear oil with GL-5 under API classification		
Final bevel gear oil capacity	200—220 ml (6.8/7.0—7.4/7.7 US/Imp oz)		
Brake fluid type	DOT4		
Coolant capacity	1 700 ml (1.8/1.5 US/Imp qt)		

THERMOSTAT + RADIATOR + FAN

ITEM		STANDARD	LIMIT
Thermostat valve opening temperature		75.0 ± 1.5°C (167 ± 2.7°F)	—
Thermostat valve lift		Over 6 mm (0.24 in) at 90°C (194°F)	—
Radiator cap valve release pressure		1.1 ± 0.15 kg/cm² (15.6 ± 2.1 psi, 110 ± 15 kPa)	—
Electric fan thermo-switch operating temperature	ON	Approx. 105° C (221°F)	—
	OFF	Approx. 100°C (212°F)	—

EMISSION CONTROL INFORMATION

CONTENTS

EMISSION CONTROL CARBURETOR COMPONENTS

VX800 motorcycles are equipped with precision, manufactured carburetors for emission level control. These carburetors require special mixture control components and other precision adjustments to function properly.

There are several carburetor mixture control components in each carburetor assembly. Three (3) of these components are machined to much closer tolerances than standard machined carburetor jets. These three (3) particular jets — MAIN JET, NEEDLE JET, PILOT JET — must not be replaced by standard jets. To aid in identifying these three (3) jets a different design of letter and number are used. If replacement of these close tolerance jets becomes necessary, be sure to replace them with the same type close tolerance jets marked as in the examples shown below.

The jet needle is also of special manufacture. Only one clip position is provided on the jet needle. If replacement becomes necessary the jet needle may only be replaced with an equivalent performing replacement component. Suzuki recommends that Genuine Suzuki Parts be utilized whenever possible for the best possible performance and durability.

Conventional Figures Used on Standard Tolerance Jet Components	1	2	3	4	5	6	7	8	9	0
Emission Type Figures Used On Close Tolerance jet Components	1	2	3	4	5	6	7	8	9	0

The carburetor specification for the emission-controlled VX800 are as follows.

Carburetor I.D. No.	Main Jet	Needle Jet	Jet Needle	Pilot Jet	Pilot Screw
45C20 (California model)	No. 1: #132.5	No. 1: P-7	No. 1: 5E72-1st	No. 1: #45	PRE-SET DO NOT ADJUST
45C10 (Other state models)	No. 2: #122.5	No. 2: P-2	No. 2: 5D47-1st	No. 2: #40	

The pilot screw is pre-set by the factory utilizing specialized testing and adjusting procedures. The pilot screw is not adustable as the idle circuit is ''sealed'' after factory adjustment. Adjusting, interferring with, improper replacement, or resetting of any of the carburetor components may adversely affect carburetor performance and cause the motorycle to exceed the exhaust emission level limits. If persons, who are unaware of these special carburetor servicing requirements tamper with the carburetors the Suzuki dealer should restore the carburetors to their original condition or if unable to effect repairs, contact the distributors representative for further technical information and assistance.

EVAPORATIVE EMISSION CONTROL SYSTEM
(Only for California model)

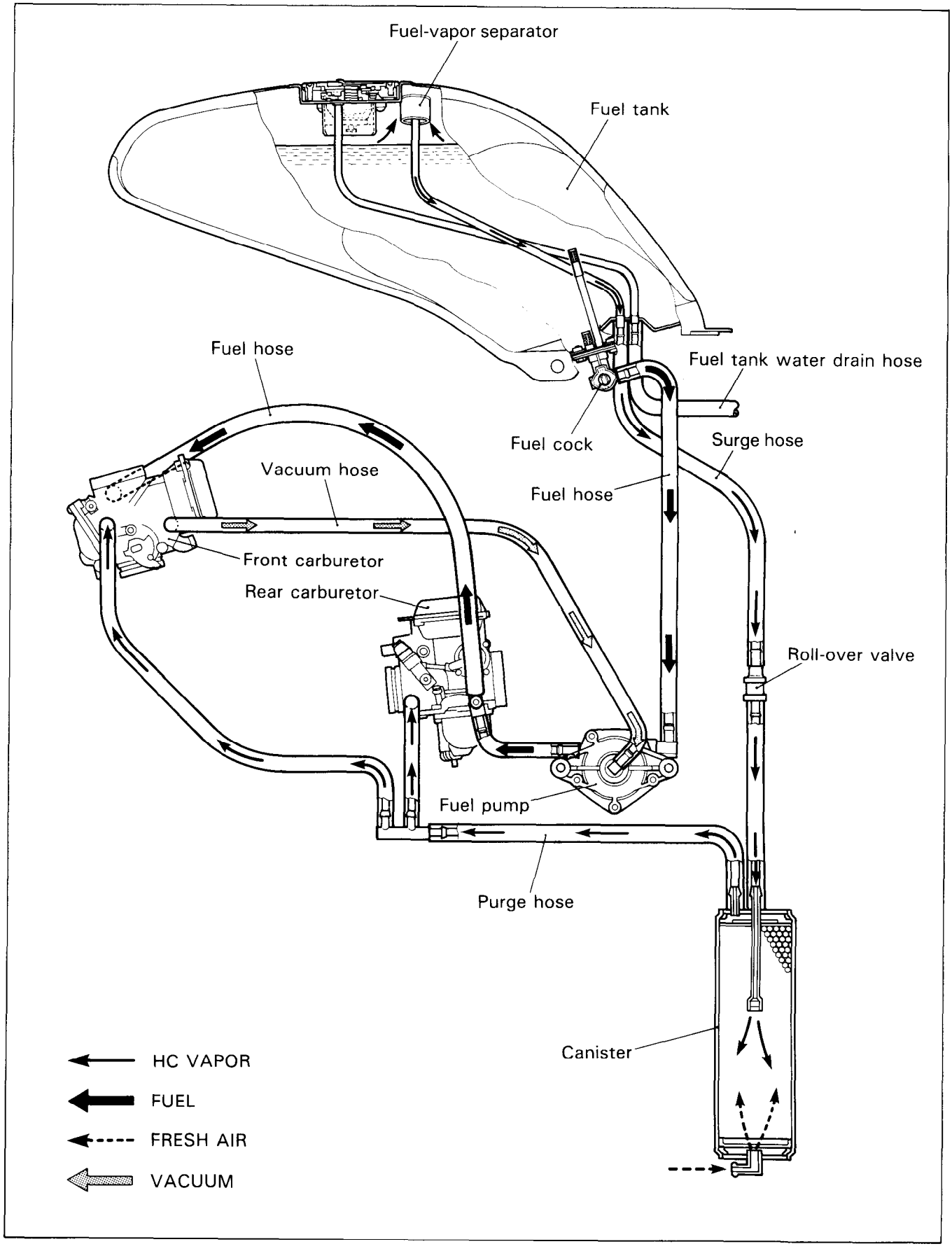

CANISTER HOSE ROUTING
(Only for California model)

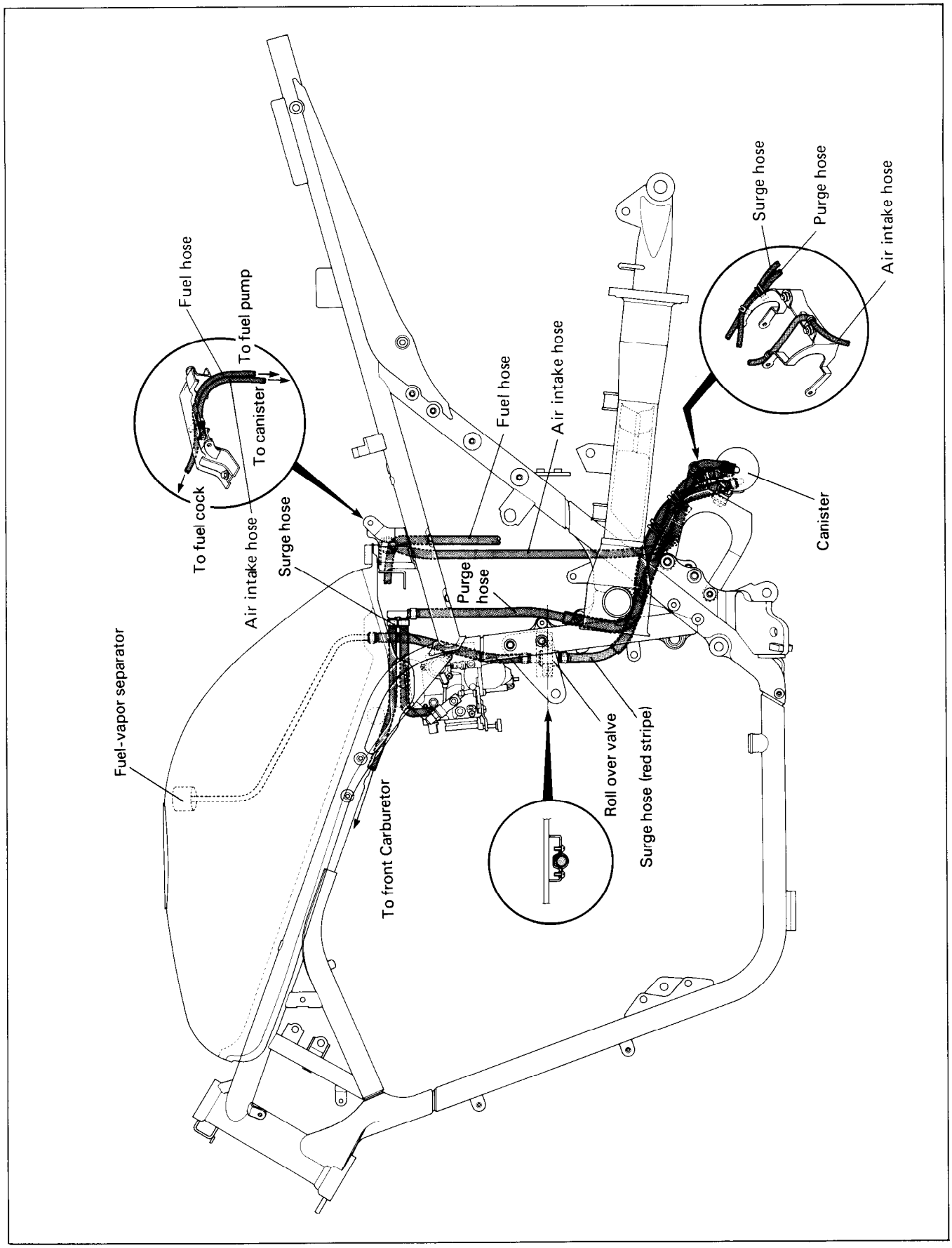

VX800M ('91-MODEL)

CONTENTS

SPECIFICATIONS

DIMENSIONS AND DRY MASS

Overall length	2280 mm (89.8 in)	E15, 16, 17, 22, 25, 39
	2355 mm (92.7 in)	E18
	2265 mm	E03, 33
	2255 mm (88.8 in)	Others
Overall width	805 mm (31.7 in)	
Overall height	1115 mm (43.9 in)	E03, 28, 33
	1085 mm (42.7 in)	Others
Wheelbase	1565 mm (61.6 in)	E03, 33
	1555 mm (61.2 in)	Others
Ground clearance	145 mm (5.7 in)	
Seat height	800 mm (31.5 in)	E01, 03, 28, 33
	795 mm (31.3 in)	Others
Dry mass	214 kg (472 lbs)	E33
	213 kg (470 lbs)	Others

ENGINE

Type	Four-stroke, water-cooled, OHC, TSCC, 45° V-twin
Valve clearance	0.08 – 0.13 mm (0.003 – 0.005 in)
Number of cylinders	2
Bore	83.0 mm (3.268 in)
Stroke	74.4 mm (2.929 in)
Piston displacement	805 cm^3 (49.12 cu. in)
Compression ratio	10.0 : 1
Carburetor, Front	MIKUNI BDS36SS, single
Rear	MIKUNI BS36SS, single
Air cleaner	Non woven fabric element
Starter system	Electric starter motor
Lubrication system	Wet sump

TRANSMISSION

Clutch	Wet multi-plate type
Transmission	5-speed constant mesh
Gearshift pattern	1-down, 4-up
Primary reduction ratio	1.690 (71/42)
Gear ratios, Low	2.285 (32/14)
2nd	1.631 (31/19)
3rd	1.227 (27/22)
4th	1.000 (25/25)
Top	0.851 (23/27)
Secondary reduction ratio	1.133 (17/15 x 30/30) E03, 33
	1.096 (17/15 x 30/31) Others
Final reduction ratio	3.090 (34/11)
Drive system	Shaft drive

CHASSIS

Front suspension	Telescopic, coil spring, oil damped
Rear suspension	Swingarm, coil spring, gas/oil damped, spring preload 5-way adjustable; rebound damping force 4-way adjustable . . . E01, 03, 28, 33; compression damping force 4-way adjustable and rebound damping force 4-way adjustable . . . Others
Front suspension stroke	150 mm (5.9 in)
Rear wheel travel	118 mm (4.6 in) . . . E01, 03, 28, 33 119 mm (4.7 in) . . . Others
Caster	59°
Trail	143 mm (5.63 in) . . . E01, 28, 129 mm . . . E03,33 142 mm (5.59 in) . . . Others
Steering angle	35° (right & left)
Turning radius	3.2 m (10.5 ft)
Front brake	Disc
Rear brake	Disc
Front tire size	110/80-18 58H, tubeless
Rear tire size	150/70-17 69H, tubeless . . . E03,28,33 150/70B-17 69H, tubeless . . . Others

ELECTRICAL

Ignition type	Fully transistorized
Ignition timing	5° B.T.D.C. below 1650 r/min and 30° B.T.D.C. above 3500 r/min . . . E03, 33 5° B.T.D.C. below 1625 r/min. and 35° B.T.D.C. above 3500 r/min . . . E-18 5° B.T.D.C. below 1625 r/min and 32° B.T.D.C. above 3750 r/min . . . Others
Spark plug	NGK DPR8EA-9 or NIPPON DENSO X24EPR-U9
Battery	12V 57.6 kC (16Ah)/10HR
Fuse	25/10/10/10A
Headlight	12V 60/55W
Position light	12V 4W . . . except E03, 28, 33
Turn signal light	12V 21W
Tail/Brake light	12V 5/21W
License plate light	12V 5W
Speedometer light	12V 3.4W
Tachometer light	12V 1.7W
Neutral indicator light	12V 3.4W
High beam indicator light	12V 1.7W
Turn signal light indicator light	12V 3.4W
Oil pressure indicator light	12V 3.4W
Coolant temperature check light	12V 3W
Speedometer light	12V 3.4W
Tachometer light	12V 1.7W (x2pcs.)

SERVICE DATA

VALVE + GUIDE

Unit: mm (in)

ITEM	STANDARD		LIMIT
Valve diam.	IN.	30 (1.18)	——
	EX.	26 (1.02)	——
Valve lift	IN.	8.5 (0.33)	——
	EX.	8.5 (0.33)	——
Valve clearance (when cold)	IN. & EX	0.08–0.13 (0.003–0.005)	——
Valve guide to valve stem clearance	IN.	0.020–0.047 (0.0008–0.0019)	0.35 (0.014)
	EX.	0.035–0.062 (0.0014–0.0024)	0.35 (0.014)
Valve guide I.D.	IN. & EX.	5.500–5.512 (0.2165–0.2170)	——
Valve stem O.D.	IN.	5.465–5.480 (0.2152–0.2157)	——
	EX.	5.450–5.465 (0.2146–0.2152)	——
Valve stem runout	IN. & EX.	——	0.05 (0.002)
Valve head thickness	IN. & EX.	——	0.5 (0.02)
Valve stem end length	IN. & EX.	——	4.0 (0.16)
Valve seat width	IN. & EX.	0.9–1.1 (0.035–0.043)	——
Valve head radial runout	IN. & EX.	——	0.03 (0.001)
Valve spring free length	INNER	——	38.3 (1.51)
	OUTER	——	40.1 (1.58)
Valve spring tension	INNER	6.51–7.49 kg (14.35–16.51 lbs) at length 32.5 mm (1.28 in)	——
	OUTER	12.09–13.91 kg (26.65–30.67 lbs) at length 36.0 mm (1.42 in)	——

CAMSHAFT + CYLINDER HEAD

Unit: mm (in)

ITEM	STANDARD		LIMIT
Cam height	IN.	35.954–35.994 (1.4155–1.4171)	35.660 (1.4039)
	EX.	36.919–36.959 (1.4535–1.4551)	36.620 (1.4417)
Camshaft journal oil clearance	0.032–0.066 (0.0013–0.0026)		0.150 (0.0059)

ITEM	STANDARD		LIMIT
Camshaft journal holder I.D.	No.1 Left side No.2 Right side	20.012–20.025 (0.7879–0.7884)	—
	No.1 Right side No.2 Left side	25.012–25.025 (0.9847–0.9852)	—
Camshaft journal O.D.	No.1 Left side No.2 Right side	19.959–19.980 (0.7858–0.7866)	—
	No.1 Right side No.2 Left side	24.959–24.980 (0.9826–0.9835)	—
Camshaft runout	—		0.10 (0.004)
Cam chain 20-pitch length	—		128.9 (5.07)
Rocker arm I.D.	IN. & EX.	12.000–12.018 (0.4724–0.4731)	—
Rocker arm shaft O.D.	IN. & EX.	11.966–11.984 (0.4711–0.4718)	—
Cylinder head distortion	—		0.05 (0.002)
Cylinder head cover distortion	—		0.05 (0.002)

CYLINDER + PISTON + PISTON RING

Unit: mm (in)

ITEM	STANDARD			LIMIT
Compression pressure	1 300–1 600 kPa (13–16 kg/cm² 185–228 psi)			1100 kPa (11 kg/cm² 156 psi)
Compression pressure difference	—			200 kPa (2 kg/cm² 28 psi)
Piston to cylinder clearance	0.045–0.055 (0.0018–0.0022)			0.120 (0.0047)
Cylinder bore	83.000–83.015 (3.2677–3.2683)			83.085 (3.2711)
Piston diam.	82.950–82.965 (3.2657–3.2663) Measure at 15 mm (0.6 in) from the skirt end.			82.880 (3.2630)
Cylinder distortion	—			0.05 (0.002)
Piston ring free end gap	1st	R	Approx. 10.5 (0.413)	8.4 (0.331)
	2nd	R	Approx. 11.8 (0.465)	9.4 (0.370)
Piston ring end gap	1st		0.20–0.35 (0.008–0.014)	0.70 (0.028)
	2nd		0.20–0.35 (0.008–0.014)	0.70 (0.028)
Piston ring groove clearance	1st		—	0.180 (0.007)
	2nd		—	0.150 (0.006)

ITEM	STANDARD		LIMIT
Piston ring groove width	1st	1.01–1.03 (0.0398–0.0406)	——
	2nd	1.21–1.23 (0.0476–0.0484)	——
	Oil	2.51–2.53 (0.0988–0.0996)	——
Piston ring thickness	1st	0.970–0.990 (0.0382–0.0390)	——
	2nd	1.170–1.190 (0.0461–0.0469)	——
Piston pin bore	20.002–20.008 (0.7875–0.7877)		20.030 (0.7886)
Piston pin O.D.	19.996–20.000 (0.7827–0.7874)		19.980 (0.7866)

CONROD + CRANKSHAFT

Unit: mm (in)

ITEM	STANDARD	LIMIT
Corod small end I.D.	20.010–20.018 (0.7878–0.7881)	20.040 (0.7890)
Conrod big end side clearance	0.10–0.20 (0.004–0.010)	0.30 (0.012)
Conrod big end width	21.95–22.00 (0.864–0.866)	——
Crank pin width	22.10–22.15 (0.870–0.872)	——
Conrod big end oil clearance	0.024–0.042 (0.0009–0.0017)	0.080 (0.0031)
Crank pin O.D.	40.982–41.000 (1.6135–1.6142)	——
Crankshaft journal oil clearance	0.020–0.050 (0.0008–0.0020)	0.080 (0.0031)
Crankshaft journal O.D.	47.965–47.980 (1.8884–1.8890)	——
Crankshaft thrust bearing thickness	1.925–2.175 (0.0758–0.0856)	——
Crankshaft thrust clearance	0.05–0.10 (0.0020–0.0040)	——
Crankshaft runout	——	0.05 (0.002)

OIL PUMP

ITEM	STANDARD	LIMIT
Oil pump reduction ratio	1.859 (71/42 x 32/29)	——
Oil pressure (at 60°C,140°F)	Above 350 kPa (3.5 kg/cm², 50 psi) Below 650 kPa (6.5 kg/cm², 92 psi) at 3 000 r/min.	——

CLUTCH

Unit: mm (in)

ITEM	STANDARD		LIMIT
Clutch cable play	4 (0.2)		—
Clutch release screw	¼ — ½ turn back		—
Drive plate thickness	No.1	2.65—2.95 (0.104—0.116)	2.35 (0.093)
	No.2	3.45—3.55 (0.136—0.140)	3.15 (0.124)
Drive plate claw width	15.8—16.0 (0.62—0.63)		15.0 (0.59)
Driven plate thickness	1.60±0.05 (0.063±0.002)		—
Driven plate distortion	—		0.10 (0.004)
Clutch spring free length	No.1	—	24.6 (0.97)
	No.2	—	23.3 (0.92)

TRANSMISSION

Unit: mm (in) Except ratio

ITEM		STANDARD		LIMIT
Primary reduction ratio		1.690 (71/42)		—
Secondary reduction ratio		U.S.A. model	1.133 (30/30 x 17/15)	—
		Other models	1.096 (30/31 x 17/15)	—
Final reduction ratio		3.090 (34/11)		—
Gear ratios	Low	2.285 (32/14)		—
	2nd	1.631 (31/19)		—
	3rd	1.227 (27/22)		—
	4th	1.000 (25/25)		—
	Top	0.851 (23/27)		—
Shift fork to groove clearance		No.1	0.10—0.30 (0.004—0.012)	0.50 (0.020)
		No.2	0.10—0.30 (0.004—0.012)	0.50 (0.020)
Shift fork groove width		No.1	5.50—5.60 (0.217—0.220)	—
		No.2	4.50—4.60 (0.177—0.181)	—
Shift fork thickness		No.1	5.30—5.40 (0.209—0.213)	—
		No.2	4.30—4.40 (0.169—0.173)	—

SHAFT DRIVE

Unit: mm (in)

ITEM	STANDARD		LIMIT
Secondary bevel gear backlash	0.05–0.32 (0.002–0.013)		——
Final bevel gear backlash	Drive side	0.03–0.064 (0.001–0.025)	——

CARBURETOR

ITEM	SPECIFICATION	
	E-02,04,16,21,25,28,34	
Carburetor type	MIKUNI BS36SS (No.1)	MIKUNI BDS36SS (No.2)
Bore size	36 mm	←
I.D. No.	45C00	←
Idle r/min.	1100 ± 100 r/min.	←
Float height	27.7 ± 1.0 mm (1.09 ± 0.04 in)	9.1 ± 1.0 mm (0.36 ± 0.04 in)
Main jet (M.J.)	#132.5	#120
Main air jet (M.A.J.)	1.8 mm	←
Jet needle (J.N.)	5F108-3rd	5D49-3rd
Needle jet (N.J.)	P-4	←
Throttle valve (Th.V.)	#115	←
Pilot jet (P.J.)	#47.5	#40
By-pass (B.P.)	0.8 mm x 2PCS	0.8 mm x 3PCS
Pilot outlet (P.O.)	0.8 mm	1.0 mm
Valve seat (V.S.)	1.5 mm	←
Starter jet (G.S.)	#25	#22.5
Pilot screw (P.S.)	(PRE-SET) 1⅜ turns back	(PRE-SET) 1⅛ turns back
Pilot air jet (P.A.J.)	No.1:(#70), No.2:(2.0 mm)	No.1:(#65), No.2:(1.2 mm)
Throttle cable play	0.5–1.0 mm (0.02–0.04 in)	←
Choke cable play	0.5–1.0 mm (0.02–0.04 in)	←

CARBURETOR

ITEM	SPECIFICATION	
	E-03	
Carburetor type	MIKUNI BS36SS (No.1)	MIKUNI BDS36SS (No.2)
Bore size	36 mm	←
I.D. No.	45C10	←
Idle r/min.	1200 ± 50 r/min.	←
Float height	27.7 ± 1.0 mm (1.09 ± 0.04 in)	9.1 ± 1.0 mm (0.36 ± 0.04 in)
Main jet (M.J.)	#132.5	#122.5
Main air jet (M.A.J.)	1.8 mm	←
Jet needle (J.N.)	5E72-1st	5D47-1st
Needle jet (N.J.)	P-7	P-2
Throttle valve (Th.V.)	#125	#110
Pilot jet (P.J.)	#45	#40
By-pass (B.P.)	0.8 mm x 2PCS	0.8 mm x 3PCS
Pilot outlet (P.O.)	0.8 mm	1.0 mm

ITEM		SPECIFICATION	
		E-03	
Valve seat	(V.S.)	1.5 mm	←
Starter jet	(G.S.)	#25	#22.5
Pilot screw	(P.S.)	(PRE-SET)	(PRE-SET)
Pilot air jet	(P.A.J)	No.1:(#65), No.2:(2.0 mm)	No.1:(#65), No.2:(1.2 mm)
Throttle cable play		0.5–1.0 mm (0.02–0.04 in)	←
Choke cable play		0.5–1.0 mm (0.02–0.04 in)	←

CARBURETOR

ITEM		SPECIFICATION	
		E-33	
Carburetor type		MIKUNI BS36SS (No.1)	MIKUNI BDS36SS (No.2)
Bore size		36 mm	←
I.D. No.		45C20	←
Idle r/min.		1200±50 r/min.	←
Float height		27.7±1.0 mm (1.09±0.04 in)	9.1±1.0 mm (0.36±0.04 in)
Main jet	(M.J.)	#132.5	#122.5
Main air jet	(M.A.J.)	1.8 mm	←
Jet needle	(J.N.)	5E72-1st	5D47-1st
Needle jet	(N.J.)	P-7	P-2
Throttle valve	(Th.V.)	#125	#110
Pilot jet	(P.J.)	#45	#40
By-pass	(B.P.)	0.8 mm x 2PCS	0.8 mm x 3PCS
Pilot outlet	(P.O.)	0.8 mm	1.0 mm
Valve seat	(V.S.)	1.5 mm	←
Starter jet	(G.S.)	#25	#22.5
Pilot screw	(P.S.)	(PRE-SET)	(PRE-SET)
Pilot air jet	(P.A.J.)	No.1:(#65), No.2:(2.0 mm)	No.1:(#65), No.2:(1.2 mm)
Throttle cable play		0.5–1.0 mm (0.02–0.04 in)	←
Choke cable play		0.5–1.0 mm (0.02–0.04 in)	←

CARBURETOR

ITEM		SPECIFICATION	
		E-18	
Carburetor type		MIKUNI BS36SS (No.1)	MIKUNI BDS36SS (No.2)
Bore size		36 mm	←
I.D. No.		45C30	←
Idle r/min.		$1200 \pm {}^{100}_{50}$ r/min.	←
Float height		27.7±1.0 mm (1.09±0.04 in)	9.1±1.0 mm (0.36±0.04 in)
Main jet	(M.J.)	#135	#125
Main air jet	(M.A.J.)	1.8 mm	←
Jet needle	(J.N.)	5F107-3rd	5D48-3rd

ITEM		SPECIFICATION	
		E-18	
Needle jet	(N.J.)	P-4	P-2
Throttle valve	(Th.V.)	#115	←
Pilot jet	(P.J.)	#45	#40
By-pass	(B.P.)	0.8 mm x 2PCS	0.8 mm x 3PCS
Pilot outlet	(P.O.)	0.8 mm	1.0 mm
Valve seat	(V.S.)	1.5 mm	←
Starter jet	(G.S.)	#25	#22.5
Pilot screw	(P.S.)	(PRE-SET) 2 turns back	(PRE-SET) 1¼ turns back
Pilot air jet	(P.A.J.)	No.1:(#55), No.2:(1.85 mm)	No.1:(#65), No.2:(1.2 mm)
Throttle cable play		0.5–1.0 mm (0.02–0.04 in)	←
Choke cable play		0.5–1.0 mm (0.02–0.04 in)	←

CARBURETOR

ITEM		SPECIFICATION	
		E-01	
Carburetor type		MIKUNI BS36SS (No.1)	MIKUNI BDS36SS (No.2)
Bore size		36 mm	←
I.D. No.		45C40	←
Idle r/min.		1100±100 r/min.	←
Float height		27.7±1.0 mm (1.09±0.04 in)	9.1±1.0 mm (0.36±0.04 in)
Main jet	(M.J.)	#135	#122.5
Main air jet	(M.A.J.)	1.8 mm	←
Jet needle	(J.N.)	5F108-3rd	5D49-3rd
Needle jet	(N.J.)	P-4	←
Throttle valve	(Th.V.)	#115	←
Pilot jet	(P.J.)	#47.5	#40
By-pass	(B.P.)	0.8 mm x 2PCS	0.8 mm x 3PCS
Pilot outlet	(P.O.)	0.8 mm	1.0 mm
Valve seat	(V.S.)	1.5 mm	←
Starter jet	(G.S.)	#25	#22.5
Pilot screw	(P.S.)	(PRE-SET) 1½ turns back	(PRE-SET) 1⅛ turns back
Pilot air jet	(P.A.J.)	No.1:(#70), No.2:(2.0 mm)	No.1:(#65), No.2:(1.2 mm)
Throttle cable play		0.5–1.0 mm (0.02–0.04 in)	←
Choke cable play		0.5–1.0 mm (0.02–0.04 in)	←

CARBURETOR

ITEM	SPECIFICATION	
	E-15,22,24,39	
Carburetor type	MIKUNI BS36SS (No.1)	MIKUNI BDS36SS (No.2)
Bore size	36 mm	←
I.D. No.	45C50	←
Idle r/min.	1100±100 r/min.	←

ITEM		SPECIFICATION	
		E-15,22,24,39	
Float height		27.7±1.0 mm (1.09±0.04 in)	9.1±1.0 mm (0.36±0.04 in)
Main jet	(M.J.)	#132.5	#120
Main air jet	(M.A.J.)	1.8 mm	←
Jet needle	(J.N.)	5F108-3rd	5D49-3rd
Needle jet	(N.J.)	P-4	←
Throttle valve	(Th.V.)	#115	←
Pilot jet	(P.J.)	#47.5	#40
By-pass	(B.P.)	0.8 mm x 2PCS	0.8 mm x 3PCS
Pilot outlet	(P.O.)	0.8 mm	1.0 mm
Valve seat	(V.S.)	1.5 mm	←
Starter jet	(G.S.)	#25	#22.5
Pilot screw	(P.S.)	(PRE-SET) 1⅛ turns back	(PRE-SET) 1 turn back
Pilot air jet	(P.A.J.)	No.1:(#70), No.2:(2.0 mm)	No.1:(#65), No.2:(1.2 mm)
Throttle cable play		0.5–1.0 mm (0.02–0.04 in)	←
Choke cable play		0.5–1.0 mm (0.02–0.04 in)	←

CARBURETOR

ITEM		SPECIFICATION	
		U-type of E-22	
Carburetor type		MIKUNI BS36SS (No.1)	MIKUNI BDS36SS (No.2)
Bore size		36 mm	←
I.D. No.		45C60	←
Idle r/min.		1100±100 r/min.	←
Float height		27.7±1.0 mm (1.09±0.04 in)	9.1±1.0 mm (0.36±0.04 in)
Main jet	(M.J.)	#135	#122.5
Main air jet	(M.A.J.)	1.8 mm	←
Jet needle	(J.N.)	5F108-3rd	5D49-3rd
Needle jet	(N.J.)	P-4	P-6
Throttle valve	(Th.V.)	#115	←
Pilot jet	(P.J.)	#47.5	#40
By-pass	(B.P.)	0.8 mm x 2PCS	0.8 mm x 3PCS
Pilot outlet	(P.O.)	0.8 mm	1.0 mm
Valve seat	(V.S.)	1.5 mm	←
Starter jet	(G.S.)	#25	#22.5
Pilot screw	(P.S.)	(PRE-SET) 1⅛ turns back	(PRE-SET) 1 1/16 turns back
Pilot air jet	(P.A.J.)	No.1:(#70), No.2:(2.0 mm)	No.1:(#65), No.2:(1.2 mm)
Throttle cable play		0.5–1.0 mm (0.02–0.04 in)	←
Choke cable play		0.5–1.0 mm (0.02–0.04 in)	←

CARBURETOR

ITEM	SPECIFICATION	
	E-17	
Carburetor type	MIKUNI BS36SS (No.1)	MIKUNI BDS36SS (No.2)
Bore size	36 mm	←
I.D. No.	45C70	←
Idle r/min.	1100 ± 100 r/min.	←
Float height	27.7 ± 1.0 mm (1.09 ± 0.04 in)	9.1 ± 1.0 mm (0.36 ± 0.04 in)
Main jet (M.J.)	#135	#122.5
Main air jet (M.A.J.)	1.8 mm	←
Jet needle (J.N.)	5F108-3rd	5D49-3rd
Needle jet (N.J.)	P-4	P-6
Throttle valve (Th.V.)	#115	←
Pilot jet (P.J.)	#47.5	#40
By-pass (B.P.)	0.8 mm x 2PCS	0.8 mm x 3PCS
Pilot outlet (P.O.)	0.8 mm	1.0 mm
Valve seat (V.S.)	1.5 mm	←
Starter jet (G.S.)	#25	#22.5
Pilot screw (P.S.)	(PRE-SET) 1⅜ turns back	(PRE-SET) 1¼ turns back
Pilot air jet (P.A.J.)	No.1:(#70), No.2:(2.0 mm)	No.1:(#65), No.2:(1.2 mm)
Throttle cable play	0.5 – 1.0 mm (0.02 – 0.04 in)	←
Choke cable play	0.5 – 1.0 mm (0.02 – 0.04 in)	←

ELECTRICAL

Unit: mm (in)

ITEM	SPECIFICATION		NOTE
Ignition timing	5° B.T.D.C. Below 1 625 r/min. and 35° B.T.D.C. Above 3 500 r/min.		E-18 model
	5° B.T.D.C. Below 1 650 r/min. and 30° B.T.D.C. Above 3 500 r/min.		U.S.A. model
	5° B.T.D.C. Below 1 625 r/min. and 32° B.T.D.C. Above 3 750 r/min.		Other models
Firing order	1·2		
Spark plug	Type	N.D.: DPR8EA-9 N.G.K.: X24EPR-U9	
	Gap	0.8 – 0.9 (0.031 – 0.035)	
Spark performance	Over 8 (0.3) at 1 atm.		
Signal coil resistance	Approx. 117 Ω (G – Bl)		U.S.A. model
	Approx. 230 Ω (G – Bl)		Other models
Ignition coil resistance	Primary	2 – 6 Ω	⊕ tap – ⊖ tap
	Secondary	19 – 27 kΩ	Plug cap – ⊕ tap
Generator no-load voltage (When engine cold)	More than 65V (AC) at 5 000 r/min.		U.S.A. model
	More than 75 V (AC) at 5 000 r/min.		Other models
Regulated voltage	13.5 – 15.5 V at 5 000 r/min.		
Starter motor brush length	Limit: 9 (0.35)		N.D.

ITEM	STANDARD		NOTE
Commutator under-cut	Limit: 0.2 (0.008)		
Starter relay resistance	2–6 Ω		
Battery	Type designation	YB16B-A	
	Capacity	12V57.6kC (16Ah)/10HR	
	Standard electrolyte S.G.	1.28 at 20°C (68°F)	
Fuse size	Headlight	10 A	
	Ignition/Fan	10 A	
	Signal	10 A	
	Main	25 A	

WATTAGE

Unit:W

ITEM		SPECIFICATION
Headlight	HI	60
	LO	55
Tail/Brake light		5/21
Turn signal light		21
Speedometer light		3.4
Tachometer light		1.7 x 2PCS
Water temp. indicator light		3
Turn signal indicator light		3.4
High beam indicator light		1.7
Neutral indicator light		3.4
Oil pressure indicator light		3.4
License light		5
Position light		4 (Execpt E-03,28,33 models)

BRAKE + WHEEL

Unit: mm (in)

ITEM	STANDARD		LIMIT
Rear brake pedal height	35 (1.4)		—
Brake disc thickness	Front	5.5 ± 0.2 (0.197 ± 0.008)	5.0 (0.20)
	Rear	6.0 ± 0.2 (0.236 ± 0.008)	5.5 (0.22)
Brake disc runout	Front	—	0.30 (0.012)
	Rear		
Master cylinder bore	Front	12.700–12.743 (0.5000–0.5017)	—
	Rear		
Master cylinder piston diam.	Front	12.657–12.684 (0.4983–0.4993)	—
	Rear		
Brake caliper cylinder bore	Front	33.960–34.036 (1.3370–1.3400)	—
		27.000–27.076 (1.0630–1.0660)	—
	Rear	42.850–42.926 (1.6870–1.6900)	—

ITEM	STANDARD		NOTE
Brake caliper piston diam.	Front	33.884–33.934 (1.3340–1.3360)	——
		26.920–26.970 (1.0598–1.0618)	——
	Rear	42.770–42.820 (1.6839–1.6858)	——
Wheel rim runout	Axial	——	2.0 (0.08)
	Radial	——	2.0 (0.08)
Wheel axle runout	Front	——	0.25 (0.010)
	Rear	——	0.25 (0.010)
Tire size	Front	110/80-18 58H	——
	Rear	150/70-B17 69H	——
Tire tread depth	Front	——	1.6 (0.06)
	Rear	——	2.0 (0.08)

SUSPENSION

Unit: mm (in)

ITEM	STANDARD	LIMIT	NOTE
Front fork stroke	150 (5.9)	——	
Front fork spring free length	——	353 (13.9)	E-01,03,28,33 models
	——	348 (13.7)	Other models
Front fork oil level	142 (5.59)	——	E-01,03,28,33 models
	138 (5.43)	——	Other models
Rear wheel travel	118 (4.64)	——	E-01,03,28,33 models
	119 (4.68)	——	Other models
Swingarm pivot shaft runout	——	0.30 (0.012)	

TIRE PRESSURE

COLD INFLATION TIRE PRESSURE	NORMAL RIDING					
	SOLO RIDING			DUAL RIDING		
	kPa	kg/cm²	psi	kPa	kg/cm²	psi
FRONT	225	2.25	33	225	2.25	33
REAR	250	2.50	36	280	2.80	41

FUEL + OIL + COOLANT

ITEM	SPECIFICATION		NOTE
Fuel type	Use only unleaded gasoline of at least 87 pump octane ($\frac{R+M}{2}$) or 91 octane or higher rated by the research method. Gasoline containing MTBE (Methyl Tertiary Butyl Ether), less than 10% ethanol, or less than 5% methanol with appropriate cosolvents and corrosion inhibitor is permissible.		U.S.A.model
	Use only unleaded gasoline of at least 87 pump octane ($\frac{R+M}{2}$ method) or 91 octane or higher rated by the Research Method.		Canada model
	Gasoline used should be graded 85-95 octane or higher. An unleaded gasoline is recommended.		Other models
Fuel tank including reserve	18.0 L (4.8/4.0 US/Imp gal		California model only
	19.0 L (5.0/4.2 US/Imp gal)		Other models
reserve	4.0 L (1.1/0.9 US/Imp gal)		
Engine oil type	SAE 10W/40, API SE or SF		
Engine oil capacity	Change	2 400 ml (2.5/2.1 US/Imp qt)	
	Filter change	2 800 ml (3.0/2.5 US/Imp qt)	
	Overhaul	3 300 ml (3.5/2.9 US/Imp qt)	
Front fork oil type	Fork oil #10		
Front fork oil capacity (each leg)	388 ml (13.1/13.7 US/Imp oz)		E-01,03,28,33, models
	392 ml (13.2/13.8 US/Imp oz)		Other models
Final bevel gear oil type	SAE 90 hypoid gear oil with GL-5 under API classification		
Final bevel gear oil capacity	200—220 ml (6.8/7.0—7.4/7.7 US/Imp oz)		
Brake fluid type	DOT4		
Coolant capacity	1 700 ml (1.8/1.5 US/Imp qt)		

THERMOSTAT + RADIATOR + FAN

ITEM		STANDARD	LIMIT
Thermostat valve opening temperature		75.0 ± 1.5°C (167 ± 2.7°F)	——
Thermostat valve lift		Over 6 mm (0.24 in) at 90°C (194°F)	——
Radiator cap valve release pressure		1.1 ± 0.15 kg/cm² (15.6 ± 2.1 psi, 110 ± 15 kPa)	——
Electric fan thermo-switch operating temperature	ON	Approx. 105° C (221°F)	——
	OFF	Approx. 100°C (212°F)	——

CABLE, HARNESS AND HOSE ROUTING

CABLE AND HOSE ROUTING

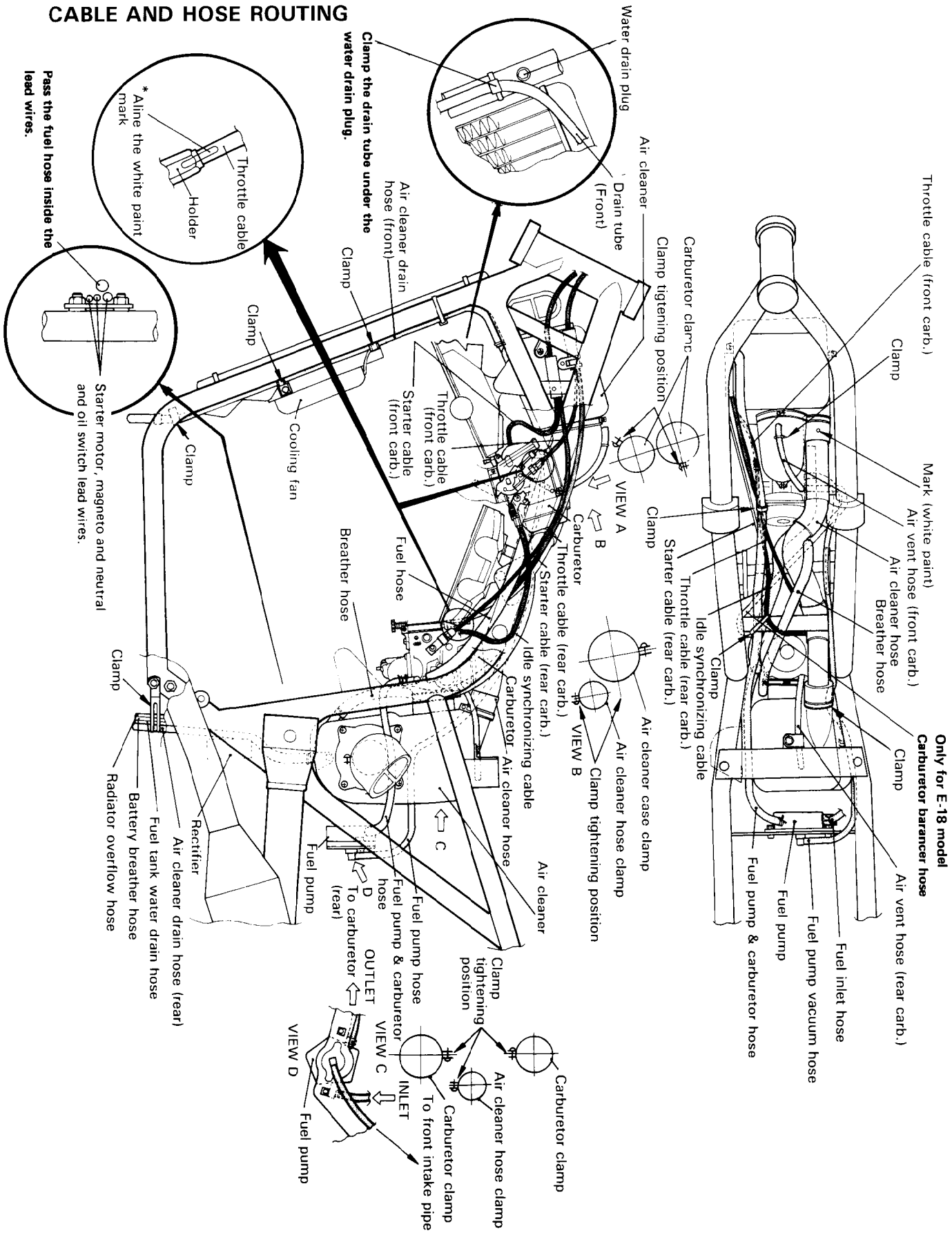

VX800N ('92-MODEL)

CONTENTS

SPECIFICATIONS

DIMENSIONS AND DRY MASS

Overall length	2280 mm (89.8 in) . . . E15, 16, 17, 22, 25, 39
	2355 mm (92.7 in) . . . E18
	2265 mm E03, 33
	2255 mm (88.8 in) . . . Others
Overall width	805 mm (31.7 in)
Overall height	1115 mm (43.9 in) . . . E03, 28, 33
	1085 mm (42.7 in) . . . Others
Wheelbase	1565 mm (61.6 in) . . . E03, 33
	1555 mm (61.2 in) . . . Others
Ground clearance	145 mm (5.7 in)
Seat height	800 mm (31.5 in) . . . E01, 03, 28, 33
	795 mm (31.3 in) . . . Others
Dry mass	214 kg (472 lbs) . . . E33
	213 kg (470 lbs) . . . Others

ENGINE

Type	Four-stroke, water-cooled, OHC, TSCC, 45° V-twin
Valve clearance	0.08 – 0.13 mm (0.003 – 0.005 in)
Number of cylinders	2
Bore	83.0 mm (3.268 in)
Stroke	74.4 mm (2.929 in)
Piston displacement	805 cm^3 (49.12 cu. in)
Compression ratio	10.0 : 1
Carburetor, Front	MIKUNI BDS36SS, single
Rear	MIKUNI BS36SS, single
Air cleaner	Non woven fabric element
Starter system	Electric starter motor
Lubrication system	Wet sump

TRANSMISSION

Clutch	Wet multi-plate type
Transmission	5-speed constant mesh
Gearshift pattern	1-down, 4-up
Primary reduction ratio	1.690 (71/42)
Gear ratios, Low	2.285 (32/14)
2nd	1.631 (31/19)
3rd	1.227 (27/22)
4th	1.000 (25/25)
Top	0.851 (23/27)
Secondary reduction ratio	1.133 (17/15 x 30/30) . . . E03, 33
	1.096 (17/15 x 30/31) . . . Others
Final reduction ratio	3.090 (34/11)
Drive system	Shaft drive

CHASSIS

Front suspension	Telescopic, coil spring, oil damped
Rear suspension	Swingarm, coil spring, gas/oil damped, spring preload 5-way adjustable; rebound damping force 4-way adjustable . . . E01, 03, 28, 33; compression damping force 4-way adjustable and rebound damping force 4-way adjustable . . . Others
Front suspension stroke	150 mm (5.9 in)
Rear wheel travel	118 mm (4.6 in) . . . E01, 03, 28, 33 119 mm (4.7 in) . . . Others
Caster	59°
Trail	143 mm (5.63 in) . . . E01, 28, 129 mm . . . E03,33 142 mm (5.59 in) . . . Others
Steering angle	35° (right & left)
Turning radius	3.2 m (10.5 ft)
Front brake	Disc
Rear brake	Disc
Front tire size	110/80-18 58H, tubeless
Rear tire size	150/70-17 69H, tubeless . . . E03,28,33 150/70 B17 69H, tubeless . . . Others

ELECTRICAL

Ignition type	Fully transistorized
Ignition timing	5° B.T.D.C. below 1650 r/min and 30° B.T.D.C. above 3500 r/min . . . E03, 33 5° B.T.D.C. below 1625 r/min. and 35° B.T.D.C. above 3500 r/min . . . E-18 5° B.T.D.C. below 1625 r/min and 32° B.T.D.C. above 3750 r/min . . . Others
Spark plug	NGK DPR8EA-9 or NIPPON DENSO X24EPR-U9
Battery	12V 57.6 kC (16Ah)/10HR
Fuse	25/10/10/10A
Headlight	12V 60/55W
Position light	12V 4W . . . except E03, 28, 33
Turn signal light	12V 21W
Tail/Brake light	12V 5/21W
License plate light	12V 5W
Speedometer light	12V 3.4W
Tachometer light	12V 1.7W
Neutral indicator light	12V 3.4W
High beam indicator light	12V 1.7W
Turn signal light indicator light	12V 3.4W
Oil pressure indicator light	12V 3.4W
Coolant temperature check light	12V 3W
Speedometer light	12V 3.4W
Tachometer light	12V 1.7W (x2pcs.)

CAPACITIES

Fuel tank, including reserve	18.0 L (4.8/4.0 US/Imp. gal) . . . E33
	19.0 L (5.0/4.2 US/Imp. gal) . . . Others
Reserve	4.0 L (1.1/0.9 US/Imp. gal)
Engine oil, oil change	2400 ml (2.5/2.1 US/Imp. qt)
with filter change	2800 ml (3.0/2.5 US/Imp. qt)
overhaul	3300 ml (3.5/2.9 US/Imp. qt)
Final gear oil	200 – 220 ml (6.8/7.0 – 7.4/7.7 US/Imp. oz)
Coolant (including reserve)	1700 ml (1.8/1.5 US/Imp. qt)
Front fork oil (each leg)	388 ml (13.1/13.7 US/Imp. oz) . . . E01, 03, 28, 33
	392 ml (13.2/13.8 US/Imp. oz) . . . Others

These specifications are subject to change without notice.

SERVICE DATA

VALVE + GUIDE

Unit: mm (in)

ITEM	STANDARD		LIMIT
Valve diam.	IN.	30 (1.18)	—
	EX.	26 (1.02)	—
Valve lift	IN.	8.5 (0.33)	—
	EX.	8.5 (0.33)	—
Valve clearance (when cold)	IN. & EX	0.08–0.13 (0.003–0.005)	—
Valve guide to valve stem clearance	IN.	0.020–0.047 (0.0008–0.0019)	0.35 (0.014)
	EX.	0.035–0.062 (0.0014–0.0024)	0.35 (0.014)
Valve guide I.D.	IN. & EX.	5.500–5.512 (0.2165–0.2170)	—
Valve stem O.D.	IN.	5.465–5.480 (0.2152–0.2157)	—
	EX.	5.450–5.465 (0.2146–0.2152)	—
Valve stem runout	IN. & EX.	—	0.05 (0.002)
Valve head thickness	IN. & EX.	—	0.5 (0.02)
Valve stem end length	IN. & EX.	—	4.0 (0.16)
Valve seat width	IN. & EX.	0.9–1.1 (0.035–0.043)	—
Valve head radial runout	IN. & EX.	—	0.03 (0.001)
Valve spring free length	INNER	—	38.3 (1.51)
	OUTER	—	40.1 (1.58)
Valve spring tension	INNER	6.51–7.49 kg (14.35–16.51 lbs) at length 32.5 mm (1.28 in)	—
	OUTER	12.09–13.91 kg (26.65–30.67 lbs) at length 36.0 mm (1.42 in)	—

CAMSHAFT + CYLINDER HEAD

Unit: mm (in)

ITEM	STANDARD		LIMIT
Cam height	IN.	35.954–35.994 (1.4155–1.4171)	35.660 (1.4039)
	EX.	36.919–36.959 (1.4535–1.4551)	36.620 (1.4417)
Camshaft journal oil clearance	0.032–0.066 (0.0013–0.0026)		0.150 (0.0059)

ITEM	STANDARD		LIMIT
Camshaft journal holder I.D.	No.1 Left side No.2 Right side	20.012–20.025 (0.7879–0.7884)	——
	No.1 Right side No.2 Left side	25.012–25.025 (0.9847–0.9852)	——
Camshaft journal O.D.	No.1 Left side No.2 Right side	19.959–19.980 (0.7858–0.7866)	——
	No.1 Right side No.2 Left side	24.959–24.980 (0.9826–0.9835)	——
Camshaft runout	——		0.10 (0.004)
Cam chain 20-pitch length	——		128.9 (5.07)
Rocker arm I.D.	IN. & EX.	12.000–12.018 (0.4724–0.4731)	——
Rocker arm shaft O.D.	IN. & EX.	11.966–11.984 (0.4711–0.4718)	——
Cylinder head distortion	——		0.05 (0.002)
Cylinder head cover distortion	——		0.05 (0.002)

CYLINDER + PISTON + PISTON RING

Unit: mm (in)

ITEM	STANDARD			LIMIT
Compression pressure	1 300–1 600 kPa (13–16 kg/cm²) (185–228 psi)			1100 kPa (11 kg/cm²) (156 psi)
Compression pressure difference	——			200 kPa (2 kg/cm²) (28 psi)
Piston to cylinder clearance	0.045–0.055 (0.0018–0.0022)			0.120 (0.0047)
Cylinder bore	83.000–83.015 (3.2677–3.2683)			83.085 (3.2711)
Piston diam.	82.950–82.965 (3.2657–3.2663) Measure at 15 mm (0.6 in) from the skirt end.			82.880 (3.2630)
Cylinder distortion	——			0.05 (0.002)
Piston ring free end gap	1st	R	Approx. 10.5 (0.413)	8.4 (0.331)
	2nd	R	Approx. 11.8 (0.465)	9.4 (0.370)
Piston ring end gap	1st		0.20–0.35 (0.008–0.014)	0.70 (0.028)
	2nd		0.20–0.35 (0.008–0.014)	0.70 (0.028)
Piston ring groove clearance	1st		——	0.180 (0.007)
	2nd		——	0.150 (0.006)

ITEM	STANDARD		LIMIT
Piston ring groove width	1st	1.01–1.03 (0.0398–0.0406)	——
	2nd	1.21–1.23 (0.0476–0.0484)	——
	Oil	2.51–2.53 (0.0988–0.0996)	——
Piston ring thickness	1st	0.970–0.990 (0.0382–0.0390)	——
	2nd	1.170–1.190 (0.0461–0.0469)	——
Piston pin bore	20.002–20.008 (0.7875–0.7877)		20.030 (0.7886)
Piston pin O.D.	19.996–20.000 (0.7827–0.7874)		19.980 (0.7866)

CONROD + CRANKSHAFT

Unit: mm (in)

ITEM	STANDARD	LIMIT
Corod small end I.D.	20.010–20.018 (0.7878–0.7881)	20.040 (0.7890)
Conrod big end side clearance	0.10–0.20 (0.004–0.010)	0.30 (0.012)
Conrod big end width	21.95–22.00 (0.864–0.866)	——
Crank pin width	22.10–22.15 (0.870–0.872)	——
Conrod big end oil clearance	0.024–0.042 (0.0009–0.0017)	0.080 (0.0031)
Crank pin O.D.	40.982–41.000 (1.6135–1.6142)	——
Crankshaft journal oil clearance	0.020–0.050 (0.0008–0.0020)	0.080 (0.0031)
Crankshaft journal O.D.	47.965–47.980 (1.8884–1.8890)	——
Crankshaft thrust bearing thickness	1.925–2.175 (0.0758–0.0856)	——
Crankshaft thrust clearance	0.05–0.10 (0.0020–0.0040)	——
Crankshaft runout	——	0.05 (0.002)

OIL PUMP

ITEM	STANDARD	LIMIT
Oil pump reduction ratio	1.859 (71/42 x 32/29)	——
Oil pressure (at 60°C,140°F)	Above 350 kPa (3.5 kg/cm², 50 psi) Below 650 kPa (6.5 kg/cm², 92 psi) at 3 000 r/min.	——

CLUTCH

Unit: mm (in)

ITEM	STANDARD		LIMIT
Clutch cable play	4 (0.2)		—
Clutch release screw	¼ – ½ turn back		—
Drive plate thickness	No.1	2.65 – 2.95 (0.104 – 0.116)	2.35 (0.093)
	No.2	3.45 – 3.55 (0.136 – 0.140)	3.15 (0.124)
Drive plate claw width	15.8 – 16.0 (0.62 – 0.63)		15.0 (0.59)
Driven plate thickness	1.60 ± 0.05 (0.063 ± 0.002)		—
Driven plate distortion	—		0.10 (0.004)
Clutch spring free length	No.1	—	24.6 (0.97)
	No.2	—	23.3 (0.92)

TRANSMISSION

Unit: mm (in) Except ratio

ITEM		STANDARD		LIMIT
Primary reduction ratio		1.690 (71/42)		—
Secondary reduction ratio		U.S.A. model	1.133 (30/30 x 17/15)	—
		Other models	1.096 (30/31 x 17/15)	—
Final reduction ratio		3.090 (34/11)		—
Gear ratios	Low	2.285 (32/14)		—
	2nd	1.631 (31/19)		—
	3rd	1.227 (27/22)		—
	4th	1.000 (25/25)		—
	Top	0.851 (23/27)		—
Shift fork to groove clearance		No.1	0.10 – 0.30 (0.004 – 0.012)	0.50 (0.020)
		No.2	0.10 – 0.30 (0.004 – 0.012)	0.50 (0.020)
Shift fork groove width		No.1	5.50 – 5.60 (0.217 – 0.220)	—
		No.2	4.50 – 4.60 (0.177 – 0.181)	—
Shift fork thickness		No.1	5.30 – 5.40 (0.209 – 0.213)	—
		No.2	4.30 – 4.40 (0.169 – 0.173)	—

SHAFT DRIVE

Unit: mm (in)

ITEM	STANDARD		LIMIT
Secondary bevel gear backlash	0.05–0.32 (0.002–0.013)		——
Final bevel gear backlash	Drive side	0.03–0.064 (0.001–0.025)	——

CARBURETOR

ITEM	SPECIFICATION	
	E-02,04,16,21,25,28,34	
Carburetor type	MIKUNI BS36SS (No.1)	MIKUNI BDS36SS (No.2)
Bore size	36 mm	←
I.D. No.	45C00	←
Idle r/min.	1100 ± 100 r/min.	←
Float height	27.7 ± 1.0 mm (1.09 ± 0.04 in)	9.1 ± 1.0 mm (0.36 ± 0.04 in)
Main jet (M.J.)	#132.5	#120
Main air jet (M.A.J.)	1.8 mm	←
Jet needle (J.N.)	5F108-3rd	5D49-3rd
Needle jet (N.J.)	P-4	←
Throttle valve (Th.V.)	#115	←
Pilot jet (P.J.)	#47.5	#40
By-pass (B.P.)	0.8 mm x 2PCS	0.8 mm x 3PCS
Pilot outlet (P.O.)	0.8 mm	1.0 mm
Valve seat (V.S.)	1.5 mm	←
Starter jet (G.S.)	#25	#22.5
Pilot screw (P.S.)	(PRE-SET) 1⅜ turns back	(PRE-SET) 1⅛ turns back
Pilot air jet (P.A.J.)	No.1:(#70), No.2:(2.0 mm)	No.1:(#65), No.2:(1.2 mm)
Throttle cable play	0.5–1.0 mm (0.02–0.04 in)	←
Choke cable play	0.5–1.0 mm (0.02–0.04 in)	←

CARBURETOR

ITEM	SPECIFICATION	
	E-03	
Carburetor type	MIKUNI BS36SS (No.1)	MIKUNI BDS36SS (No.2)
Bore size	36 mm	←
I.D. No.	45C10	←
Idle r/min.	1200 ± 50 r/min.	←
Float height	27.7 ± 1.0 mm (1.09 ± 0.04 in)	9.1 ± 1.0 mm (0.36 ± 0.04 in)
Main jet (M.J.)	#132.5	#122.5
Main air jet (M.A.J.)	1.8 mm	←
Jet needle (J.N.)	5E72-1st	5D47-1st
Needle jet (N.J.)	P-7	P-2
Throttle valve (Th.V.)	#125	#110
Pilot jet (P.J.)	#45	#40
By-pass (B.P.)	0.8 mm x 2PCS	0.8 mm x 3PCS
Pilot outlet (P.O.)	0.8 mm	1.0 mm

ITEM		SPECIFICATION	
		E-03	
Valve seat	(V.S.)	1.5 mm	←
Starter jet	(G.S.)	#25	#22.5
Pilot screw	(P.S.)	(PRE-SET)	(PRE-SET)
Pilot air jet	(P.A.J)	No.1:(#65), No.2:(2.0 mm)	No.1:(#65), No.2:(1.2 mm)
Throttle cable play		0.5–1.0 mm (0.02–0.04 in)	←
Choke cable play		0.5–1.0 mm (0.02–0.04 in)	←

CARBURETOR

ITEM		SPECIFICATION	
		E-33	
Carburetor type		MIKUNI BS36SS (No.1)	MIKUNI BDS36SS (No.2)
Bore size		36 mm	←
I.D. No.		45C20	←
Idle r/min.		1200±50 r/min.	←
Float height		27.7±1.0 mm (1.09±0.04 in)	9.1±1.0 mm (0.36±0.04 in)
Main jet	(M.J.)	#132.5	#122.5
Main air jet	(M.A.J.)	1.8 mm	←
Jet needle	(J.N.)	5E72-1st	5D47-1st
Needle jet	(N.J.)	P-7	P-2
Throttle valve	(Th.V.)	#125	#110
Pilot jet	(P.J.)	#45	#40
By-pass	(B.P.)	0.8 mm x 2PCS	0.8 mm x 3PCS
Pilot outlet	(P.O.)	0.8 mm	1.0 mm
Valve seat	(V.S.)	1.5 mm	←
Starter jet	(G.S.)	#25	#22.5
Pilot screw	(P.S.)	(PRE-SET)	(PRE-SET)
Pilot air jet	(P.A.J.)	No.1:(#65), No.2:(2.0 mm)	No.1:(#65), No.2:(1.2 mm)
Throttle cable play		0.5–1.0 mm (0.02–0.04 in)	←
Choke cable play		0.5–1.0 mm (0.02–0.04 in)	←

CARBURETOR

ITEM		SPECIFICATION	
		E-18	
Carburetor type		MIKUNI BS36SS (No.1)	MIKUNI BDS36SS (No.2)
Bore size		36 mm	←
I.D. No.		45C30	←
Idle r/min.		$1200 \pm {}^{100}_{50}$ r/min.	←
Float height		27.7±1.0 mm (1.09±0.04 in)	9.1±1.0 mm (0.36±0.04 in)
Main jet	(M.J.)	#135	#125
Main air jet	(M.A.J.)	1.8 mm	←
Jet needle	(J.N.)	5F107-3rd	5D48-3rd

ITEM		SPECIFICATION	
		E-18	
Needle jet	(N.J.)	P-4	P-2
Throttle valve	(Th.V.)	#115	←
Pilot jet	(P.J.)	#45	#40
By-pass	(B.P.)	0.8 mm x 2PCS	0.8 mm x 3PCS
Pilot outlet	(P.O.)	0.8 mm	1.0 mm
Valve seat	(V.S.)	1.5 mm	←
Starter jet	(G.S.)	#25	#22.5
Pilot screw	(P.S.)	(PRE-SET) 2 turns back	(PRE-SET) 1¼ turns back
Pilot air jet	(P.A.J.)	No.1:(#55), No.2:(1.85 mm)	No.1:(#65), No.2:(1.2 mm)
Throttle cable play		0.5—1.0 mm (0.02—0.04 in)	←
Choke cable play		0.5—1.0 mm (0.02—0.04 in)	←

CARBURETOR

ITEM		SPECIFICATION	
		E-01	
Carburetor type		MIKUNI BS36SS (No.1)	MIKUNI BDS36SS (No.2)
Bore size		36 mm	←
I.D. No.		45C40	←
Idle r/min.		1100±100 r/min.	←
Float height		27.7±1.0 mm (1.09±0.04 in)	9.1±1.0 mm (0.36±0.04 in)
Main jet	(M.J.)	#135	#122.5
Main air jet	(M.A.J.)	1.8 mm	←
Jet needle	(J.N.)	5F108-3rd	5D49-3rd
Needle jet	(N.J.)	P-4	←
Throttle valve	(Th.V.)	#115	←
Pilot jet	(P.J.)	#47.5	#40
By-pass	(B.P.)	0.8 mm x 2PCS	0.8 mm x 3PCS
Pilot outlet	(P.O.)	0.8 mm	1.0 mm
Valve seat	(V.S.)	1.5 mm	←
Starter jet	(G.S.)	#25	#22.5
Pilot screw	(P.S.)	(PRE-SET) 1½ turns back	(PRE-SET) 1⅛ turns back
Pilot air jet	(P.A.J.)	No.1:(#70), No.2:(2.0 mm)	No.1:(#65), No.2:(1.2 mm)
Throttle cable play		0.5—1.0 mm (0.02—0.04 in)	←
Choke cable play		0.5—1.0 mm (0.02—0.04 in)	←

CARBURETOR

ITEM	SPECIFICATION	
	E-15,22,24,39	
Carburetor type	MIKUNI BS36SS (No.1)	MIKUNI BDS36SS (No.2)
Bore size	36 mm	←
I.D. No.	45C50	←
Idle r/min.	1100±100 r/min.	←

ITEM		SPECIFICATION	
		E-15,22,24,39	
Float height		27.7±1.0 mm (1.09±0.04 in)	9.1±1.0 mm (0.36±0.04 in)
Main jet	(M.J.)	#132.5	#120
Main air jet	(M.A.J.)	1.8 mm	←
Jet needle	(J.N.)	5F108-3rd	5D49-3rd
Needle jet	(N.J.)	P-4	←
Throttle valve	(Th.V.)	#115	←
Pilot jet	(P.J.)	#47.5	#40
By-pass	(B.P.)	0.8 mm x 2PCS	0.8 mm x 3PCS
Pilot outlet	(P.O.)	0.8 mm	1.0 mm
Valve seat	(V.S.)	1.5 mm	←
Starter jet	(G.S.)	#25	#22.5
Pilot screw	(P.S.)	(PRE-SET) 1⅛ turns back	(PRE-SET) 1 turn back
Pilot air jet	(P.A.J.)	No.1:(#70), No.2:(2.0 mm)	No.1:(#65), No.2:(1.2 mm)
Throttle cable play		0.5–1.0 mm (0.02–0.04 in)	←
Choke cable play		0.5–1.0 mm (0.02–0.04 in)	←

CARBURETOR

ITEM		SPECIFICATION	
		U-type of E-22	
Carburetor type		MIKUNI BS36SS (No.1)	MIKUNI BDS36SS (No.2)
Bore size		36 mm	←
I.D. No.		45C60	←
Idle r/min.		1100±100 r/min.	←
Float height		27.7±1.0 mm (1.09±0.04 in)	9.1±1.0 mm (0.36±0.04 in)
Main jet	(M.J.)	#135	#122.5
Main air jet	(M.A.J.)	1.8 mm	←
Jet needle	(J.N.)	5F108-3rd	5D49-3rd
Needle jet	(N.J.)	P-4	P-6
Throttle valve	(Th.V.)	#115	←
Pilot jet	(P.J.)	#47.5	#40
By-pass	(B.P.)	0.8 mm x 2PCS	0.8 mm x 3PCS
Pilot outlet	(P.O.)	0.8 mm	1.0 mm
Valve seat	(V.S.)	1.5 mm	←
Starter jet	(G.S.)	#25	#22.5
Pilot screw	(P.S.)	(PRE-SET) 1⅛ turns back	(PRE-SET) 1 1/16 turns back
Pilot air jet	(P.A.J.)	No.1:(#70), No.2:(2.0 mm)	No.1:(#65), No.2:(1.2 mm)
Throttle cable play		0.5–1.0 mm (0.02–0.04 in)	←
Choke cable play		0.5–1.0 mm (0.02–0.04 in)	←

CARBURETOR

ITEM	SPECIFICATION	
	E-17	
Carburetor type	MIKUNI BS36SS (No.1)	MIKUNI BDS36SS (No.2)
Bore size	36 mm	←
I.D. No.	45C70	←
Idle r/min.	1100 ± 100 r/min.	←
Float height	27.7 ± 1.0 mm (1.09 ± 0.04 in)	9.1 ± 1.0 mm (0.36 ± 0.04 in)
Main jet (M.J.)	#135	#122.5
Main air jet (M.A.J.)	1.8 mm	←
Jet needle (J.N.)	5F108-3rd	5D49-3rd
Needle jet (N.J.)	P-4	P-6
Throttle valve (Th.V.)	#115	←
Pilot jet (P.J.)	#47.5	#40
By-pass (B.P.)	0.8 mm x 2PCS	0.8 mm x 3PCS
Pilot outlet (P.O.)	0.8 mm	1.0 mm
Valve seat (V.S.)	1.5 mm	←
Starter jet (G.S.)	#25	#22.5
Pilot screw (P.S.)	(PRE-SET) 1⅜ turns back	(PRE-SET) 1¼ turns back
Pilot air jet (P.A.J.)	No.1:(#70), No.2:(2.0 mm)	No.1:(#65), No.2:(1.2 mm)
Throttle cable play	0.5 – 1.0 mm (0.02 – 0.04 in)	←
Choke cable play	0.5 – 1.0 mm (0.02 – 0.04 in)	←

ELECTRICAL

Unit: mm (in)

ITEM	SPECIFICATION		NOTE
Ignition timing	5° B.T.D.C. Below 1 650 r/min. and 30° B.T.D.C. Above 3 500 r/min.		U.S.A. model
	5° B.T.D.C. Below 1 625 r/min. and 32° B.T.D.C. Above 3 750 r/min.		Other models
Firing order	1·2		
Spark plug	Type	N.G.K.: DPR8EA-9 ND: X24EPR-U9	
	Gap	0.8 – 0.9 (0.031 – 0.035)	
Spark performance	Over 8 (0.3) at 1 atm.		
Signal coil resistance	Approx. 117 Ω (G – Bl)		U.S.A. model
	Approx. 230 Ω (G – Bl)		Other models
Ignition coil resistance	Primary	2 – 6 Ω	⊕ tap – ⊖ tap
	Secondary	19 – 27 kΩ	Plug cap – ⊕ tap
Generator no-load voltage (When engine cold)	More than 65V (AC) at 5 000 r/min.		U.S.A. model
	More than 75 V (AC) at 5 000 r/min.		Other models
Regulated voltage	13.5 – 15.5 V at 5 000 r/min.		
Starter motor brush length	Limit: 9 (0.35)		N.D.

ITEM	STANDARD		NOTE
Commutator under-cut	Limit: 0.2 (0.008)		
Starter relay resistance	2–6 Ω		
Battery	Type designation	YB16B-A	
	Capacity	12V57.6kC (16Ah)/10HR	
	Standard electrolyte S.G.	1.28 at 20°C (68°F)	
Fuse size	Headlight	10 A	
	Ignition/Fan	10 A	
	Signal	10 A	
	Main	25 A	

WATTAGE

Unit:W

ITEM		SPECIFICATION
Headlight	HI	60
	LO	55
Tail/Brake light		5/21
Turn signal light		21
Speedometer light		3.4
Tachometer light		1.7 x 2PCS
Water temp. indicator light		3
Turn signal indicator light		3.4
High beam indicator light		1.7
Neutral indicator light		3.4
Oil pressure indicator light		3.4
License light		5
Position light		4 (Execpt E-03,28,33 models)

BRAKE + WHEEL

Unit: mm (in)

ITEM	STANDARD		LIMIT
Rear brake pedal height	35 (1.4)		—
Brake disc thickness	Front	5.5±0.2 (0.197±0.008)	5.0 (0.20)
	Rear	6.0±0.2 (0.236±0.008)	5.5 (0.22)
Brake disc runout	Front	—	0.30 (0.012)
	Rear		
Master cylinder bore	Front	12.700–12.743 (0.5000–0.5017)	—
	Rear		
Master cylinder piston diam.	Front	12.657–12.684 (0.4983–0.4993)	—
	Rear		
Brake caliper cylinder bore	Front	33.960–34.036 (1.3370–1.3400)	—
		27.000–27.076 (1.0630–1.0660)	—
	Rear	42.850–42.926 (1.6870–1.6900)	—

ITEM		STANDARD		LIMIT
Brake caliper piston diam.		Front	33.884–33.934 (1.3340–1.3360)	—
			26.920–26.970 (1.0598–1.0618)	—
		Rear	42.770–42.820 (1.6839–1.6858)	—
Wheel rim runout		Axial	—	2.0 (0.08)
		Radial	—	2.0 (0.08)
Wheel axle runout		Front	—	0.25 (0.010)
		Rear	—	0.25 (0.010)
Tire size		Front	110/80-18 58H	—
	E-03,28,33	Rear	150/70-17 69H	—
	Others	Rear	150/70 B17 69H	—
Tire tread depth		Front	—	1.6 (0.06)
		Rear	—	2.0 (0.08)

SUSPENSION

Unit: mm (in)

ITEM	STANDARD	LIMIT	NOTE
Front fork stroke	150 (5.9)	—	
Front fork spring free length	—	353 (13.9)	E-01,03,28,33 models
	—	348 (13.7)	Other models
Front fork oil level	142 (5.59)	—	E-01,03,28,33 models
	138 (5.43)	—	Other models
Rear wheel travel	118 (4.64)	—	E-01,03,28,33 models
	119 (4.68)	—	Other models
Swingarm pivot shaft runout	—	0.30 (0.012)	

TIRE PRESSURE

COLD INFLATION TIRE PRESSURE	NORMAL RIDING					
	SOLO RIDING			DUAL RIDING		
	kPa	kg/cm²	psi	kPa	kg/cm²	psi
FRONT	225	2.25	33	225	2.25	33
REAR	250	2.50	36	280	2.80	41

FUEL + OIL + COOLANT

ITEM	SPECIFICATION		NOTE
Fuel type	Use only unleaded gasoline of at least 87 pump octane ($\frac{R+M}{2}$) or 91 octane or higher rated by the research method. Gasoline containing MTBE (Methyl Tertiary Butyl Ether), less than 10% ethanol, or less than 5% methanol with appropriate cosolvents and corrosion inhibitor is permissible.		U.S.A.model
	Use only unleaded gasoline of at least 87 pump octane ($\frac{R+M}{2}$ method) or 91 octane or higher rated by the Research Method.		Canada model
	Gasoline used should be graded 85-95 octane or higher. An unleaded gasoline is recommended.		Other models
Fuel tank including reserve	18.0 L (4.8/4.0 US/Imp gal		California model only
	19.0 L (5.0/4.2 US/Imp gal)		Other models
reserve	4.0 L (1.1/0.9 US/Imp gal)		
Engine oil type	SAE 10W/40, API SE or SF		
Engine oil capacity	Change	2 400 ml (2.5/2.1 US/Imp qt)	
	Filter change	2 800 ml (3.0/2.5 US/Imp qt)	
	Overhaul	3 300 ml (3.5/2.9 US/Imp qt)	
Front fork oil type	Fork oil #10		
Front fork oil capacity (each leg)	388 ml (13.1/13.7 US/Imp oz)		E-01,03,28,33, models
	392 ml (13.2/13.8 US/Imp oz)		Other models
Final bevel gear oil type	SAE 90 hypoid gear oil with GL-5 under API classification		
Final bevel gear oil capacity	200–220 ml (6.8/7.0–7.4/7.7 US/Imp oz)		
Brake fluid type	DOT4		
Coolant capacity	1 700 ml (1.8/1.5 US/Imp qt)		

THERMOSTAT + RADIATOR + FAN

ITEM		STANDARD	LIMIT
Thermostat valve opening temperature		75.0 ± 1.5°C (167 ± 2.7°F)	——
Thermostat valve lift		Over 6 mm (0.24 in) at 90°C (194°F)	——
Radiator cap valve release pressure		1.1 ± 0.15 kg/cm² (15.6 ± 2.1 psi, 110 ± 15 kPa)	——
Electric fan thermo-switch operating temperature	ON	Approx. 105° C (221°F)	——
	OFF	Approx. 100°C (212°F)	——

CABLE, HARNESS AND HOSE ROUTING

CABLE AND HOSE ROUTING

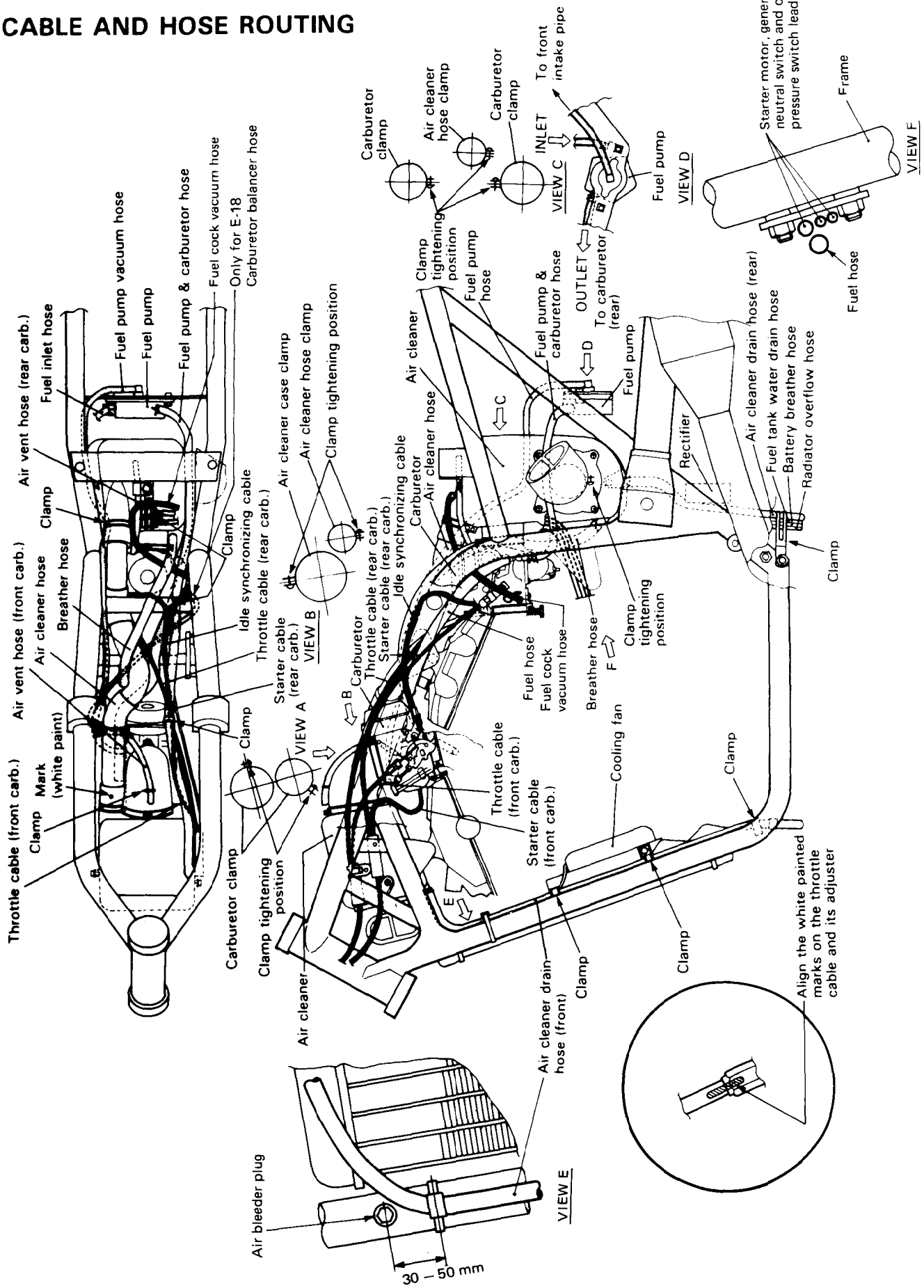

WIRING DIAGRAM

FOR AUSTRALIA MODEL

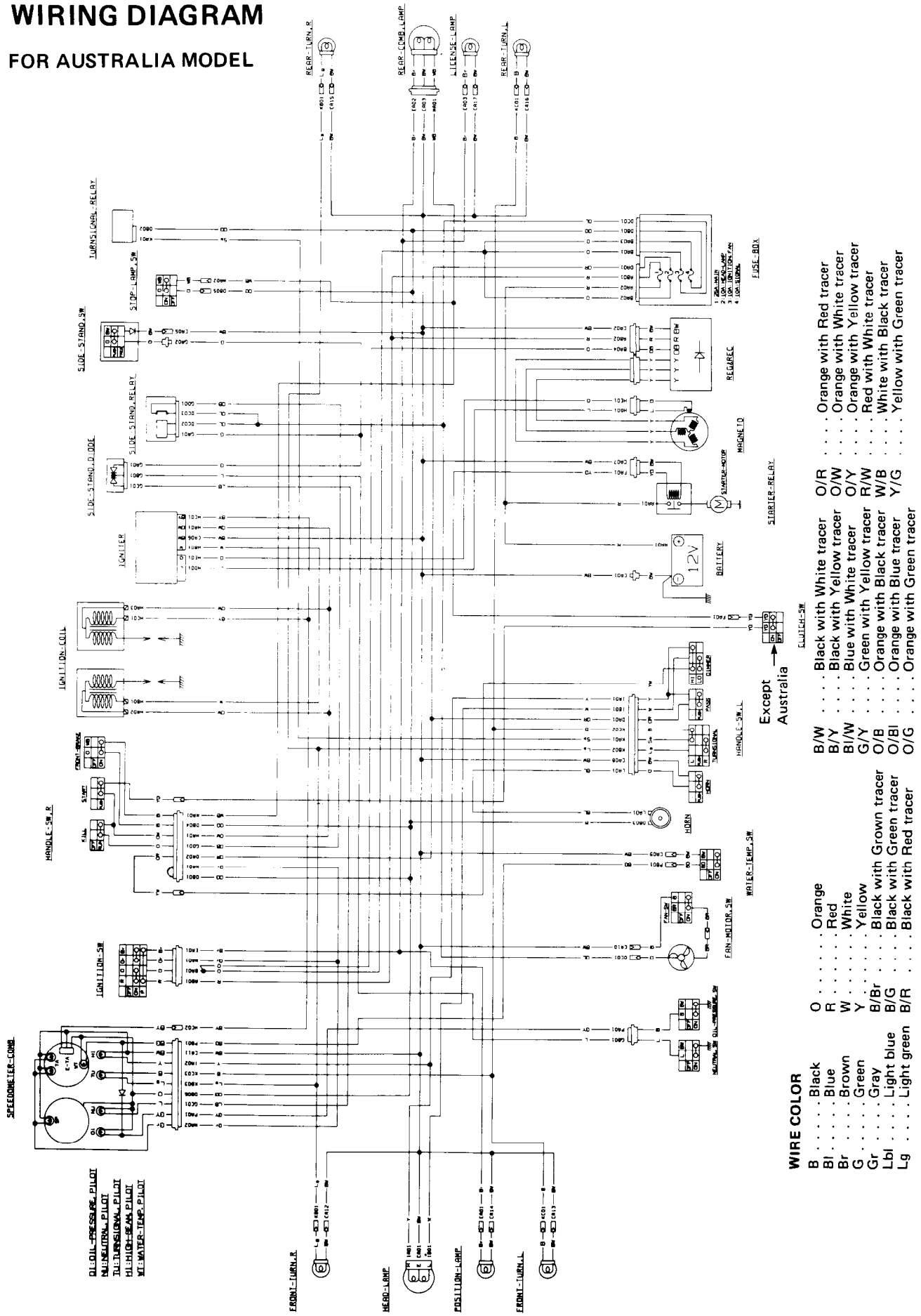

WIRE COLOR

B . . . . . Black	O . . . . . Orange	B/W . . . . Black with White tracer	O/R . . . . Orange with Red tracer
Bl . . . . . Blue	R . . . . . Red	B/Y . . . . Black with Yellow tracer	O/W . . . . Orange with White tracer
Br . . . . . Brown	W . . . . . White	Bl/W . . . . Blue with White tracer	O/Y . . . . Orange with Yellow tracer
G . . . . . Green	Y . . . . . Yellow	G/Y . . . . Green with Yellow tracer	R/W . . . . Red with White tracer
Gr . . . . . Gray	B/Br . . . . Black with Grown tracer	O/B . . . . Orange with Black tracer	W/B . . . . White with Black tracer
Lbl . . . . Light blue	B/G . . . . Black with Green tracer	O/Bl . . . . Orange with Blue tracer	Y/G . . . . Yellow with Green tracer
Lg . . . . Light green	B/R . . . . Black with Red tracer	O/G . . . . Orange with Green tracer	

AIR SUPPLY HOSE ROUTING

FOR SWITZERLAND AND AUSTRIA MODELS

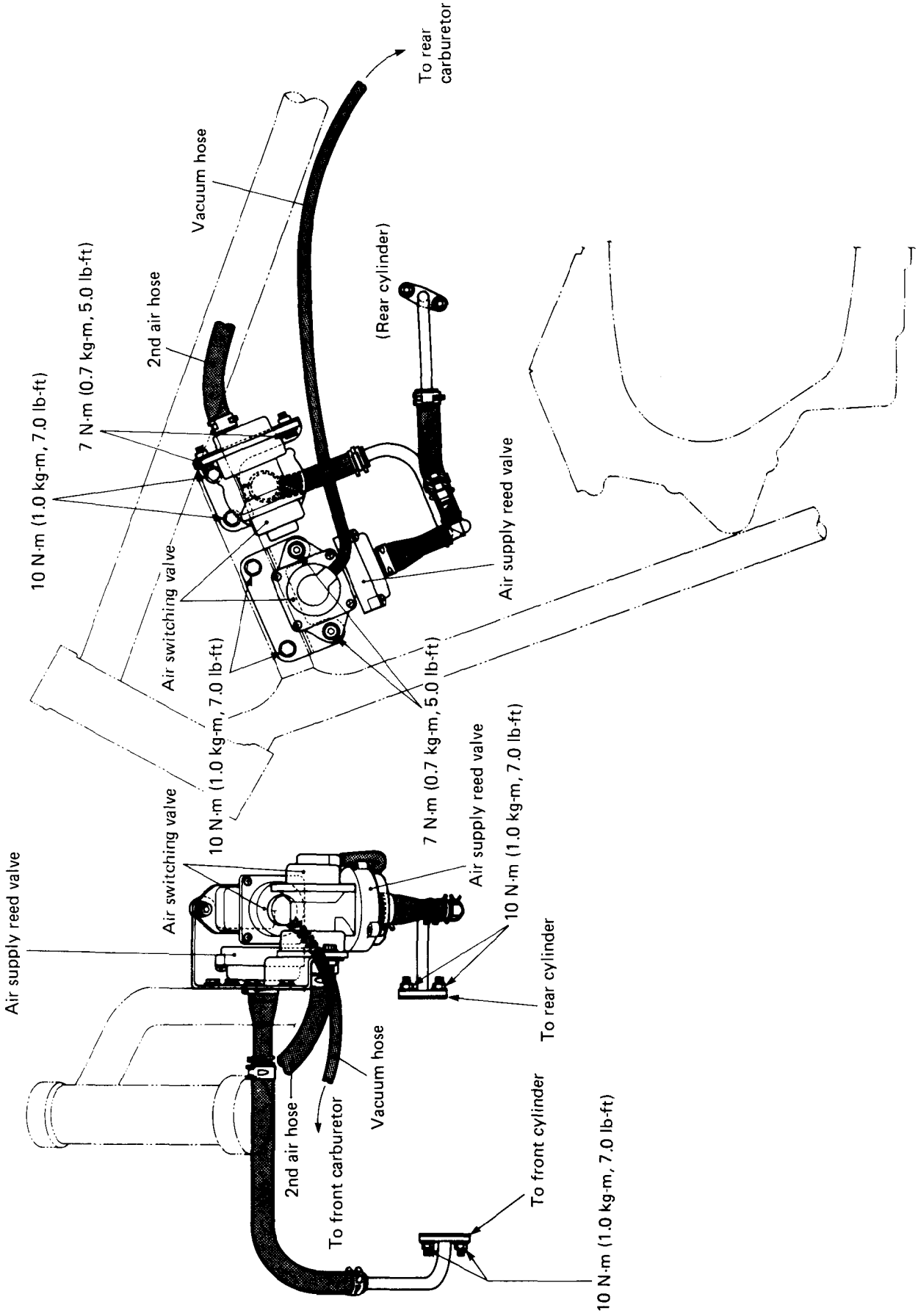

VX800P ('93-MODEL)

CONTENTS

SERVICE DATA

VALVE + GUIDE

Unit: mm (in)

ITEM	STANDARD		LIMIT
Valve diam.	IN.	30 (1.18)	—
	EX.	26 (1.02)	—
Valve lift	IN.	8.5 (0.33)	—
	EX.	8.5 (0.33)	—
Valve clearance (when cold)	IN. & EX	0.08–0.13 (0.003–0.005)	—
Valve guide to valve stem clearance	IN.	0.020–0.047 (0.0008–0.0019)	0.35 (0.014)
	EX.	0.035–0.062 (0.0014–0.0024)	0.35 (0.014)
Valve guide I.D.	IN. & EX.	5.500–5.512 (0.2165–0.2170)	—
Valve stem O.D.	IN.	5.465–5.480 (0.2152–0.2157)	—
	EX.	5.450–5.465 (0.2146–0.2152)	—
Valve stem runout	IN. & EX.	—	0.05 (0.002)
Valve head thickness	IN. & EX.	—	0.5 (0.02)
Valve stem end length	IN. & EX.	—	4.0 (0.16)
Valve seat width	IN. & EX.	0.9–1.1 (0.035–0.043)	—
Valve head radial runout	IN. & EX.	—	0.03 (0.001)
Valve spring free length	INNER	—	38.3 (1.51)
	OUTER	—	40.1 (1.58)
Valve spring tension	INNER	6.51–7.49 kg (14.35–16.51 lbs) at length 32.5 mm (1.28 in)	—
	OUTER	12.09–13.91 kg (26.65–30.67 lbs) at length 36.0 mm (1.42 in)	—

CAMSHAFT + CYLINDER HEAD

Unit: mm (in)

ITEM	STANDARD		LIMIT
Cam height	IN.	35.954–35.994 (1.4155–1.4171)	35.660 (1.4039)
	EX.	36.919–36.959 (1.4535–1.4551)	36.620 (1.4417)
Camshaft journal oil clearance	0.032–0.066 (0.0013–0.0026)		0.150 (0.0059)

ITEM	STANDARD		LIMIT
Camshaft journal holder I.D.	No.1 Left side No.2 Right side	20.012–20.025 (0.7879–0.7884)	——
	No.1 Right side No.2 Left side	25.012–25.025 (0.9847–0.9852)	——
Camshaft journal O.D.	No.1 Left side No.2 Right side	19.959–19.980 (0.7858–0.7866)	——
	No.1 Right side No.2 Left side	24.959–24.980 (0.9826–0.9835)	——
Camshaft runout	-		0.10 (0.004)
Cam chain 20-pitch length	——		128.9 (5.07)
Rocker arm I.D.	IN. & EX.	12.000–12.018 (0.4724–0.4731)	——
Rocker arm shaft O.D.	IN. & EX.	11.966–11.984 (0.4711–0.4718)	——
Cylinder head distortion	——		0.05 (0.002)
Cylinder head cover distortion	——		0.05 (0.002)

CYLINDER + PISTON + PISTON RING

Unit: mm (in)

ITEM	STANDARD			LIMIT
Compression pressure	1 300–1 600 kPa (13–16 kg/cm² 185–228 psi)			1100 kPa (11 kg/cm² 156 psi)
Compression pressure difference	——			200 kPa (2 kg/cm² 28 psi)
Piston to cylinder clearance	0.045–0.055 (0.0018–0.0022)			0.120 (0.0047)
Cylinder bore	83.000–83.015 (3.2677–3.2683)			83.085 (3.2711)
Piston diam.	82.950–82.965 (3.2657–3.2663) Measure at 15 mm (0.6 in) from the skirt end.			82.880 (3.2630)
Cylinder distortion	——			0.05 (0.002)
Piston ring free end gap	1st	R	Approx. 10.5 (0.413)	8.4 (0.331)
	2nd	R	Approx. 11.8 (0.465)	9.4 (0.370)
Piston ring end gap	1st		0.20–0.35 (0.008–0.014)	0.70 (0.028)
	2nd		0.20–0.35 (0.008–0.014)	0.70 (0.028)
Piston ring groove clearance	1st		——	0.180 (0.007)
	2nd		——	0.150 (0.006)

ITEM	STANDARD		LIMIT
Piston ring groove width	1st	1.01—1.03 (0.0398—0.0406)	—
	2nd	1.21—1.23 (0.0476—0.0484)	—
	Oil	2.51—2.53 (0.0988—0.0996)	—
Piston ring thickness	1st	0.970—0.990 (0.0382—0.0390)	—
	2nd	1.170—1.190 (0.0461—0.0469)	—
Piston pin bore	20.002—20.008 (0.7875—0.7877)		20.030 (0.7886)
Piston pin O.D.	19.996—20.000 (0.7827—0.7874)		19.980 (0.7866)

CONROD + CRANKSHAFT

Unit: mm (in)

ITEM	STANDARD	LIMIT
Corod small end I.D.	20.010—20.018 (0.7878—0.7881)	20.040 (0.7890)
Conrod big end side clearance	0.10—0.20 (0.004—0.010)	0.30 (0.012)
Conrod big end width	21.95—22.00 (0.864—0.866)	—
Crank pin width	22.10—22.15 (0.870—0.872)	—
Conrod big end oil clearance	0.024—0.042 (0.0009—0.0017)	0.080 (0.0031)
Crank pin O.D.	40.982—41.000 (1.6135—1.6142)	—
Crankshaft journal oil clearance	0.020—0.050 (0.0008—0.0020)	0.080 (0.0031)
Crankshaft journal O.D.	47.965—47.980 (1.8884—1.8890)	—
Crankshaft thrust bearing thickness	1.925—2.175 (0.0758—0.0856)	—
Crankshaft thrust clearance	0.05—0.10 (0.0020—0.0040)	
Crankshaft runout	—	0.05 (0.002)

OIL PUMP

ITEM	STANDARD	LIMIT
Oil pump reduction ratio	1.859 (71/42 x 32/29)	—
Oil pressure (at 60°C,140°F)	Above 350 kPa (3.5 kg/cm², 50 psi) Below 650 kPa (6.5 kg/cm², 92 psi) at 3 000 r/min.	—

CLUTCH

Unit: mm (in)

ITEM	STANDARD		LIMIT
Clutch cable play	4 (0.2)		—
Clutch release screw	¼ — ½ turn back		—
Drive plate thickness	No.1	2.65—2.95 (0.104—0.116)	2.35 (0.093)
	No.2	3.45—3.55 (0.136—0.140)	3.15 (0.124)
Drive plate claw width	15.8—16.0 (0.62—0.63)		15.0 (0.59)
Driven plate thickness	1.60±0.05 (0.063±0.002)		—
Driven plate distortion	—		0.10 (0.004)
Clutch spring free length	No.1	—	24.6 (0.97)
	No.2	—	23.3 (0.92)

TRANSMISSION

Unit: mm (in) Except ratio

ITEM		STANDARD		LIMIT
Primary reduction ratio		1.690 (71/42)		—
Secondary reduction ratio		U.S.A. model	1.133 (30/30 x 17/15)	—
		Other models	1.096 (30/31 x 17/15)	—
Final reduction ratio		3.090 (34/11)		—
Gear ratios	Low	2.285 (32/14)		—
	2nd	1.631 (31/19)		—
	3rd	1.227 (27/22)		—
	4th	1.000 (25/25)		—
	Top	0.851 (23/27)		—
Shift fork to groove clearance		No.1	0.10—0.30 (0.004—0.012)	0.50 (0.020)
		No.2	0.10—0.30 (0.004—0.012)	0.50 (0.020)
Shift fork groove width		No.1	5.50—5.60 (0.217—0.220)	—
		No.2	4.50—4.60 (0.177—0.181)	—
Shift fork thickness		No.1	5.30—5.40 (0.209—0.213)	—
		No.2	4.30—4.40 (0.169—0.173)	—

SHAFT DRIVE

Unit: mm (in)

ITEM	STANDARD		LIMIT
Secondary bevel gear backlash	0.05—0.32 (0.002—0.013)		——
Final bevel gear backlash	Drive side	0.03—0.064 (0.001—0.025)	——

CARBURETOR

ITEM	SPECIFICATION	
	E-02,04,21,25,28,34	
Carburetor type	MIKUNI BS36SS (No.1)	MIKUNI BDS36SS (No.2)
Bore size	36 mm	←
I.D. No.	45C00	←
Idle r/min.	1100±100 r/min.	←
Float height	27.7±1.0 mm (1.09±0.04 in)	9.1±1.0 mm (0.36±0.04 in)
Main jet (M.J.)	#132.5	#120
Main air jet (M.A.J.)	1.8 mm	←
Jet needle (J.N.)	5F108-3rd	5D49-3rd
Needle jet (N.J.)	P-4	←
Throttle valve (Th.V.)	#115	←
Pilot jet (P.J.)	#47.5	#40
By-pass (B.P.)	0.8 mm x 2PCS	0.8 mm x 3PCS
Pilot outlet (P.O.)	0.8 mm	1.0 mm
Valve seat (V.S.)	1.5 mm	←
Starter jet (G.S.)	#25	#22.5
Pilot screw (P.S.)	(PRE-SET) 1⅜ turns back	(PRE-SET) 1⅛ turns back
Pilot air jet (P.A.J.)	No.1:(#70), No.2:(2.0 mm)	No.1:(#65), No.2:(1.2 mm)
Throttle cable play	0.5—1.0 mm (0.02—0.04 in)	←
Choke cable play	0.5—1.0 mm (0.02—0.04 in)	←

CARBURETOR

ITEM	SPECIFICATION	
	E-03	
Carburetor type	MIKUNI BS36SS (No.1)	MIKUNI BDS36SS (No.2)
Bore size	36 mm	←
I.D. No.	45C10	←
Idle r/min.	1200±50 r/min.	←
Float height	27.7±1.0 mm (1.09±0.04 in)	9.1±1.0 mm (0.36±0.04 in)
Main jet (M.J.)	#132.5	#122.5
Main air jet (M.A.J.)	1.8 mm	←
Jet needle (J.N.)	5E72-1st	5D47-1st
Needle jet (N.J.)	P-7	P-2
Throttle valve (Th.V.)	#125	#110
Pilot jet (P.J.)	#45	#40
By-pass (B.P.)	0.8 mm x 2PCS	0.8 mm x 3PCS
Pilot outlet (P.O.)	0.8 mm	1.0 mm

ITEM		SPECIFICATION	
		E-03	
Valve seat	(V.S.)	1.5 mm	←
Starter jet	(G.S.)	#25	#22.5
Pilot screw	(P.S.)	(PRE-SET)	(PRE-SET)
Pilot air jet	(P.A.J)	No.1:(#65), No.2:(2.0 mm)	No.1:(#65), No.2:(1.2 mm)
Throttle cable play		0.5—1.0 mm (0.02—0.04 in)	←
Choke cable play		0.5—1.0 mm (0.02—0.04 in)	←

CARBURETOR

ITEM		SPECIFICATION	
		E-33	
Carburetor type		MIKUNI BS36SS (No.1)	MIKUNI BDS36SS (No.2)
Bore size		36 mm	←
I.D. No.		45C20	←
Idle r/min.		1200±50 r/min.	←
Float height		27.7±1.0 mm (1.09±0.04 in)	9.1±1.0 mm (0.36±0.04 in)
Main jet	(M.J.)	#132.5	#122.5
Main air jet	(M.A.J.)	1.8 mm	←
Jet needle	(J.N.)	5E72-1st	5D47-1st
Needle jet	(N.J.)	P-7	P-2
Throttle valve	(Th.V.)	#125	#110
Pilot jet	(P.J.)	#45	#40
By-pass	(B.P.)	0.8 mm x 2PCS	0.8 mm x 3PCS
Pilot outlet	(P.O.)	0.8 mm	1.0 mm
Valve seat	(V.S.)	1.5 mm	←
Starter jet	(G.S.)	#25	#22.5
Pilot screw	(P.S.)	(PRE-SET)	(PRE-SET)
Pilot air jet	(P.A.J.)	No.1:(#65), No.2:(2.0 mm)	No.1:(#65), No.2:(1.2 mm)
Throttle cable play		0.5—1.0 mm (0.02—0.04 in)	←
Choke cable play		0.5—1.0 mm (0.02—0.04 in)	←

CARBURETOR

ITEM		SPECIFICATION	
		E-18	
Carburetor type		MIKUNI BS36SS (No.1)	MIKUNI BDS36SS (No.2)
Bore size		36 mm	←
I.D. No.		45C30	←
Idle r/min.		$1200 \pm {}^{100}_{50}$ r/min.	←
Float height		27.7±1.0 mm (1.09±0.04 in)	9.1±1.0 mm (0.36±0.04 in)
Main jet	(M.J.)	#135	#125
Main air jet	(M.A.J.)	1.8 mm	←
Jet needle	(J.N.)	5F107-3rd	5D48-3rd

ITEM		SPECIFICATION	
		E-18	
Needle jet	(N.J.)	P-4	P-2
Throttle valve	(Th.V.)	#115	←
Pilot jet	(P.J.)	#45	#40
By-pass	(B.P.)	0.8 mm x 2PCS	0.8 mm x 3PCS
Pilot outlet	(P.O.)	0.8 mm	1.0 mm
Valve seat	(V.S.)	1.5 mm	←
Starter jet	(G.S.)	#25	#22.5
Pilot screw	(P.S.)	(PRE-SET) 2 turns back	(PRE-SET) 1¼ turns back
Pilot air jet	(P.A.J.)	No.1:(#55), No.2:(1.85 mm)	No.1:(#65), No.2:(1.2 mm)
Throttle cable play		0.5—1.0 mm (0.02—0.04 in)	←
Choke cable play		0.5—1.0 mm (0.02—0.04 in)	←

CARBURETOR

ITEM		SPECIFICATION	
		E-01	
Carburetor type		MIKUNI BS36SS (No.1)	MIKUNI BDS36SS (No.2)
Bore size		36 mm	←
I.D. No.		45C40	←
Idle r/min.		1100±100 r/min.	←
Float height		27.7±1.0 mm (1.09±0.04 in)	9.1±1.0 mm (0.36±0.04 in)
Main jet	(M.J.)	#135	#122.5
Main air jet	(M.A.J.)	1.8 mm	←
Jet needle	(J.N.)	5F108-3rd	5D49-3rd
Needle jet	(N.J.)	P-4	←
Throttle valve	(Th.V.)	#115	←
Pilot jet	(P.J.)	#47.5	#40
By-pass	(B.P.)	0.8 mm x 2PCS	0.8 mm x 3PCS
Pilot outlet	(P.O.)	0.8 mm	1.0 mm
Valve seat	(V.S.)	1.5 mm	←
Starter jet	(G.S.)	#25	#22.5
Pilot screw	(P.S.)	(PRE-SET) 1½ turns back	(PRE-SET) 1⅛ turns back
Pilot air jet	(P.A.J.)	No.1:(#70), No.2:(2.0 mm)	No.1:(#65), No.2:(1.2 mm)
Throttle cable play		0.5—1.0 mm (0.02—0.04 in)	←
Choke cable play		0.5—1.0 mm (0.02—0.04 in)	←

CARBURETOR

ITEM	SPECIFICATION	
	E-22,24	
Carburetor type	MIKUNI BS36SS (No.1)	MIKUNI BDS36SS (No.2)
Bore size	36 mm	←
I.D. No.	45C50	←
Idle r/min.	1100±100 r/min.	←

ITEM		SPECIFICATION	
		E-22,24	
Float height		27.7 ± 1.0 mm (1.09 ± 0.04 in)	9.1 ± 1.0 mm (0.36 ± 0.04 in)
Main jet	(M.J.)	#132.5	#120
Main air jet	(M.A.J.)	1.8 mm	←
Jet needle	(J.N.)	5F108-3rd	5D49-3rd
Needle jet	(N.J.)	P-4	←
Throttle valve	(Th.V.)	#115	←
Pilot jet	(P.J.)	#47.5	#40
By-pass	(B.P.)	0.8 mm x 2PCS	0.8 mm x 3PCS
Pilot outlet	(P.O.)	0.8 mm	1.0 mm
Valve seat	(V.S.)	1.5 mm	←
Starter jet	(G.S.)	#25	#22.5
Pilot screw	(P.S.)	(PRE-SET) 1⅛ turns back	(PRE-SET) 1 turn back
Pilot air jet	(P.A.J.)	No.1:(#70), No.2:(2.0 mm)	No.1:(#65), No.2:(1.2 mm)
Throttle cable play		0.5 – 1.0 mm (0.02 – 0.04 in)	←
Choke cable play		0.5 – 1.0 mm (0.02 – 0.04 in)	←

CARBURETOR

ITEM		SPECIFICATION	
		U-type of E-22	
Carburetor type		MIKUNI BS36SS (No.1)	MIKUNI BDS36SS (No.2)
Bore size		36 mm	←
I.D. No.		45C60	←
Idle r/min.		1100 ± 100 r/min.	←
Float height		27.7 ± 1.0 mm (1.09 ± 0.04 in)	9.1 ± 1.0 mm (0.36 ± 0.04 in)
Main jet	(M.J.)	#135	#122.5
Main air jet	(M.A.J.)	1.8 mm	←
Jet needle	(J.N.)	5F108-3rd	5D49-3rd
Needle jet	(N.J.)	P-4	P-6
Throttle valve	(Th.V.)	#115	←
Pilot jet	(P.J.)	#47.5	#40
By-pass	(B.P.)	0.8 mm x 2PCS	0.8 mm x 3PCS
Pilot outlet	(P.O.)	0.8 mm	1.0 mm
Valve seat	(V.S.)	1.5 mm	←
Starter jet	(G.S.)	#25	#22.5
Pilot screw	(P.S.)	(PRE-SET) 1⅛ turns back	(PRE-SET) 1 1/16 turns back
Pilot air jet	(P.A.J.)	No.1:(#70), No.2:(2.0 mm)	No.1:(#65), No.2:(1.2 mm)
Throttle cable play		0.5 – 1.0 mm (0.02 – 0.04 in)	←
Choke cable play		0.5 – 1.0 mm (0.02 – 0.04 in)	←

CARBURETOR

ITEM		SPECIFICATION	
		E-17	
Carburetor type		MIKUNI BS36SS (No.1)	MIKUNI BDS36SS (No.2)
Bore size		36 mm	←
I.D. No.		45C70	←
Idle r/min.		1100 ± 100 r/min.	←
Float height		27.7 ± 1.0 mm (1.09 ± 0.04 in)	9.1 ± 1.0 mm (0.36 ± 0.04 in)
Main jet	(M.J.)	#135	#122.5
Main air jet	(M.A.J.)	1.8 mm	←
Jet needle	(J.N.)	5F108-3rd	5D49-3rd
Needle jet	(N.J.)	P-4	P-6
Throttle valve	(Th.V.)	#115	←
Pilot jet	(P.J.)	#47.5	#40
By-pass	(B.P.)	0.8 mm x 2PCS	0.8 mm x 3PCS
Pilot outlet	(P.O.)	0.8 mm	1.0 mm
Valve seat	(V.S.)	1.5 mm	←
Starter jet	(G.S.)	#25	#22.5
Pilot screw	(P.S.)	(PRE-SET) 1⅜ turns back	(PRE-SET) 1¼ turns back
Pilot air jet	(P.A.J.)	No.1:(#70), No.2:(2.0 mm)	No.1:(#65), No.2:(1.2 mm)
Throttle cable play		0.5 – 1.0 mm (0.02 – 0.04 in)	←
Choke cable play		0.5 – 1.0 mm (0.02 – 0.04 in)	←

ELECTRICAL

Unit: mm (in)

ITEM		SPECIFICATION	NOTE
Ignition timing		5° B.T.D.C. Below 1 650 r/min. and 30° B.T.D.C. Above 3 500 r/min.	U.S.A. model
		5° B.T.D.C. Below 1 625 r/min. and 32° B.T.D.C. Above 3 750 r/min.	Other models
Firing order		1·2	
Spark plug	Type	N.G.K.: DPR8EA-9 ND: X24EPR-U9	
	Gap	0.8 – 0.9 (0.031 – 0.035)	
Spark performance		Over 8 (0.3) at 1 atm.	
Signal coil resistance		Approx. 117 Ω (G – Bl)	U.S.A. model
		Approx. 230 Ω (G – Bl)	Other models
Ignition coil resistance	Primary	2 – 6 Ω	⊕ tap – ⊖ tap
	Secondary	19 – 27 kΩ	Plug cap – ⊕ tap
Generator no-load voltage (When engine cold)		More than 65V (AC) at 5 000 r/min.	U.S.A. model
		More than 75 V (AC) at 5 000 r/min.	Other models
Regulated voltage		13.5 – 15.5 V at 5 000 r/min.	
Starter motor brush length		Limit: 9 (0.35)	N.D.

ITEM	STANDARD		NOTE
Commutator under-cut	Limit: 0.2 (0.008)		
Starter relay resistance	2–6 Ω		
Battery	Type designation	YB16B-A	
	Capacity	12V57.6kC (16Ah)/10HR	
	Standard electrolyte S.G.	1.28 at 20°C (68°F)	
Fuse size	Headlight	10 A	
	Ignition/Fan	10 A	
	Signal	10 A	
	Main	25 A	

WATTAGE

Unit:W

ITEM		SPECIFICATION
Headlight	HI	60
	LO	55
Tail/Brake light		5/21
Turn signal light		21
Speedometer light		3.4
Tachometer light		1.7 x 2PCS
Water temp. indicator light		3
Turn signal indicator light		3.4
High beam indicator light		1.7
Neutral indicator light		3.4
Oil pressure indicator light		3.4
License light		5
Position light		4 (Execpt E-03,28,33 models)

BRAKE + WHEEL

Unit: mm (in)

ITEM	STANDARD		LIMIT
Rear brake pedal height	35 (1.4)		—
Brake disc thickness	Front	5.5 ± 0.2 (0.197 ± 0.008)	5.0 (0.20)
	Rear	6.0 ± 0.2 (0.236 ± 0.008)	5.5 (0.22)
Brake disc runout	Front	—	0.30 (0.012)
	Rear		
Master cylinder bore	Front	12.700–12.743 (0.5000–0.5017)	—
	Rear		
Master cylinder piston diam.	Front	12.657–12.684 (0.4983–0.4993)	—
	Rear		
Brake caliper cylinder bore	Front	33.960–34.036 (1.3370–1.3400)	—
		27.000–27.076 (1.0630–1.0660)	—
	Rear	42.850–42.926 (1.6870–1.6900)	—

ITEM		STANDARD		LIMIT
Brake caliper piston diam.		Front	33.884–33.934 (1.3340–1.3360)	—
			26.920–26.970 (1.0598–1.0618)	—
		Rear	42.770–42.820 (1.6839–1.6858)	—
Wheel rim runout		Axial	—	2.0 (0.08)
		Radial	—	2.0 (0.08)
Wheel axle runout		Front	—	0.25 (0.010)
		Rear	—	0.25 (0.010)
Tire size		Front	110/80-18 58H	—
	E-03,28,33	Rear	150/70-17 69H	—
	Others	Rear	150/70 B17 69H	—
Tire tread depth		Front	—	1.6 (0.06)
		Rear	—	2.0 (0.08)

SUSPENSION

Unit: mm (in)

ITEM	STANDARD	LIMIT	NOTE
Front fork stroke	150 (5.9)	—	
Front fork spring free length	—	353 (13.9)	E-01,03,28,33 models
	—	348 (13.7)	Other models
Front fork oil level	142 (5.59)	—	E-01,03,28,33 models
	138 (5.43)	—	Other models
Rear wheel travel	118 (4.64)	—	E-01,03,28,33 models
	119 (4.68)	—	Other models
Swingarm pivot shaft runout	—	0.30 (0.012)	

TIRE PRESSURE

COLD INFLATION TIRE PRESSURE	NORMAL RIDING					
	SOLO RIDING			DUAL RIDING		
	kPa	kg/cm²	psi	kPa	kg/cm²	psi
FRONT	225	2.25	33	225	2.25	33
REAR	250	2.50	36	280	2.80	41

FUEL + OIL + COOLANT

ITEM	SPECIFICATION		NOTE
Fuel type	Use only unleaded gasoline of at least 87 pump octane ($\frac{R+M}{2}$) or 91 octane or higher rated by the research method. Gasoline containing MTBE (Methyl Tertiary Butyl Ether), less than 10% ethanol, or less than 5% methanol with appropriate cosolvents and corrosion inhibitor is permissible.		U.S.A.model
	Use only unleaded gasoline of at least 87 pump octane ($\frac{R+M}{2}$ method) or 91 octane or higher rated by the Research Method.		Canada model
	Gasoline used should be graded 85-95 octane or higher. An unleaded gasoline is recommended.		Other models
Fuel tank including reserve	18.0 L (4.8/4.0 US/Imp gal		California model only
	19.0 L (5.0/4.2 US/Imp gal)		Other models
reserve	4.0 L (1.1/0.9 US/Imp gal)		
Engine oil type	SAE 10W/40, API SE or SF		
Engine oil capacity	Change	2 400 ml (2.5/2.1 US/Imp qt)	
	Filter change	2 800 ml (3.0/2.5 US/Imp qt)	
	Overhaul	3 300 ml (3.5/2.9 US/Imp qt)	
Front fork oil type	Fork oil #10		
Front fork oil capacity (each leg)	388 ml (13.1/13.7 US/Imp oz)		E-01,03,28,33, models
	392 ml (13.2/13.8 US/Imp oz)		Other models
Final bevel gear oil type	SAE 90 hypoid gear oil with GL-5 under API classification		
Final bevel gear oil capacity	200—220 ml (6.8/7.0—7.4/7.7 US/Imp oz)		
Brake fluid type	DOT4		
Coolant capacity	1 700 ml (1.8/1.5 US/Imp qt)		

THERMOSTAT + RADIATOR + FAN

ITEM		STANDARD	LIMIT
Thermostat valve opening temperature		75.0 ± 1.5°C (167 ± 2.7°F)	—
Thermostat valve lift		Over 6 mm (0.24 in) at 90°C (194°F)	—
Radiator cap valve release pressure		1.1 ± 0.15 kg/cm² (15.6 ± 2.1 psi, 110 ± 15 kPa)	—
Electric fan thermo-switch operating temperature	ON	Approx. 105° C (221°F)	—
	OFF	Approx. 100°C (212°F)	—