# 2001-2002

# SUZUKI

# GSX-R600

# SERVICE MANUAL


99500-35080-01E

# FOREWORD

*This manual contains an introductory description on the SUZUKI GSX-R600 and procedures for its inspection/service and overhaul of its main components.*
*Other information considered as generally known is not included.*
*Read the GENERAL INFORMATION section to familiarize yourself with the motorcycle and its maintenance. Use this section as well as other sections to use as a guide for proper inspection and service.*
*This manual will help you know the motorcycle better so that you can assure your customers of fast and reliable service.*

- *This manual has been prepared on the basis of the latest specifications at the time of publication. If modifications have been made since then, differences may exist between the content of this manual and the actual motorcycle.*
- *Illustrations in this manual are used to show the basic principles of operation and work procedures. They may not represent the actual motorcycle exactly in detail.*
- *This manual is written for persons who have enough knowledge, skills and tools, including special tools, for servicing SUZUKI motorcycles. If you do not have the proper knowledge and tools, ask your authorized SUZUKI motorcycle dealer to help you.*

**⚠ WARNING**

**Inexperienced mechanics or mechanics without the proper tools and equipment may not be able to properly perform the services described in this manual. Improper repair may result in injury to the mechanic and may render the motorcycle unsafe for the rider and passenger.**

**SUZUKI MOTOR CORPORATION**
*Motorcycle Service Department*

# GROUP INDEX

# HOW TO USE THIS MANUAL

## TO LOCATE WHAT YOU ARE LOOKING FOR:

1. The text of this manual is divided into sections.
2. The section titles are listed in the GROUP INDEX.
3. Holding the manual as shown at the right will allow you to find the first page of the section easily.
4. The contents are listed on the first page of each section to help find the item and page you need.

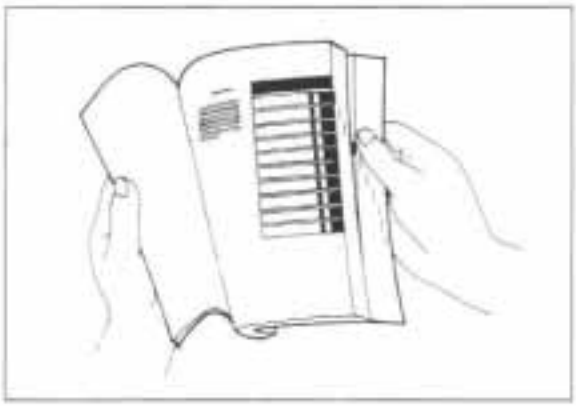

## COMPONENT PARTS AND WORK TO BE DONE

Under the name of each system or unit, is its exploded view. Work instructions and other service information such as the tightening torque, lubricating points and locking agent points, are provided.

Example: Front wheel

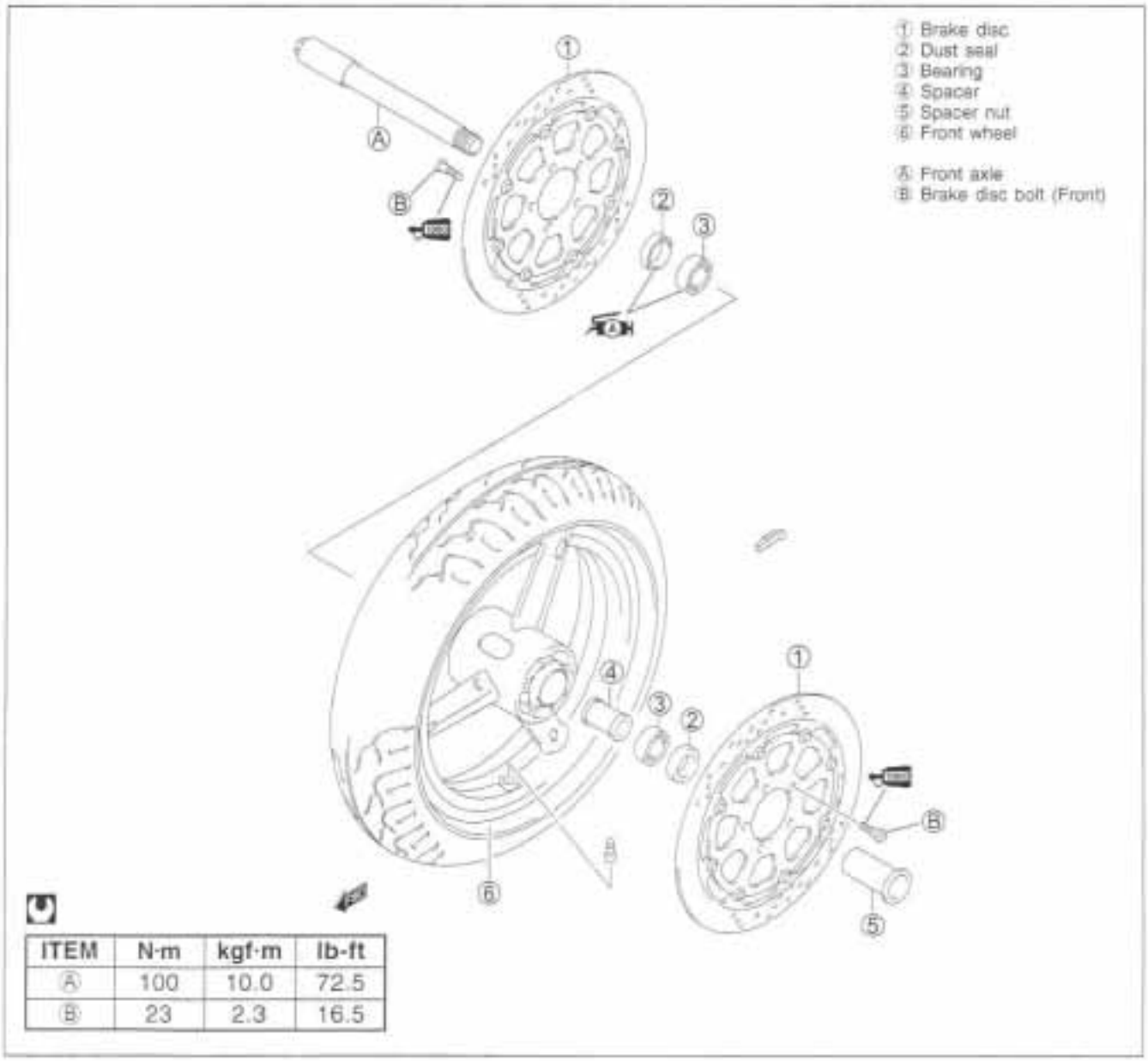


| ITEM | N·m | kgf·m | lb-ft |
|---|---|---|---|
| Ⓐ | 100 | 10.0 | 72.5 |
| Ⓑ | 23 | 2.3 | 16.5 |

## SYMBOL

Listed in the table below are the symbols indicating instructions and other information necessary for servicing. The meaning of each symbol is also included in the table.

| SYMBOL | DEFINITION | SYMBOL | DEFINITION |
|---|---|---|---|
| | Torque control required. Data beside it indicates specified torque. | 1360 | Apply THREAD LOCK SUPER "1360". 99000-32130 |
| OIL | Apply oil. Use engine oil unless otherwise specified. | LLC | Use engine coolant. 99000-99032-11X |
| M/O | Apply molybdenum oil solution. (Mixture of engine oil and SUZUKI MOLY PASTE in a ratio of 1:1) | FORK | Use fork oil. 99000-99001-SS8 (99000-99044-10G) |
| A | Apply SUZUKI SUPER GREASE "A". 99000-25010 | BF | Apply or use brake fluid. |
| M | Apply SUZUKI MOLY PASTE. 99000-25140 | V | Measure in voltage range. |
| 1207B | Apply SUZUKI BOND "1207B". 99000-31140 | A | Measure in current range. |
| 1215 | Apply SUZUKI BOND "1215" 99000-31110 | | Measure in diode test range. |
| 1303 | Apply THREAD LOCK SUPER "1303". 99000-32030 | | Measure in continuity test range. |
| 1322 | Apply THREAD LOCK SUPER "1322". 99000-32110 | TOOL | Use special tool. |
| 1342 | Apply THREAD LOCK "1342". 99000-32050 | DATA | Indication of service data. |

## ABBREVIATIONS MAY BE USED IN THIS MANUAL

**A**

| | |
|---|---|
| ABDC | : After Bottom Dead Center |
| AC | : Alternating Current |
| ACL | : Air Cleaner, Air Cleaner Box |
| API | : American Petroleum Institute |
| ATDC | : After Top Dead Center |
| ATM Pressure | : Atmospheric Pressure<br>Atmospheric Pressure Sensor (APS, AP Sensor) |
| A/F | : Air Fuel Mixture |

**B**

| | |
|---|---|
| BBDC | : Before Bottom Dead Center |
| BTDC | : Before Top Dead Center |
| B+ | : Battery Positive Voltage |

**C**

| | |
|---|---|
| CKP Sensor | : Crankshaft Position Sensor (CKPS) |
| CKT | : Circuit |
| CLP Switch | : Clutch Lever Position Switch (Clutch Switch) |
| CMP Sensor | : Camshaft Position Sensor (CMPS) |
| CO | : Carbon Monoxide |
| CPU | : Central Processing Unit |

**D**

| | |
|---|---|
| DC | : Direct Current |
| DMC | : Dealer Mode Coupler |
| DOHC | : Double Over Head Camshaft |
| DRL | : Daytime Running Light |

**E**

| | |
|---|---|
| ECM | : Engine Control Module<br>Engine Control Unit (ECU) (FI Control Unit) |
| ECT Sensor | : Engine Coolant Temperature Sensor (ECTS), Water Temp. Sensor (WTS) |
| EVAP | : Evaporative Emission |
| EVAP Canister | : Evaporative Emission Canister (Canister) |

**F**

| | |
|---|---|
| FI | : Fuel Injection, Fuel Injector |
| FP | : Fuel Pump |
| FPR | : Fuel Pressure Regulator |
| FP Relay | : Fuel Pump Relay |

**G**

| | |
|---|---|
| GEN | : Generator |
| GND | : Ground |
| GP Switch | : Gear Position Switch |

**H**

| | |
|---|---|
| HC | : Hydrocarbons |

**I**

| | |
|---|---|
| IAP Sensor | : Intake Air Pressure Sensor (IAPS) |
| IAT Sensor | : Intake Air Temperature Sensor (IATS) |
| IG | : Ignition |

**L**

| | |
|---|---|
| LCD | : Liquid Crystal Display |
| LED | : Light Emitting Diode (Malfunction Indicator Lamp) |
| LH | : Left Hand |

**M**

| | |
|---|---|
| MAL-Code | : Malfunction Code (Diagnostic Code) |
| Max | : Maximum |
| MIL | : Malfunction Indicator Lamp (LED) |
| Min | : Minimum |

**N**

| | |
|---|---|
| NOx | : Nitrogen Oxides |

**O**

| | |
|---|---|
| OHC | : Over Head Camshaft |
| OPS | : Oil Pressure Switch |

**P**

| | |
|---|---|
| PCV | : Positive Crankcase Ventilation (Crankcase Breather) |

**R**

| | |
|---|---|
| RH | : Right Hand |
| ROM | : Read Only Memory |

**S**

| | |
|---|---|
| SAE | : Society of Automotive Engineers |
| STC System | : Secondary Throttle Control System (STCS) |
| STC Unit | : Secondary Throttle Control Unit (STCU) |
| STP Sensor | : Secondary Throttle Position Sensor (STPS) |
| ST Valve | : Secondary Throttle Valve (STV) |
| STV Actuator | : Secondary Throttle Valve Actuator (STVA) |

**T**

| | |
|---|---|
| TO Sensor | : Tip Over Sensor (TOS) |
| TP Sensor | : Throttle Position Sensor (TPS) |

# GENERAL INFORMATION

1

CONTENTS

## WARNING/CAUTION/NOTE

Please read this manual and follow its instructions carefully. To emphasize special information, the symbol and the words WARNING, CAUTION and NOTE have special meanings. Pay special attention to the messages highlighted by these signal words.

**⚠ WARNING**

**Indicates a potential hazard that could result in death or injury.**

**⚠ CAUTION**

**Indicates a potential hazard that could result in motorcycle damage.**

*NOTE:*

*Indicates special information to make maintenance easier or instructions clearer.*

Please note, however, that the warnings and cautions contained in this manual cannot possibly cover all potential hazards relating to the servicing, or lack of servicing, of the motorcycle. In addition to the WARNINGS and CAUTIONS stated, you must use good judgement and basic mechanical safety principles. If you are unsure about how to perform a particular service operation, ask a more experienced mechanic for advice.

## GENERAL PRECAUTIONS

**⚠ WARNING**

- **Proper service and repair procedures are important for the safety of the service mechanic and the safety and reliability of the motorcycle.**
- **When 2 or more persons work together, pay attention to the safety of each other.**
- **When it is necessary to run the engine indoors, make sure that exhaust gas is forced outdoors.**
- **When working with toxic or flammable materials, make sure that the area you work in is well-ventilated and that you follow all of the material manufacturer's instructions.**
- **Never use gasoline as a cleaning solvent.**
- **To avoid getting burned, do not touch the engine, engine oil, radiator and exhaust system until they have cooled.**
- **After servicing the fuel, oil, engine coolant, exhaust or brake systems, check all lines and fittings related to the system for leaks.**

**⚠ CAUTION**

- If parts replacement is necessary, replace the parts with Suzuki Genuine Parts or their equivalent.
- When removing parts that are to be reused, keep them arranged in an orderly manner so that they may be reinstalled in the proper order.
- Be sure to use special tools when instructed.
- Make sure that all parts used in reassembly are clean. Lubricate them when specified.
- Use the specified lubricant, bond, or sealant.
- When removing the battery, disconnect the negative cable first and then the positive cable.
- When reconnecting the battery, connect the positive cable first and then the negative cable, and cover the positive terminal with the terminal cover.
- When performing service to electrical parts, disconnect the battery negative cable unless the service procedure requires the battery power.
- When tightening cylinder head and crankcase bolts and nuts, tighten the larger sizes first. Always tighten the bolts and nuts diagonally from the inside working out and to the specified tightening torque.
- Whenever you remove oil seals, gaskets, packing, O-rings, locking washers, self-locking nuts, cotter pins, circlips, and certain other parts as specified, be sure to replace them with new ones. Also, before installing these new parts, be sure to remove any left over material from the mating surfaces.
- Never reuse a circlip. When installing a new circlip, take care not to expand the end gap larger than required to slip the circlip over the shaft. After installing a circlip, always ensure that it is completely seated in its groove and securely fitted.
- Use a torque wrench to tighten fasteners to the specified torque. Wipe off grease and oil if a thread is smeared with them.
- After reassembling, check parts for tightness and proper operation.

- To protect the environment, do not unlawfully dispose of used motor oil, engine coolant and other fluids: batteries, and tires.
- To protect the earth's natural resources, properly dispose of used motorcycles and parts.

# SUZUKI GSX-R600K1 (2001-MODEL)

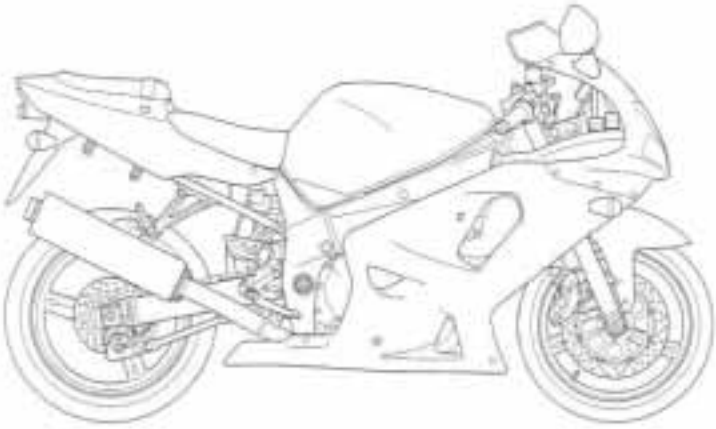

RIGHT SIDE

LEFT SIDE

* Difference between photograph and actual motorcycle depends on the markets.

## SERIAL NUMBER LOCATION

The frame serial number or V.I.N. (Vehicle Identification Number) Ⓐ is stamped on the right side of the steering head pipe. The engine serial number Ⓑ is located on the rear side of the crankcase. These numbers are required especially for registering the machine and ordering spare parts.


# FUEL, OIL AND ENGINE COOLANT RECOMMENDATION

## FUEL (FOR USA AND CANADA)

Use only unleaded gasoline of at least 87 pump octane ($\frac{R+M}{2}$) or 91 octane or higher rated by the research method. Gasoline containing MTBE (Methyl Tertiary Butyl Ether), less than 10% ethanol, or less than 5% methanol with appropriate cosolvents and corrosion inhibitor is permissible.

## FUEL (FOR THE OTHER COUNTRIES)

Gasoline used should be graded 91 octane (Research Method) or higher. An unleaded gasoline is recommended.

## ENGINE OIL (For U.S.A. model)

SUZUKI recommends the use of SUZUKI PERFORMANCE 4 MOTOR OIL or an oil which is rated SF or SG under the API (American Petroleum Institute) service classification. The recommended viscosity is SAE 10W/40. If an SAE 10W/40 oil is not available, select and alternative according to the right chart.

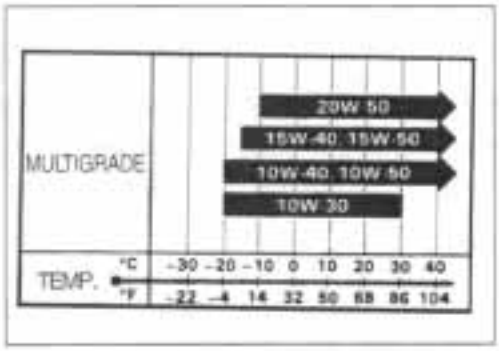


## ENGINE OIL (For the other models)

Use a premium quality 4-stroke motor oil to ensure longer service life of your motorcycle. Use only oils which are rated SF or SG under the API service classification.

The recommended viscosity is SAE 10W-40. If an SAE 10W-40 motor oil is not available, select an alternative according to the following chart.

## BRAKE FLUID

Use DOT4 brake fluid.

**⚠ WARNING**

**Since the brake system of this motorcycle is filled with a glycol-based brake fluid by the manufacturer, do not use or mix different types of fluid such as silicone-based and petroleum-based fluid for refilling the system, otherwise serious damage will result.**

**Do not use any brake fluid taken from old or used or unsealed containers.**

**Never re-use brake fluid left over from a previous servicing, which has been stored for a long period.**

## FRONT FORK OIL

Use fork oil SS-8 (#10) or an equivalent fork oil.

## ENGINE COOLANT

Use an anti-freeze/engine coolant compatible with an aluminum radiator, mixed with distilled water only.

## WATER FOR MIXING

Use distilled water only. Water other than distilled water can corrode and clog the aluminum radiator.

## ANTI-FREEZE/ENGINE COOLANT

The engine coolant perform as a corrosion and rust inhabit as well as anti-freeze. Therefore, the engine coolant should be used at all times even though the atmospheric temperature in your area does not go down to freezing point.

Suzuki recommends the use of SUZUKI COOLANT anti-freeze/engine coolant. If this is not available, use an equivalent which is compatible with an aluminum radiator.

## LIQUID AMOUNT OF WATER/ENGINE COOLANT

**Solution capacity (total): 2 400 ml (2.5/2.1 US/Imp qt)**

For engine coolant mixture information, refer to cooling system section. (☞ 5-2)

**⚠ CAUTION**

**Mixing of anti-freeze/engine coolant should be limited to 60%. Mixing beyond it would reduce its efficiency. If the anti-freeze/engine coolant mixing ratio is below 50%, rust inhabiting performance is greatly reduced. Be sure to mix it above 50% even though the atmospheric temperature does not go down to the freezing point.**

# BREAK-IN PROCEDURES

During manufacture only the best possible materials are used and all machined parts are finished to a very high standard but it is still necessary to allow the moving parts to "BREAK-IN" before subjecting the engine to maximum stresses. The future performance and reliability of the engine depends on the care and restraint exercised during its early life. The general rules are as follows.

- Keep to these break-in procedures:

| | | | |
|---|---|---|---|
| **Initial** | **800 km ( 500 miles):** | **Below** | **7 000 r/min** |
| **Up to** | **1 600 km (1 000 miles):** | **Below** | **10 500 r/min** |
| **Over to** | **1 600 km (1 000 miles):** | **Below** | **14 000 r/min** |

- Upon reaching an odometer reading of 1 600 km (1 000 miles) you can subject the motorcycle to full throttle operation. However, do not exceed 14 000 r/min at any time.

# CYLINDER IDENTIFICATION

The four cylinders of this engine are identified as No.1, No.2, No.3 and No.4 cylinder, as counted from left to right (as viewed by the rider on the seat).

# INFORMATION LABELS

| | GSX-R600 | GSX-R600UD | GSX-R600UF |
|---|---|---|---|
| ① Noise label | ○ For E-03, 24, 33 | | |
| ② Information label | ○ For E-03, 28, 33 | | |
| ③ Vacuum hose routing label | ○ For E-33 | | |
| ④ Fuel caution label | ○ For E-02, 24 | | |
| ⑤ Manual notice label | ○ For E-03, 33 | | |
| ⑥ Frame caution label | ○ | ○ | ○ |
| ⑦ Screen warning label | ○ | ○ | ○ |
| ⑧ Steering warning label | ○ | ○ | ○ |
| ⑨ Tire pressure label | ○ | ○ | ○ |
| ⑩ Warning safety label | ○ | ○ | ○ |
| ⑪ ICES Canada label | ○ For E-28 | | |
| ⑫ ID plate | ○ For E-02, 19, 24 | ○ | ○ |
| ⑬ E-19 ID label | | | ○ |
| ⑭ Safety plate | ○ For E-03, 28, 33 | | |

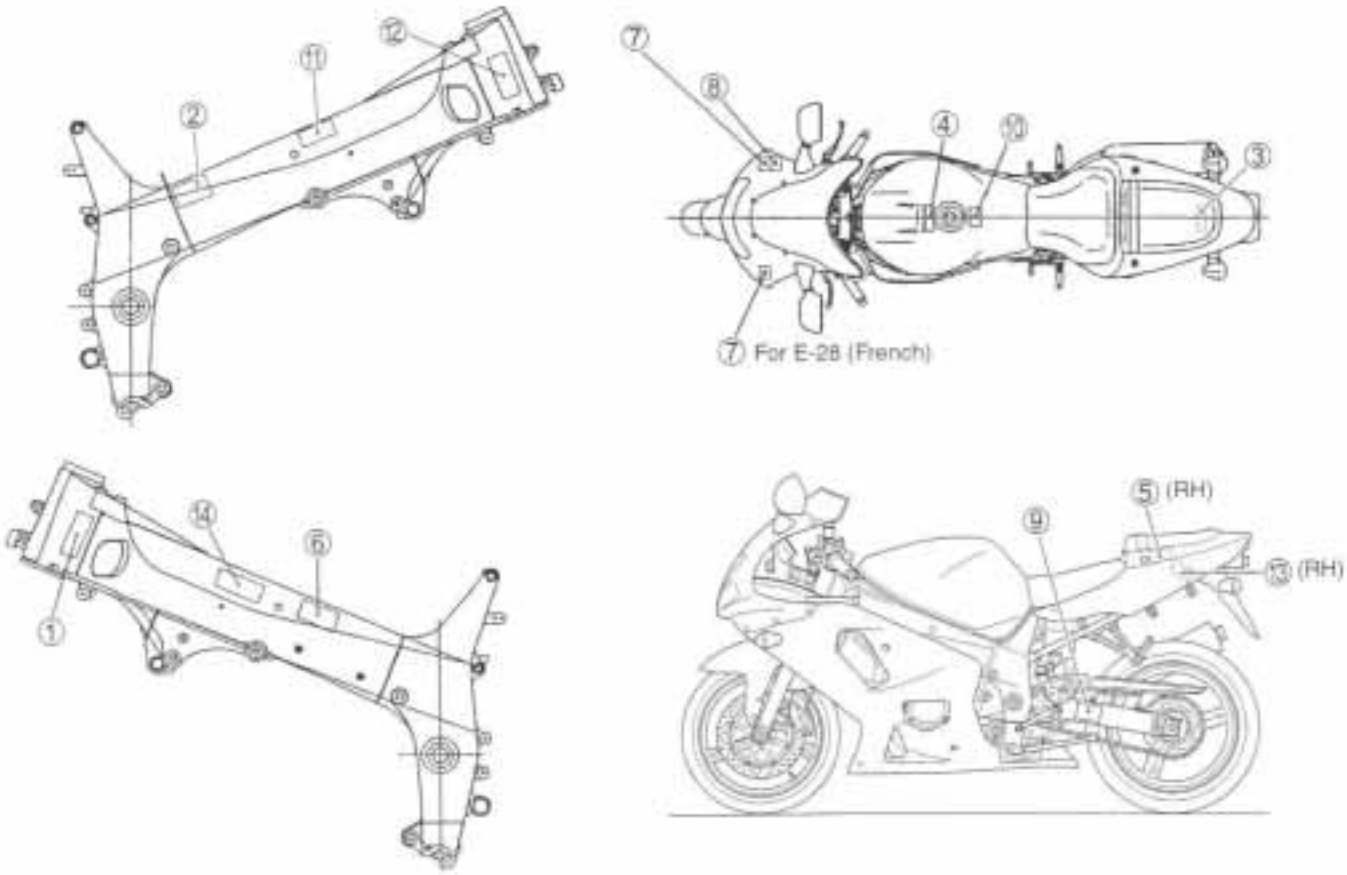

# SPECIFICATIONS

## DIMENSIONS AND DRY MASS

| | |
|---|---|
| Overall length | 2 040 mm (80.3 in) |
| Overall width | 715 mm (28.1 in) |
| Overall height | 1 135 mm (44.7 in) |
| Wheelbase | 1 410 mm (55.5 in) |
| Ground clearnce | 130 mm (5.1 in) |
| Seat height | 830 mm (32.7 in) |
| Dry mass | 163 kg (359 lbs) ..... For E-33<br>164 kg (361 lbs) ..... For the others |

## ENGINE

| | |
|---|---|
| Type | Four-stroke, Liquid-cooled, DOHC |
| Number of cylinders | 4 |
| Valve clearance IN | 0.10 – 0.20 mm (0.004 – 0.008 in) |
| EX | 0.20 – 0.30 mm (0.008 – 0.012 in) |
| Bore | 67.0 mm (2.638 in) |
| Stroke | 42.5 mm (1.673 in) |
| Piston displacement | 599 $cm^3$ (36.5 cu. in) |
| Compression ratio | 12.2 : 1 |
| Fuel system | Fuel injection |
| Air cleaner | Non-woven fabric element |
| Starter system | Electric |
| Lubrication system | Wet sump |

## TRANSMISSION

| | |
|---|---|
| Clutch | Wet multi-plate type |
| Transmission | 6-speed, constant mesh |
| Gearshift pattern | 1-down, 5-up |
| Primary reduction ratio | 1.926 (79/41) |
| Gear ratios, Low | 2.785 (39/14) |
| 2nd | 2.000 (32/16) |
| 3rd | 1.600 (32/20) |
| 4th | 1.363 (30/20) |
| 5th | 1.208 (29/24) |
| Top | 1.086 (25/23) |
| Final reduction ratio | 2.812 (45/16) |
| Drive system | RK 525SMOZ6, 110 links |

## CHASSIS

| | |
|---|---|
| Front suspension | Telescopic, coil spring, oil damped, spring pre-load fully adjustable, rebound and compression damp ing force fully adjustable. |
| Rear suspension | Link type,oil damped, coil spring, spring pre-road fully adjustable, rebound damping force and compression damping force fully adjustable. |
| Caster | 24° |
| Trail | 96 mm (3.8 in) |
| Steering angle | 29° (right & left) |
| Turning radius | 3.2 m (10.5 ft) |
| Front brake | Disc brake, twin |
| Rear brake | Disc brake |
| Front tire size | 120/70 ZR17 (58 W), tubeless |
| Rear tire size | 180/55 ZR17 (73 W), tubeless |

## ELECTRICAL

| | |
|---|---|
| Ignition type | Electronic ignition (Transistorized) |
| Ignition timing | 4° B.T.D.C. at 1 300 r/min |
| Spark plug | NGK CR9E, DENSO U27ESR-N |
| Battery | 12V 36.0 kC(8 Ah)/10HR |
| Generator | Three-phase A.C. Generator |
| Main fuse | 30A |
| Fuse | 15/15/15/15/10/10A |
| Headlight | 12V 55+55/55W (H7) |
| Position light | 12V 5W ..... Except for E-03, 24, 28, 33 models |
| Turn signal light | 12V 21W |
| Brake light/Taillight | 12V 21/5W × 2 |
| Neutral indicator light | LED |
| High beam indicator light | LED |
| Turn signal indicator light | LED |
| Fuel injection warnning light | LED |
| FI/Oil pressure/Engine coolant temp. indicator light | LED |

## CAPACITIES

| | |
|---|---|
| Fuel tank, including reserve | 18 L (4.8/4.0 US/Imp gal) |
| Engine oil, oil change | 2 800 ml (3.0/2.5 US/Imp qt) |
| with filter change | 3 100 ml (3.3/2.7 US/Imp qt) |
| overhaul | 3 400 ml (3.6/3.0 US/Imp qt) |
| Coolant | 2 400 ml (3.2/2.6 US/Imp qt) |
| Front fork oil (each leg) | 528 ml (17.8/18.6 US/Imp oz) |

These specifications are subject to change without notice.

# COUNTRY AND AREA CODES

The following codes stand for the applicable country(-ies) and area(-s).

| MODEL | CODE | COUNTRY or AREA |
|---|---|---|
| GSX-R600 | E-02 | U.K. |
| | E-03 | USA (Except for california) |
| | E-19 | EU |
| | E-24 | Australia |
| | E-28 | Canada |
| | E-33 | California (USA) |
| GSX-R600UD | E-19 | EU |
| GSX-R600UF | E-19 | EU |

# PERIODIC MAINTENANCE

2

CONTENTS

# PERIODIC MAINTENANCE SCHEDULE

The chart below lists the recommended intervals for all the required periodic service work necessary to keep the motorcycle operating at peak performance and economy. Maintenance intervals are expressed in terms of kilometer, miles and months, and are dependant on whichever comes first.

*NOTES:*
*More frequent servicing may be performed on motorcycles that are used under severe conditions.*

## PERIODIC MAINTENANCE CHART

| Interval / Item | km | 1 000 | 6 000 | 12 000 | 18 000 | 24 000 |
|---|---|---|---|---|---|---|
| | miles | 600 | 4 000 | 7 500 | 11 000 | 15 000 |
| | months | 1 | 6 | 12 | 18 | 24 |
| Air cleaner element | | - | I | I | R | I |
| Spark plugs | | - | I | R | I | R |
| Valve clearance | | - | - | - | - | I |
| Engine oil | | R | R | R | R | R |
| Engine oil filter | | R | - | - | R | - |
| Fuel line | | - | I | I | I | I |
| | | Replace fuel hose every 4 years. | | | | |
| Idle speed | | I | I | I | I | I |
| Throttle valve synchronization | | I (E-33 only) | - | I | - | I |
| Evaporative emission control system (E-33 only) | | - | - | I | - | I |
| | | Replace vapor hose every 4 years. | | | | |
| PAIR (air supply) system | | - | - | I | - | I |
| Throttle cable play | | I | I | I | I | I |
| Clutch | | - | I | I | I | I |
| Radiator hoses | | - | I | I | I | I |
| Engine coolant | | Replace every 2 years. | | | | |
| Drive chain | | I | I | I | I | I |
| | | Clean and lubricate every 1 000 km (600 miles). | | | | |
| Brakes | | I | I | I | I | I |
| Brake hoses | | - | I | I | I | I |
| | | Replace every 4 years. | | | | |
| Brake fluid | | - | I | I | I | I |
| | | Replace every 2 years. | | | | |
| Tires | | - | I | I | I | I |
| Steering | | I | - | I | - | I |
| Front forks | | - | - | I | - | I |
| Rear suspension | | - | - | I | - | I |
| Exhaust pipe bolts and muffler bolt and nut | | T | - | T | - | T |
| Chassis bolts and nuts | | T | T | T | T | T |

*I = Inspect and adjust, clean, lubricate or replace as necessary.*
*R = Replace*
*T = Tighten*

## LUBRICATION POINTS

Proper lubrication is important for smooth operation and long life of each working part of the motorcycle. Major lubrication points are indicated below.

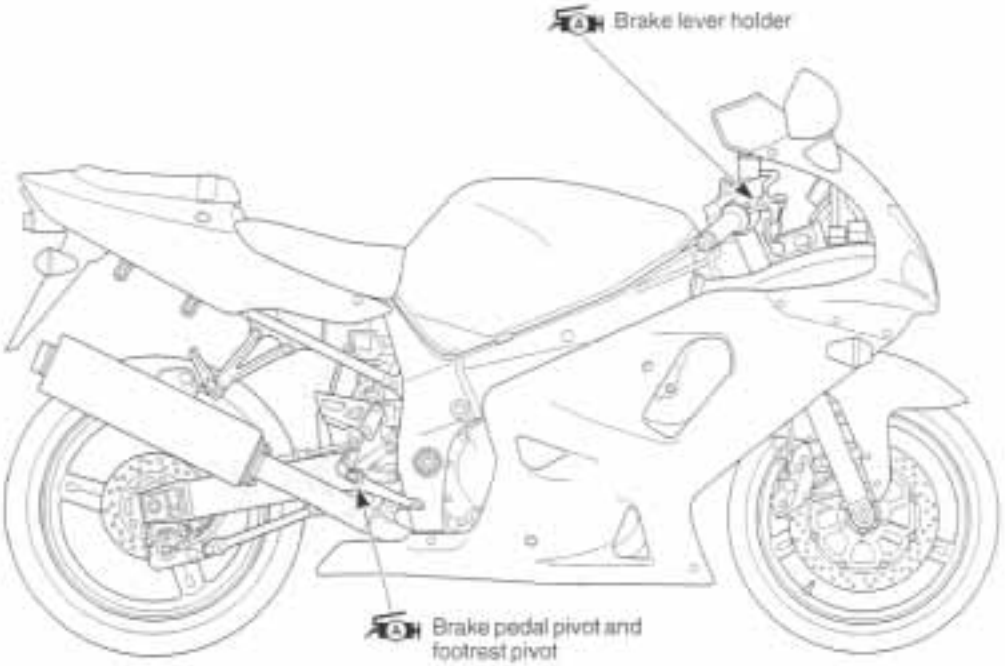


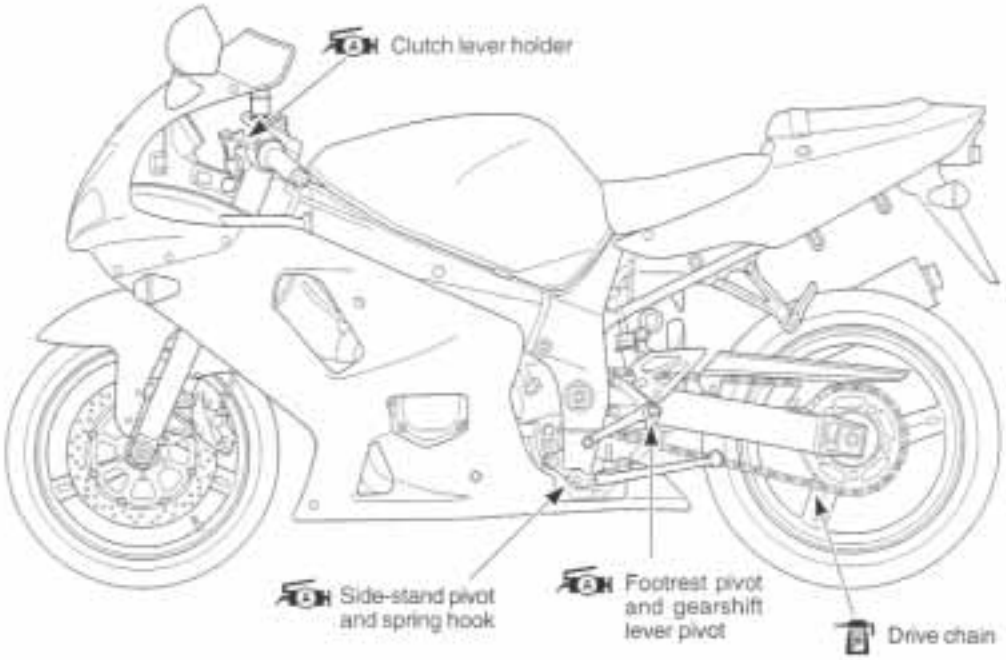


*NOTE:*

- *Before lubricating each part, clean off any rusty spots and wipe off any grease, oil, dirt or grime.*
- *Lubricate exposed parts which are subject to rust, with a rust preventative spray, especially whenever the motorcycle has been operated under wet or rainy conditions.*

# MAINTENANCE AND TUNE-UP PROCEDURES

This section describes the servicing procedures for each item mentioned in the Periodic Maintenance chart.

## AIR CLEANER

**Inspect every 6 000 km (4 000 miles, 6 months) and replace every 18 000 km (11 000 miles, 18 months).**

- Remove the front and rear seats. (☞ 6-6)
- Lift and support the fuel tank. (☞ 4-52)

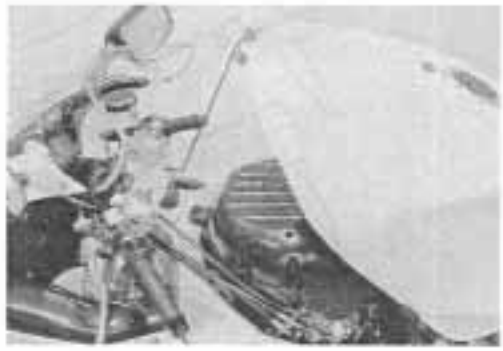

- Remove the air cleaner element by removing the screws.

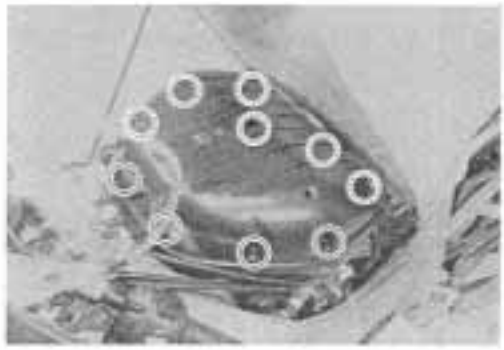

- Carefully use air hose to blow the dust from the cleaner element.

**⚠ CAUTION**

**Always use air pressure on the outside of the air cleaner element. If air pressure is used on the inside, dirt will be forced into the pores of the air cleaner element thus restricting air flow through the air cleaner element.**

- Reinstall the cleaned or new air cleaner element in the reverse order of removal.

**⚠ CAUTION**

**If driving under dusty conditions, clean the air cleaner element more frequently. The surest way to accelerate engine wear is to operate the engine without the element or to use a torn element. Make sure that the air cleaner is in good condition at all times. The life of the engine depends largely on this component!**

- Remove the drain plugs from the air cleaner box to allow any water to drain out.

## SPARK PLUG

**Inspect every 6 000 km (4 000 miles, 6 months) and replace every 12 000 km (7 500 miles, 12 months).**

### SPARK PLUG AND IGNITION COIL/PLUG CAP REMOVAL

- Remove the front and rear seat. (☞ 6-6)
- Lift and support the fuel tank. (☞ 4-52)
- Remove the air cleaner box ①. (☞ 4-62)

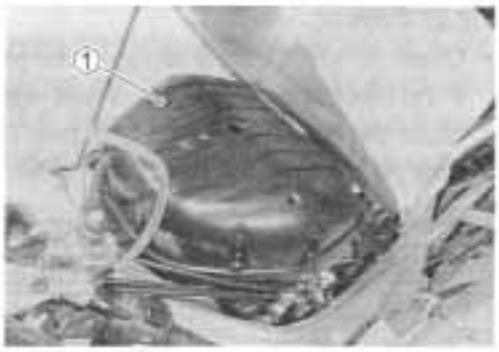


- Disconnect all of the lead wire couplers from each ignition coil/plug cap.

**⚠ CAUTION**

**Do not remove the ignition coil/plug cap before disconnecting its lead wire coupler.**

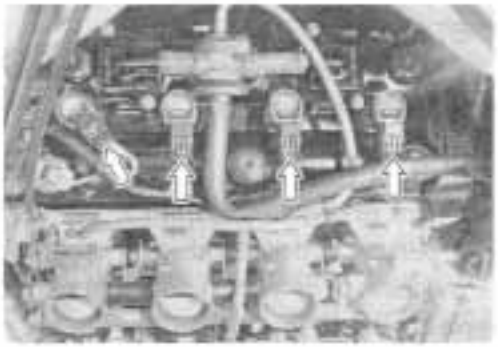

- Remove all of the ignition coils/plug caps.

**⚠ CAUTION**

- **Do not pry up the ignition coil/plug cap with a driver or a bar to avoid its damage.**
- **Be careful not to drop the ignition coil/plug cap to prevent the short or open the circuit of its.**

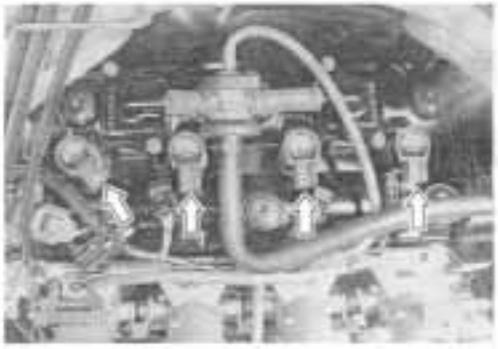

- Remove the spark plugs with a spark plug wrench.

### HEAT RANGE

- Check to see the heat range of the plug.
  If the electrode of the plug is wet appearing or dark color, replace the plug with hotter type one. If it is white or glazed appearing, replace the plug with colder type one.

| | NGK | DENSO |
|---|---|---|
| Hotter type | CR8E | U24ESR-N |
| Standard | CR9E | U27ESR-N |
| Colder type | CR10E | U31ESR-N |

*NOTE:*
*"R" type spark plug has a resistor located at the center electrode to prevent radio noise.*

### CARBON DEPOSITS

- Check to see if there are carbon deposits on the spark plug.
- If carbon is deposited, remove it using a spark plug cleaner machine or carefully use a tool with a pointed end.

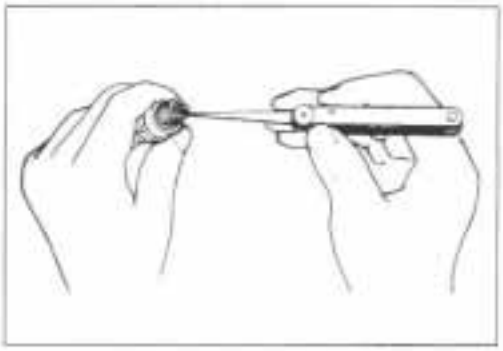

### SPARK PLUG GAP

- Measure the spark plug gap using a thickness gauge.
- If out of specification, regap the spark plug.

**DATA Spark plug gap:**
**Standard: 0.7 – 0.8 mm (0.028 – 0.031 in)**

**TOOL 09900-20803: Thickness gauge**

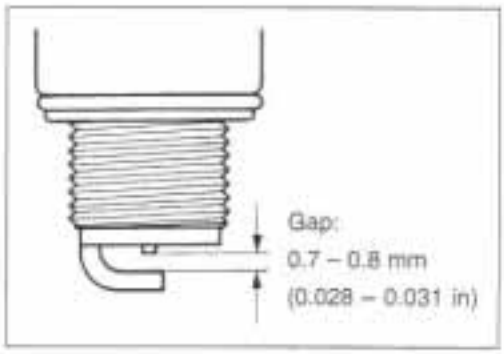


### ELECTRODE'S CONDITION

- Check the condition of the electrode.
- If it is extremely worn or burnt, replace the spark plug. Replace the spark plug if it has a broken insulator, damaged thread, etc.

**⚠ CAUTION**

**Check the thread size and reach when replacing the spark plug. If the reach is too short, carbon will be deposited on the screw portion of the spark plug hole and engine damage may result.**

## SPARK PLUG AND IGNITION COIL/PLUG CAP INSTALLATION

- Install the spark plugs to the cylinder head by finger tight, and then tighten them to the specified torque.

**Spark plug: 11 N·m (1.1 kgf·m, 8.0 lb-ft)**

**⚠ CAUTION**

**To avoid damaging the cylinder head threads, first finger tighten the spark plug and then tighten it to the proper torque using the spark plug wrench.**

- Install the ignition coils/plug caps and connect their lead wire couplers.

**⚠ CAUTION**

- **Do not strike the ignition coil/plug cap with a plastic hammer when installing it.**
- **When installing the ignition coil/plug cap, place its coupler not to contact with the cylinder head cover.**

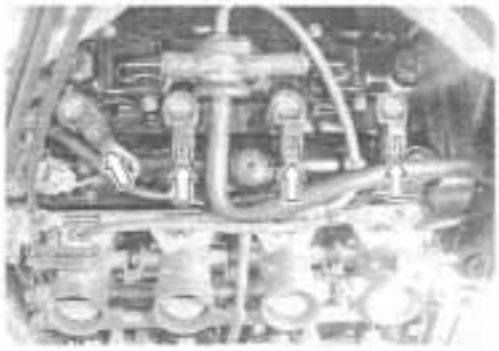

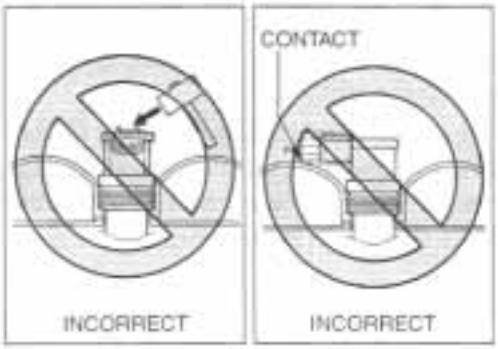

## VALVE CLEARANCE

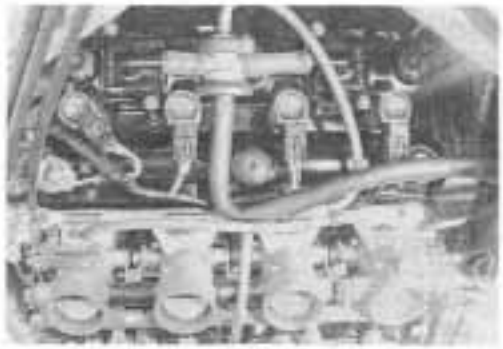

**Inspect every 24 000 km (15 000 miles, 24 months).**

- Remove the right under cowling. (☞ 6-3)
- Remove the front and rear seats. (☞ 6-6)
- Lift and support the fuel tank. (☞ 4-52)
- Remove the spark plugs. (☞ 2-5)
- Remove the cylinder head covers. (☞ 3-15)

The valve clearance specification is different for intake and exhaust valves.
Valve clearance must be checked and adjusted, 1) at the time of periodic inspection, 2) when the valve mechanism is serviced, and 3) when the camshafts are disturbed by removing them for servicing.

**DATA Valve clearance (when cold):**
**Standard: IN. : 0.10 – 0.20 mm (0.004 – 0.008 in)**
**EX.: 0.20 – 0.30 mm (0.008 – 0.012 in)**

*NOTE:*
- *The cam must be at positions, Ⓐ or Ⓑ, in order to check the valve clearance, or to adjust tappet clearance. Clearance readings should not be taken with the cam in any other position than these two positions.*
- *The clearance specification is for COLD state.*
- *To turn the crankshaft for clearance checking, be sure to use a wrench, and rotate in the normal running direction. All spark plugs should be removed.*

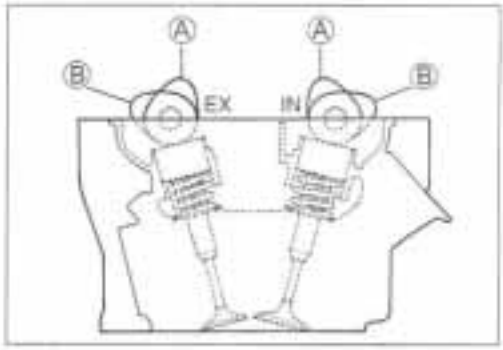


- Remove the valve timing inspection cap ①.

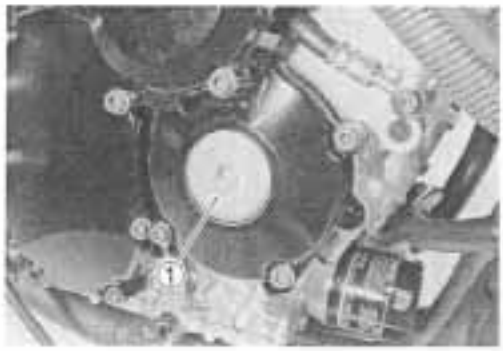

- Turn the crankshaft to bring the "Top" line on the starter clutch to the index mark and also to bring the notches Ⓐ on the left ends of both camshafts (Ex and In) to the positions as shown.

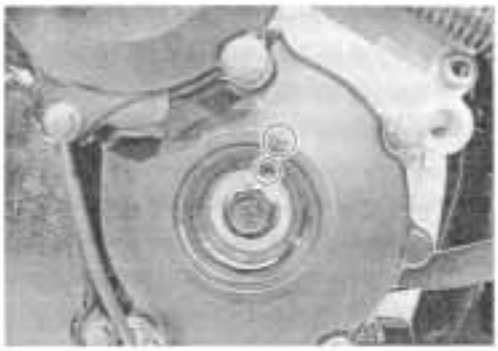

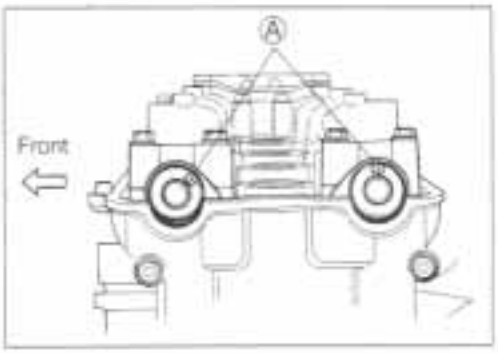


- In this condition, read the valve clearance at the valves Ⓑ (In and Ex of No.4 cylinder, Ex of No.3 and In of No.2).
- If the clearance is out of specification, adjust the clearance. (☞ 2-10)

**09900-20803: Thickness gauge**

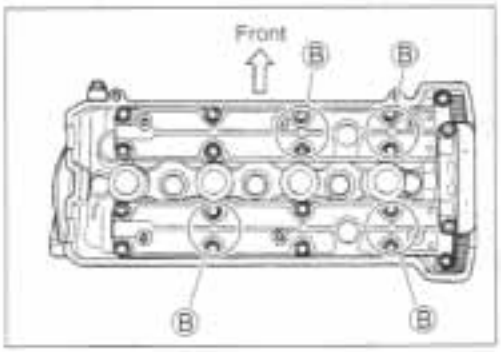


- Turn the crankshaft 360 degrees (one rotation) to bring the "TOP" line on the starter clutch to the index mark of valve timing inspection hole and also to bring the notches Ⓐ to the position as shown.
- Read the clearance at the remaining valves Ⓒ and adjust the clearance if necessary. (☞ 2-10)

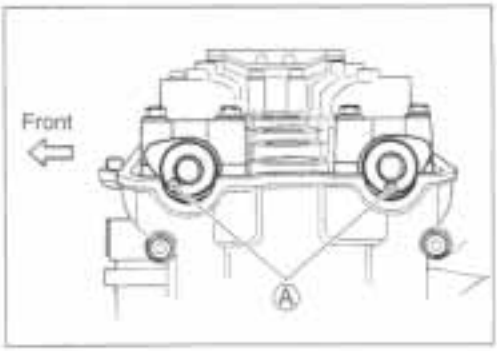


| Cam position | Notch Ⓐ position | |
|---|---|---|
| | Exhaust Camshaft | Intake Camshaft |
| Ⓑ | ←Front Ⓒ | ←Front Ⓒ |
| Ⓒ | ←Front Ⓒ | ←Front Ⓒ |

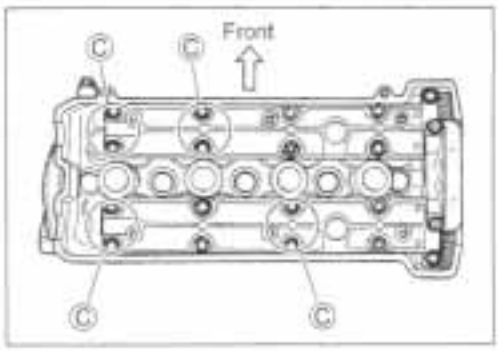

### VALVE CLEARANCE ADJUSTMENT

The clearance is adjusted by replacing the existing tappet shim by a thicker or thinner shim.

- Remove the intake or exhaust camshafts. (☞ 3-16)
- Remove the tappet and shim by fingers or magnetic hand.
- Check the figures printed on the shim. These figures indicate the thickness of the shim, as illustrated.
- Select a replacement shim that will provide a clearance within the specified range. For the purpose of this adjustment, a total of 25 sizes of tappet shim are available ranging from 1.20 to 2.20 mm in steps of 0.05 mm. Fit the selected shim to the valve stem end, with numbers toward tappet. Be sure to check shim size with micrometer to ensure its size. Refer to the tappet shim selection table (☞ 2-11, 2-12) for details.

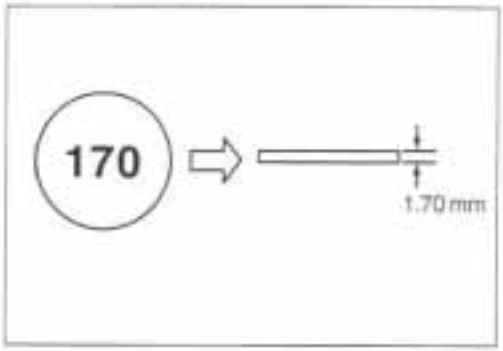


*NOTE:*

- *Be sure to apply engine oil to tappet shim top and bottom faces.*
- *When seating the tappet shim, be sure to face figure printed surface to the tappet.*

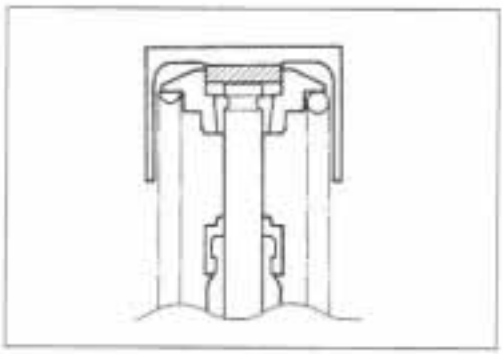

**⚠ CAUTION**

**Reinstall the camshafts as the specified manner. (☞ 3-91)**

- After replacing the tappet shim and camshafts, rotate the engine so that the tappet is depressed fully. This will squeeze out oil trapped between the shim and the tappet that could cause an incorrect measurement, then check the clearance again to confirm that it is within the specified range.

- After finishing the valve clearance adjustment, reinstall the following items.

| | Page |
|---|---|
| * Cylinder head cover | 3-96 |
| * Spark plug and plug cap | 2-7 |
| * Valve timing inspection plug | 3-96 |

## TAPPET SHIM SELECTION TABLE [INTAKE]
## TAPPET SHIM NO. (12892-05C00-XXX)

TAPPET SHIM SET (12800-05820)

| MEASURED VALVE CLEARANCE (mm) \ SUFFIX NO. | 120 | 125 | 130 | 135 | 140 | 145 | 150 | 155 | 160 | 165 | 170 | 175 | 180 | 185 | 190 | 195 | 200 | 205 | 210 | 215 | 220 |
|---|---|---|---|---|---|---|---|---|---|---|---|---|---|---|---|---|---|---|---|---|---|
| PRESENT SHIM SIZE (mm) | 1.20 | 1.25 | 1.30 | 1.35 | 1.40 | 1.45 | 1.50 | 1.55 | 1.60 | 1.65 | 1.70 | 1.75 | 1.80 | 1.85 | 1.90 | 1.95 | 2.00 | 2.05 | 2.10 | 2.15 | 2.20 |
| 0.00-0.04 | | | 1.20 | 1.25 | 1.30 | 1.35 | 1.40 | 1.45 | 1.50 | 1.55 | 1.60 | 1.65 | 1.70 | 1.75 | 1.80 | 1.85 | 1.90 | 1.95 | 2.00 | 2.05 | 2.10 |
| 0.05-0.09 | | 1.20 | 1.25 | 1.30 | 1.35 | 1.40 | 1.45 | 1.50 | 1.55 | 1.60 | 1.65 | 1.70 | 1.75 | 1.80 | 1.85 | 1.90 | 1.95 | 2.00 | 2.05 | 2.10 | 2.15 |
| 0.10-0.20 | SPECIFIED CLEARANCE/NO ADJUSTMENT REQUIRED | | | | | | | | | | | | | | | | | | | | |
| 0.21-0.25 | 1.30 | 1.35 | 1.40 | 1.45 | 1.50 | 1.55 | 1.60 | 1.65 | 1.70 | 1.75 | 1.80 | 1.85 | 1.90 | 1.95 | 2.00 | 2.05 | 2.10 | 2.15 | 2.20 | 2.20 | |
| 0.26-0.30 | 1.35 | 1.40 | 1.45 | 1.50 | 1.55 | 1.60 | 1.65 | 1.70 | 1.75 | 1.80 | 1.85 | 1.90 | 1.95 | 2.00 | 2.05 | 2.10 | 2.15 | 2.20 | | | |
| 0.31-0.35 | 1.40 | 1.45 | 1.50 | 1.55 | 1.60 | 1.65 | 1.70 | 1.75 | 1.80 | 1.85 | 1.90 | 1.95 | 2.00 | 2.05 | 2.10 | 2.15 | 2.20 | | | | |
| 0.36-0.40 | 1.45 | 1.50 | 1.55 | 1.60 | 1.65 | 1.70 | 1.75 | 1.80 | 1.85 | 1.90 | 1.95 | 2.00 | 2.05 | 2.10 | 2.15 | 2.20 | | | | | |
| 0.41-0.45 | 1.50 | 1.55 | 1.60 | 1.65 | 1.70 | 1.75 | 1.80 | 1.85 | 1.90 | 1.95 | 2.00 | 2.05 | 2.10 | 2.15 | 2.20 | | | | | | |
| 0.46-0.50 | 1.55 | 1.60 | 1.65 | 1.70 | 1.75 | 1.80 | 1.85 | 1.90 | 1.95 | 2.00 | 2.05 | 2.10 | 2.15 | 2.20 | | | | | | | |
| 0.51-0.55 | 1.60 | 1.65 | 1.70 | 1.75 | 1.80 | 1.85 | 1.90 | 1.95 | 2.00 | 2.05 | 2.10 | 2.15 | 2.20 | | | | | | | | |
| 0.56-0.60 | 1.65 | 1.70 | 1.75 | 1.80 | 1.85 | 1.90 | 1.95 | 2.00 | 2.05 | 2.10 | 2.15 | 2.20 | | | | | | | | | |
| 0.61-0.65 | 1.70 | 1.75 | 1.80 | 1.85 | 1.90 | 1.95 | 2.00 | 2.05 | 2.10 | 2.15 | 2.20 | | | | | | | | | | |
| 0.66-0.70 | 1.75 | 1.80 | 1.85 | 1.90 | 1.95 | 2.00 | 2.05 | 2.10 | 2.15 | 2.20 | | | | | | | | | | | |
| 0.71-0.75 | 1.80 | 1.85 | 1.90 | 1.95 | 2.00 | 2.05 | 2.10 | 2.15 | 2.20 | | | | | | | | | | | | |
| 0.76-0.80 | 1.85 | 1.90 | 1.95 | 2.00 | 2.05 | 2.10 | 2.15 | 2.20 | | | | | | | | | | | | | |
| 0.81-0.85 | 1.90 | 1.95 | 2.00 | 2.05 | 2.10 | 2.15 | 2.20 | | | | | | | | | | | | | | |
| 0.86-0.90 | 1.95 | 2.00 | 2.05 | 2.10 | 2.15 | 2.20 | | | | | | | | | | | | | | | |
| 0.91-0.95 | 2.00 | 2.05 | 2.10 | 2.15 | 2.20 | | | | | | | | | | | | | | | | |
| 0.96-1.00 | 2.05 | 2.10 | 2.15 | 2.20 | | | | | | | | | | | | | | | | | |
| 1.01-1.05 | 2.10 | 2.15 | 2.20 | | | | | | | | | | | | | | | | | | |
| 1.06-1.10 | 2.15 | 2.20 | | | | | | | | | | | | | | | | | | | |
| 1.11-1.15 | 2.20 | | | | | | | | | | | | | | | | | | | | |

HOW TO USE THIS CHART:

I. Measure valve clearance. "ENGINE IS COLD"

II. Measure present shim size.

III. Match clearance in vertical column with present shim size in horizontal column.

EXAMPLE

| | |
|---|---|
| Valve clearance is | 0.23 mm |
| Present shim size | 1.70 mm |
| Shim size to be used | 1.80 mm |

(EXHAUST SIDE)

TAPPET SHIM SELECTION TABLE [EXHAUST]
TAPPET SHIM NO. (12892-05C00-XXX)

TAPPET SHIM SET (12800-05820)

| MEASURED VALVE CLEARANCE (mm) \ SUFFIX NO. | 120 | 125 | 130 | 135 | 140 | 145 | 150 | 155 | 160 | 165 | 170 | 175 | 180 | 185 | 190 | 195 | 200 | 205 | 210 | 215 | 220 |
|---|---|---|---|---|---|---|---|---|---|---|---|---|---|---|---|---|---|---|---|---|---|
| PRESENT SHIM SIZE (mm) | 1.20 | 1.25 | 1.30 | 1.35 | 1.40 | 1.45 | 1.50 | 1.55 | 1.60 | 1.65 | 1.70 | 1.75 | 1.80 | 1.85 | 1.90 | 1.95 | 2.00 | 2.05 | 2.10 | 2.15 | 2.20 |
| 0.05-0.09 | | | | 1.20 | 1.25 | 1.30 | 1.35 | 1.40 | 1.45 | 1.50 | 1.55 | 1.60 | 1.65 | 1.70 | 1.75 | 1.80 | 1.85 | 1.90 | 1.95 | 2.00 | 2.05 |
| 0.10-0.14 | | | 1.20 | 1.25 | 1.30 | 1.35 | 1.40 | 1.45 | 1.50 | 1.55 | 1.60 | 1.65 | 1.70 | 1.75 | 1.80 | 1.85 | 1.90 | 1.95 | 2.00 | 2.05 | 2.10 |
| 0.15-0.19 | | 1.20 | 1.25 | 1.30 | 1.35 | 1.40 | 1.45 | 1.50 | 1.55 | 1.60 | 1.65 | 1.70 | 1.75 | 1.80 | 1.85 | 1.90 | 1.95 | 2.00 | 2.05 | 2.10 | 2.15 |
| 0.20-0.30 | SPECIFIED CLEARANCE/NO ADJUSTMENT REQUIRED | | | | | | | | | | | | | | | | | | | | |
| 0.31-0.35 | 1.30 | 1.35 | 1.40 | 1.45 | 1.50 | 1.55 | 1.60 | 1.65 | 1.70 | 1.75 | 1.80 | 1.85 | 1.90 | 1.95 | 2.00 | 2.05 | 2.10 | 2.15 | 2.20 | 2.20 | |
| 0.36-0.40 | 1.35 | 1.40 | 1.45 | 1.50 | 1.55 | 1.60 | 1.65 | 1.70 | 1.75 | 1.80 | 1.85 | 1.90 | 1.95 | 2.00 | 2.05 | 2.10 | 2.15 | 2.20 | | | |
| 0.41-0.45 | 1.40 | 1.45 | 1.50 | 1.55 | 1.60 | 1.65 | 1.70 | 1.75 | 1.80 | 1.85 | 1.90 | 1.95 | 2.00 | 2.05 | 2.10 | 2.15 | 2.20 | | | | |
| 0.46-0.50 | 1.45 | 1.50 | 1.55 | 1.60 | 1.65 | 1.70 | 1.75 | 1.80 | 1.85 | 1.90 | 1.95 | 2.00 | 2.05 | 2.10 | 2.15 | 2.20 | | | | | |
| 0.51-0.55 | 1.50 | 1.55 | 1.60 | 1.65 | 1.70 | 1.75 | 1.80 | 1.85 | 1.90 | 1.95 | 2.00 | 2.05 | 2.10 | 2.15 | 2.20 | | | | | | |
| 0.56-0.60 | 1.55 | 1.60 | 1.65 | 1.70 | 1.75 | 1.80 | 1.85 | 1.90 | 1.95 | 2.00 | 2.05 | 2.10 | 2.15 | 2.20 | | | | | | | |
| 0.61-0.65 | 1.60 | 1.65 | 1.70 | 1.75 | 1.80 | 1.85 | 1.90 | 1.95 | 2.00 | 2.05 | 2.10 | 2.15 | 2.20 | | | | | | | | |
| 0.66-0.70 | 1.65 | 1.70 | 1.75 | 1.80 | 1.85 | 1.90 | 1.95 | 2.00 | 2.05 | 2.10 | 2.15 | 2.20 | | | | | | | | | |
| 0.71-0.75 | 1.70 | 1.75 | 1.80 | 1.85 | 1.90 | 1.95 | 2.00 | 2.05 | 2.10 | 2.15 | 2.20 | | | | | | | | | | |
| 0.76-0.80 | 1.75 | 1.80 | 1.85 | 1.90 | 1.95 | 2.00 | 2.05 | 2.10 | 2.15 | 2.20 | | | | | | | | | | | |
| 0.81-0.85 | 1.80 | 1.85 | 1.90 | 1.95 | 2.00 | 2.05 | 2.10 | 2.15 | 2.20 | | | | | | | | | | | | |
| 0.86-0.90 | 1.85 | 1.90 | 1.95 | 2.00 | 2.05 | 2.10 | 2.15 | 2.20 | | | | | | | | | | | | | |
| 0.91-0.95 | 1.90 | 1.95 | 2.00 | 2.05 | 2.10 | 2.15 | 2.20 | | | | | | | | | | | | | | |
| 0.96-1.00 | 1.95 | 2.00 | 2.05 | 2.10 | 2.15 | 2.20 | | | | | | | | | | | | | | | |
| 1.01-1.05 | 2.00 | 2.05 | 2.10 | 2.15 | 2.20 | | | | | | | | | | | | | | | | |
| 1.06-1.10 | 2.05 | 2.10 | 2.15 | 2.20 | | | | | | | | | | | | | | | | | |
| 1.11-1.15 | 2.10 | 2.15 | 2.20 | | | | | | | | | | | | | | | | | | |
| 1.16-1.20 | 2.15 | 2.20 | | | | | | | | | | | | | | | | | | | |
| 1.21-1.25 | 2.20 | | | | | | | | | | | | | | | | | | | | |

**HOW TO USE THIS CHART:**

I. Measure valve clearance. "ENGINE IS COLD"

II. Measure present shim size.

III. Match clearance in vertical column with present shim size in horizontal column.

EXAMPLE

| | |
|---|---|
| Valve clearance is | 0.33 mm |
| Present shim size | 1.70 mm |
| Shim size to be used | 1.80 mm |

## ENGINE OIL AND OIL FILTER

**(ENGINE OIL)**
**Replace initially at 1 000 km (600 miles, 1 month) and every 6 000 km (4 000 miles, 6 months) thereafter.**

**(OIL FILTER)**
**Replace initially at 1 000 km (600 miles, 1 month) and every 18 000 km (11 000 miles, 18 months) thereafter.**

Oil should be changed while the engine is warm. Oil filter replacement at the above intervals, should be done together with the engine oil change.

### ENGINE OIL REPLACEMENT

- Keep the motorcycle upright.
- Place an oil pan below the engine, and drain oil by removing the oil drain plug ① and filler cap ②.

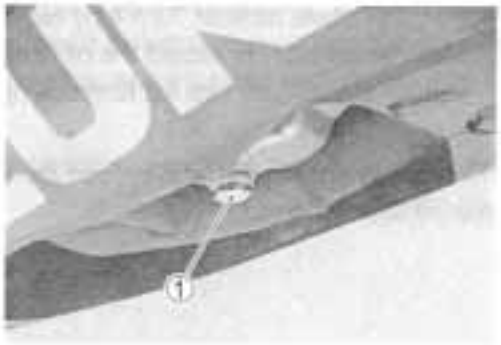


- Tighten the drain plug ① to the specified torque, and pour fresh oil through the oil filler. The engine will hold about 2.8 L (3.0/2.5 US/Imp qt) of oil. Use an API classification of SF or SG oil with SAE 10W/40 viscosity.

**Oil drain plug: 23 N·m (2.3 kgf·m, 16.5 lb-ft)**


- Start up the engine and allow it to run for several minutes at idling speed.
- Turn off the engine and wait about three minutes, then check the oil level through the inspection window. If the level is below mark "L", add oil to "F" level. If the level is above mark "F", drain oil to "F" level.

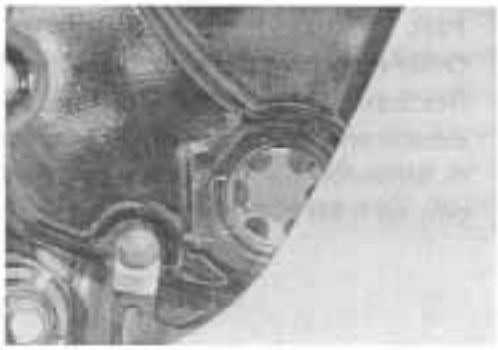

### OIL FILTER REPLACEMENT

- Drain the engine oil as described in the engine oil replacement procedure.
- Remove the oil filter ① using the special tool.

**09915-40610: Oil filter wrench**

- Apply engine oil lightly to the gasket of the new oil filter before installation.

- Install the new oil filter. Turn it by hand until you feel that the oil filter gasket has contacted the oil filter mounting surface. Then, tighten the oil filter two full turns using the special tool.

*NOTE:*
*To properly tighten the oil filter, use the special tool. Never tighten the oil filter by hand.*

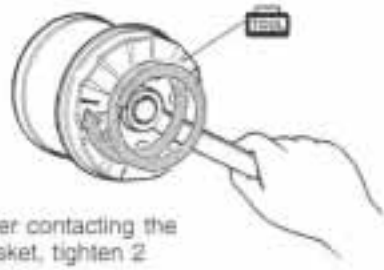

After contacting the gasket, tighten 2 turns.

- Add new engine oil and check the oil level as described in the engine oil replacement procedure.

**NECESSARY AMOUNT OF ENGINE OIL:**
**Oil change: 2.8L (3.0/2.5 US/Imp qt)**
**Oil and filter change: 3.1L (3.3/2.7 US/Imp qt)**
**Engine overhaul: 3.4L (3.6/3.0 US/Imp qt)**

**⚠ CAUTION**

**ONLY USE A GENUINE SUZUKI MOTORCYCLE OIL FILTER.**
**Other manufacturer's oil filters may differ in thread specifications (thread diameter and pitch), filtering performance and durability which may lead to engine damage or oil leaks. Also, do not use a genuine Suzuki automobile oil filter on this motorcycle.**

## FUEL HOSE

**Inspect every 6 000 km (4 000 miles,6 months).**
**Replace every 4 years.**

Inspect the fuel hose ① for damage and fuel leakage. If any defects are found, the hoses must be replaced.


## ENGINE IDLE SPEED

**Inspect initially at 1 000 km (600 miles, 1 month) and every 6 000 km (4 000 miles, 6 months) thereafter.**

*NOTE:*
*Make this adjustment when the engine is hot.*

- Start the engine, turn the throttle stop screw and set the engine idle speed as follows.

**DATA Engine idle speed: 1 300 ± 100 rpm**

## THROTTLE VALVE SYNCHRONIZATION

**Inspect initially at 1 000 km (600 miles, 1 month)(E-33 only) and every 12 000 km (7 500 miles, 12 months).**
(☞ 4-73)

## THROTTLE CABLE PLAY

**Inspect initially at 1 000 km (600 miles, 1 month) and every 6 000 km (4 000 miles, 6 months) thereafter.**

Adjust the throttle cable play Ⓐ as follows.


### MINOR ADJUSTMENT

1st step:

- Loosen the locknut ① of the throttle returning cable ② and fully turn in the adjuster ③.

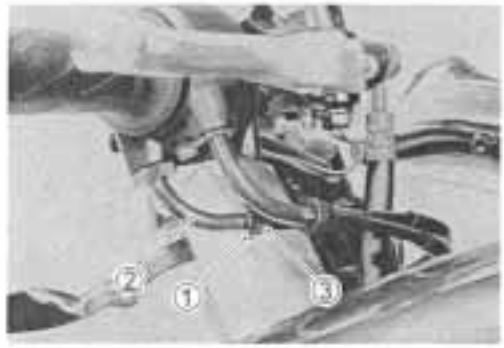


2nd step:

- Loosen the locknut ④ of the throttle pulling cable ⑤.
- Turn the adjuster ⑥ in or out until the throttle cable play (at the throttle grip) Ⓐ is between 2.0 – 4.0 mm (0.08 – 0.16 in).
- Tighten the locknut ④ while holding the adjuster ⑥.

**DATA Throttle cable play Ⓐ: 2.0 – 4.0 mm (0.08 – 0.16 in)**

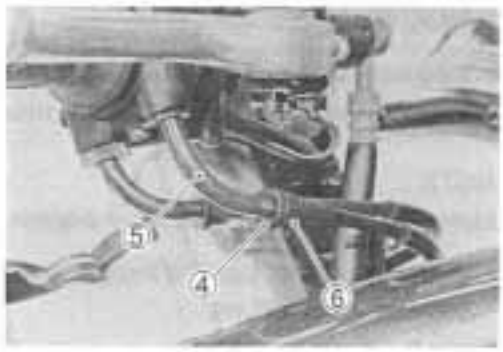


3rd step:

- While holding the throttle grip at the fully closed position, slowly turn out the adjuster ③ of the throttle returning cable ② until resistance is felt.
- Tighten the locknut ① while holding the adjuster ③.

**⚠ WARNING**

**After the adjustment is completed, check that handlebar movement does not raise the engine idle speed and that the throttle grip returns smoothly and automatically.**

*NOTE:*
*Major adjustment can be made at the throttle body side adjuster.*

### MAJOR ADJUSTMENT

- Lift and support the fuel tank with its prop stay. (☞ 4-52)
- Loosen the lock nuts ① of the throttle returning cable ②.
- Turn the returning cable adjuster ③ to obtain proper cable play.
- Loosen the lock nuts ④ of the throttle pulling cable ⑤.
- Turn the pulling cable adjuster ⑥ in or out until the throttle cable play Ⓐ should be 2.0 – 4.0 mm (0.08 – 0.16 in) at the throttle grip.
- Tighten the lock nuts ④ securely while holding the adjuster ⑥.


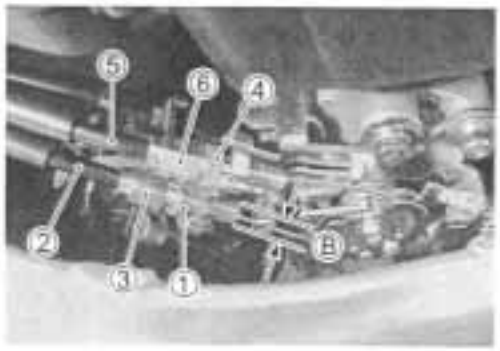


**DATA Throttle cable play Ⓐ: 2.0 – 4.0 mm (0.08 – 0.16 in)**

- While holding the throttle grip at the fully closed position, slowly turn the returning cable adjuster ③ to obtain a cable slack Ⓑ of 1.0 mm (0.04 in).
- Tighten the lock nuts ① securely.

**⚠ WARNING**

**After the adjustment is completed, check that handlebar movement does not raise the engine idle speed and that the throttle grip returns smoothly and automatically.**

## CLUTCH

**Inspect Every 6 000 km (4 000 miles, 6 months).**

- Remove the left under cowling. (☞ 6-3)
- Turn in the adjuster ① all the way into the clutch lever assembly.
- Remove the clutch release cover.
- Loosen the lock nut ② and turn out the adjusting screw ③ two or three rotations.
- From that position, slowly turn in the adjusting screw ③ to feel resistance.
- From this position, turn out the adjusting screw ③ ¼ rotations, and tighten the lock nut ②.
- Loosen the lock nut ④, and turn the cable adjuster ⑤ to obtain 10 – 15 mm (0.4 – 0.6 in) of free play Ⓐ at the clutch lever end.
- Tighten the lock nuts ④.



**DATA Clutch lever play Ⓐ: 10 – 15 mm (0.4 – 0.6 in)**
**Clutch release screw: ¼ turns out**

## COOLING SYSTEM

**Inspect every 6 000 km (4 000 miles, 6 months).**
**Replace engine coolant every 2 years.**

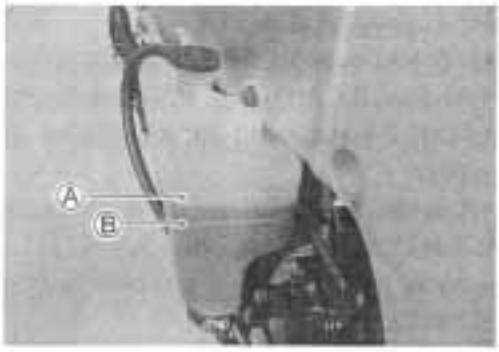


### ENGINE COOLANT LEVEL CHECK

- Keep the motorcycle upright.
- Check the engine coolant level by observing the full and lower lines on the engine coolant reserve tank.

  Ⓐ Full line Ⓑ Lower line

- If the level is below the lower line, remove the left under cowling (☞6-3), and add engine coolant to the full line from the engine coolant reserve tank filler.

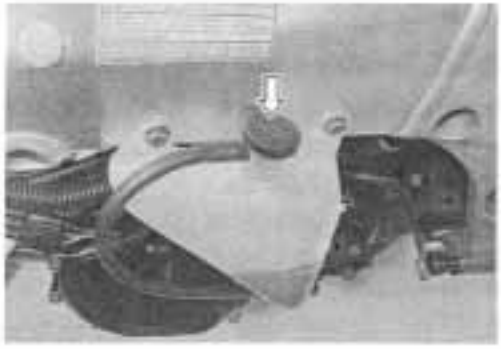

### ENGINE COOLANT CHANGE

- Remove the under cowling. (☞ 6-3)
- Remove the radiator cap ①.
- Drain engine coolant by disconnecting the radiator hose ② from the pump.


**⚠ WARNING**

- **Do not open the radiator cap when the engine is hot, as you may be injured by escaping hot liquid or vapor.**
- **Engine coolant may be harmful if swallowed or if it comes in contact with skin or eyes. If engine coolant gets into the eyes or in contact with the skin, flush thoroughly with plenty of water. If swallowed, induce vomiting and call physician immediately!**


- Flush the radiator with fresh water if necessary.
- Connect the radiator hose ② securely.
- Pour the specified engine coolant up to the radiator inlet.

LLC **Engine coolant capacity (without reservoir):**
**2 150 ml (2.3/1.9 Us/Imp qt)**

- Bleed the air from the engine coolant circuit as following procedure. (☞2-19)

**ENGINE COOLANT INFORMATION: ☞5-2**

### AIR BLEEDING THE COOLING CIRCUIT

- Add engine coolant up to the radiator inlet.
- Support the motorcycle upright.
- Slowly swing the motorcycle, right and left, to bleed the air trapped in the cooling circuit.
- Add engine coolant up to the radiator inlet.

- Start up the engine and bleed air from the radiator inlet completely.
- Add engine coolant up to the radiator inlet.
- Repeat the above procedure until bleed no air from the radiator inlet.
- Loosen the air bleeding bolt ① and check the engine coolant flow out.

**Air bleeding bolt: 5.5 N·m (0.55 kgf·m, 4.0 lb-ft)**


- Close the radiator cap securely.
- After warming up and cooling down the engine several times, add the engine coolant up to the full level of the reserve tank.

**▲ CAUTION**

**Repeat the above procedure several times and make sure that the radiator is filled with engine coolant up to the reserve tank full level.**

**LLC Engine coolant capacity (Without reservoir): 2 150 ml (2.3/1.9 US/Imp qt)**

### RADIATOR HOSES

- Remove the under cowlings. (☞ 6-3)
- Check to see the radiator hoses for crack, damage or engine coolant leakage.
- If any defects are found, replace the radiator hoses with new ones.

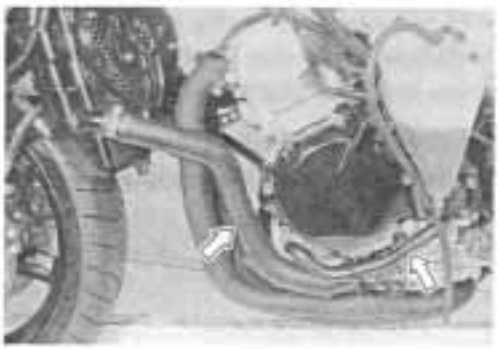

## DRIVE CHAIN

**Inspect initially at 1 000 km (600 miles, 1 month) and every 6 000 km (4 000 miles, 6 months) thereafter. Clean and lubricate every 1 000 km (600 miles).**

Visually check the drive chain for the possible defects listed below. (Support the motorcycle by a jack and a wooden block, turn the rear wheel slowly by hand with the transmission shifted to Neutral.)

* Loose pins
* Excessive wear
* Damaged rollers
* Improper chain adjustment
* Dry or rusted links
* Missing O-ring seals
* Kinked or binding links

If any defects are found, the drive chain must be replaced.

*NOTE:*
*When replacing the drive chain, replace the drive chain and sprockets as a set.*

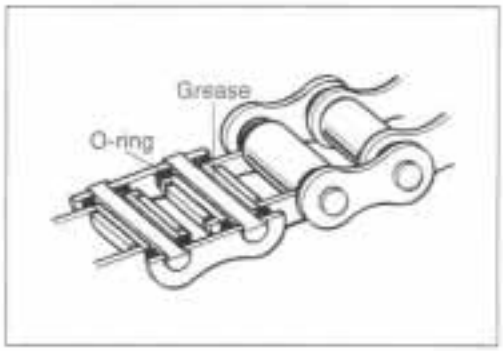


### CHECKING

- Remove the axle cotter pin. (For E-03, 28 and 33)
- Loosen the axle nut ①.
- Loosen the chain adjuster lock nuts ②.
- Loosen the torque link nut (Rear) ③.
- Tense the drive chain fully by turning both chain adjusters ④.

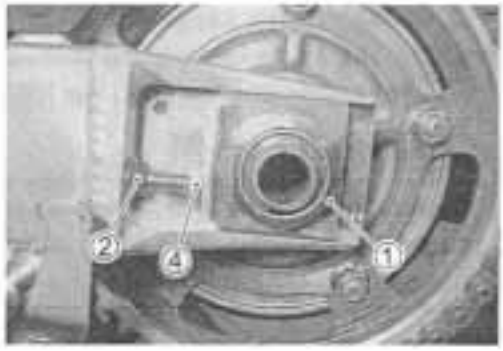


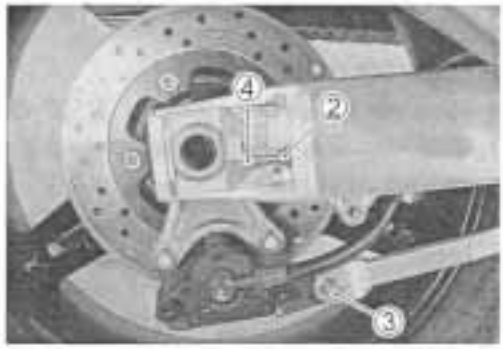


- Count out 21 pins (20 pitches) on the chain and measure the distance between the two points. If the distance exceeds the service limit, the chain must be replaced.

**DATA Drive chain 20-pitch length:**
**Service limit: 319.4 mm (12.57 in)**

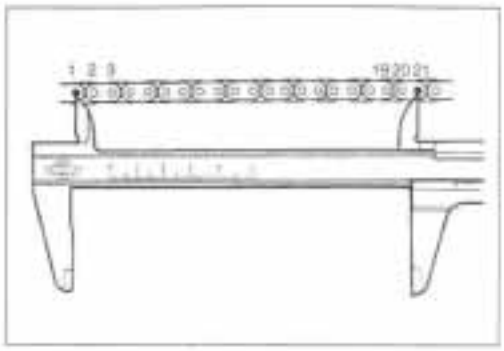

### ADJUSTING

- Loosen or tighten both chain adjuster nuts ① until there is 20 – 30 mm (0.8 – 1.2 in) of slack at the middle of the chain between the engine and rear sprockets as shown. The reference marks Ⓐ on both sides of the swingarm and the edge of each chain adjuster must be aligned to ensure that the front and rear wheels are correctly aligned.

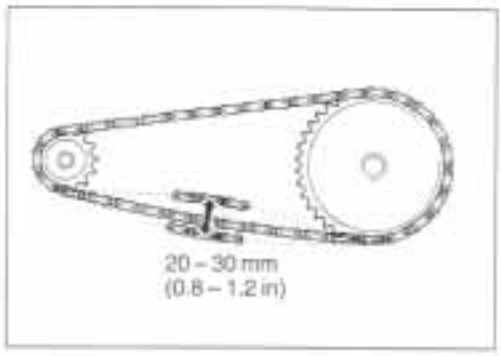


**DATA Drive chain slack:**
**Standard: 20 – 30 mm (0.8 – 1.2 in)**

- Place the motorcycle on its side-stand for accurate adjustment.
- After adjusting the drive chain, tighten the axle nut ② and the torque link nut (Rear) ③ to the specified torque.
- Tighten both chain adjuster nuts ④ securely.

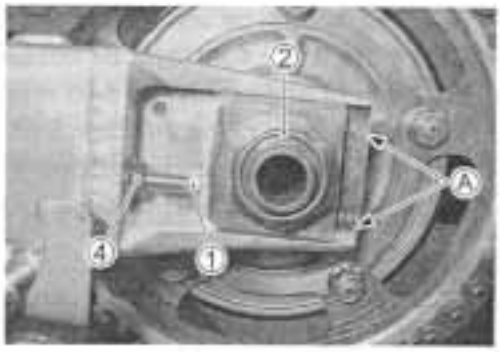


**Rear axle nut: 110 N·m (11.0 kgf·m, 79.6 lb-ft)**
**..... For E-03, -28, -33**
**120 N·m (12.0 kgf·m, 86.8 lb-ft)**
**..... For the others**
**Torque link nut (Rear): 34 N·m (3.4 kgf·m, 24.6 lb-ft)**

- Install a new cotter pin. (For E-03, 28, 33)
- Recheck the drive chain slack after tightening the axle nut.

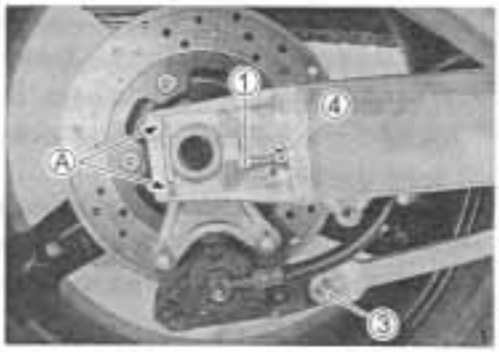


### CLEANING AND LUBRICATING

- Clean the drive chain with kerosine. If the drive chain tends to rust quickly, the intervals must be shortened.

**▲ CAUTION**

**Do not use trichloroethylene, gasoline or any similar solvent. These fluids have too great a dissolving power for this chain and they can damage the O-rings. Use only kerosine to clean the drive chain.**

- After washing and drying the chain, oil it with a heavyweight motor oil.

**▲ CAUTION**

- **Do not use any oil sold commercially as "drive chain oil". Such oil can damage the O-rings.**
- **The standard drive chain is a RK 525SMOZ6 Suzuki recommends to use this standard drive chain as a replacement.**

## BRAKE

**(BRAKE)**
**Inspect initially at 1 000 km (600 miles, 1 month) and every 6 000 km (4 000 miles, 6 months) thereafter.**

**(BRAKE HOSE AND BRAKE FLUID)**
**Inspect every 6 000 km (4 000 miles, 6 months). Replace hoses every 4 years. Replace fluid every 2 years.**

### BRAKE FLUID LEVEL CHECK

- Keep the motorcycle upright and place the handlebars straight.
- Check the brake fluid level by observing the lower limit lines on the front and rear brake fluid reservoirs.
- When the level is below the lower limit line, replenish with brake fluid that meets the following specification.

**Specification and Classification: DOT 4**

**WARNING**

- **The brake system of this motorcycle is filled with a glycol-based brake fluid. Do not use or mix different types of fluid such as silicone-based and petroleum-based fluids. Do not use any brake fluid taken from old, used or unsealed containers. Never re-use brake fluid left over from the last servicing or stored for a long period of time.**
- **Brake fluid, if it leaks, will interfere with safe running and immediately discolor painted surfaces. Check the brake hoses and hose joints for cracks and fluid leakage before riding.**

### BRAKE PADS

#### FRONT BRAKE

- The extent of brake pad wear can be checked by observing the grooved limit line Ⓐ on the pad. When the wear exceeds the grooved limit line, replace the pads with new ones. (☞ 6-55)

**CAUTION**

**Replace the brake pads as a set, otherwise braking performance will be adversely affected.**

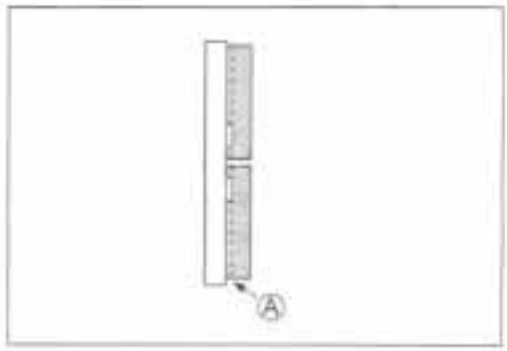

### REAR BRAKE

- The extent of brake pad wear can be checked by observing the grooved limit line Ⓐ on the pad. When the wear exceeds the grooved limit line, replace the pads with new ones. (☞ 6-63)

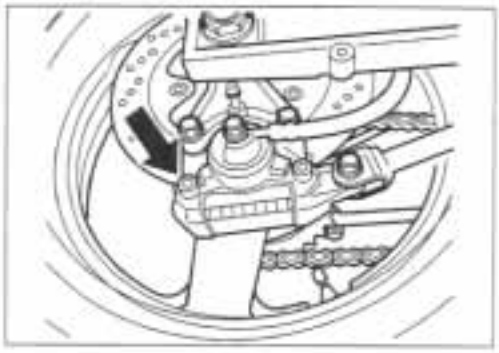

**⚠ CAUTION**

**Replace the brake pads as a set, otherwise braking performance will be adversely affected.**

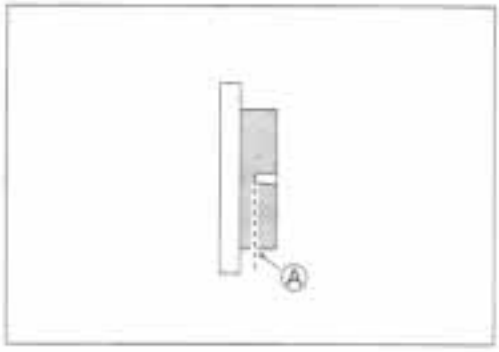


### BRAKE PEDAL HEIGHT

- Loosen the locknut ①.
- Turn the push rod ② until the brake pedal is 50 – 60 mm (2.0 – 2.4 in) Ⓐ below the top of the footrest.
- Tighten the locknut ① securely.

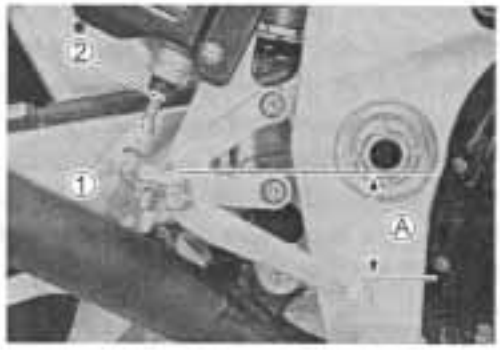


**Rear brake master cylinder rod locknut:**
**18 N·m (1.8 kgf·m, 13.0 lb-ft)**

**DATA Brake pedal height Ⓐ:**
**Standard: 50 – 60 mm (2.0 – 2.4 in)**

### BRAKE LIGHT SWITCH

- Adjust the rear brake light switch so that the brake light will come on just before pressure is felt when the brake pedal is depressed.

## AIR BLEEDING THE BRAKE FLUID CIRCUIT

Air trapped in the brake fluid circuit acts like a cushion to absorb a large proportion of the pressure developed by the master cylinder and thus interferes with the full braking performance of the brake caliper. The presence of air is indicated by "sponginess" of the brake lever and also by lack of braking force. Considering the danger to which such trapped air exposes the machine and rider, it is essential that after remounting the brake and restoring the brake system to the normal condition, the brake fluid circuit be purged of air in the following manner:

### FRONT BRAKE

- Fill the master cylinder reservoir to the top of the inspection window. Replace the reservoir cap to prevent dirt from entering.
- Attach a hose to the air bleeder valve and insert the free end of the hose into a receptacle.

- Squeeze and release the brake lever several times in rapid succession and squeeze the lever fully without releasing it. Loosen the air bleeder valve by turning it a quarter of a turn so that the brake fluid runs into the receptacle, this will remove the tension of the brake lever causing it to touch the handlebar grip. Then, close the air bleeder valve, pump and squeeze the lever, and open the valve. Repeat this process until fluid flowing into the receptacle no longer contains air bubbles.

*NOTE:*
*While bleeding the brake system, replenish the brake fluid in the reservoir as necessary. Make sure that there is always some fluid visible in the reservoir.*

- Close the air bleeder valve and disconnect the hose. Fill the reservoir with brake fluid to the top of the inspection window.

**Air bleeder valve: 8 N·m (0.8 kgf·m, 6.0 lb-ft)**

**⚠ CAUTION**

**Handle brake fluid with care: the fluid reacts chemically with paint, plastics, rubber materials, etc.**

### REAR BRAKE

- Bleed air from the rear brake system as the same manner of front brake.

*NOTE:*
*The only difference between bleeding the front and rear brakes is that the rear master cylinder is actuated by a pedal.*

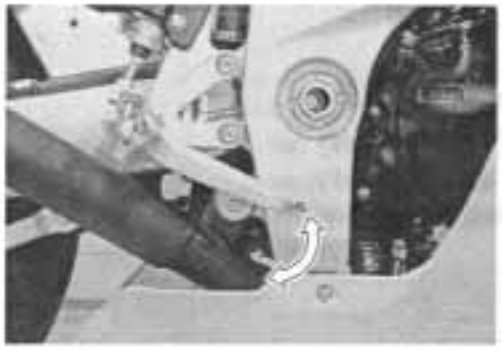

## TIRES

**Inspect every 6 000 km (4 000 miles, 6 months).**

### TIRE TREAD CONDITION

Operating the motorcycle with excessively worn tires will decrease riding stability and consequently invite a dangerous situation. It is highly recommended to replace a tire when the remaining depth of tire tread reaches the following specification.

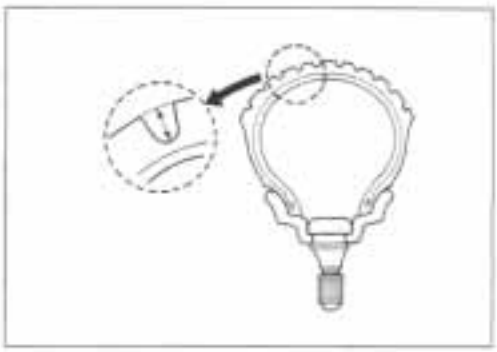

**09900-20805: Tire depth gauge**

**DATA Tire tread depth:**

**Service Limit: FRONT 1.6 mm (0.06 in)**
**REAR 2.0 mm (0.08 in)**

### TIRE PRESSURE

If the tire pressure is too high or too low, steering will be adversely affected and tire wear will increase. Therefore, maintain the correct tire pressure for good roadability and a longer tire life. Cold inflation tire pressure is as follows.

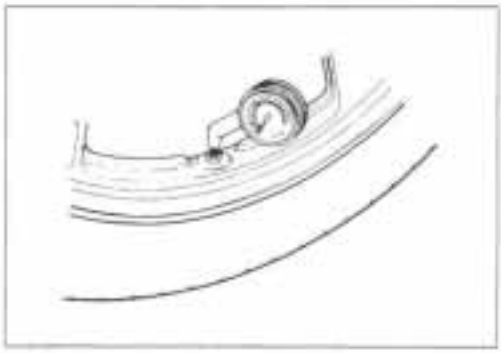

**DATA Cold inflation tire pressure**

**Solo riding: Front: 250 kPa (2.50 kgf/cm², 36 psi)**
**Rear: 250 kPa (2.50 kgf/cm², 36 psi)**
**Dual riding: Front: 250 kPa (2.50 kgf/cm², 36 psi)**
**Rear: 250 kPa (2.50 kgf/cm², 36 psi)**

**▲ CAUTION**

**The standard tire fitted on this motorcycle is a 120/70 ZR17 (58W) for the front and a 180/55 ZR17 (73W) for the rear. The use of tires other than those specified may cause instability. It is highly recommended to use the specified tires.**

**DATA TIRE TYPE**

**DUNLOP (D207FU.....Front, D207U.....Rear)**
**..... E-03, 24, 28, 33**
**PIRELLI (MTR21S corsa....Front, MTR22S corsa....Rear)**
**..... The others**

## STEERING

**Inspect initially at 1 000 km (600 miles, 1 month) and every 12 000 km (7 500 miles, 12 months) thereafter.**

The steering should be adjusted properly for smooth turning of the handlebars and safe operation. Overtight steering prevents smooth turning of the handlebars and too loose steering will cause poor stability. Check that there is no play in the front fork. Support the motorcycle so that the front wheel is off the ground. With the wheel facing straight ahead, grasp the lower fork tubes near the axle and pull forward. If play is found, readjust the steering. (☞ 6-29)

## FRONT FORK

**Inspect every 12 000 km (7 500 miles, 12 months).**

Inspect the front forks for oil leakage, scoring or scratches on the outer surface of the inner tubes. Replace any defective parts, if necessary. (☞ 6-13)

## REAR SUSPENSION

**Inspect every 12 000 km (7 500 miles, 12 months).**

Inspect the rear shock absorbers for oil leakage and check that there is no play in the swingarm. Replace any defective parts if necessary. (☞ 6-41, 6-45)

## EXHAUST PIPE BOLT AND NUT

**Tighten initially at 1 000 km (600 miles, 1 month) and every 12 000 km (7 500 miles, 12 months) thereafter.**

- Tighten the exhaust pipe bolts, muffler mounting bolt and nut to the specified torque.

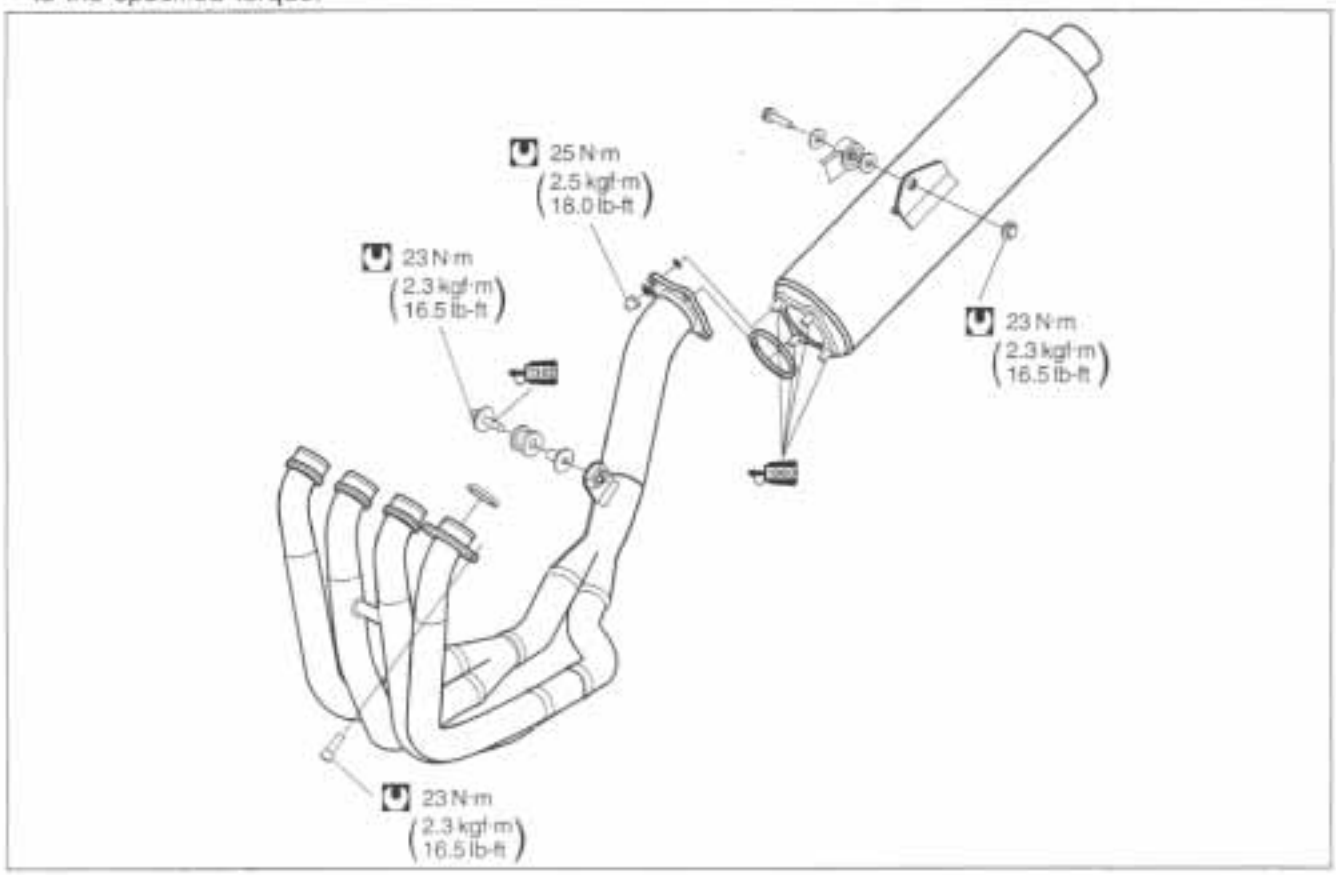

## CHASSIS BOLTS AND NUTS

**Tighten initially at 1 000 km (600 miles, 1 month) and every 6 000 km (4 000 miles, 6 months) thereafter.**

Check that all chassis bolts and nuts are tightened to their specified torque. The locations of the following nuts and bolts on the motorcycle.: ☞ 2-29

| Item | | N·m | kgf·m | lb-ft |
|---|---|---|---|---|
| ① Steering stem head nut | | 90 | 9.0 | 65.0 |
| ② Steering stem lock nut | | 80 | 8.0 | 58.0 |
| ③ Front fork upper clamp bolt | | 23 | 2.3 | 16.5 |
| ④ Front fork lower clamp bolt | | 23 | 2.3 | 16.5 |
| ⑤ Front fork cap bolt | | 35 | 3.5 | 25.5 |
| ⑥ Front axle | | 100 | 10.0 | 72.5 |
| ⑦ Front axle pinch bolt | | 23 | 2.3 | 16.5 |
| ⑧ Handlebar set bolt | | 10 | 1.0 | 7.0 |
| ⑨ Handlebar clamp bolt | | 23 | 2.3 | 16.5 |
| ⑩ Front brake master cylinder mounting bolt | | 10 | 1.0 | 7.0 |
| ⑪ Front brake caliper mounting bolt | | 25 | 2.5 | 18.1 |
| ⑫ Front brake caliper housing bolt | | 21 | 2.1 | 15.2 |
| ⑬ Brake hose union bolt (Front & Rear) | | 23 | 2.3 | 16.5 |
| ⑭ Caliper air bleeder valve (Front & Rear) | | 8 | 0.8 | 6.0 |
| ⑮ Brake disc bolt (Front) | | 23 | 2.3 | 16.5 |
| ⑯ Brake disc bolt (Rear) | | 35 | 3.5 | 25.5 |
| ⑰ Rear brake caliper mounting bolt | | 25 | 2.5 | 18.1 |
| ⑱ Rear brake caliper housing bolt | | 30 | 3.0 | 21.5 |
| ⑲ Rear brake master cylinder mounting bolt | | 10 | 1.0 | 7.0 |
| ⑳ Rear brake master cylinder rod lock nut | | 18 | 1.8 | 13.0 |
| ㉑ Front footrest bracket mounting bolt | | 23 | 2.3 | 16.5 |
| ㉒ Swingarm pivot nut | | 100 | 10.0 | 72.5 |
| ㉓ Swingarm pivot lock nut | | 90 | 9.0 | 65.0 |
| ㉔ Torque link bolt and nut (Front) | | 28 | 2.8 | 20.0 |
| ㉕ Torque link bolt and nut (Rear) | | 34 | 3.4 | 24.6 |
| ㉖ Rear shock absorber bracket nut | | 115 | 11.5 | 83.2 |
| ㉗ Rear shock absorber mounting bolt/nut (Upper & Lower) | | 50 | 5.0 | 36.0 |
| ㉘ Rear cushion lever/rod mounting nut | | 78 | 7.8 | 56.5 |
| ㉙ Rear axle nut | For E-03, 28, 33 | 110 | 11.0 | 79.6 |
| | For the others | 120 | 12.0 | 86.8 |
| ㉚ Rear sprocket nut | | 60 | 6.0 | 43.5 |
| ㉛ Steering damper bolt/nut | | 23 | 2.3 | 16.5 |

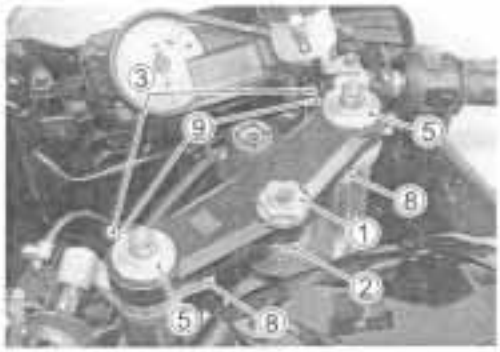
3
9
5
8
1
2
5
8

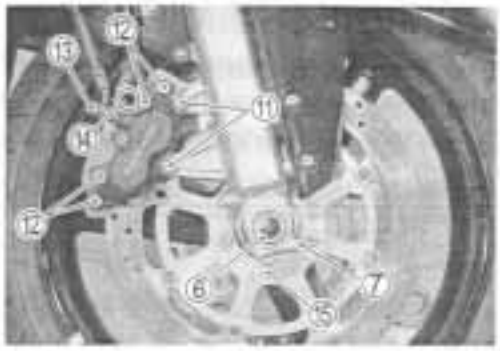
13
12
11
14
12
6
7
15

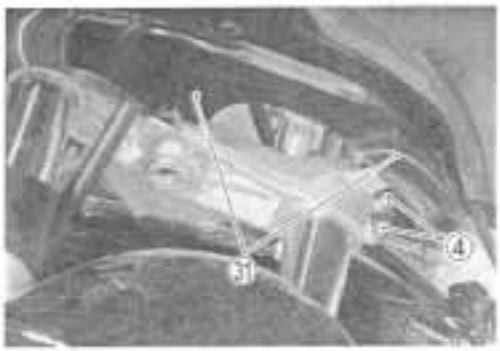
4
31

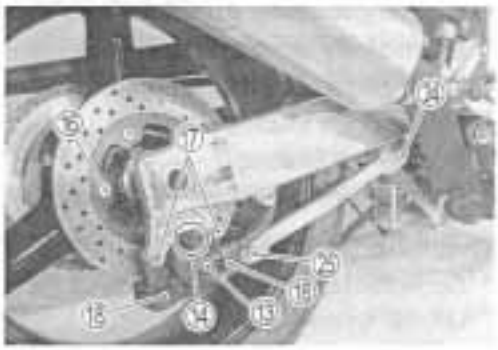
24
16
17
25
15
18
14
13

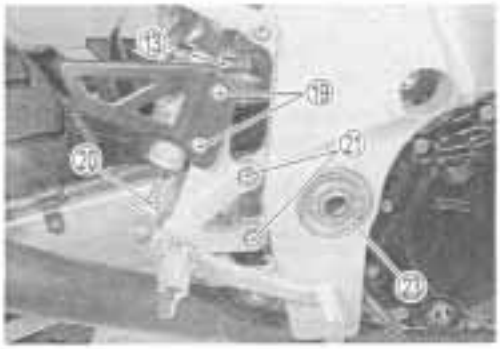
13
19
20
21
23


22
21

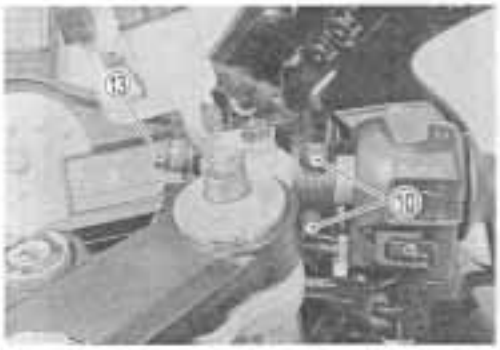
13
10


26
27


24
27

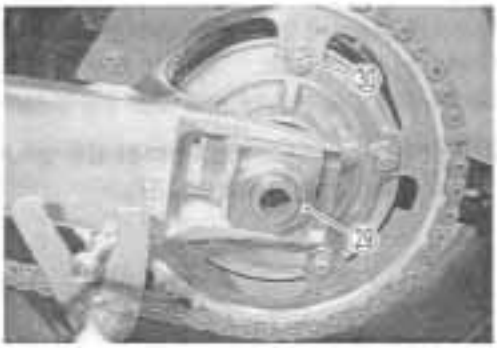
29

# COMPRESSION PRESSURE CHECK

The compression pressure reading of a cylinder is a good indicator of its internal condition.
The decision to overhaul the cylinder is often based on the results of a compression test. Periodic maintenance records kept at your dealership should include compression readings for each maintenance service.

COMPRESSION PRESSURE SPECIFICATION

| Standard | Limit | Difference |
|---|---|---|
| 1 100 – 1 500 kPa<br>(11 – 15 kgf/cm²<br>156 – 213 psi) | 900 kPa<br>(9 kgf/cm²<br>128 psi) | 200kPa<br>(2 kgf/cm²<br>28 psi) |

**Low compression pressure can indicate any of the following conditions:**

* Excessively worn cylinder walls
* Worn piston or piston rings
* Piston rings stuck in grooves
* Poor valve seating
* Ruptured or otherwise defective cylinder head gasket

**Overhaul the engine in the following cases:**

* Compression pressure in one of the cylinders is less than 900 kPa (9 kg/cm², 128 psi).
* The difference in compression pressure between any two cylinders is more than 200 kPa (2 kgf/cm², 28 psi).
* All compression pressure readings are below 1 100 kPa (11 kgf/cm², 156 psi) even when they measure more than 900 kPa (9 kgf/cm², 128 psi).

## COMPRESSION TEST PROCEDURE

*NOTE:*

* *Before testing the engine for compression pressure, make sure that the cylinder head nuts are tightened to the specified torque values and the valves are properly adjusted.*
* *Have the engine warmed up before testing.*
* *Make sure that the battery is fully-charged.*

Remove the related parts and test the compression pressure in the following manner.

- Lift and support the fuel tank. (☞ 4-52)
- Remove all the spark plugs. (☞ 2-5)
- Install the compression gauge and adaptor in the spark plug hole. Make sure that the connection is tight.
- Keep the throttle grip in the fully opened position.
- Press the starter button and crank the engine for a few seconds. Record the maximum gauge reading as the cylinder compression.
- Repeat this procedure with the other cylinders.

**09915-64510: Compression gauge set**
**09913-10750: Adaptor**

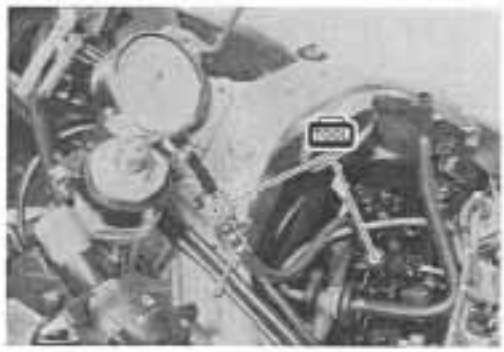

# OIL PRESSURE CHECK

Check the engine oil pressure periodically. This will give a good indication of the condition of the moving parts.

OIL PRESSURE SPECIFICATION

| |
|---|
| **200 – 500 kPa (2.0 – 5.0 kgf/cm², 28 – 71 psi) at 3 000 r/min., Oil temp. at 60°C (140°F)** |

If the oil pressure is lower or higher than the specification, the following causes may be considered.

**LOW OIL PRESSURE**

* Clogged oil filter
* Oil leakage from the oil passage
* Damaged O-ring
* Defective oil pump
* Combination of the above items

**HIGH OIL PRESSURE**

* Engine oil viscosity is too high
* Clogged oil passage
* Combination of the above items

**OIL PRESSURE TEST PROCEDURE**

Start the engine and check if the oil pressure indicator light is turned on. If the light stays on, check the oil pressure indicator light circuit. If the circuit is OK, check the oil pressure in the following manner.

- Remove the main oil gallery plug ①.
- Install the oil pressure gauge and adaptor into the main oil gallery.
- Warm up the engine as follows:
  Summer: 10 min. at 2 000 r/min.
  Winter: 20 min. at 2 000 r/min.
- After warming up, increase the engine speed to 3 000 r/min. (observe the tachometer), and read the oil pressure gauge.

**09915-74520: Oil pressure gauge hose**
**09915-74540: Oil pressure gauge attachment**
**09915-77330: Meter (for high pressure)**

**Oil gallery plug (M16): 35 N·m (3.5 kgf·m, 25.5 lb-ft)**

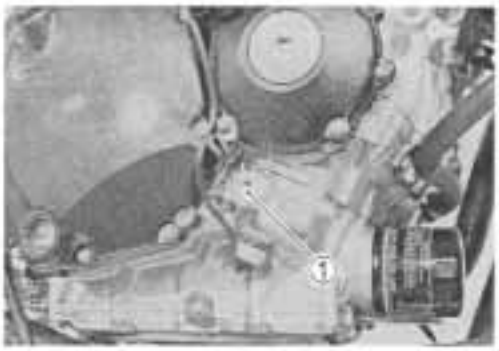


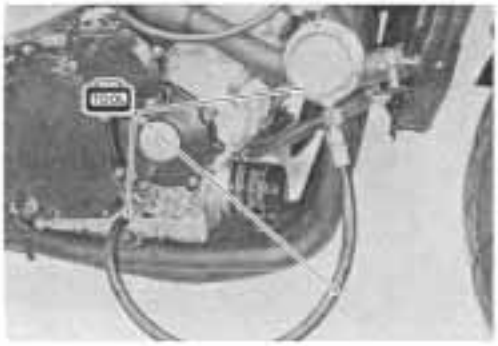

# ENGINE



CONTENTS

# ENGINE COMPONENTS REMOVABLE WITH ENGINE IN PLACE

The parts listed below can be removed and reinstalled without removing the engine from the frame. Refer to page listed in each section for removal and reinstallation instructions.

## ENGINE CENTER

| ITEM | REMOVAL | INSPECTION | REINSTALLATION |
|---|---|---|---|
| PAIR valve | 3-15 | 3-28 | 3-97 |
| Starter motor | 3-15 | 7-12 | 3-97 |
| Breather cover | 3-24 | — | 3-77 |
| Thermostat | 3-17 | 5-10 | 3-90 |
| Cylinder head cover | 3-15 | 3-29 | 3-96 |
| Camshaft | 3-16 | 3-29 | 3-91 |
| Intake pipe | — | — | 3-41 |
| Oil filter | 3-24 | — | 3-76 |
| Oil cooler | 3-24 | — | 3-76 |
| Oil pan | 3-25 | — | 3-75 |

## ENGINE RIGHT SIDE

| ITEM | REMOVAL | INSPECTION | REINSTALLATION |
|---|---|---|---|
| Exhaust pipe and muffler | 3-5 | — | 3-14 |
| Cam chain tension adjuster | 3-16 | 3-31 | 3-94 |
| Clutch cover | 3-18 | — | 3-88 |
| Clutch (plates) | 3-18 | 3-42 | 3-86 |
| Primary driven gear | 3-19 | — | 3-84 |
| Oil pump | 3-20 | 3-43 | 3-84 |
| Gearshift shaft | 3-20 | 3-44 | 3-84 |
| Starter idle gear cover | 3-22 | — | 3-82 |
| Starter idle gear | 3-22 | — | 3-81 |
| Starter clutch cover | 3-22 | — | 3-81 |
| Starter clutch | 3-23 | 3-43 | 3-81 |
| CKP sensor | 3-23 | 4-35 | 3-80 |
| Primary drive gear | 3-23 | — | 3-81 |
| Cam chain and cam chain tensioner | 3-22 | 3-31 | 3-80 |
| Cam chain guide | 3-22 | 3-31 | 3-80 |

## ENGINE LEFT SIDE

| ITEM | REMOVAL | INSPECTION | REINSTALLATION |
|---|---|---|---|
| Engine sprocket | 3-8 | — | 3-13 |
| Gear position sensor | 3-24 | 4-49 | 3-77 |
| Generator (cover) | 3-23 | 3-43 | 3-79 |
| Generator rotor | 3-23 | — | 3-79 |
| Water pump | 3-23 | 5-14 | 3-78 |

# ENGINE REMOVAL AND REINSTALLATION

## ENGINE REMOVAL

Before taking the engine out of the frame, wash the engine using a steam cleaner. Engine removal is sequentially explained in the following steps. Reinstall the engine by reversing the removal procedure.

- Remove the under cowlings. (☞ 6-3)
- Remove the front and rear seats (seat tail cover). (☞ 6-6)
- Remove the fuel tank. (☞4-52)

- Disconnect the battery ⊖ lead wire.

- Drain engine oil. (☞ 2-13)

- Drain engine coolant. (☞ 2-18)

- Remove the air cleaner box. (☞ 4-62)

- Remove the throttle body. (☞ 4-63)

**RADIATOR**

- Disconnect the reserve tank hose.

- Disconnect the radiator inlet hoses.

- Disconnect the cooling fan thermo-switch coupler ① and cooling fan coupler ②.

- Disconnect the horn coupler ③.
- Remove the radiator bolt.
- Remove the radiator and horn.

**⚠ CAUTION**

**Be careful not to bent the radiator fin.**

- Remove the front engine cover.

**EXHAUST PIPE AND MUFFLER**

- Remove the exhaust pipe bolts.

- Remove the muffler mounting bolt and nut.
- Remove the exhaust pipe/muffler.

- Remove the radiator mounting bracket ①.

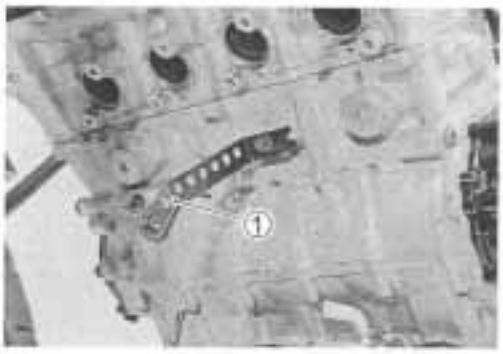


**ELECTRIC PARTS**

- Disconnect the oil pressure switch lead wire ① and remove it from the clamps.

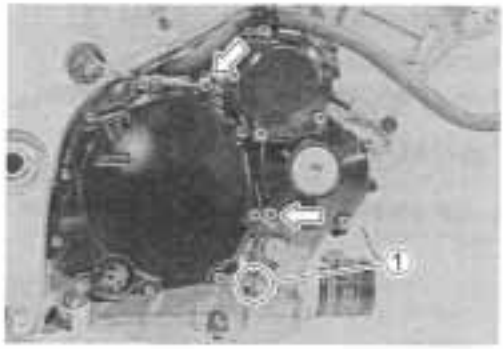


- Disconnect the starter motor lead wire ②.
- Disconnect the ground lead wire ③.


- Disconnect the crankshaft position sensor coupler ④.
- Disconnect the gear position switch coupler ⑤.
- Disconnect the engine coolant temperature sensor coupler ⑥.

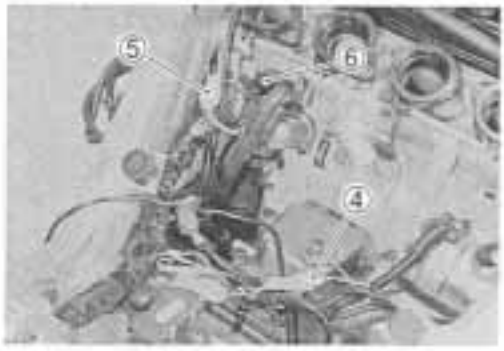


- Disconnect the generator coupler ⑦.

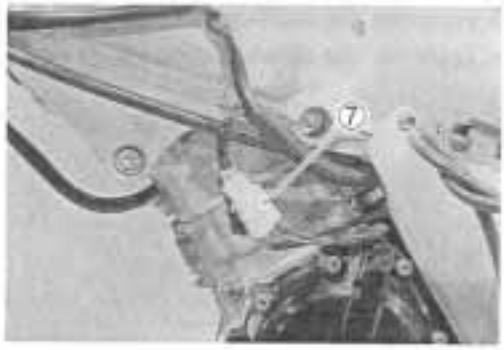

- Disconnect the lead wire couplers from each ignition coil/plug cap and camshaft position sensor.

**⚠ CAUTION**

**Do not remove the ignition coil/plug cap before disconnecting its lead wire coupler.**

- Remove the ignition coils/plug caps.

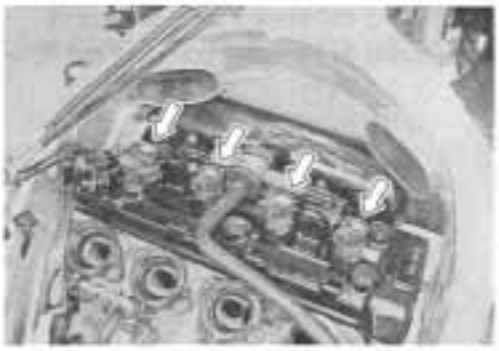

**⚠ CAUTION**

- **Do not pry up the ignition coil/plug cap with a driver or a bar to avoid its damage.**
- **Be careful not to drop the ignition coil/plug cap to prevent its short or open circuit.**

- Remove the reservor tank.

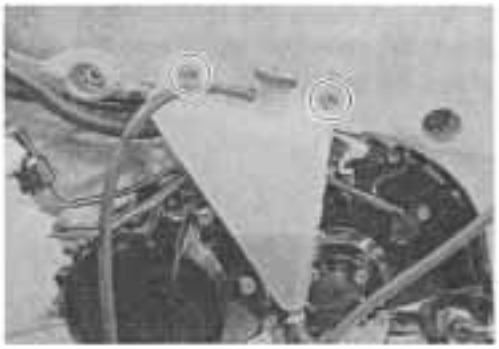

**ENGINE SPROCKET AND GEAR SHIFT LEVER**

- Remove the speed sensor.
- Remove the gearshift lever.
- Remove the engine sprocket cover.

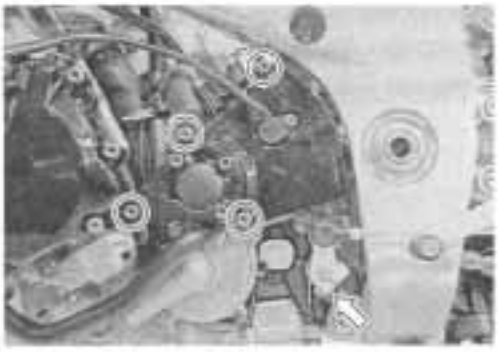

- Remove the clutch push rod ①.

*NOTE:*
*Jack up the motorcycle and fix it for safety.*

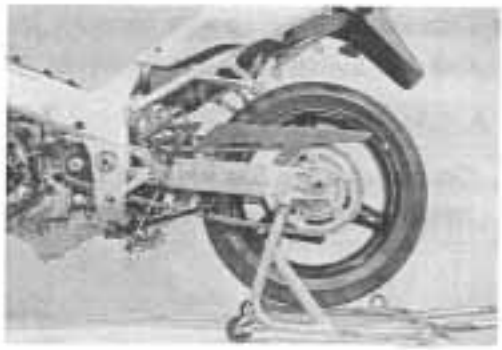

- Remove the speed sensor rotor ①.
- Remove the engine sprocket nut ② and the washer.

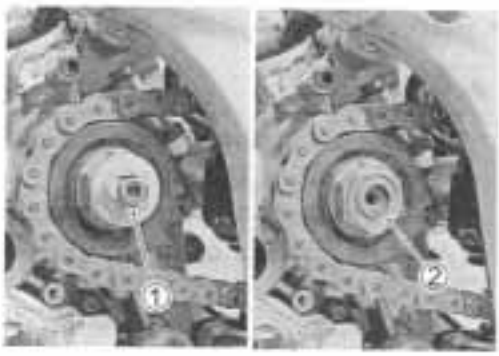


- Remove the cotter pin. (For E-03, 28, 33)
- Loosen the rear axle nut ③ and the rear torque link nut ④.
- Loosen the left and right chain adjusters ⑤.

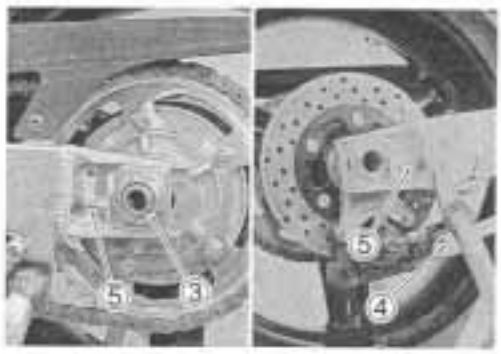


- Push the rear wheel forward and make sure that the drive chain has enough slack.
- Disengage the drive chain from the rear sprocket.

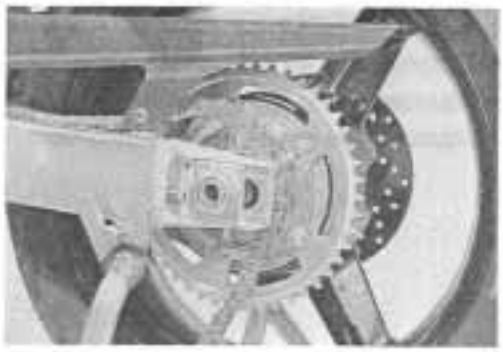

- Remove the engine sprocket ⑥.

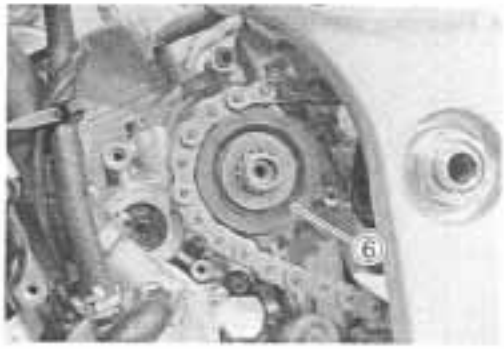

## ENGINE

- Support the engine using an engine jack.

- Remove the engine mounting bolts ①, ②.

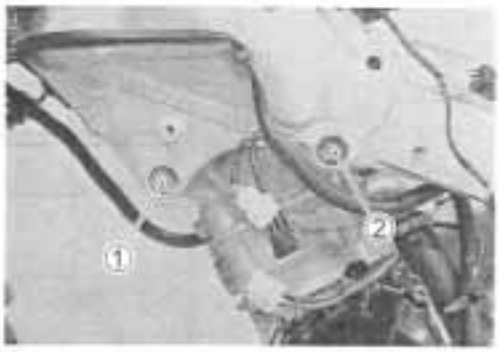


- Loosen the engine mounting pinch bolts ③.
- Remove the engine mounting bolts ④.

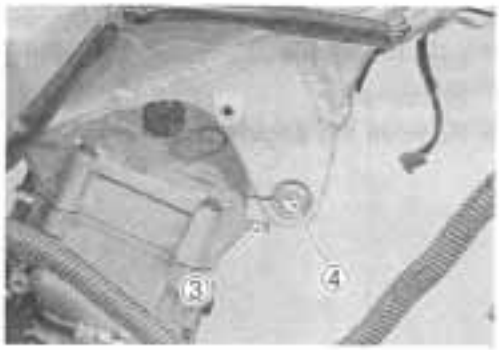


- Remove the engine mounting nut ⑤.
- Remove the engine mounting thrust adjuster locknut ⑥ with the special tool.
- Loosen the engine mounting thrust adjuster ⑦ fully with the special tool.

**09940-14990: Engine mounting thrust adjuster socket wrench**


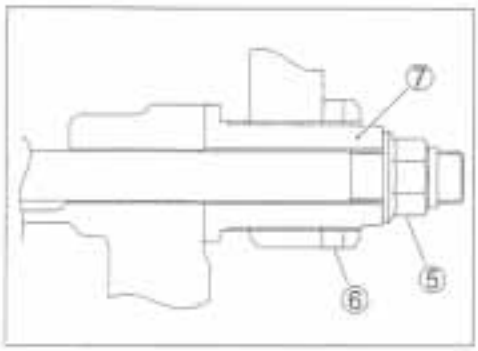


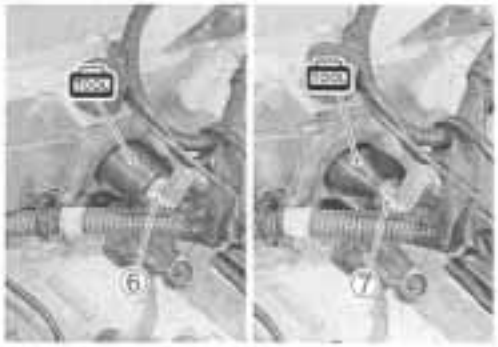

- Remove the engine mounting nut ①.
- Loosen the engine mounting thrust adjuster locknut ②.
- Loosen the engine mounting thrust adjuster ③.

*NOTE:*
*Do not remove the engine mounting bolts at this stage.*

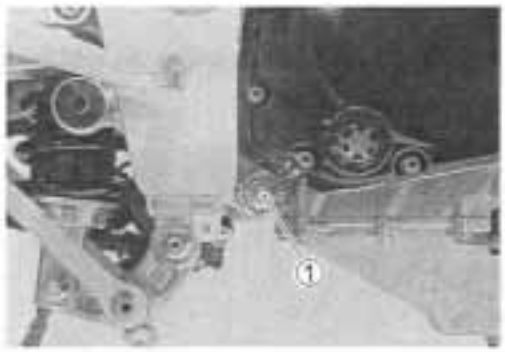


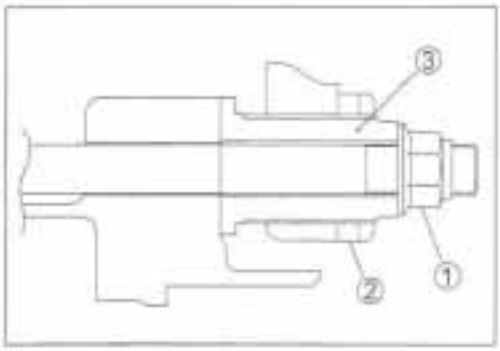



- Remove the engine mounting bolts and gradually lower the front side of the engine. Then, take off the drive chain from the driveshaft.
- Remove the engine assembly.

## ENGINE REINSTALLATION

Reinstall the engine in the reverse order of engine removal. Pay attention to the following points:

*NOTE:*

*Be careful not to damage the frame and engine when installing the engine.*

- Before installing the engine, install the spacer ①.

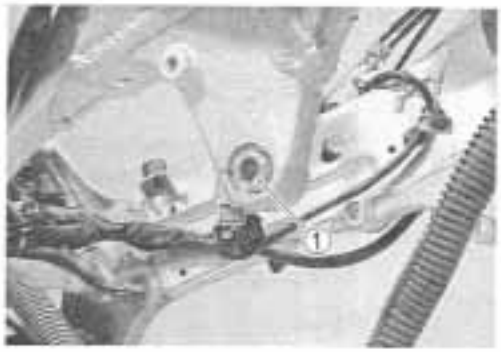


- Before installing the engine, install the engine mounting thrust adjusters ② and ③.
- Install all engine mounting bolts, spacers and tighten them temporarily. (☞ 3-12)

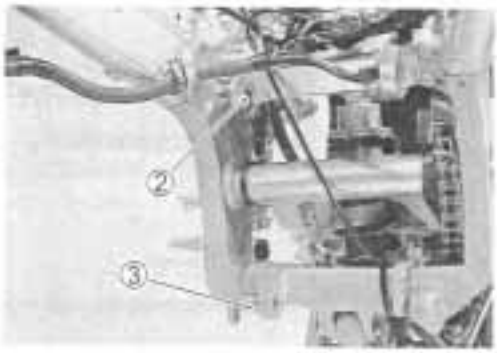


**⚠ CAUTION**

**Be careful not to catch the wiring harness between the frame and the engine.**

- Tighten the engine mounting thrust adjusters to the specified torque with the special tool.

**TOOL 09940-14990: Engine mounting thrust adjuster socket wrench**

**Engine mounting thrust adjuster: 23 N·m (2.3 kgf·m, 16.5 lb-ft)**

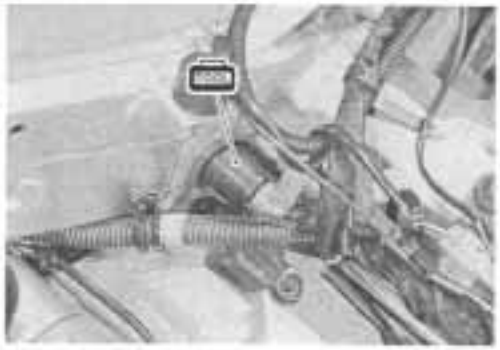

- Tighten the engine mounting thrust adjuster lock nuts to the specified torque with the special tool.

**TOOL 09940-14990: Engine mounting thrust adjuster socket wrench**

**Engine mounting thrust adjuster locknut: 45 N·m (4.5 kgf·m, 32.5 lb-ft)**

- Tighten all engine mounting bolts and nuts to the specified torque. (☞ 3-12)

*NOTE:*

*The engine mounting nuts are self-locking. Once the nuts have been removed, they are no longer of any use.*

- Tighten the engine mounting pinch bolt to the specified torque. (☞ 3-12)

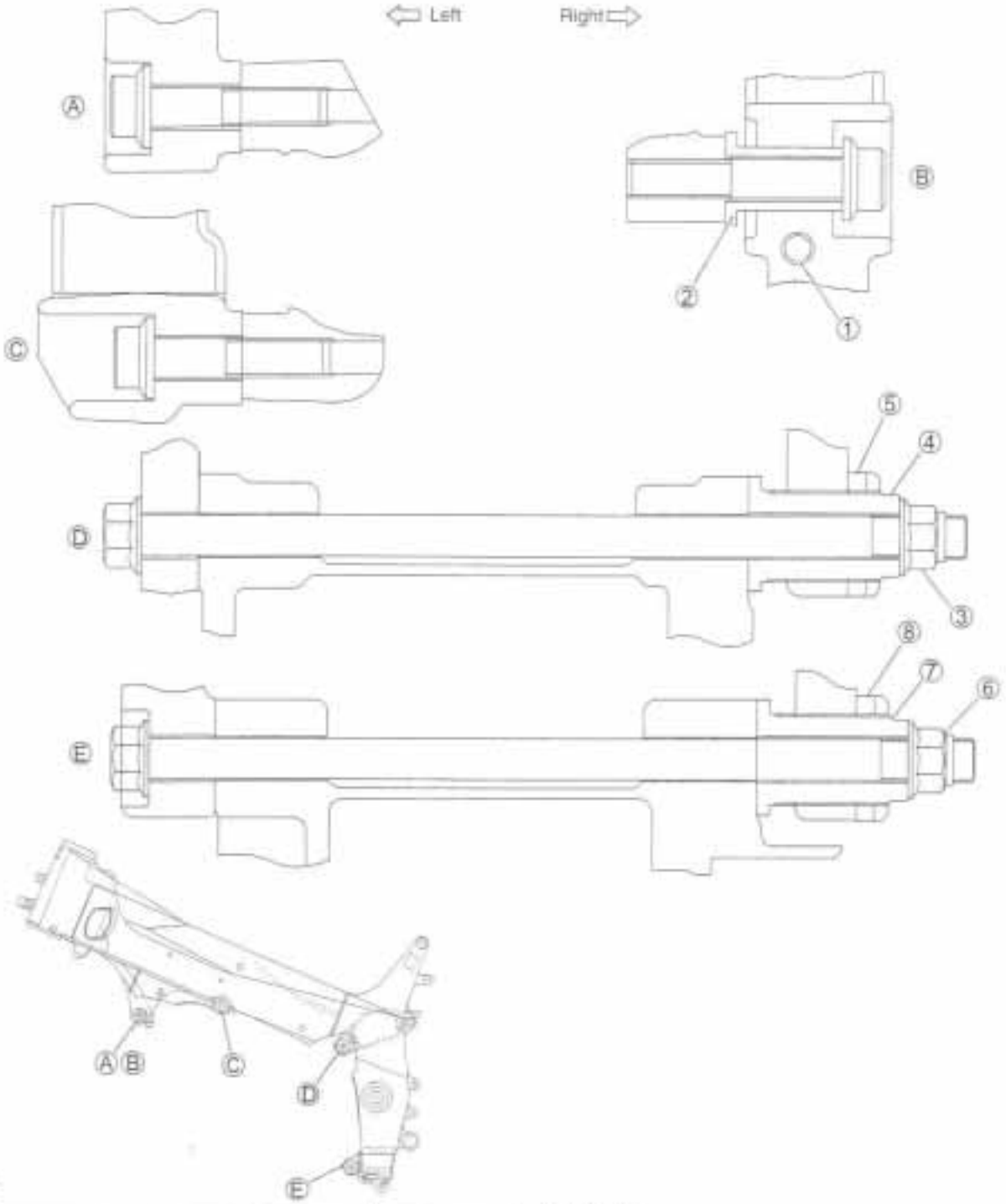


| ITEM | N·m | kgf·m | lb-ft |
|---|---|---|---|
| ⒶⒷⒸ | 55 | 5.5 | 39.8 |
| ③⑥ | 75 | 7.5 | 54.0 |
| ①⑦ | 23 | 2.3 | 16.5 |
| ④ | 10 | 1.0 | 7.3 |
| ⑤⑧ | 45 | 4.5 | 32.5 |

**LENGTH**

| ITEM | | mm | in |
|---|---|---|---|
| Bolt | ⒶⒸ | 45 | 1.77 |
| | Ⓑ | 55 | 2.17 |
| | ⒹⒺ | 215 | 8.46 |
| Spacer | ② | 30.5 | 1.20 |
| Adjuster | ④⑦ | 40 | 1.57 |

- Install the engine sprocket and the washer.
- Apply a small quantity of THREAD LOCK "1342" to the drive shaft thread portion.

**99000-32050: THREAD LOCK "1342"**

- Tighten the engine sprocket nut to the specified torque.

**Engine sprocket nut: 115 N·m (11.5 kgf·m, 83.2 lb-ft)**

- Install the speed sensor rotor.
- Tighten the speed sensor rotor bolt to the specified torque.

**Speed sensor rotor bolt: 20 N·m (2.0 kgf·m, 14.4 lb-ft)**

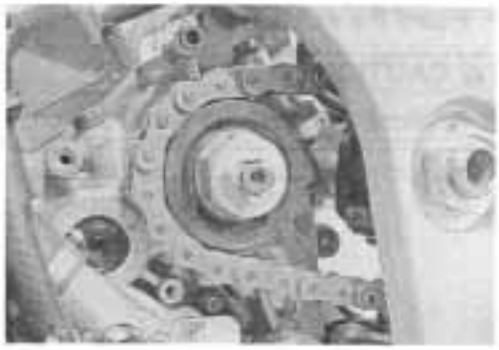

- Apply grease to the clutch push rod and install it.

**99000-25010: SUZUKI SUPER GREASE "A"**

- Align the hole of the clutch release cylinder with the end of the clutch push rod when installing the engine sprocket cover.

- Tighten the speed sensor bolt ① to the specified torque.

**Speed sensor bolt: 4.5 N·m (0.45 kgf·m, 3.0 lb-ft)**


- Install the engine sprocket cover and the gearshift lever.

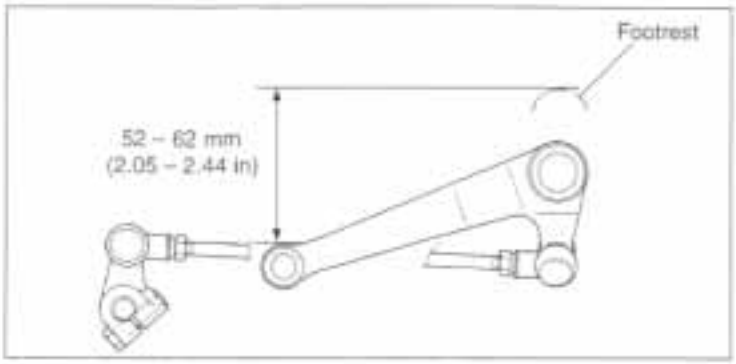

- Install the radiator mounting bracket ①.

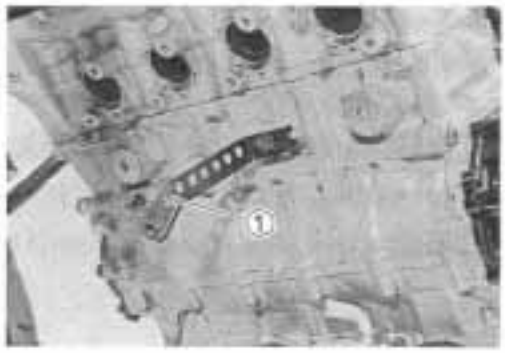


- Install the exhaust pipe/muffler.

**⚠ CAUTION**

**Replace the gaskets with new ones.**

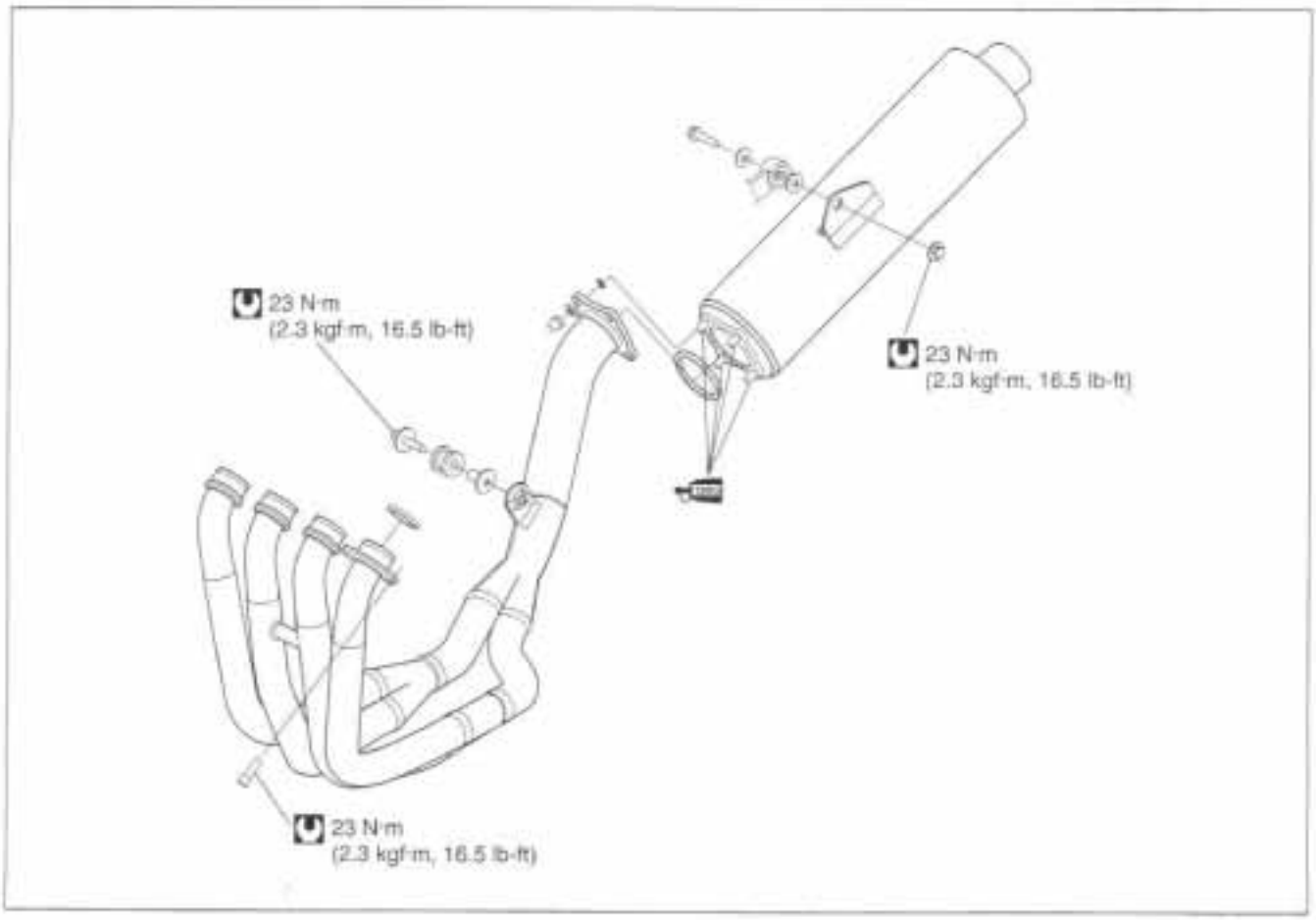


- Install and adjust the following items.
  - Engine oil (☞ 2-13)
  - Engine coolant (☞ 2-19)
  - Throttle cable play (☞ 2-16)
  - Clutch (☞ 2-17)
  - Idling adjustment (☞ 2-15)
  - Throttle valve synchronization (☞ 4-73)
  - Drive chain slack (☞ 2-20)
  - Wiring harness, cables and hoses. (☞ 8-14 – 22)

## ENGINE DISASSEMBLY

**⚠ CAUTION**

**Identify the position of each removed part. Organize the parts in their respective groups (e.g., intake, exhaust) so that they can be reinstalled in their original positions.**

- Remove the spark plugs. (☞ 2-5)

### STARTER MOTOR

- Remove the starter motor.

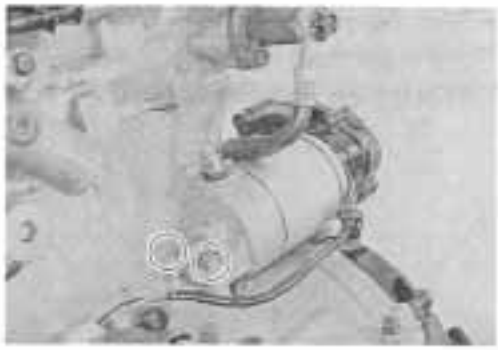

### PAIR VALVE

- Remove the PAIR valve ①.

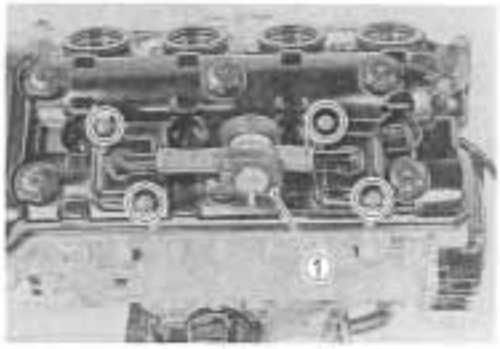


### CYLINDER HEAD COVER

- Remove the cylinder head cover and its gaskets.

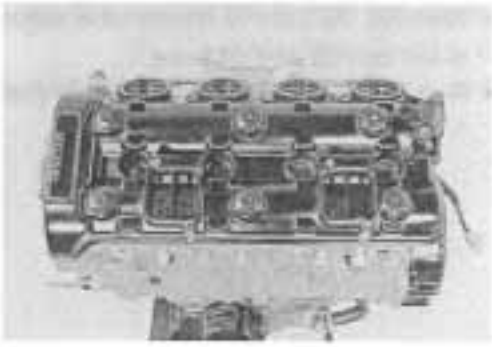

- Remove the dowel pins and O-rings.

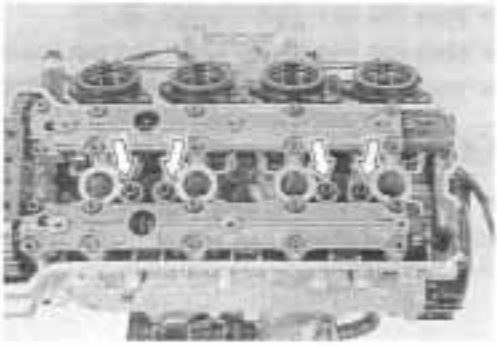

## CAMSHAFTS

- Remove the valve timing inspection cap ①.


- Turn the crankshaft to bring the line Ⓐ on the starter clutch to the index mark Ⓑ of the valve timing inspection hole and also to bring the cams to the position as shown.

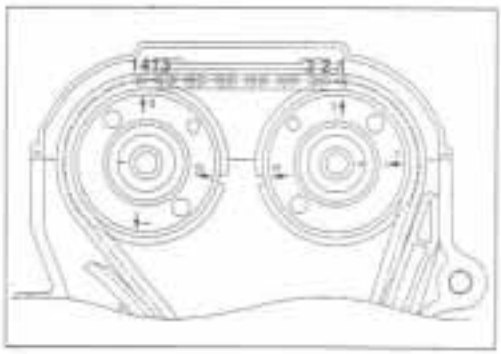


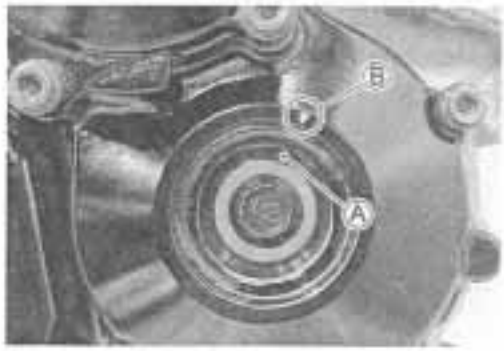


- Remove the cam chain tension adjuster cap bolt ①, oil hose union bolt ② and oil hose.
- Remove the spring, ball and cam chain tension adjuster.


- Remove the cam chain guide ②.
- Remove the intake camshaft journal holder ③.
- Remove the exhaust camshaft journal holder ④.

**⚠ CAUTION**

**Be sure to loosen the camshaft journal holder bolts evenly by shifting the wrench diagonally.**

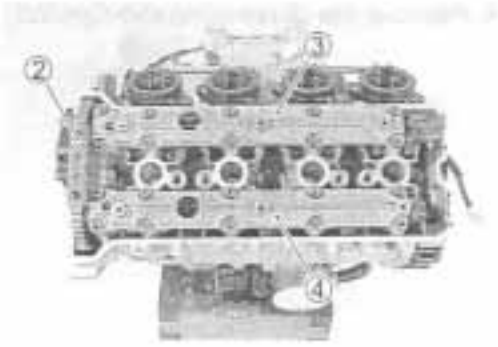

- Remove the intake camshaft ①.
- Remove the exhaust camshaft ②.

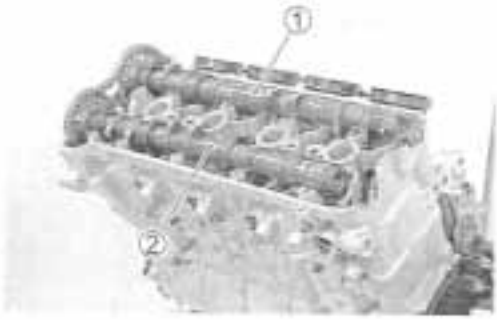


**CYLINDER HEAD**

- Remove the water hose ①.
- Remove the thermostat cover ② and thermostat.

**THERMOSTAT INSPECTION:** ☞ 5-10

- Remove the engine coolant temp. gauge ③.

**ENGINE COOLANT TEMP. GAUGE INSPECTION:** ☞ 5-8

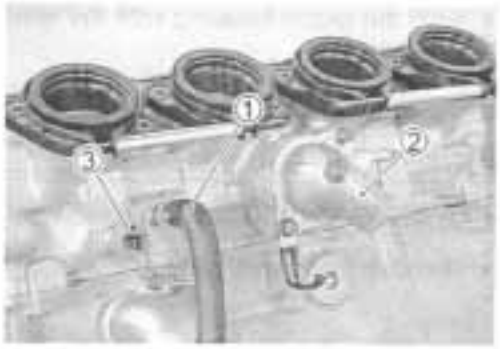


- Remove the cylinder head side bolt ④ and its gasket.

**⚠ CAUTION**

**When removing the cylinder head side bolt, pull the cam chain upward, or the chain will be caught between the cylinder head and the side bolt.**

- Remove the cylinder head bolts (M6) ⑤.

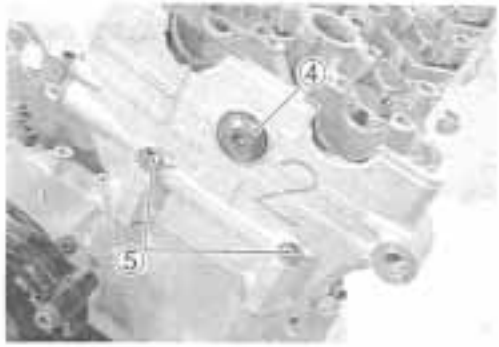


- Remove the cylinder head bolts and washers.

*NOTE:*
*When loosening the cylinder head bolts, loosen each bolt little by little diagonally.*

- Remove the cylinder head.

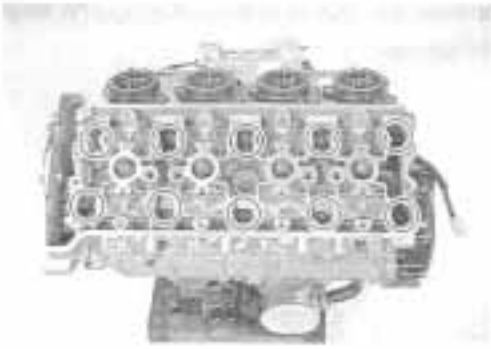

## CLUTCH

- Remove the clutch cover.

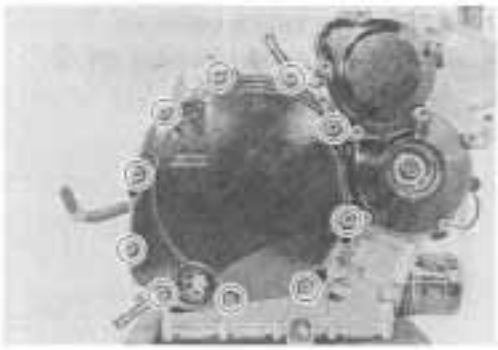

- Hold the clutch housing with the special tool.

**⚠ CAUTION**

**Be careful not to damage the clutch housing or clutch plates.**

**09920-53740: Clutch sleeve hub holder**

- Remove the clutch springs.

*NOTE:*
*Loosen the clutch spring set bolts little by little and diagonally.*

- Remove the pressure plate, clutch plates, spring washer and washer.

- Remove the clutch push piece ①, the bearing ② and the thrust washer ③.


- Remove the clutch push rod ④.

*NOTE:*
*If it is difficult to pull out the push rod ④, use a magnetic hand or a wire.*

- Unlock the clutch sleeve hub nut.

- Hold the clutch sleeve hub with the special tool.

**09920-53740: Clutch sleeve hub holder**

- Remove the clutch sleeve hub nut.

- Remove the wave washer ① washer ②, clutch sleeve hub ③ and washer.

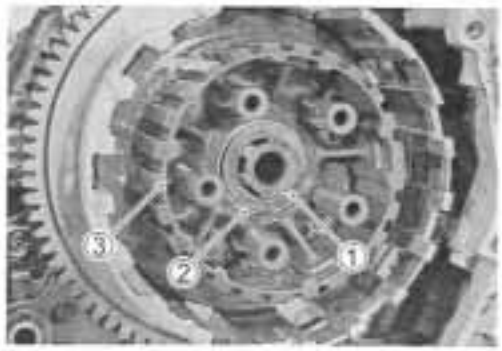


- Remove the primary driven gear assembly ④.

*NOTE:*
*If it is difficult to remove the primary driven gear, rotate the crankshaft.*


- Remove the spacer ⑤ and bearing ⑥.
- Remove the thrust washer ⑦.

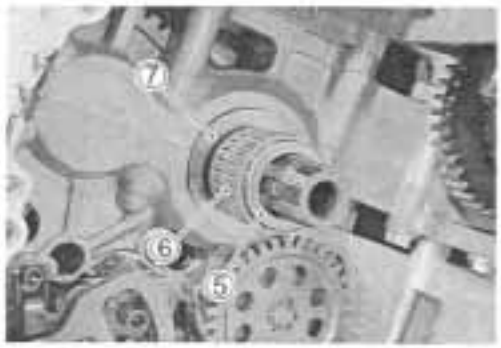

### OIL PUMP

- Remove the circlip ①.
- Remove the oil pump driven gear ②.

*NOTE:*
*Do not drop the circlip ①, the pin ③ and the washer ④ into the crankcase.*

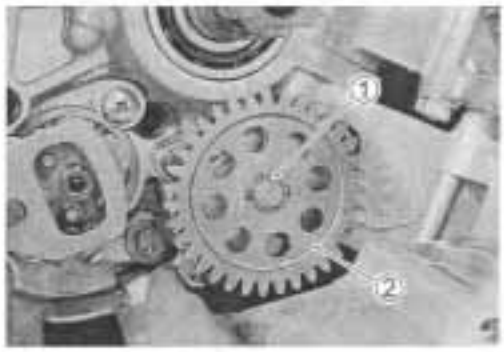


- Remove the pin ③ and the washer ④.
- Remove the oil pump ⑤.

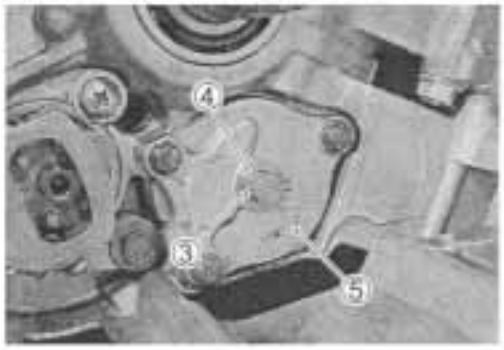


### GEAR SHIFT SYSTEM

- With the circlip ① removed, remove the gearshift shaft assembly ②.

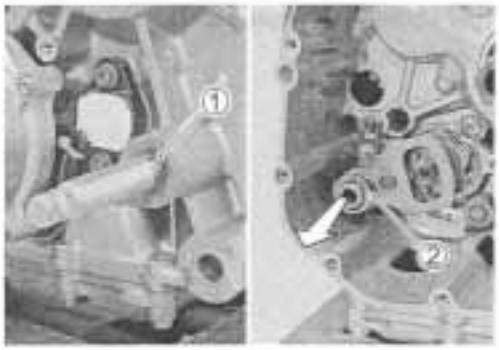


- Remove the gearshift cam plate bolt ③ and gearshift cam plate ④.
- Remove the gearshift cam stopper ⑤.

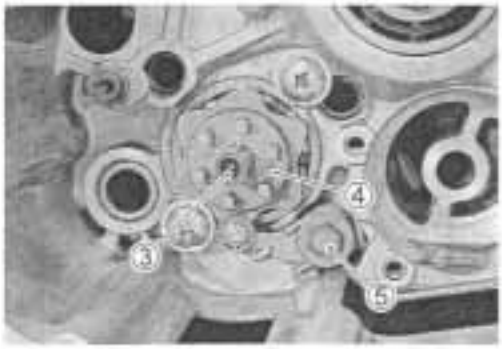

## STARTER IDLE GEAR

- Remove the starter idle gear cover.

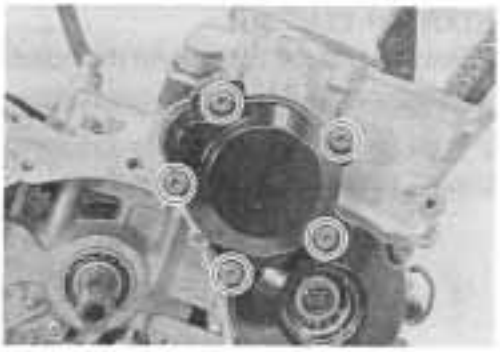

- Remove the shaft ①, wave washer ② washer ③ starter idle gear No.1 ④, bearing ⑤ and washer ⑥.

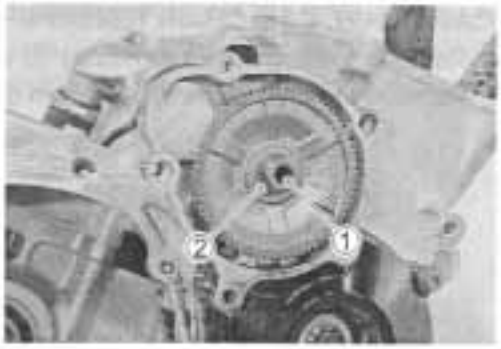


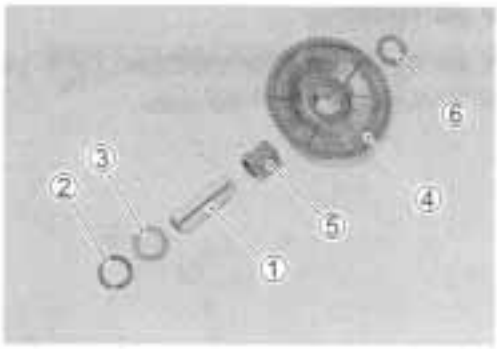


- Remove the starter clutch cover.

- Remove the wave washer ①, the starter idle gear No.2 ② and its shaft ③.

### STARTER CLUTCH

- Hold the starter clutch with the special tool.

**09920-34830: Starter clutch holder**

- Remove the starter clutch bolt and washer.
- Remove the starter clutch assembly.

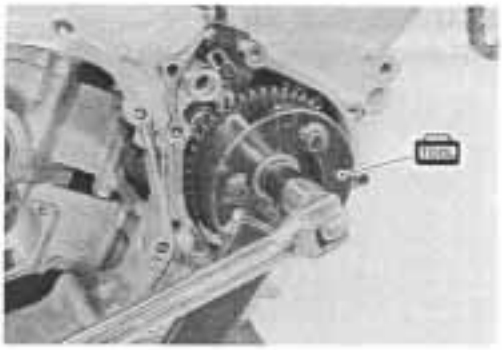

### CAM CHAIN, CAM CHAIN TENSIONER, CAM CHAIN GUIDE

- Remove the cam chain tensioner ① and cam chain guide ②.
- Remove the cam chain ③ and cam chain drive sprocket ④.


### CKP SENSOR

**CKP SENSOR INSPECTION:** 7-24

- Remove the CKP sensor.

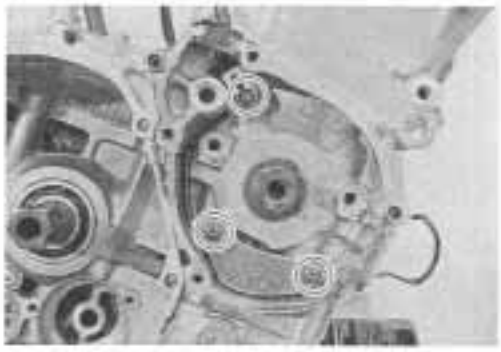

### GENERATOR COVER

- Remove the generator cover.

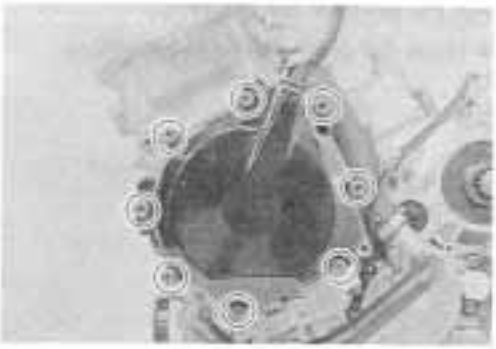

### GENERATOR ROTOR

- Hold the generator rotor with the special tool.

**09930-44520: Rotor holder**

- Remove the generator rotor bolt.

- Install a suitable bolt Ⓐ to the left end of crankshaft.

  **SUITABLE BOLT Ⓐ [M12, length: 28 – 38 mm]**

- Remove the generator rotor with the special tool.

**09930-34980: Rotor remover**

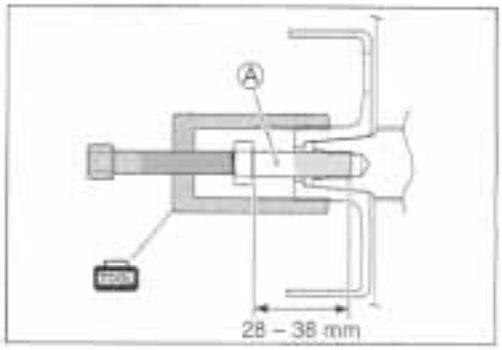


### WATER PUMP

- Remove the water hose ①, ② and inlet cover ③.
- Remove the water pump ④.

**WATER PUMP SERVICING: 5-11**

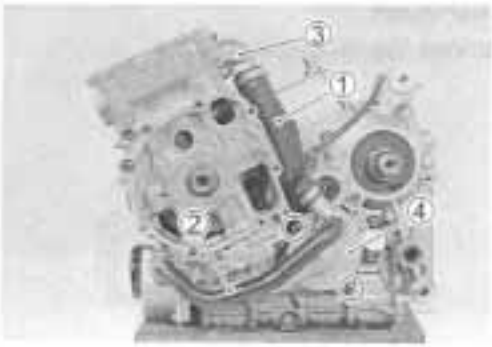

### GEAR POSITION SWITCH

- Remove the gear position switch.

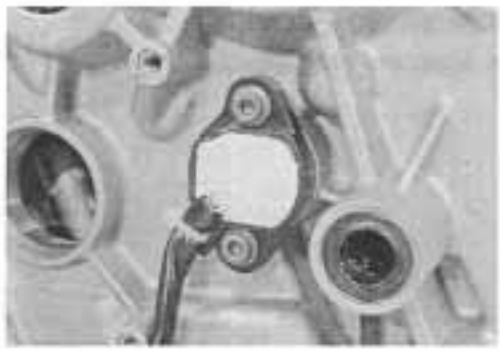

- Remove the switch contacts and springs.

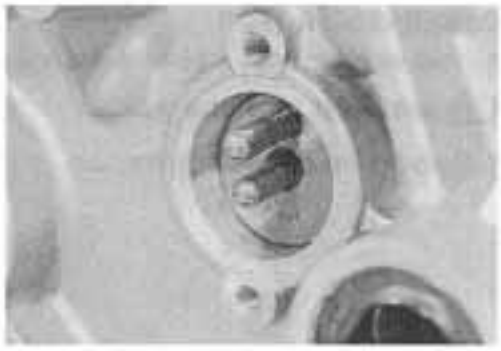

### BREATHER COVER

- Remove the breather cover.

### OIL FILTER

- Remove the oil filter with the special tool. (☞ 2-14)

**TOOL 09915-40610: Oil filter wrench**

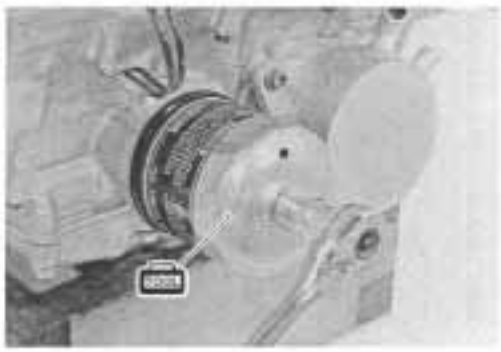

### OIL COOLER

- Remove the oil cooler.

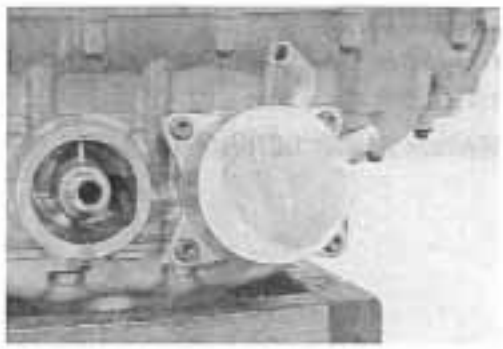

**OIL PAN**

- Remove the cowling brackets ①.
- Remove the oil pan.

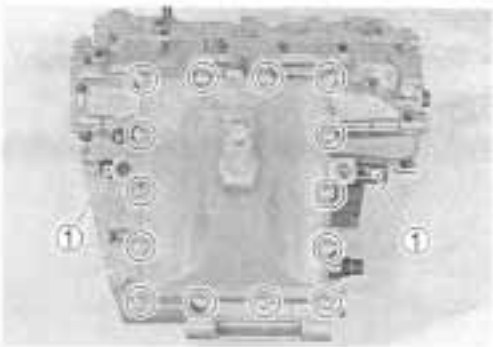


**OIL PRESSURE REGULATOR**

- Remove the oil pressure regulator ①.

**OIL PRESSURE SWITCH**

- Remove the oil pressure switch ②.

**OIL STRAINER**

- Remove the oil strainer ③ and O-ring.

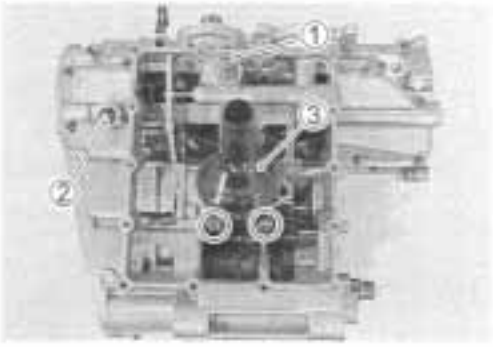


**LOWER CRANK CASE**

- Remove the lower crankcase bolts (6 mm).

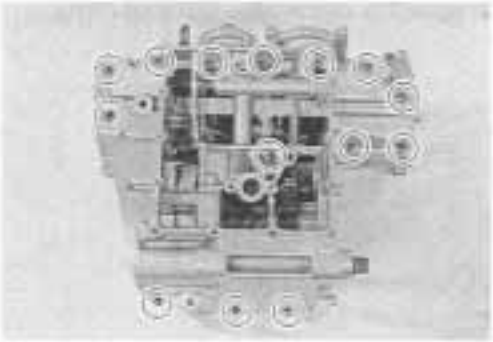

- Remove the lower crankcase bolts (8 mm).
- Remove the lower crankcase assembly.

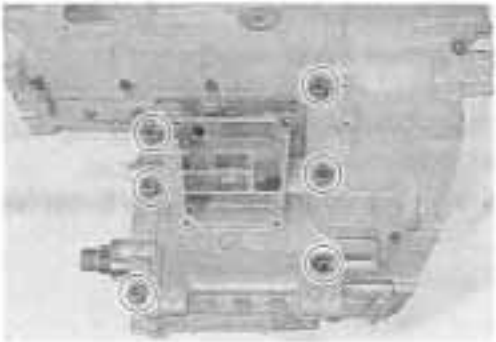

**TRANSMISSION**

- Remove the transmission and O-rings.

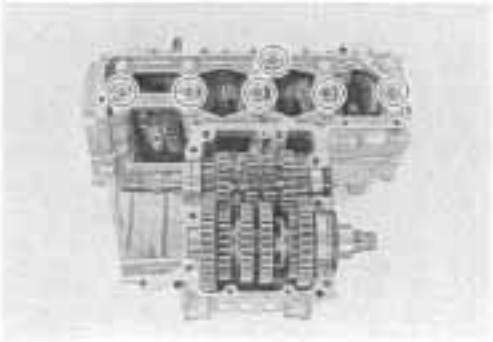

### MIDDLE CRANKCASE

- Remove the crankcase bolts (6 mm).

*NOTE:*
*Loosen the crankcase bolts diagonally and the smaller sizes first.*

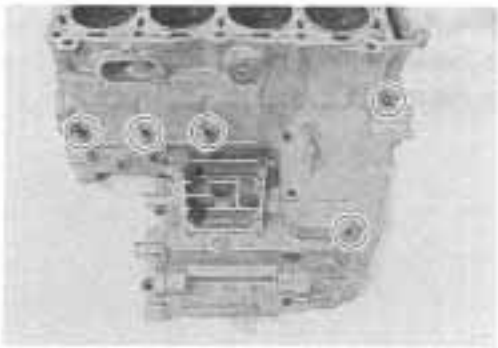

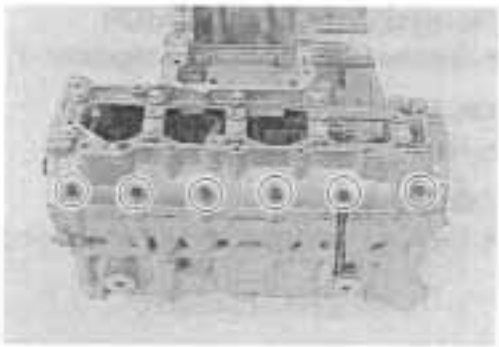

- Remove the crankcase bolts (8 mm).

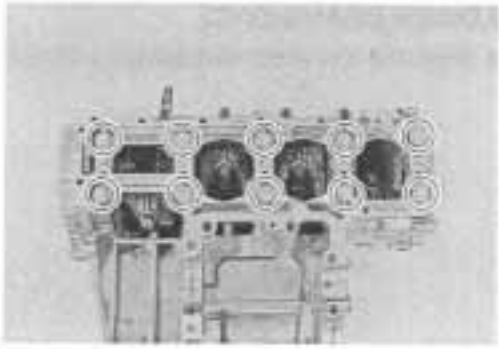

### CRANKSHAFT

- Remove the O-ring ①.
- Loosen the bearing cap bolts by using 10 mm, 12 point socket wrench, and tap the bearing cap bolt lightly with plastic hammer to remove the bearing cap.
- Remove the crankshaft and thrust washers ②.

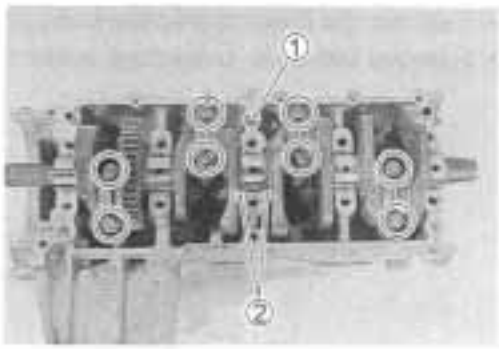

## PISTON AND CONROD

- Push the conrod to upward and remove the piston and conrod from the upper crankcase.

**⚠ CAUTION**

**Be careful not to damage the cylinder wall by the conrod.**

- Remove the piston pin circlip.
- Separate the piston and conrod by driving out the piston pin.

*NOTE:*

*Scribe the cylinder number on the head of the piston.*

# ENGINE COMPONENTS INSPECTION AND SERVICE

**⚠ CAUTION**

**Identify the position of each removed part. Organize the parts in their respective groups (i.e., intake, exhaust, No.1 or No.2) so that they can be installed in their original locations.**

## PAIR VALVE

### PAIR REED VALVE

- Remove the PAIR valve cover.
- Inspect the reed valve for the carbon deposit.
- If the carbon deposit is found in the reed valve, replace the PAIR control valve with a new one.

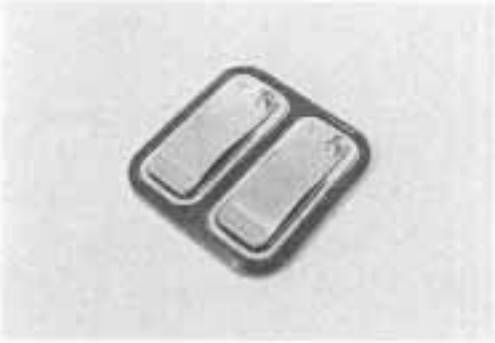

### PAIR CONTROL VALVE

- Inspect that air flows through the PAIR control valve air inlet port to the air outlet ports.
- If air does not flow out, replace the PAIR valve with a new one.
- Connect the vacuum pump gauge to the vacuum port of the control valve as shown in the photograph.
- Apply negative pressure of the specification slowly to the control valve and inspect the air flow.
- If air does not flow out, the control valve is in normal condition.
- If the control valve does not function within the specification, replace the control valve with a new one.

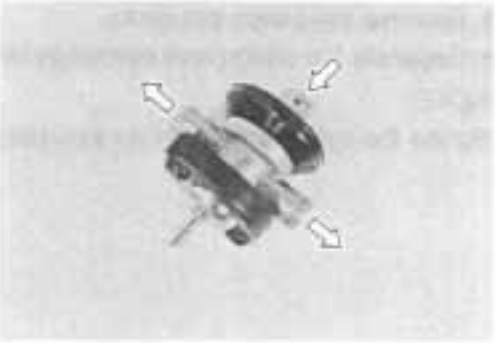

**DATA Negative pressure range: More than 66.6 kPa (491 mmHg)**

**TOOL 09917-47010: Vacuum pump gauge**

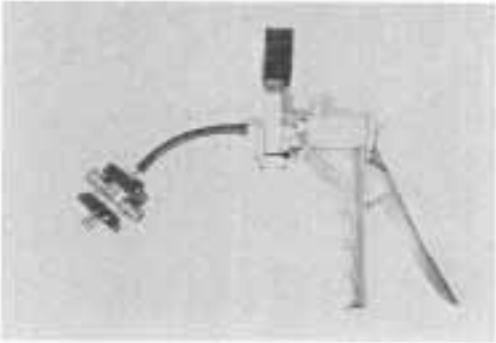

**⚠ CAUTION**

**Use a hand operated vacuum pump to prevent the control valve damage.**

## CYLINDER HEAD COVER

### CAM POSITION SENSOR

- Install the oil seal ① and cam position sensor ②.

*NOTE:*
*When installing, clean the cam position sensor's face.*

**Cam position sensor bolt: 8 N·m (0.8 kgf·m, 5.8 lb-ft)**

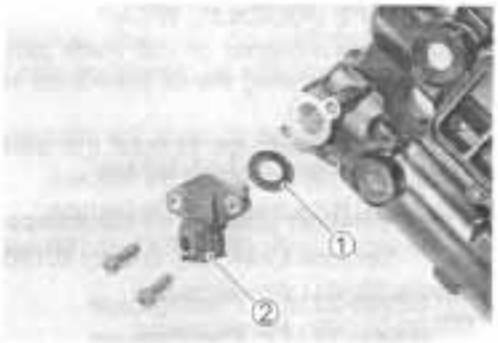


## CAMSHAFT

### CAMSHAFT IDENTIFICATION

The exhaust camshaft can be distinguished from that of the intake by the embossed letters "EX" (for exhaust) as against letters "IN" (for intake).

### CAM WEAR

- Check the camshaft for wear or damage.
- Measure the cam height Ⓗ with a micrometer.

**09900-20202: Micrometer (25 – 50 mm)**

**Cam height Ⓗ:**
**Service Limit: (IN.) : 36.28 mm (1.428 in)**
**(EX.) : 34.98 mm (1.417 in)**

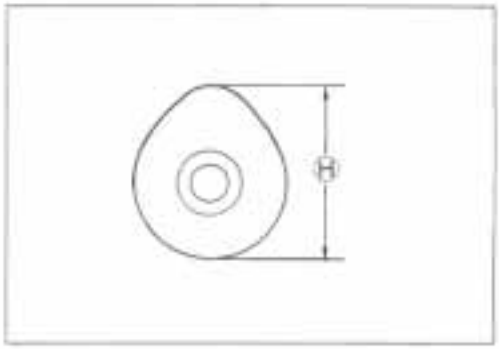

### CAMSHAFT JOURNAL WEAR

- Determine whether or not each journal is worn down to the limit by measuring the oil clearance with the camshaft installed in place.
- Use the plastigauge to read the clearance at the widest portion, which is specified as follows:

**DATA Camshaft journal oil clearance:**
**Service Limit: (IN & EX): 0.150 mm (0.0059 in)**

**TOOL 09900-22301: Plastigauge**
**09900-22302: Plastigauge**

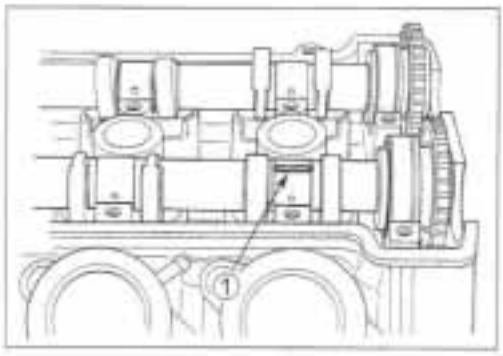


*NOTE:*
*Install camshaft journal holders to their original positions.*
*(☞ 3-94)*

- Tighten the camshaft journal holder bolts evenly and diagonally to the specified torque.

**Camshaft journal holder bolt: 10 N·m (1.0 kgf·m, 7.0 lb-ft)**

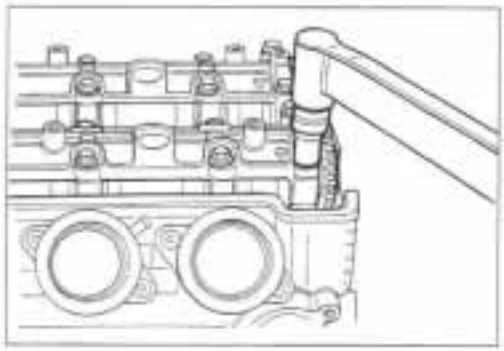

*NOTE:*
*Do not rotate the camshaft with the plastigauge in place.*

- Remove the camshaft holders, and read the width of the compressed plastigauge with envelope scale.
- This measurement should be taken at the widest part.

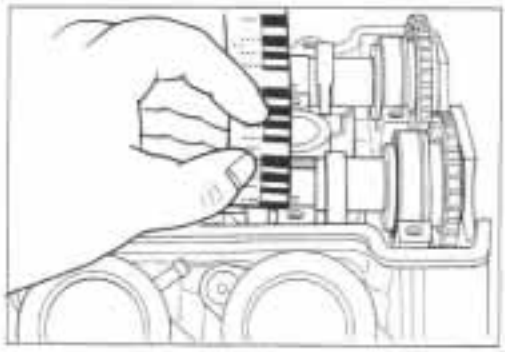

- If the camshaft journal oil clearance measured exceeds the limit, measure the inside diameter of the camshaft journal holder and outside diameter of the camshaft journal.
- Replace the camshaft or the cylinder head depending upon which one exceeds the specification.

**DATA Journal holder I.D.:**
**Standard: (IN & EX): 24.012 – 24.025 mm**
**(0.9454 – 0.9459 in)**

**TOOL 09900-20602: Dial gauge (1/1000, 1 mm)**
**09900-22403: Small bore gauge (18 – 35 mm)**

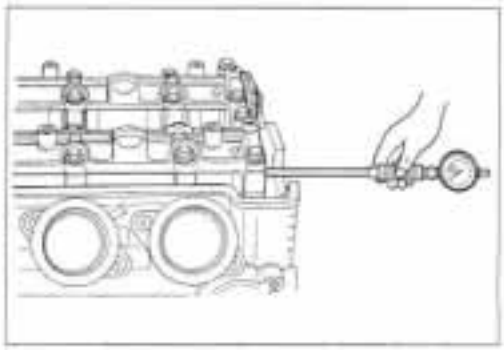

**DATA Camshaft journal O.D.:**
**Standard (IN & EX): 23.959 – 23.980 mm**
**(0.9433 – 0.9441 in)**

**TOOL 09900-20205: Micrometer (0 – 25 mm)**

### CAMSHAFT RUNOUT

- Measure the runout using the dial gauge.
- Replace the camshaft if the runout exceeds the limit.

**09900-20606: Dial gauge (1/100 mm)**
**09900-20701: Magnetic stand**
**09900-21304: V-block set (100 mm)**

**Camshaft runout:**
**Service Limit (IN & EX): 0.10 mm (0.004 in)**

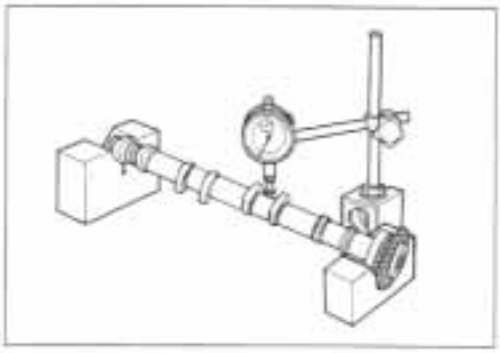

### CAM SPROCKET

- Inspect the sprocket teeth for wear.
- If they are worn, replace the sprocket/camshaft assembly and cam chain as a set.

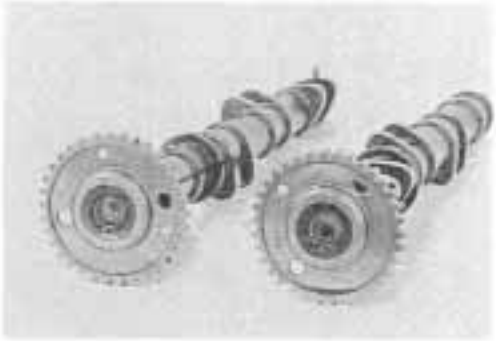

## CAM CHAIN TENSION ADJUSTER

### INSPECTION

- Remove the cam chain tension adjuster cap bolt.
- Check that the push rod slides smoothly when releasing stopper.
- If it does not slide smoothly, replace the cam chain tension adjuster with a new one.

## CAM CHAIN TENSIONER

### INSPECTION

- Check the contacting surface of the cam chain tensioner.
- If it is worn or damaged, replace it with a new one.

## CAM CHAIN GUIDE

### INSPECTION

- Check the contacting surfaces of the cam chain guides.
- If they are worn or damaged, replace them with the new ones.

# CYLINDER HEAD AND VALVE

## VALVE AND VALVE SPRING DISASSEMBLY

- Remove the tappets ① and shims ② by fingers or magnetic hand.


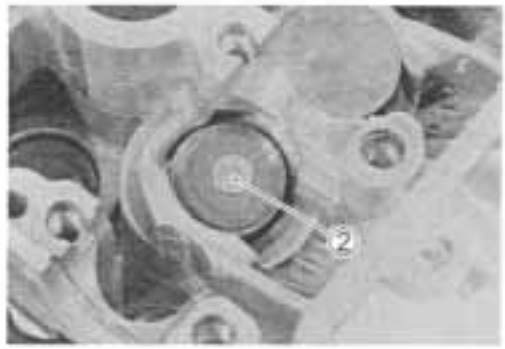


**▲ CAUTION**

**Identify the position of each removed part.**

- Using special tools, compress the valve springs and remove the two cotter halves ③ from valve stem.

**09916-14510: Valve lifter**
**09916-14521: Valve lifter attachment (IN.)**
**09916-14530: Valve lifter attachment (EX.)**
**09916-84511: Tweezers**

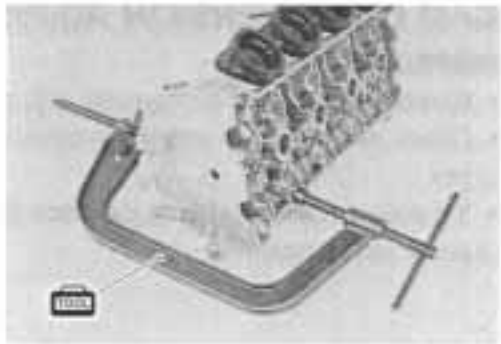

**▲ CAUTION**

**Be careful not to damage the tappet sliding surface with the special tool.**


- Remove the valve spring retainer ④ and valve springs ⑤.
- Pull out the valve from the other side.

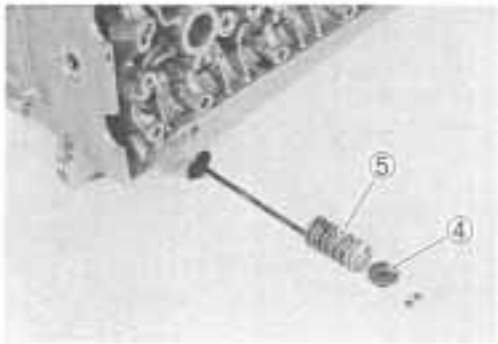

- Remove the oil seal ① and the spring seat ②.

**⚠ CAUTION**

**Do not reuse the removed oil seal.**

- Remove the other valves in the same manner as described previously.

### CYLINDER HEAD DISTORTION

- Decarbonize the combustion chambers.
- Check the gasketed surface of the cylinder head for distortion with a straightedge and thickness gauge, taking a clearance reading at several places indicated.
- If the largest reading at any position of the straightedge exceeds the limit, replace the cylinder head.

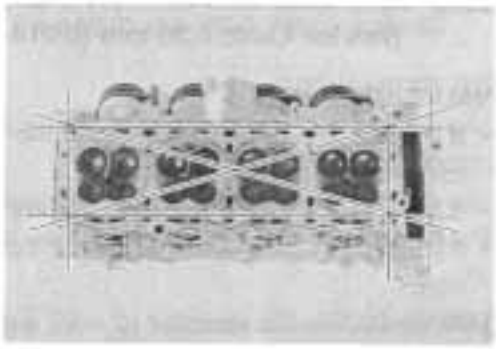

**TOOL 09900-20803: Thickness gauge**

**DATA Cylinder head distortion:**
**Service Limit: 0.20 mm (0.008 in)**

### VALVE STEM RUNOUT

- Support the valve using V-blocks and check its runout using the dial gauge as shown.
- If the runout exceeds the service limit, replace the valve.

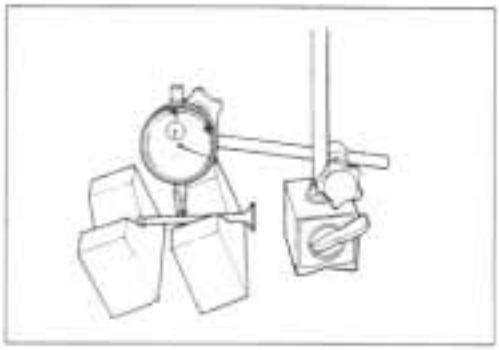

**TOOL 09900-20606: Dial gauge (1/100 mm)**
**09900-20701: Magnetic stand**
**09900-21304: V-block set (100 mm)**

**DATA Valve stem runout:**
**Service Limit: 0.05 mm (0.002 in)**

### VALVE HEAD RADIAL RUNOUT

- Place the dial gauge at a right angle to the valve head face and measure the valve head radial runout.
- If it measures more than the service limit, replace the valve.

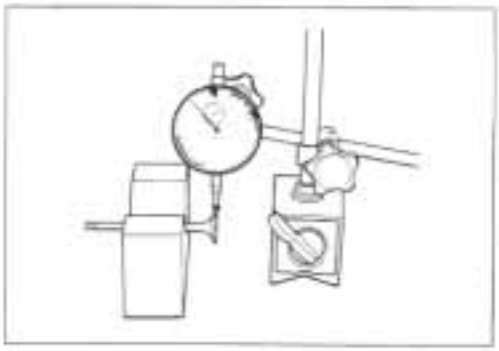

**TOOL 09900-20606: Dial gauge (1/100 mm)**
**09900-20701: Magnetic stand**
**09900-21304: V-block set (100 mm)**

**DATA Valve head radial runout:**
**Service Limit: 0.03 mm (0.001 in)**

### VALVE FACE WEAR

- Visually inspect each valve face for wear. Replace any valve with an abnormally worn face. The thickness of the valve face decreases as the face wears. Measure the valve face Ⓣ. If it is out of specification, replace the valve with a new one.

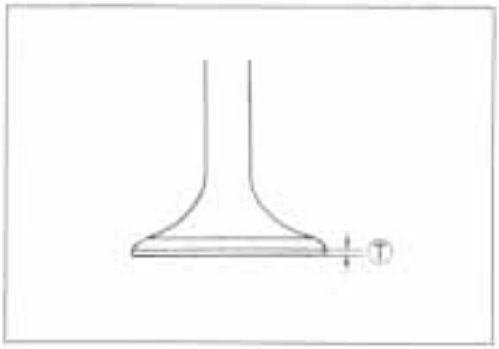


**TOOL 09900-20102: Vernier calipers**

**DATA Valve head thickness Ⓣ:**
**Service Limit: 0.5 mm (0.02 in)**

### VALVE STEM DEFLECTION

- Lift the valve about 10 mm (0.39 in) from the valve seat.
- Measure the valve stem deflection in two directions, perpendicular to each other, by positioning the dial gauge as shown.
- If the deflection measured exceeds the limit, then determine whether the valve or the guide should be replaced with a new one.

**TOOL 09900-20606: Dial gauge (1/100 mm)**
**09900-20701: Magnetic stand**

**DATA Valve stem deflection (IN & EX):**
**Service Limit: 0.35 mm (0.014 in)**

### VALVE STEM WEAR

- If the valve stem is worn down to the limit, as measured with a micrometer, replace the valve.
- If the stem is within the limit, then replace the guide.
- After replacing valve or guide, be sure to recheck the deflection.

**TOOL 09900-20205: Micrometer (0 – 25 mm)**

**DATA Valve stem O.D.:**
**Standard (IN) : 3.975 – 3.990 mm (0.1565 – 0.1571 in)**
**(EX): 3.955 – 3.970 mm (0.1557 – 0.1563 in)**

*NOTE:*
*If valve guides have to be removed for replacement after inspecting related parts, carry out the steps shown in valve guide servicing.* *(☞ 3-35)*

### VALVE GUIDE SERVICING

- Using the valve guide remover, drive the valve guide out toward the intake or exhaust camshaft side.

**09916-53310: Valve guide remover/installer**

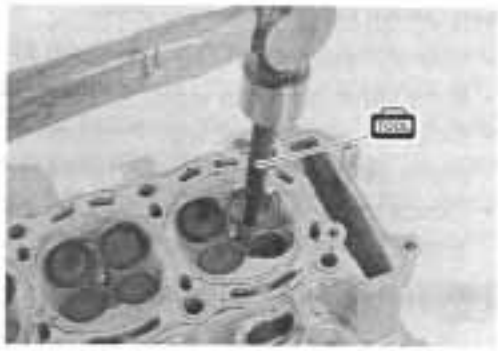

*NOTE:*
- *Discard the removed valve guide subassemblies.*
- *Only oversized valve guides are available as replacement parts. (Part No. 11115-11D70)*

- Re-finish the valve guide holes in cylinder head with the reamer and handle.

**09916-49030: Valve guide reamer**
**09916-34542: Reamer handle**

**⚠ CAUTION**

**When refinishing or removing the reamer from the valve guide hole, always turn it clockwise.**

- Apply engine oil to the valve guide hole.
- Drive the valve guide into the hole using the valve guide installer ① and attachment ②.

**09916-53310: Valve guide installer/remover ①**
**09916-43220: Attachment ②**

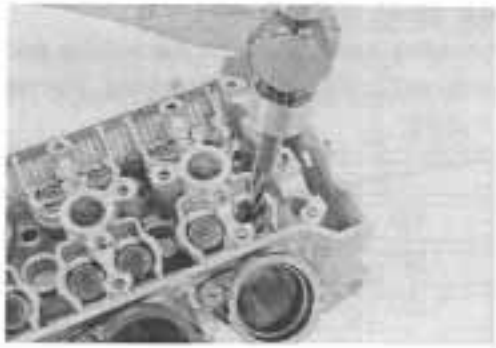

*NOTE:*
*Install the valve guide until the attachment contacts with the cylinder head ③.*

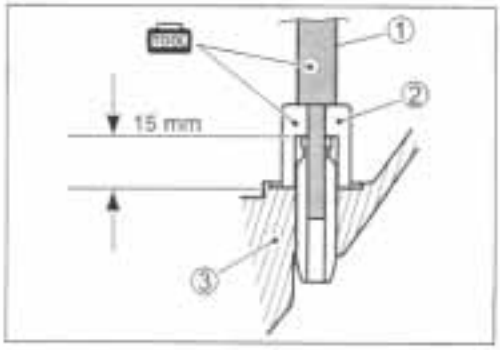


**⚠ CAUTION**

**Failure to oil the valve guide hole before driving the new guide into place may result in a damaged guide or head.**

- After installing the valve guides, re-finish their guiding bores using the reamer.
- Clean and oil the guides after reaming.

**09916-33310: Valve guide reamer**
**09916-34542: Valve guide reamer handle**

*NOTE:*
*Insert the reamer from the combustion chamber and always turn the reamer handle clockwise.*

### VALVE SEAT WIDTH INSPECTION

- Visually check for valve seat width on each valve face.
- If the valve face has worn abnormally, replace the valve.
- Coat the valve seat with Prussian Blue and set the valve in place. Rotate the valve with light pressure.
- Check that the transferred blue on the valve face is uniform all around and in center of the valve face.

**TOOL 09916-10911: Valve lapper set**

- If the seat width Ⓦ measured exceeds the standard value, or seat width is not uniform reface the seat using the seat cutter.

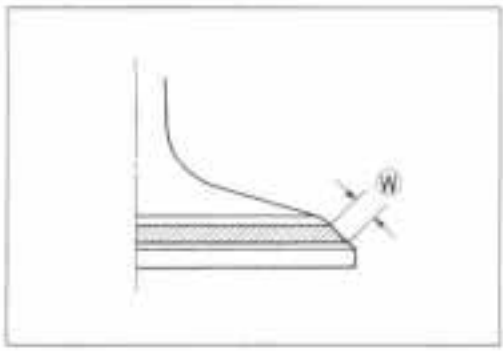


**DATA Valve seat width Ⓦ:**
**Standard: 0.9 – 1.1 mm (0.035 – 0.043 in)**

If the valve seat is out of specification, re-cut the seat.

### VALVE SEAT SERVICING

- The valve seats for both the intake and exhaust valves are machined to four different angles. The seat contact surface is cut at 45°.

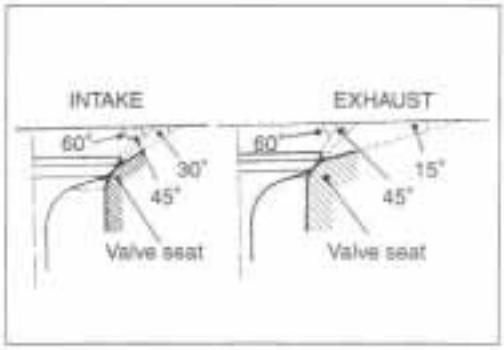


| | INTAKE | EXHAUST |
|---|---|---|
| 15° | | N-121 |
| 30° | N-126 | |
| 45° | N-122 | N-122 |
| 60° | N-111 | N-111 |

**TOOL 09916-21111: Valve seat cutter set**
**09916-20630: Valve seat cutter (N-126)**
**09916-20650: Solid pilot (N-100-4.0)**

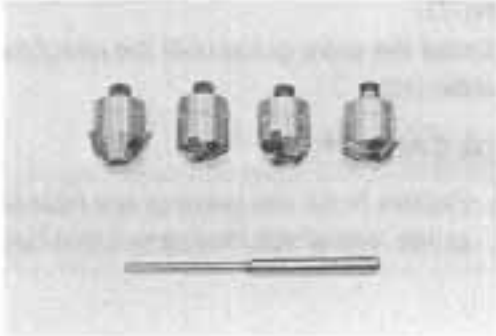

*NOTE:*
*The valve seat cutters (N-121), (N-122) and (N-111) are included in the valve seat cutter set (09916-21111).*

**⚠ CAUTION**

**The valve seat contact area must be inspected after each cut.**

- When installing the solid pilot ①, rotate it slightly. Seat the pilot snugly. Install the 45° cutter, attachment and T-handle.

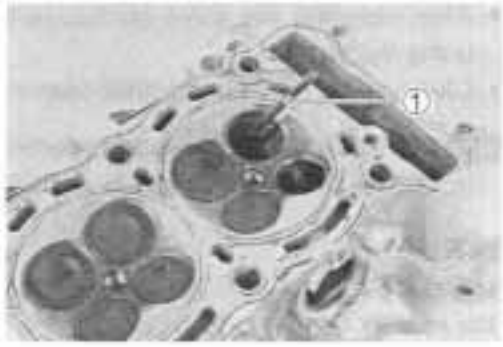

### INITIAL SEAT CUT

- Using the 45° cutter, descale and clean up the seat. Rotate the cutter one or two turns.
- Measure the valve seat width Ⓦ after every cut.

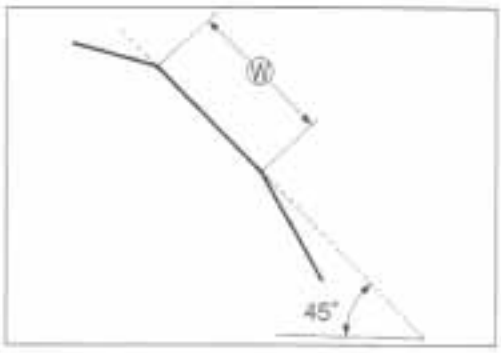


- If the valve seat is pitted or burned, use the 45° cutter to condition the seat some more.

*NOTE:*
*Cut only the minimum amount necessary from the seat to prevent the possibility of the valve stem becoming too close to the camshaft.*

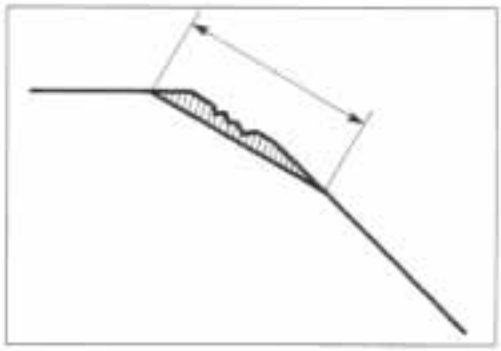

### TOP NARROWING CUT

- If the contact area Ⓦ is too high on the valve, or if it is too wide, use the 15° (for the exhaust side) and the 30° (for the intake side) to lower and narrow the contact area.

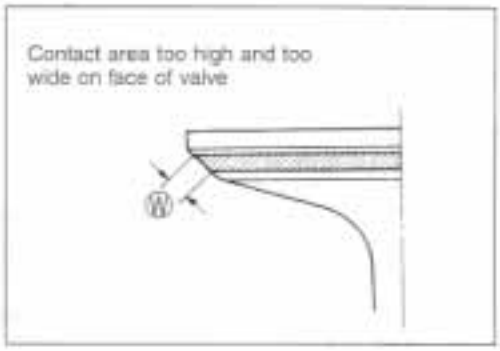


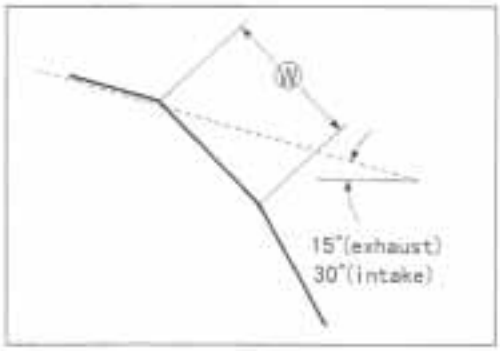


### BOTTOM NARROWING CUT

- If the contact area Ⓦ is too wide or too low, use the 60° cutter to narrow and raise the contact area.

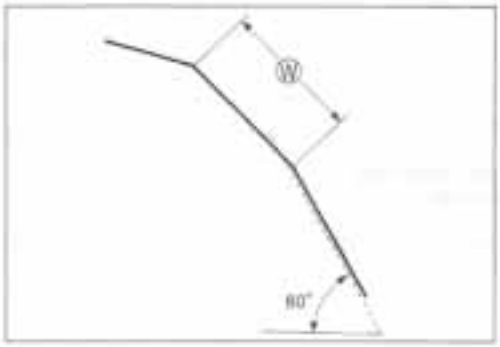

### FINAL SEAT CUT

- If the contact area Ⓦ is too low or too narrow, use the 45° cutter to raise and widen the contact area.

*NOTE:*
*After cutting the 15°, 30° and 60° angles, it is possible that the valve seat (45°) is too narrow. If so, re-cut the valve seat to the correct width.*

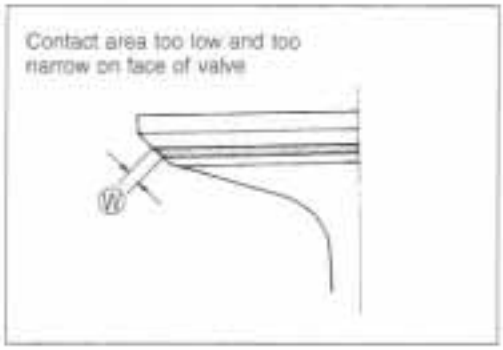


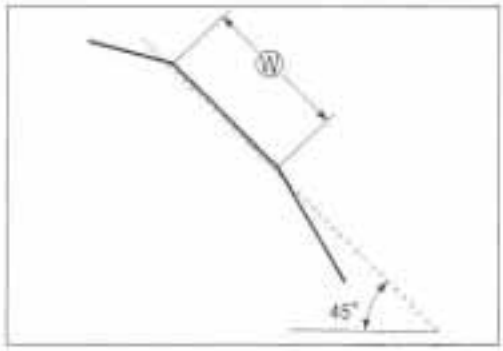


- After the desired seat position and width is achieved, use the 45° cutter very lightly to clean up any burrs caused by the previous cutting operations.

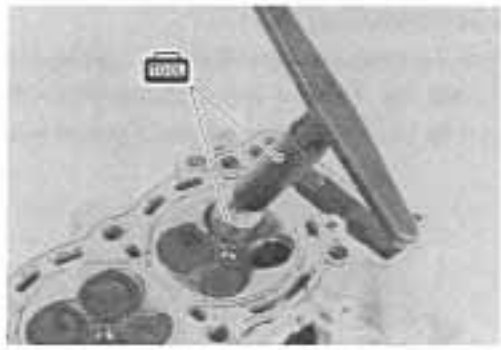

**⚠ CAUTION**

**Do not use lapping compound after the final cut is made. The finished valve seat should have a velvety smooth finish but not a highly polished or shiny finish. This will provide a soft surface for the final seating of the valve which will occur during the first few seconds of engine operation.**

*NOTE:*
*After servicing the valve seats, be sure to check the valve clearance after the cylinder head has been reinstalled.* (☞ 2-8)

- Clean and assemble the head and valve components. Fill the intake and exhaust ports with gasoline to check for leaks.
- If any leaks occur, inspect the valve seat and face for burrs or other things that could prevent the valve from sealing.

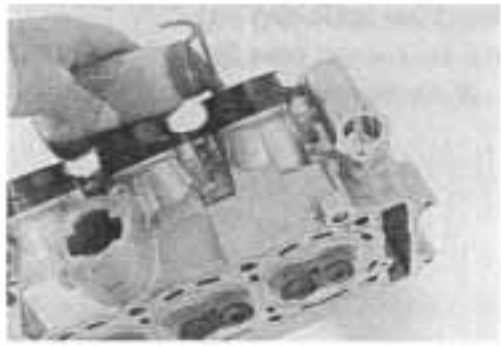

**⚠ WARNING**

**Always use extreme caution when handling gasoline.**

### VALVE STEM END CONDITION

- Check the valve stem end face for pitting and wear.

### VALVE SPRING

The force of the coil springs keeps the valve seat tight. Weakened springs result in reduced engine power output, and often account for the chattering noise coming from the valve mechanism.

- Check the valve springs for proper strength by measuring their free length and also by the force required to compress them.
- If the spring length is less than the service limit, or if the force required to compress the spring does not fall within the range specified, replace both the inner and outer springs as a set.

**TOOL 09900-20102: Vernier calipers**

**DATA Valve spring free length (IN & EX):**
**Service limit: 37.8 mm (1.49 in)**

**DATA Valve spring tension:**
**Standard: (IN & EX): 173 – 199 N/32.85 mm**
**(17.6 – 20.3 kgf / 38.8 – 44.8 lbs / 1.29 in)**

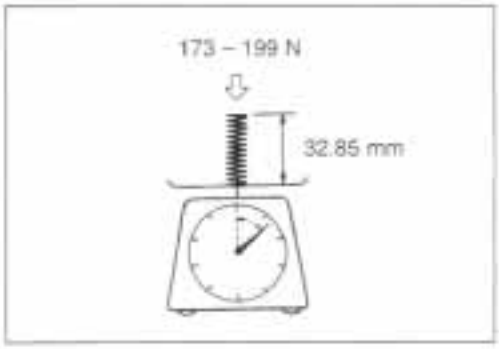

### VALVE AND VALVE SPRING REASSEMBLY

- Install the valve spring seats.
- Apply molybdenum oil solution to each oil seal, and press-fit them into position with the valve guide installer.

**09916-44310: Valve guide remover/installer**

**MOLYBDENUM OIL SOLUTION**

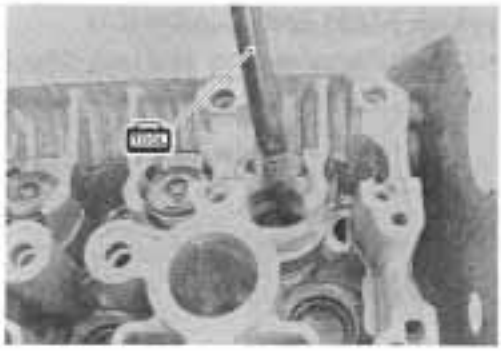

**⚠ CAUTION**

**Do not reuse the removed oil seals.**

- Insert the valves, with their stems coated with molybdenum oil solution all around and along the full stem length without any break.

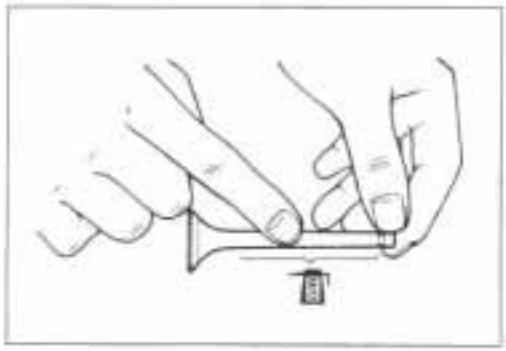

**⚠ CAUTION**

**When inserting each valve, take care not to damage the lip of the oil seal.**

**MOLYBDENUM OIL SOLUTION**

- Install the valve springs with the small-pitch portion Ⓐ facing cylinder head.

Ⓑ: Large-pitch portion

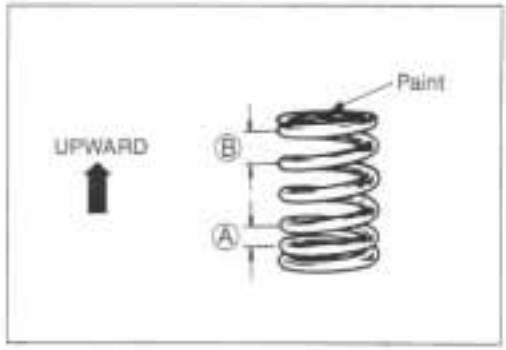


- Put on the valve spring retainer ①, and using the valve lifter, press down the springs, fit the cotter halves to the stem end, and release the lifter to allow the cotter ② to wedge in between retainer and stem. Be sure that the rounded lip Ⓐ of the cotter fits snugly into the groove Ⓑ in the stem end.

**09916-14510: Valve lifter**
**09916-14910: Valve lifter attachment**
**09916-84511: Tweezers**

**⚠ CAUTION**

**Be sure to restore each spring and valve to their original positions.**

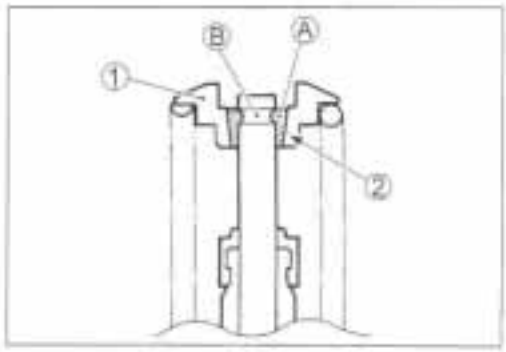

- Install the tappet shims and the tappets to their original position.

*NOTE:*

- *Apply engine oil to the shim and tappet before fitting them.*
- *When seating the tappet shim, be sure the figure printed surface faces the tappet.*

**INTAKE PIPE**

- Install the intake pipe in the following procedure.
- Apply THREAD LOCK "1342" to the screw and install the intake pipes.

**99000-32050: THREAD LOCK "1342"**

**WATER BYPASS UNION**

- Apply SUZUKI BOND "1207B" to the thread part of the water bypass union and tighten it to the specified torque.

**99000-31140: SUZUKI BOND "1207B"**

**Water bypass union: 14 N·m (1.4 kgf·m, 10.0 lb-ft)**

# CLUTCH

## CLUTCH DRIVE PLATES INSPECTION

*NOTE:*
*Wipe off engine oil from the clutch drive plates with a clean rag.*

- Measure the thickness of drive plates with a vernier calipers.
- If each drive plate is not within the standard range, replace it with a new one.

**DATA Drive plate thickness (No. 1, 2 & 3):**
**Standard: 2.92 – 3.08 mm (0.115 – 0.121 in)**

**09900-20102: Vernier calipers**

- Measure the claw width of drive plates with a vernier calipers.
- Replace the drive plates found to have worn down to the limit.

**DATA Drive plate claw width (No. 1, 2 & 3):**
**Service Limit: 12.9 mm (0.508 in)**

**09900-20102: Vernier calipers**

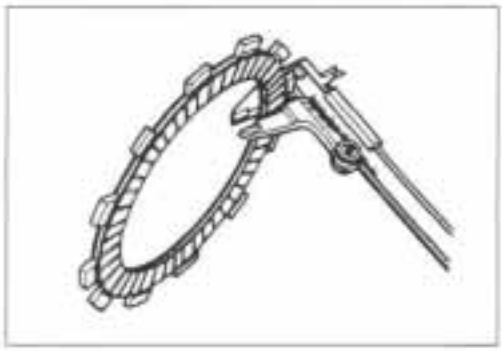

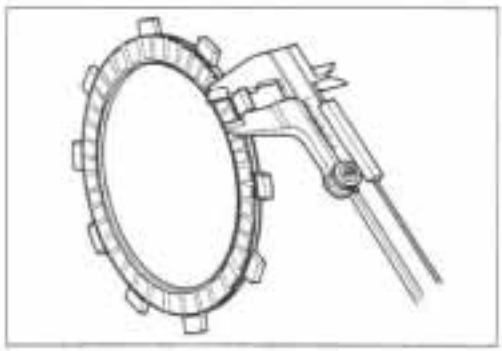

## CLUTCH DRIVEN PLATES INSPECTION

*NOTE:*
*Wipe off engine oil from the clutch driven plates with a clean rag.*

- Measure each driven plate for distortion with a thickness gauge and surface plate.
- Replace driven plates which exceed the limit.

**DATA Driven plate distortion (No.1 and No.2):**
**Service Limit: 0.10 mm (0.004 in)**

**09900-20803: Thickness gauge**

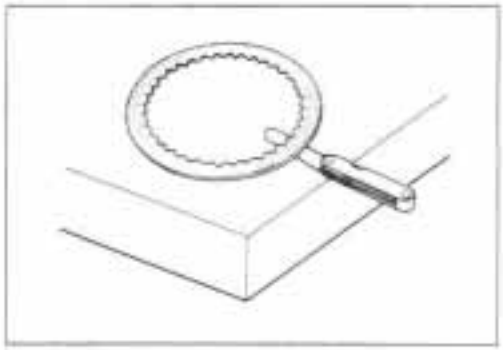

## CLUTCH SPRING INSPECTION

- Measure the free length of each coil spring with a vernier calipers, and compare the length with the specified limit.
- Replace all the springs if any spring is not within the limit.

**DATA Clutch spring free length:**
**Service Limit: 45.4 mm (1.787 in)**

**09900-20102: Vernier calipers**

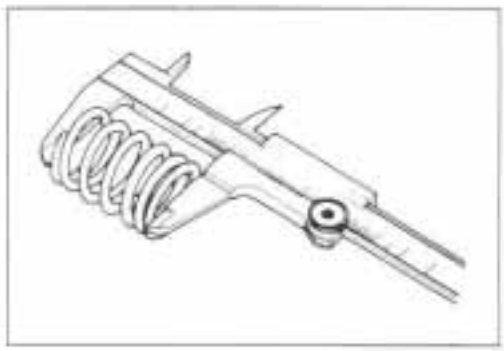

## CLUTCH BEARING INSPECTION

- Inspect the clutch release bearing for any abnormality, particularly cracks, to decide whether it can be reused or should be replaced.
- Smooth engagement and disengagement of the clutch depends on the condition of this bearing.

## OIL PUMP

### INSPECTION

- Rotate the oil pump by hand and check that it moves smoothly.
- If it does not move smoothly, replace the oil pump assembly.

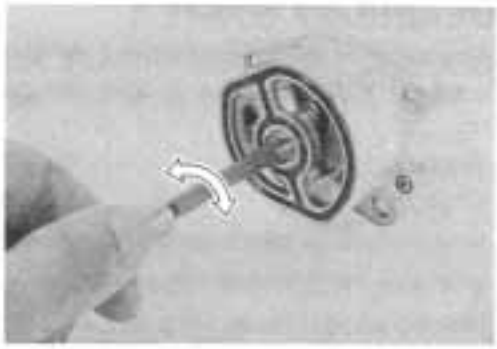

**▲ CAUTION**

- **Do not attempt to disassemble the oil pump assembly.**
- **The oil pump is available only as an assembly.**

## STARTER CLUTCH

### INSPECTION

- Install the starter driven gear onto the starter clutch.
- Turn the starter driven gear by hand.
- Inspect the starter clutch for a smooth movement.
- Inspect that the gear turns one direction only.

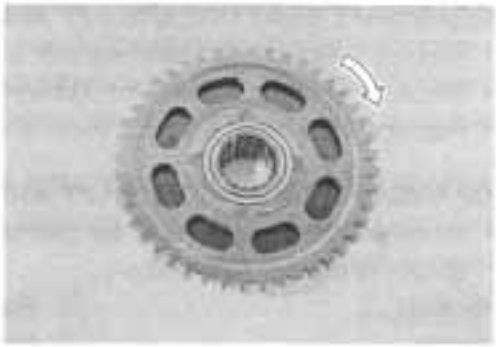

- If a large resistance is felt for rotation, inspect the starter clutch bearing or the starter clutch contacting surface on the starter driven gear for wear and damage.
- If they are found to be damaged, replace them with new ones.

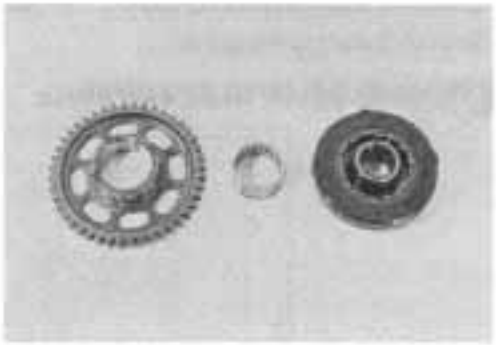

## GENERATOR

**INSPECTION:** ☞ 7-10

### REASSEMBLY

- When installing the generator stator set bolts, tighten them to the specified torque.

**Generator stator set bolt ①: 10 N·m (1.0 kgf·m, 7.0 lb-ft)**

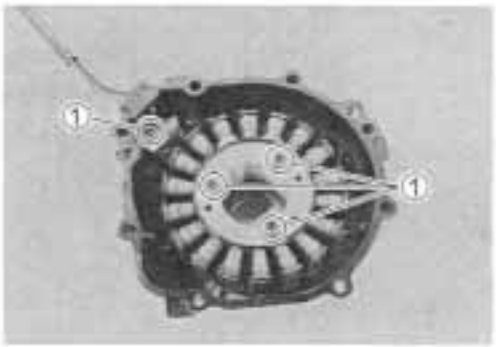


*NOTE:*
*Be sure to install the grommet to the generator cover.*

## WATER PUMP

(☞ 5-11)

## GEARSHIFT SYSTEM

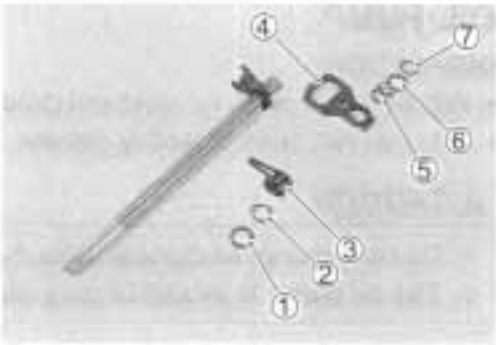


### GEARSHIFT SHAFT/GEARSHIFT ARM DISASSEMBLY

- Remove the following parts from the gearshift shaft/gearshift arm.

① Washer
② Circlip
③ Gearshift shaft return spring
④ Gearshift cam drive plate
⑤ Plate return spring
⑥ Washer
⑦ Circlip

**09900-06107: Snap ring pliers**

### GEARSHIFT SHAFT/GEARSHIFT ARM INSPECTION

- Inspect the gearshift shaft/gearshift arm for wear or bend.
- Inspect the return springs for damage or fatigue.
- Replace the arm or spring if there is anything unusual.

### GEARSHIFT SHAFT/GEARSHIFT ARM REASSEMBLY

- Install the following parts to the gearshift shaft/gearshift arm as shown in the right illustration.

① Washer
② Circlip
③ Gearshift shaft return spring
④ Gearshift cam drive plate
⑤ Plate return spring
⑥ Washer
⑦ Circlip

**09900-06107: Snap ring pliers**

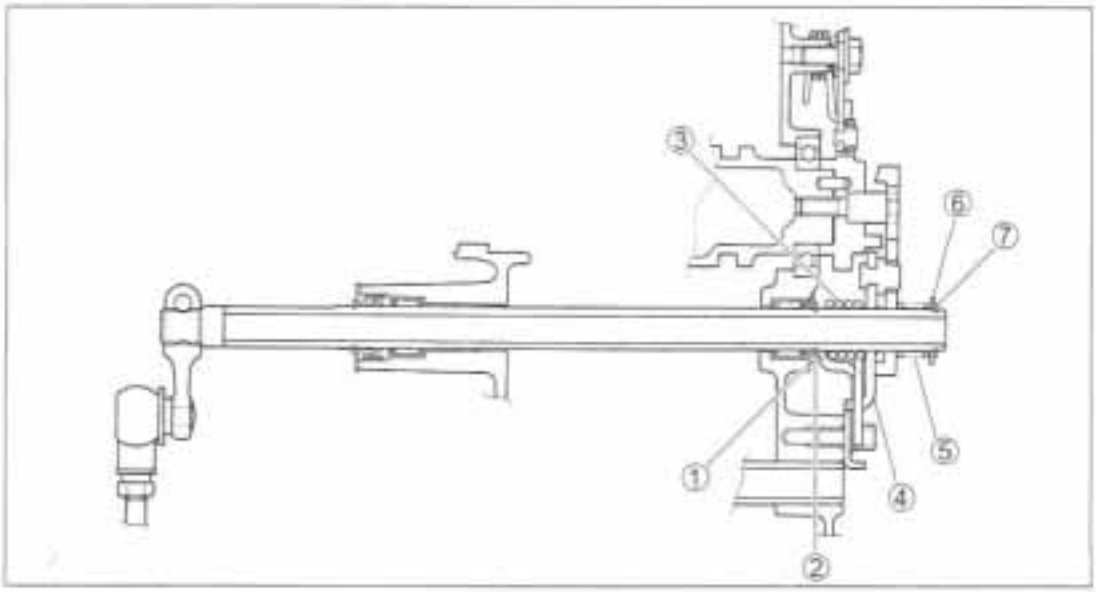


*NOTE:*
*When installing the gearshift shaft return spring, position the stopper Ⓑ of the gearshift arm between the shaft return spring ends Ⓐ.*

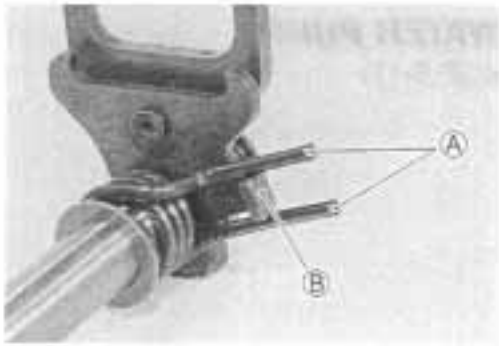

## OIL PRESSURE REGULATOR

- Inspect the operation of the oil pressure regulator by pushing on the piston with a proper bar.
- If the piston does not operate, replace the oil pressure regulator with a new one.

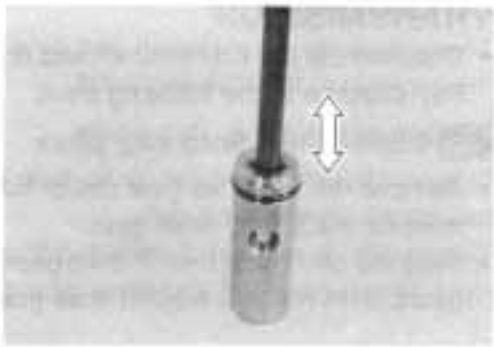

## OIL STRAINER

- Inspect the oil strainer body for damage.
- Clean the oil strainer if necessary.

## TRANSMISSION

- Disassemble the countershaft and drive shaft.
  Pay attention to the following point.

**TOOL 09900-06104: Snap ring pliers**

- Remove the 6th drive gear circlip from its groove and slide it towards the 3rd/4th drive gear.
- Slide the 6th ① and 2nd ② drive gears toward the 3rd/4th drive gears, then remove the 2nd drive gear circlip ③.

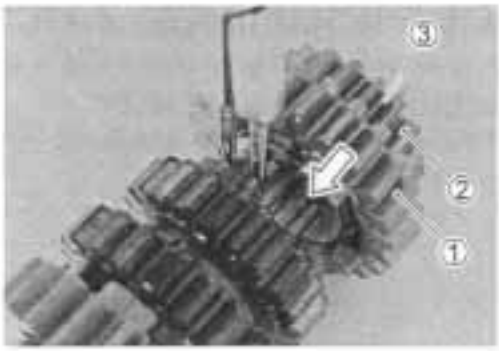


115 N·m
(11.5 kgf·m
83.2 lb-ft)

① Countershaft/1st drive gear
② 5th drive gear
③ 3rd/4th drive gear
④ 6th drive gear
⑤ 2nd drive gear
⑥ Driveshaft
⑦ 2nd driven gear
⑧ 6th driven gear
⑨ 3rd driven gear
⑩ 4th driven gear
⑪ 5th driven gear
⑫ 1st driven gear

## REASSEMBLY

Assemble the countershaft and driveshaft in the reverse order of disassembly. Pay attention to the following points:

*NOTE:*

- *Rotate the bearings by hand to inspect for smooth rotation. Replace the bearings if there is anything unusual.*
- *Before installing the gears, apply engine oil to the driveshaft and countershaft.*
- *Before installing the oil seal, apply grease to oil seal.*

**99000-25010: SUZUKI SUPER GREASE "A"**

**▲ CAUTION**

- **Never reuse a circlip. After a circlip has been removed from a shaft, it should be discarded and a new circlip must be installed.**
- **When installing a new circlip, do not expand the end gap larger than required to slip the circlip over the shaft.**
- **After installing a circlip, make sure that it is completely seated in its groove and securely fitted.**

*NOTE:*

*When reassembling the transmission, attention must be given to the locations and positions of washers and circlips. The cross sectional view shows the correct position of the gears, bushings, washers and circlips.* *(☞ 3-49)*

- When installing a new circlip, pay attention to the direction of the circlip. Fit it to the side where the thrust is as shown in the illustration.

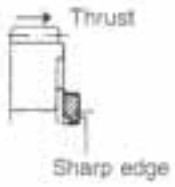


**▲ CAUTION**

**When installing the gear bushing onto the shaft, align the shaft oil hole ① with the bushing oil hole ②.**

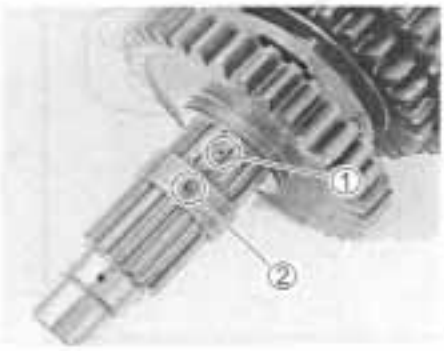


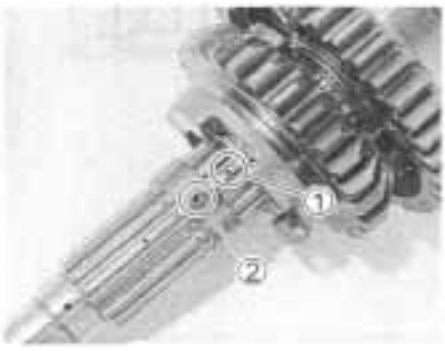


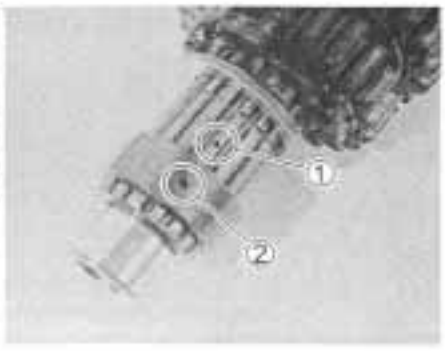

## TRANSMISSION PARTS LOCATION

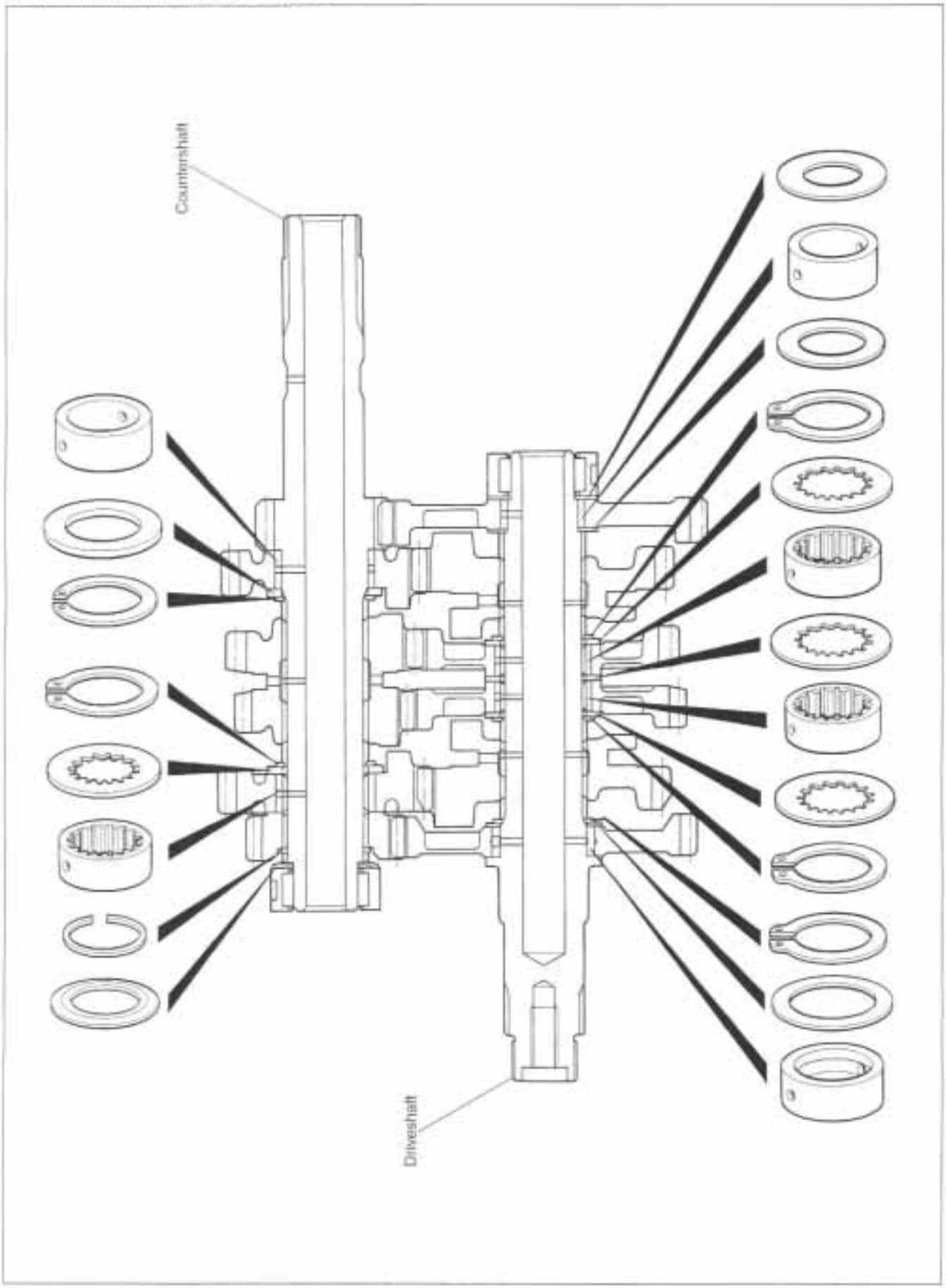

# CYLINDER

CRANKCASE SERVICING: 3-54

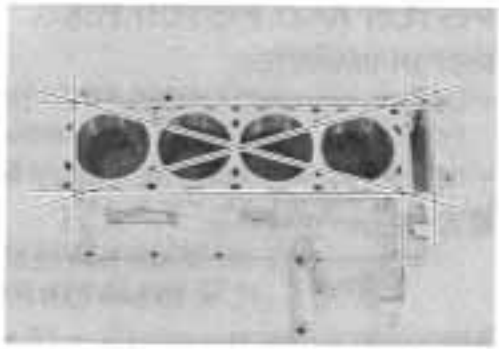

## CYLINDER DISTORTION

- Check the gasketed surface of the cylinder for distortion with a straightedge and thickness gauge, taking a clearance reading at several places as indicated.
- If the largest reading at any position of the straightedge exceeds the limit, replace the cylinder.

**TOOL 09900-20803: Thickness gauge**

**DATA Cylinder distortion:**
**Service Limit: 0.20 mm (0.008 in)**

## CYLINDER BORE

- Inspect the cylinder wall for any scratches, nicks or other damage.
- Measure the cylinder bore diameter at six places.

**DATA Cylinder bore:**
**Standard: 67.000 – 67.015 mm (2.6378 – 2.6384 in)**

**TOOL 09900-20508: Cylinder gauge set**

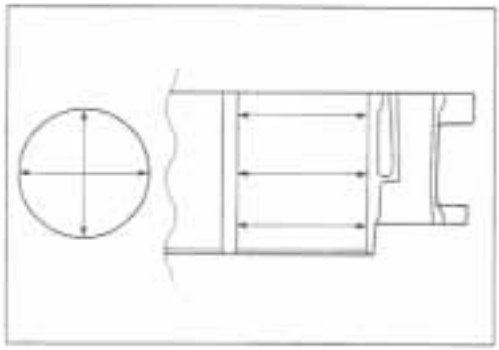

## PISTON AND PISTON RING

### PISTON DIAMETER

- Using a micrometer, measure the piston outside diameter at 15 mm (0.6 in) from the piston skirt end.
- If the measurement is less than the limit, replace the piston.

**DATA Piston diameter:**
**Service Limit: 66.880 mm (2.6331 in)**
**at 15 mm (0.6 in) from the skirt end**

**TOOL 09900-20203: Micrometer (50 – 75 mm)**

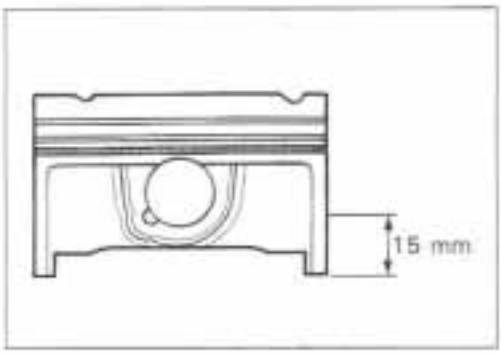


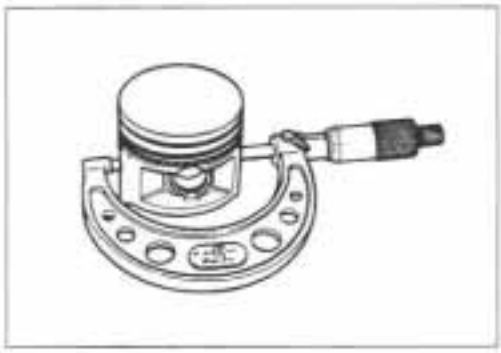

### PISTON TO CYLINDER CLEARANCE

- Subtract the piston diameter from the cylinder bore diameter. (☞ 3-50)
- If the piston to cylinder clearance exceeds the service limit, replace the cylinder and the piston.

**DATA Piston to cylinder clearance:**
**Service Limit: 0.120 mm (0.0047 in)**

### PISTON PINS AND PIN BORE

- Measure the piston pin bore inside diameter using the small bore gauge.
- If the measurement is out of specifications replace the piston.

**TOOL 09900-20602: Dial gauge (1/1000 mm)**
**09900-22401: Small bore gauge (10 – 18 mm)**

**DATA Piston pin bore I.D.:**
**Service Limit: 14.030 mm (0.5524 in)**

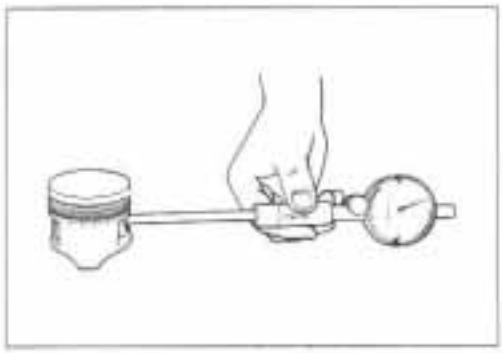

- Measure the piston pin outside diameter at three positions using the micrometer.
- If any of the measurements are out of specification, replace the piston pin.

**TOOL 09900-20205: Micrometer (0 – 25 mm)**

**DATA Piston pin O.D.:**
**Service Limit: 13.980 mm (0.5504 in)**

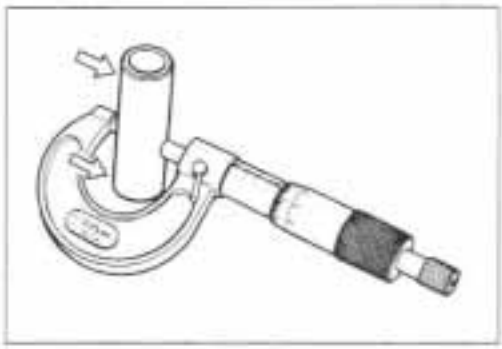

### PISTON RING TO GROOVE CLEARANCE

- Measure the side clearances of the 1st and 2nd piston rings using the thickness gauge.
- If any of the clearances exceed the limit, replace both the piston and piston rings.

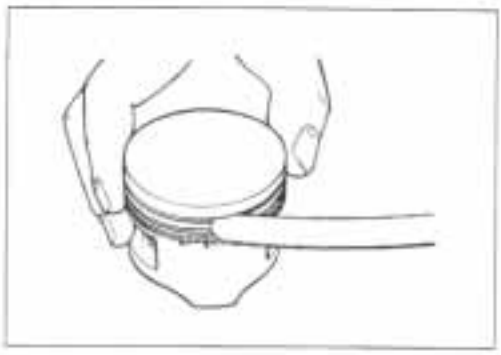

**TOOL 09900-20803: Thickness gauge**
**09900-20205: Micrometer (0 – 25 mm)**

**DATA Piston ring to groove clearance:**
**Service Limit (1st): 0.18 mm (0.0071 in)**
**(2nd): 0.15 mm (0.0059 in)**

**DATA Piston ring groove width:**

| | | |
|---|---|---|
| Standard | (1st): | 1.01 – 1.03 mm (0.0398 – 0.0406 in) |
| | (2nd): | 0.81 – 0.83 mm (0.0319 – 0.0327 in) |
| | (Oil): | 1.51 – 1.53 mm (0.0594 – 0.0602 in) |

**DATA Piston ring thickness:**

| | | |
|---|---|---|
| Standard | (1st): | 0.97 – 0.99 mm (0.0382 – 0.0390 in) |
| | (2nd): | 0.77 – 0.79 mm (0.0303 – 0.0311 in) |

### PISTON RING FREE END GAP AND PISTON RING END GAP

- Measure the piston ring free end gap using vernier calipers.
- Next, fit the piston ring squarely into the cylinder and measure the piston ring end gap using the thickness gauge.
- If any of the measurements exceed the service limit, replace the piston ring with a new one.

**TOOL 09900-20102: Vernier calipers**

**DATA Piston ring free end gap:**
**Service Limit (1st) : 5.8 mm (0.23 in)**
**(2nd): 7.4 mm (0.29 in)**

**TOOL 09900-20803: Thickness gauge**

**DATA Piston ring end gap:**
**Service Limit (1st) : 0.50 mm (0.020 in)**
**(2nd): 0.50 mm (0.020 in)**

### PISTON RING REASSEMBLY

- Install the piston rings in the order of oil ring, 2nd ring and 1st ring.
- The first member to go into the oil ring groove is a spacer ①. After placing the spacer, fit the two side rails ②.

*NOTE:*
*Side designations, top and bottom, are not applied to the spacer and side rails: you can position each either way.*

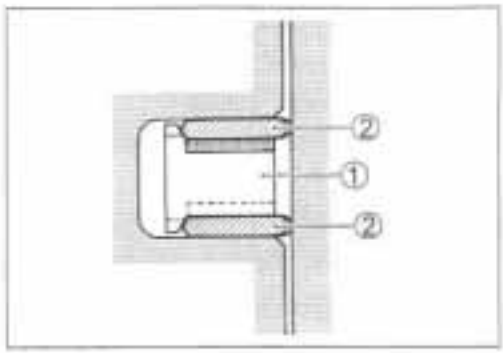


**▲ CAUTION**

**When installing the spacer, be careful not to allow its two ends to overlap in the groove.**

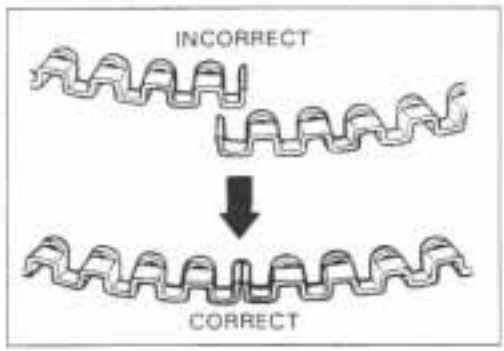


- Install the 2nd ring ③ and the 1st ring ④.

*NOTE:*
*1st ring and 2nd ring differ in shape.*

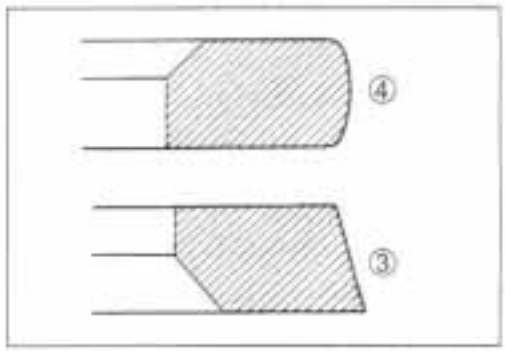


- 1st ring and 2nd ring have letters "R" and "RN" marked on the side. Be sure to bring the marked side to the top when fitting them to the piston.

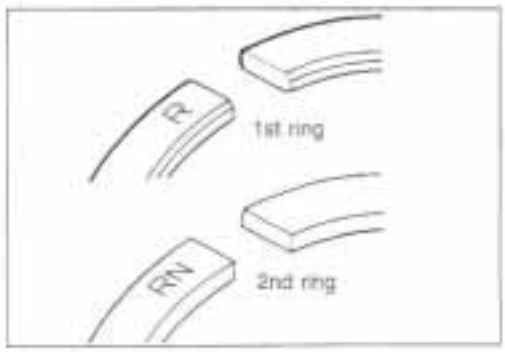


- Position the gaps of the three rings as shown. Before inserting each piston into the cylinder, check that the gaps are so located.

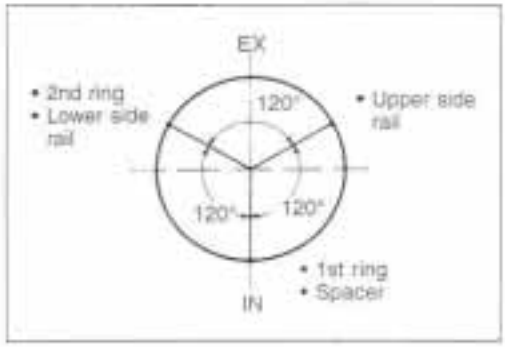

# CRANKCASE

## LOWER CRANKCASE

### GEARSHIFT FORK AND GEARSHIFT CAM

#### Removal

- Remove the gearshift cam bearing retainer ① and gearshift fork retainer ② from the lower crankcase.

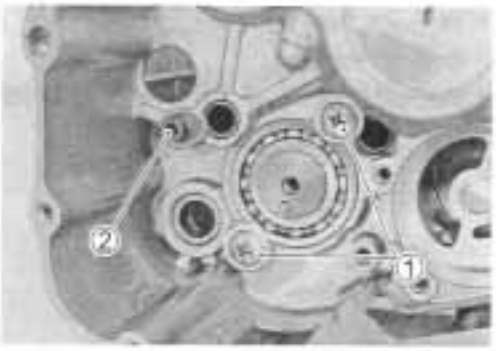


- Remove the gearshift fork shafts and gearshift forks from the lower crankcase.
- Remove the gear shift cam and its bearing.

### GEARSHIFT FORK TO GROOVE CLEARANCE

- Using a thickness gauge, check the gearshift fork clearance in the groove of its gear.
- The clearance for each gearshift fork plays an important role in the smoothness and positiveness of the shifting action.

**DATA Shift fork to groove clearance:**
**Service Limit: 0.50 mm (0.020 in)**

**TOOL 09900-20803: Thickness gauge**

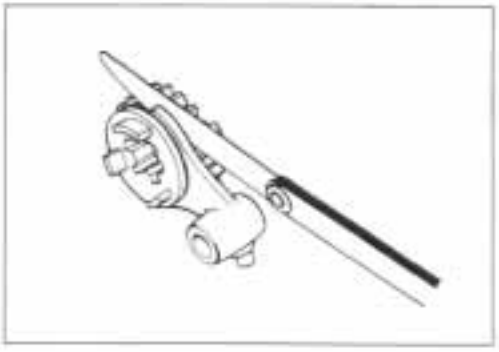

- If the clearance checked is noted to exceed the limit specified, replace the fork or its gear, or both.

### GEARSHIFT FORK GROOVE WIDTH

- Measure the gearshift fork groove width using the vernier calipers.

**DATA Shift fork groove width:**
**Standard: 5.0 – 5.1 mm (0.197 – 0.201 in)**

**TOOL 09900-20102: Vernier calipers**

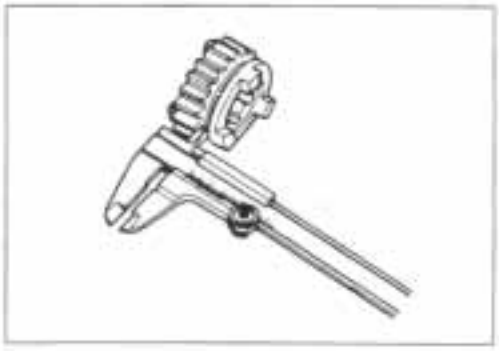

### GEARSHIFT FORK THICKNESS

- Measure the gearshift fork thickness using the vernier calipers.

**DATA Shift fork thickness:**
**Standard: 4.8 – 4.9 mm (0.189 – 0.193 in)**

**TOOL 09900-20102: Vernier calipers**

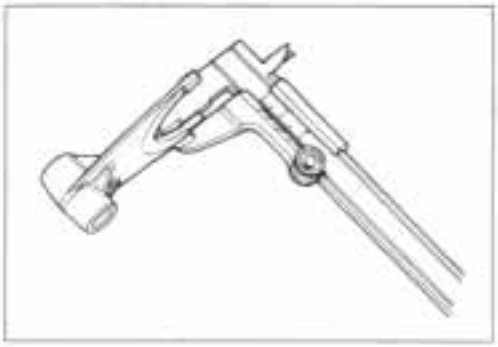

- Inspect the gearshift cam bearing for abnormal noise and smooth rotation.
- Replace the bearings if there is anything unusual.

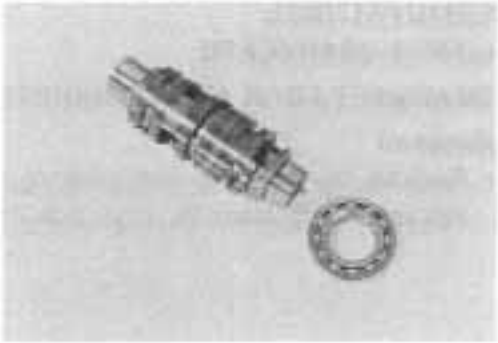

- Inspect the gearshift cam bearing ①, gearshift fork bearing ② and gearshift shaft bearing ③ for abnormal noise and smooth rotation while they are in the crankcase.
- Replace a bearing if there is anything unusual.


**Bearing removal**

- Remove the gearshift fork bearing using the special tool.

**09921-20210: Bearing remover**
**09930-30102: Sliding shaft**

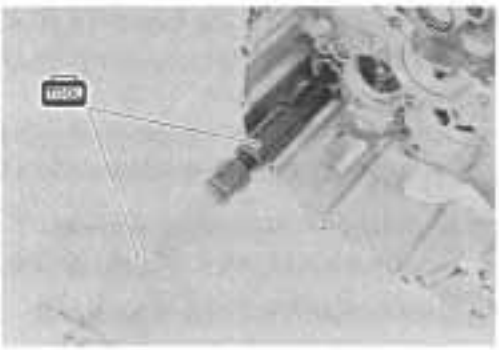

- Remove the gearshift cam bearing using the special tools.

**09921-20220: Bearing remover set**
**09910-20115: Conrod stopper**

**⚠ CAUTION**

- **Don't damage the crankcase by the conrod stopper.**
- **Be careful not to lean the bearing remover.**

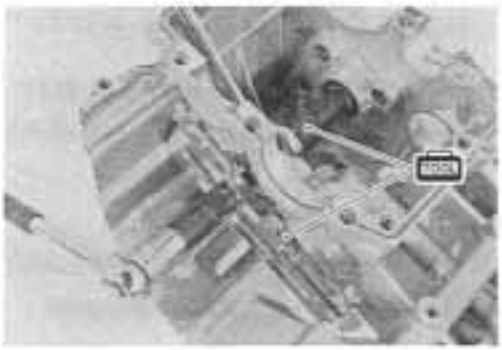

- Remove the oil seal.
- Remove the gearshift shaft bearing using the special tool.

**09921-20220: Bearing remover set**

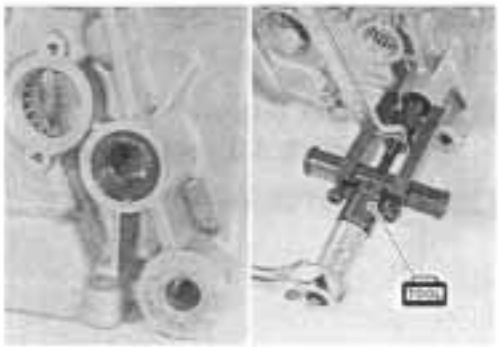

**Installation**

- Install the bearings using the special tool.

**09913-70210: Bearing installer set**

*NOTE:*
*The stamped mark side of the gearshift shaft bearing faces outside.*

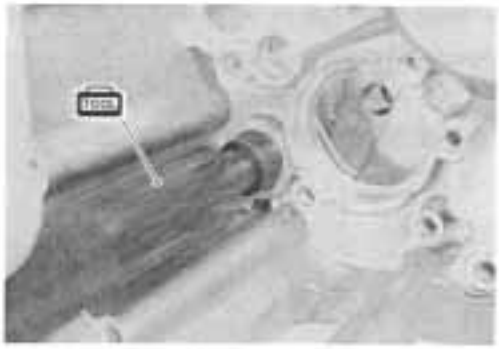

- Install the oil seal.

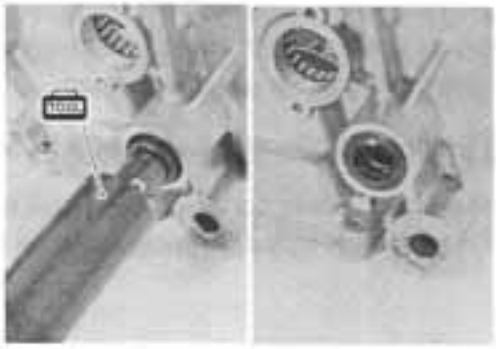

- Install the gearshift cam with the bearing.

*NOTE:*
*The stamped mark side of the gearshift cam bearing faces outside.*

- Install the gearshift forks and their shafts as shown.

① For 3rd/4th drive gears
② For 6th driven gear
③ For 5th driven gear

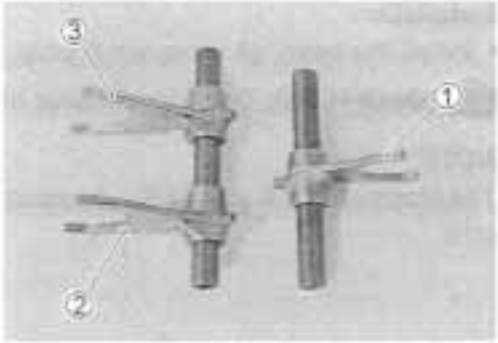



- Apply a small quantity of THREAD LOCK "1342" to the bearing retainer screws and the shift fork shaft retainer bolt.
- Tighten them to the specified torque.

**99000-32050: THREAD LOCK "1342"**

**Bearing retainer screw: 10 N·m (1.0 kgf·m, 7.0 lb-ft)**
**Gearshift fork shaft retainer bolt: 19 N·m (1.9 kgf·m, 13.7 lb-ft)**

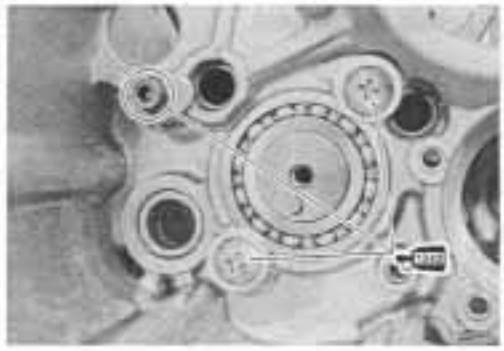

## OIL JET

### Removal

- Remove the piston cooling oil jets ① from the upper crankcase.

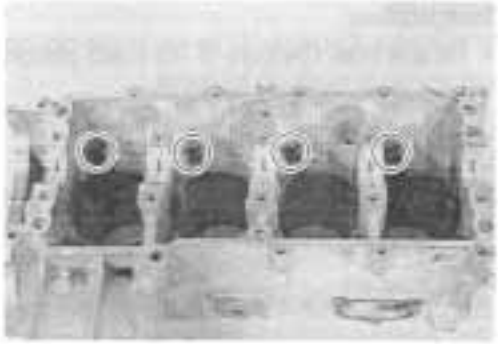


- Remove the oil jet (for transmission) from the lower crankcase.

### Inspection and cleaning

- Check the oil jets for clogging.
- If they are clogged, clean their oil passage with a proper wire and compressed air.

① Piston cooling oil jet
② Oil jet (#14) (For transmission)

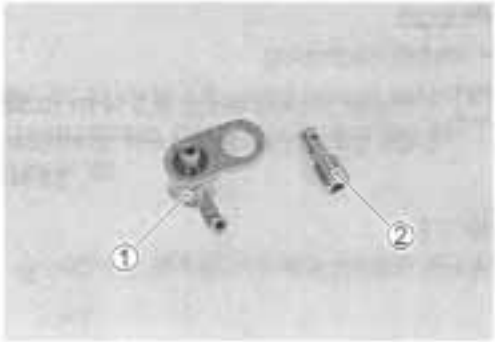

**Installation**

- Fit the new O-rings ① to each piston cooling oil jet as shown and apply engine oil to them.

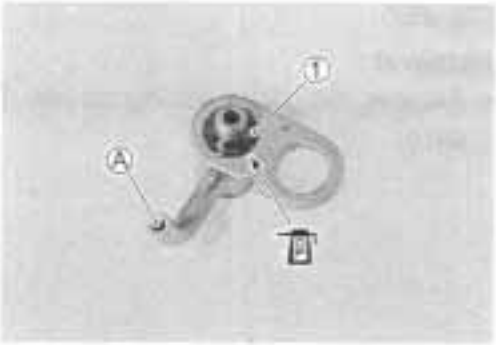


**▲ CAUTION**

**Use the new O-rings to prevent oil pressure down.**

*NOTE:*
*Be sure to face the oil holes Ⓐ on each piston cooling oil jet to the top when installing them.*

- Install each piston cooling oil jet with the bolts.

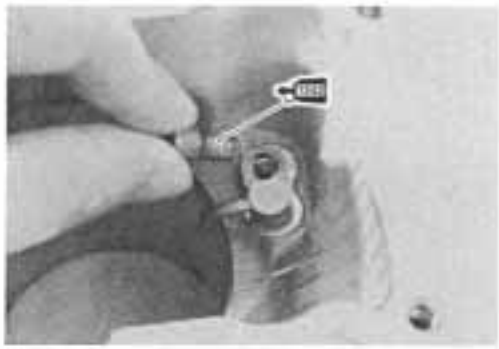

*NOTE:*
*Apply a small quantity of THREAD LOCK "1342" to the bolts and tighten them to the specified torque.*

**99000-32050: THREAD LOCK "1342"**

**Piston cooling oil jet bolt: 10 N·m (1.0 kgf·m, 7.0 lb-ft)**

- Install the oil jets (for transmission).

**PLUGS**

- Install each plug.

**① Water jacket plug: 9.5 N·m (0.95 kgf·m, 6.9 lb-ft)**
**② Oil gallery plug (lower crankcase): 35 N·m (3.5 kgf·m, 25.3 lb-ft)**

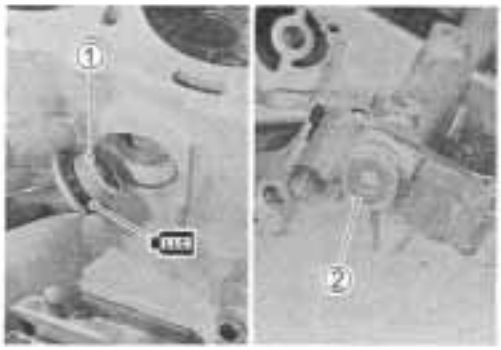


*NOTE:*
*Apply the engine coolant to the O-ring.*

# CRANKSHAFT AND CONROD

## CRANKSHAFT RUNOUT

- Support the crankshaft with "V" blocks as shown, with the two end journals resting on the blocks.
- Set up the dial gauge, as shown.
- Rotate the crankshaft slowly to read the runout.
- Replace the crankshaft if the runout is greater than the limit.

**TOOL 09900-20606: Dial gauge (1/100 mm, 10 mm)**
**09900-20701: Magnetic stand**
**09900-21304: V-block (100 mm)**

**DATA Crankshaft runout:**
**Service Limit: 0.05 mm (0.002 in)**

## CONROD SMALL END I.D.

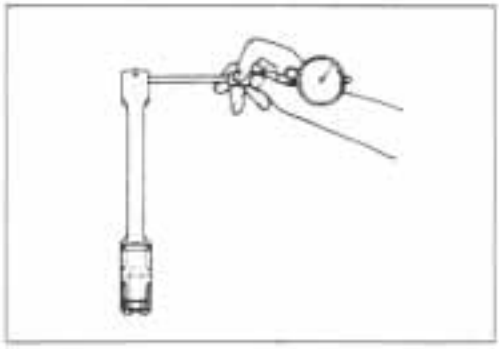

- Using a small bore gauge, measure the inside diameter of the conrod small end.

**TOOL 09900-20602: Dial gauge (1/1000 mm, 1 mm)**
**09900-22401: Small bore gauge (10 – 18 mm)**

**DATA Conrod small end I.D.:**
**Service Limit: 15.040 mm (0.5921 in)**

- If the inside diameter of the conrod small end exceeds the limit, replace the conrod.

## CONROD BIG END SIDE CLEARANCE

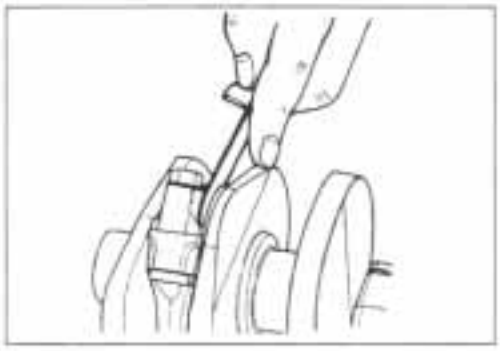

- Inspect the conrod side clearance by using a thickness gauge.
- If the clearance exceeds the limit, remove the conrod and inspect the conrod big end width and the crank pin width.
- If the width exceed the limit, replace conrod or crankshaft.

**DATA Conrod big end side clearance:**
**Service Limit: 0.30 mm (0.012 in)**

**TOOL 09900-20803: Thickness gauge**

**DATA Conrod big end width:**
**Standard: 19.95 – 20.00 mm (0.7854 – 0.7874 in)**

**TOOL 09900-20205: Micrometer (0 – 25 mm)**

**DATA Crank pin width:**
**Standard: 20.10 – 20.15 mm (0.7913 – 0.7933 in)**

**TOOL 09900-20605: Dial calipers (1/100 mm, 10 – 34 mm)**

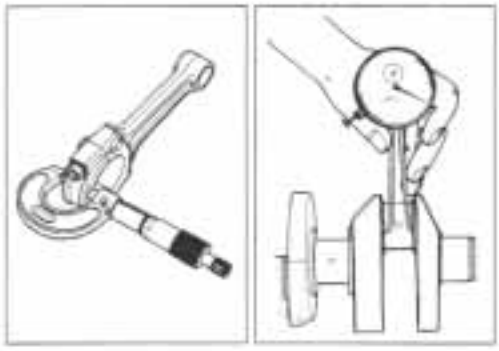

### CONROD-CRANK PIN BEARING INSPECTION

- Inspect the bearing surfaces for any sign of fusion, pitting, burn, or flaws. If any, replace them with a specified set of bearings.

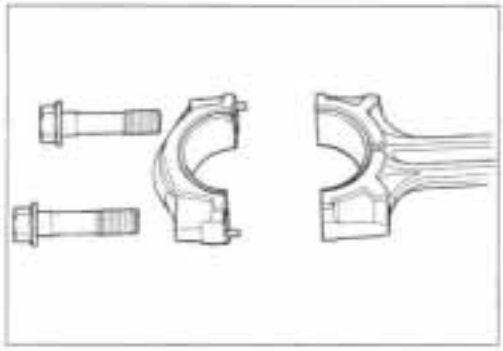

### CONROD-CRANK PIN BEARING SELECTION

- Place the plastigauge axially along the crank pin, avoiding the oil hole, as shown.

**TOOL 09900-22301: Plastigauge**

- Tighten the conrod cap bolts to the specified torque, in two stages. (☞ 3-68)

**⚠ CAUTION**

- **Apply engine oil to the conrod cap bolt.**
- **Never rotate the crankshaft or conrod when a piece of plastigauge is installed.**

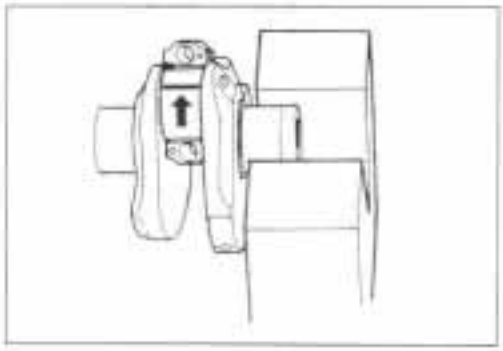

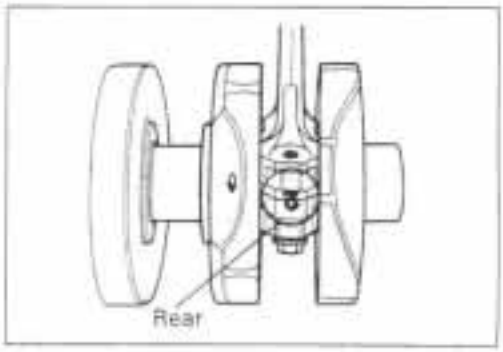


- Remove the bearing caps and measure the width of the compressed plastigauge using the envelope scale. This measurement should be taken at the widest part of the compressed plastigauge.

**DATA Conrod big end oil clearance:**
**Standard: 0.032 – 0.056 mm (0.0013 – 0.0022 in)**
**Service Limit: 0.080 mm (0.0031 in)**

- If the oil clearance exceeds the service limit, select the specified bearings from the bearing selection table.

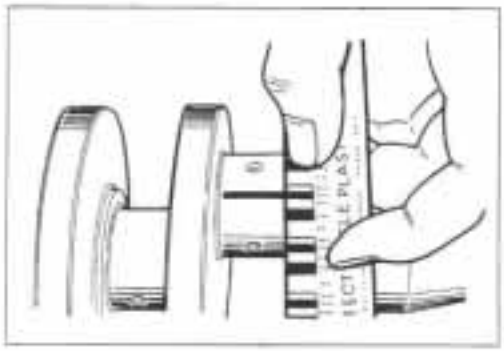

- Check the corresponding conrod I.D. code number ("1" or "2") Ⓐ.


- Check the corresponding crank pin O.D. code number ("1", "2" or "3") Ⓑ.

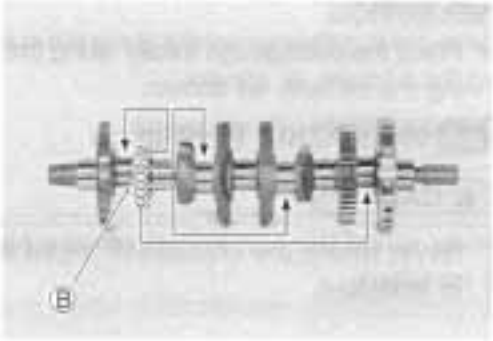


**DATA Bearing selection table**

| | | Crank pin O.D. Ⓑ | | |
|---|---|---|---|---|
| | Code | 1 | 2 | 3 |
| Conrod I.D. Ⓐ | 1 | Green | Black | Brown |
| | 2 | Black | Brown | Yellow |

**DATA Conrod I.D.**

| Code | I.D. specification |
|---|---|
| 1 | 35.000 – 35.008 mm (1.3780 – 1.3783 in) |
| 2 | 35.008 – 35.016 mm (1.3783 – 1.3786 in) |

**DATA Crank pin O.D.**

| Code | O.D. specification |
|---|---|
| 1 | 30.992 – 31.000 mm (1.2202 – 1.2205 in) |
| 2 | 30.984 – 30.992 mm (1.2198 – 1.2202 in) |
| 3 | 30.976 – 30.984 mm (1.2195 – 1.2198 in) |

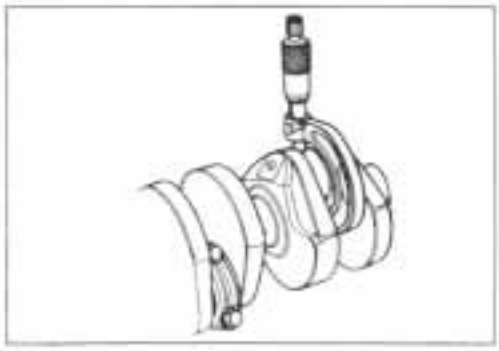

**09900-20202: Micrometer (25 – 50 mm)**

**DATA Bearing thickness**

| Color (Part No.) | Thickness |
|---|---|
| Green (12164-39F00-0A0) | 1.480 – 1.484 mm (0.0583 – 0.0584 in) |
| Black (12164-39F00-0B0) | 1.484 – 1.488 mm (0.0584 – 0.0586 in) |
| Brown (12164-39F00-0C0) | 1.488 – 1.492 mm (0.0586 – 0.0587 in) |
| Yellow (12164-39F00-0D0) | 1.492 – 1.496 mm (0.0587 – 0.0589 in) |

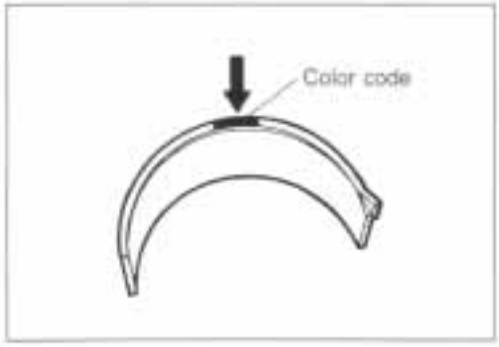


**⚠ CAUTION**

**The bearings must be replaced as a set.**

## CRANKSHAFT JOURNAL BEARING

### INSPECTION

- Inspect each bearing of upper and lower crankcases for any damage.

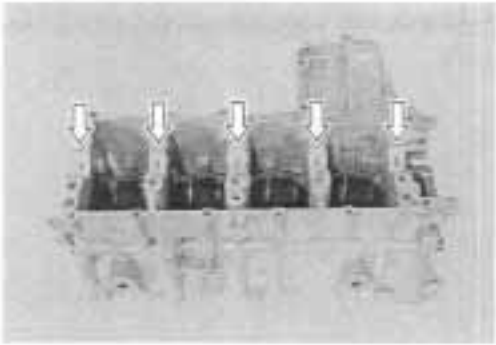

### SELECTION

- Place the plastigauge axially along the crankshaft journal, avoiding the oil hole, as shown.

**09900-22301: Plastigauge**

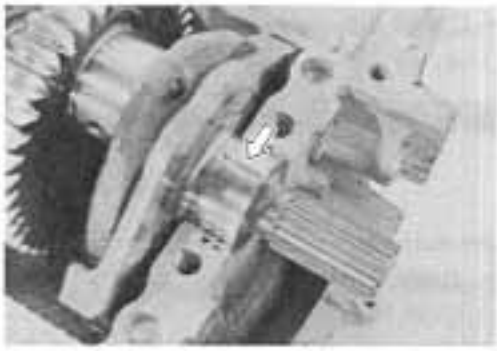

**▲ CAUTION**

**Never rotate the crankshaft when a piece of plastigauge is installed.**

- Mate the lower crankcase with the upper crankcase, and tighten the crankcase bolts (M9) with the specified torque value in the indicated order.

**Crankcase bolt (9 mm)**

**Initial : 18 N·m (1.8 kgf·m, 13.0 lb-ft)**
**Final : 32 N·m (3.2 kgf·m, 23.0 lb-ft)**

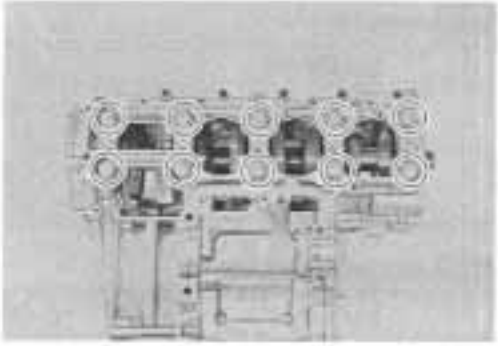

- Remove the lower crankcase and measure the width of the compressed plastigauge using the envelope scale. This measurement should be taken at the widest part of the compressed plastigauge.

**DATA Crankshaft journal oil clearance:**
**Standard: 0.016 – 0.040 mm (0.0006 – 0.0016 in)**
**Service Limit: 0.080 mm (0.031 in)**

- If the oil clearance exceeds the service limit, select the specified bearings from the bearing selection table.

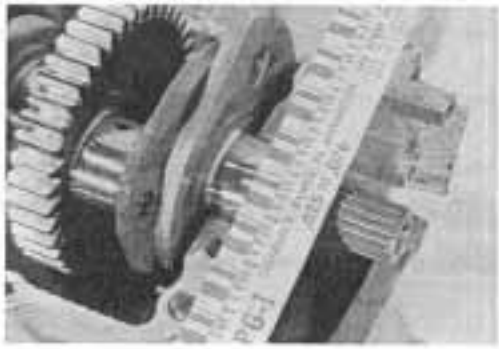

- Check the corresponding crankcase journal I.D. code number Ⓐ, "A" or "B" which are stamped on the rear of upper crankcase.
- Check the corresponding crankshaft journal O.D. code number Ⓑ, "A", "B" or "C" which are stamped on the crankshaft.

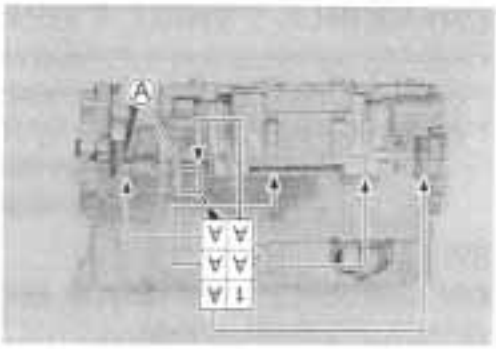


**DATA Bearing selection table**

| | | Crankshaft journal O.D. Ⓑ | | |
|---|---|---|---|---|
| | Code | A | B | C |
| Crankcase I.D. Ⓐ | A | Green | Black | Brown |
| | B | Black | Brown | Yellow |

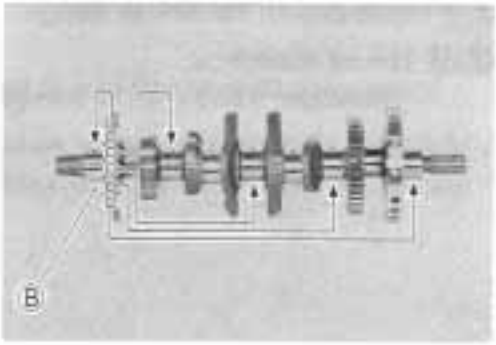


**DATA Crankcase I.D. specification**

| Code | I.D. specification |
|---|---|
| A | 35.000 – 35.008 mm (1.3780 – 1.3783 in) |
| B | 35.008 – 35.016 mm (1.3783 – 1.3786 in) |

**DATA Crankshaft journal O.D. specification**

| Code | O.D. specification |
|---|---|
| A | 31.992 – 32.000 mm (1.2595 – 1.2598 in) |
| B | 31.984 – 31.992 mm (1.2592 – 1.2595 in) |
| C | 31.976 – 31.984 mm (1.2589 – 1.2592 in) |

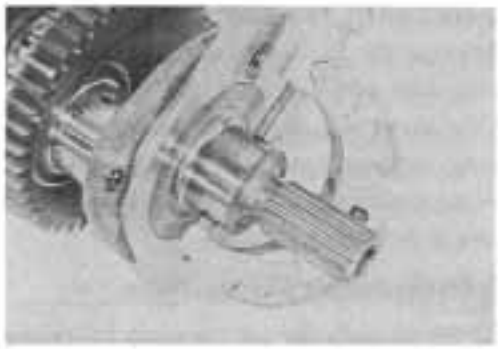

**TOOL 09900-20202: Micrometer (25 – 50 mm)**

**DATA Bearing thickness specification**

| Color (Part No.) | Thickness |
|---|---|
| Green (12229-35F00-0A0) | 1.488 – 1.492 mm (0.0586 – 0.0587 in) |
| Black (12229-35F00-0B0) | 1.492 – 1.496 mm (0.0587 – 0.0589 in) |
| Brown (12229-35F00-0C0) | 1.496 – 1.500 mm (0.0589 – 0.0591 in) |
| Yellow (12229-35F00-0D0) | 1.500 – 1.504 mm (0.0591 – 0.0592 in) |

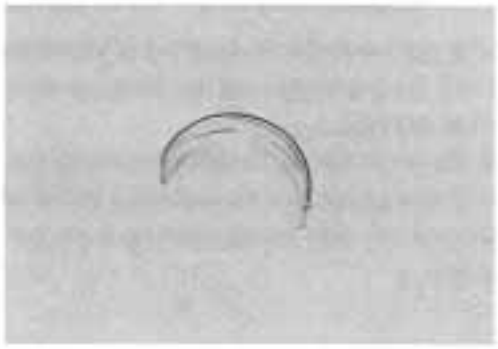

*NOTE:*
*Upper and middle crankshaft journal bearings are the same.*

**INSTALLATION**

- When fitting the crankshaft journal bearings to the upper and lower crankcases, be sure to fix the stopper part Ⓐ first and press the other end.

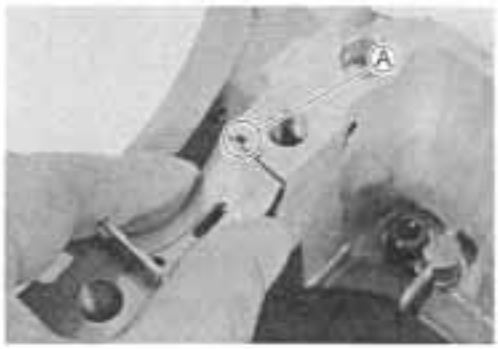


**⚠ CAUTION**

**Do not touch the bearing surfaces with your hands. Grasp by the edge of the bearing shell.**

## CRANKSHAFT THRUST BEARING

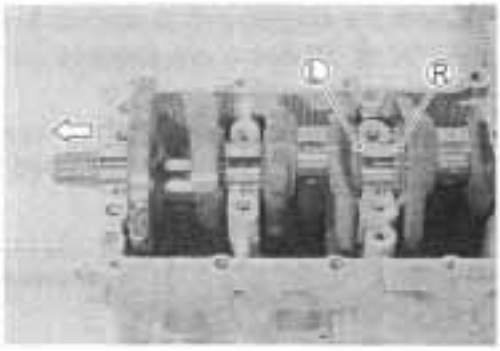


- With the crankshaft right-side thrust bearing and left-side thrust bearing inserted in the upper crankcase, measure the thrust clearance on the left side by using the thickness gauge.

  Ⓡ: Right-side thrust bearing
  Ⓛ: Left-side thrust bearing

*NOTE:*
*Pull the crankshaft to the left-side, so that there is no clearance on the right-side thrust bearing.*

**09900-20803: Thickness gauge**

**Thrust clearance:**
**Standard: 0.055 – 0.110 mm (0.0022 – 0.0043 in)**

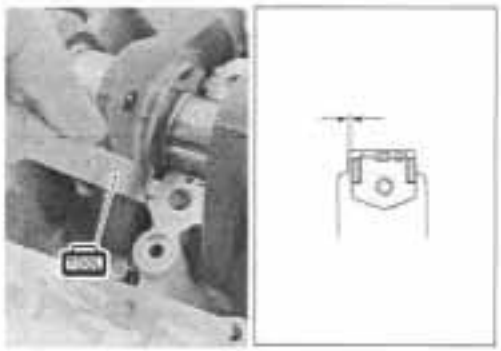

- If the thrust clearance exceeds the standard range, adjust the thrust clearance by the following procedures.

### CRANKSHAFT THRUST CLEARANCE ADJUSTMENT

- Remove the right-side thrust bearing and measure its thickness with a micrometer.
- If the thickness of the right-side thrust bearing is below standard, replace it with a new one and once again perform the thrust clearance measurement listed above, checking to make sure it is within standard.

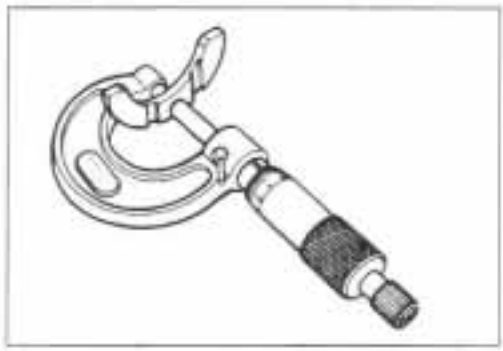

**09900-20205: Micrometer**

**Right-side thrust bearing thickness:**
**Standard: 2.425 – 2.450 mm (0.0955 – 0.0965 in)**

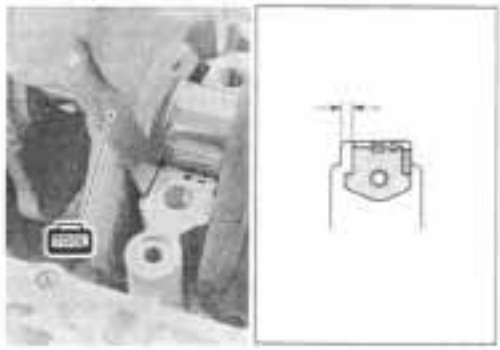

- If the right-side thrust bearing is within the standard range, reinsert the right-side thrust bearing and remove the left-side thrust bearing.
- As shown in the illustration, measure the clearance by using a thickness gauge before inserting of the left-side thrust bearing.
- Select a left-side thrust bearing from the selection table. (☞ 3-65)

**DATA Thrust bearing selection table**

| Clearance before inserting left-side thrust bearing | Color (Part No.) | Thrust bearing thickness | Thrust clearance |
|---|---|---|---|
| 2.560 – 2.585 mm (0.1008 – 0.1018 in) | White (12228-17E00-0F0) | 2.475 – 2.500 mm (0.0974 – 0.0984 in) | 0.060 – 0.110 mm (0.0024 – 0.0043 in) |
| 2.535 – 2.560 mm (0.0998 – 0.1008 in) | Yellow (12228-17E00-0E0) | 2.450 – 2.475 mm (0.0965 – 0.0974 in) | 0.060 – 0.110 mm (0.0024 – 0.0043 in) |
| 2.510 – 2.535 mm (0.0988 – 0.0998 in) | Green (12228-17E00-0D0) | 2.425 – 2.450 mm (0.0955 – 0.0965 in) | 0.060 – 0.110 mm (0.0024 – 0.0043 in) |
| 2.485 – 2.510 mm (0.0978 – 0.0988 in) | Blue (12228-17E00-0C0) | 2.400 – 2.425 mm (0.0945 – 0.0955 in) | 0.060 – 0.110 mm (0.0024 – 0.0043 in) |
| 2.460 – 2.485 mm (0.0969 – 0.0978 in) | Black (12228-17E00-0B0) | 2.375 – 2.400 mm (0.0935 – 0.0945 in) | 0.060 – 0.110 mm (0.0024 – 0.0043 in) |
| 2.430 – 2.460 mm (0.0957 – 0.0969 in) | Red (12228-17E00-0A0) | 2.350 – 2.375 mm (0.0925 – 0.0935 in) | 0.055 – 0.110 mm (0.0022 – 0.0043 in) |

- After selecting a left-side thrust bearing, insert it and again perform the thrust clearance measurement to make sure it falls within the standard range.

*NOTE:*
*Right-side thrust bearing has the same specification as the GREEN (12228-17E00-0D0) of left-side thrust bearing.*

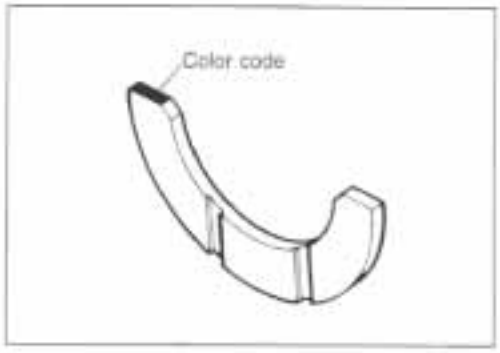

# ENGINE REASSEMBLY

- Reassemble the engine in the reverse order of disassembly.
- The following steps require special attention or precautionary measures should be taken.

*NOTE:*
*Apply engine oil to each running and sliding part before reassembling.*

- Be sure to install the following items to the crankcase.
  - * Crankshaft journal bearing (☞ 3-62)
  - * Gearshift fork (☞ 3-56)
  - * Gearshift fork shaft (☞ 3-56)
  - * Gearshift shaft bearing (☞ 3-55)
  - * Gearshift cam bearing (☞ 3-55)
  - * Gearshift fork bearing (☞ 3-55)
  - * Gearshift cam (☞ 3-55)
  - * Bearing retainer (☞ 3-56)
  - * Oil jets (☞ 3-58)

### PISTON AND CONROD

- Position the gaps of the three rings as shown. Before inserting each piston into the cylinder, check that the gaps are so located.

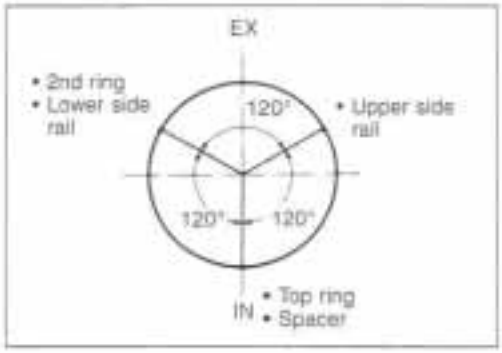


- Rub a small quantity of molybdenum oil solution onto each piston pin.

**MOLYBDENUM OIL**

- Assemble the piston and conrod.

*NOTE:*
** When installing the pistons, the indent Ⓐ on the piston head must be faced to another side of ID code Ⓑ on conrod face.*

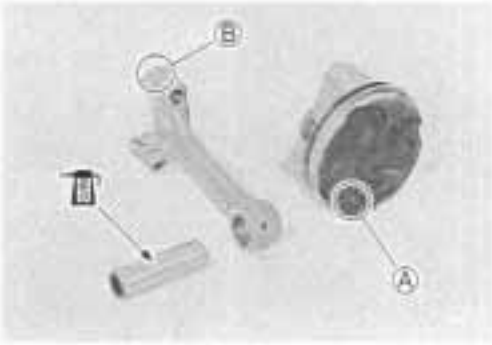


- Install the pistons.

*NOTE:*
*Be sure to install the pistons in the cylinders from which they were removed in disassembly; refer to the cylinder numbers, "1" through "4", scribed on the piston.*

- Install the piston pin circlips ①.

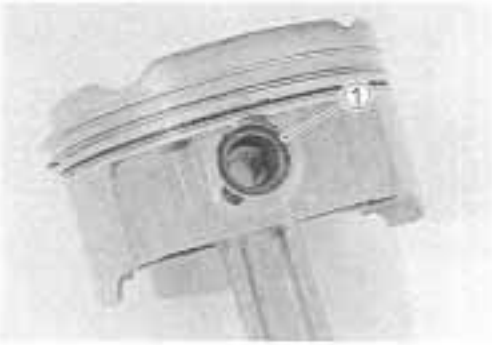


**⚠ CAUTION**

**Use new piston pin circlips to prevent circlip failure which will occur with a bend one.**

*NOTE:*
*End gap of the circlip should not be aligned with the cutaway in the piston pin bore.*

- Apply engine oil to the sliding surface of the pistons and cylinder walls.

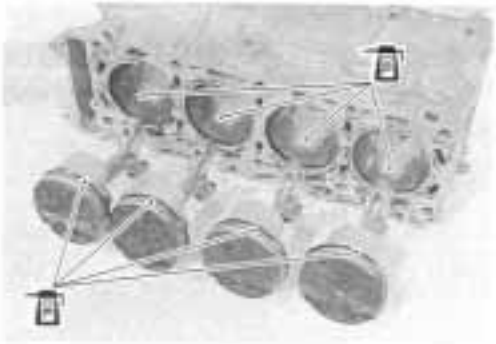

- Install the pistons and conrods into the cylinders from upside.

*NOTE:*
*When installing the pistons, the indent Ⓐ of the piston head must be faced to each exhaust side.*


**⚠ CAUTION**

**Be carefull not to damage the cylinder wall by the conrod.**

- Check that ID code Ⓑ on the each conrods faces toward intake side.

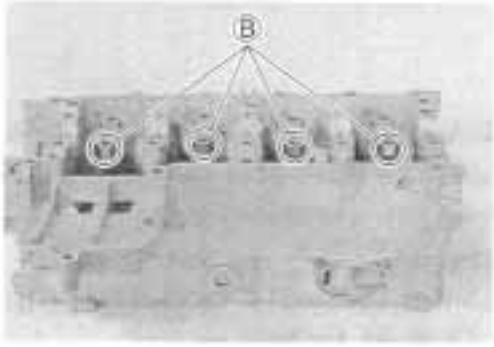


**⚠ CAUTION**

**Be sure to clean the conrod big end.**

- Apply molybdenum oil solution to the crank pin bearings surface.

**MOLYBDENUM OIL SOLUTION**

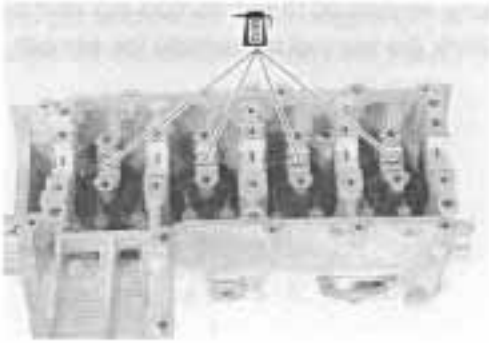

## CRANKSHAFT

- Position the No.2 and No.3 conrod big ends toward same side and the No.1 and No.4 conrod big ends toward opposite side of No.2 and No.3.

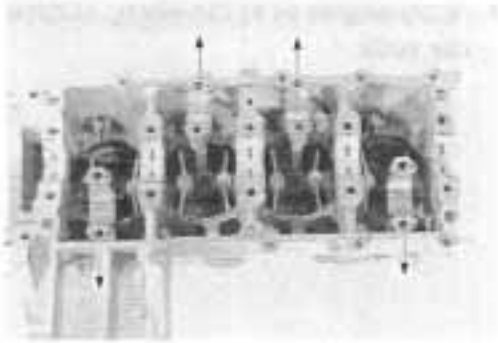

- Set the crankshaft to the conrods and upper crankcase.

- Apply molybdenum oil solution to the crank pin and bearing surface.

**MOLYBDENUM OIL SOLUTION**

**⚠ CAUTION**

**Be sure to clean the conrod big end.**

- When fitting the conrod cap, make sure that I.D. code Ⓑ on each conrod faces toward intake valve side.


- Apply engine oil to the bearing cap bolts.
- Tighten the bearing cap bolt by using a 10 mm, 12 point socket wrench as following two steps.

**Conrod bearing cap bolt:**
**Initial: 15 N·m (1.5 kgf·m, 11.0 lb-ft)**
**Final: 90° (¼ turn)**

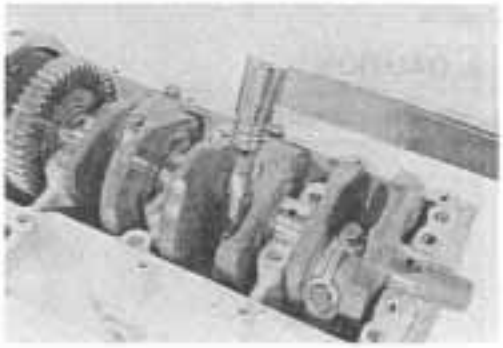

- Apply engine oil to the conrod big end side surfaces.
- Check the conrod movement for smooth turning.

## CRANKSHAFT

- Apply molybdenum oil solution to each crankshaft journal bearing lightly.

**MOLYBDENUM OIL SOLUTION**

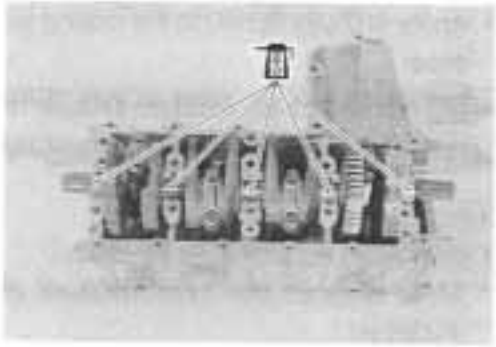

- Insert the right and left-thrust bearings with oil groove Ⓑ facing the crank web..

*NOTE:*
*Right-thrust bearing has green painting.*

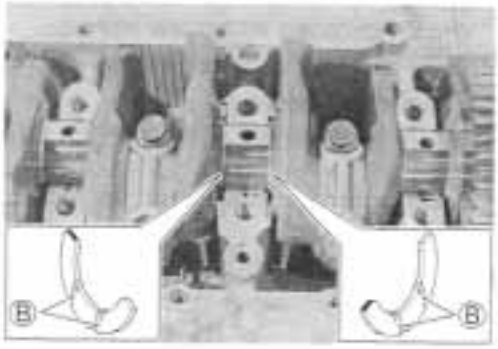


## CRANKCASE

- Clean the mating surfaces of the crankcases.
- Install the dowel pins ① and O-ring ② to the upper crankcase.

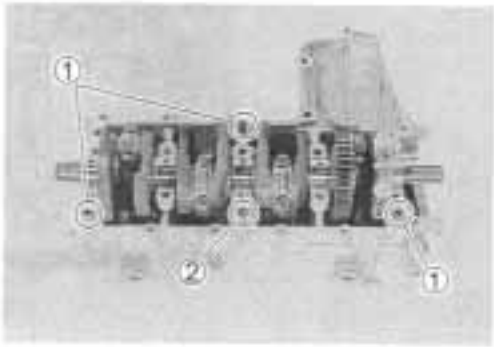

- Apply SUZUKI BOND to the mating surface of the middle crankcase.

**99104-31140: SUZUKI BOND "1207B" (For USA)**

**99000-31110: SUZUKI BOND "1215" (For the others)**

*NOTE:*
*Use of SUZUKI BOND is as follows:*
- *Make surfaces free from moisture, oil, dust and other foreign materials.*
- *Spread on surfaces thinly to form an even layer, and assemble the crankcases within few minutes.*
- *Take extreme care not to apply any BOND to the oil hole, oil groove and bearing.*
- *Apply to distorted surfaces as it forms a comparatively thick film.*

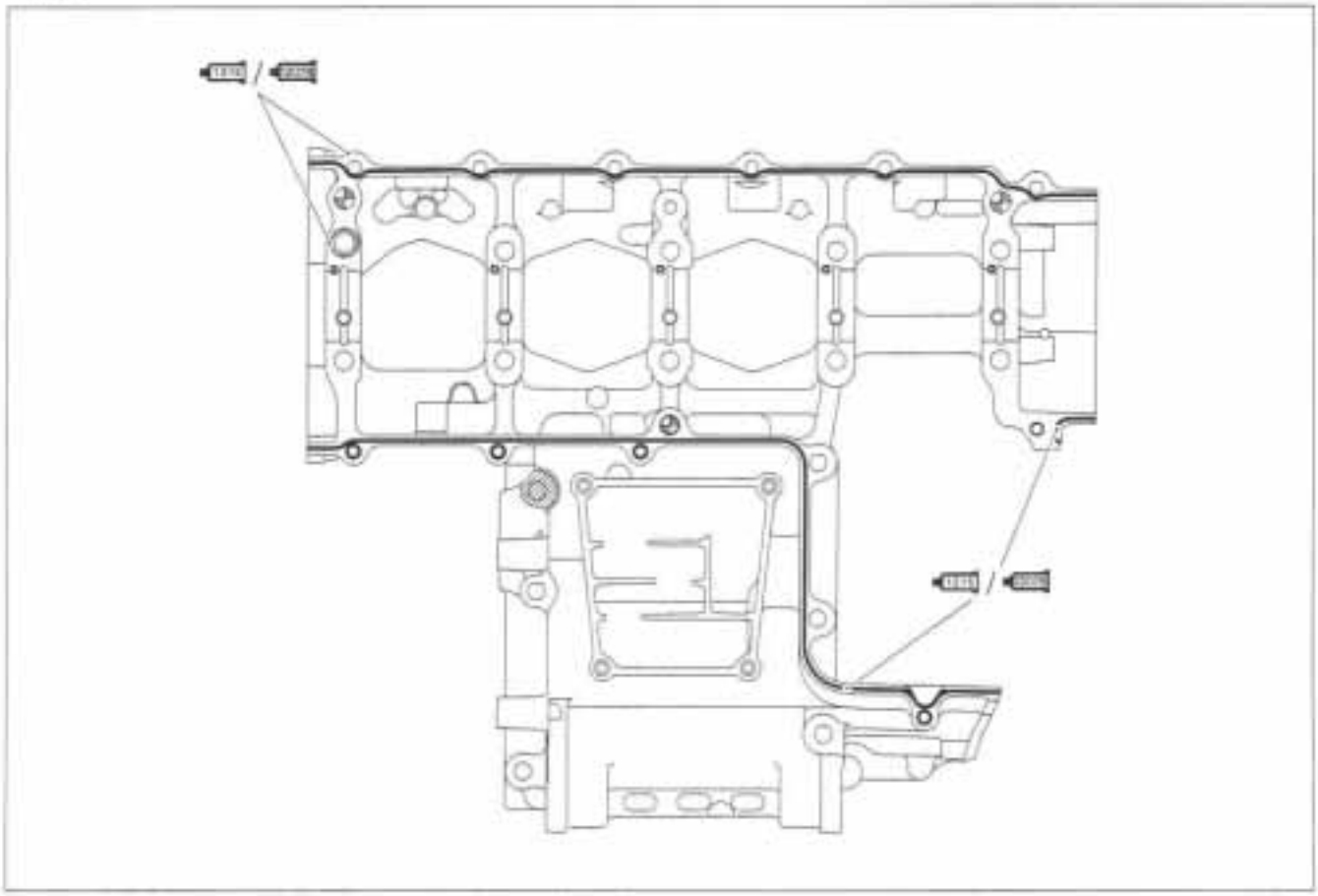

*Align the gearshift forks with the each gear.*
- Tighten the crankcase bolt (9 mm) in ascending order of numbers assigned to these bolts. Tighten each bolt a little at a time to equalize the pressure.

**Crankcase bolt: (M9)**

**Initial: 18 N·m (1.8 kgf·m, 13.0 lb-ft)**
**Final: 32 N·m (3.2 kgf·m, 23.0 lb-ft)**

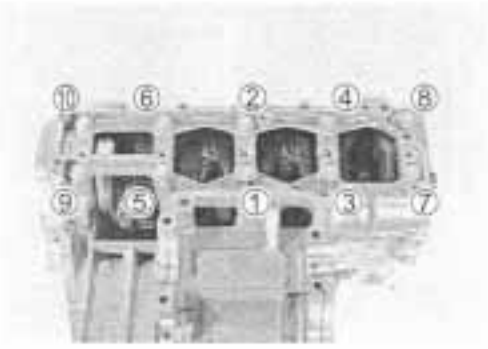

- Tighten the other crankcase bolts a little at a time to equalize the pressure.

**Crankcase bolt:**

| | | |
|---|---|---|
| (M6) | Initial: | 6 N·m (0.6 kgf·m, 4.5 lb-ft) |
| | Final: | 11 N·m (1.1 kgf·m, 8.0 lb-ft) |

*NOTE:*
*Fit the clamp to the crankcase bolt Ⓐ.*

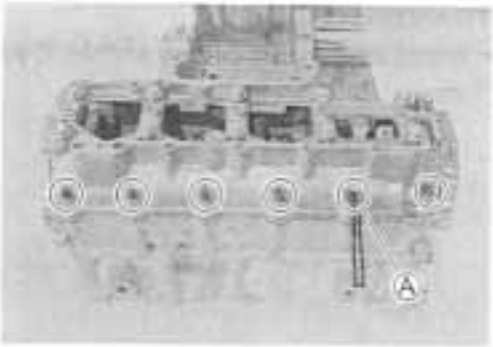


*NOTE:*
*Fit the gasket to the crankcase bolt Ⓑ.*

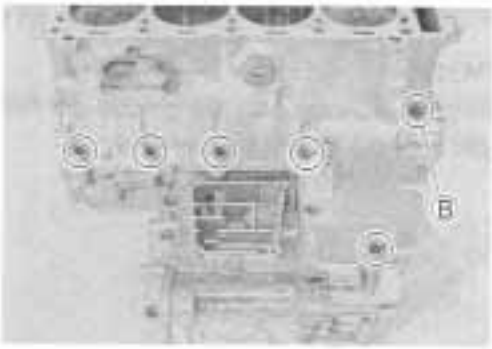


*NOTE:*
*After the crankcase bolts have been tightened, check if the crankshaft rotates smoothly.*

**TRANSMISSION**

- Install the bearing pins ① and the C-ring ② on the upper crankcase.

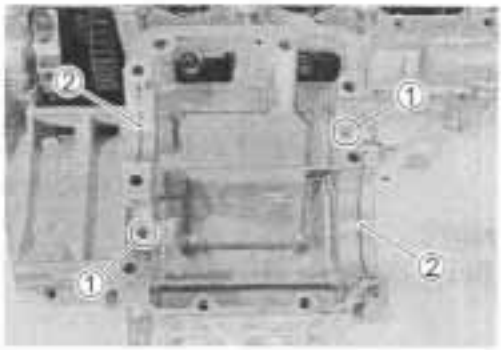


- Install the countershaft assembly on the upper crankcase.

*NOTE:*
*Align the C-ring with the groove on the bearing and the bearing pin with the indent on the bearing.*

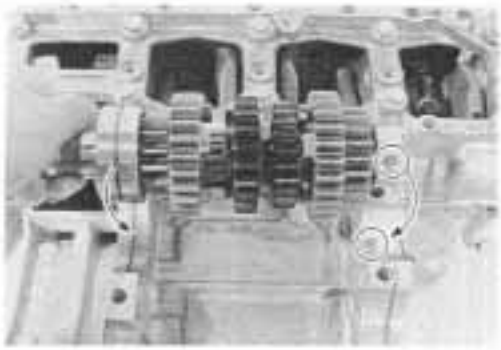

- Install the driveshaft assembly on the upper crankcase.

*NOTE:*
*Align the bearing ring with the groove on the crankcase and the bearing pin with the indent on the bearing.*

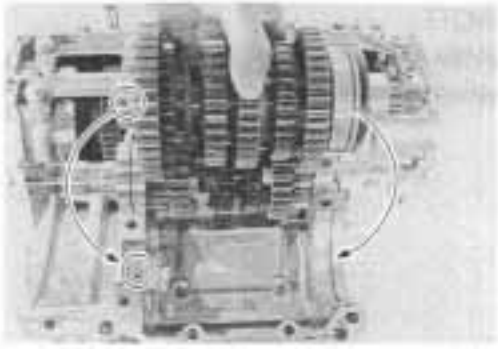

- Install the oil seal ①.
- Turn the bearings to install the bearing dowel pins Ⓐ in the respective positions.

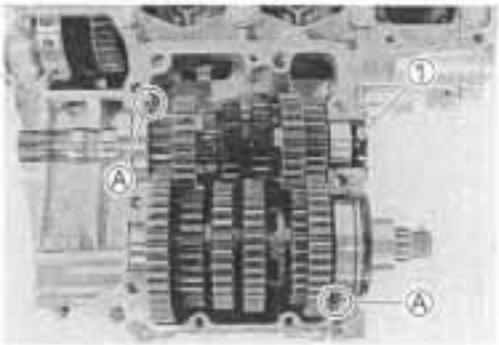


- Install the O-rings.
- Install the dowel pins ①.

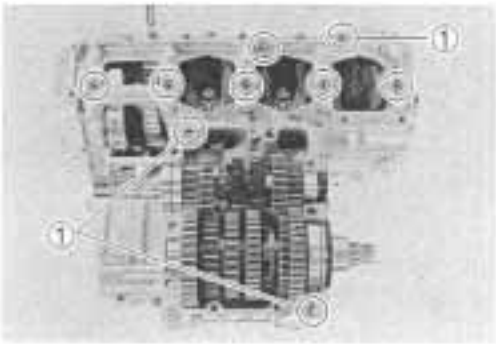

- Apply SUZUKI BOND to the mating surface of the lower crankcase.

**99104-31140: SUZUKI BOND "1207B" (For USA)**

**99000-31110: SUZUKI BOND "1215" (For the others)**

*NOTE:*
*Use of SUZUKI BOND is as follows:*
- *Make surfaces free from moisture, oil, dust and other foreign materials.*
- *Spread on surfaces thinly to form an even layer, and assemble the crankcases within few minutes.*
- *Take extreme care not to apply any BOND to the oil hole, oil groove and bearing.*
- *Apply to distorted surfaces as it forms a comparatively thick film.*

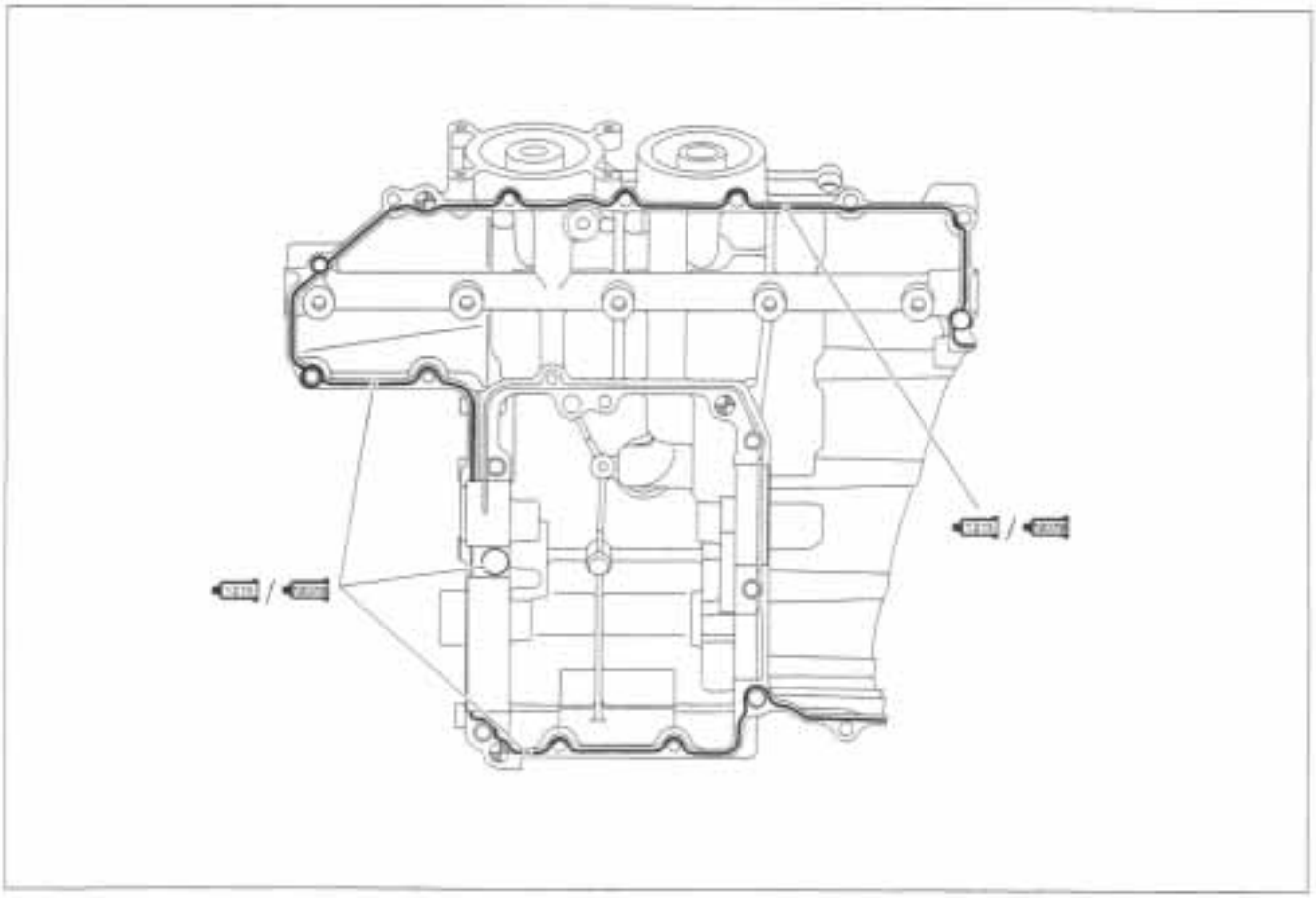

- Match the middle and lower crankcases.

*NOTE:*
*Align the gearshift forks with their grooves.*

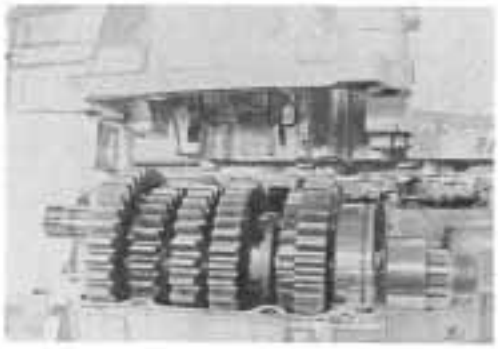

- Tighten the crankcase bolts a little at a time to equalize the pressure.

**Crankcase bolt:(M6) initial: 6 N·m (0.6 kgf·m, 4.5 lb-ft)**
**Final : 11 N·m (1.1 kgf·m, 8.0 lb-ft)**
**(M8) initial: 15 N·m (1.5 kgf·m, 10.8 lb-ft)**
**Final : 26 N·m (2.6 kgf·m, 19.0 lb-ft)**

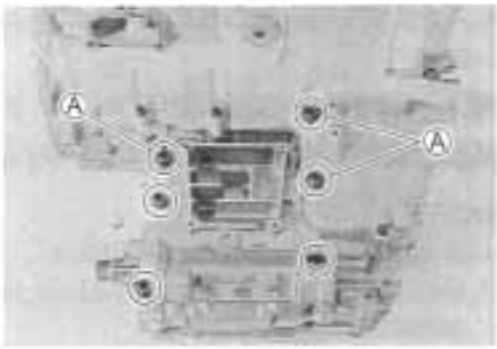


*NOTE:*
- *Fit the copper washer to the crankcase bolts Ⓐ.*
- *Fit the gasket washer to the crankcase bolts Ⓑ.*

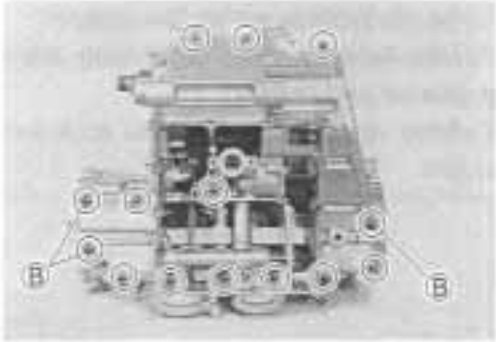


- Check the driveshaft and countershaft to rotate smoothly.

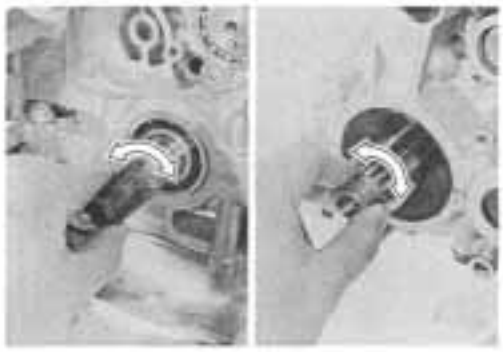

### OIL STRAINER

- Install the O-ring.

*NOTE:*
*Apply grease to the O-ring.*

**99000-25010: SUZUKI SUPER GREASE "A"**

**⚠ CAUTION**

**Use the new O-ring to prevent oil leakage.**

- Install the oil strainer as shown.

**Oil strainer bolt: 10 N·m (1.0 kgf·m, 7.0 lb-ft)**

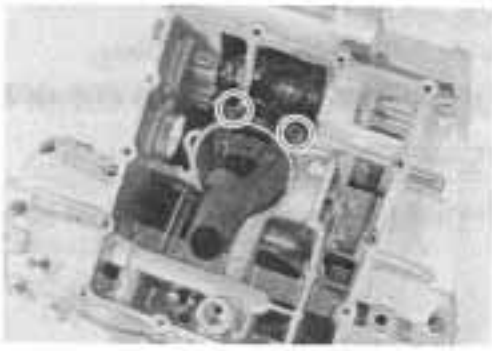

### OIL PRESSURE REGULATOR

- Apply grease to the O-ring and press in the oil pressure regulator to the crankcase.

**99000-25010: SUZUKI SUPER GREASE "A"**

**⚠ CAUTION**

**Use the new O-ring to prevent oil leakage.**

### OIL PAN

- Install the gasket ①.

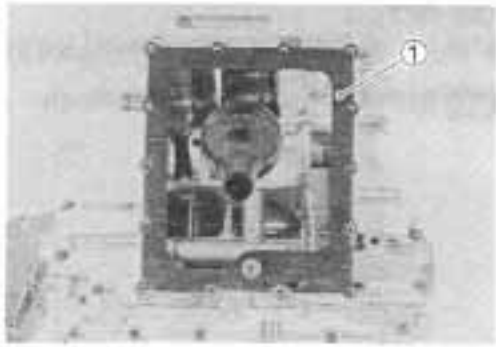


**⚠ CAUTION**

**Use the new gasket to prevent oil leakage.**

- Install the oil pan.

*NOTE:*
*Fit the gasket washer to the oil pan bolt Ⓐ.*

- Tighten the oil pan bolts diagonally to the specified torque.

**Oil pan bolt: 10 N·m (1.0 kgf·m, 7.0 lb-ft)**

- Install the cowling brackets ① and ②.

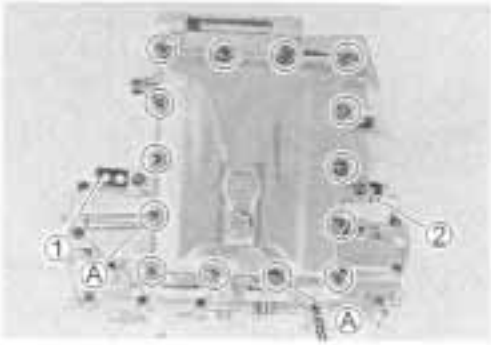

### OIL PRESSURE SWITCH

- Apply SUZUKI BOND "1207B" to the thread part of the oil pressure switch ① and tighten it to the specified torque.

**99000-31140: SUZUKI BOND "1207B"**

**Oil pressure switch: 14 N·m (1.4 kgf·m, 10.0 lb-ft)**

*NOTE:*
*Be careful not to apply SUZUKI BOND "1207B" to the hole of the thread end.*

### OIL COOLER

- Apply the grease to the O-ring.

**99000-25010: SUZUKI SUPER GREASE "A"**

**⚠ CAUTION**

**Use the new O-ring to prevent oil leakage.**

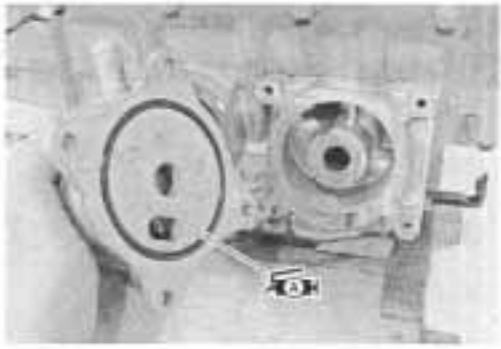

- Install the oil cooler as shown.

**Oil cooler bolt: 10 N·m (1.0 kgf·m, 7.0 lb-ft)**

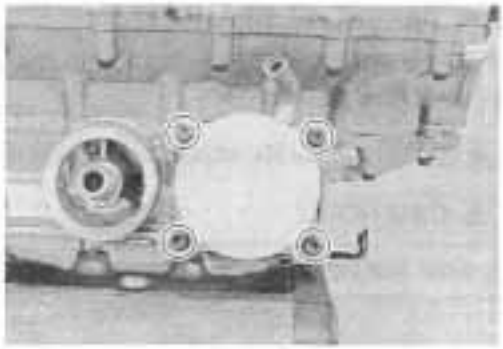

### OIL FILTER

- Install the oil filter using the special tool. (☞ 2-14)

**09915-40610: Oil filter wrench**

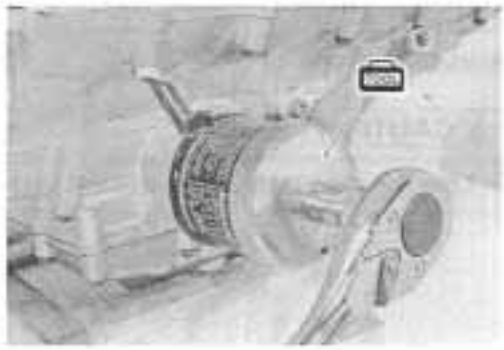

- Install the gasket.

- Install the breather cover.

**Breather cover bolt: 10 N·m (1.0 kgf·m, 7.0 lb-ft)**

**GEAR POSITION SWITCH**

- Install the gear position switch contacts ① and the springs ②.

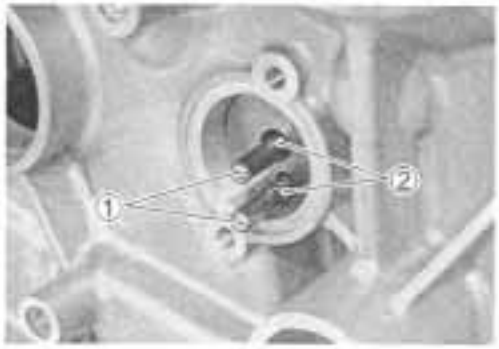


- Apply the grease to the O-ring.

**99000-25010: SUZUKI SUPER GREASE "A"**

- Install the gear position switch as shown.

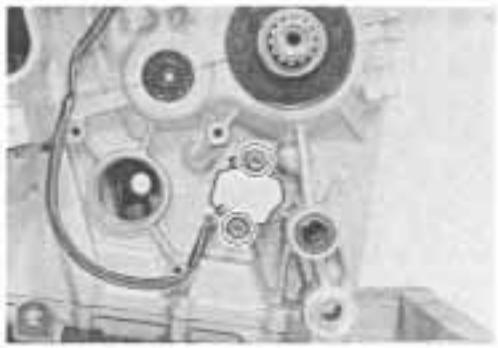

**WATER PUMP**

- Apply grease to the O-ring.

**⚠ CAUTION**

**Use the new O-ring to prevent oil leakage.**

**99000-25010: SUZUKI SUPER GREASE "A"**

- Tighten the water pump mounting bolts to the specified torque.

**Water pump mounting bolt: 10 N·m (1.0 kgf·m, 7.0 lb-ft)**

*NOTE:*
*Pass through the gear position switch lead wire under the warter pump lib Ⓐ.*

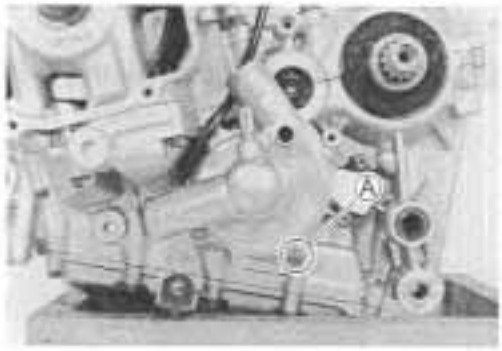


- Apply the engine coolant to the O-ring.

- Install the water inlet cover.

**Water inlet cover bolt: 10 N·m (1.0 kgf·m, 7.0 lb-ft)**

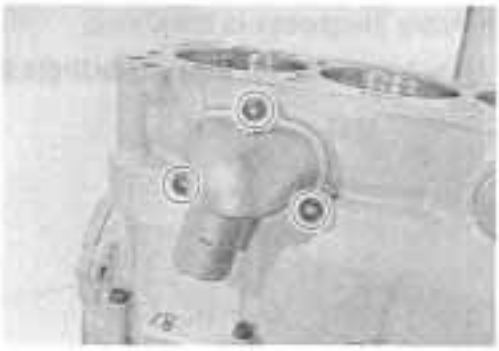

- Install the radiator hoses. (☞8-24)

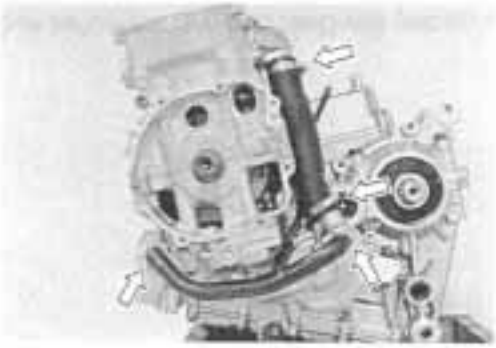

### GENERATOR ROTOR

- Degrease the tapered portion of the generator rotor and also the crankshaft. Use nonflammable cleaning solvent to wipe off oily or greasy matter and make these surfaces completely dry.

- Install the generator rotor onto the crankshaft.
- Install the rotor bolt with the washer.
- Holding the generator rotor with the special tool and tighten its bolt to the specified torque.

**09930-44520: Rotor holder**

**Generator rotor bolt: 120 N·m (12.0 kgf·m, 88.5 lb-ft)**

### GENERATOR COVER

- Apply SUZUKI BOND "1207B" lightly to the mating surfaces at the parting line between the upper and lower crankcases as shown.

**99000-31140: SUZUKI BOND "1207B"**

- Install the dowel pins and new gasket ①.

**⚠ CAUTION**

**Use the new gaskets to prevent oil leakage.**


- Install the generator cover and tighten the generator cover bolts to the specified torque.

**Generator cover bolt: 10 N·m (1.0 kgf·m, 7.0 lb-ft)**

**⚠ WARNING**

**Be careful not to pinch the finger between the generator cover and the crankcase.**

*NOTE:*
*Fit the gasket washer to the bolts Ⓐ.*

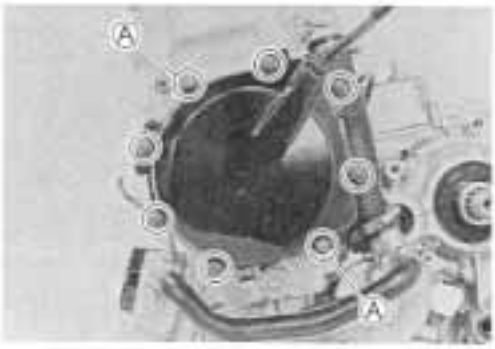

- Install the CKP sensor.

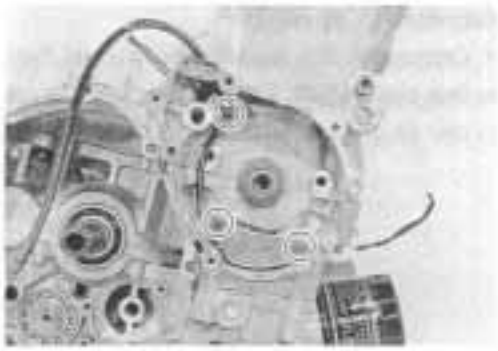

- Apply SUZUKI BOND "1207B" light to the groove of the signal generator lead wire gromet.

**99000-31140: SUZUKI BOND "1207B"**

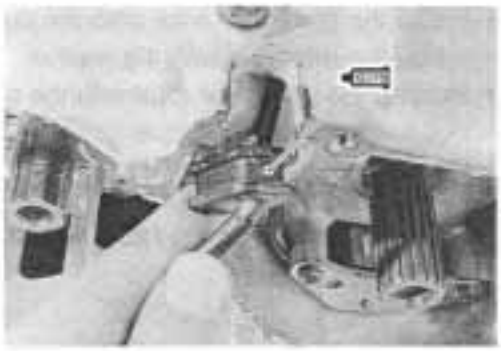

**CAM CHAIN DRIVE SPROCKET**

- Install the cam chain drive sprocket onto the crankshaft.

*NOTE:*
*Align the punched mark Ⓐ on the cam chain drive sprocket with the punched mark Ⓑ on the crankshaft.*


**CAM CHAIN TENSIONER AND CAM CHAIN GUIDE**

- Install the cam chain.
- Apply a small quantity of THREAD LOCK "1342" to the cam chain tensioner bolt and cam chain guide bolt..
- Install the cam chain tensioner ①, washer ② and cam chain guide ③.

**99000-32050: THREAD LOCK "1342"**

**Cam chain tensioner bolt: 10 N·m (1.0 kgf·m, 7.0 lb-ft)**
**Cam chain guide bolt: 10 N·m (1.0 kgf·m, 7.0 lb-ft)**

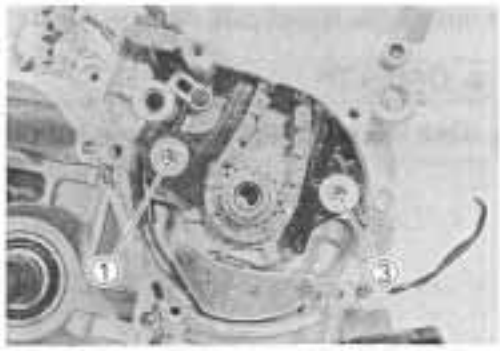


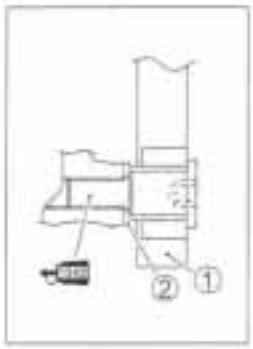


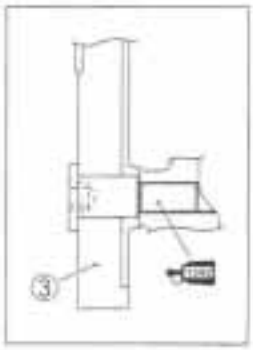

### STARTER CLUTCH

- Install the washer ①.

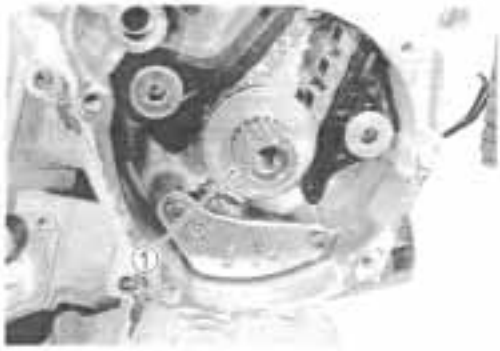


- Install the starter clutch assembly onto the crankshaft.

*NOTE:*
*Align the engraved line Ⓐ on the starter clutch with the punched mark Ⓑ on the crankshaft.*


- Install the starter clutch bolt with the washer.
- Hold the starter clutch with special tool and tighten its bolt to the specified torque.

**09920-34830: Starter clutch**

**Starter clutch bolt: 55 N·m (5.5 kgf·m, 40.0 lb-ft)**

### STARTER IDLE GEAR

- Install the starter idle gear No.2 ① its shaft ② and the wave washer ③.


- Apply SUZUKI BOND "1207B" lightly to the mating surfaces Ⓐ at the parting line between the upper and lower crankcases and surface Ⓑ as shown.

**99000-31140: SUZUKI BOND "1207B"**

- Install the new gasket ① and the dowel pins.

**▲ CAUTION**

**Use a new gasket to prevent oil leakage.**

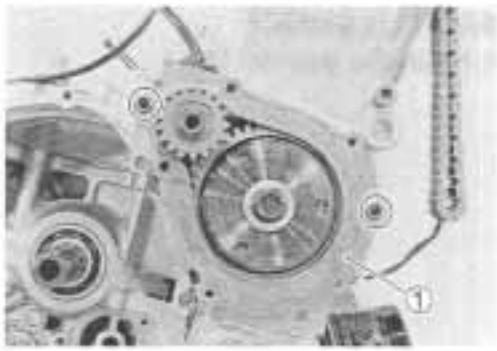


- Install the starter clutch cover and tighten its bolt as shown.

*NOTE:*

- *Fit the wire clamp to the starter clutch cover bolt Ⓐ as shown.*
- *Fit the new gasket washer to the starter clutch cover bolt Ⓑ as shown.*

**▲ CAUTION**

**Use the new gasket washer to prevent oil leakage.**

**Starter idle gear cover: 10 N·m (1.0 kgf·m, 7.0 lb-ft)**

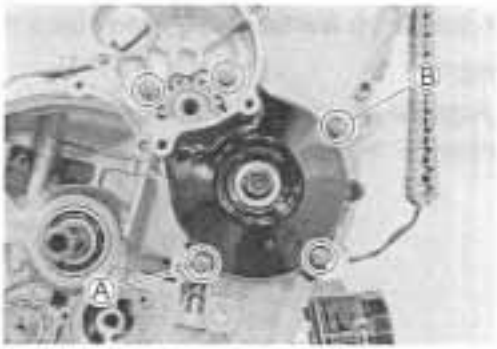


- Install the starter idle gear No.1 shaft ① and the thrust washer ② the bearing ③ and the starter idle gear No.1 ④ the washer ⑤ and the wave washer ⑥.

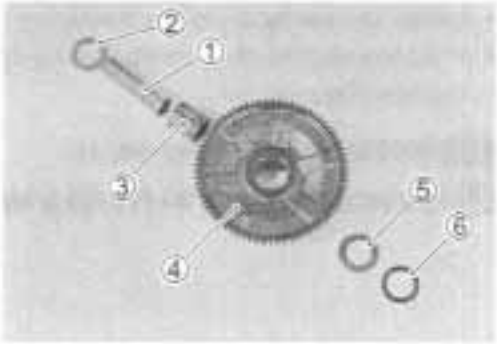


- Install the dowel pins and the new gasket ⑦.

**▲ CAUTION**

**Use a new gasket to prevent oil leakage.**

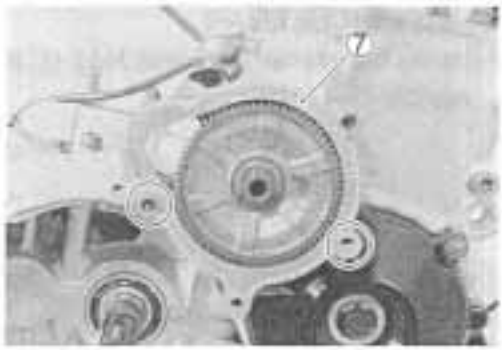


- Install the starter idle gear cover and tighten its bolts to the specified torque.

**Starter idle gear cover: 10 N·m (1.0 kgf·m, 7.0 lb-ft)**

*NOTE:*

*Fit the gasket washer to the bolt Ⓐ.*

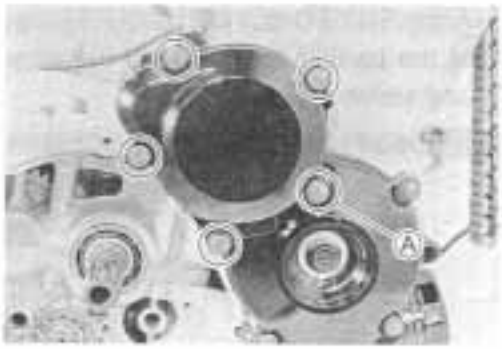

### GEARSHIFT SYSTEM

- Install the gearshift cam stopper ①, its bolt ②, the washer ③ and the return spring ④.


*NOTE:*
*Apply a small quantity of THREAD LOCK "1342" to the gearshift cam stopper bolt ② and tighten it to the specified torque.*

**99000-32050: THREAD LOCK "1342"**

**Gearshift cam stopper bolt: 10 N·m (1.0 kgf·m, 7.0 lb-ft)**

*NOTE:*
*Hook the return spring end to the stopper ①.*

- Confirm the gearshift cam stopper movement.
- Check the neutral position.


- Install the gearshift cam stopper plate after aligning the gearshift cam pin Ⓐ with the gearshift cam stopper plate hole Ⓑ.

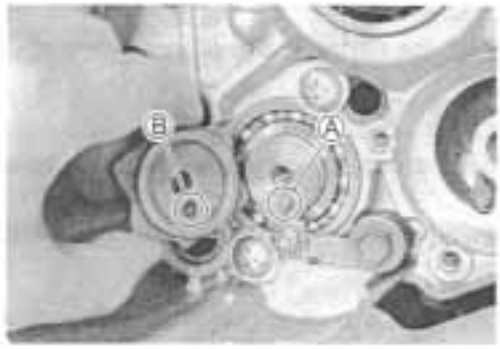


- Apply a small quantity of THREAD LOCK "1342" to the gearshift cam stopper plate bolt and tighten it to the specified torque.

**99000-32050: THREAD LOCK "1342"**

**Gearshift cam stopper plate bolt: 10 N·m (1.0 kgf·m, 7.0 lb-ft)**

- Install the gearshift shaft/gearshift arm ① with the washers as shown.

*NOTE:*
*Pinch the gearshift arm stopper ② with return spring ends Ⓐ.*

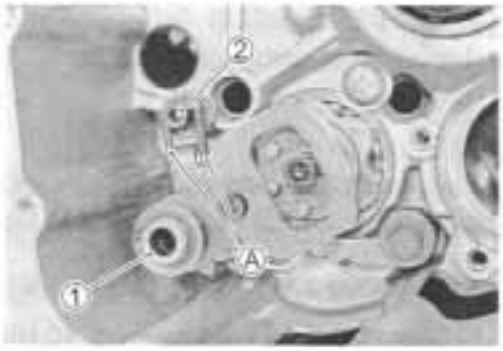


- Install the washer ③ and circlip ④.

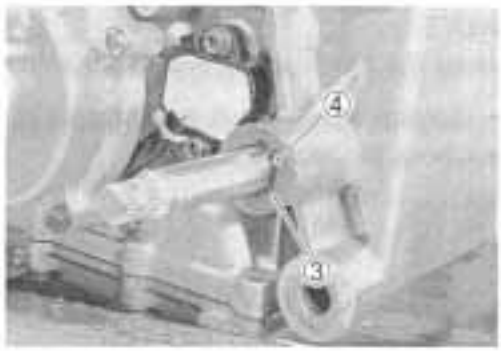


**OIL PUMP**

- Install the O-ring to the oil pump and apply grease to it.

**⚠ CAUTION**

**Use the new O-ring to prevent oil leakage.**

**99000-25010: SUZUKI SUPER GREASE "A"**

*NOTE:*
*Set the oil pump shaft end to the water pump shaft.*

- Install the oil pump with the three bolts and then tighten them to the specified torque.

**Oil pump mounting bolts: 10 N·m (1.0 kgf·m, 7.0 lb-ft)**

- Install the washer ① and the pin ②.

*NOTE:*
*Be careful not to drop the washer ① and the pin ② into the crankcase.*

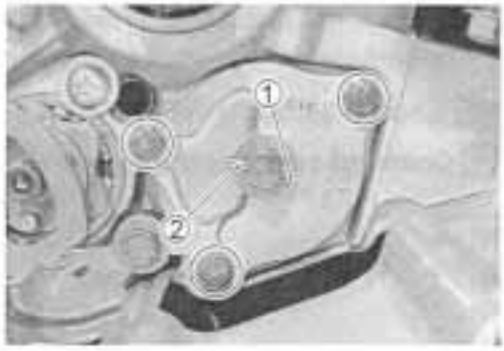


- Install the oil pump driven gear ③.
- Install the circlip ④.

**09900-06107: Snap ring pliers**

**CLUTCH**

- Install the thrust washer onto the countershaft.

*NOTE:*
*The chamfer side Ⓐ of the thrust washer faces crankcase side.*

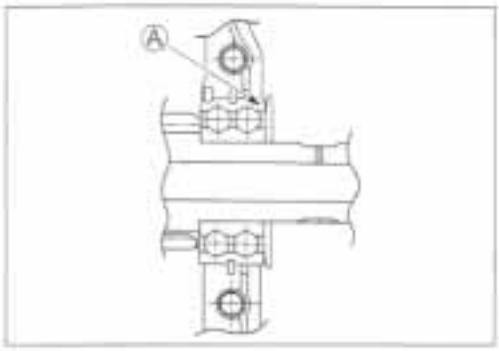


- Install the oil pump drive gear ① to the primary driven gear assembly.


*NOTE:*
*Be careful not to contact the primary driven gear with the crankweb when installing the clutch housing.*

- Install the bearing ① and spacer ② and apply engine oil to them.
- Install the primary driven gear assembly.

- Install the thrust washer ①.


- Install the clutch sleeve hub ② onto the countershaft.
- Install the washer ③ and spring washer ④.

*NOTE:*
*The convex side of the washer ④ faces outside.*

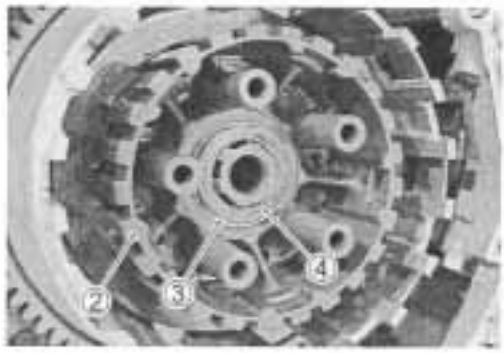


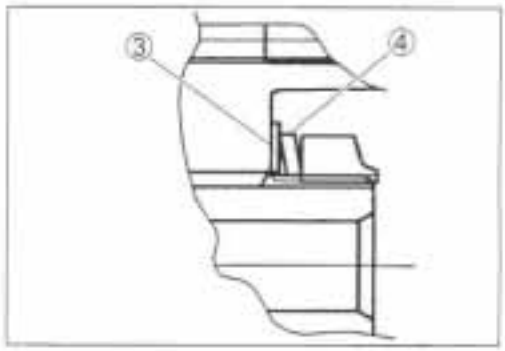


- Install the clutch sleeve hub nut ①.
- Hold the clutch sleeve hub using the special tool.

**09920-53740: Clutch sleeve hub holder**

- Tighten the clutch sleeve hub nut to the specified torque.

**Clutch sleeve hub nut: 150 N·m (15.0 kgf·m, 108 lb-ft)**

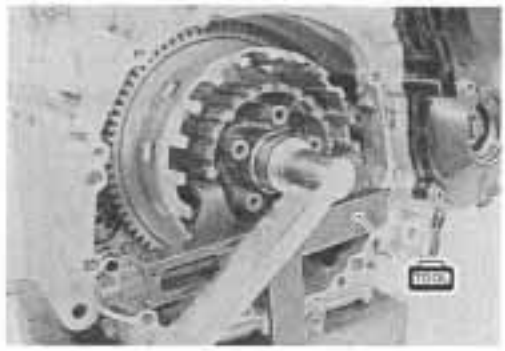

- Lock the clutch sleeve hub nut with a center punch.

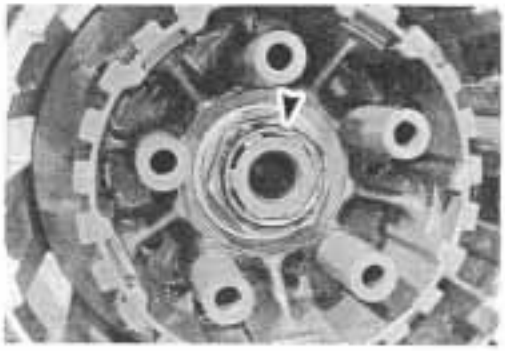

## CLUTCH

- Insert the washer ① and spring washer ②.

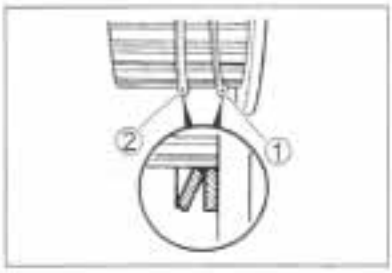


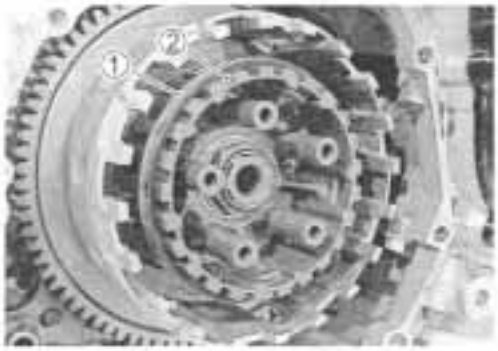


- Insert the clutch drive plates and driven plates one by one into the clutch sleeve hub in the prescribed order.

*NOTE:*
*Insert the outermost drive plate claws Ⓐ to the other slits Ⓑ of clutch housing as shown.*


ⓐ DRIVE PLATE No. 1 (40 friction pcs) : 7 pcs
ⓑ DRIVE PLATE No. 2 (48 friction pcs) : 1 pc
ⓒ DRIVE PLATE No. 3 (With damper) : 1 pc
ⓓ DRIVEN PLATE No. 1 (Thickness: 2.6 mm): 6 – 8 pcs
ⓔ DRIVEN PLATE No. 2 (Thickness: 2.3 mm): 0 – 2 pcs
} Total 8 pcs

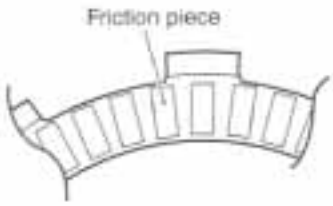


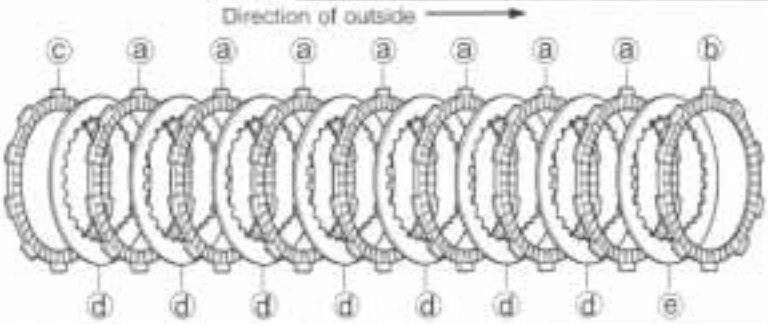


- Install the clutch push rod ① into the countershaft.

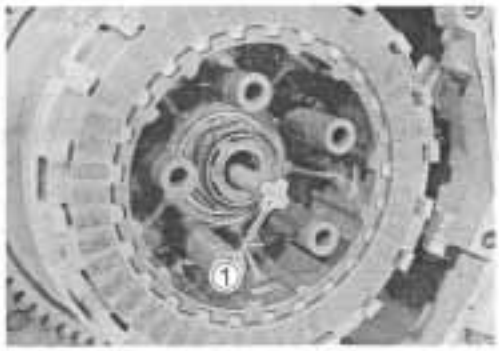


- Install the clutch push piece ②, the bearing ③ and the thrust washer ④ to the countershaft.

*NOTE:*
*Thrust washer ④ is located between the pressure plate and the bearing ③.*

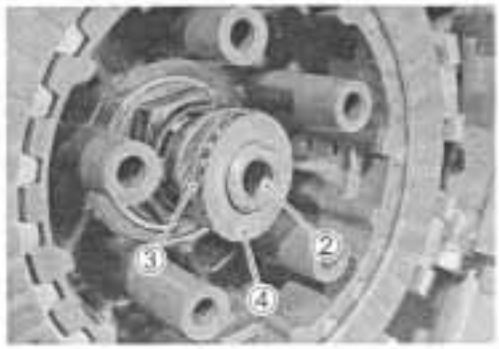

- Install the clutch pressure plate.
- Install the clutch springs.

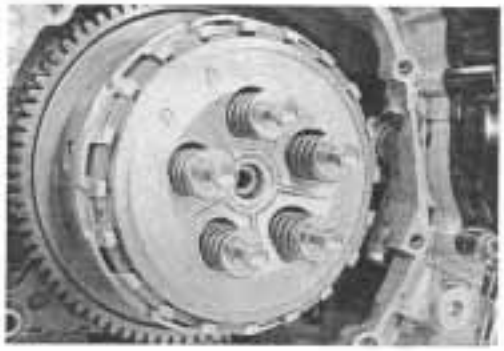

- Hold the clutch housing using the special tool.

**⚠ CAUTION**

**Be careful not to damage the clutch housing or clutch plates.**

**09920-53740: Clutch sleeve hub holder**

- Tighten the clutch spring set bolts to the specified torque.

**Clutch spring set bolt: 10 N·m (1.0 kgf·m, 7.0 lb-ft)**

*NOTE:*
*Tighten the clutch spring set bolts diagonally.*

**CLUTCH COVER**

- Apply SUZUKI BOND "1207B" lightly to the mating surfaces at the parting line between the upper, middle and lower crankcases as shown.

**99000-31140: SUZUKI BOND "1207B"**

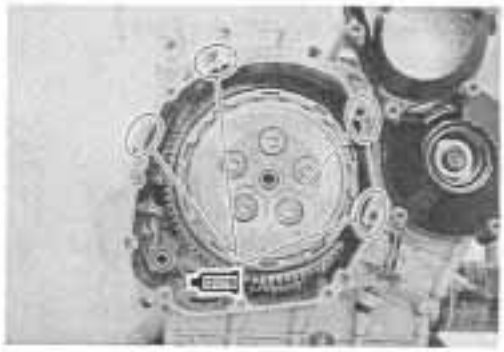

- Install the gasket ① and the dowel pins.

**⚠ CAUTION**

**Use the new gasket to prevent oil leakage.**

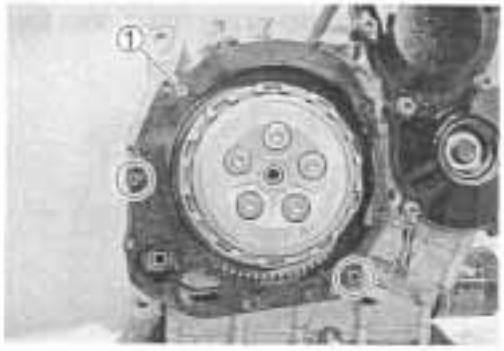


- Install the clutch cover and tighten its bolts to the specified torque.

**Clutch cover bolt: 10 N·m (1.0 kgf·m, 7.0 lb-ft)**

*NOTE:*
- *Fit the clamp to the bolt Ⓐ as shown.*
- *Fit the gaskets to the bolts Ⓑ as shown.*

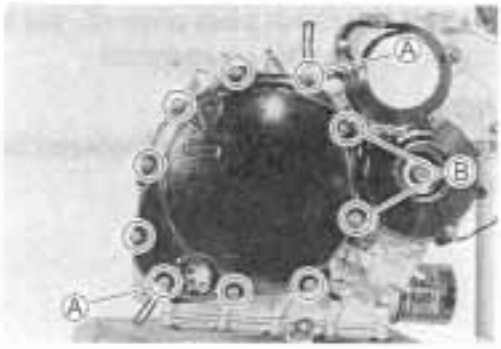

### CYLINDER HEAD

- Fit the dowel pins and the new cylinder head gasket ① to the cylinder.

**⚠ CAUTION**

**Use the new gasket to prevent gas leakage.**

- Place the cylinder head on the cylinder.

- Install the cylinder head side bolt ② and gasket ③ and tighten it to the specified torque.

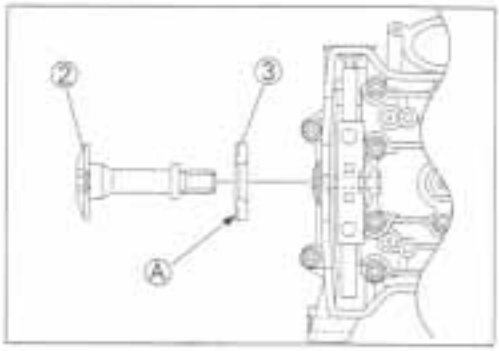


**Cylinder head side bolt: 14 N·m (1.4 kgf·m, 10.0 lb-ft)**

*NOTE:*
- *The metal side of the gasket Ⓐ faces out.*
- *Install the cylinder head side bolt between the cam chain.*

*NOTE:*
*When installing the cylinder head, keep the cam chain taut.*

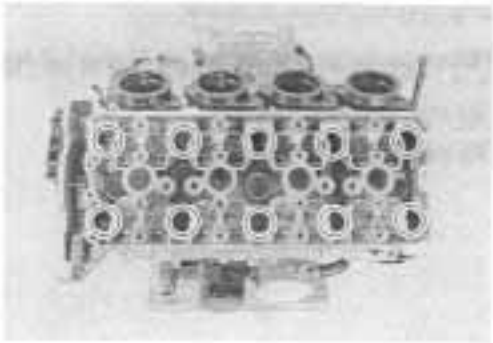

- Tighten the cylinder head bolts (M10) to the specified two-step torque with a torque wrench sequentially and diagonally.

**Cylinder head bolt (M10): Initial: 25 N·m (2.5 kgf·m, 18.0 lb-ft)**
**Final: 46 N·m (4.6 kgf·m, 33.3 lb-ft)**

*NOTE:*
- *Install the washers to the cylinder head bolts (M10) as shown.*
- *Apply engine oil to the washers and thread portion of the bolts before installing the cylinder head bolts.*

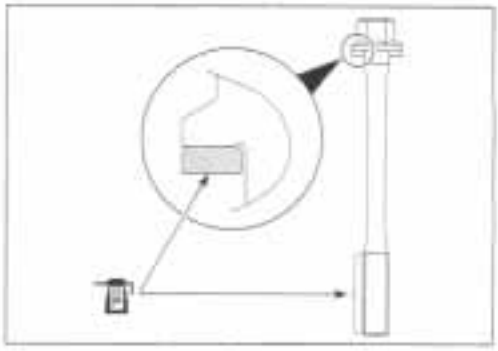

- Tighten the cylinder head bolts to the specified torque.

**Cylinder head bolt (M6): 10 N·m (1.0 kgf·m, 7.0 lb-ft)**

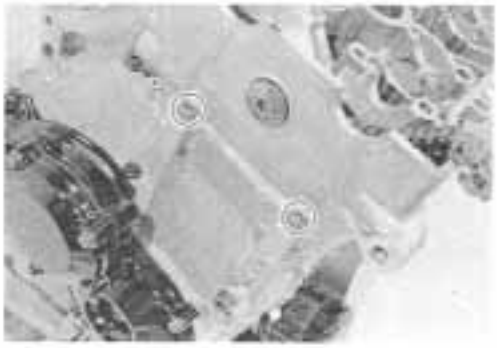

- Fit the gasket ① and tighten the water temp. gauge.

**Water temp. gauge: 18 N·m (1.8 kgf·m, 13.0 lb-ft)**


- Install the thermostat. (5-10)

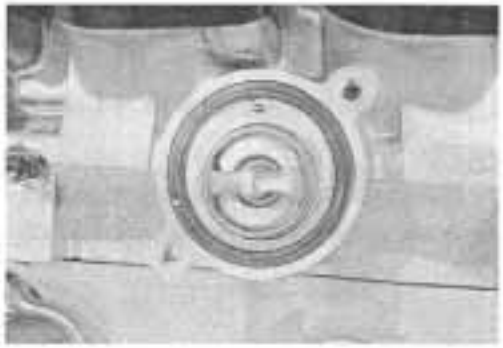

- Install the thermostat cover.

**Thermostat cover bolt: 10 N·m (1.0 kgf·m, 7.0 lb-ft)**

*NOTE:*
*Fit the clamp to the bolt Ⓐ.*


- Install the water hose. (8-24)

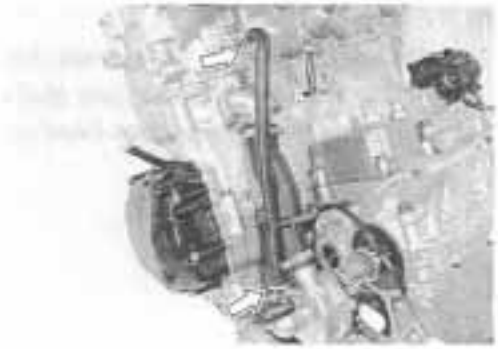

### CAMSHAFT

- Turn the crankshaft counterclockwise with the box wrench and align the line Ⓐ on the starter clutch with the index mark Ⓑ of the valve timing inspection hole while keeping the cam chain pulled upward.

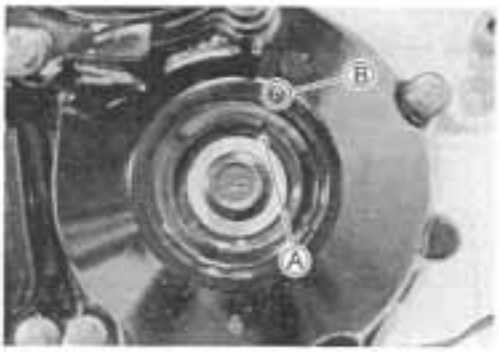


**⚠ CAUTION**

**Pull the cam chain upward, or the chain will be caught between crankcase and cam drive sprocket.**

**⚠ CAUTION**

**To adjust the camshaft timing correctly, be sure to align the line Ⓐ with the index mark Ⓑ and hold this position when installing the camshafts.**

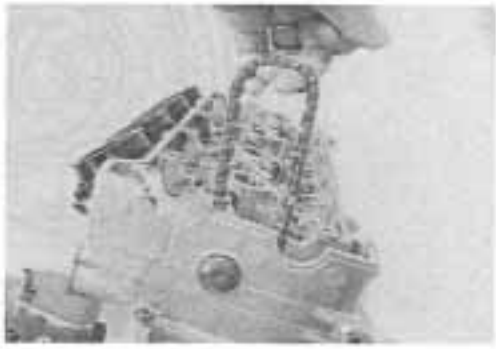

- The cam shafts are identified by the embossed letters.
- Before placing the camshafts on cylinder head, apply molybdenum oil solution to their journals and cam faces.
- Apply engine oil to the camshaft journal holders.

**MOLYBDENUM OIL SOLUTION**

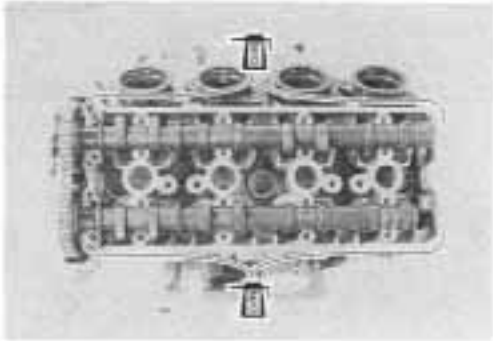

*NOTE:*
*Before installing the camshaft, check that the tappets are installed correctly.*

- Pull the cam chain lightly.
- The exhaust camshaft sprocket has an arrow marked "1" Ⓐ. Turn the exhaust camshaft so that the arrow is aligned with the gasket surface of the cylinder head.
- Engage the cam chain with the exhaust camshaft sprocket.
- Bind the cam chain and the sprocket with a proper wire clamp ① to prevent the cam chain disengagement while installing the camshaft journal holders.

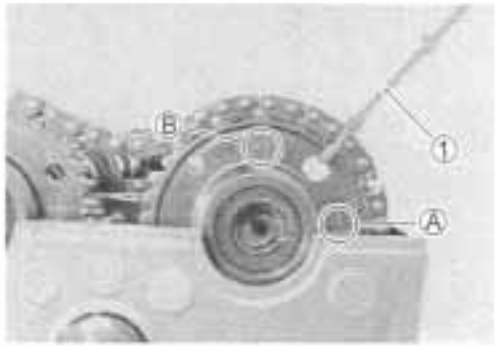


- The other arrow marked "2" Ⓑ should now be pointing straight up. Starting from the roller pin that is directly above the arrow marked "2" Ⓑ, count out 14 roller pins (from the exhaust camshaft side going towards the intake camshaft side).
- Engage the 14 roller pin Ⓒ on the cam chain with the arrow marked "3" on the intake sprocket.
- Bind the cam chain and the sprocket with a proper wire clamp ① to prevent the cam chain disengagement while installing the camshaft journal holders.

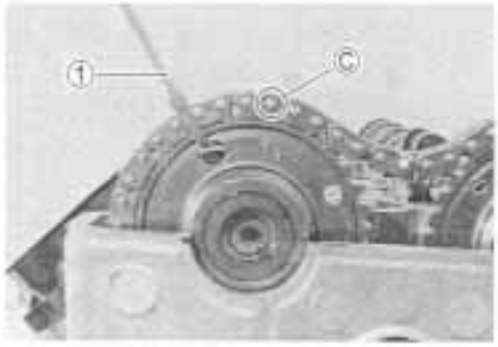

*NOTE:*
*The cam chain should now be on all three sprockets. Be careful not to move the crankshaft until the camshaft journal holders and cam chain tension adjuster are secured.*

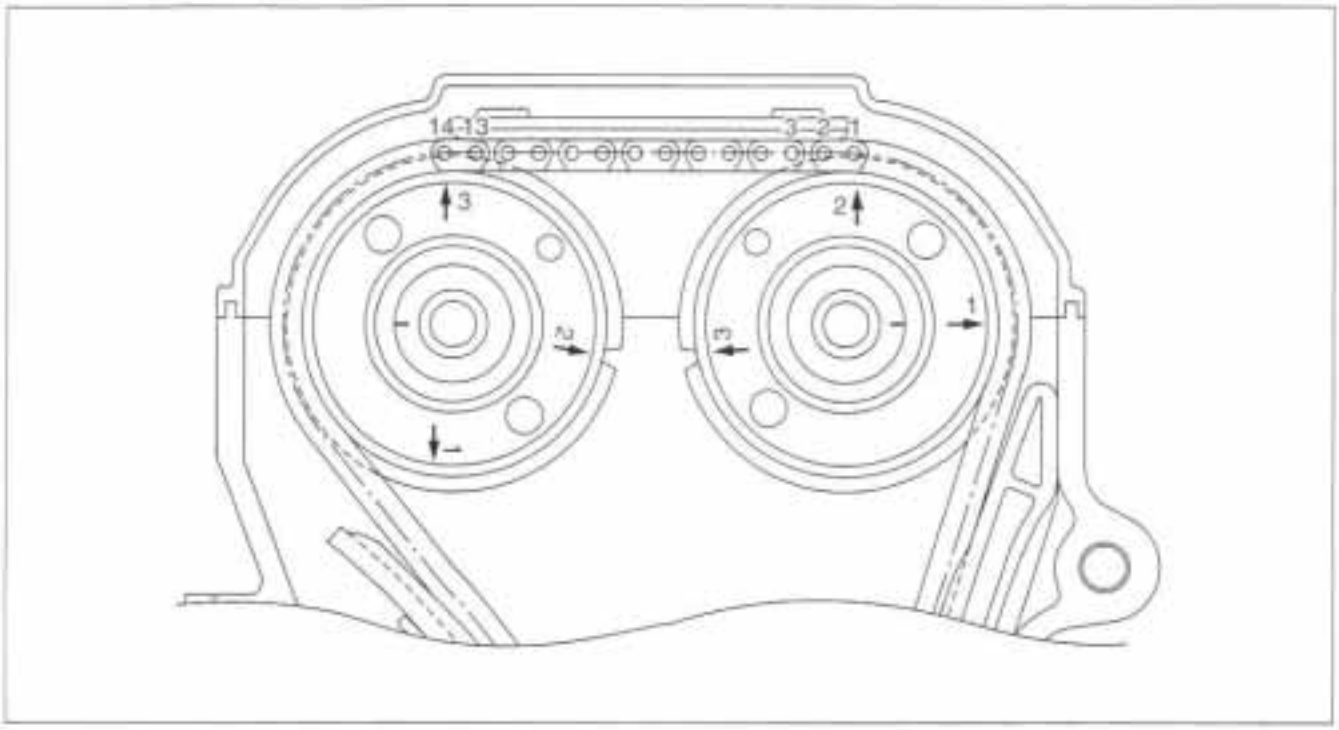

- Install the dowel pins.
- Install the camshaft journal holders, intake and exhaust and cam chain guide.
- Fasten the camshaft journal holders evenly by tightening the camshaft journal holder bolts sequentially and diagonally.

*NOTE:*

- *Damage to head or camshaft journal holder thrust surfaces may result if the camshaft journal holders are not drawn down evenly.*
- *Each camshaft journal holder is identified with a cast-on letters Ⓐ.*

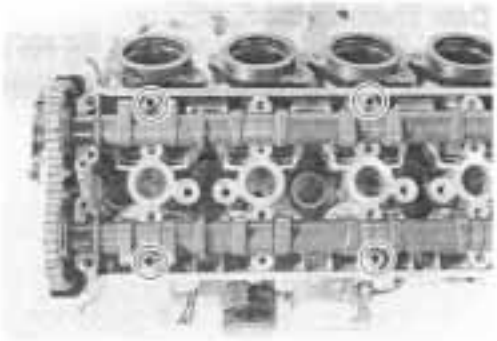

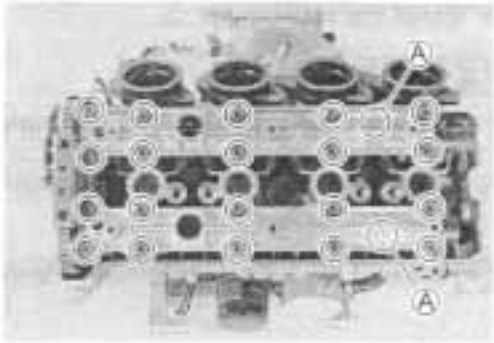


- Tighten the camshaft journal holder bolts in ascending order of numbers (see below) to the specified torque.

**Camshaft journal holder bolt: 10 N·m (1.0 kgf·m, 7.0 lb-ft)**

**⚠ CAUTION**

**The camshaft journal holder bolts are made of a special material and much superior in strength, compared with other types of high strength bolts.**
**Take special care not to use other types of bolts.**

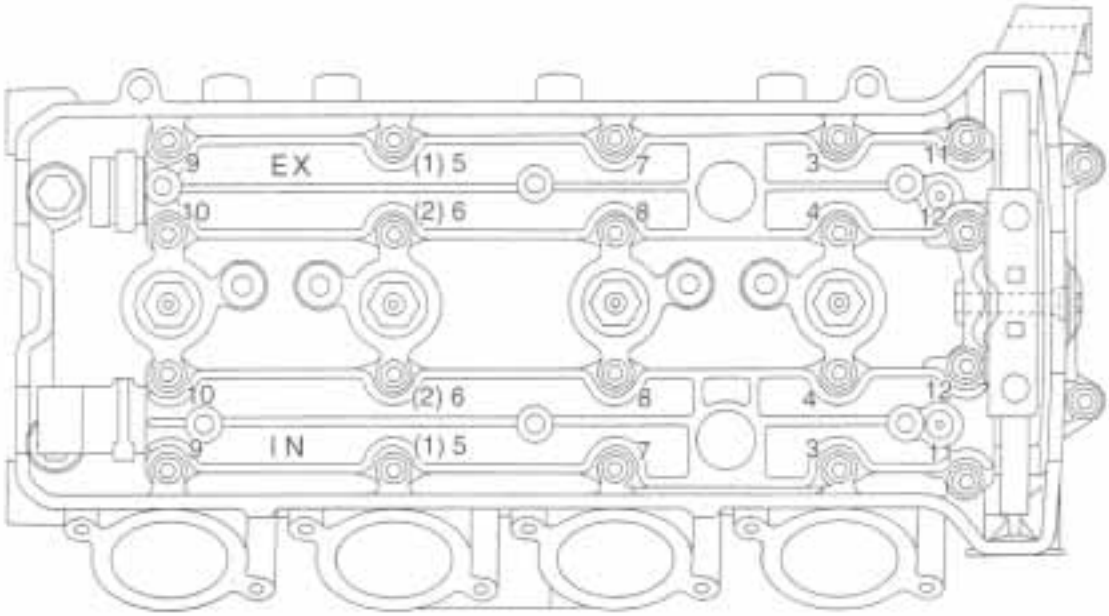

**Cam chain tension adjuster**

- Retract the push rod by pushing the rachet.
- Install the ball ① to the cam chain tension adjuster.

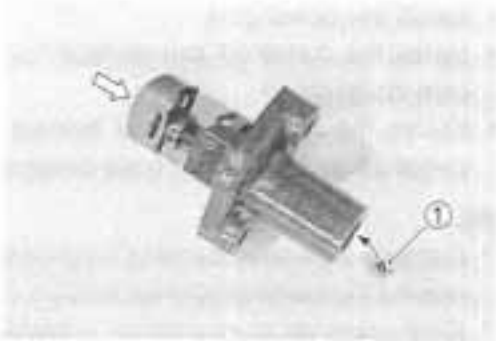


- Install the new gasket ②.

**▲ CAUTION**

**Use the new gasket to prevent oil leakage.**

- Install the cam chain tension adjuster and tighten the mounting bolts.

**Cam chain tension adjuster mounting bolt: 10 N·m (1.0 kgf·m, 7.0 lb-ft)**

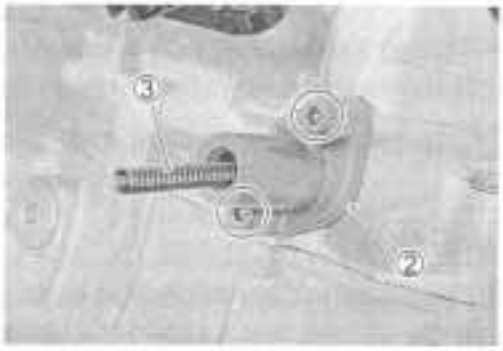


- Install the spring ③.
- Install the oil hose as shown in illustration. (☞Next page)
- Install the gaskets and tighten the union bolt.

**Oil hose union bolt: 12 N·m (1.2 kgf·m, 8.7 lb-ft)**

- Install the gaskets and the cam chain tension adjuster cap bolt.

*NOTE:*
*Click sound is heard when the cam chain tension adjuster cap bolt is installed.*

- Tighten the cam chain tension adjuster cap bolt to the specified torque.

**Cam chain tension adjuster cap bolt: 23 N·m (2.3 kgf·m, 16.5 lb-ft)**

**▲ CAUTION**

**After installing the cam chain tension adjuster, check to be sure that the adjuster work properly by checking the slack of cam chain.**

- Cut the wire clamps.
- After installing the cam chain tension adjuster, rotate the crankshaft (some turns), and recheck the positions of the camshafts. (☞ 3-96)

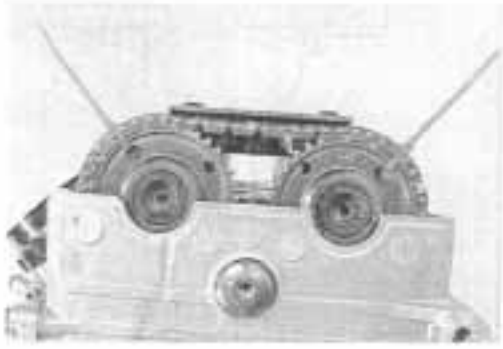

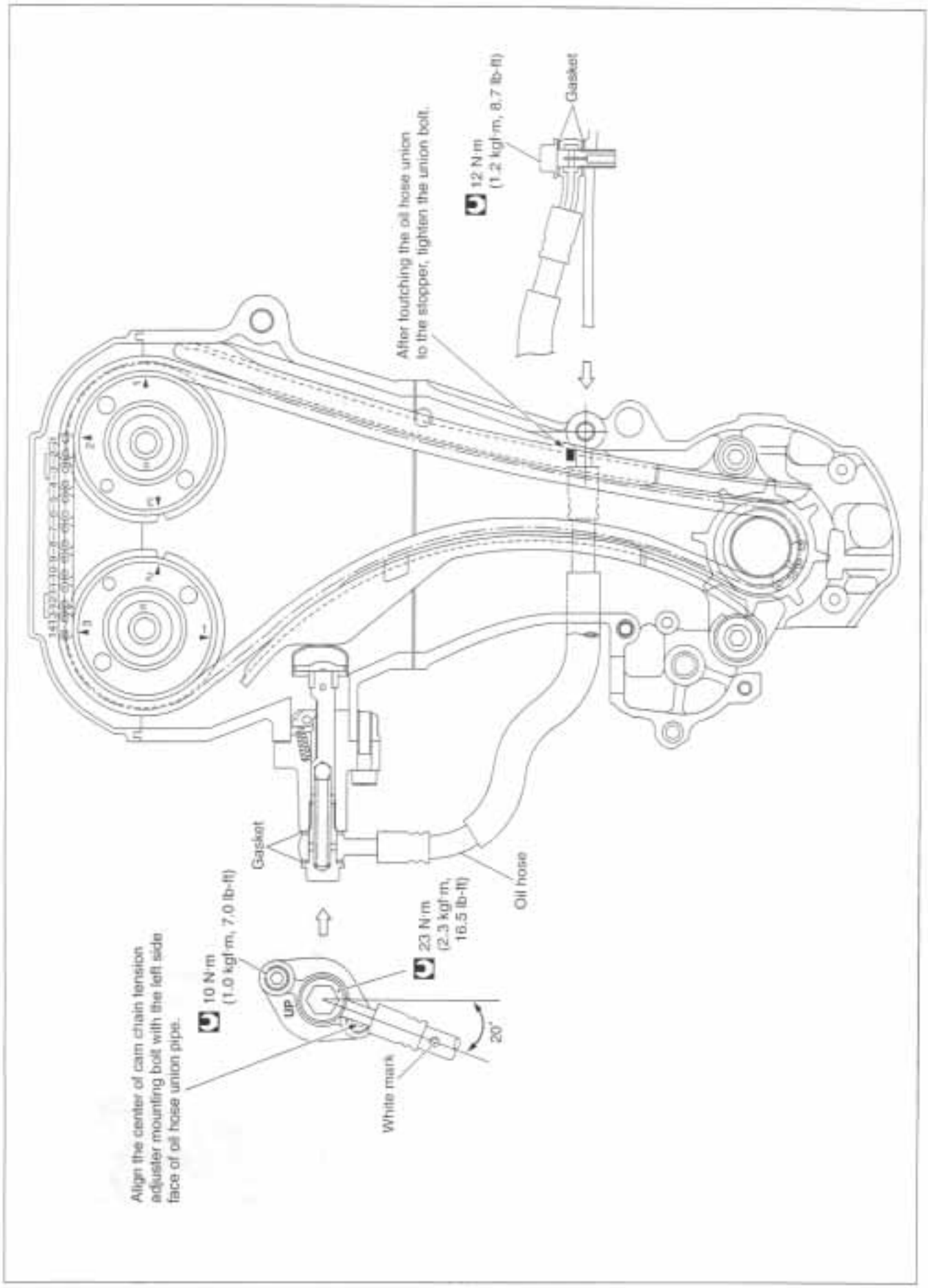
Gasket
12 N·m
(1.2 kgf·m, 8.7 lb-ft)
After foutching the oil hose union
to the stopper, tighten the union bolt.
Gasket
Oil hose
23 N·m
(2.3 kgf·m,
16.5 lb-ft)
10 N·m
(1.0 kgf·m, 7.0 lb-ft)
UP
20°
White mark
Align the center of cam chain tension
adjuster mounting bolt with the left side
face of oil hose union pipe.

- Tighten the valve timing inspection plug ① to the specified torque.

**Valve timing inspection plug: 11 N·m (1.1 kgf·m, 8.0 lb-ft)**

### CYLINDER HEAD COVER

- Pour engine oil in each oil pocket in the cylinder head.

*NOTE:*
*Be sure to check the valve clearance. (☞ 2-8)*

- Install the dowel pins.
- Install the O-rings.

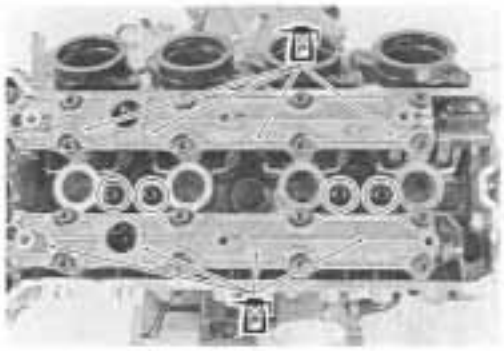

- Install the new gaskets to the cylinder head cover.
- Apply SUZUKI BOND "1207B" to the cam end caps of the gaskets as shown.

**99000-31140: SUZUKI BOND "1207B"**

**⚠ CAUTION**

**Use the new gaskets to prevent oil leakage.**

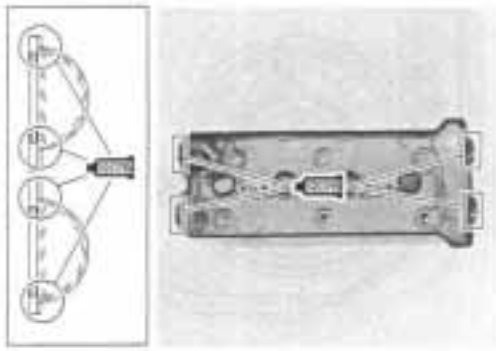

- Place the cylinder head cover on the cylinder head.
- Fit the new gaskets to each head cover bolt.

**⚠ CAUTION**

**Use the new gaskets to prevent oil leakage.**

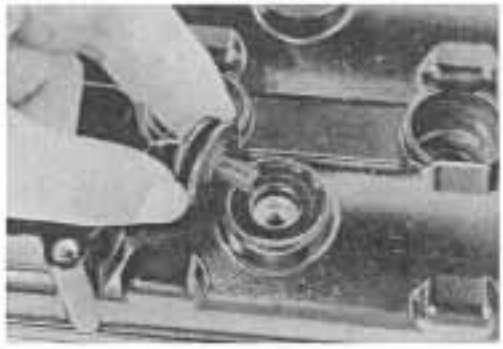

- Tighten the head cover bolts to the specified torque.

**Head cover bolt: 14 N·m (1.4 kgf·m, 10.0 lb-ft)**

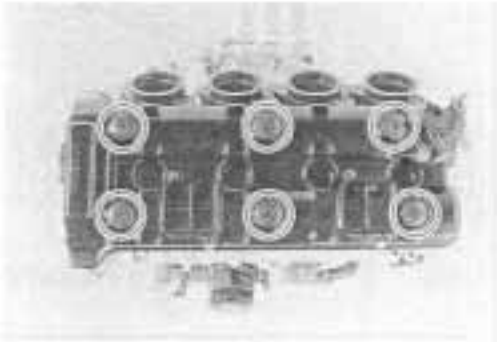

**PAIR VALVE**

- Install the PAIR reed valve ①. (☞ 8-22)

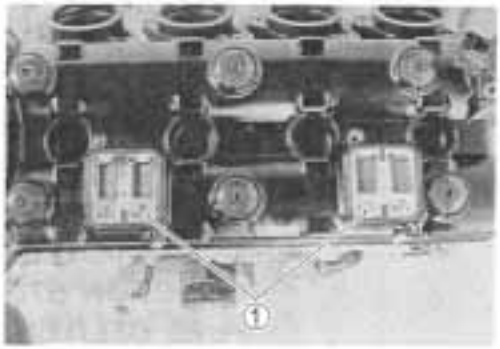


- Apply THREAD LOCK to the bolts, install the PAIR valve and hose. (☞ 8-22)

**99000-32050: THREAD LOCK "1342"**

**PAIR reed valve cover bolt: 10 N·m (1.0 kgf·m, 7.0 lb-ft)**

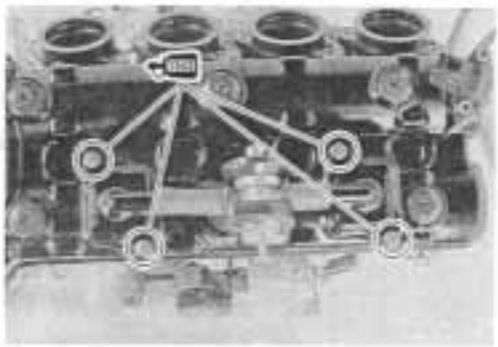

**STARTER MOTOR**

- Apply the grease to the O-ring.

**99000-25010: SUZUKI SUPER GREASE "A"**

- Install the starter motor.

**Starter motor mounting bolt: 10 N·m (1.0 kgf·m, 7 lb-ft)**

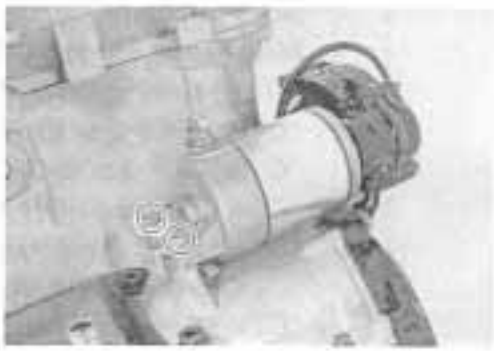

- Install the spark plugs. (☞ 2-5)

# FI SYSTEM AND INTAKE AIR SYSTEM

CONTENTS

# PRECAUTIONS IN SERVICING

When handling the FI component parts or servicing the FI system, observe the following points for the safety of the system.

## CONNECTOR/COUPLER

- When connecting a connector, be sure to push it in until a click is felt.

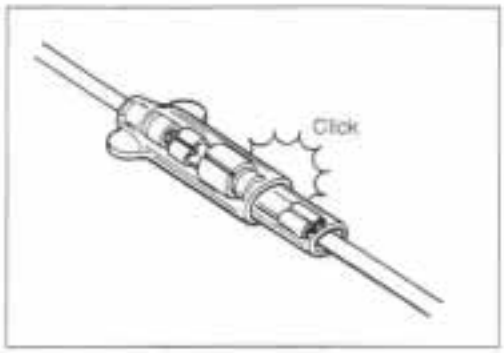


- With a lock type coupler, be sure to release the lock when disconnecting, and push it in fully till the lock works when connecting it.
- When disconnecting the coupler, be sure to hold the coupler body and do not pull the lead wires.

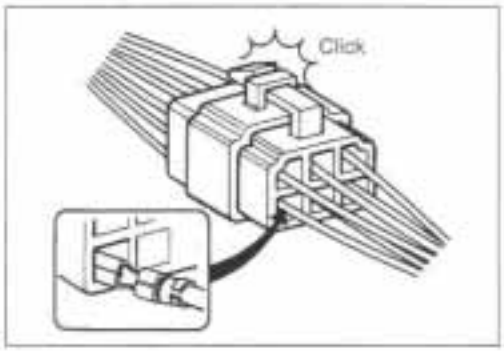


- Inspect each terminal on the connector/coupler for looseness or bending.
- Inspect each terminal for corrosion and contamination.
  The terminals must be clean and free of any foreign material which could impede proper terminal contact.
- Inspect each lead wire circuit for poor connection by shaking it by hand lightly. If any abnormal condition is found, repair or replace.

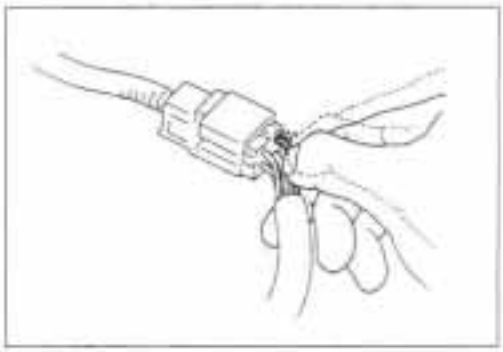

- When taking measurements at electrical connectors using a tester probe, be sure to insert the probe from the wire harness side (backside) of the connector/coupler.

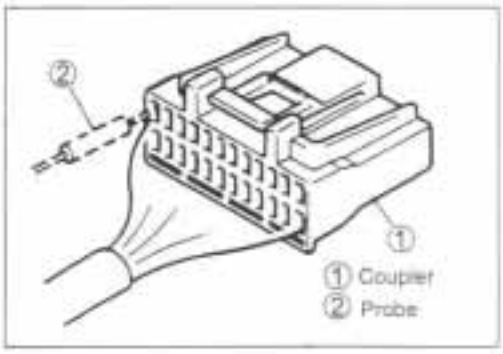


- When connecting meter probe from the terminal side of the coupler (connection from harness side not being possible), use extra care not to force and cause the male terminal to bend or the female terminal to open.
  Connect the probe as shown to avoid opening of female terminal.
  Never push in the probe where male terminal is supposed to fit.
- Check the male connector for bend and female connector for excessive opening. Also check the coupler for locking (looseness), corrosion, dust, etc.

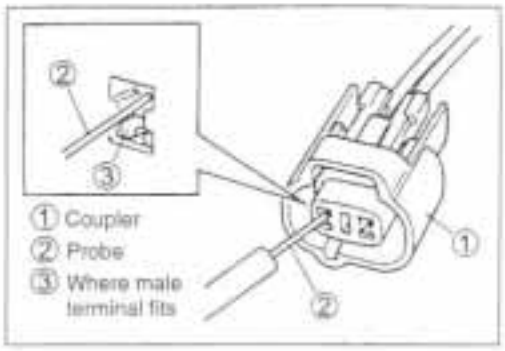

## FUSE

- When a fuse blows, always investigate the cause, correct it and then replace the fuse.
- Do not use a fuse of a different capacity.
- Do not use wire or any other substitute for the fuse.

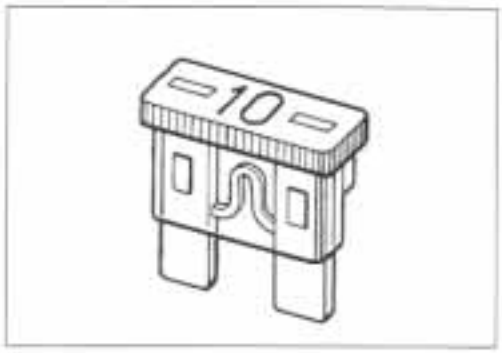


## ECM/VARIOUS SENSORS

- Since each component is a high-precision part, great care should be taken not to apply any sharp impacts during removal and installation.

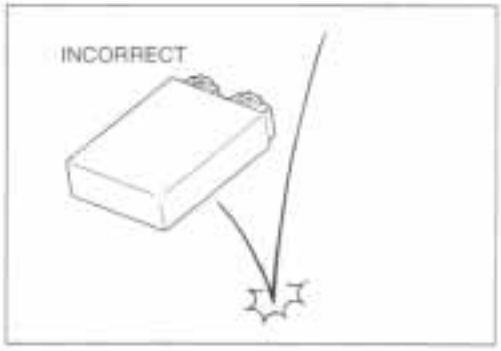


- Be careful not to touch the electrical terminals of the ECM. The static electricity from your body may damage this part.

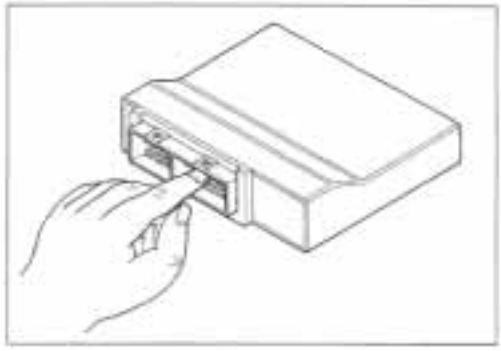

- When disconnecting and connecting the ECM couplers, make sure to turn OFF the ignition switch, or electronic parts may get damaged.

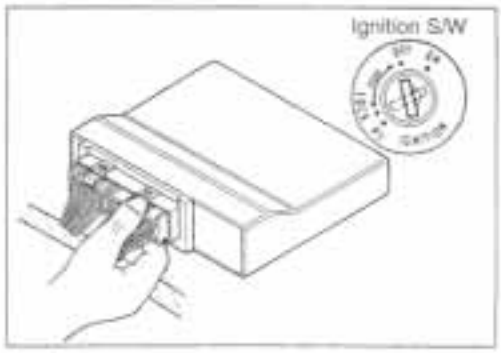


- Battery connection in reverse polarity is strictly prohibited. Such a wrong connection will damage the components of the FI system instantly when reverse power is applied.

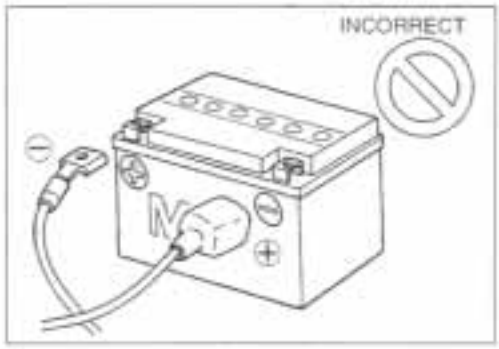

- Removing any battery terminal of a running engine is strictly prohibited.
  The moment such removal is made, damaging counter electromotive force will be applied to the ECM which may result in serious damage.

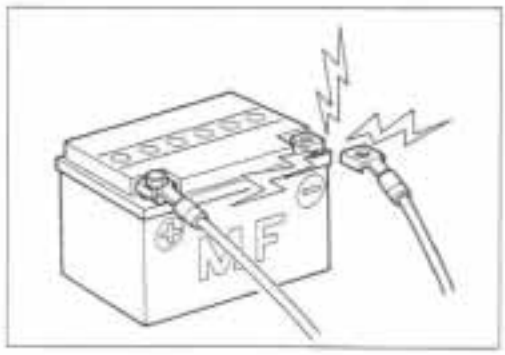

- Before measuring voltage at each terminal, check to make sure that battery voltage is 11V or higher. Terminal voltage check at low battery voltage will lead to erroneous diagnosis.

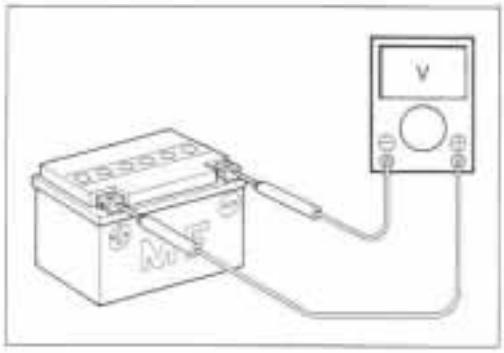


- Never connect any tester (voltmeter, ohmmeter, or whatever) to the ECM when its coupler is disconnected. Otherwise, damage to ECM may result.
- Never connect an ohmmeter to the ECM with its coupler connected. If attempted, damage to ECM or sensors may result.
- Be sure to use a specified voltmeter/ohmmeter. Otherwise, accurate measurements may not be obtained and personal injury may result.

## ELECTRICAL CIRCUIT INSPECTION PROCEDURE

While there are various methods for electrical circuit inspection, described here is a general method to check for open and short circuit using an ohmmeter and a voltmeter.

### OPEN CIRCUIT CHECK

Possible causes for the open circuit are as follows. As the cause can exist in the connector/coupler or terminal, they need to be checked carefully.

- Loose connection of connector/coupler
- Poor contact of terminal (due to dirt, corrosion or rust, poor contact tension, entry of foreign object etc.)
- Wire harness being open
- Poor terminal-to-wire connection

- Disconnect the negative cable from the battery.
- Check each connector/coupler at both ends of the circuit being checked for loose connection. Also check for condition of the coupler lock if equipped.

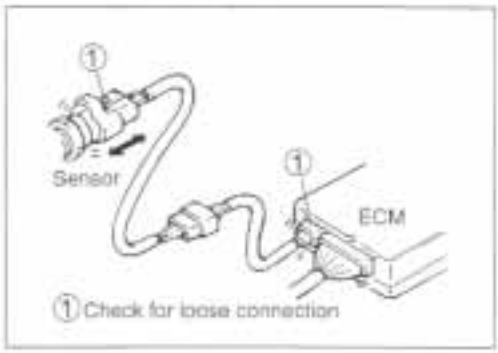


- Using a test male terminal, check the female terminals of the circuit being checked for contact tension.
  Check each terminal visually for poor contact (possibly caused by dirt, corrosion, rust, entry of foreign object, etc.). At the same time, check to make sure that each terminal is fully inserted in the coupler and locked.
  If contact tension is not enough, rectify the contact to increase tension or replace.
  The terminals must be clean and free of any foreign material which could impede proper terminal contact.
- Using continuity inspect or voltage check procedure as described below, inspect the wire harness terminals for open circuit and poor connection. Locate abnormality, if any.

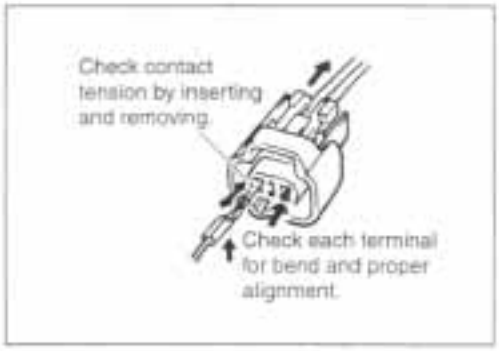


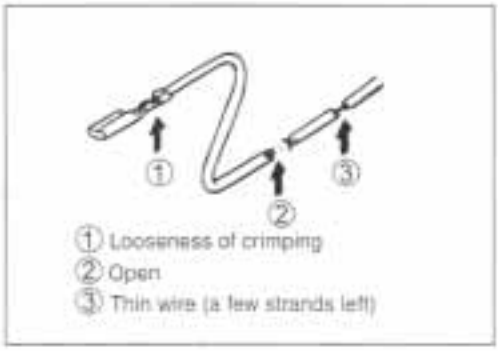


**Continuity check**

- Measure resistance across coupler Ⓑ (between Ⓐ and Ⓒ in the figure).
  If no continuity is indicated (infinity or over limit), the circuit is open between terminals Ⓐ and Ⓒ.

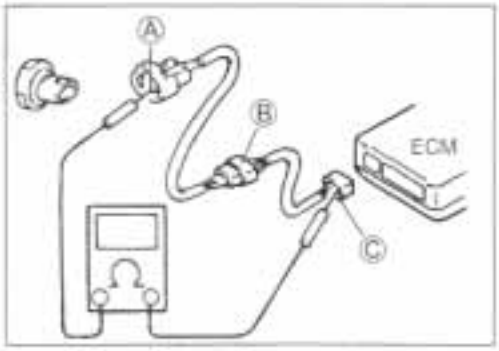


- Disconnect the coupler Ⓑ and measure resistance between couplers Ⓐ and Ⓑ'.
  If no continuity is indicated, the circuit is open between couplers Ⓐ and Ⓑ'. If continuity is indicated, there is an open circuit between couplers Ⓑ' and Ⓒ or an abnormality in coupler Ⓑ' or coupler Ⓒ.

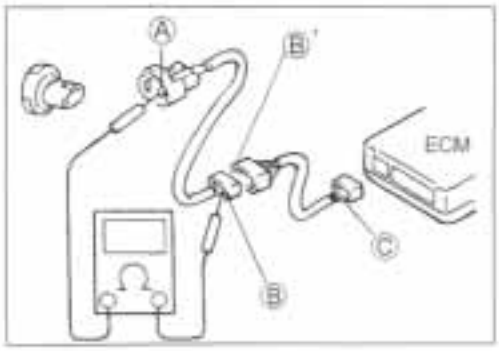

### VOLTAGE CHECK

If voltage is supplied to the circuit being checked, voltage check can be used as circuit check.

- With all connectors/couplers connected and voltage applied to the circuit being checked, measure voltage between each terminal and body ground.

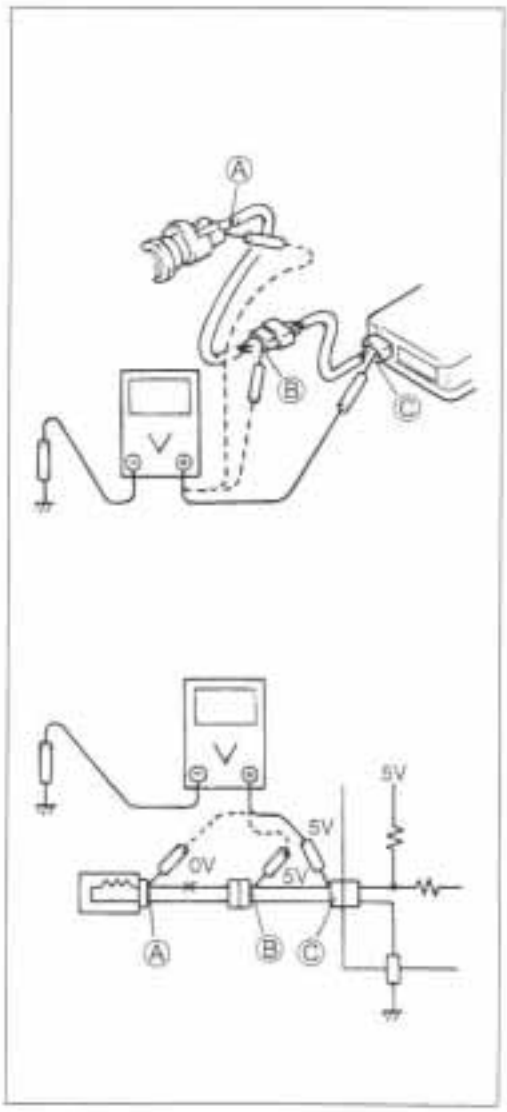


If measurements were taken as shown in the figure at the right and results are as listed below, it means that the circuit is open between terminals Ⓐ and Ⓑ.

**Voltage Between:**

Ⓒ and body ground: Approx. 5V
Ⓑ and body ground: Approx. 5V
Ⓐ and body ground: 0V

Also, if measured values are as listed below, a resistance (abnormality) exists which causes the voltage drop in the circuit between terminals Ⓐ and Ⓑ.

**Voltage Between:**

Ⓒ and body ground: Approx. 5V
Ⓑ and body ground: Approx. 5V — 2V voltage drop
Ⓐ and body ground: Approx. 3V

### SHORT CIRCUIT CHECK (WIRE HARNESS TO GROUND)

- Disconnect the negative cable from the battery.
- Disconnect the connectors/couplers at both ends of the circuit to be checked.

*NOTE:*
*If the circuit to be checked branches to other parts as shown, disconnect all connectors/couplers of those parts. Otherwise, diagnosis will be misled.*

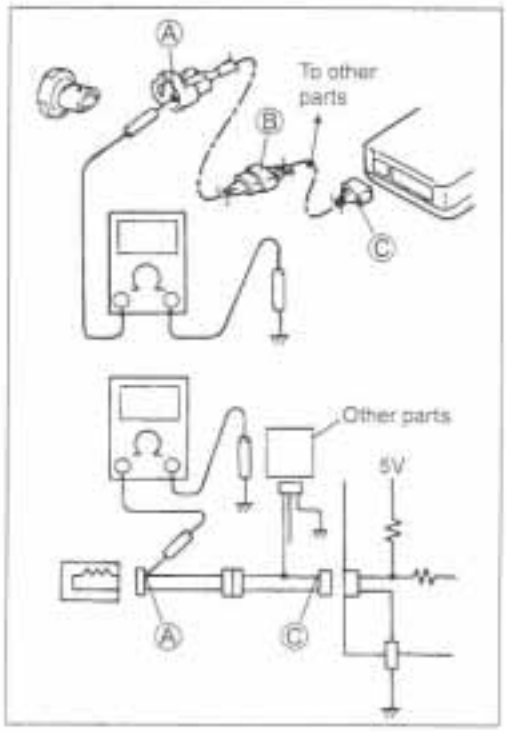


- Measure resistance between terminal at one end of circuit (Ⓐ terminal in figure) and body ground. If continuity is indicated, there is a short circuit to ground between terminals Ⓐ and Ⓒ.

- Disconnect the connector/coupler included in circuit (coupler Ⓑ) and measure resistance between terminal Ⓐ and body ground.
  If continuity is indicated, the circuit is shorted to the ground between terminals Ⓐ and Ⓑ.

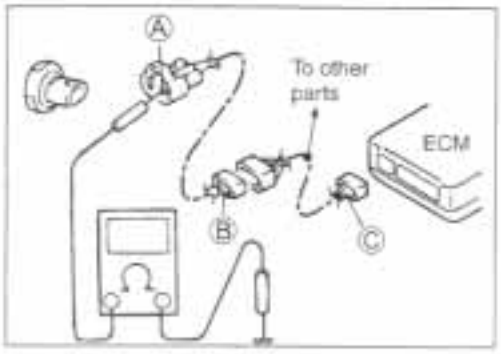


## USING TESTERS

- Use the Suzuki multi-circuit tester (09900-25008).
- Use well-charged batteries in the tester.
- Be sure to set the tester to the correct testing range.

### Using the tester

- Incorrectly connecting the ⊕ and ⊖ probes may cause the inside of the tester to burnout.
- If the voltage and current are not known, make measurements using the highest range.
- Reset the pocket tester to 0Ω before measuring each resistance or after changing the resistance range.
- When measuring the resistance with the multi-circuit tester, also measure the resistance with no-load. Sub-tract that resistance from the resistance measured under load in order to get the true resistance.

(Measured resistance) − (No-load resistance) = (True resistance)

- When measuring the resistance with the multi-circuit tester, ∞ will be shown as 10.00MΩ and "1" flashes in the display.
- Check that no voltage is applied before making the measurement. If voltage is applied, the tester may be damaged.
- After using the tester, turn the power off.

**09900-25008: Multi-circuit tester**

*NOTE:*

- *When connecting the multi circuit tester, install fine copper wires (O.D is below 0.5 mm) to the back side of the lead wire coupler and connect the probes of tester to them.*
- *Use a fine copper wire, the outer diameter being below 0.5 mm, to prevent the rubber of the water proof coupler from damage.*

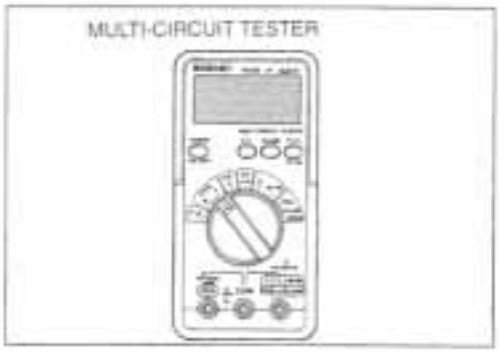

# FI SYSTEM TECHNICAL FEATURES

## INJECTION TIME (INJECTION VOLUME)

The factors to determine the injection time include the basic fuel injection time which is calculated on the basis of the intake air pressure, engine speed and throttle opening angle, and various compensations which are determined according to the signals from various sensors that detect the engine and driving conditions.

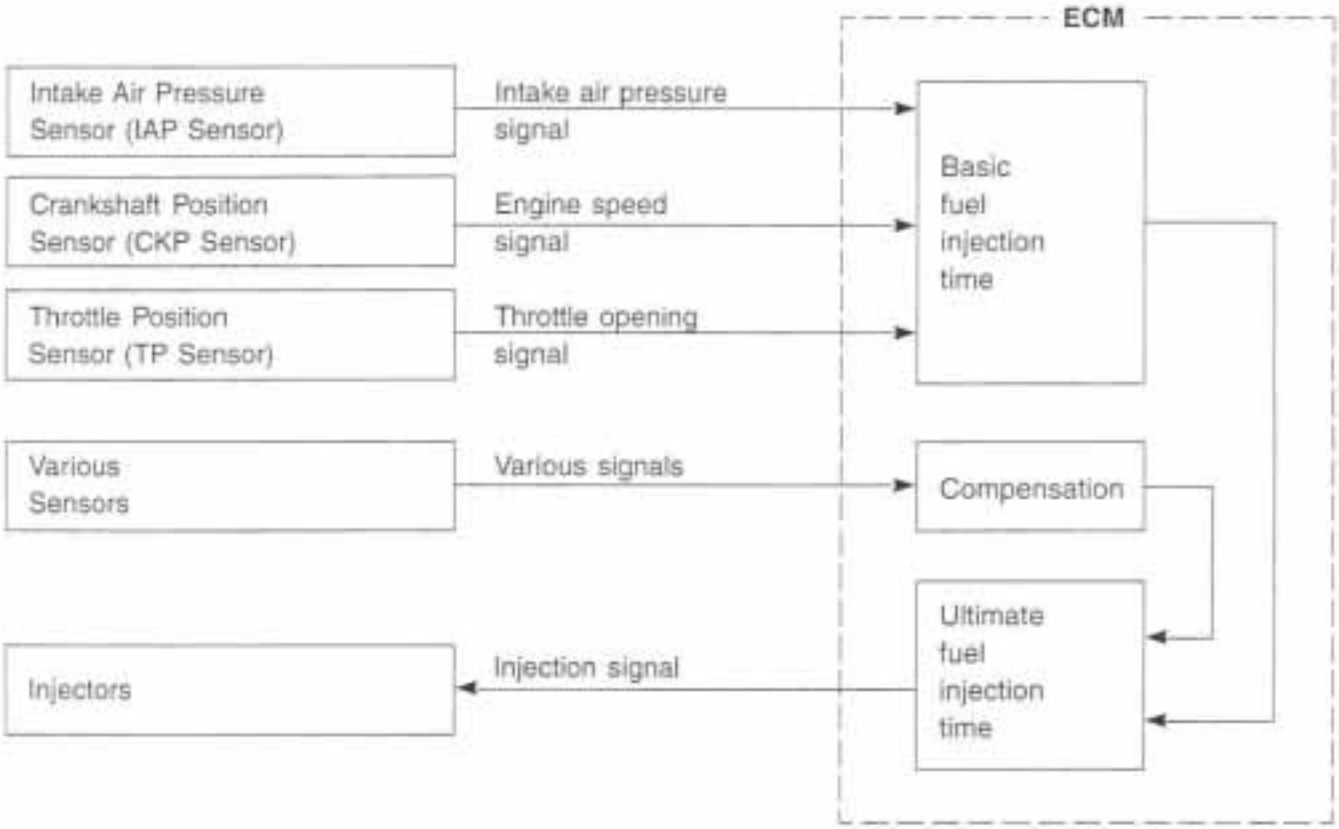

## COMPENSATION OF INJECTION TIME (VOLUME)

The following different signals are output from the respective sensors for compensation of the fuel injection time (volume).

| SIGNAL | DESCRIPTION |
|---|---|
| ATMOSPHERIC PRESSURE SENSOR SIGNAL | When atmospheric pressure is low, the sensor sends the signal to the ECM and reduce the injection time (volume). |
| ENGINE COOLANT TEMPERATURE SENSOR SIGNAL | When engine coolant temperature is low, injection time (volume) is increased. |
| INTAKE AIR TEMPERATURE SENSOR SIGNAL | When intake air temperature is low, injection time (volume) is increased. |
| BATTERY VOLTAGE SIGNAL | ECM operates on the battery voltage and at the same time, it monitors the voltage signal for compensation of the fuel injection time (volume). A longer injection time is needed to adjust injection volume in the case of low voltage. |
| ENGINE RPM SIGNAL | At high speed, the injection time (volume) is increased. This is the compensation of the SRAD. |
| STARTING SIGNAL | When starting engine, additional fuel is injected during cranking engine. |
| ACCELERATION SIGNAL/ DECELERATION SIGNAL | During acceleration, the fuel injection time (volume) is increased, in accordance with the throttle opening speed and engine rpm. During deceleration, the fuel injection time (volume) is decreased. |

## INJECTION STOP CONTROL

| SIGNAL | DESCRIPTION |
|---|---|
| TIP OVER SENSOR SIGNAL (FUEL SHUT-OFF) | When the motorcycle tips over, the tip over sensor sends a signal to the ECM. Then, this signal cuts OFF current supplied to the fuel pump, fuel injectors and ignition coils. |
| OVER-REV. LIMITER SIGNAL | The fuel injectors stop operation when engine rpm reaches rev. limit rpm. |

## FUEL DELIVERY SYSTEM

The fuel delivery system consists of the fuel tank, fuel pump, fuel filters, fuel feed hose, fuel delivery pipe (including fuel injectors) and fuel pressure regulator. There is no fuel return hose. The fuel in the fuel tank is pumped up by the fuel pump and pressurized fuel to flow into the injector installed in the fuel delivery pipe. Fuel pressure is regulated by the fuel pressure regulator. As the fuel pressure applied to the fuel injector (the fuel pressure in the fuel delivery pipe) is always kept absolute fuel pressure of 3.0 kgf/cm² (300 kPa, 43 psi), the fuel is injected into the throttle body in conic dispersion when the injector opens according to the injection signal from the ECM.

The fuel relieved by the fuel pressure regulator flows out to the fuel tank.

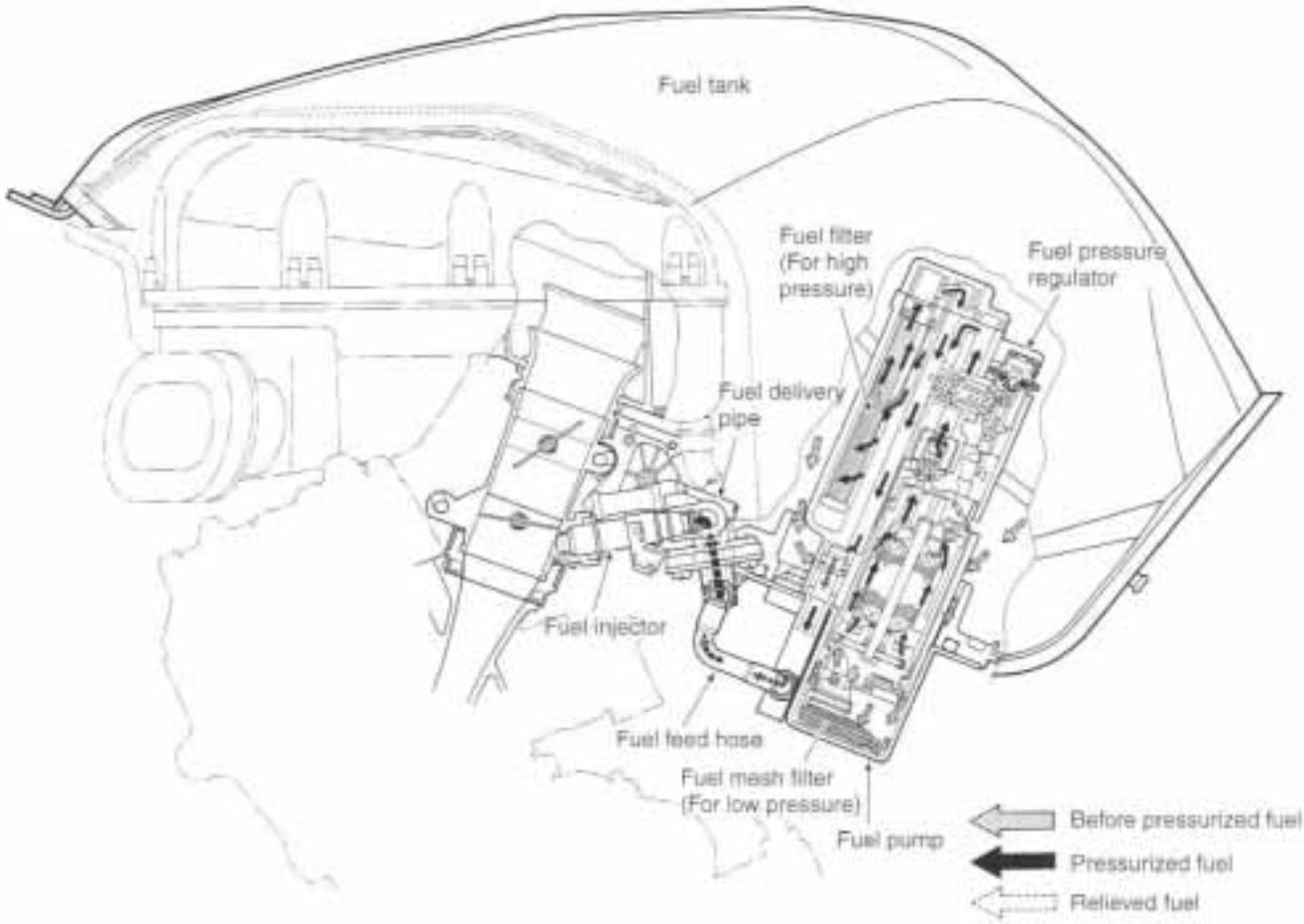

## FUEL PUMP

The electric fuel pump is mounted at the bottom of the fuel tank, which consists of the armature, magnet, impeller, brush, check valve and relief valve. The ECM controls its ON/OFF operation as controlled under the FUEL PUMP CONTROL SYSTEM.

When electrical energy is supplied to the fuel pump, the motor in the pump runs and so does the impeller. This causes a pressure difference to occur between both sides of the impeller as there are many grooves around it. Then the fuel is drawn through the inlet port, and with its pressure increased, it is discharged through the outlet port. The fuel pump has a check valve to keep some pressure in the fuel feed hose even when the fuel pump is stopped. Also, the relief valve is equipped in the fuel pump, which releases pressurized fuel to the fuel tank when the outlet of the fuel pressure has increased up to 4.5 – 6.0 kgf/cm² (450 – 600 kPa, 64 – 85 psi).

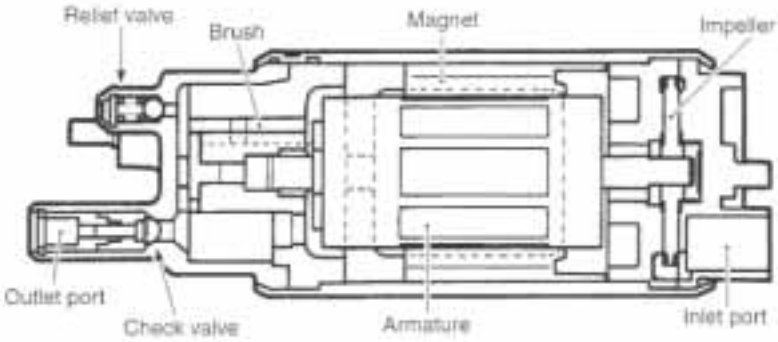


When the impeller is driven by the motor, pressure differential occurs between the front part and the rear part of the blade groove as viewed in angular direction due to fluid friction. This process continuously takes place causing fuel pressure to be built up. The pressurized fuel is then let out from the pump chamber and discharged through the motor section and the check valve.

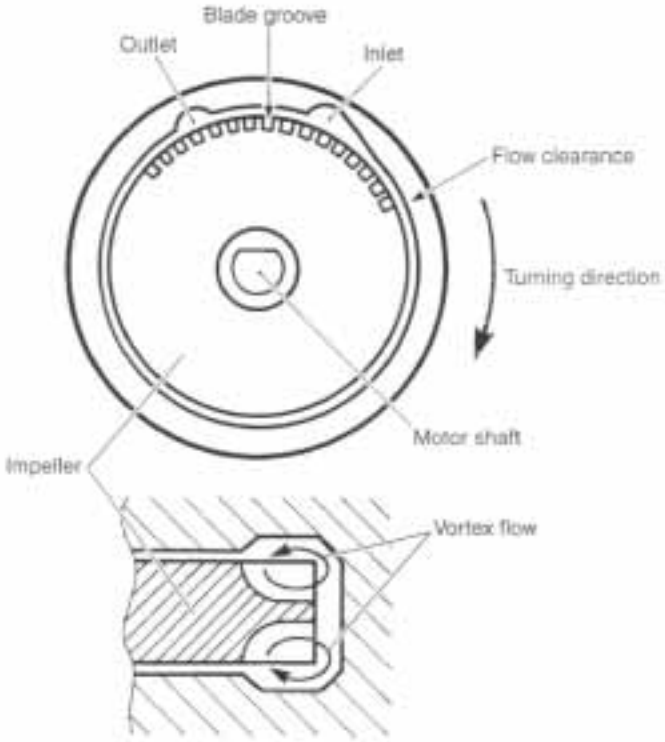

## FUEL PRESSURE REGULATOR

The fuel pressure regulator consists of the spring and valve. It keeps absolute fuel pressure of 3.0 kgf/cm² (300 kPa, 43 psi) applied to the injector at all times.

When the fuel pressure rises more than 3.0 kgf/cm² (300 kPa, 43 psi), the fuel pushes the valve in the regulator open and excess fuel returns to the fuel tank.

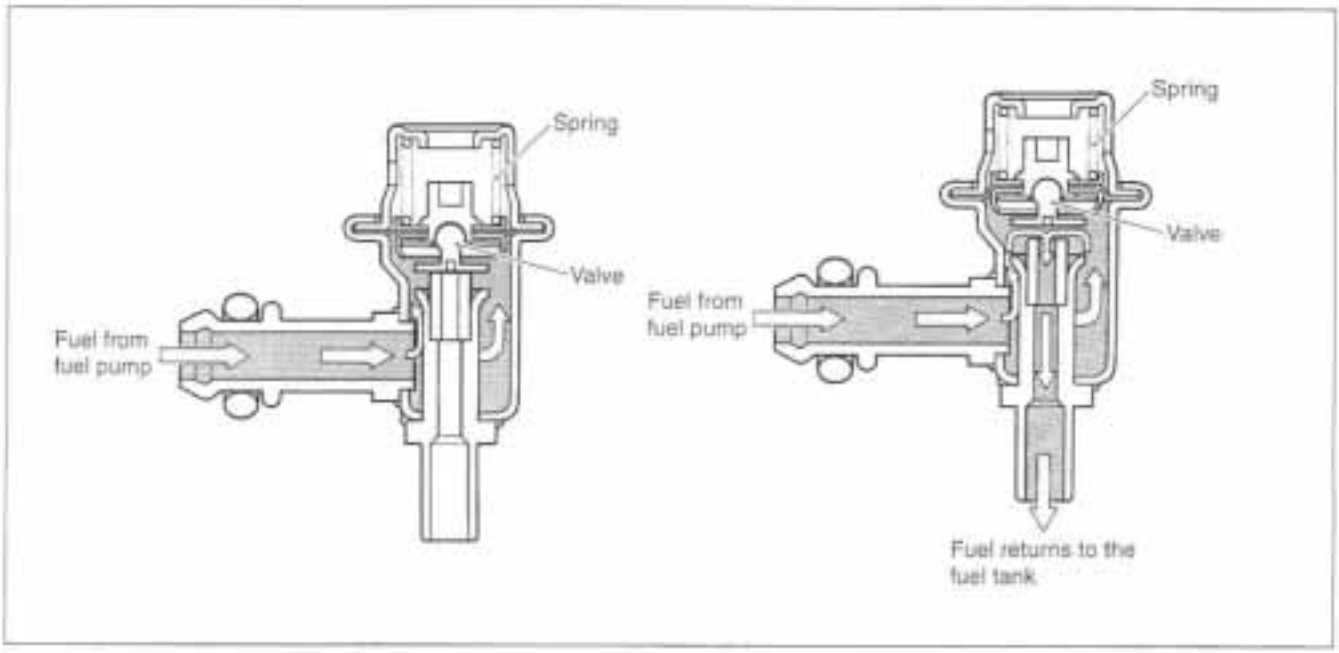


## FUEL INJECTOR

The fuel injector consists of the solenoid coil, plunger, needle valve and filter.

It is an electromagnetic type injection nozzle which injects fuel in the throttle body according to the signal from the ECM.

When the solenoid coil of the injector is energized by the ECM, it becomes an electromagnet and attracts the plunger. At the same time, the needle valve incorporated with the plunger opens and the injector which is under the fuel pressure injects fuel in conic dispersion. As the lift stroke of the needle valve of the injector is set constant, the volume of the fuel injected at one time is determined by the length of time during which the solenoid coil is energized (injection time).

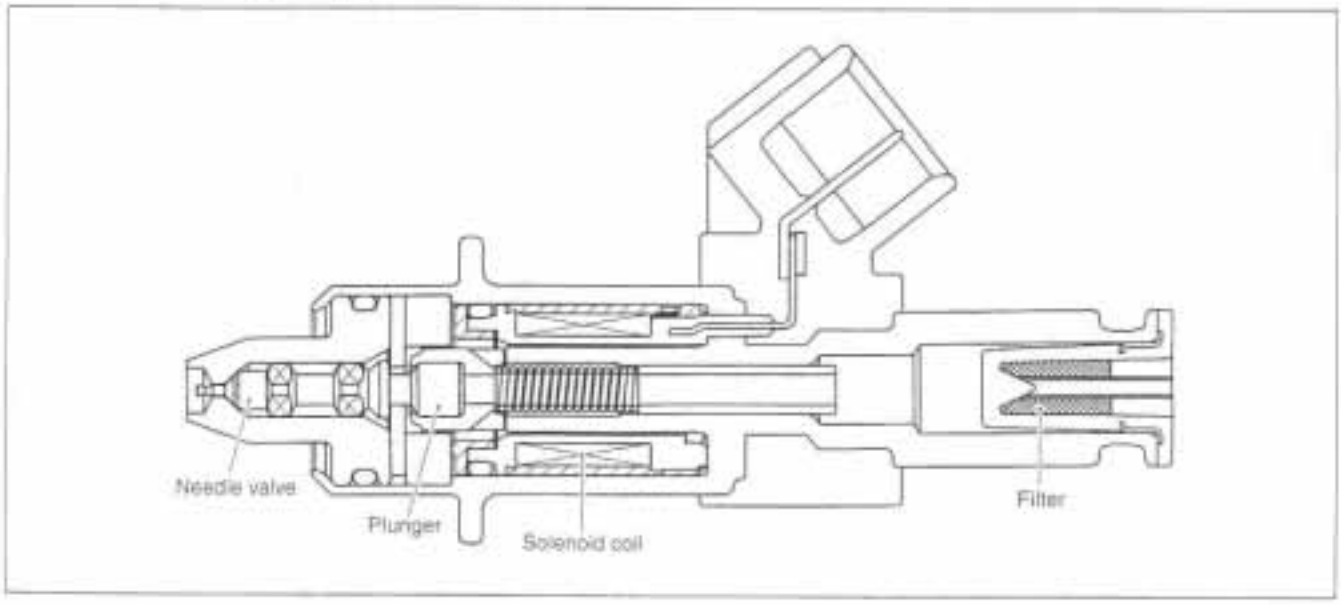

## FUEL PUMP CONTROL SYSTEM

When the ignition switch is turned on, current from the battery flows to the fuel pump motor through the side-stand relay and the fuel pump relay causing the motor to turn.

Since the ECM has a timer function, the fuel pump motor stops turning in three seconds after the switch has been turned on.

Thereafter, when the crankshaft is turned by the starter motor or the engine has been started, the engine revolving signal is input to the ECM. Then, current flows to the fuel pump motor from the battery through the side-stand relay and the fuel pump relay so that the pump continues to function.

A tip over sensor is provided in the fuel pump control circuit. By this provision, anytime the motorcycle tips over, the tip over sensor sends a signal to the ECM to turn off power to the fuel pump relay, causing the fuel pump motor to stop. At the same time, current to the fuel injectors as well as the ignition coil is interrupted, which then stops the engine.

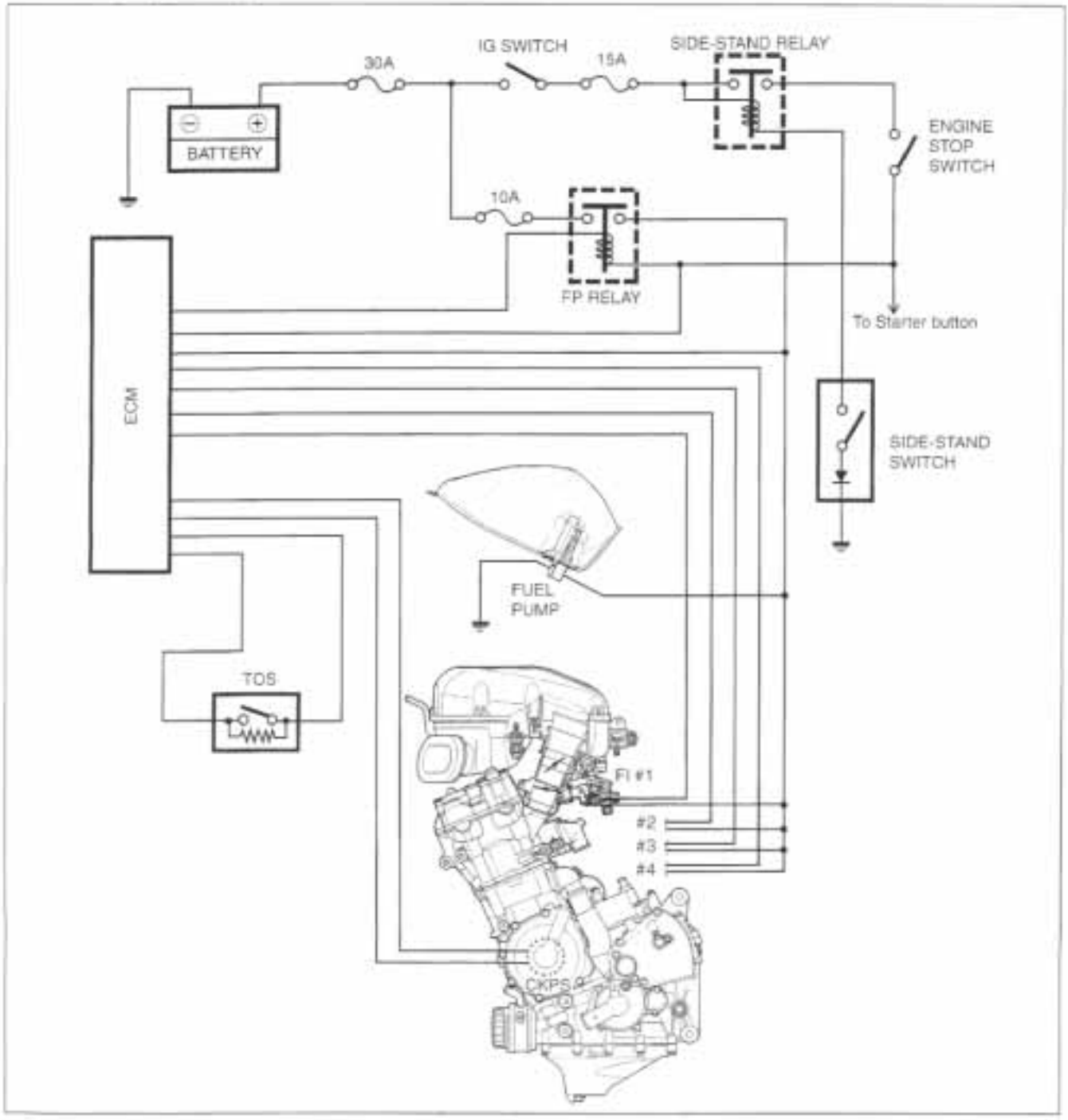

## ECM (FI CONTROL UNIT)

The ECM is located under the seat.

The ECM consists of CPU (Central Processing Unit), memory (ROM) and I/O (Input/Output) sections. The signal from each sensor is sent to the input section and then sent to CPU. On the basis of signal information received, CPU calculates the volume of fuel necessary for injection using maps programmed for varying engine conditions. Then, the operation signal of the fuel injection is sent from the output section to the fuel injector.

The eight kinds of independent program maps are programmed in the ROM.

These eight kinds of maps are designed to compensate for differences of the intake/exhaust systems and cooling performance.

LIGHT LOAD: When the engine is running in a light load, the fuel injected volume (time) is determined the basis of the intake air pressure and engine speed.

HEAVY LOAD: When the engine is running in a heavy load, the fuel injected volume (time) is determined the basis of the throttle valve opening and engine speed.

## INJECTION TIMING

The system employs a sequential, four-cylinder independent injection type, using the crankshaft position sensor (signal generator) to determine the piston position (injection timing and ignition timing) and the camshaft position sensor to identify the cylinder during operation, and these information are sent to the ECM. This makes it possible to inject the optimum volume of fuel in the best timing for the engine operating conditions.

When the crankshaft begins to turn at the time of starting, the ECM sends the signals to the four injectors, #1, #2, #3 and #4 to have them inject fuel simultaneously. From the second turn onward, the sequential four-cylinder independent injection occurs as explained above.

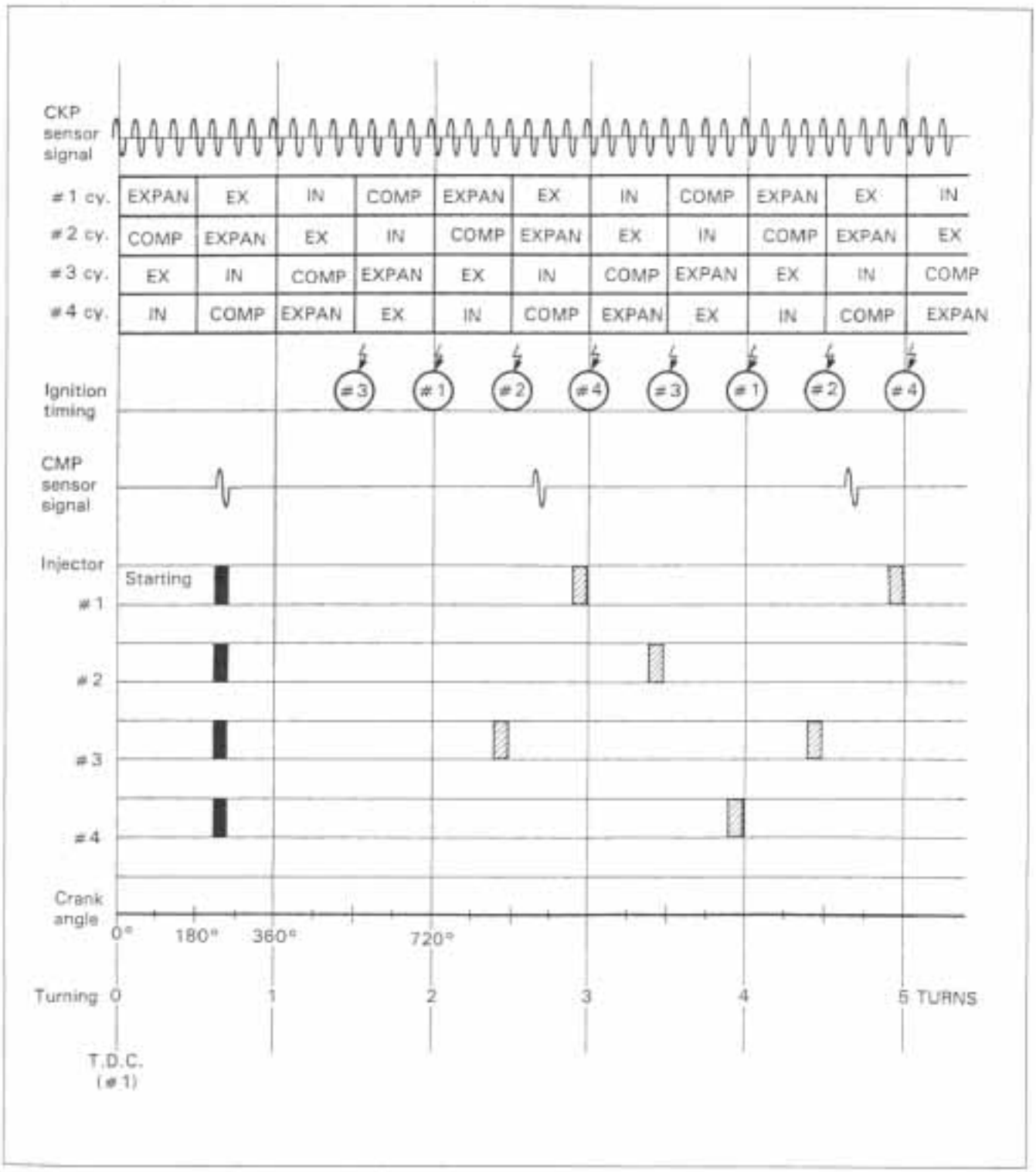

## SENSORS

### INTAKE AIR PRESSURE SENSOR (IAP SENSOR)

The intake air pressure sensor is located at the rear side of the air cleaner box and its vacuum hose is connected to the throttle body.
The sensor detects the intake air pressure, which is then converted into voltage signal and sent to the ECM.
The basic fuel injection time (volume) is determined according to the voltage signal (output voltage).
The voltage signal increases when the intake air pressure is high.

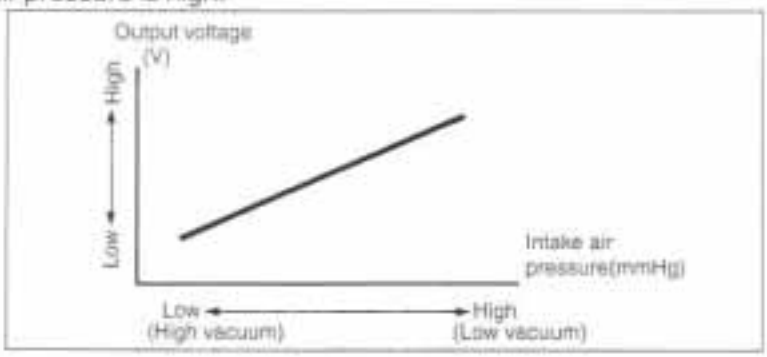


### THROTTLE POSITION SENSOR (TP SENSOR)

The throttle position sensor is installed on the No.4 throttle body.
The throttle position sensor is a kind of variable resistor which detects the throttle opening angle.
The battery voltage in the sensor is changed to the throttle position voltage which is then sent to the ECM.
The basic fuel injection time (volume) is determined according to the voltage signal (output voltage).
The voltage signal increases as the throttle is opened wider.

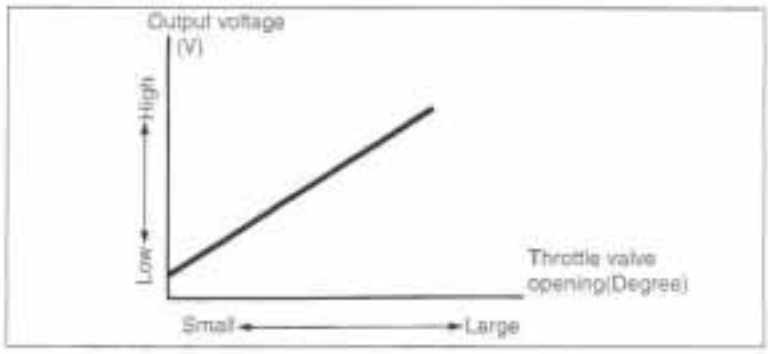

### CRANKSHAFT POSITION SENSOR (CKP SENSOR)

The signal rotor is mounted on the right end of the crankshaft, and the crankshaft position sensor (Pick-up coil) is installed on the right side of the middle crankcase.
The sensor generates the pick-up signal to be supplied to the ECM.
The ECM calculates and decides both the fuel injection timing and ignition timing.
The injection volume increases when the engine rpm is high.

### CAMSHAFT POSITION SENSOR (CMP SENSOR)

The signal rotor is installed on the intake camshaft, and the camshaft position sensor (Pick-up coil) is installed on the cylinder head cover.
The sensor generates the pick-up signal to be supplied to the ECM.
The ECM calculates and decides the cylinder identity and sequential injection timing.

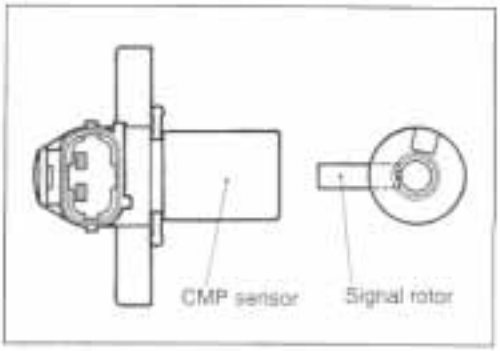


### INTAKE AIR TEMPERATURE SENSOR (IAT SENSOR)

The intake air temperature sensor is installed at the right side of the air cleaner box.
The sensor detects the intake air temperature in thermistor resistance value. With this resistance value converted to voltage signal, the signal is sent to the ECM. The injection volume increases as intake air temperature decreases.

The thermistor resistance value increases when the intake air temperature is low, and decreases when the intake air temperature is high.

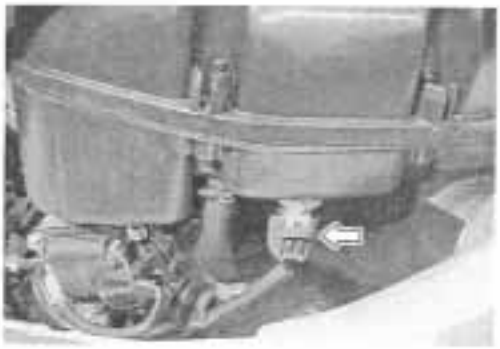

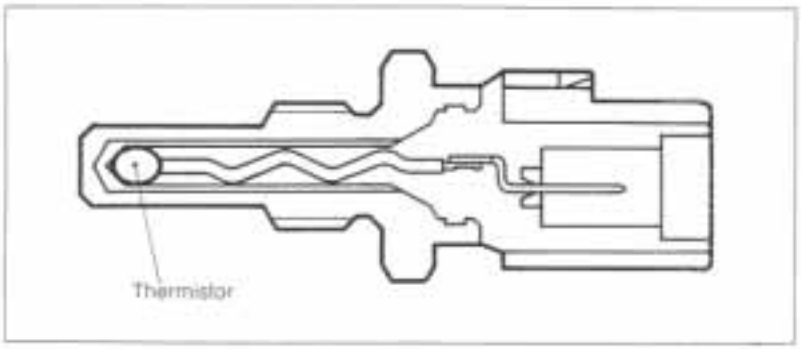


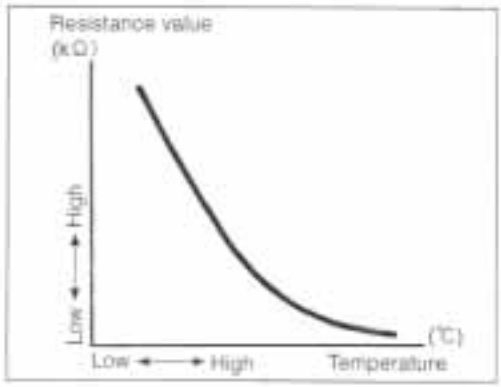

## ENGINE COOLANT TEMPERATURE SENSOR (ECT SENSOR)

The engine coolant temperature sensor is installed at the rear side of the cylinder head.
The sensor detects the engine coolant temperature in thermistor resistance value, which is then converted to voltage signal and sent to the ECM. The injection volume increases as coolant temperature decreases.

The thermistor resistance value increases when the engine coolant temperature is low, and decreases when the engine coolant temperature is high.

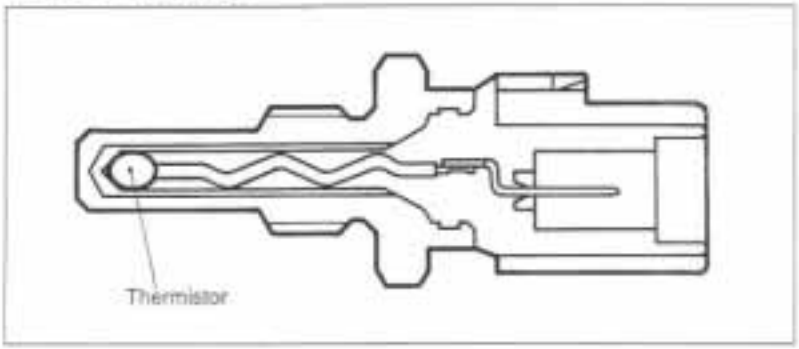


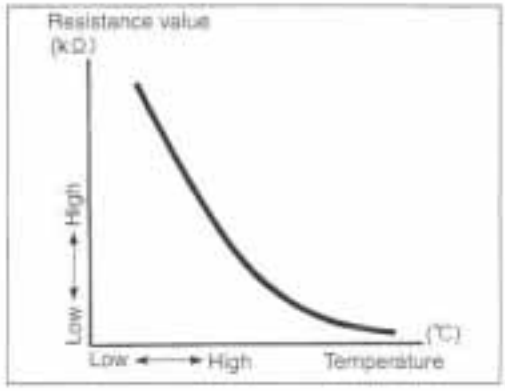


## ATMOSPHERIC PRESSURE SENSOR (AP SENSOR)

The atmospheric pressure sensor is located over the ECM.
The sensor detects the atmospheric pressure. The detected pressure is converted into voltage signal and sent to the ECM.
The injection time (volume) is controlled according to the voltage signal (output voltage).

The voltage signal increases as the atmospheric pressure rises.

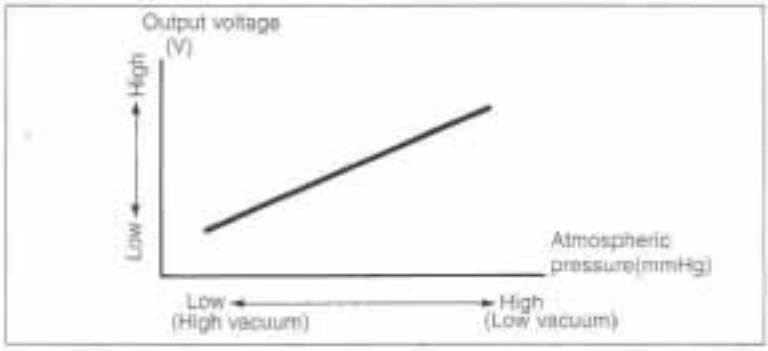

### TIP OVER SENSOR (TO SENSOR)

The tip over sensor is located in ahead of the battery holder.
The sensor detects the leaning of the motorcycle. When it leans more than 43°, the mechanical switch turns ON and a signal is sent to the ECM. At the same time, this signal cuts OFF current supply to the fuel pump, fuel injectors and ignition coils.

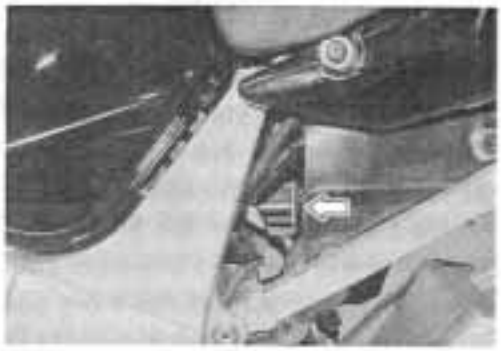

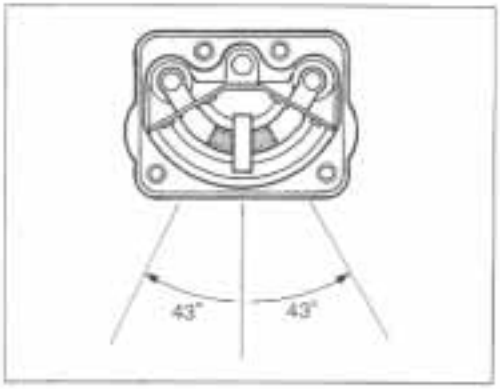


### SECONDARY THROTTLE POSITION SENSOR (STP SENSOR)

The secondary throttle position sensor is installed on the No.4 throttle body.
The secondary throttle position sensor is a kind of variable resistor which detects the secondary throttle opening angle.
The STP sensor detects the STV actuator movement by the voltage signal which is then sent to the ECM.
The ECM determines the ST valve angle based on the operation map.
The voltage signal increases as the secondary throttle is opened wider.

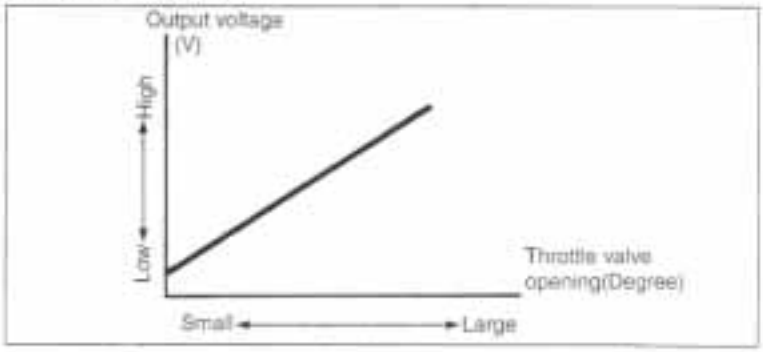

# INTAKE AIR SYSTEM

## SECONDARY THROTTLE CONTROL SYSTEM

The secondary throttle control system (STC system) consists of the secondary throttle valve (ST valve), secondary throttle valve actuator (STV actuator) and secondary throttle position sensor (STP sensor).
ST valve is installed in each throttle body. STV actuator and STP sensor are installed on the right side of the throttle body assembly. The ST valve is turned by the STV actuator.
This system is designed to control the volume and the velocity of intake air so as to improve engine output power. The system produces more seamless and linear throttle response.
This is performed by opening or closing the throttle body intake port according to the gear positions and engine rpm.
When the engine is running in a low speed range, the intake port is almost closed for controlled intake air volume. This improves the effect to intake air flow pulsation so that the engine can output higher power in this speed range.
As the engine speed grows faster, the intake port are gradually open for guiding the proper volume of air into the throttle bodies so that the engine can produce the maximum power in each speed range.

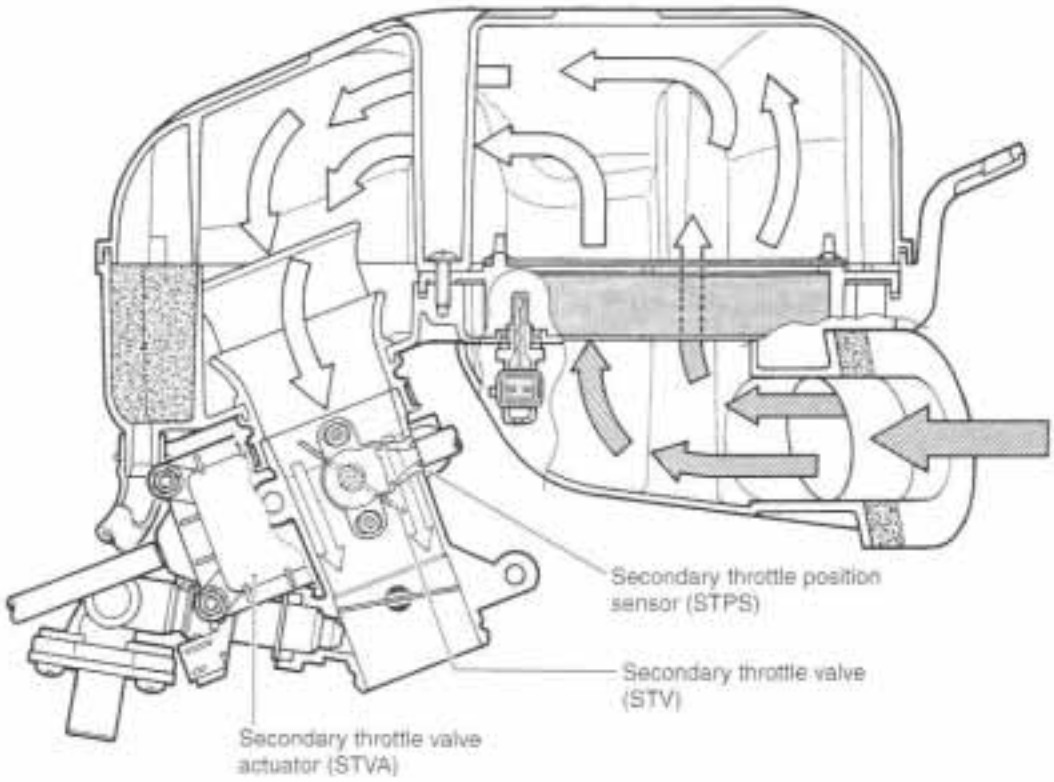

## OPERATION

The secondary throttle control system (STC system) operates on the signal supplied from the ECM. The open/close operation of the secondary throttle valve (ST valve) is performed by the secondary throttle valve actuator (STV actuator) which is controlled by the STC unit to change the current direction into the motor of the STV actuator.

The STP sensor detects the STV actuator movement by measuring voltage and the ECM determines the ST valve angle based on the operation map.

When turning the ignition switch ON, every time the STV actuator automatically drives the ST valve and checks fully close and open position voltage and return to original position to confirm each ST valve position voltage.

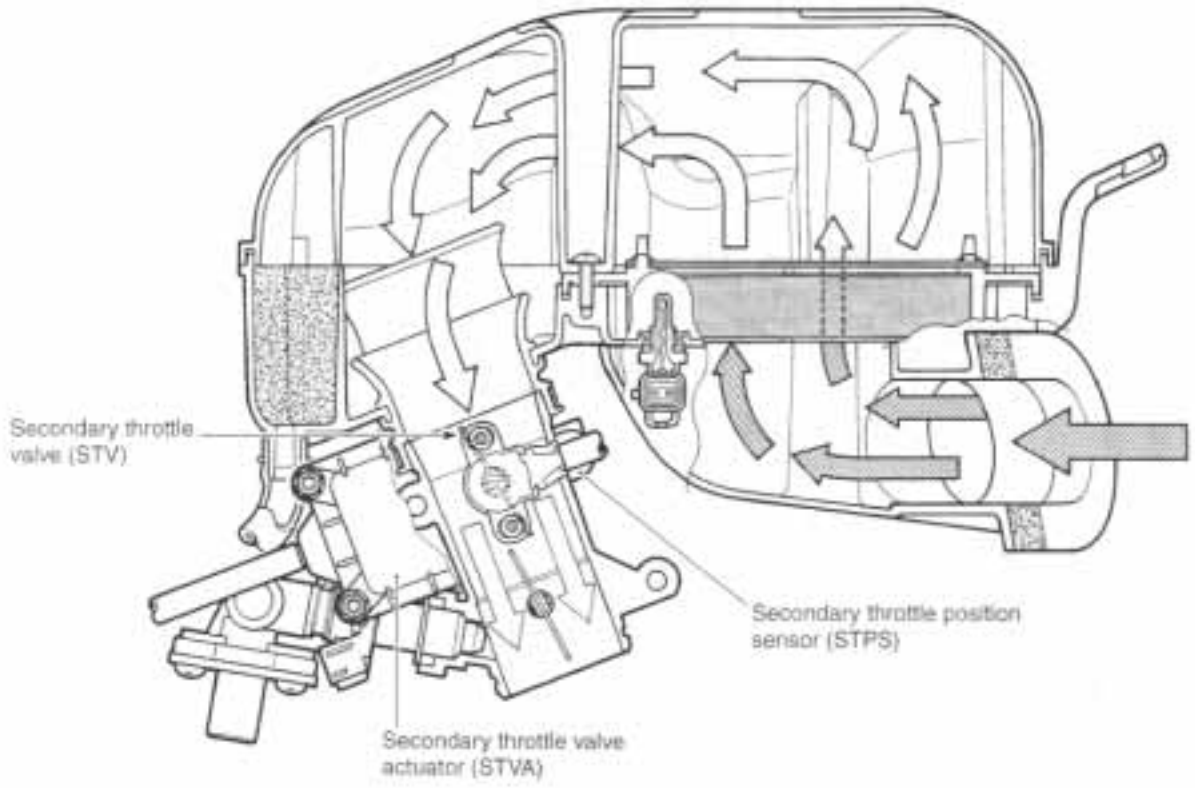

# FI SYSTEM PARTS LOCATION

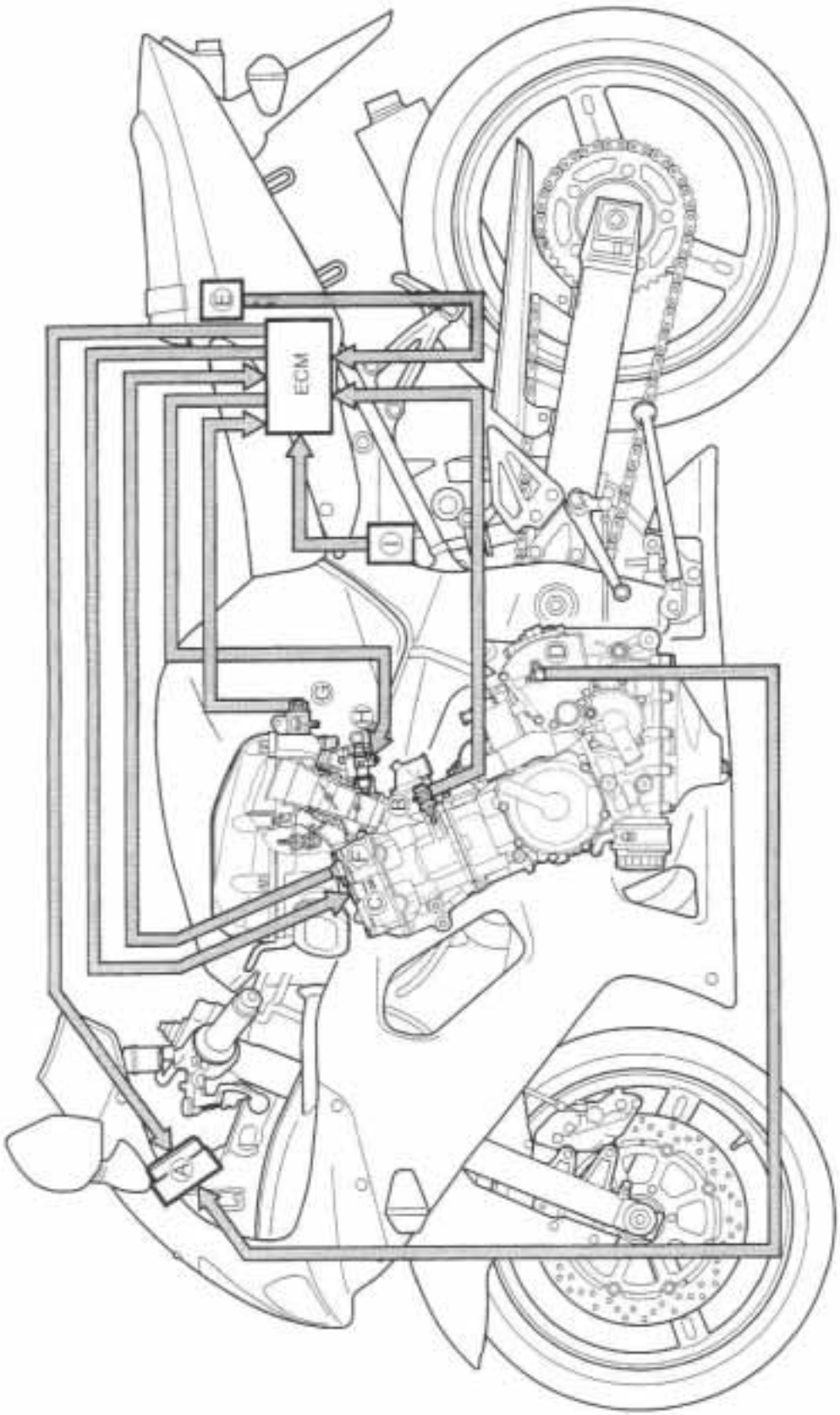


Ⓐ Speedometer
Ⓑ Engine coolant temperature sensor (ECTS)
Ⓒ Ignition coil (IG COIL)
Ⓓ Speed sensor
Ⓔ Atmospheric pressure sensor (APS)
Ⓕ Camshaft position sensor (CMPS)
Ⓖ Intake air pressure sensor (IAPS)
Ⓗ Fuel injector (FI)
Ⓘ Tip over sensor (TOS)

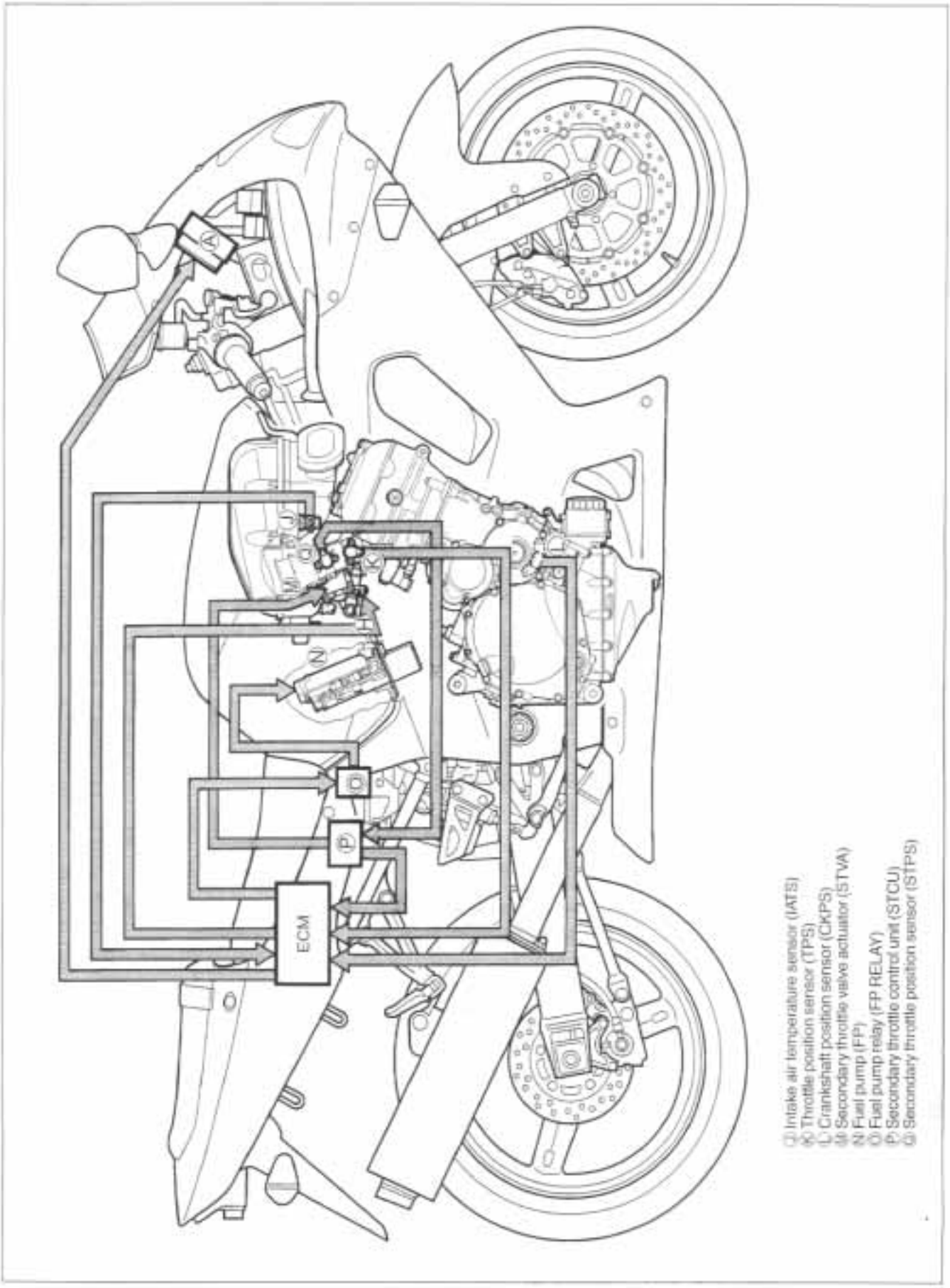
ECM
Ⓐ Intake air temperature sensor (IATS)
Ⓑ Throttle position sensor (TPS)
Ⓒ Crankshaft position sensor (CKPS)
Ⓓ Secondary throttle valve actuator (STVA)
Ⓔ Fuel pump (FP)
Ⓕ Fuel pump relay (FP RELAY)
Ⓖ Secondary throttle control unit (STCU)
Ⓗ Secondary throttle position sensor (STPS)

# FI SYSTEM DIAGRAM

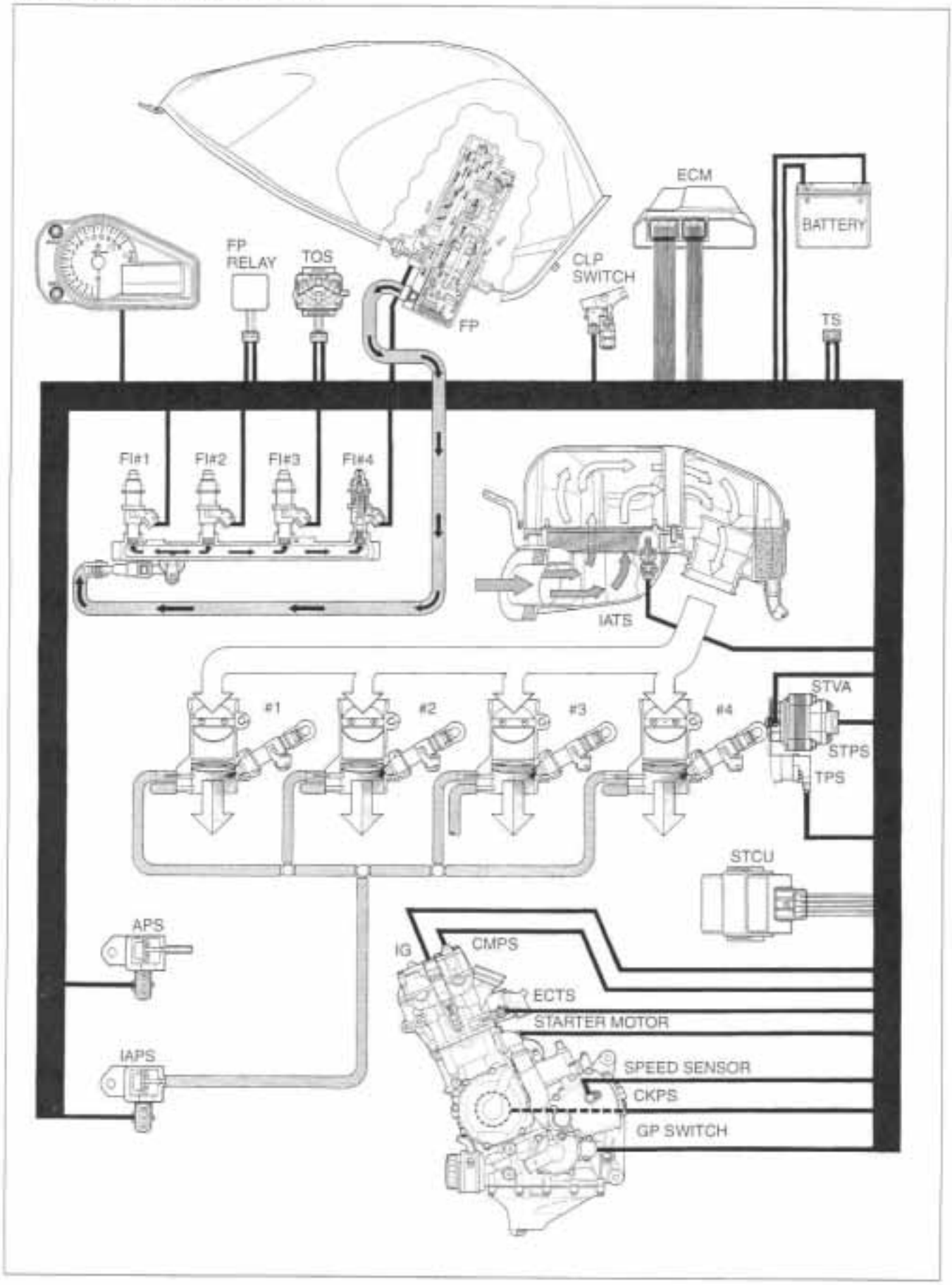

# FI SYSTEM WIRING DIAGRAM

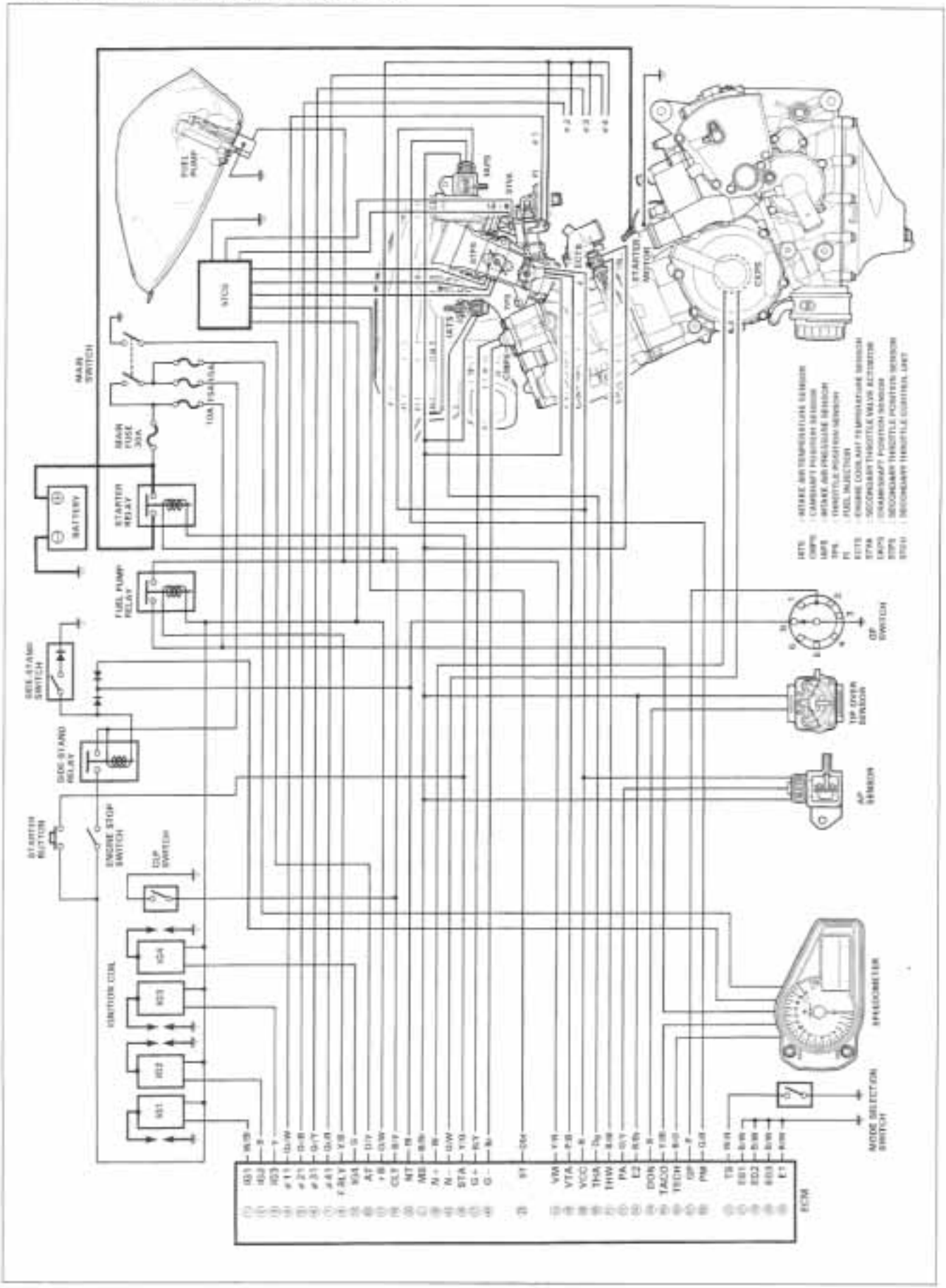

# SELF-DIAGNOSIS FUNCTION

The self-diagnosis function is incorporated in the ECM. The function has two modes, "User mode" and "Dealer mode". The user can only be notified by the LCD (DISPLAY) panel and LED (FI light). To check the function of the individual FI system devices, the dealer mode is prepared. In this check, the special tool is necessary to read the code of the malfunction items.

## USER MODE

| MALFUNCTION | LCD (DISPLAY) INDICATION | FI LIGHT INDICATION | INDICATION MODE |
|---|---|---|---|
| "NO" | Coolant Temp. | — | — |
| "YES" Engine can start | Coolant Temp. and "FI" letters *1 | FI light turns ON. | Each 2 sec. Temp. or "FI" is indicated. |
| "YES" Engine can not start | "FI" letter *2 | FI light turns ON and blinks. | "FI" is indicated continuously. |

*1
When one of the signals is not received by ECM, the fail-safe circuit works and injection is not stopped. In this case, "FI" and coolant temp. are indicated in the LCD panel and motorcycle can run.

*2
The injection signal is stopped, when the camshaft position sensor signal, crankshaft position sensor signal, tip over sensor signal , #1/#2, #3 and #4 ignition signals, #1, #2, #3 and #4 injector signals, fuel pump relay signal or ignition switch signal is not sent to ECM. In this case, "FI" is indicated in the LCD panel. Motorcycle does not run.

"CHEC": The LCD panel indicates "CHEC" when no communication signal from the ECM is received for 5 seconds.

For Example:

The ignition switch is turned ON, and the engine stop switch is turned OFF. In this case, the speedometer does not receive any signal from the ECM, and the panel indicates "CHEC".

If CHEC is indicated, the LCD does not indicate the trouble code. It is necessary to check the wiring harness between ECM and speedometer couplers.

The possible cause of this indication is as follows;

Engine stop switch is in OFF position. Side-stand/ignition inter-lock system is not working. Ignition fuse is burnt.

*NOTE:*

*Until starting the engine, the FI light turns ON.*

*The FI light is also turned ON when engine temperature is high, or oil pressure is low.*

## DEALER MODE

The defective function is memorized in the computer. Use the special tool's coupler to connect to the dealer mode coupler. The memorized malfunction code is displayed on LCD (DISPLAY) panel. Malfunction means that the ECM does not receive signal from the devices. These affected devices are indicated in the code form.

**09930-82710: Mode select switch**

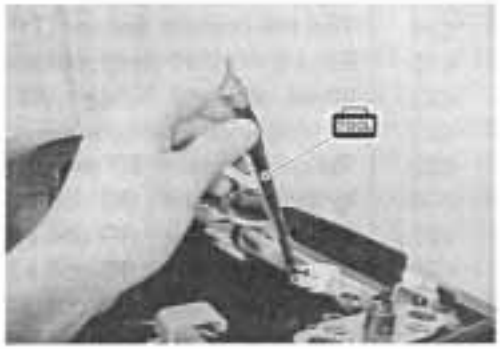

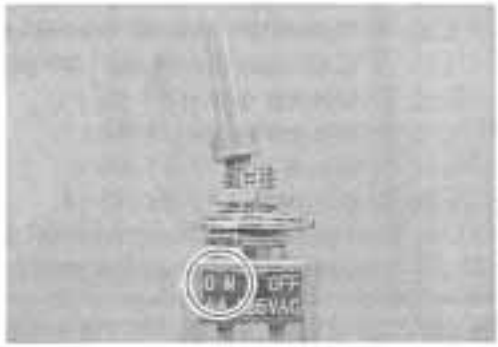


**⚠ CAUTION**

**Before checking the malfunction code, do not disconnect the ECM lead wire couplers.**
**If the couplers from the ECM are disconnected, the malfunction code memory is erased and the malfunction code can not checked.**

| MALFUNCTION | LCD (DISPLAY) INDICATION | FI LIGHT INDICATION | INDICATION MODE |
|---|---|---|---|
| "NO" | c00 | FI light turns OFF. | — |
| "YES" | c** code is indicated from small numeral to large one. | | For each 2 sec., code is indicated. |

| CODE | MALFUNCTION PART | REMARKS |
|---|---|---|
| c00 | None | No defective part |
| c11 | Camshaft position sensor (CMP sensor) | |
| c12 | Crankshaft position sensor (CKP sensor) | Pick-up coil signal, signal generator |
| c13 | Intake air pressure sensor (IAP sensor) | |
| c14 | Throttle position sensor (TP sensor) | *3 |
| c15 | Engine coolant temp. sensor (ECT sensor) | |
| c21 | Intake air temp. sensor (IAT sensor) | |
| c22 | Atmospheric pressure sensor (AP sensor) | |
| c23 | Tip over sensor (TO sensor) | |
| c24 | Ignition signal #1 (IG coil #1) | For #1 cylinder |
| c25 | Ignition signal #2 (IG coil #2) | For #2 cylinder |
| c26 | Ignition signal #3 (IG coil #3) | For #3 cylinder |
| c27 | Ignition signal #4 (IG coil #4) | For #4 cylinder |
| c28 | Secondary throttle valve actuator (STV actuator) | |
| c29 | Secondary throttle position sensor (STP sensor) | |
| c30 | Secondary throttle control unit (STC unit) | |
| c31 | Gear position signal (GP switch) | |
| c32 | Injector signal #1 (FI #1) | For #1 cylinder |
| c33 | Injector signal #2 (FI #2) | For #2 cylinder |
| c34 | Injector signal #3 (FI #3) | For #3 cylinder |
| c35 | Injector signal #4 (FI #4) | For #4 cylinder |
| c41 | Fuel pump control system (FP control system) | Fuel pump, Fuel pump relay |
| c42 | Ignition switch signal (IG switch signal) | Anti-theft |

In the LCD (DISPLAY) panel, the malfunction code is indicated from small code to large code.

*3

To get the proper signal from the throttle position sensor, the sensor basic position is indicated in the LCD (DISPLAY) panel. The malfunction code is indicated in three digits. In front of the three digits, a line appears in any of the position, upper, middle or lower line. If the indication is upper or lower line when engine rpm is 1 300 rpm, slightly turn the throttle position sensor and bring the line to middle.

In the normal condition, the throttle valve stop screw pushes throttle valves slightly, and indication point is middle line.


Setting procedure:

1. Adjust the engine rpm to 1 300 rpm. (☞ 2-15)
2. Stop the engine and connect the special tool (Mode select switch) to the dealer mode coupler at the wiring harness.
3. If the throttle position sensor adjustment is necessary, loosen the screws and turn the throttle position sensor and bring the line to middle.
4. Then, tighten the screws to fix the throttle position sensor.

**09930-11960: Torx wrench**

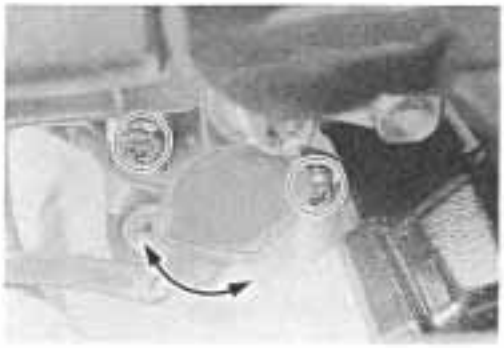

| | |
|---|---|
| _C00 | ← Incorrect |
| -C00 | ← Correct position |
| ‾C00 | ← Incorrect |

The LCD indicates 0.4 sec./time, and two times show the correct position, where it is fixed.

# FAIL-SAFE FUNCTION

FI system is provided with fail-safe function to allow the engine to start and the motorcycle to run in a minimum performance necessary even under malfunction condition.

| ITEM | | FAIL-SAFE MODE | STARTING ABILITY | RUNNING ABILITY |
|---|---|---|---|---|
| Camshaft position sensor | | When camshaft position signal has failed during running, the ECM determines cylinder as # before occurrence of such a failure. | "NO" | "YES" |
| | | | Motorcycle can run, but once engine stops, engine can not start. | |
| Crankshaft position sensor | | The motorcycle stops. | "NO" | "NO" |
| Intake air pressure sensor | | Intake air pressure is fixed to 760 mmHg. | "YES" | "YES" |
| Throttle position sensor | | The throttle opening is fixed to full open position. Ignition timing is also fixed. | "YES" | "YES" |
| Engine coolant temperature sensor | | Engine coolant temperature value is fixed to 80°C. | "YES" | "YES" |
| Intake air temperature sensor | | Intake air temperature value is fixed to 40°C. | "YES" | "YES" |
| Atmospheric pressure sensor | | Atmospheric pressure is fixed to 760 mmHg. | "YES" | "YES" |
| Ignition signal | #1 | #1 Ignition-off | "YES" | "YES" |
| | | | #2, #3 & #4 cylinders can run. | |
| | #2 | #2 Ignition-off | "YES" | "YES" |
| | | | #1, #3 & #4 cylinders can run. | |
| | #3 | #3 Ignition-off | "YES" | "YES" |
| | | | #1, #2 & #4 cylinders can run. | |
| | #4 | #4 Ignition-off | "YES" | "YES" |
| | | | #1, #2 & #3 cylinders can run. | |
| Injection | #1 | #1 Fuel-cut | "YES" | "YES" |
| | | | #2, #3 & #4 cylinders can run. | |
| | #2 | #2 Fuel-cut | "YES" | "YES" |
| | | | #1, #3 & #4 cylinders can run. | |
| | #3 | #3 Fuel-cut | "YES" | "YES" |
| | | | #1, #2 & #4 cylinders can run. | |
| | #4 | #4 Fuel-cut | "YES" | "YES" |
| | | | #1, #2 & #3 cylinders can run. | |
| Secondary throttle valve actuator | | Secondary throttle valve is fixed to half open position. | "YES" | "YES" |
| Secondary throttle position sensor | | Secondary throttle valve is fixed to full open position. | "YES" | "YES" |
| Secondary throttle control unit | | Secondary throttle valve is fixed to full open position. | "YES" | "YES" |
| Gear position signal | | Gear position signal is fixed to 6th gear. | "YES" | "YES" |

"Yes" means that the engine can start and can run even if the above signal is not received from each sensor. But, the engine running condition is not complete, providing only emergency help (by fail-safe circuit). In this case, it is necessary to bring the motorcycle to the workshop for complete repair.

When two ignition signals or two injector signals are not received by ECM, the fail-safe circuit can not work and ignition or injection is stopped.

# FI SYSTEM TROUBLE SHOOTING

## CUSTOMER COMPLAINT ANALYSIS

Record details of the problem (failure, complaint) and how it occurred as described by the customer. For this purpose, use of such an inspection form will facilitate collecting information to the point required for proper analysis and diagnosis.

### EXAMPLE: CUSTOMER PROBLEM INSPECTION FORM

| | | | |
|---|---|---|---|
| User name: | Model: | VIN: | |
| Date of issue: | Date Reg. | Date of problem: | Mileage: |

| | |
|---|---|
| Malfunction indicator lamp condition (LED) | ☐ Always ON ☐ Sometimes ON ☐ Always OFF ☐ Good condition |
| Malfunction display/code (LCD) | User mode:☐ No display ☐ Malfunction display ( ) |
| | Dealer mode:☐ No code ☐ Malfunction code ( ) |

| PROBLEM SYMPTOMS | |
|---|---|
| ☐ **Difficult Starting**<br>☐ No cranking<br>☐ No initial combustion<br>☐ No combustion<br>☐ Poor starting at<br>(☐ cold ☐ warm ☐ always)<br>☐ Other_____ | ☐ **Poor Driveability**<br>☐ Hesitation on acceleration<br>☐ Back fire/☐ After fire<br>☐ Lack of power<br>☐ Surging<br>☐ Abnormal knocking<br>☐ Other_____ |
| ☐ **Poor Idling**<br>☐ Poor fast idle<br>☐ Abnormal idling speed<br>(☐ High ☐ Low) ( r/min)<br>☐ Unstable<br>☐ Hunting ( r/min. to r/min)<br>☐ Other_____ | ☐ **Engine Stall when**<br>☐ Immediately after start<br>☐ Throttle valve is opened<br>☐ Throttle valve is closed<br>☐ Load is applied<br>☐ Other |
| ☐ OTHERS: | |

| MOTORCYCLE/ENVIRONMENTAL CONDITION WHEN PROBLEM OCCURS | |
|---|---|
| **Environmental condition** | |
| Weather | ☐ Fair ☐ Cloudy ☐ Rain ☐ Snow ☐ Always ☐ Other |
| Temperature | ☐ Hot ☐ Warm ☐ Cool ☐ Cold ( °F/ °C) ☐ Always |
| Frequency | ☐ Always ☐ Sometimes ( times/ day, month) ☐ Only once<br>☐ Under certain condition |
| Road | ☐ Urban ☐ Suburb ☐ Highway ☐ Mountainous (☐ Uphill ☐ Downhill)<br>☐ Tarmacadam ☐ Gravel ☐ Other |
| **Motorcycle condition** | |
| Engine condition | ☐ Cold ☐ Warming up phase ☐ Warmed up ☐ Always ☐ Other at starting<br>☐ Immediately after start ☐ Racing without load ☐ Engine speed ( r/min) |
| Motorcycle condition | During driving: ☐ Constant speed ☐ Accelerating ☐ Decelerating<br>☐ Right hand corner ☐ Left hand corner ☐ When shifting (Gear position )<br>☐ At stop ☐ Motorcycle speed when problem occurs ( km/h, Mile/h)<br>☐ Other_____ |

*NOTE:*

*The above form is a standard sample. It should be modified according to conditions characteristic of each market.*

## SELF-DIAGNOSTIC PROCEDURES

- Don't disconnect couplers from ECM, battery cable from battery, ECM ground wire harness from engine or main fuse before confirming malfunction code (self-diagnostic trouble code) stored in memory. Such disconnection will erase memorized information in ECM memory.
- Malfunction code stored in ECM memory can be checked by the special tool.
- Before checking malfunction code, read SELF-DIAGNOSIS FUNCTION "USER MODE and DEALER MODE" (☞ 4-26 and -27) carefully to have good understanding as to what functions are available and how to use it.
- Be sure to read "PRECAUTIONS for Electrical Circuit Service" (☞ 4-4) before inspection and observe what is written there.
- Remove the rear seat.
- Connect the special tool to the dealer mode coupler Ⓐ at the wiring harness, and start the engine or crank the engine for more than 4 seconds.
- Turn the special tool's switch ON and check the malfunction code to determine the malfunction part.

**09930-82710: Mode select switch**

09930-82710 : Mode select switch

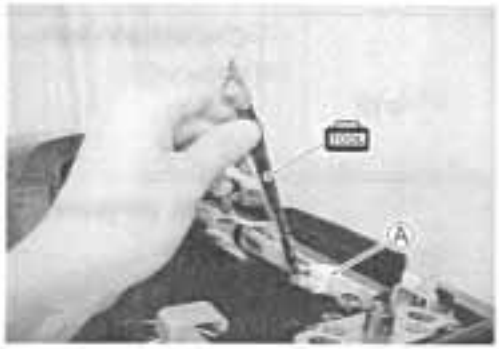


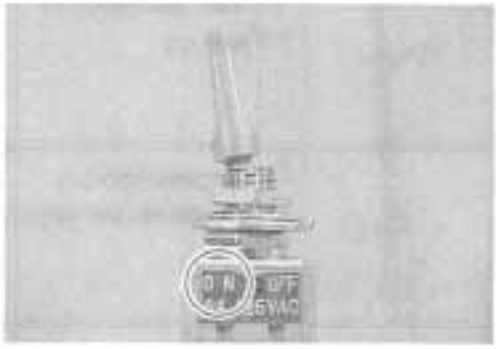


## SELF-DIAGNOSIS RESET PROCEDURE

- After repairing the trouble, turn OFF the ignition switch and turn ON again.
  If the malfunction code indicates (c00), the malfunction is cleared.
- Disconnect the special tool from the dealer mode coupler.

## MALFUNCTION CODE AND DEFECTIVE CONDITION

| MALFUNCTION CODE | DETECTED ITEM | DETECTED FAILURE CONDITION<br>CHECK FOR |
|---|---|---|
| c00 | NO FAULT | ——— |
| c11 | Camshaft position sensor | The signal does not reach ECM for more than 4 sec. after receiving the starter signal. |
| | | The camshaft position sensor wiring and mechanical parts. (Camshaft position sensor, intake cam pin, wiring/coupler connection) |
| c12 | Crankshaft position sensor | The signal does not reach ECM for more than 4 sec. after receiving the starter signal. |
| | | The crankshaft position sensor wiring and mechanical parts. (Crankshaft position sensor, wiring/coupler connection) |
| c13 | Intake air pressure sensor | The sensor should produce following voltage.<br>(0.5 V ≦ sensor voltage < 4.85 V)<br>Without the above range, c13 is indicated. |
| | | Intake air pressure sensor, wiring/coupler connection. |
| c14 | Throttle position sensor | The sensor should produce following voltage.<br>(0.2 V ≦ sensor voltage < 4.8 V)<br>Without the above range, c14 is indicated. |
| | | Throttle position sensor, wiring/coupler connection. |
| c15 | Engine coolant temperature sensor | The sensor voltage should be the following.<br>(0.15 V ≦ sensor voltage < 4.85 V)<br>Without the above range, c15 is indicated. |
| | | Engine coolant temperature sensor, wiring/coupler connection. |
| c21 | Intake air temperature sensor | The sensor voltage should be the following.<br>(0.15 V ≦ sensor voltage < 4.85 V)<br>Without the above range, c21 is indicated. |
| | | Intake air temperature sensor, wiring/coupler connection. |
| c22 | Atmospheric pressure sensor | The sensor voltage should be the following.<br>(0.5 V ≦ sensor voltage < 4.85 V)<br>Without the above range, c22 is indicated. |
| | | Atm. pressure sensor, wiring/coupler connection. |
| c23 | Tip over sensor | The sensor voltage should be less than the following for more than 2 sec. after ignition switch turns ON.<br>(0.25 ≦ sensor voltage < 4.85 V)<br>Without the above value, c23 is indicated. |
| | | Tip over sensor, wiring/coupler connection. |
| c24, c25, c26 or c27 | Ignition signal | Crankshaft position sensor (pick-up coil) signal is produced but signal from ignition coil is interrupted continuous by two times or more. In this case, the code c24, c25, c26 or c27 is indicated. |
| | | Ignition coil, wiring/coupler connection, power supply from the battery. |

| | | |
|---|---|---|
| c28 | Secondary throttle valve actuator | When no actuator control signal is supplied from the ECM or communication signal does not reach ECM or operation voltage does not reach STV actuator, c28 is indicated. STV actuator can not operate. |
| | | STV actuator lead wire/coupler. |
| c29 | Secondary throttle position sensor | The sensor should produce following voltage.<br>(0.2 V ≦ sensor voltage < 4.8 V)<br>Without the above range, c29 is indicated. |
| | | Secondary throttle position sensor, wiring/coupler connection. |
| c30 | Secondary throttle control unit | When no communication signal is supplied from the ECM or when power source stops, c30 is indicated. |
| | | STC unit, wiring/coupler connection, power supply to STC unit. |
| c31 | Gear position signal | Gear position signal voltage should be higher than the following for more than 3 seconds.<br>(Gear position sensor voltage > 0.60 V)<br>Without the above value, c31 is indicated. |
| | | Gear position sensor, wiring/coupler connection. Gearshift cam etc. |
| c32, c33, c34 or c35 | Fuel injector signal | When fuel injection signal stops, the c32, c33, c34 or c35 is indicated. |
| | | Injector, wiring/coupler connection, power supply to the injector. |
| c41 | Fuel pump relay signal | When no signal is supplied from fuel pump relay, c41 is indicated. |
| | | Fuel pump relay, connecting lead, power source to fuel pump relay. |
| c42 | Ignition switch signal | Ignition switch signal is not input in the ECM. |
| | | Ignition switch, lead wire/coupler. |

## "C11" CMP SENSOR CIRCUIT MALFUNCTION

| DETECTED CONDITION | POSSIBLE CAUSE |
|---|---|
| No CMP sensor signal for 4 seconds at engine cranking. | • Metal particles or foreign material being attached on the CMP sensor and rotor tip.<br>• CMP sensor circuit open or short.<br>• CMP sensor malfunction.<br>• ECM malfunction. |

### INSPECTION

- Lift and support the fuel tank with its prop stay. (☞4-52)
- Remove the air cleaner box. (☞4-62)

1 Turn the ignition switch OFF.
Check the CMP sensor coupler for loose or poor contacts.
If OK, then measure the CMP sensor resistance.
Disconnect the CMP sensor coupler and measure the resistance.

**DATA CMP sensor resistance: 0.9 – 1.7 kΩ (Terminal – Terminal)**

If OK, then check the continuity between each terminal and ground.

**DATA CMP sensor continuity: ∞Ω (Infinity) (Terminal – Ground)**

**09900-25008: Multi circuit tester**

**Tester knob indication: Resistance (Ω)**

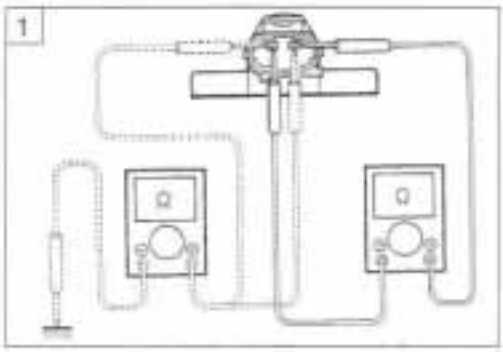


No → Replace the CMP sensor with a new one.

Yes ↓

2 Disconnect the CMP sensor coupler.
Crank the engine a few seconds with the starter motor, and measure the CMP sensor peak voltage at the sensor.

**DATA CMP sensor peak voltage: More than 0.7 V (B/Y – Br)**

Repeat the above test procedure a few times and measure the highest peak voltage.
If OK, then measure the CMP sensor peak voltage at the ECM terminals. (G+/G– or ㉑/㉒)

**09900-25008: Multi circuit tester**

**Tester knob indication: Voltage (⎓)**

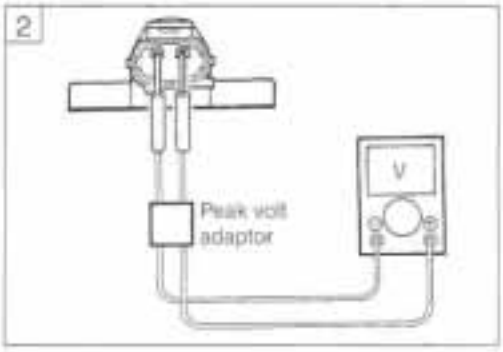


No → Loose or poor contacts on the CMP sensor coupler or ECM coupler. Replace the CMP sensor with a new one.

Yes ↓

B/Y or Br wire open or shorted to ground, or poor ㉑ or ㉒ connection. (☞4-25)
If wire and connection are OK, intermittent trouble or faulty ECM.
Recheck each terminal and wire harness for open circuit and poor connection. (☞4-4)

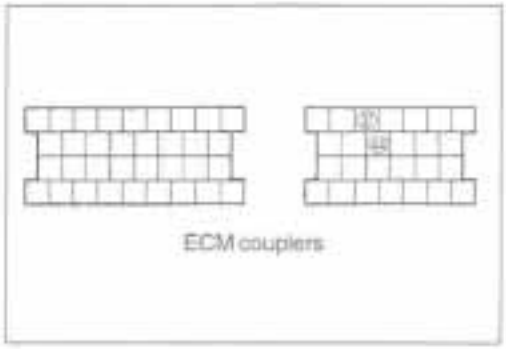


→ Replace the ECM with a new one, and inspect it again.

## "C12" CKP SENSOR CIRCUIT MALFUNCTION

| DETECTED CONDITION | POSSIBLE CAUSE |
|---|---|
| No CKP sensor signal for 4 seconds at engine cranking. | • Metal particles or foreign material being attached on the CKP sensor and rotor tips.<br>• CKP sensor circuit open or short.<br>• CKP sensor malfunction.<br>• ECM malfunction. |

### INSPECTION

• Lift and support the fuel tank with its prop stay. (☞ 4-52)

**1** Turn the ignition switch OFF.
Check the CKP sensor coupler for loose or poor contacts.
If OK, then measure the CKP sensor resistance.
Disconnect the CKP sensor coupler and measure the resistance.

**DATA CKP sensor resistance: 70 – 220 Ω (Black – Green)**

If OK, then check the continuity between each terminal and ground.

**DATA CKP sensor continuity: ∞Ω (Infinity) (Black – Ground / Green – Ground)**

**09900-25008: Multi circuit tester**

**Tester knob indication: Resistance (Ω)**

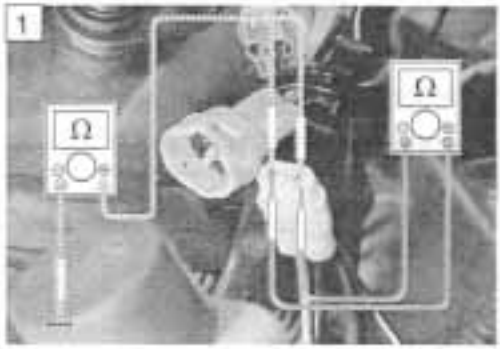


No → Replace the CKP sensor with a new one.

Yes ↓

**2** Disconnect the CKP sensor coupler.
Crank the engine a few seconds with the starter motor, and measure the CKP sensor peak voltage at the coupler.

**DATA CKP sensor peak voltage: More than 0.5 V (Black – Green)**

Repeat the above test procedure a few times and measure the highest peak voltage.
If OK, then measure the CKP sensor peak voltage at the ECM terminals. (N+/N– or ㊱/㊸)

**09900-25008: Multi circuit tester**

**Tester knob indication: Voltage (⎓)**

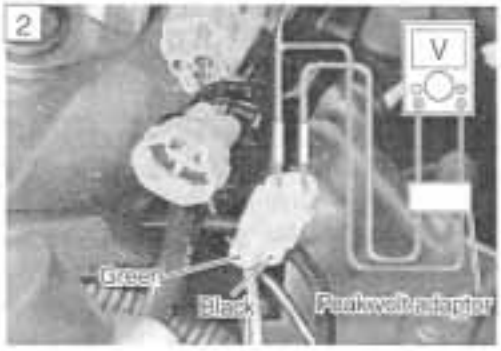


No → Loose or poor contacts on the CKP sensor coupler or ECM coupler. Replace the CKP sensor with a new one.

Yes ↓

Black or Green wire open or shorted to ground, or poor ㊱ or ㊸ connection. (☞ 4-25)
If wire and connection are OK, intermittent trouble or faulty ECM.
Recheck each terminal and wire harness for open circuit and poor connection. (☞ 4-4)

→ Replace the ECM with a new one, and inspect it again.

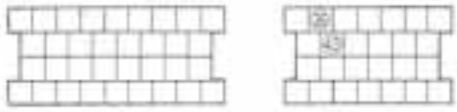


ECM couplers

## "C13" IAP SENSOR CIRCUIT MALFUNCTION

| DETECTED CONDITION | POSSIBLE CAUSE |
|---|---|
| Low pressure and low voltage.<br>High pressure and high voltage.<br>( 0.5 V ≦ Sensor voltage < 4.85 V without the above range. )<br>*NOTE:*<br>*Note that atmospheric pressure varies depending on weather conditions as well as altitude.*<br>*Take that into consideration when inspecting voltage.* | • Clogged vacuum passage between throttle body and IAP sensor.<br>• Air being drawn from vacuum passage between throttle body and IAP sensor.<br>• Red wire circuit open or shorted to ground.<br>• B/Br or G/B wire circuit shorted to ground.<br>• IAP sensor malfunction.<br>• ECM malfunction. |

### INSPECTION

- Lift and support the fuel tank with its prop stay. (☞ 4-52)

**1** Turn the ignition switch OFF.
Check the IAP sensor coupler for loose or poor contacts.
If OK, then measure the IAP sensor input voltage.
Disconnect the IAP sensor coupler.
Turn the ignition switch ON.
Measure the voltage at the Red wire and ground.
If OK, then measure the voltage at the Red wire and B/Br wire.

**DATA IAP sensor input voltage: 4.5 – 5.5 V**
**( ⊕Red – ⊖Ground / ⊕Red – ⊖B/Br )**

**09900-25008: Multi circuit tester**
**Tester knob indication: Voltage (⎓)**

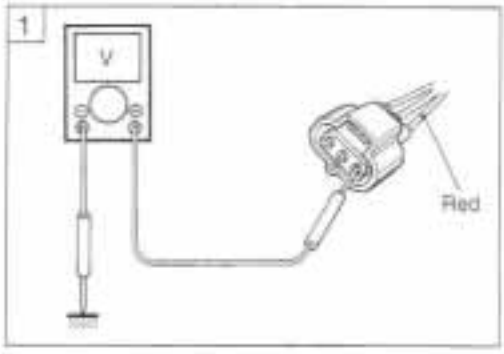


No → Loose or poor contacts on the ECM coupler.
Open or short circuit in the Red wire or B/Br wire.

↓ Yes

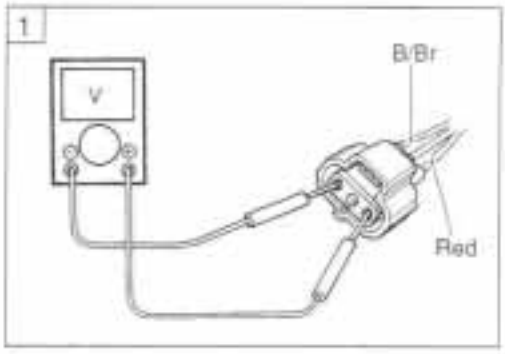


**2** Connect the IAP sensor coupler.
Insert the copper wires to the lead wire coupler.
Start the engine at idling speed.
Measure the IAP sensor output voltage at the wire side coupler (between G/B and B/Br wires).

**DATA IAP sensor output voltage: Approx. 1.32 V at idle speed (⊕G/B – ⊖B/Br)**

**09900-25008: Multi circuit tester**
**Tester knob indication: Voltage (⎓)**

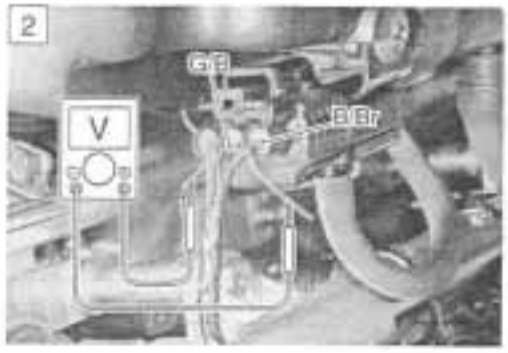


No → Check the vacuum hose for crack or damage.
Open or short circuit in the G/B wire.
Replace the IAP sensor with a new one.

↓ Yes

3 Remove the IAP sensor.
Connect the vacuum pump gauge to the vacuum port of the IAP sensor.
Arrange 3 new 1.5 V batteries in series (check that total voltage is 4.5 – 5.0 V) and connect ⊖ terminal to the ground terminal and ⊕ terminal to the Vcc terminal.
Check the voltage between Vout and ground. Also, check if voltage reduces when vacuum is applied up to 40 cmHg by using vacuum pump gauge. (See table below.)

**09917-47010: Vacuum pump gauge**
**09900-25008: Multi circuit tester**

**Tester knob indication: Voltage (⎓)**

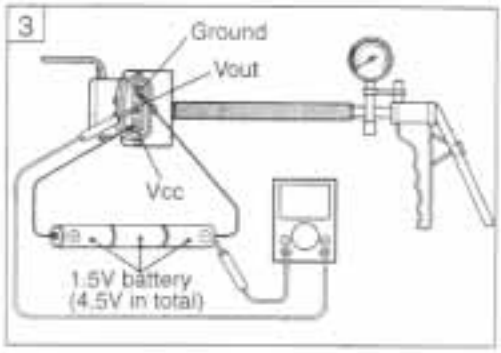


No → If check result is not satisfactory, replace IAP sensor with a new one.

↓ Yes

Red, G/B or B/Br wire open or shorted to ground, or poor ⑮, ⑯ or ⑲ connection. (☞ 4-25)
If wire and connection are OK, intermittent trouble or faulty ECM.
Recheck each terminal and wire harness for open circuit and poor connection. (☞ 4-4)

→ Replace the ECM with a new one, and inspect it again.

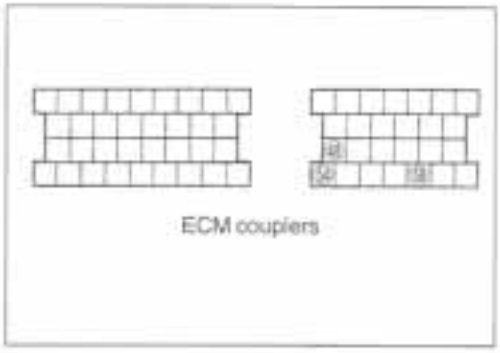


**Output voltage (Vcc voltage 4.5 – 5.0 V, ambient temp. 20 – 30°C, 68 – 86°F)**

| ALTITUDE (Reference) | | ATMOSPHERIC PRESSURE | | OUTPUT VOLTAGE |
|---|---|---|---|---|
| (ft) | (m) | (mmHg) | kPa | (V) |
| 0 – 2 000 | 0 – 610 | 760 – 707 | 100 – 94 | 3.1 – 3.6 |
| 2 001 – 5 000 | 611 – 1 524 | 707 – 634 | 94 – 85 | 2.8 – 3.4 |
| 5 001 – 8 000 | 1 525 – 2 438 | 634 – 567 | 85 – 76 | 2.6 – 3.1 |
| 8 001 – 10 000 | 2 439 – 3 048 | 567 – 526 | 76 – 70 | 2.4 – 2.9 |

## "C14" TP SENSOR CIRCUIT MALFUNCTION

| DETECTED CONDITION | POSSIBLE CAUSE |
|---|---|
| Signal voltage low or high.<br>Difference between actual throttle opening and opening calculated by ECM in larger than specified value.<br>( 0.2 V ≤ Sensor Voltage < 4.8 V without the above range. ) | • TP sensor maladjusted.<br>• TP sensor circuit open or short.<br>• TP sensor malfunction.<br>• ECM malfunction. |

### INSPECTION

• Lift and support the fuel tank with its prop stay. (☞ 4-52)

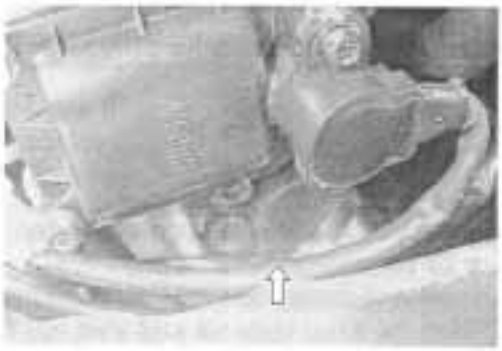

**1** Turn the ignition switch OFF.
Check the TP sensor coupler for loose or poor contacts.
If OK, then measure the TP sensor input voltage.
Disconnect the TP sensor coupler.
Turn the ignition switch ON.
Measure the voltage at the Red wire and ground.
If OK, then measure the voltage at the Red wire and B/Br wire.

**DATA TPS sensor input voltage: 4.5 – 5.5 V**
**( ⊕Red – ⊖Ground / ⊕Red – ⊖B/Br )**

**09900-25008: Multi circuit tester**
**Tester knob indication: Voltage (⎓)**

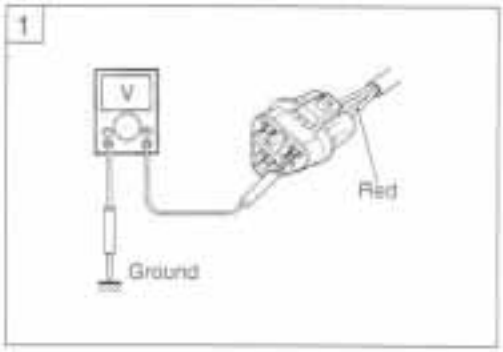


No → Loose or poor contacts on the ECM coupler.
Open or short circuit in the Red wire or B/Br wire.

↓ Yes

**2** Turn the ignition switch OFF.
Disconnect the TP sensor coupler.
Check the continuity between Yellow wire and ground.

**DATA TP sensor continuity: ∞Ω (Infinity)**
**(Yellow wire – Ground)**

If OK, then measure the TP sensor resistance at the coupler (between Yellow and Black wires).
Turn the throttle grip and measure the resistance.

**DATA TP sensor resistance**
**Throttle valve is closed: Approx. 1.1 kΩ**
**Throttle valve is opened: Approx. 4.3 kΩ**

**09900-25008: Multi circuit tester**
**Tester knob indication: Resistance (Ω)**

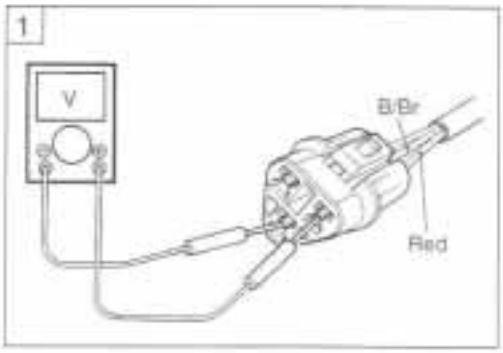


No → Reset the TP sensor position correctly.
Replace the TP sensor with a new one.

↓ Yes

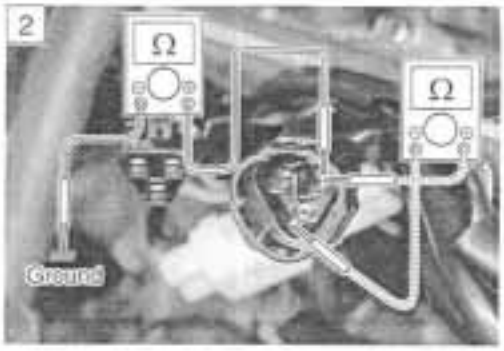

3 Connect the TP sensor coupler.
Insert the copper wires to the lead wire coupler.
Turn the ignition switch ON.
Measure the TP sensor output voltage at the coupler (between Yellow and Black wires) by turning the throttle grip.

**DATA TP sensor output voltage**
**Throttle valve is closed: Approx. 1.1 V**
**Throttle valve is opened: Approx. 4.3 V**

**09900-25008: Multi circuit tester**

**Tester knob indication: Voltage (⎓)**

No → If check result is not satisfactory, replace TP sensor with a new one.

Yes ↓

Red, P/B or B/Br wire open or shorted to ground, or poor ㊽, ㊾ or ㊿ connection. (☞ 4-25)
If wire and connection are OK, intermittent trouble or faulty ECM. Recheck each terminal and wire harness for open circuit and poor connection. (☞ 4-4)

→ Replace the ECM with a new one, and inspect it again.

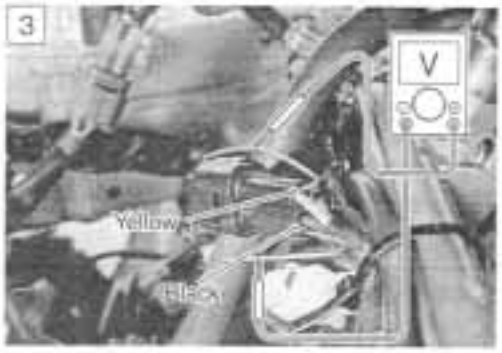


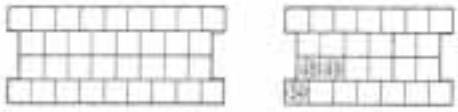

ECM couplers

## "C15" ECT SENSOR CIRCUIT MALFUNCTION

| DETECTED CONDITION | POSSIBLE CAUSE |
|---|---|
| High engine coolant temp. (Low voltage – Low resistance)<br>Low engine coolant temp. (High voltage – High resistance) | • B/Bl circuit shorted to ground.<br>• B/Br circuit open.<br>• ECT sensor malfunction.<br>• ECM malfunction. |

**INSPECTION**

• Lift and support the fuel tank with its prop stay. (☞ 4-52)

1 Turn the ignition switch OFF.
Check the ECT sensor coupler for loose or poor contacts.
If OK, then measure the ECT sensor voltage at the wire side coupler.
Disconnect the coupler and turn the ignition switch ON.
Measure the voltage between B/Bl wire terminal and ground.
If OK, then measure the voltage between B/Bl wire terminal and B/Br wire terminal.

**DATA ECT sensor voltage: 4.5 – 5.5 V**
**(⊕B/Bl – ⊖Ground / ⊕B/Bl – ⊖B/Br)**

**09900-25008: Multi circuit tester**
**Tester knob indication: Voltage (⎓)**

No → Loose or poor contacts on the ECM coupler.
Open or short circuit in the B/Bl wire or B/Br wire.

Yes ↓

2 Turn the ignition switch OFF.
Measure the ECT sensor resistance.

**DATA ECT sensor resistance: 2.3 – 2.6 kΩ at 20°C (68°F) (Terminal – Terminal)**

**09900-25008: Multi circuit tester**
**Tester knob indication: Resistance (Ω)**

Refer to page 5-8 for details.

No → Replace the ECT sensor with a new one.

Yes ↓

B/Bl or B/Br wire open or shorted to ground, or poor ⑤ or ⑭ connection. (☞ 4-25)
If wire and connection are OK, intermittent trouble or faulty ECM.
Recheck each terminal and wire harness for open circuit and poor connection. (☞ 4-4)

→ Replace the ECM with a new one, and inspect it again.

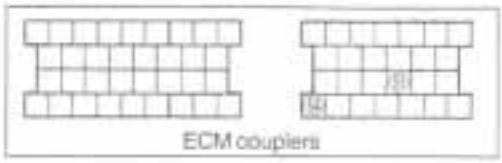


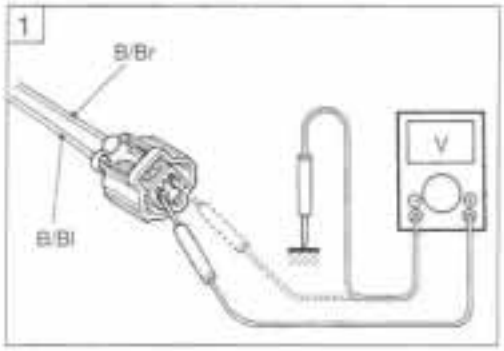


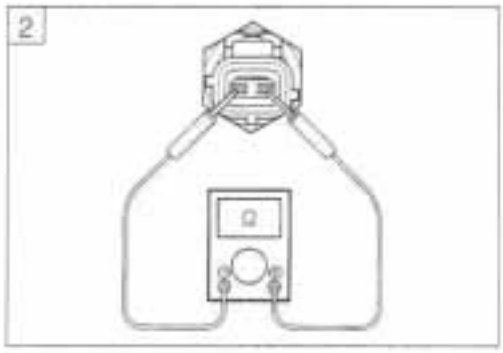


| Engine Coolant Temp. | Resistance |
|---|---|
| 20°C ( 68 °F) | Approx. 2.45 kΩ |
| 50°C (122 °F) | Approx. 0.811 kΩ |
| 80°C (176 °F) | Approx. 0.318 kΩ |
| 110°C (230 °F) | Approx. 0.142 kΩ |

## "C21" IAT SENSOR CIRCUIT MALFUNCTION

| DETECTED CONDITION | POSSIBLE CAUSE |
|---|---|
| High intake air temp. (Low voltage – Low resistance)<br>Low intake air temp. (High voltage – High resistance) | • Dg circuit shorted to ground.<br>• B/Br circuit open.<br>• IAT sensor malfunction.<br>• ECM malfunction. |

### INSPECTION

• Lift and support the fuel tank with its prop stay. (☞ 4-52)

**1** Turn the ignition switch OFF.
Check the IAT sensor coupler for loose or poor contacts.
If OK, then measure the IAT sensor voltage at the wire side coupler.
Disconnect the coupler and turn the ignition switch ON.
Measure the voltage between Dg wire terminal and ground.
If OK, then measure the voltage between Dg wire terminal and B/Br wire terminal.

**DATA IAT sensor voltage: 4.5 – 5.5 V**
**(⊕Dg – ⊖Ground / ⊕Dg – ⊖B/Br)**

**09900-25008: Multi circuit tester**

**Tester knob indication: Voltage (⎓)**

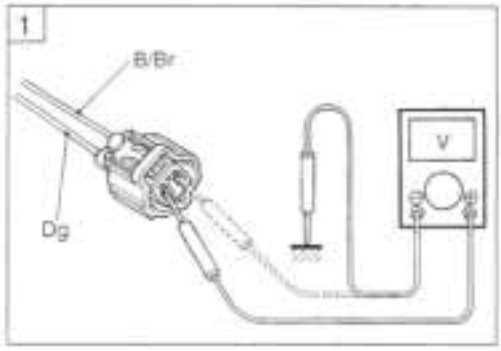


No → Loose or poor contacts on the ECM coupler. Open or short circuit in the Dg wire or B/Br wire.

Yes ↓

**2** Turn the ignition switch OFF.
Measure the IAT sensor resistance.

**DATA IAT sensor resistance: 2.2 – 2.7 kΩ at 20°C (68°F) (Terminal – Terminal)**

**09900-25008: Multi circuit tester**

**Tester knob indication: Resistance (Ω)**

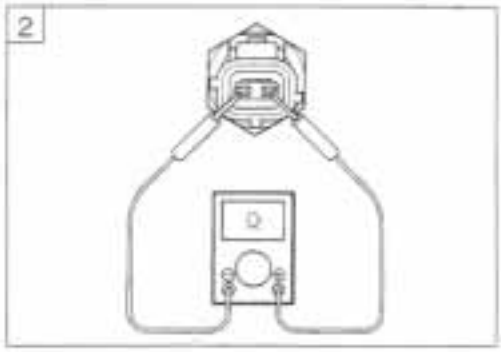


No → Replace the IAT sensor with a new one.

Yes ↓

Dg or B/Br wire open or shorted to ground, or poor ⑤ or ⑭ connection. (☞ 4-25)
If wire and connection are OK, intermittent trouble or faulty ECM.
Recheck each terminal and wire harness for open circuit and poor connection. (☞ 4-4)

→ Replace the ECM with a new one, and inspect it again.

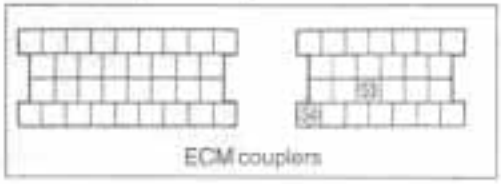


| Intake Air Temp. | Resistance |
|---|---|
| 20°C ( 68 °F) | Approx. 2.45 kΩ |
| 50°C (122 °F) | Approx. 0.808 kΩ |
| 80°C (176 °F) | Approx. 0.322 kΩ |
| 110°C (230 °F) | Approx. 0.148 kΩ |

*NOTE:*
*IAT sensor resistance measurement method is the same way as that of the ECT sensor. Refer to page 5-8 for details.*

## "C22" AP SENSOR CIRCUIT MALFUNCTION

| DETECTED CONDITION | POSSIBLE CAUSE |
|---|---|
| Low pressure and low voltage.<br>High pressure and high voltage.<br>( 0.5 V ≦ Sensor Voltage < 4.5 V without the above range. )<br>*NOTE:*<br>*Note that atmospheric pressure varies depending on weather conditions as well as altitude.*<br>*Take that into consideration when inspecting voltage.* | • Clogged air passage with dust.<br>• Red wire circuit open or shorted to ground.<br>• B/Br or G/Y wire circuit shorted to ground.<br>• AP sensor malfunction.<br>• ECM malfunction. |

### INSPECTION

- Remove the front seat. (☞6-6)

1 Turn the ignition switch OFF.
Check the AP sensor coupler for loose or poor contacts.
If OK, then measure the AP sensor input voltage.
Turn the ignition switch ON.
Disconnect the AP sensor coupler.
Measure the voltage between Red wire and ground.
If OK, then measure the voltage between Red wire and B/Br wire.

**DATA AP sensor input voltage: 4.5 – 5.5 V**
**(⊕Red – ⊖Ground / ⊕Red – ⊖B/Br)**

**09900-25008: Multi circuit tester**
**Tester knob indication: Voltage (⎓)**

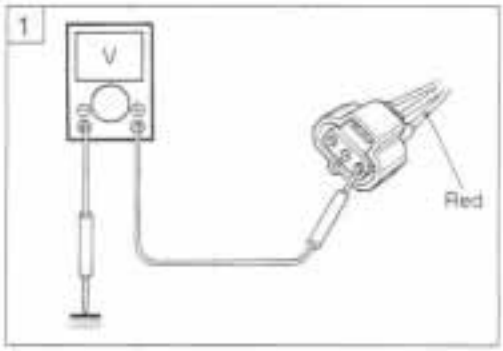


No → Loose or poor contacts on the ECM coupler.
Open or short circuit in the Red wire or B/Br wire.

↓ Yes

2 Connect the AP sensor coupler.
Insert the copper wires to the lead wire coupler.
Turn the ignition switch ON.
Measure the AP sensor output voltage at the wire side coupler between G/Y and B/Br wires.

**DATA AP sensor output voltage: Approx. 3.6 V at 760 mmHg (100 kPa) (⊕G/Y – ⊖B/Br)**

**09900-25008: Multi circuit tester**
**Tester knob indication: Voltage (⎓)**

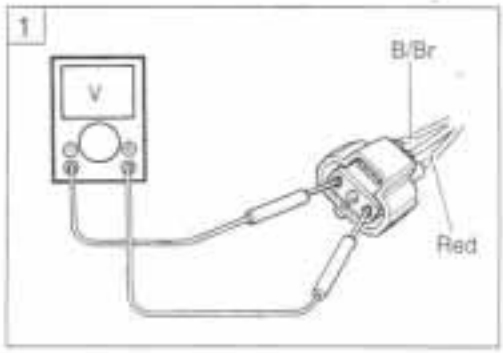


No → Check the air passage for clogging.
Open or short circuit in the G/Y wire.
Replace the AP sensor with a new one.

↓ Yes

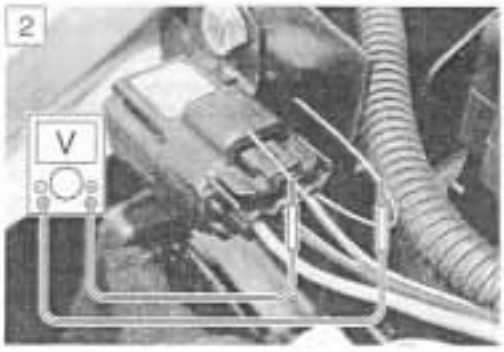

3 Remove the AP sensor.
Connect the vacuum pump gauge to the air passage port of the AP sensor.
Arrange 3 new 1.5 V batteries in series (check that total voltage is 4.5 – 5.0 V) and connect ⊖ terminal to the ground terminal and ⊕ terminal to the Vcc terminal.
Check the voltage between Vout and ground. Also, check if voltage reduces when vacuum is applied up to 40 cmHg by using vacuum pump gauge. (See table below)

**09917-47010: Vacuum pump gauge**
**09900-25008: Multi circuit tester**

**Tester knob indication: Voltage (⎓)**

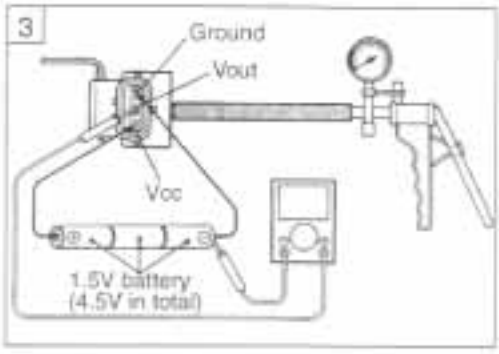


No → If check result is not satisfactory, replace AP sensor with a new one.

Yes ↓

Red, G/Y or B/Br wire open or shorted to ground, or poor ㊽, ㊾ or ㊿ connection. (☞ 4-25)
If wire and connection are OK, intermittent trouble or faulty ECM.
Recheck each terminal and wire harness for open circuit and poor connection. (☞ 4-4)

→ Replace the ECM with a new one, and inspect it again.

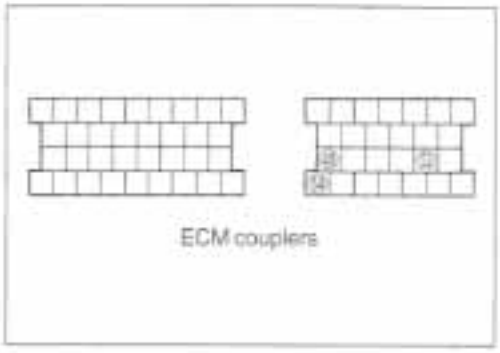


**Output voltage (Vcc voltage 4.5 – 5.0 V, ambient temp. 20 – 30°C, 68 – 86°F)**

| ALTITUDE (Reference) | | ATMOSPHERIC PRESSURE | | OUTPUT VOLTAGE |
|---|---|---|---|---|
| (ft) | (m) | (mmHg) | kPa | (V) |
| 0 – 2 000 | 0 – 610 | 760 – 707 | 100 – 94 | 3.1 – 3.6 |
| 2 001 – 5 000 | 611 – 1 524 | 707 – 634 | 94 – 85 | 2.8 – 3.4 |
| 5 001 – 8 000 | 1 525 – 2 438 | 634 – 567 | 85 – 76 | 2.6 – 3.1 |
| 8 001 – 10 000 | 2 439 – 3 048 | 567 – 526 | 76 – 70 | 2.4 – 2.9 |

## "C23" TO SENSOR CIRCUIT MALFUNCTION

| DETECTED CONDITION | POSSIBLE CAUSE |
|---|---|
| No TO sensor signal for more than 2 seconds, after ignition switch turns ON.<br>Sensor voltage high.<br>( 0.25 V ≤ Sensor Voltage < 4.85 V without the above range. ) | • TO sensor circuit open or short.<br>• TO sensor malfunction.<br>• ECM malfunction. |

### INSPECTION

• Lift and support the fuel tank with its prop stay. (☞ 4-52)

**1** Turn the ignition switch OFF.
Check the TO sensor coupler for loose or poor contacts.
If OK, then measure the TO sensor resistance.
Disconnect the TO sensor coupler.
Measure the resistance between Black and B/W wire terminals.

**DATA TO sensor resistance: 60 – 64 kΩ (Black – B/W)**

**09900-25008: Multi circuit tester**

**Tester knob indication: Resistance (Ω)**

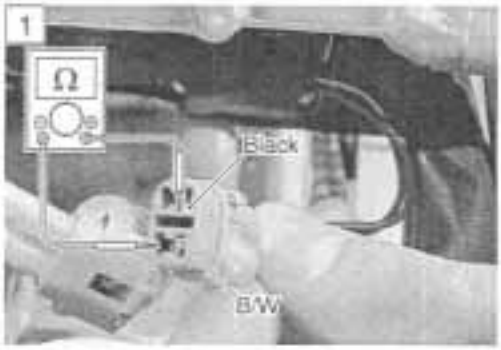


No → Replace the TO sensor with a new one.

Yes ↓

**2** Connect the TO sensor coupler.
Insert the copper wires to the wire lead coupler.
Turn the ignition switch ON.
Measure the voltage at the wire side coupler between Black and B/Br wires.

**DATA TO sensor voltage: Approx. 2.5 V (Black – B/Br)**

Also, measure the voltage when leaning of the motorcycle.
Dismount the TO sensor from its bracket and measure the voltage when it is leaned more than 43°, left and right, from the horizontal level.

**DATA TO sensor voltage: 0 V (Black – B/Br)**

**09900-25008: Multi circuit tester**

**Tester knob indication: Voltage (⎓)**

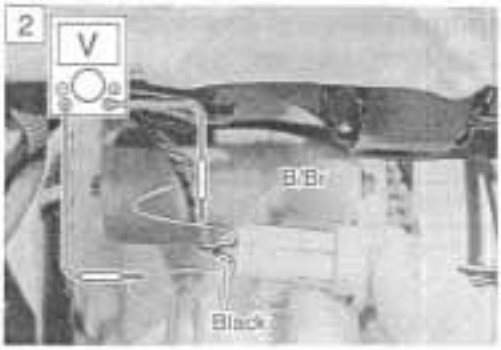


No → Loose or poor contacts on the ECM coupler.
Open or short circuit in the Black wire or B/Br wire.
Replace the TO sensor with a new one.

Yes ↓

Black or B/Br wire open or shorted to ground, or poor ㊹ or ㊺ connection. (☞ 4-25)
If wire and connection are OK, intermittent trouble or faulty ECM.
Recheck each terminal and wire harness for open circuit and poor connection. (☞ 4-4)

→ Replace the ECM with a new one, and inspect it again.

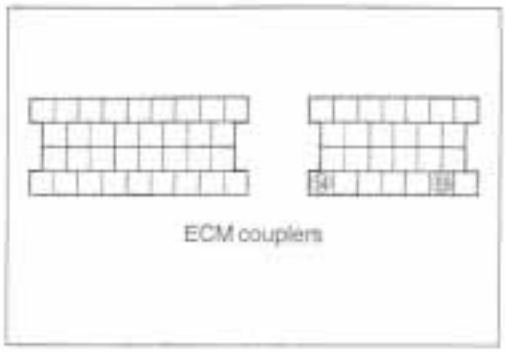


ECM couplers

## "C24", "C25", "C26" or "C27" IGNITION SYSTEM MALFUNCTION

***Refer to the IGNITION SYSTEM for details. (☞7-17)**

## "C28" STV ACTUATOR CIRCUIT MALFUNCTION

| DETECTED CONDITION | POSSIBLE CAUSE |
|---|---|
| The operation voltage does not reach the STV actuator.<br>ECM does not receive communication signal from the STC unit. | • STV actuator malfunction.<br>• STV actuator circuit open or short.<br>• STVA motor malfunction. |

### INSPECTION

- Lift and support the fuel tank with its prop stay. (☞4-52)
- Remove the air cleaner element.

1

Turn the ignition switch OFF.
Check the STV actuator lead wire coupler for loose or poor contacts.
Turn the ignition switch ON.
Check the operation of the STV actuator by the STV movement.
(Operating order: Half open → Full close → Full open → Half open)

No → Loose or poor contacts on the STC unit coupler. Open or short circuit in the Red or Black wire.

Yes ↓

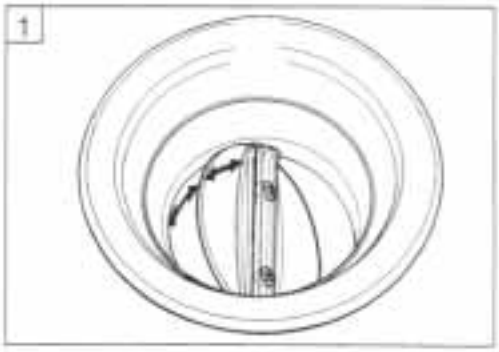

1

2

Turn the ignition switch OFF.
Disconnect the STV actuator lead wire coupler.
Check the continuity between Red wire and ground.

**DATA STV actuator continuity: ∞Ω (Infinity)**

If OK, then measure the STV actuator resistance. (between Red and Black wires)

**DATA STV actuator resistance: Approx. 5.6 Ω (⊕ Red – ⊖ Black)**

**09900-25008: Multi circuit tester**

**Tester knob indication: Resistance (Ω)**

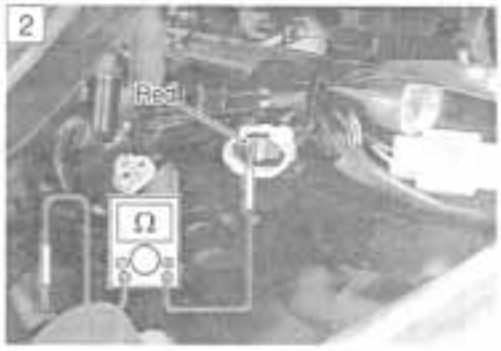


2

No → Replace the STV actuator with a new one.

Yes ↓

Loose or poor contacts on the STV actuator coupler or STC unit coupler.
If wire and connection are OK, intermittent trouble or faulty STC unit. Recheck each terminal and wire harness for open circuit and poor connection. (☞4-4)

→ Replace the STC unit with new one, and inspect it again.


2

## "C29" STP SENSOR CIRCUIT MALFUNCTION

| DETECTED CONDITION | POSSIBLE CAUSE |
|---|---|
| Signal voltage low or high.<br>Difference between actual throttle opening and opening calculated by ECM in larger than specified value.<br>( 0.2 V ≤ Sensor Voltage < 4.8 V without the above range. ) | • STP sensor maladjusted.<br>• STP sensor circuit open or short.<br>• STP sensor malfunction.<br>• STC unit malfunction<br>• ECM malfunction. |

### INSPECTION

• Lift and support the fuel tank with its prop stay. (☞ 4-52)

**1** Turn the ignition switch OFF.
Check the STP sensor coupler for loose or poor contacts.
If OK, then measure the STP sensor input voltage.
Disconnect the STP sensor coupler.
Turn the ignition switch ON.
Measure the voltage at the Blue wire and ground.
If OK, then measure the voltage at the Blue wire and Black wire.

**DATA STP sensor input voltage: 4.5 – 5.5 V**
**( ⊕Blue – ⊖Ground / ⊕Blue – ⊖Black )**

**09900-25008: Multi circuit tester**
**Tester knob indication: Voltage (⎓)**

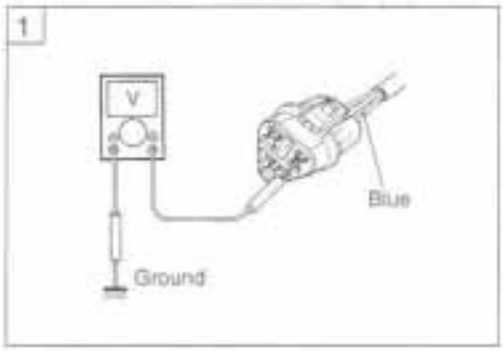


No → Loose or poor contacts on the ECM coupler.
Open or short circuit in the Blue wire or Black wire.

Yes ↓

**2** Turn the ignition switch OFF.
Remove the air cleaner element.
Disconnect the STP sensor coupler.
Check the continuity between Yellow wire and ground.

**DATA STP sensor continuity: ∞Ω (Infinity)**
**(Yellow wire – Ground)**

If OK, then measure the STP sensor resistance at the coupler (between Yellow and Black wires).
Close the secondary throttle valve by finger and measure the valve closing resistance. Turn the ignition switch ON and measure the valve opening resistance.

**DATA STP sensor resistance**
**Secondary throttle valve is closed: Approx. 0.8 kΩ**
**Secondary throttle valve is opened: Approx. 3.9 kΩ**

**09900-25008: Multi circuit tester**
**Tester knob indication: Resistance (Ω)**

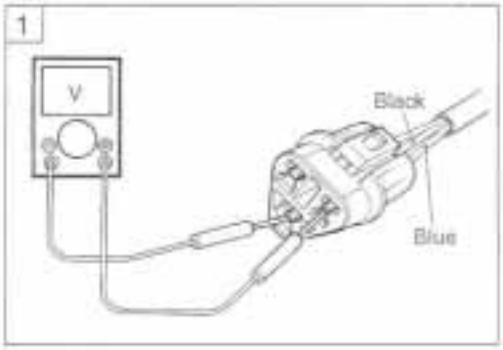


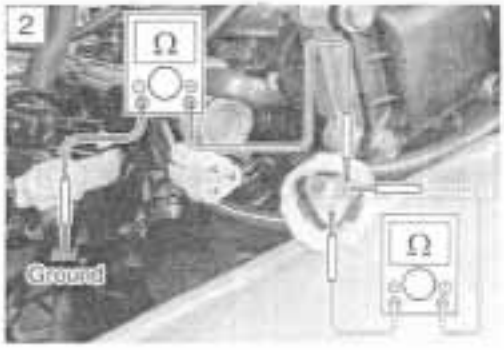


No → Reset the STP sensor position correctly. (☞ 4-71)
Replace the STP sensor with a new one.


Yes

3 Turn the ignition switch OFF.
Connect the STP sensor coupler.
Insert the copper wires to the lead wire coupler.
Turn the ignition switch ON.
Measure the STP sensor output voltage at the coupler (between Yellow and Black wires) by turning the secondary throttle valve (close and open) with a finger.

**DATA STP sensor output voltage**
**Throttle valve is closed: Approx. 0.8 V**
**Throttle valve is opened: Approx. 4.0 V**

**09900-25008: Multi circuit tester**

**Tester knob indication: Voltage (⎓)**

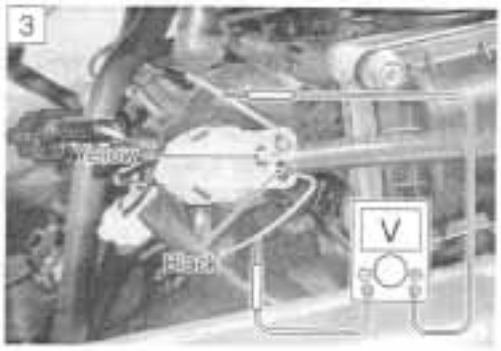


No → If check result is not satisfactory, replace STP sensor with a new one.

Yes

Blue, Yellow or Black wire open or shorted to ground, or poor ⑦ connection. (☞ 4-25)
If wire and connection are OK, intermittent trouble or STC unit faulty or faulty ECM.
Recheck each terminal and wire harness for open circuit and poor connection. (☞ 4-4)


→ Replace the STC unit or ECM with a new one, and inspect it again.


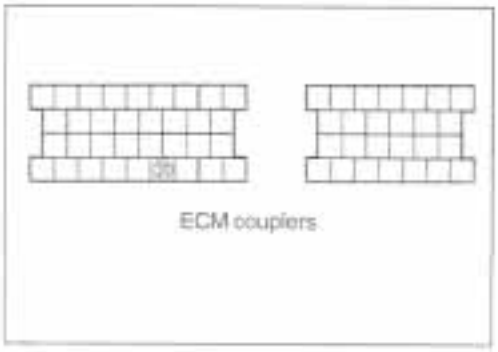

## "C30" STC UNIT CIRCUIT MALFUNCTION

| DETECTED CONDITION | POSSIBLE CAUSE |
|---|---|
| The power source does not reach the STC unit.<br>ECM does not receive communication signal from the STC unit. | • STC unit malfunction.<br>• STC unit circuit open or short. |

### INSPECTION

• Remove the frame cover. (☞6-6)

1 Turn the ignition switch OFF.
Check the STC unit lead wire coupler for loose or poor contacts.
If OK, then measure the STC unit input voltage.
Insert the copper wires to the lead wire coupler.
Turn the ignition switch ON, and measure the voltage between the O/W wire and ground.
If OK, then measure the voltage between the O/W wire and B/W wire.

**DATA STC unit input voltage: Battery voltage**
**(⊕ O/W – ⊖ Ground / ⊕ O/W – ⊖ B/W)**

**TOOL 09900-25008: Multi circuit tester**

**Tester knob indication: Voltage (⎓)**

No → Open or short circuit in the O/W wire or B/W wire.

Yes ↓

O/W, B/W or Dbr wire open or shorted to ground, or poor ⑪ connection. (☞ 4-25)
Measure the STC unit voltage with the multi circuit tester. (☞7-22)
If wire and connection are OK, intermittent trouble or STC unit faulty or faulty ECM.
Recheck each terminal and wire harness for open circuit and poor connection. (☞ 4-4)

→ Replace the STC unit with a new one, and inspect it again.

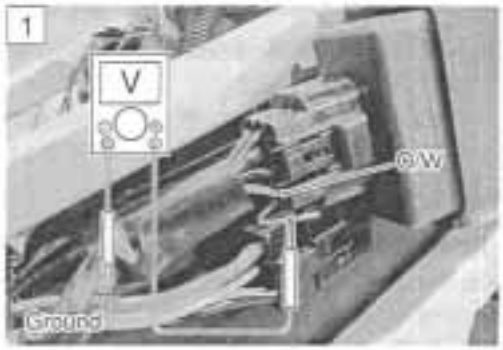


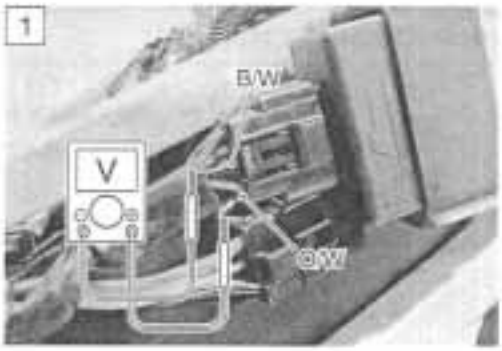


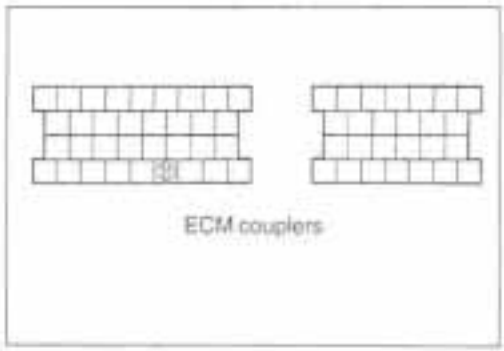

# "C31" GEAR POSITION (GP) SWITCH CIRCUIT MALFUNCTION

| DETECTED CONDITION | POSSIBLE CAUSE |
|---|---|
| No Gear Position switch voltage<br>Switch voltage low.<br>( Sensor Voltage > 0.6 V without the above range. ) | • Gear Position switch circuit open or short.<br>• Gear Position switch malfunction.<br>• ECM malfunction. |

**INSPECTION**

• Lift and support the fuel tank with its prop stay. (☞ 4-52)

1. Turn the ignition switch OFF.
Check the GP switch coupler for loose or poor contacts.
If OK, then measure the GP switch voltage.
Support the motorcycle with a jack.
Turn the side-stand to up-right position.
Turn the engine stop switch ON.
Insert the copper wire to the lead wire coupler.
Turn the ignition switch ON.
Measure the voltage at the wire side coupler between Pink wire and ground, when shifting the gearshift lever from 1st to Top.

**DATA GP switch voltage: More than 0.6 V (Pink – Ground)**

**09900-25008: Multi circuit tester**

**Tester knob indication: Voltage (⎓)**


No → Open or short circuit in the Pink wire.
Replace the GP switch with a new one.

Yes ↓

Pink wire open or shorted to ground, or poor ⓕ connection. (☞ 4-25)
If wire and connection are OK, intermittent trouble or faulty ECM.
Recheck each terminal and wire harness for open circuit and poor connection. (☞ 4-4)

→ Replace the ECM with a new one, and inspect it again.

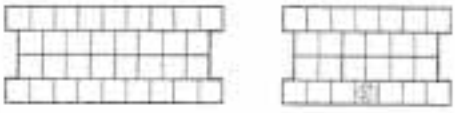

ECM couplers

## "C32", "C33", "C34" or "C35" FUEL INJECTION MALFUNCTION

| DETECTED CONDITION | POSSIBLE CAUSE |
|---|---|
| No injector current. | • Injector circuit open or short.<br>• Injector malfunction.<br>• ECM malfunction. |

### INSPECTION

• Lift and support the fuel tank with its prop stay. (☞ 4-52)

1 Turn the ignition switch OFF.
Check the injector coupler for loose or poor contacts.
If OK, then measure the injector resistance.
Disconnect the coupler and measure the resistance between terminals.

**DATA Injector resistance: 11 – 16 Ω at 20°C (68°F)**
**(Terminal – Terminal)**

If OK, then check the continuity between each terminal and ground.

**DATA Injector continuity: ∞Ω (Infinity)**
**(Terminal – Ground)**

**09900-25008: Multi circuit tester**

**Tester knob indication: Resistance (Ω)**

No → Replace the injector with a new one. (☞ 4-64)

Yes ↓

2 Turn the ignition switch ON.
Measure the injector voltage between Y/R wire and ground.

**DATA Injector voltage: Battery voltage**
**(Y/R – Ground)**

*NOTE:*
*Injector voltage can be detected only 3 seconds after ignition switch is turned ON.*

**09900-25008: Multi circuit tester**

**Tester knob indication: Voltage (⎓)**

No → Open circuit in the Yellow/Red wire.

Yes ↓

Gr/W, Gr/B, Gr/Y, Gr/R or Y/R wire open or shorted to ground, or poor ④, ⑤, ⑥, ⑦ or ⑮ connection. (☞ 4-25)
If wire and connection are OK, intermittent trouble or faulty ECM.
Recheck each terminal and wire harness for open circuit and poor connection. (☞ 4-4)

→ Replace the ECM with a new one, and inspect it again.


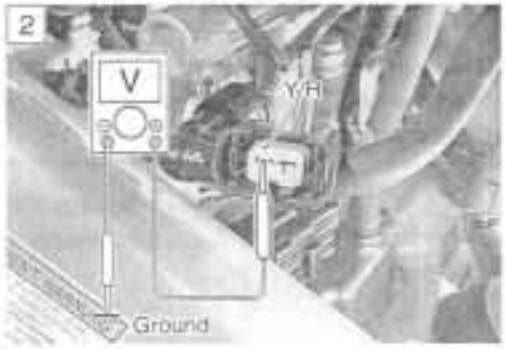


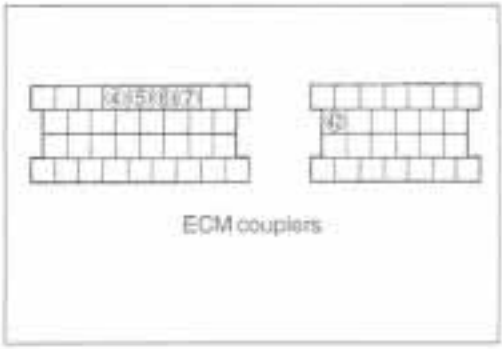

## "C41" FP RELAY CIRCUIT MALFUNCTION

| DETECTED CONDITION | POSSIBLE CAUSE |
|---|---|
| No signal from fuel pump relay. | • Fuel pump relay circuit open or short.<br>• Fuel pump relay malfunction.<br>• ECM malfunction. |

**INSPECTION**

- Remove the front seat.
- Lift and support the fuel tank with its prop stay. (☞ 4-52)

1 Turn the ignition switch OFF.
Check the FP relay coupler for loose or poor contacts.
If OK, then check the insulation and continuity. Refer to page 4-55 for details.

No → Replace the FP relay with a new one.

Yes ↓

Y/B or O/W wire open or shorted to ground, or poor ⑨ or ⑦ connection. (☞ 4-25)
If wire and connection are OK, intermittent trouble or faulty ECM.
Recheck each terminal and wire harness for open circuit and poor connection. (☞ 4-4)

→ Replace the ECM with a new one, and inspect it again.

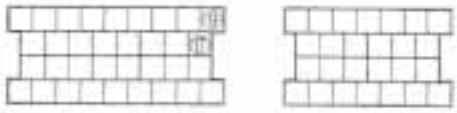

ECM couplers

## "C42" IG SWITCH CIRCUIT MALFUNCTION

- **Refer to the IGNITION SWITCH INSPECTION for details.**
- Remove the right under cowling. (☞ 6-3)
- Inspect the ignition switch. (☞ 7-31)

# FUEL SYSTEM

## FUEL TANK LIFT-UP

- Remove the front seat.
- Remove the fuel tank mounting bolts.

- Lift and support the fuel tank with the fuel tank prop stay ①.

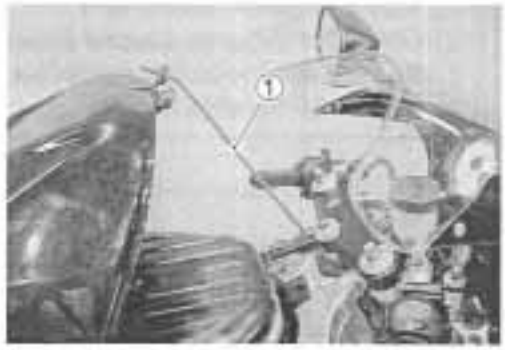


## FUEL TANK REMOVAL

- Lift and support the fuel tank with the fuel tank prop stay. (See above)
- Disconnect the fuel pump lead wire coupler ①.
- Place a rag under the fuel feed hose and remove the fuel feed hose ②.


**⚠ CAUTION**

**When removing the fuel tank, do not remain the fuel feed hose ② at the fuel tank side.**

**⚠ WARNING**

**Gasoline is highly flammable and explosive.**
**Keep heat, spark and flame away.**

- Remove the fuel tank bracket mounting bolts.
- Remove the fuel tank.

## FUEL TANK INSTALLATION

- Installation is in the reverse order of removal.

## FUEL PRESSURE INSPECTION

- Lift and support the fuel tank with its prop stay. (☞4-52)
- Place a rag under the fuel feed hose. (☞4-52)
- Remove the fuel feed hose and install the special tools between the fuel tank and fuel delivery pipe.

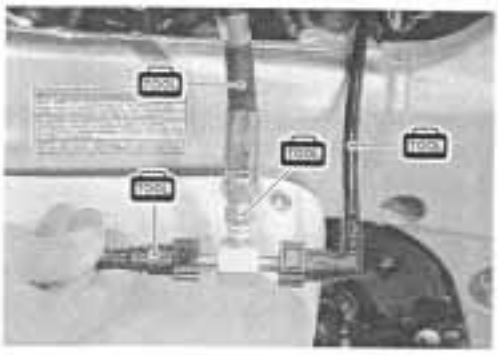

**TOOL 09940-40211: Fuel pressure gauge adaptor**
**09940-40220: Fuel pressure gauge hose attachment**
**09915-77330: Oil pressure gauge**
**09915-74520: Oil pressure gauge hose**

Turn the ignition switch ON and check the fuel pressure.

**DATA Fuel pressure: Approx. 300 kPa (3.0 kgf/cm², 43 psi)**

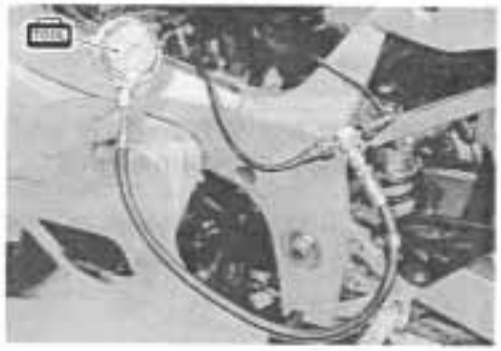

If the fuel pressure is lower than the specified, inspect the following items:

- Fuel hose leakage
- Clogged fuel filter
- Pressure regulator
- Fuel pump

If the fuel pressure is higher than the specified, inspect the following items:

- Fuel pump check valve
- Pressure regulator

**⚠ WARNING**

- **Before removing the special tools, turn the ignition switch OFF position and release the fuel pressure slowly.**
- **Gasoline is highly flammable and explosive. Keep heat, sparks and flame away.**

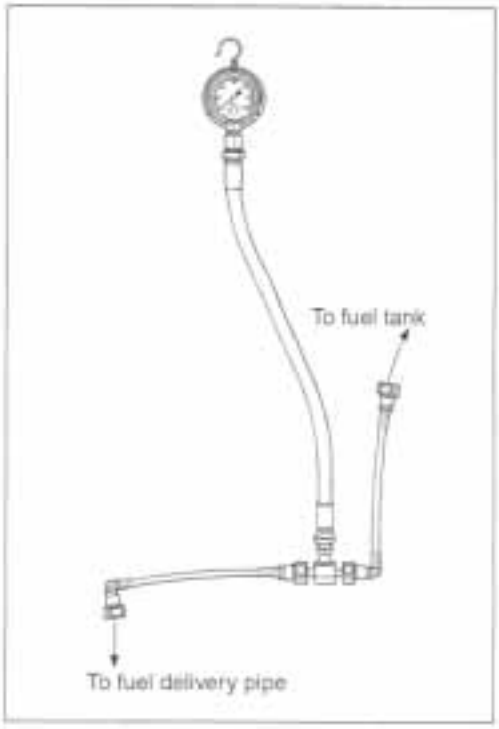

## FUEL PUMP INSPECTION

Turn the ignition switch ON and check that the fuel pump operates for few seconds.
If the fuel pump motor does not make operating sound, replace the fuel pump assembly or inspect the fuel pump relay and tip over sensor.

### FUEL DISCHARGE AMOUNT INSPECTION

**▲ WARNING**

**Gasoline is highly flammable and explosive.**
**Keep heat, spark and flame away.**

- Lift and support the fuel tank with its prop stay. (☞4-52)
- Disconnect the fuel feed hose ① from the fuel pump.


- Connect a proper fuel hose ② to the fuel pump.


- Disconnect the ECM lead wire coupler ③.


- Push the lock Ⓐ to pull out the power source lead wire (Yellow with red tracer ④).

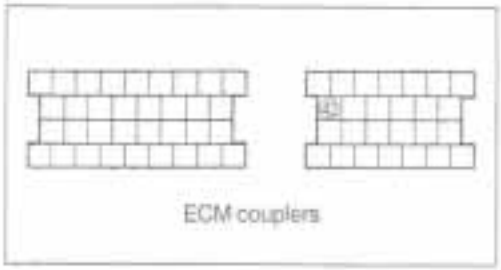


ECM couplers

- Place the measuring cylinder and insert the fuel hose end into the measuring cylinder.

- Apply 12 volts to the fuel pump for 30 seconds and measure the amount of fuel discharged.
  Battery ⊕ terminal —— Power source lead wire ①
  (Yellow with red tracer)


If the discharge amount is not specified it means that the fuel pump is defective or that the fuel filter is clogged.

**DATA Fuel discharge amount: Approx. 1 200 ml/30 sec.**
**(1.3/1.1 US/Imp oz)/30 sec.**

*NOTE:*
*The battery must be in fully charged condition.*

## FUEL PUMP RELAY INSPECTION

Fuel pump relay is located in ahead of the battery.

- Remove the front and rear seats.
- Lift and support the fuel tank with its prop stay. (☞4-52)
- Remove the fuel pump relay.

First, check the insulation between ① and ② terminals with pocket tester. Then apply 12 volts to ③ and ④ terminals, ⊕ to ③ and ⊖ to ④, and check the continuity between ① and ②.
If there is no continuity, replace it with a new one.

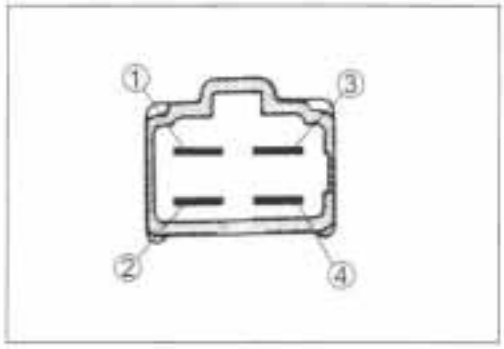


## FUEL PUMP AND FUEL FILTER REMOVAL

### CONSTRUCTION

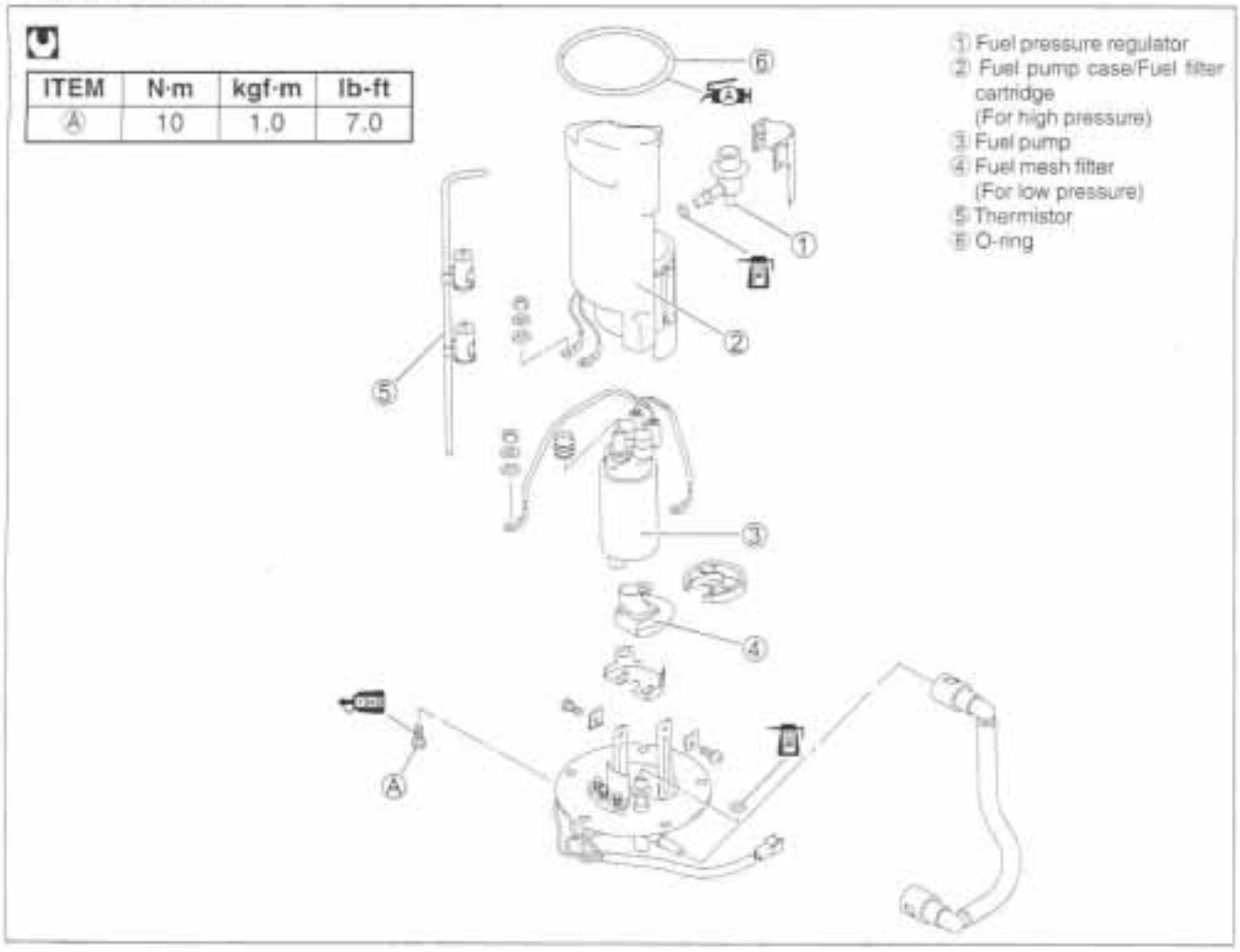


| ITEM | N·m | kgf·m | lb-ft |
|---|---|---|---|
| Ⓐ | 10 | 1.0 | 7.0 |

**REMOVAL**

- Remove the fuel tank. (☞4-52)
- Remove the fuel pump assembly by removing its mounting bolts diagonally.

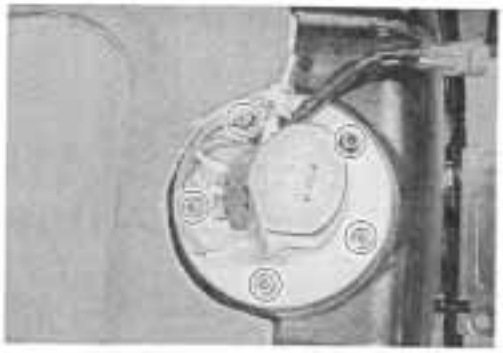

**⚠ WARNING**

**Gasoline is highly flammable and explosive.**
**Keep heat, spark and flame away.**

- Remove the nuts.

- Remove the screws.

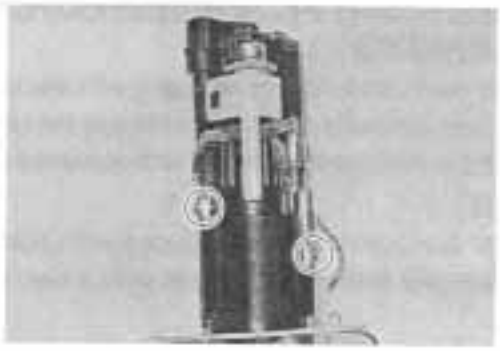

- Remove the fuel pump assy from the fuel pump plate.

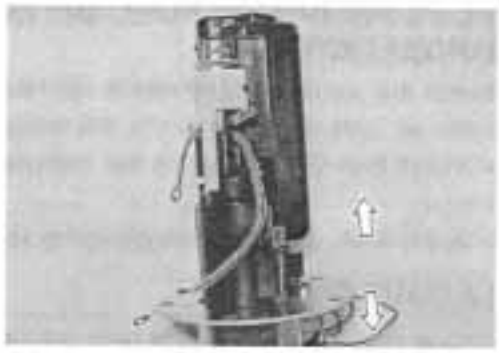

- Remove the fuel pump holder ①.

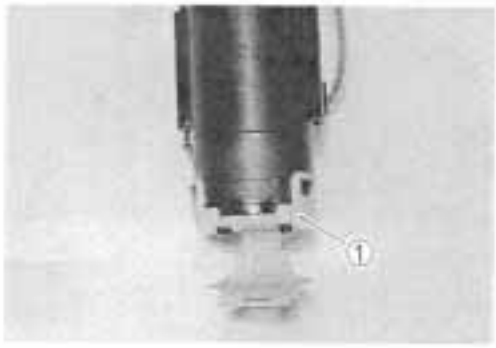

- Remove the fuel mesh filter.

- Remove the fuel pressure regulator holder ① and the fuel pressure regulator ②.

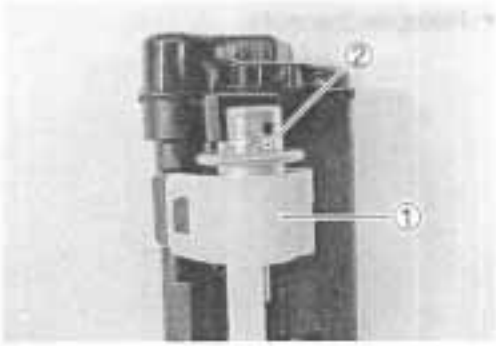


## FUEL MESH FILTER INSPECTION AND CLEANING

If the fuel mesh filter is clogged with sediment or rust, fuel will not flow smoothly and loss in engine power may result.
Blow the fuel mesh filter with compressed air.

*NOTE:*
*If the fuel mesh filter is clogged with many sediment or rust, replace the fuel filter cartridge with a new one.*

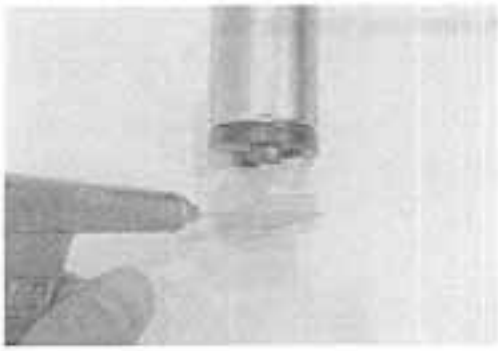

## FUEL PUMP AND FUEL MESH FILTER INSTALLATION

Install the fuel pump and fuel mesh filter in the reverse order of removal, and pay attention to the following points:

- Install the new O-rings to the fuel pressure regulator and fuel pipe.
- Apply thin coat of the engine oil to the O-rings.

**⚠ CAUTION**

**Use the new O-rings to prevent fuel leakage.**

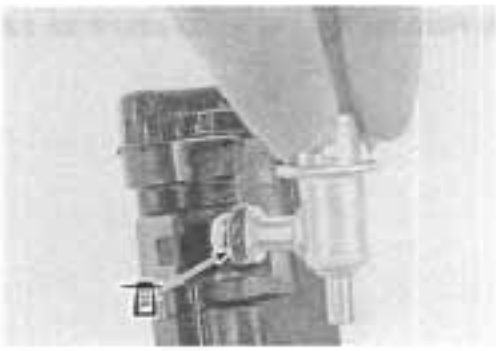

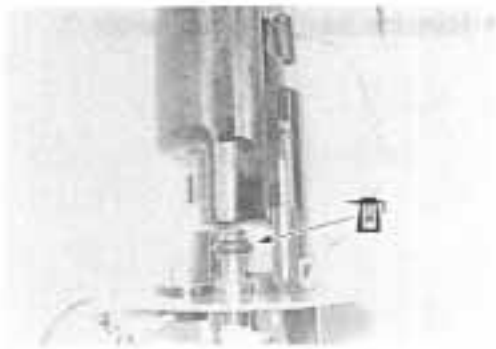

- Pass through the wires behind the thermistors.

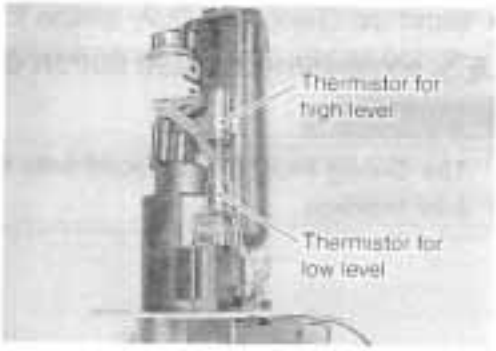


- Be sure to connect the wires to the proper terminals.
  Ⓐ ..... ⊕ terminal for fuel pump
  Ⓑ ..... Thermistor for low level
  Ⓒ ..... Thermistor for high level

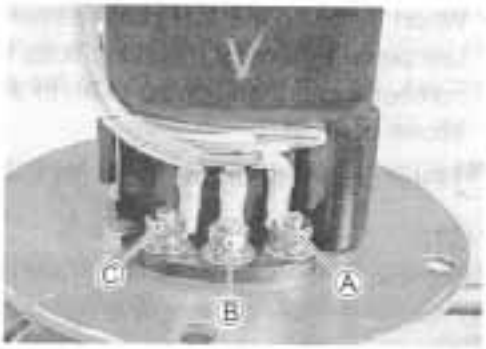


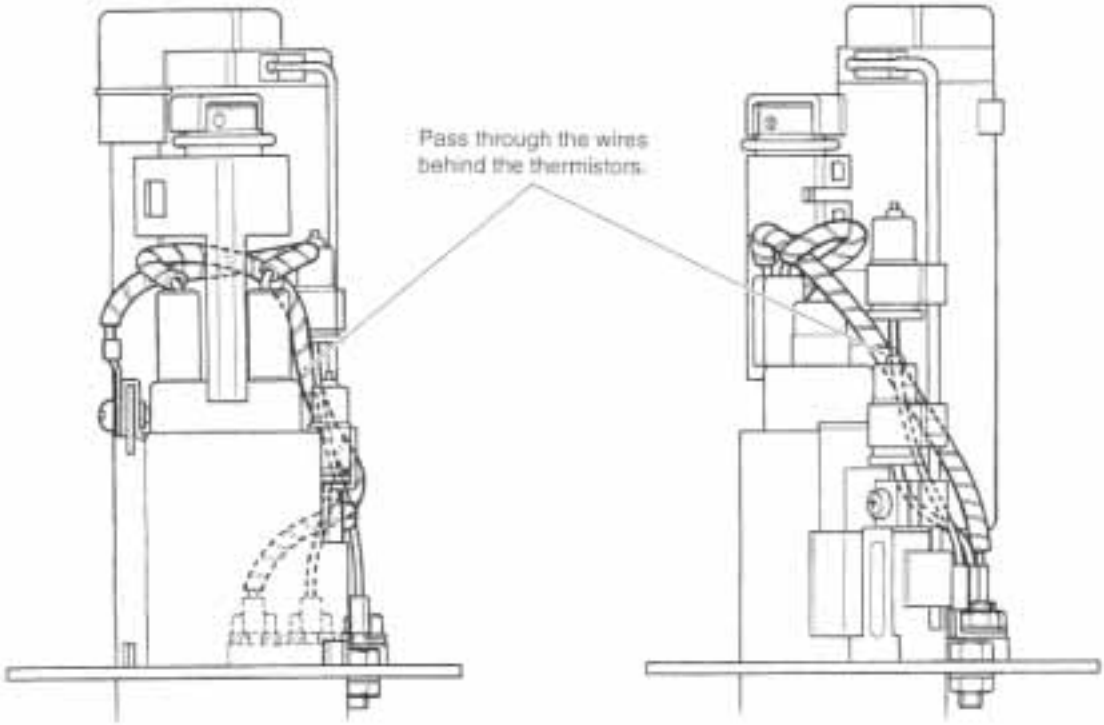

- Install the O-ring and apply grease to it.

**99000-25010: SUZUKI SUPER GREASE "A"**

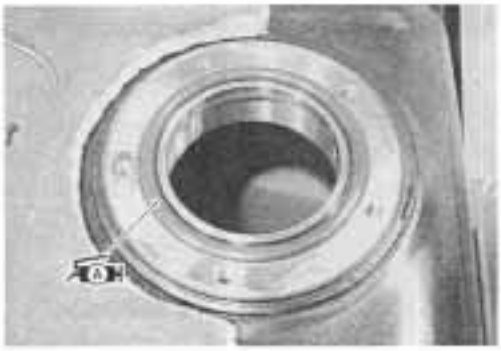

**WARNING**

**The O-ring must be replaced with a new one to prevent fuel leakage.**

- When installing the fuel pump assembly, lightly tighten all the fuel pump assembly mounting bolts in the ascending order of numbers, and then tighten them to the specified torque in the above manner.

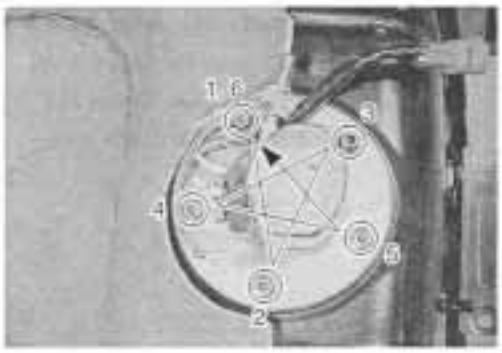


**Fuel pump mounting bolt: 10 N·m (1.0 kgf·m, 7.0 lb-ft)**

*NOTE:*
*Apply a small quantity of the THREAD LOCK "1342" to the thread portion of the fuel pump mounting bolt.*

**99000-32050: THREAD LOCK "1342"**

# THROTTLE BODY AND STV ACTUATOR

## CONSTRUCTION

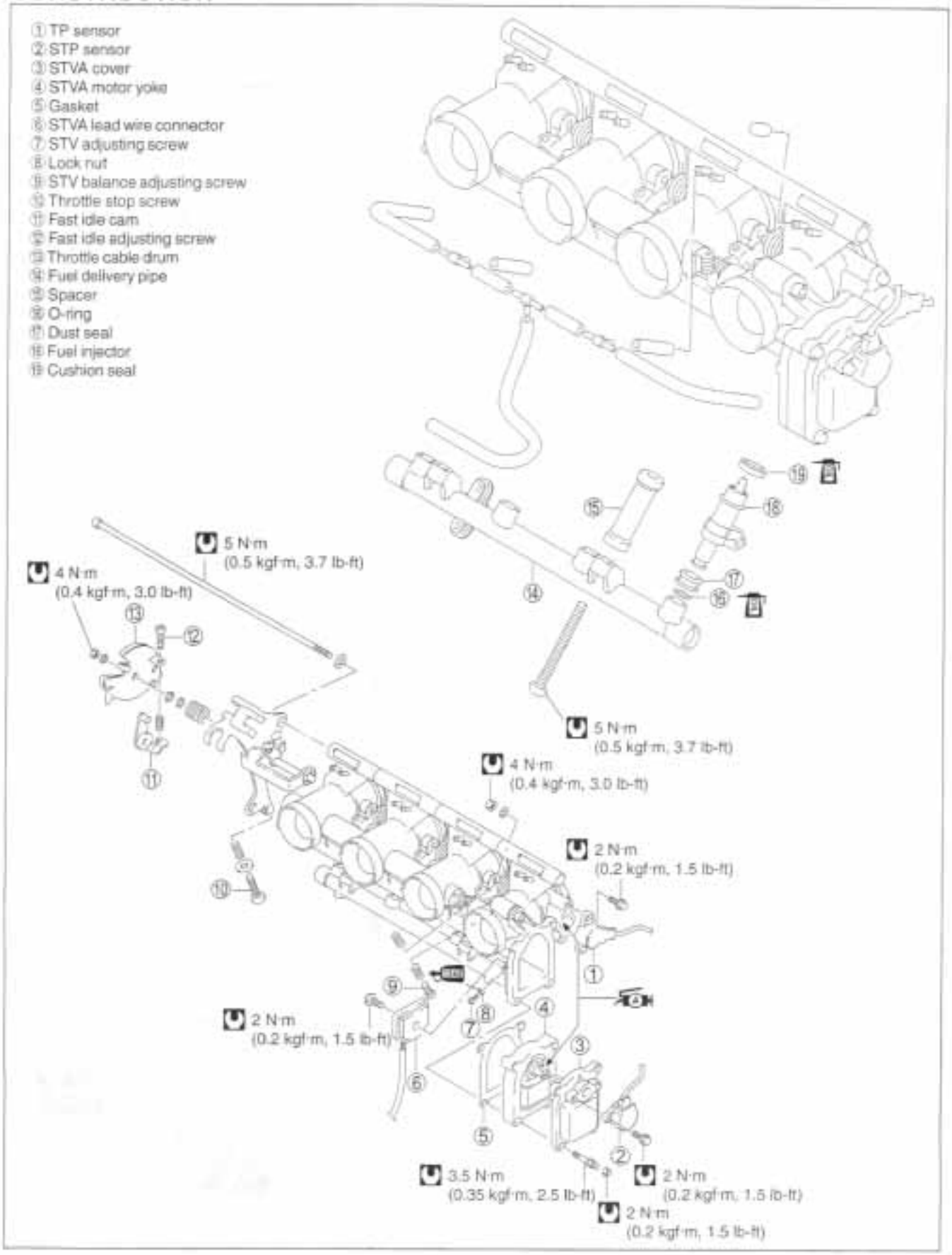

# AIR CLEANER BOX AND THROTTLE BODY REMOVAL

## AIR CLEANER BOX

- Lift and support the fuel tank with its prop stay. (☞4-52)
- Disconnect the IAT sensor coupler ① and PAIR hose ②.

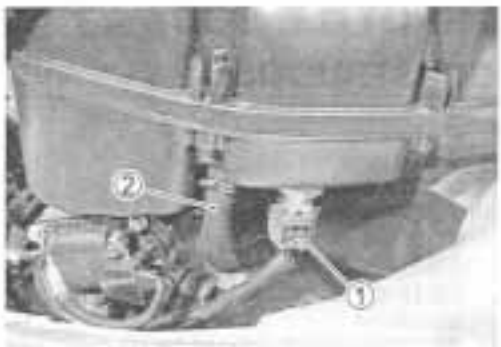


- Remove the IAP sensor ③ along with the vacuum hose ④.
- Disconnect the crankcase breather hose ⑤.


- Loosen the throttle body clamp screws.

- Remove the air cleaner box mounting bolt.
- Remove the air cleaner box.

### THROTTLE BODY

- Disconnect the throttle cables from their drum.
- Disconnect the fast idle cable from its cam.

**▲ CAUTION**

**After disconnecting the throttle cables, do not snap the throttle valve from full open to full close. It may cause damage to the throttle valve and throttle body.**

- Place a rag under the fuel feed hose and disconnect the fuel feed hose from the fuel tank.

- Disconnect the vacuum hose ① from the PAIR valve.


- Disconnect the fuel injector lead wire coupler ②.


- Loosen the throttle body clamp screws at the intake pipe side.
- Remove the throttle body assembly.

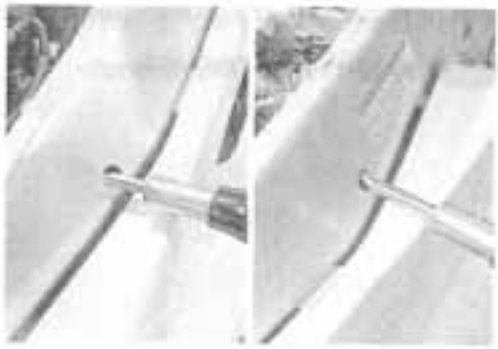

## THROTTLE BODY DISASSEMBLY

- Disconnect the respective vaccum hoses from each throttle body.

- Remove the lead wire clamps.
- Disconnect the TP sensor lead wire coupler ①, STP sensor lead wire coupler ②, STVA motor lead wire coupler ③ and fuel injector lead wire couplers ④.

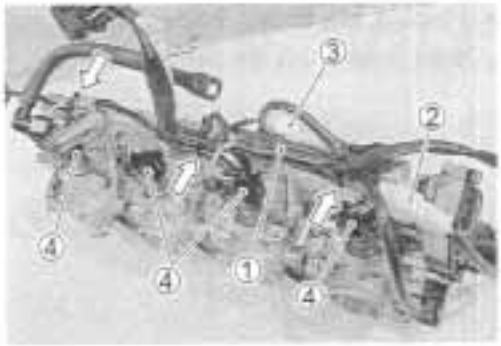


- Remove the fuel delivery pipe assembly ⑤ by removing its mounting screws.
- Remove the fuel injectors.

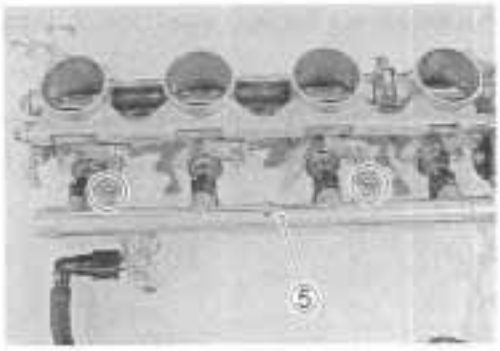


- Separate the four throttle bodies respectively by removing their connecting bolts.

- Remove the TP sensor ⑥ with the special tool.

**09930-11960: Torx wrench**

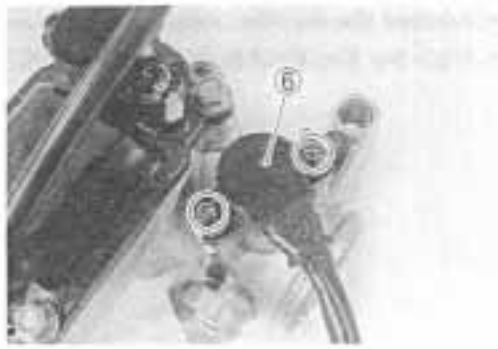

- Remove the STVA motor cover ① along with the STP sensor ②.

*NOTE:*
*Prior to disassembly, mark the STP sensor's original position with a paint or scribe for accurate reinstallation.*

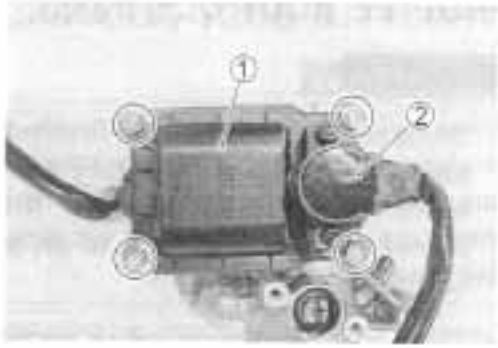


- Remove the STVA motor lead wire connector ③ by removing the screw.

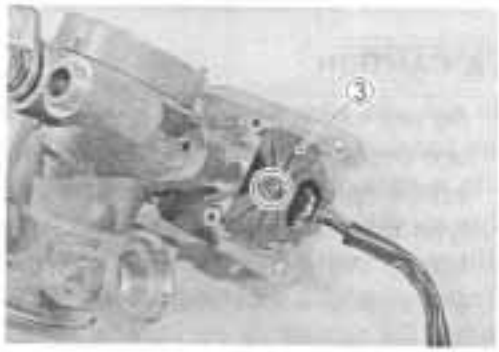


- Remove the STVA motor yoke ④ along with STVA motor ⑤.

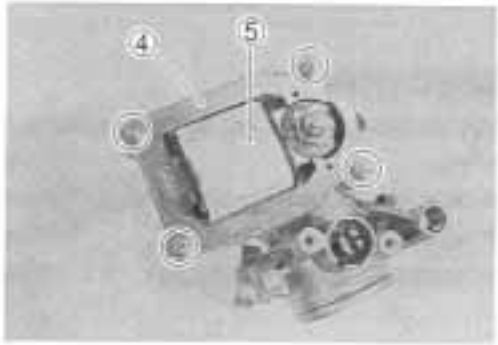


**⚠ CAUTION**

**Never remove the STVA motor frame ⑥.**
**Avoid removing the STV adjuster Ⓐ unless absolutely necessary.**

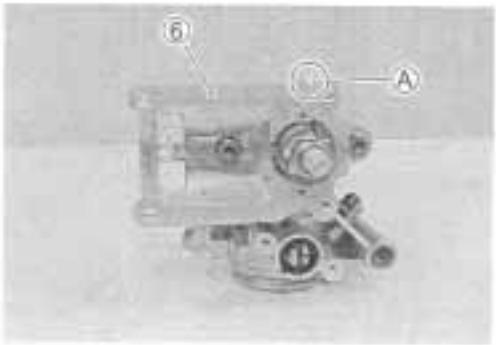


**⚠ CAUTION**

**Never remove the secondary throttle valve and throttle valve.**

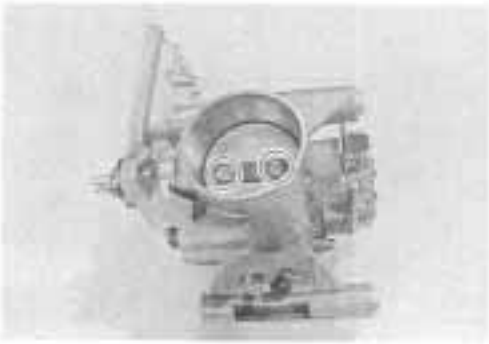

## THROTTLE BODY CLEANING

**⚠ WARNING**

**Some carburetor cleaning chemicals, especially dip-type soaking solutions, are very corrosive and must be handled carefully. Always follow the chemical manufacturer's instructions on proper use, handling and storage.**

- Clean all passageways with a spray-type carburetor cleaner and blow dry with compressed air.

**⚠ CAUTION**

**Do not use wire to clean passageways. Wire can damage passageways. If the components cannot be cleaned with a spray cleaner it may be necessary to use a dip-type cleaning solution and allow them to soak. Always follow the chemical manufacturer's instructions for proper use and cleaning of the throttle body components. Do not apply carburetor cleaning chemicals to the rubber and plastic materials.**

## INSPECTION

Check following items for any damage or clogging.

- O-ring
- Throttle shaft bushing and seal
- Throttle valve
- Secondary throttle valve
- Fuel injector filter
- Injector cushion seal
- Injector dust seal
- Vacuum hose

## THROTTLE BODY REASSEMBLY

Reassemble the throttle body in the reverse order of disassembly.

Pay attension to the following points:

- Install the STVA motor yoke ① along with the STVA motor ②.

**STVA motor yoke mounting bolt: 3.5 N·m (0.35 kgf·m, 2.5 lb-ft)**

- Align the groove Ⓐ on the secondary throttle shaft end with the lib Ⓑ of the STP sensor.

*NOTE:*
*Apply grease "A" to the groove Ⓐ if necessary.*

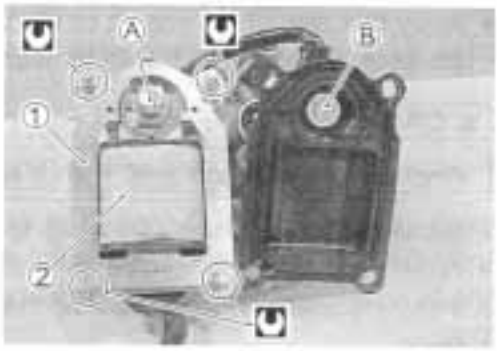


**STVA motor cover nut: 2.0 N·m (0.2 kgf·m, 1.5 lb-ft)**

*NOTE:*
*If the STP sensor adjustment is necessary, refer to page 4-71 for STP sensor setting procedure.*

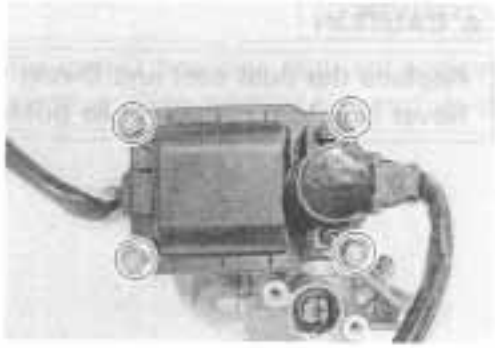

- Align the groove Ⓒ on the throttle shaft end with the lib Ⓓ of the TP sensor.

**09930-11960: Torx wrench**

*NOTE:*
*Apply grease "A" to the groove Ⓒ if necessary.*
*TP sensor setting procedure* ☞ 4-28.

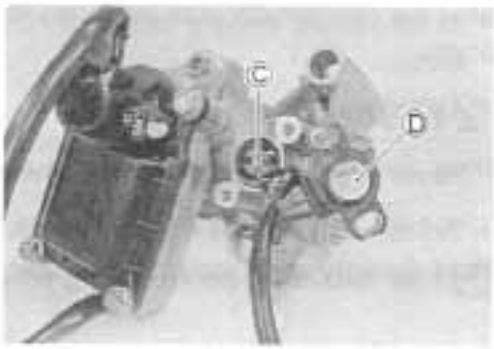


- Position the TV control lever ① between the TV synchronizing screw ② and spring ③ as shown.
- Set each TV to the same opening by turning the balance screws ②.

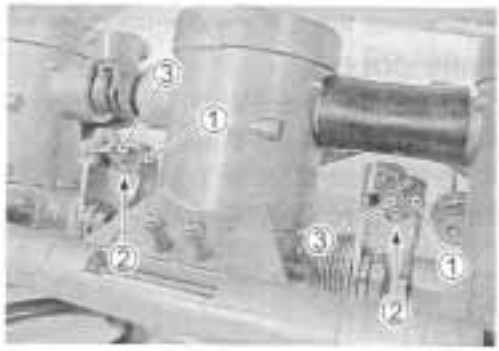


- Position the STV control lever ④ between the STV synchronizing screw ⑤ and spring ⑥ as shown.
- Place the throttle body assembly on the surface plate and tighten the connecting bolts.

**Throttle body connecting bolt: 5 N·m (0.5 kgf·m, 3.7 lb-ft)**

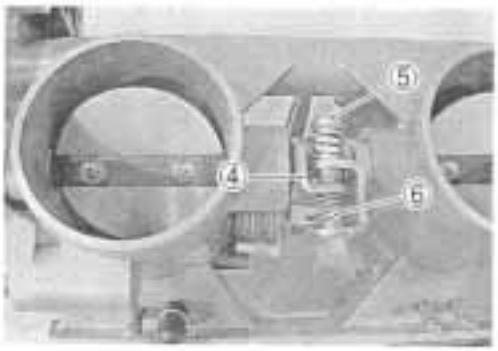

- Apply thin coat of the engine oil to the new fuel injector cushion seals ①, and install them to each fuel injector.


**▲ CAUTION**

**Replace the cushion seal with a new one.**

- Install the seals ② and O-rings ③ to each fuel injector.
- Apply thin coat of the engine oil to the new O-rings ③.
- Install the fuel injectors by pushing them straight to each throttle body.

**▲ CAUTION**

**Replace the dust seal and O-ring with the new ones. Never turn the injector while pushing it.**

- Install the fuel delivery pipe assembly to the throttle body assembly.

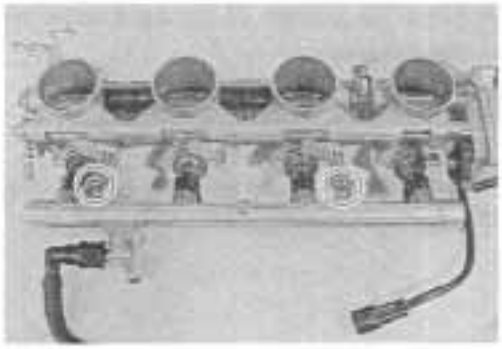

**▲ CAUTION**

**Never turn the fuel injectors while installing them.**

- Tighten the fuel delivery pipe mounting screws.

**Fuel delivery pipe mounting screw: 5 N·m (0.5 kgf·m, 3.7 lb-ft)**

- Connect the fuel injector couplers to each fuel injector.

**WIRE COLOR**

No.1 coupler: Gray, W/Bl
No.2 coupler: Gray, Black
No.3 coupler: Gray, Yellow
No.4 coupler: Gray, Green

- With the STV fully opened and using a proper scale, set the No. 4 and No. 3 ST valves to the same opening by turning the balance screw ①.

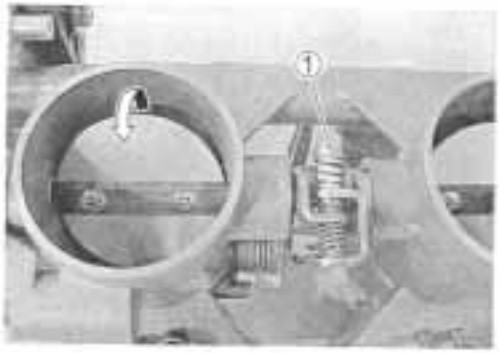



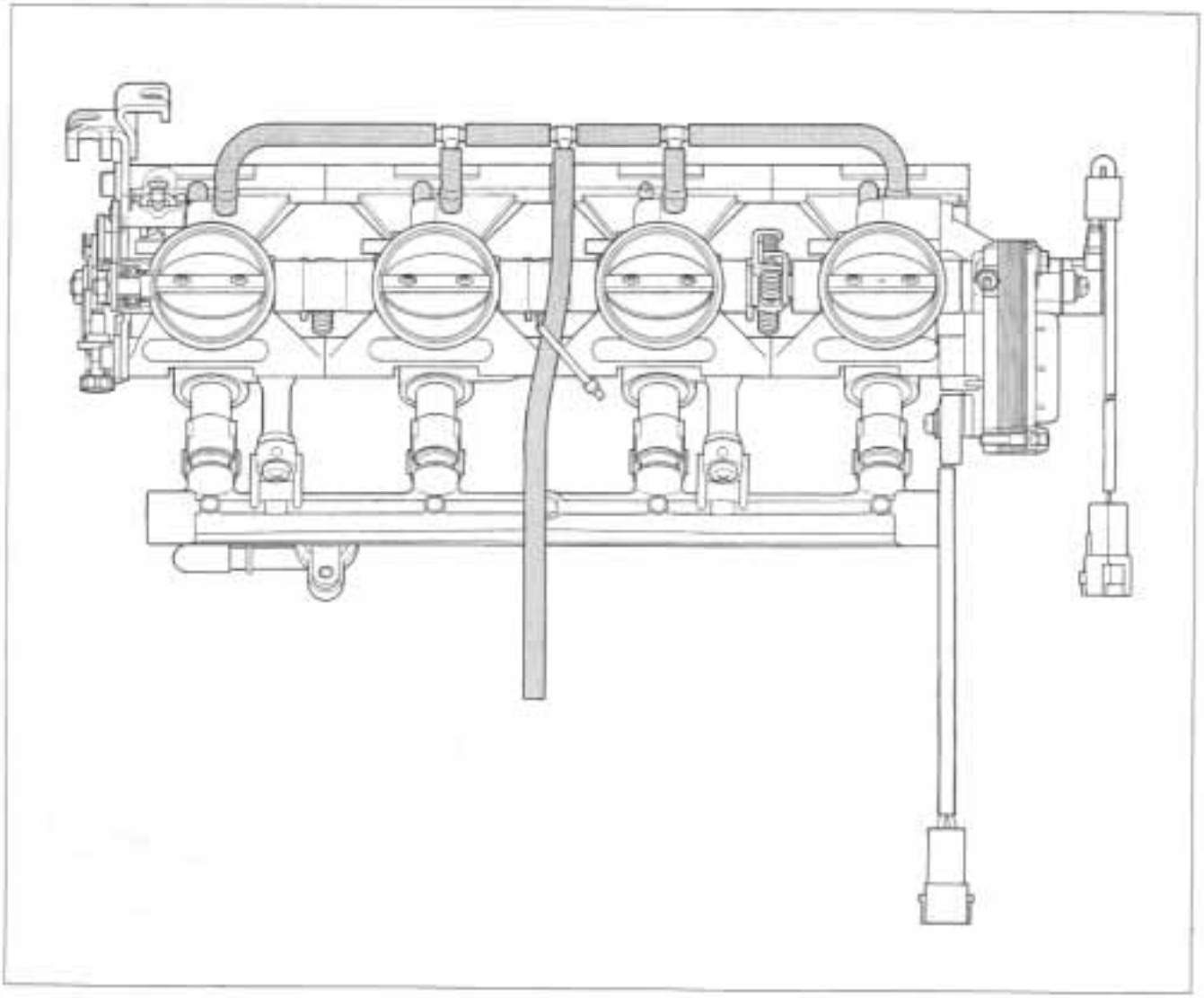

Clamp
Clamp
STVA coupler
Clamp
STPS coupler
TPS coupler
IAPS coupler
IATS coupler
FI coupler

## THROTTLE BODY INSTALLATION

Installation is in the reverse order of removal. Pay attention to the following points:

- Connect the throttle pulling cable ① and throttle returning cable ② to the throttle cable drum.
- Adjust the throttle cable play with the cable adjusters ③ and ④.
  Refer to page 4-76 for details.
- Connect the fast idle cable ⑤ and adjust the fast idle cable play with the cable adjuster ⑥.

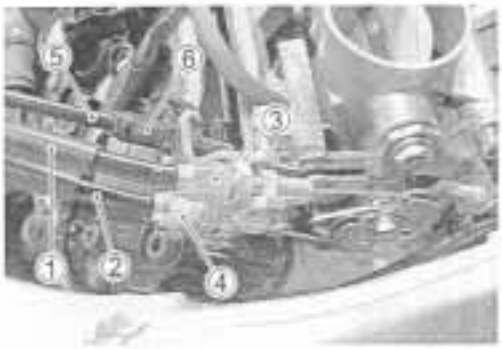

## STP SENSOR ADJUSTMENT

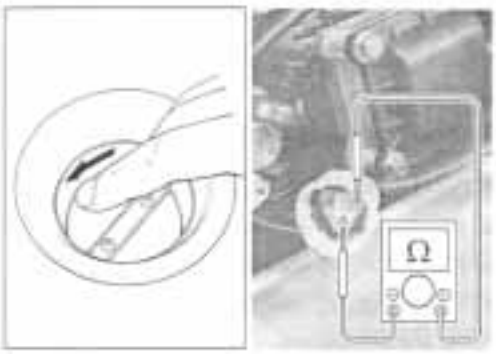


If the STP sensor adjustment is necessary, measure the sensor resistance and adjust the STP sensor positioning as follows:

- Disconnect the STP sensor coupler.
- Set the ST valve to fully close position by finger and measure the resistance between yellow and black wires.

**DATA STP sensor setting resistance**
**ST valve is fully closed: Approx. 0.8 kΩ**
**(⊕ Yellow – ⊖ Black)**

**09900-25008: Multi circuit tester**

**Tester knob indication: Resistance (Ω)**

- Loosen the STP sensor mounting screws.
- Adjust the STP sensor until resistance is within specification and tighten the STP sensor mounting screws.

**09930-11960: Torx wrench**

**STP sensor mounting screw: 2.0 N·m**
**(0.2 kgf·m, 1.5 lb-ft)**

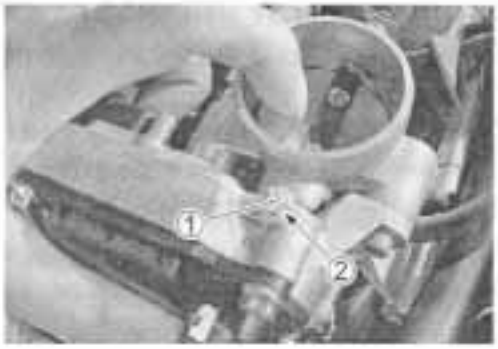


If the measured resistance is not within specification, adjust the STV adjuster ① as follows:

- Under above condition, loosen the lock ② and turn in or out the STV adjuster ① until the resistance becomes specified value.
  If the measured resistance is not obtain, replace the STP sensor with a new one, and adjust the STP sensor positioning again.

**STV adjuster lock nut: 1.0 N·m (0.1 kgf·m, 0.73 lb-ft)**

*NOTE:*
*After adjusting the STV adjuster, apply THREAD LOCK "1342" to the lock nut ②.*

### THROTTLE BODY CLAMP POSITION

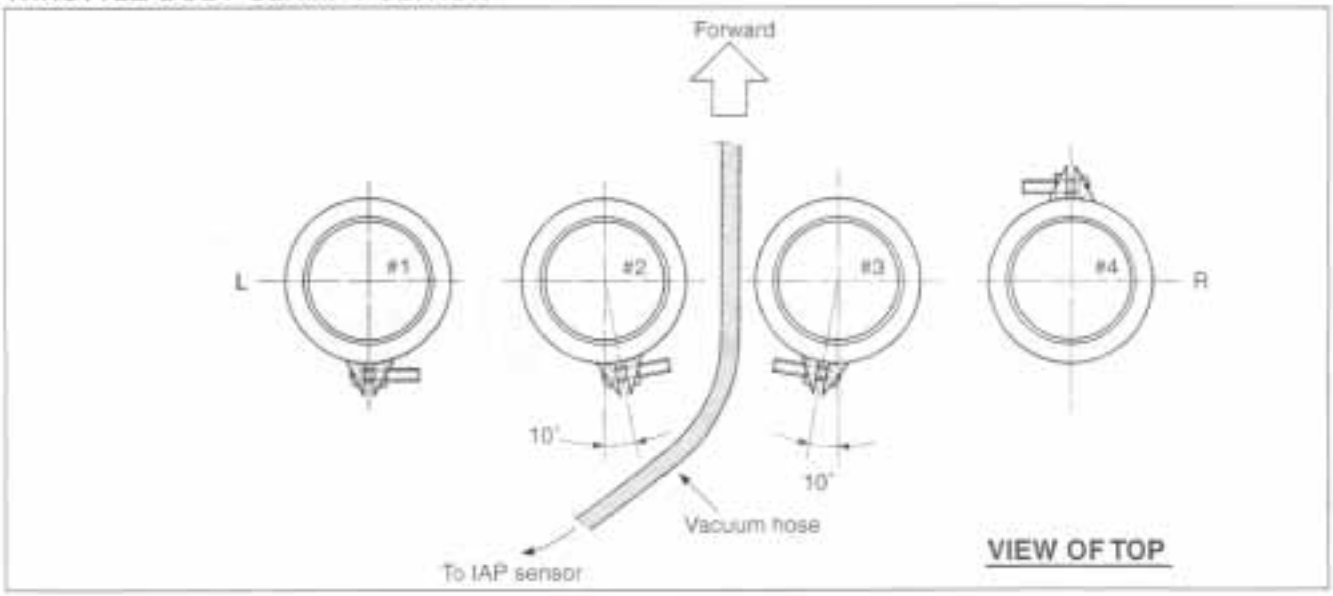

## FUEL INJECTOR INSPECTION

The fuel injector can be checked without removing it from the throttle body.
Refer to page 4-50 for details.

## FUEL INJECTOR REMOVAL

- Lift and support the fuel tank with its prop stay. (☞ 4-52)
- Remove the air cleaner box. (☞ 4-62)
- With battery negative cable disconnected, disconnect the injector couplers.
- Remove the fuel delivery pipe assembly. (☞ 4-64)
- Remove the fuel injectors No.1, No.2, No.3 and No.4. (☞ 4-64)

### INSPECTION

Check fuel injector filter for evidence of dirt and contamination. If present, clean and check for presence of dirt in the fuel lines and fuel tank.

## FUEL INJECTOR INSTALLATION

- Apply thin coat of the engine oil to new injector cushion seals and O-rings.
- Install the injector by pushing it straight to the throttle body. Never turn the injector while pushing it. (☞ 4-68)

## FAST IDLE ADJUSTMENT

The fast idle system is a kind of starter system, which opens throttle valve by the fast idle cam mechanically. The fast idle cam is turned by the fast idle cable and the cam pushes throttle valve shaft bracket. The bracket then opens throttle valve a little to increase the engine speed, and at the fully-pulled condition the engine speed rises to 3 000 rpm when warmed up.


- Connect a tachometer.
- Start up the engine and run it in idle condition for warming up.
- Set the idle speed to 1 300 rpm.
- Turn the fast idle lever (choke lever) ① fully and check the fast idle setting rpm. If the engine speed is not in the specified range, adjust it to 3 000 rpm as explained in the following procedures:

1) Lift and support the fuel tank with its prop stay. (☞ 4-52)
2) Start up the engine and keep the fast idle lever in fully-pulled condition.
3) Adjust the fast idle engine speed to 3 000 rpm by turning the fast idle adjusting screw ②. (Fast idle adjusting screw ② is located behind the throttle cable drum.)
4) After adjusting the fast idle speed, set the idle speed to 1 300 rpm.

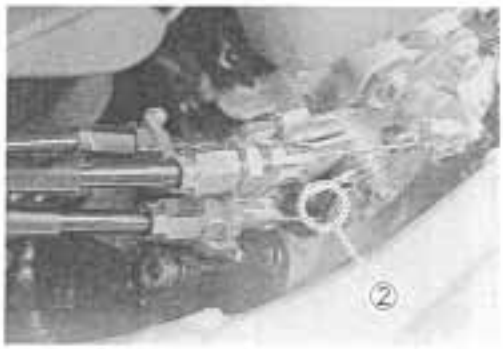


**DATA** **Fast idle setting rpm : 3 000 rpm**
**(When the engine is warmed.)**
**Engine idle rpm : 1 300 rpm**
**(When the engine is warmed.)**

## THROTTLE VALVE SYNCHRONIZATION

Check and adjust the throttle valve synchronization among four cylinders.

### CALIBRATING EACH GAUGE

- Lift and support the fuel tank. (☞ 4-52)
- Start up the engine and run it in idling condition for warming up.
- Stop the warmed-up engine.
- Disconnect the IAT sensor coupler ① and remove the IAT sensor from the air cleaner box.
- Connect the removed IAT sensor to its coupler and place it on the frame.


- Remove the IAP sensor mounting screw ②.
- Remove the air cleaner box. (☞ 4-62)

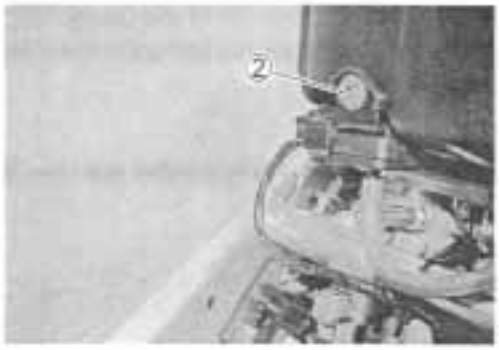


- Disconnect the vacuum hose ③ from the No.3 throttle body.


- Connect a proper rubber cap ④ to the nipple on the No.3 throttle body.

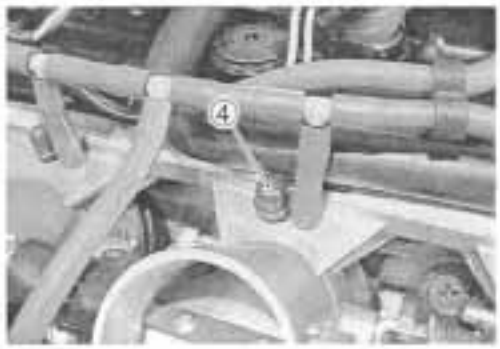

- Connect one of the four rubber hoses of the vacuum balancer gauge to the nipple ① on the No.1 throttle body.

**09913-13121: Vacuum balancer gauge**


- Connect a tachometer.
- Start up the engine and keep it running at 1 300 rpm by turning throttle stop screw ②.

**▲ CAUTION**

**Avoid drawing dirt into the throttle body while running the engine without air cleaner box. Dirt drawn into the engine will damage the internal engine parts.**

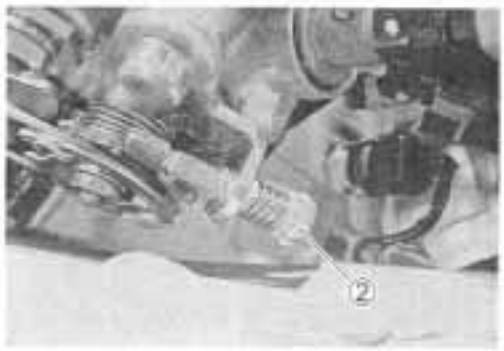


- Turn the air screw ③ of the gauge so that the vacuum acting on the tube of that hose will bring the steel ball ④ in the tube to the center line ⑤.

*NOTE:*
*The vacuum gauge is positioned approx. 30° from the horizontal level.*

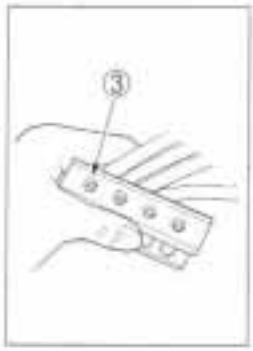


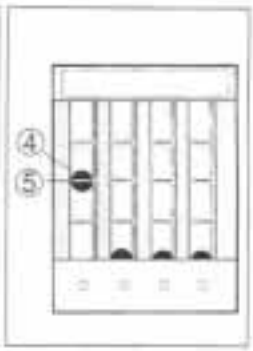


- After making sure that the steel ball stays steady at the center line, disconnect the hose from the No.1 throttle body nipple and connect the next hose to this nipple.
- Turn air screw to bring the other steel ball ⑥ to the center line.
- Repeat the above process on the third and fourth hoses.

The balancer gauge is now ready for use in balancing the throttle valves.

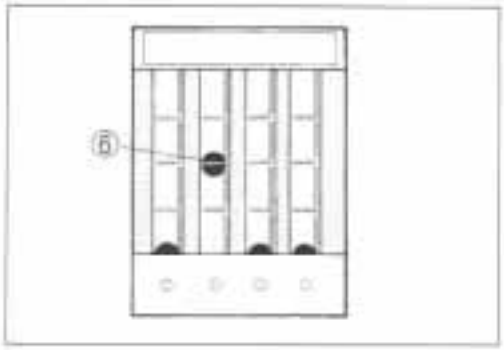

### THROTTLE VALVE SYNCHRONIZATION

- To synchronize throttle valves, remove the rubber caps ① and vacuum hose ② from each vacuum nipple and connect the vacuum balancer gauge hoses to the vacuum nipples respectively.

**09913-13121: Vacuum balancer gauge**

- Connect a tachometer and start up the engine.
- Bring the engine rpm to 1 300 rpm by the throttle stop screw.
- Check the vacuum of the four cylinders and balance the four throttle valves.

The vacuum gauge is positioned approx. 30° from the horizontal level, and in this position the four balls should be within one ball dia. If the difference is larger than one ball, turn the balance adjusting screw on the throttle body and bring the ball to the same level.

A correctly adjusted throttle valve synchronization has the balls in the No. 1 through 4 at the same level.

**⚠ CAUTION**

**Avoid drawing dirt into the throttle body while running the engine without air cleaner box. Dirt drawn into the engine will damage the internal engine parts.**

*NOTE:*

- *During balancing the throttle valves, always set the engine rpm at 1 300 rpm, using throttle stop screw.*
- *After balancing the four valves, set the idle rpm to 1 300 rpm by the throttle stop screw after installing the air cleaner box.*

## THROTTLE POSITION SENSOR (TPS) SETTING

After all adjustments are completed, check or adjust the TPS setting condition.
(Refer to page 4-28 for TPS setting procedure.)


## THROTTLE CABLE ADJUSTMENT

*NOTE:*
*Minor adjustment can be made by the throttle grip side adjuster. (☞ 2-16)*

### MAJOR ADJUSTMENT

- Loosen the lock nuts ① of the throttle returning cable ②.
- Turn the returning cable adjuster ③ to obtain proper cable play.
- Loosen the lock nuts ④ of the throttle pulling cable ⑤.
- Turn the pulling cable adjuster ⑥ in or out until the throttle cable play Ⓐ should be 2.0 – 4.0 mm (0.08 – 0.16 in) at the throttle grip.
- Tighten the lock nuts ④ securely while holding the adjuster ⑥.
- While holding the throttle grip at the fully closed position, slowly turn the returning cable adjuster ③ to obtain a cable slack Ⓑ of 1.0 mm (0.04 in).
- Tighten the lock nuts ① securely.

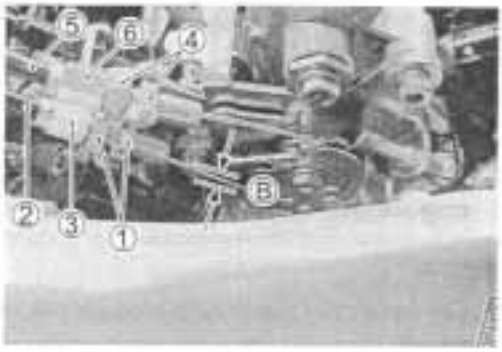


# SENSORS

## IAP SENSOR INSPECTION

The intake air pressure sensor is located at the rear side of the air cleaner box. (☞ 4-36)

## IAP SENSOR REMOVAL/INSTALLATION

- Lift and support the fuel tank. (☞ 4-52)
- Remove the IAP sensor mounting screw ① and disconnect the coupler ② and vacuum hose ③.
- Installation is in the reverse order of removal.


## TP SENSOR INSPECTION

The throttle position sensor is installed on the No.4 throttle body. (☞ 4-38)

## TP SENSOR REMOVAL/INSTALLATION

- Lift and support the fuel tank. (☞ 4-52)
- Remove the TP sensor setting screws ① and disconnect the coupler ②.
- Install the TP sensor to the No.4 throttle body. Refer to page 4-28 for TP sensor setting procedure.

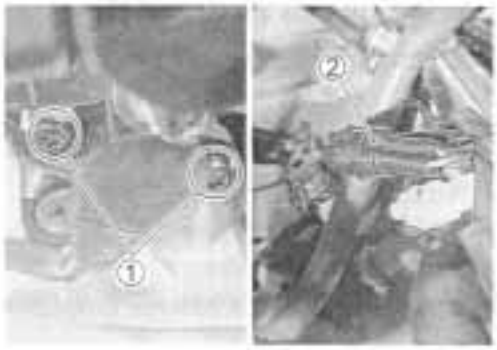


## CKP SENSOR INSPECTION

The signal rotor is mounted on the right end of the crankshaft, and the crankshaft position sensor (Pick-up coil) is installed on the right side of the middle crankcase. (☞ 4-35)

## CKP SENSOR REMOVAL/INSTALLATION

(☞ 3-23 and -80)

## CMP SENSOR INSPECTION

The signal rotor is installed on the intake camshaft, and the camshaft position sensor (Pick-up coil) is installed on the cylinder head cover. (☞ 4-34)

## CMP SENSOR REMOVAL/INSTALLATION

- Lift and support the fuel tank. (☞ 4-52)
- Remove the air cleaner box. (☞ 4-62)
- Disconnect the coupler ① and remove the CMP sensor. Installation is in the reverse order of removal.


## IAT SENSOR INSPECTION

The intake air temperature sensor is installed at the right side of the air cleaner box. (☞ 4-41)

## IAT SENSOR REMOVAL/INSTALLATION

- Lift and support the fuel tank. (☞ 4-52)
- Disconnect the IAT sensor coupler ① and remove the IAT sensor from the air cleaner box.
- Installation is in the reverse order of removal.

**IAT sensor: 18 N·m (1.8 kgf·m, 13.0 lb·ft)**

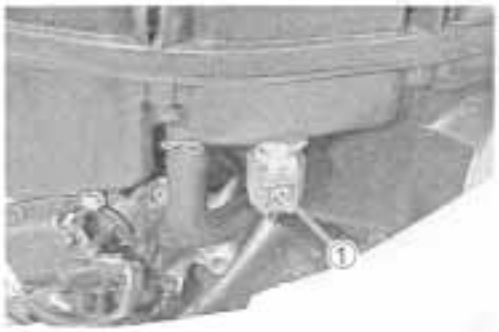

## ECT SENSOR INSPECTION

The engine coolant temperature sensor is installed at the rear side of the cylinder head. (☞ 4-40 and 5-8)

## ECT SENSOR REMOVAL/INSTALLATION

(☞ 5-8 and -9)


## AP SENSOR INSPECTION

The atmospheric pressure sensor is located over the ECM. (☞ 4-42)

## AP SENSOR REMOVAL/INSTALLATION

- Remove the front seat. (☞ 6-6)
- Disconnect the coupler ①.
- Remove the AP sensor.
- Installation is in the reverse order of removal.


## TO SENSOR INSPECTION

The tip over sensor is located in ahead of the battery holder.

## TO SENSOR REMOVAL/INSTALLATION

- Remove the front seat. (☞ 6-6)
- Lift and support the fuel tank. (☞ 4-52)
- Disconnect the coupler ① and remove the TO sensor from the fuel tank bracket.
- Installation is in the reverse order of removal.

*NOTE:*

*When installing the TO sensor, bring the "UPPER" letter on it to the top.*


## STP SENSOR INSPECTION

The secondary throttle position sensor is installed on the STV actuator. (☞ 4-46)

## STP SENSOR REMOVAL/INSTALLATION

- Lift and support the fuel tank. (☞ 4-52)
- Remove the STP sensor setting screws ① and disconnect the coupler ②.
- Install the STP sensor to the STV actuator. Refer to page 4-71 for STP sensor setting procedure.

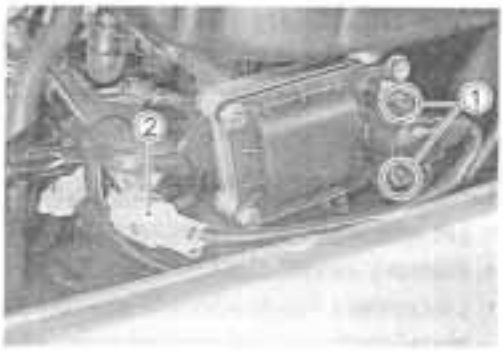

# COOLING AND LUBRICATION SYSTEM

CONTENTS

# ENGINE COOLANT

At the time of manufacture, the cooling system is filled with a 50:50 mixture of distilled water and ethylene glycol anti-freeze. This 50:50 mixture will provide the optimum corrosion protection and excellent heat protection, and will protect the cooling system from freezing at temperatures above –31°C (–24°F).
If the motorcycle is to be exposed to temperatures below –31°C (–24°F), this mixing ratio should be increased up to 55% or 60% according to the figure.

| Anti-freeze density | Freezing point |
|---|---|
| 50% | –30°C (–24°F) |
| 55% | –40°C (–44°F) |
| 60% | –55°C (–67°F) |

**⚠ CAUTION**

- **Use a high quality ethylene glycol base anti-freeze, mixed with distilled water. Do not mix an alcohol base anti-freeze and different brands of anti-freeze.**
- **Do not put in more than 60% anti-freeze or less than 50%. (Refer to Right figure.)**
- **Do not use a radiator anti-leak additive.**

50% Engine coolant including reserve tank capacity

| | |
|---|---|
| Anti-freeze | 1 200 ml (3.1/2.6 US/Imp. pt) |
| Water | 1 200 ml (3.1/2.6 US/Imp. pt) |

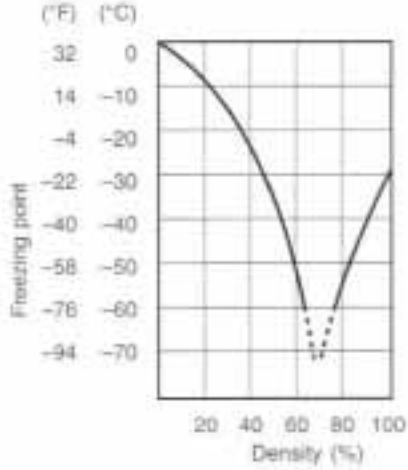


**Fig.1 Engine coolant density-freezing point curve.**

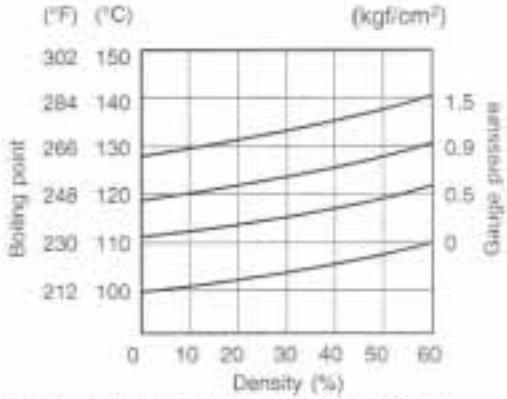


**Fig.2 Engine coolant density-boiling point curve.**

**⚠ WARNING**

- **You can be injured by scalding fluid or steam if you open the radiator cap when the engine is hot. After the engine cools, wrap a thick cloth around cap and carefully remove the cap by turning it a quarter turn to allow pressure to escape and then turn the cap all the way off.**
- **The engine must be cool before servicing the cooling system.**
- **Coolant is harmful;**
  - **If it comes in contact with skin or eyes, flush with water.**
  - **If swallowed accidentally, induce vomiting and call physician immediately.**
  - **Keep it away from children.**

# COOLING CIRCUIT

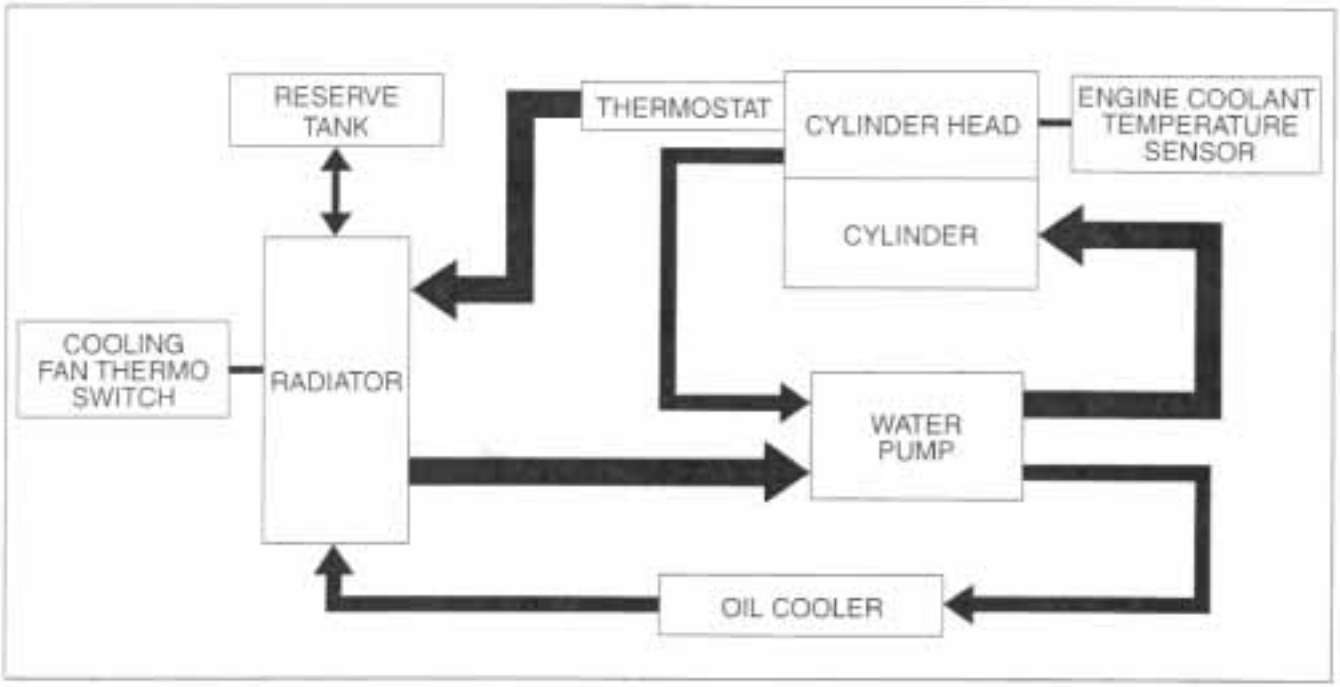


## COOLING CIRCUIT INSPECTION

Before removing the radiator and draining the engine coolant, inspect the cooling circuit for tightness.

- Remove the under cowling. (☞6-3)
- Remove the radiator cap ① and connect the tester ② to the filler.


**⚠ WARNING**

**Do not remove the radiator cap when the engine is hot.**

- Give a pressure of about 120 kPa (1.2 kgf/cm², 17 psi) and see if the system holds this pressure for 10 seconds.
- If the pressure should fall during this 10-second interval, it means that there is a leaking point in the system. In such a case, inspect the entire system and replace the leaking component or part.


**⚠ WARNING**

**When removing the radiator cap tester, put a rag on the filler to prevent spouting of engine coolant.**

**⚠ CAUTION**

**Do not allow the pressure to exceed the radiator cap release pressure, or the radiator can be damaged.**

# RADIATOR AND WATER HOSES

## RADIATOR REMOVAL

- Remove the under cowling. (☞6-3)
- Drain engine coolant. (☞2-18)
- Remove the radiator. (☞3-5)

## RADIATOR CAP INSPECTION

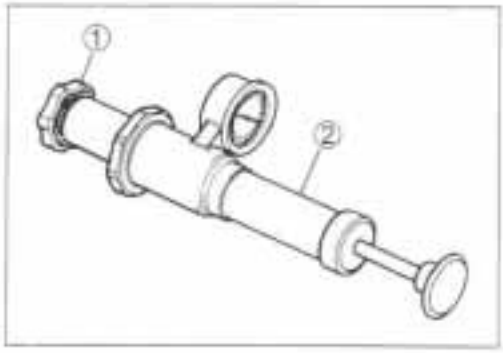


- Fit the cap ① to the radiator cap tester ②.
- Build up pressure slowly by operating the tester. Make sure that the pressure build-up stops at 95–125 kPa (0.95–12.5 kgf/cm², 13.5–17.8 psi) and that, with the tester held standstill, the cap is capable of holding that pressure for at least 10 seconds.
- Replace the cap if it is found not to satisfy either of these two requirements.

**DATA Radiator cap valve opening pressure**
**Standard: 95 – 125 kPa**
**(0.95 – 1.25 kgf/cm², 13.5 – 17.8 psi)**

## RADIATOR INSPECTION AND CLEANING

- Road dirt or trash stuck to the fins must be removed.
- Use of compressed air is recommended for this cleaning.

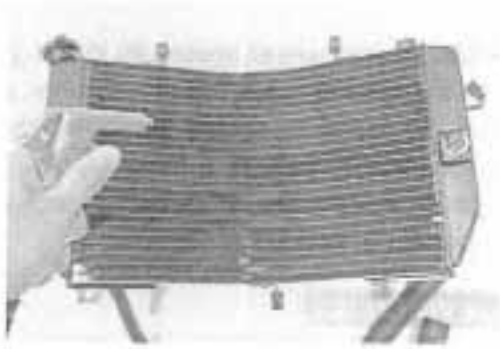

- Fins bent down or dented can be repaired by straightening them with the blade of a small screwdriver.

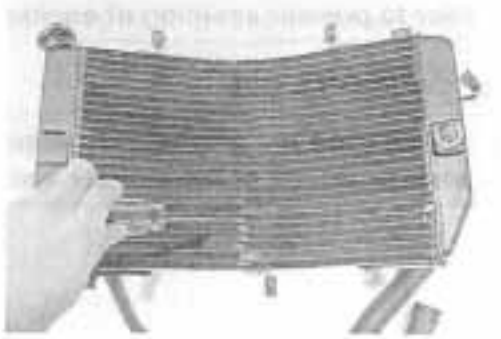

## RADIATOR REMOUNTING

- Install the radiator.
- Route the radiator hoses. (☞8-19)
- Pour engine coolant. (☞2-18)
- Bleed the air from the cooling circuit. (☞2-19)
- Install the under cowling.

## WATER HOSE INSPECTION

- Remove the under cowling. (☞6-3)
- Any water hose found in a cracked condition or flattened must be replaced.
- Any leakage from the connecting section should be corrected by proper tightening.

# COOLING FAN

## REMOVAL

- Remove the under cowling. (☞6-3)
- Drain engine coolant. (☞2-18)
- Remove the radiator. (☞3-5)
- Remove the cooling fan.

## INSPECTION

- Remove the under cowling. (☞6-3)
- Disconnect the cooling fan lead wire coupler ①.
- Test the cooling fan motor for load current with an ammeter connected as shown in the illustration.


- The voltmeter is for making sure that the battery applies 12 volts to the motor. With the motor with electric motor fan running at full speed, the ammeter should be indicating not more than 5 amperes.
- If the fan motor does not turn, replace the motor assembly with a new one.

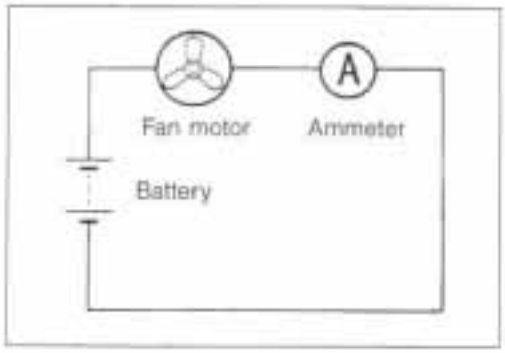


*NOTE:*
*When making above test, it is not necessary to remove the cooling fan.*

## INSTALLATION

- Install the radiator.
- Route the radiator hoses. (☞8-19)
- Pour engine coolant. (☞2-18)
- Bleed the air from the cooling circuit. (☞2-19)
- Install the under cowling. (☞6-3)

# COOLING FAN THERMO-SWITCH

## REMOVAL

- Remove the under cowling. (☞6-3)
- Drain engine coolant. (☞2-18)
- Disconnect the cooling fan thermo-switch lead wire coupler ①.
- Remove the cooling fan thermo-switch ②.

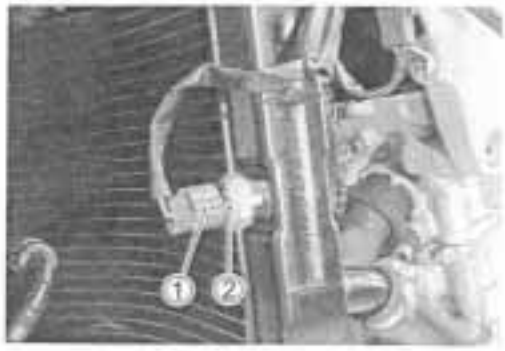

## INSPECTION

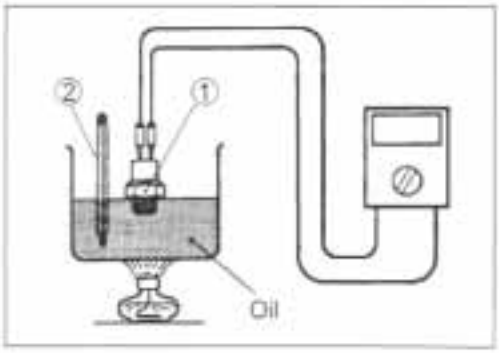


- Check the thermo-switch closing or opening temperatures by testing it at the bench as shown in the figure. Connect the thermo-switch to a circuit tester and place it in the oil contained in a pan, which is placed on a stove.
- Heat the oil to raise its temperature slowly, and read the column thermometer when the switch closes or opens.

**09900-25008: Multi circuit tester set**

**Tester knob indication: Continuity test (•))**

**DATA Cooling fan thermo-switch operating temperature**
**Standard (OFF→ON): Approx. 105°C (221°F)**
**(ON→OFF): Approx. 100°C (212°F)**

**⚠ CAUTION**

- **Take special care when handling the thermo-switch. It may cause damage if it gets a sharp impact.**
- **Do not contact the cooling fan thermo-switch ① and the column thermometer ② with a pan.**

## INSTALLATION


- Install the O-ring ①.
- Tighten the cooling fan thermo-switch to the specified torque.

**Cooling fan thermo-switch: 17 N·m**
**(1.7 kgf·m, 12.5 lb-ft)**

- Pour engine coolant. (☞2-18)
- Install the under cowling. (☞6-3)

# ENGINE COOLANT TEMPERATURE SENSOR

## REMOVAL

- Remove the front seat. (☞6-6)
- Remove the fuel tank. (☞4-52)
- Remove the air cleaner box. (☞4-62)
- Remove the throttle body. (☞4-63)
- Remove the left side intake pipes.

- Disconnect the engine coolant temperature switch lead wire coupler.
- Keep the motorcycle upright.
- Place a rag under the sensor and remove the engine coolant temperature sensor ①.

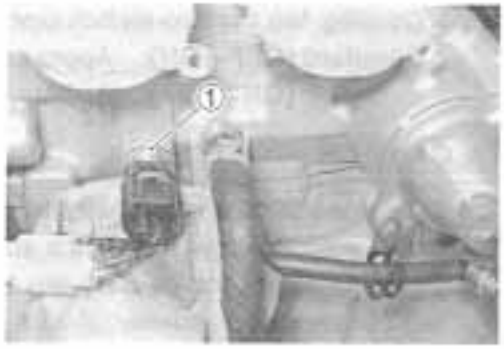


## INSPECTION

- Check the engine coolant temperature sensor by testing it at the bench as shown in the figure. Connect the temperature sensor ① to a circuit tester and place it in the oil contained in a pan, which is placed on a stove.
- Heat the oil to raise its temperature slowly and read the column thermometer and the ohmmeter.

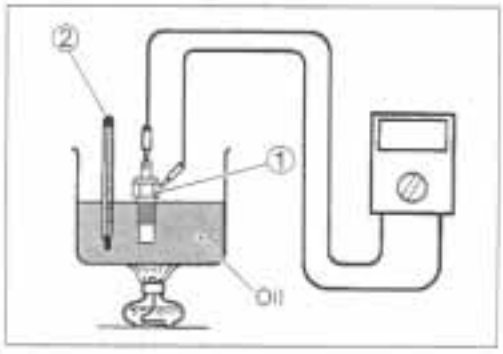


- If the temperature sensor ohmic value does not change in the proportion indicated, replace it with a new one.

**DATA Temperature sensor specification**

| Temperature | Standard resistance |
|---|---|
| 20°C ( 68°F) | Approx. 2.45 kΩ |
| 50°C (122°F) | Approx. 0.811 kΩ |
| 80°C (176°F) | Approx. 0.318 kΩ |
| 110°C (230°F) | Approx. 0.142 kΩ |
| 130°C (266°F) | Approx. 0.088 kΩ |

If the resistance noted to show infinity or too much different resistance value, replace the temperature sensor with a new one.

**⚠ CAUTION**

- **Take special care when handling the temperature-sensor. It may cause damage if it gets a sharp impact.**
- **Do not contact the engine coolant temperature sensor ① and the column thermometer ② with a pan.**

## INSTALLATION

- Tighten the engine coolant temperature switch to the specified torque.

**Engine coolant temperature sensor: 18 N·m (1.8 kgf·m, 13.0 lb-ft)**

**CAUTION**

**Take special care when handling the temperature-sensor. It may cause damage if it gets a sharp impact.**

- Install the throttle body.
- Install the air cleaner box.
- Install the fuel tank. (4-52)
- Install the front seat.

# THERMOSTAT

## REMOVAL

- Remove the front seat. (6-6)
- Remove the fuel tank. (4-52)
- Place a rag under the thermostat case.
- Remove the thermostat case.

- Remove the thermostat ①.

## INSPECTION

Inspect the thermostat pellet for signs of cracking.
Test the thermostat at the bench for control action, in the following manner.

- Pass a string between flange, as shown in the illustration.
- Immerse the thermostat in the water contained in a beaker, as shown in the illustration. Note that the immersed thermostat is in suspension. Heat the water by placing the beaker on a stove and observe the rising temperature on a thermometer.

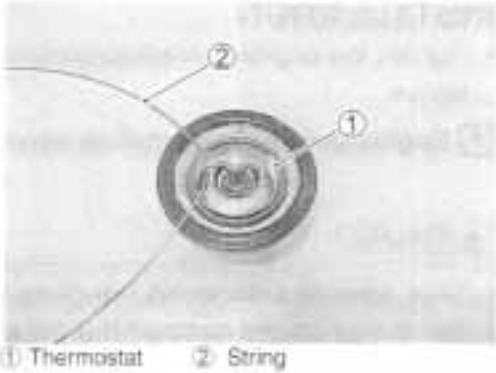

① Thermostat ② String

- Read the thermometer just when opening the thermostat. This reading, which is the temperature level at which the thermostat valve begins to open, should be within the standard value.

**DATA Thermostat valve opening temperature**
**Standard: Approx. 82°C (180°F)**

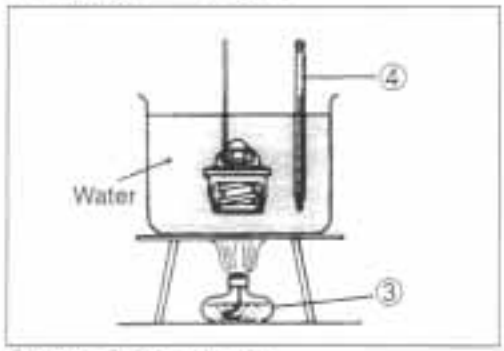

③ Stove ④ Thermometer

- Keep on heating the water to raise its temperature.
- Just when the water temperature reaches specified value, the thermostat valve should have lifted by at least 8.0 mm (0.31 in).

**DATA Thermostat valve lift**
**Standard: Over 8.0 mm at 95°C (Over 0.31 in at 203°F)**

- A thermostat failing to satisfy either of the two requirements (start-to-open temperature and valve lift) must be replaced.

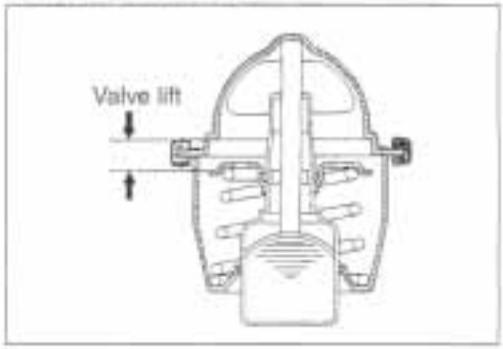


## INSTALLATION

- Install the thermostat.

*NOTE:*
*The jiggle valve Ⓐ of the thermostat faces upside.*

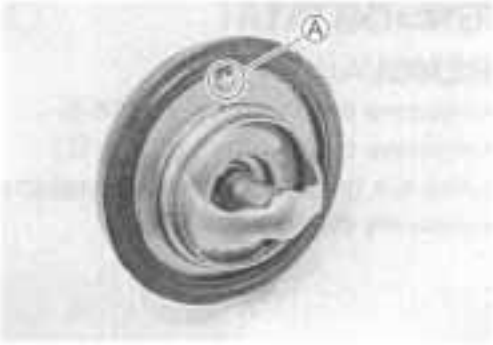


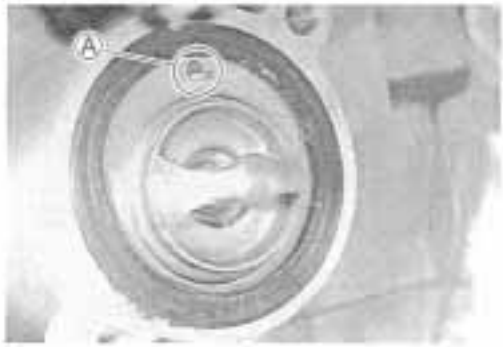

- Install the thermostat case.

*NOTE:*
*Fit the clamp to the thermostat case bolt Ⓐ.*

- Tighten the thermostat case bolt to the specified torque.

**Thermostat case bolt: 10 N·m (1.0 kgf·m, 7.0 lb-ft)**


- Install the fuel tank. (☞ 4-52)
- Install the front seat.

# WATER PUMP

## REMOVAL AND DISASSEMBLY

- Remove the under cowling. (☞ 6-3)
- Drain engine coolant. (☞ 2-18)
- Drain engine oil. (☞ 2-13)

*NOTE:*
*Before draining engine oil and engine coolant, inspect engine oil and coolant leakage between the water pump and crankcase. If engine oil is leaking, visually inspect the oil seal and O-ring. If engine coolant is leaking, visually inspect the mechanical seal and seal washer. (☞ 5-14)*

- Remove the reserve tank ①.

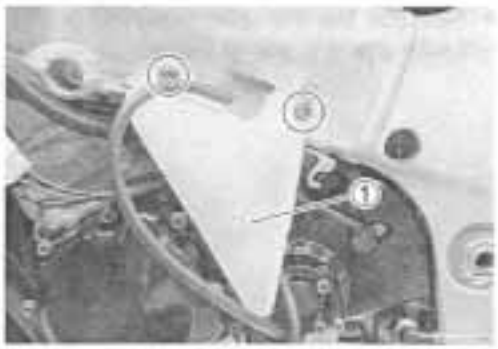

- Remove the engine sprocket cover ①.


- Disconnect the water hoses.

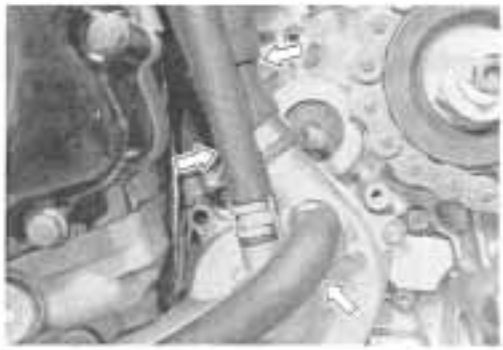

- Remove the water pump.

- Remove the water pump cover.

- Remove the impeller securing bolt ② by holding the impeller shaft with a water pump pliers.

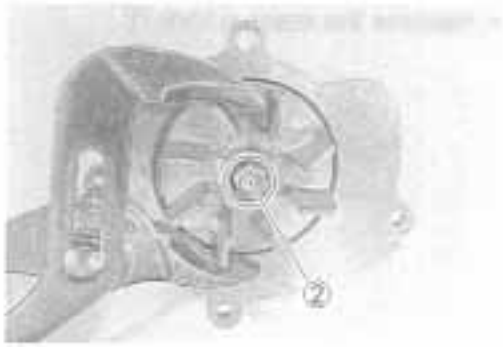

- Remove the mechanical seal ring ① and the rubber seal ② from the impeller.

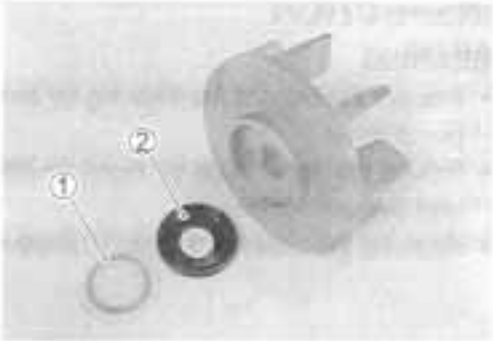


- Remove the impeller shaft ③.

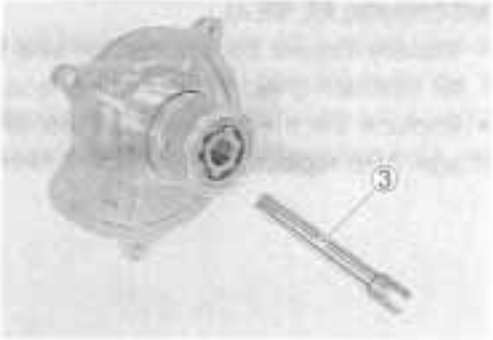


- Remove the bearing using the special tool.

**TOOL 09921-20220: Bearing remover set (φ 10)**

*NOTE:*
*If no abnormal noise, bearing removal is not necessary.*

**⚠ CAUTION**

**The removed bearing must be replaced with a new one.**

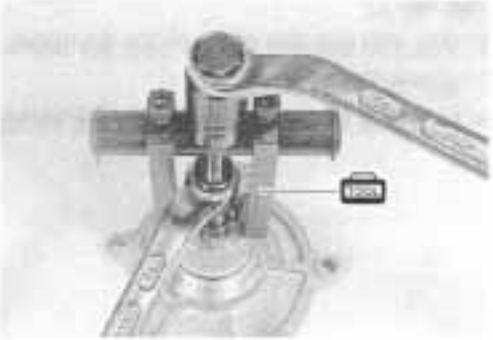


- Remove the mechanical seal using the special tool.

**TOOL 09921-20220: Bearing remover set (φ 12)**

*NOTE:*
*If no abnormal, the mechanical seal removal is not necessary.*

**⚠ CAUTION**

**The removed mechanical seal must be replaced with a new one.**

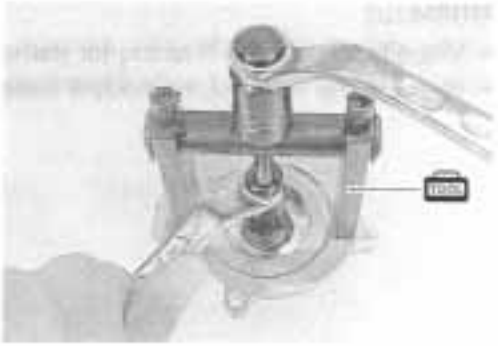


- Remove the oil seal using a suitable bar.

*NOTE:*
*If no abnormal, the oil seal removal is not necessary.*

**⚠ CAUTION**

**The removed oil seal must be replaced with a new one.**

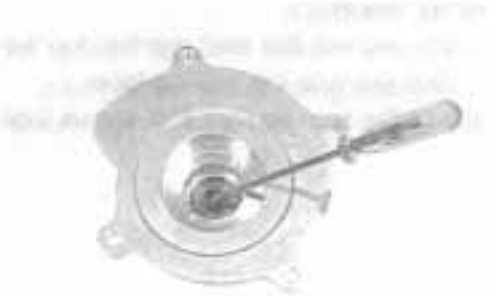

## INSPECTION

### BEARING

- Inspect the play of the bearing by hand while it is in the water pump case.
- Rotate the inner race by hand to inspect for abnormal noise and smooth rotation.
- Replace the bearing if there is anything unusual.

### MECHANICAL SEAL

- Visually inspect the mechanical seal for damage, with particular attention given to the sealing face.
- Replace the mechanical seal that shows indications of leakage. Also replace the seal ring if necessary.

### OIL SEAL

- Visually inspect the oil seal for damage, with particular attention given to the lip.
- Replace the oil seal that shows indications of leakage.

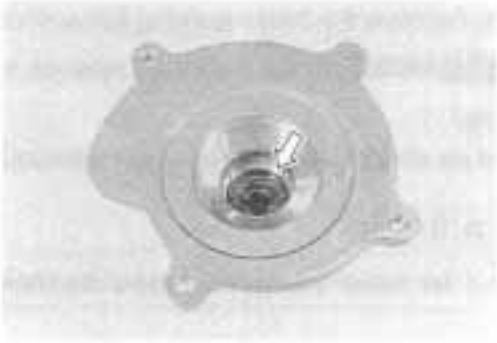

### BUSHING

- Visually inspect the bushing for damage.
- Replace the water pump body if necessary.

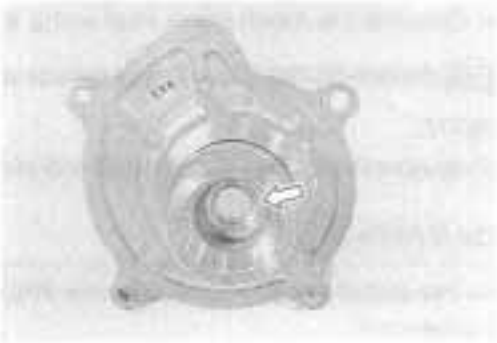

### SEAL WASHER

- Visually inspect the seal washer for damage, with particular attention given to the sealing face.
- Replace the seal washer that shows indications of leakage.

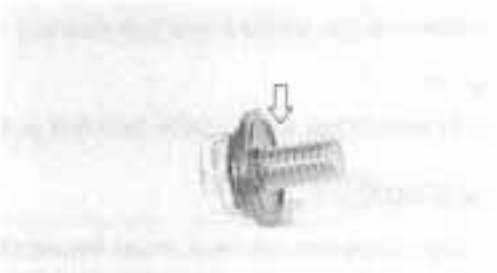

## REASSEMBLY AND INSTALLATION

- Install the oil seal using the special tool.

**09913-70210: Bearing installer set (φ 20)**

*NOTE:*
*The stamped mark on the oil seal faces outside.*

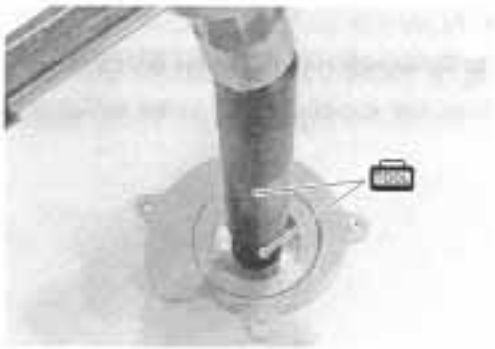

- Apply a small quantity of the SUZUKI SUPER GREASE "A" to the oil seal lip.

**99000-25010: SUZUKI SUPER GREASE "A"**

- Install the new mechanical seal using a suitable size socket wrench.

*NOTE:*
*The new mechanical seal has been applied the sealer Ⓐ.*

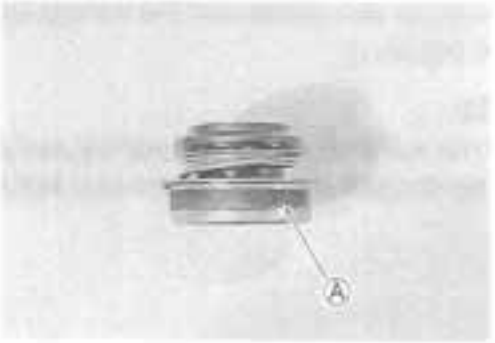


- Install the new bearing using the special tool.

**09913-70210: Bearing installer set (φ 25)**

*NOTE:*
*The stamped mark on the bearing faces crankcase side.*

- Apply grease to the impeller shaft.

**99000-25010: SUZUKI SUPER GREASE "A"**

- Install the impeller shaft to the water pump body.

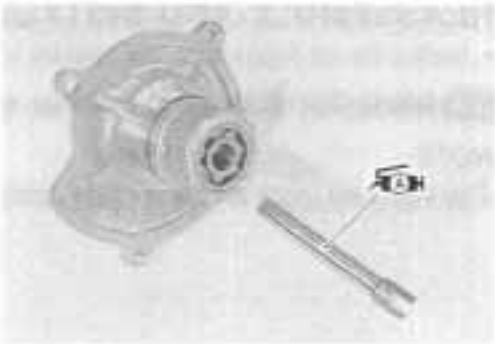

- Install the rubber seal ① into the impeller.
- After wiping off the oily or greasy matter from the mechanical seal ring, install it into the impeller.

*NOTE:*
*The marked side Ⓐ of the mechanical seal ring faces the impeller.*

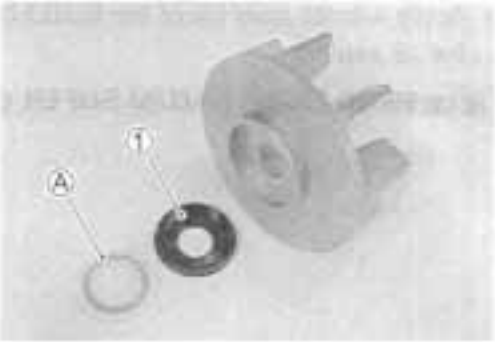


- Install the seal washer and the washer onto the impeller securing bolt ②.

*NOTE:*
*The metal side Ⓑ of the seal washer and the convex side Ⓒ of the washer face the impeller securing bolt head.*

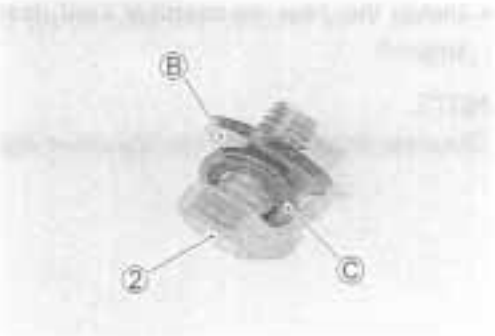


- Install the impeller ③ and its securing bolt ② onto the shaft.
- Tighten the impeller securing bolt ② to the specified torque.

**Impeller securing bolt: 8 N·m (0.8 kgf·m, 6.0 lb-ft)**

*NOTE:*
*Before installing the impeller securing bolt, apply a small quantity of the THREAD LOCK "1342" to it.*

**99000-32050: THREAD LOCK "1342"**

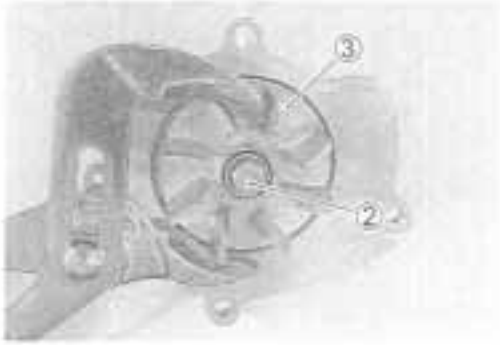

- Install the new O-rings, ① and ②.

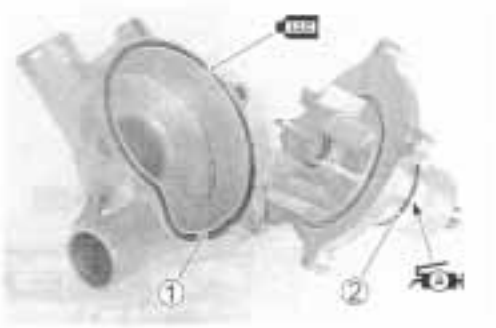


**⚠ CAUTION**

**Use the new O-rings to prevent engine coolant leakage.**

*NOTE:*
** Apply engine coolant to the O-ring ①.*
** Apply grease to the O-ring ②.*

**99000-25010: SUZUKI SUPER GREASE "A"**

- Tighten the water pump cover screws to the specified torque.

**Water pump cover screw: 6 N·m (0.6 kgf·m, 4.5 lb-ft)**

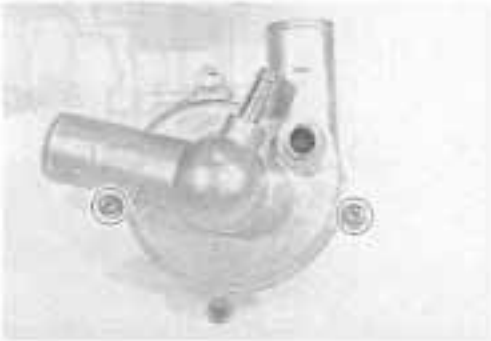

- Install the water pump and tighten its mounting bolt to the specified torque.

**Water pump mounting bolt: 10 N·m (1.0 kgf·m, 7.0 lb-ft)**

*NOTE:*
*Set the water pump shaft end Ⓐ to the oil pump shaft Ⓑ as shown in the following illustration. (☞ 5-18)*

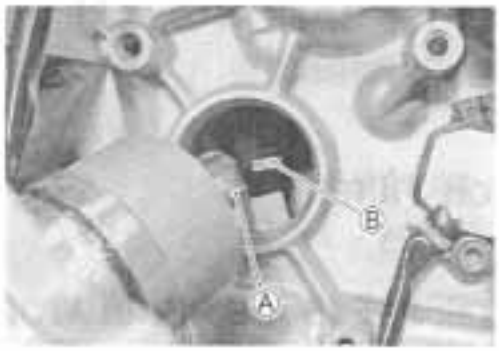


- Connect the water hoses. (☞ 8-19)
- Install the engine sprocket cover.
- Install the reserve tank.
- Pour engine coolant. (☞ 2-18)
- Pour engine oil. (☞ 2-13)
- Install the under cowling.

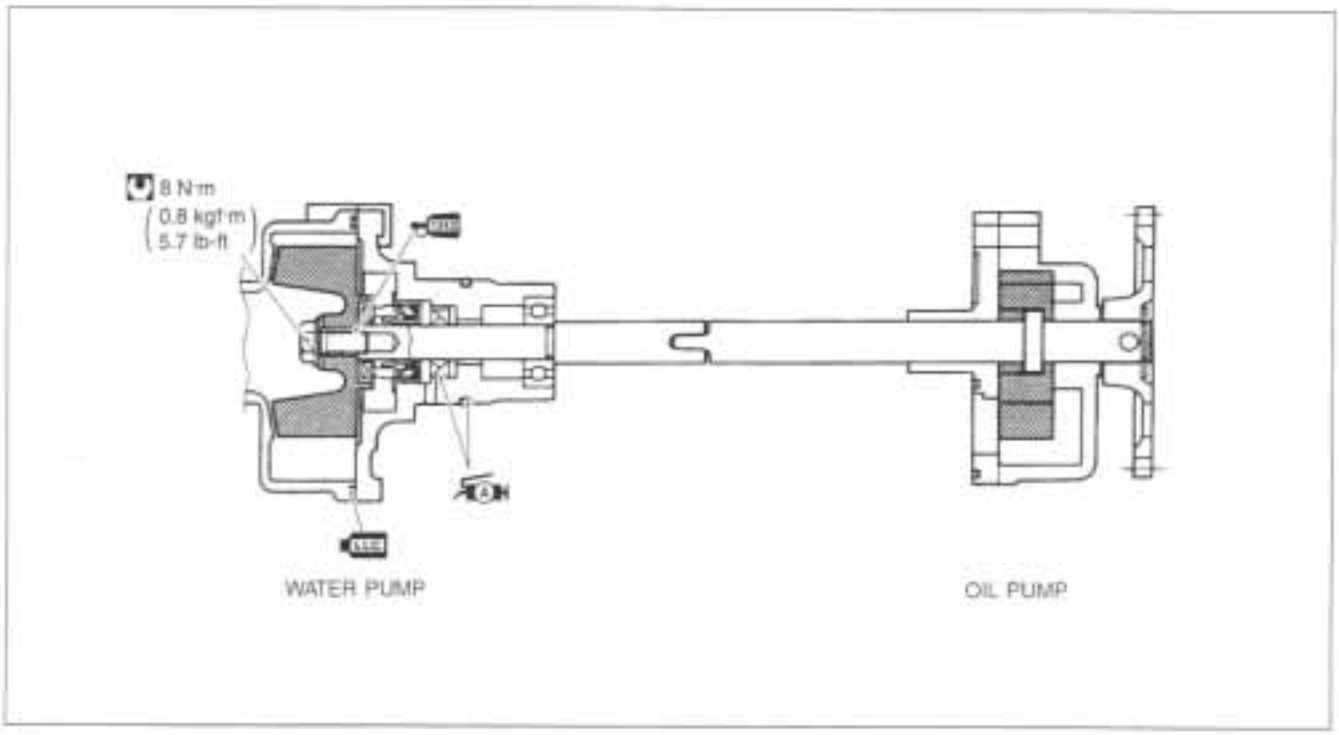


# LUBRICATION SYSTEM

## OIL PRESSURE

☞ 2-31

## OIL FILTER

☞ 2-14

## OIL PRESSURE REGULATOR

☞ 3-45

## OIL STRAINER

☞ 3-45

## OIL JET

☞ 3-57

## OIL PUMP

☞ 3-43

## OIL PRESSURE SWITCH

☞ 7-31

## ENGINE LUBRICATION SYSTEM CHART

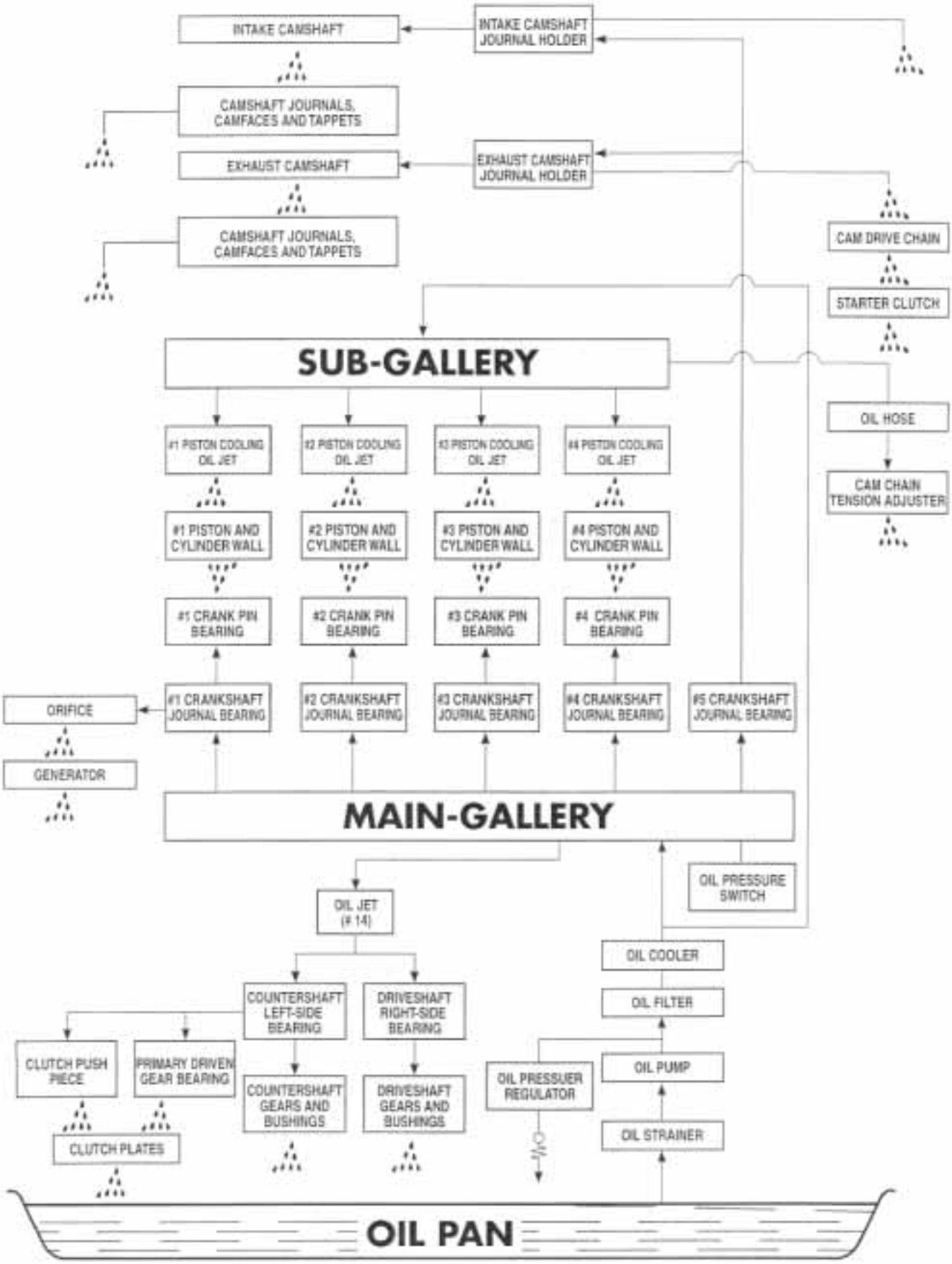

## ENGINE LUBRICATION SYSTEM

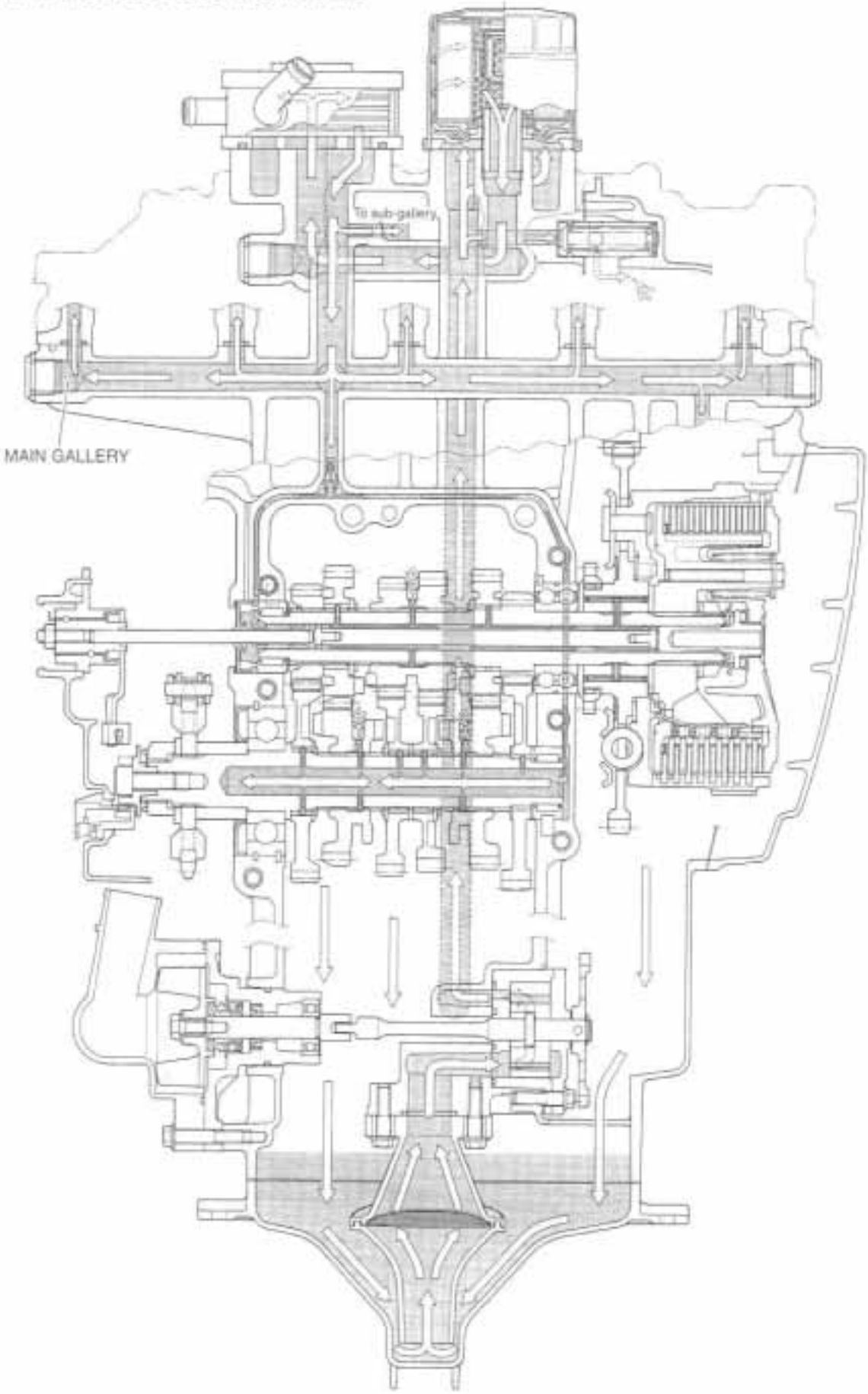

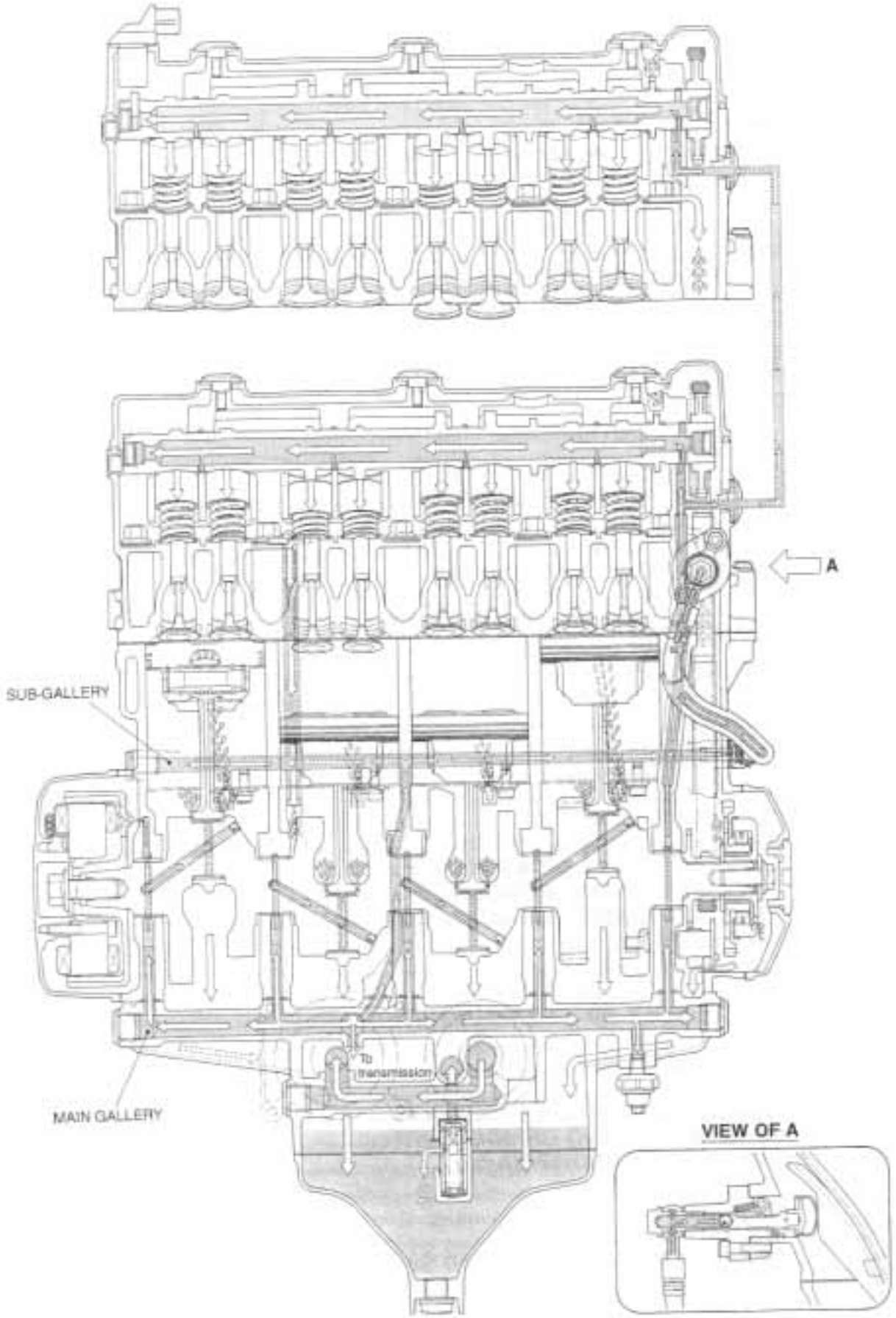
A
SUB-GALLERY
To transmission
MAIN GALLERY
VIEW OF A

# CHASSIS

CONTENTS

# EXTERIOR PARTS

## FASTENER REMOVAL AND REINSTALLATION

### FASTENER ⓐ

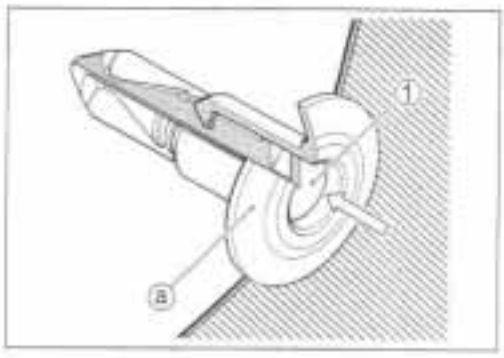


#### REMOVAL

- Depress the head of fasteners center piece ①.
- Pull out the fastener.

#### INSTALLATION

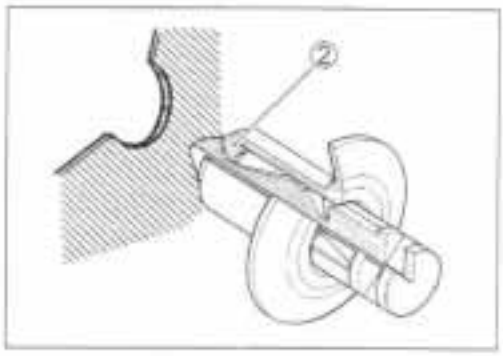


- Let the center piece stick out toward the head so that the pawls ② close.
- Insert the fastener into the installation hole.

*NOTE:*

*To prevent the pawl ② from damage, insert the fastener all the way into the installation hole.*

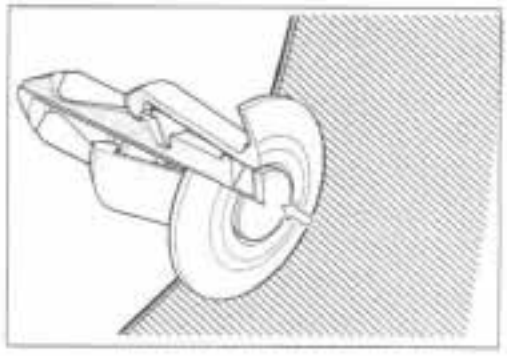

- Push in the head of center piece until it becomes flush with the fastener outside face.

### FASTENER ⓑ

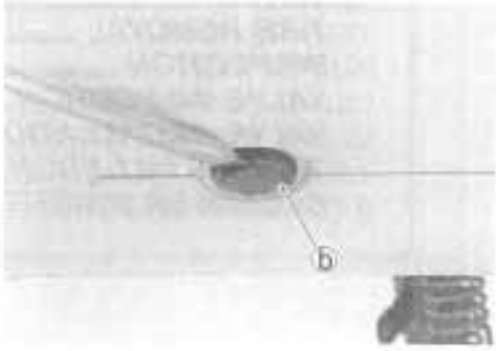


#### REMOVAL

- Pull the head of fastener center piece
- Pull out the fastener.

#### INSTALLATION

- Let the center piece stick out toward the head so that the pawls close.
- Insert the fastener into the installation hole.
- Push in the head of center piece.

## SCREEN

- Remove the bolts and nuts.
- Remove the screen.

## BODY COWLING COVER

- Remove the body cowling cover ① by removing the fasteners.


## RIGHT AND LEFT UNDER COWLINGS

- Remove the fastener.

- Remove the fastener.

- Remove the right under cowling.
- Disconnect the turn signal light lead wire coupler.

- Remove the left under cowling.
- Disconnect the turn signal light lead wire coupler.

## BODY COWLING

### REMOVAL

- Remove the rear view mirrors.

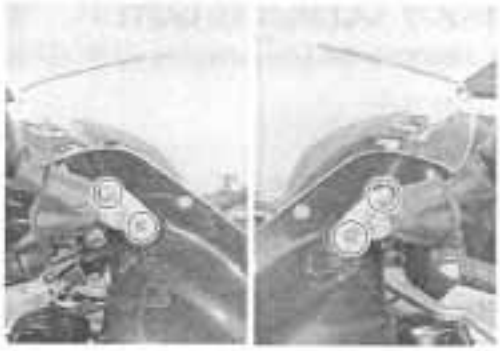

- Remove the fasteners.

- Remove the bolts.
- Remove the body cowling by disconnecting the lead wire couplers.

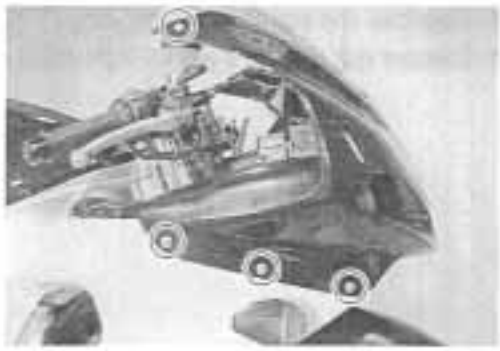

### REMOUNTING

*NOTE:*
*When remounting the body cowling, install the hooks Ⓐ to the cowling brace holes.*

## RIGHT AND LEFT AIR INTAKE PIPES

- Remove the body cowling.
- Remove the bolt and fastener.
- Remove the right air intake pipe ①.


- Remove the bolt and fastener.
- Remove the left air intake pipe ②.


## COWLING BRACE

### REMOVAL

- Remove the body cowling. (☞ 6-4)
- Remove the cowling brace.

### REMOUNTING

- Tighten the cowling brace bolts and nut.

**Cowling brace bolt and nut : 23 N·m (2.3 kgf·m, 16.5 lb-ft)**

- Clamp the wire harness and the brake hose. (☞ 8-14, 15, 20)

## FRONT SEAT

- Remove the front seat by removing the bolts.

## REAR SEAT AND SEAT TAIL COVER

- Remove the rear seat (seat tail cover) with the ignition key.

## FRAME COVER

- Remove the seats.
- Remove the bolts.

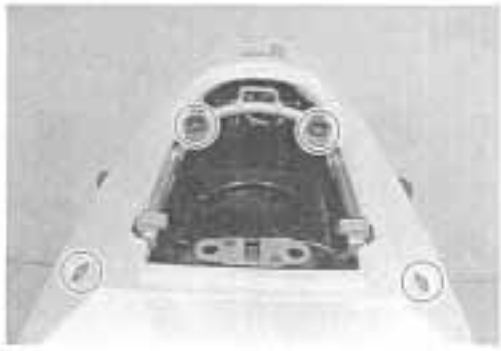

- Remove the fasteners.
- Disconnect the rear combination light lead wire coupler.
- Remove the frame cover.

# FRONT WHEEL

## CONSTRUCTION

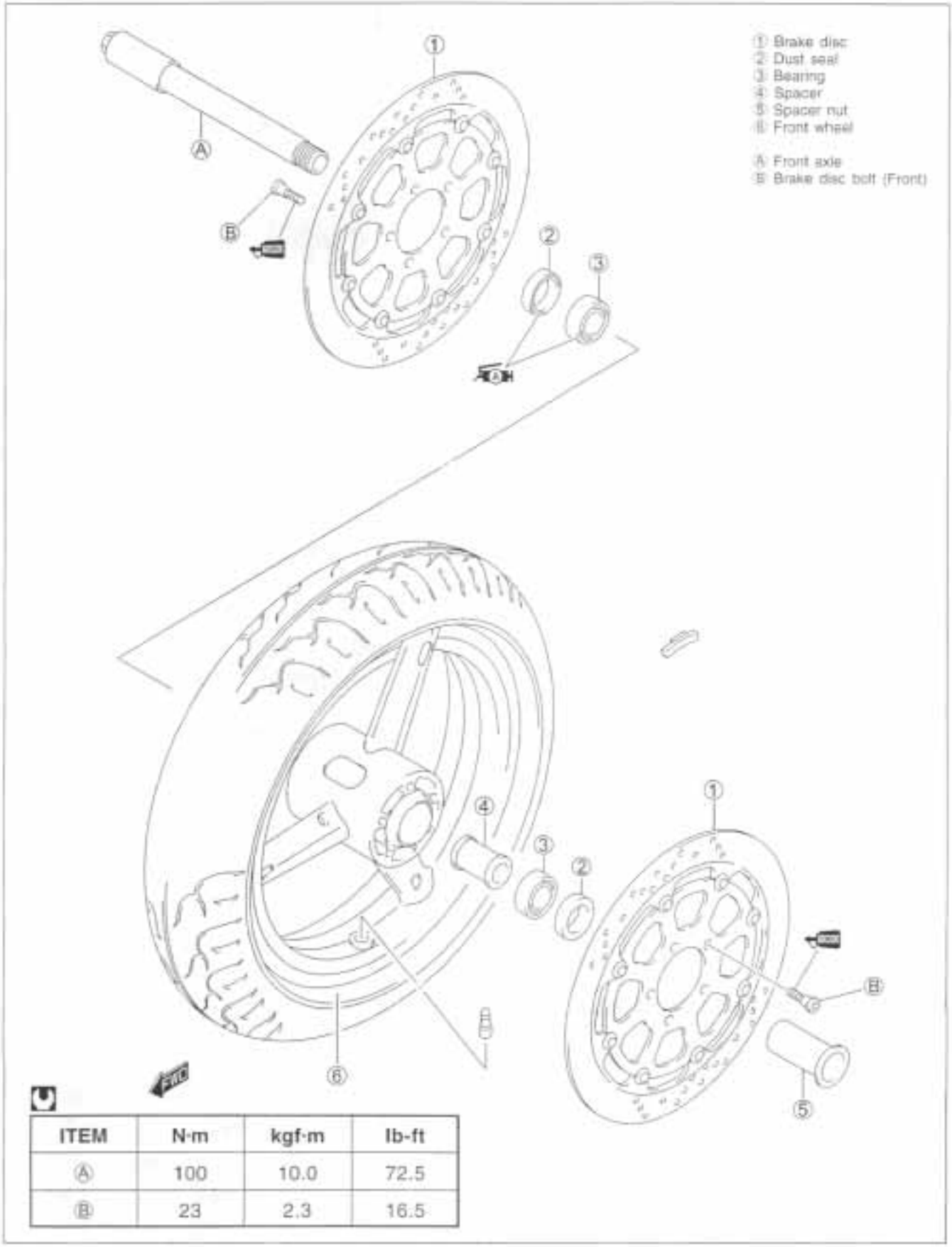


| ITEM | N·m | kgf·m | lb-ft |
|---|---|---|---|
| Ⓐ | 100 | 10.0 | 72.5 |
| Ⓑ | 23 | 2.3 | 16.5 |

## REMOVAL

- Remove the brake calipers.

**▲ CAUTION**

**Do not operate the brake lever while removing the calipers.**

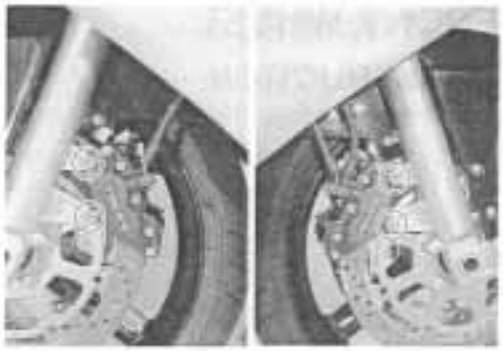

- Loosen two axle pinch bolts ① on the right front fork leg.
- Loosen the front axle ②.

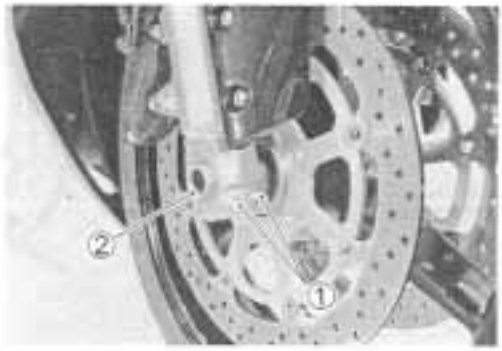


- Raise the front wheel off the ground and support the motorcycle with a jack or a wooden block.

**▲ CAUTION**

**Do not work by using side stand. Do not support the motorcycle with exhaust pipe. Make sure that the motorcycle is supported securely.**

- Remove the front axle and the front wheel.

*NOTE:*
*After removing the front wheel, fit the calipers temporarily to the original positions.*

- Loosen two axle pinch bolts ③ on the left front fork leg and remove the spacer nut ④.

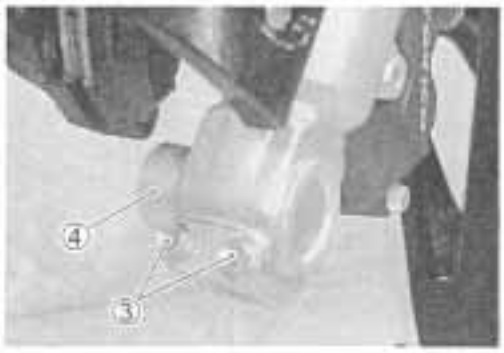


## INSPECTION AND DISASSEMBLY

**TIRE INSPECTION:** ☞ 6-68

- Remove the brake disc.

**BRAKE DISC INSPECTION:** ☞ 6-58

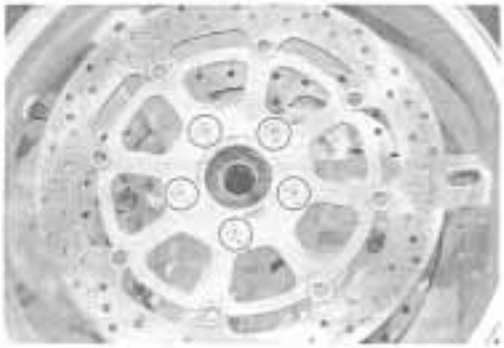

— Continued on next page —

• Remove both side dust seals by using the oil seal remover.

**09913-50121: Oil seal remover**

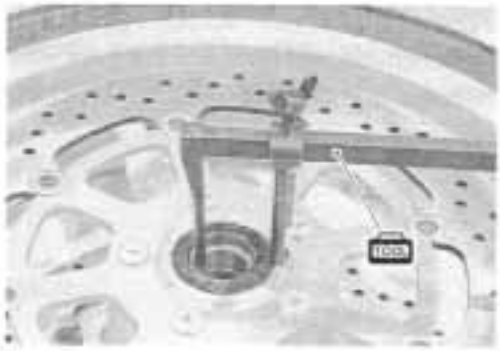

**⚠ CAUTION**

**The removed dust seals must be replaced with new ones.**

### AXLE SHAFT

Using a dial gauge, check the axle shaft for runout and replace it if the runout exceeds the limit.

**09900-20606: Dial gauge (1/100)**
**09900-20701: Magnetic stand**
**09900-21304: V-block set (100 mm)**

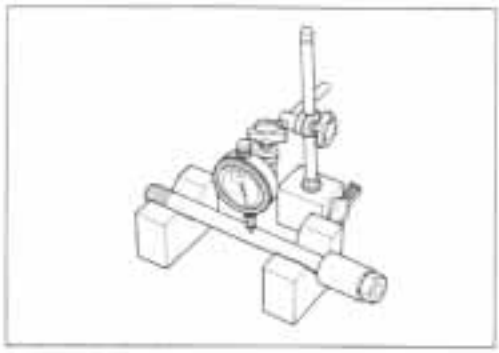

**DATA Axle shaft runout**
**Service Limit: 0.25 mm (0.010 in)**

### WHEEL

Make sure that the wheel runout checked as shown does not exceed the service limit. An excessive runout is usually due to worn or loosened wheel bearings and can be reduced by replacing the bearings. If bearing replacement fails to reduce the runout, replace the wheel.

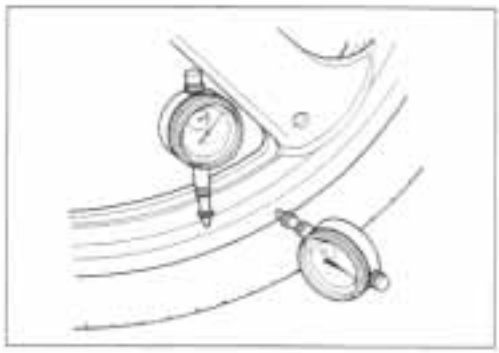

**DATA Wheel runout**
**Service Limit (Axial and Radial): 2.0 mm (0.08 in)**

### WHEEL BEARINGS

Inspect the play of the wheel bearings by finger while they are in the wheel. Rotate the inner race by finger to inspect for abnormal noise and smooth rotation.
Replace the bearing in the following procedure if there is anything unusual.

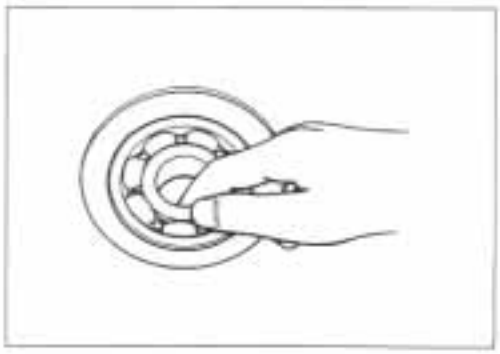

• Remove the wheel bearings by using the special tool.

**09921-20220: Bearing remover set**

**⚠ CAUTION**

**The removed bearings should be replaced with new ones.**

## REASSEMBLY AND REMOUNTING

Reassemble and remount the front wheel in the reverse order of removal and disassembly. Pay attention to the following points:

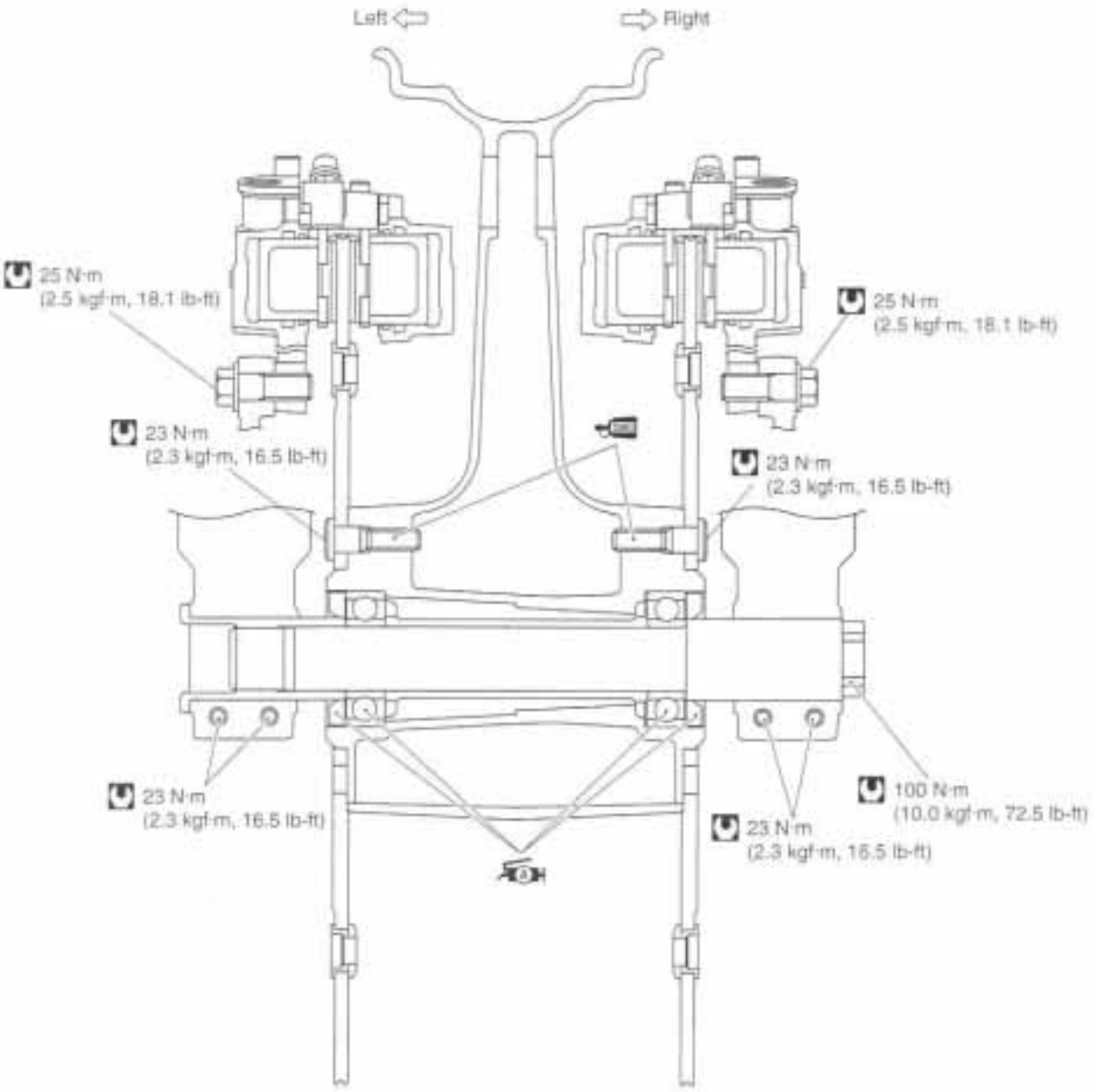

### WHEEL BEARING

- Apply grease to the wheel bearings.

**99000-25010: SUZUKI SUPER GREASE "A"**

- Install the wheel bearings as follows by using the special tools.

**09941-34513: Bearing/Steering race installer set**

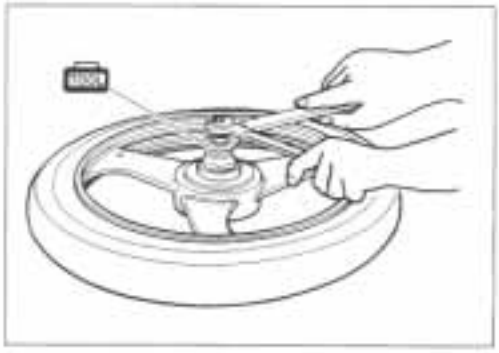

**▲ CAUTION**

**First install the left wheel bearing, then install the right wheel bearing.**
**The sealed cover of the bearing must face outside.**

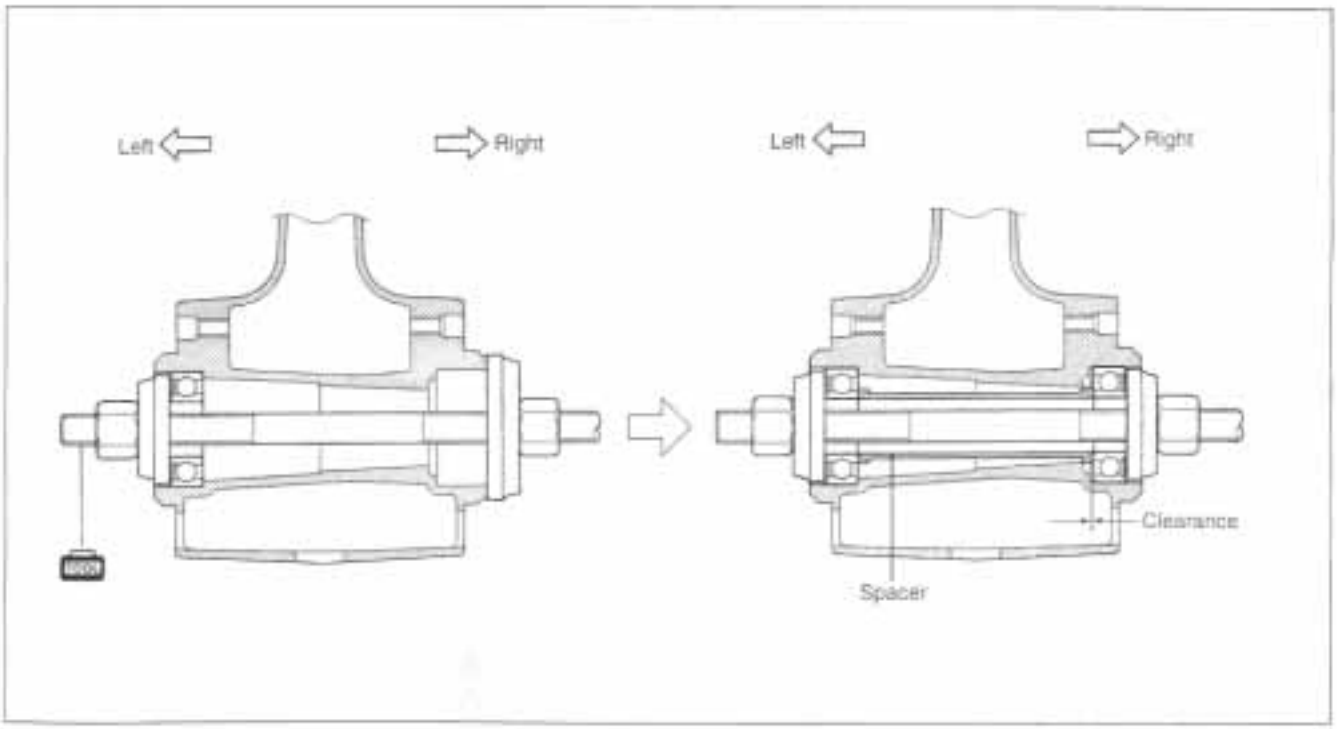


### BRAKE DISC

Make sure that the brake disc is clean and free of any greasy matter.

- Apply THREAD LOCK SUPER "1360" to the disc mounting bolts and tighten them to the specified torque.

**Brake disc bolt (Front): 23 N·m (2.3 kgf·m, 16.5 lb-ft)**

**99000-32130: THREAD LOCK SUPER "1360"**

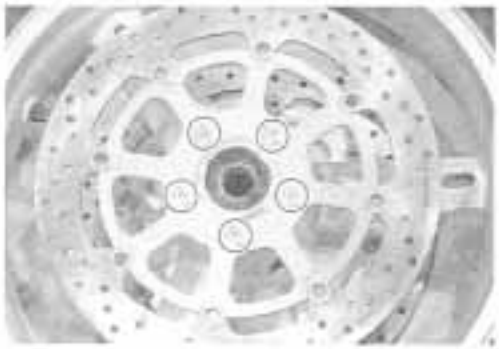

### SPACER NUT

After touching the flange of spacer nut being contact with the left front fork leg, tighten the two axle pinch bolts on the left front fork leg to the specified torque.

**Front axle pinch bolt: 23 N·m (2.3 kgf·m, 16.5 lb-ft)**

### WHEEL

Install the front wheel with the front axle and hand-tighten the front axle temporarily.

**WARNING**

**The directional arrow on the tire should point to the wheel rotation, when remounting the wheel.**

### BRAKE CALIPER

- Tighten the brake caliper mounting bolts to the specified torque.

**Front brake caliper mounting bolt: 25 N·m (2.5 kgf·m, 18.1 lb-ft)**

*NOTE:*
*Push the pistons all the way into the caliper and remount the calipers.*

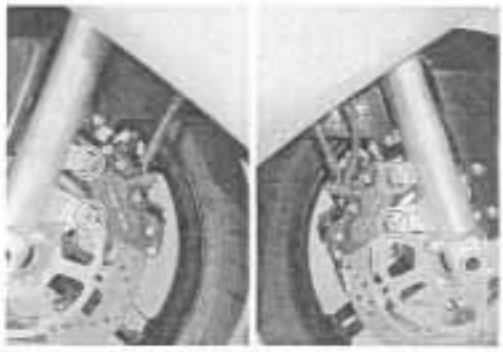

### FRONT AXLE

- Tighten the front axle to the specified torque.

**Front axle: 100 N·m (10.0 kgf·m, 72.5 lb-ft)**

*NOTE:*
*Before tightening the two axle pinch bolts on the right front fork leg, move the front fork up and down 4 or 5 times.*

- Tighten two axle pinch bolts on the right front fork leg to the specified torque.

**Front axle pinch bolt: 23 N·m (2.3 kgf·m, 16.5 lb-ft)**

# FRONT FORK

## CONSTRUCTION

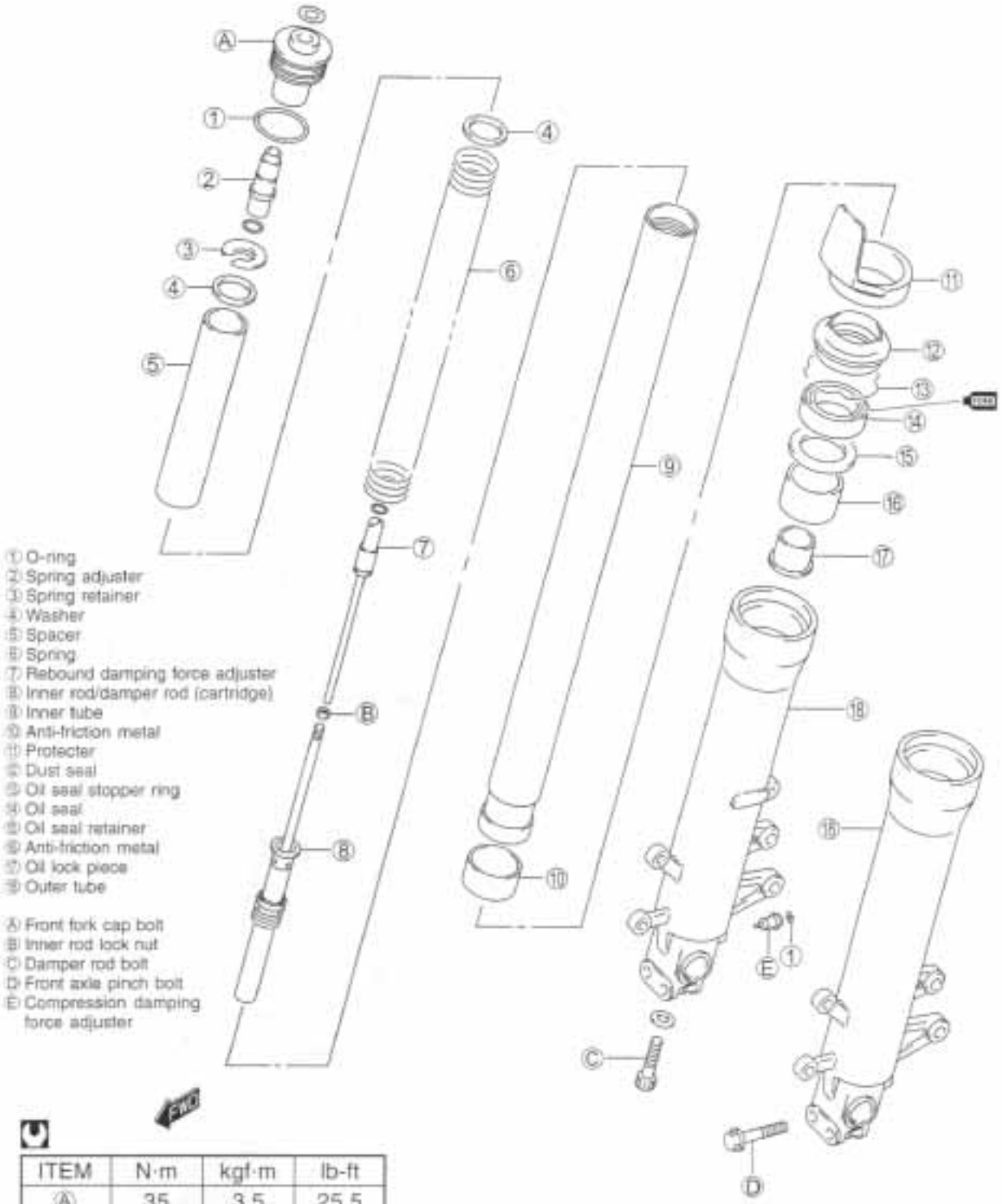


| ITEM | N·m | kgf·m | lb-ft |
|---|---|---|---|
| Ⓐ | 35 | 3.5 | 25.5 |
| Ⓑ | 20 | 2.0 | 14.5 |
| Ⓒ | 35 | 3.5 | 25.5 |
| Ⓓ | 23 | 2.3 | 16.5 |
| Ⓔ | 18 | 1.8 | 13.0 |

## REMOVAL AND DISASSEMBLY

- Remove the front wheel. (☞6-8)
- Disconnect the brake hoses.
- Remove the front fender.

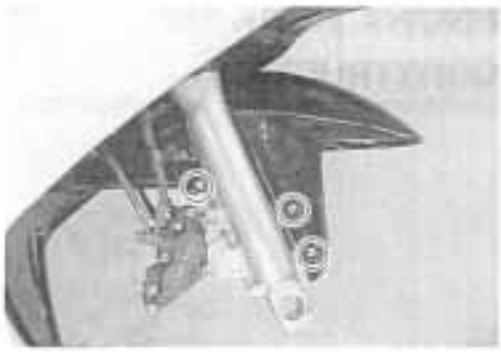

- Loosen the front fork upper clamp bolt ①.

*NOTE:*
*Slightly loosen the front fork cap bolts ② before loosening the lower clamp bolts to facilitate later disassembly.*

- Loosen the handlebar clamp bolt ③.

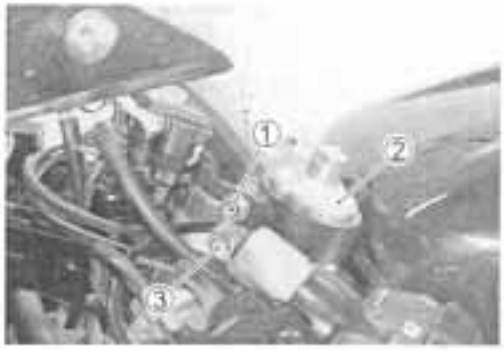


- Remove the handlebar set bolt ④.

*NOTE:*
*Place the rags under each handlebar to prevent scratching the upper fairing and the air intake pipes.*


- Loosen the front fork set bolts.

*NOTE:*
*Be careful not to drop the front fork when loosening the bolts.*

- Remove the protecter ⑤.

- Loosen the front fork cap bolt ① and remove the spring seat ②.

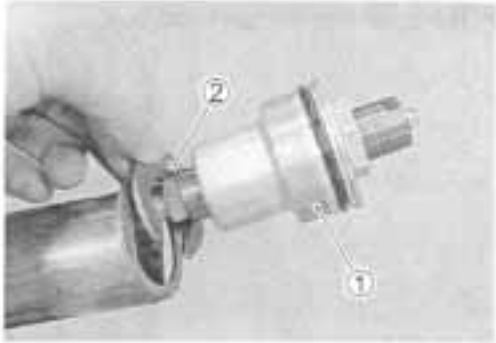


- Remove the front fork cap bolt with spring adjuster by holding the inner rod lock nut.

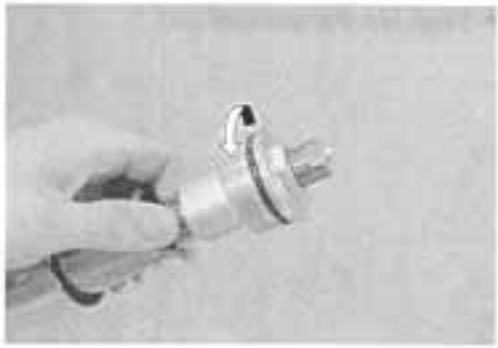

- Remove the spacer ③, washers ④, and spring ⑤.

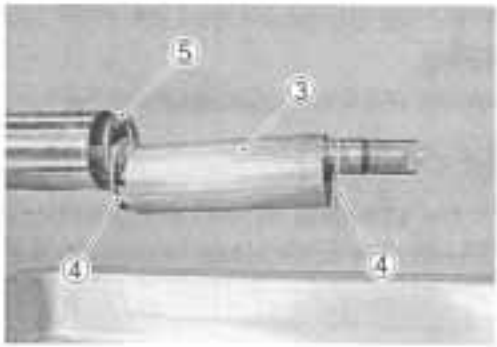


- Invert the fork and stroke it several times to drain out fork oil.
- Hold the fork inverted for a few minutes to drain oil.

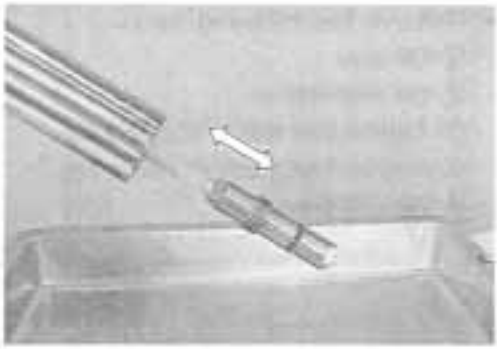

- Remove the dust seal.
- Remove the oil seal stopper ring.

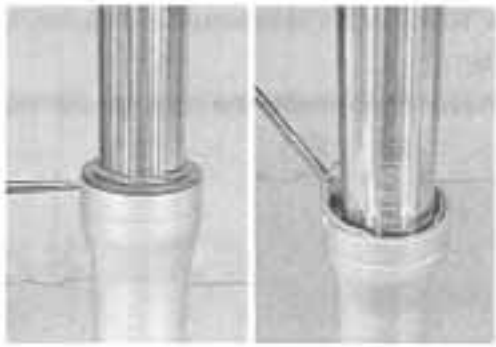

- Remove the damper rod bolt.

- Remove the damper rod.

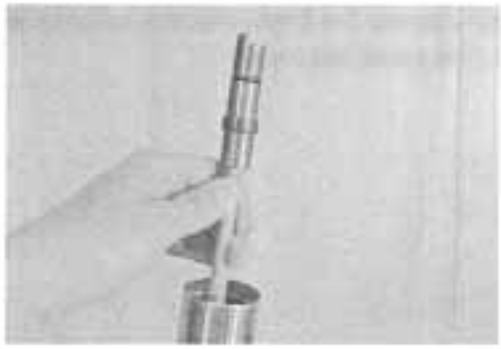

- Extract the outer tube from the inner tube.

*NOTE:*
*Be careful not to damage the inner tube.*

**▲ CAUTION**

**The slide metals, oil seal and dust seal must be replaced with new ones when reassembling the front fork.**

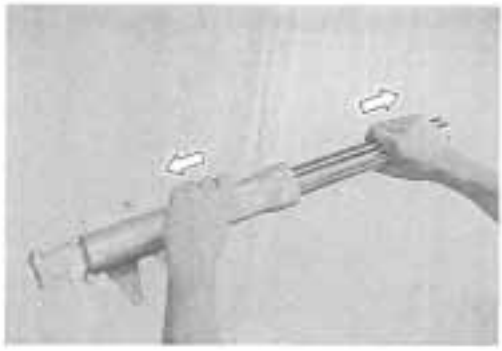

- Remove the following parts.
  ① Oil seal
  ② Oil seal retainer
  ③ Anti-friction metal (Outer tube)
  ④ Anti-friction metal (Inner tube)
  ⑤ Oil lock piece

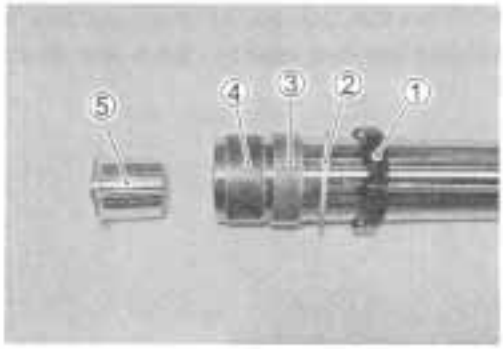


- Remove the compression damping force adjuster.

*NOTE:*
*Never disassemble the compression damping force adjuster.*

### DAMPER ROD DISASSEMBLY

- Loosen the inner rod lock nut ①.

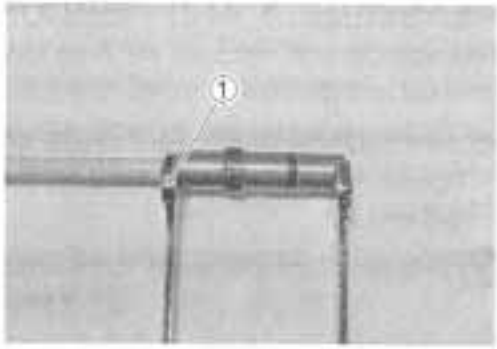


- Remove the spring adjuster.

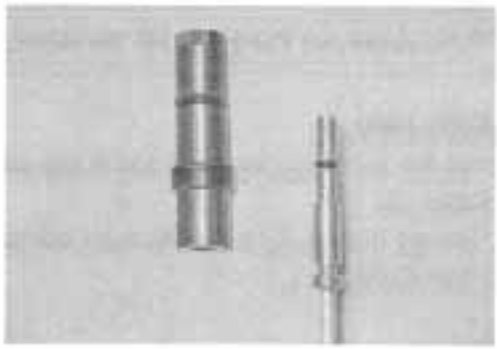

**⚠ CAUTION**

**Replace the O-rings with new ones.**

## INSPECTION

### INNER AND OUTER TUBES

Inspect the inner tube sliding surface and outer tube sliding surface for scuffing.

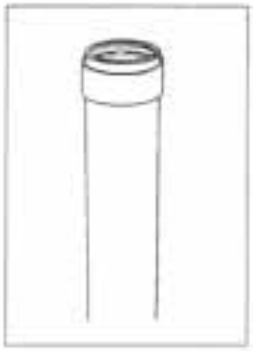

### FORK SPRING

Measure the fork spring free length.
If it is shorter than the service limit, replace it with a new one.

**DATA Front fork spring free length**
**Service limit : 243 mm (9.6 in)**

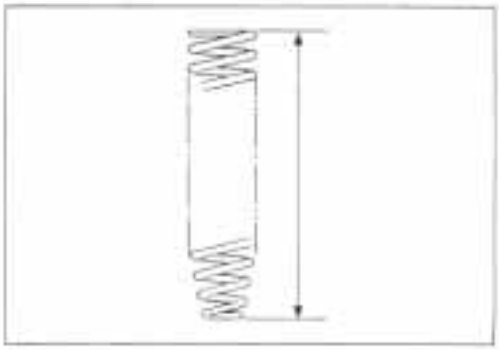

### DAMPER ROD

Move the inner rod by hand to examine it for smoothness.

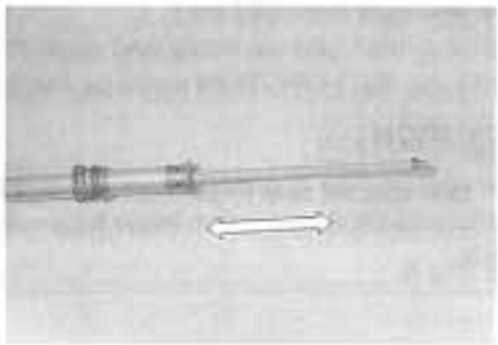

## REASSEMBLY AND REMOUNTING

Reassemble and remount the front fork in the reverse order of removal and disassembly. Pay attension to the following points:

### COMPRESSION DAMPING FORCE ADJUSTER

- Tighten the compression damping force adjuster to the specified torque.

**Compression damping force adjuster:**
**18 N·m (1.8 kgf·m, 13.0 lb-ft)**

**⚠ CAUTION**

**The removed O-ring must be replaced with a new one.**

### DAMPER ROD

- Install the rebound damping force adjuster ① into the spring adjuster ②.
- Adjust the height Ⓐ of the rebound damping force adjuster at 1.5 mm (0.06 in).

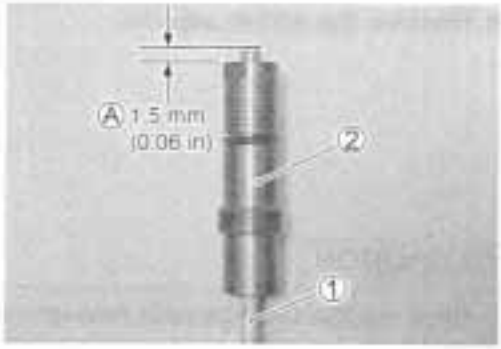


- Keep the above position and turn in the rebound damping force adjuster fully into the inner rod ③.

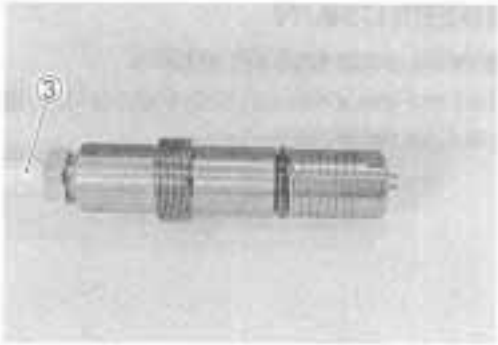


- Tighten the inner rod lock nut ④ to the specified torque by holding the spring adjuster.

**Inner rod lock nut: 20 N·m (2.0 kgf·m, 14.5 lb-ft)**

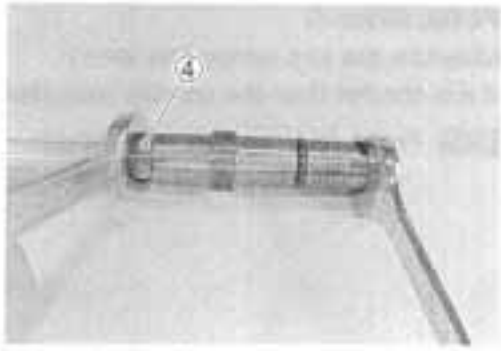


### TUBE METALS AND SEALS

- Hold the inner tube vertically and clean the metal groove and install the ANTI-FRICTION metal by hand as shown.

**⚠ CAUTION**

**Use special care to prevent damage to the "Teflon" coated surface of the Anti-friction inner tube metal when mounting it.**

- Install the oil lock piece Ⓐ onto the inner tube.

**⚠ CAUTION**

- **Do not use solvents for washing to prevent oil seal damage.**
- **Apply fork oil to the Anti-friction metals, lip of oil seal and dust seal.**

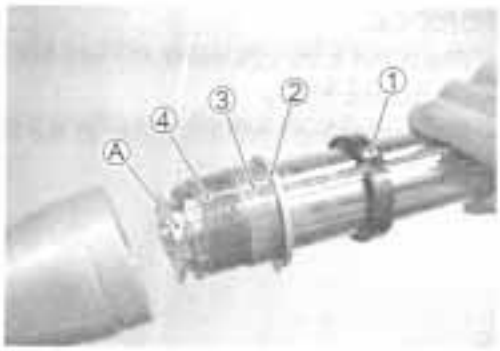


- Apply fork oil to the oil seal lip lightly before installing it.

**99000-99001-SS8: SUZUKI FORK OIL SS-08 (#10)**

- Install the following parts as shown.
  1. Oil seal
  2. Oil seal retainer
  3. Anti-friction metal (Outer tube)
  4. Anti-friction metal (Inner tube)
  5. Dust seal
  6. Oil seal stopper ring

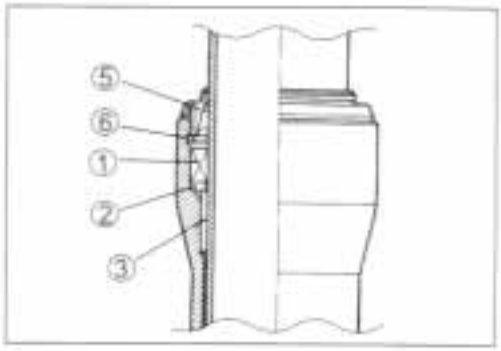


- Insert the inner tube into the outer tube and fit the oil seal and dust seal with the special tool.

**09940-52861: Front fork oil seal installer**

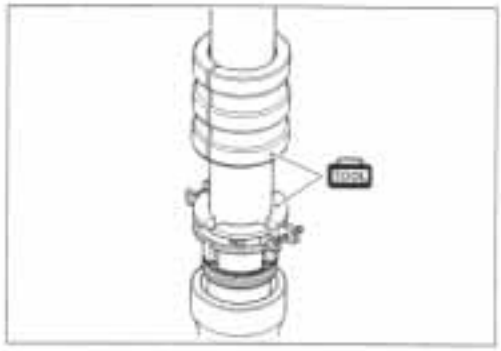

**DAMPER ROD BOLT**

- Tighten the damper rod bolt to the specified torque.

**Damper rod bolt: 35 N·m (3.5 kgf·m, 25.5 lb·ft)**

**⚠ CAUTION**

**Use a new damper rod bolt gasket to prevent oil leakage.**

*NOTE:*
*If the damper rod turns with the damper rod bolt, temporarily install the fork spring, spacer and cap bolt.*

**FORK OIL**

- Place the front fork vertically without spring.
- Compress it fully.
- Pour specified front fork oil up to the top level of the outer tube.

- Move the inner rod slowly more than ten times until bubbles do not come out from the oil.

*NOTE:*
*Refill front fork oil up to the top of the outer tube to find bubbles while bleeding air.*

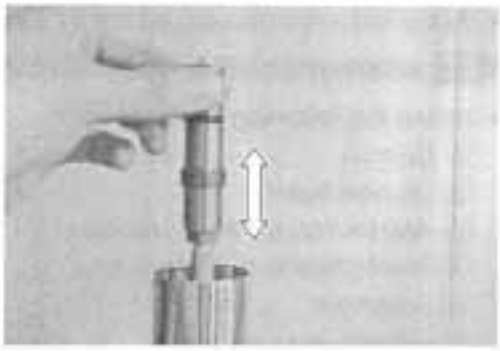

- Refill specified front fork oil up to the top level of the outer tube again. Move the outer tube up and down several strokes until bubbles do not come out from the oil.
- Keep the front fork vertically and wait 5 – 6 minutes.

*NOTE:*
- *Always keep oil level over the cartridge top end, or air may enter the cartridge during this procedure.*
- *Take extream attention to pump out air completely.*

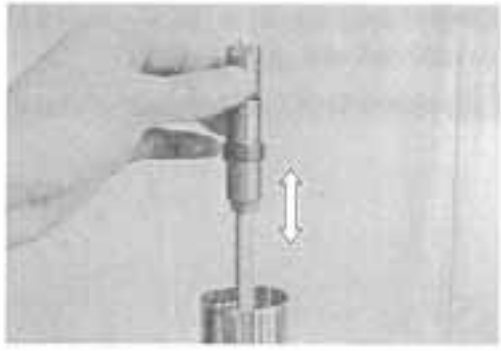

- Hold the front fork vertically and adjust fork oil level with the special tool.

*NOTE:*
*When adjusting the fork oil level, remove the fork spring and compress the inner tube fully.*

**09943-74111: Front fork oil level gauge**

**Fork oil level: 102 mm (4.0 in)**

**Fork oil type: SS-08 (#10)**

**99000-99001-SS8: SUZUKI FORK OIL SS-08 (#10)**

**Capacity (each leg): 528 ml (17.8/18.6 US/Imp oz)**

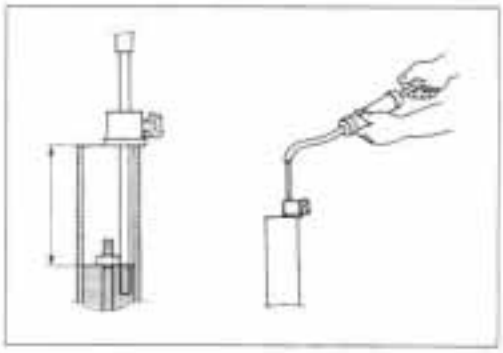

**FORK SPRING**

- Install the fork spring.

*NOTE:*

*The small end Ⓐ of the fork spring should be at the bottom of the front fork.*

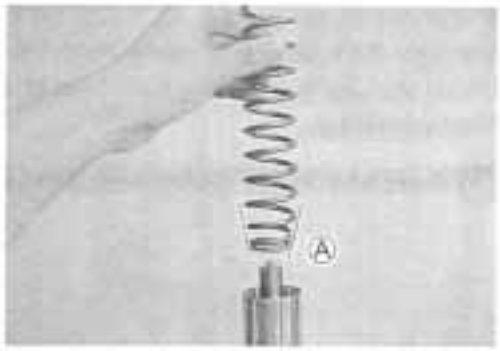


**FRONT FORK CAP BOLT**

- Install the washers ① and spacer ②.

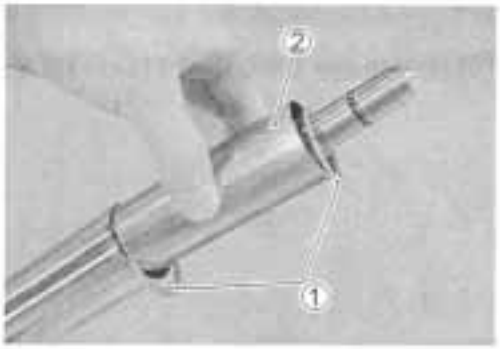


- Install the front fork cap.
- Install the spring retainer ③.

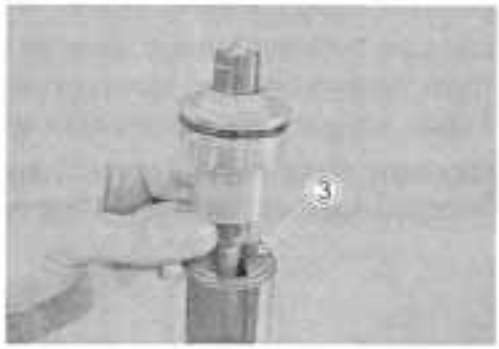


- Apply fork oil lightly to the O-ring.

**▲ CAUTION**

**Use a new O-ring to prevent oil leakage.**

- Tighten the front fork cap bolt temporarily.

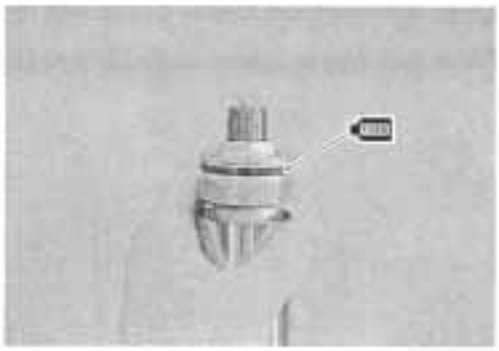

- Install the front fork protecter.

*NOTE:*

*Fit the projection of the front fork protecter to the depression of the front fork outer tube.*

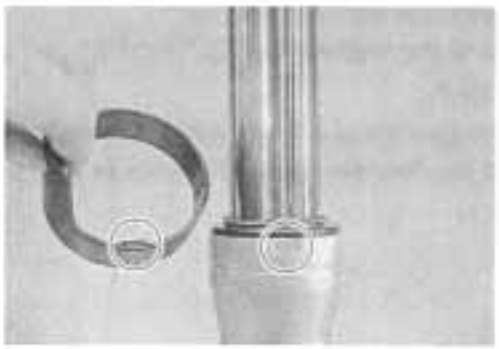

- Set the upper surface of the inner tube at 6.3 mm (0.25 in) height Ⓐ from the upper surface of the steering stem upper bracket and tighten the front fork lower clamp bolts ① to the specified torque.

**Front fork lower clamp bolt: 23 N·m (2.3 kgf·m, 16.5 lb-ft)**

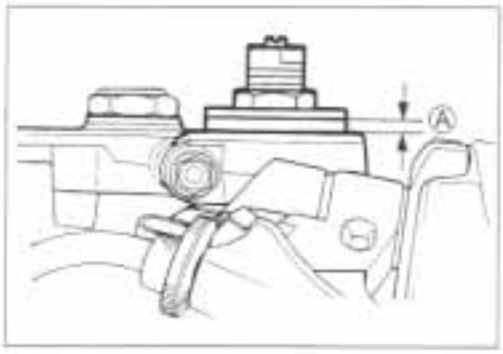


- Tighten the handlebar set bolt ② to the specified torque.

**Handlebar set bolt: 10 N·m (1.0 kgf·m, 7.0 lb-ft)**

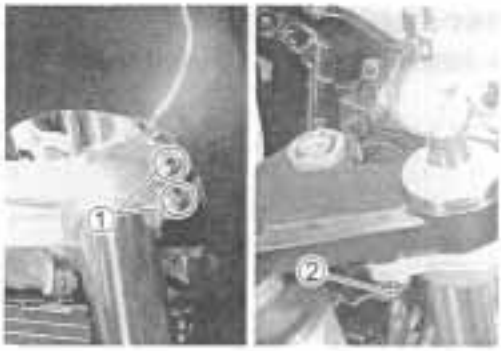


- Tighten the handlebar clamp bolt ③.
- Tighten the front fork cap bolt ④ to the specified torque and recheck the front fork outer tube upper surface height Ⓐ from the upper surface of the steering stem upper bracket.

**Handlebar clamp bolt: 23 N·m (2.3 kgf·m, 16.5 lb-ft)**
**Front fork cap bolt: 35 N·m (3.5 kgf·m, 25.5 lb-ft)**


- Tighten the front fork upper clamp bolt ⑤.

**Front fork upper clamp bolt: 23 N·m (2.3 kgf·m, 16.5 lb-ft)**


- Install the front fender.
- Install the front wheel. (☞6-11)

*NOTE:*
*Before tightening the two axle pinch bolts on right front fork leg, move the front fork up and down 4 or 5 times.*

## SUSPENSION SETTING

After installing the front fork, adjust the spring pre-load and damping force as follows.

### SPRING PRE-LOAD ADJUSTMENT

There are seven grooved lines on the side of the spring adjuster. Position 1 provides the maximum spring pre-load and position 7 provides the minimum spring pre-load.
(STD position: 4)

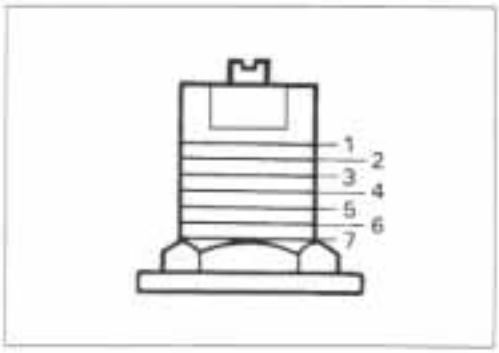


### DAMPING FORCE ADJUSTMENT

**(Rebound side)**

Fully turn the damping force adjuster ① clockwise. It is at stiffest position and turn it out to standard setting position.
(STD position: 1 and ⅛ turns out [Fine-tune the adjuster by turning it slightly until two punch marks align.])

Rebound side

**(Compression side)**

Fully turn the damping force adjuster ② clockwise. It is at stiffest position and turn it out to standard setting position.
(STD position: 1 and ⅛ turns out [Fine-tune the adjuster by turning it slightly until two punch marks align.])

Compression side

### STANDARD FRONT SUSPENSION SETTING

| | | FRONT | | |
|---|---|---|---|---|
| | | Spring pre-load adjuster | Damping force adjuster | |
| | | | Rebound | Compression |
| Solo riding | Softer | 4 | 1 and ⅛ turns out | 1 and ⅛ turns out |
| | Standard | 4 | 1 and ⅛ turns out | 1 and ⅛ turns out |
| | Stiffer | 4 | 1 and ⅛ turns out | 1 turn out |
| Dual riding | | 4 | 1 and ⅛ turns out | 1 and ⅛ turns out |

**⚠ WARNING**

**Be sure to adjust the spring pre-load and damping force on both front fork legs equally.**

# STEERING DAMPER

## CONSTRUCTION

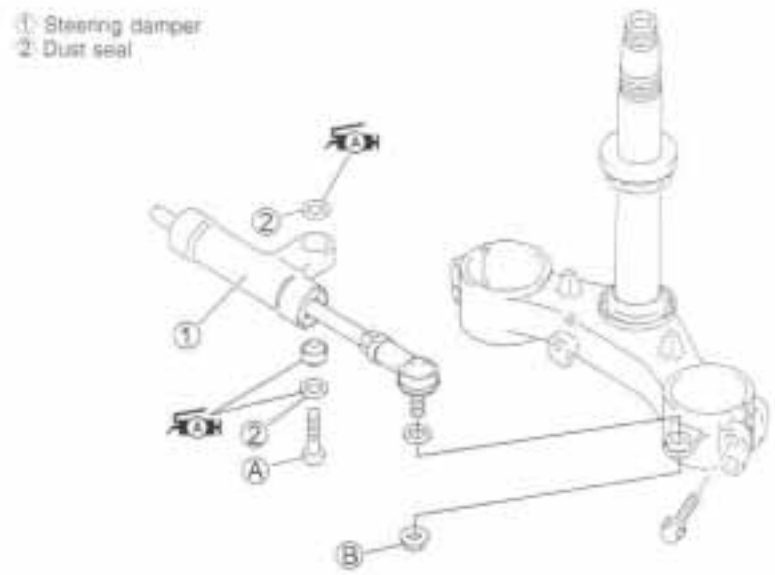


| ITEM | N·m | kgf·m | lb-ft |
|---|---|---|---|
| Ⓐ | 23 | 2.3 | 16.5 |
| Ⓑ | 23 | 2.3 | 16.5 |

## REMOVAL

- Remove the nut ① by holding the nut Ⓐ.
- Remove the bolt ② and remove the steering damper.

## INSPECTION

Inspect the steering damper body, bearing and oil seal for damage and oil leaking.
Move the steering damper rod by hand to inspect for a smooth movement.
If any defects are found, replace the steering damper with a new one.

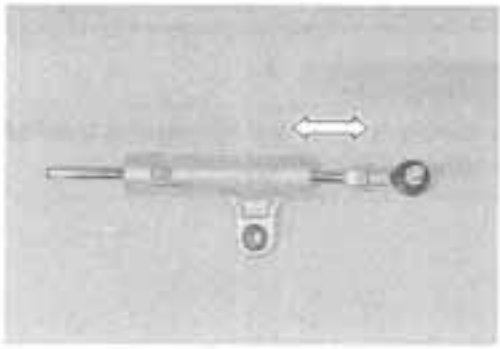

## REMOUNTING

- Install the steering damper and tighten the bolt and nut.

**Steering damper bolt and nut: 23 N·m (2.3 kgf·m, 16.5 lb-ft)**

- Apply grease to the bearings and dust seals.

**99000-25010: SUZUKI SUPER GREASE "A"**

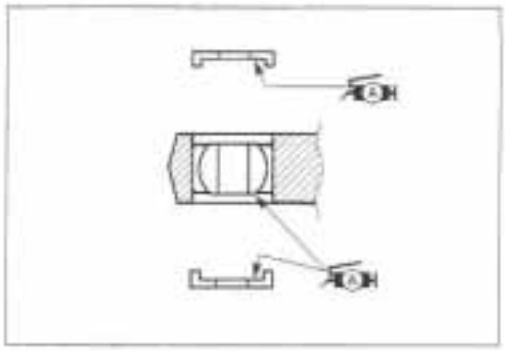

# STEERING

## CONSTRUCTION

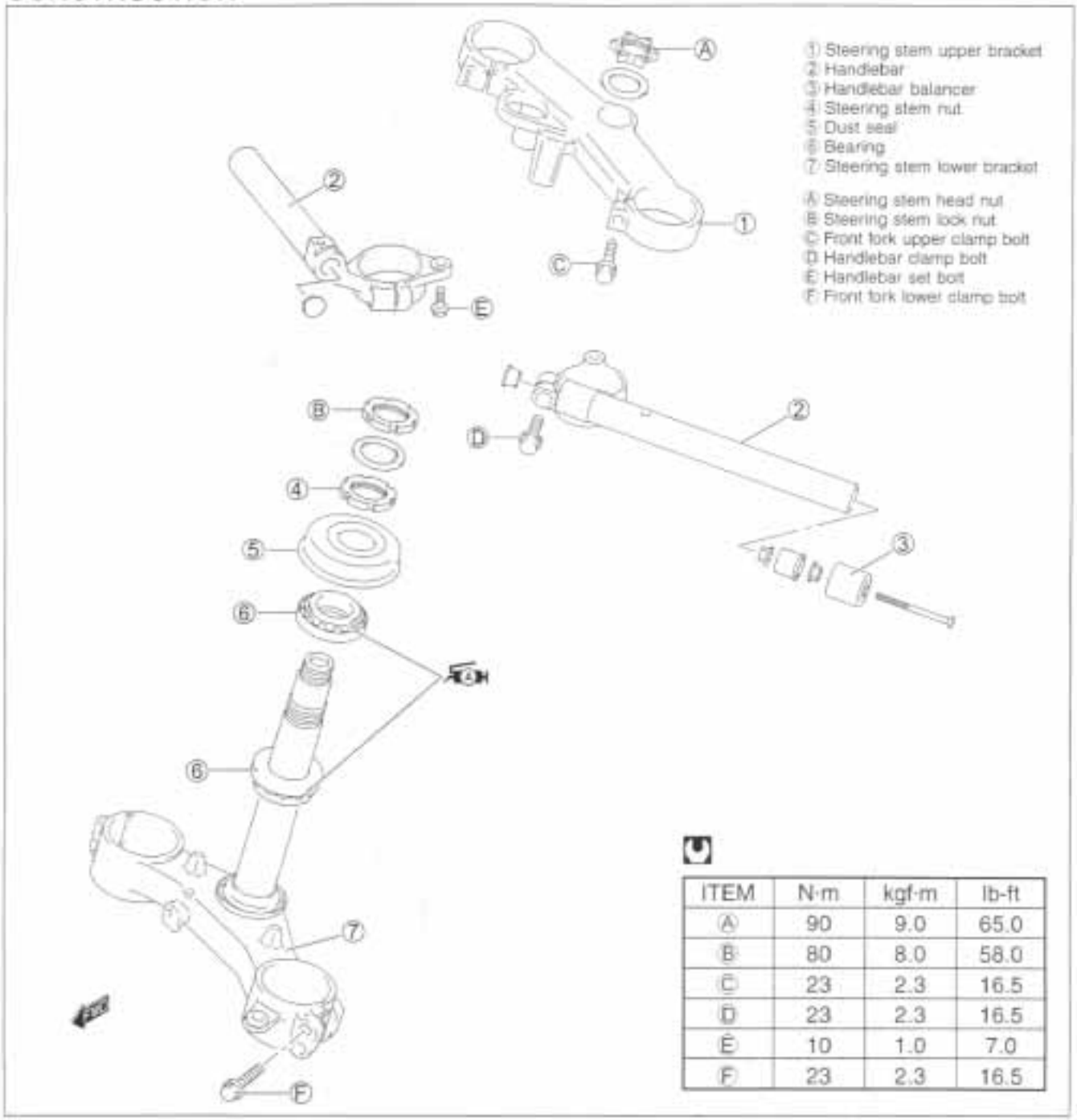


| ITEM | N·m | kgf·m | lb-ft |
|---|---|---|---|
| Ⓐ | 90 | 9.0 | 65.0 |
| Ⓑ | 80 | 8.0 | 58.0 |
| Ⓒ | 23 | 2.3 | 16.5 |
| Ⓓ | 23 | 2.3 | 16.5 |
| Ⓔ | 10 | 1.0 | 7.0 |
| Ⓕ | 23 | 2.3 | 16.5 |

## REMOVAL AND DISASSEMBLY

- Remove the front wheel. (6-8)
- Remove the front fork. (6-14)

- Remove the steering stem upper bracket by removing its head nut.

*NOTE:*
*It is not necessary to remove the ignition switch, when only replacing the steering stem.*
*(Ignition switch removal: ☞ 7-30)*

- Remove the brake hose clamp bolt.

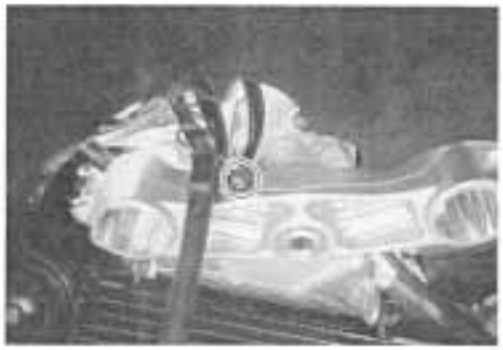

- Remove the steering stem lock nut, the washer and the steering stem nut with the special tools.

**TOOL 09940-14911: Steering stem nut wrench**
**09940-14960: Steering stem nut wrench socket**

- Draw out the steering stem lower bracket.

*NOTE:*
*Hold the steering stem lower bracket by hand to prevent it from falling.*


- Remove the dust seal ①, the steering stem upper bearing inner race ② and the bearing ③.

## INSPECTION AND DISASSEMBLY

Inspect the removed parts for the following abnormalities.

* Handlebars distortion
* Race wear and brinelling
* Bearing wear or damage
* Abnormal noise of bearing

If any abnormal points are found, replace defective parts with the new ones.

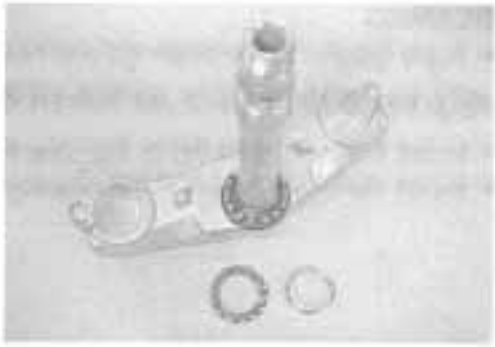

- Remove the steering stem lower bearing inner race with a chisel.

**⚠ CAUTION**

**The removed bearing outer race must be replaced with a new one.**

- Drive out the steering stem bearing outer races, upper and lower, using a suitable wedge bar.

**⚠ CAUTION**

**The removed bearing outer race must be replaced with a new one.**

## REASSEMBLY AND REMOUNTING

Reassemble and remount the steering stem in the reverse order of removal and disassembly.

Pay attention to the following points:

### OUTER RACE

- Press in the upper and lower bearing outer races with the special tools.

**09941-34513: Steering outer race installer set**

### INNER RACE

- Press in the lower bearing inner race with the special tool.

**09925-18011: Steering bearing installer**

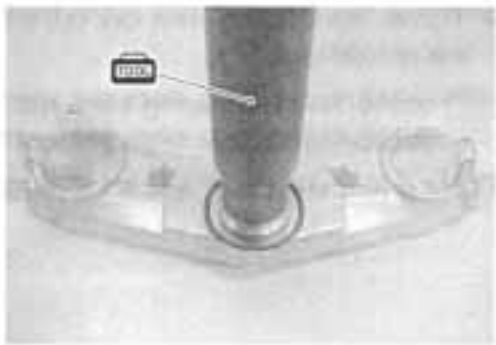

**BEARING**

- Apply grease to the bearings and bearing races.

**99000-25010: SUZUKI SUPER GREASE "A"**

- Install the lower bearing to the steering stem lower bracket.
- Install the upper bearing and bearing inner race.

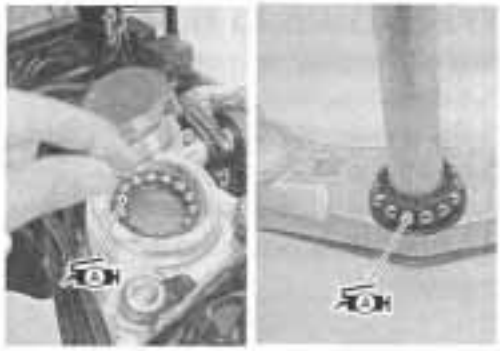

**STEM NUT**

- Install the dust seal.
- Tighten the steering stem nut to the specified torque with the special tools.

**09940-14911: Steering stem nut wrench**
**09940-14960: Steering stem nut wrench socket**

**Steering stem nut: 45 N·m (4.5 kgf·m, 32.5 lb-ft)**

- Turn the steering stem lower bracket about five or six times to the left and right so that the angular ball bearings will be seated properly.
- Loosen the stem nut by 1/4 – 1/2 turn.

*NOTE:*
*This adjustment will vary from motorcycle to motorcycle.*

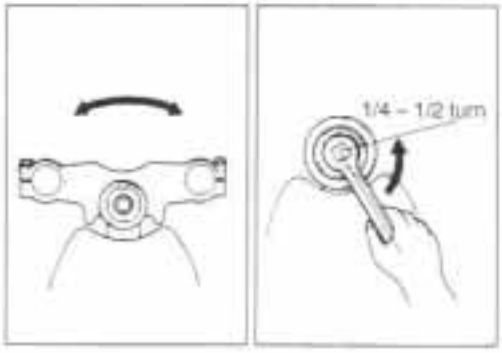


*NOTE:*
*When installing the washer, align the stopper lug to the groove of the steering stem.*

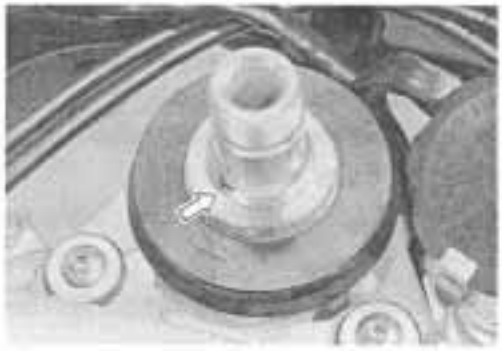

- Tighten the steering stem lock nut to the specified torque with the special tools.

**09940-14911: Steering stem nut wrench**
**09940-14960: Steering stem nut wrench socket**

**Steering stem lock nut: 80 N·m (8.0 kgf·m, 58.0 lb-ft)**

### FRONT FORK AND STEERING STEM UPPER BRACKET

Install the front fork and steering stem upper bracket following steps:

1) Install the upper bracket, washer ① and steering stem head nut ② temporarily.
2) Set the front forks and tighten the steering stem head nut ②.

**Steering stem head nut: 90 N·m (9.0 kgf·m, 65 lb-ft)**

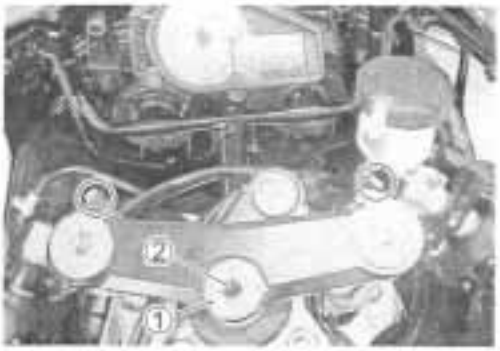


3) Tighten the front fork upper and lower clamp bolts. (☞ 6-22)

- Install the handlebars. (☞ 6-31)
- Install the front wheel. (☞ 6-10)
- Install the steering damper. (☞ 6-24)

## STEERING TENSION ADJUSTMENT

Check the steering movement in the following procedure.

- By supporting the motorcycle with a jack, lift the front wheel until it is off the floor by 20 – 30 mm (0.8 – 1.2 in).
- Remove the steering damper. (☞ 6-24)
- Check to make sure that the cables and wire harnesses are properly routed.
- With the front wheel in the straight ahead state, hitch the spring scale (special tool) on one handlebar grip end as shown in the figure and read the graduation when the handlebar starts moving. Do the same on the other grip end.

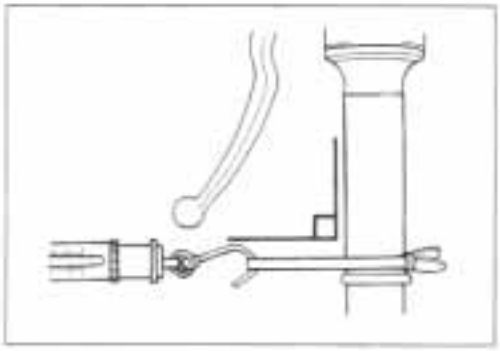

**DATA Initial force: 200 – 500 grams**

**TOOL 09940-92720: Spring scale**

- If the initial force read on the scale when the handlebar starts turning is either too heavy or too light, adjust it till it satisfies the specification.

1) First, loosen the front fork upper and lower clamp bolts, steering stem head nut and steering stem lock nut, and then adjust the steering stem nut by loosening or tightening it.
2) Tighten the steering stem lock nut, stem head nut and front fork upper and lower clamp bolts to the specified torque and re-check the initial force with the spring scale according to the previously described procedure.
3) If the initial force is found within the specified range, adjustment has been completed.

*NOTE:*
*Hold the front fork legs, move them back and forth and make sure that the steering is not loose.*

# HANDLEBAR

## CONSTRUCTION

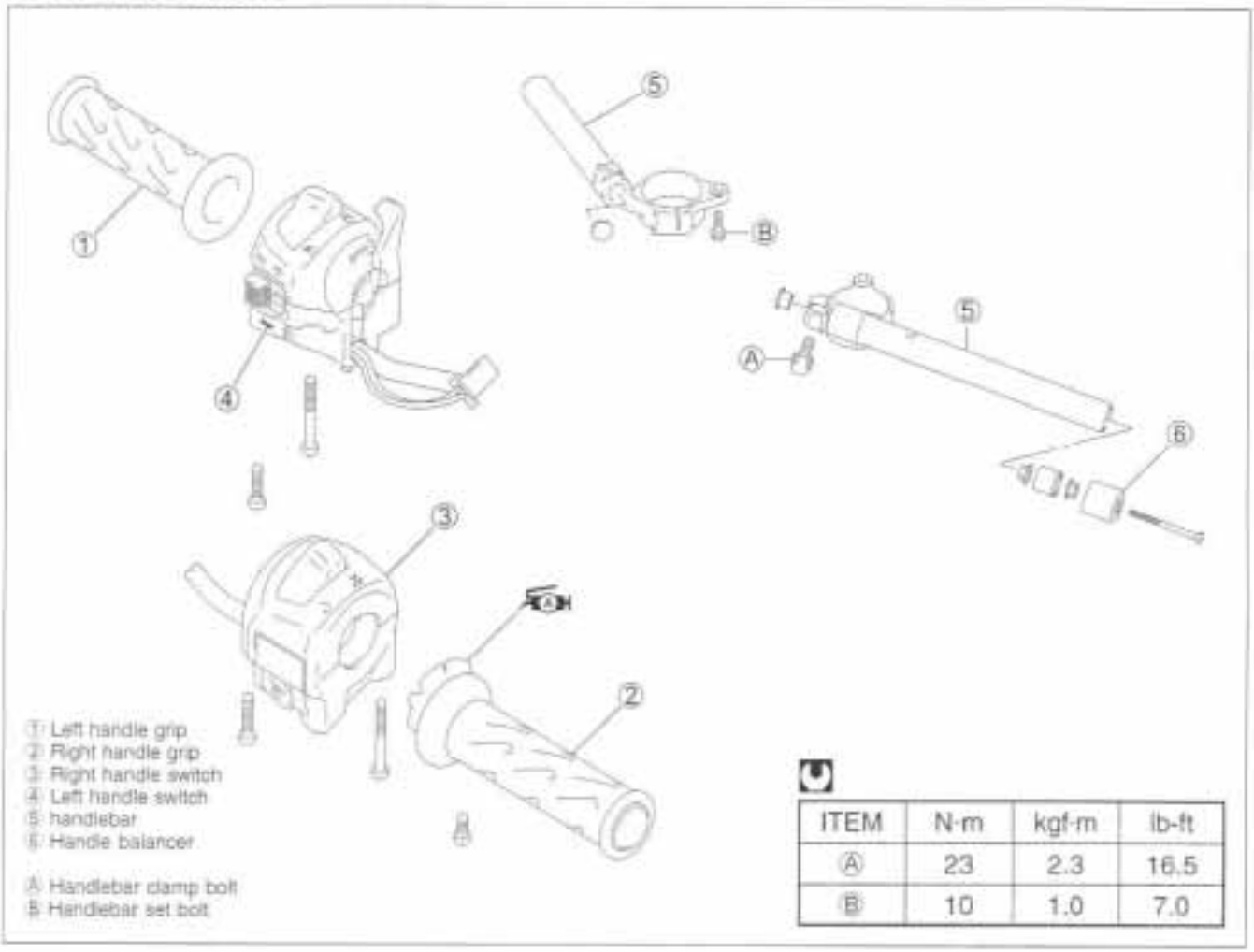


| ITEM | N·m | kgf·m | lb-ft |
|---|---|---|---|
| Ⓐ | 23 | 2.3 | 16.5 |
| Ⓑ | 10 | 1.0 | 7.0 |

## REMOVAL AND DISASSEMBLY

### RIGHT HANDLEBAR

- Remove the brake master cylinder ①. (☞ 6-59)
- Remove the right handle switch ②.
- Remove the handle balancer ③.
- Remove the right handle grip ④.

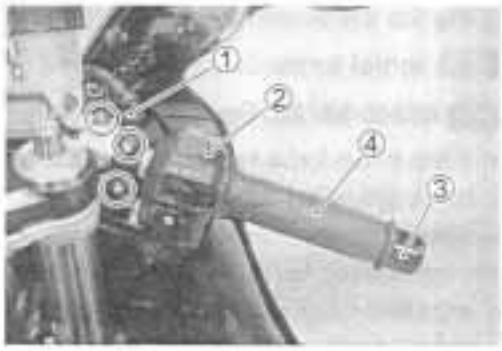

### LEFT HANDLEBAR

- Remove the clutch lever holder ①.
- Remove the left handle switch ②.
- Remove the handle balancer ③.
- Remove the left handle grip ④.

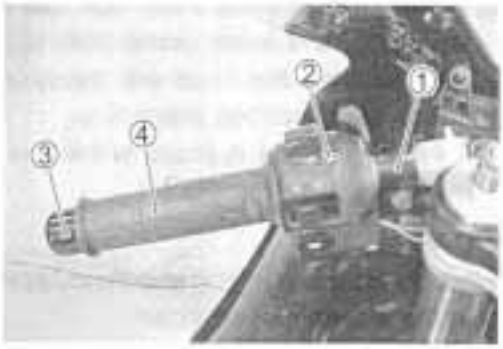

- Loosen the handlebar clamp bolts.

- Remove the handlebar set bolts.
- Loosen the front fork upper clamp bolt.
- Remove the steering stem upper bracket by removing the steering stem head nut.

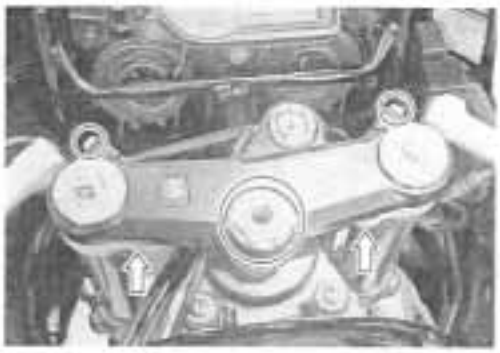

- Draw out the handlebars to upward.

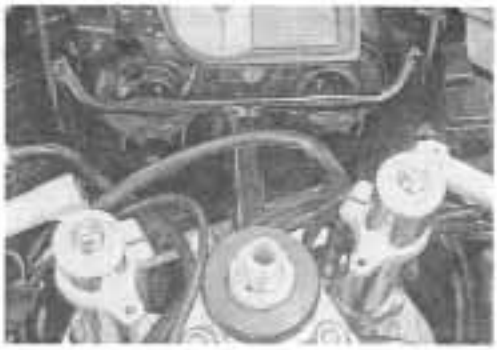

## REASSEMBLY AND REMOUNTING

Reassemble and remount the handlebar in the reverse order of removal and disassembly.

Pay attention to the following points:

- Install the handlebars temporaly.
- Install the steering stem upper bracket.

*NOTE:*

*If it is difficult to install the steering stem upper bracket, loosen the axle pinch bolts of right front fork.*

- Tighten the steering stem head nut.

**Steering stem head nut: 90 N·m (9.0 kgf·m, 65.0 lb-ft)**

- Tighten the front fork upper clamp bolts.

**Front fork upper clamp bolt: 23 N·m (2.3 kgf·m, 16.5 lb-ft)**

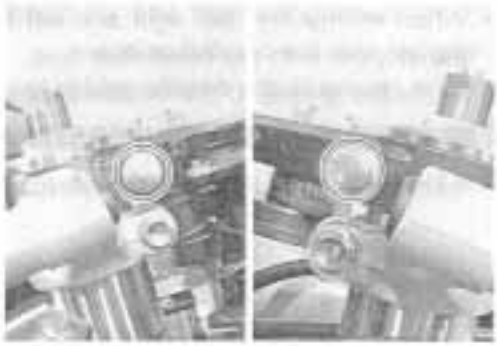

- Tighten the handlebar set bolts.

**Handlebar set bolt: 10 N·m (1.0 kgf·m, 7.0 lb-ft)**

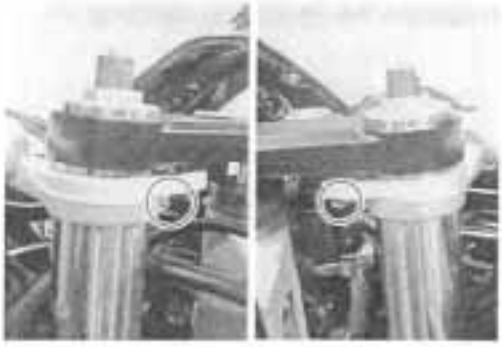

- Tighten the handlebar clamp bolts.

**Handlebar clamp bolt: 23 N·m (2.3 kgf·m, 16.5 lb-ft)**

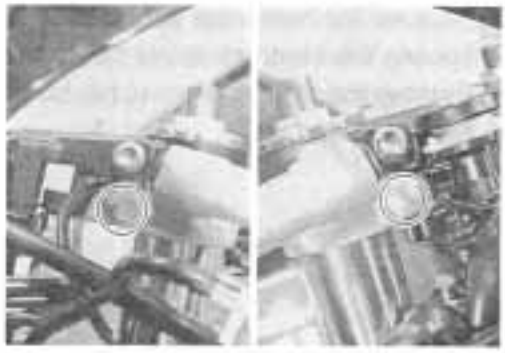

- When remounting the clutch lever holder, align the holder's mating surface with punch mark Ⓐ on the handlebar.


- When remounting the brake master cylinder, align the holders mating surface with punch mark Ⓑ on the handlebar.


- When remounting the right and left handle switches, engage the stopper with the handlebar hole.
- Apply the grease to the throttle cables and their holder.

**99000-25010: SUZUKI SUPER GREASE "A"**

- Install the front brake master cylinder. (☞ 6-60)

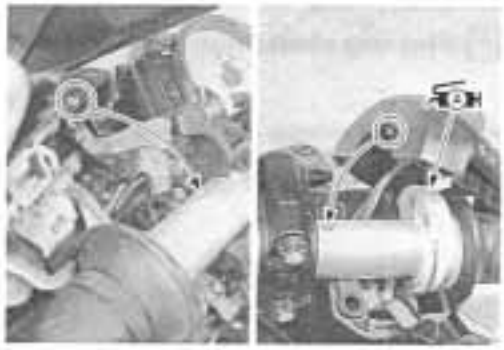

# REAR WHEEL

## CONSTRUCTION

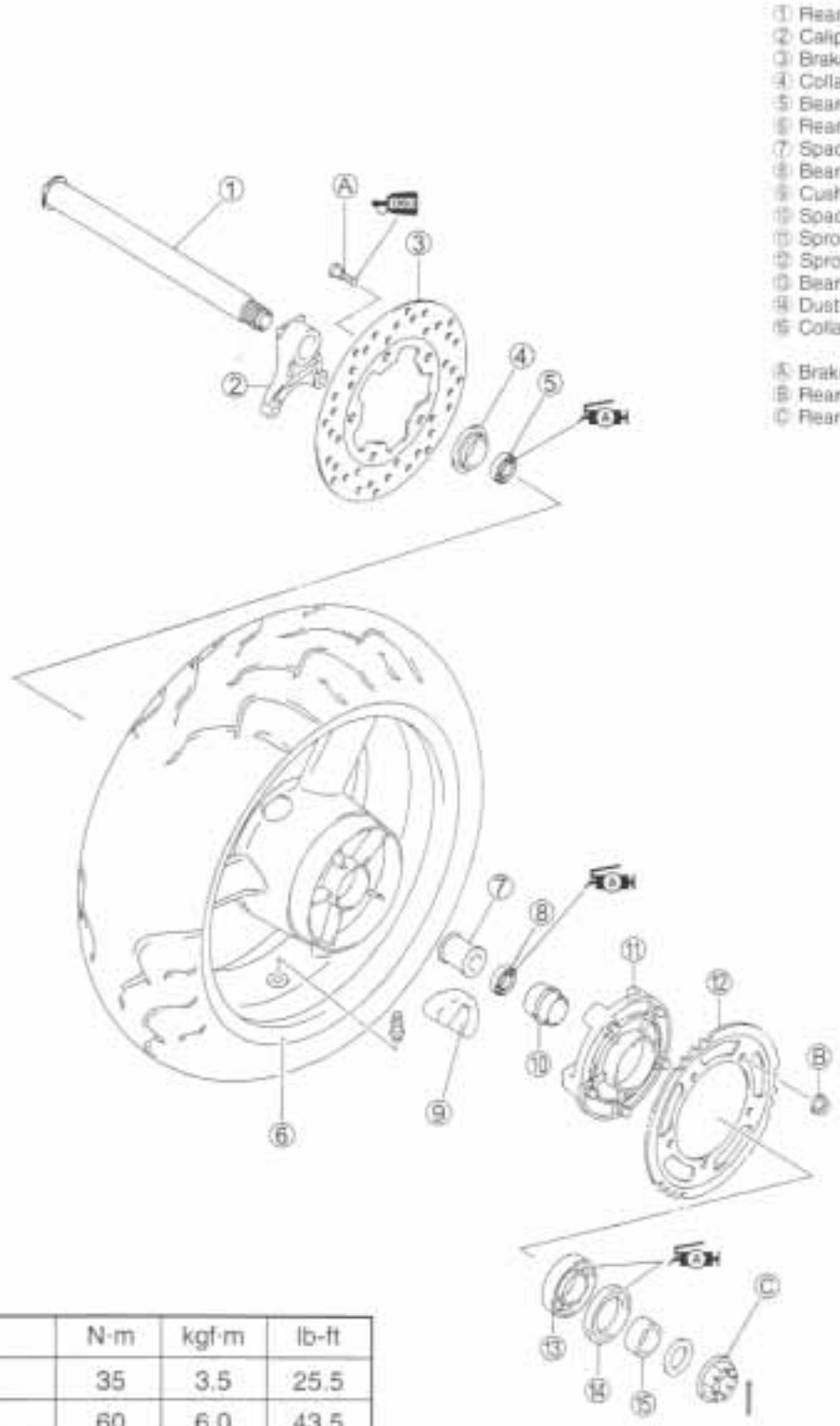


| ITEM | N·m | kgf·m | lb-ft |
|---|---|---|---|
| Ⓐ | 35 | 3.5 | 25.5 |
| Ⓑ | 60 | 6.0 | 43.5 |
| Ⓒ (For E-03, 28, 33) | 110 | 11.0 | 79.6 |
| Ⓒ (For the others) | 120 | 12.0 | 86.8 |

## REMOVAL

- Remove the cotter pin. (For Canada and USA)
- Loosen the axle nut.
- Raise the rear wheel off the ground and support the motorcycle with a jack or wooden block.
- Remove the axle nut and draw out the rear axle.

- Remove the rear wheel by disengaging the drive chain.

**⚠ CAUTION**

**Do not operate the brake pedal while removing the rear wheel.**

- Remove the collar ①.
- Draw out the rear sprocket mounting drum ② from the wheel hub.


- Remove the rear sprocket mounting drum retainer ③.
- Separate the rear sprocket from its mounting drum by removing nuts.

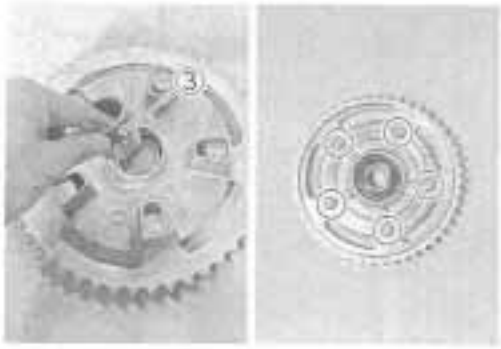


- Remove the dust seal by using special tool.

**09913-50121: Oil seal remover**

**⚠ CAUTION**

**The removed dust seal must be replaced with a new one.**

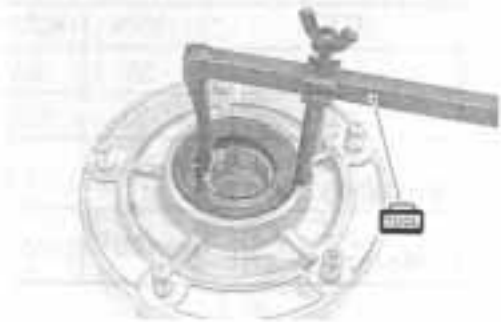

- Remove the collar ①.
- Remove the brake disc.


## INSPECTION AND DISASSEMBLY

**TIRE INSPECTION: ☞ 2-25 and 6-68**
**WHEEL INSPECTION: ☞ 6-9 and 68**

### REAR AXLE

Using a dial gauge, check the rear axle for runout.
If the runout exceeds the limit, replace the rear axle.

**DATA Axle shaft runout: Service Limit: 0.25 mm (0.010 in)**

**TOOL 09900-20606: Dial gauge (1/100 mm)**
**09900-20701: Magnetic stand**
**09900-21304: V-block set (100 mm)**

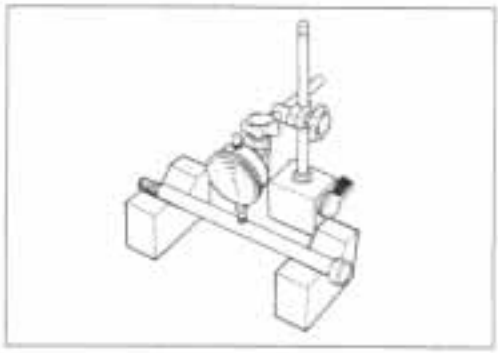

### WHEEL DAMPER

Inspect the damper for wear and damage.
Replace the damper if there is anything unusual.

### SPROCKET

Inspect the sprocket teeth for wear. If they are worn as shown, replace the two sprockets and drive chain as a set.

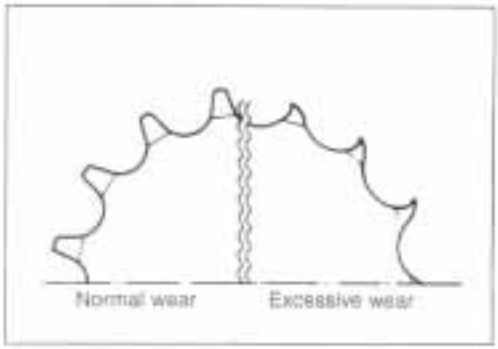

## BEARINGS

Inspect the play of the wheel and sprocket mounting drum bearings by hand while they are in the wheel and drum. Rotate the inner race by hand to inspect for abnormal noise and smooth rotation. Replace the bearing if there is anything unusual.

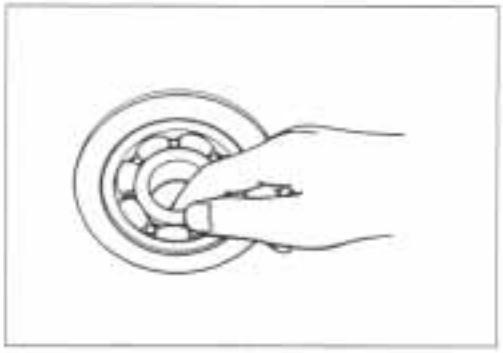

- Remove the sprocket mounting drum bearing and wheel bearings by using the special tool.

**09921-20220: Bearing remover set (⇨ 30)**

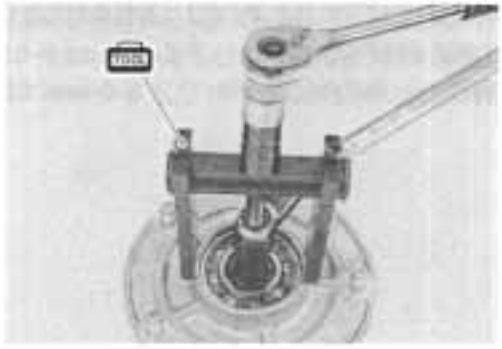

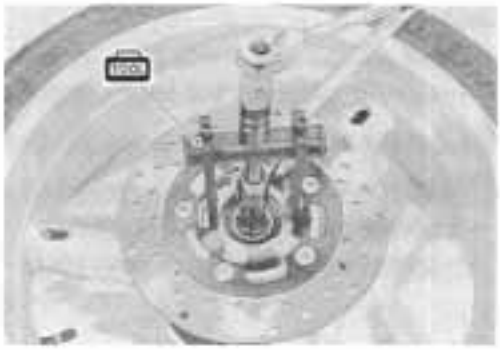

**▲ CAUTION**

**The removed bearings must be replaced with new ones.**

## REASSEMBLY AND REMOUNTING

Reassemble and remount the rear wheel in the reverse order of removal and disassembly. Pay attention to the following points:

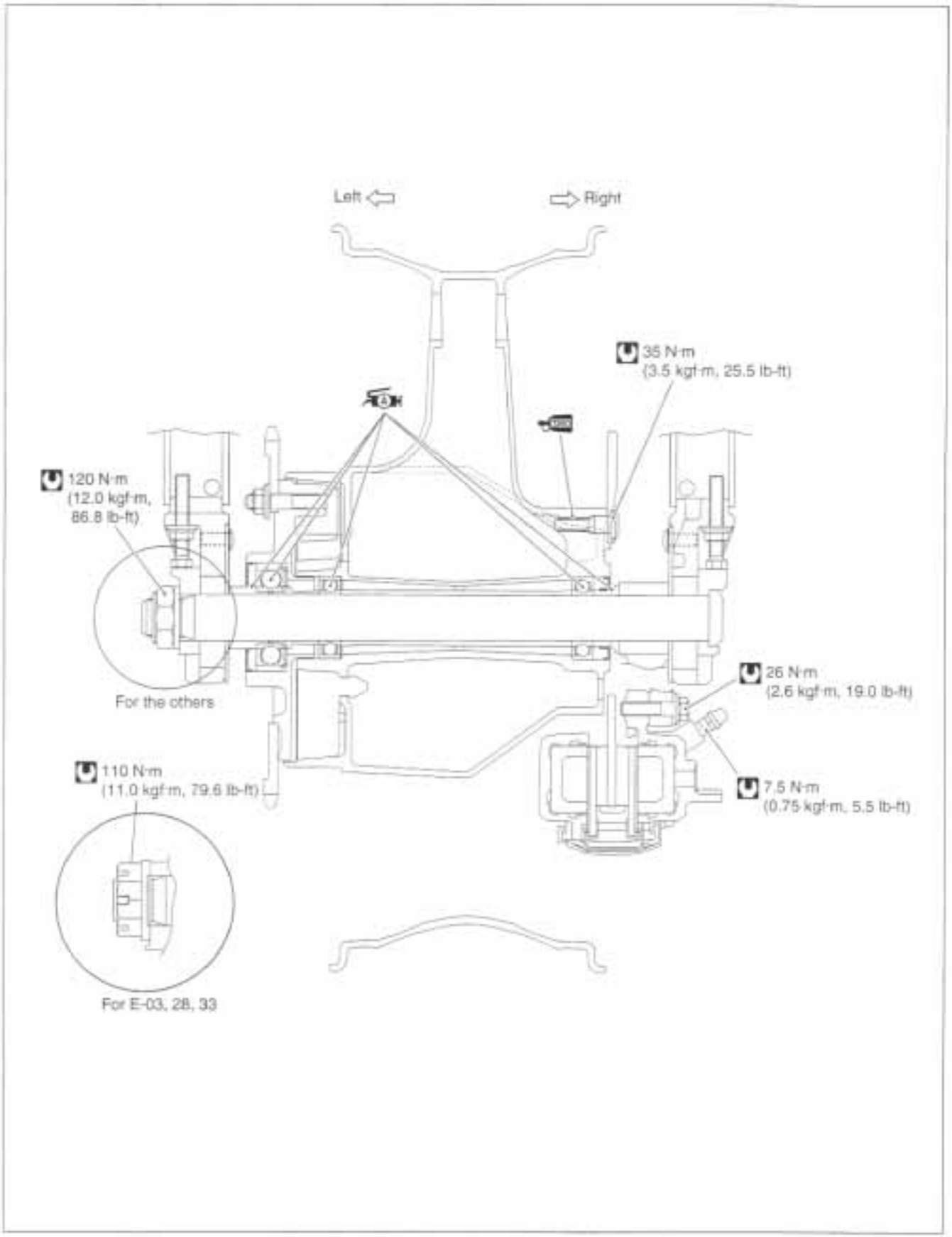

## BEARINGS

- Apply grease to the bearings before installing.

**99000-25010: SUZUKI SUPER GREASE "A"**

- Install the new bearing to the sprocket mounting drum using the special tool.

**09924-84510: Bearing installer set**

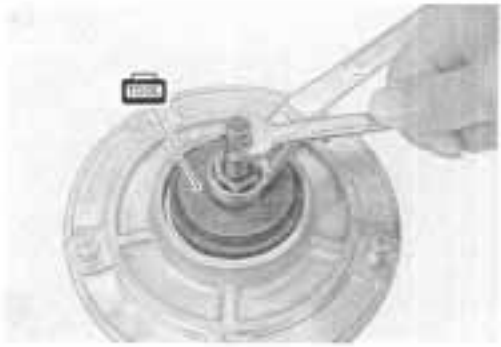

- First install the right wheel bearing, then install the left wheel bearing using the special tool.

**09941-34513: Bearing/Steering race installer set**

**▲ CAUTION**

**The sealed cover of the bearing must face outside.**

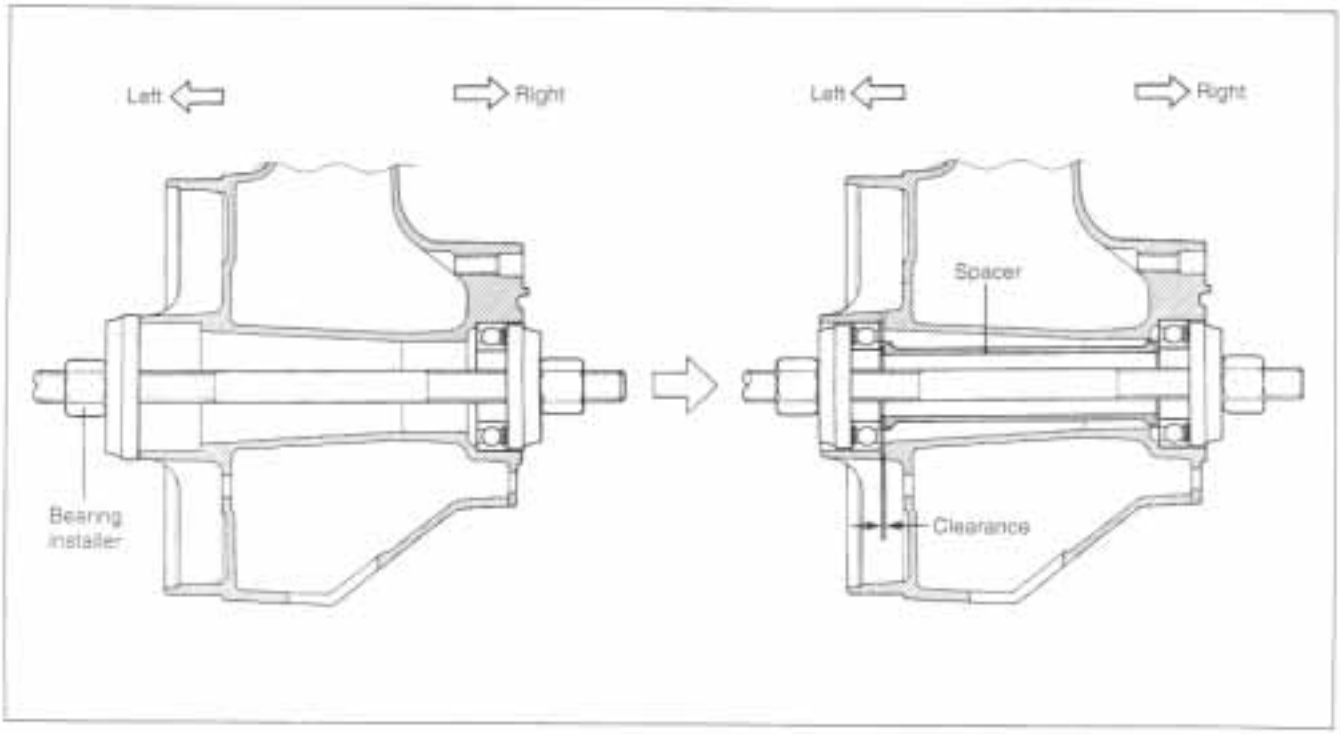

### DUST SEALS

- Install the new dust seal using proper drift.
- Apply grease to the dust seal lip before assembling rear wheel.

**99000-25010: SUZUKI SUPER GREASE "A"**

### BRAKE DISC

- Apply THREAD LOCK SUPER "1360" to the disc bolts and tighten them to the specified torque.

*NOTE:*
*Make sure that the brake disc is clean and free of any greasy matter.*

**99000-32130: THREAD LOCK SUPER "1360"**

**Brake disc bolt: 35 N·m (3.5 kgf·m, 25.5 lb-ft)**

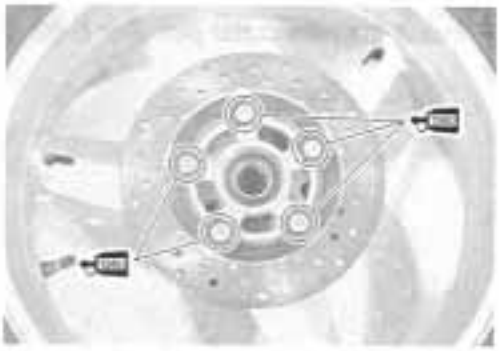

### REAR SPROCKET

- Tighten the sprocket mounting nuts to the specified torque.

**Rear sprocket nut: 60 N·m (6.0 kgf·m, 43.5 lb-ft)**

*NOTE:*
*Stamped mark on the sprocket should face outside.*

- Install the rear sprocket mounting drum retainer ①.


- Install the rear sprocket mounting drum.
- Install the collars ② and ③.

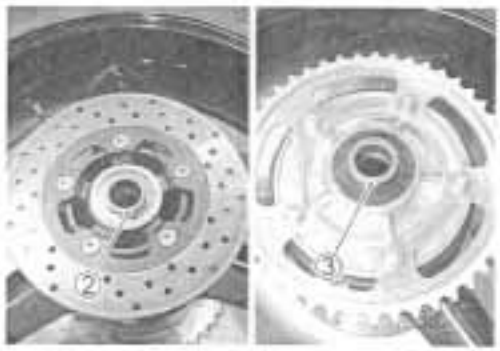

## REAR AXLE

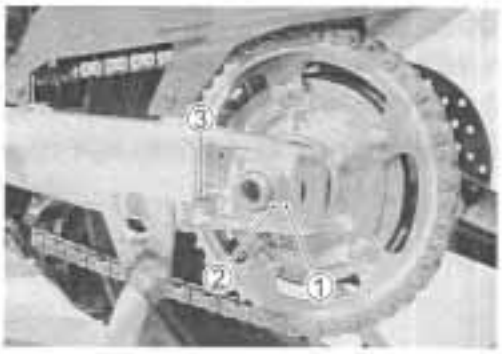


- Remount the rear wheel and rear axle shaft, install the washer ① and rear axle nut ②.
- Adjust the chain slack after rear wheel installation. (☞ 2-20)
- Tighten the rear axle nut ② to the specified torque.

**Rear axle nut: 110 N·m (11.0 kgf·m, 79.6 lb-ft)**
**[For E-03, 28, 33]**
**120 N·m (12.0 kgf·m, 86.8 lb-ft)**
**[For the others]**

- Tighten both chain adjuster lock nuts ③ securely.
- Install the new cotter pin. (For E-03, 28, 33)

# REAR SHOCK ABSORBER

## CONSTRUCTION

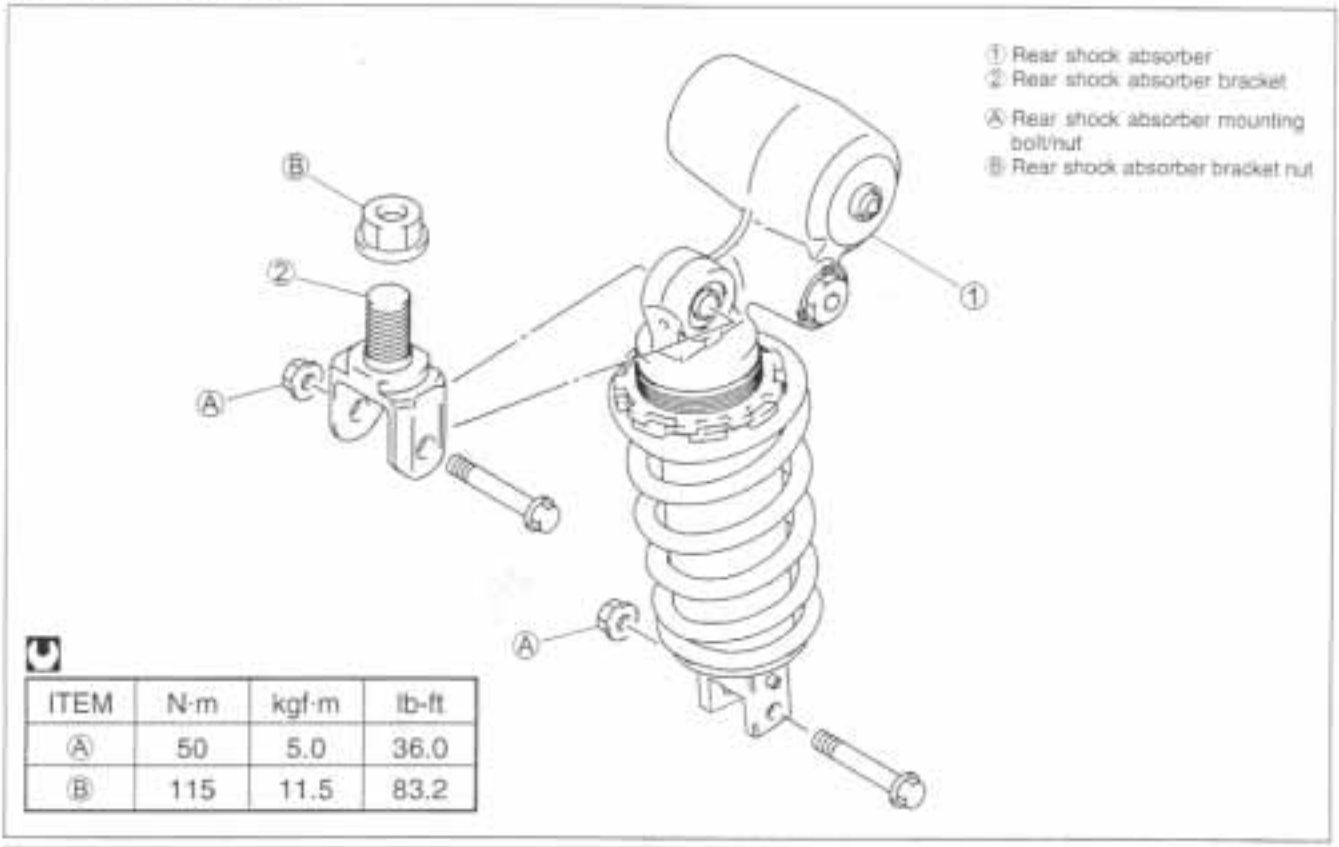


| ITEM | N·m | kgf·m | lb-ft |
|---|---|---|---|
| Ⓐ | 50 | 5.0 | 36.0 |
| Ⓑ | 115 | 11.5 | 83.2 |

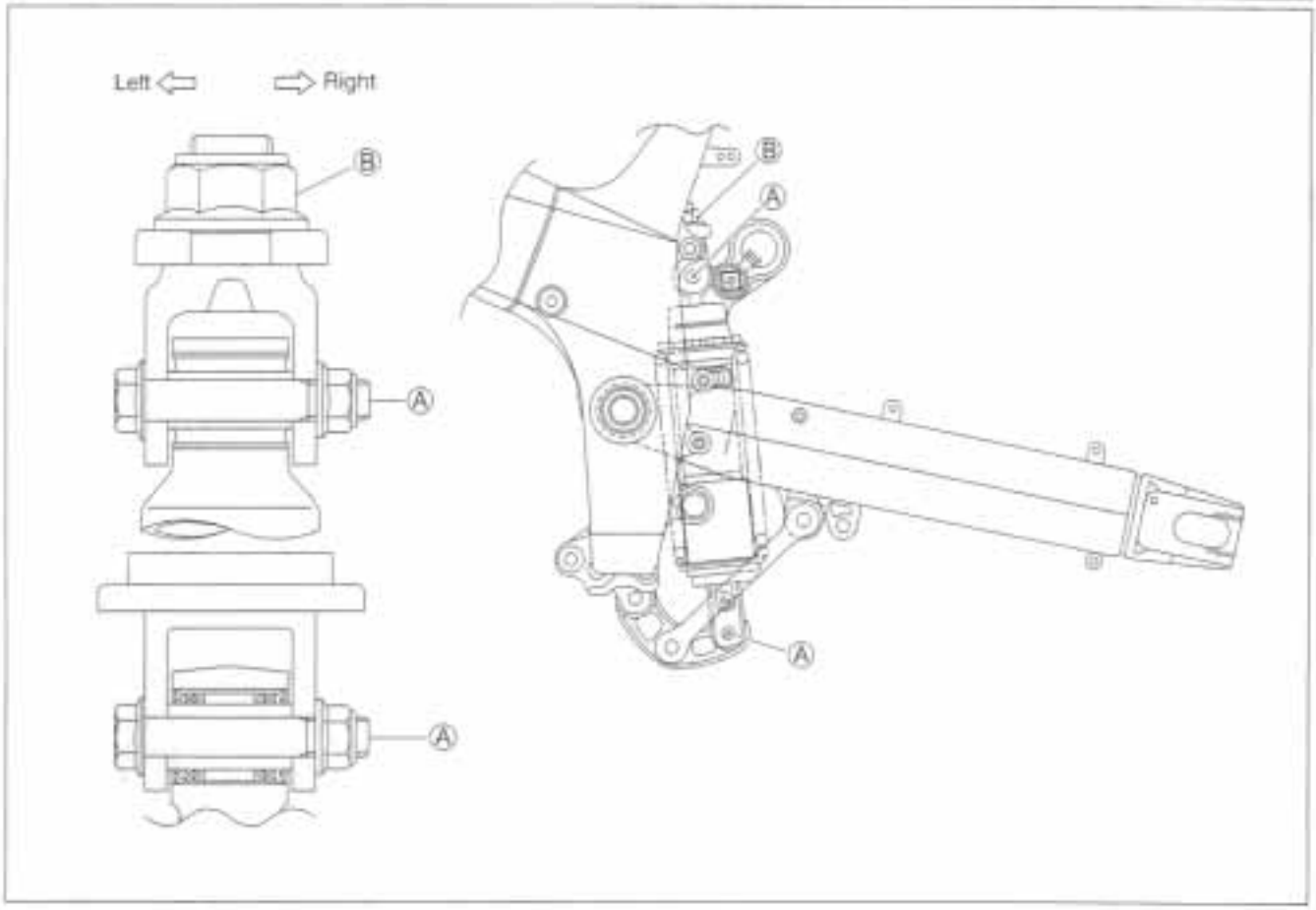

## REMOVAL

- Support the motorcycle with a jack to be no load for the rear shock absorber.

- Remove the rear shock absorber upper mounting bolt and nut.
- Remove the rear cushion lever bolt and nut.

- Remove the rear shock absorber lower mounting bolt and nut.
- Take out the rear shock absorber to downward.

## INSPECTION

Inspect the shock absorber body and bushing for damage and oil leakage.

If any defects are found, replace the shock absorber with a new one.

**⚠ CAUTION**

**Do not attempt to disassemble the rear shock absorber unit. It is unserviceable.**

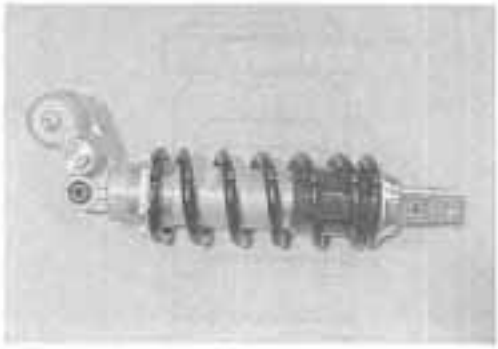

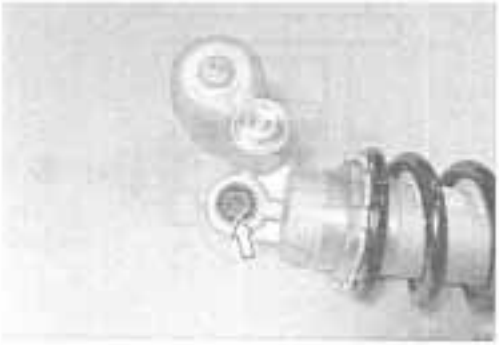

## REAR SHOCK ABSORBER SCRAPPING PROCEDURE

**WARNING**

- **Handle the rear shock absorber with caution since a high pressure nitrogen gas is contained.**
- **Avoid incineration, exposure to high pressure or overhauling.**
- **In the case of scrapping the rear shock absorber, evacuate gas in the following procedures. In the case of scrapping the rear shock absorber, evacuate gas in the following procedures.**

### REAR SHOCK ABSORBER GAS EVACUATION

- Remove the valve cap.
- Evacuate gas through the valve hole.

**WARNING**

**Keep your face away from the valve hole.**

## REMOUNTING

Remount the rear shock absorber in the reverse order of removal. Pay attention to the following points:

### HEIGHT ADJUSTER

- Tighten the rear shock absorber bracket nut to the specified torque.

**Rear shock absorber bracket nut: 115 N·m (11.5 kgf·m, 83.2 lb-ft)**

- Install the rear shock absorber and tighten the rear shock absorber upper/lower mounting bolts and nuts.

**Rear shock absorber mounting nut: 50 N·m (5.0 kgf·m, 36.0 lb-ft)**

- Tighten the rear cushion lever bolt and nut.

**Rear cushion lever nut: 78 N·m (7.8 kgf·m, 56.5 lb-ft)**

## SUSPENSION SETTING

After installing the rear suspension, adjust the spring pre-load and damping force as follows.

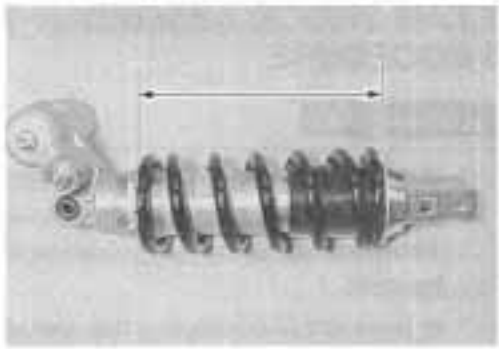

### SPRING PRE-LOAD ADJUSTMENT

The set length 186.5 mm provides the maximum spring pre-load.
The set length 196.5 mm provides the minimum spring pre-load.
(STD length: 191.5 mm)

### DAMPING FORCE ADJUSTMENT

**(Rebound side)**

Fully turn the damping force adjuster ① clockwise. It is at stiffest position and turn it out to standard setting position.
(STD position: 1 and ¼ turns out [Fine-tune the adjuster by turning it slightly until two punch marks align.])

**(Compression side)**

Fully turn the damping force adjuster ② clockwise. It is at stiffest position and turn it out to standard setting position.
(STD position: 1 and ⅛ turns out [Fine-tune the adjuster by turning it slightly until two punch marks align.])

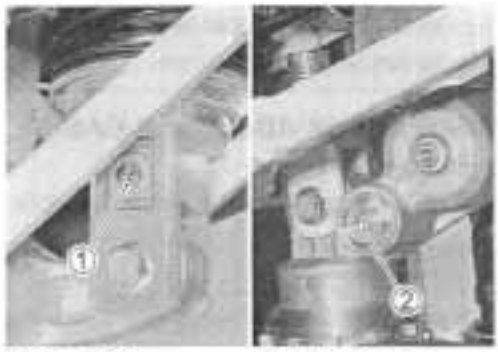


Rebound side　　Compression side

### STANDARD SUSPENSION SETTING

| | | REAR | | |
|---|---|---|---|---|
| | | Spring set length | Damping force adjuster | |
| | | | Rebound | Compression |
| Solo riding | Softer | 191.5 mm (7.54 in) | 1 and ¼ turns out | 1 and ¼ turns out |
| | Standard | 191.5 mm (7.54 in) | 1 and ¼ turns out | 1 and ⅛ turns out |
| | Stiffer | 191.5 mm (7.54 in) | 1 and ¼ turns out | 1 turn out |
| Dual riding | | 191.5 mm (7.54 in) | 1 and ¼ turns out | 1 and ⅛ turns out |

# REAR SUSPENSION CONSTRUCTION

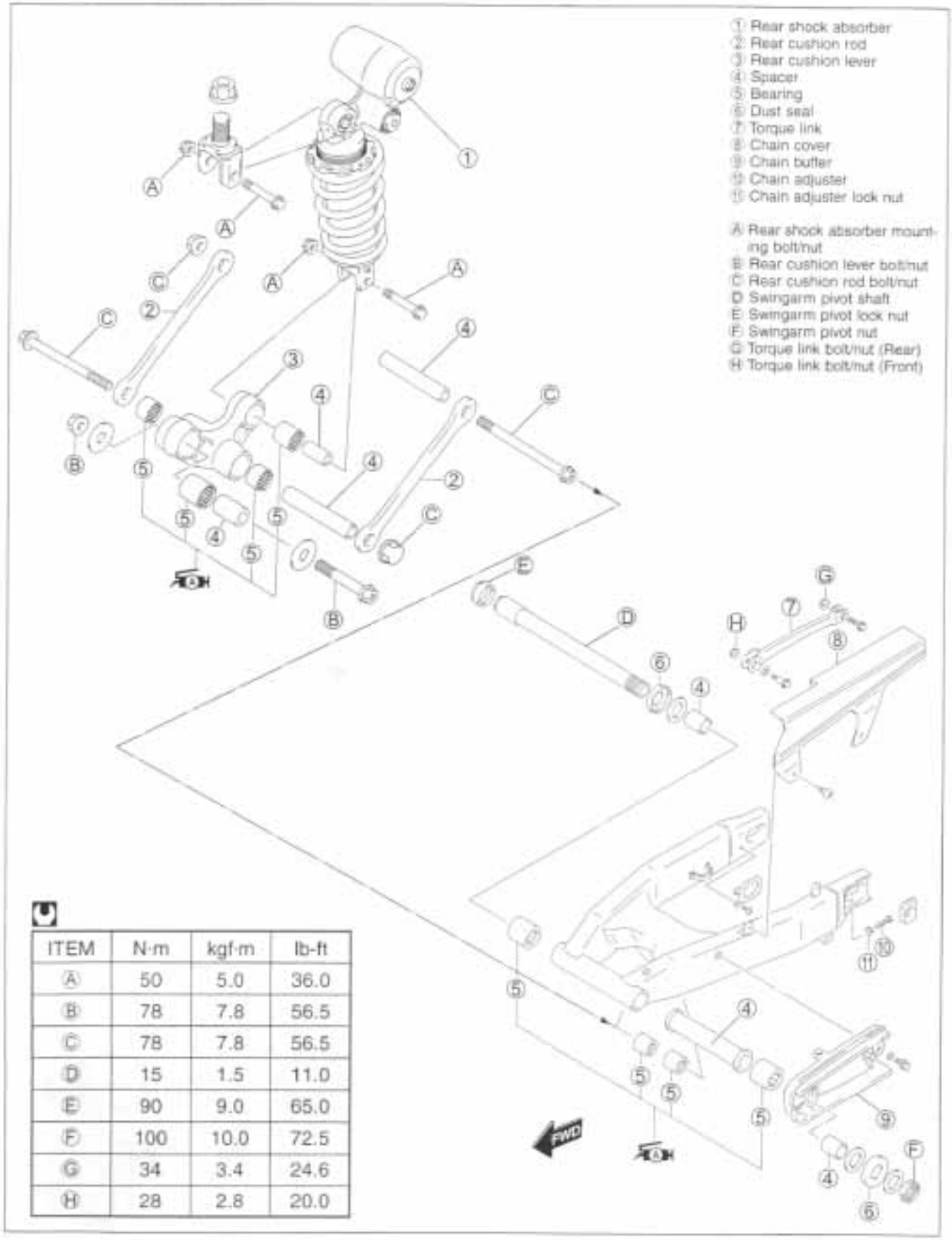


| ITEM | N·m | kgf·m | lb-ft |
|---|---|---|---|
| Ⓐ | 50 | 5.0 | 36.0 |
| Ⓑ | 78 | 7.8 | 56.5 |
| Ⓒ | 78 | 7.8 | 56.5 |
| Ⓓ | 15 | 1.5 | 11.0 |
| Ⓔ | 90 | 9.0 | 65.0 |
| Ⓕ | 100 | 10.0 | 72.5 |
| Ⓖ | 34 | 3.4 | 24.6 |
| Ⓗ | 28 | 2.8 | 20.0 |

## REMOVAL

- Raise the rear wheel off the ground and support the motorcycle with a jack or a wooden block.
- Remove the rear wheel. (☞ 6-34)

- Remove the rear brake hose union bolt.
- Remove the rear brake caliper along with its bracket by removing the torque link bolts.

**⚠ CAUTION**

**Completely wipe off any brake fluid adhering to any part of motorcycle. The fluid reacts chemically with paint, plastics, rubber materials and so on.**

- Remove the brake hose guides.

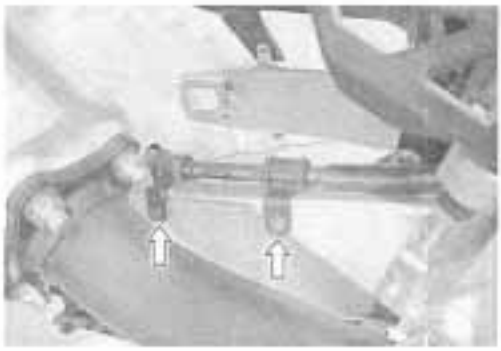

- Remove the cushion lever mounting bolts/nuts and rear shock absorber lower mounting bolt/nut.

- Remove the side-stand.
- Remove the cusion lever.

*NOTE:*
*It is necessary to remove the side-stand, only when replacing the cusion lever.*

- Remove the swingarm pivot shaft lock nut by using the special tool.

**09940-14940: Swingarm pivot thrust adjuster socket wrench**

- Hold the swingarm pivot shaft ① and remove the swingarm pivot nut ②.

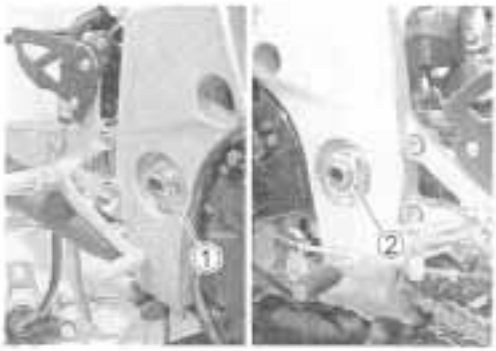


- Remove the swingarm pivot shaft.
- Remove the rear suspension assembly.

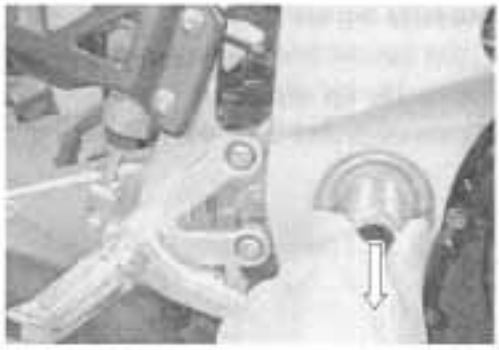

- Remove the chain case ①, mad guard ② and chain buffer ③.
- Remove the dust covers and washers ④.

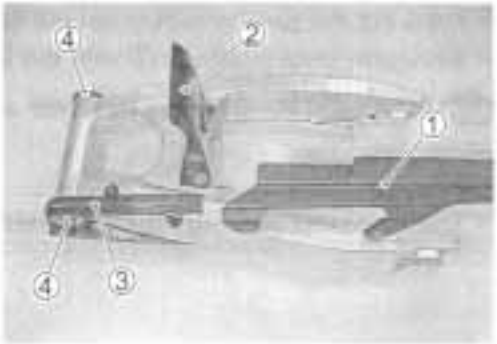


- Remove the cushion rod.
- Remove the torque link.

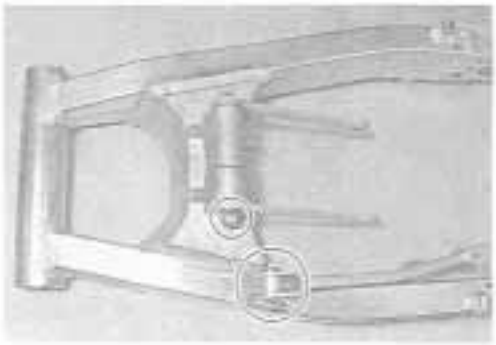

## INSPECTION AND DISASSEMBLY

### SPACER

- Remove the spacers from swingarm.
- Remove the spacers from the cushion lever.
- Inspect the spacers for any flaws or other damage. If any defects are found, replace the spacers with new ones.

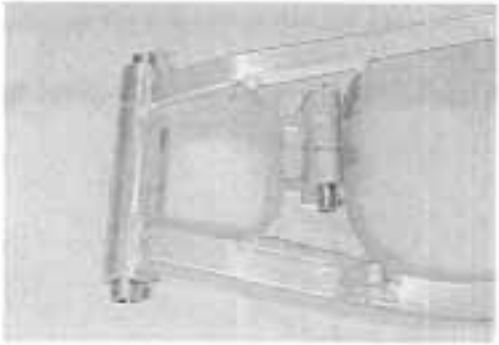

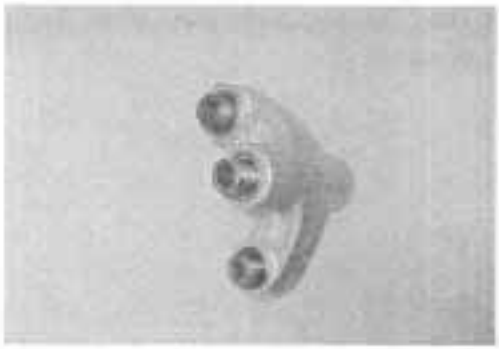

### SWINGARM BEARING

Insert the spacer into bearing and check the play when moving the spacer up and down.
If excessive play is noted, replace the bearing with a new one.

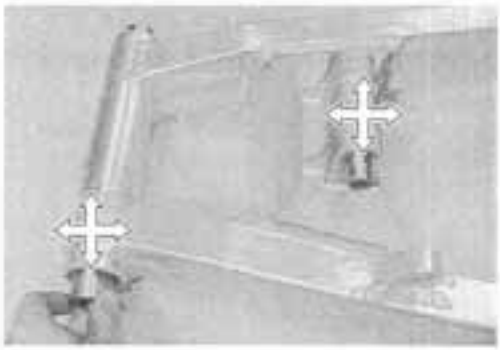

- Draw out the swingarm cushion rod upper bearings ① and the swingarm pivot bearings ② with the special tools.

**09921-20220: Bearing remover set**

**▲ CAUTION**

**The removed bearings must be replaced with new ones.**

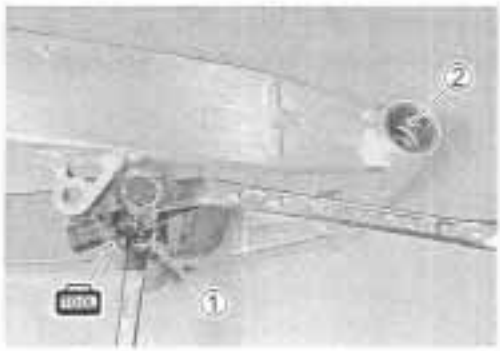

### CUSHION LEVER BEARING

Insert the spacer into bearing and check the play when moving the spacer up and down.
If excessive play is noted, replace the bearing with a new one.

- Draw out the cushion lever bearings with the special tools.

**TOOL 09921-20220: Bearing remover set**

**⚠ CAUTION**

**The removed bearings must be replaced with new ones.**

### CUSHION LEVER AND CUSHION LEVER RODS

Inspect the cushion lever and cushion lever rods for damage.

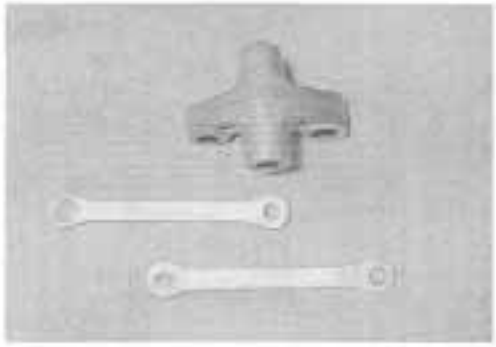

### SWINGARM PIVOT SHAFT

Using a dial gauge, check the pivot shaft runout and replace it if the runout exceeds the limit.

**TOOL 09900-20606: Dial gauge (1/100 mm, 10 mm)**
**09900-20701: Magnetic stand**
**09900-21304: V-block (100 mm)**

**DATA Swingarm pivot shaft runout:**
**Service limit: 0.3 mm (0.01 in)**

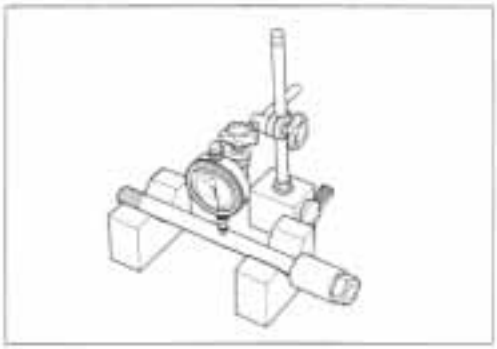

### CHAIN BUFFER

Inspect the chain buffer for wear and damage.
If any defects are found, replace the chain buffer with a new one.

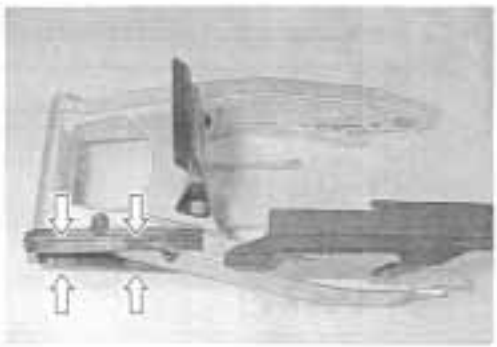

## REASSEMBLY

Reassemble the swingarm in the reverse order of disassembly and removal.
Pay attention to the following points:

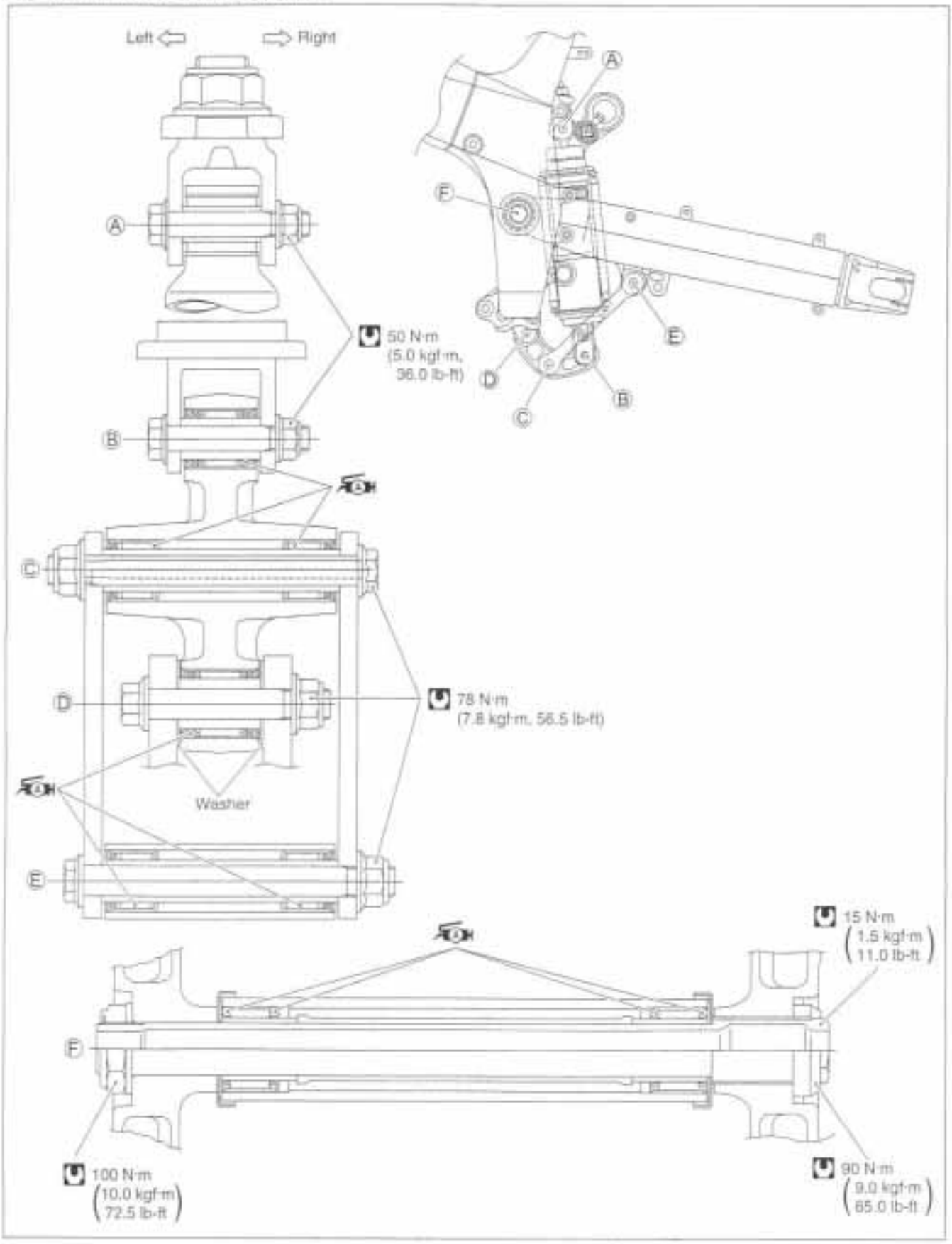

### SWINGARM BEARING

- Press the bearing into the swingarm pivot by using the special tool.

**09941-34513: Steering race installer**

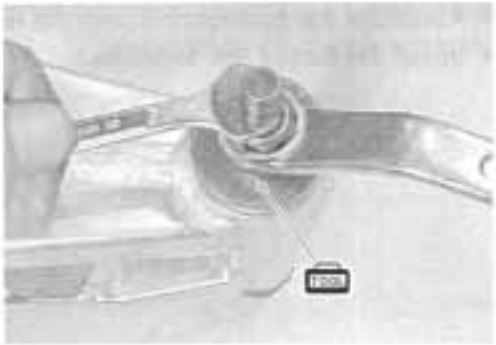

- Press the swingarm cushion rod upper side bearing with the special tool.

**09941-34513: Steering race installer**

*NOTE:*
*When reinstalling the bearing, stamped mark on bearing must face outside.*

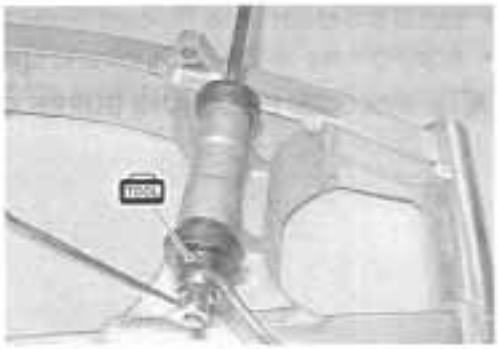

### CUSHION LEVER BEARING

- Press the bearings into the cushion lever with the special tool.

**09941-34513: Steering race installer**

*NOTE:*
*When installing the bearing, stamped mark on bearing must face outside.*

- Apply grease to the bearings and spacers.

**99000-25010: SUZUKI SUPER GREASE "A"**

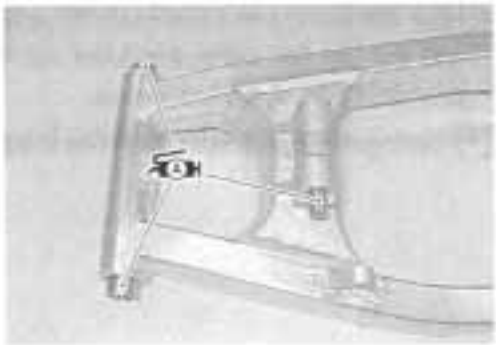

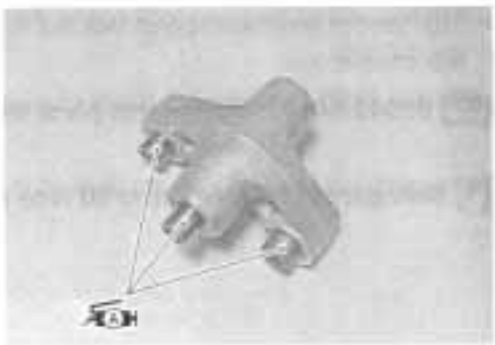

- Assemble the cushion rod onto the swingarm temporarily.
- Install the torque link temporarily.

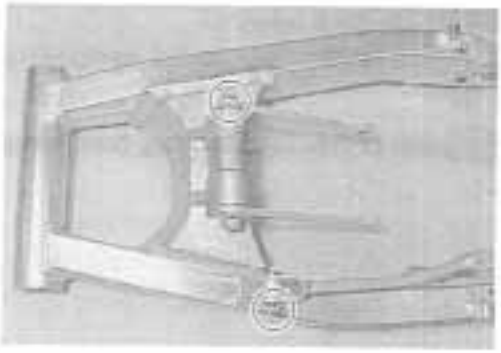

- Install the chain case ①, mud guard ② and chain buffer ③.
- Apply grease to the bearings and spacers.

**99000-25010: SUZUKI SUPER GREASE "A"**

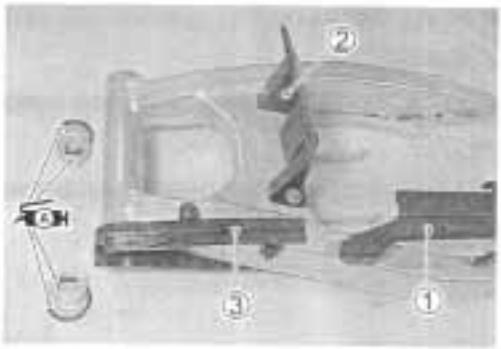


## REMOUNTING

Remount the swingarm in the reverse order of disassembly and removal, and pay attention to the following points.

### SWINGARM PIVOT THRUST CLEARANCE ADJUSTMENT

Adjust swingarm pivot thrust clearance as following procedure.

- Insert the swingarm pivot shaft and tighten it to the specified torque.

**Swingarm pivot shaft: 15 N·m (1.5 kgf·m, 11.0 lb-ft)**

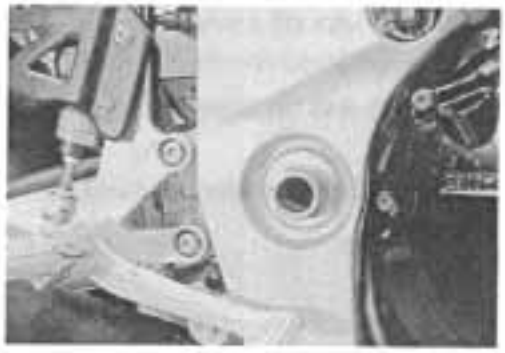

- Hold the swingarm pivot shaft ① with a 27 mm socket wrench and tighten the swingarm pivot nut ② with a 36 mm socket wrench to the specified torque.

**Swingarm pivot nut: 100 N·m (10.0 kgf·m, 72.5 lb-ft)**

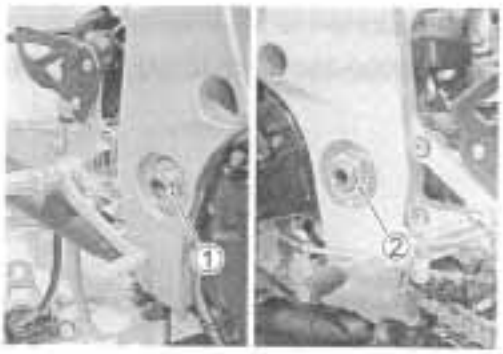


- Tighten the swingarm pivot lock nut to the specified torque with the special tool.

**09940-14940: Swingarm pivot thrust adjuster lock nut wrench**

**Swingarm pivot lock nut: 90 N·m (9.0 kgf·m, 65.0 lb-ft)**

### SHOCK ABSORBER AND CUSHION LEVER MOUNTING NUT

- Install the washers Ⓐ and cushion lever.
- Install the side-stand.

**Cushion lever mounting nut: 78 N·m (7.8 kgf·m, 56.5 lb-ft)**
**Side-stand mounting bolt: 50 N·m (5.0 kgf·m, 36.2 lb-ft)**


- Assemble the cushion lever, cushion rod and rear shock absorber.

**Rear shock absorber mounting nut ①: 50 N·m (5.0 kgf·m, 36.0 lb-ft)**
**Cushion rod nut ②: 78 N·m (7.8 kgf·m, 56.5 lb-ft)**
**Cushion rod mounting nut ③: 78 N·m (7.8 kgf·m, 56.5 lb-ft)**


- Route the brake hose and install the brake hose guides. (☞ 8-21)
- Remount the rear wheel. (☞ 6-37)

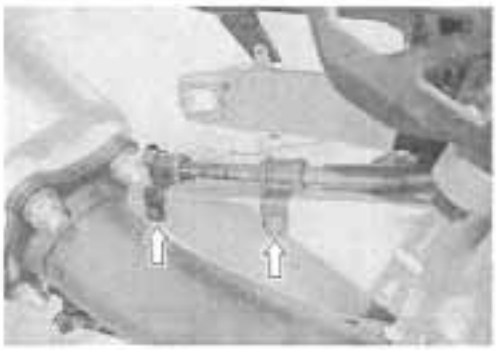

### TORQUE LINK

- Tighten the rear torque link nuts to the specified torque.

**Torque link nut (Front): 28 N·m (2.8 kgf·m, 20.0 lb-ft)**
**(Rear) : 34 N·m (3.4 kgf·m, 24.6 lb-ft)**

- Tighten the brake hose union bolt to the specified torque. (Brake fluid replacement: ☞ 6-55)

**Brake hose union bolt: 23 N·m (2.3 kgf·m, 16.5 lb-ft)**

## FINAL INSPECTION AND ADJUSTMENT

After installing the rear suspension and wheel, the following adjustments are required before driving.

- Drive chain: ☞ 2-20
- Tire pressure: ☞ 2-26
- Chassis bolts and nuts: ☞ 2-28

# FRONT BRAKE

## CONSTRUCTION

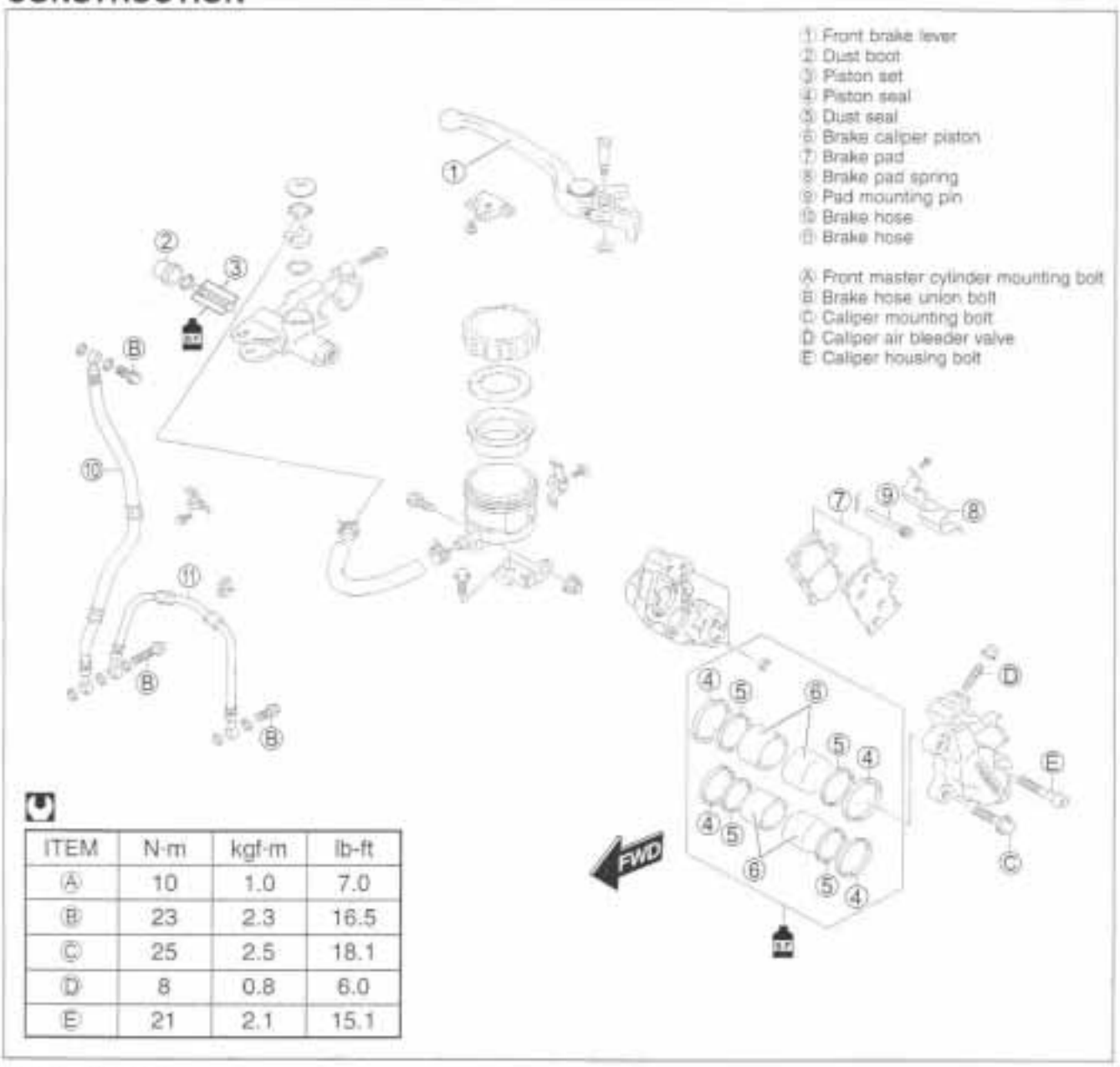


| ITEM | N·m | kgf·m | lb-ft |
|---|---|---|---|
| Ⓐ | 10 | 1.0 | 7.0 |
| Ⓑ | 23 | 2.3 | 16.5 |
| Ⓒ | 25 | 2.5 | 18.1 |
| Ⓓ | 8 | 0.8 | 6.0 |
| Ⓔ | 21 | 2.1 | 15.1 |

**⚠ WARNING**

- **This brake system is filled with an ethylene glycol-based DOT 4 brake fluid. Do not use mix different types of fluid such as silicone-based or petroleum-based.**
- **Do not use any brake fluid taken from old, used or unsealed containers. Never reuse brake fluid left over from the last servicing or stored for long periods.**
- **When storing the brake fluid, seal the container completely and keep away from children.**
- **When replenishing brake fluid, take care not to get dust into fluid.**
- **When washing brake components, use fresh brake fluid. Never use cleaning solvent.**
- **A contaminated brake disc or brake pad reduces braking performance. Discard contaminated pads and clean the disc with high quality brake cleaner or neutral detergent.**

**⚠ CAUTION**

**Handle brake fluid with care: the fluid reacts chemically with paint, plastics, rubber materials etc.**

## BRAKE PAD REPLACEMENT

- Remove the spring ①.
- Remove the brake pads by removing the clip ② and pad mounting pin ③.

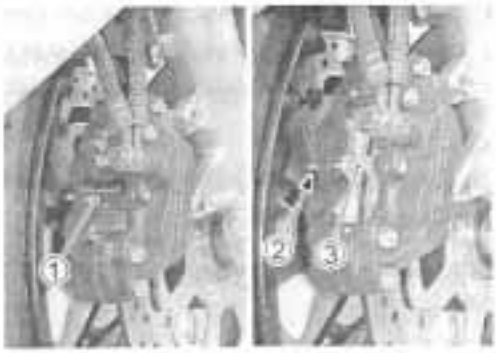

**⚠ CAUTION**

- **Do not operate the brake lever while dismounting the pads.**
- **Replace the brake pads as a set, otherwise braking performance will be adversely affected.**

- Install the new brake pads.

**Pad mounting pin: 16 N·m (1.6 kgf·m, 11.6 lb-ft)**

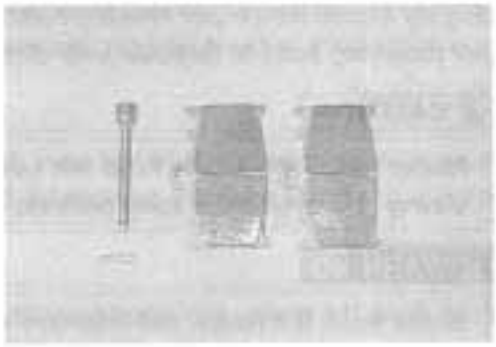

*NOTE:*
*After replacing the brake pads, pump the brake lever few times to check for proper brake operation and then check the brake fluid level.*

## BRAKE FLUID REPLACEMENT

- Place the motorcycle on a level surface and keep the handlebars straight.
- Remove the brake fluid reservoir cap and diaphragm.
- Suck up the old brake fluid as much as possible.
- Fill the reservoir with new brake fluid.

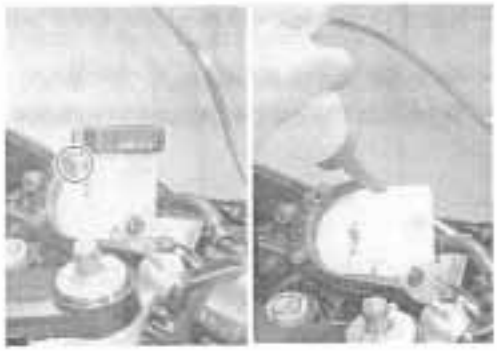

- Connect a clear hose to the caliper air bleeder valve and insert the other end of hose into a receptacle.
- Loosen the air bleeder valve and pump the brake lever until old brake fluid flows out of the bleeder system.
- Close the caliper air bleeder valve and disconnect a clear hose. Fill the reservoir with new fluid to the upper mark of the reservoir.

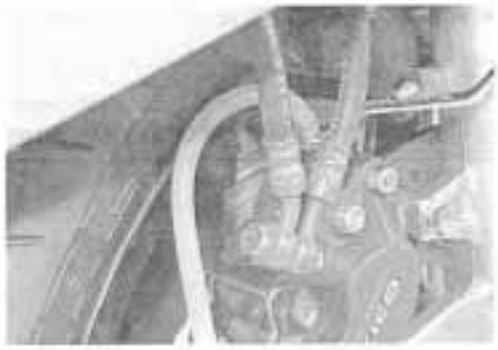

**Specification and Classification: DOT 4**

**⚠ CAUTION**

**Bleed air from the brake system. (☞ 2-24)**

## CALIPER REMOVAL AND DISASSEMBLY

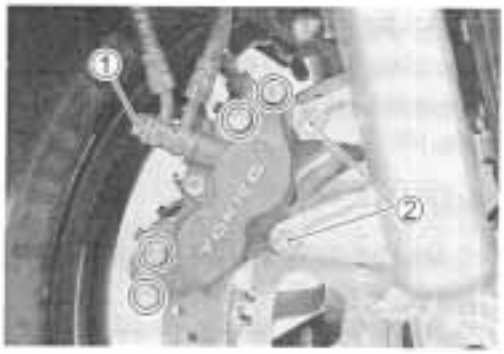


- Remove the brake hose from the caliper by removing the union bolt ① and catch the brake fluid in a suitable receptacle.

*NOTE:*
*Place a rag underneath the union bolt on the brake caliper to catch any spilt brake fluid.*

- Remove the brake caliper by removing the caliper mounting bolts ②.

*NOTE:*
*Slightly loosen the caliper housing bolts before removing the caliper mounting bolts to facilitate later disassembly.*

**⚠ CAUTION**

**Never reuse the brake fluid left over from previous servicing and stored for long periods of time.**

**⚠ WARNING**

**Brake fluid, if it leaks, will interfere with safe running and discolor painted surfaces. Check the brake hose and hose joints for cracks and fluid leakage.**

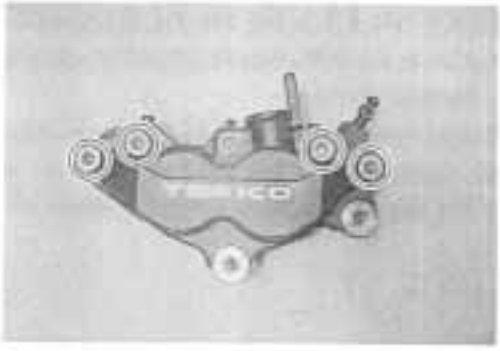

- Remove the brake pads. (☞ 6-55)
- Separate the caliper halves to remove the caliper housing bolts.

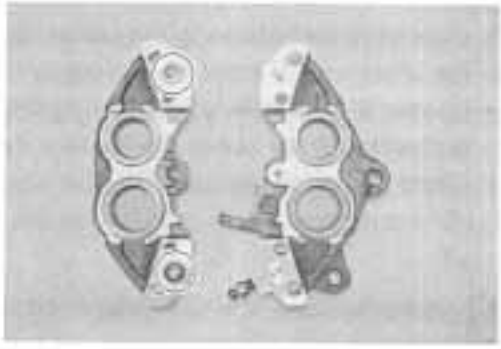

- Remove the O-rings.

**⚠ CAUTION**

**Replace the O-rings with new ones.**

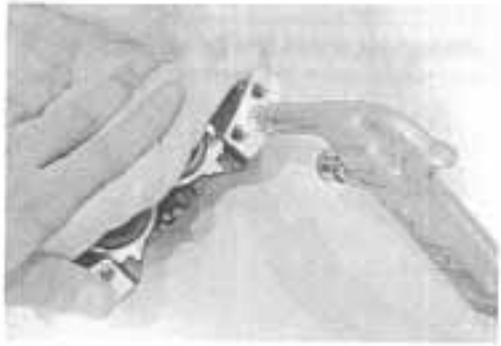

- Place a rag over the pistons to prevent it from popping out and then force out the pistons using compressed air.

**⚠ CAUTION**

**Do not use high pressure air to prevent piston damage.**

- Remove the dust seals and piston seals.

**▲ CAUTION**

**Do not reuse the dust seals and piston seals to prevent fluid leakage.**

## CALIPER INSPECTION

### BRAKE CALIPER

Inspect the brake caliper cylinder wall for nicks, scratches or other damage.

### BRAKE CALIPER PISTON

Inspect the brake caliper piston surface for any scratches or other damage.

## CALIPER REASSEMBLY AND REMOUNTING

Reassemble the caliper in the reverse order of removal and disassembly. Pay attention to the following points:

- Wash the caliper bores and pistons with specified brake fluid. Particularly wash the dust seal grooves and piston seal grooves.

**Specification and Classification: DOT 4**

**▲ CAUTION**

- **Wash the caliper components with fresh brake fluid before reassembly. Never use cleaning solvent or gasoline to wash them.**
- **Do not wipe the brake fluid off after washing the components.**
- **When washing the components, use the specified brake fluid. Never use different types of fluid or cleaning solvent such as gasoline, kerosine or the others.**
- **Replace the piston seals and dust seals with new ones when reassembly. Apply the brake fluid to both seals when installing them.**

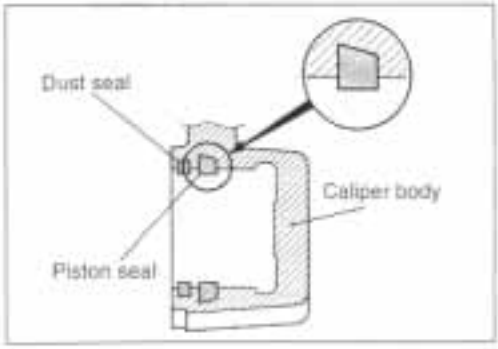


### PISTON SEAL

- Install the piston seals as shown in the right illustration.

### O-ring

- Install the O-rings and put caliper halves together.

- Tighten each bolt to the specified torque.

**Front brake caliper housing bolt ①:**
**21 N·m (2.1 kgf·m, 15.1 lb-ft)**
**Front brake caliper mounting bolt ②:**
**25 N·m (2.5 kgf·m, 18.1 lb-ft)**
**Front brake hose union bolt ③:**
**23 N·m (2.3 kgf·m, 16.5 lb-ft)**

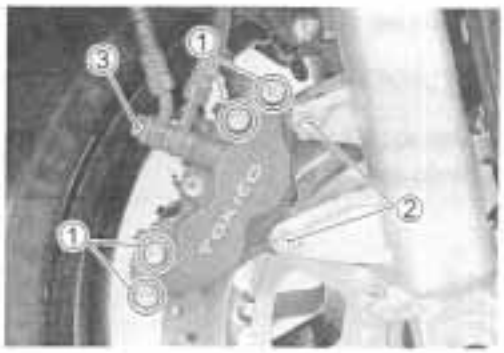


*NOTE:*
*Before remounting the caliper, push the piston all the way into the caliper.*

**⚠ CAUTION**

**Bleed air from the system after reassembling the caliper. (☞ 2-25)**

## BRAKE DISC INSPECTION

Visually check the brake disc for damage or cracks.
Measure the thickness with a micrometer.
Replace the disc if the thickness is less than the service limit or if damage is found.

**DATA Front disc thickness: Service Limit: 4.5 mm (0.18 in)**

**TOOL 09900-20205: Micrometer (0–25 mm)**

- Remove the brake calipers. (☞ 6-56)

Measure the runout with a dial gauge.
Replace the disc if the runout exceeds the service limit.

**DATA Front disc runout: Service Limit: 0.30 mm (0.012 in)**

**TOOL 09900-20606: Dial gauge (1/100 mm)**
**09900-20701: Magnetic stand**

*** Brake disc removal (☞ 6-8)**

*** Brake disc installation (☞ 6-11)**

## MASTER CYLINDER REMOVAL AND DISASSEMBLY

- Disconnect the front brake light switch lead wires.

- Place a rag underneath the union bolt on the master cylinder to catch any spilt brake fluid. Remove the union bolt and disconnect the brake hose.

**⚠ CAUTION**

**Immediately and completely wipe off any brake fluid contacting any part of the motorcycle. The fluid reacts chemically with paint, plastics and rubber materials, etc. and will damage them severely.**

- Remove the master cylinder by removing the master cylinder bolts.

- Remove the reservoir cap ①, insulator ② and diaphragm ③.

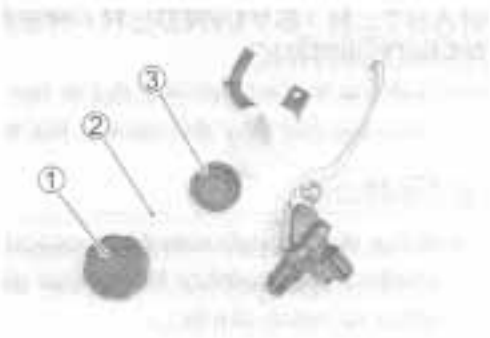


- Remove the brake lever ④ and brake switch ⑤.

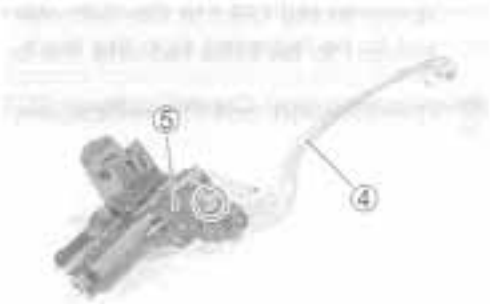

- Pull out the dust boot ① and remove the circlip ②.

**09900-06108: Snap ring pliers.**

- Remove the piston/secondary cup, primary cup and return spring.
  ③ Secondary cup
  ④ Piston
  ⑤ Primary cup
  ⑥ Return spring
- Remove the circlip ⑦, connector ⑧ and O-ring ⑨.

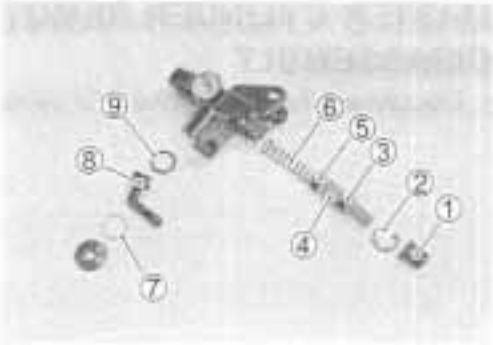


## MASTER CYLINDER INSPECTION

Inspect the master cylinder bore for any scratches or other damage.
Inspect the piston surface for any scratches or other damage.
Inspect the primary cup, secondary cup and dust seal for wear or damage.

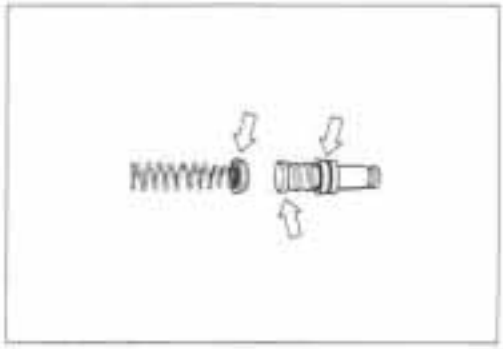

## MASTER CYLINDER REASSEMBLY AND REMOUNTING

Reassemble the master cylinder in the reverse order of removal and disassembly. Pay attention to the following points:

**⚠ CAUTION**

- **Wash the master cylinder components with fresh brake fluid before reassembly. Never use cleaning solvent or gasoline to wash them.**
- **Do not wipe the components with a rag.**
- **Apply brake fluid to the cylinder bore and all the component to be inserted into the bore.**


**Specification and Classification: DOT 4**

- When remounting the brake master cylinder onto the handlebar, align the master cylinder holder's mating surface with punched mark Ⓐ on the handlebar and tighten the upper clamp bolt first as shown.

**Front brake master cylinder mounting bolt: 10 N·m (1.0 kgf·m, 7.0 lb-ft)**


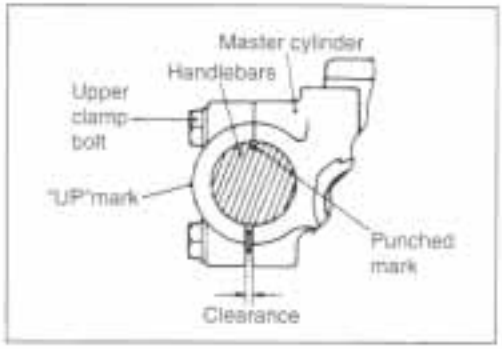


- Tighten the union bolt. (Brake hose routing: ☞ 8-20)

**Brake hose union bolt: 23 N·m (2.3 kgf·m, 16.5 lb-ft)**

- Bleed air from the brake system. (☞ 2-24)

### INSPECTION AFTER REASSEMBLY

- Front brake: ☞ 2-22

# REAR BRAKE

## CONSTRUCTION

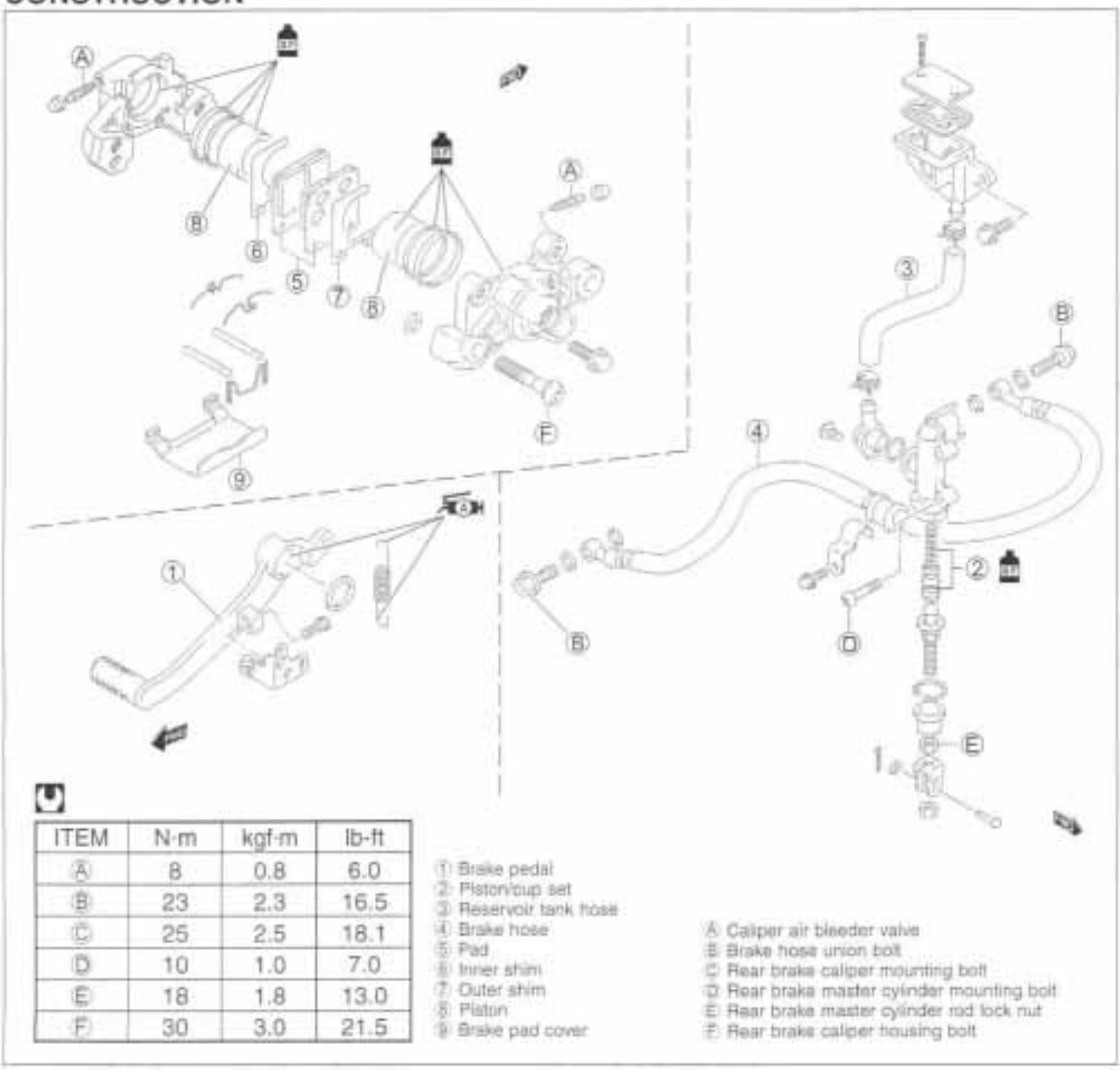

| ITEM | N·m | kgf·m | lb-ft |
|---|---|---|---|
| Ⓐ | 8 | 0.8 | 6.0 |
| Ⓑ | 23 | 2.3 | 16.5 |
| Ⓒ | 25 | 2.5 | 18.1 |
| Ⓓ | 10 | 1.0 | 7.0 |
| Ⓔ | 18 | 1.8 | 13.0 |
| Ⓕ | 30 | 3.0 | 21.5 |

① Brake pedal
② Piston/cup set
③ Reservoir tank hose
④ Brake hose
⑤ Pad
⑥ Inner shim
⑦ Outer shim
⑧ Piston
⑨ Brake pad cover

Ⓐ Caliper air bleeder valve
Ⓑ Brake hose union bolt
Ⓒ Rear brake caliper mounting bolt
Ⓓ Rear brake master cylinder mounting bolt
Ⓔ Rear brake master cylinder rod lock nut
Ⓕ Rear brake caliper housing bolt

**⚠ WARNING**

- This brake system is filled with an ethylene glycol-based DOT 4 brake fluid. Do not use or mix different types of fluid such as silicone-based or petroleum-based.
- Do not use any brake fluid taken from old, used or unsealed containers. Never reuse brake fluid left over from the last servicing or stored for long periods.
- When storing the brake fluid, seal the container completely and keep away from children.
- When replenishing brake fluid, take care not to get dust into fluid.
- When washing brake components, use fresh brake fluid. Never use cleaning solvent.
- A contaminated brake disc or brake pad reduces braking performance. Discard contaminated pads and clean the disc with high quality brake cleaner or neutral detergent.

**⚠ CAUTION**

Handle brake fluid with care: the fluid reacts chemically with paint, plastics, rubber materials etc.

## BRAKE PAD REPLACEMENT

- Remove the brake pad cover.

- Remove the clip ①.
- Remove the brake pads along with the shims by removing the brake pad mounting pins ② and springs ③.

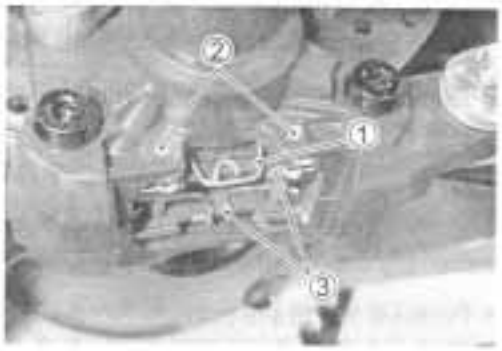


**⚠ CAUTION**

- **Do not operate the brake pedal while dismounting the pads.**
- **Replace the brake pads as a set, otherwise braking performance will be adversely affected.**

- Install the new brake pads and shims.

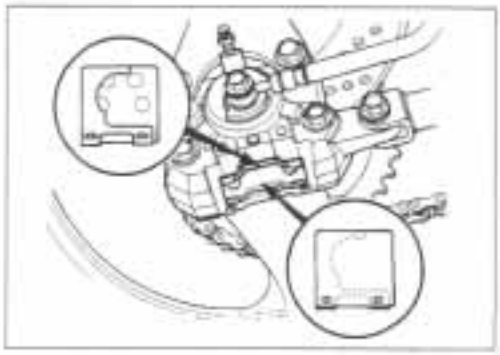

**⚠ CAUTION**

**Be sure to install the shims properly as shown in the illustration.**

*NOTE:*
*After replacing the brake pads, pump the brake pedal few times to operate the brake correctly and then check the brake fluid level.*

## BRAKE FLUID REPLACEMENT

- Remove the frame cover. (☞ 6-6)
- Remove the brake fluid reservoir cap.
- Replace the brake fluid in the same manner as the front brake. (☞ 6-55)

**Specification and Classification: DOT 4**

**⚠ CAUTION**

**Bleed air from the brake system. (☞ 2-25)**

## CALIPER REMOVAL AND DISASSEMBLY

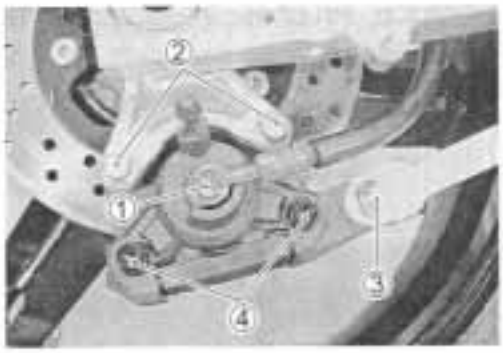


- Remove the union bolt ① and catch the brake fluid in a suitable receptacle.

**⚠ CAUTION**

**Never reuse the brake fluid left over from previous servicing and stored for long periods.**

**⚠ WARNING**

**Brake fluid, if it leaks, will interfere with safe running and discolor painted surfaces. Check the brake hose and hose joints for cracks and fluid leakage.**

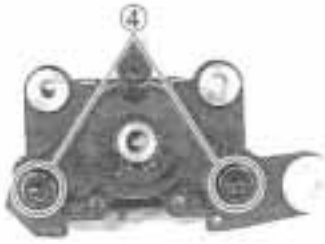


- Remove the brake caliper mounting bolts ② and torque link bolt ③.

*NOTE:*
*Slightly loosen the caliper housing bolts ④ to facilitate later disassembly before removing the caliper mounting bolts.*

- Remove the brake pads. (☞ 6-63)
- Remove the caliper housing bolts ④.
- Separate the caliper halves.
- Remove the O-ring ⑤.

**⚠ CAUTION**

**Replace the O-ring with a new one.**


- Place a rag over the piston to prevent it from popping out and then force out the pistons using compressed air.

**⚠ CAUTION**

**Do not use high pressure air to prevent piston damage.**

- Remove the dust seals and piston seals.

**⚠ CAUTION**

**Do not reuse the dust seals and piston seals to prevent fluid leakage.**

## CALIPER INSPECTION

CALIPER INSPECTION: ☞ 6-57
BRAKE DISC INSPECTION: ☞ 6-58

**DATA** Service Limit

**Rear disc thickness: 4.5 mm (0.18 in)**
**Rear disc runout: 0.30 mm (0.012 in)**

## CALIPER REASSEMBLY AND REMOUNTING

Reassemble and remount the caliper in the reverse order of removal and disassembly. Pay attention to the following points:


**⚠ CAUTION**

- **Wash the caliper components with fresh brake fluid before reassembly. Never use cleaning solvent or gasoline to wash them.**
- **Apply brake fluid to the caliper bore and piston to be inserted into the bore.**

**Specification and Classification: DOT 4**

### PISTON SEAL

- Install the piston seals as shown in the right illustration.

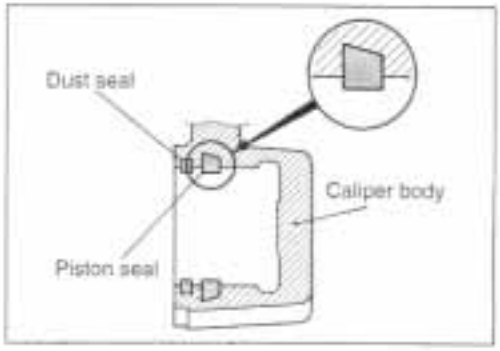


- Tighten each bolt to the specified torque.

**Brake hose union bolt ①: 23 N·m (2.3 kgf·m, 16.5 lb-ft)**
**Rear brake caliper mounting bolt ②: 25 N·m (2.5 kgf·m, 18.1 lb-ft)**
**Rear torque link nut ③: 34 N·m (3.4 kgf·m, 24.6 lb-ft)**
**Rear brake caliper housing bolt ④: 30 N·m (3.0 kgf·m, 21.5 lb-ft)**

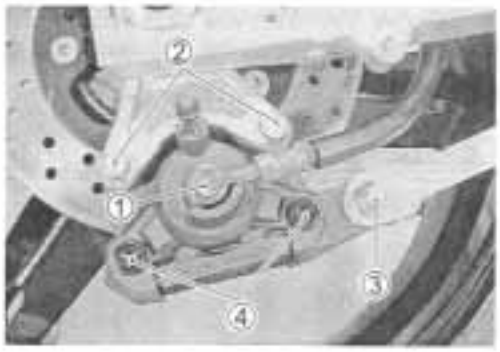


**⚠ CAUTION**

**Bleed air from the system after reassembling the caliper. (☞ 2-25)**

## MASTER CYLINDER REMOVAL AND DISASSEMBLY

- Remove the frame cover. (☞ 6-6)
- Remove the brake fluid reservoir tank mounting bolt ①.


- Place a rag underneath the union bolt on the master cylinder to catch spilled drops of brake fluid. Remove the union bolt ② and disconnect the brake hose.
- Loosen the lock nut ③.
- Remove the mounting bolts ④.


**⚠ CAUTION**

**Immediately and completely wipe off any brake fluid contacting any parts of the motorcycle. The fluid reacts chemically with paint, plastic and rubber materials, etc. and will damage them severely.**

- Disconnect the hose.
- Remove the master cylinder by turning the master cylinder rod ⑤.


- Remove the reservoir cap and diaphragm.
- Remove the connector by removing the screw.
- Remove the O-ring ⑥.

**⚠ CAUTION**

**Replace the O-ring with a new one.**


- Pull out the dust seal then remove the circlip with the special tool.

**TOOL 09900-06108: Snap ring pliers**

- Remove the push rod, piston/primary cup and spring.

## MASTER CYLINDER INSPECTION

### CYLINDER, PISTON AND CUP SET

Inspect the cylinder bore wall for any scratches or other damage.
Inspect the cup set and each rubber part for damage.

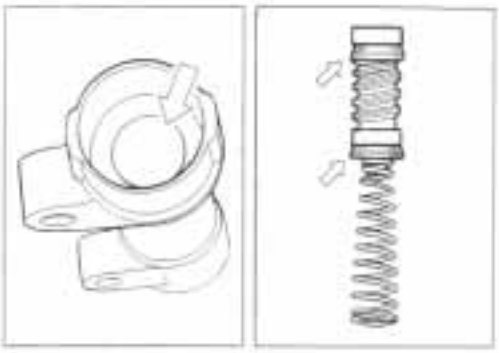

## MASTER CYLINDER REASSEMBLY AND REMOUNTING

Reassemble and remount the master cylinder in the reverse order of removal and disassembly. Pay attention to the following points:

**▲ CAUTION**

- **Wash the master cylinder components with fresh brake fluid before reassembly. Never use cleaning solvent or gasoline to wash them.**
- **Apply brake fluid to the cylinder bore and all the component to be inserted into the bore.**

**Specification and Classification: DOT 4**

- Tighten each bolt to the specified torque.
  (Brake hose routing: ☞ 8-21)

**Brake hose union bolt ①: 23 N·m (2.3 kgf·m, 16.5 lb-ft)**
**Rear master cylinder mounting bolt ②:**
**10 N·m (1.0 kgf·m, 7.0 lb-ft)**
**Rear master cylinder rod lock nut ③:**
**18 N·m (1.8 kgf·m, 13.0 lb-ft)**


- Bleed air from the brake system. (☞ 2-25)

### INSPECTION AFTER REASSEMBLY

Rear brake: ☞ 2-23

# TIRE AND WHEEL

## TIRE REMOVAL

The most critical factor of a tubeless tire is the seal between the wheel rim and the tire bead. For this reason, it is recommended to use a tire changer that can satisfy this sealing requirement and can make the operation efficient as well as functional.
For operating procedures, refer to the instructions supplied by the tire changer manufacturer.

*NOTE:*
*When removing the tire in the case of repair or inspection, mark the tire with a chalk to indicate the tire position relative to the valve position.*
*Even though the tire is refitted to the original position after repairing puncture, the tire may have to be balanced again since such a repair can cause imbalance.*

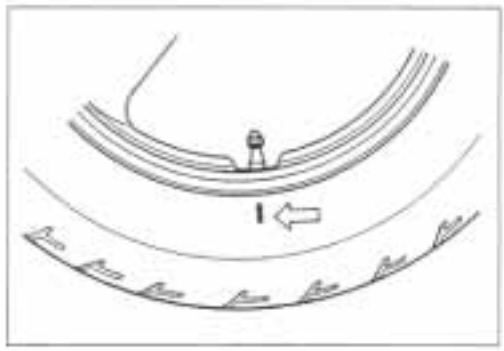

## INSPECTION

### WHEEL INSPECTION

Wipe the wheel clean and check for the following:
- Distortion and crack
- Nick or scratch on bead
- Wheel rim runout (☞ 6-13)

### TIRE INSPECTION

Tire must be checked for the following points:
- Nick and rupture on side wall
- Thread remaining depth (☞ 2-25)
- Separation of cord
- Abnormal, uneven wear on tread
- Surface damage on bead
- Localized tread wear due to skidding (Flat spot)
- Abnormal condition of inner liner

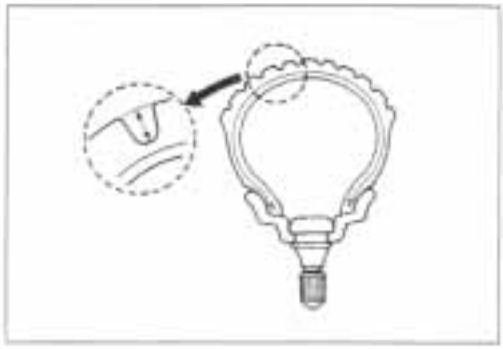

## VALVE INSPECTION

Inspect the valve after the tire is removed from the rim. Replace the valve with a new one if the seal rubber is peeling or has damage.

*NOTE:*
*If the external appearance of the valve shows no abnormal condition, removing of the valve is not necessary.*
Inspect the valve core.
If the seal has abnormal deformation, replace the valve with a new one.

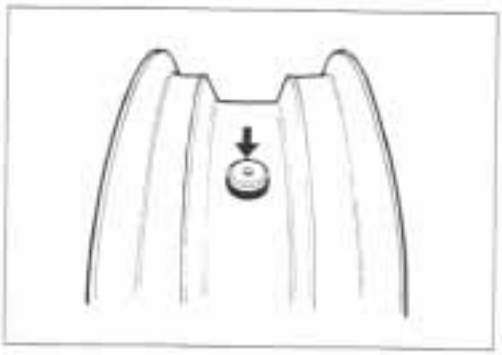

## VALVE INSTALLATION

Any dust or rust around the valve hole must be cleaned off.
Then install the valve in the rim.

*NOTE:*
*To properly install the valve into the valve hole, apply a special tire lubricant or neutral soapy liquid to the valve.*

**⚠ CAUTION**

**Be careful not to damage the lip of valve.**

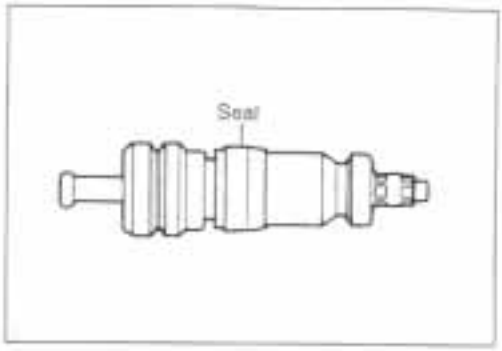


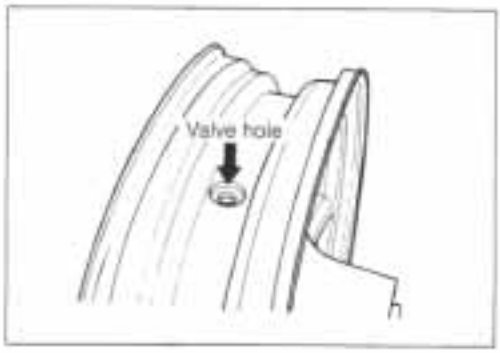


## TIRE INSTALLATION

- Apply tire lubricant to the tire bead.
- When installing the tire onto the wheel, observe the following points.

**⚠ CAUTION**

**Do not reuse the valve which has been once removed.**

**⚠ CAUTION**

**Never use oil, grease or gasoline on the tire bead in place of tire lubricant.**

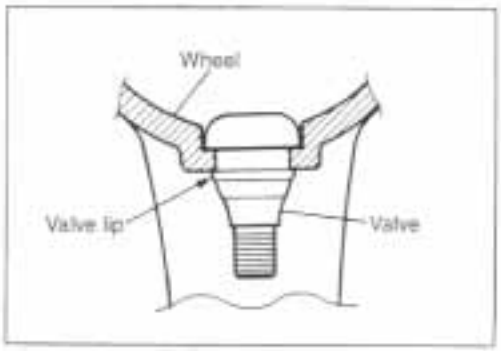


- When installing the tire, the arrow ① on the side wall should point to the direction of wheel rotation.
- Align the chalk mark put on the tire at the time of removal with the valve position.

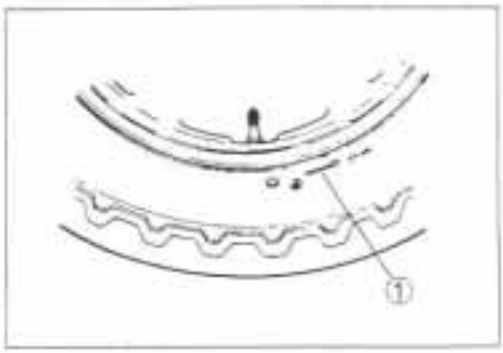


- For installation procedure of tire onto the wheel, follow the instructions given by the tire changer manufacturer.
- Bounce the tire several times while rotating. This makes the tire bead expand outward to contact the wheel, thereby facilitating air inflation.
- Pump up the tire with air.

**⚠ WARNING**

- **Do not inflate the tire to more than 400 kPa (4.0kgf/cm²). If inflated beyond this limit, the tire can burst and possibly cause injury. Do not stand directly over the tire while inflating.**
- **In the case of preset pressure air inflator, pay special care for the set pressure adjustment.**

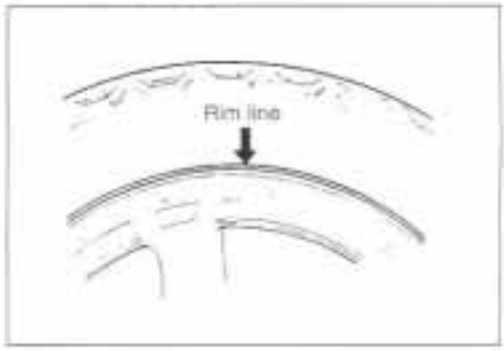


- In this condition, check the "rim line" cast on the tire side walls. The line must be equidistant from the wheel rim all around. If the distance between the rim line and wheel rim varies, this indicates that the bead is not properly seated. If this is the case, deflate the tire completely and unseat the bead for both sides. Coat the bead with lubricant and fit the tire again.
- When the bead has been fitted properly, inflate air and adjust the pressure to specification.
- As necessary, adjust the tire balance.

**⚠ CAUTION**

**Do not run with a repaired tire at a high speed.**

**DATA Cold inflation tire pressure**

| | | |
|---|---|---|
| **Solo riding:** | **Front:** | **250 kPa (2.50 kgf/cm², 36 psi)** |
| | **Rear:** | **250 kPa (2.50 kgf/cm², 36 psi)** |
| **Dual riding:** | **Front:** | **250 kPa (2.50 kgf/cm², 36 psi)** |
| | **Rear:** | **250 kPa (2.50 kgf/cm², 36 psi)** |

## BALANCER WEIGHT

- When installing the balancer weights to front wheel, set the two balancer weights on both sides of wheel rim.

**⚠ CAUTION**

**Weight difference between the two balancer weights must be less than 10 g.**

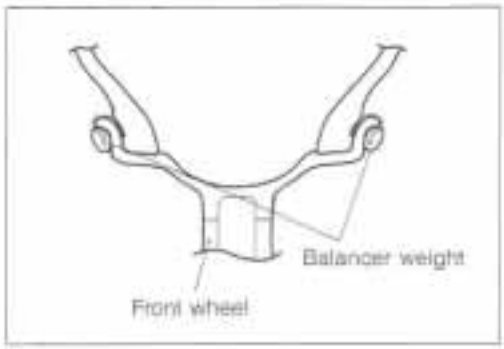

# ELECTRICAL SYSTEM

CONTENTS

# CAUTIONS IN SERVICING

## CONNECTOR

- When connecting a connector, be sure to push it in until a click is felt.
- Inspect the connector for corrosion, contamination and breakage in its cover.

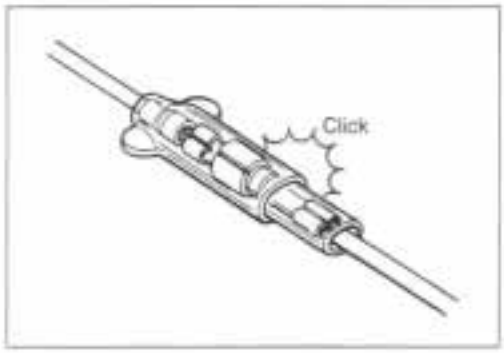


## COUPLER

- With a lock type coupler, be sure to release the lock before disconnecting it and push it in fully till the lock works when connecting it.
- When disconnecting the coupler, be sure to hold the coupler itself and do not pull the lead wires.
- Inspect each terminal on the coupler for being loose or bent.
- Inspect each terminal for corrosion and contamination.

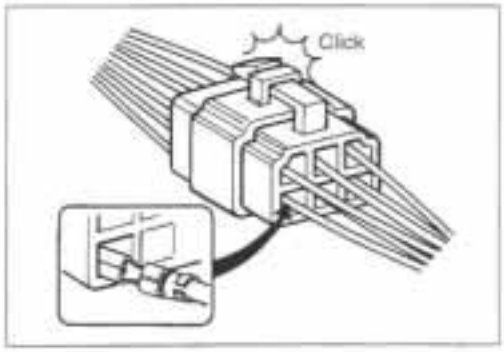


## CLAMP

- Clamp the wire harness at such positions as indicated in "WIRE HARNESS ROUTING". (☞8-14 – 15)
- Bend the clamp properly so that the wire harness is clamped securely.
- In clamping the wire harness, use care not to allow it to hang down.
- Do not use wire or any other substitute for the band type clamp.

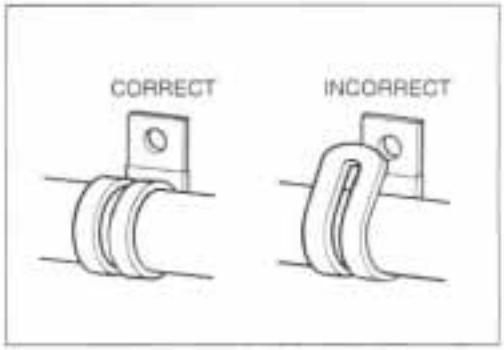


## FUSE

- When a fuse blows, always investigate the cause, correct it and then replace the fuse.
- Do not use a fuse of a different capacity.
- Do not use wire or any other substitute for the fuse.

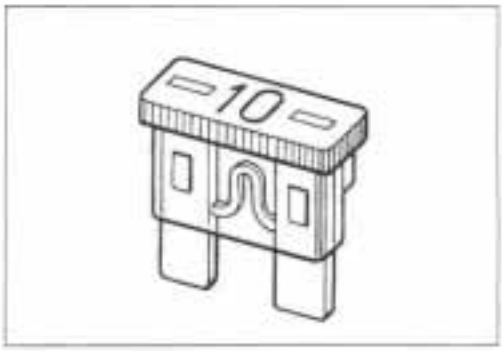


## SEMI-CONDUCTOR EQUIPPED PART

- Be careful not to drop the part with a semi-conductor built in such as a ECM.
- When inspecting this part, follow inspection instruction strictly. Neglecting proper procedure may cause damage to this part.

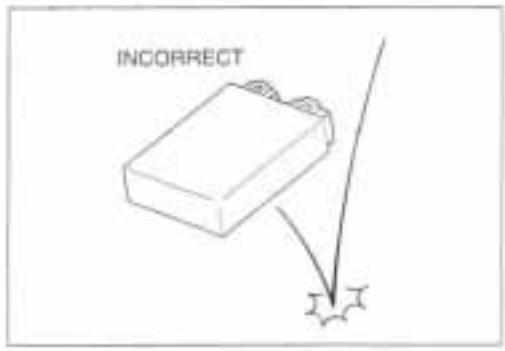

## BATTERY

- The MF battery used in this vehicle does not require maintenance (e.g., electrolyte level inspection, distilled water replenishment).
- During normal charging, no hydrogen gas is produced. However, if the battery is overcharged, hydrogen gas may be produced. Therefore, be sure there are no fire or spark sources (e.g., short circuit) nearby when charging the battery.
- Be sure to recharge the battery in a well-ventilated and open area.
- Note that the charging system for the MF battery is different from that of a conventional battery. Do not replace the MF battery with a conventional battery.

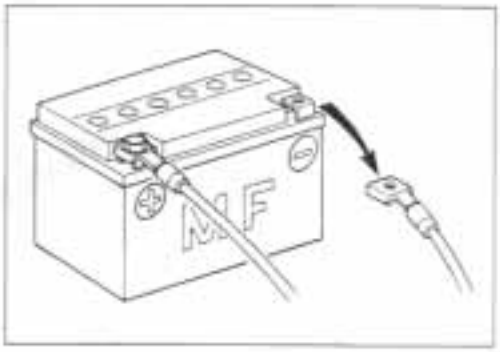


## CONNECTING THE BATTERY

- When disconnecting terminals from the battery for disassembly or servicing, be sure to disconnect the ⊖ battery lead wire, first.
- When connecting the battery lead wires, be sure to connect the ⊕ battery lead wire, first.
- If the terminal is corroded, remove the battery, pour warm water over it and clean it with a wire brush.
- After connecting the battery, apply a light coat of grease to the battery terminals.
- Install the cover over the ⊕ battery terminal.

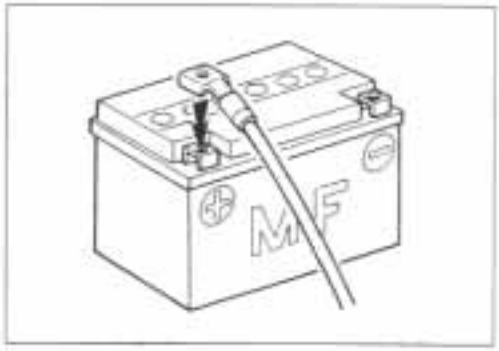


## WIRING PROCEDURE

- Properly route the wire harness according to the "WIRE ROUTING" section. (☞8-14 to 8-15)

## USING THE MULTI CIRCUIT TESTER

- Properly use the multi circuit tester ⊕ and ⊖ probes. Improper use can cause damage to the motorcycle and tester.
- If the voltage and current values are not known, begin measuring in the highest range.
- When measuring the resistance, make sure that no voltage is applied. If voltage is applied, the tester will be damaged.
- After using the tester, be sure to turn the switch to the OFF position.

**⚠ CAUTION**

**Before using the multi circuit tester, read its instruction manual.**

# LOCATION OF ELECTRICAL COMPONENTS

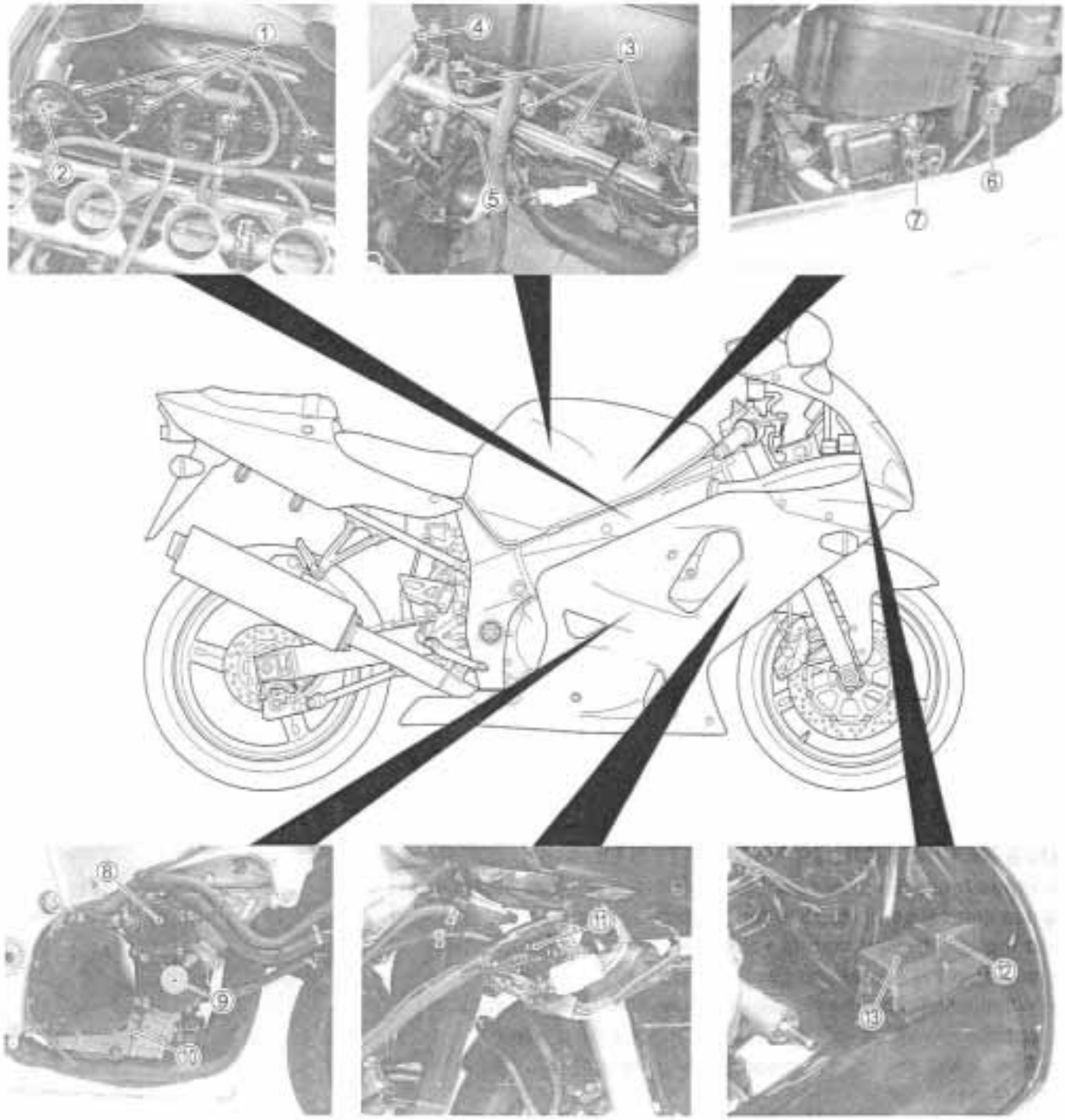

① Ignition coil (No.1, 2, 3, 4)
② Cam position sensor (☞4-35)
③ Fuel injector (☞4-50)
④ Intake air pressure sensor (☞4-36)
⑤ Engine coolant temp. sensor (☞4-40)
⑥ Intake air temp. sensor (☞4-41)
⑦ Throttle position sensor (☞4-38)
⑧ Starter motor
⑨ Crankshaft position sensor (☞4-35)
⑩ Oil pressure switch
⑪ Horn
⑫ Turn signal/side-stand relay
⑬ Fuse box

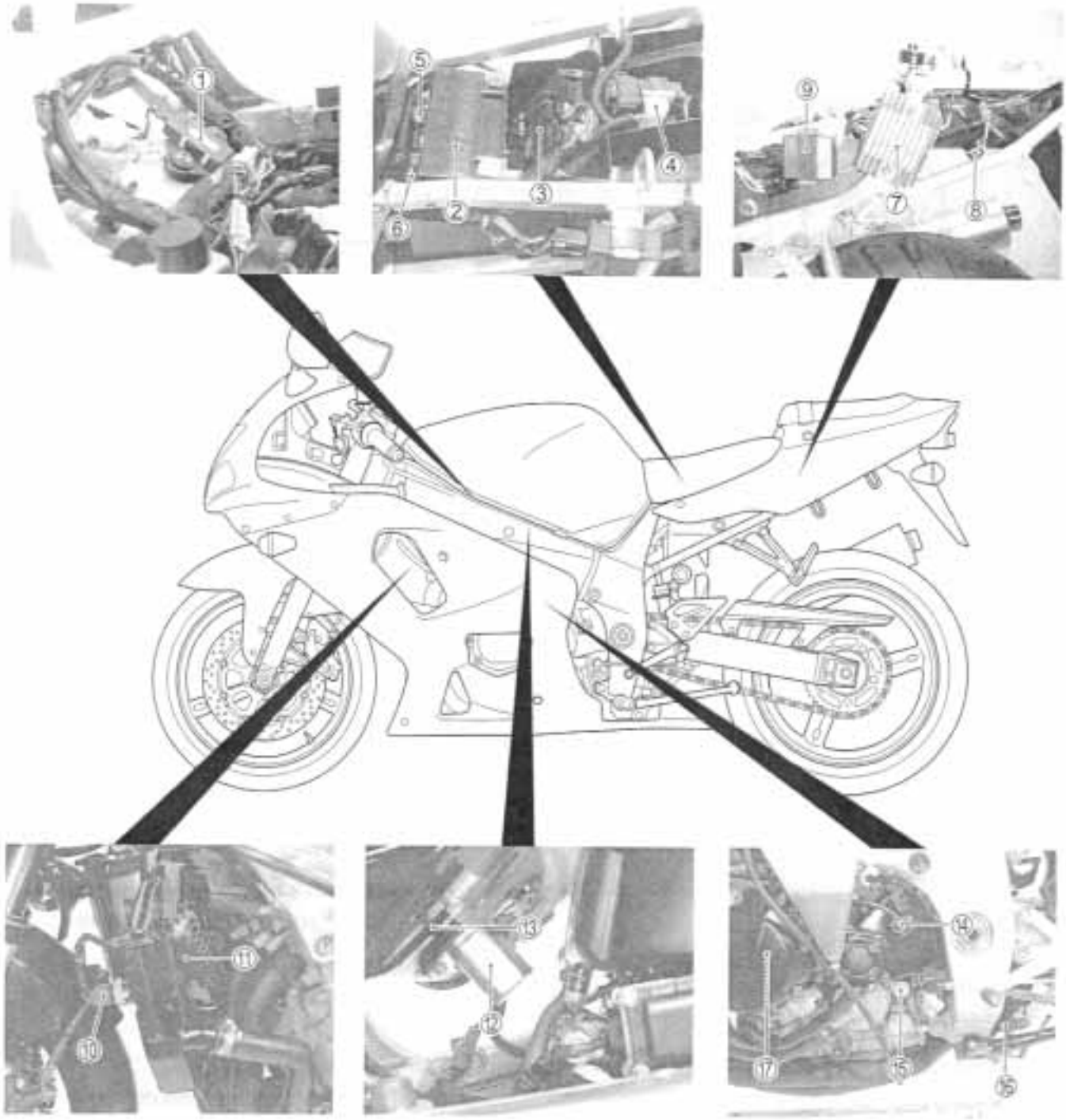

① Fuel level resister
② Battery
③ ECM (Engine Control Module)
④ Starter relay/Main fuse
⑤ Fuel pump relay (☞4-51)
⑥ Tip over sensor (☞4-44)
⑦ Regulator/Rectifier
⑧ Mode selection switch coupler
⑨ Secondary throttle control unit
⑩ Cooling fan thermo-switch (☞5-7)
⑪ Cooling fan (☞5-6)
⑫ Fuel pump (☞4-54)
⑬ Fuel level switch
⑭ Speedometer sensor
⑮ Gear position switch
⑯ Side-stand switch
⑰ Generator

## CHARGING SYSTEM

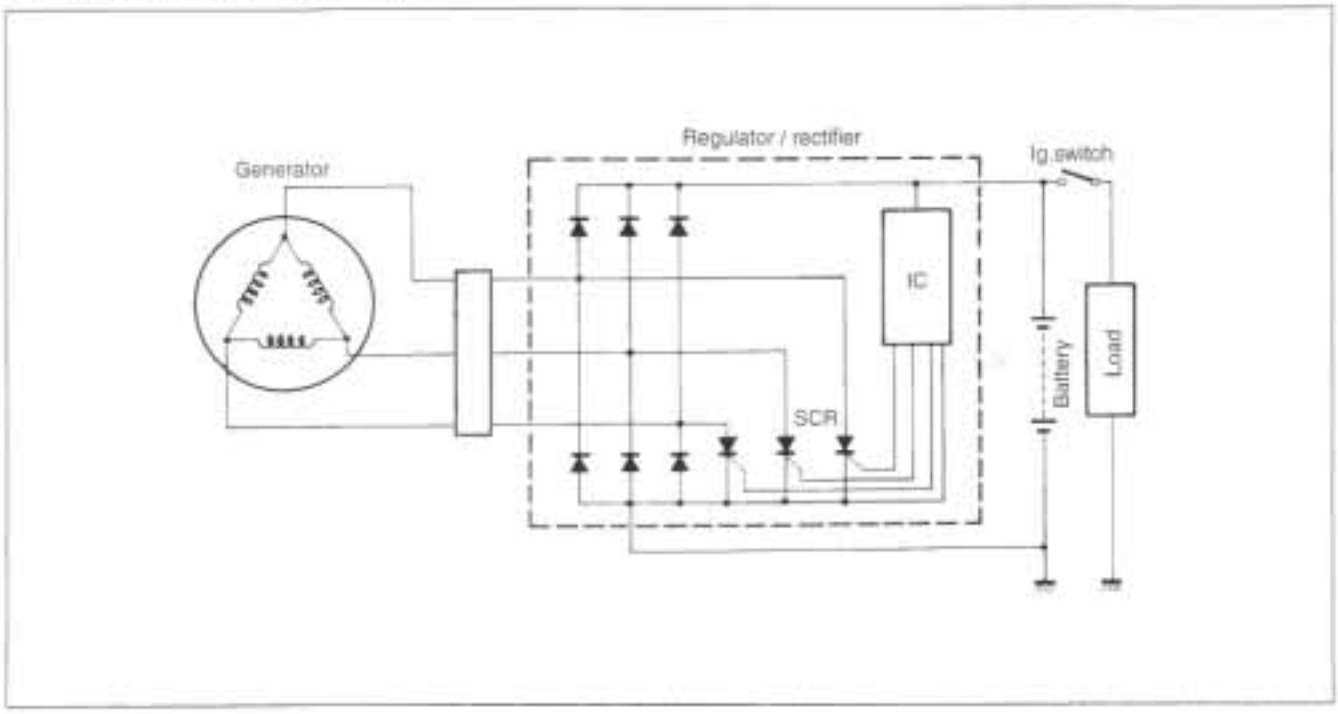


## TROUBLESHOOTING

**Battery runs down quickly.**

↓

Check accessories which use excessive amounts of electricity. — Accessories are installed → • Remove accessories.

No accessories

↓

Check the battery for current leaks. (☞ 7-7) — Current leaks → • Short circuit of wire harness • Faulty electrical equipment

No current leaks

↓

Measure the charging voltage between the battery terminals. (☞ 7-8) — Correct → • Faulty battery • Abnormal driving condition

Incorrect

↓

Measure the continuity of the generator coil. (☞ 7-8) — No continuity → • Faulty generator coil or disconnected lead wires

Continuity

↓

Continued on next page

Measure the generator no-load voltage. (☞ 7-8) — No good → • Faulty generator

OK ↓

Inspect the regulator/rectifier. (☞ 7-9) — No good → • Faulty regulator/rectifier

OK ↓

Inspect wirings. — No good → • Short circuit of wire harness
• Poor contact of couplers

OK → • Faulty battery

**Others**

| | |
|---|---|
| Battery overcharge | • Faulty regulator/rectifier<br>• Faulty battery<br>• Poor contact of generator lead wire coupler |

## INSPECTION

### BATTERY CURRENT LEAKAGE

- Remove the front seat. (☞6-6)
- Turn the ignition switch to the OFF position.
- Disconnect the battery ⊖ lead wire.

Measure the current between ⊖ battery terminal and the ⊖ battery lead wire using the multi circuit tester. If the reading exceeds the specified value, leakage is evident.

**TOOL 09900-25008: Multi circuit tester set**

**DATA Battery current (leak): Under 3 mA**

**Tester knob indication: Current (⎓, 20 mA)**

**⚠ CAUTION**

- **Because the current leak might be large, turn the tester to high range first to avoid tester damage.**
- **Do not turn the ignition switch to the "ON" position when measuring current.**

When checking to find the excessive current leakage, remove the couplers and connectors, one by one, checking each part.

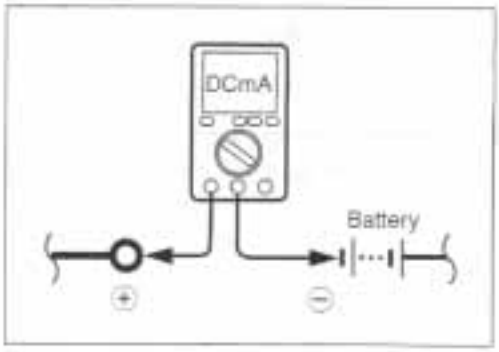

### REGULATED VOLTAGE

- Remove the front seat. (☞6-6)
- Start the engine and keep it running at 5 000 r/min. with lighting switch turned ON and dimmer switch turned HI position.

Measure the DC voltage between the ⊕ and ⊖ battery terminals using the multi circuit tester. If the voltage is not within the specified value, inspect the generator and regulator/rectifier. (☞7-8 and 7-9)

*NOTE:*
*When making this test, be sure that the battery is in fully-charged condition.*

**09900-25008: Multi circuit tester set**

**Tester knob indication: Voltage (⎓)**

**DATA Charging output (Regulated voltage):**
**14.0 – 15.0 V at 5 000 r/min.**

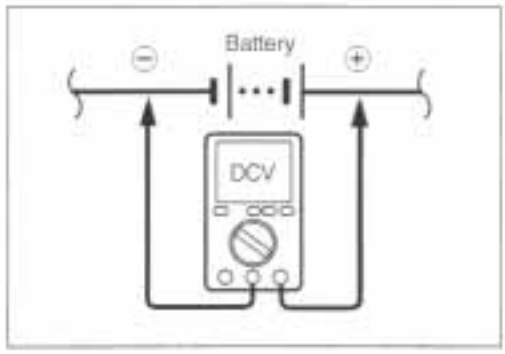


### GENERATOR COIL RESISTANCE

- Remove the frame cover. (☞6-6)
- Disconnect the generator coupler.

Measure the resistance between the three lead wires.
If the resistance is not specified value, replace the stator with a new one. Also, check that the generator core is insulated.

**09900-25008: Multi circuit tester set**

**Tester knob indication: Resistance (Ω)**

**DATA Generator coil resistance: 0.2 – 1.5 Ω (Black – Black)**
**∞ Ω (Black – Ground)**

*NOTE:*
*When making above test, it is not necessary to remove the generator.*

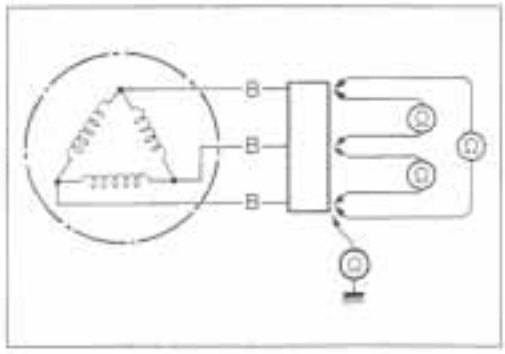


### GENERATOR NO-LOAD PERFORMANCE

- Start the engine and keep it running at 5 000 r/min.

Using the multi circuit tester, measure the voltage between three lead wires.
If the tester reads under the specified value, replace the generator with a new one.

**09900-25008: Multi circuit tester set**

**Tester knob indication: Voltage (~)**

**DATA Generator no-load performance:**
**More than 65 V at 5 000 r/min (When engine is cold)**

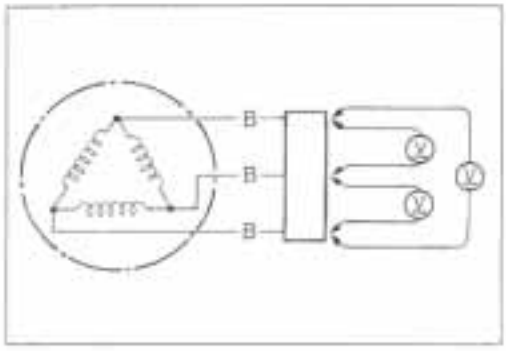

## REGULATOR/RECTIFIER

- Remove the frame cover. (☞6-6)
- Disconnect the regulator/rectifier coupler.

Measure the voltage between the lead wires using the multi circuit tester as indicated in the table below. If the voltage is not within the specified value, replace the regulator/rectifier with a new one.

**09900-25008: Multi circuit tester set**

**Tester knob indication: Diode test (→|◀)**

Unit: V

| Probe of tester to: ⊖ | ⊕ Probe of tester to: B/R | B1 | B2 | B3 | B/W |
|---|---|---|---|---|---|
| B/R | | 0.4 – 0.7 | 0.4 – 0.7 | 0.4 – 0.7 | 0.5 – 1.2 |
| B1 | * | | * | * | 0.4 – 0.7 |
| B2 | * | * | | * | 0.4 – 0.7 |
| B3 | * | * | * | | 0.4 – 0.7 |
| B/W | * | * | * | * | |

* More than 1.4 V (tester's battery voltage)

*NOTE:*
*If the tester reads under 1.4 V when the tester probes are not connected, replace the battery of multi circuit tester.*

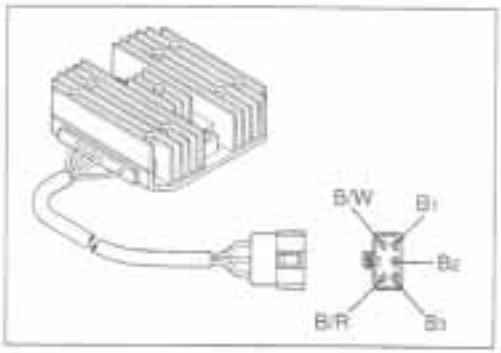


WIRE COLOR
B: Black, B/R: Black with Red tracer,
B/W: Black with White tracer

# STARTER SYSTEM AND SIDE-STAND/IGNITION INTERLOCK SYSTEM

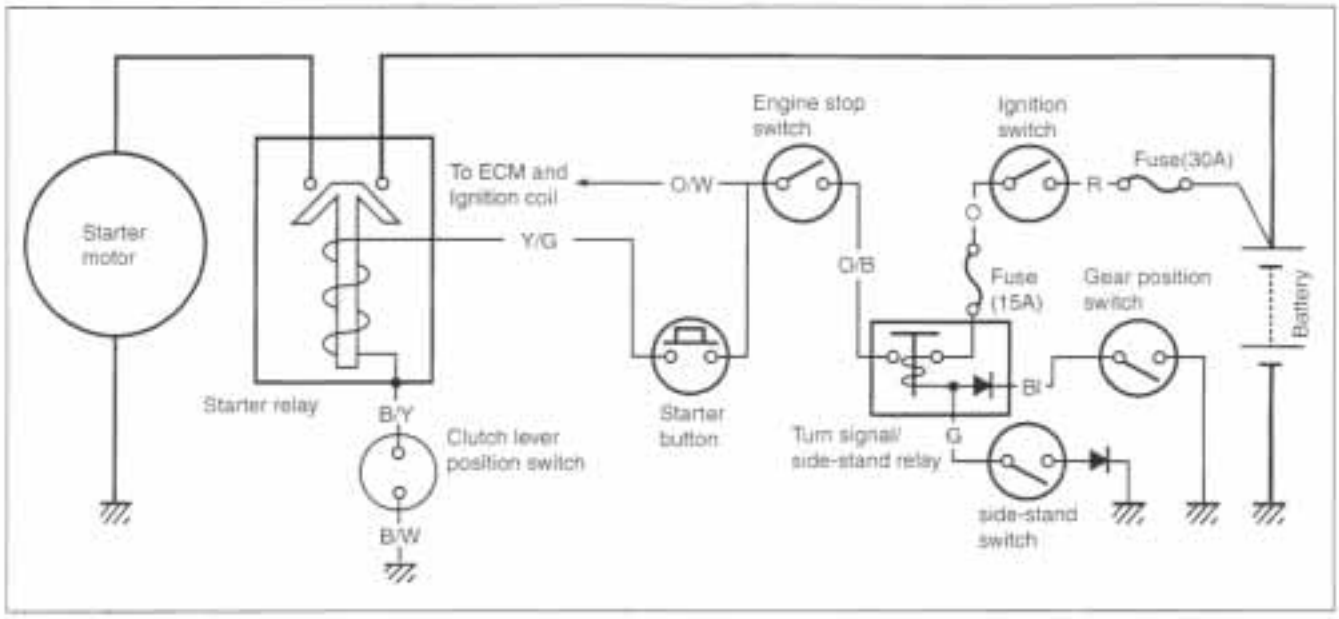


## TROUBLESHOOTING

**Starter motor will not run.**

The transmission is in neutral. Grasp the clutch lever, turn on the ignition switch with the engine stop switch in the "RUN" position and listen for a click from the starter relay when the starter button is pushed.

Clicks → Check if the starter motor runs when its terminal is connected to the battery ⊕ terminal (Do not use thin "wire" because a large amount of current flows)

- Runs → 
  - Faulty starter relay
  - Loose or disconnected starter motor lead wire
- Does not run → 
  - Faulty starter motor

No click ↓

Measure the starter relay voltage at the starter relay connectors (between Y/G ⊕ and B/Y ⊖) when the starter button is pushed.

No voltage →
- Faulty ignition switch
- Faulty engine stop switch
- Faulty clutch lever position switch
- Faulty gear position switch
- Faulty turn signal/side-stand relay
- Faulty starter button
- Poor contact of connector
- Open circuit in wire harness

Voltage ↓

Continued on next page

Check the starter relay.
(☞ 7-13)

No good → • Faulty starter relay

OK → • Poor contact of the starter relay

The starter motor runs when the transmission is in neutral, but does not run when the transmission is in any position other than neutral, with the side-stand up.

Check the side-stand switch.
(☞ 7-14)

No good → • Faulty side-stand switch

OK → • Open circuit in wire harness
• Poor contact of connector

**Others**

| | |
|---|---|
| Engine does not turn though the starter motor runs. | • Faulty starter clutch |

## STARTER MOTOR REMOVAL AND DISASSEMBLY

- Remove the starter motor.

- Disassemble the starter motor as shown in the illustration.

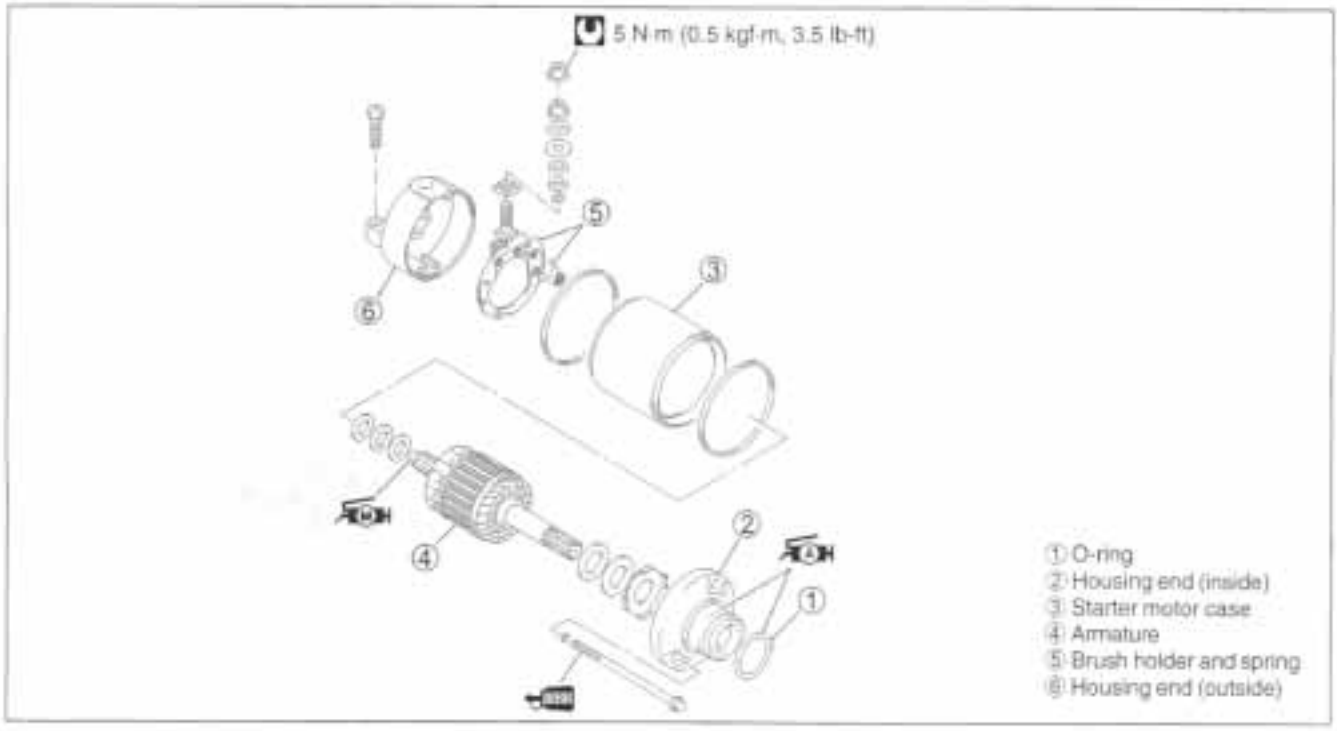

## STARTER MOTOR INSPECTION

### CARBON BRUSH

Inspect the brushes for abnormal wear, cracks, or smoothness in the brush holder.
If any damages are found, replace the brush assembly with a new one.

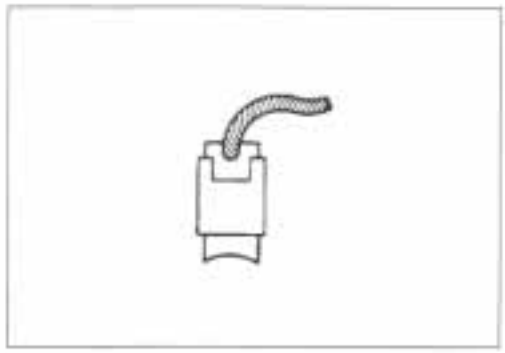

### COMMUTATOR

Inspect the commutator for discoloration, abnormal wear or undercut Ⓐ.
If abnormal wear is found, replace the armature with a new one.
If the commutator surface is discolored, polish it with #400 sand paper and wipe it using a clean dry cloth.
If there is no undercut, scrape out the insulator ① with a saw blade.

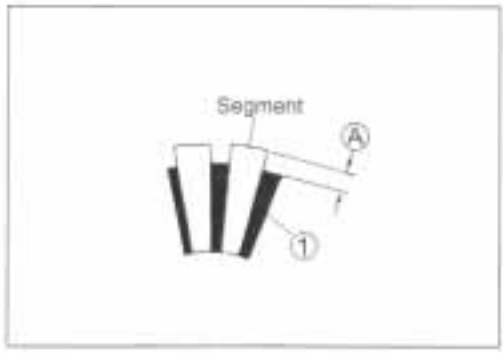


### ARMATURE COIL INSPECTION

Check for continuity between each segment and between each segment and the armature shaft using the multi circuit tester.
If there is no continuity between the segments or there is continuity between the segments and shaft, replace the armature with a new one.

**09900-25008: Multi circuit tester set**

**Tester knob indication: Continuity test (•ı)))**

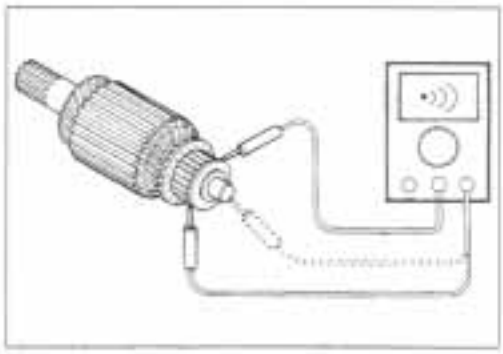

### OIL SEAL INSPECTION

Check the oil seal lip for damage or leakage.
If any damage is found, replace the housing end.

## STARTER MOTOR REASSEMBLY

Reassemble the starter motor in the reverse order of disassembly. Pay attention to the following points:

- Apply grease to the lip of the oil seal.

**99000-25010: SUZUKI SUPER GREASE "A"**

- Apply a small quantity of SUZUKI MOLY PASTE to the armature shaft.

**99000-25140: SUZUKI MOLY PASTE**

- Align the match marks ① on the starter motor case with the match mark on the housing end.
- Apply a small quantity of THREAD LOCK SUPER "1322" to the starter motor housing bolts.

**99000-32110: THREAD LOCK SUPER "1322"**

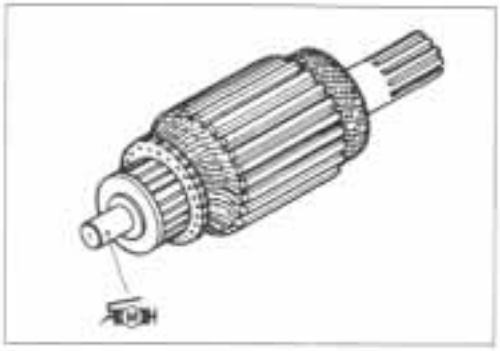

- Apply SUZUKI SUPER GREASE "A" to the O-ring.

**99000-25010: SUZUKI SUPER GREASE "A"**

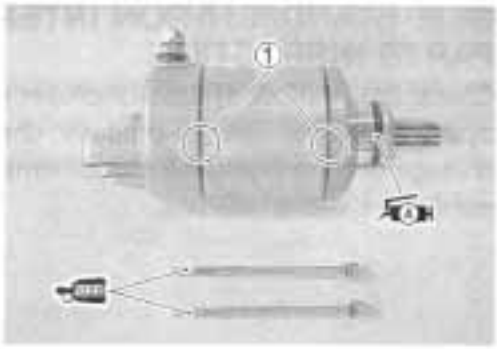

- Tighten the starter motor lead wire mounting nut to the specified torque.

**Lead wire mounting nut: 5 N·m (0.5 kgf·m, 3.5 lb-ft)**

## STARTER RELAY INSPECTION

- Remove the front seat and frame cover. (6-6)
- Disconnect the battery ⊖ lead wire from the battery.
- Remove the starter relay cover.
- Disconnect the starter motor lead wire ①, battery lead wire ② and starter relay coupler ③.
- Remove the starter relay ④.

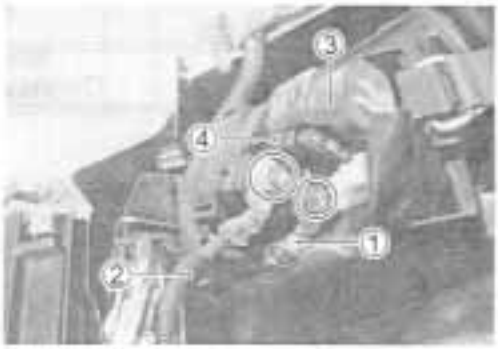

Apply 12 V to Ⓐ and Ⓑ terminals and check for continuity between the positive and negative terminals using the multi circuit tester. If the starter relay clicks and continuity is found, the relay is ok.

**09900-25008: Multi circuit tester set**

**Tester knob indication: Continuity test (•ı))**

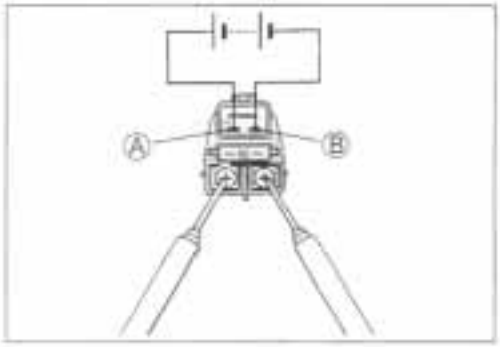

**⚠ CAUTION**

**Do not apply a battery voltage to the starter relay for more than five seconds, since the relay coil may overheat and damaged.**

Measure the relay coil resistance between the terminals using the multi circuit tester. If the resistance is not within the specified value, replace the starter relay with a new one.

**09900-25008: Multi circuit tester set**

**Starter relay resistance: 3 – 5 Ω**

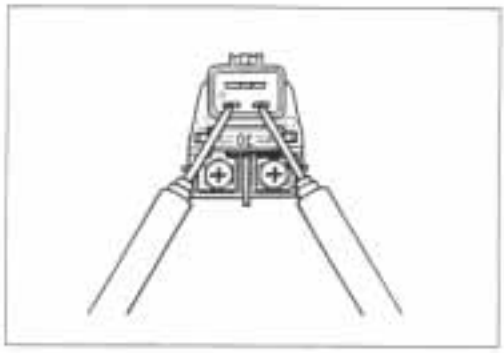

## SIDE STAND/IGNITION INTERLOCK SYSTEM PARTS INSPECTION

Check the interlock system for proper operation. If the interlock system does not operate properly, check each component for damage or abnormalities. If any abnormality is found, replace the component with a new one.

### SIDE-STAND SWITCH

The side-stand switch coupler is located upper the crankcase.

- Lift the fuel tank. (☞ 4-52)
- Disconnect the side-stand switch coupler and measure the voltage between Green and Black/White lead wires.

**09900-25008: Multi circuit tester set**

**Tester knob indication: Diode test (⊣◀)**

| | Green (⊕ Probe) | Black/White (⊖ Probe) |
|---|---|---|
| ON (Side-stand up) | 0.4–0.6 V | |
| OFF (Side-stand down) | More than 1.4 V (Tester's battery voltage) | |

*NOTE:*
*If the tester reads under 1.4V when the tester probes are not connected, replace its battery.*

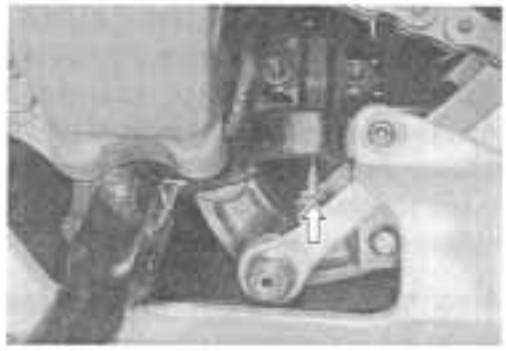

### GEAR POSITION SWITCH

- Lift the fuel tank. (☞ 4-52)
- Disconnect the gear position switch coupler and check the continuity between Blue and Black/White with the transmission in "NEUTRAL".

| | Blue | Black/White |
|---|---|---|
| ON (Neutral) | ○ | ○ |
| OFF (Except neutral) | | |

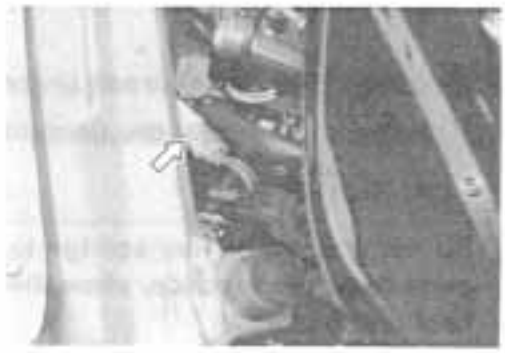

**⚠ CAUTION**

**When disconnecting and connecting the gear position switch coupler, make sure to turn OFF the ignition switch, or electronic parts may get damaged.**

- Connect the gear position switch coupler to the wiring harness.
- Turn the ignition switch to "ON" position and side-stand to upright position.

Measure the voltage between Pink and Black/White lead wires using a multi circuit tester, when shifting the gearshift lever from low to top.

**09900-25008: Multi circuit tester set**

**Tester knob indication: Voltage (⎓)**

**DATA Gear position switch voltage: More than 0.6V**
**(* Low to top gear position / * Except neutral position) (Pink – B/W)**

*NOTE:*

- *When connecting the multi circuit tester, install the copper wire (O.D is below 0.5 mm) to the back side of the lead wire coupler and connect the probes of tester to them.*
- *Use the copper wire, its outer diameter is below 0.5 mm, to prevent the rubber of the water proof coupler from damage.*

## TURN SIGNAL/SIDE-STAND RELAY

The turn signal/side-stand relay is composed of the turn signal relay, and the side-stand relay and diode.

- Remove the turn signal/side-stand relay.

### SIDE-STAND RELAY INSPECTION

First check the insulation between Ⓓ and Ⓔ terminals with the tester. Then apply 12V to terminals Ⓓ and Ⓒ (⊕ to Ⓓ and ⊖ to Ⓒ) and check the continuity between Ⓓ and Ⓔ. If there is no continuity, replace the turn signal/side-stand relay with a new one.

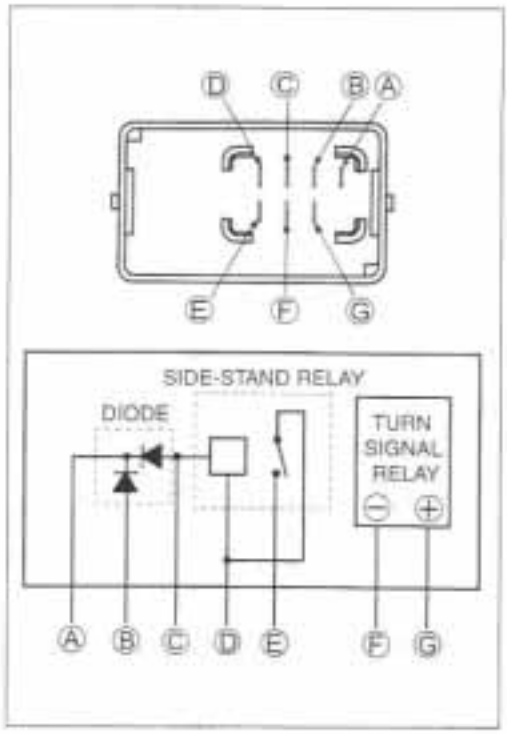


### DIODE INSPECTION

Measure the voltage between the terminals using the multi circuit tester. Refer to the following table.

Unit: V

| ⊖ Probe of tester to: | ⊕ Probe of tester to: Ⓒ, Ⓑ | ⊕ Probe of tester to: Ⓐ |
|---|---|---|
| Ⓒ, Ⓑ | | More than 1.4 V (Tester's battery voltage) |
| Ⓐ | 0.4–0.6 | |

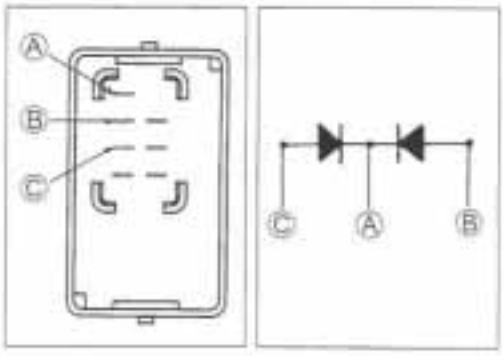


**09900-25008: Multi circuit tester set**

**Tester knob indication: Diode test (⊣◀)**

*NOTE:*

*If the multi circuit tester reads under 1.4V when the tester probes are not connected, replace its battery .*

# IGNITION SYSTEM

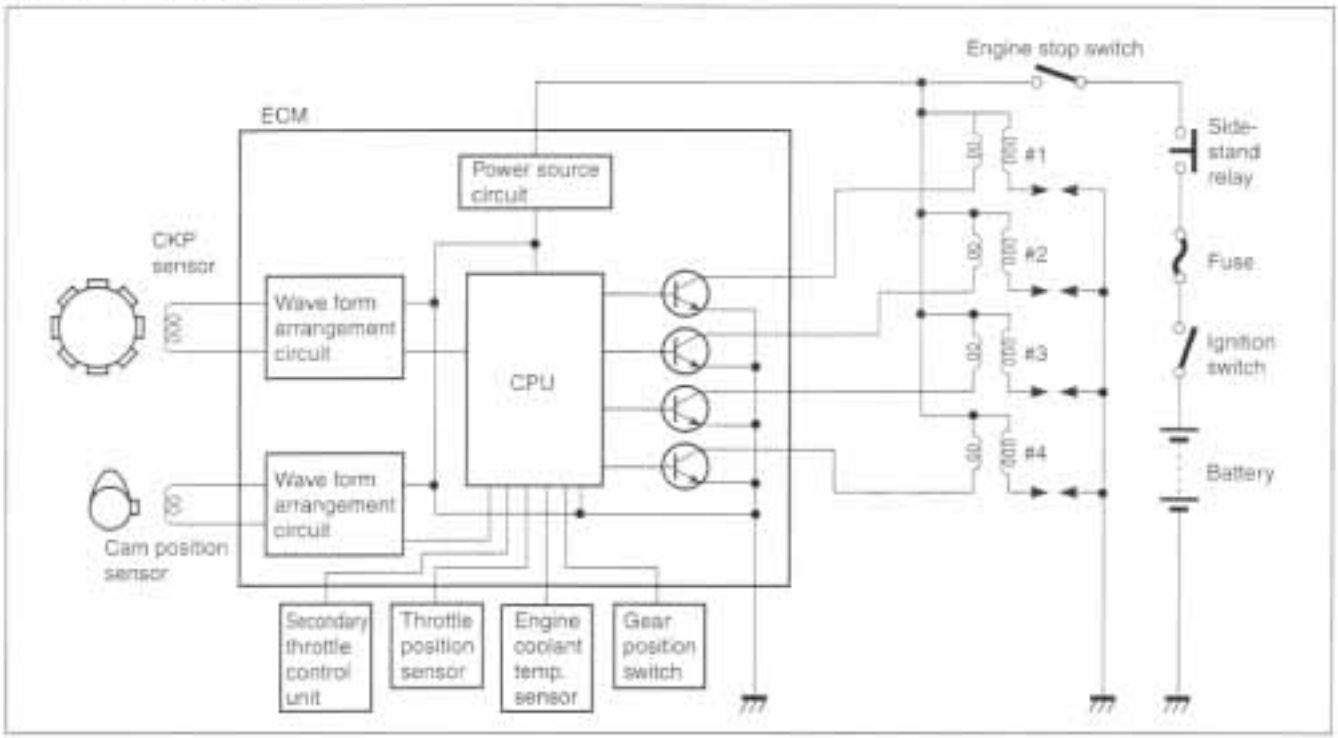


*NOTE:*

*The ignition cut-off circuit is incorporated in this ECM to prevent over-running of engine. If engine rpm reaches 14 000 r/min., this circuit cuts off the ignition primary current for all spark plugs.*

**⚠ CAUTION**

**Under no load, the engine can run over 14 000 r/min, even if the ignition cut-off circuit is effective, and it may cause engine damage. Do not run the engine without load over 14 000 r/min at anytime.**

## TROUBLESHOOTING

**No spark or poor spark**

↓

Check the ignition system couplers for poor connections. — Looseness → • Poor connection of couplers

Correct

↓

Continued on next page

* Check that the transmission is in neutral and the engine stop switch is in the "RUN" position. Grasp the clutch lever. Check that the fuse is not blown and the battery is fully-charged before diagnosing.

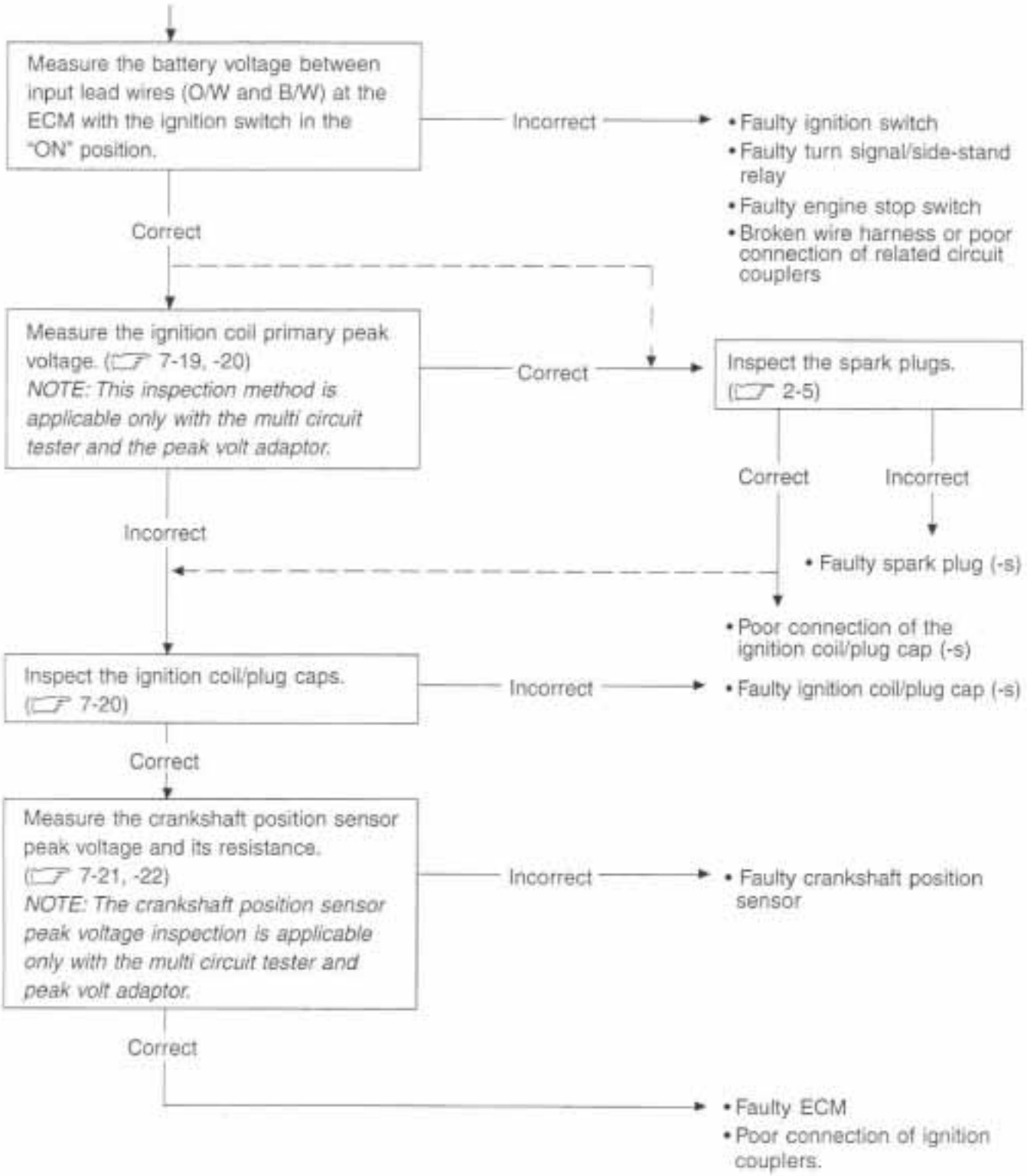
Measure the battery voltage between input lead wires (O/W and B/W) at the ECM with the ignition switch in the "ON" position.
Incorrect
• Faulty ignition switch
• Faulty turn signal/side-stand relay
• Faulty engine stop switch
• Broken wire harness or poor connection of related circuit couplers
Correct
Measure the ignition coil primary peak voltage. (☞ 7-19, -20)
NOTE: This inspection method is applicable only with the multi circuit tester and the peak volt adaptor.
Correct
Inspect the spark plugs. (☞ 2-5)
Correct
Incorrect
• Faulty spark plug (-s)
Incorrect
• Poor connection of the ignition coil/plug cap (-s)
Inspect the ignition coil/plug caps. (☞ 7-20)
Incorrect
• Faulty ignition coil/plug cap (-s)
Correct
Measure the crankshaft position sensor peak voltage and its resistance. (☞ 7-21, -22)
NOTE: The crankshaft position sensor peak voltage inspection is applicable only with the multi circuit tester and peak volt adaptor.
Incorrect
• Faulty crankshaft position sensor
Correct
• Faulty ECM
• Poor connection of ignition couplers.

## INSPECTION

### IGNITION COIL PRIMARY PEAK VOLTAGE

- Remove the air cleaner box. (☞4-62)
- Disconnect all the ignition coil/plug cap lead wire couplers before removing the ignition coil/plug caps.
- Remove all of the ignition coil/plug caps.

**⚠ CAUTION**

- **Do not remove the ignition coil/plug cap before disconnecting the lead wire coupler, or the lead wire will be damaged.**
- **Do not pry up the ignition coil/plug cap with a screwdriver or a bar to avoid damage.**
- **Be careful not to drop the ignition coil/plug cap as it may open or short in a circuit.**

- Connect the new four spark plugs to each ignition coil/plug cap.
- Connect all the ignition coil/plug cap lead wire couplers to the ignition coil/plug caps respectively, and ground them on the cylinder head (each spark plug hole).

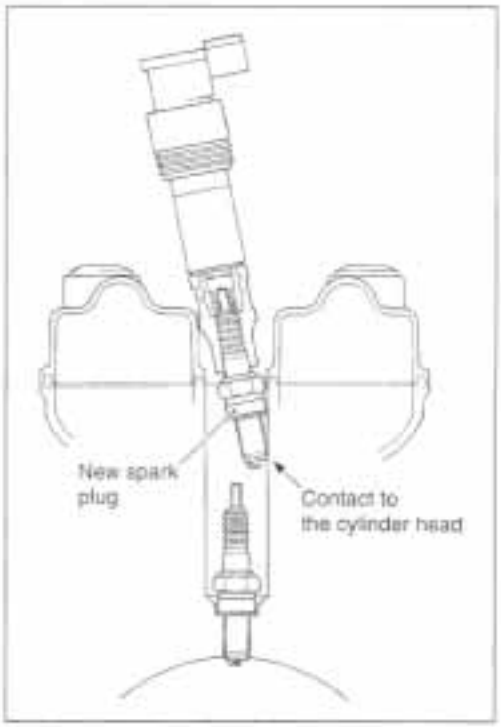


**⚠ CAUTION**

**Avoid grounding the spark plugs and suppling the electrical shock to the cylinder head cover (magnesium parts) to prevent the magnesium material from damage.**

*NOTE:*
*Be sure that all couplers and spark plugs are connected properly and the battery used is in fully-charged condition.*

Inspect each ignition coil primary peak voltage at the ignition coil/plug cap coupler.

- Connect the multi circuit tester with peak voltage adaptor as follows.
  No.1 ignition coil/plug cap:
  W/Bl terminal (⊕ Probe) – Ground (⊖ Probe) terminal
  No.2 ignition coil/plug cap:
  B terminal (⊕ Probe) – Ground (⊖ Probe) terminal
  No.3 ignition coil/plug cap:
  Y terminal (⊕ Probe) – Ground (⊖ Probe) terminal
  No.4 ignition coil/plug cap:
  G terminal (⊕ Probe) – Ground (⊖ Probe) terminal

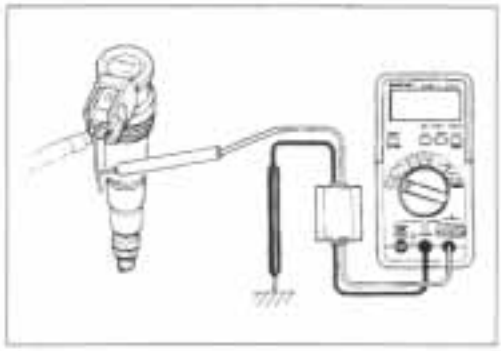

**TOOL 09900-25008: Multi circuit tester set**

**⚠ CAUTION**

**Before using the multi circuit tester and peak volt adaptor, be sure to refer to the appropriate instruction manual.**

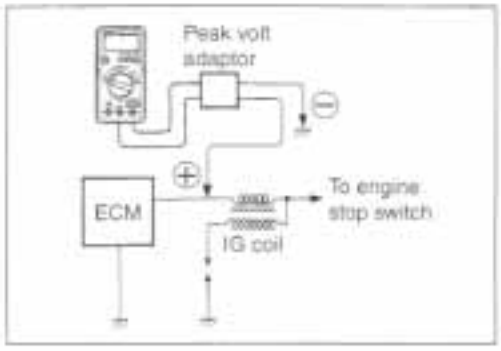

*NOTE:*

- *When connecting the multi circuit tester, insert the copper wires (O.D is below 0.5 mm) to the back side of the ignition coil lead wire coupler and connect the tester probes to them.*
- *Use the copper wire, its outer diameter being below 0.5 mm, to prevent the rubber of the water proof coupler from damage.*

- Shift the transmission into neutral and turn ignition switch "ON".
- Crank the engine a few seconds with the starter motor by depressing starter button and check the ignition coil primary peak voltage.
- Repeat the above inspection a few times and measure the highest peak voltage.

**Tester knob indication: voltage (⎓)**

**DATA Ignition coil primary peak voltage: More than 80 V**

**⚠ WARNING**

**Do not touch the tester probes and spark plugs to prevent an electric shock while testing.**

If the peak voltage is lower than the standard range, check the ignition coil/plug cap as follow.

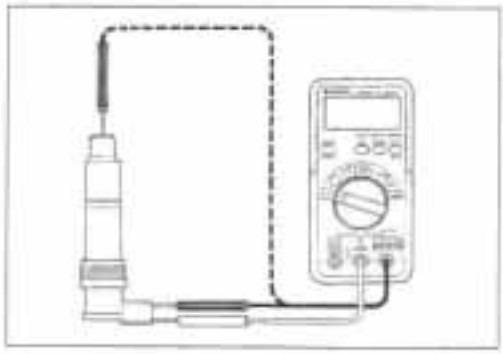

### IGNITION COIL/PLUG CAP RESISTANCE

- Check the ignition coil/plug cap for resistance in both primary and secondary windings. If the resistance is not within the standard range, replace the ignition coil/plug cap with a new one.

**TOOL 09900-25008: Multi circuit tester set**

**Tester knob indication: Resistance (Ω)**

**DATA Ignition coil/plug cap resistance**
**Primary : 0.8 – 2.0 Ω (⊕ tap – ⊖ tap)**
**Secondary : 8 – 15 kΩ (Plug cap – ⊖ tap)**

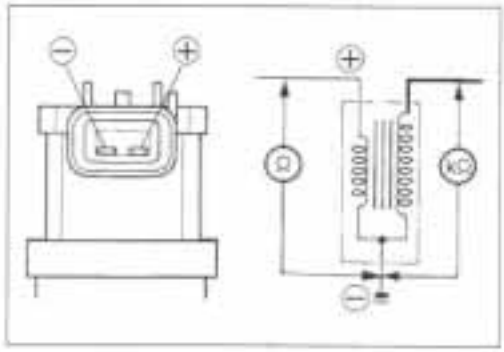

### CKP SENSOR PEAK VOLTAGE

- Remove the front seat. (☞ 6-6)

*NOTE:*

*Be sure that all couplers are connected properly and the battery used is in fully-charged condition.*

- Connect the multi circuit tester with peak volt adaptor as follows.
- Measure the CKP sensor peak voltage between White and Green/White lead wires at the ECM coupler.

White (⊕ Probe) – Green/White (⊖ Probe)

**09900-25008: Multi circuit tester set**

**⚠ CAUTION**

**Before using the multi circuit tester and peak volt adaptor, be sure to refer to the appropriate instruction manual.**

- Shift the transmission into the neutral and turn ignition switch "ON".
- Crank the engine a few seconds with the starter motor by depressing starter button and check the CKP sensor peak voltage.
- Repeat the above test procedure a few times and measure the highest peak voltage.

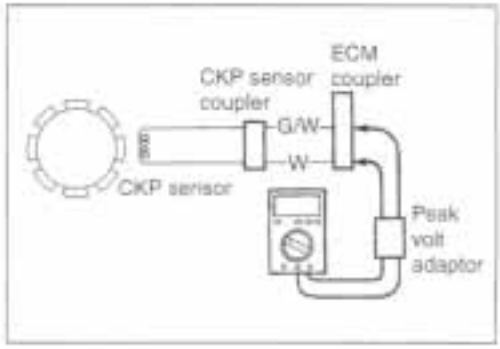


**Tester knob indication: Voltage (⎓)**

**CKP sensor peak voltage: More than 0.5 V**

If the peak voltage is lower than the standard range, check the peak voltage at the CKP sensor lead wire coupler.

- Lift up the fuel tank. (☞ 4-52)
- Disconnect the CKP sensor lead wire coupler and connect the multi circuit tester with the peak volt adaptor.

Black (⊕ Probe) – Green (⊖ Probe)

- Measure the CKP sensor peak voltage at the CKP sensor lead wire coupler.

**Tester knob indication: Voltage (⎓)**

**CKP sensor peak voltage: More than 0.5 V**

If the peak voltage is lower than the standard range, check each coupler at both ends of the circuit or replace the CKP sensor and inspect it again.

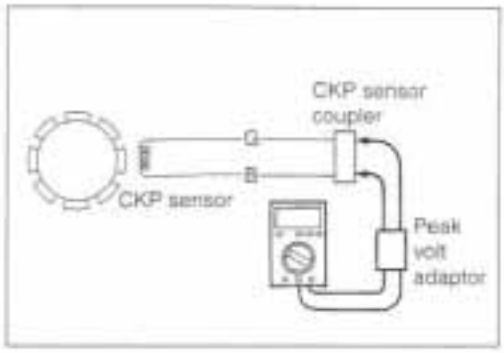


### CKP SENSOR RESISTANCE

- Measure the resistance between the lead wires and ground. If the resistance is not specified value, the CKP sensor must be replaced.

**09900-25008: Multi circuit tester set**

**Tester knob indication: Resistance (Ω)**

**CKP sensor resistance : 70 – 220 Ω (Green – Black)**
**: ∞ Ω (Green – Ground)**

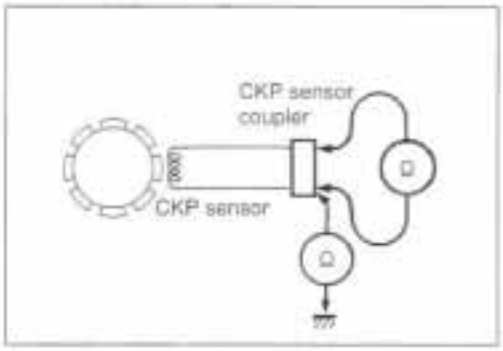


## SECONDARY THROTTLE CONTROL UNIT

- Remove the frame cover. (6-6)
- Remove the secondary throttle control unit.

Measure the voltage between the terminals using the multi circuit tester, as indicated in the table below. If the voltage is not within the specified valve, replace the its control unit with a new one.

**99000-25008: Multi circuit tester set**

**Tester knob indication: Diode test (⊣◀)**

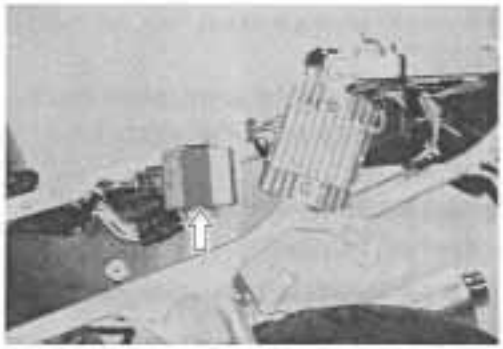

Unit: V

| ⊖ Probe of tester to: | ⊕ Probe of tester to: A | B | C | D | E | F | G | H |
|---|---|---|---|---|---|---|---|---|
| A | | 0.2 – 0.8 | 0.2 – 0.8 | 1.0 – 1.5 | 0.9 – 1.4 | 1.1 – 1.5 | 1.0 – 1.5 | 1.0 – 1.5 |
| B | 0.5 – 1.0 | | 0 | 0.7 – 1.2 | 0.5 – 1.0 | 1.0 – 1.5 | 0.7 – 1.3 | 0.7 – 1.3 |
| C | 0.5 – 1.0 | 0 | | 0.7 – 1.2 | 0.5 – 1.0 | 1.0 – 1.5 | 0.7 – 1.3 | 0.7 – 1.3 |
| D | * | * | * | | * | * | * | * |
| E | 0.4 – 0.9 | 0.3 – 0.8 | 0.3 – 0.8 | 0.2 – 0.7 | | 1.0 – 1.5 | 0.4 – 0.9 | 0.4 – 0.9 |
| F | 1.1 – 1.5 | 1.0 – 1.5 | 1.0 – 1.5 | 1.1 – 1.5 | 1.0 – 1.4 | | 1.1 – 1.5 | 1.1 – 1.5 |
| G | 0.7 – 1.3 | 0.2 – 0.8 | 0.2 – 0.8 | 1.0 – 1.5 | 0.9 – 1.4 | 1.1 – 1.5 | | 1.0 – 1.5 |
| H | 0.7 – 1.3 | 0.2 – 0.8 | 0.2 – 0.8 | 1.0 – 1.5 | 0.9 – 1.4 | 1.1 – 1.5 | 1.0 – 1.5 | |

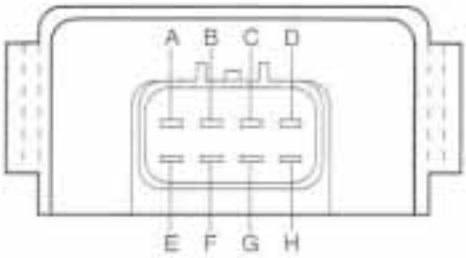


* More than 1.4 V (Tester's battery voltage)

*NOTE:*
*If the multi circuit tester reads under 1.4 V, replace its battery when the tester probes are not connected.*

# COMBINATION METER

## DESCRIPTION

This combination meter mainly consists of the stepping motor, LCD (Liquid Crystal Display) and LED (Light Emitting Diode). This combination meter is light, thin and high response on those currently in use because of this composition.

The rpm pointer is driven by the stepping motor.

The LCDs indicate speed, Odo/Trip1/Trip2/Clock and engine coolant temp./FI respectively.

**LED (Light Emitting Diode)**

LED is used for the illumination light and each indicator light.

LED is maintenance free. LED is less consuming electric power and stronger to vibration resistance compared to the bulb.

All LEDs light up immediately after turning the ignition switch on.

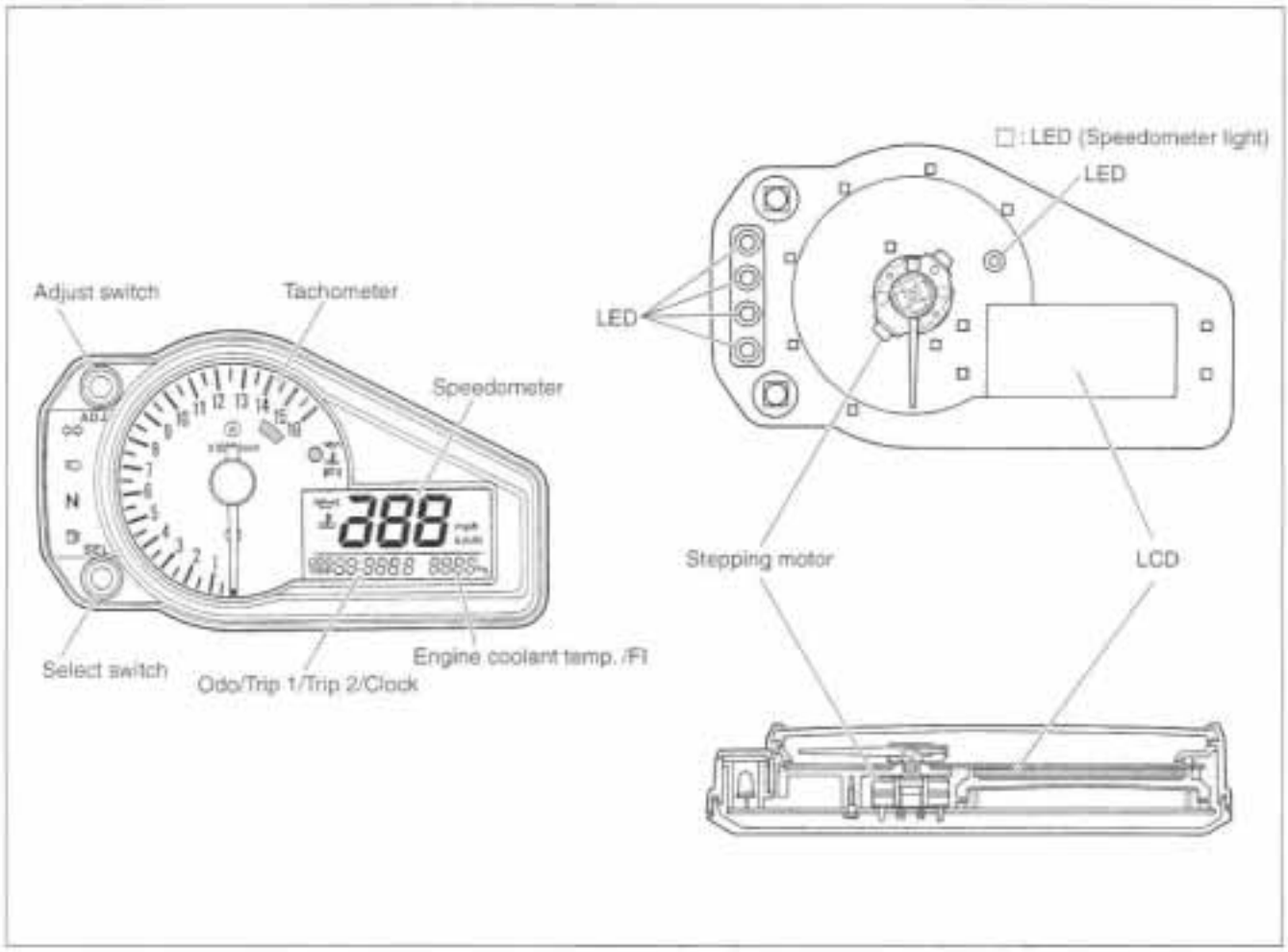

## REMOVAL AND DISASSEMBLY

- Remove the screw ①.
- Draw out the hook ② from the body cowling.
- Disconnect the lead wire coupler.
- Remove the combination meter.

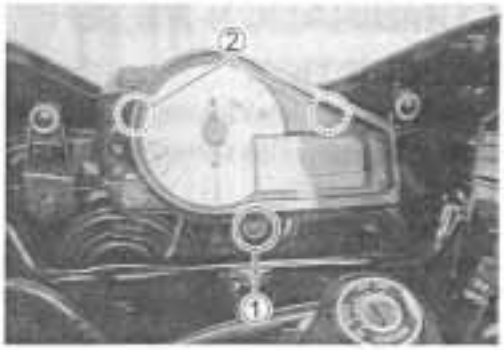


**⚠ CAUTION**

**When disconnecting and connecting the combination meter coupler, make sure to turn OFF the ignition switch, or electronic parts may get damaged.**

- Disassemble the combination meter as follows.

**⚠ CAUTION**

**Do not attempt to disassemble the combination meter unit ②.**

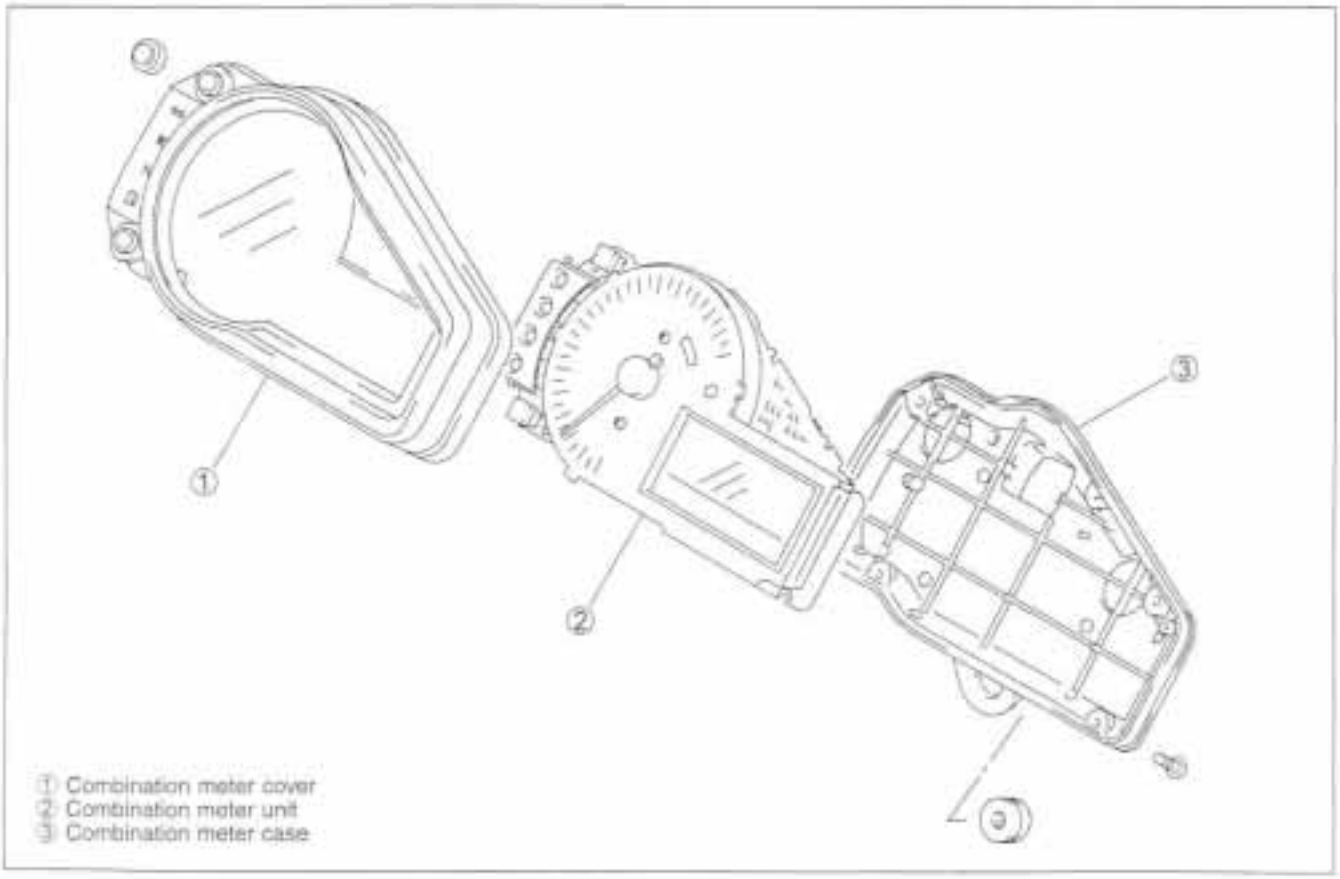

## INSPECTION

### LED (LIGHT EMITTING DIODE)

Check that the LED lights immediately after turning the ignition switch on.

If the LED fails in operation, replace the combination meter unit with a new one after checking its wire harness/coupler.

### STEPPING MOTOR

Check that the pointer calibrates itself immediately after turning the ignition switch on and stops at starting point.

If abnormal condition is found, replace the combination meter unit with a new one after checking its wire harness/coupler.

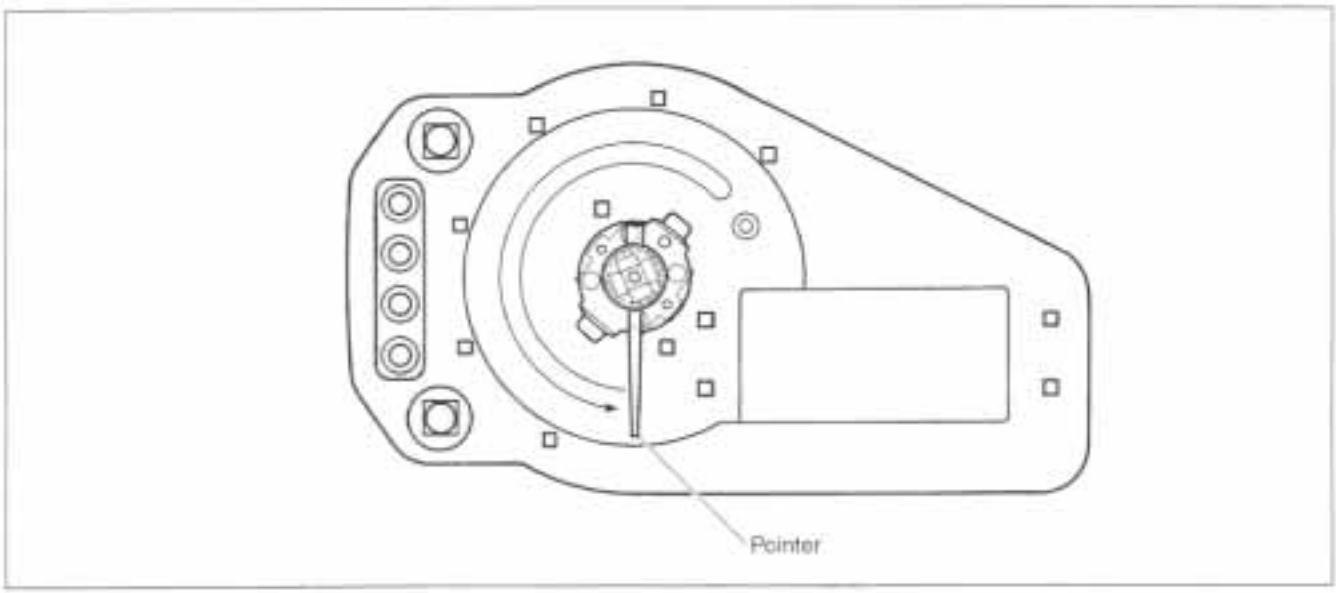


*NOTE:*

The pointer may not return to the proper position even turning the ignition switch on under low temperature condition. In that case, you can reset the pointer to the proper position by following the instruction below:

1) With the function switch Ⓐ pressed, turn the ignition switch on.
2) Release the function switch Ⓐ, 3 to 5 seconds after turning the ignition switch on.
3) Press the function switch Ⓐ twice (within 1 second). → Reset

* Complete the operation within 10 seconds after the ignition switch has been turned on.

| Time | Ignition switch | Adjuster switch Ⓐ |
|---|---|---|
| | OFF | PUSH |
| 0 | ON | ↓ |
| •<br>• | ↓ | ↓ |
| 3 sec<br>•<br>5 sec | ↓ | ↓<br>Release |
| •<br>•<br>•<br>• | ↓ | Push<br>Push→Reset |
| 10 sec | | |

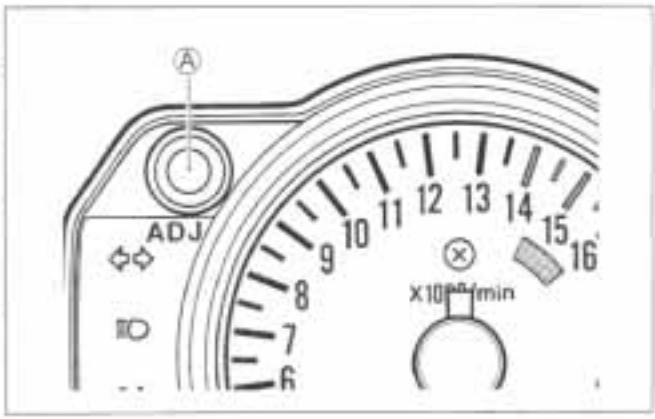


Pointer will return to the starting point right after the completion of the operation. In the case of the pointer not returning to the proper position after doing above, replace the combination meter unit.

## ENGINE COOLANT TEMPERATURE METER AND INDICATOR

Engine coolant temp. sensor inspection: ☞ 5-8

- Lift up the fuel tank. (☞ 4-52)
- Disconnect the engine coolant temperature sensor coupler ①.

**⚠ CAUTION**

**When connecting and disconnecting the engine coolant temp. sensor lead wire coupler, make sure to turn OFF the ignition switch, or electronic parts may get damaged.**

- Connect the variable resister Ⓐ between the terminals.
- Turn the ignition switch ON.
- Check the LCD and LED operations when the resistance is adjusted to the specified values.

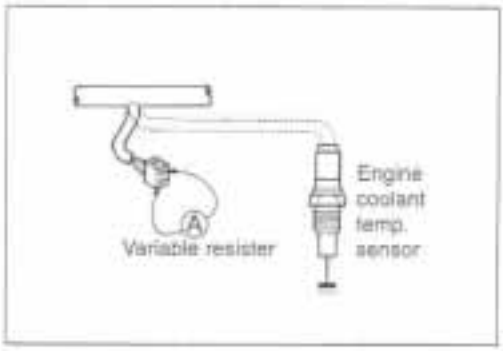


| Resistance Ⓐ | LED Ⓑ | LCD Ⓒ | LCD Ⓓ | Water temperature |
|---|---|---|---|---|
| Over 2.45 kΩ | OFF | "---" | — | Under 19°C |
| Approx. 0.811 kΩ | OFF | "50" | — | Approx. 50 °C |
| Approx. 0.1 kΩ | ON | "120" - "139" | Flicker | 120 – 139 °C |
| 0 Ω (Jumper wire) | ON | "HI" | Flicker | Over 140 °C |

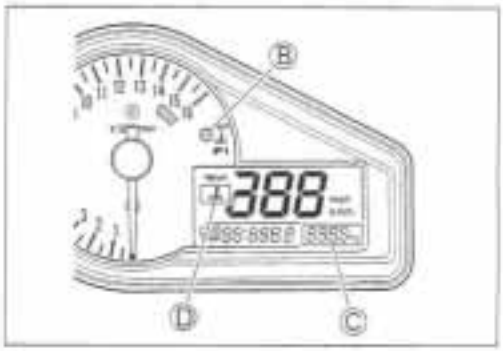


If either one or all indications are abnormal, replace the combination meter with a new one.

*NOTE:*

*If the engine stop switch is turned OFF while the ignition switch is ON, the LCD displays "CHEC". But it is not malfunction.*

*This codition implies that combination meter recieves no signal from the ECM.*

*In that case, they are restored to ordinary indication by turning the engine stop switch RUN.*

### FUEL LEVEL INDICATOR SWITCH INSPECTION

- Remove and disassemble the fuel pump assembly. (☞4-57)

- Connect 12 V battery and test bulb (12 V, 3.4 W) to the fuel level indicator switch as shown in the right illustlations. The bulb should come on after several seconds if the switch is in good condition.

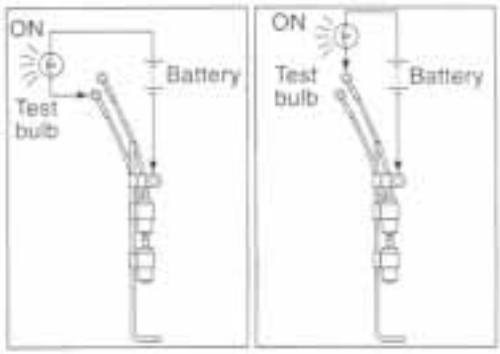


- When the switch is immersed in water under the above condition, the bulb should go out. If the bulb remains lit, replace the unit with a new one.

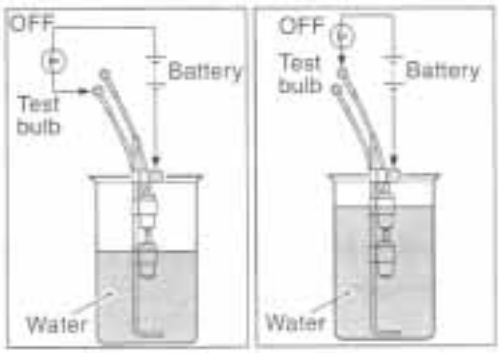


### FUEL LEVEL INDICATOR LIGHT INSPECTION

If the fuel level indicator light does not function properly, check the fuel level indicator switch and its lead wire/coupler.
If the fuel level indicator switch and its lead wire/coupler are all right, replace the combination meter with a new one.

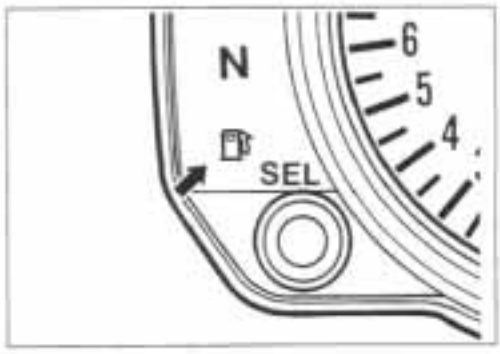


### FUEL LEVEL RESISTER INSPECTION

- Measure the resistance between the terminals of each fuel level resister. If the resistance is not within the standard range, replace the resister with a new one.

**RED – BLACK, RED – WHITE**

**09900-25008: Multi circuit tester set**

**Tester knob indication: Resistance (Ω)**

**DATA Fuel level resister resistance: 65 – 75 Ω**

## SPEEDOMETER

If the speedometer, odometer or trip meter does not function properly, inspect the speedometer sensor and connection of couplers. If the speedometer sensor and connection are all right, replace the meter with a new one.

### SPEEDOMETER SENSOR

- Remove the left under cowling. (☞ 6-3)
- Disconnect speedometer sensor coupler.
- Remove the speedometer sensor ① by removing its mounting bolt.
- Connect 12V battery, 10 kΩ resistor and the multi circuit tester as shown right illustration.

**B/R: Black with Red tracer**
**B/W: Black with White tracer**
**B: Black**

**09900-25008: Multi circuit tester set**

**Tester knob indication: Voltage (⎓)**


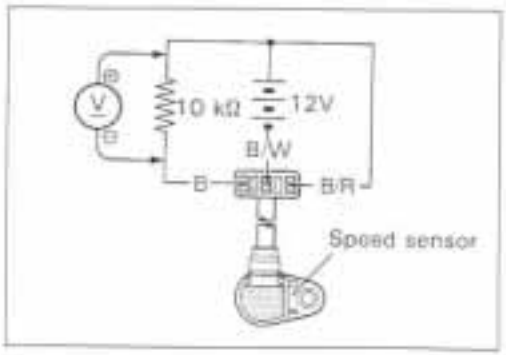


- Under above condition, if a suitable screwdriver touching the pick-up surface of the speed sensor is moved, the tester reading voltage changes (0V→12V or 12V→0V). If the tester reading voltage does not change, replace the speedometer sensor with a new one.

*NOTE:*
*The highest tester reading voltage (12V) while testing is same as battery voltage.*

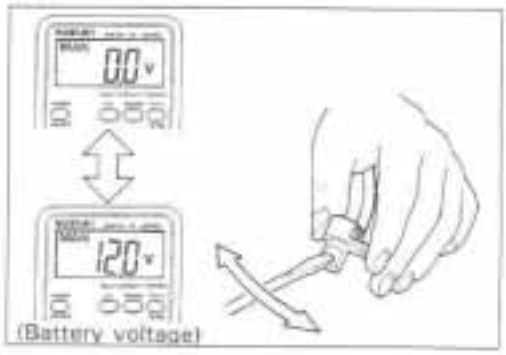


## OIL PRESSURE INDICATOR

*NOTE:*
*Before inspecting the oil pressure switch, check if the engine oil level is enough. (☞ 2-13)*

- Remove the right under cowling. (☞ 6-3)
- Disconnect the oil pressure switch lead wire from the oil pressure switch.
- Turn the ignition switch ON.
- Check if the oil pressure indicator Ⓐ will light and LCD Ⓑ will flicker, when grounding the lead wire.

If each indication are abnormal, replace the combination meter with a new one after checking connection of couplers.

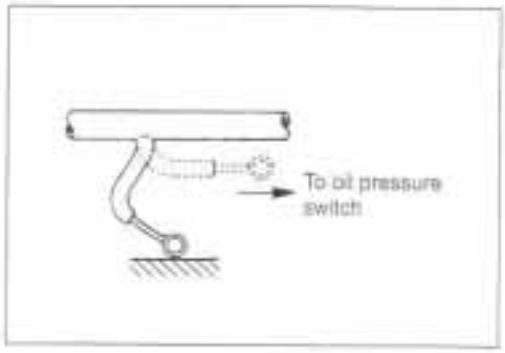


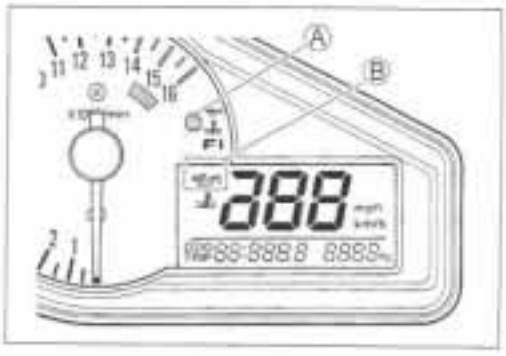

# LAMPS

## HEADLIGHT, BRAKE LIGHT/TAILLIGHT AND TURN SIGNAL LIGHT

**HEADLIGHT**

12 V 55 W (H7)
12 V 55 W (H7)
12 V 5 W ① (Except for E-03, 24, 28, 33)

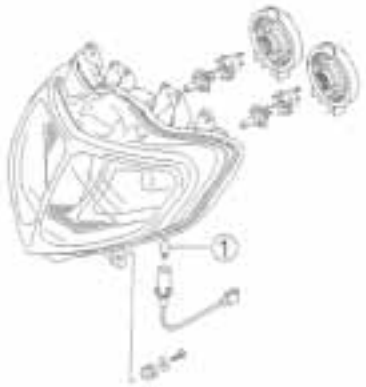


**BRAKE LIGHT/TAILLIGHT**

12 V 21/5 W

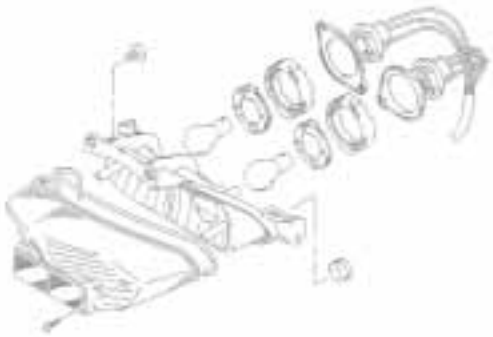

**TURN SIGNAL LIGHT**

12 V 21 W

**⚠ CAUTION**

**If you touch the bulb with your bare hands, clean it with a cloth moistened with alcohol or soapy water to prevent early failure.**

### HEADLIGHT BEAM ADJUSTMENT

- Remove the body cowling cover. (☞ 6-3)
- Adjust the headlight beam, both vertical and horizontal.
  Ⓐ: Vertical adjuster (Using a screw driver ⊕)
  Ⓑ: Horizontal adjuster

*NOTE:*
*To adjust the headlight beam, adjust the beam horizontally first, then adjust the vertically.*

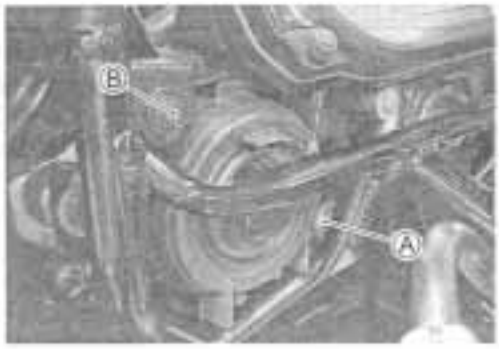

# RELAYS

## TURN SIGNAL/SIDE-STAND RELAY

The turn signal/side-stand relay is composed of the turn signal relay, side-stand relay and diode.

### INSPECTION

Before removing the turn signal/side-stand relay, check the operation of the turn signal light.

If the turn signal light does not illuminate, inspect the bulb, turn signal switch and circuit connection.

If the bulb, turn signal switch and circuit connection are OK, the turn signal relay may be faulty; therefore, replace the turn signal/side-stand relay with a new one.

*NOTE:*

- *Make sure that the battery is fully charged.*
- *Refer to the page 7-16 for the side-stand relay and diode inspection.*

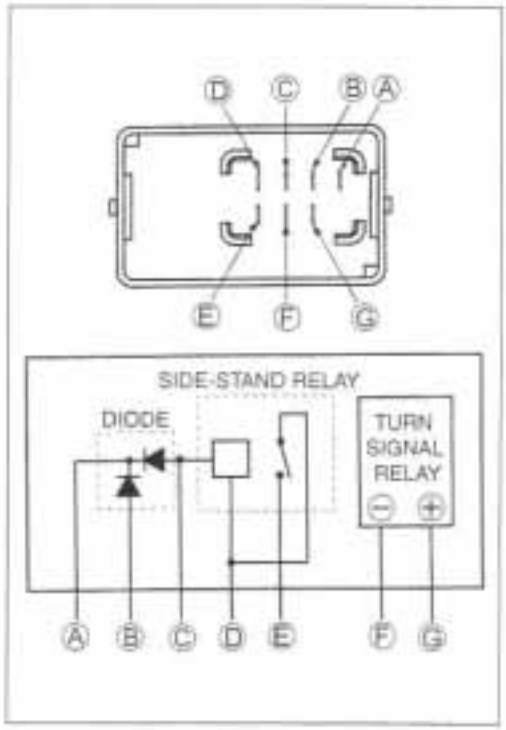


## STARTER RELAY

☞ 7-13

## FUEL PUMP RELAY

☞ 4-51

# SWITCHES

### IGNITION SWITCH REMOVAL

- Remove the right under cowling. (☞ 6-3)
- Disconnect the coupler.
- Remove the ignition switch mounting bolts using the special tools.

**09930-11920: Torx bit JT40H**
**09930-11940: Bit holder**

**▲ CAUTION**

**When reusing the ignition switch bolt, clean thread and apply the THREAD LOCK SUPER "1322"**

**99000-32110: THREAD LOCK SUPER "1322"**

Inspect each switch for continuity with a tester. If any abnormality is found, replace the respective switch assemblies with new ones.

### IGNITION SWITCH

**(For E-24)**

| Position \ Color | R | O | O/Y | B/W |
|---|---|---|---|---|
| ON | ○ | ○ | ○ | ○ |
| OFF | | | | |
| LOCK | | | | |

**(For Others)**

| Position \ Color | R | O | O/Y | B/W | Gr | Br |
|---|---|---|---|---|---|---|
| ON | ○ | ○ | ○ | ○ | ○ | ○ |
| OFF | | | | | | |
| LOCK | | | | | | |
| P | ○ | | | | | ○ |

### LIGHTING SWITCH

**(Except for E-03, 24, 28 and 33)**

| Position \ Color | O/Bl | Gr | O/R | Y/W |
|---|---|---|---|---|
| OFF (•) | | | | |
| S (≡DC) | ○ | ○ | | |
| ON (☼) | ○ | ○ | ○ | ○ |

### DIMMER SWITCH

| Position \ Color | W | Y | Y/W |
|---|---|---|---|
| HI (≡D) | | ○ | ○ |
| LO (D) | ○ | | ○ |

### TURN SIGNAL SWITCH

| Position \ Color | Lg | Lbl | B |
|---|---|---|---|
| L | | ○ | ○ |
| PUSH | | | |
| R | ○ | ○ | |

### PASSING LIGHT SWITCH

**(Except for E-03, 28 and 33)**

| Position \ Color | O/R | Y |
|---|---|---|
| • | | |
| PUSH | ○ | ○ |

### ENGINE STOP SWITCH

| Position \ Color | O/B | O/W |
|---|---|---|
| OFF (⊘) | | |
| RUN (○) | ○ | ○ |

### STARTER BUTTON

| Position \ Color | O/W | Y/G |
|---|---|---|
| • | | |
| PUSH | ○ | ○ |

### HORN BUTTON

| Position \ Color | B/Bl | B/W |
|---|---|---|
| • | | |
| PUSH | ○ | ○ |

### FRONT BRAKE SWITCH

| Position \ Color | B/R | B |
|---|---|---|
| OFF | | |
| ON | ○ | ○ |

### REAR BRAKE SWITCH

| Position \ Color | O/G | W/B |
|---|---|---|
| OFF | | |
| ON | ○ | ○ |

### CLUTCH LEVER POSITION SWITCH

| Position \ Color | B/Y | B/Y |
|---|---|---|
| OFF | | |
| ON | ○ | ○ |

### OIL PRESSURE SWITCH

| Position \ Color | G/Y | Ground |
|---|---|---|
| ON (engine is stopped) | ○ | ○ |
| OFF (engine is running) | | |

*NOTE:*
*Before inspecting the oil pressure switch, check if the engine oil level is enough. (☞ 2-13)*

### WIRE COLOR

| | | | | | |
|---|---|---|---|---|---|
| B | : Black | Lbl | : Light blue | R | : Red |
| Br | : Brown | Lg | : Light green | Y | : Yellow |
| Gr | : Gray | O | : Orange | W | : White |

B/Bl : Black with Blue tracer
B/W : Black with White tracer
B/Y : Black with Yellow tracer
B/R : Black with Red tracer
G/Y : Green with Yellow tracer
O/B : Orange with Black tracer
O/Bl : Orange with Blue tracer
O/G : Orange with Green tracer
O/R : Orange with Red tracer
O/W : Orange with White tracer
O/Y : Orange with Yellow tracer
W/B : White with Black tracer
Y/G : Yellow with Green tracer
Y/W : Yellow with White tracer

# BATTERY

## SPECIFICATIONS

| | |
|---|---|
| Type designation | FTX9-BS |
| Capacity | 12V, 28.8 kC (8 Ah)/10HR |

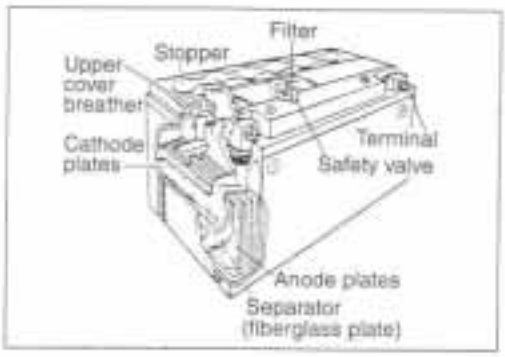


## INITIAL CHARGING

**Filling electrolyte**

- Remove the aluminum tape ① sealing the battery electrolyte filler holes.

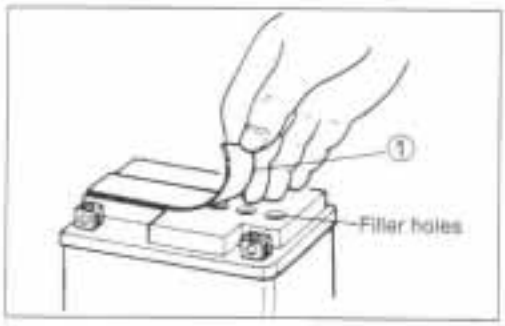


- Remove the caps ②.

*NOTE:*

- *After filling the electrolyte completely, use the removed cap ② as the sealed caps of battery-filler holes.*
- *Do not remove or pierce the sealed areas ③ of the electrolyte container.*

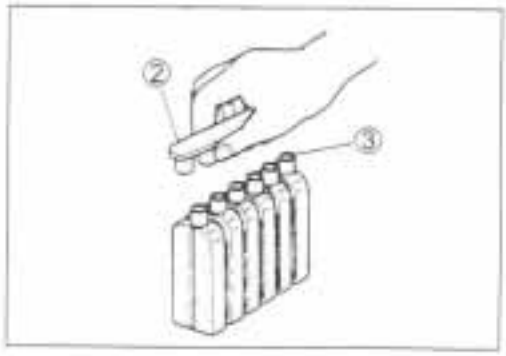


- Insert the nozzles of the electrolyte container into the battery's electrolyte filler holes, holding the container firmly so that it does not fall. Take precaution not to allow any of the fluid to spill.

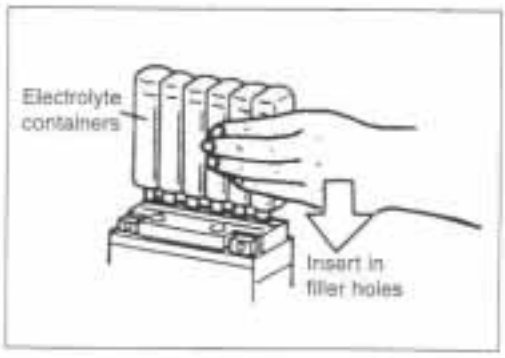


- Make sure air bubbles are coming up each electrolyte container, and leave in this position for about more than 20 minutes.

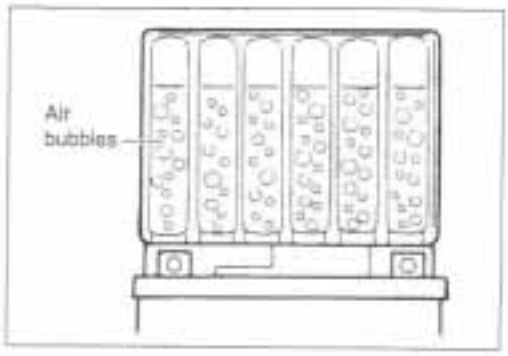

*NOTE:*
*If no air bubbles are coming up from a filler port, tap the bottom of the electrolyte container two or three times.*
*Never remove the container from the battery.*

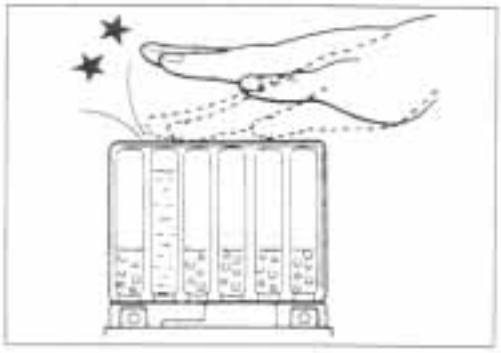

- After confirming that the electrolyte has entered the battery completely, remove the electrolyte containers from the battery. Wait for about 20 minutes.
- Insert the caps into the filler holes, pressing in firmly so that the top of the caps do not protrude above the upper surface of the battery's top cover.

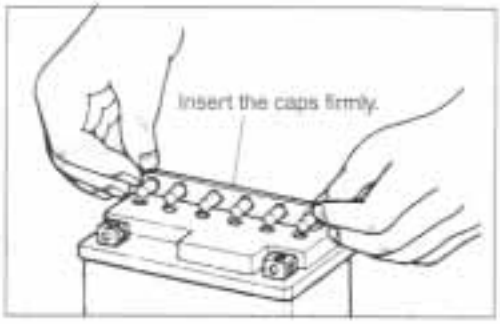


**⚠ CAUTION**

- **Never use anything except the specified battery.**
- **Once install the caps to the battery; do not remove the caps.**
- **Do not tap the caps with a hammer when installing them.**

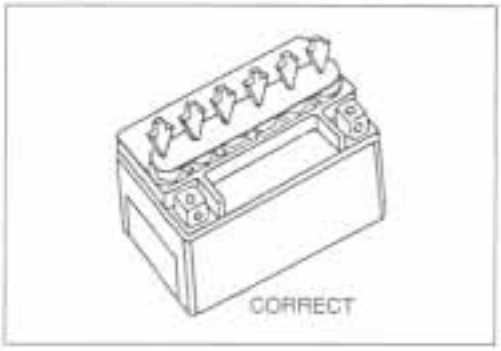


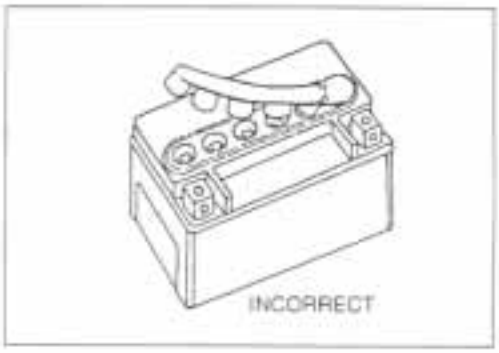


- Using multi circuit tester, measure the battery voltage. The tester should indicate more than 12.5 – 12.6V (DC) as shown in the Fig. If the battery voltage is lower than the specification, charge the battery with a battery charger. (Refer to the recharging operation)

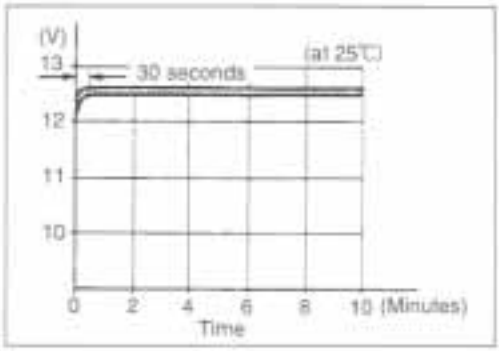


**⚠ CAUTION**

**Do not remove the caps on the battery top while charging.**

*NOTE:*
*Initial charging for a new battery is recommended if two years have elapsed since the date of manufacture.*

## SERVICING

Visually inspect the surface of the battery container. If any signs of cracking or electrolyte leakage from the sides of the battery have occurred, replace the battery with a new one. If the battery terminals are found to be coated with rust or an acidic white powdery substance, then this can be cleaned away with sandpaper.

## RECHARGING OPERATION

- Using the multi circuit tester, check the battery voltage. If the voltage reading is less than the 12.0V (DC), recharge the battery with a battery charger.

**⚠ CAUTION**

- **When recharging the battery, remove the battery from the motorcycle.**
- **Do not remove the caps on the battery top while recharging.**

**Recharging time: 4A for one hour or 0.9A for 5 to 10 hours**

**⚠ CAUTION**

**Be careful not to permit the charging current to exceed 4A at any time.**

- After recharging, wait for more than 30 minutes and check the battery voltage with a multi circuit tester.
- If the battery voltage is less than the 12.5V, recharge the battery again.
- If battery voltage is still less than 12.5V, after recharging, replace the battery with a new one.
- When the motorcycle is not used for a long period, check the battery every 1 month to prevent the battery discharge.

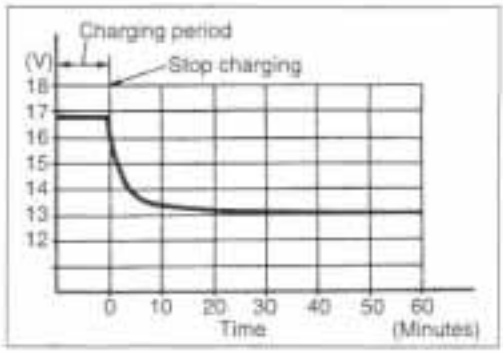


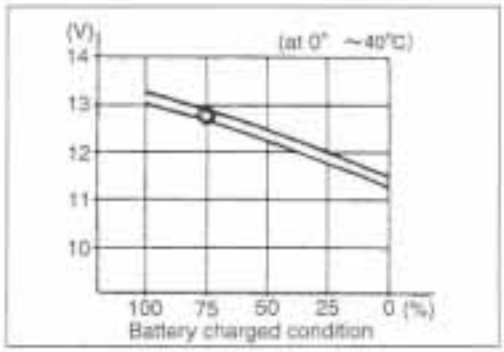

# SERVICING INFORMATION

CONTENTS

# TROUBLESHOOTING

## FI SYSTEM MALFUNCTION CODE AND DEFECTIVE CONDITION

| MALFUNCTION CODE | DETECTED ITEM | DETECTED FAILURE CONDITION<br>CHECK FOR |
|---|---|---|
| c00 | NO FAULT | ——— |
| c11 | Camshaft position sensor | The signal does not reach ECM for more than 2 sec. after receiving the starter signal. |
| | | The camshaft position sensor wiring and mechanical parts. (Camshaft position sensor, intake cam pin, wiring/coupler connection) |
| c12 | Crankshaft position sensor | The signal does not reach ECM for more than 2 sec. after receiving the starter signal. |
| | | The crankshaft position sensor wiring and mechanical parts. (Crankshaft position sensor, wiring/coupler connection) |
| c13 | Intake air pressure sensor | The sensor should produce following voltage.<br>(0.5 V ≦ sensor voltage < 4.85 V)<br>Without the above range, c13 is indicated. |
| | | Intake air pressure sensor, wiring/coupler connection. |
| c14 | Throttle position sensor | The sensor should produce following voltage.<br>(0.2 V ≦ sensor voltage < 4.8 V)<br>Without the above range, c14 is indicated. |
| | | Throttle position sensor, wiring/coupler connection. |
| c15 | Engine coolant temperature sensor | The sensor voltage should be the following.<br>(0.15 V ≦ sensor voltage < 4.85 V)<br>Without the above range, c15 is indicated. |
| | | Engine coolant temperature sensor, wiring/coupler connection. |
| c21 | Intake air temperature sensor | The sensor voltage should be the following.<br>(0.15 V ≦ sensor voltage < 4.85 V)<br>Without the above range, c21 is indicated. |
| | | Intake air temperature sensor, wiring/coupler connection. |
| c22 | Atmospheric pressure sensor | The sensor voltage should be the following.<br>(0.5 V ≦ sensor voltage < 4.85 V)<br>Without the above range, c22 is indicated. |
| | | Atm. pressure sensor, wiring/coupler connection. |
| c23 | Tip over sensor | The sensor voltage should be less than the following for more than 3 sec. after ignition switch turns ON.<br>(0.25 V ≦ sensor voltage < 4.85 V)<br>Without the above value, c23 is indicated. |
| | | Tip over sensor, wiring/coupler connection. |
| c24, c25, c26 or c27 | Ignition signal | Crankshaft position sensor (pick-up coil) signal is produced but signal from ignition coil is interrupted continuous by two times or more. In this case, the code c24, c25, c26 or c27 is indicated. |
| | | Ignition coil, wiring/coupler connection, power supply from the battery. |

| | | |
|---|---|---|
| c28 | Secondary throttle valve actuator | When no actuator control signal is supplied from ECM or communication signal does not reach ECM or operation voltage does not reach STV actuator.<br>Without the above value, c28 is indicated. STV actuator can not operate. |
| | | STV actuator lead wire/coupler. |
| c29 | Secondary throttle position sensor | The sensor should produce following voltage.<br>(0.2 V ≦ sensor voltage < 4.8 V)<br>Without the above range, c29 is indicated. |
| | | Secondary throttle position sensor, wiring/coupler connection. |
| c30 | Secondary throttle control unit | When no communication signal is supplied from the ECM or when power source stops, c30 is indicated. |
| | | STC unit, wiring/coupler connection, power supply to STC unit. |
| c31 | Gear position signal | Gear position signal voltage should be higher than the following for more than 3 seconds.<br>(Gear position sensor voltage > 0.60 V)<br>Without the above value, c31 is indicated. |
| | | Gear position sensor, wiring/coupler connection. Gearshift cam etc. |
| c32, c33, c34 or c35 | Fuel injector signal | When fuel injection signal stops, the c32, c33, c34 or c35 is indicated. |
| | | Injector, wiring/coupler connection, power supply to the injector. |
| c41 | Fuel pump relay signal | When no signal is supplied from fuel pump relay, c41 is indicated. |
| | | Fuel pump relay, connecting lead, power source to fuel pump relay. |
| c42 | Ignition switch signal | Ignition switch signal is not input in the ECM. |
| | | Ignition switch, lead wire/coupler. |

# ENGINE

| Complaint | Symptom and possible causes | Remedy |
|---|---|---|
| **Engine will not start, or is hard to start.** | **Compression too low** | |
| | 1. Out of adjustment valve clearance. | Adjust. |
| | 2. Worn valve guides or poor seating of valves. | Repair or replace. |
| | 3. Mistiming valves. | Adjust. |
| | 4. Excessively worn piston rings. | Replace. |
| | 5. Worn-down cylinder bores. | Replace. |
| | 6. Too slowly starter motor cranks. | See electrical section. |
| | 7. Poor seating of spark plugs. | Retighten. |
| | **Plugs not sparking** | |
| | 1. Fouled spark plugs. | Clean. |
| | 2. Wet spark plugs. | Clean and dry. |
| | 3. Defective ignition coil/plug cap. | Replace. |
| | 4. Defective CKP sensor. | Replace. |
| | 5. Defective ECM. | Replace. |
| | 6. Open-circuited wiring connections. | Repair or replace. |
| | **No fuel reaching intake manifold** | |
| | 1. Clogged fuel filter or fuel hose. | Clean or replace. |
| | 2. Defective fuel pump. | Replace. |
| | 3. Defective fuel pressure regulator. | Replace. |
| | 4. Defective fuel injector. | Replace. |
| | 5. Defective fuel pump relay. | Replace. |
| | 6. Defective ECM. | Replace. |
| | 7. Open-circuited wiring connections. | Check and repair. |
| | **Incorrect fuel/air mixture** | |
| | 1. Out of adjustment throttle position sensor. | Adjust. |
| | 2. Defective fuel pump. | Replace. |
| | 3. Defective fuel pressure regulator. | Replace. |
| | 4. Defective throttle position sensor. | Replace. |
| | 5. Defective crankshaft position sensor. | Replace. |
| | 6. Defective intake air pressure sensor. | Replace. |
| | 7. Defective atmospheric pressure sensor. | Replace. |
| | 8. Defective ECM. | Replace. |
| | 9. Defective engine coolant temp. sensor. | Replace. |
| | 10. Defective intake air temp. sensor. | Replace. |

| Complaint | Symptom and possible causes | Remedy |
|---|---|---|
| Engine idles poorly. | 1. Out of adjustment valve clearance. | Adjust. |
| | 2. Poor seating of valves. | Replace or repair. |
| | 3. Defective valve guides. | Replace. |
| | 4. Worn down camshaft. | Replace. |
| | 5. Too wide spark plug gaps. | Adjust or replace. |
| | 6. Defective ignition coil/plug cap. | Replace. |
| | 7. Defective crankshaft position sensor. | Replace. |
| | 8. Defective ECM. | Replace. |
| | 9. Defective throttle position sensor. | Replace. |
| | 10. Defective fuel pump. | Replace. |
| | 11. Imbalanced throttle valve. | Adjust. |
| | 12. Damaged or cracked vacuum hose. | Replace. |
| Engine stalls easily. | **Incorrect fuel/air mixture** | |
| | 1. Defective intake air pressure sensor or circuit. | Repair or replace. |
| | 2. Clogged fuel filter. | Clean or replace. |
| | 3. Defective fuel pump. | Replace. |
| | 4. Defective fuel pressure regulator. | Replace. |
| | 5. Defective engine coolant temp. sensor. | Replace. |
| | 6. Defective thermostat. | Replace. |
| | 7. Defective intake air temp. sensor. | Replace. |
| | **Improperly working fuel injector** | |
| | 1. Defective fuel injector. | Replace. |
| | 2. No injection signal from ECM. | Repair or replace. |
| | 3. Open or short circuited wiring connection. | Repair or replace. |
| | 4. Defective battery or low battery voltage. | Replace or recharge. |
| | **Improperly working control circuit or sensors** | |
| | 1. Defective ECM. | Replace. |
| | 2. Defective fuel pressure regulator. | Replace. |
| | 3. Defective throttle position sensor. | Replace. |
| | 4. Defective intake air temp. sensor. | Replace. |
| | 5. Defective camshaft position sensor. | Replace. |
| | 6. Defective crankshaft position sensor. | Replace. |
| | 7. Defective engine coolant temp. sensor. | Replace. |
| | 8. Defective fuel pump relay. | Replace. |
| | **Improperly working engine internal parts** | |
| | 1. Fouled spark plugs. | Clean. |
| | 2. Defective crankshaft position sensor or ECM. | Replace. |
| | 3. Clogged fuel hose. | Clean. |
| | 4. Out of adjustment tappet clearance. | Adjust. |

| Complaint | Symptom and possible causes | Remedy |
|---|---|---|
| Noisy engine. | **Excessive valve chatter** | |
| | 1. Too large valve clearance. | Adjust. |
| | 2. Weakened or broken valve springs. | Replace. |
| | 3. Worn tappet or cam surface. | Replace. |
| | 4. Worn and burnt camshaft journal. | Replace. |
| | **Noise seems to come from piston** | |
| | 1. Worn down pistons or cylinders. | Replace. |
| | 2. Fouled with carbon combustion chambers. | Clean. |
| | 3. Worn piston pins or piston pin bore. | Replace. |
| | 4. Worn piston rings or ring grooves. | Replace. |
| | **Noise seems to come from timing chain** | |
| | 1. Stretched chain. | Replace. |
| | 2. Worn sprockets. | Replace. |
| | 3. Not working tension adjuster. | Repair or replace. |
| | **Noise seems to come from clutch** | |
| | 1. Worn splines of countershaft or hub. | Replace. |
| | 2. Worn teeth of clutch plates. | Replace. |
| | 3. Distorted clutch plates, driven and drive. | Replace. |
| | 4. Worn clutch release bearing. | Replace. |
| | 5. Weakened clutch dampers. | Replace the primary driven gear. |
| | **Noise seems to come from crankshaft** | |
| | 1. Due to wear rattling bearings. | Replace. |
| | 2. Worn and burnt big-end bearings. | Replace. |
| | 3. Worn and burnt journal bearings. | Replace. |
| | 4. Too large thrust clearance. | Replace thrust bearing. |
| | **Noise seems to come from transmission** | |
| | 1. Worn or rubbing gears. | Replace. |
| | 2. Worn splines. | Replace. |
| | 3. Worn or rubbing primary gears. | Replace. |
| | 4. Worn bearings. | Replace. |
| | **Noise seems to come from water pump** | |
| | 1. Too much play on pump shaft bearing. | Replace. |
| | 2. Worn or damaged impeller shaft. | Replace. |
| | 3. Worn or damaged mechanical seal. | Replace. |
| | 4. Touches pump case and impeller. | Replace. |
| Engine runs poorly in high speed range. | **Defective engine internal/electrical parts** | |
| | 1. Weakened valve springs. | Replace. |
| | 2. Worn camshafts. | Replace. |
| | 3. Valve timing out of adjustment. | Adjust. |
| | 4. Too narrow spark plug gaps. | Adjust. |
| | 5. Ignition not advanced sufficiently due to poorly working timing advance circuit. | Replace ECM. |
| | 6. Defective ignition coil. | Replace. |
| | 7. Defective crankshaft position sensor. | Replace. |
| | 8. Defective ECM. | Replace. |
| | 9. Clogged air cleaner element. | Clean. |
| | 10. Clogged fuel hose, resulting in inadequate fuel supply to injector. | Clean and prime. |
| | 11. Defective fuel pump. | Replace. |
| | 12. Defective throttle position sensor. | Replace. |
| | 13. Defective STC unit or STV actuator | Replace. |

| Complaint | Symptom and possible causes | Remedy |
|---|---|---|
| Engine runs poorly in high speed range. | **Defective air flow system** | |
| | 1. Clogged air cleaner element. | Clean or replace. |
| | 2. Defective throttle valve. | Adjust or replace. |
| | 3. Defective secoundary throttle valve. | Adjust or replace. |
| | 4. Sucking air from throttle body joint. | Repair or replace. |
| | 5. Defective ECM. | Replace. |
| | **Defective control circuit or sensor** | |
| | 1. Low fuel pressure. | Repair or replace. |
| | 2. Defective throttle position sensor. | Replace. |
| | 3. Defective intake air temp. sensor. | Replace. |
| | 4. Defective camshaft position sensor. | Replace. |
| | 5. Defective crankshaft position sensor. | Replace. |
| | 6. Defective gear position sensor. | Replace. |
| | 7. Defective intake air pressure sensor. | Replace. |
| | 8. Defective atmospheric pressure sensor. | Replace. |
| | 9. Defective ECM. | Replace. |
| | 10. Imbalancing throttle valve synchronization. | Adjust. |
| | 11. Defective STP sensor and/or STV actuator. | Replace. |
| | 12. Defective STC unit. | Replace. |
| Engine lacks power. | **Defective engine internal/electrical parts** | |
| | 1. Loss of valve clearance. | Adjust. |
| | 2. Weakened valve springs. | Replace. |
| | 3. Out of adjustment valve timing. | Adjust. |
| | 4. Worn piston rings or cylinders. | Replace. |
| | 5. Poor seating of valves. | Repair. |
| | 6. Fouled spark plug. | Clean or replace. |
| | 7. Incorrect spark plug. | Adjust or replace. |
| | 8. Clogged injector. | Clean. |
| | 9. Out of adjustment throttle position sensor. | Adjust. |
| | 10. Clogged air cleaner element. | Clean. |
| | 11. Imbalancing throttle valve synchronization. | Adjust. |
| | 12. Sucking air from throttle valve or vacuum hose. | Retighten or replace. |
| | 13. Too much engine oil. | Drain out excess oil. |
| | 14. Defective fuel pump or ECM. | Replace. |
| | 15. Defective crankshaft position sensor and ignition coil. | Replace. |
| | **Defective control circuit or sensor** | |
| | 1. Low fuel pressure. | Repair or replace. |
| | 2. Defective throttle position sensor. | Replace. |
| | 3. Defective intake air temp. sensor. | Replace. |
| | 4. Defective camshaft position sensor. | Replace. |
| | 5. Defective crankshaft position sensor. | Replace. |
| | 6. Defective gear position sensor. | Replace. |
| | 7. Defective intake air pressure sensor. | Replace. |
| | 8. Defective atmospheric pressure sensor. | Replace. |
| | 9. Defective ECM. | Replace. |
| | 10. Imbalancing throttle valve synchronization. | Adjust. |
| | 11. Defective STP sensor and/or STV actuator. | Replace. |
| | 12. Defective STC unit. | Replace. |

| Complaint | Symptom and possible causes | Remedy |
|---|---|---|
| Engine overheats. | **Defective engine internal parts** | |
| | 1. Heavy carbon deposit on piston crowns. | Clean. |
| | 2. Not enough oil in the engine. | Add oil. |
| | 3. Defective oil pump or clogged oil circuit. | Replace or clean. |
| | 4. Sucking air from intake pipes. | Retighten or replace. |
| | 5. Use incorrect engine oil. | Change. |
| | 6. Defective cooling system. | See radiator section. |
| | **Lean fuel/air mixture** | |
| | 1. Short-circuited intake air pressure sensor/lead wire. | Repair or replace. |
| | 2. Short-circuited intake air temp. sensor/lead wire. | Repair or replace. |
| | 3. Sucking air from intake pipe joint. | Clean or replace. |
| | 4. Defective fuel injector. | Repair or replace. |
| | 5. Defective engine coolant temp. sensor. | Replace. |
| | **The other factors** | |
| | 1. Ignition timing is too advanced due to defective timing advance system (engine coolant temp. sensor, gear position sensor, crankshaft position sensor and ECM.) | Replace. |
| | 2. Drive chain is too tight. | Adjust. |
| Dirty or heavy exhaust smoke. | 1. Too much engine oil in the engine. | Check with inspection window drain out excess oil. |
| | 2. Worn piston rings or cylinders. | Replace. |
| | 3. Worn valve guides. | Replace. |
| | 4. Scored or scuffed cylinder walls. | Replace. |
| | 5. Worn valves stems. | Replace. |
| | 6. Defective stem seal. | Replace. |
| | 7. Worn oil ring side rails. | Replace. |
| Slipping clutch. | 1. Weakened clutch springs. | Replace. |
| | 2. Worn or distorted pressure plate. | Replace. |
| | 3. Distorted clutch plates or clutch plate. | Replace. |
| Dragging clutch. | 1. Some clutch spring weakened while others are not. | Replace. |
| | 2. Distorted pressure plate or clutch plate. | Replace. |
| Transmission will not shift. | 1. Broken gearshift cam. | Replace. |
| | 2. Distorted gearshift forks. | Replace. |
| | 3. Worn gearshift pawl. | Replace. |
| Transmission will not shift back. | 1. Broken return spring on shift shaft. | Replace. |
| | 2. Rubbing or stickly shift shaft. | Repair or replace. |
| | 3. Distorted or worn gearshift forks. | Replace. |
| Transmission jumps out of gear. | 1. Worn shifting gears on driveshaft or countershaft. | Replace. |
| | 2. Distorted or worn gearshift forks. | Replace. |
| | 3. Weakened stopper spring on gearshift stopper. | Replace. |
| | 4. Worn gearshift cam plate. | Replace. |

RADIATOR (COOLING SYSTEM)

| Complaint | Symptom and possible causes | Remedy |
|---|---|---|
| **Engine overheats.** | 1. Not enough engine coolant. | Add coolant. |
| | 2. Clogged with dirt or trashes radiator core. | Clean. |
| | 3. Faulty cooling fan. | Repair or replace. |
| | 4. Defective cooling fan thermo-switch. | Replace. |
| | 5. Clogged water passage. | Clean. |
| | 6. Air trapped in the cooling circuit. | Bleed out air. |
| | 7. Defective water pump. | Replace. |
| | 8. Use incorrect coolant. | Replace. |
| | 9. Defective thermostat. | Replace. |
| **Engine overcools.** | 1. Defective cooling fan thermo-switch. | Replace. |
| | 2. Extremely cold weather. | Put on the radiator cover. |
| | 3. Defective thermostat. | Replace. |

## CHASSIS

| Complaint | Symptom and possible causes | Remedy |
|---|---|---|
| Heavy steering. | 1. Overtightened steering stem nut.<br>2. Broken bearing in steering stem.<br>3. Distorted steering stem.<br>4. Not enough pressure in tires. | Adjust.<br>Replace.<br>Replace.<br>Adjust. |
| Wobbly handlebars. | 1. Loss of balance between right and left front forks.<br>2. Distorted front fork.<br>3. Distorted front axle or crooked tire.<br>4. Loose steering stem nut.<br>5. Worn or incorrect tire or wrong tire pressure.<br>6. Worn bearing/race in steering stem. | Replace.<br>Repair or replace.<br>Replace.<br>Adjust.<br>Adjust or replace.<br>Replace. |
| Wobbly front wheel. | 1. Distorted wheel rim.<br>2. Worn front wheel bearings.<br>3. Defective or incorrect tire.<br>4. Loose axle or axle pinch bolt.<br>5. Incorrect front fork oil level. | Replace.<br>Replace.<br>Replace.<br>Retighten.<br>Adjust. |
| Front suspension too soft. | 1. Weakened springs.<br>2. Not enough fork oil.<br>3. Wrong weight fork oil.<br>4. Improperly set front fork spring adjuster.<br>5. Improperly set front fork damping force adjuster. | Replace.<br>Replenish.<br>Replace.<br>Adjust.<br>Adjust. |
| Front suspension too stiff. | 1. Too viscous fork oil.<br>2. Too much fork oil.<br>3. Improperly set front fork spring adjuster.<br>4. Improperly set front fork damping force adjuster.<br>5. Bent front axle. | Replace.<br>Drain excess oil.<br>Adjust.<br>Adjust.<br>Replace. |
| Noisy front suspension. | 1. Not enough fork oil.<br>2. Loose bolts on suspension. | Replenish.<br>Retighten. |
| Wobbly rear wheel. | 1. Distorted wheel rim.<br>2. Worn rear wheel bearing or swingarm bearings.<br>3. Defective or incorrect tire.<br>4. Worn swingarm and rear suspension bearings.<br>5. Loose nuts or bolts on rear suspensions. | Replace.<br>Replace.<br>Replace.<br>Replace.<br>Retighten. |
| Rear suspension too soft. | 1. Weakened spring of shock absorber.<br>2. Leakage oil or gas of shock absorber.<br>3. Improperly set rear spring unit adjuster.<br>4. Improperly set rear suspension damping force adjuster. | Replace.<br>Replace.<br>Adjust.<br>Adjust. |
| Rear suspension too stiff. | 1. Bent shock absorber shaft.<br>2. Bent swingarm.<br>3. Worn swingarm and rear suspension bearings.<br>4. Improperly set rear suspension adjuster.<br>5. Improperly set rear suspension damping force adjuster. | Replace.<br>Replace.<br>Replace.<br>Adjust.<br>Adjust. |
| Noisy rear suspension. | 1. Loose nuts or bolts on rear suspension.<br>2. Worn swingarm and suspension bearings. | Retighten.<br>Replace. |

## BRAKES

| Complaint | Symptom and possible causes | Remedy |
|---|---|---|
| Insufficient brake power. | 1. Leakage of brake fluid from hydraulic system.<br>2. Worn pads.<br>3. Oil adhesion of engaging surface of pads/shoe.<br>4. Worn disc.<br>5. Air in hydraulic system.<br>6. Not enough brake fluid in the reservoir. | Repair or replace.<br>Replace.<br>Clean disc and pads.<br>Replace.<br>Bleed air.<br>Replenish. |
| Brake squeaking. | 1. Carbon adhesion on pad surface.<br>2. Tilted pad.<br>3. Damaged wheel bearing.<br>4. Loosen front-wheel axle or rear-wheel axle.<br>5. Worn pads.<br>6. Foreign material in brake fluid.<br>7. Clogged return port of master cylinder. | Repair surface with sandpaper.<br>Modify pad fitting or replace.<br>Replace.<br>Tighten to specified torque.<br>Replace.<br>Replace brake fluid.<br>Disassemble and clean master cylinder. |
| Excessive brake lever stroke. | 1. Air in hydraulic system.<br>2. Insufficient brake fluid.<br>3. Improper quality of brake fluid. | Bleed air.<br>Replenish fluid to specified level; bleed air.<br>Replace with correct fluid. |
| Leakage of brake fluid | 1. Insufficient tightening of connection joints.<br>2. Cracked hose.<br>3. Worn piston and/or cup. | Tighten to specified torque.<br>Replace.<br>Replace piston and/or cup. |
| Brake drags. | 1. Rusty part.<br>2. Insufficient brake lever or brake pedal pivot lubrication. | Clean and lubricate.<br>Lubricate. |

## ELECTRICAL

| Complaint | Symptom and possible causes | Remedy |
|---|---|---|
| No sparking or poor sparking. | 1. Defective ignition coil/plug cap or camshaft position sensor.<br>2. Defective spark plugs.<br>3. Defective crankshaft position sensor.<br>4. Defective ECM.<br>5. Defective tip over sensor.<br>6. Open-circuited wiring connections. | Replace.<br>Replace.<br>Replace.<br>Replace.<br>Replace.<br>Check and repair. |
| Spark plug soon become fouled with carbon. | 1. Mixture too rich.<br>2. Idling speed set too high.<br>3. Incorrect gasoline.<br>4. Dirty element in air cleaner.<br>5. Too cold spark plugs. | Consult FI system.<br>Adjust fast idle or throttle stop screw.<br>Change.<br>Clean or replace.<br>Replace with hot type plugs. |
| Spark plugs become fouled too soon. | 1. Worn piston rings.<br>2. Worn piston or cylinders.<br>3. Excessive clearance of valve stems in valve guides.<br>4. Worn stem oil seal. | Replace.<br>Replace.<br>Replace.<br>Replace. |
| Spark plug electrodes overheat or burn. | 1. Too hot spark plugs.<br>2. Overheated the engine.<br>3. Loose spark plugs.<br>4. Too lean mixture. | Replace with cold type plugs.<br>Tune up.<br>Retighten.<br>Consult FI system. |
| Generator does not charge. | 1. Open or short lead wires, or loose lead connections.<br>2. Shorted, grounded or open generator coils.<br>3. Shorted or panctured regulator/rectifiers. | Repair or replace or retighten.<br>Replace.<br>Replace. |
| Generator does charge, but charging rate is below the specification. | 1. Lead wires tend to get shorted or open-circuited or loosely connected at terminals.<br>2. Grounded or open-circuited stator coils or generator.<br>3. Defective regulator/rectifier.<br>4. Defective cell plates in the battery. | Repair or retighten.<br>Replace.<br>Replace.<br>Replace the battery. |
| Generator overcharges. | 1. Internal short-circuit in the battery.<br>2. Damaged or defective regulator/rectifier.<br>3. Poorly grounded regulator/rectifier. | Replace the battery.<br>Replace.<br>Repair, replace, or connect properly. |
| Unstable charging. | 1. Lead wire insulation frayed due to vibration, resulting in intermittent shorting.<br>2. Internally shorted generator.<br>3. Defective regulator/rectifier. | Repair or replace.<br>Replace.<br>Replace. |
| Starter button is not effective. | 1. Run down battery.<br>2. Defective switch contacts.<br>3. Not seating properly brushes on commutator in starter motor.<br>4. Defective starter relay/starter interlock switch.<br>5. Defective main fuse. | Repair or replace.<br>Replace.<br>Repair or replace.<br>Replace.<br>Replace. |

## BATTERY

| Complaint | Symptom and possible causes | Remedy |
|---|---|---|
| "Sulfation", acidic white powdery substance or spots on surface of cell plates. | 1. Cracked battery case.<br>2. Battery has been left in a run-down condition for a long time. | Replace the battery.<br>Replace the battery. |
| Battery runs down quickly. | 1. Not correct the charging system. | Check the generator, regulator/rectifier and circuit connections and make necessary adjustments to obtain specified charging operation. |
| | 2. Cell plates have lost much of their active material as a result of overcharging. | Replace the battery, and correct the charging system. |
| | 3. A short-circuit condition exists within the battery. | Replace the battery. |
| | 4. Too low battery voltage. | Recharge the battery fully. |
| | 5. Too old battery. | Replace the battery. |
| Battery "sulfation". | 1. Incorrect charging rate.<br>(When not in use batteries should be checked at least once a month to avoid sulfation.) | Replace the battery. |
| | 2. The battery was left un used in a cold climate for too long. | Replace the battery if badly sulfated. |
| Battery discharges too rapidly. | 1. Dirty container top and sides. | Clean. |

# WIRING HARNESS, CABLE AND HOSE ROUTING

## WIRING HARNESS ROUTING

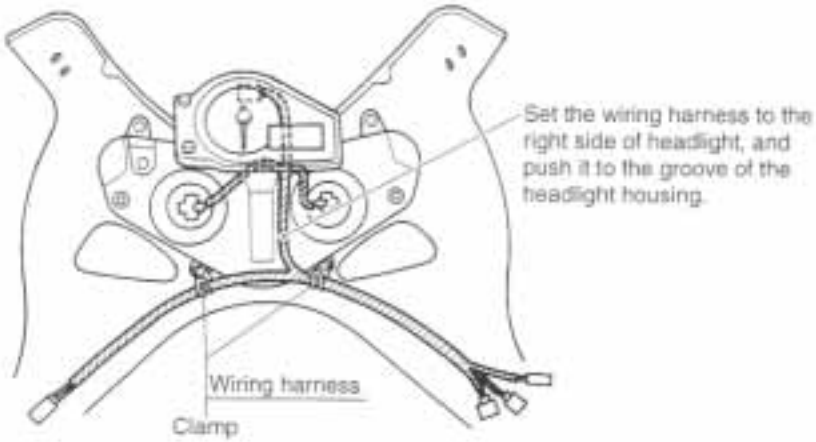


**INSIDE OF THE BODY COWLING**

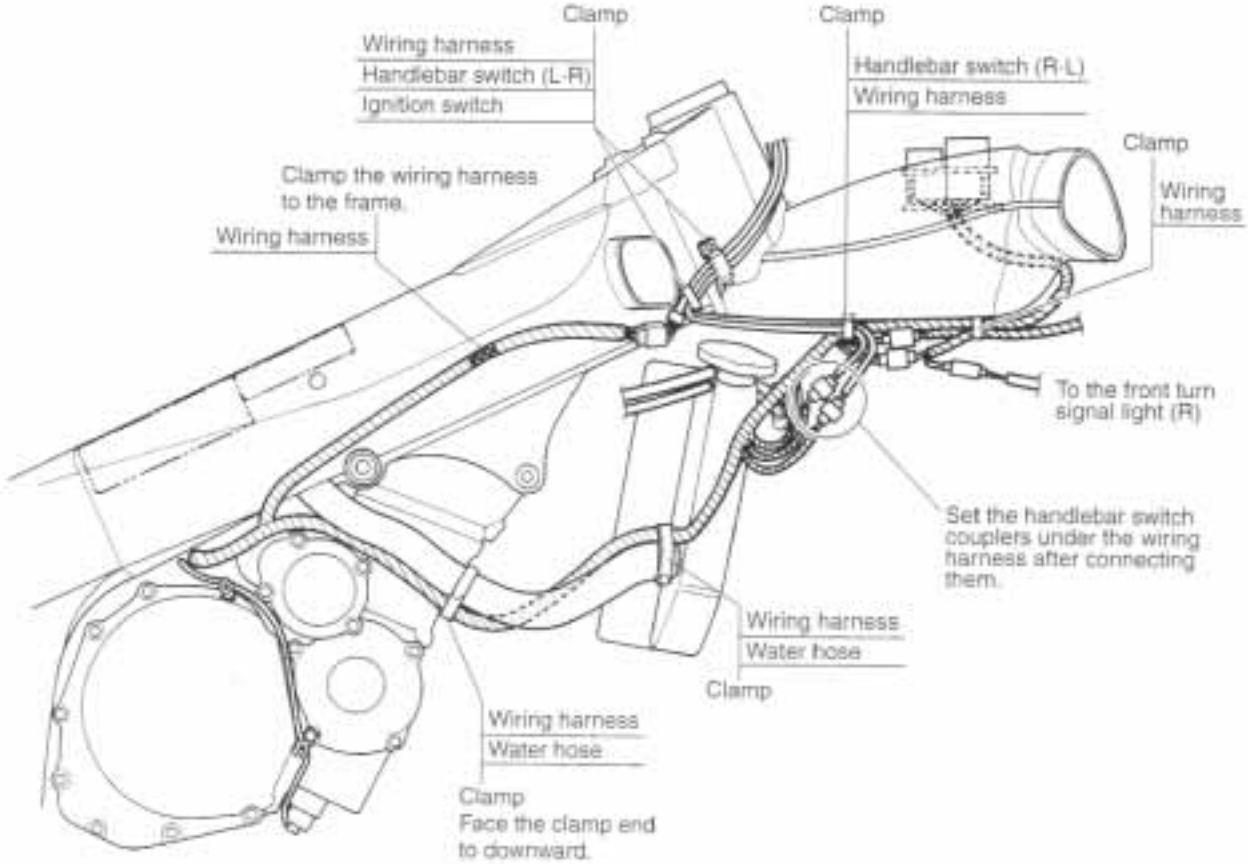

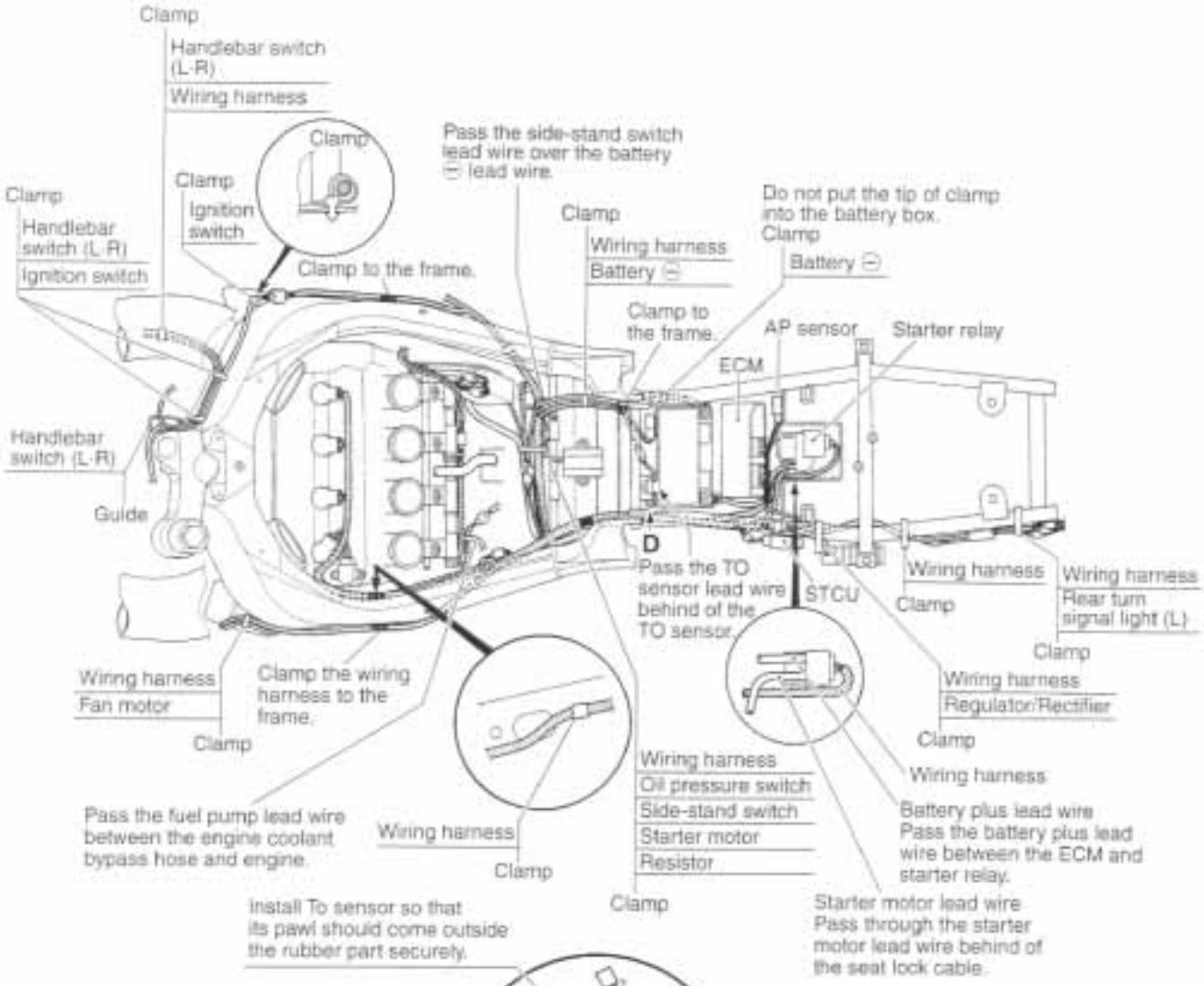
Clamp
Handlebar switch (L·R)
Wiring harness
Clamp
Clamp
Ignition switch
Clamp
Handlebar switch (L·R)
Ignition switch
Clamp to the frame.
Pass the side-stand switch lead wire over the battery ⊖ lead wire.
Clamp
Wiring harness
Battery ⊖
Do not put the tip of clamp into the battery box.
Clamp
Battery ⊖
Clamp to the frame.
AP sensor
Starter relay
ECM
Handlebar switch (L·R)
Guide
D
Pass the TO sensor lead wire behind of the TO sensor.
STCU
Wiring harness
Clamp
Wiring harness
Rear turn signal light (L)
Clamp
Wiring harness
Fan motor
Clamp
Clamp the wiring harness to the frame.
Wiring harness
Regulator/Rectifier
Clamp
Wiring harness
Wiring harness
Oil pressure switch
Side-stand switch
Starter motor
Resistor
Clamp
Pass the fuel pump lead wire between the engine coolant bypass hose and engine.
Wiring harness
Clamp
Battery plus lead wire
Pass the battery plus lead wire between the ECM and starter relay.
Starter motor lead wire
Pass through the starter motor lead wire behind of the seat lock cable.

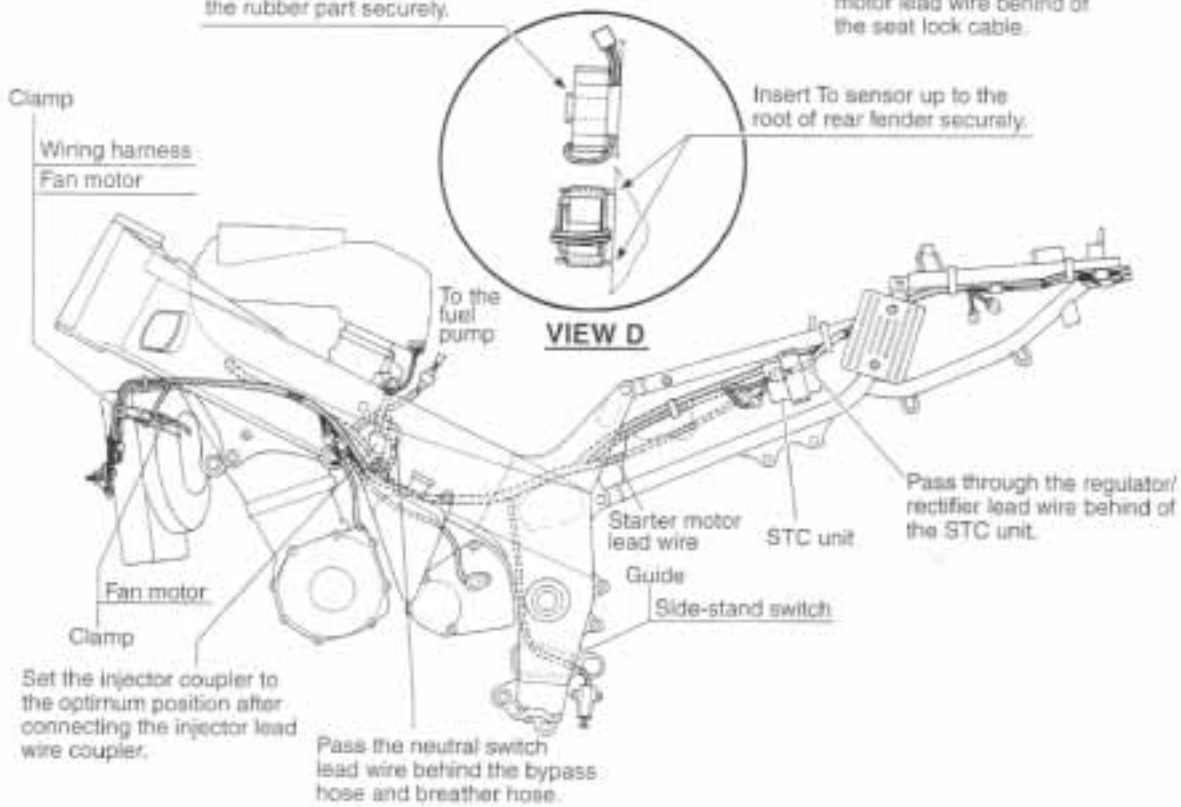
Install To sensor so that its pawl should come outside the rubber part securely.
Insert To sensor up to the root of rear fender securely.
Clamp
Wiring harness
Fan motor
To the fuel pump
VIEW D
Pass through the regulator/ rectifier lead wire behind of the STC unit.
Starter motor lead wire
STC unit
Guide
Side-stand switch
Fan motor
Clamp
Set the injector coupler to the optimum position after connecting the injector lead wire coupler.
Pass the neutral switch lead wire behind the bypass hose and breather hose.

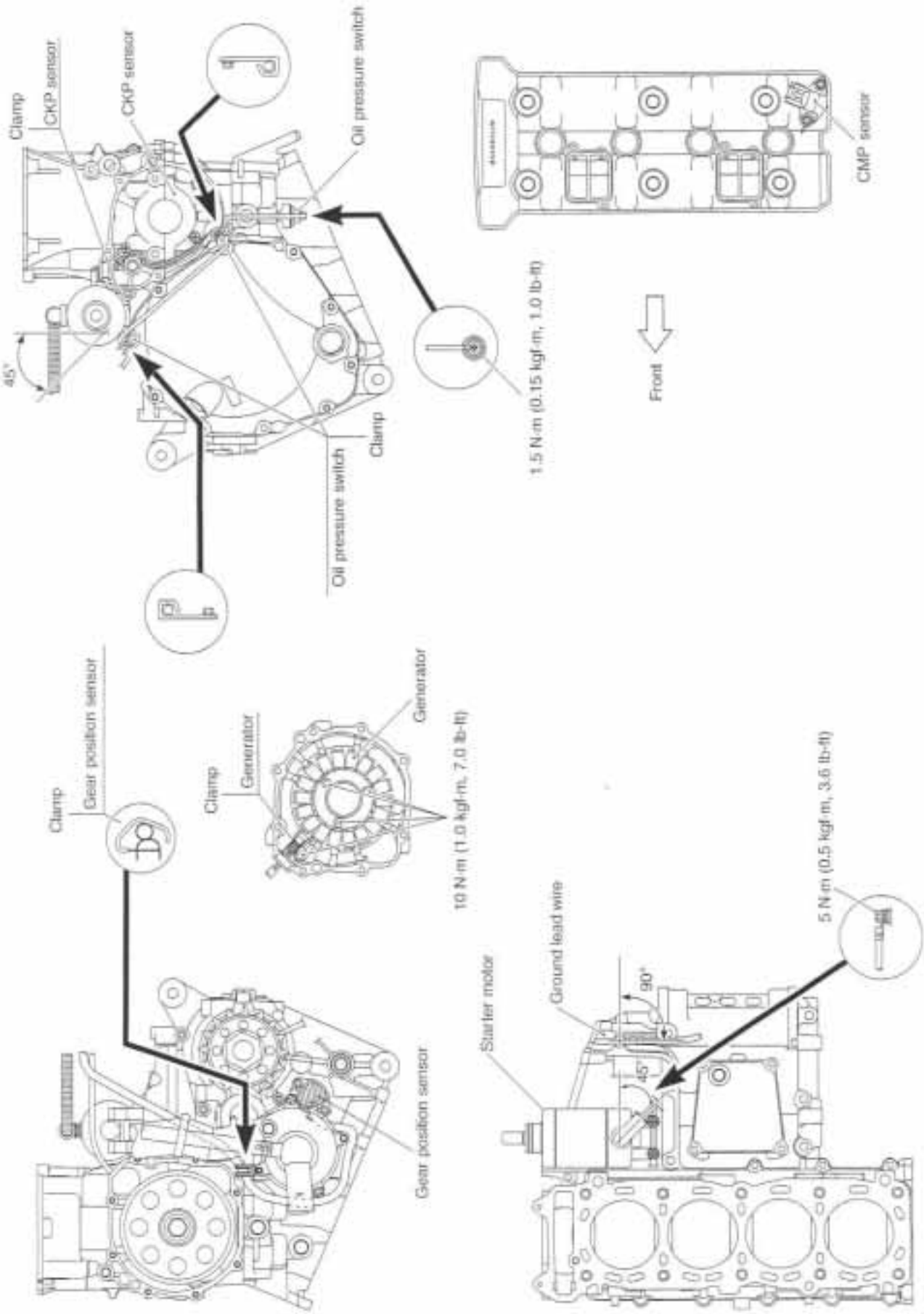
Clamp
CKP sensor
CKP sensor
Oil pressure switch
45°
Oil pressure switch
Clamp
1.5 N·m (0.15 kgf·m, 1.0 lb-ft)
Front
CMP sensor
Clamp
Gear position sensor
Clamp
Generator
Generator
10 N·m (1.0 kgf·m, 7.0 lb-ft)
Gear position sensor
Starter motor
Ground lead wire
90°
45°
5 N·m (0.5 kgf·m, 3.6 lb-ft)

## CABLE ROUTING

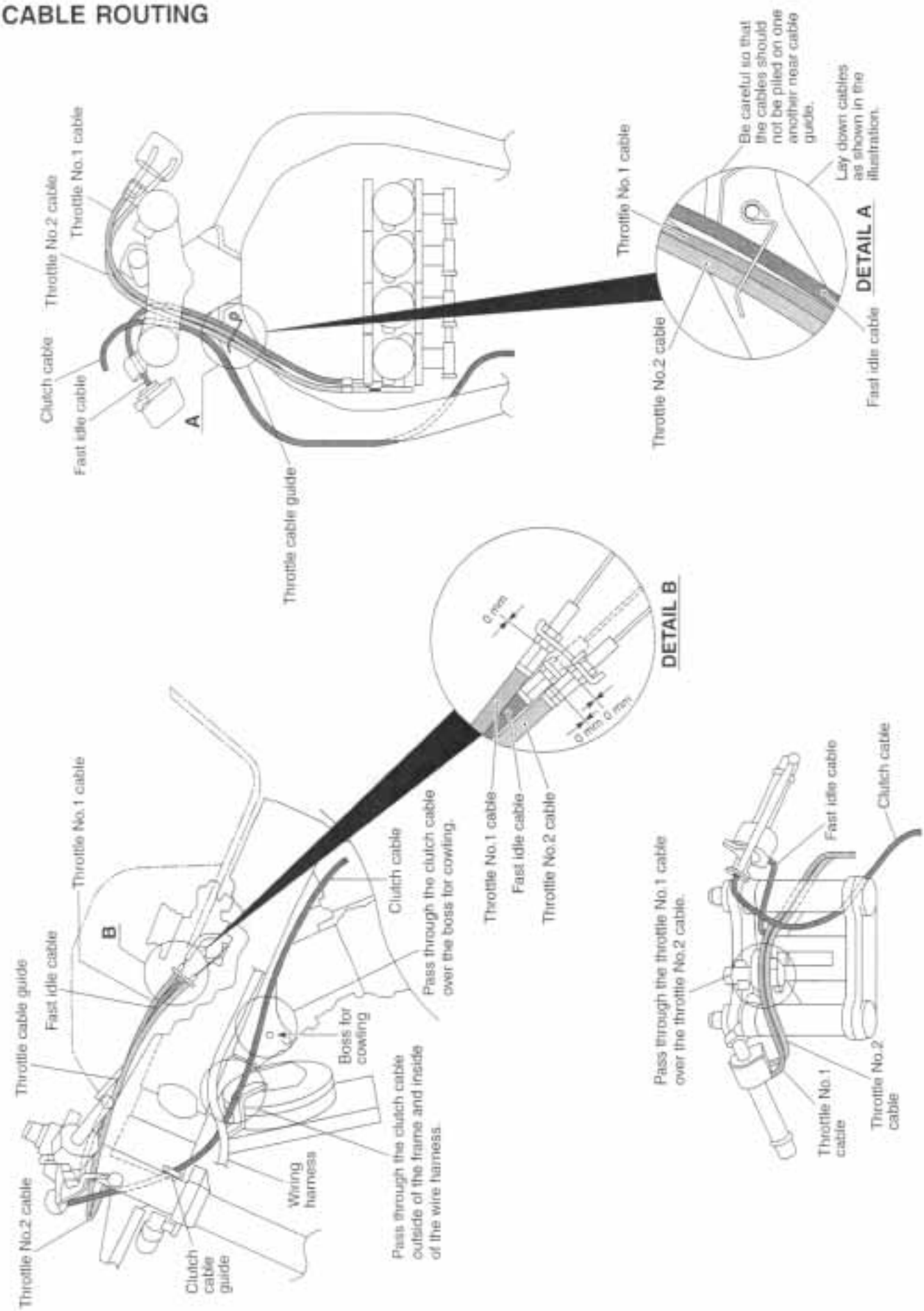

## FUEL TANK DRAIN HOSE ROUTING

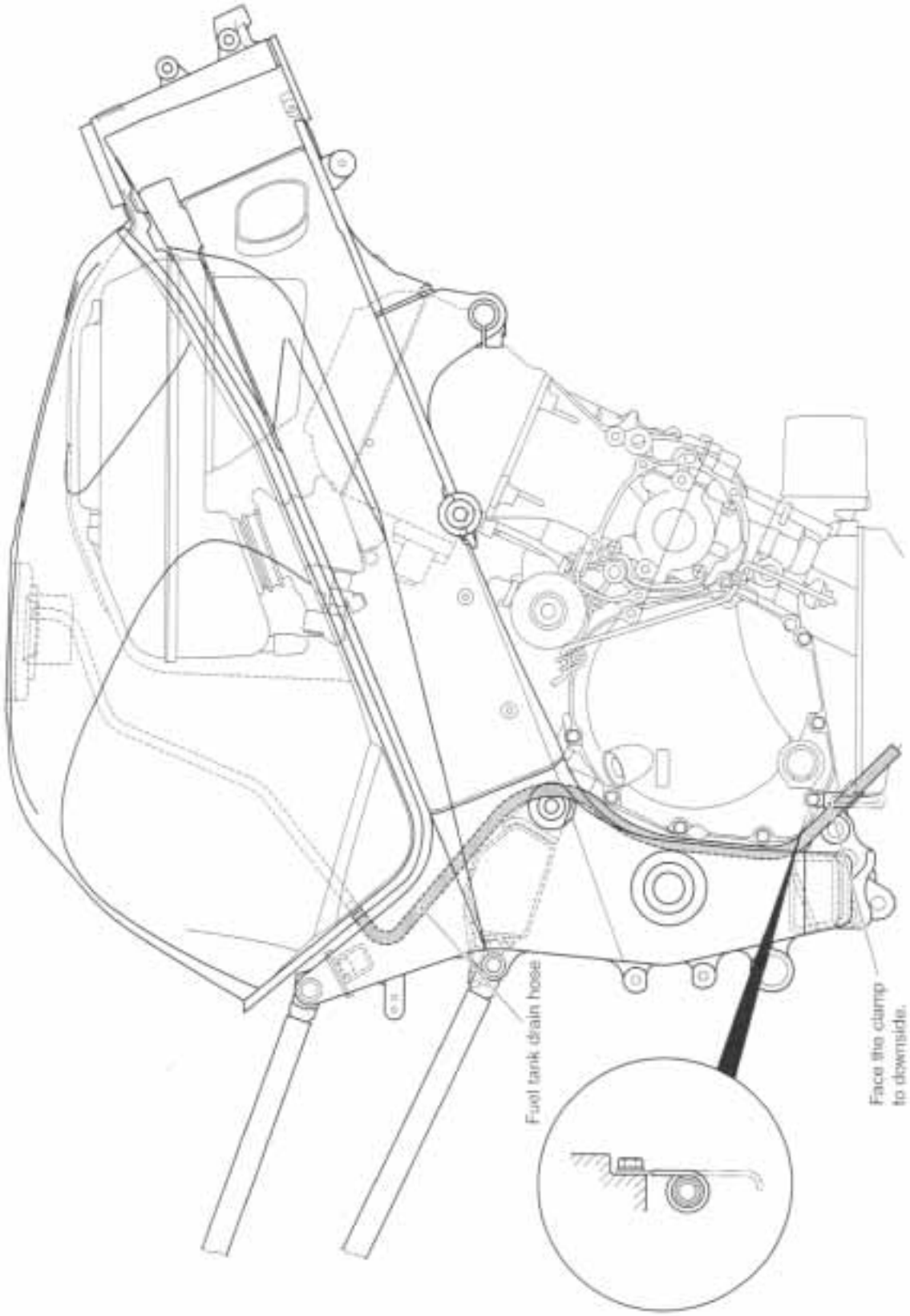

# COOLING SYSTEM HOSE ROUTING

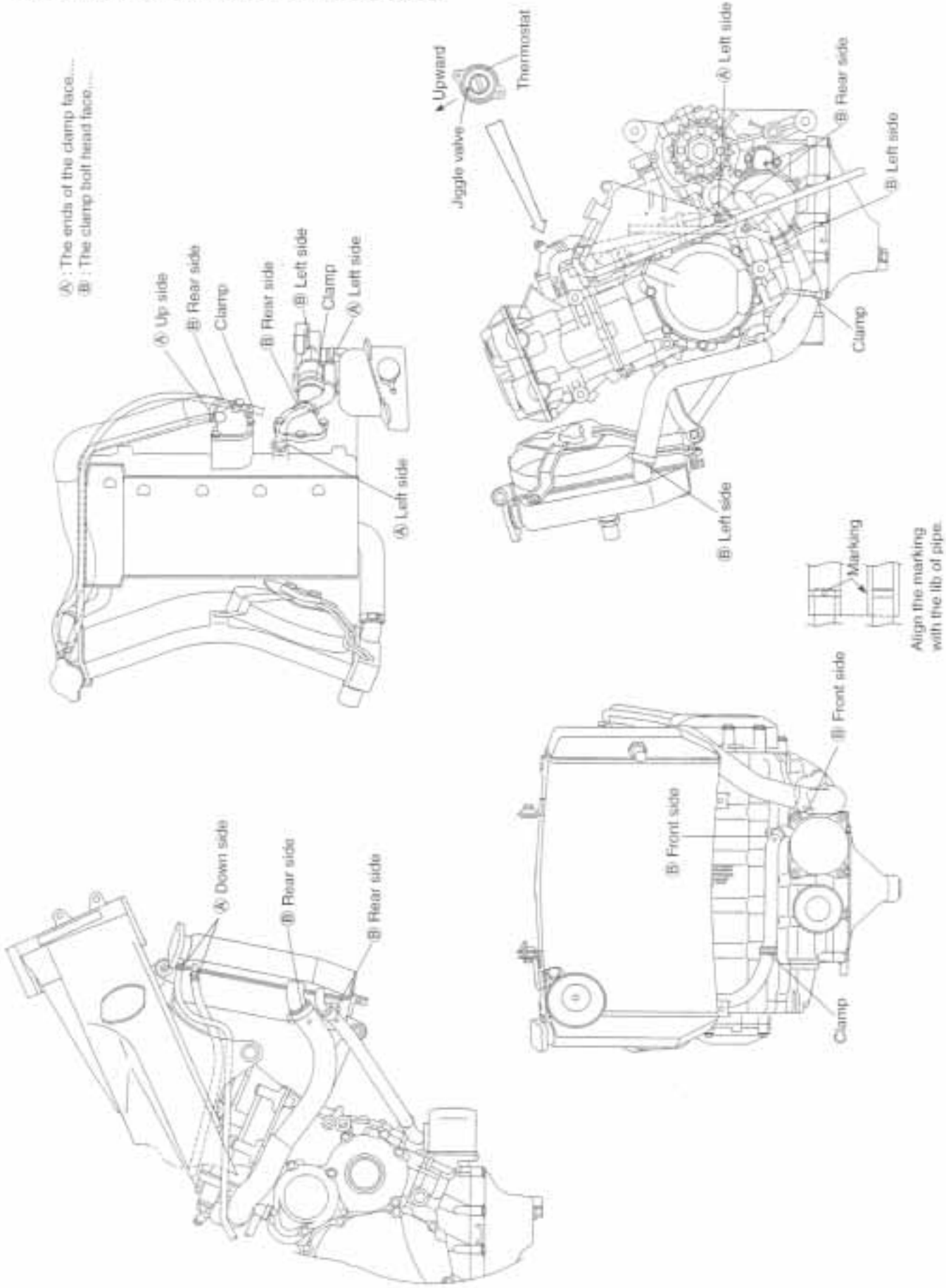

## FRONT BRAKE HOSE ROUTING

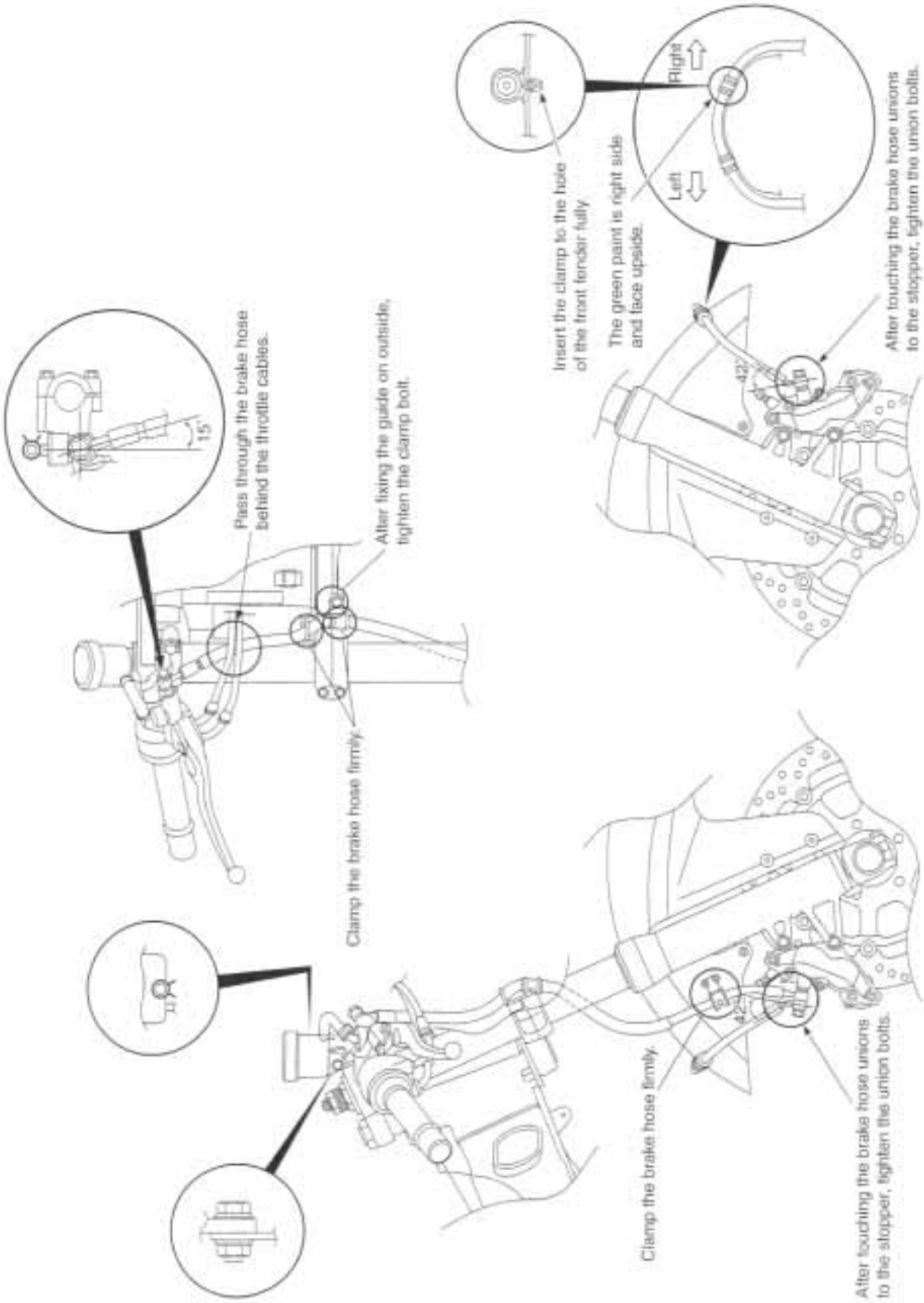

## REAR BRAKE HOSE ROUTING

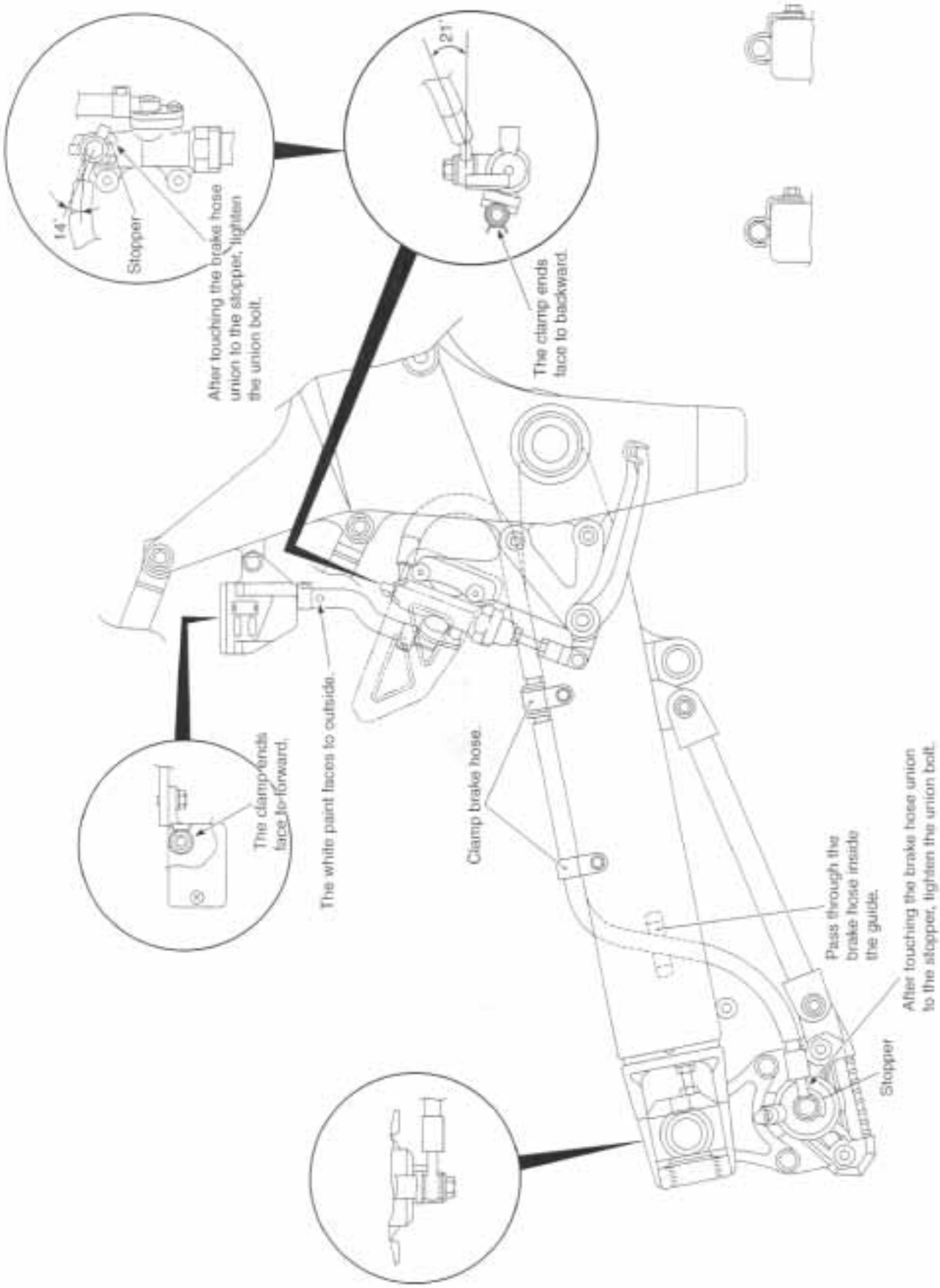

## PAIR (AIR SUPPLY) SYSTEM HOSE ROUTING

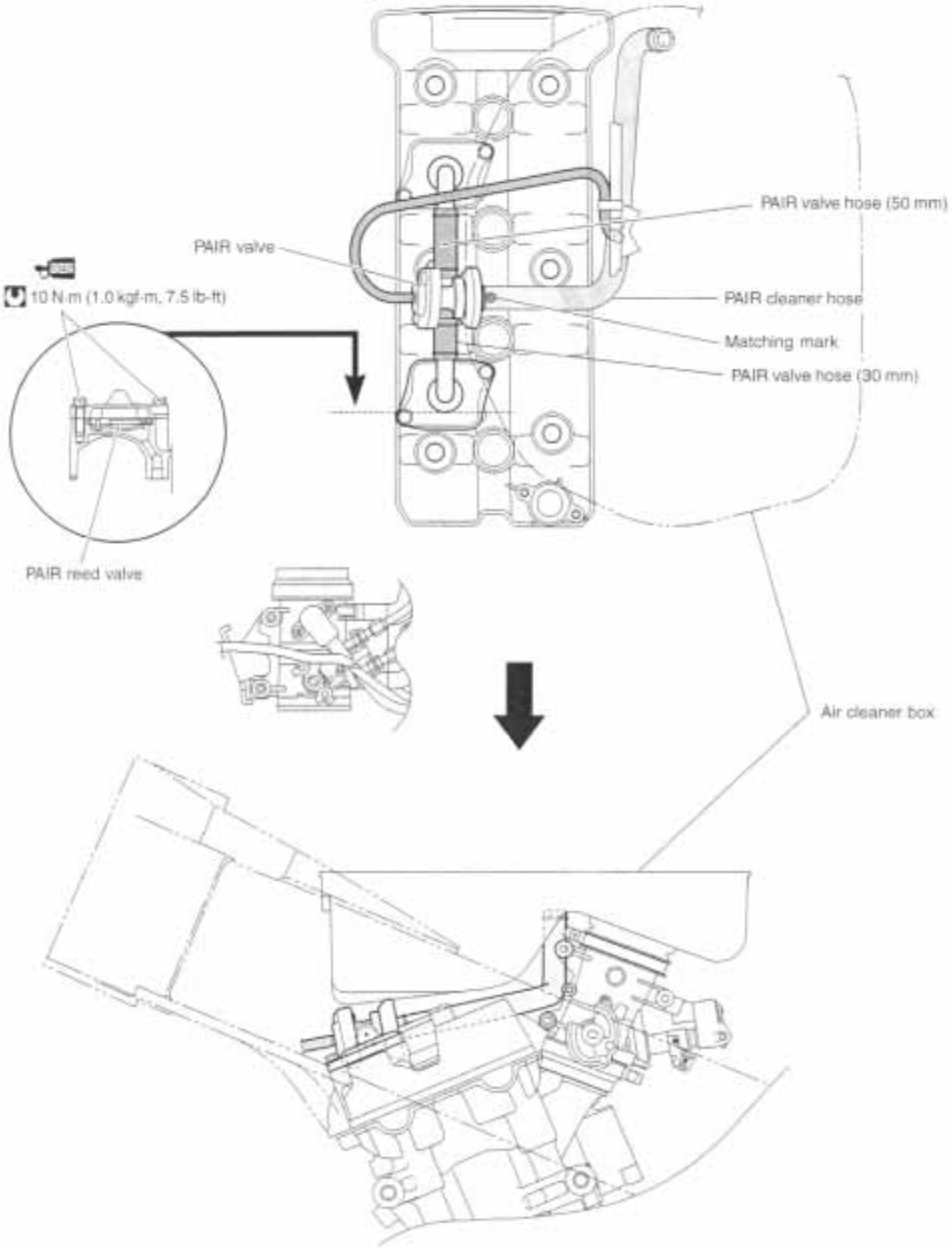

# FUEL TANK SET-UP

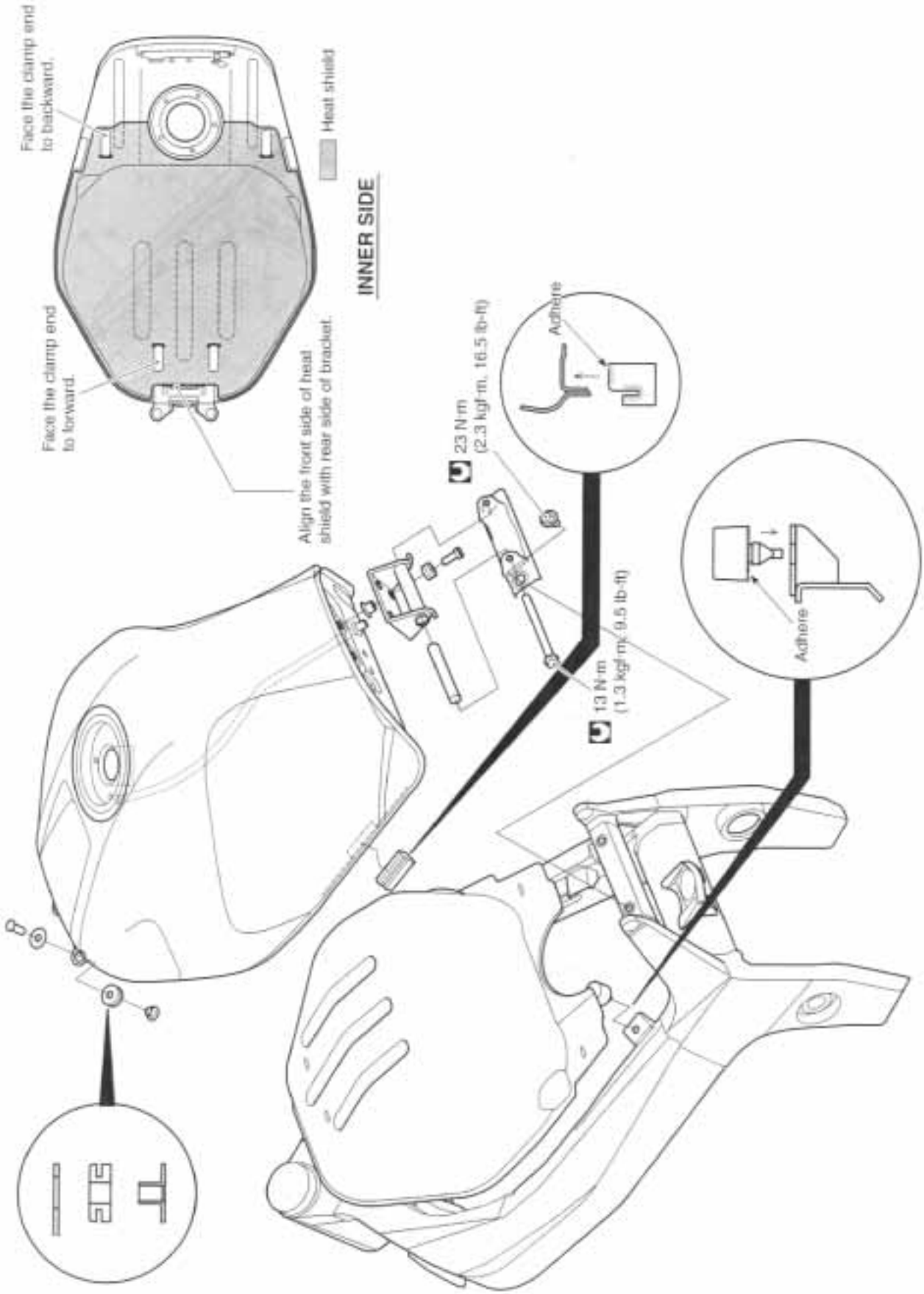

# COWLING SET-UP

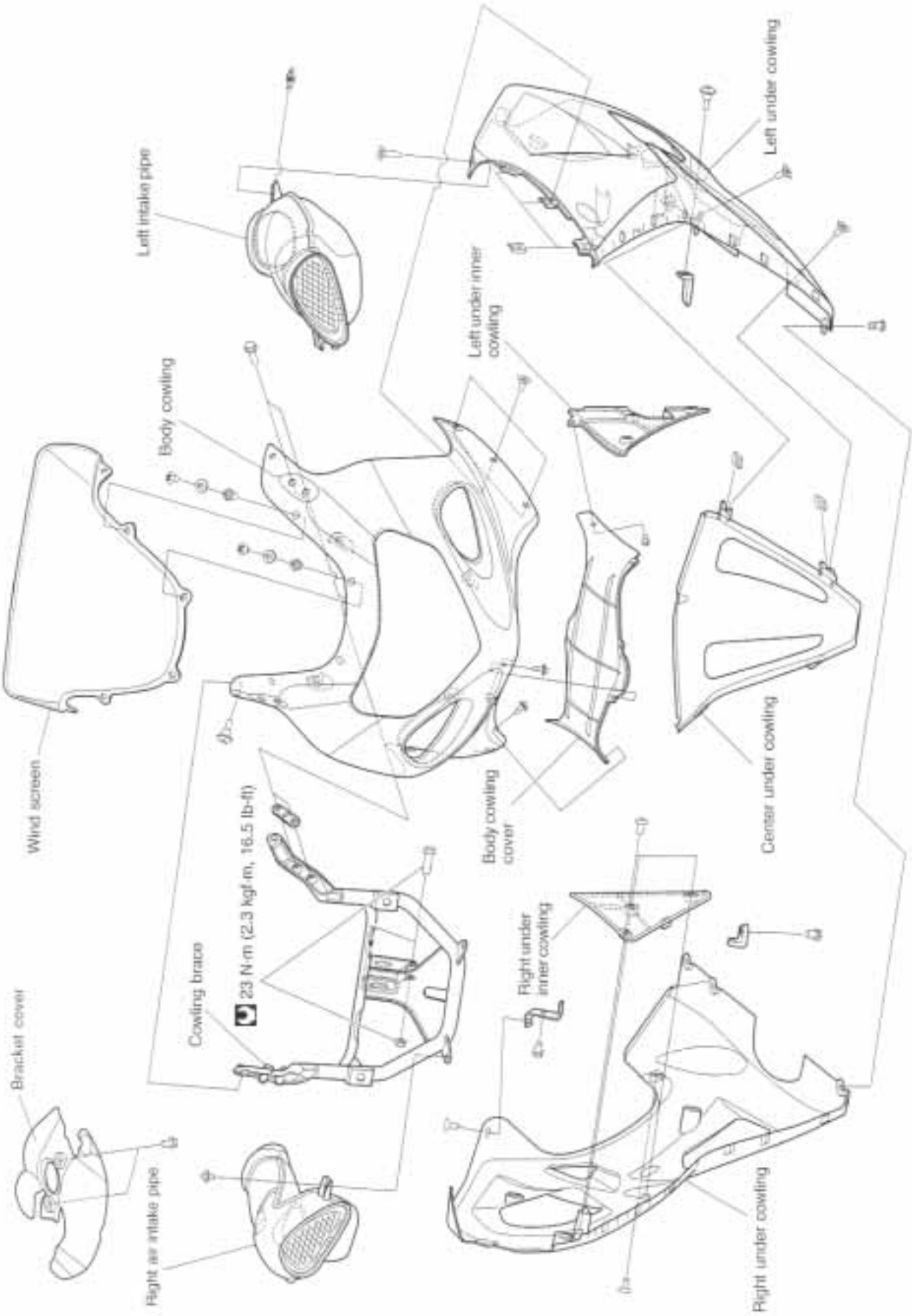

## FRAME COVER SET-UP

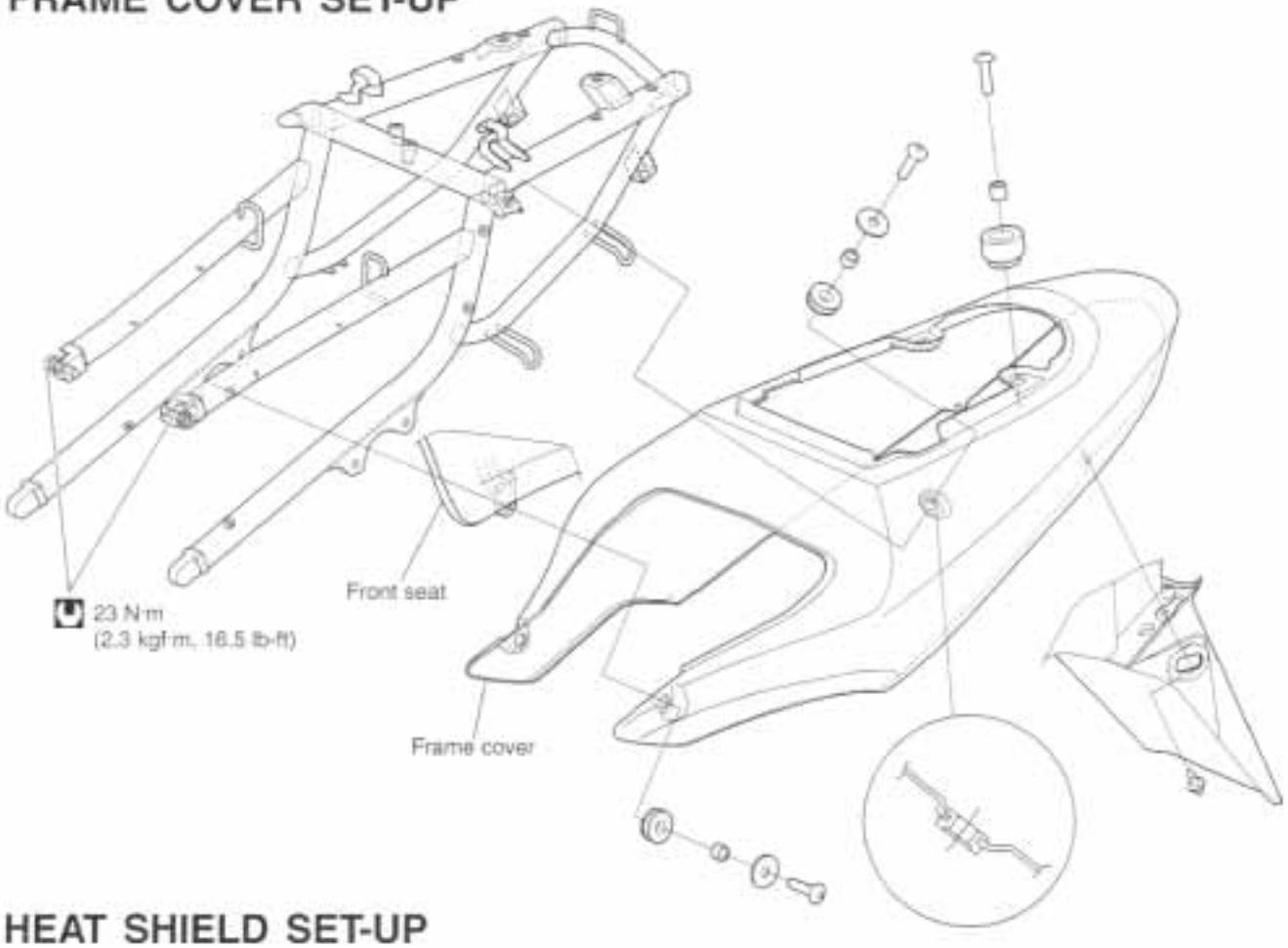


## HEAT SHIELD SET-UP

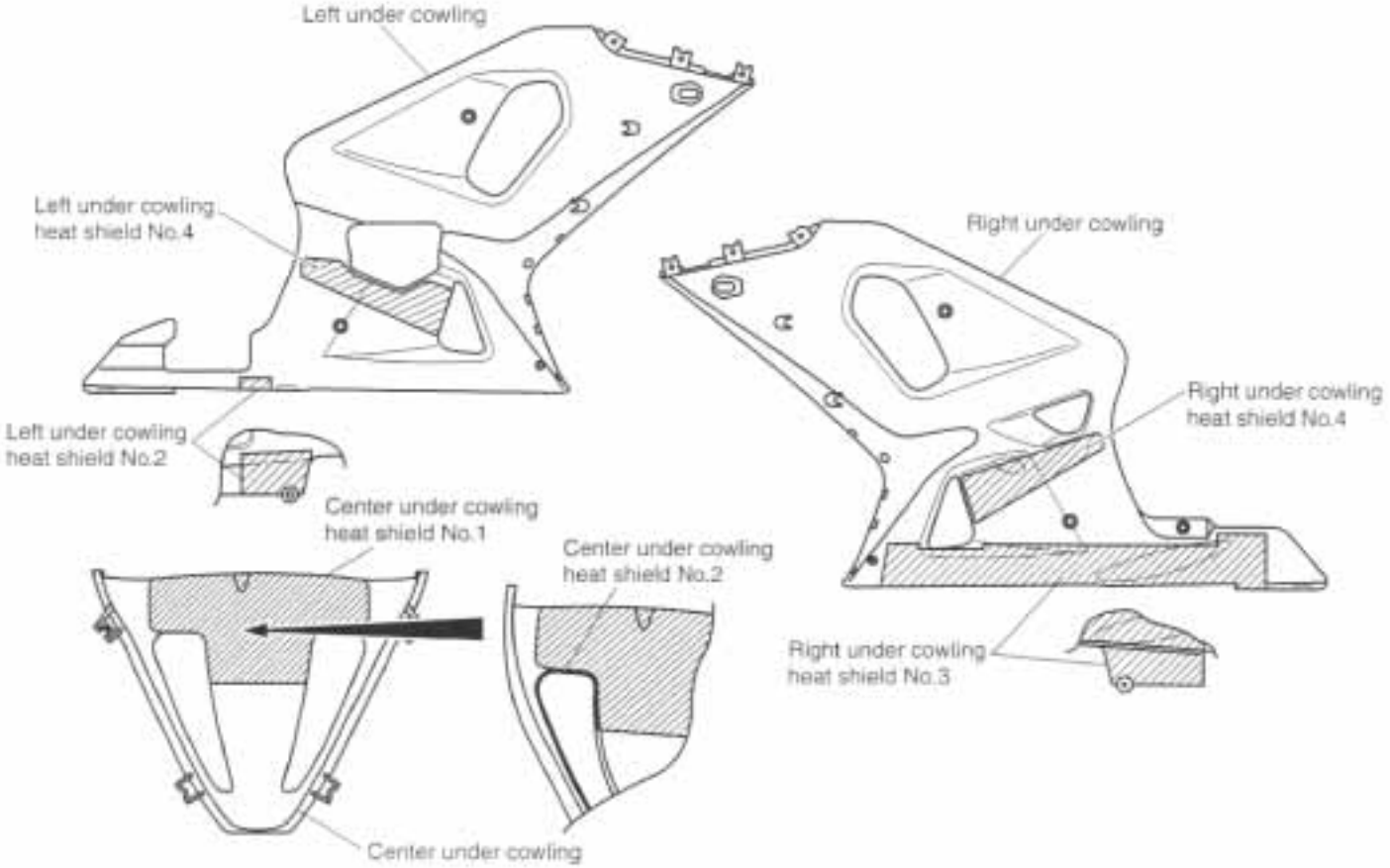

## SIDE-STAND SET-UP

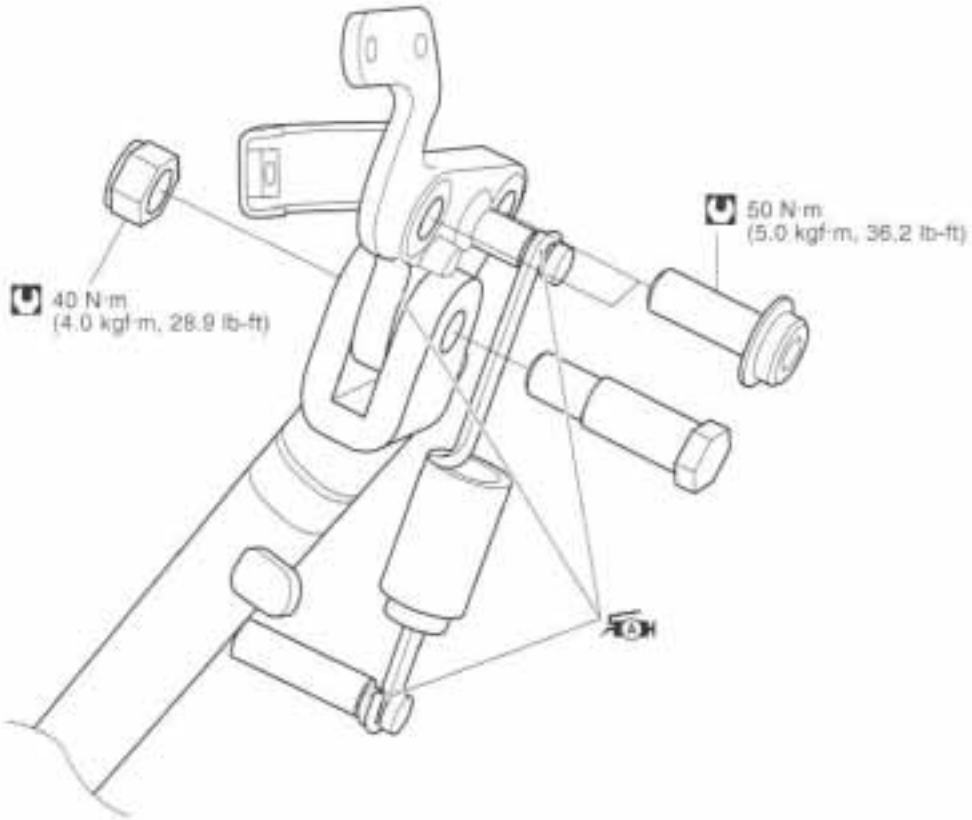


## GEARSHIFT PEDAL SET-UP

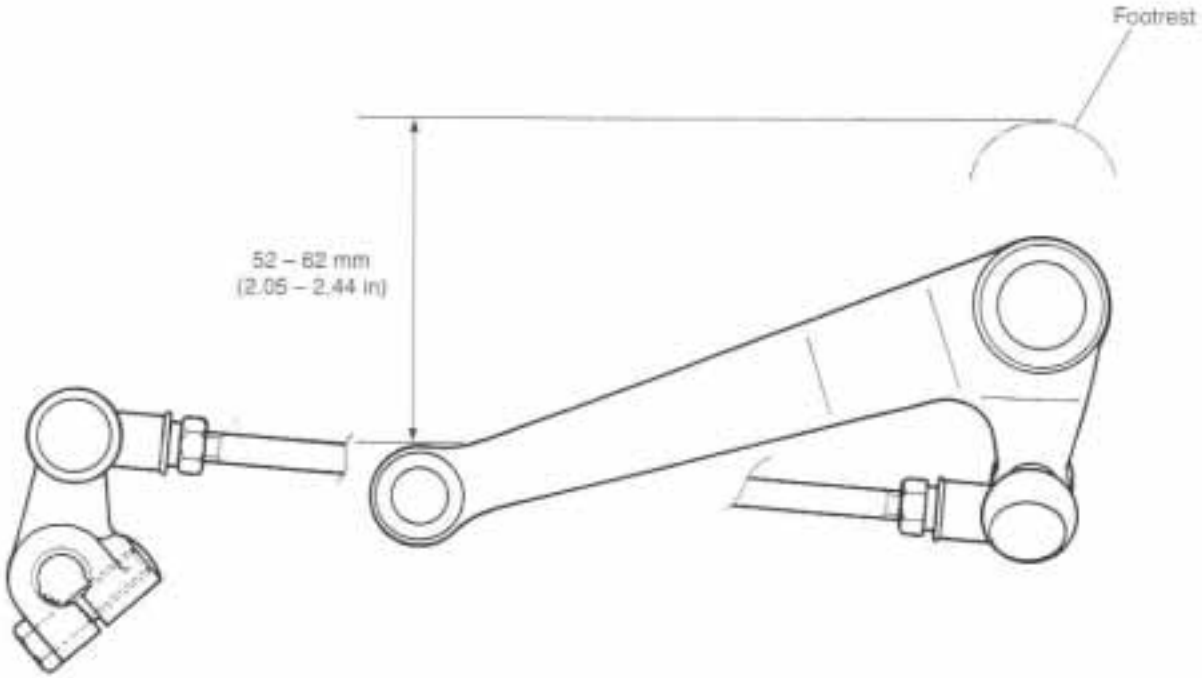

# SPECIAL TOOLS

| | | | | |
|---|---|---|---|---|
|  09900-06104 Snap ring pliers |  09900-06107 Snap ring pliers |  09900-06108 Snap ring pliers |  09900-20101 09900-20102 Vernier calipers |  09900-20202 Micrometer (25 – 50 mm) |
|  09900-20203 Micrometer (50 – 75 mm) |  09900-20205 Micrometer (0 – 25 mm) |  09900-20508 Cylinder gauge set |  09900-20602 Dial gauge (1/1000 mm, 1 mm) |  09900-20605 Dial calipers (1/100 mm, 10 – 34 mm) |
|  09900-20607 Dial gauge (1/100 mm, 10 mm) | 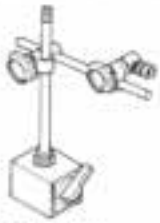 09900-20701 Magnetic stand |  09900-20803 09900-20806 Thickness gauge |  09900-20805 Tire depth gauge |  09900-21304 V-block (100 mm) |
|  09900-22301 09900-22302 Plastigauge |  09900-22401 (10 – 18 mm) 09900-22403 (18 – 35 mm) Small bore gauge |  09900-25008 Multi circuit tester set |  09910-20115 Conrod holder |  09913-10750 Compression gauge adapter |
|  09913-13121 Carburetor balancer set |  09913-50121 Oil seal remover |  09913-70210 Bearing installer set |  09915-40610 Oil filter wrench |  09915-64510 Compression gauge |

| | | | | |
|---|---|---|---|---|
|  09915-74520 Oil pressure gauge hose |  09915-74540 Oil pressure gauge adaptor |  09915-77330 Meter (for high pressure) |  09916-10911 Valve lapper set |  09916-14510 Valve spring compressor |
|  09916-14521 Valve spring compressor attachment | 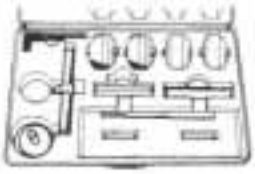 09916-21111 Valve seat cutter set |  09916-20630 Valve seat cutter head (N-126) |  09916-20650 Solid pilot (N-100 -4.0) |  09916-34542 Reamer handle |
|  09916-33310 Valve guide reamer (4.0 mm) |  09916-49030 Valve guide reamer (9.3 mm) |  09916-53310 Valve guide remover/installer |  09916-43220 Attachment |  09916-84511 Tweezers |
|  09917-47010 Vacuum pump gauge |  09920-34830 Starter clutch holder |  09920-53740 Clutch sleeve hub holder |  09921-20220 Bearing remover set |  09922-22711 Drive chain cutting and joining tool |
|  09924-84521 Bearing installer set |  09916-14530 Valve spring compressor attachment |  09925-18011 Steering bearing installer |  09930-11920 Torx bit JT40H |  09930-11940 Bit holder |

| | | | | |
|---|---|---|---|---|
|  09930-11960 Torx wrench |  09930-34980 Rotor remover |  09930-44520 Rotor holder |  09930-82710 Mode selection switch |  09940-14911 Steering stem nut wrench |
|  09940-14960 Steering nut wrench socket |  09940-14970 Swingarm pivot shaft lock nut socket wrench |  09940-14990 Engine mounting thrust adjuster socket wrench |  09940-30221 Front fork assembling tool |  09940-40211 Fuel pressure gauge adaptor |
|  09940-40220 Fuel pressure gauge hose attachment |  09940-50120 Front fork inner rod holder |  09940-92720 Spring scale |  09940-94922 Front fork spring stopper plate |  09940-94930 Front fork spacer holder |
|  09941-34513 Steering race installer |  09943-74111 Fork oil level gauge |  09944-60210 Wheel bearing remover | | |

*NOTE:*

*When order the special tool, please confirm whether it is available or not.*

# TIGHTENING TORQUE

## ENGINE

| ITEM | | N·m | kgf·m | lb-ft |
|---|---|---|---|---|
| Exhaust pipe bolt | | 23 | 2.3 | 16.5 |
| Muffler mounting nut | | 23 | 2.3 | 16.5 |
| Speed sensor rotor bolt | | 20 | 2.0 | 14.4 |
| Engine sprocket nut | | 115 | 11.5 | 83.2 |
| Engine mounting bolt and nut | (M:12) | 75 | 7.5 | 54.0 |
| | (M:10) | 55 | 5.5 | 39.8 |
| Engine mounting thrust adjuster | | 23 | 2.3 | 16.5 |
| Engine mounting thrust adjuster lock nut | | 45 | 4.5 | 32.5 |
| Engine mounting pinch bolt | | 23 | 2.3 | 16.5 |
| Cylinder head cover bolt | | 14 | 1.4 | 10.0 |
| Spark plug | | 11 | 1.1 | 8.0 |
| Cam chain guide bolt | | 10 | 1.0 | 7.0 |
| Camshaft journal holder bolt | | 10 | 1.0 | 7.0 |
| Cam chain tension adjuster cap bolt | | 23 | 2.3 | 16.5 |
| Cam chain tension adjuster mounting bolt | | 10 | 1.0 | 7.0 |
| Cylinder head side bolt | | 14 | 1.4 | 10.0 |
| Cam chain tensioner bolt | | 10 | 1.0 | 7.0 |
| Cylinder head bolt | (M:10) | 46 | 4.6 | 33.3 |
| | (M:6) | 10 | 1.0 | 7.0 |
| PAIR reed valve cover bolt | | 10 | 1.0 | 7.0 |
| Water jacket plug | | 9.5 | 0.95 | 6.9 |
| Water inlet cover bolt | | 10 | 1.0 | 7.0 |
| Clutch cover bolt | | 10 | 1.0 | 7.0 |
| Clutch sleeve hub nut | | 150 | 15.0 | 108 |
| Clutch spring set bolt | | 10 | 1.0 | 7.0 |
| Starter clutch cover bolt | | 10 | 1.0 | 7.0 |
| Starter idle gear cover bolt | | 10 | 1.0 | 7.0 |
| Valve timing inspection plug | | 11 | 1.1 | 8.0 |
| Starter clutch bolt | | 55 | 5.5 | 40.0 |
| Generator cover bolt | | 10 | 1.0 | 7.0 |
| Generator rotor bolt | | 120 | 12.0 | 88.5 |
| Generator stator set bolt | | 10 | 1.0 | 7.0 |
| Gearshift cam stopper bolt | | 10 | 1.0 | 7.0 |
| Gearshift cam stopper plate bolt | | 10 | 1.0 | 7.0 |
| Oil pressure switch | | 14 | 1.4 | 10.0 |
| Crankcase bolt | (M:6) | 11 | 1.1 | 8.0 |
| | (M:8) | 26 | 2.6 | 19.0 |
| | (M:9) | 32 | 3.2 | 23.0 |
| Oil gallery plug | (M:6) (M:10) | 11 | 1.1 | 8.0 |
| | (M:16) | 35 | 3.5 | 26.5 |
| Oil drain plug | | 23 | 2.3 | 16.5 |

| ITEM | | N·m | kgf·m | lb-ft |
|---|---|---|---|---|
| Piston cooling oil jet bolt | | 10 | 1.0 | 7.0 |
| Oil pump mounting bolt | | 10 | 1.0 | 7.0 |
| Conrod bearing cap bolt | (Initial) | 15 | 1.5 | 11.0 |
| | (Final) | 90° (¼ turn) | | |
| Bearing retainer screw | | 10 | 1.0 | 7.0 |
| Breather cover bolt | | 10 | 1.0 | 7.0 |
| Oil strainer bolt | | 10 | 1.0 | 7.0 |
| Oil pan bolt | | 10 | 1.0 | 7.0 |
| Oil cooler bolt | | 10 | 1.0 | 7.0 |

## FI SYSTEM AND INTAKE AIR SYSTEM

| ITEM | N·m | kgf·m | lb-ft |
|---|---|---|---|
| Camshaft position sensor mounting bolt | 8 | 0.8 | 6.0 |
| Intake air temperature sensor | 18 | 1.8 | 13.0 |
| Fuel delivery pipe mounting screw | 5 | 0.5 | 3.7 |
| Fuel pump mounting bolt | 10 | 1.0 | 7.0 |
| Throttle body connecting bolt | 5 | 0.5 | 3.5 |
| STVA motor yoke mounting bolt | 3.5 | 0.35 | 2.5 |
| STVA motor cover nut | 2.0 | 0.2 | 1.5 |

## COOLING SYSTEM

| ITEM | N·m | kgf·m | lb-ft |
|---|---|---|---|
| Impeller securing bolt | 8 | 0.8 | 6.0 |
| Water pump cover bolt | 6 | 0.6 | 4.5 |
| Water pump mounting bolt | 10 | 1.0 | 7.0 |
| Cooling fan thermo-switch | 17 | 1.7 | 12.5 |
| Engine coolant temperature sensor | 18 | 1.8 | 13.0 |
| Thermostat case bolt | 10 | 1.0 | 7.0 |

## CHASSIS

| ITEM | | N·m | kgf·m | lb-ft |
|---|---|---|---|---|
| Steering stem head nut | | 90 | 9.0 | 65.0 |
| Steering stem lock nut | | 80 | 8.0 | 58.0 |
| Steering damper bolt and nut | | 23 | 2.3 | 16.6 |
| Front fork upper clamp bolt | | 23 | 2.3 | 16.5 |
| Front fork lower clamp bolt | | 23 | 2.3 | 16.5 |
| Front fork cap bolt | | 35 | 3.5 | 25.5 |
| Front fork inner rod lock nut | | 20 | 2.0 | 14.5 |
| Front fork damper rod bolt | | 35 | 3.5 | 25.5 |
| Front axle | | 100 | 10.0 | 72.5 |
| Front axle pinch bolt | | 23 | 2.3 | 16.5 |
| Handlebar clamp bolt | | 23 | 2.3 | 16.5 |
| Handlebar set bolt | | 10 | 1.0 | 7.0 |
| Front brake master cylinder mounting bolt | | 10 | 1.0 | 7.0 |
| Front brake caliper mounting bolt | | 25 | 2.5 | 18.1 |
| Front brake caliper housing bolt | | 21 | 2.1 | 15.1 |
| Brake hose union bolt | | 23 | 2.3 | 16.5 |
| Clutch holder mounting bolt | | 10 | 1.0 | 7.0 |
| Air bleeder valve | | 8.0 | 0.8 | 6.0 |
| Brake disc bolt (Front) | | 23 | 2.3 | 16.5 |
| Brake disc bolt (Rear) | | 35 | 3.5 | 25.5 |
| Rear brake caliper mounting bolt | | 25 | 2.5 | 18.1 |
| Rear brake caliper housing bolt | | 30 | 3.0 | 21.5 |
| Rear brake master cylinder mounting bolt | | 10 | 1.0 | 7.0 |
| Rear brake master cylinder rod lock nut | | 18 | 1.8 | 13.0 |
| Front footrest bracket mounting bolt | | 23 | 2.3 | 16.5 |
| Swingarm pivot shaft | | 15 | 1.5 | 11.0 |
| Swingarm pivot nut | | 100 | 10.0 | 72.5 |
| Swingarm pivot lock nut | | 90 | 9.0 | 65.0 |
| Torque link nut (Front) | | 28 | 2.8 | 20.5 |
| Torque link nut (Rear) | | 34 | 3.4 | 24.6 |
| Cushion lever mounting nut | | 78 | 7.8 | 56.5 |
| Cushion rod mounting nut | | 78 | 7.8 | 56.5 |
| Rear shock absorber mounting bolt and nut (Upper and Lower) | | 50 | 5.0 | 36.0 |
| Rear axle nut | For E-03, 28, 33 | 110 | 11.0 | 79.6 |
| | For the others | 120 | 12.0 | 86.8 |
| Rear sprocket nut | | 60 | 6.0 | 43.5 |
| Side-stand mounting bracket bolt | | 50 | 5.0 | 36.0 |
| Cowling brace bolt and nut | | 23 | 2.3 | 16.5 |
| Rear shock absorber bracket nut | | 115 | 11.5 | 83.2 |
| Seat rail bolt | | 23 | 2.3 | 16.5 |

## TIGHTENING TORQUE CHART

For other bolts and nuts listed previously, refer to this chart:

| Bolt Diameter | Conventional or "4" marked bolt | | | "7" marked bolt | | |
|---|---|---|---|---|---|---|
| Ⓐ (mm) | N·m | kgf·m | lb-ft | N·m | kgf·m | lb-ft |
| 4 | 1.5 | 0.15 | 1.0 | 2.3 | 0.23 | 1.5 |
| 5 | 3 | 0.3 | 2.0 | 4.5 | 0.45 | 3.0 |
| 6 | 5.5 | 0.55 | 4.0 | 10 | 1.0 | 7.0 |
| 8 | 13 | 1.3 | 9.5 | 23 | 2.3 | 16.5 |
| 10 | 29 | 2.9 | 21.0 | 50 | 5.0 | 36.0 |
| 12 | 45 | 4.5 | 32.5 | 85 | 8.5 | 61.5 |
| 14 | 65 | 6.5 | 47.0 | 135 | 13.5 | 97.5 |
| 16 | 105 | 10.5 | 76.0 | 210 | 21.0 | 152.0 |
| 18 | 160 | 16.0 | 115.5 | 240 | 24.0 | 173.5 |

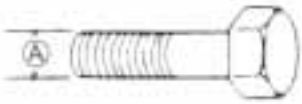


Conventional bolt

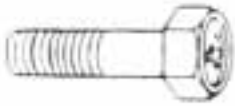


"4" marked bolt


"7" marked bolt

# SERVICE DATA

## VALVE + GUIDE

Unit: mm (in)

| ITEM | | STD/SPEC. | LIMIT |
|---|---|---|---|
| Valve diam. | IN. | 27.2 (1.07) | — |
| | EX. | 22 (0.87) | — |
| Valve clearance (when cold) | IN. | 0.10 – 0.20 (0.004 – 0.008) | — |
| | EX. | 0.20 – 0.30 (0.008 – 0.012) | — |
| Valve guide to valve stem clearance | IN. | 0.010 – 0.037 (0.0004 – 0.0015) | — |
| | EX. | 0.030 – 0.057 (0.0012 – 0.0022) | — |
| Valve guide I.D. | IN. & EX. | 4.000 – 4.012 (0.1575 – 0.1580) | — |
| Valve stem O.D. | IN. | 3.975 – 3.990 (0.1565 – 0.1571) | — |
| | EX. | 3.955 – 3.970 (0.1557 – 0.1563) | — |
| Valve stem deflection | IN. & EX. | — | 0.35 (0.014) |
| Valve stem runout | IN. & EX. | — | 0.05 (0.002) |
| Valve head thickness | IN. & EX. | — | 0.5 (0.02) |
| Valve seat width | IN. & EX. | 0.9 – 1.1 (0.035 – 0.043) | — |
| Valve head radial runout | IN. & EX. | — | 0.03 (0.001) |
| Valve spring free length | IN. & EX. | — | 37.8 (1.49) |
| Valve spring tension | IN. & EX. | 173 – 199 N (17.6 – 20.3 kgf / 38.8 – 44.8 lbs) at length 32.85 mm (1.29 in) | — |

## CAMSHAFT + CYLINDER HEAD

Unit: mm (in)

| ITEM | | STD/SPEC. | LIMIT |
|---|---|---|---|
| Cam height | IN. | 36.58 – 36.62 (1.440 – 1.442) | 36.28 (1.428) |
| | EX. | 35.28 – 35.32 (1.389 – 1.391) | 34.98 (1.417) |
| Camshaft journal oil clearance | IN. & EX. | 0.032 – 0.066 (0.0013 – 0.0026) | 0.150 (0.0059) |
| Camshaft journal holder I.D. | IN. & EX. | 24.012 – 24.025 (0.9454 – 0.9459) | — |

| ITEM | STD/SPEC. | | LIMIT |
|---|---|---|---|
| Camshaft journal O.D. | IN. & EX. | 23.959 – 23.980<br>(0.9433 – 0.9441) | ——— |
| Camshaft runout | ——— | | 0.10<br>(0.004) |
| Cam chain pin (at arrow "3") | 14th pin | | ——— |
| Cylinder head distortion | ——— | | 0.20<br>(0.008) |

## CYLINDER + PISTON + PISTON RING

Unit: mm (in)

| ITEM | STD/SPEC. | | | LIMIT |
|---|---|---|---|---|
| Compression pressure | 1 100 – 1 500 kPa<br>(11 – 15 kgf/cm²<br>156 – 213 psi) | | | 900 kPa<br>(9 kgf/cm²<br>128 psi) |
| Compression pressure difference | ——— | | | 200 kPa<br>(2 kgf/cm²<br>28 psi) |
| Piston to cylinder clearance | 0.010 – 0.035<br>(0.00039 – 0.00138) | | | 0.120<br>(0.0047) |
| Cylinder bore | 67.000 – 67.015<br>(2.6378 – 2.6384) | | | Nicks or Scratches |
| Piston diam. | 66.970 – 66.985<br>(2.6366 – 2.6372)<br>Measure at 15 mm (0.6 in) from the skirt end. | | | 66.880<br>(2.6331) |
| Cylinder distortion | ——— | | | 0.20<br>(0.008) |
| Piston ring free end gap | 1st | R | Approx. 7.3 (0.29) | 5.8<br>(0.23) |
| | 2nd | RN | Approx. 9.2 (0.36) | 7.4<br>(0.29) |
| Piston ring end gap | 1st | R | 0.06 – 0.18<br>(0.003 – 0.008) | 0.50<br>(0.020) |
| | 2nd | RN | 0.06 – 0.18<br>(0.003 – 0.008) | 0.50<br>(0.020) |
| Piston ring to groove clearance | 1st | ——— | | 0.180<br>(0.0071) |
| | 2nd | ——— | | 0.150<br>(0.0059) |
| Piston ring groove width | 1st | 1.01 – 1.03<br>(0.0398 – 0.0406) | | ——— |
| | 2nd | 0.81 – 0.83<br>(0.0319 – 0.0327) | | ——— |
| | Oil | 1.51 – 1.53<br>(0.0594 – 0.0602) | | ——— |
| Piston ring thickness | 1st | 0.97 – 0.99<br>(0.0382 – 0.0390) | | ——— |
| | 2nd | 0.77 – 0.79<br>(0.0303 – 0.0311) | | ——— |
| Piston pin bore | 14.002 – 14.008<br>(0.5513 – 0.5515) | | | 14.030<br>(0.5524) |
| Piston pin O.D. | 13.995 – 14.000<br>(0.5510 – 0.5512) | | | 13.980<br>(0.5504) |

## CONROD + CRANKSHAFT

Unit: mm (in)

| ITEM | STD/SPEC. | | LIMIT |
|---|---|---|---|
| Conrod small end I.D. | 14.010 – 14.018<br>(0.5516 – 0.5519) | | 14.040<br>(0.5528) |
| Conrod big end side clearance | 0.10 – 0.20<br>(0.004 – 0.008) | | 0.30<br>(0.012) |
| Conrod big end width | 19.95 – 20.00<br>(0.7854 – 0.7874) | | ——— |
| Crank pin width | 20.10 – 20.15<br>(0.7913 – 0.7933) | | ——— |
| Conrod big end oil clearance | 0.032 – 0.056<br>(0.0013 – 0.0022) | | 0.080<br>(0.0031) |
| Crank pin O.D. | 30.976 – 31.000<br>(1.2195 – 1.2205) | | ——— |
| Crankshaft journal oil clearance | 0.016 – 0.040<br>(0.0006 – 0.0016) | | 0.080<br>(0.0031) |
| Crankshaft journal O.D. | 31.976 – 32.000<br>(1.2589 – 1.2598) | | ——— |
| Crankshaft thrust bearing thickness | Right side | 2.425 – 2.450<br>(0.0955 – 0.0965) | ——— |
| | Left side | 2.350 – 2.500<br>(0.0925 – 0.0984) | ——— |
| Crankshaft thrust clearance | 0.055 – 0.110<br>(0.0022 – 0.0043) | | ——— |
| Crankshaft runout | ——— | | 0.05<br>(0.002) |

## OIL PUMP

| ITEM | STD/SPEC. | LIMIT |
|---|---|---|
| Oil pressure (at 60°C, 140°F) | 200 – 500 kPa<br>(2.0 – 5.0 kgf/cm², 28 – 71 psi)<br>at 3 000 r/min. | ——— |

## CLUTCH

Unit: mm (in)

| ITEM | STD/SPEC. | | LIMIT |
|---|---|---|---|
| Clutch lever play | 10 – 15<br>(0.4 – 0.6) | | ——— |
| Clutch release screw | ¼ turn back | | ——— |
| Drive plate thickness | No. 1, 2 and 3 | 2.92 – 3.08<br>(0.115 – 0.121) | ——— |
| Drive plate claw width | No. 1, 2 and 3 | 13.7 – 13.8<br>(0.540 – 0.543) | 12.9<br>(0.508) |
| Driven plate distortion | ——— | | 0.10<br>(0.004) |
| Clutch spring free height | 47.80<br>(1.882) | | 45.4<br>(1.787) |

## TRANSMISSION + DRIVE CHAIN

Unit: mm (in) Except ratio

| ITEM | | STD/SPEC. | | LIMIT |
|---|---|---|---|---|
| Primary reduction ratio | | 1.926 (79/41) | | — |
| Final reduction ratio | | 2.812 (45/16) | | — |
| Gear ratios | Low | 2.785 (39/14) | | — |
| | 2nd | 2.000 (32/16) | | — |
| | 3rd | 1.600 (32/20) | | — |
| | 4th | 1.363 (30/22) | | — |
| | 5th | 1.208 (29/24) | | — |
| | Top | 1.086 (25/23) | | — |
| Shift fork to groove clearance | | 0.10 – 0.30 (0.004 – 0.012) | | 0.50 (0.020) |
| Shift fork groove width | | 5.0 – 5.1 (0.197 – 0.201) | | — |
| Shift fork thickness | | 4.8 – 4.9 (0.189 – 0.193) | | — |
| Drive chain | Type | RK525SMOZ6 | | — |
| | Links | 110 links | | — |
| | 20-pitch length | — | | 319.4 (12.57) |
| Drive chain slack (on side-stand) | | 20 – 30 (0.79 – 1.18) | | — |
| Gearshift lever height | | 52 – 62 (2.05 – 2.44) | | — |

## THERMOSTAT + RADIATOR + FAN + COOLANT

| ITEM | | STD/SPEC. | LIMIT |
|---|---|---|---|
| Thermostat valve opening temperature | | Approx. 82°C (180 °F) | — |
| Thermostat valve lift | | Over 8 mm (0.31 in) at 95°C (203°F) | — |
| Engine coolant temperature sensor resistance | 20°C (68°F) | Approx. 2.45 kΩ | — |
| | 50°C (122°F) | Approx. 0.811 kΩ | — |
| | 80°C (176°F) | Approx. 0.318 kΩ | — |
| | 110°C (230°F) | Approx. 0.142 kΩ | — |
| | 130°C (226°F) | Approx. 0.088 kΩ | — |
| Radiator cap valve opening pressure | | 95 – 125 kPa (0.95 – 1.25 kgf/cm², 13.5 – 17.8 psi) | — |
| Cooling fan thermo-switch operating temperature | OFF → ON | Approx. 105°C (221°F) | — |
| | ON → OFF | Approx. 100°C (212°F) | — |
| Engine coolant type | | Use an antifreeze/coolant compatible with aluminum radiator, mixed with distilled water only, at the ratio of 50:50. | — |
| Engine coolant | Reserve tank side | Approx. 250 ml (0.3/0.2 US/Imp qt) | — |
| | Engine side | Approx. 2 150 ml (2.3/1.9 US/Imp qt) | — |

## INJECTOR + FUEL PUMP + FUEL PRESSURE REGULATOR

| ITEM | STD/SPEC. | NOTE |
|---|---|---|
| Injector resistance | 11 – 16 Ω at 20°C (68°F) | |
| Fuel pump discharge amount | Approx. 1.2 L (1.3/1.1 US/Imp qt) /30 sec. | |
| Fuel pressure regulator operating set pressure | Approx. 300 kPa (3.0 kgf/cm², 43 psi) | |

## FI SENSORS + SECONDARY THROTTLE VALVE ACTUATOR

| ITEM | STD/SPEC. | | NOTE |
|---|---|---|---|
| CMP sensor resistance | 0.9 – 1.7 kΩ | | |
| CMP sensor peak voltage | More than 0.7 V | | |
| CKP sensor resistance | 70 – 220 Ω | | |
| CKP sensor peak voltage | More than 0.5 V | | |
| IAP sensor input voltage | 4.5 – 5.5 V | | |
| IAP sensor output voltage | Approx. 1.32 V at idle speed | | |
| TP sensor input voltage | 4.5 – 5.5 V | | |
| TP sensor resistance | Closed | Approx. 1.1 kΩ | |
| | Opened | Approx. 4.3 kΩ | |
| TP sensor output voltage | Closed | Approx. 1.1 V | |
| | Opened | Approx. 4.3 V | |
| ECT sensor input voltage | 4.5 – 5.5 V | | |
| ECT sensor resistance | 2.3 – 2.6 kΩ at 20°C (68°F) | | |
| IAT sensor input voltage | 4.5 – 5.5 V | | |
| IAT sensor resistance | 2.2 – 2.7 kΩ at 20°C (68°F) | | |
| AP sensor input voltage | 4.5 – 5.5 V | | |
| AP sensor output voltage | Approx. 3.6 V at 100 kPa (760 mmHg) | | |
| TO sensor resistance | 60 – 64 kΩ | | |
| TO sensor voltage | Approx. 2.5 V | | |
| GP switch voltage | More than 0.6 V (From 1st to Top) | | |
| Injector voltage | Battery voltage | | |
| Ignition coil primary peak voltage | More than 80 V (When cranking) | | |
| STP sensor input voltage | 4.5 – 5.5 V | | |
| STP sensor resistance | Closed | Approx. 0.8 kΩ | |
| | Opened | Approx. 3.9 kΩ | |
| STP Sensor output voltage | Closed | Approx. 0.8 V | |
| | Opened | Approx. 4.0 V | |
| STV actuator resistance | Approx. 5.6 Ω | | |
| STC unit input voltage | Battery voltage | | |

## THROTTLE BODY

| ITEM | STD/SPEC. |
|---|---|
| Bore size | 38 mm |
| I.D. No. | 39 F1 (For E-33), 39 F0 (For the others) |
| Idle r/min. | 1 300 ± 100 r/min. |
| Fast idle r/min. | 3 000 r/min. (After warming up) |
| Throttle cable play | 2.0 – 4.0 mm<br>(0.08 – 0.16 in) |

## ELECTRICAL

Unit: mm (in)

| ITEM | | | STD/SPEC. | NOTE |
|---|---|---|---|---|
| Firing order | | | 1·2·4·3 | |
| Spark plug | | Type | NGK: CR9E<br>DENSO: U27ESR-N | |
| | | Gap | 0.7 – 0.8<br>(0.028 – 0.031) | |
| Spark performance | | | Over 8 (0.3) at 1 atm. | |
| CKP sensor resistance | | | 70 – 220 Ω | |
| CKP sensor peak voltage | | | More than 0.5 V | ⊕: G ⊖: B |
| Ignition coil resistance | | Primary | 0.8 – 2.0 Ω | Terminal – Terminal |
| | | Secondary | 8 – 15 kΩ | Plug cap – Terminal |
| Ignition coil primary peak voltage | | | More than 80 V | |
| Generator coil resistance | | | 0.2 – 1.5 Ω | |
| Generator Max. output | | | Approx. 390 W at 5 000 r/min. | |
| Generator no-load voltage (when cold) | | | More than 65 V (AC) at 5 000 r/min. | |
| Regulated voltage | | | 14.0 – 15.0 V at 5 000 r/min. | |
| Starter relay resistance | | | 3 – 5 Ω | |
| GP switch voltage | | | More than 0.6 V (From 1st to top) | |
| Battery | Type designation | | FTX9-BS | |
| | Capacity | | 12 V 28.8 kC (8 Ah)/10 HR | |
| Fuse size | Headlight | HI | 15 A | |
| | | LO | 15 A | |
| | Signal | | 15 A | |
| | Ignition | | 15 A | |
| | Fuel | | 10 A | |
| | Fan | | 10 A | |
| | Main | | 30 A | |

## WATTAGE

| ITEM | | STD/SPEC. | |
|---|---|---|---|
| | | E-03, -24, -28, -33 | E-02, -19 |
| Headlight | HI | 55 + 55 W | ← |
| | LO | 55 W | ← |
| Parking or position light | | | 5 W |
| Brake light/Taillight | | 21/5 W × 2 | ← |
| Turn signal light | | 21 W × 4 | ← |
| Combination meter light | | LED | ← |
| Turn signal indicator light | | LED | ← |
| High beam indicator light | | LED | ← |
| Neutral indicator light | | LED | ← |
| FI indicator light/Oil pressure indicator light/Engine coolant temp. indicator light | | LED | ← |
| Fuel level indicator light | | LED | ← |

## BRAKE + WHEEL

Unit: mm (in)

| ITEM | STD/SPEC. | | | LIMIT |
|---|---|---|---|---|
| Rear brake pedal height | 50 – 60 (1.97 – 2.36) | | | — |
| Brake disc thickness | Front | 4.8 – 5.2 (0.189 – 0.205) | | 4.5 (0.177) |
| | Rear | 4.8 – 5.2 (0.189 – 0.205) | | 4.5 (0.177) |
| Brake disc runout | — | | | 0.30 (0.012) |
| Master cylinder bore | Front | 15.870 – 15.913 (0.6248 – 0.6265) | | — |
| | Rear | 12.700 – 12.743 (0.5000 – 0.5017) | | — |
| Master cylinder piston diam. | Front | 15.827 – 15.854 (0.6231 – 0.6242) | | — |
| | Rear | 12.657 – 12.684 (0.4983 – 0.4994) | | — |
| Brake caliper cylinder bore | Front | Leading | 30.230 – 30.280 (1.1902 – 1.1921) | — |
| | | Trailing | 33.960 – 34.010 (1.3370 – 1.3390) | — |
| | Rear | 38.180 – 38.256 (1.5031 – 1.5061) | | — |
| Brake caliper piston diam. | Front | Leading | 30.167 – 30.200 (1.1877 – 1.1890) | — |
| | | Trailing | 33.901 – 33.934 (1.3345 – 1.3399) | — |
| | Rear | 38.098 – 38.148 (1.4999 – 1.5019) | | — |
| Brake fluid type | DOT 4 | | | — |

| ITEM | STD/SPEC. | | LIMIT |
|---|---|---|---|
| Wheel rim runout | Axial | ——— | 2.0 (0.08) |
| | Radial | ——— | 2.0 (0.08) |
| Wheel rim size | Front | 17 × MT 3.50 | ——— |
| | Rear | 17 × MT 5.50 | ——— |
| Wheel axle runout | Front | ——— | 0.25 (0.010) |
| | Rear | ——— | 0.25 (0.010) |

## TIRE

Unit: mm (in)

| ITEM | STD/SPEC. | | LIMIT |
|---|---|---|---|
| Cold inflation tire pressure (Solo riding) | Front | 250 kPa (2.50 kgf/cm², 36 psi) | ——— |
| | Rear | 250 kPa (2.50 kgf/cm², 36 psi) | ——— |
| Cold inflation tire pressure (Dual riding) | Front | 250 kPa (2.50 kgf/cm², 36 psi) | ——— |
| | Rear | 250 kPa (2.50 kgf/cm², 36 psi) | ——— |
| Tire size | Front | 120/70 ZR17 (58W) | ——— |
| | Rear | 180/55 ZR17 (73W) | ——— |
| Tire type | Front | PIRELLI: MTR21s corsa (E-02, 19)<br>DUNLOP : D207FU (The others) | ——— |
| | Rear | PIRELLI: MTR22s corsa (E-02, 19)<br>DUNLOP : D207U (The others) | ——— |
| Tire tread depth (Recommended depth) | Front | ——— | 1.6 (0.06) |
| | Rear | ——— | 2.0 (0.08) |

## SUSPENSION

Unit: mm (in)

| ITEM | STD/SPEC. | | LIMIT |
|---|---|---|---|
| Front fork stroke | 125 (4.92) | | ——— |
| Front fork spring free length | 248.6 (9.79) | | 243 (9.57) |
| Front fork oil level (without spring, outer tube fully compressed) | 102 (4.02) | | ——— |
| Front fork oil type | SUZUKI Fork oil SS-08 (#10) or an equivalent fork oil | | ——— |
| Front fork oil capacity (each leg) | 528 ml (17.8/18.6 US/Imp oz) | | ——— |
| Front fork spring adjuster | 4th groove from top | | ——— |
| Front fork damping force adjuster | Rebound | 1 and 1/8 turns out | ——— |
| | Compression | 1 and 1/8 turns out | ——— |
| Rear shock absorber spring pre-set length | 191.5 (7.539) | | ——— |
| Rear shock absorber damping force adjuster | Rebound | 1 and 1/4 turns out | ——— |
| | Compression | 1 and 1/8 turns out | ——— |

| ITEM | STD/SPEC. | LIMIT |
|---|---|---|
| Rear wheel travel | 130<br>(5.1) | —— |
| Swingarm pivot shaft runout | —— | 0.3<br>(0.01) |

## FUEL + OIL

| ITEM | STD/SPEC. | | NOTE |
|---|---|---|---|
| Fuel type | Use only unleaded gasoline of at least 87 pump octane ($\frac{R+M}{2}$) or 91 octane or higher rated by the reserch method.<br>Gasoline containing MTBE (Methyl Tertiary Butyl Ether), less than 10% ethanol, or less than 5% methanol with appropriate cosolvents and corrosion inhibitor is permissible. | | E-03, 28, 33 |
| | Gasoline used should be graded 91 octane or higher. An unleaded gasoline is recommended. | | The others |
| Fuel tank capacity | Including reserve | 18 L<br>(4.8/4.0 US/Imp gal) | |
| | Fuel level indicator light flickering | Approx. 4.1 L<br>(1.1/0.9 US/Imp gal) | |
| | Fuel level indicator light lighting | Approx. 2.6 L<br>(0.69/0.58 US/Imp gal) | |
| Engine oil type | SAE 10W/40, API, SF or SG | | |
| Engine oil capacity | Change | 2.8 L<br>(3.0/2.5 US/Imp qt) | |
| | Filter change | 3.1 L<br>(3.3/2.7 US/Imp qt) | |
| | Overhaul | 3.4 L<br>(3.6/3.0 US/Imp qt) | |

# WIRING DIAGRAM

## FI SYSTEM WIRING DIAGRAM

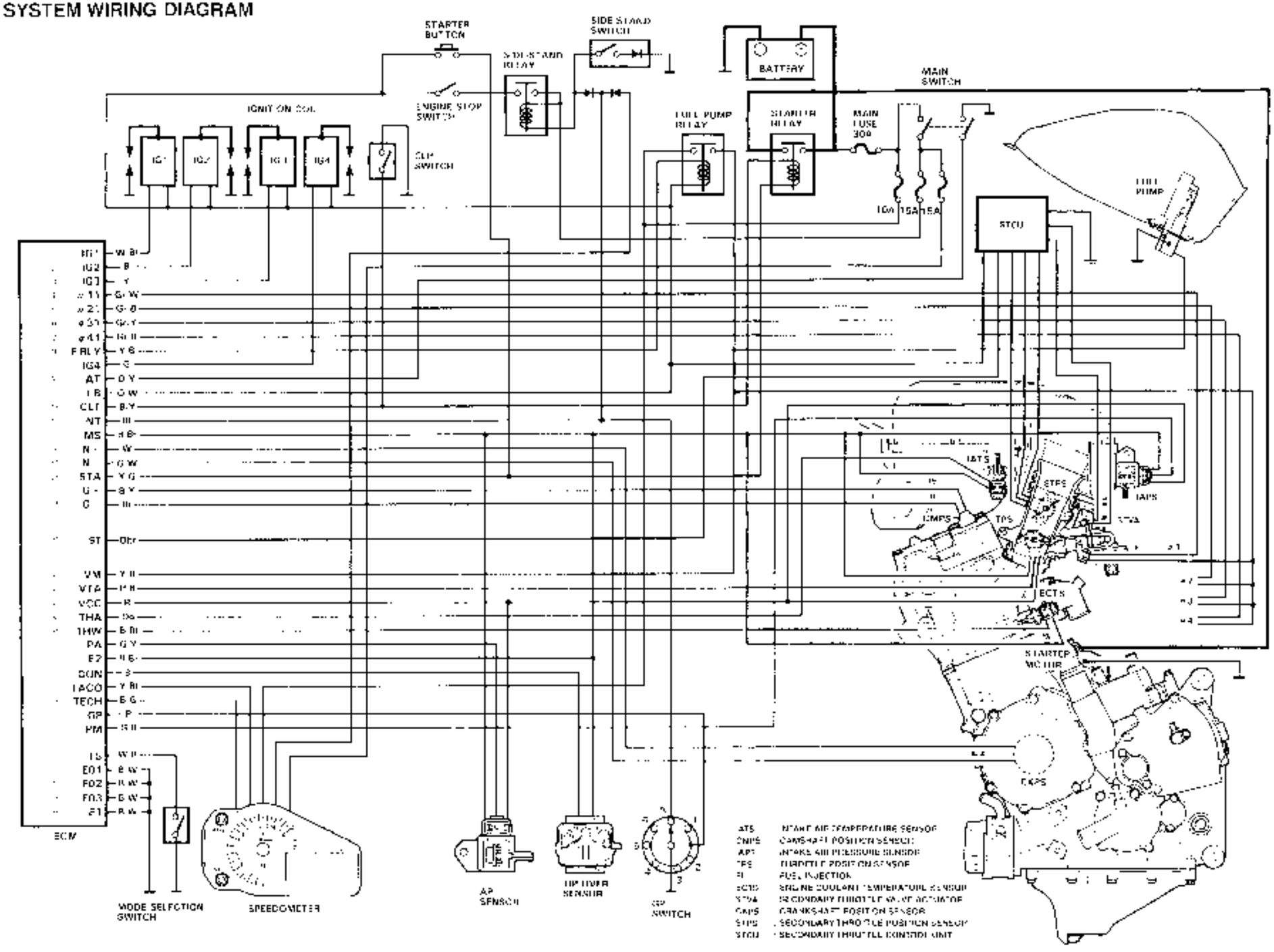


WIRE COLOR

| | |
|---|---|
| B | Black |
| Bl | Blue |
| Br | Brown |
| Dbr | Dark brown |
| Dg | Dark green |
| G | Green |
| Gr | Gray |
| Lbl | Light blue |
| Lg | Light green |
| O | Orange |
| P | Pink |
| R | Red |
| V | Violet |
| W | White |
| Y | Yellow |
| B/B | Black with Blue tracer |
| B/Br | Black with Brown tracer |
| B/G | Black with Green tracer |
| B/Lg | Black with Light green tracer |
| B/O | Black with Orange tracer |
| B/P | Black with Pink tracer |
| B/W | Black with White tracer |
| B/Y | Black with Yellow tracer |
| Bl/B | Blue with Black tracer |
| Bl/G | Blue with Green tracer |
| Bl/R | Blue with Red tracer |
| Bl/W | Blue with White tracer |
| Bl/Y | Blue with Yellow tracer |
| G/B | Green with Black tracer |
| G/Bl | Green with Blue tracer |
| G/R | Green with Red tracer |
| G/W | Green with White tracer |
| G/Y | Green with Yellow tracer |
| O/B | Orange with Black tracer |
| O/Bl | Orange with Blue tracer |
| O/G | Orange with Green tracer |
| O/R | Orange with Red tracer |
| O/W | Orange with White tracer |
| O/Y | Orange with Yellow tracer |
| P/B | Pink with Black tracer |
| R/B | Red with Black tracer |
| R/Bl | Red with Blue tracer |
| R/W | Red with White tracer |
| W/B | White with Black tracer |
| W/Bl | White with Blue tracer |
| W/R | White with Red tracer |
| Y/B | Yellow with Black tracer |
| Y/Bl | Yellow with Blue tracer |
| Y/G | Yellow with Green tracer |
| Y/R | Yellow with Red tracer |
| Y/W | Yellow with White tracer |

# WIRING DIAGRAM

## FOR E-03, 28, 33

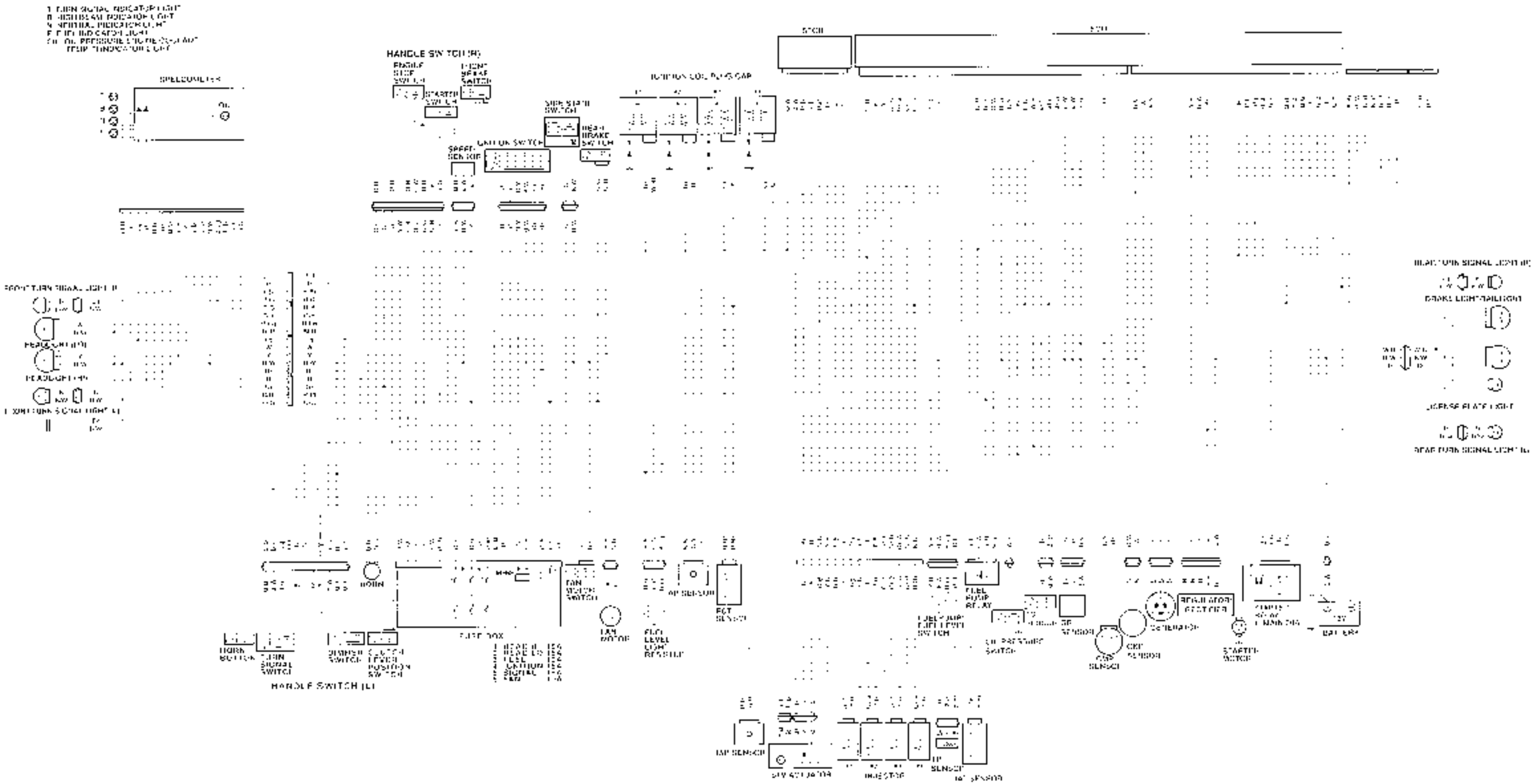

FOR E-02, 19

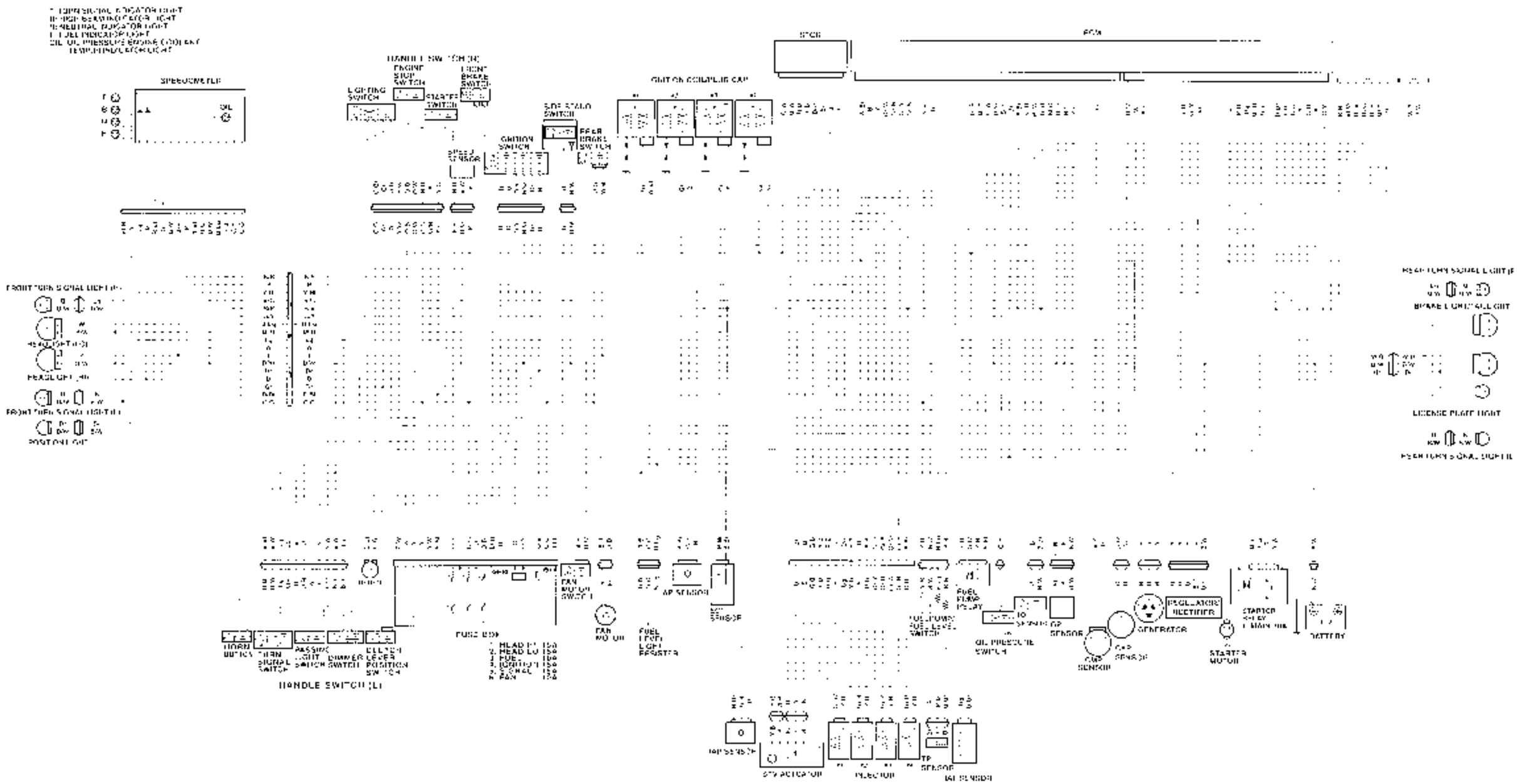
SPEEDOMETER
HANDLE SWITCH (R)
ENGINE STOP SWITCH
FRONT BRAKE SWITCH
LIGHTING SWITCH
STARTER SWITCH
REAR BRAKE SWITCH
IGNITION SWITCH
IGNITION COUPLER CAP
ECU
FRONT TURN SIGNAL LIGHT (R)
HEADLIGHT (R)
HEADLIGHT (L)
FRONT TURN SIGNAL LIGHT (L)
REAR TURN SIGNAL LIGHT (R)
BRAKE LIGHT/TAIL LIGHT
LICENSE PLATE LIGHT
REAR TURN SIGNAL LIGHT (L)
HORN
HORN BUTTON
TURN SIGNAL SWITCH
PASSING LIGHT SWITCH
DIMMER SWITCH
CLUTCH LEVER POSITION SW
HANDLE SWITCH (L)
FUSE BOX
1. HEAD HI 15A
2. HEAD LO 15A
3. FUEL 10A
4. IGNITION 15A
5. SIGNAL 15A
6. FAN 15A
FAN MOTOR SWITCH
FAN MOTOR
AP SENSOR
FUEL PUMP RELAY
FUEL LEVEL RESISTER
IAT SENSOR
FUEL PUMP FUEL LEVEL SWITCH
OIL PRESSURE SWITCH
IO SENSOR
CKP SENSOR
GEAR POSITION SENSOR
CMP SENSOR
GENERATOR
REGULATOR RECTIFIER
STARTER MOTOR
STARTER RELAY
MAIN FUSE
BATTERY
IAP SENSOR
STV ACTUATOR
INJECTOR
TP SENSOR
OIL SENSOR

## FOR E-24

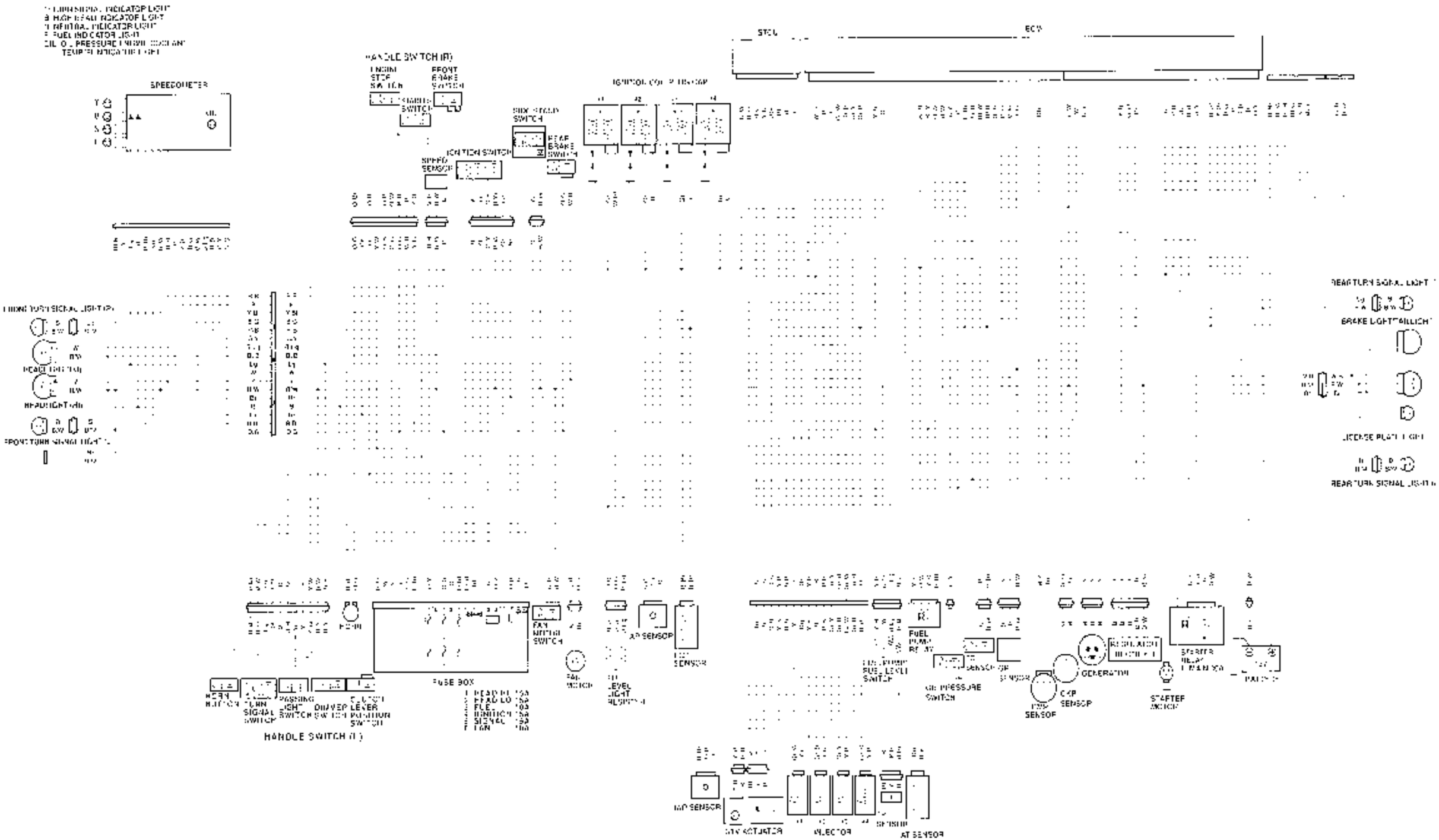
SPEEDOMETER
HANDLE SWITCH (R)
ENGINE STOP SWITCH
FRONT BRAKE SWITCH
SIDE STAND SWITCH
REAR BRAKE SWITCH
IGNITION SWITCH
SPEED SENSOR
STCL
ECV
REAR TURN SIGNAL LIGHT
BRAKE LIGHT/TAILLIGHT
LICENSE PLATE LIGHT
REAR TURN SIGNAL LIGHT
HEADLIGHT
FRONT TURN SIGNAL LIGHT
HORN
FAN MOTOR SWITCH
AP SENSOR
FUEL SENSOR
FUEL PUMP RELAY
FUEL PUMP FUEL LEVEL SWITCH
OIL PRESSURE SWITCH
CKP SENSOR
GENERATOR
REGULATOR RECTIFIER
STARTER RELAY
STARTER MOTOR
FUSE BOX
FAN MOTOR
FUEL LEVEL LIGHT
HORN BUTTON
TURN SIGNAL SWITCH
PASSING LIGHT SWITCH
DIMMER SWITCH
CLUTCH LEVER POSITION SWITCH
HANDLE SWITCH (L)
IAP SENSOR
STV ACTUATOR
INJECTOR
AT SENSOR

Prepared by

**SUZUKI MOTOR CORPORATION**

Motorcycle Service Department
September, 2000
Part No. 99500-35080-01E
Printed in Japan