SUZUKI

GSF1200/S

SERVICE MANUAL

99500-39134-01E

FOREWORD

This manual contains an introductory description on SUZUKI GSF1200/S and procedures for its inspection/service and overhaul of its main components.
Other information considered as generally known is not included.
Read GENERAL INFORMATION section to familiarize yourself with outline of the vehicle and MAINTENANCE and other sections to use as a guide for proper inspection and service.
This manual will help you know the vehicle better so that you can assure your customers of your optimum and quick service.

* *This manual has been prepared on the basis of the latest specification at the time of publication.*
  If modification has been made since then, difference may exist between the content of this manual and the actual vehicle.
* *Illustrations in this manual are used to show the basic principles of operation and work procedures.*
  They may not represent the actual vehicle exactly in detail.
* *This manual is intended for those who have enough knowledge and skills for servicing SUZUKI vehicles. Without such knowledge and skills, you should not attempt servicing by relying on this manual only.*
  Instead, please contact your nearby authorized SUZUKI motorcycle dealer.

SUZUKI MOTOR CORPORATION
Motorcycle Service Department

GROUP INDEX

GENERAL INFORMATION	1
PERIODIC MAINTENANCE	2
ENGINE	3
FUEL AND LUBRICATION SYSTEM	4
CHASSIS	5
ELECTRICAL SYSTEM	6
SERVICING INFORMATION	7
GSF1200V/SV ('97-MODEL)	8
GSF1200SAV ('97-MODEL)	9
GSF1200W/SW ('98-MODEL) GSF1200X/SX ('99-MODEL)	10
GSF1200SAW ('98-MODEL) GSF1200SAX ('99-MODEL)	11

© COPYRIGHT SUZUKI MOTOR CORPORATION 1996

HOW TO USE THIS MANUAL

TO LOCATE WHAT YOU ARE LOOKING FOR:

1. The text of this manual is divided into sections.
2. As the title of these sections are listed on the previous page as GROUP INDEX, select the section where what you are looking for belong.
3. Holding the manual as shown at the right will allow you to find the first page of the section easily.
4. On the first page of each section, its contents are listed. Find the item and page you need.

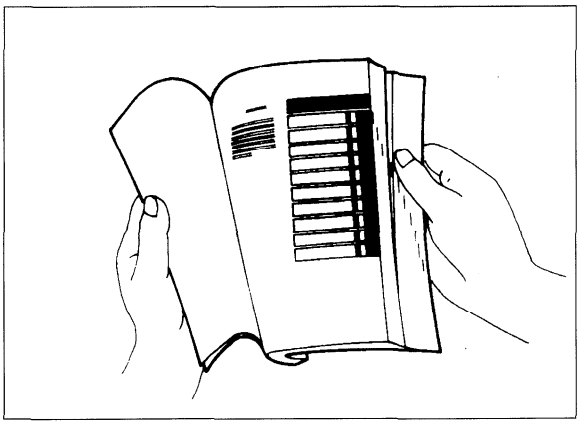

COMPONENT PARTS AND WORK TO BE DONE

Under the name of each system or unit, its exploded view is provided with work instruction and other service information such as the tightening torque, lubricating points and locking agent points.

Example: Front wheel

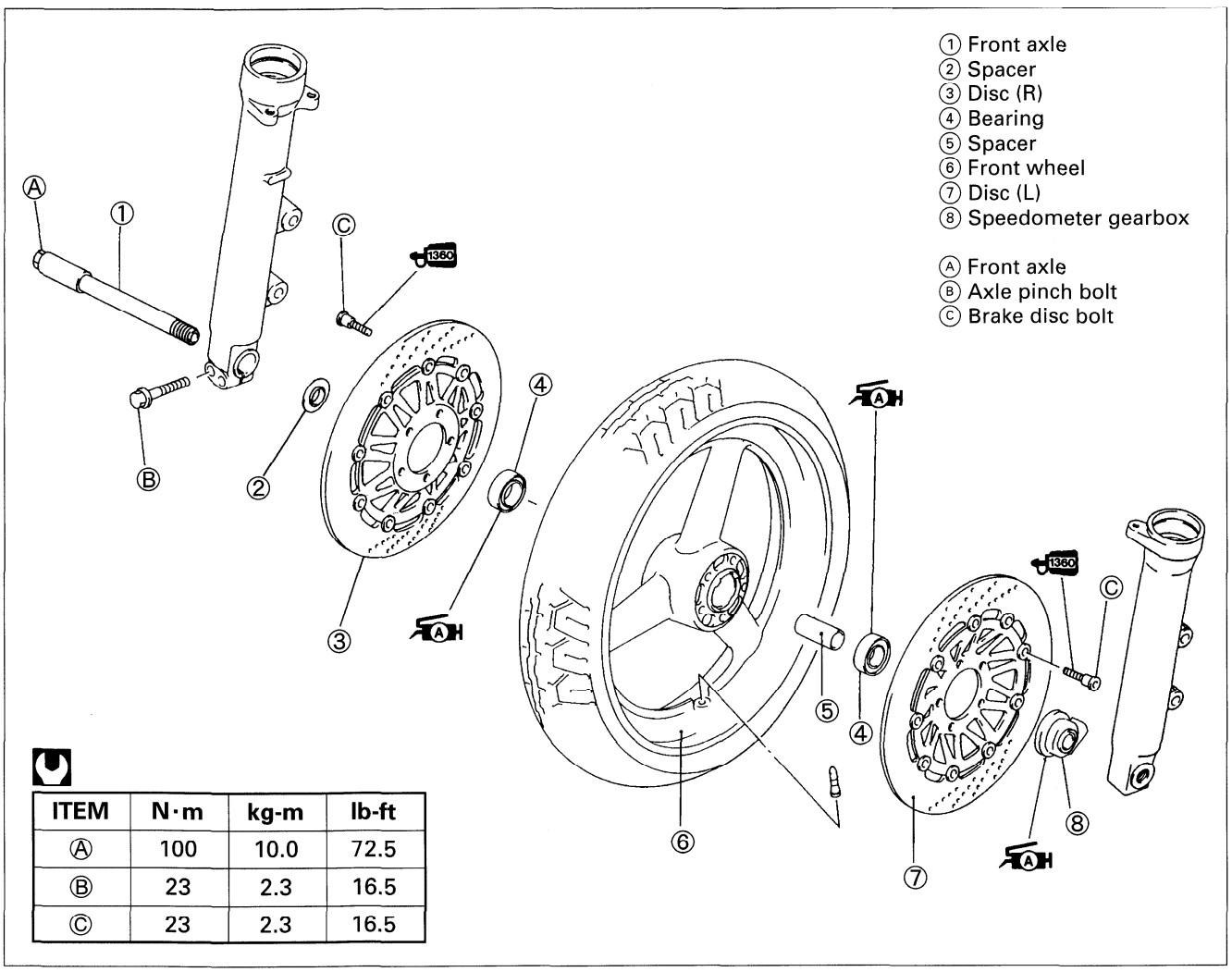

ITEM	N·m	kg-m	lb-ft
Ⓐ	100	10.0	72.5
Ⓑ	23	2.3	16.5
Ⓒ	23	2.3	16.5

SYMBOL

Listed in the table below are the symbols indicating instructions and other information necessary for servicing and meaning associated with them respectively.

SYMBOL	DEFINITION	SYMBOL	DEFINITION
	Torque control required. Data beside it indicates specified torque.	1303	Apply THREAD LOCK SUPER "1303". 99000-32030
OIL	Apply oil. Use engine oil unless otherwise specified.	FORK	Use fork oil. 99000-99044-10G
A	Apply SUZUKI SUPER GREASE "A". 99000-25010	BF	Apply or use brake fluid.
S	Apply SUZUKI SILICONE GREASE. 99000-25100	V	Measure in voltage range.
M	Apply SUZUKI MOLY PASTE. 99000-25140	Ω	Measure in resistance range.
1207B	Apply SUZUKI BOND "1207B". 99000-31140	A	Measure in current range.
1342	Apply THREAD LOCK "1342". 99000-32050	TOOL	Use special tool.
1360	Apply THREAD LOCK SUPER "1360". 99000-32130		

GENERAL INFORMATION

1

CONTENTS

WARNING/CAUTION/NOTE 1-1
GENERAL PRECAUTIONS 1-1
SUZUKI GSF1200T/1200ST ('96-MODEL) 1-3
SERIAL NUMBER LOCATION 1-3
FUEL AND OIL RECOMMENDATION 1-3
FUEL 1-3
ENGINE OIL 1-4
BRAKE FLUID 1-4
FRONT FORK OIL 1-4
BREAK-IN PROCEDURES 1-4
CYLINDER IDENTIFICATION 1-4
INFORMATION LABELS 1-5
SPECIFICATIONS 1-7
COUNTRY OR AREA 1-9

WARNING/CAUTION/NOTE

Please read this manual and follow its instructions carefully. To emphasize special information, the symbol and the words WARNING, CAUTION and NOTE have special meanings. Pay special attention to the messages highlighted by these signal words.

⚠ WARNING

Indicates a potential hazard that could result in death or injury.

⚠ CAUTION

Indicates a potential hazard that could result in vehicle damage.

NOTE:
Indicates special information to make maintenance easier or instructions clearer.

Please note, however, that the warnings and cautions contained in this manual cannot possibly cover all potential hazards relating to the servicing, or lack of servicing, of the motorcycle. In addition to the WARNINGS and CAUTIONS stated, you must use good judgement and basic mechanical safety principles. If you are unsure about how to perform a particular service operation, ask a more experienced mechanic for advice.

GENERAL PRECAUTIONS

⚠ WARNING

* **Proper service and repair procedures are important for the safety of the service mechanic and the safety and reliability of the vehicle.**
* **When 2 or more persons work together, pay attention to the safety of each other.**
* **When it is necessary to run the engine indoors, make sure that exhaust gas is forced outdoors.**
* **When working with toxic or flammable materials, make sure that the area you work in is well-ventilated and that you follow all of the material manufacturer's instructions.**
* **Never use gasoline as a cleaning solvent.**
* **To avoid getting burned, do not touch the engine, engine oil or exhaust system during or for a while after engine operation.**
* **After servicing fuel, oil, exhaust or brake systems, check all lines and fittings related to the system for leaks.**

⚠ CAUTION

* If parts replacement is necessary, replace the parts with Suzuki Genuine Parts or their equivalent.
* When removing parts that are to be reused, keep them arranged in an orderly manner so that they may be reinstalled in the proper order and orientation.
* Be sure to use special tools when instructed.
* Make sure that all parts used in reassembly are clean, and also lubricated when specified.
* When use of a certain type of lubricant, bond, or sealant is specified, be sure to use the specified type.
* When removing the battery, disconnect the negative cable first and then the positive cable. When reconnecting the battery, connect the positive cable first and then the negative cable, and replace the terminal cover on the positive terminal.
* When performing service to electrical parts, if the service procedures not require use of battery power, disconnect the negative cable the battery.
* Tighten cylinder head and case bolts and nuts, beginning with larger diameter and ending with smaller diameter, from inside to outside diagonally, to the specified tightening torque.
* Whenever you remove oil seals, gaskets, packing, O-rings, locking washers, self-locking nuts, cotter pins, circlips, and certain other parts as specified, be sure to replace them with new ones. Also, before installing these new parts, be sure to remove any left over material from the mating surfaces.
* Never reuse a circlip. When installing a new circlip, take care not to expand the end gap larger than required to slip the circlip over the shaft. After installing a circlip, always ensure that it is completely seated in its groove and securely fitted.
* Use a torque wrench to tighten fasteners to the torque values when specified. Wipe off grease or oil if a thread is smeared with them.
* After reassembly, check parts for tightness and operation.

* To protect environment, do not unlawfully dispose of used motor oil and other fluids: batteries, and tires.
* To protect Earth's natural resources, properly dispose of used vehicles and parts.

SUZUKI GSF1200T/1200ST ('96-MODEL)

GSF1200T

GSF1200ST

*Difference between photographs and actual motorcycles depends on the markets.

SERIAL NUMBER LOCATION

The frame serial number or V.I.N. (Vehicle Identification Number) ① is stamped on the right side of the steering head pipe. The engine serial number ② is located on the right side of the crankcase. These numbers are required especially for registering the machine and ordering spare parts.

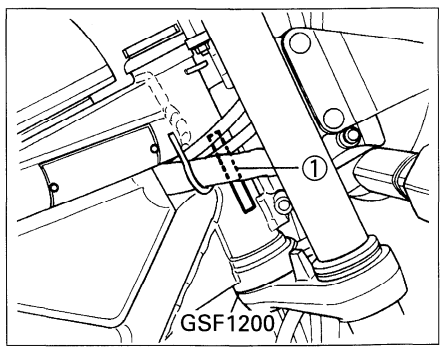

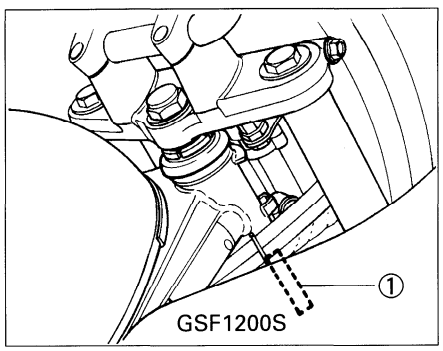

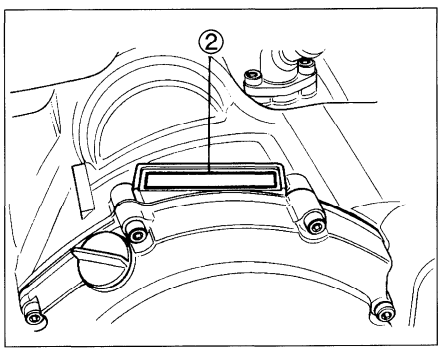

FUEL AND OIL RECOMMENDATION

FUEL (FOR CANADIAN MODEL)

Use only unleaded gasoline of at least 87 pump octane ($\frac{R + M}{2}$) method or 91 octane or higher rated by the research method.

FUEL (FOR THE OTHER MODELS)

Gasoline used should be graded 85–95 octane (Research Method) or higher. An unleaded gasoline type is recommended.

ENGINE OIL

Make sure that the engine oil you use comes under API classification of SE, SF or SG and that its viscosity rating is SAE 10W/40. If an SAE 10W/40 motor oil is not available, select an alternate according to the right chart.

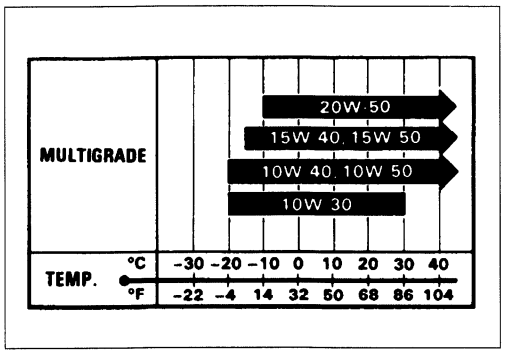

BRAKE FLUID

Specification and classification: DOT 4

⚠WARNING

Since the brake system of this motorcycle is filled with a glycol-based brake fluid by the manufacturer, do not use or mix different types of fluid such as silicone-based and petroleum-based fluid for refilling the system, otherwise serious damage will result.
Do not use any brake fluid taken from old or used or unsealed containers.
Never re-use brake fluid left over from a previous servicing, which has been stored for a long period.

FRONT FORK OIL

Use fork oil #10.

BREAK-IN PROCEDURES

During manufacture only the best possible materials are used and all machined parts are finished to a very high standard but it is still necessary to allow the moving parts to "BREAK-IN" before subjecting the engine to maximum stresses. The future performance and reliability of the engine depends on the care and restraint exercised during its early life. The general rules are as follows.

- Keep to these break-in engine speed limits:

Initial 800 km (500 miles): Below 5 000 r/min.
Up to 1 600 km (1 000 miles): Below 7 500 r/min.
Over 1 600 km (1 000 miles): Below 10 000 r/min.

- Upon reaching an odometer reading of 1 600 km (1 000 miles) you can subject the motorcycle to full throttle operation. However, do not exceed 10 000 r/min. at any time.

CYLINDER IDENTIFICATION

The four cylinders of this engine are identified as No.1, No.2, No.3 and No.4 cylinder, as counted from left to right (as viewed by the rider on the seat).

INFORMATION LABELS

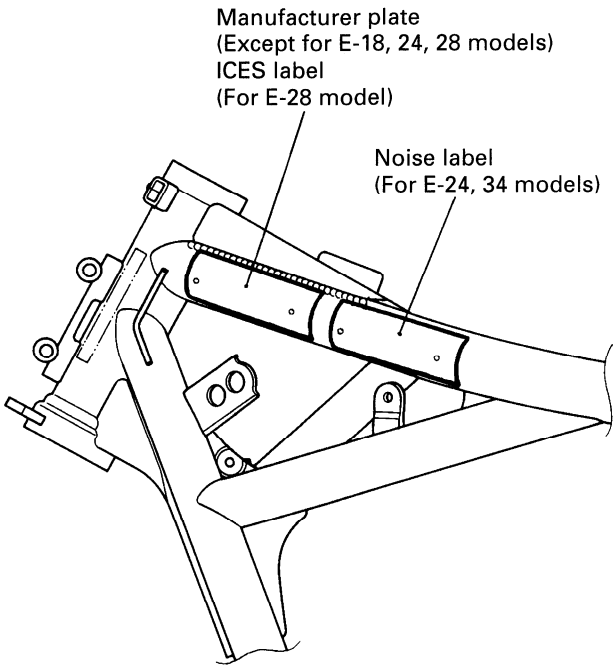

LEFT SIDE

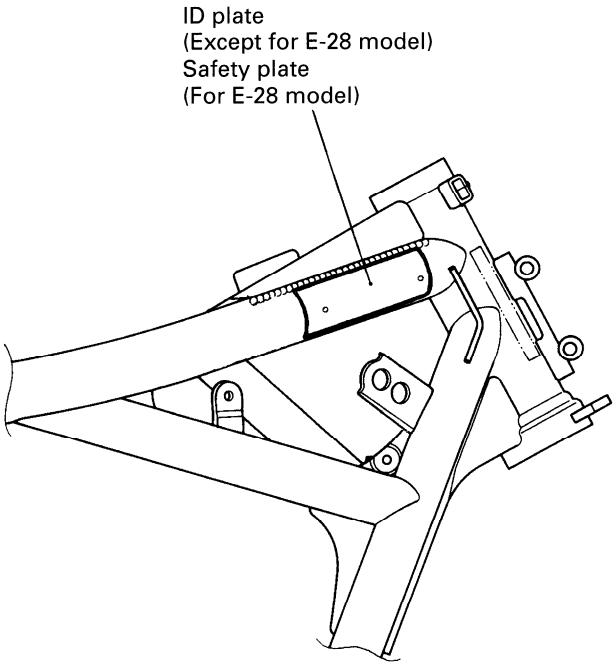

RIGHT SIDE

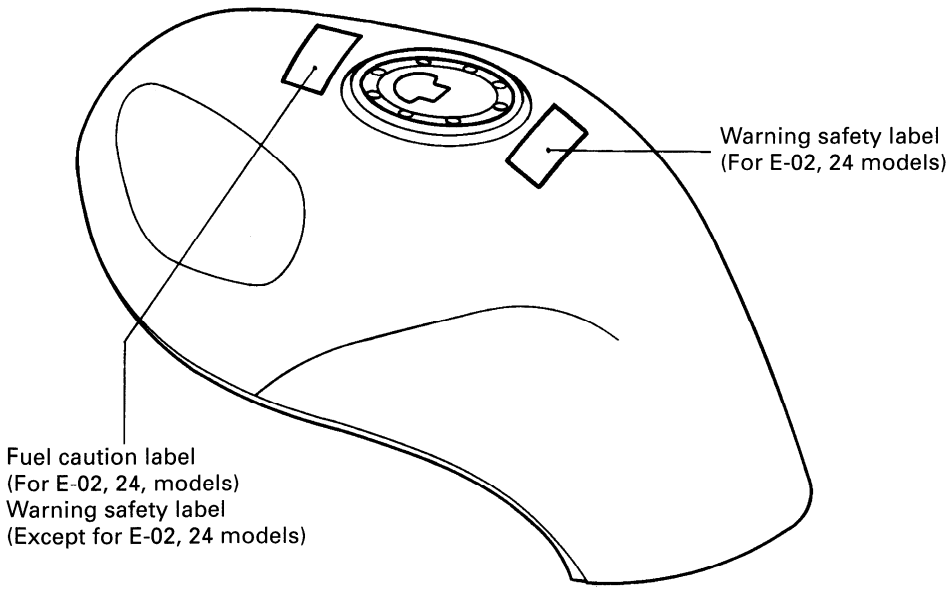

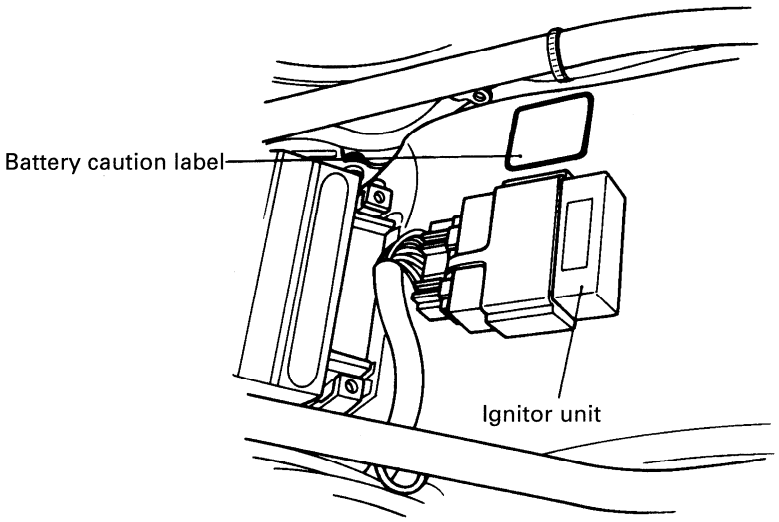

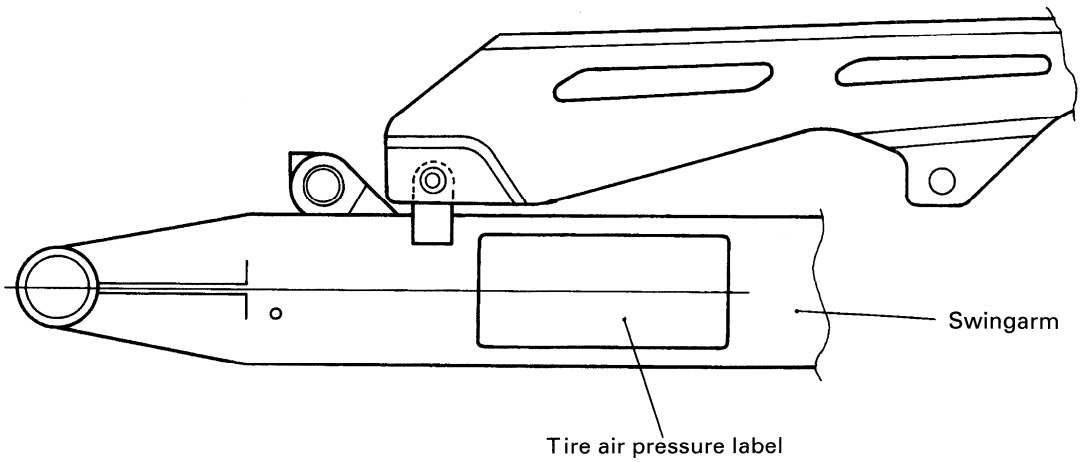

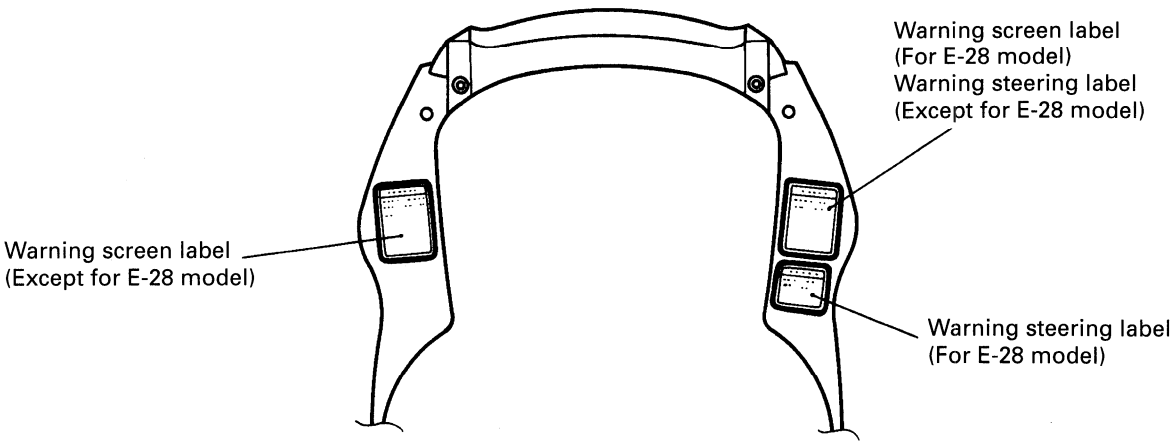

For GSF1200S model

SPECIFICATIONS

DIMENSIONS AND DRY MASS

Overall length	2 165 mm (84.6 in) ..... For E-15, 16, 17, 22
	2 180 mm (85.8 in) ..... For E-18, 39
	2 095 mm (82.5 in) ..... For the others
Overall width	790 mm (31.1 in)
Overall height	1 100 mm (43.3 in) GSF1200
	1 215 mm (47.8 in) GSF1200S
Wheelbase	1 435 mm (56.5 in)
Ground clearance	130 mm (5.1 in)
Seat height	835 mm (32.9 in)
Dry mass	211 kg (465 lbs) GSF1200
	214 kg (471 lbs) GSF1200S

ENGINE

Type	Four-stroke, air-cooled, with SACS, DOHC, TSCC
Number of cylinders	4
Bore	79.0 mm (3.110 in)
Stroke	59.0 mm (2.323 in)
Compression ratio	9.5 : 1
Piston displacement	1 157 cm^3 (70.6 cu. in)
Carburetor	MIKUNI BST36, four
Air cleaner	Non-woven fabric element
Starter system	Electric starter
Lubrication system	Wet sump

TRANSMISSION

Clutch	Wet multi-plate type
Transmission	5-speed constant mesh
Gearshift pattern	1-down, 4-up
Primary reduction ratio	1.565 (72/46)
Final reduction ratio	3.000 (45/15)
Gear ratios, Low	2.384 (31/13)
2nd	1.631 (31/19)
3rd	1.250 (25/20)
4th	1.045 (23/22)
Top	0.913 (21/23)
Drive chain	RK GB50MFOZ1, 110 links

CHASSIS

Front suspension	Telescopic, coil spring, oil damped, spring pre-load fully adjustable
Rear suspension	Link type system, oil damped, coil spring, spring pre-load 7-way adjustable, rebound damping force 4-way adjustable
Steering angle	35° (right & left)
Caster	64° 24′
Trail	107 mm (4.2 in)
Turning radius	2.8 m (9.2 ft)
Front brake	Disc brake, twin
Rear brake	Disc brake
Front tire size	120/70 ZR17
Rear tire size	180/55 ZR17
Front fork stroke	130 mm (5.1 in)
Rear wheel travel	134 mm (5.3 in)

ELECTRICAL

Ignition type	Electronic Ignition (Fully Transistorized)
Ignition timing	7° B.T.D.C. at 1 500 r/min.
Spark plug	NGK: JR9B
Battery	12V 36 kC (10 Ah)/10 HR
Generator	Three-phase A.C. Generator
Main fuse	30A
Fuse	15/15/10/15/10A
Headlight	12V 60/55W
Position light	12V 4W ..... Except for E-24 and 28 models
Turn signal light	12V 21W × 4
Tail/Brake light	12V 5/21W
License plate light	12V 5W
Speedometer light	12V 1.7W × 2
Fuel meter light	12V 1.7W
Tachometer light	12V 1.7W
Neutral indicator light	12V 3W
High beam indicator light	12V 3W
Turn signal indicator light	12V 3W × 2
Oil pressure indicator light	12V 3W

CAPACITIES

Fuel tank, including reserve	19.0 L (5.0/4.1 US/Imp gal)
reserve	4.5 L (1.1/0.9 US/Imp gal)
Engine oil, oil change	3 300 ml (3.4/2.9 US/Imp qt)
with filter change	3 500 ml (3.6/3.0 US/Imp qt)
overhaul	4 600 ml (4.9/4.0 US/Imp qt)
Front fork oil (each leg)	516 ml (17.4/18.2 US/Imp oz)

These specifications are subject to change without notice.

COUNTRY OR AREA

The series of symbols on the left stand for the countries or area on the right.

SYMBOL	COUNTRY or AREA
E-02	England
E-04	France
E-15	Finland
E-16	Norway
E-17	Sweden
E-18	Switzerland
E-21	Belgium
E-22	Germany
E-24	Australia
E-25	Netherlands
E-26	Denmark
E-28	Canada
E-34	Italy
E-39	Austria
E-53	Spain

(E-15,16 and 26 countries are included in E-17.
E-21 and 53 countries are included in E-34.
E-39 country is included in E-18.)

PERIODIC MAINTENANCE

2

CONTENTS

PERIODIC MAINTENANCE SCHEDULE 2- 1
PERIODIC MAINTENANCE CHART 2- 1
LUBRICATION POINTS 2- 2
MAINTENANCE AND TUNE-UP PROCEDURES 2- 3
VALVE CLEARANCE 2- 3
SPARK PLUGS 2- 4
EXHAUST PIPE BOLTS AND MUFFLER BOLTS 2- 5
AIR CLEANER ELEMENT 2- 6
ENGINE OIL AND OIL FILTER 2- 7
FUEL HOSE 2- 8
ENGINE IDLE SPEED 2- 9
THROTTLE CABLE PLAY 2- 9
CARBURETOR SYNCHRONIZATION 2- 9
CLUTCH 2-10
DRIVE CHAIN 2-11
BRAKE 2-13
TIRE 2-16
STEERING 2-17
FRONT FORK 2-17
REAR SUSPENSION 2-17
CHASSIS BOLTS AND NUTS 2-18
COMPRESSION PRESSURE CHECK 2-20
OIL PRESSURE CHECK 2-21

PERIODIC MAINTENANCE SCHEDULE

The chart below lists the recommended intervals for all the required periodic service work necessary to keep the motorcycle operating at peak performance and economy. Mileages are expressed in terms of kilometer, miles and time for your convenience.

NOTE:
More frequent servicing may be performed on motorcycles that are used under severe conditions.

PERIODIC MAINTENANCE CHART

Interval / Item	km	1 000	6 000	12 000	18 000	24 000
	miles	600	4 000	7 500	11 000	15 000
	months	1	6	12	18	24
Valve clearance		I	–	I	–	I
Spark plugs		–	I	R	I	R
Exhaust pipe bolts and muffler bolts		T	–	T	–	T
Air cleaner		–	I	I	R	I
Engine oil		R	R	R	R	R
Engine oil filter		R	–	–	R	–
Fuel hose		–	I	I	I	I
		Replace every 4 years.				
Engine idle speed		I	I	I	I	I
Throttle cable play		I	I	I	I	I
Carburetor synchronization		–	–	I	–	I
Clutch hose		–	I	I	I	I
		Replace every 4 years.				
Clutch fluid		–	–	I	–	I
		Replace every 2 years.				
Drive chain		I	I	I	I	I
		Clean and lubricate every 1 000 km (600 miles).				
Brakes		I	I	I	I	I
Brake hose		–	I	I	I	I
		Replace every 4 years.				
Brake fluid		–	I	I	I	I
		Replace every 2 years.				
Tire		–	I	I	I	I
Steering		I	–	I	–	I
Front fork		–	–	I	–	I
Rear suspension		–	–	I	–	I
Chassis bolts and nuts		T	T	T	T	T

I=Inspection and adjust, clean, lubricate or replace as necessary
C=Clean R=Replace T=Tighten

LUBRICATION POINTS

Proper lubrication is important for smooth operation and long life of each working part of the motorcycle.
Major lubrication points are indicated below.

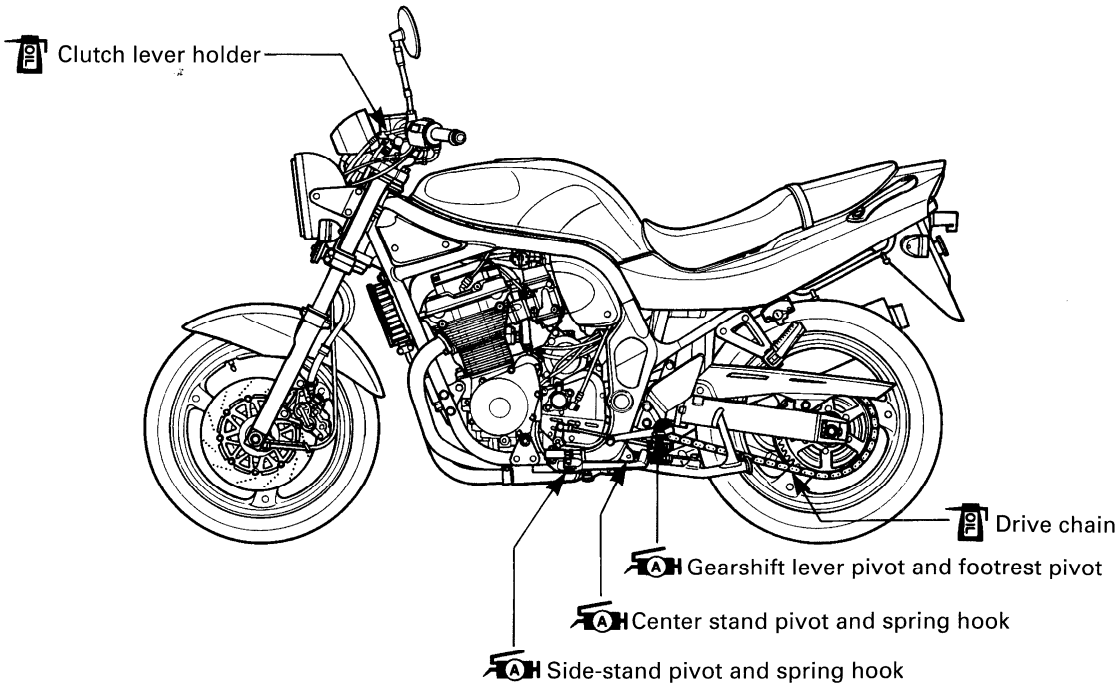

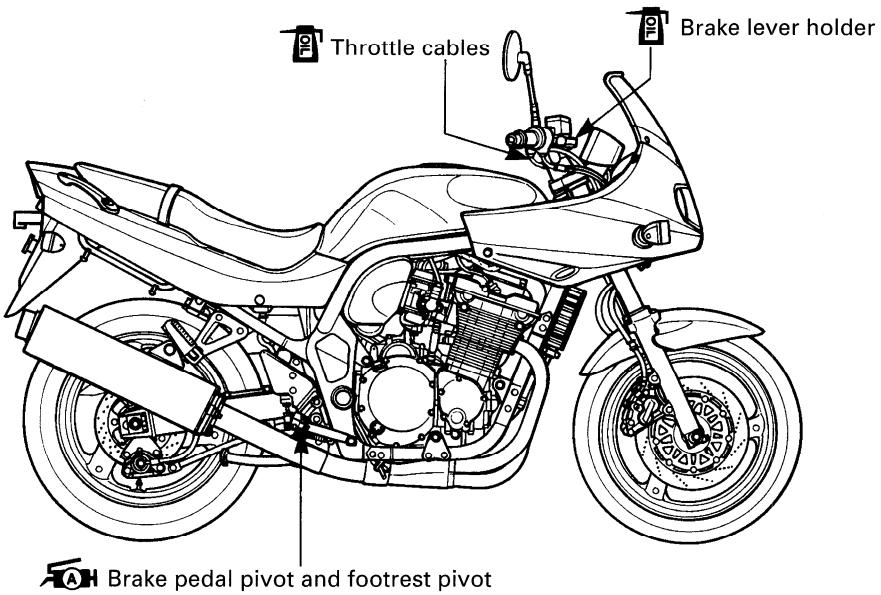

NOTE:

* *Before lubricating each part, clean off any rusty spots and wipe off any grease, oil, dirt or grime.*
* *Lubricate exposed parts which are subject to rust, with a rust preventative spray whenever the motorcycle has been operated under wet or rainy conditions.*

MAINTENANCE AND TUNE-UP PROCEDURES

This section describes the servicing procedures for each item of the Periodic Maintenance requirements.

VALVE CLEARANCE

Inspect Initially at 1 000 km (600 miles, 1 month) and Every 12 000 km (7 500 miles, 12 months).

- Remove the right and left side fairings. ..... (For GSF1200S)
- Remove the seat and fuel tank.
- Remove the all spark plugs.
- Remove the cylinder head cover.

The valve clearance specification is different for intake and exhaust valves.
Valve clearance adjustment must be checked and adjusted 1) at the time of periodic inspection, 2) when the valve mechanism is serviced, and 3) when the camshafts are disturbed by removing them for servicing.

Valve clearance (when cold):
IN.: 0.10–0.15 mm (0.004–0.006 in)
EX.: 0.18–0.23 mm (0.007–0.009 in)

NOTE:
* *The cam must be at positions, Ⓐ or Ⓑ, in order to check the valve clearance or to adjust valve clearance. Clearance readings should not be taken with the cam in any other position than these two positions.*
* *The clearance specification is for COLD state.*
* *To turn the crankshaft for clearance checking, be sure to use a 19-mm wrench and rotate in the normal running direction. All spark plugs should be removed.*

- Turn crankshaft to bring the "T" mark on the rotor to the center of pick up coil and also to bring the notches ① in the right ends of both camshafts (Ex and In) to the positions shown. In this condition, read the valve clearance at the valves Ⓒ (In and Ex of No.1 cylinder, Ex of No.2 and In of No.3).

- Use thickness gauge between adjusting screw and valve stem end. If clearance is off the specification, bring it into the specified range by using the special tool.

TOOL **09900-20803: Thickness gauge**
09917-14920: Valve adjuster driver

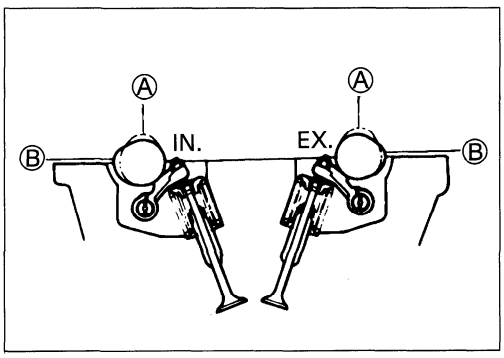

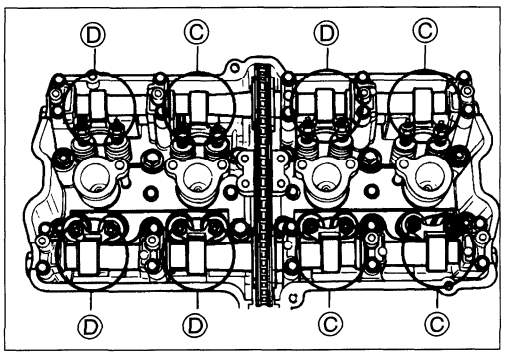

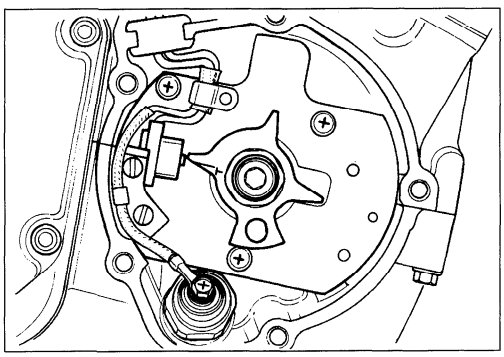

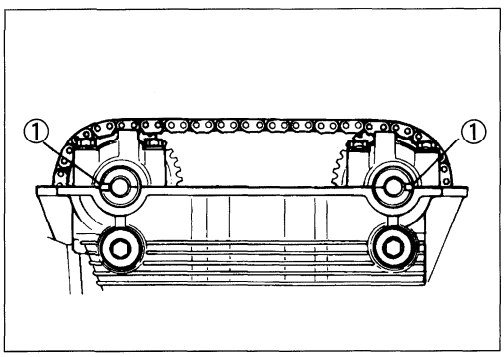

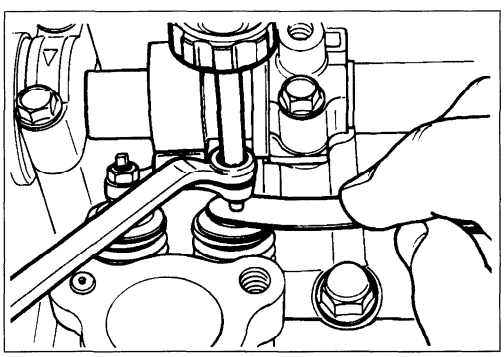

- Turn the crankshaft 360° (one rotation) to bring the "T" mark on the rotor to the center of pick up coil and also to bring the notches ① to the positions shown.
- Read the clearance at the remaining valves Ⓓ and adjust the clearance if necessary.

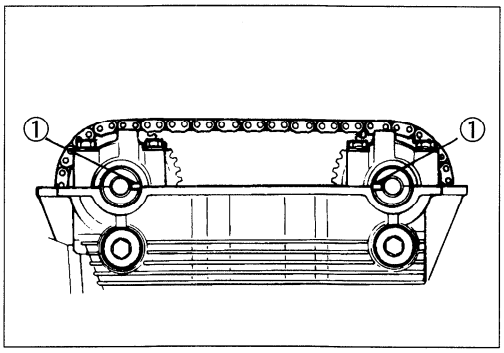

Cam Position	Notch ① position	
	Intake Camshaft	Exhaust Camshaft
Ⓒ	⊖	⊖
Ⓓ	⊖	⊖

- When installing the cylinder head cover, apply SUZUKI BOND NO.1207B to the head cover groove and cam end caps. (Refer to page 3-69.)

1207B 99000-31140: SUZUKI BOND NO. 1207B

- Tighten the cylinder head cover bolts to the specified torque.

Cylinder head cover bolt: 14 N·m (1.4 kg-m, 10.0 lb-ft)

⚠ CAUTION

Both the right and left valve clearances should be as closely as possible.

SPARK PLUGS

Inspect at 6 000 km (4 000 miles, 6 months), 18 000 km (11 000 miles, 18 months) and Replace Every 12 000 km (7 500 miles, 12 months).

- Remove the seat and fuel tank.
- Remove all the spark plugs.

NOTE:
If it is difficult to remove the spark plug cap, pry up it with a screwdriver.

TOOL 09930-10121: Spark plug socket wrench set

	Standard	Cold type	Hot type
NGK	JR9B	JR10B	JR8B

CARBON DEPOSIT

Check to see the carbon deposit on the plug.
If the carbon is deposited, remove it with a spark plug cleaner machine or carefully using a tool with a pointed end.

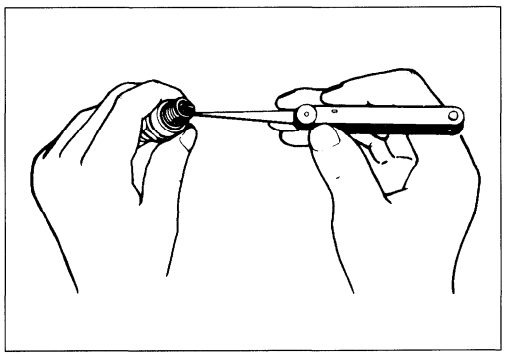

SPARK PLUG GAP

Measure the plug gap with a thickness gauge if it is correct. If not, adjust it to the following gap.

	Standard
Spark plug gap	0.6–0.7 mm (0.024–0.028 in)

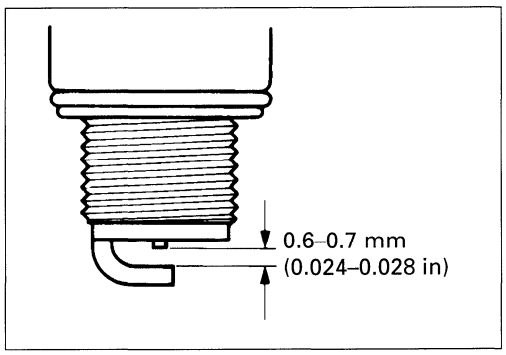

TOOL 09900-20803: Thickness gauge

ELECTRODE'S CONDITION

Check to see the worn or burnt condition of the electrodes. If it is extremely worn or burnt, replace the plug. And also replace the plug if it has a broken insulator, damaged thread, etc.

⚠ CAUTION

Confirm the thread size and reach when replacing the plug. If the reach is too short, carbon will be deposited on the screw portion of the plug hole and engine damage may result.

EXHAUST PIPE BOLTS AND MUFFLER BOLTS

Tighten Initially at 1 000 km (600 miles, 1 month) and Every 12 000 km (7 500 miles, 12 months).

- Tighten the exhaust pipe clamp bolts and muffler mounting bolts to the specified torque.

Exhaust pipe bolt: 23 N·m (2.3 kg-m, 16.5 lb-ft)
Muffler mounting bolt: 29 N·m (2.9 kg-m, 21.0 lb-ft)

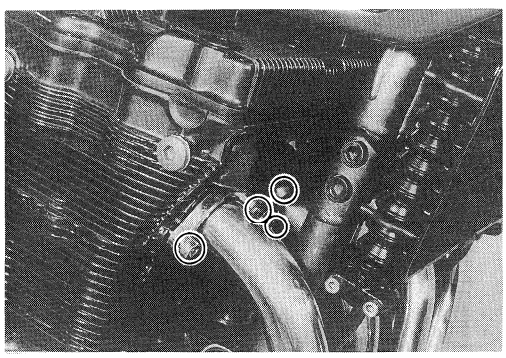

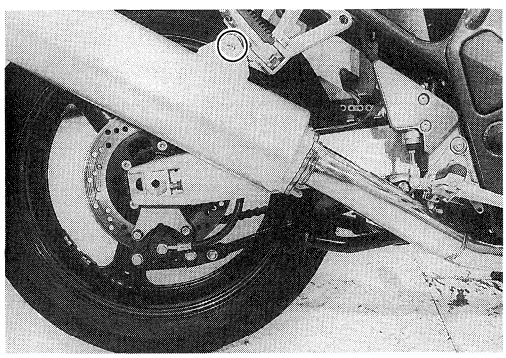

AIR CLEANER ELEMENT

Inspect Every 6 000 km (4 000 miles, 6 months) and Replace Every 18 000 km (11 000 miles, 18 months).

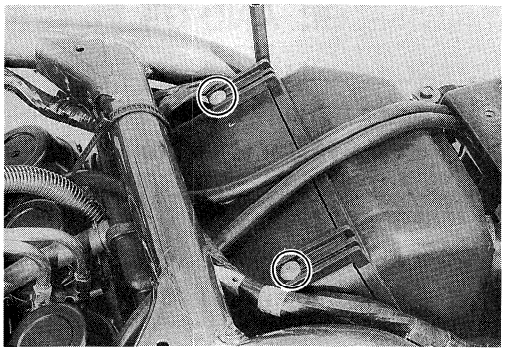

- Remove the seat and fuel tank.
- Remove the air cleaner element by removing the screws.
- Carefully use air hose to blow the dust from the cleaner element.

⚠ CAUTION

Always use air pressure on the inside of the air cleaner element. If air pressure is used on the outside, dirt will be forced into the pores of the air cleaner element thus restricting air flow through the air cleaner element.

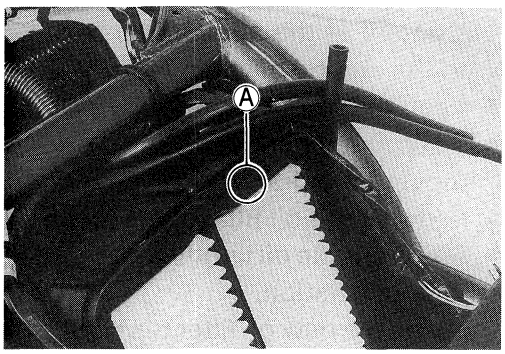

- Reinstall the cleaned or new air cleaner element in the reverse order of removal.
- When installing the air cleaner element in the cleaner case, make sure that the ⬍ mark Ⓐ comes upward.

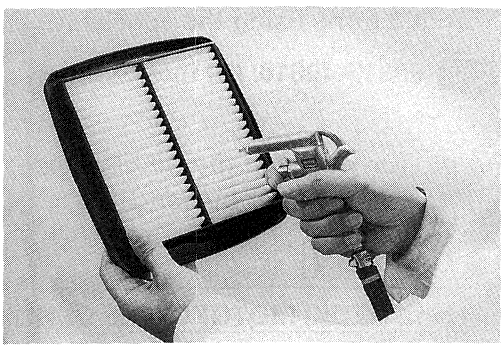

⚠ CAUTION

If driving under dusty condition, clean the air cleaner element more frequently. The surest way to accelerate engine wear is to use the engine without the element or to use a ruptured element. Make sure that the air cleaner is in good condition at all times. Life of the engine depends largely on this component!

NOTE:
When cleaning the air cleaner element, drain water from the air cleaner drain hose by removing the drain plug.

ENGINE OIL AND OIL FILTER

(ENGINE OIL)
Replace Initially at 1 000 km (600 miles, 1 month) and Every 6 000 km (4 000 miles, 6 months) thereafter.

(OIL FILTER)
Replace Initially at 1 000 km (600 miles, 1 month) and Every 18 000 km (11 000 miles, 18 months) thereafter.

Oil should be changed while the engine is warm. Oil filter replacement at the above intervals, should be done together with the engine oil change.

- Keep the motorcycle upright with the center stand.
- Place an oil pan below the engine, and drain the oil by removing the drain plug ① and filler cap ② .
- Remove the oil filter ③ by using the special tool.
- Apply engine oil lightly to the gasket of the new oil filter before installation.
- Install the new oil filter turning it by hand until you feel that the filter gasket contacts the mounting surface. Then tighten it 2 turns using the special tool.

TOOL 09915-40610: Oil filter wrench

NOTE:
To properly tighten the oil filter, use the special tool. Never tighten the oil filter by hand.

▲ CAUTION

Use SUZUKI MOTORCYCLE GENUINE OIL FILTER only, since the other make's genuine filters and after-market parts may differ in thread specifications (thread diameter and pitch), filtering performance and durability, which could cause engine damage or oil leaks. Suzuki automobile genuine oil filter is also not usable for the motorcycles.

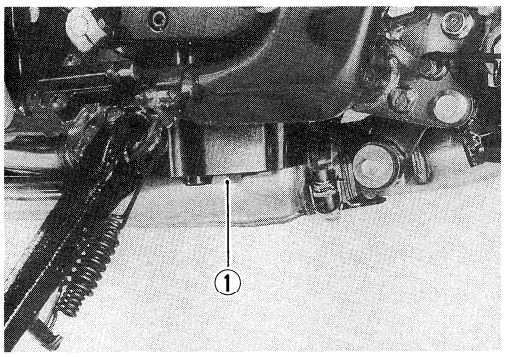

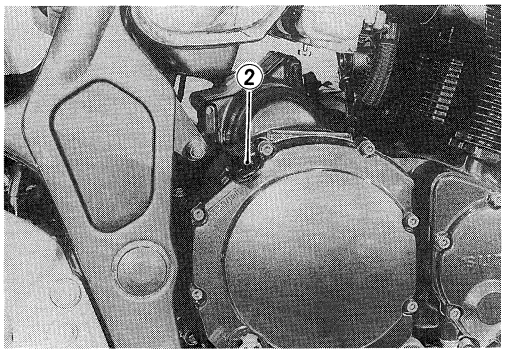

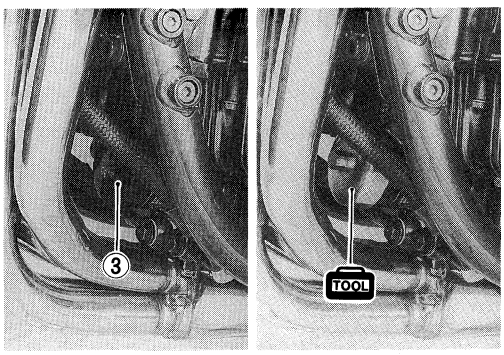

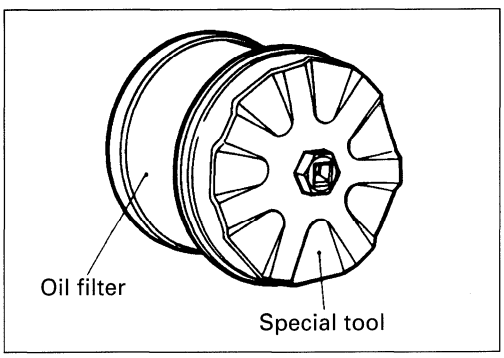

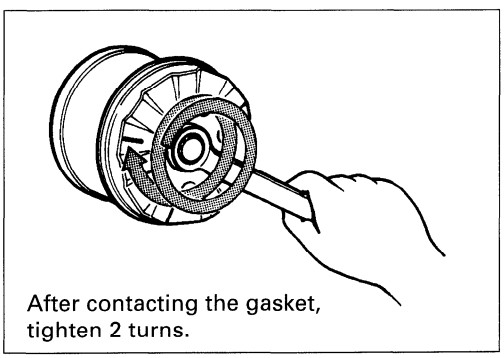

- Fit the drain plug ① securely, and pour fresh oil through the oil filler. The engine will hold about 3.3 L of oil. Use an API classification of SE, SF or SG oil with SAE 10W/40 viscosity.
- Start up the engine and allow it to run for several seconds at idling speed.
- Turn off the engine and wait about one minute, then check the oil level through the inspection window ②. If the level is below mark "F", add oil to that level.

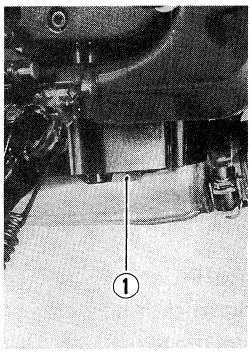

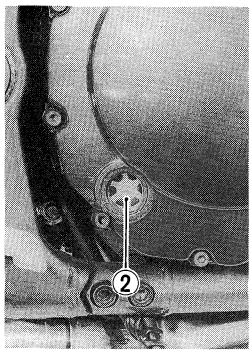

NECESSARY AMOUNT OF ENGINE OIL
Oil change: 3.3 L (3.4/2.9 US/Imp qt)
Filter change: 3.5 L (3.6/3.0 US/Imp qt)
Overhaul engine: 4.6 L (4.9/4.0 US/Imp qt)

FUEL HOSE

Inspect Every 6 000 km (4 000 miles, 6 months).
Replace Every 4 years.

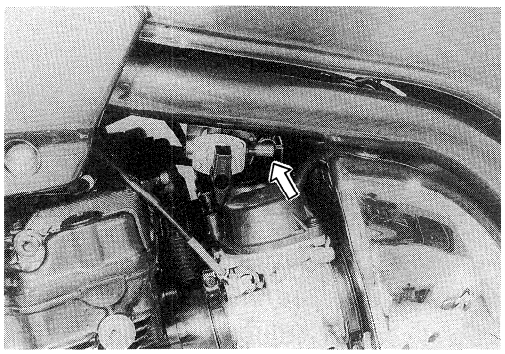

ENGINE IDLE SPEED

Inspect Initially at 1 000 km (600 miles, 1 month) and Every 6 000 km (4 000 miles, 6 months) thereafter.

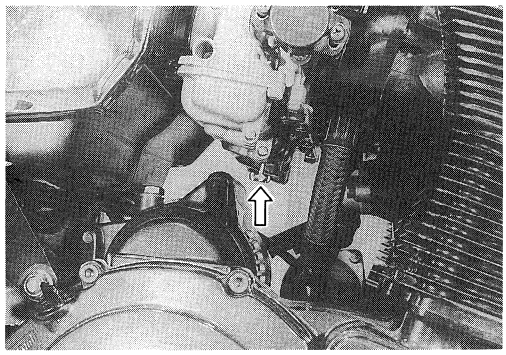

NOTE:
Make this adjustment when the engine is hot.

- Connect a tachometer.
- Start up the engine and set its speed at anywhere between 1 100 and 1 300 r/min. by turning throttle stop screw.

Engine idle speed: 1 200±100 r/min.
$1\,200^{+100}_{-50}$ r/min. ..... For E-18 model

THROTTLE CABLE PLAY

Inspect Initially at 1 000 km (600 miles, 1 month) and Every 6 000 km (4 000 miles, 6 months) thereafter.

To adjust the cable play, adjust the returning cable first and then adjust the pulling cable.

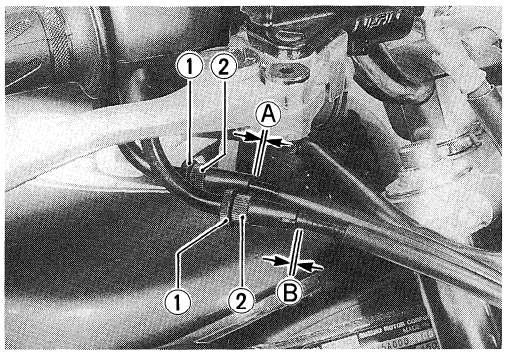

Returning cable play Ⓐ
The returning cable play Ⓐ should be 0.5–1.0 mm (0.02–0.04 in). Adjust the throttle cable play with the following procedures.

- Loosen the lock nut ① and turn the adjuster ② in or out until the specified play is obtained.
- Tighten the lock nut ① while holding the adjuster.

Pulling cable play Ⓑ
There should be 0.5–1.0 mm (0.02–0.04 in) play Ⓑ in the throttle cable. Adjust the throttle cable play in the same manner as the returning cable play adjustment.

Throttle cable play (Ⓐ, Ⓑ): 0.5–1.0 mm (0.02–0.04 in)

⚠ WARNING

After the adjustment is completed, check that handlebar movement does not raise the engine idle speed and that the throttle grip returns smoothly and automatically.

CARBURETOR SYNCHRONIZATION

Inspect Every 12 000 km (7 500 miles, 12 months).

Refer to page 4-15.

CLUTCH

(CLUTCH FLUID)
Inspect Every 12 000 km (7 500 miles, 12 months).
Replace fluid Every 2 years.

(CLUTCH HOSE)
Inspect Every 6 000 km (4 000 miles, 6 months).
Replace hose Every 4 years.

CLUTCH FLUID LEVEL

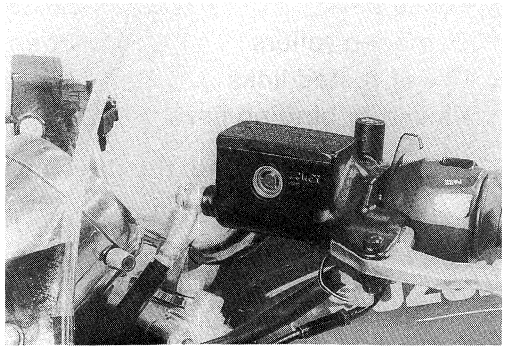

- Keep the motorcycle upright and place the handlebars straight.
- Check the clutch fluid level by observing the lower limit line on the clutch fluid reservoir.
- If the level is found to be lower than the lower mark, replenish with BRAKE FLUID that the following specification.

Specification and Classification: DOT 4

WARNING

The clutch system of this motorcycle is filled with a glycol-based brake fluid. Do not use or mix different types of fluid such as silicone-based or petroleum-based. Do not use any brake fluid taken from old, used or unsealed containers. Never re-use brake fluid left over from the last servicing or stored for a long periods. Check the clutch hose and hose joints for cracks and oil leakage.

BLEEDING AIR FROM THE CLUTCH FLUID CIRCUIT

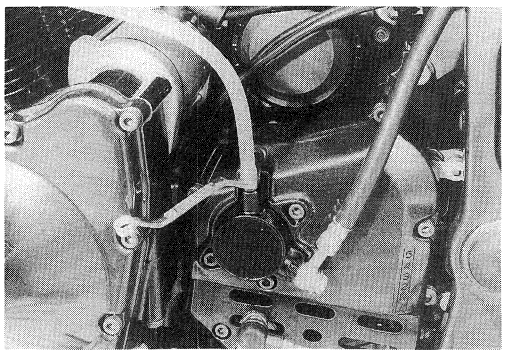

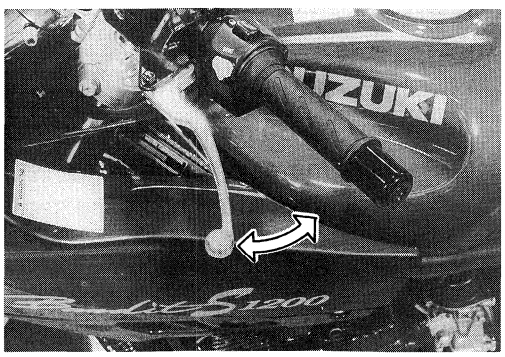

The clutch fluid circuit may be purged of air in the following manner.

- Keep the motorcycle upright and place the handlebars straight.
- Fill up the master cylinder reservoir to the upper end of the inspection window. Replace the reservoir cap to prevent entry of dirt.
- Attach a pipe to the bleeder valve and insert the free end of the pipe into a receptacle.
- Squeeze and release the clutch lever several times in rapid succession, and squeeze the lever fully without releasing it. Loosen the bleeder valve by turning it a quarter of a turn so that the fluid runs into the receptacle; this will remove the tension of the clutch lever causing it to touch the handlebar grip. Then, close the valve, pump and squeeze the lever, and open the valve. Repeat this process until the fluid flowing into the receptacle no longer contains air bubbles.
- Close the bleeder valve, and disconnect the pipe. Fill the reservoir with brake fluid to the upper end of the inspection window.

Air bleeder valve: 8 N·m (0.8 kg-m, 6.0 lb-ft)

DRIVE CHAIN

Inspect Initially at 1 000 km (600 miles, 1 month) and Every 6 000 km (4 000 miles, 6 months) thereafter. Clean and lubricate Every 1 000 km (600 miles).

Visually check the drive chain for the possible defects listed below. (Support the motorcycle by a center stand, turn the rear wheel slowly by hand with the transmission shifted to Neutral.)

* Loose pins
* Damaged rollers
* Dry or rusted links
* Kinked or binding links
* Excessive wear
* Improper chain adjustment
* Missing O-ring seals

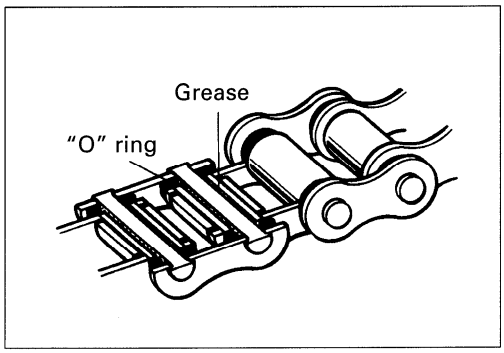

If any defects are found, the drive chain must be replaced.

NOTE:
When replacing the drive chain, replace the drive chain and sprockets as a set.

CHECKING

- Remove the cotter pin. (For Canadian model)
- Loosen the axle nut ①.
- Loosen both chain adjuster lock nuts ②.
- Tense the drive chain fully by turning both chain adjuster bolts ③.

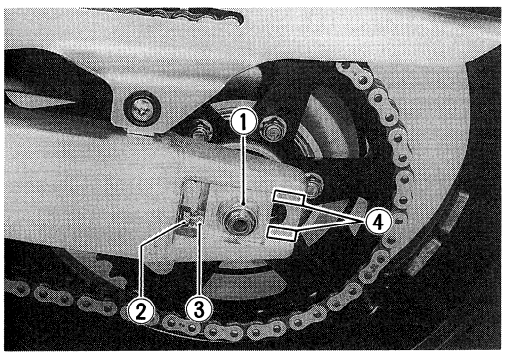

- Count out 21 pins (20 pitches) on the chain and measure the distance between the two points. If the distance exceeds the service limit, the chain must be replaced.

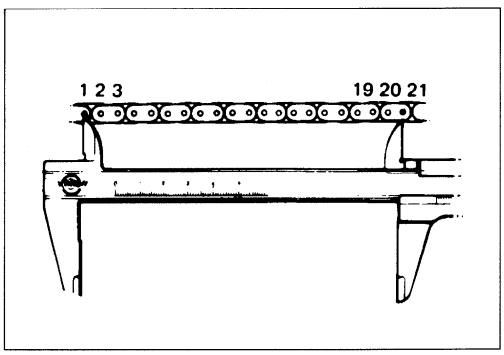

	Service Limit
Drive chain 20-pitch length	319.4 mm (12.6 in)

ADJUSTING

- Loosen or tighten both chain adjuster bolts ③ until the chain has 20–30 mm (0.8–1.2 in) of slack in the middle between engine and rear sprockets. The marks ④ on both chain adjusters must be at the same position on the scale to ensure that the front and rear wheels are correctly aligned.
- Place the motorcycle on its side-stand for accurate adjustment.
- After adjusting the drive chain, tighten the axle nut ① to the specified torque.
- Tighten both chain adjuster lock nuts ② securely.

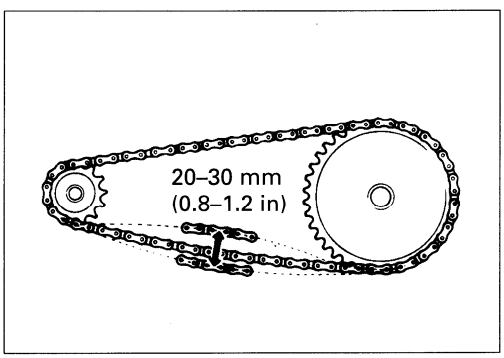

Rear axle nut: 100 N·m (10.0 kg-m, 72.5 lb-ft)

CLEANING AND LUBRICATING

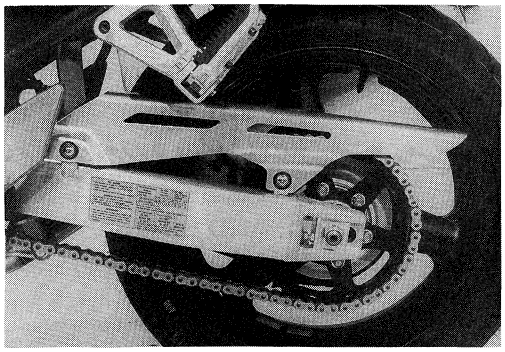

- Wash the chain with kerosene. If the chain tends to rust quickly, the intervals must be shortened.

⚠ CAUTION

Do not use trichlene, gasoline or any similar fluids: These fluids have too great a dissolving power for this chain and, what is more important, they can damage the "O"-rings (or seals) confining the grease in the bush to pin clearance. Remember, high durability comes from the presence of grease in that clearance.

- After washing and drying the chain, oil it with a heavy-weight motor oil.

⚠ CAUTION

*** Do not use any oil sold commercially as "drive chain oil". Such oil can damage the "O"-rings (or seals).**
*** The standard drive chain is RK GB50MFOZ1. SUZUKI recommends that this standard drive chain should be used for the replacement.**

BRAKE

(BRAKE)
Inspect Initially at 1 000 km (600 miles, 1 month) and Every 6 000 km (4 000 miles, 6 months) thereafter.

(BRAKE HOSE AND BRAKE FLUID)
Inspect Every 6 000 km (4 000 miles, 6 months). Replace hoses Every 4 years. Replace fluid Every 2 years.

BRAKE FLUID LEVEL

- Keep the motorcycle upright and place the handlebars straight.
- Check the brake fluid level by observing the lower limit lines on the front and rear brake fluid reservoirs.
- When the level is below the lower limit line, replenish with brake fluid that meets the following specification.

Specification and Classification: DOT 4

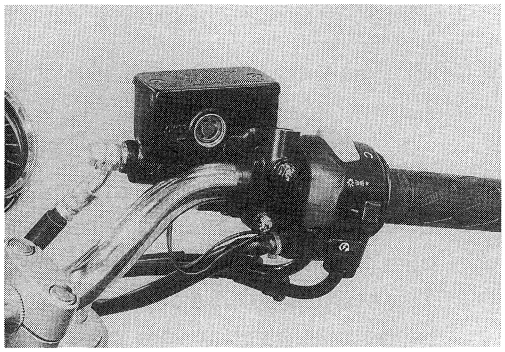

WARNING

The brake system of this motorcycle is filled with a glycol-based brake fluid. Do not use or mix different types of fluid such as silicone-based or petroleum-based. Do not use any brake fluid taken from old, used or unsealed containers. Never re-use brake fluid left over from the last servicing or stored for a long period.

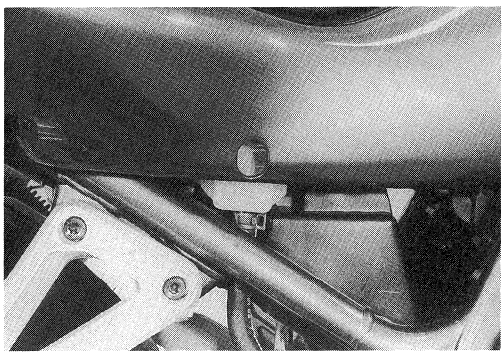

WARNING

Brake fluid, if it leaks, will interfere with safe running and immediately discolor painted surfaces. Check the brake hoses and hose joints for cracks and oil leakage before riding.

BRAKE PADS

The extent of brake pad wear can be checked by observing the grooved limit line ① on the pad. When the wear exceeds the grooved limit line, replace the pads with new ones. (Refer to pages 5-16 and 5-42.)

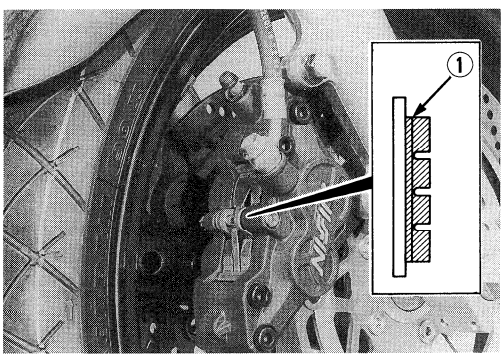

CAUTION

Replace the brake pad as a set, otherwise braking performance will be adversely affected.

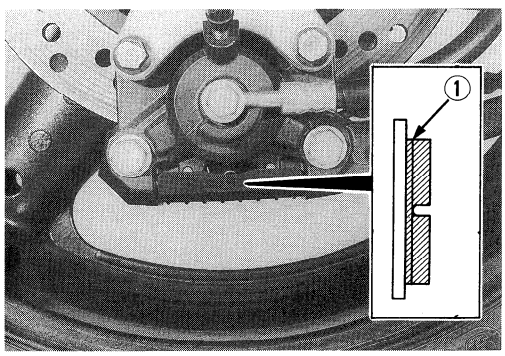

BRAKE PEDAL HEIGHT

- Loosen the lock nut ① and rotate the push rod ② to locate brake pedal 55 mm (2.2 in) Ⓐ below the top face of the footrest.
- Retighten the lock nut ① to secure the push rod ② in the proper position.

Brake pedal height Ⓐ : 55 mm (2.2 in)

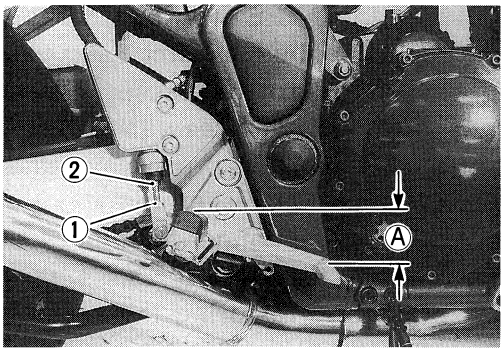

BRAKE LIGHT SWITCH

Adjust the rear brake light switch so that the brake light will come on just before pressure is felt when the brake pedal is depressed.

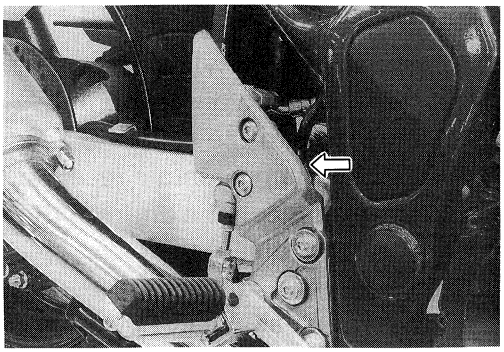

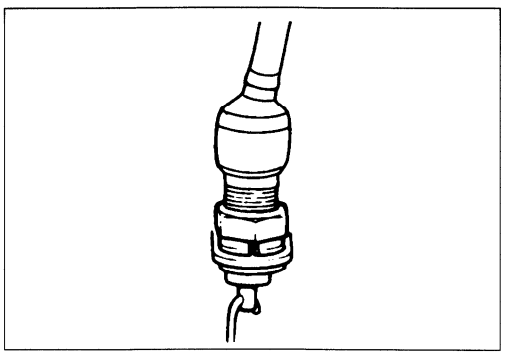

AIR BLEEDING THE BRAKE FLUID CIRCUIT

Air trapped in the fluid circuit acts like a cushion to absorb a large proportion of the pressure developed by the master cylinder and thus interferes with the full braking performance of the brake caliper. The presence of air is indicated by "sponginess" of the brake lever and also by lack of braking force. Considering the danger to which such trapped air exposes the machine and rider, it is essential that, after remounting the brake and restoring the brake system to the normal condition, the brake fluid circuit be purged of air in the following manner:

- Fill up the master cylinder reservoir to the "UPPER" line. Replace the reservoir cap to prevent entry of dirt.
- Attach a pipe to the caliper bleeder valve, and insert the free end of the pipe into a receptacle.
- Front brake: Bleed the air from the air bleeder valve.
- Squeeze and release the brake lever several times in rapid succession and squeeze the lever fully without releasing it. Loosen the bleeder valve by turning it a quarter of a turn so that the brake fluid runs into the receptacle; this will remove the tension of the brake lever causing it to touch the handlebar grip. Then, close the valve, pump and squeeze the lever, and open the valve. Repeat this process until the fluid flowing into the receptacle no longer contains air bubbles.

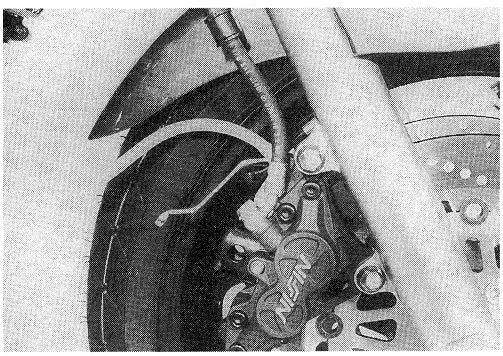

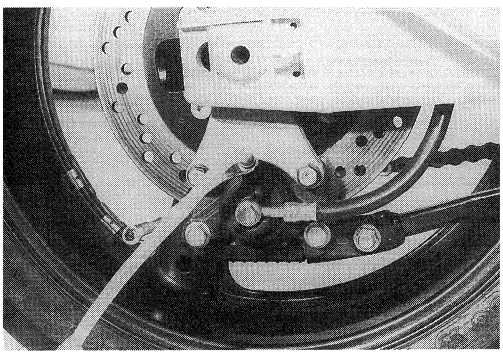

NOTE:
Replenish the brake fluid in the reservoir as necessary while bleeding the brake system. Make sure that there is always some fluid visible in the reservoir.

- Close the bleeder valve, and disconnect the pipe. Fill the reservoir with brake fluid to the "UPPER" end of the inspection window.

Air bleeder valve: 8 N·m (0.8 kg-m, 6.0 lb-ft)

CAUTION

Handle brake fluid with care: the fluid reacts chemically with paint, plastics, rubber materials etc.

- The only difference between bleeding the front and rear brakes is that the rear master cylinder is actuated by a pedal.

TIRE

Inspect Every 6 000 km (4 000 miles, 6 months).

TIRE TREAD CONDITION

Operating the motorcycle with excessively worn tires will decrease riding stability and consequently invite a dangerous situation. It is highly recommended to replace a tire when the remaining depth of tire tread reaches the following specification.

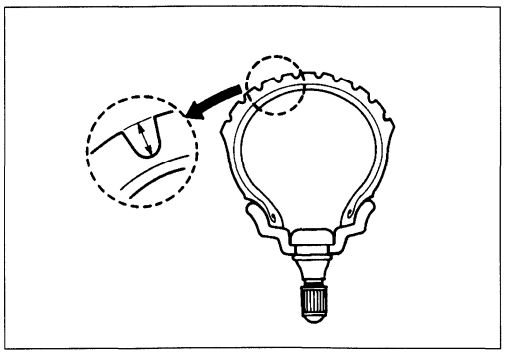

Tire tread depth limit: FRONT 1.6 mm (0.06 in)
REAR 2.0 mm (0.08 in)

TIRE PRESSURE

If the tire pressure is too high or too low, steering will be adversely affected and tire wear increased. Therefore, maintain the correct tire pressure for good roadability or shorter tire life will result. Cold inflation tire pressure is as follows.

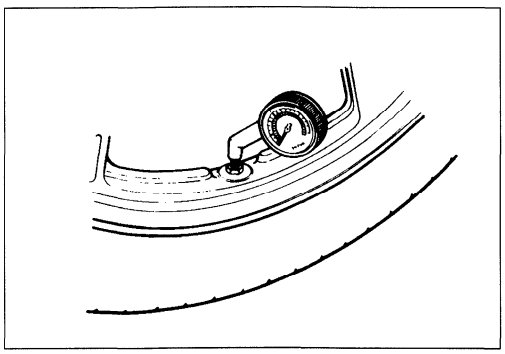

COLD INFLATION TIRE PRESSURE	SOLO RIDING			DUAL RIDING		
	kPa	kg/cm^2	psi	kPa	kg/cm^2	psi
FRONT	250	2.50	36	250	2.50	36
REAR	250	2.50	36	250	2.50	36

⚠ CAUTION

The standard tire fitted on this motorcycle is 120/70 ZR17 for front (MICHELIN MACADAM 90X M or BRIDGESTONE BT-54F F) and 180/55 ZR17 for rear (MICHELIN MACADAM 90X M or BRIDGESTONE BT-54R G). The use of tires other than those specified may cause instability. It is highly recommended to use a SUZUKI Genuine Tire.

STEERING

Inspect Initially at 1 000 km (600 miles, 1 month) and Every 12 000 km (7 500 miles, 12 months) thereafter.

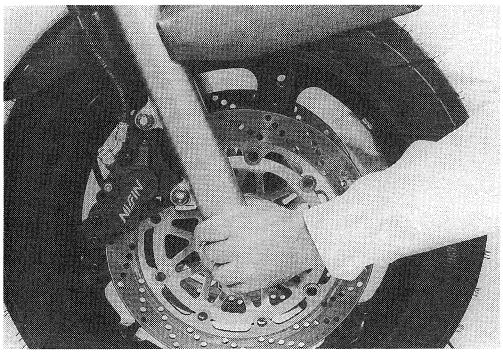

Taper roller type bearings are used on the steering system for better handling. Steering should be adjusted properly for smooth turning of handlebars and safe running. Overtight steering prevents smooth turning of the handlebars and too loose steering will cause poor stability. Check that there is no play in the front fork assembly by supporting the machine so that the front wheel is off the ground, with the wheel straight ahead, grasp the lower fork tubes near the axle and pull forward. If play is found, perform steering bearing adjustment as described in page 5-33 of this manual.

FRONT FORK

Inspect Every 12 000 km (7 500 miles, 12 months).

Inspect the front forks for oil leakage, scoring or scratches on the outer surface of the inner tubes. Replace any defective parts, if necessary. (Refer to page 5-22.)

REAR SUSPENSION

Inspect Every 12 000 km (7 500 miles, 12 months).

Inspect the rear shock absorber for oil leakage and check that there is no play in the swingarm assembly.

CHASSIS BOLTS AND NUTS

Tighten Initially at 1 000 km (600 miles, 1 month) and Every 6 000 km (4 000 miles, 6 months) thereafter.

Check that all chassis bolts and nuts are tightened to their specified torque. (Refer to page 2-19 for the locations of the following nuts and bolts on the motorcycle.)

Item	N·m	kg-m	lb-ft
① Steering stem head nut	65	6.5	47.0
② Front fork upper clamp bolt	23	2.3	16.5
③ Front fork lower clamp bolt	23	2.3	16.5
④ Front fork cap bolt	23	2.3	16.5
⑤ Front axle	65	6.5	47.0
⑥ Front axle pinch bolt	23	2.3	16.5
⑦ Handlebar clamp bolt	23	2.3	16.5
⑧ Front brake master cylinder mounting bolt	10	1.0	7.0
⑨ Front brake caliper mounting bolt	39	3.9	28.0
⑩ Front brake caliper pad mounting pin	18	1.8	13.0
⑪ Brake hose union bolt (Front & Rear)	23	2.3	16.5
⑫ Air bleeder valve (Brake & Clutch)	8	0.8	6.0
⑬ Brake disc bolt (Front & Rear)	23	2.3	16.5
⑭ Rear brake caliper mounting bolt	25	2.5	18.0
⑮ Rear brake caliper housing bolt	30	3.0	21.5
⑯ Rear brake master cylinder mounting bolt	23	2.3	16.5
⑰ Rear brake master cylinder rod lock nut	18	1.8	13.0
⑱ Front footrest bracket mounting bolt	23	2.3	16.5
⑲ Front footrest bolt	39	3.9	28.0
⑳ Swingarm pivot nut	100	10.0	72.5
㉑ Rear shock absorber mounting nut (Upper & Lower)	50	5.0	36.0
㉒ Rear cushion lever/rod mounting nut	78	7.8	56.5
㉓ Rear axle nut	100	10.0	72.5
㉔ Rear sprocket nut	60	6.0	43.5
㉕ Rear torque link nut	35	3.5	25.5
㉖ Clutch master cylinder mounting bolt	10	1.0	7.0
㉗ Clutch hose union bolt	23	2.3	16.5

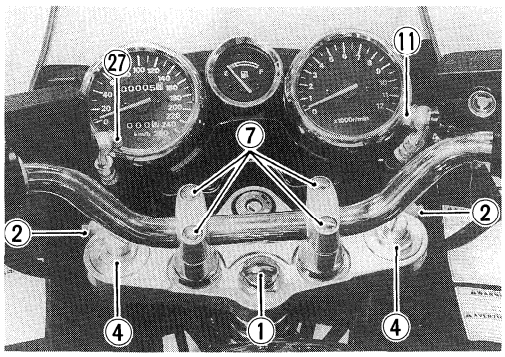
27
11
7
2
2
4
1
4

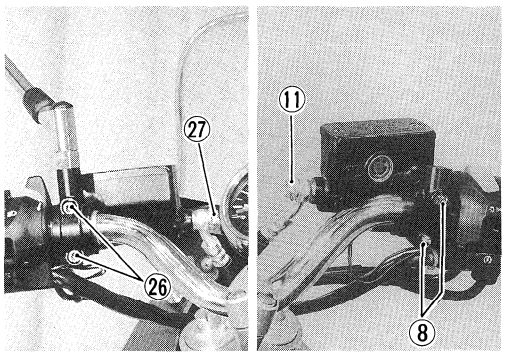
27
26
11
8

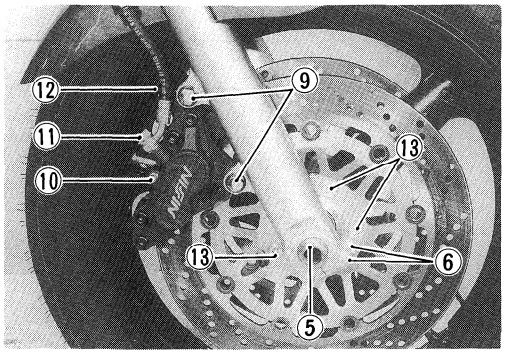
12
11
10
9
13
13
6
5

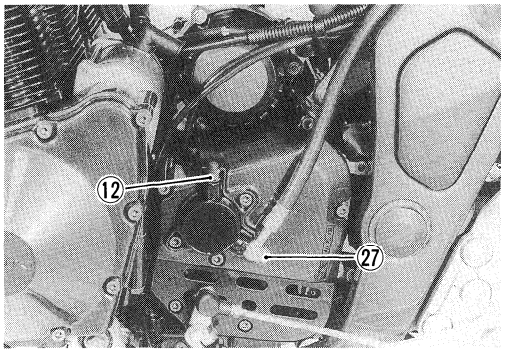
12
27

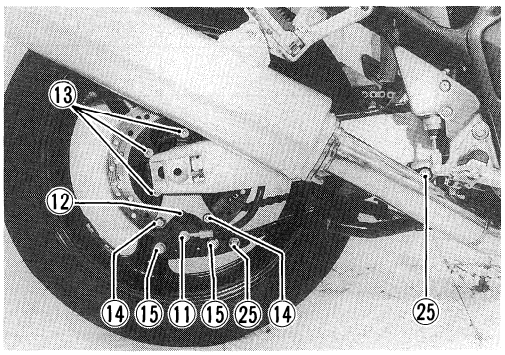
13
12
14
15
11
15
25
14
25

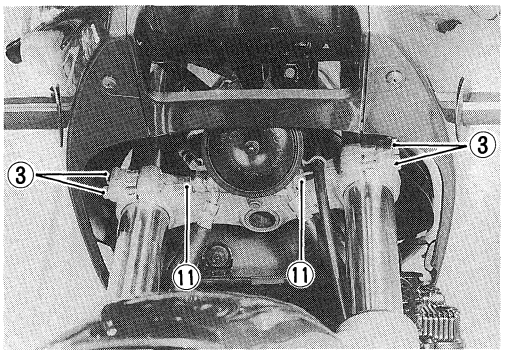
3
3
11
11

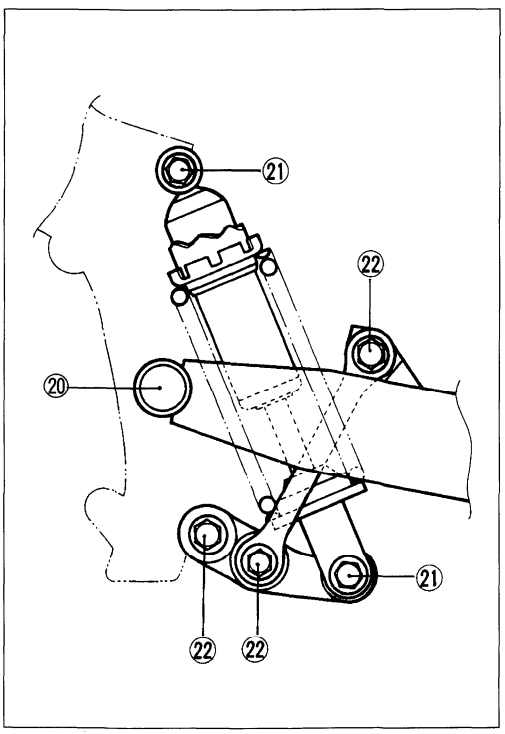
21
22
20
21
22
22

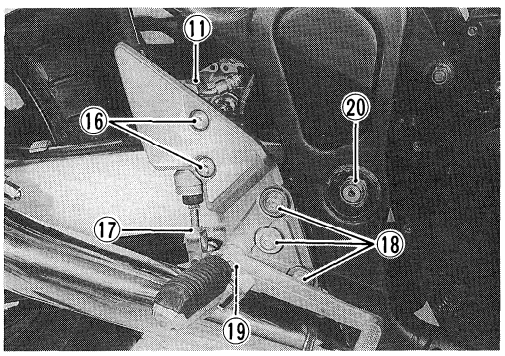
11
16
20
17
18
19

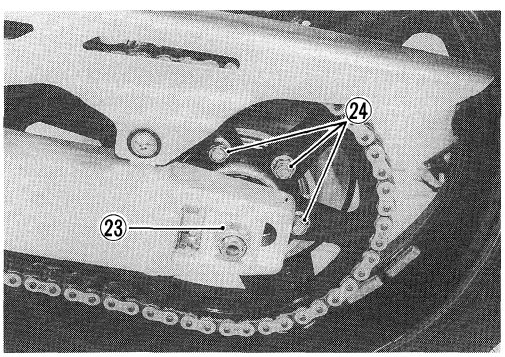
24
23

COMPRESSION PRESSURE CHECK

The compression of a cylinder is a good indicator of its internal condition.
The decision to overhaul the cylinder is often based on the results of a compression test. Periodic maintenance records kept at your dealership should include compression readings for each maintenance service.

COMPRESSION PRESSURE SPECIFICATION

Standard	Limit	Difference
1 250 kPa (12.5 kg/cm^2, 178 psi)	875 kPa (8.75 kg/cm^2, 124 psi)	200 kPa (2 kg/cm^2, 28 psi)

Low compression pressure can indicate any of the following conditions:
* Excessively worn cylinder wall
* Worn-down piston or piston rings
* Piston rings stuck in grooves
* Poor seating of valves
* Ruptured or otherwise defective cylinder head gasket

Overhaul the engine in the following cases:
* Compression pressure in one of the cylinders is less than 875 kPa (8.75 kg/cm^2, 124 psi).
* Difference in compression pressure between any two cylinders is more than 200 kPa (2 kg/cm^2, 28 psi).
* All compression pressure are below 1 000 kPa (10 kg/cm^2, 142 psi) even when they measure more than 875 kPa (8.75 kg/cm^2, 124 psi).

COMPRESSION TEST PROCEDURE

NOTE:
* *Before testing the engine for compression pressure, make sure that the cylinder head bolts are tightened to the specified torque values and valves are properly adjusted.*
* *Have the engine warmed up by idling before testing.*
* *Be sure that the battery used is in fully-charged condition.*

Remove the parts concerned and test the compression pressure in the following manner.
- Remove the seat and fuel tank.
- Remove all the spark plugs.
- Fit the compression gauge in one of the plug holes, while taking care that the connection tight.
- Keep the throttle grip in full-open position.
- While cranking the engine a few seconds with the starter, and record the maximum gauge reading as the compression of that cylinder.
- Repeat this procedure with the other cylinders.

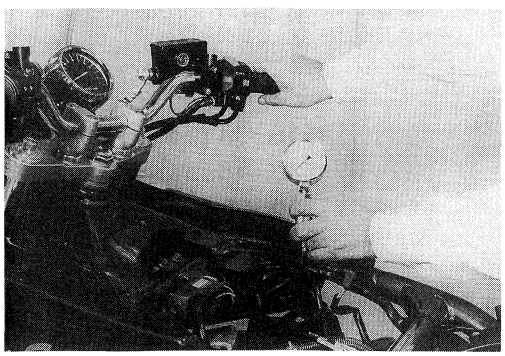

TOOL **09915-64510: Compression gauge**
09915-63210: Adaptor

OIL PRESSURE CHECK

Check periodically the oil pressure in the engine to judge roughly the condition of the moving parts.

OIL PRESSURE SPECIFICATION

Above 300 kPa (3.0 kg/cm^2, 43 psi) **Below 600 kPa (6.0 kg/cm^2, 85 psi)**	**at 3 000 r/min., Oil temp. at 60°C (140°F)**

If the oil pressure is lower or higher than the specification, the following causes may be considered.

LOW OIL PRESSURE

* Clogged oil filter
* Oil leakage from the oil passage way
* Damaged O-ring
* Defective oil pump
* Combination of above items

HIGH OIL PRESSURE

* Used a engine oil which is too high viscosity
* Clogged oil passage way
* Combination of above items

OIL PRESSURE TEST PROCEDURE

Start the engine and check if the oil pressure indicator light is turned on. If it keeps on lighting, check the oil pressure indicator light circuit. If it is in good condition, check the oil pressure in the following manner.

- Remove the main oil gallery plug.
- Install the oil pressure gauge ① with adaptor in the position shown in the figure.
- Warm up the engine as follows:
  Summer 10 min. at 2 000 r/min.
  Winter 20 min. at 2 000 r/min.
- After warming up, increase the engine speed to 3 000 r/min. (with the engine tachometer), and read the oil pressure gauge.

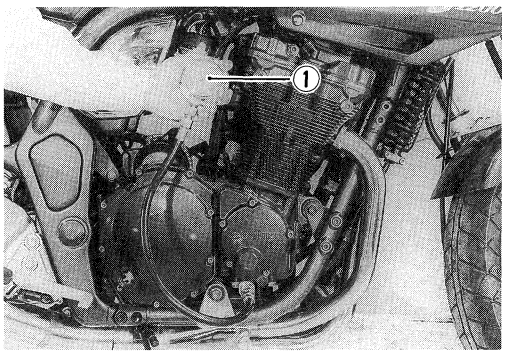

TOOL **09915-74510: Oil pressure gauge**
09915-74540: Adaptor
09915-77330: Meter (for high pressure)

ENGINE

CONTENTS

ENGINE COMPONENTS REMOVABLE WITH ENGINE IN PLACE ... 3- 1
ENGINE REMOVAL AND REINSTALLATION ... 3- 2
ENGINE REMOVAL ... 3- 2
ENGINE REINSTALLATION ... 3- 8
ENGINE DISASSEMBLY ... 3-11
ENGINE COMPONENTS INSPECTION AND SERVICE ... 3-23
CYLINDER HEAD ... 3-23
VALVE ... 3-24
CAMSHAFT ... 3-30
CAM CHAIN TENSION ADJUSTER ... 3-33
CYLINDER ... 3-34
PISTON ... 3-34
PISTON RING ... 3-35
PISTON PIN ... 3-36
CONROD ... 3-36
CRANKSHAFT ... 3-37
CLUTCH ... 3-43
OIL PUMP ... 3-44
TRANSMISSION ... 3-45
ENGINE REASSEMBLY ... 3-50

ENGINE COMPONENTS REMOVABLE WITH ENGINE IN PLACE

The parts listed below can be removed and reinstalled without removing the engine from the frame. Refer to the page listed in each section for removal and reinstallation instructions.

ENGINE CENTER

	See page
Exhaust pipe/muffler	3-3 and 4
Oil hose	3-11 and 70
Oil filter	3-11 and 70
Oil cooler	3-3
Oil pan	3-19 and 54
Engine oil pressure regulator	3-53
Oil sump filter	3-19 and 53
Carburetors	3-5 and 6
Cam chain tension adjuster	3-11 and 68
Cylinder head cover	3-11 and 69
Cylinder head breather cover	3-4
Camshafts	3-12 and 65
Cylinder head	3-12 and 63
Cylinder	3-13 and 63
Pistons	3-13 and 62
Starter motor	3-14 and 61
Generator	3-14 and 61

ENGINE LEFT SIDE

	See page
Gearshift lever	3-6 and 10
Engine sprocket cover	3-6
Engine sprocket and drive chain	3-6
Neutral indicator switch body	3-18 and 59
Starter clutch cover	3-17 and 60
Starter idle gear	3-17 and 60
Starter clutch	3-18 and 60

ENGINE RIGHT SIDE

	See page
Clutch cover	3-14 and 58
Signal generator	3-14 and 59
Oil pressure switch	3-58
Clutch pressure, drive and driven plates	3-15, 16, 55 and 56
Clutch sleeve hub	3-16 and 56
Oil pump driven gear	3-16 and 55
Generator/oil pump drive gears	3-16 and 55
Primary driven gear	3-16 and 55
Gearshift shaft	3-16 and 54
Gearshift cam pawl and cam driven gear	3-17 and 54

ENGINE REMOVAL AND REINSTALLATION

ENGINE REMOVAL

Before taking the engine out of the frame, wash the engine with a steam cleaner. The procedure of engine removal is sequentially explained in the following steps, and engine installation is effected by reversing the removal procedure.

- Remove the fairings. (See page 5-2.)
- Remove the seat.
- Remove the frame cover assembly. (See page 5-3.)
- Disconnect the battery ⊖ lead wire terminal and battery ⊖ lead wire coupler.
- Disconnect the fuel level gauge lead wire coupler.
- Remove the fuel tank mounting bolts ①.

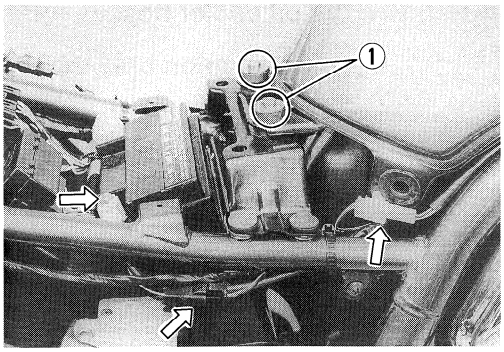

- Turn the fuel valve to "ON" position and disconnect the fuel hose ② and vacuum hose ③ from the fuel valve.
- Remove the fuel tank.

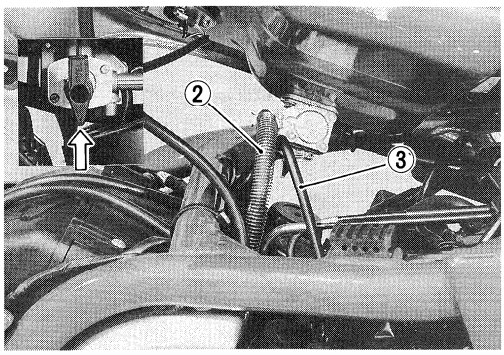

- Remove the air cleaner box covers, left and right.

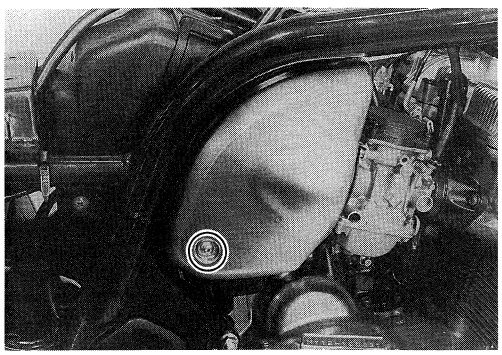

- Disconnect all the spark plug caps.

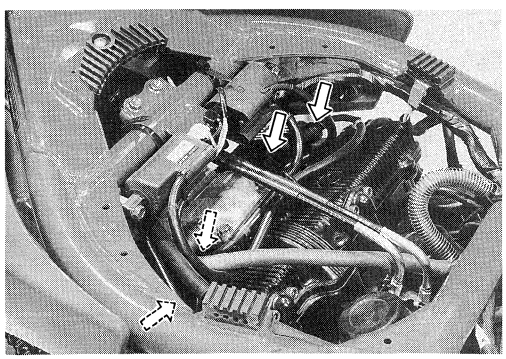

- Remove the oil drain plug to drain out engine oil.

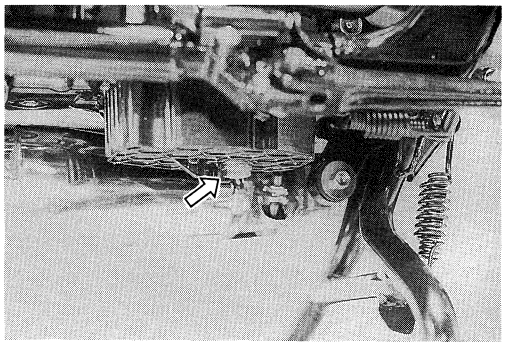

- Remove the oil cooler hose union bolts ①.

Oil cooler hose union bolt: 28 N·m (2.8 kg-m, 20.0 lb-ft)

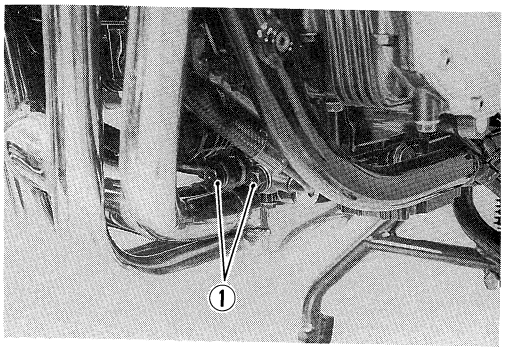

- Remove the oil cooler by removing its mounting bolts ②.

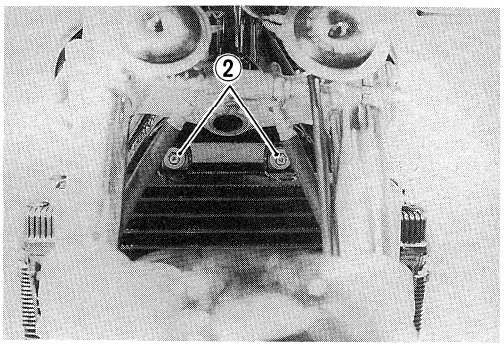

- Remove the eight exhaust pipe clamp bolts.

Exhaust pipe clamp bolt: 23 N·m (2.3 kg-m, 16.5 lb-ft)

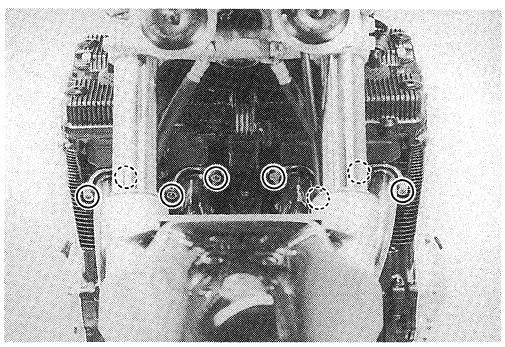

- Remove the exhaust pipe mounting bolt ③.

Exhaust pipe mounting bolt: 23 N·m (2.3 kg-m, 16.5 lb-ft)

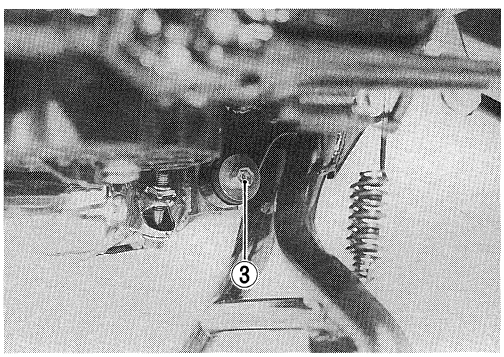

- Remove the muffler mounting bolt ①, then remove the exhaust pipe/muffler assembly.
  The gasket retainers ② are installed in the #1 and #4 exhaust pipes.

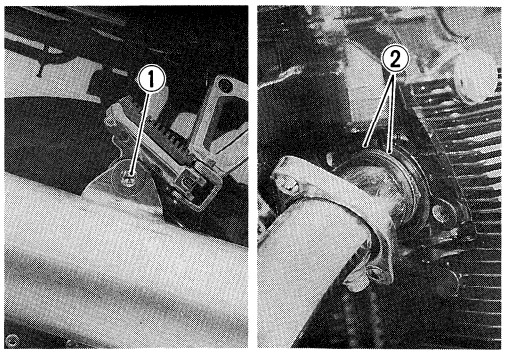

NOTE:
When installing a new exhaust pipe/muffler connector, clean any old dried sealer from the exhaust pipe and from inside the muffler and the exhaust gas sealer should be applied to both the inside and outside of the exhaust pipe/muffler connector.

EXHAUST GAS SEALER: PERMATEX 1372

Exhaust muffler mounting bolt: 29 N·m (2.9 kg-m, 21.0 lb-ft)

- Remove the exhaust pipe gaskets ③.

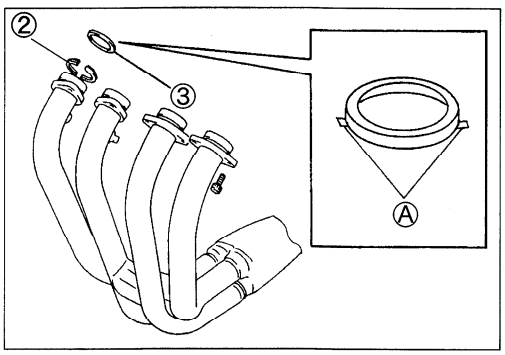

▲ CAUTION

Be sure to face the tabs Ⓐ on the exhaust pipe gasket ③ to the inside when installing it.

- Remove the breather hose ④.

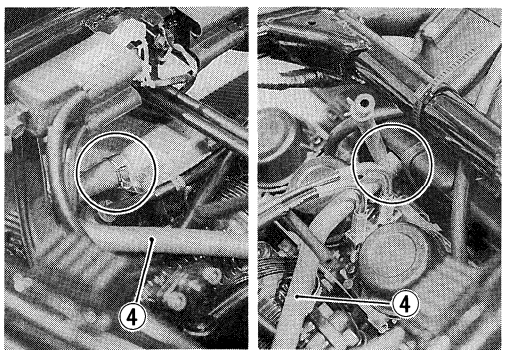

- Remove the cylinder head breather cover ⑤ by removing the mounting bolts.

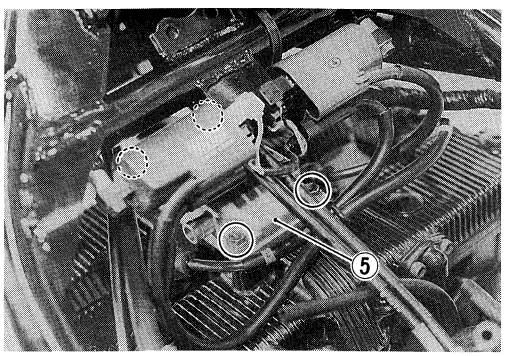

- Remove the fuel tank bracket.

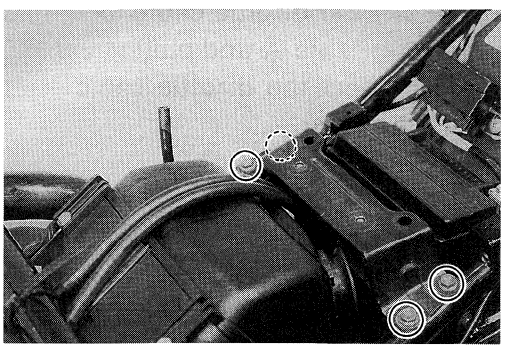

- Remove the air cleaner box mounting screws, left and right.

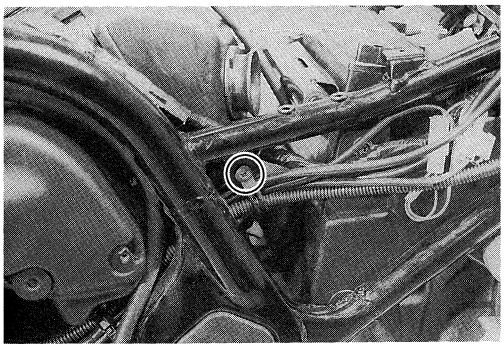

- Loosen the air cleaner side carburetor clamp screws.
- Slightly move the air cleaner box backward.

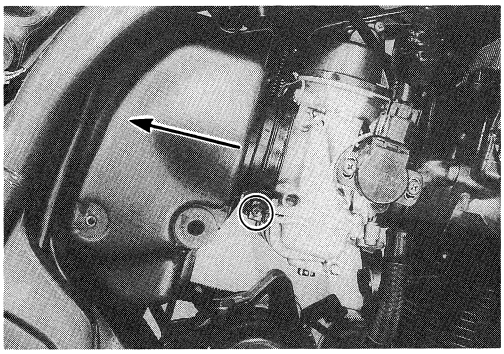

- Disconnect the throttle position switch lead wire coupler.
- Loosen the engine side carburetor clamp screws.
- Slightly move the carburetor backward.

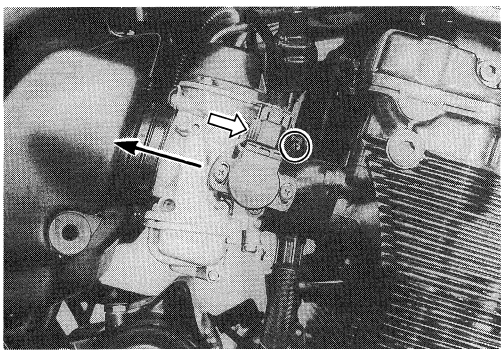

- Dismount the carburetor assembly from right side.

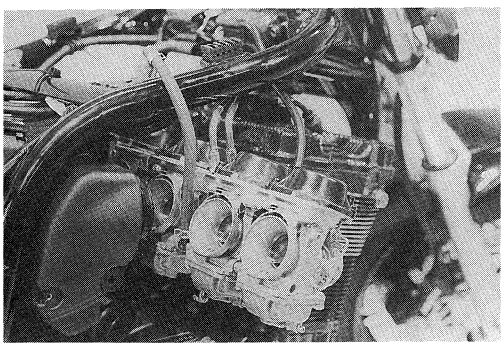

- Loosen the throttle cable lock nuts, ① and ②, on the returning cable Ⓐ and pulling cable Ⓑ.
- Disconnect the throttle cable ends, ③ and ④, from the throttle lever.

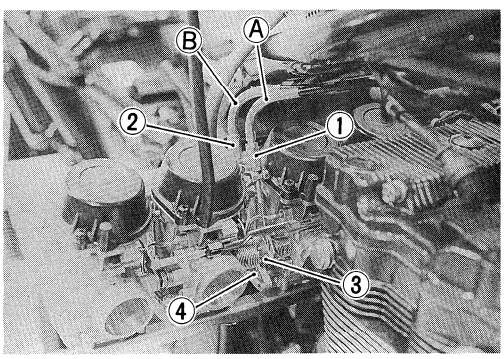

- Disconnect the starter cable from the starter lever.
- Remove the carburetor assembly.

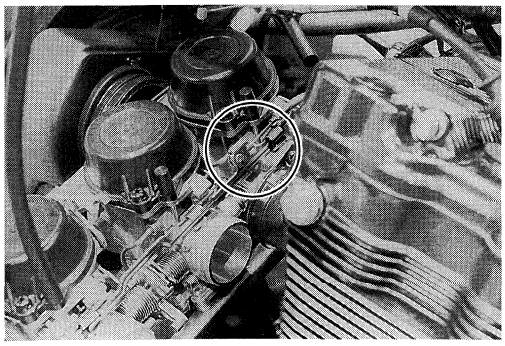

- Remove the gearshift lever by removing its mounting bolt.

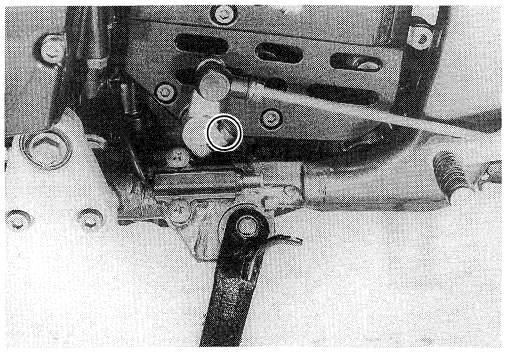

- Remove the engine sprocket cover by removing the bolts.

⚠ CAUTION

Do not operate the clutch lever to prevent clutch piston retainer damage.

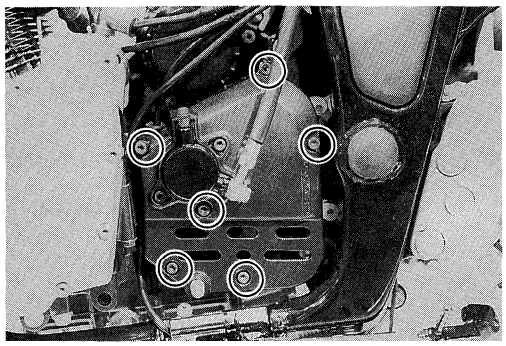

- Flatten the lock washer.
- Remove the engine sprocket nut while depressing the rear brake pedal.

Engine sprocket nut: 115 N·m (11.5 kg-m, 83.0 lb-ft)

- Remove the engine sprocket.

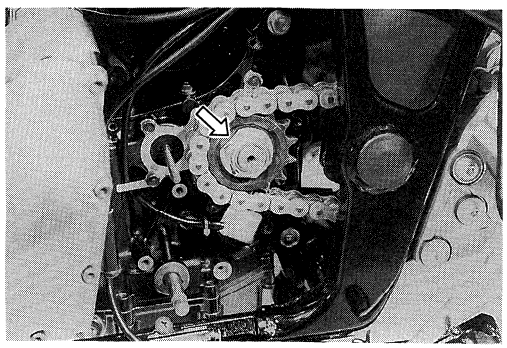

NOTE:
If it is difficult to remove the engine sprocket, loosen the axle nut and chain adjusters to provide additional chain slack.

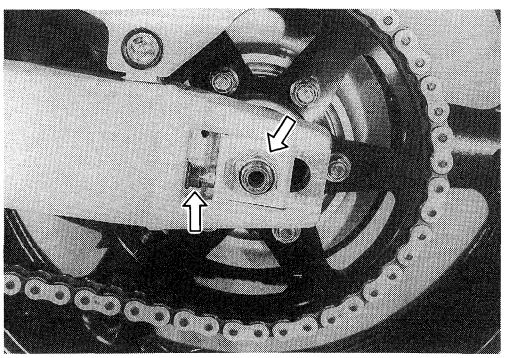

- Disconnect the various lead wires.

① Neutral switch
② Oil pressure switch
③ Generator
④ Signal generator

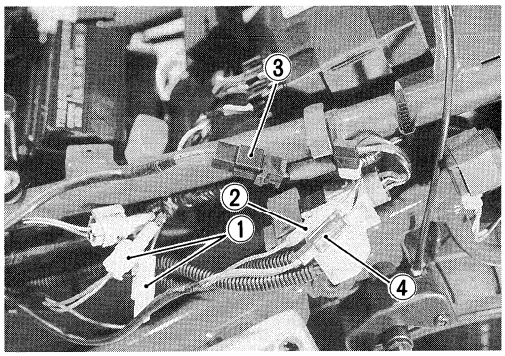

- Disconnect the starter motor lead wire.

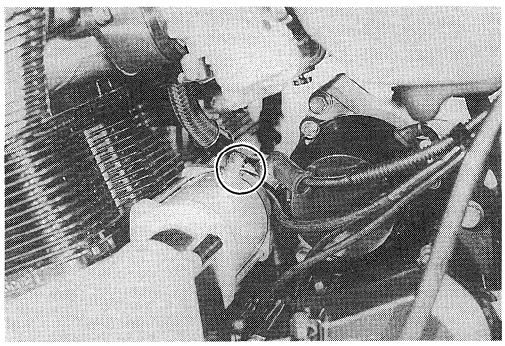

- Support the engine with a proper engine jack.
- Remove the frame down tube mounting bolts and nuts.
- Remove the engine mounting bolts, nuts, spacer and brackets.
- Gradually lower the engine assembly.

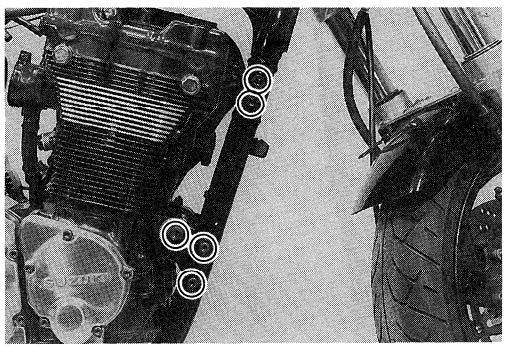

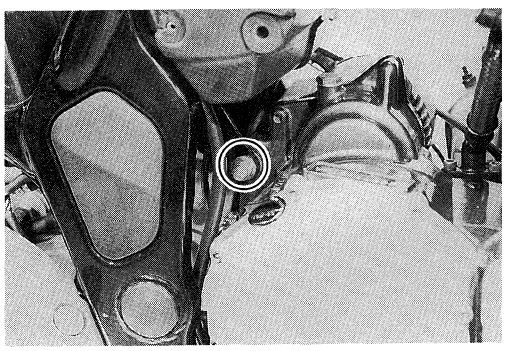

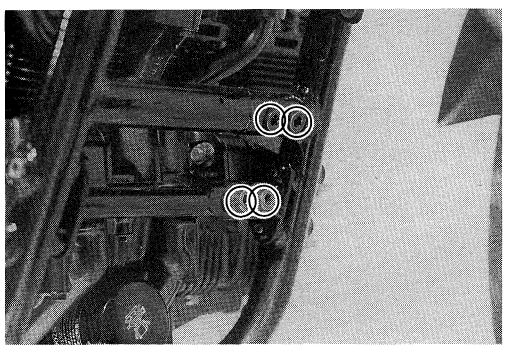

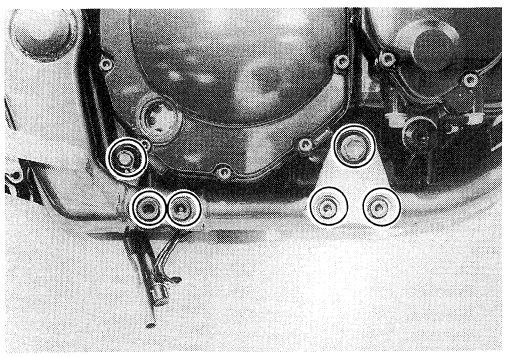

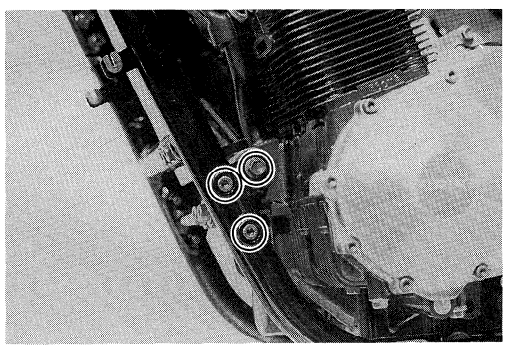

ENGINE REINSTALLATION

Reinstall the engine in the reverse order of engine removal.

- Insert the two long bolts from left side. Install the brackets, spacer, bolts and nuts properly, as shown in the following illustration.

NOTE:
The engine mounting nuts are self-locking. Once the nut has been removed, it is no longer of any use. Be sure to use new nuts and tighten them to the specified torque.

LENGTH

Bolt ①	33 mm (1.3 in)
Bolt ②	33 mm (1.3 in)
Bolt ③	33 mm (1.3 in)
Bolt ④	55 mm (2.2 in)
Bolt ⑤	180 mm (7.1 in)
Bolt ⑥	140 mm (5.5 in)
Bolt ⑦	50 mm (2.0 in)
Bolt ⑧	30 mm (1.2 in)
Bolt ⑨	75 mm (3.0 in)
Bolt ⑩	25 mm (1.0 in)
Spacer RH Ⓐ	27 mm (1.1 in)

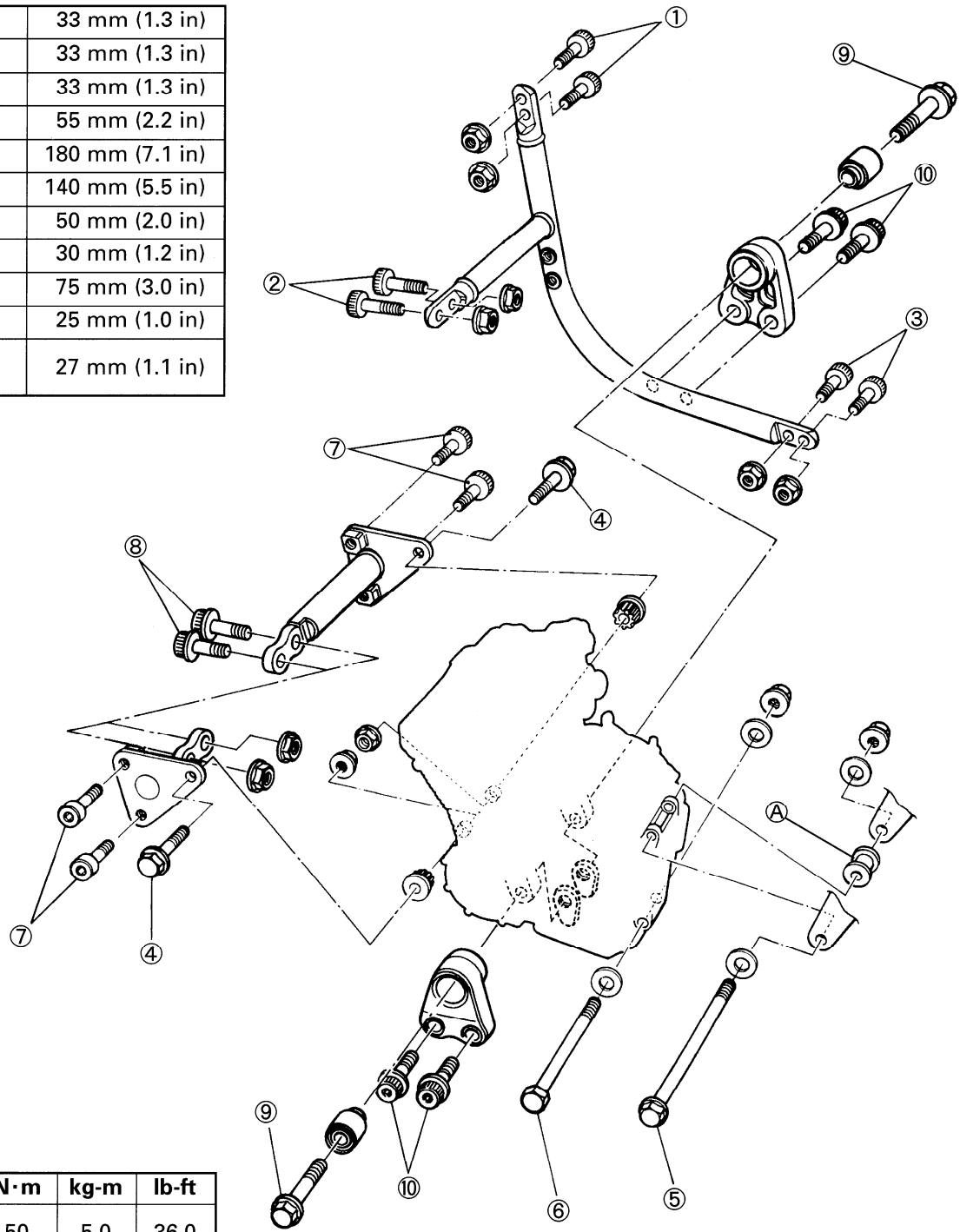

ITEM	N·m	kg-m	lb-ft
①, ② ③, ⑧	50	5.0	36.0
④, ⑨	55	5.5	40.0
⑤, ⑥	88	8.8	63.5
⑦, ⑩	23	2.3	16.5

NOTE:
The bolt ④ of the spare parts is applied with a thread lock agent. If reusing a removed bolt ④ , apply a small quantity of the THREAD LOCK "1342" to its threads.

- Replace the plug caps on the spark plugs so that their code markings correspond to the cylinder numbers arranged in the order of **1, 2, 3,** and **4** from the left hand.

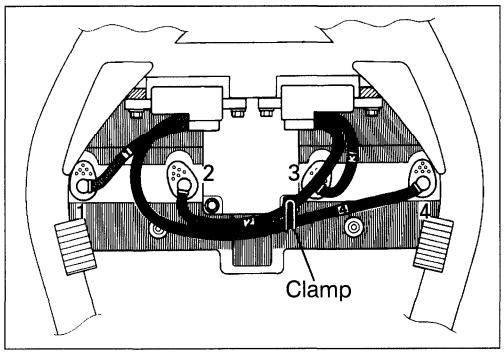

- Locate the carburetor clamps, as shown in the illustration.

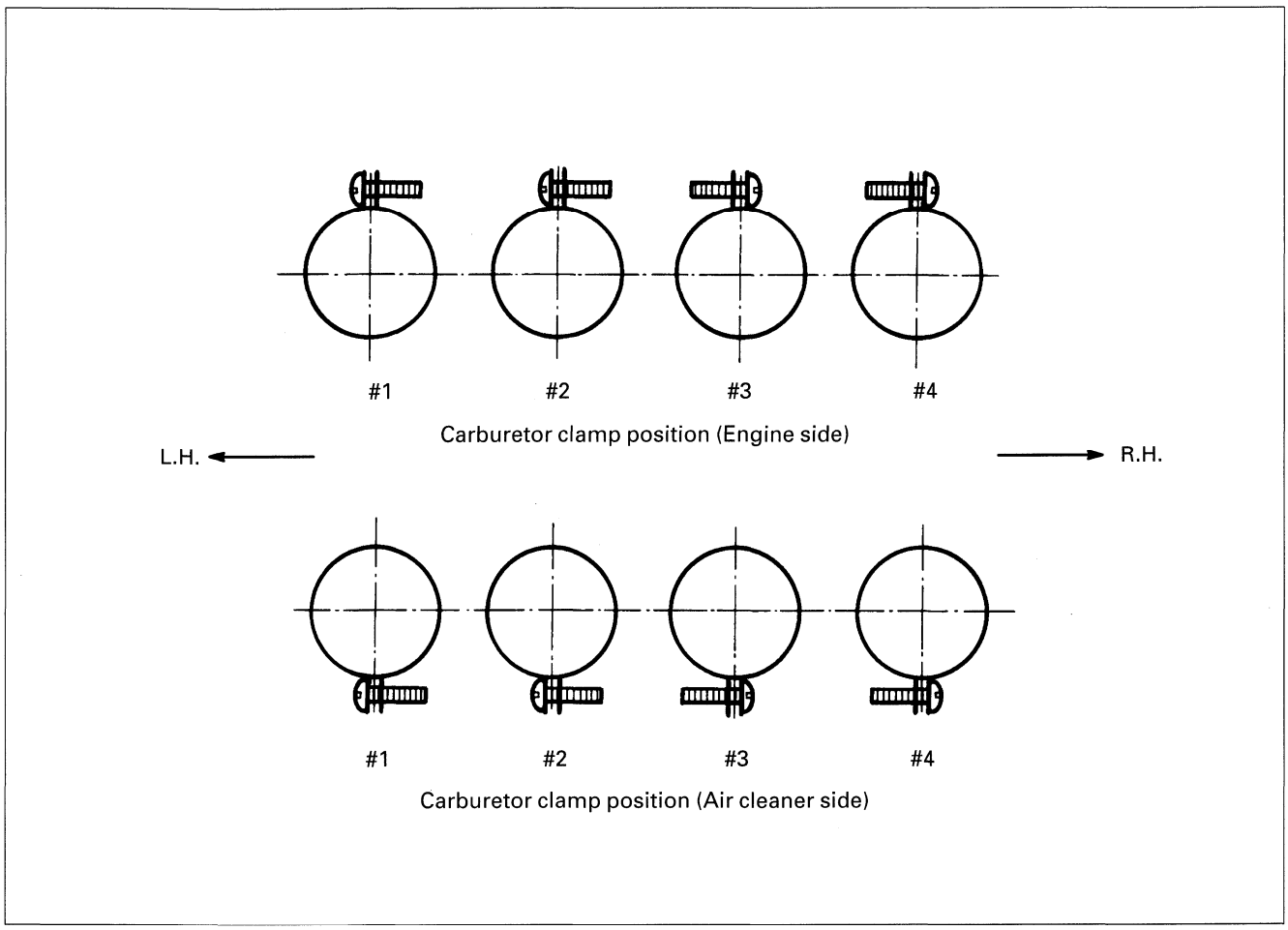

- Replace the carburetor air vent hoses ①, breather hose ②, vacuum hose ③ and throttle cables ④ to the exact positions.

Pass through the vacuum hose ③ between the breather hose ② and throttle cables ④.

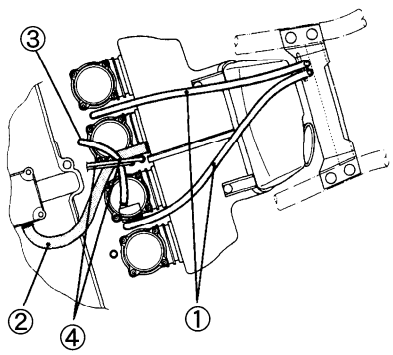

- Install the gearshift lever to the gearshift shaft in the correct position.

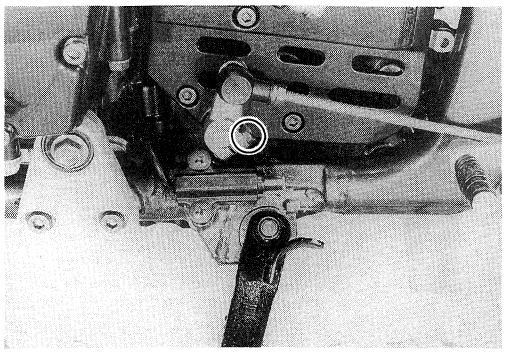

- Tighten the engine sprocket nut to the specified torque and bend up the lock washer to lock the nut.
- Tighten the rear axle nut, exhaust pipe clamp bolts, exhaust pipe mounting bolt and muffler mounting bolt to the specified torque. (See page 7-29.)
- After remounting the engine, route wiring harnesses, cables and hoses properly by referring to the sections, for wire routing, cable routing and hose routing. (See pages 7-13 through 23.)
- Adjust the following items to the specification.

	Page
* Throttle cable play	2- 9
* Idling adjustment	4-17
* Carburetor synchronization	4-15
* Drive chain	2-11

- Pour 4.6 L (4.9/4.0 US/Imp qt) of engine oil SAE 10W/40 graded SE, SF or SG into the engine after overhauling engine.
- Start up the engine and allow it run for several minutes at idle speed. About several minutes after stopping engine, check that the oil level remains between the marks of oil level inspection window.

Change	3 300 ml (3.4/2.9 US/Imp qt)
Filter change	3 500 ml (3.6/3.0 US/Imp qt)
Overhaul	4 600 ml (4.9/4.0 US/Imp qt)

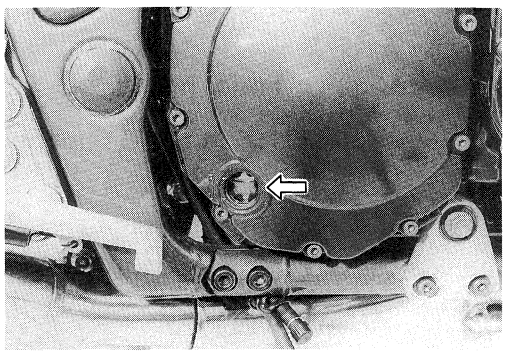

ENGINE DISASSEMBLY

- Remove the oil filter ① by using the special tool.

TOOL 09915-40610: Oil filter wrench

NOTE:
Refer to page 3-70 for installation procedures.

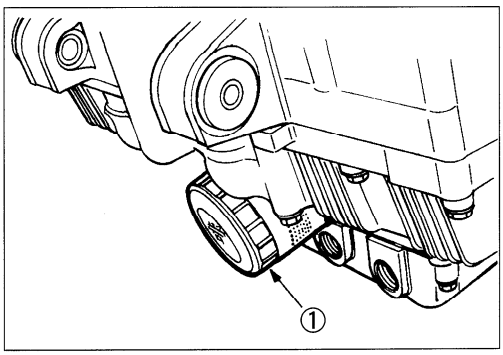

- Remove the left and right oil hoses ② by removing the bolts.

TOOL 09911-73730: 5 mm "T" type hexagon wrench

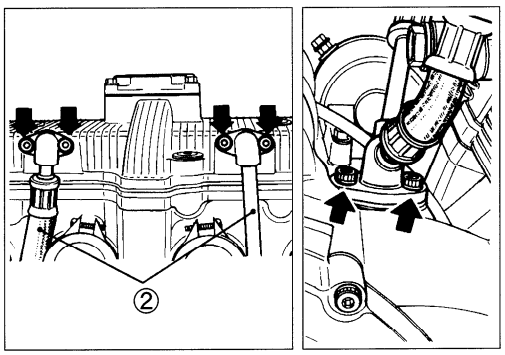

- After removing the spring holder bolt ③ and spring ④, remove the cam chain tension adjuster ⑤ by removing the mounting bolts.

TOOL 09911-73730: 5 mm "T" type hexagon wrench

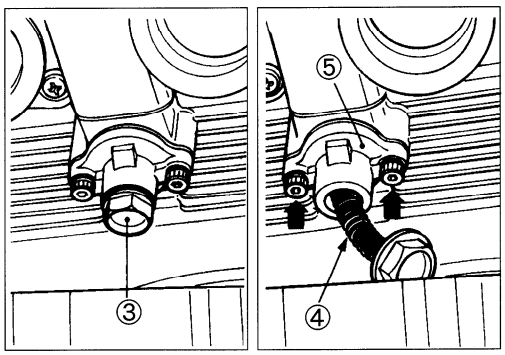

- Remove the cylinder head cover by removing the bolts.

TOOL 09914-25811: 6 mm "T" type hexagon wrench

NOTE:
The cylinder head breather cover is to be removed only when replacing it or when removing the engine from the frame.

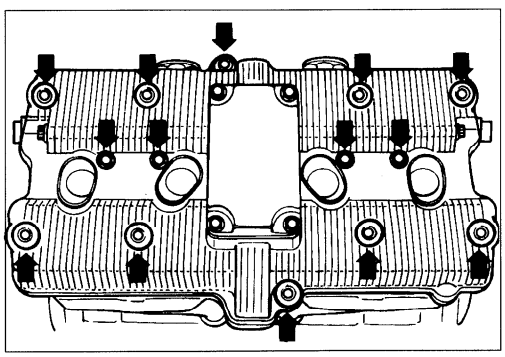

- Remove the signal generator cover by removing the bolts.

TOOL 09911-73730: 5 mm "T" type hexagon wrench

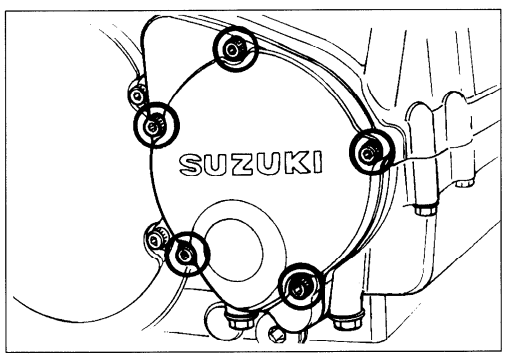

- Remove the ten camshaft journal holders by removing the bolts.

NOTE:
Be sure to loosen camshaft journal holder bolts evenly by shifting the wrench diagonally.

- Remove the two camshafts; intake and exhaust.

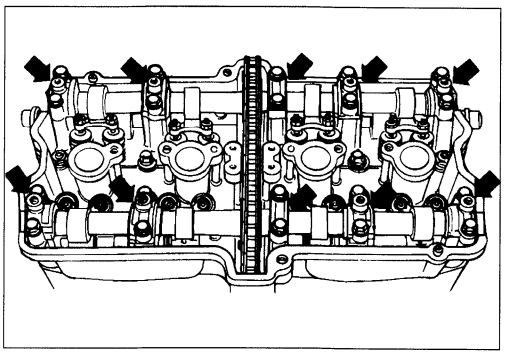

- Remove the cam chain guide ①.

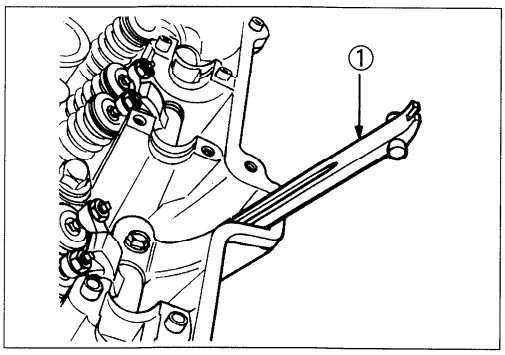

- The cylinder head becomes free for removal when its one 6-mm bolt Ⓐ and twelve 10-mm nuts are removed.

TOOL 09911-74510: Long socket 14 mm
09914-24510: T-handle

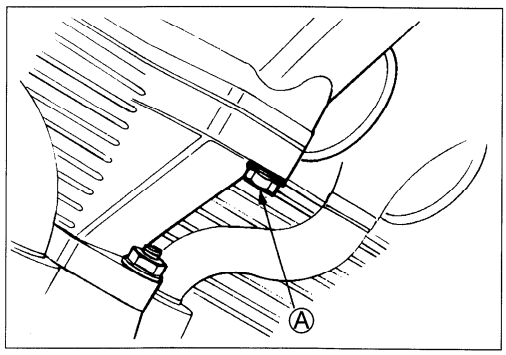

NOTE:
When loosening the cylinder head nuts, loosen each nut little by little, in a descending order, according to the numbers cast on a cylinder head.

- Lift the cylinder head up to grip its both ends. If it does not come off, lightly tap on the finless portions of it with a plastic mallet.

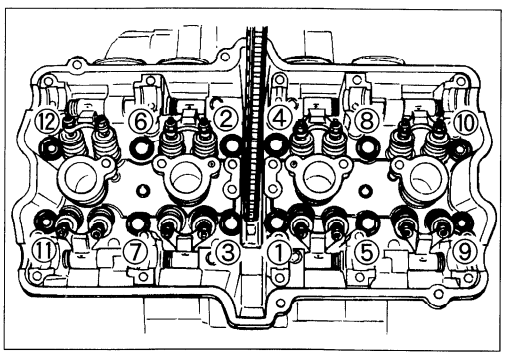

⚠ CAUTION

Be careful not to damage the fins when removing or handling the cylinder head.

- Remove the left and right oil pipes ①.

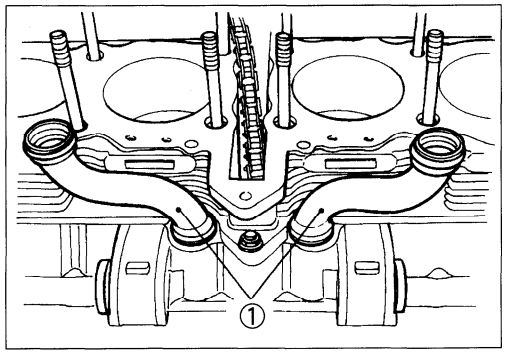

- Remove the cylinder nut Ⓐ.

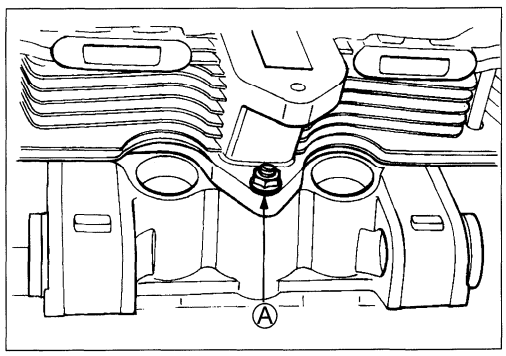

- Firmly grip both ends of the cylinder block and lift it straight up. If the block does not come off, lightly tap on the finless portions of the block with a plastic mallet to make the gasketed joint loose.

⚠ CAUTION

Be careful not to damage the fins when removing or handling the cylinder block.

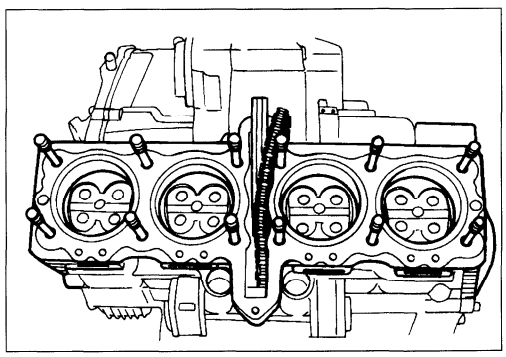

- Scribe the cylinder number on the head of the respective pistons.

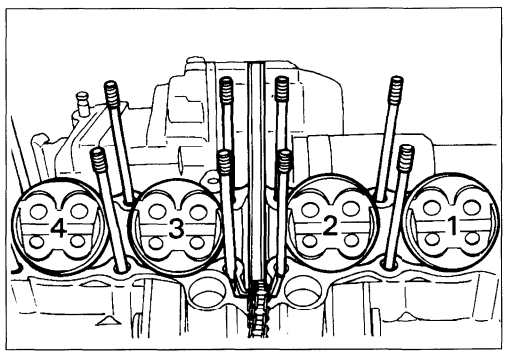

- Place a cloth beneath the piston so as not to drop any parts in the crankcase, and remove the circlip ② with long-nose pliers.
- Draw out the piston pin. Place each piston pin in the same piston as that it was removed from.

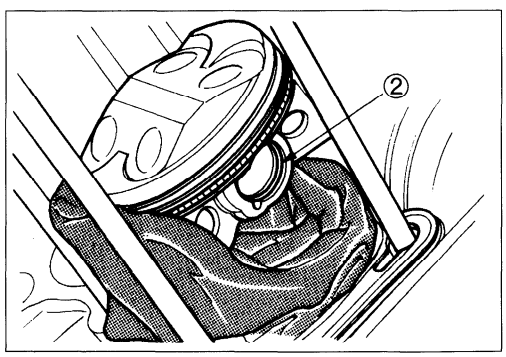

- Remove the starter motor by removing the bolts.

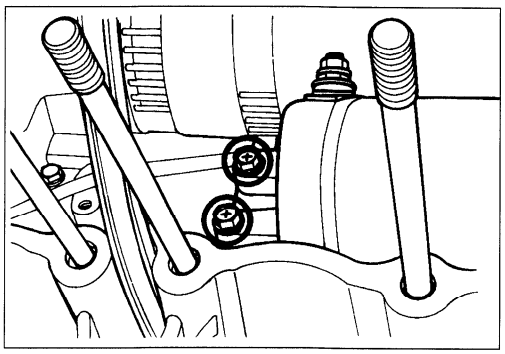

- Remove the generator by removing the bolts.

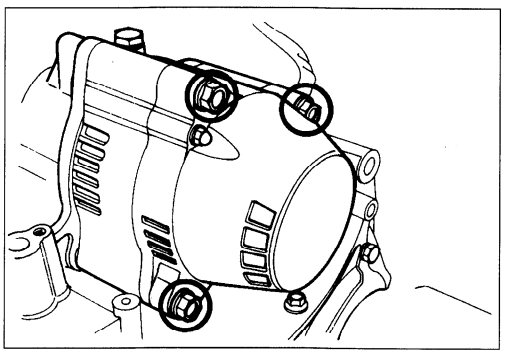

- Remove the signal generator rotor by removing the bolt.

TOOL 09900-00410: Hexagon wrench set

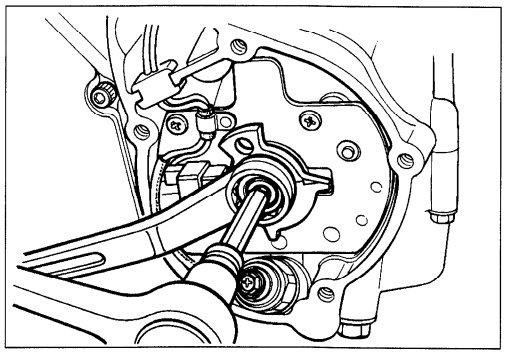

- Disconnect the oil pressure switch lead wire Ⓐ.
- Remove the grommet ①.
- Remove the signal generator stator by removing the screws.

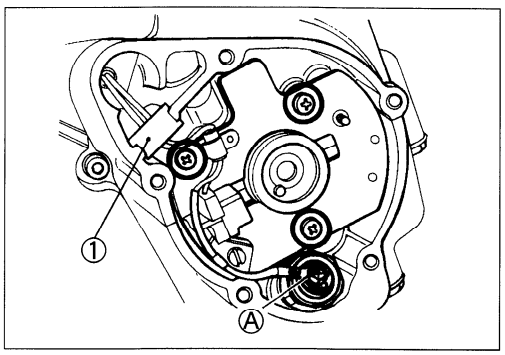

- Remove the clutch cover by removing the bolts.

TOOL 09911-73730: 5 mm "T" type hexagon wrench

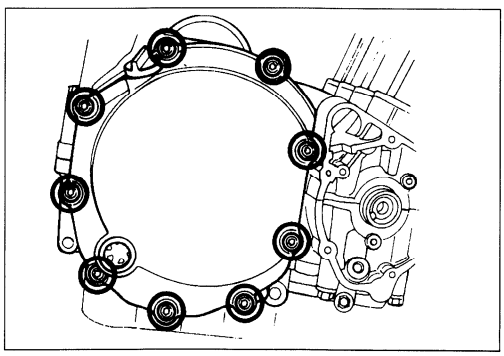

- Remove the clutch pressure plate lifter ① by removing the circlip.

TOOL 09900-06108: Snap ring pliers

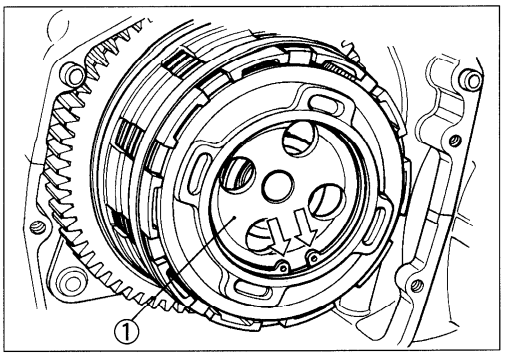

- After removing the clutch pressure plate lifter, remove the thrust washer ②, bearing ③ and clutch push piece ④, and pull out the clutch push rods, ⑤ and ⑥.

NOTE:
If it is difficult to pull out the push rod ⑤, use a magnetic hand or wire.

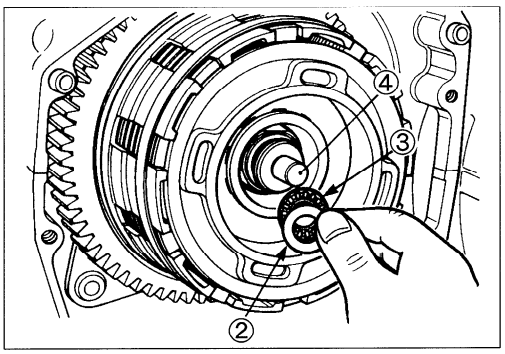

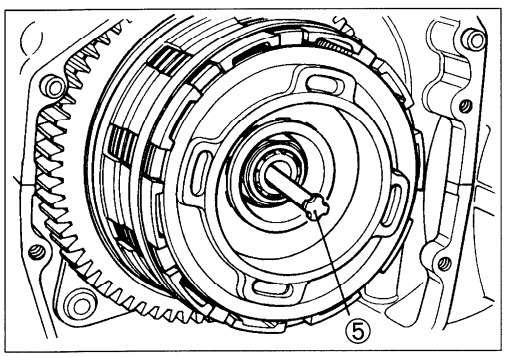

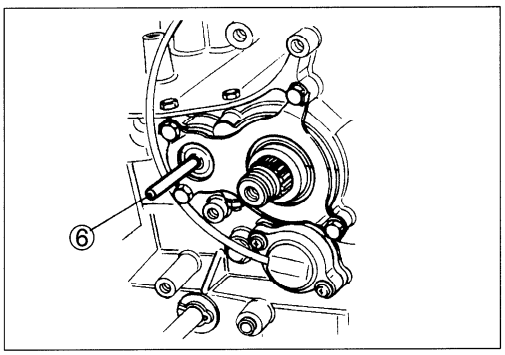

- Hold the clutch pressure plate with the special tool and loosen the clutch sleeve hub nut.

TOOL 09920-34820: Clutch pressure plate holder

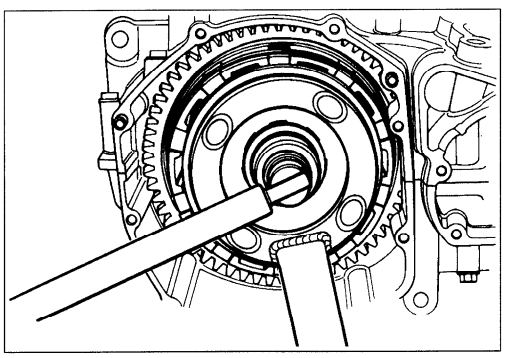

- After removing the clutch sleeve hub nut, remove the lock washer ⑦.
- Remove the clutch diaphragm spring holder ⑧ by removing the screws.

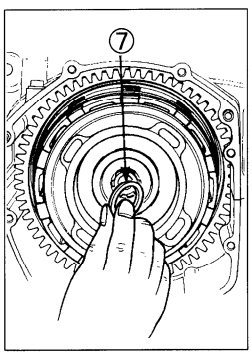

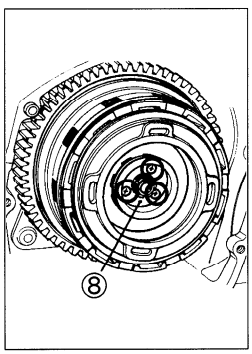

- Remove the clutch diaphragm springs ⑨, clutch diaphragm spring seat ⑩ and clutch pressure plate ⑪.

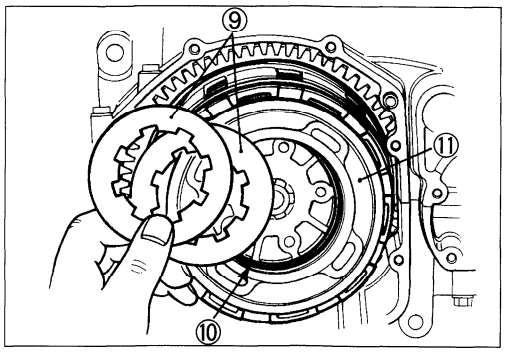

- Screw two 6-mm bolts into the threaded of the clutch sleeve hub as shown.
- Remove the clutch drive and driven plates along with the clutch sleeve hub.

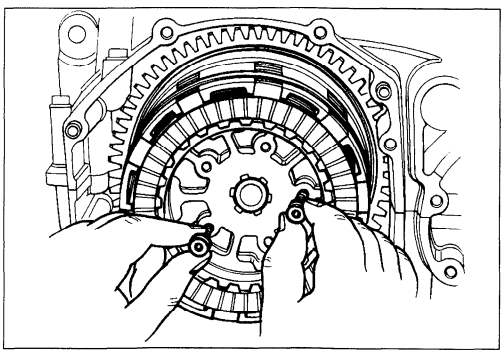

- Remove the thrust washer ⑫.

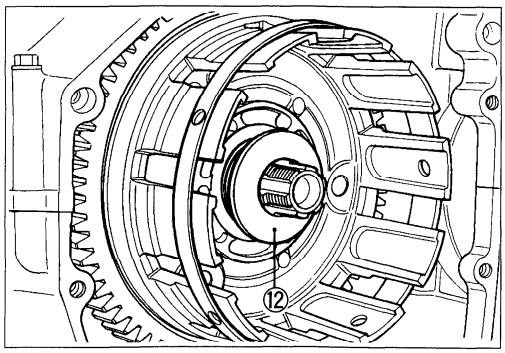

- With the spacer and bearing removed, the primary driven gear (integral with the clutch housing) is free to disengage from the primary drive gear.
- Remove the primary driven gear assembly with the generator/oil pump drive gears.
- Remove the thrust washer ⑬.

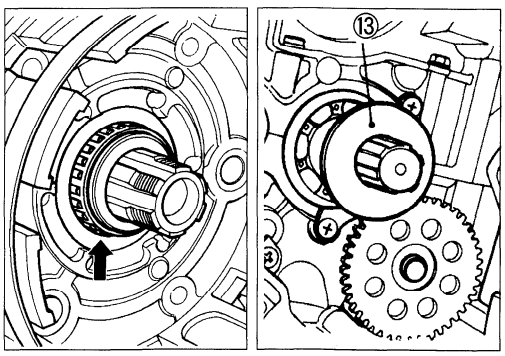

- Remove the clip and washer from the gearshift shaft.

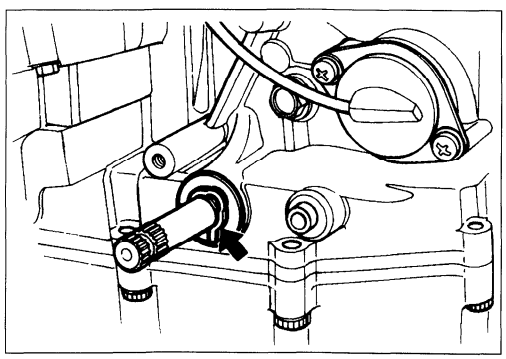

- Draw out the gearshift shaft ①, and then remove the cam driven gear ②.

TOOL 09900-09003: Impact driver set

NOTE:
When removing the cam driven gear, do not lose the gear-shifting pawl ③, pin ④ and spring ⑤.

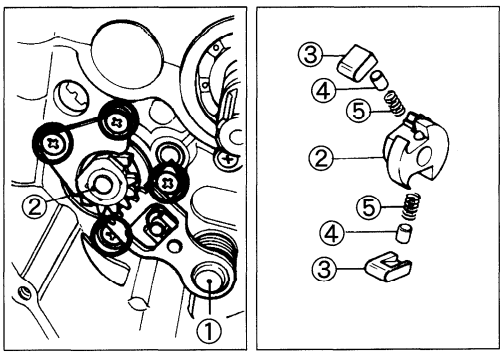

- Remove the oil pump driven gear by removing the circlip ⑥.

TOOL 09900-06107: Snap ring pliers

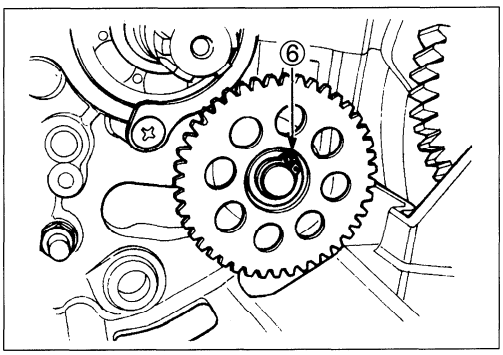

NOTE:
Do not lose the circlip, pin ⑦ and two washers ⑧.

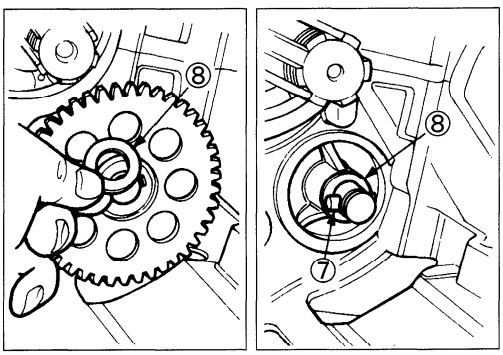

- Remove the starter clutch cover by removing the bolts.

TOOL 09911-73730: 5 mm "T" type hexagon wrench

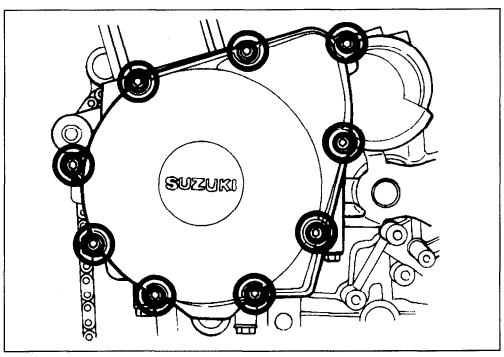

- Remove the starter idle gear ⑨ and its shaft ⑩.

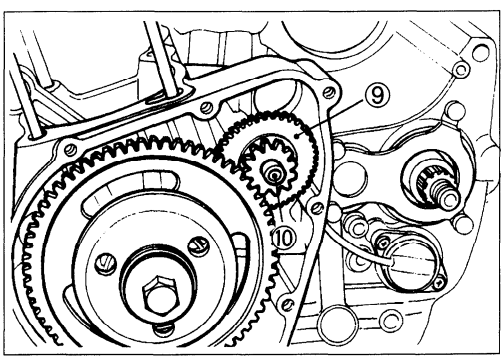

- Loosen the starter clutch mounting bolt with the special tool.

TOOL 09920-34810: Starter clutch holder

NOTE:
When removing the starter clutch assembly from the crankshaft, do not remove the starter clutch mounting bolt after loosening because it is used in conjuction with the special tool.

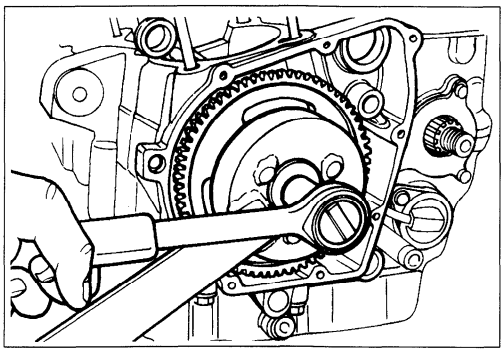

- Remove the starter clutch assembly from the crankshaft with the special tool.

TOOL 09930-33720: Rotor remover

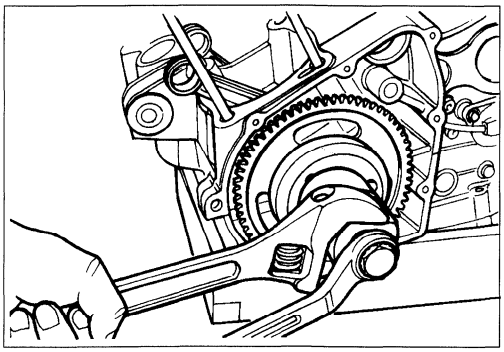

- Flatten the lock portion of the oil seal retainer and remove it by removing the four bolts.

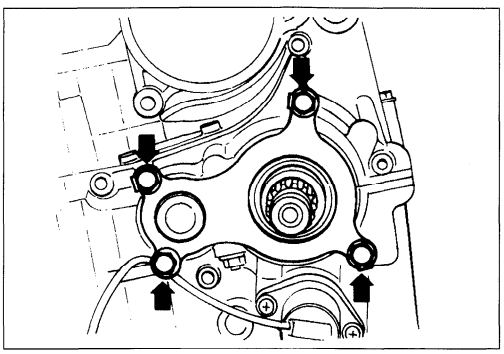

- Remove the neutral position indicator switch by removing the screws.

NOTE:
Do not lose the O-ring ①, switch contact ② and its spring ③.

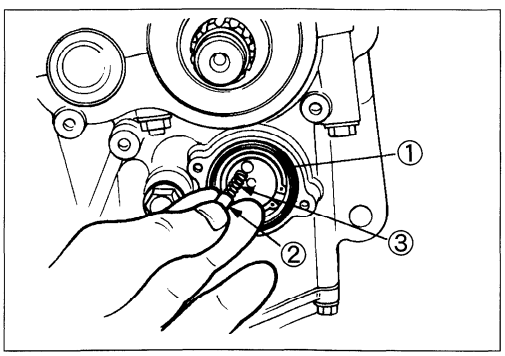

- Remove the countershaft bearing retainer by removing the screws.

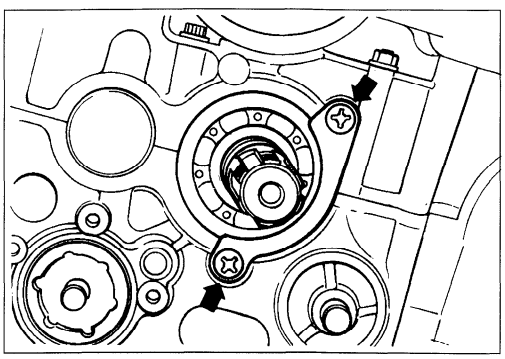

- Remove the plug ① on the upper crankcase.

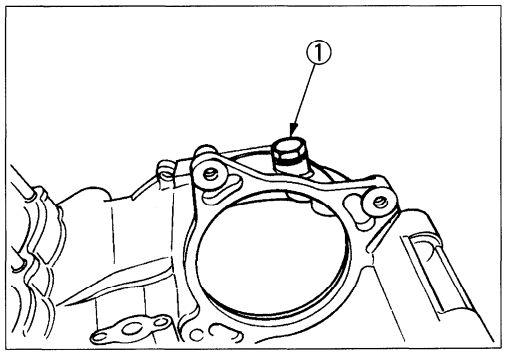

- Remove the upper crankcase tightening bolts and nut.

TOOL 09911-73730: 5 mm "T" type hexagon wrench

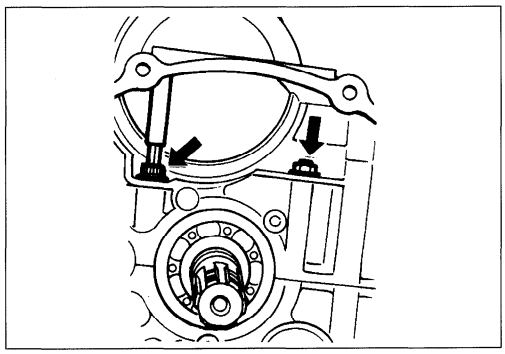

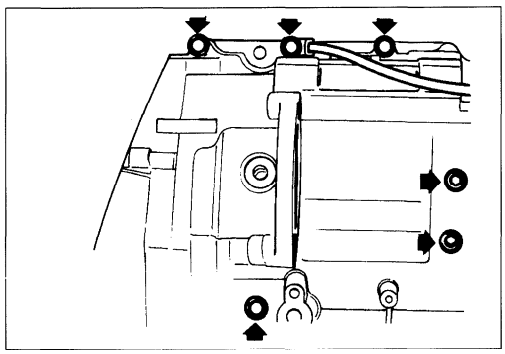

- Remove the oil pan by removing the bolts.

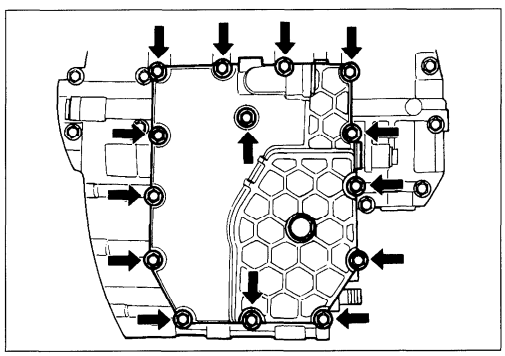

- Remove the shim ② and O-ring ③.
- Remove the oil sump filter ④ by removing the two bolts.
- Remove the oil return pipe ⑤ by removing the bolt.

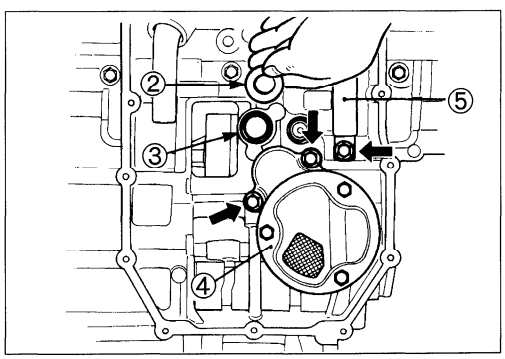

- Remove the lower crankcase tightening bolts and nut.

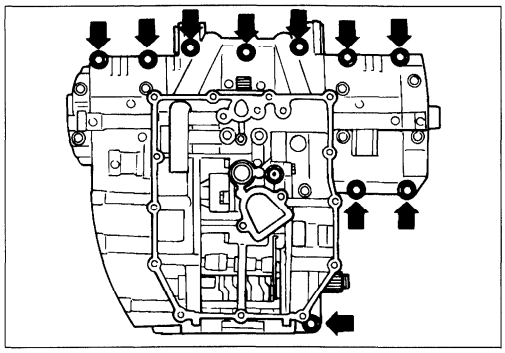

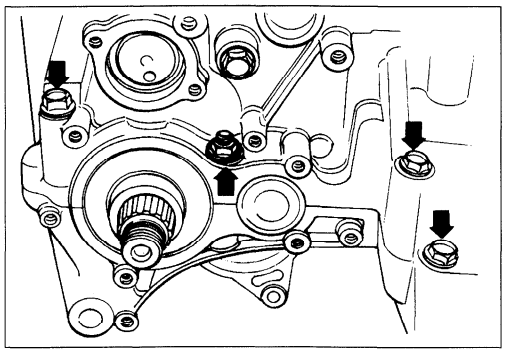

- Remove the main oil gallery plug Ⓐ.
- When removing the crankshaft tightening bolts, loosen them in the descending order of numbers assigned to these bolts.

NOTE:

** Two allen bolts are used for tightening crankshaft at the portion Ⓑ.*

** When installing the main oil gallery plug Ⓐ, replace the O-ring with new one and tighten it to the specified torque.*

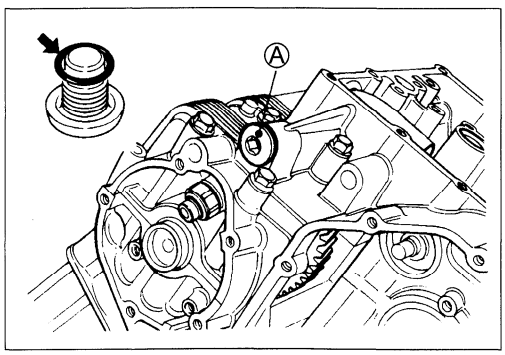

TOOL 09914-25811: 6 mm "T" type hexagon wrench
09900-00410: Hexagon wrench set

Main oil gallery plug Ⓐ: 40 N·m (4.0 kg-m, 29.0 lb-ft)

- Remove the right oil pipe Ⓒ.
- Make sure that all bolts are removed without fail. Hammer lightly the lower crankcase side with a plastic hammer to separate the upper and lower crankcase halves and then lift the latter.

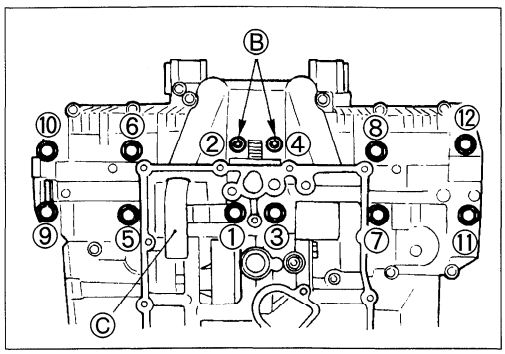

⚠ CAUTION

Do not drop the crankshaft journal bearings from the lower crankcase.

- Remove the crankshaft assembly from the upper crankcase.

NOTE:
Bear in mind that the crankshaft thrust bearings Ⓒ are located between shaft and case.

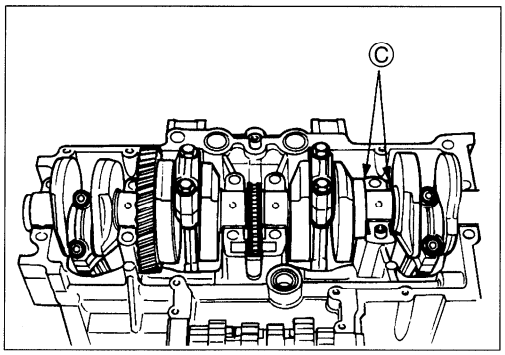

- Remove the two dampers ① and cam chain tensioner ②.
- Remove the O-rings, ③ and ④.

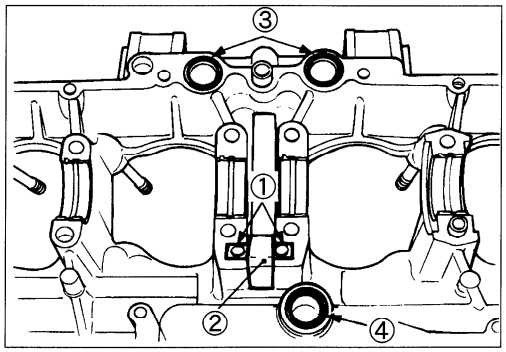

- Remove the countershaft assembly ⑤ and driveshaft assembly ⑥.

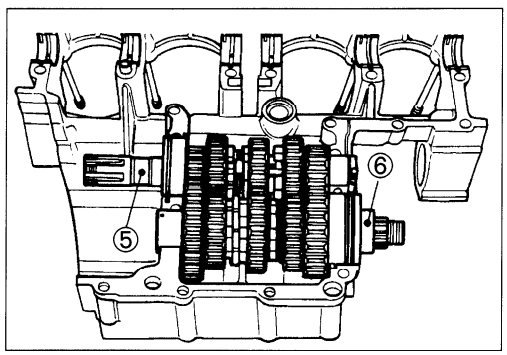

NOTE:
Do not lose the C-rings ⑦ and bearing pins ⑧.

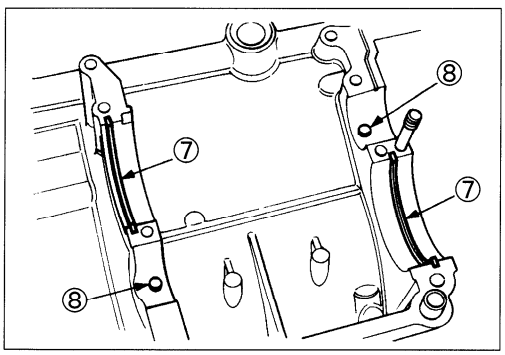

- Hold the gearshift forks by hand while drawing out the gearshift fork shaft from the lower crankcase.

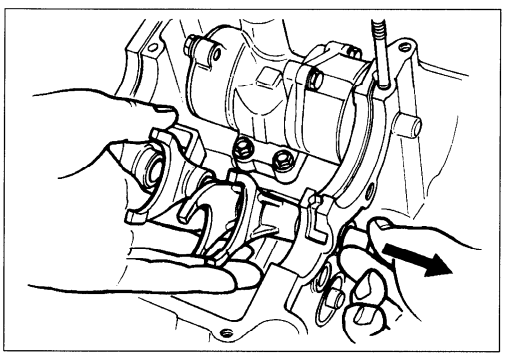

- Unhook the gearshift cam stopper spring from the lower crankcase.

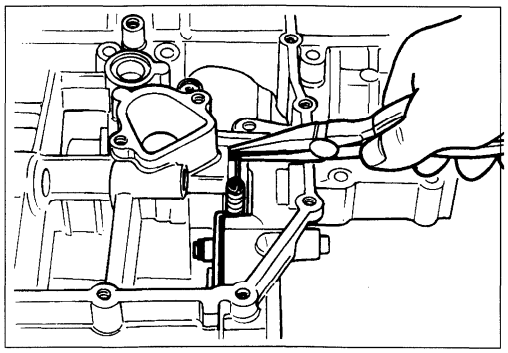

- Remove the circlip ① from the gearshift cam, then draw out the gearshift cam from the other side.

TOOL 09900-06107: Snap ring pliers

NOTE:
When replacing the gearshift cam stopper bolt ②, apply a small quantity of THREAD LOCK "1342" to the bolt.

1342 99000-32050: THREAD LOCK "1342"

Gearshift cam stopper bolt: 10 N·m (1.0 kg-m, 7.0 lb-ft)

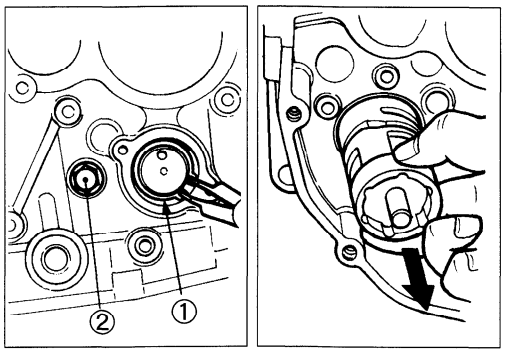

- Remove the gearshift cam stopper ③ by removing the circlip ④.

TOOL 09900-06107: Snap ring pliers

NOTE:
Rotate the bearing ⑤ in the crankcase by hand to inspect for abnormal noise and smooth rotation.
Replace the bearing if there is anything unusual.

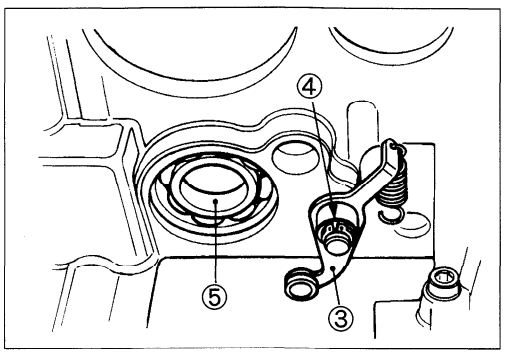

- Remove the oil pump assembly by removing the mounting bolts.

TOOL 09900-00410: Hexagon wrench set

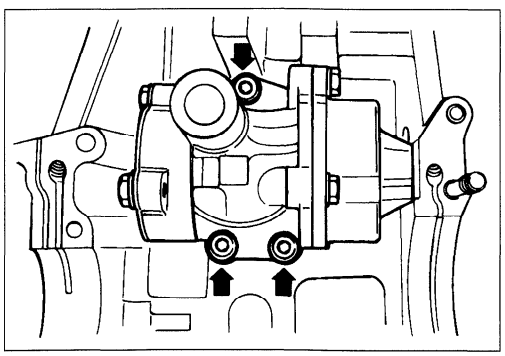

- Remove the O-rings and dowel pins.

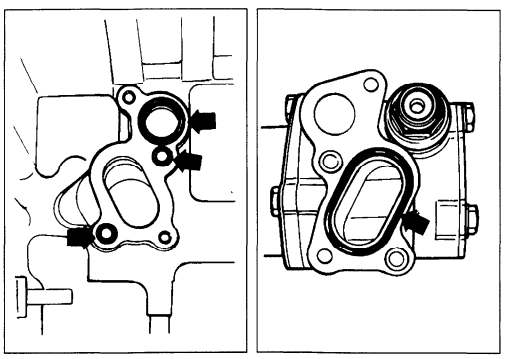

ENGINE COMPONENTS INSPECTION AND SERVICE

CYLINDER HEAD SERVICE

⚠ CAUTION

Be sure to identify each removed part as to its location, and lay the parts out in groups designated as "No.1", "No.2", "Exhaust", "Inlet", so that each will be restored to the original location during assembly.

NOTE:

* *When removing rocker arm shaft, remove the rocker arm shaft set bolt ① and plug ②, and then screw 8 mm bolt into the rocker arm shaft end and pull it out.*
Tighten the set bolt ① and plug ② to the specified torque.
Removal of valves completes ordinary disassembling work. If valve guides have to be removed for replacement after inspecting related parts, carry out the steps shown in valve guide servicing.

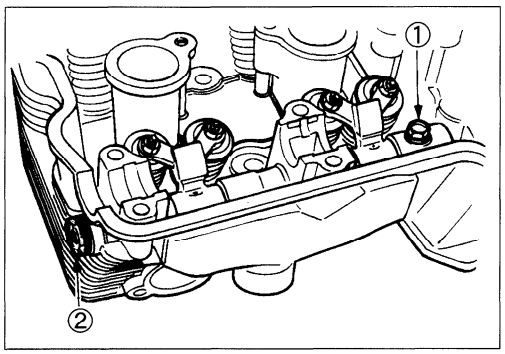

TOOL 09900-00410: Hexagon wrench set

Rocker arm shaft set bolt ①: 9 N·m (0.9 kg-m, 6.5 lb-ft)
Cylinder head plug ②: 28 N·m (2.8 kg-m, 20.0 lb-ft)

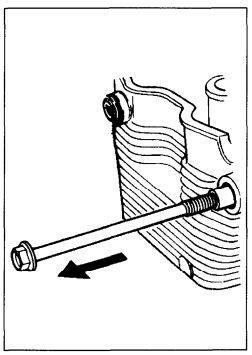

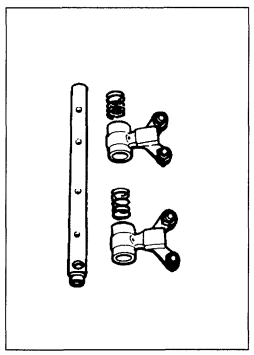

- Using special tools, compress the valve spring and remove the two cotter halves ③ from valve stem.

TOOL 09916-14510: Valve lifter
09916-14910: Valve lifter attachment
09916-84511: Tweezers

- Remove the valve spring retainer, inner and outer valve springs.
- Remove the valve spring seat.
- Remove the valve from the other side.

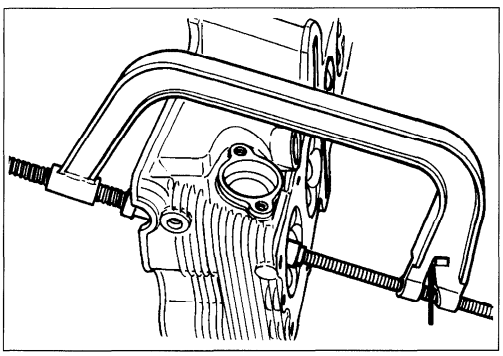

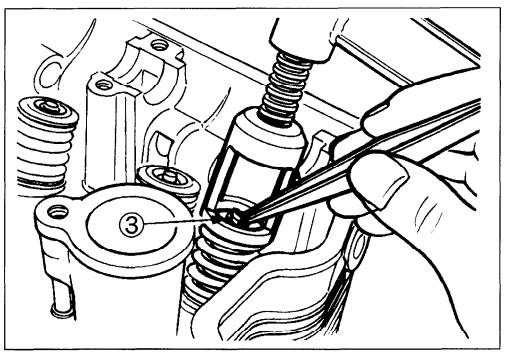

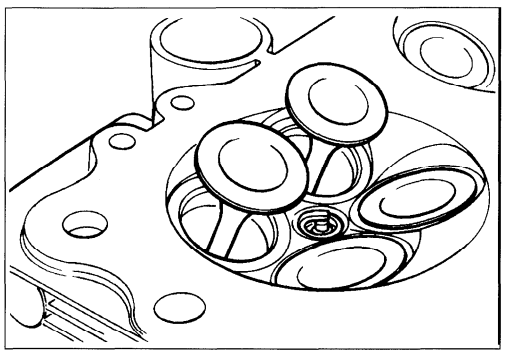

CYLINDER HEAD DISTORTION

Decarbonize the combustion chambers.
Check the gasketed surface of the cylinder head for distortion with a straightedge and thickness gauge, taking a clearance reading at several places indicated. If the largest reading at any position of the straightedge exceeds the limit, replace the cylinder head.

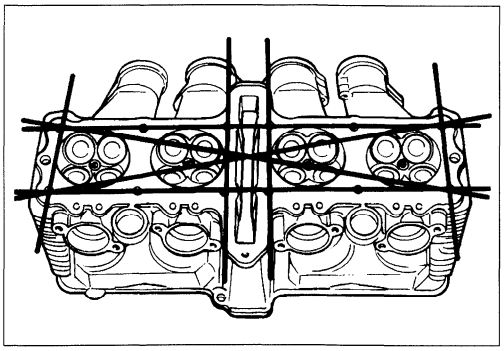

TOOL 09900-20803: Thickness gauge

Service Limit: 0.2 mm (0.008 in)

VALVE STEM RUNOUT

Support the valve with "V" blocks, as shown, and check its runout with a dial gauge.
The valve must be replaced if the runout exceeds the limit.

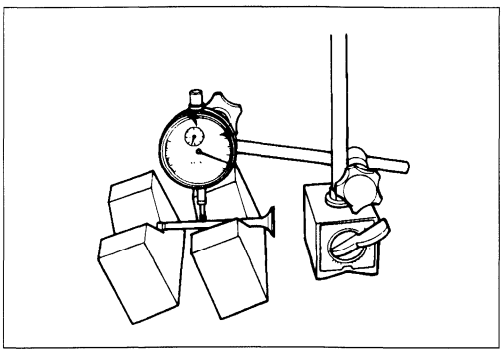

TOOL 09900-20606: Dial gauge (1/100 mm)
09900-20701: Magnetic stand
09900-21304: V-block (100 mm)

Service Limit: 0.05 mm (0.002 in)

VALVE HEAD RADIAL RUNOUT

Place the dial gauge at right angles to the valve head face, and measure the valve head radial runout.
If it measures more than the limit, replace the valve.

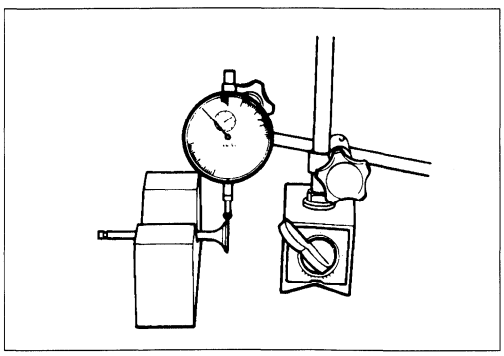

TOOL 09900-20606: Dial gauge (1/100 mm)
09900-20701: Magnetic stand
09900-21304: V-block (100 mm)

Service Limit: 0.03 mm (0.001 in)

VALVE FACE WEAR

Visually inspect each valve for wear of its seating face. Replace any valve with an abnormally worn face. The thickness Ⓣ decreases as the wear of the face advances.
Measure the thickness and, if the thickness is found to have been reduced to the limit, replace it.

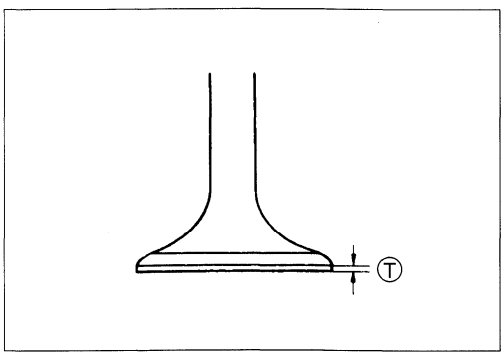

TOOL 09900-20102: Vernier calipers

Service Limit Ⓣ: 0.5 mm (0.02 in)

VALVE STEM DEFLECTION

Lift the valve about 10 mm (0.39 in) from the valve seat.
Measure the valve stem deflection in two directions, "X" and "Y", perpendicular to each other, by positioning the dial gauge as shown. If the deflection measured exceeds the limit, (see below) then determine whether the valve or the guide should be replaced with a new one.

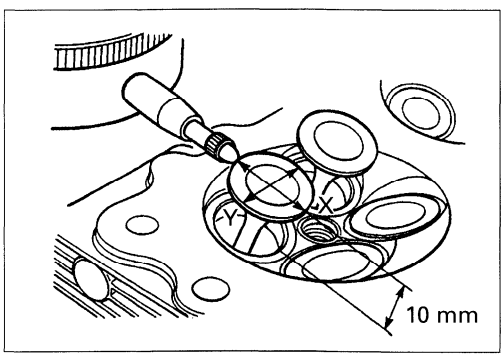

TOOL 09900-20606: Dial gauge (1/100 mm)
09900-20701: Magnetic stand

Service Limit
Intake and exhaust valves: 0.35 mm (0.014 in)

VALVE STEM WEAR

If the valve stem is worn down to the limit, as measured with a micrometer, where the clearance is found to be in excess of the limit indicated, replace the valve; if the stem is within the limit, then replace the guide. After replacing valve or guide, be sure to recheck the clearance.

TOOL 09900-20205: Micrometer (0–25 mm)

Standard

Intake valves: 4.965–4.980 mm (0.1955–0.1961 in)

Exhaust valves: 4.945–4.960 mm (0.1947–0.1953 in)

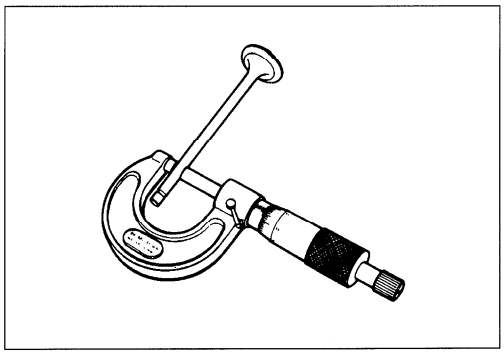

VALVE GUIDE SERVICING

- Using the valve guide remover ①, drive the valve guide out toward the intake or exhaust camshaft side.

TOOL 09916-44310: Valve guide remover/installer

NOTE:

** Discard the removed valve guide subassemblies.*

** Only oversized valve guides are available as replacement parts. (Part No. 11116-06B70)*

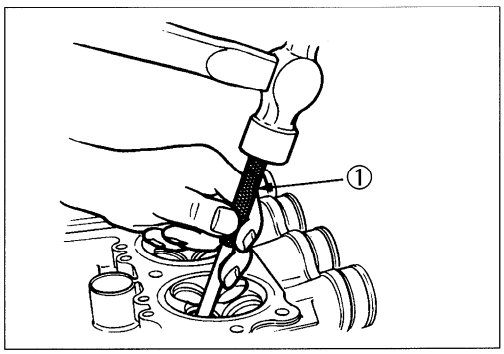

- Re-finish the valve guide holes in cylinder head with the reamer and handle.

TOOL 09916-34580: Valve guide reamer
09916-34542: Reamer handle

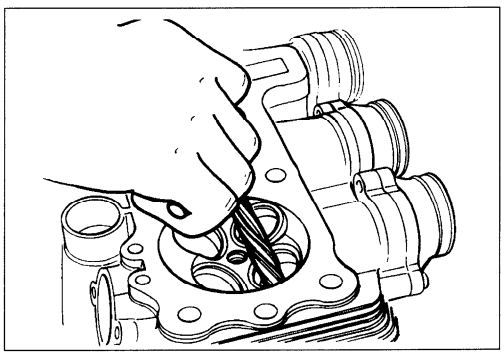

- Fit a ring to each valve guide. Be sure to use new rings.
- Oil the stem hole, too, of each valve guide and drive the guide into the guide hole with the valve guide installer.

TOOL 09916-44310: Valve guide remover/installer

⚠ CAUTION

Failure to oil the valve guide hole before driving the new guide into place may result in a damaged guide or head.

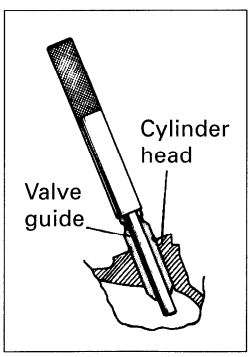

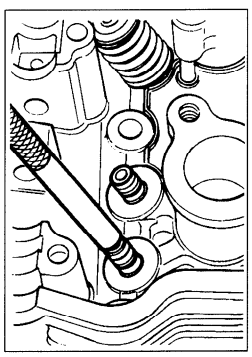

- After fitting the valve guides, re-finish their guiding bores with the reamer. Be sure to clean and oil the guides after reaming.

TOOL 09916-34570: Valve guide reamer
09916-34542: Reamer handle

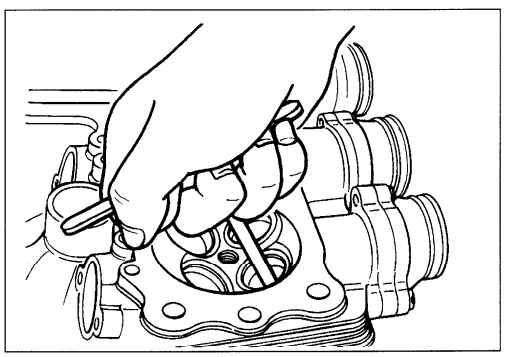

VALVE SEAT WIDTH

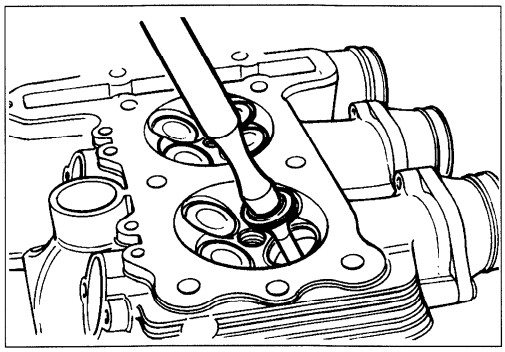

- Coat the valve seat uniformly with Prussian blue. Fit the valve and tap the coated seat with the valve face in a rotating manner, in order to obtain a clear impression of the seating contact. In this operation, use the valve lapper to hold the valve head.
- The ring-like dye impression left on the valve face must be continuous-without any break. In addition, the width of the dye ring, which is the visualized seat "width", must be within the following specification:

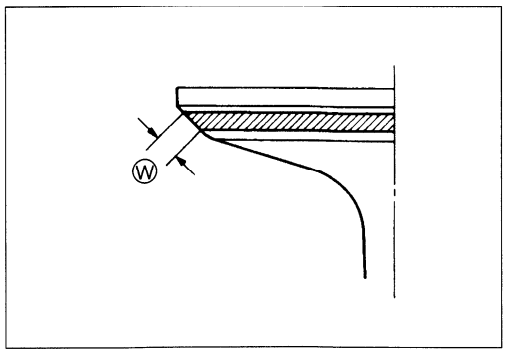

Standard
Valve seat width Ⓦ: 0.9–1.1 mm (0.035–0.043 in)

If either requirement is not met, correct the seat by servicing is as follows:

VALVE SEAT SERVICING

The valve seats for both intake and exhaust valves are machined to two different angles. (The seat contact surface is cut 45°.)

	INTAKE		EXHAUST
45°	N-122	45°	N-122
15°	N-121	15°	N-121

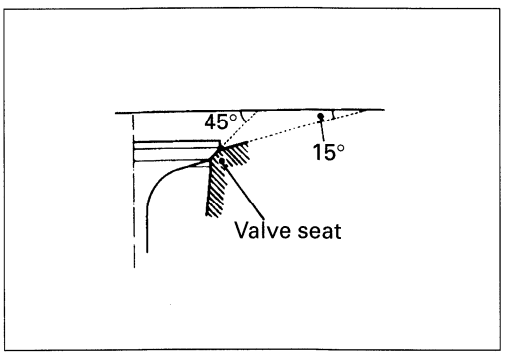

TOOL **Valve seat cutter: (N-121) and (N-122)**
Solid pilot: (N-100-5.0)

NOTE:
The valve seat contact area must be inspected after each cut.

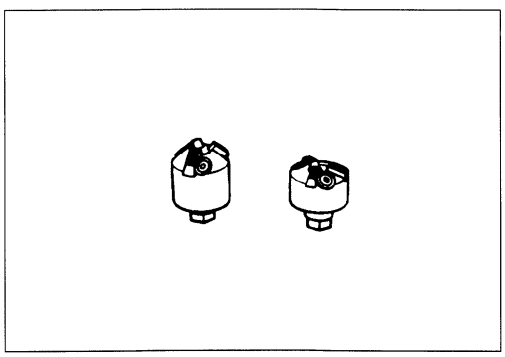

TOOL **09916-20610: Valve seat cutter (N-121)**
09916-20620: Valve seat cutter (N-122)
09916-24311: Solid pilot (N-100-5.0)
09916-21110: Valve seat cutter set

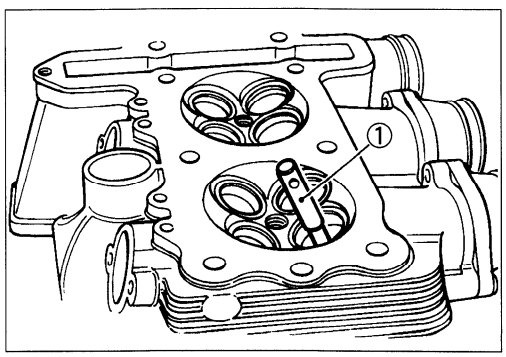

- Insert the solid pilot ① with a slight rotation. Seat the pilot snugly. Install the 45° cutter, attachment and T-handle.
- Using the 45° cutter, descale and clean up the seat with one or two turns.
- Inspect the seat by the previously described seat width measurement procedure. If the seat is pitted or burned, additional seat conditioning with the 45° cutter is required.

NOTE:
Cut only the minimum amount necessary from the seat to prevent the possibility of the valve stem becoming too close to the rocker arm for correct valve contact angle.

If the contact area is too high on the valve, or if it is too wide, use the 15° cutter to lower and narrow the contact area.

Contact area too high and too wide on face of valve

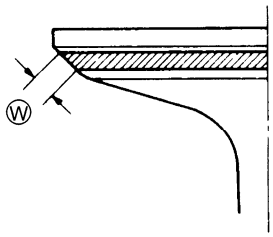

If the contact area is too low or too narrow, use the 45° cutter to raise and widen the contact area.

Contact area too low and too narrow on face of valve

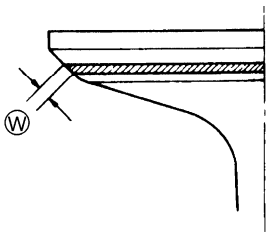

- After the desired seat position and width is achieved, use the 45° cutter very lightly to clean up any burrs caused by the previous cutting operations.

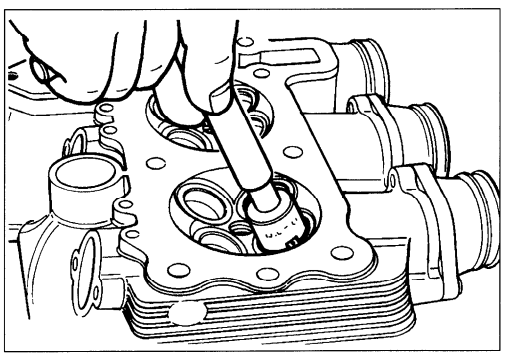

⚠ CAUTION

DO NOT use lapping compound after the final cut is made. The finished valve seat should have a velvety smooth finish and not a highly polished or shiny finish. This will provide a soft surface for the final seating of the valve which will occur during the first few seconds of engine operation.

- Clean and assemble the head and valve components. Fill the intake and exhaust ports with gasoline to check for leaks. If any leaks occur, inspect the valve seat and face for burrs or other things that could prevent the valve from sealing.

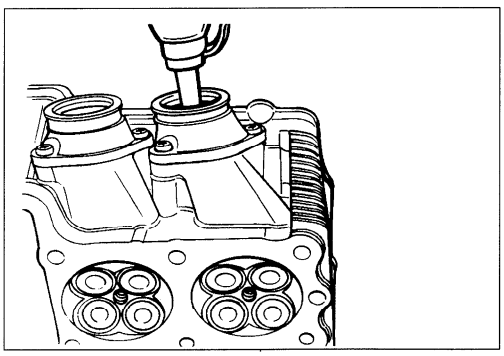

⚠ WARNING

Always use extreme caution when handling gasoline.

NOTE:
After servicing the valve seats, be sure to check the valve clearance after the cylinder head has been reinstalled. (see page 2-3.)

VALVE STEM END CONDITION

Inspect the valve stem end face for pitting and wear. If pitting or wear or the stem end face are present, the valve stem end should be resurfaced, providing that the length ① will not be reduced to less than 2.5 mm (0.10 in). If this length becomes less than 2.5 mm (0.10 in), the valve should be replaced. After installing a valve whose stem end has been ground off as above, check to ensure that the face ② of the valve stem end is above the cotters ③.

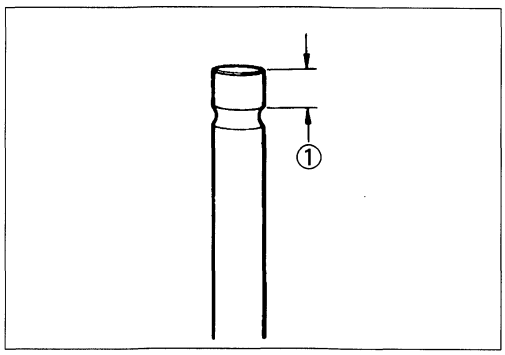

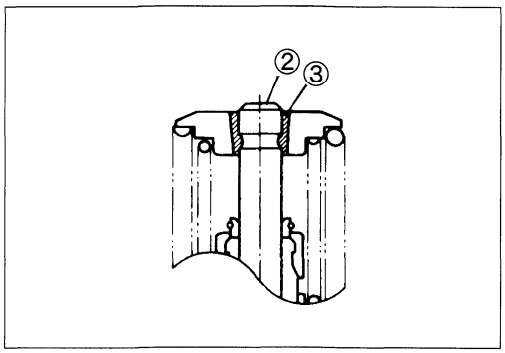

VALVE SPRING

The force of the coil spring keeps the valve seat tight. Weakened spring result in reduced engine power output, and often account for the chattering noise coming from the valve mechanism.

Check the valve springs for proper strength by measuring their free length and also by the force required to compress them. If the spring length is less than the service limit, or if the force required to compress the spring does not fall within the range specified, replace both the inner and outer springs as a set.

TOOL 09900-20102: Vernier calipers

Valve spring free length (IN & EX)

Service Limit	**INNER: 35.0 mm (1.38 in)** **OUTER: 37.8 mm (1.49 in)**

Valve spring tension (IN & EX)

Standard	**INNER: 5.3–6.5 kg/28 mm (11.7–14.3 lbs/1.10 in)** **OUTER: 13.1–15.1 kg/31.5 mm (28.9–33.3 lbs/1.24 in)**

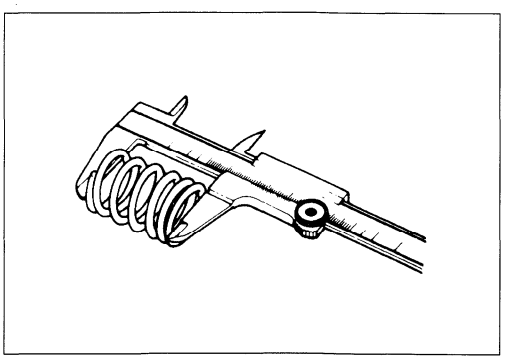

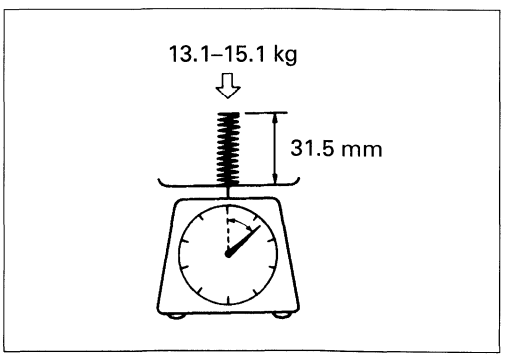

- Locate the plate Ⓐ on the cylinder head of exhaust side.

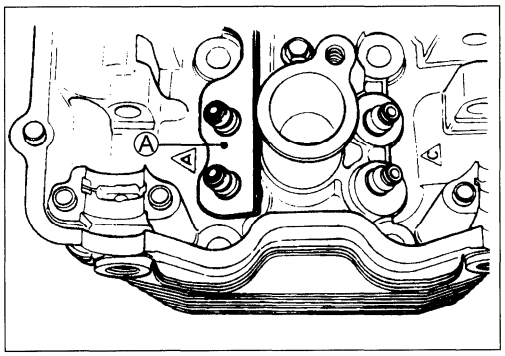

REASSEMBLY

- Oil each oil seal, and press-fit them into position with the valve guide installer.

TOOL 09916-44310: Valve guide remover/installer

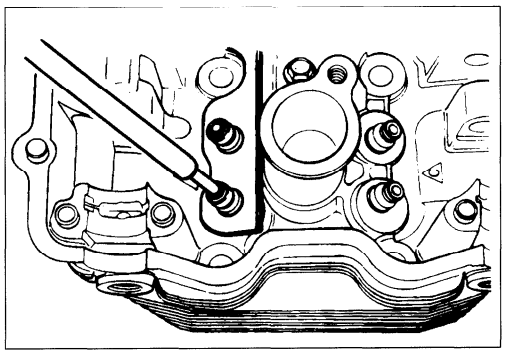

⚠ CAUTION

Do not reuse the oil seals.

- Install the valve spring lower seats, ① (for exhaust) and ② (for intake). Be careful not to confuse the lower seat with the spring retainer ③.

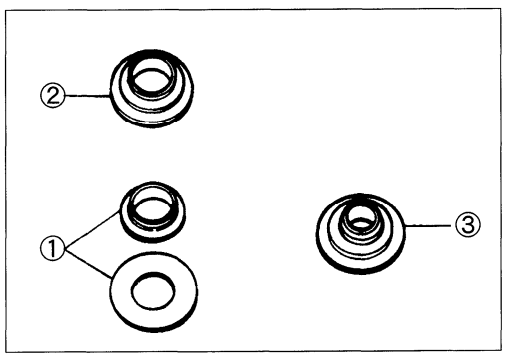

For Exhaust side

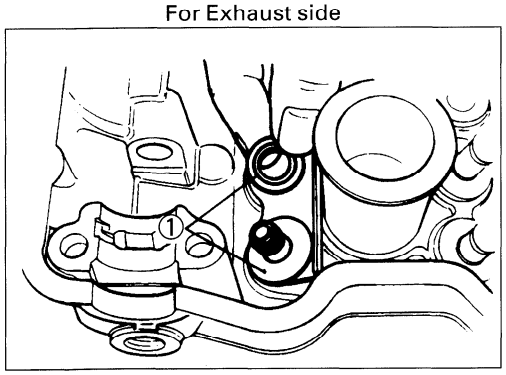

For Intake side

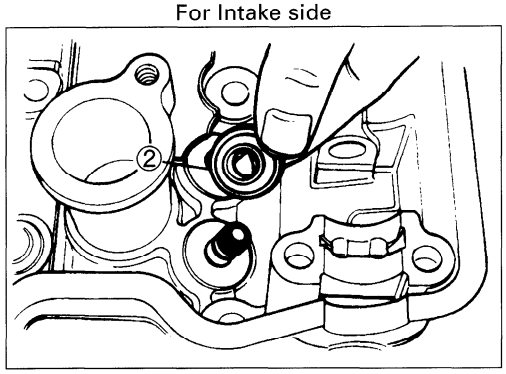

- Insert the valves, with their stems coated with high quality molybdenum disulfide lubricant (SUZUKI MOLY PASTE) all around and along the full stem length without any break.

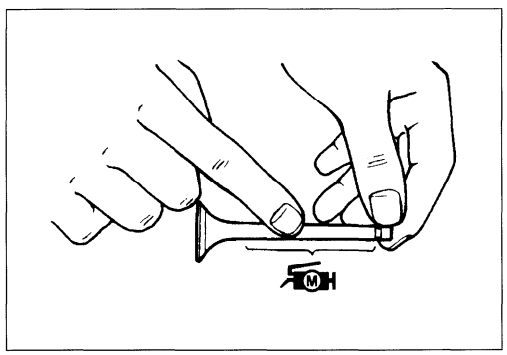

⚠ CAUTION

When inserting each valve, take care not to damage the lip of the oil seal.

99000-25140: SUZUKI MOLY PASTE

- Install the valve springs with the small-pitch portion Ⓐ facing cylinder head. Ⓑ Large-pitch portion.

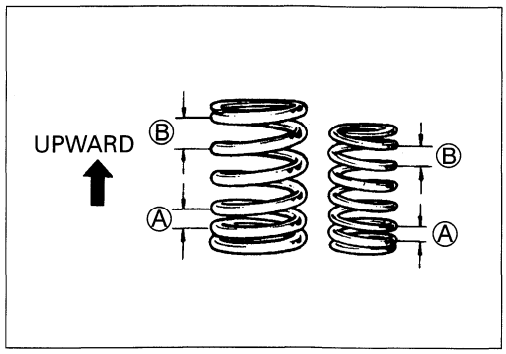

- Put on the valve spring retainer, and using the valve lifter, press down the springs, fit the cotter halves to the stem end, and release the lifter to allow the cotter ① to wedge in between retainer and stem. Be sure that the rounded lip ② of the cotter fits snugly into the groove ③ in the stem end.

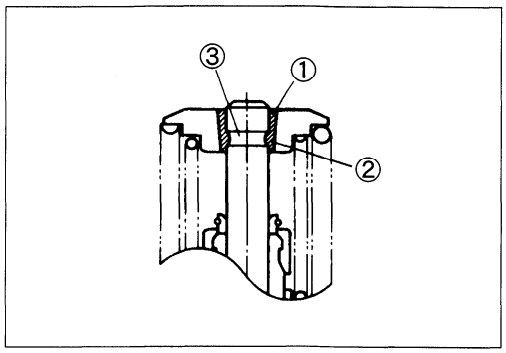

TOOL 09916-14510: Valve lifter
09916-14910: Valve lifter attachment
09916-84511: Tweezers

⚠ CAUTION

Be sure to locate each spring and valve to their original positions.

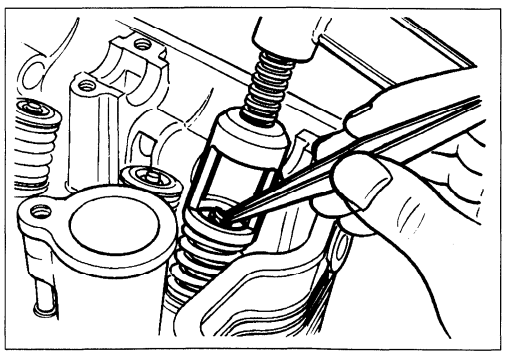

CAMSHAFT

Both camshafts should be checked for runout and also for wear of cams and journals if the engine has been noted as giving abnormal noise or vibration or lack power output. Any of these conditions may be caused by camshafts worn down or distorted to the service limit.

The exhaust camshaft can be distinguished from that of the intake by the embossed letters "EX" (for exhaust) as against letters "IN" (for intake).
Similarly, the right end can be distinguished by the notch from the left end.

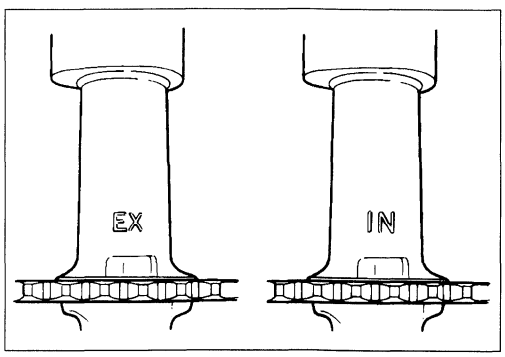

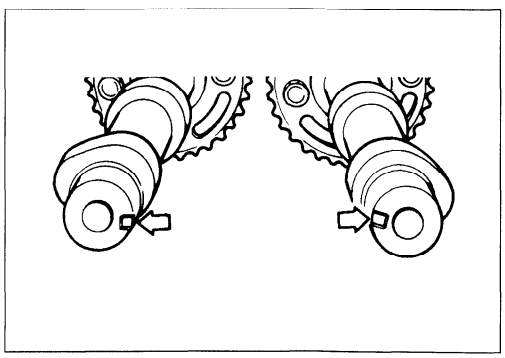

CAM WEAR

Worn-down cams are often the cause of mistimed valve operation resulting in reduced power output.
The limit of cam wear is specified for both intake and exhaust cams in terms of cam height Ⓗ, which is to be measured with a micrometer. Replace camshafts if found worn down to the limit.

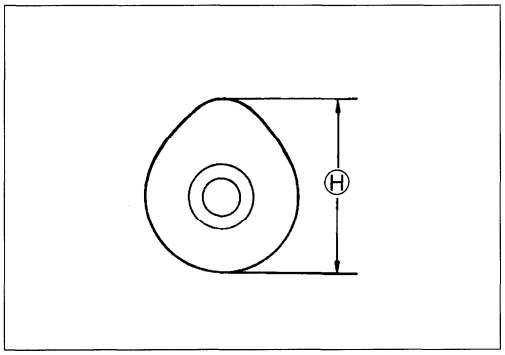

TOOL 09900-20202: Micrometer (25–50 mm)

Cam height Ⓗ
Service Limit

Intake cams	Exhaust cams
33.28 mm (1.3102 in)	33.11 mm (1.3035 in)

CAMSHAFT JOURNAL WEAR

Determine whether or not each journal is worn down to the limit by measuring the oil clearance with the camshaft installed in place. Use the plastigauge ① to read the clearance at the widest portion, which is specified as follows:

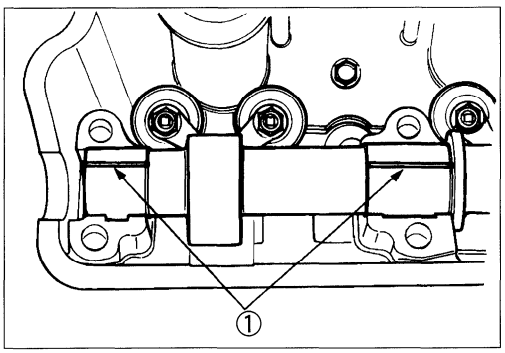

Camshaft-Journal oil clearance (IN & EX)
Service Limit: 0.150 mm (0.0059 in)

TOOL 09900-22301: Plastigauge

NOTE:
Install each holder to their original positions. (page 3-67.)

Tighten the camshaft holder bolts evenly and diagonally to the specified torque.

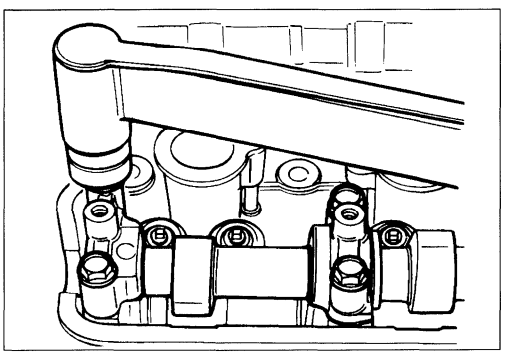

Camshaft holder bolt: 10 N·m (1.0 kg-m, 7.0 lb-ft)

NOTE:
Do not rotate the camshafts with the plastigauge in place.

Remove the camshaft holders, and read the width of the compressed plastigauge with envelope scale. This measurement should be taken at the widest part.

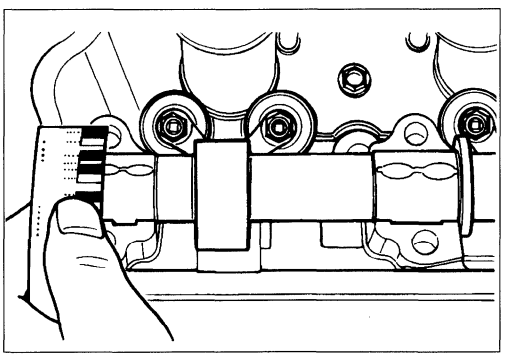

If the camshaft journal oil clearance measured exceeds the limit, measure the inside diameter of the camshaft journal holder and outside diameter of the camshaft journal. Replace the camshaft or the cylinder head depending upon which one exceeds the specification.

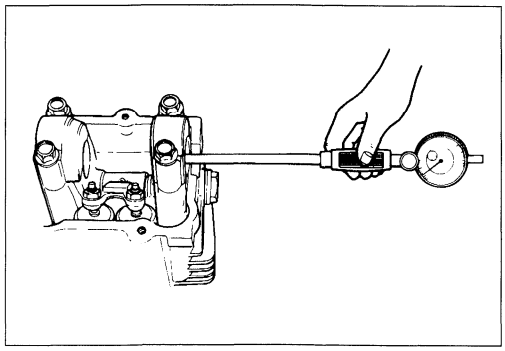

TOOL 09900-20602: Dial gauge (1/1000 mm, 1 mm)
09900-22403: Small bore gauge (18–35 mm)

Standard
Journal holder I.D. (IN & EX): 22.012–22.025 mm (0.8666–0.8671 in)

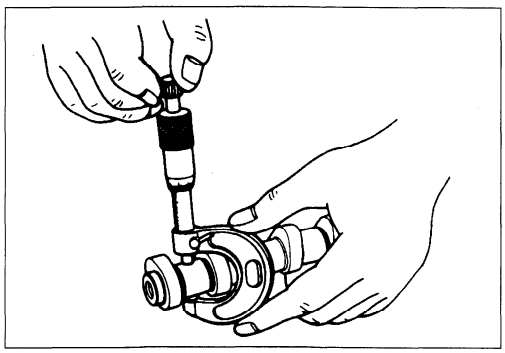

TOOL 09900-20205: Micrometer (0–25 mm)

Standard
Camshaft journal O.D. (IN & EX): 21.959–21.980 mm (0.8645–0.8654 in)

CAMSHAFT RUNOUT

Measure the runout with a dial gauge. Replace the camshaft if the runout exceeds the limit.

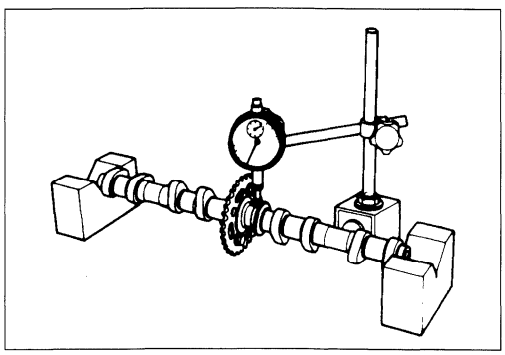

Camshaft runout (IN & EX)
Service Limit: 0.1 mm (0.004 in)

TOOL 09900-20606: Dial gauge (1/100 mm, 10 mm)
09900-20701: Magnetic stand
09900-21304: V-block (100 mm)

CAM SPROCKET

The fixed position of each cam sprocket on each camshaft is determined by arrow mark "3" (on INTAKE sprocket) or arrow marks "1" and "2" (on EXHAUST sprocket) located (as shown) in reference to the notch ① in the right end of each camshaft.

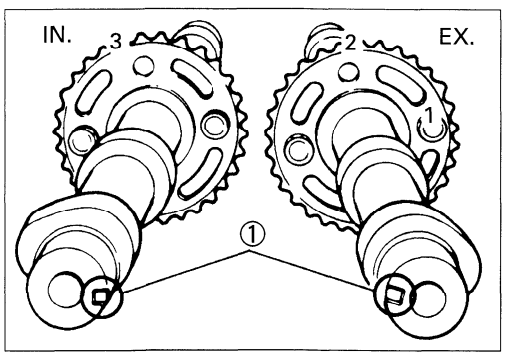

REASSEMBLY

- Apply THREAD LOCK SUPER "1303" to the threads of cam sprocket bolts, and tighten them to the following torque value:

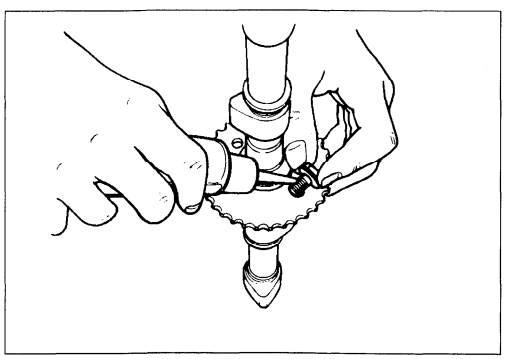

1303 99000-32030: THREAD LOCK SUPER "1303"

Cam sprocket bolt: 25 N·m (2.5 kg-m, 18.0 lb-ft)

CAM CHAIN TENSION ADJUSTER

The cam chain tension adjuster is maintained at the proper tension by an automatically adjusted tensioner.
Unlock the ratchet mechanism ①, and move the push rod ② in place to see if it slides smoothly. If any stickiness is noted or ratchet mechanism is faulty, replace the cam chain tension adjuster assembly with a new one.

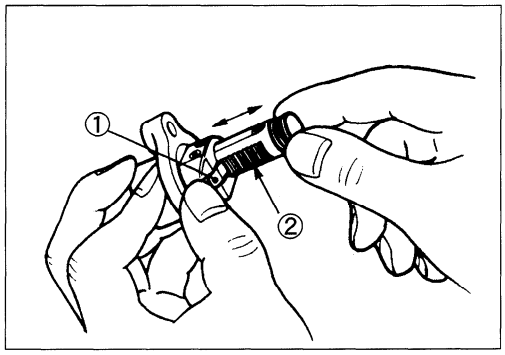

CAM CHAIN GUIDE AND TENSIONER

Check the cam chain guides and tensioner for wear and damage. If they are found to be damaged, replace them with new ones.

NOTE:
When replacing the cam chain guides Ⓐ and Ⓑ, apply SUZUKI THREAD LOCK SUPER "1303" to threads of bolt and screws.

1303 99000-32030: THREAD LOCK SUPER "1303"

Cam chain guide mounting bolt: 6 N·m (0.6 kg-m, 4.5 lb-ft)

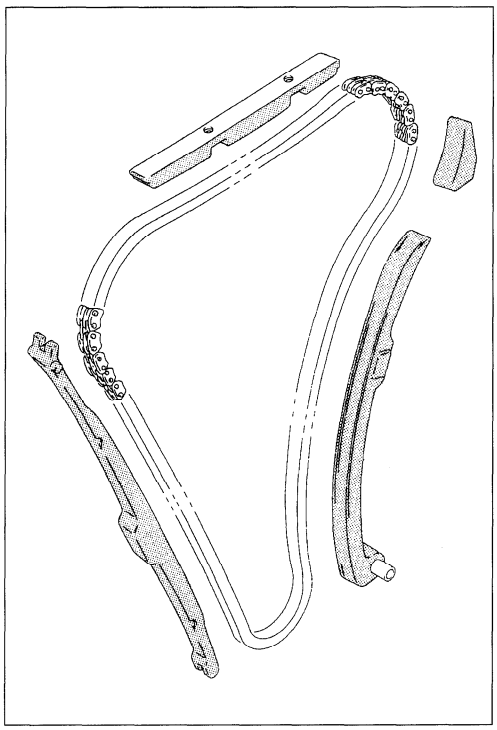

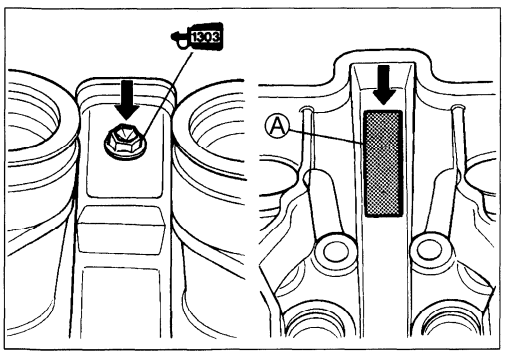

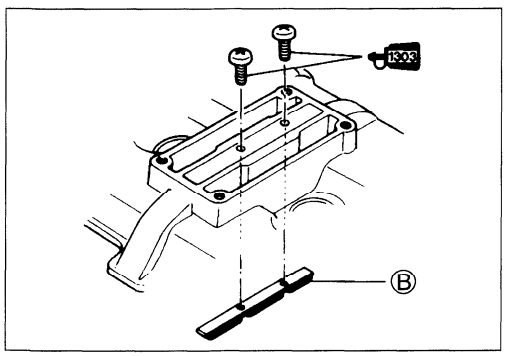

CYLINDER BLOCK DISTORTION

Check the gasketed surface of the cylinder block for distortion with a straightedge and thickness gauge, taking a clearance reading at several places as indicated. If the largest reading at any position of the straightedge exceeds the limit, replace the cylinder block.

TOOL 09900-20803: Thickness gauge

Cylinder distortion
Service Limit: 0.2 mm (0.008 in)

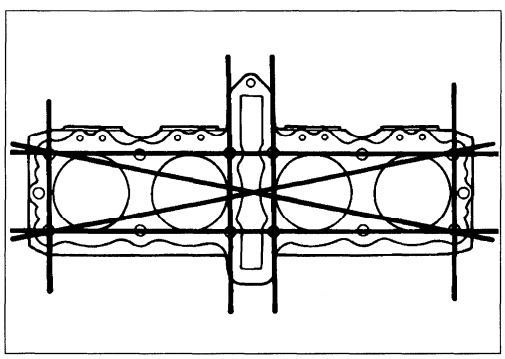

CYLINDER BORE

Measure the cylinder bore diameter at six places. If any one of the measurements exceeds the limit, overhaul the cylinder and replace the piston with an oversize piston. The remaining cylinders must be also rebored accordingly. Otherwise, the imbalance might cause excess vibration.

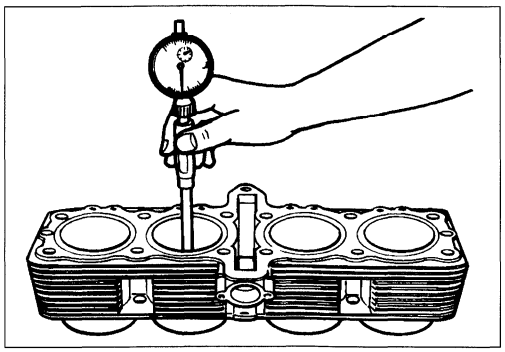

Cylinder bore
Service Limit: 79.080 mm (3.1134 in)

TOOL 09900-20508: Cylinder gauge set

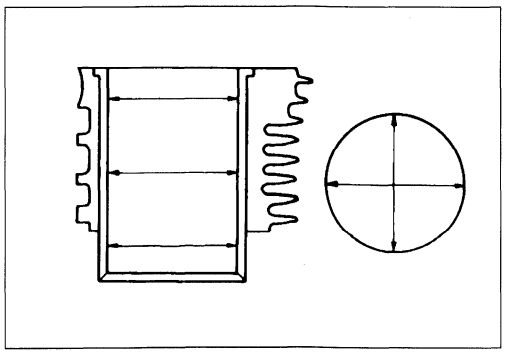

PISTON DIAMETER

Using a micrometer, measure the piston's outside diameter at the place shown in Fig. If the measurement is less than the limit, replace the piston.

Service Limit: 78.880 mm (3.1055 in)

TOOL 09900-20204: Micrometer (75–100 mm)

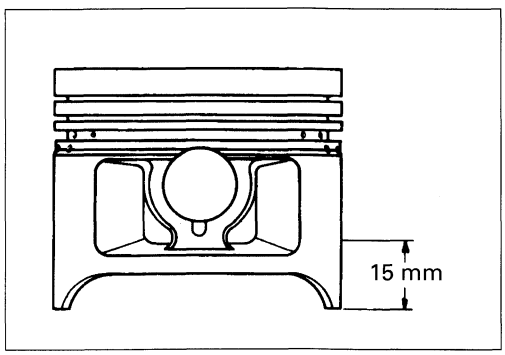

PISTON-CYLINDER CLEARANCE

As a result of the above measurement, if the piston clearance exceeds the following limit, overhaul the cylinder and use an oversize piston, or replace both cylinder and piston.

Service Limit: 0.12 mm (0.0047 in)

Piston oversize: 0.5 mm (0.02 in)

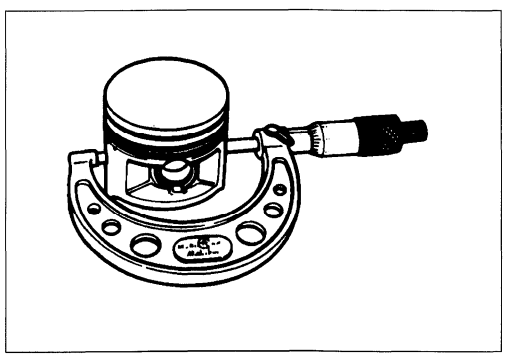

PISTON RING-GROOVE CLEARANCE

Using a thickness gauge, measure the side clearances of the 1st and 2nd rings. If any of the clearances exceeds the limit, replace both piston and piston rings.

TOOL 09900-20803: Thickness gauge

Piston ring-groove clearance
Service Limit
1st : 0.18 mm (0.007 in)
2nd: 0.15 mm (0.006 in)

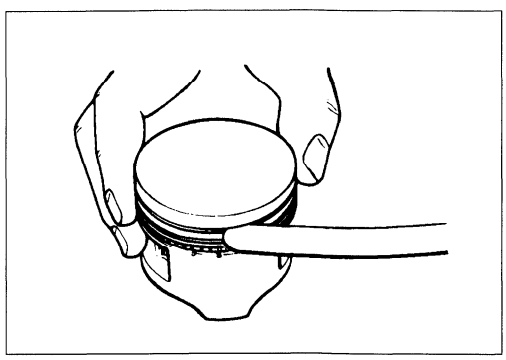

Piston ring groove width

Standard	**1st & 2nd:**	**1.01–1.03 mm (0.040–0.041 in)**
	Oil :	**2.01–2.03 mm (0.079–0.080 in)**

Piston ring thickness

Standard 1st & 2nd: 0.97–0.99 mm (0.038–0.039 in)

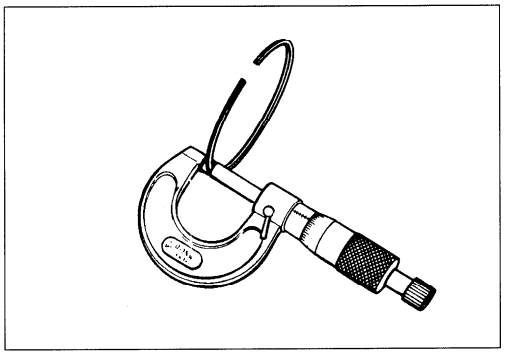

PISTON RING FREE END GAP AND PISTON RING END GAP

Before installing piston rings, measure the free end gap of each ring using vernier calipers. Next, fit the ring in the cylinder, and measure each ring end gap using a thickness gauge. If any ring has an excess end gap, replace the ring.

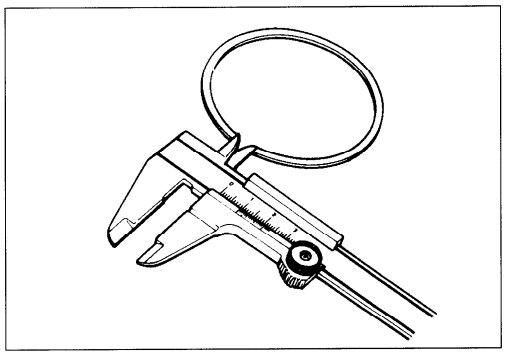

Piston ring free end gap

Service Limit	**1st :**	**8.0 mm (0.31 in)**
	2nd:	**9.6 mm (0.38 in)**

TOOL 09900-20102: Vernier calipers

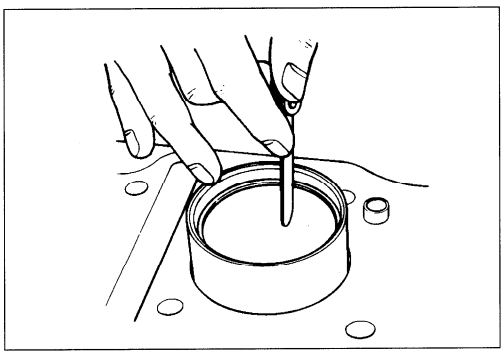

Piston ring end gap

Service Limit	**1st :**	**0.5 mm (0.02 in)**
	2nd:	**1.0 mm (0.04 in)**

TOOL 09900-20803: Thickness gauge

Oversize piston ring

The following oversize piston rings are used. They bear the following identification numbers.

	1st	2nd
0.5 mm	50	50

Oversize oil ring

The following oversize oil ring is available as optional part. The following identification mark (color) is used.

SIZE	COLOR
STD	Painted red
0.5 mm O.S.	Painted blue

Oversize side rail

Just measure out side diameter to identify the size.

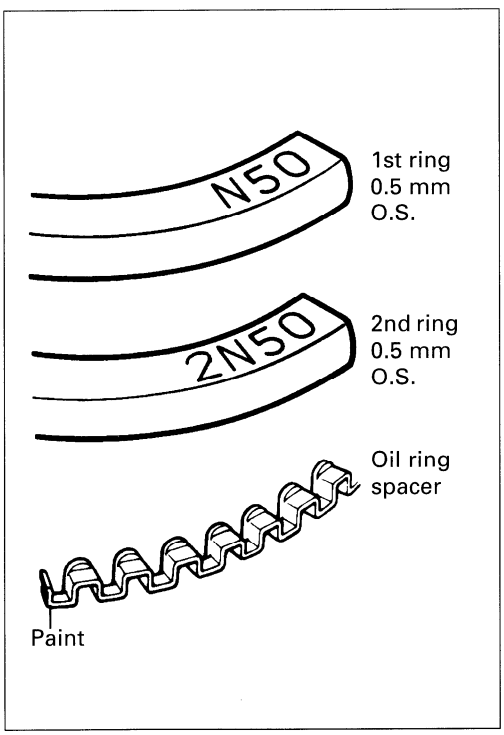

PISTON PIN AND PIN BORE

Using a small bore gauge, measure the piston pin bore inside diameter, and using a micrometer, measure the piston pin outside diameter. If the difference between these two measurements is more than the limits, replace both piston and piston pin.

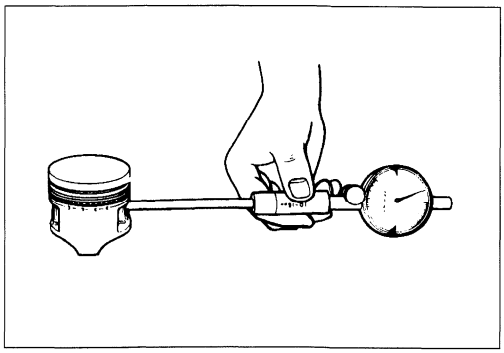

Piston pin bore I.D.
Service Limit: 20.030 mm (0.7886 in)

TOOL 09900-20602: Dial gauge (1/1000 mm, 1 mm)
09900-22403: Small bore gauge (18–35 mm)

Using a micrometer, measure the piston pin outside diameter at three positions.

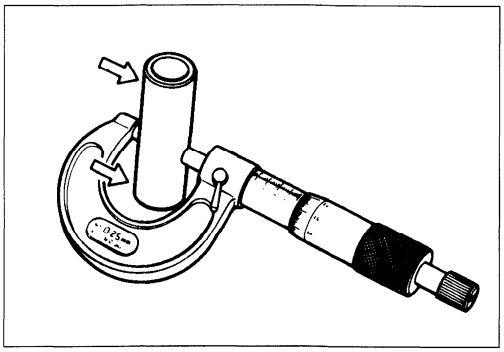

Piston pin O.D.
Service Limit: 19.980 mm (0.7866 in)

TOOL 09900-20205: Micrometer (0–25 mm)

CONROD SMALL END I.D.

Using a small bore gauge, measure the conrod small end inside diameter.

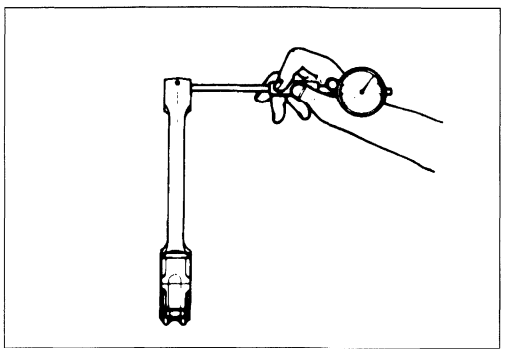

TOOL 09900-20602: Dial gauge (1/1000 mm, 1 mm)
09900-22403: Small bore gauge (18–35 mm)

Conrod small end I.D.
Service Limit: 20.040 mm (0.7890 in)

If the conrod small end inside diameter exceeds the above-mentioned limit, replace the conrod.

CONROD BIG END SIDE CLEARANCE

Check the conrod side clearance by using a thickness gauge. If the clearance exceeds the limit, replace conrod or crankshaft.

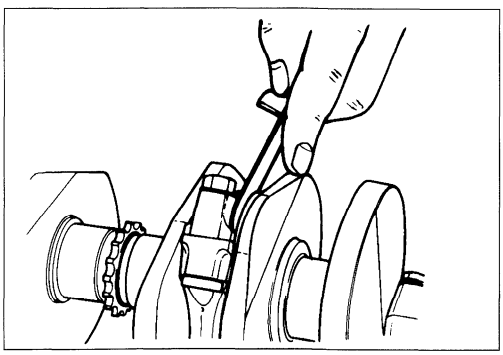

Service Limit: 0.3 mm (0.01 in)

TOOL 09900-20803: Thickness gauge

Standard
Big end width: 20.95–21.00 mm (0.825–0.827 in)

Standard
Crank pin width: 21.10–21.15 mm (0.831–0.833 in)

TOOL 09900-20205: Micrometer (0–25 mm)
09900-20605: Dial calipers (10–34 mm)

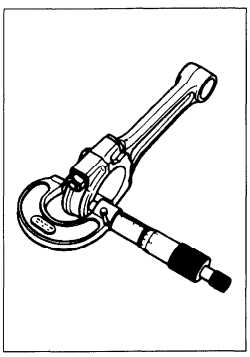

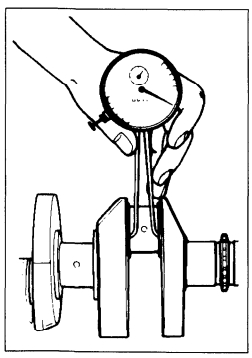

CONROD-CRANK PIN BEARING SELECTION

- Remove the bearing cap nuts, and tap the bearing cap lightly with plastic hammer to remove the bearing cap.
- Remove the rods, and mark them to identify the cylinder position.
- Inspect the bearing surfaces for any sign of fusion, pitting, burn, or flaws. If any, replace them with a specified set of bearings.

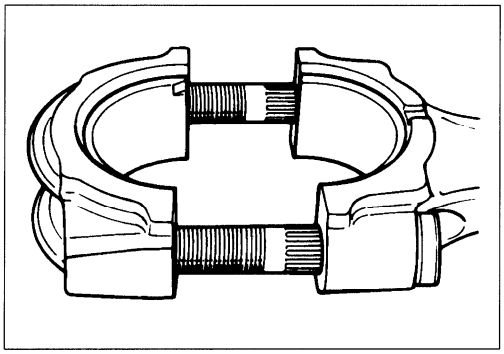

- Place plastigauge axially on the crank pin avoiding the oil hole, at TDC or BDC side as shown.
- Tighten the bearing cap nuts with two-step torque values.

Initial tightening torque: 25 N·m (2.5 kg-m, 18.0 lb-ft)

Final tightening torque: 50 N·m (5.0 kg-m, 36.0 lb-ft)

TOOL 09900-22301: Plastigauge

NOTE:
When fitting bearing cap to crank pin, be sure to discriminate one end from the other, namely front and rear.

NOTE:
Never rotate the crankshaft or conrod when a piece of plastigauge is in the clearance.

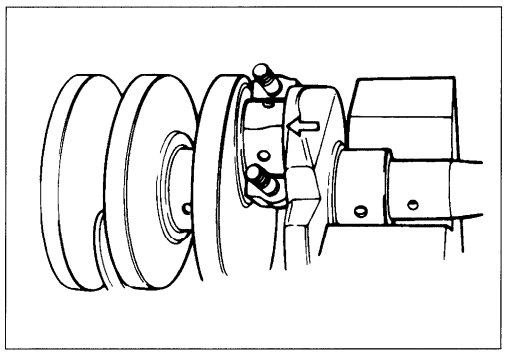

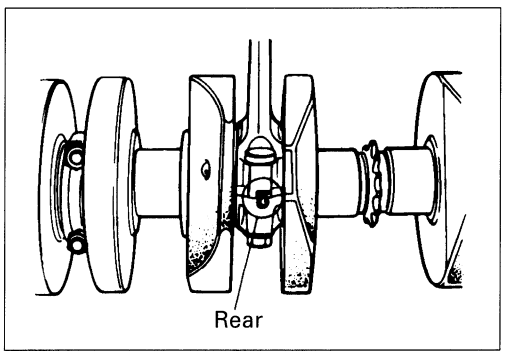

- Remove the caps, and measure the width of compressed plastigauge with envelope scale. This measurement should be taken at the widest part.

Crank pin bearing oil clearance

Standard: 0.032–0.056 mm (0.0013–0.0022 in)

Service Limit: 0.080 mm (0.0031 in)

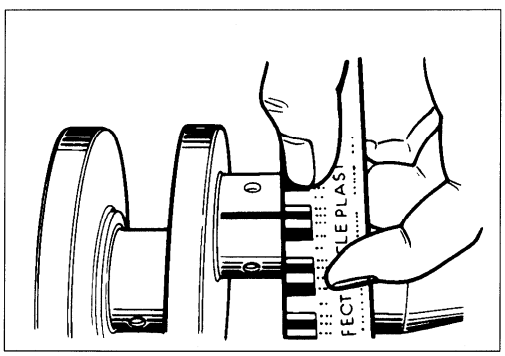

- If oil clearance exceeds the service limit, select the specified bearings from the bearing selection table.
- Check the corresponding conrod I.D. code number ①, "1" or "2".

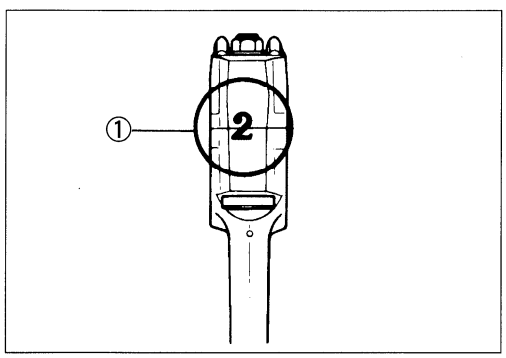

- Check the corresponding crank pin O.D. code number ②, "1", "2" or "3".

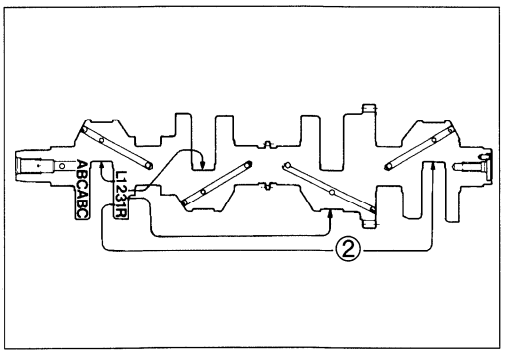

Bearing selection table

		Crank pin O.D. ②		
	Code	1	2	3
Conrod I.D. ①	1	Green	Black	Brown
	2	Black	Brown	Yellow

Conrod I.D. specification

Code	I.D. specification
1	41.000–41.008 mm (1.6142–1.6145 in)
2	41.008–41.016 mm (1.6145–1.6148 in)

Crank pin O.D. specification

Code	O.D. specification
1	37.992–38.000 mm (1.4957–1.4961 in)
2	37.984–37.992 mm (1.4954–1.4957 in)
3	37.976–37.984 mm (1.4951–1.4954 in)

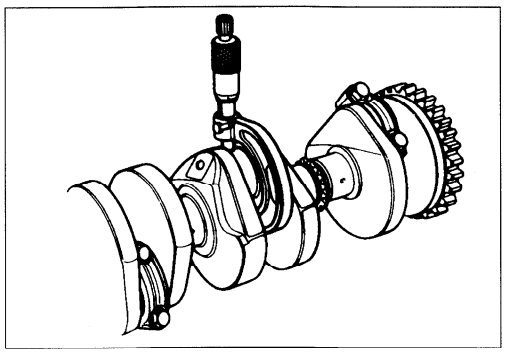

TOOL 09900-20202: Micrometer (25–50 mm)

Bearing thickness

Color (Part No.)	Thickness
Green (12164-46E01-0A0)	1.480–1.484 mm (0.0583–0.0584 in)
Black (12164-46E01-0B0)	1.484–1.488 mm (0.0584–0.0586 in)
Brown (12164-46E01-0C0)	1.488–1.492 mm (0.0586–0.0587 in)
Yellow (12164-46E01-0D0)	1.492–1.496 mm (0.0587–0.0589 in)

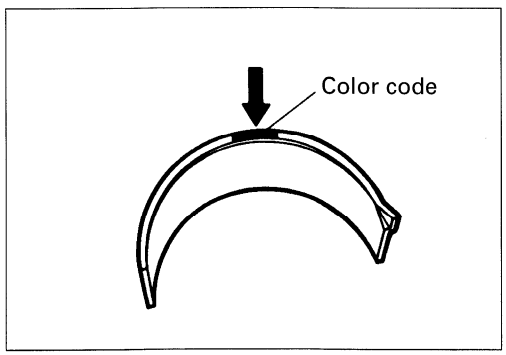

⚠ CAUTION

Bearing should be replaced as a set.

BEARING ASSEMBLY

- When fitting the bearings to the bearing cap and conrod, be sure to fix the stopper part first, and press in the other end.

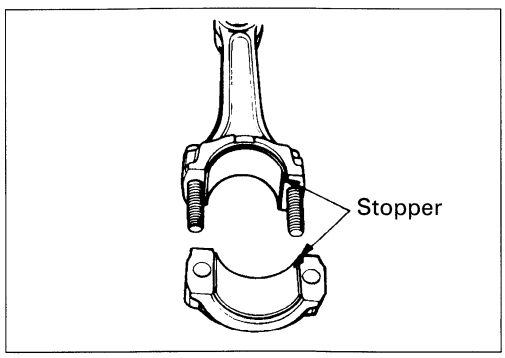

- Apply engine oil or SUZUKI MOLY PASTE to the crank pin and bearing surface.

99000-25140: SUZUKI MOLY PASTE

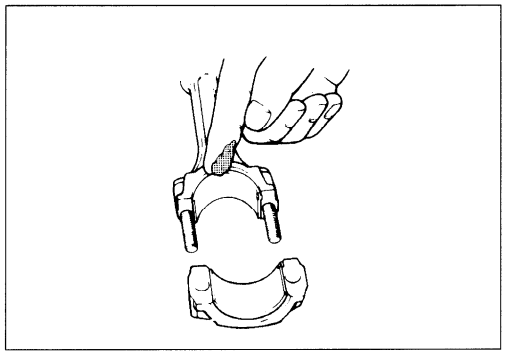

- When mounting the conrod on the crankshaft, make sure that numeral figure ① of the conrod faces rearward.
- Tighten the bearing cap nuts with specified torque.

Initial tightening torque: 25 N·m (2.5 kg-m, 18.0 lb-ft)

Final tightening torque: 50 N·m (5.0 kg-m, 36.0 lb-ft)

- Check the conrod movement for smooth turning.

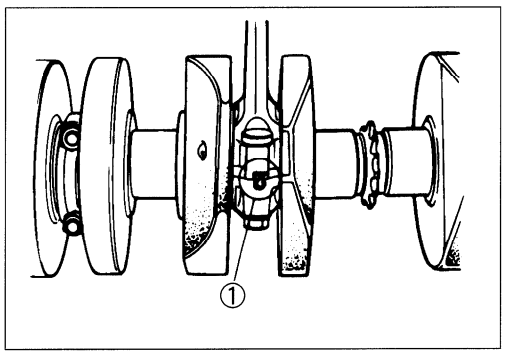

CRANKCASE-CRANKSHAFT BEARING SELECTION

- Inspect each bearing of upper and lower crankcases for any damage.

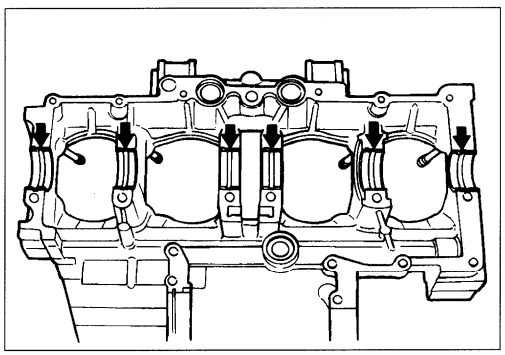

- Place the plastigauge on each crankshaft journal in the usual manner.

09900-22301: Plastigauge

NOTE:
Do not place the plastigauge on the oil hole, and do not rotate the shaft when plastigauge is in place.

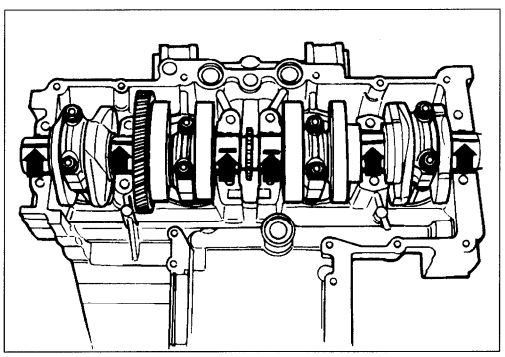

- Mate the lower crankcase with the upper crankcase, and tighten the crankshaft tightening bolts with specified torque value in the indicated order.

Tightening torque	Initial Tightening	Final Tightening
8 mm bolt	13 N·m 1.3 kg-m 9.5 lb-ft	22 N·m 2.2 kg-m 16.0 lb-ft

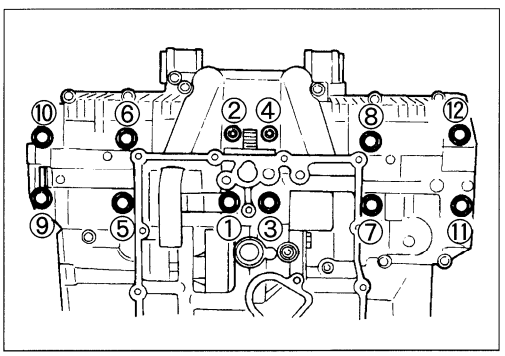

- Remove the lower crankcase, and measure the width of compressed plastigauge in the usual manner.

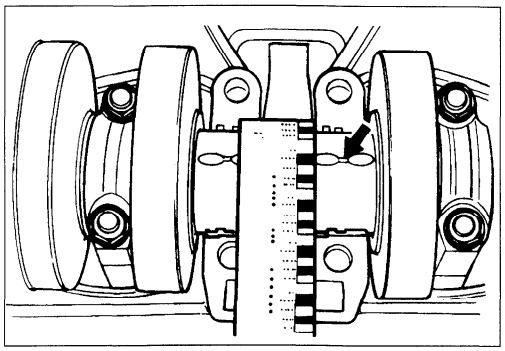

Crank journal bearing oil clearance

Standard: 0.020–0.044 mm (0.0008–0.0017 in)

Service Limit: 0.08 mm (0.0031 in)

- If the width at the widest part exceeds the limit, replace the set of bearings with new ones by referring to the selection table.

- Check the corresponding crankcase journal I.D. code number ①, "A" or "B" which are stamped on the rear of upper crankcase.
- Check the corresponding crankshaft journal O.D. code number ②, "A", "B" or "C" which are stamped on the crankshaft.

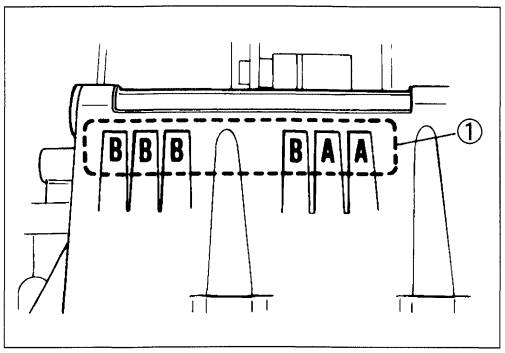

Bearing selection table

		Crankshaft O.D. ②		
	Code	A	B	C
Crankcase I.D. ①	A	Green	Black	Brown
	B	Black	Brown	Yellow

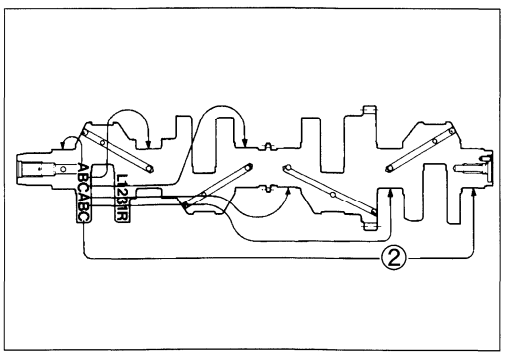

Crankcase I.D. specification

Code	I.D. specification
A	39.000–39.008 mm (1.5354–1.5357 in)
B	39.008–39.016 mm (1.5357–1.5361 in)

Crankshaft journal O.D. specification

Code	O.D. specification
A	35.992–36.000 mm (1.4170–1.4173 in)
B	35.984–35.992 mm (1.4167–1.4170 in)
C	35.976–35.984 mm (1.4164–1.4167 in)

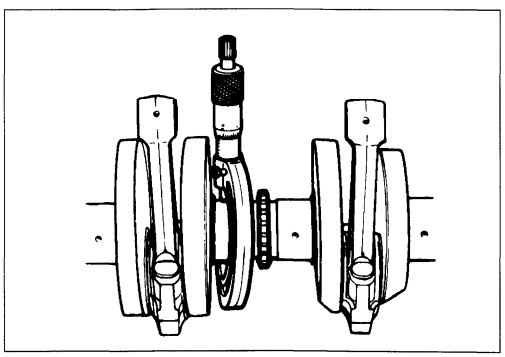

TOOL 09900-20202: Micrometer (25–50 mm)

Bearing thickness specification
(Grooved bearing with oil hole ..... For lower case)

Color (Part No.)	Specification
Green (12229-06B00-0A0)	1.486–1.490 mm (0.0585–0.0587 in)
Black (12229-06B00-0B0)	1.490–1.494 mm (0.0587–0.0588 in)
Brown (12229-06B00-0C0)	1.494–1.498 mm (0.0588–0.0590 in)
Yellow (12229-06B00-0D0)	1.498–1.502 mm (0.0590–0.0591 in)

NOTE:
* *Grooved bearings have the same specification as the Grooved bearing with oil hole.*
* *These parts numbers are shown as follows.*
12229-06B10-× × ×. (Grooved bearing)

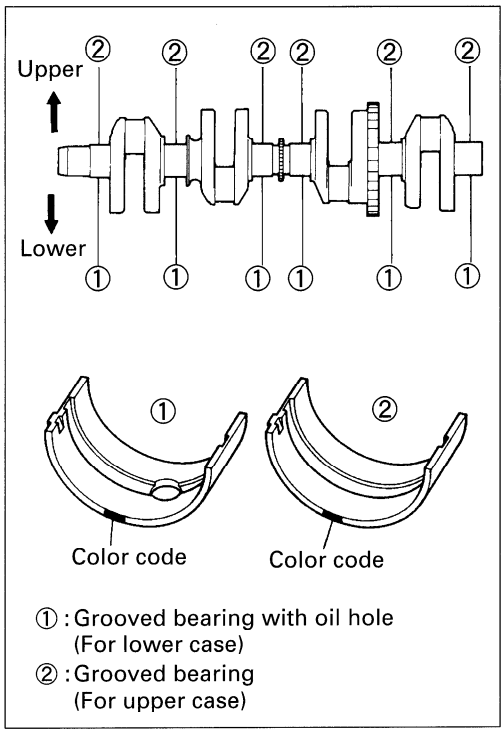

CRANKSHAFT THRUST CLEARANCE

- With the crankshaft, right-side thrust bearing and left-side thrust bearing inserted in the upper crankcase, use a thickness gauge to measure the thrust clearance on the left-side. Ⓡ : Right-side thrust bearing
  Ⓛ : Left-side thrust bearing

NOTE:
Push the crankshaft to the left-side, so that there is no clearance on the right-side thrust bearing.

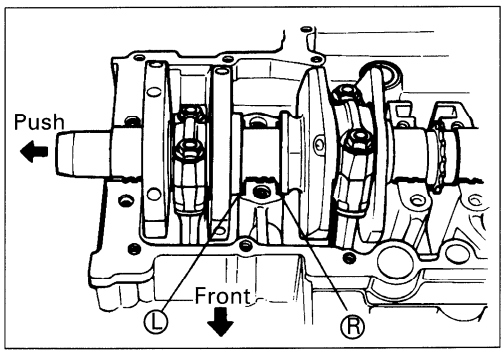

Thrust clearance
Standard: 0.04–0.08 mm (0.002–0.003 in)

If the thrust clearance exceeds the standard range, adjust the thrust clearance by the following procedures:

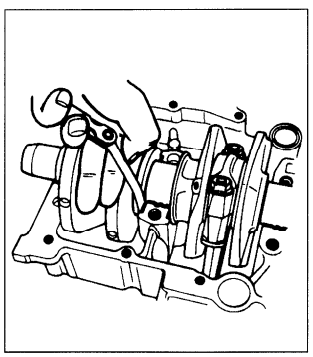

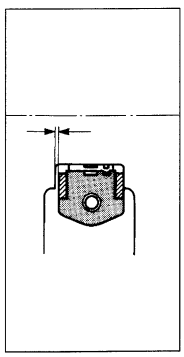

- Remove the right-side thrust bearing and measure its thickness with a micrometer. If the thickness of the right-side thrust bearing is below standard, replace with a new bearing and once again perform the thrust clearance measurement listed above, checking to make sure it is within standard.

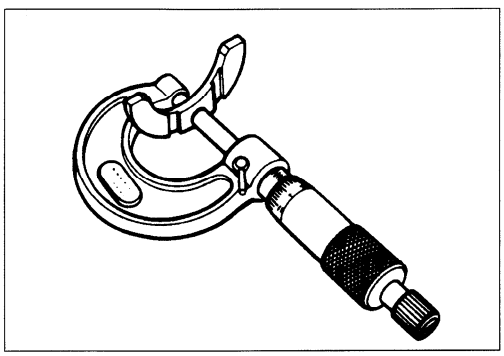

Right-side thrust bearing thickness
Standard: 2.42–2.44 mm (0.0953–0.0961 in)

- If the right-side thrust bearing is within the standard range, reinsert the right-side thrust bearing and remove the left-side thrust bearing.
- As shown in the illustration, use a thickness gauge to measure the clearance before inserting of the left-side thrust bearing, and select a left-side thrust bearing from the selection table.

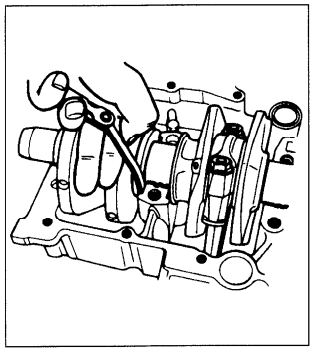

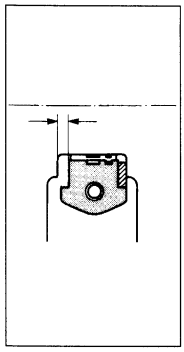

Thrust bearing selection table

Clearance before inserting left-side thrust bearing	Color (Part No.)	Thrust bearing thickness	Thrust clearance
2.42–2.44 mm (0.0953–0.0961 in)	Black (12228-48B00-0H0)	2.36–2.38 mm (0.0929–0.0937 in)	0.04–0.08 mm (0.002–0.003 in)
2.44–2.46 mm (0.0961–0.969 in)	Orange (12228-48B00-0G0)	2.38–2.40 mm (0.0937–0.0995 in)	
2.46–2.48 mm (0.0969–0.0976 in)	Blue (12228-48B00-0F0)	2.40–2.42 mm (0.0945–0.0953 in)	
2.48–2.50 mm (0.0976–0.0984 in)	Green (12228-48B00-0E0)	2.42–2.44 mm (0.0953–0.0961 in)	
2.50–2.52 mm (0.0984–0.0992 in)	Yellow (12228-48B00-0D0)	2.44–2.46 mm (0.0961–0.0969 in)	
2.52–2.54 mm (0.0992–0.1000 in)	Red (12228-48B00-0C0)	2.46–2.48 mm (0.0969–0.0976 in)	
2.54–2.56 mm (0.1000–0.1008 in)	Brown (12228-48B00-0B0)	2.48–2.50 mm (0.0976–0.0984 in)	
2.56–2.57 mm (0.1008–0.1012 in)	Pink (12228-48B00-0A0)	2.50–2.52 mm (0.0984–0.0992 in)	0.04–0.07 mm (0.002–0.003 in)

- After selecting a left-side thrust bearing, insert it and again perform the thrust clearance measurement to make sure it falls within the standard range.

NOTE:
Right-side thrust bearing color code and part No. are as follows. GREEN (12228-48B00-0E0).

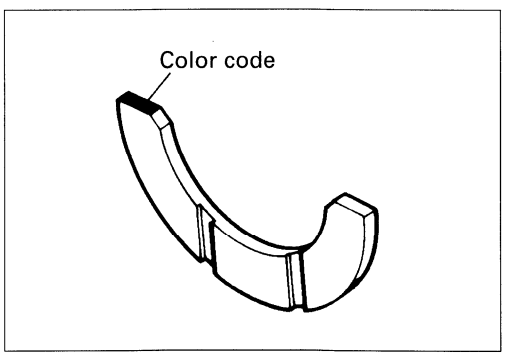

CRANKSHAFT RUNOUT

Support the crankshaft with "V" blocks as shown, with the two end journals resting on the blocks. Set up the dial gauge, as shown, and rotate the crankshaft slowly to read the runout. Replace the crankshaft if the runout is greater than the limit.

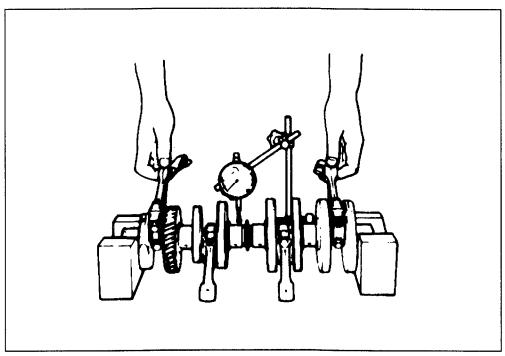

TOOL 09900-20606: Dial gauge (1/100 mm, 10 mm)
09900-20701: Magnetic stand
09900-21304: V-block (100 mm)

Crankshaft runout
Service Limit: 0.05 mm (0.002 in)

CLUTCH INSPECTION

CLUTCH DIAPHRAGM SPRING

Measure the free height of each diaphragm spring with a vernier calipers. If each diaphragm spring height is not within the specified limit, replace it with a new one.

TOOL 09900-20102: Vernier calipers

Service Limit: 2.9 mm (0.11 in)

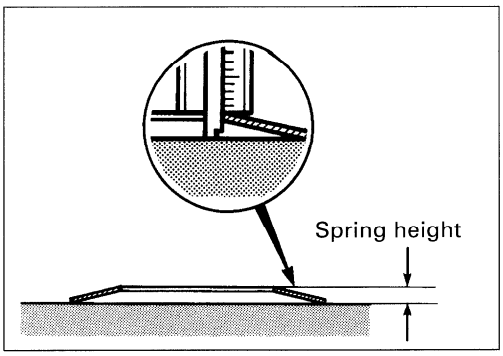

CLUTCH DRIVE AND DRIVEN PLATES

NOTE:
Wipe off the engine oil from the drive and driven plates with a clean rag.

Measure the thickness of drive plates with a vernier calipers. If each drive plate is not within the standard range, replace it with a new one.

TOOL 09900-20102: Vernier calipers

Standard (No.1 and No.2 drive plates)
Thickness: 2.92–3.08 mm (0.115–0.121 in)

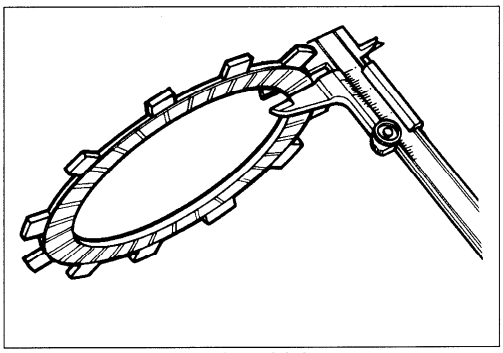

Measuring thickness

Measure the claw width of drive plates with a vernier calipers. Replace the drive plates found to have worn down to the limit.

TOOL 09900-20102: Vernier calipers

Service Limit (No.1 and No.2 drive plates)
Claw width: 13.0 mm (0.51 in)

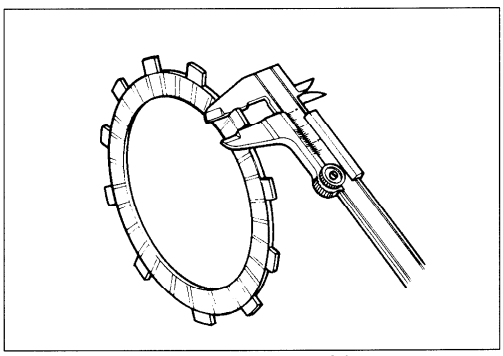

Measuring claw wide

Measure each driven plate for distortion with a thickness gauge and surface plate.
Replace driven plates which exceed the limit.

TOOL 09900-20803: Thickness gauge

Service Limit: 0.1 mm (0.004 in)

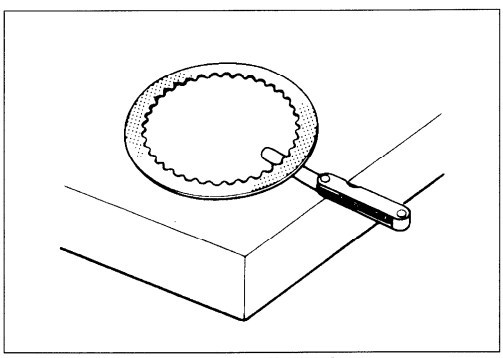

Measuring distortion

CLUTCH BEARING

Inspect the clutch release bearing for any abnormality, particularly cracks, to decide whether it can be reused or should be replaced.
Smooth engagement and disengagement of the clutch depends on the condition of the bearing.

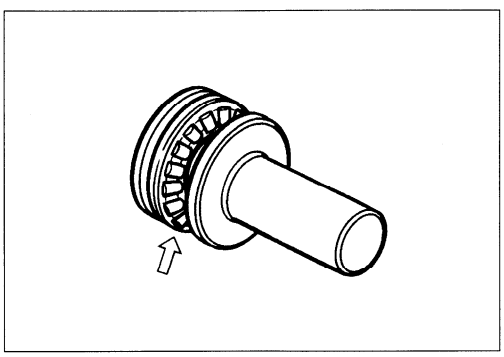

CLUTCH RELEASE CYLINDER

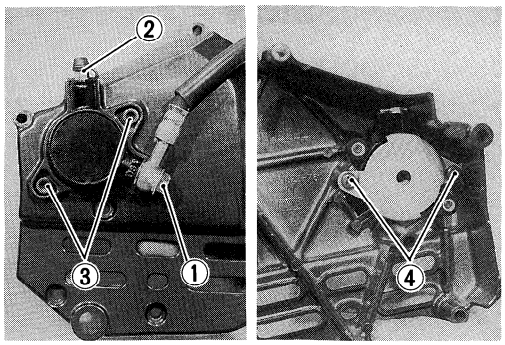

DISASSEMBLY

- Remove the gearshift lever and engine sprocket cover. (Refer to page 3-6.)
- Remove the clutch hydraulic line by removing the union bolt ①.
- Remove the air bleeder valve ②.
- Remove the clutch release cylinder by removing the mounting bolts ③ and piston retainer screws ④.

NOTE:
Completely wipe off any clutch fluid adhering to any part of motorcycle.
The fluid reacts chemically with paint, plastics, rubber materials, etc.

- Place a rag over the piston to prevent popping up. Force out the piston by using air gun.

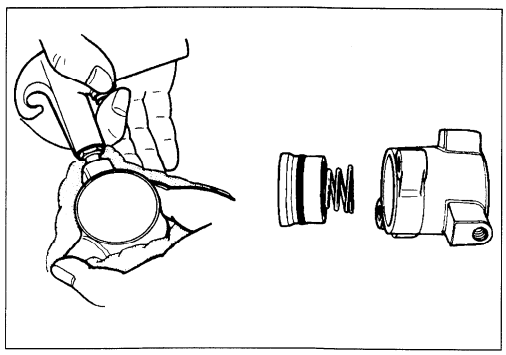

⚠ CAUTION

Do not use high pressure air to prevent piston damage.

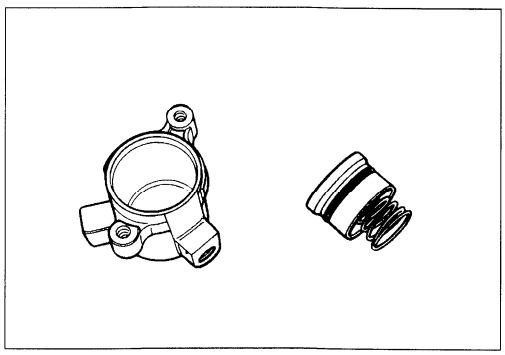

INSPECTION

Inspect the clutch cylinder bore wall for nicks, scratches or other damage. Inspect the oil seal for damage and wear. Inspect the piston surface for any scratches or other damage.

REASSEMBLY

Reassemble the clutch cylinder in the reverse order of disassembly and by taking the following steps.

⚠ CAUTION

- **Wash the clutch cylinder components with fresh brake fluid before reassembly.**
- **Never use cleaning solvent or gasoline to wash them.**
- **Apply brake fluid to the cylinder bore and piston to be inserted into the bore.**
- **Bleed air from the system after reassembling the cylinder. (Refer to page 2-10.)**
  (Refer to page 5-54 for the clutch master cylinder.)

OIL PUMP

⚠ CAUTION

Do not attempt to disassemble the oil pump assembly. The oil pump is available only as an assembly.

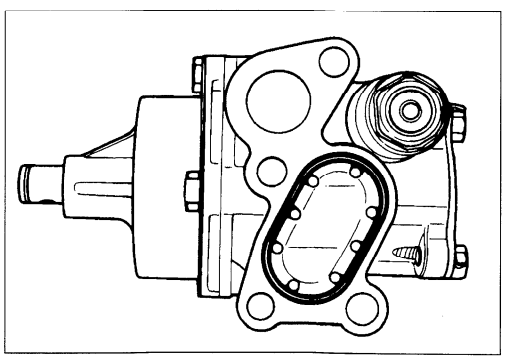

TRANSMISSION

DISASSEMBLY

- Disassemble the transmission gears as shown in the illustration.

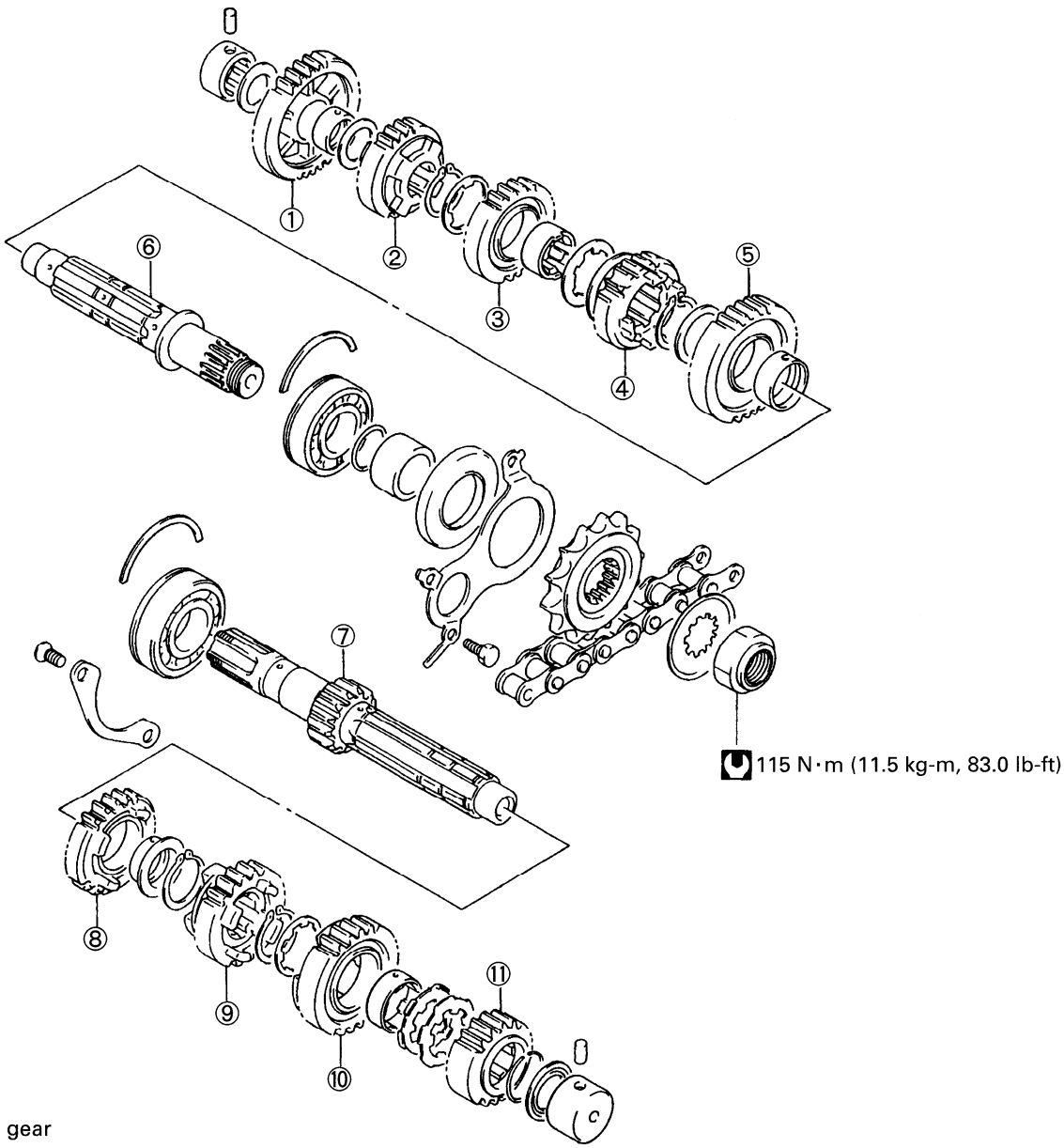

① Low driven gear
② 4th driven gear
③ 3rd driven gear
④ Top driven gear
⑤ 2nd driven gear
⑥ Driveshaft
⑦ Countershaft/Low drive gear
⑧ 4th drive gear
⑨ 3rd drive gear
⑩ Top drive gear
⑪ 2nd drive gear

REASSEMBLY

Assemble the countershaft and driveshaft in the reverse order of disassembly. Pay attention to the following points:

NOTE:

* *Before installing the gears, rotate the bearing by hand to inspect for abnormal noise and smooth rotation. Replace the bearing if there is anything unusual.*
* *Before installing the gears, lightly coat moly paste or engine oil to the driveshaft and countershaft.*
* *Before installing the oil seal, apply grease to the oil seal lip.*

99000-25140: SUZUKI MOLY PASTE

99000-25010: SUZUKI SUPER GREASE "A"

⚠ CAUTION

* **Never reuse a circlip. After a circlip has been removed from a shaft, it should be discarded, a new circlip must be installed.**
* **When installing a new circlip, care must be taken not to expand the end gap larger than required to slip the circlip over the shaft.**
* **After installing a circlip, always insure that it is completely seated in its groove and securely fitted.**

NOTE:

In reassembling the transmission, attention must be given to the locations and positions of washers and circlips. The cross sectional view given here will serve as a reference for correctly mounting the gears, washers and circlips. (Refer to page 3-47.)

- When installing a new circlip, pay attention to the direction of the circlip. Fit it to the side where the thrust is as shown in the illustration.

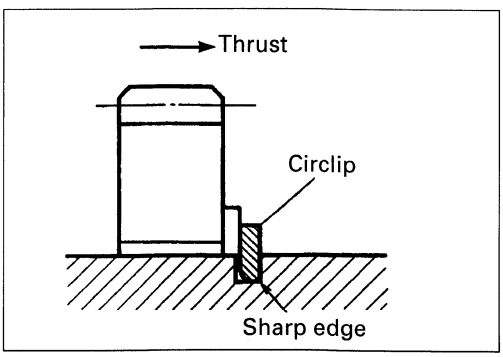

- When installing the gear bushing onto the shaft, align the shaft oil hole ① with the bushing oil hole ② .

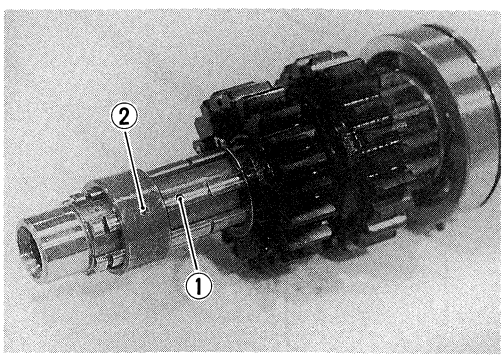

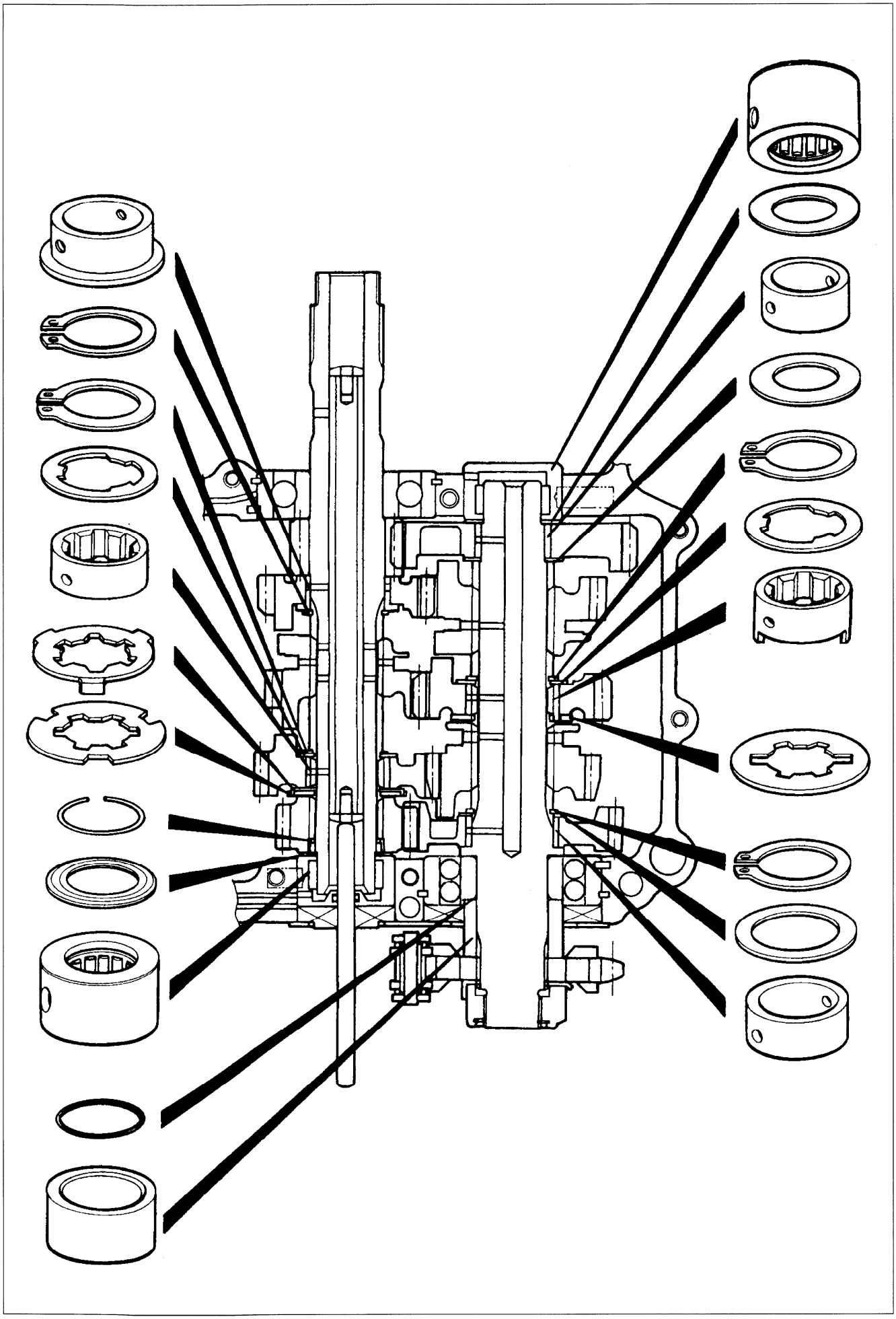

GEARSHIFT FORK-GROOVE CLEARANCE

Using a thickness gauge, check the gearshift fork clearance in the groove of its gear.
The clearance for each of the three gearshift forks plays an important role in the smoothness and positiveness of the shifting action.

Gearshift fork-Groove clearance
Standard : 0.10–0.30 mm (0.004–0.012 in)
Service Limit: 0.50 mm (0.020 in)

If the clearance checked is noted to exceed the limit specified, replace the fork or its gear, or both.

TOOL 09900-20803: Thickness gauge
09900-20102: Vernier calipers

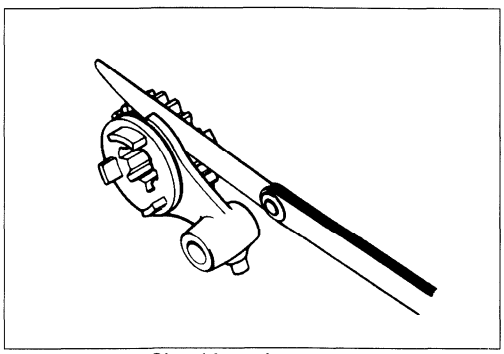

Checking clearance

Shift fork groove width
Standard: No.1, No.2 & No.3 5.00–5.10 mm (0.197–0.201 in)

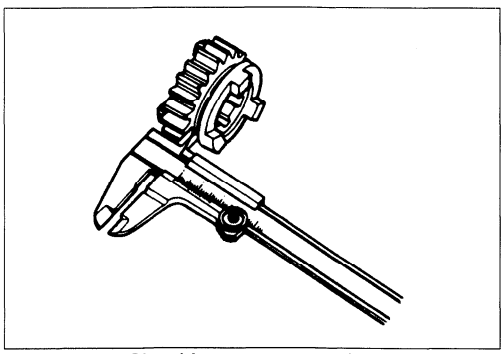

Checking groove width

Shift fork thickness
Standard: No.1, No.2 & No.3 4.80–4.90 mm (0.189–0.193 in)

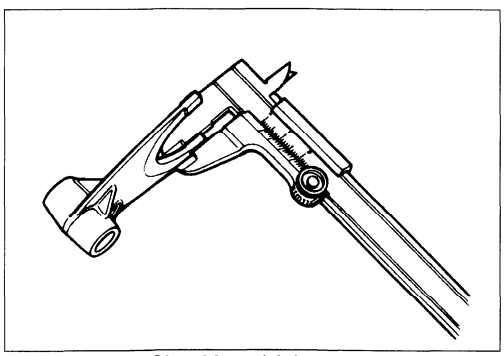

Checking thickness

STARTER CLUTCH

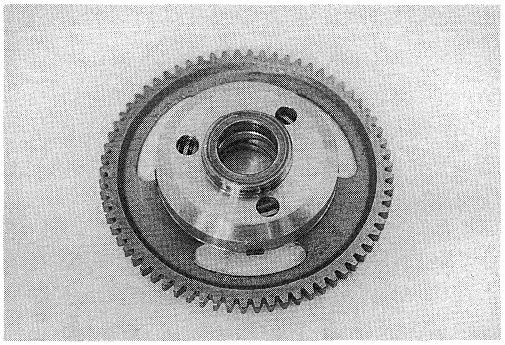

INSPECTION

Install the starter driven gear onto the starter clutch and turn the starter driven gear by hand to inspect the starter clutch for a smooth movement. The gear turns one direction only. If a large resistance is felt to rotation, inspect the starter clutch for damage or inspect the starter clutch contacting surface of the starter driven gear for wear or damage.
If they are found to be damaged, replace them with new ones.

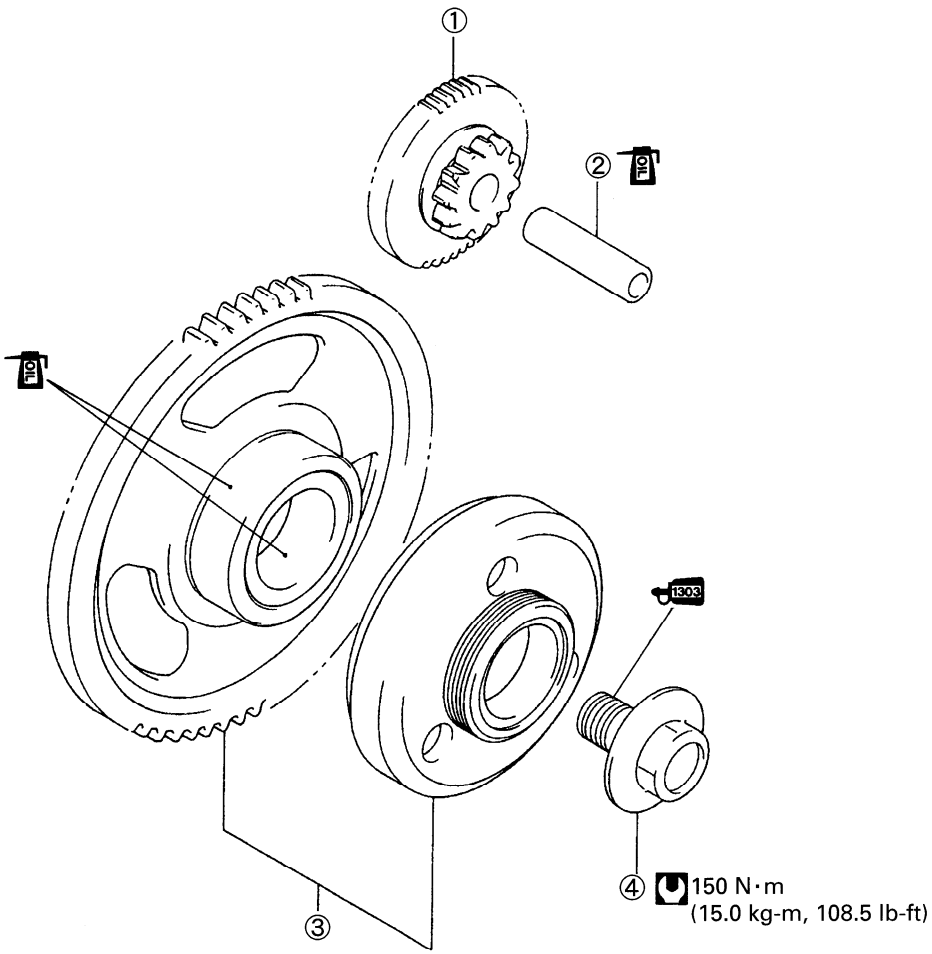

① Starter idle gear
② Shaft
③ Starter clutch assembly
④ Bolt

ENGINE REASSEMBLY

The engine is reassembled by carrying out the steps of disassembly in the reversed order, but there are a number of steps which demand special descriptions or precautionary measures.

NOTE:
Apply engine oil to each running and sliding part before reassembling.

NOTE:
When installing the gearshift cam stopper plate Ⓐ, align the pin groove Ⓑ with the pin Ⓒ as shown in the figure.

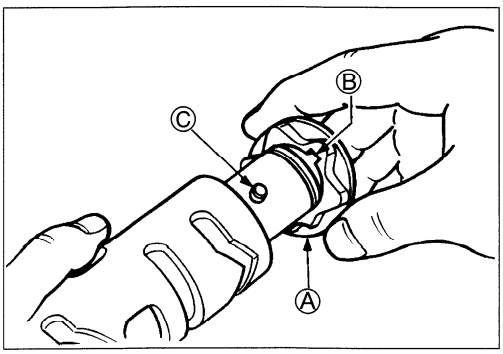

- Install the gearshift cam related parts.

  ①Gearshift cam
  ②Gearshift cam stopper
  ③Circlip
  ④Circlip
  ⑤Spring

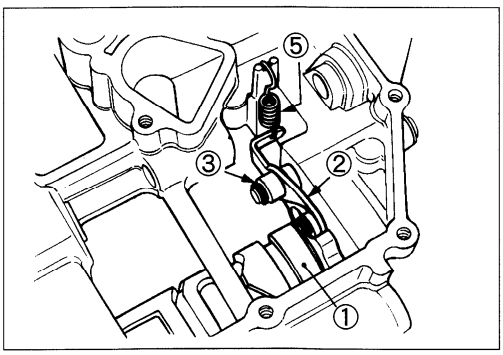

⚠ CAUTION

Always use new circlips, ③ and ④.

- Position the gearshift cam in Neutral position as shown in the figure, so that the gearshift forks and transmission gears can be installed easily.

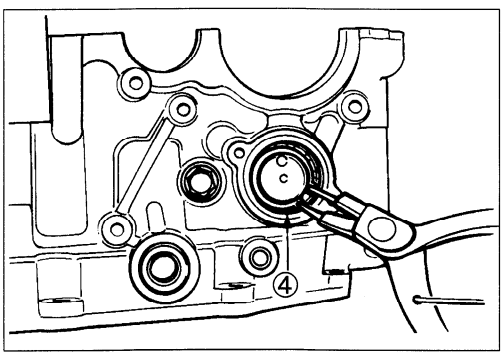

- Install the gearshift forks to the crankcase in the correct position and direction.

  ①For 4th driven gear
  ②For 3rd drive gear
  ③For Top driven gear

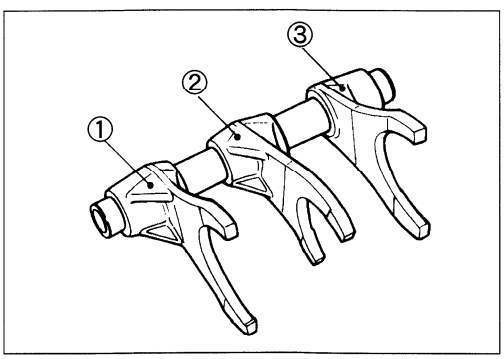

- Fit the O-rings, ① and ②, and dowel pins ③ to the correct positions, as shown in the illustrations.

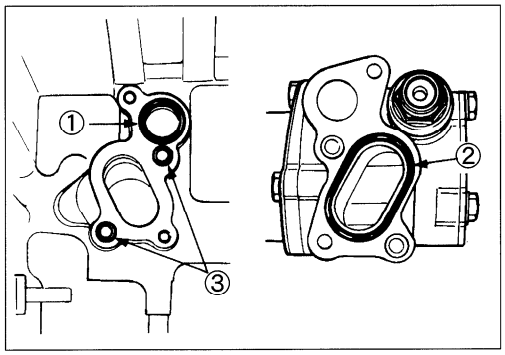

⚠ CAUTION

Replace the O-rings with new ones to prevent oil leakage.

- Install the oil pump to the lower crankcase with three bolts and tighten them to the specified torque.

NOTE:

Apply a small quantity of THREAD LOCK "1342" to the bolts.

1342 99000-32050: THREAD LOCK "1342"

Oil pump mounting bolt: 14 N·m (1.4 kg-m, 10.0 lb-ft)

NOTE:
Check the oil jets ④ fitted on the lower crankcase for clogging.

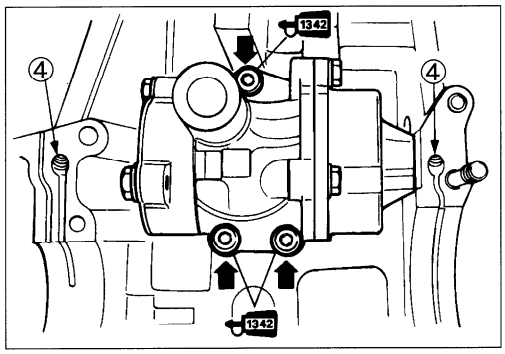

- Fit the bearing pins ⑤ and C-rings ⑥ on the upper crankcase.

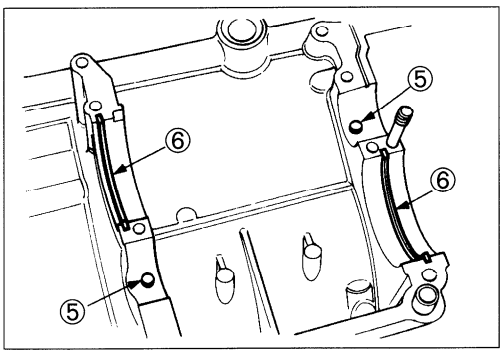

- Install the countershaft assembly and driveshaft assembly on the upper crankcase.

NOTE:
* *Be sure to install the bearing dowel pins ⑦ in their respective positions.*
* *Install the countershaft end cap to the position ⑧ .*
* *Make sure that the countershaft turns freely while holding the driveshaft. If not, shift the gear to the neutral position.*

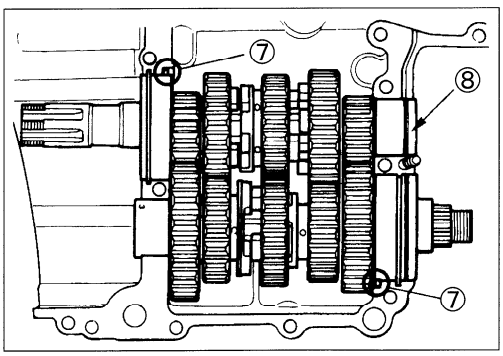

NOTE:
Before fitting the crankshaft journal bearings, check the piston oil jets ⑨ fitted on the upper crankcase for clogging.

⑨ Piston oil jet(4 pcs) .....For upper case

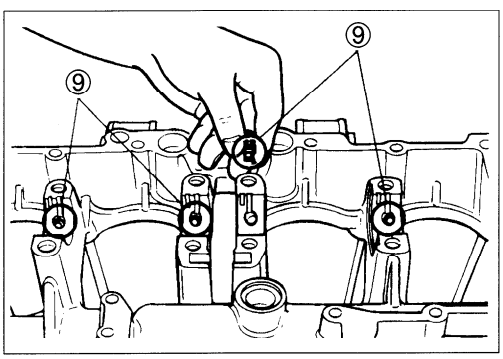

- When fitting the crankshaft journal bearings to the upper and lower crankcases, be sure to fix the stopper part ① first and press the other end. (Refer to page 3-41.)

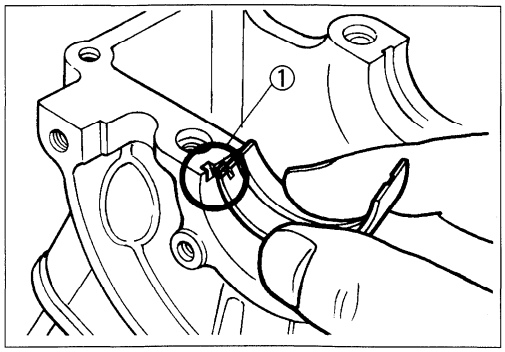

⚠ CAUTION

Do not touch the bearing surfaces with your hands. Grasp by the edge of the bearing shell.

- Install the cam chain tensioner ② and two dampers ③ properly.

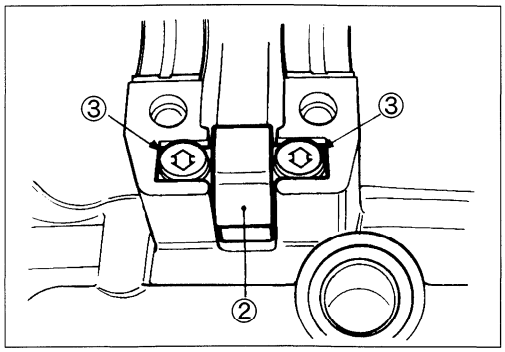

NOTE:
Be sure to face the arrow mark on the damper to the front and rear, not to the left and right.

- Fit the O-rings, ④ and ⑤.

⚠ CAUTION

Replace the O-rings with new ones to prevent oil leakage.

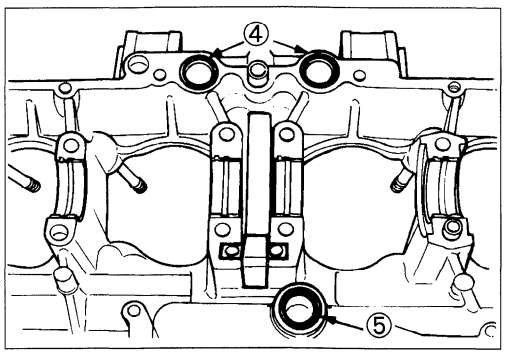

- Before installing the crankshaft, apply SUZUKI MOLY PASTE to each journal bearing lightly.

99000-25140: SUZUKI MOLY PASTE

- Install the crankshaft with the cam chain to the upper crankcase.
- Insert the right and left-thrust bearings ⑥ with oil grooved facing the crank web. (Refer to page 3-41.)
- Clean the mating surfaces of the crankcases before matching the upper and lower ones.
- Install the dowel pins to the upper crankcase.
- Apply SUZUKI BOND NO. 1207B to the mating surface of the lower crankcase in the following procedure.

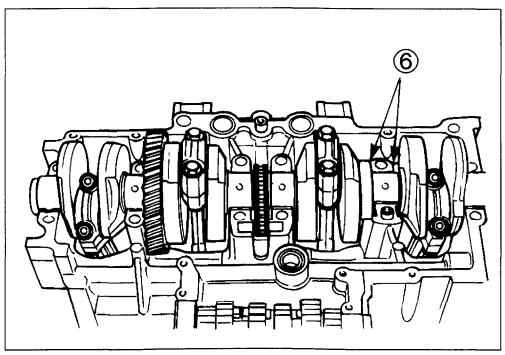

99000-31140: SUZUKI BOND NO. 1207B

NOTE:
Use of SUZUKI BOND NO. 1207B is as follows:

* *Make surfaces free from moisture, oil, dust and other foreign materials.*
* *Spread on surfaces thinly to form an even layer, and assemble the cases within few minutes.*
* *Take extreme care not to apply any BOND NO. 1207B to the bearing surfaces.*
* *Apply to cornered surface as it forms a comparatively thick film.*

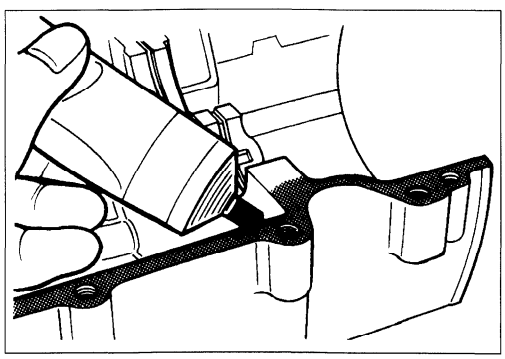

- Fix the right oil pipe Ⓐ with No. ① bolt.
- Fit the copper washers to the No. ⑨ and No. ⑪ bolts.
- Locate two allen bolts at position Ⓑ and ten 8-mm bolts.
- Tighten the crankshaft tightening 8-mm bolts in the ascending order of numbers assigned to these bolts, tightening each bolt a little at a time to equalize the pressure.
- Fit the copper washer to the bolt Ⓒ.
- Tighten the lower and upper crankcase tightening bolts and nuts to the specified torque values.

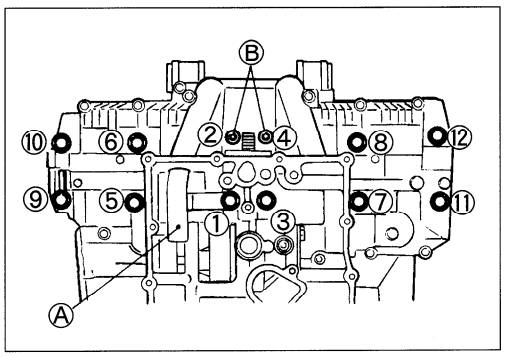

Crankcase bolt	Initial tightening			Final tightening		
	N·m	kg-m	lb-ft	N·m	kg-m	lb-ft
6 mm bolt	6	0.6	4.5	13	1.3	9.5
8 mm bolt	13	1.3	9.5	22	2.2	16.0

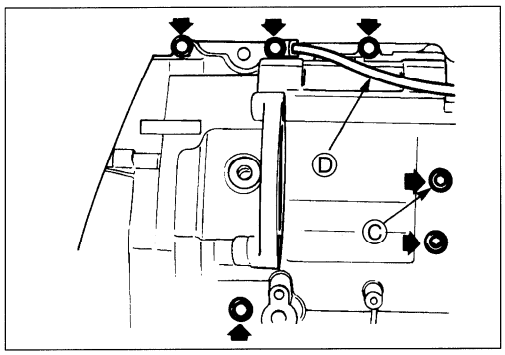

NOTE:

** Install the main oil gallery plug. (Refer to page 3-20.)*

** Fit the engine ground wire Ⓓ to the correct position as shown in the figure.*

TOOL 09900-00410: Hexagon wrench set

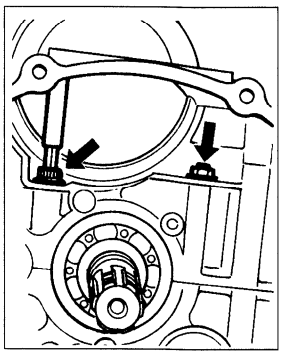

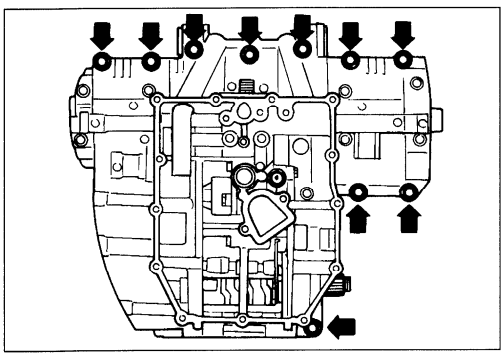

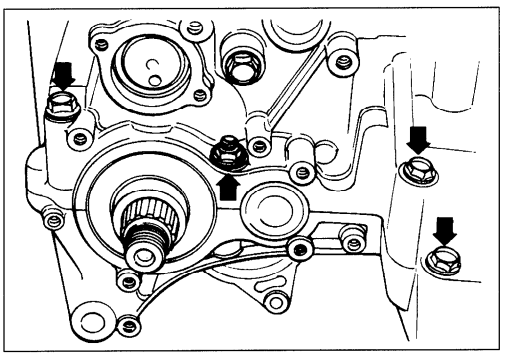

- Install the left oil pipe ① with bolt.
- Fit a new O-ring ② and shim ③.
- Fit a new gasket and install the oil sump filter ④ with two bolts.

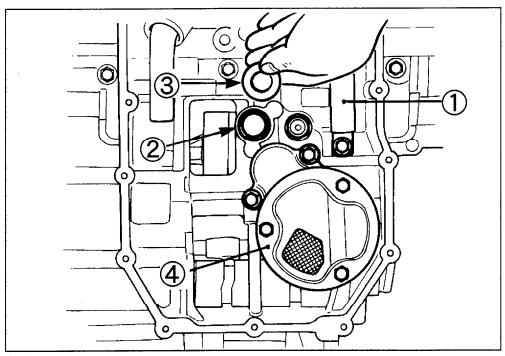

⚠ CAUTION

Replace the gasket and O-ring with new ones to prevent oil leakage.

- Seat the washer and install the oil pressure regulator ⑤ to the oil pan and tighten it to the specified torque.

Oil pressure regulator: 28 N·m (2.8 kg-m, 20.0 lb-ft)

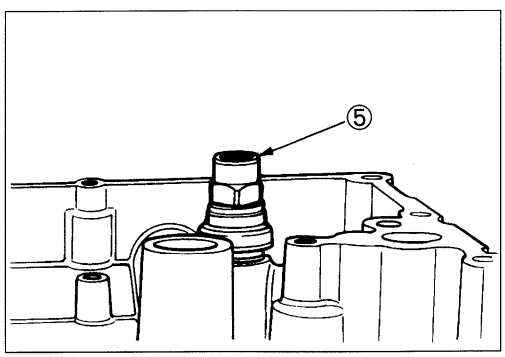

- Fit a new gasket and install the oil pan. Tighten the oil pan bolts to the specified torque.

Oil pan bolt: 14 N·m (1.4 kg-m, 10.0 lb-ft)

NOTE:
Fit a new gasket to the oil pan bolt Ⓐ correctly position as shown.

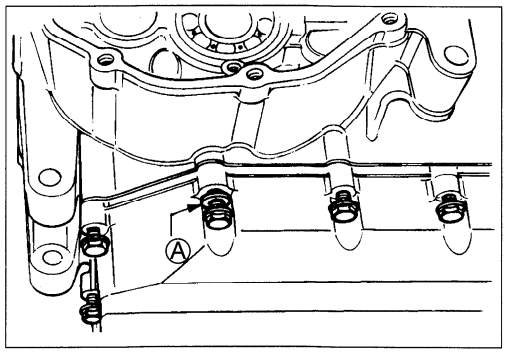

⚠ CAUTION

Use a new gasket to prevent oil leakage.

- Tighten the engine oil drain plug to the specified torque.

Oil drain plug: 23 N·m (2.3 kg-m, 16.5 lb-ft)

- Install the countershaft bearing retainer with two screws.

NOTE:
Apply a small quantity of THREAD LOCK "1342" to the two screws.

99000-32050: THREAD LOCK "1342"

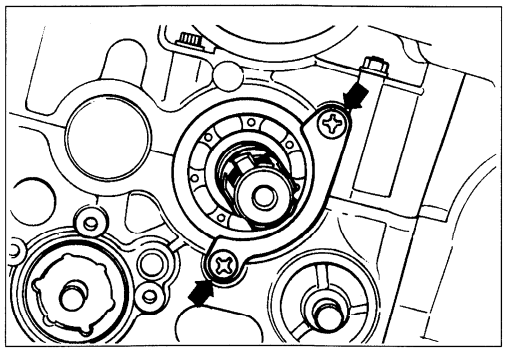

- Install each gearshift pawl ① into the cam driven gear ②. The large shoulder Ⓐ must face to the outside as shown.
- When installing the cam guide ③ and pawl lifter ④, apply a small quantity of THREAD LOCK "1342" to the screws.

99000-32050: THREAD LOCK "1342"

09900-09003: Impact driver set

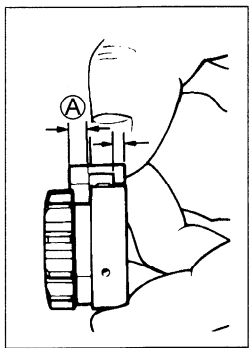

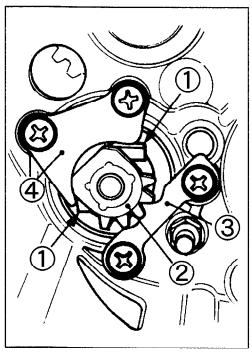

- Install the gearshift shaft with the center of shift gear on shaft aligned the center of gearshift cam driven gear.

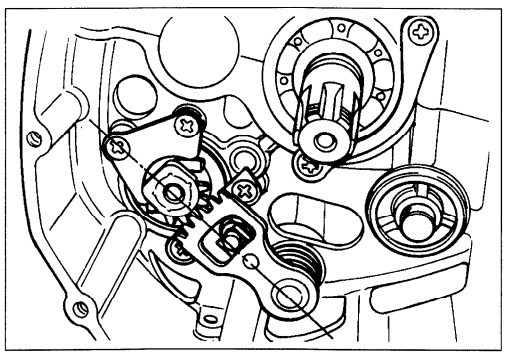

- Install the washer and fix the gearshift shaft with the circlip.

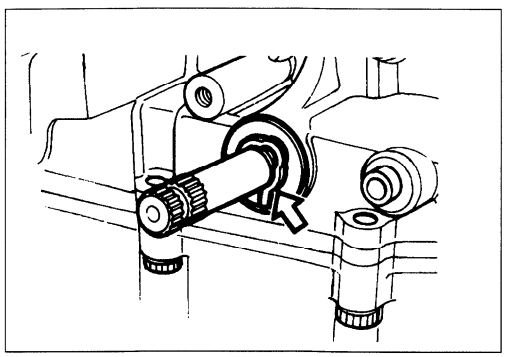

- Install the washer ①, pin ②, oil pump driven gear ③ and washer ④.
- Fix the oil pump driven gear with the circlip.

TOOL 09900-06107: Snap ring pliers

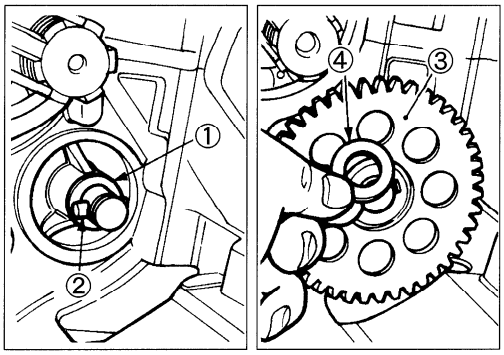

- Install the thrust washer ⑤ onto the countershaft.

NOTE:
Flat surface of washer is positioned outside.

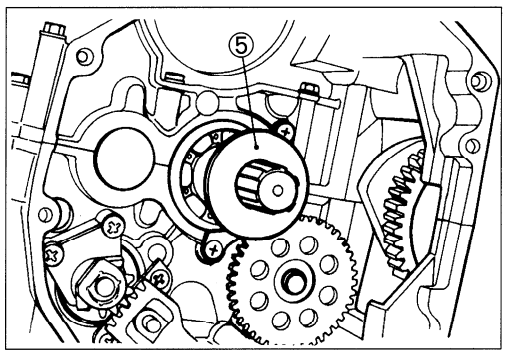

- Install the generator/oil pump drive gears ⑥ onto the primary driven gear ⑦.

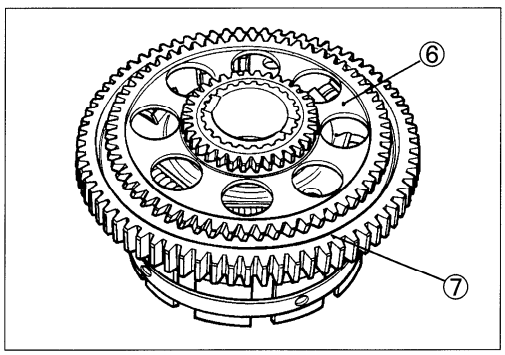

- Install the primary driven gear assembly onto the countershaft, and apply engine oil to the needle bearing and spacer.
- Install the thrust washer ⑧ onto the countershaft.

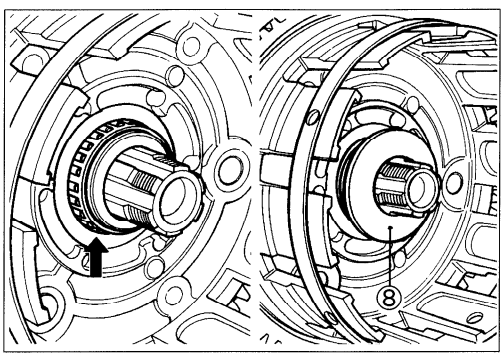

- Install the spring washer seat ⑨ and spring washer ⑩ onto the clutch sleeve hub correctly.

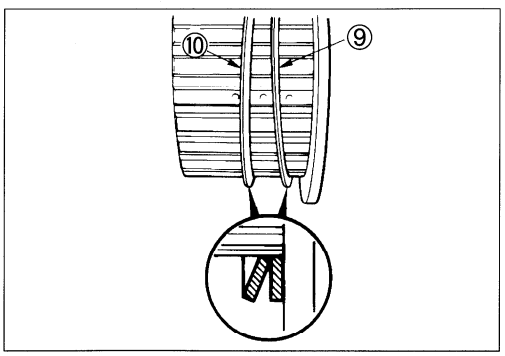

- Install the clutch sleeve hub onto the countershaft.
- Insert the clutch drive plates and driven plates one by one into the clutch sleeve hub in the prescribed order, No.2 drive plate first.

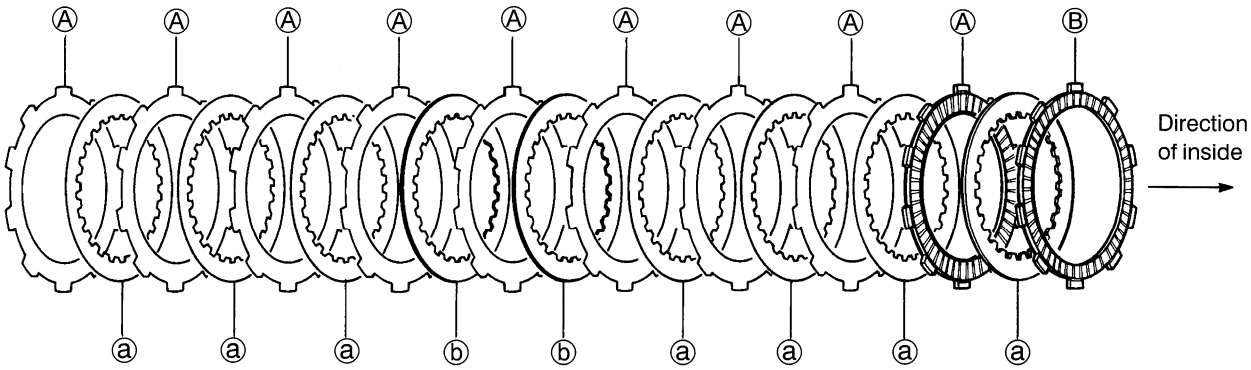

DRIVE PLATE:
Two kinds of the drive plate, No.1 and No.2, are equipped in the clutch system, they can be distinguished by the inside diameter.
Ⓐ No.1 Drive Plate (Inside Diameter): 101 mm ..... 9 pcs
Ⓑ No.2 Drive Plate (Inside Diameter): 108 mm .....1 pc

DRIVEN PLATE:
Two kinds of the driven plate, No.1 and No.2, are equipped in the clutch system, they can be distinguished by the thickness. (The spare part of the No.2 driven plate is not available individually.)
ⓐ No.1 Driven Plate (Thickness): 1.6 mm (0.06 in) .....7 pcs
ⓑ No.2 Driven Plate (Thickness): 2.0 mm (0.08 in) ..... 2 pcs

- Put the clutch pressure plate onto the clutch sleeve hub securely.

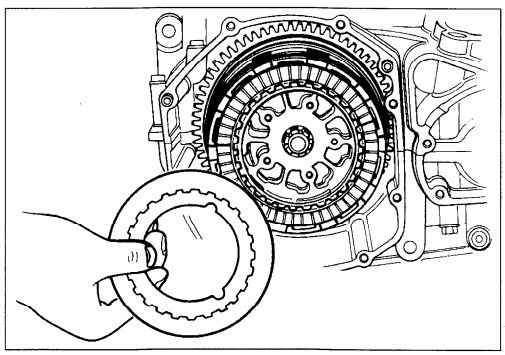

- Put the clutch diaphragm spring seat ① and clutch diaphragm springs ② onto the clutch pressure plate properly.

NOTE:
Pay attention to the direction of the clutch diaphragm springs. (See page 3-58.)

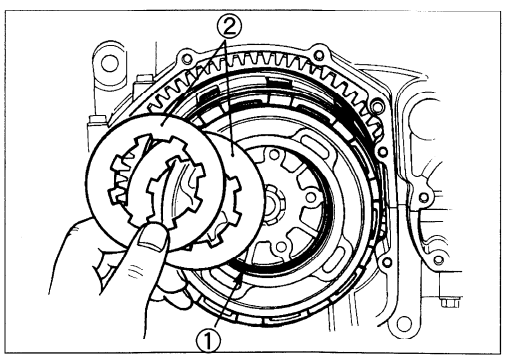

- Install the diaphragm spring holder ① with three screws.
- Install the lock washer ②.

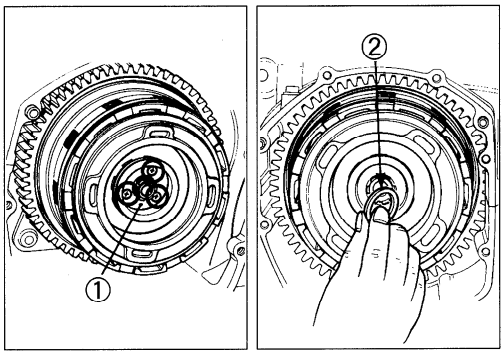

- Tighten the clutch sleeve hub nut to the specified torque by using the torque wrench and clutch pressure plate holder.

TOOL 09920-34820: Clutch pressure plate holder

Clutch sleeve hub nut: 150 N·m (15.0 kg-m, 108.5 lb-ft)

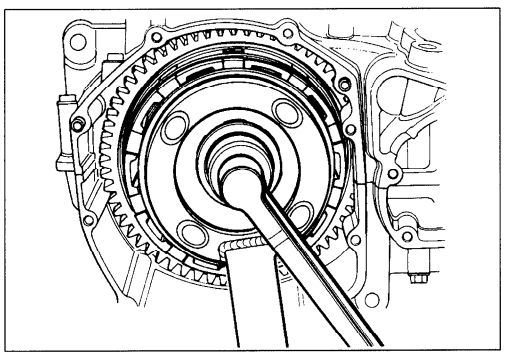

- Lock the clutch sleeve hub nut with a center punch.

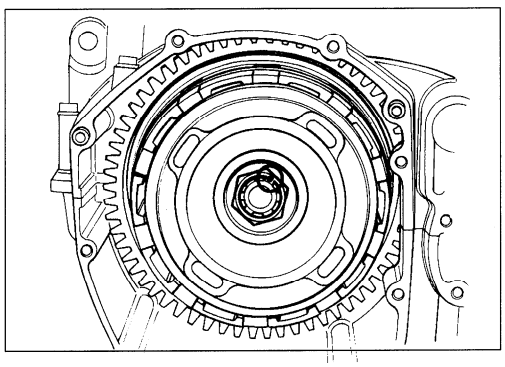

- Insert the clutch push rod ③ into the countershaft.
- Install the clutch push piece ④, bearing ⑤ and thrust washer ⑥ to the countershaft.

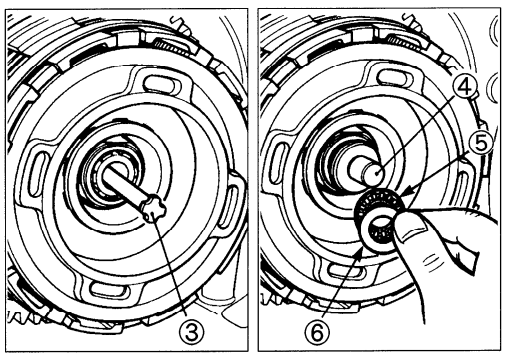

- Fix the clutch pressure plate lifter with the circlip.

TOOL 09900-06108: Snap ring pliers

NOTE:
When fitting the circlip, make sure that the sharp edge of the circlip faces outside.

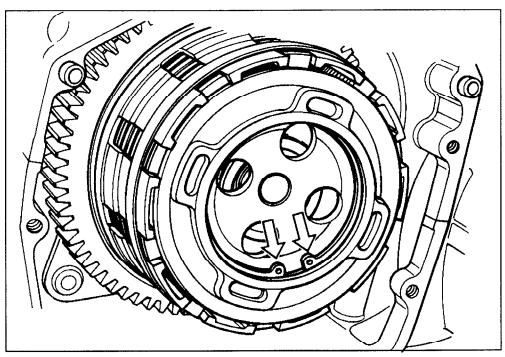

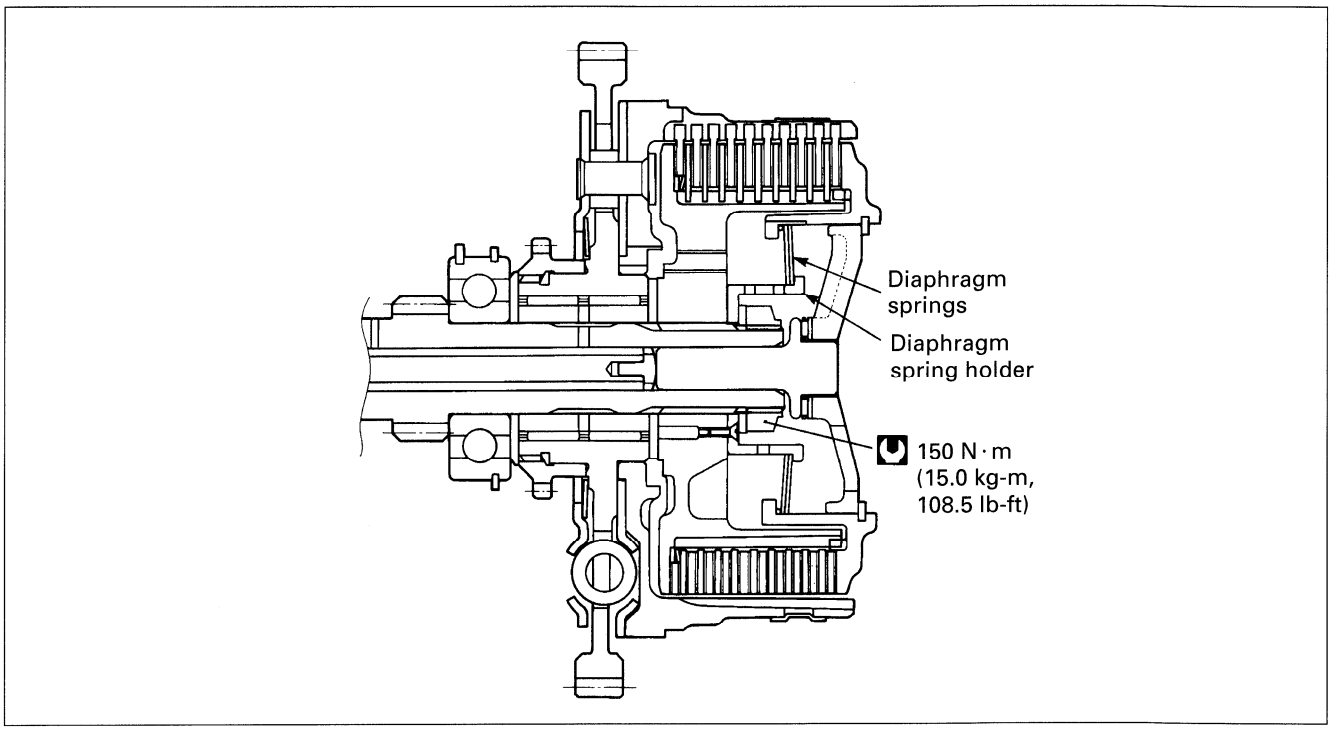

- Coat SUZUKI BOND NO.1207B lightly to the mating surfaces Ⓐ between upper and lower crankcases.

1207B 99000-31140: SUZUKI BOND NO. 1207B

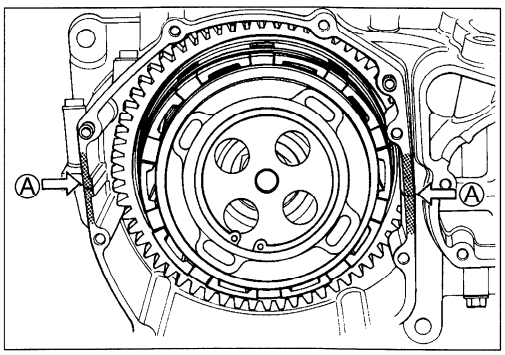

- Install the dowel pins, a new gasket and clutch cover.
- Tighten the clutch cover bolts securely.

NOTE:
Fit the two gaskets to the clutch cover bolts Ⓑ correctly as shown in the figure.

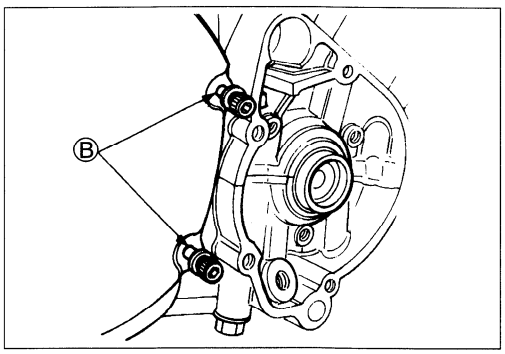

▲ CAUTION

Use only new gasket to prevent oil leakage.

NOTE:
When installing the oil pressure switch, apply SUZUKI BOND NO.1207B to its thread lightly.

1207B 99000-31140: SUZUKI BOND NO. 1207B

Oil pressure switch: 14 N · m (1.4 kg-m, 10.0 lb-ft)

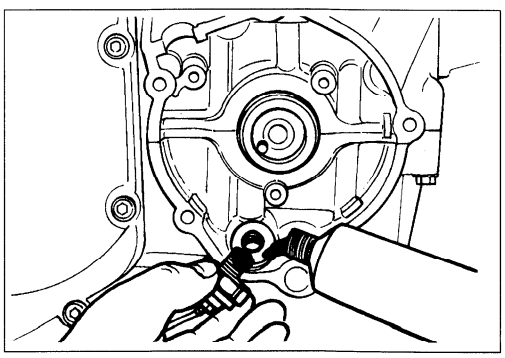

- Install the signal generator stator with three screws.
- Make sure to fit the slot ① on the back surface of the signal generator rotor over the locating pin ② at the end of crankshaft.

NOTE:
SUZUKI BOND NO.1207B should be applied to the groove of the signal generator lead wire grommet ③.

1207B 99000-31140: SUZUKI BOND NO. 1207B

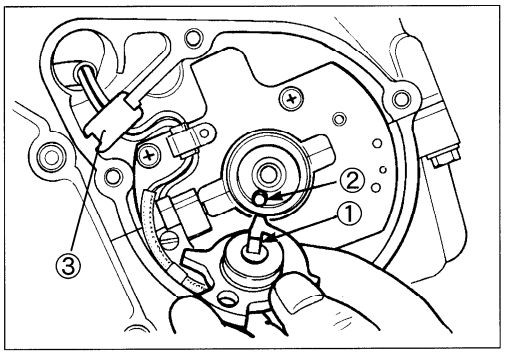

- Hold the crankshaft turning nut and tighten the rotor bolt to the specified torque.

TOOL 09900-00410: Hexagon wrench set

Signal generator rotor bolt: 25 N·m (2.5 kg-m, 18.0 lb-ft)

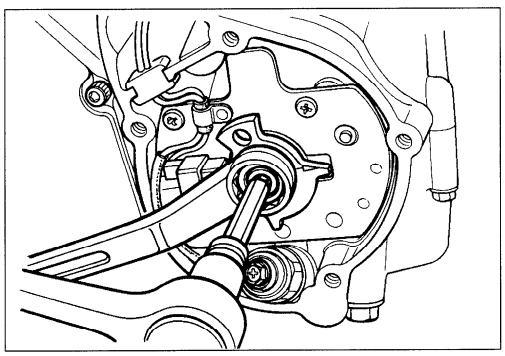

- Pass the signal generator lead wire through upper crankcase as shown in the figure.

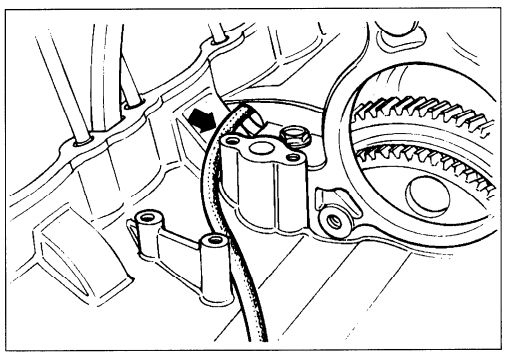

- Install the neutral position indicator switch with two screws.

NOTE:
When installing the neutral position indicator switch, be sure to locate the spring ① , switch contact ② and O-ring ③ .

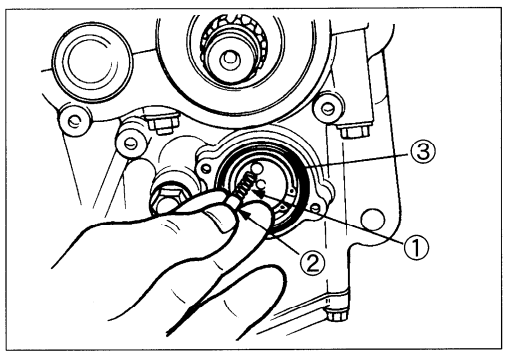

- Install the oil seal retainer with four bolts, and positively bend the lock portion of the retainer.
- Insert the clutch push rod into the countershaft.

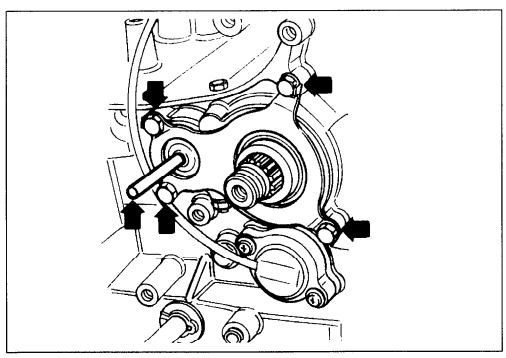

- Degrease the tapered portion of the starter clutch and also the crankshaft. Use nonflammable cleaning solvent to wipe off the oily or greasy matter to make these surfaces completely dry.

NOTE:
Apply a small quantity of THREAD LOCK SUPER "1303" to the thread of starter clutch mounting bolt.

1303 99000-32030: THREAD LOCK SUPER "1303"

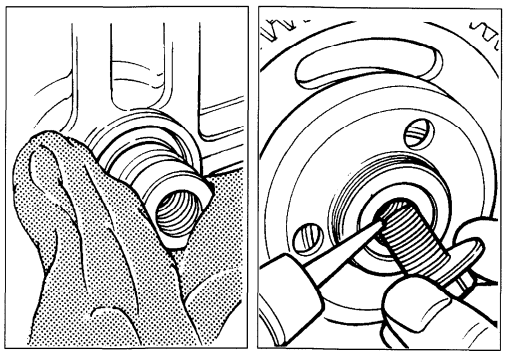

- Tighten the starter clutch mounting bolt to the specified torque with the special tool.

Starter clutch mounting bolt:
150 N·m (15.0 kg-m, 108.5 lb-ft)

TOOL 09920-34810: Starter clutch holder

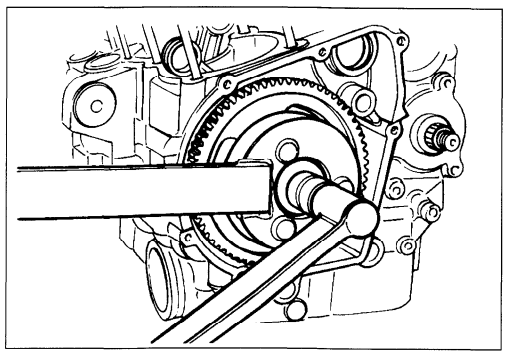

- Install the starter idle gear ① and its shaft ②.
- Coat SUZUKI BOND NO.1207B lightly to the mating surfaces between upper and lower crankcases.

1207B 99000-31140: SUZUKI BOND NO. 1207B

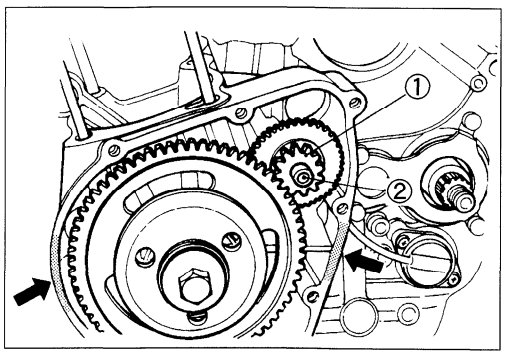

- Install the dowel pin ③ and a new gasket ④.

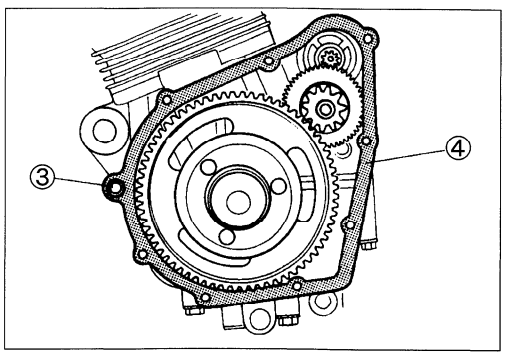

- Install the starter clutch cover, and tighten the cover bolts securely.

NOTE:
Fit the gasket to the starter clutch cover bolt Ⓐ correctly as shown in the figure.

⚠ CAUTION

Use a new gasket to prevent oil leakage.

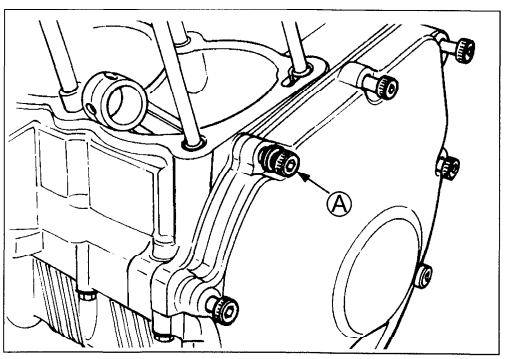

- Install the generator with three bolts.

Generator mounting bolt: 25 N·m (2.5 kg-m, 18.0 lb-ft)

NOTE:
Apply SUZUKI SUPER GREASE "A" to the generator O-ring.

99000-25010: SUZUKI SUPER GREASE "A"

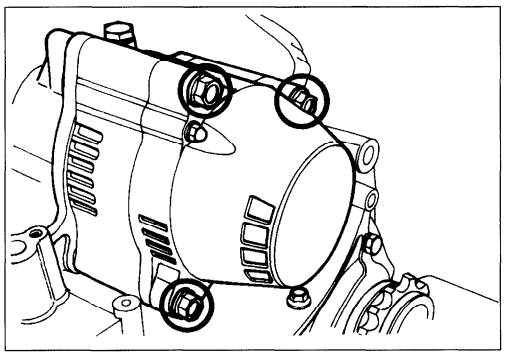

- Install the starter motor with two bolts.

Starter motor mounting bolt: 6 N·m (0.6 kg-m, 4.5 lb-ft)

NOTE:
* *Apply SUZUKI SUPER GREASE "A" to the starter motor O-ring.*
* *Apply a small quantity of THREAD LOCK "1342" to the two bolts.*

99000-25010: SUZUKI SUPER GREASE "A"

99000-32050: THREAD LOCK "1342"

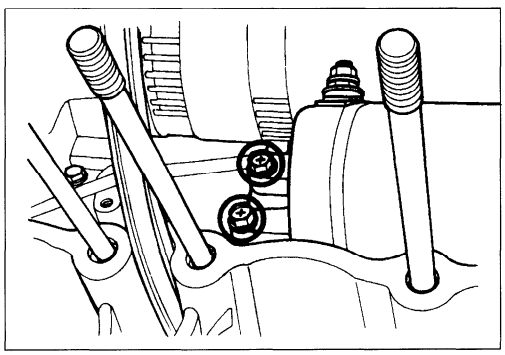

- Install the piston rings in the order of oil ring, 2nd ring and top ring.
- Top ring and 2nd (middle) ring differ in the shape of ring face, and the face of top ring is chrome-plated where as that of ring is not.
- Top and 2nd (middle) rings have letter "N" marked on the side.

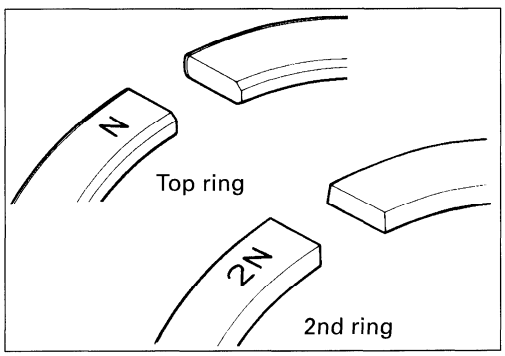

NOTE:
Be sure to bring the marked side to top when fitting them to the piston.

- The first member to go into the oil ring groove is a spacer ①. After placing spacer, fit the two side rails ②.

Side designations, top and bottom, are not applied to the spacer and side rails: you can position each either way.

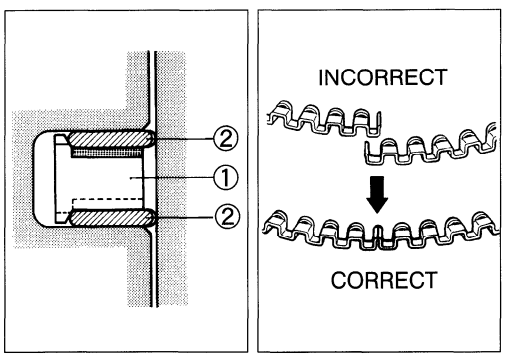

▲ CAUTION

When installing the spacer, be careful not to allow its two ends to overlap in the groove.

- Position the gaps of the three rings as shown. Before inserting each piston into the cylinder, check that the gaps are so located.

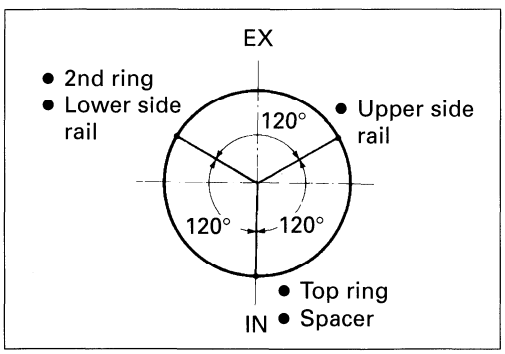

CYLINDER STUD BOLT LOCATION

Item No.	Color	Length
① ③	Black	168 mm (6.61 in)
⑥ ⑧	Silver	157 mm (6.18 in)
② ④ ⑤ ⑦	Silver	164 mm (6.46 in)
⑨ ⑩ ⑪ ⑫	Black	164 mm (6.46 in)

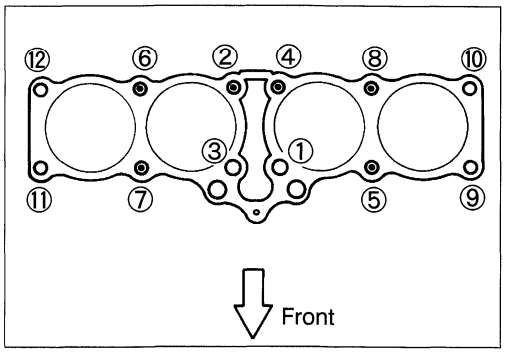

NOTE:
When reinstalling the cylinder stud bolt ⑦, apply SUZUKI BOND NO.1207B lightly to the stud bolt thread.

Cylinder stud bolt: 16 N·m (1.6 kg-m, 11.5 lb-ft)

1207B 99000-31140: SUZUKI BOND NO. 1207B

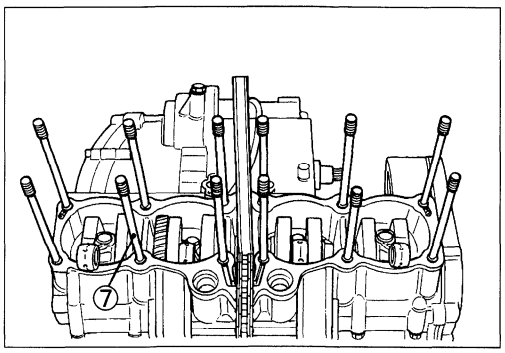

- Check the oil jets ① fitted on the crankcase for clogging.

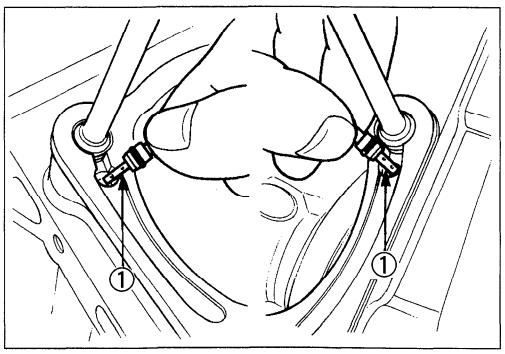

NOTE:
When fitting the piston, turn the triangle mark on the piston head to exhaust side.

- Be sure to install the pistons in the cylinder from which they were removed in disassembly, refer to the letter mark, "1" through "4", scribed on the piston.
- Have each piston pin moly paste oiled lightly before installing it.
- Place a cloth beneath the piston, and install the circlips ②.

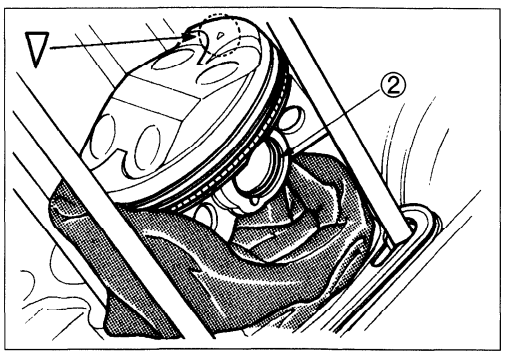

NOTE:
Be sure to use new circlips.

- Place the dowel pins and new cylinder gasket on the crankcase.
- Before putting on the cylinder block, oil the big and small ends of each conrod and also the sliding surface of each piston.

NOTE:
Be sure to identify the top surface by "UP" mark on the cylinder gasket as shown in the Fig.

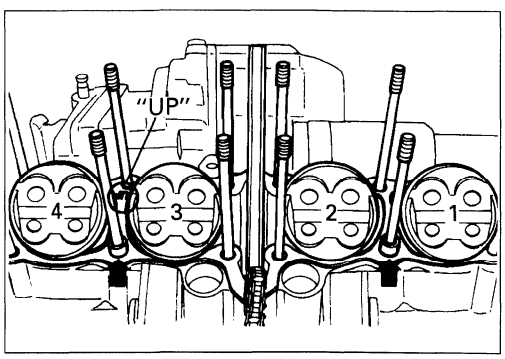

⚠ CAUTION

Use a new gasket to prevent oil leakage.

- Install piston ring holders in the indicated manner. Some light resistance must be overcome to lower the cylinder block.
- With No.2 and No.3 pistons in place, install No.1 and No.4 pistons, and insert them into the cylinder.

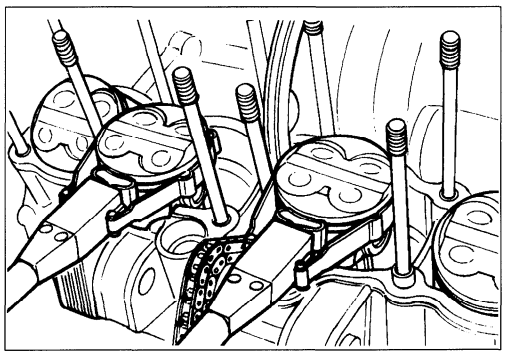

TOOL 09916-74521: Holder body
09916-74540: Band

NOTE:
Do not overtighten the special tool bands or the pistons entry into the cylinders will be difficult.

- Tighten the cylinder base nut Ⓐ to the specified torque.

Cylinder base nut: 9 N·m (0.9 kg-m, 6.5 lb-ft)

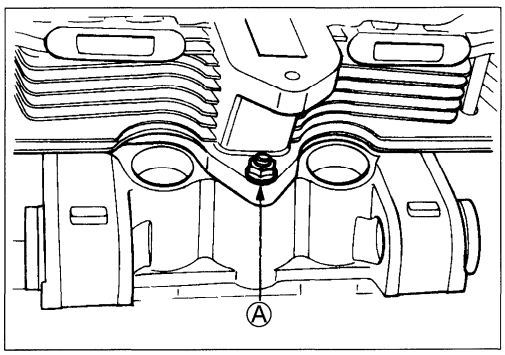

- Place the six O-rings, two dowel pins and new cylinder head gasket on the cylinder.

NOTE:
Be sure to identify the top surface "UP" mark ① on the cylinder head gasket as shown in the Fig.

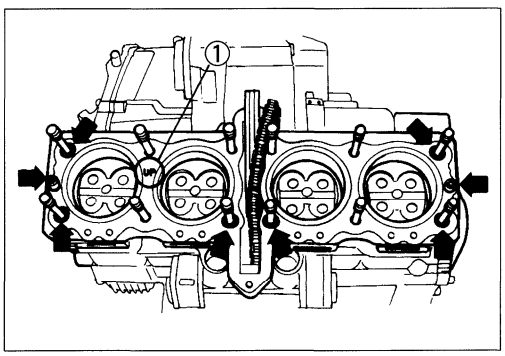

⚠ CAUTION

Replace the O-rings and gasket with new ones to prevent oil leakage and gas leakage.

- Fit the new O-rings ② onto the oil pipes and apply SUZUKI SUPER GREASE "A" to the O-rings.
- Install the right and left oil pipes.

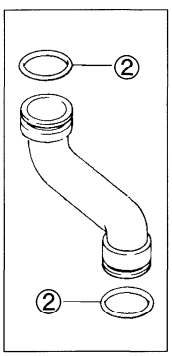

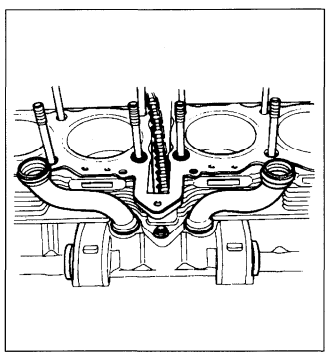

⚠ CAUTION

Replace the O-rings ② with new ones to prevent oil leakage.

99000-25010: SUZUKI SUPER GREASE "A"

- Place the cylinder head onto the cylinder.
- Place the cylinder head plate ③ onto the cylinder head.
- Cylinder head nuts and washers must be fitted in the correct positions, as shown in the illustration.

  Ⓐ Copper washer with cap nut (4 pcs)
  Ⓑ Steel washer with normal nut (4 pcs)
  Ⓒ Copper washer with normal nut (4 pcs)

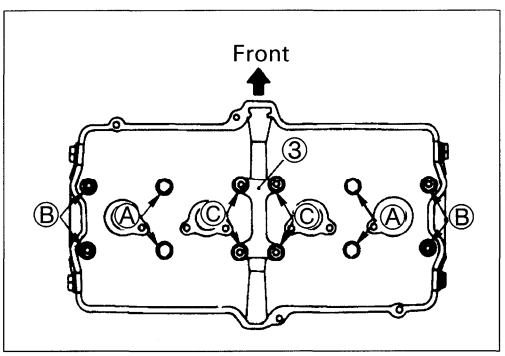

- Tighten the twelve 10-mm nuts to the specified torque with a torque wrench sequentially in the ascending order of numbers.

Cylinder head nut: 38 N·m (3.8 kg-m, 27.5 lb-ft)

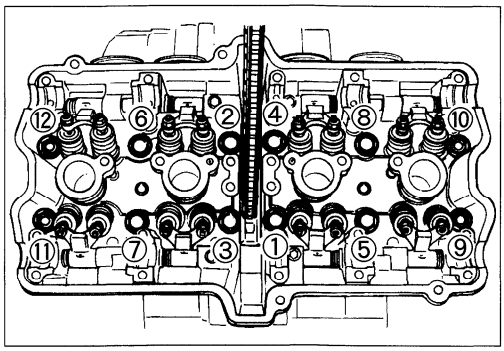

- After firmly tightening the twelve 10-mm nuts, install one 6-mm bolt Ⓐ and tighten it to the specified torque.

Cylinder head bolt: 10 N·m (1.0 kg-m, 7.0 lb-ft)

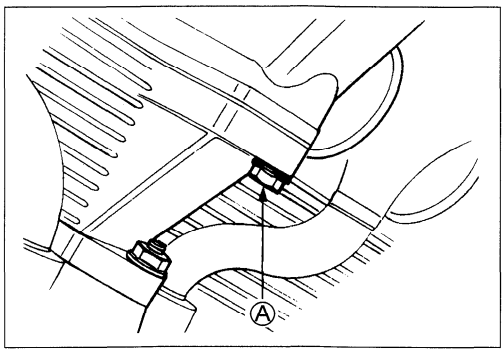

- Place the cam chain guide ① properly.

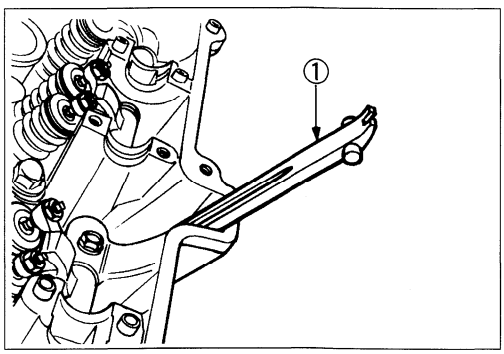

- While holding down the cam chain, rotate the crankshaft in normal direction to bring the "T" mark on the rotor to the center of pick-up coil.

⚠ CAUTION

To turn over crankshaft, torque nut with a 19 mm wrench. Never try to rotate crankshaft by putting a 6 mm T-type wrench over the bolt.

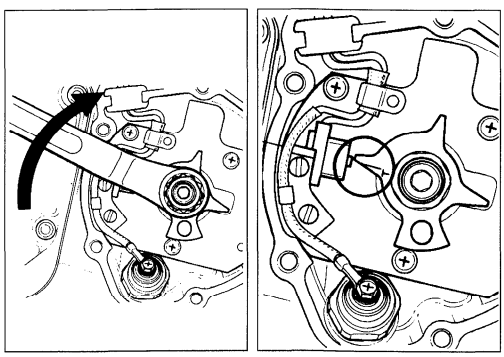

NOTE:
Just before placing the camshaft on the cylinder head, apply SUZUKI MOLY PASTE to its journals, fully coating each journal Ⓐ with the paste, taking care not to leave any dry spot. Apply engine oil to the camshaft journal holders.

99000-25140: SUZUKI MOLY PASTE

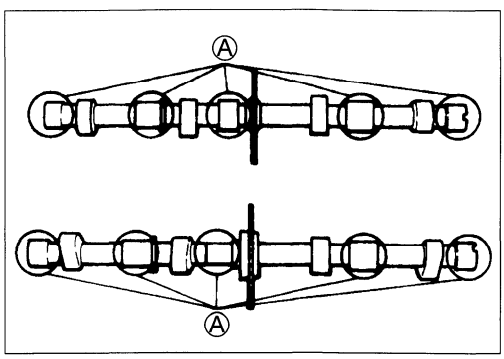

- The exhaust camshaft can be distinguished from that of the intake by the embossed letters "EX" (for exhaust) as against letters "IN" (for intake). Similarly, the right end can be distinguished by the notch ① at the right end.

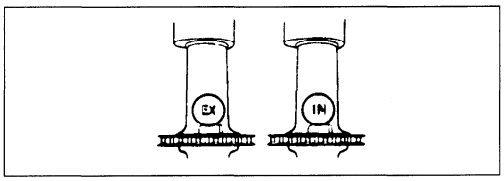

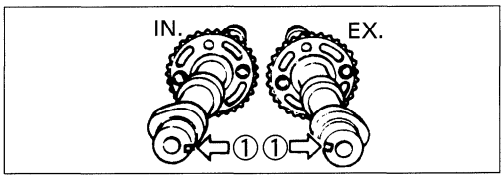

- With "T" mark accurately lined up with the timing mark, hold the camshaft steady and lightly pull up the chain to remove the slack between the crank sprocket and exhaust sprocket.
- The exhaust sprocket bears an arrow marked "1" indicated as ① . Turn over the exhaust camshaft so that the arrow points flush with the gasketed surface of the cylinder head.
- Engage the cam chain with this sprocket.

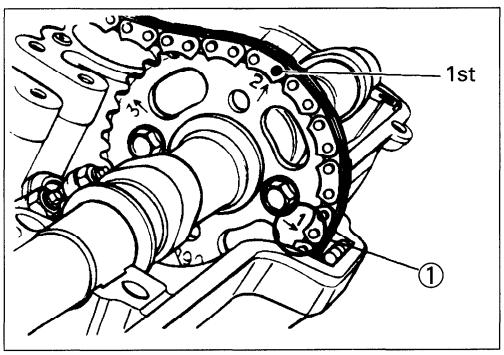

- The other arrow marked "2" is now pointing straight upward. Count the chain roller pins toward the intake camshaft, starting from the roller pin directly above this arrow marked "2" and ending with the 24th roller pin. Engage the cam chain with intake sprocket, locating the 24th pin at the above the arrow marked "3" on the intake sprocket.

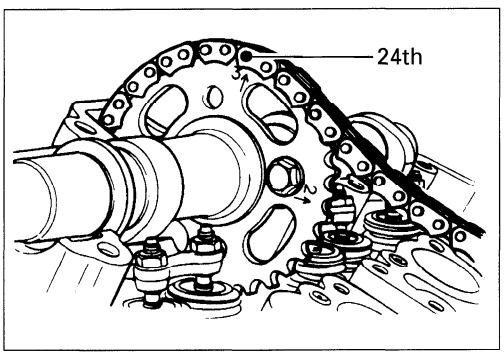

NOTE:
The cam chain is now riding on all three sprockets. Be careful not to disturb the crankshaft until the camshaft journal holders and cam chain tensioner are secured.

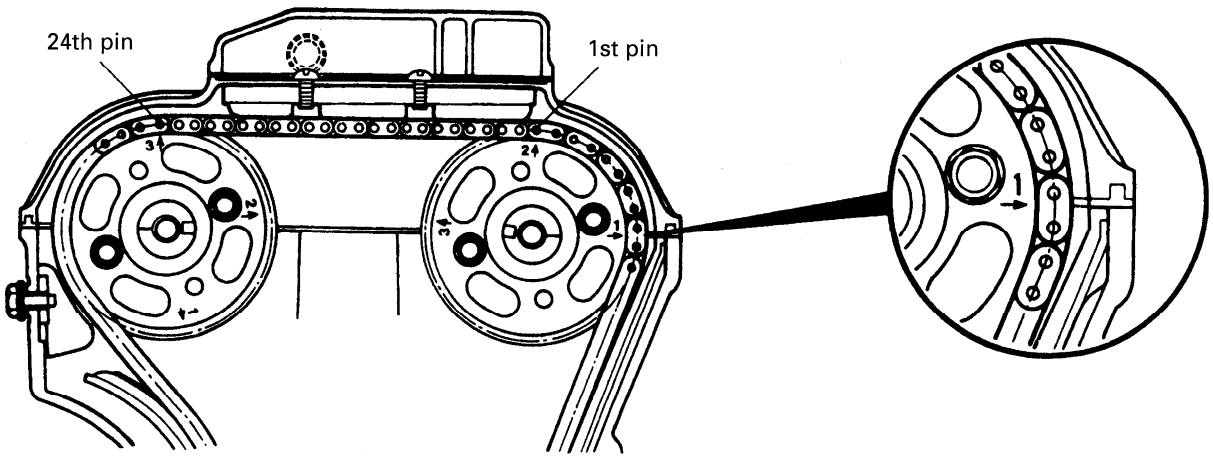
24th pin
1st pin

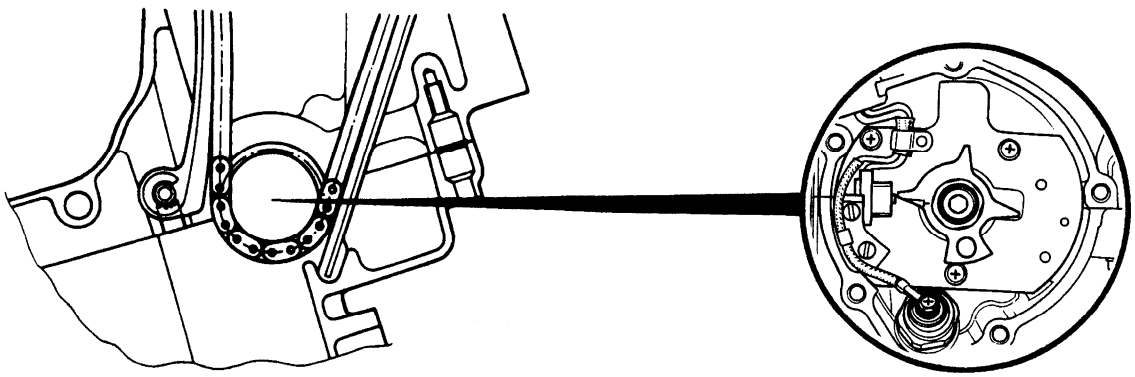

- Each camshaft journal holder is identified with a cast-on letter. Install the dowel pins to each camshaft journal holder.
- Fasten the camshaft journal holders evenly by tightening the camshaft journal holder bolts sequentially. (Try to equalize the pressure by shifting the wrench in this above manner, to fasten the shafts evenly.)

NOTE:
Damage to head or camshaft journal holder thrust surfaces may result if the camshaft journal holders are not drawn down evenly.

- Tighten the camshaft journal holder bolts to the specified torque.

Camshaft journal holder bolt: 10 N·m (1.0 kg-m, 7.0 lb-ft)

▲ CAUTION

The camshaft journal holder bolts are made of a special material and much superior in strength, compared with other types of high strength bolts.
Take special care not to use other types of bolts instead of these special bolts. To identify these bolts, each of them has a figure "9" on its head.

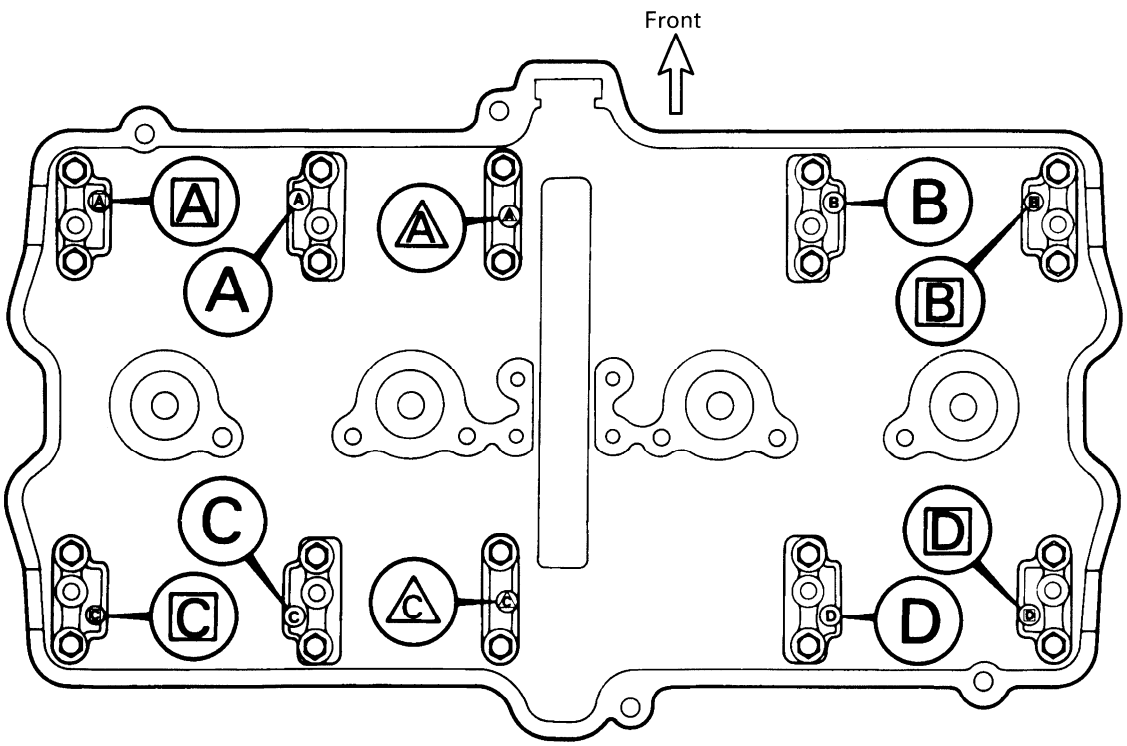

- After removing the spring holder bolt ① and spring, unlock the ratchet mechanism ② and push in the push rod ③ all the way.

NOTE:
Before installing the cam chain tension adjuster, turn the crankshaft clockwise to remove the cam chain slack between the crank sprocket and exhaust sprocket.

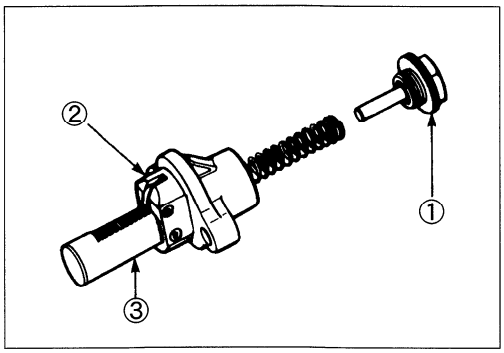

- Install a new gasket and the cam chain tension adjuster to the cylinder block with two bolts and tighten them to the specified torque.

Cam chain tension adjuster mounting bolt: 7 N·m (0.7 kg-m, 5.0 lb-ft)

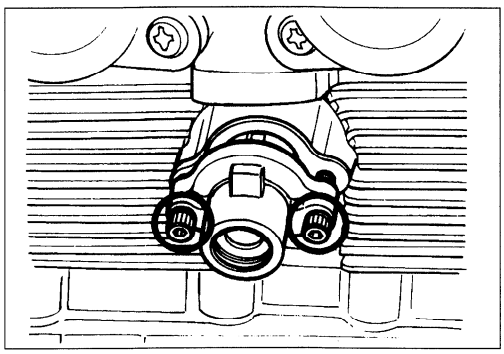

- Insert the spring into the cam chain tension adjuster and tighten the spring holder bolt ① to the specified torque.

Spring holder bolt: 35 N·m (3.5 kg-m, 25.5 lb-ft)

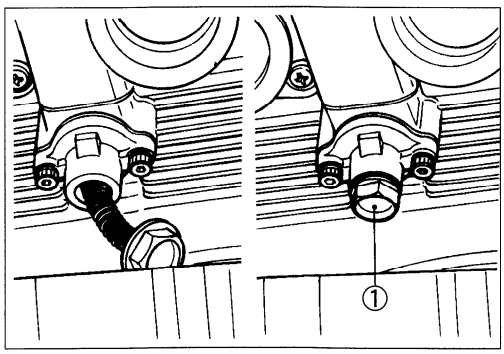

▲ CAUTION

After installing the cam chain tension adjuster, check to be sure that the tensioner work properly by checking the slack of cam chain.

- Pour about 50 ml of engine oil in each oil pocket in the head.

NOTE:
Turn the crankshaft and check that all the moving parts such as cam follower, camshaft, work properly.

▲ CAUTION

Be sure to check and adjust the valve clearance. (Refer to page 2-3.)

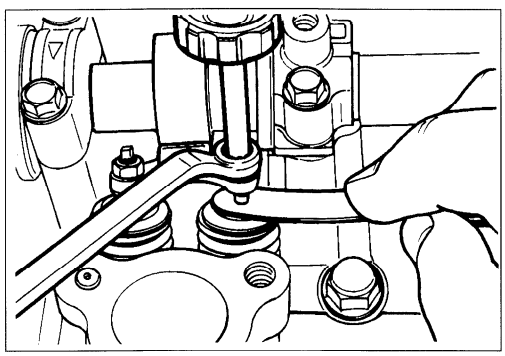

- Coat SUZUKI BOND NO.1207B lightly to the mating surfaces between upper and lower crankcases as shown in the Fig.

1207B 99000-31140: SUZUKI BOND NO. 1207B

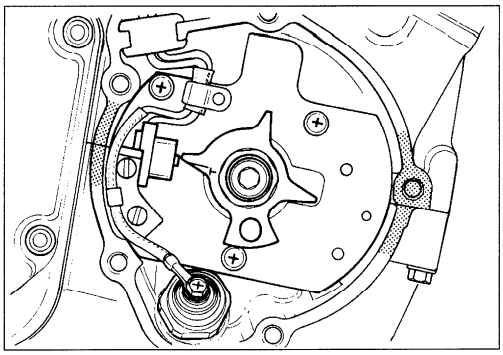

- Install a new gasket and the signal generator cover with five bolts.

NOTE:
Fit a gasket to the signal generator cover bolt Ⓐ correctly as shown in the Fig.

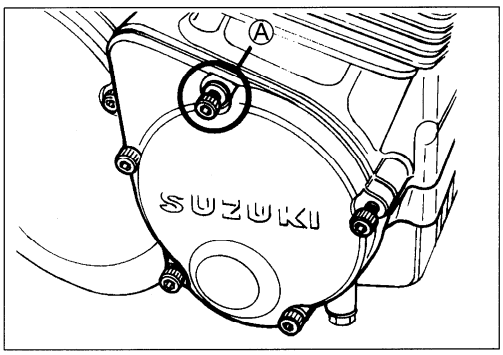

⚠ CAUTION

Use a new gasket to prevent oil leakage.

- Before installing the cylinder head cover gaskets on the cylinder head cover, apply SUZUKI BOND NO.1207B to the grooves of the head cover.
- Apply SUZUKI BOND NO.1207B to the four cam end caps of the gasket as shown in the Fig.

1207B 99000-31140: SUZUKI BOND NO. 1207B

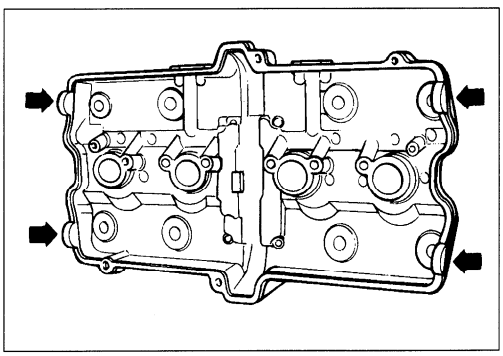

- Place the cylinder head cover on the cylinder head.
- Fit the four gaskets to each head cover union bolt ① and tighten them to the specified torque.

⚠ CAUTION

Replace the gaskets with new ones to prevent oil leakage.

Head cover union bolt ①: 16 N·m (1.6 kg-m, 11.5 lb-ft)

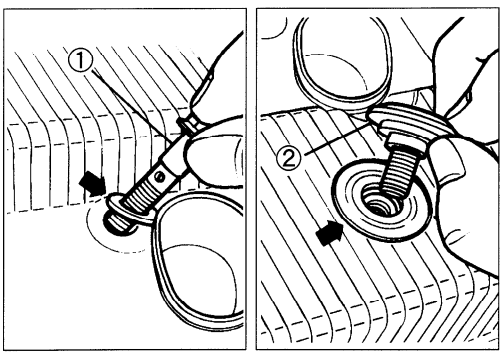

- Place the eight gaskets to each position correctly.
- Tighten the head cover bolts ② to the specified torque.

⚠ CAUTION

Replace the gaskets with new ones to prevent oil leakage.

Head cover bolt ②: 14 N·m (1.4 kg-m, 10.0 lb-ft)

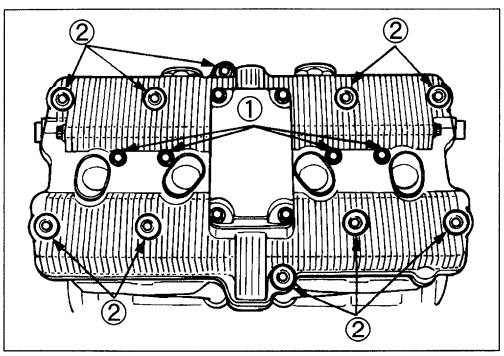

- Install the left and right oil hoses and tighten their mounting bolts to the specified torque.

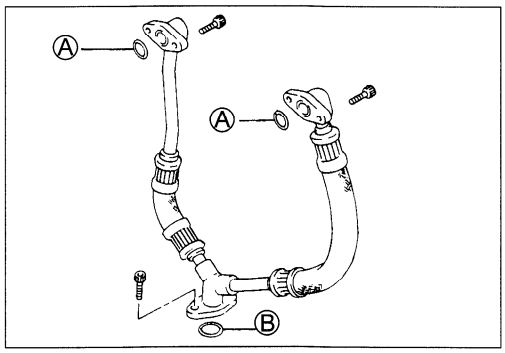

▲ CAUTION

Replace the O-rings (Ⓐ and Ⓑ) with new ones to prevent oil leakage.

Oil hose mounting bolt: 10 N·m (1.0 kg-m, 7.0 lb-ft)

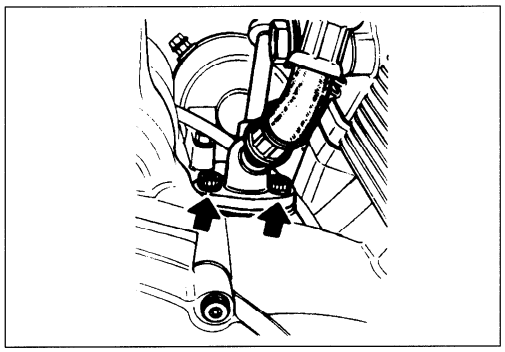

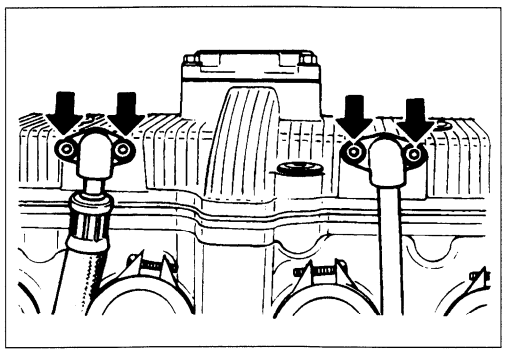

NOTE:
When replacing the intake pipes, identify the different intake pipes according to each I.D. code.
(13110-40C0 for No.1)
(13120-40C0 for No.2)
(13130-40C0 for No.3)
(13140-40C0 for No.4)

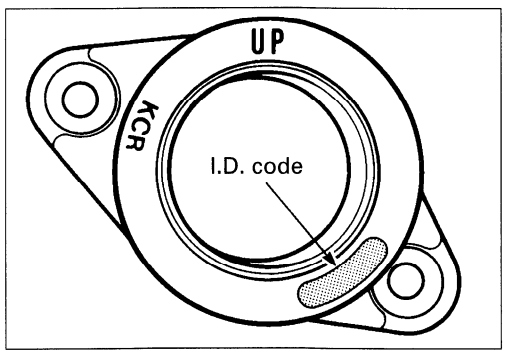

▲ CAUTION

Use a new O-ring to prevent sucking air from the joint.

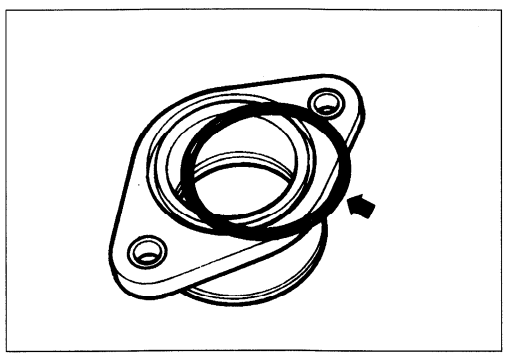

- Install the oil filter turning it by hand until you feel that the filter gasket contacts the mounting surface. Then tighten it 2 turns by using the special tool.

TOOL 09915-40610: Oil filter wrench

NOTE:
Before installing the oil filter, apply engine oil lightly to its O-ring.

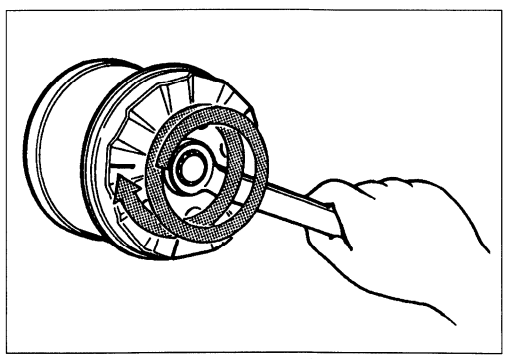

FUEL AND LUBRICATION SYSTEM

CONTENTS

FUEL SYSTEM 4- 1
FUEL VALVE 4- 2
FUEL VALVE/FUEL FILTER REMOVAL 4- 2
INSPECTION AND CLEANING 4- 3
FUEL TANK 4- 3
FUEL TANK REMOVAL 4- 3
CARBURETOR 4- 4
CONSTRUCTION 4- 4
SPECIFICATIONS 4- 5
I.D. NO. LOCATION 4- 5
DIAPHRAGM AND PISTON OPERATION 4- 6
SLOW SYSTEM 4- 7
MAIN SYSTEM 4- 8
STARTER SYSTEM 4- 9
FLOAT SYSTEM 4- 9
REMOVAL 4-10
DISASSEMBLY 4-10
CARBURETOR CLEANING 4-11
CARBURETOR JET INSPECTION 4-12
THROTTLE POSITION SENSOR INSPECTION 4-12
NEEDLE VALVE INSPECTION 4-12
FLOAT HEIGHT ADJUSTMENT 4-12
REASSEMBLY AND REMOUNTING 4-13
CARBURETOR SYNCHRONIZATION 4-15
LUBRICATION SYSTEM 4-17
OIL PRESSURE 4-17
OIL FILTER 4-17
OIL SUMP FILTER 4-17
ENGINE LUBRICATION SYSTEM CHART 4-18
ENGINE LUBRICATION SYSTEM 4-19
CYLINDER HEAD COOLING SYSTEM CHART 4-20
CYLINDER HEAD COOLING SYSTEM 4-21
ENGINE OIL COOLING SYSTEM 4-22

FUEL SYSTEM

When turning starter motor, negative pressure is generated in the combustion chamber. This negative pressure draws on the diaphragm of fuel valve through passage way provided in the carburetor main bore and vacuum hose. Due to this, the negative pressure increases behind the fuel valve diaphragm, until it is higher than the valve spring pressure. The fuel valve is then forced to open (due to this diaphragm operation) and allows fuel to flow into carburetor float chamber.

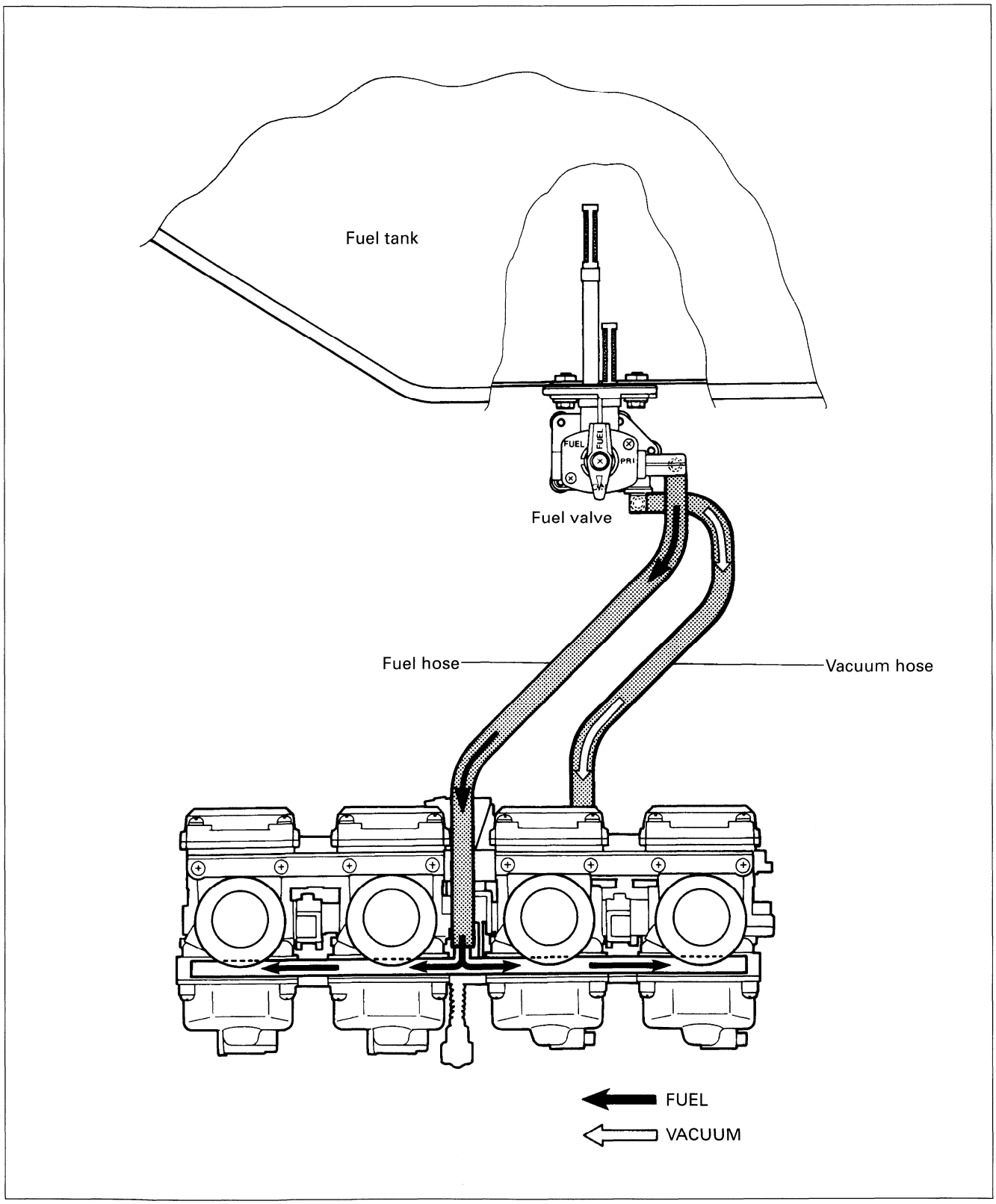

FUEL VALVE

FUEL VALVE MECHANISM

A valve is provided at the end of the fuel valve lever and can switch over to "OFF", "ON" and "RES". With the valve "ON" (normal), the main passage opens. With the valve "OFF", both holes close.

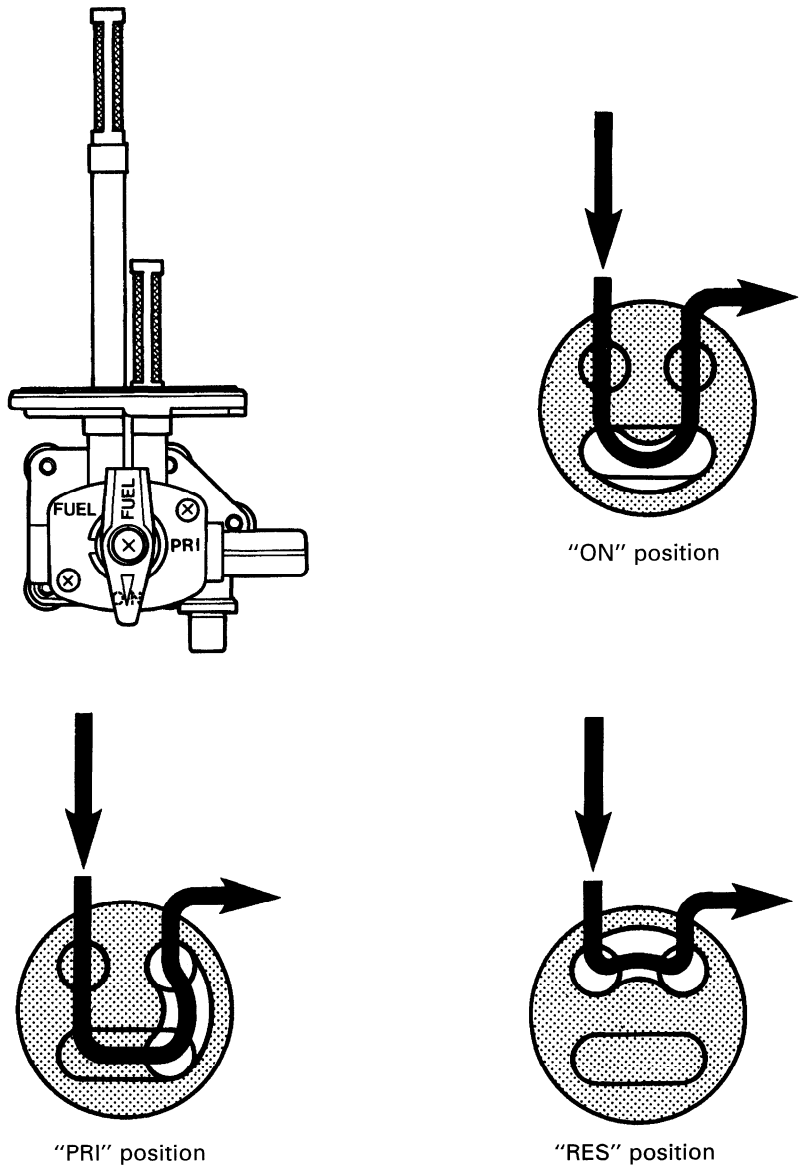

FUEL VALVE/FUEL FILTER REMOVAL

- Remove the seat and frame cover assembly. (Refer to page 5-3.)
- Remove the fuel tank. (Refer to page 4-3.)
- Remove the fuel valve/fuel filter by removing the mounting bolts.

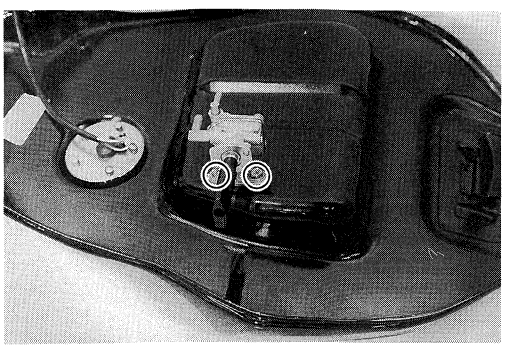

⚠ WARNING

Gasoline is very explosive. Extreme care must be taken. Gaskets and O-ring must be replaced with new ones to prevent fuel leakage.

INSPECTION AND CLEANING

If the fuel filter is dirty with sediment or rust, fuel will not flow smoothly and loss in engine power may result. Clean the fuel filter with compressed air.

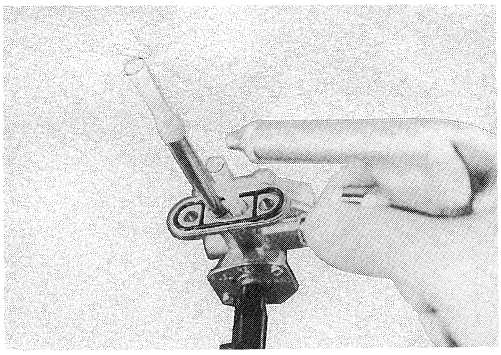

FUEL TANK

FUEL TANK REMOVAL

- Remove the seat and frame cover assembly. (Refer to page 5-3.)
- Turn the fuel valve to "ON" position.

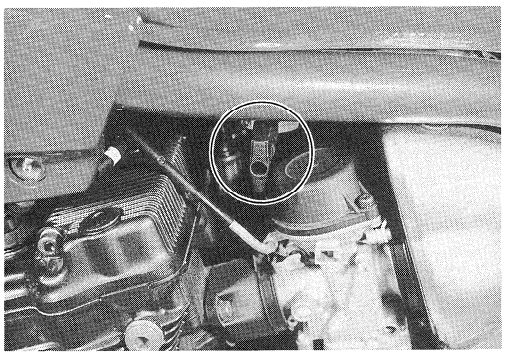

- Remove the fuel tank mounting bolts ①.
- Disconnect the fuel level gauge lead wire coupler.

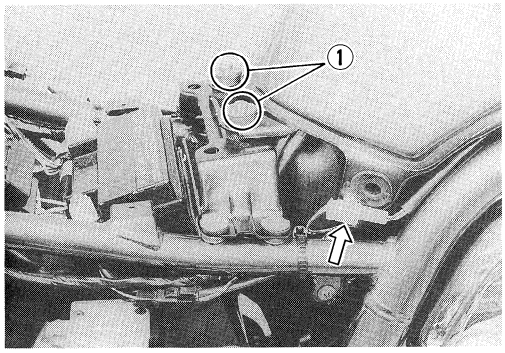

- Slide the fuel tank backward and lift up it, and disconnect the fuel hose ② and vacuum hose ③ from the fuel valve.
- Remove the fuel tank.

⚠WARNING

Gasoline is very explosive. Extreme care must be taken.

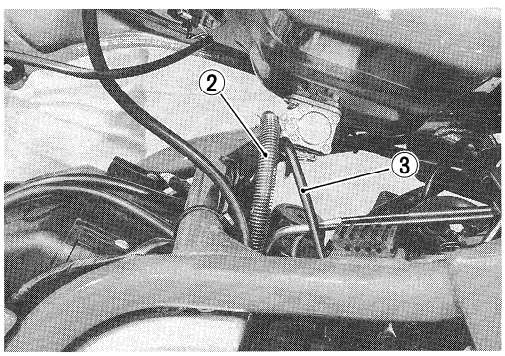

CARBURETOR

CONSTRUCTION

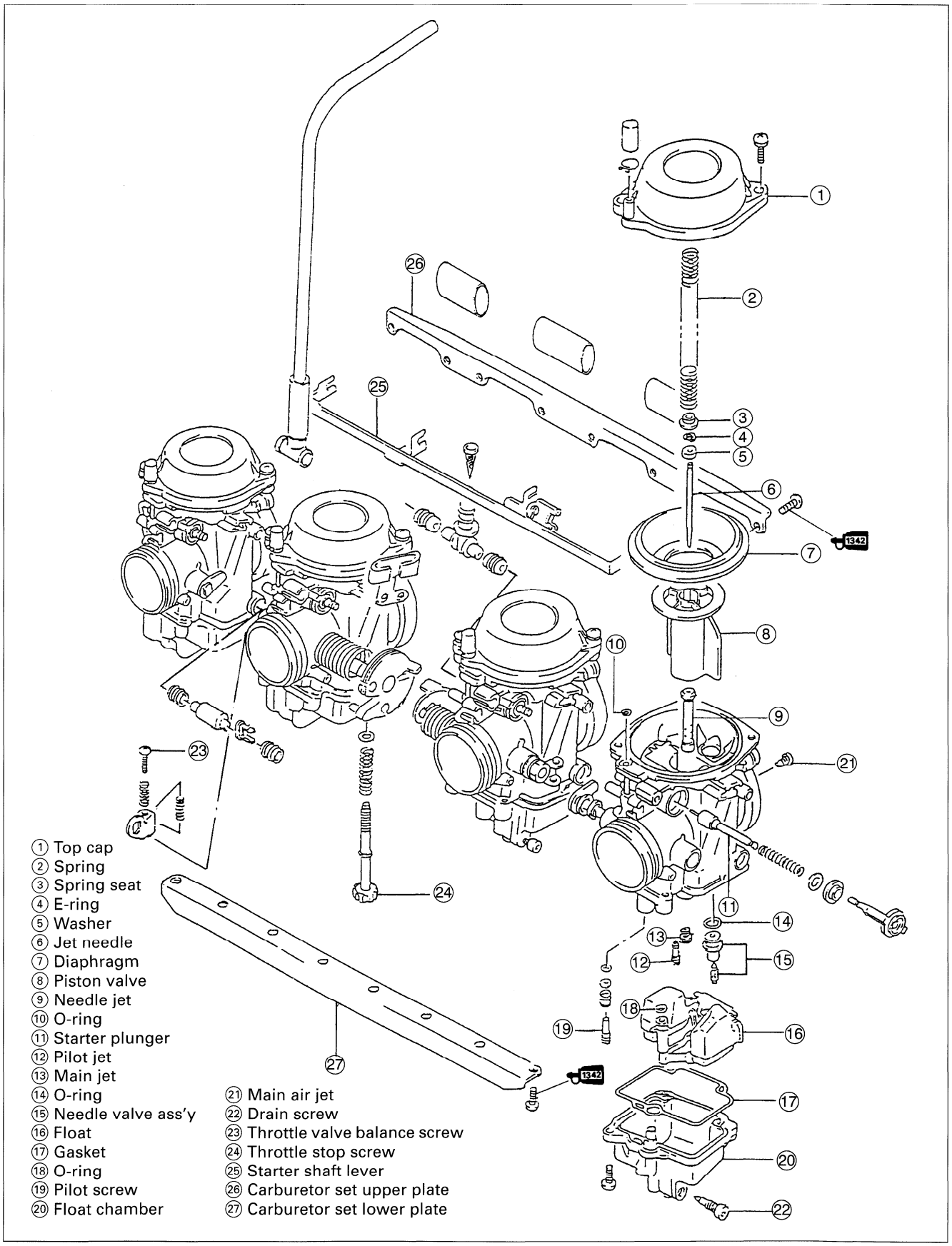

① Top cap
② Spring
③ Spring seat
④ E-ring
⑤ Washer
⑥ Jet needle
⑦ Diaphragm
⑧ Piston valve
⑨ Needle jet
⑩ O-ring
⑪ Starter plunger
⑫ Pilot jet
⑬ Main jet
⑭ O-ring
⑮ Needle valve ass'y
⑯ Float
⑰ Gasket
⑱ O-ring
⑲ Pilot screw
⑳ Float chamber
㉑ Main air jet
㉒ Drain screw
㉓ Throttle valve balance screw
㉔ Throttle stop screw
㉕ Starter shaft lever
㉖ Carburetor set upper plate
㉗ Carburetor set lower plate

CARBURETOR

ITEM	SPECIFICATION		
	E-02,04,17,22, 24,25,28,34	E-18	E-37
Carburetor type	MIKUNI BST36SS	←	←
Bore size	36 mm (1.4 in)	←	←
I.D. No.	27E1	27E3	27E4
Idle r/min.	1 200 ± 100 r/min.	$1\,200^{+100}_{-50}$ r/min.	1 200 ± 100 r/min.
Float height	14.6 ± 1.0 mm (0.58 ± 0.04 in)	←	←
Main jet (M.J.)	#102.5	←	←
Jet needle (J.N.)	5D76-4th	5D55-2nd	5D76-4th
Needle jet (N.J.)	O-8	←	←
Throttle valve (Th.V.)	#120	←	←
Pilot jet (P.J.)	#37.5	←	←
Pilot screw (P.S.)	PRE-SET (1-3/4 turns back)	←	←
Throttle cable play	0.5–1.0 mm (0.02–0.04 in)	←	←

E-02: England
E-04: France
E-17: Sweden
E-18: Switzerland
E-22: Germany
E-24: Australia
E-25: Netherlands
E-28: Canada
E-34: Italy
E-37: Brazil

I.D. NO. LOCATION

Each carburetor has I.D. Number ① printed on the carburetor body according to its specification.

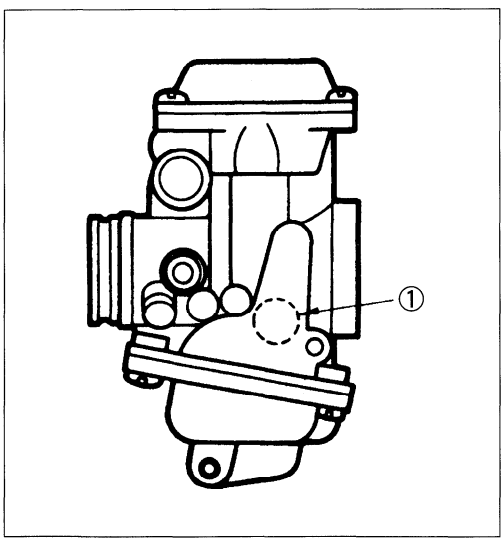

DIAPHRAGM AND PISTON OPERATION

The carburetor is a variable-venturi type, whose venturi cross section area is increased or decreased automatically by the piston valve ① which moves according to the negative pressure present on the downstream side of the venturi Ⓐ. Negative pressure is admitted into the diaphragm chamber ② through two orifices ③ provided in the piston valve ①.

Rising negative pressure overcomes the spring ④ force, causing the piston valve ① to rise to increase the said area and thus prevent the air velocity from increasing. Thus, air velocity in the venturi passage is kept relatively constant for improved fuel atomization and for securing optimum ratio of fuel/air mixture.

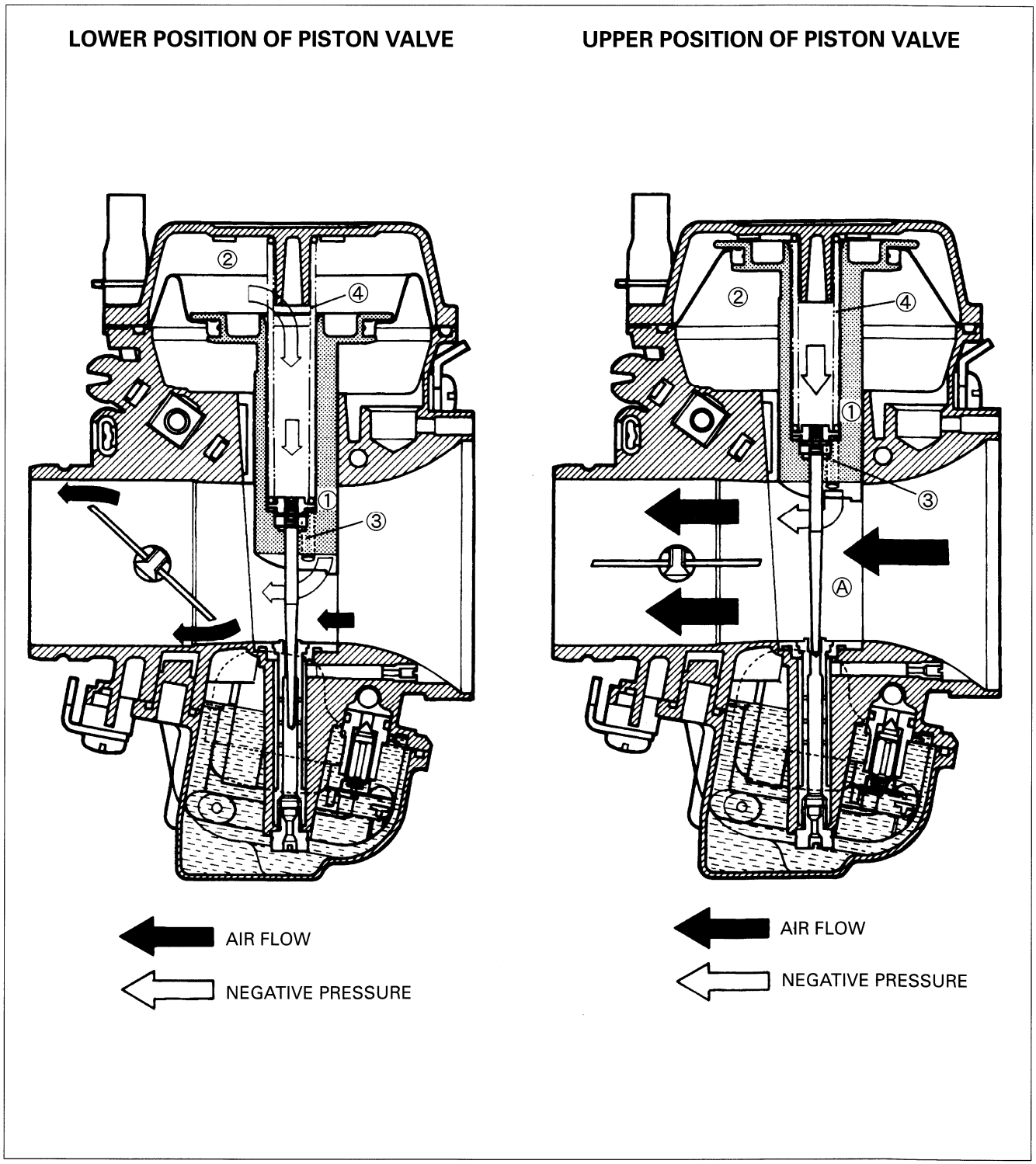

SLOW SYSTEM

This system supplies fuel during engine operation with throttle valve ① closed or slight opened. The fuel from float chamber ② is metered by pilot jet ③ where it mixes with air coming in through pilot air jet ④. This mixture, rich with fuel, then goes up through pilot passage to pilot screw ⑤. A part of the mixture is discharged into the main bore out of bypass ports ⑥. The remainder is then metered by pilot screw ⑤ and sprayed out into the main bore through pilot outlet ⑦.

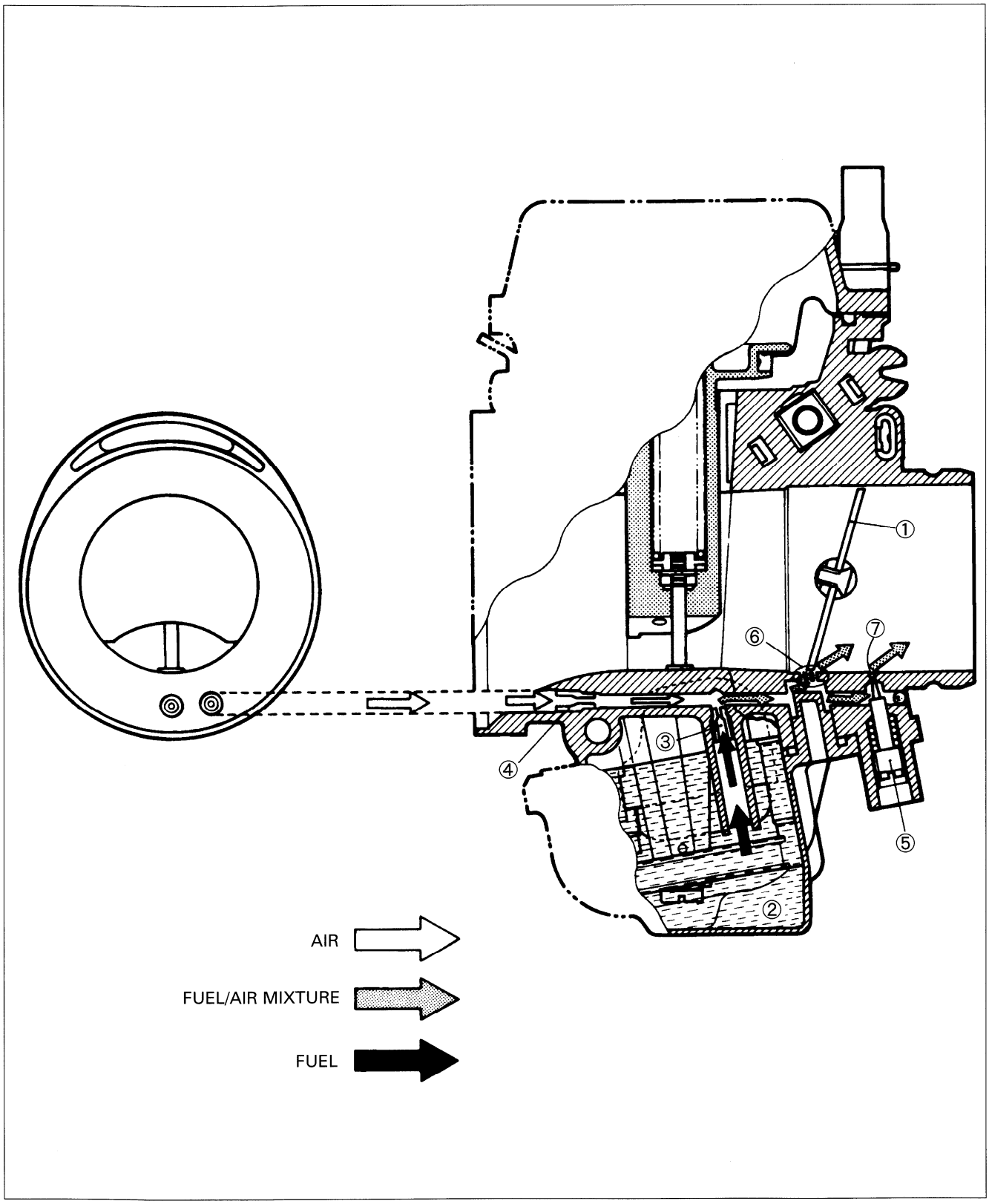

MAIN SYSTEM

As throttle valve ① is opened, engine speed rises, and this increases negative pressure in the venturi Ⓐ. Consequently the piston valve ② moves upward.
Meanwhile, the fuel in float chamber ③ is metered by main jet ④, and the metered fuel enters needle jet ⑤, in which it mixes with the air admitted through main air jet ⑥ to form an emulsion.
The emulsified fuel then passes through the clearance between needle jet ⑤ and jet needle ⑦, and is discharged into the venturi Ⓐ, in which it meets main air stream being drawn by the engine.
Mixture proportioning is accomplished in needle jet ⑤; the clearance through which the emulsified fuel must flow in large or small, depending ultimately on throttle position.

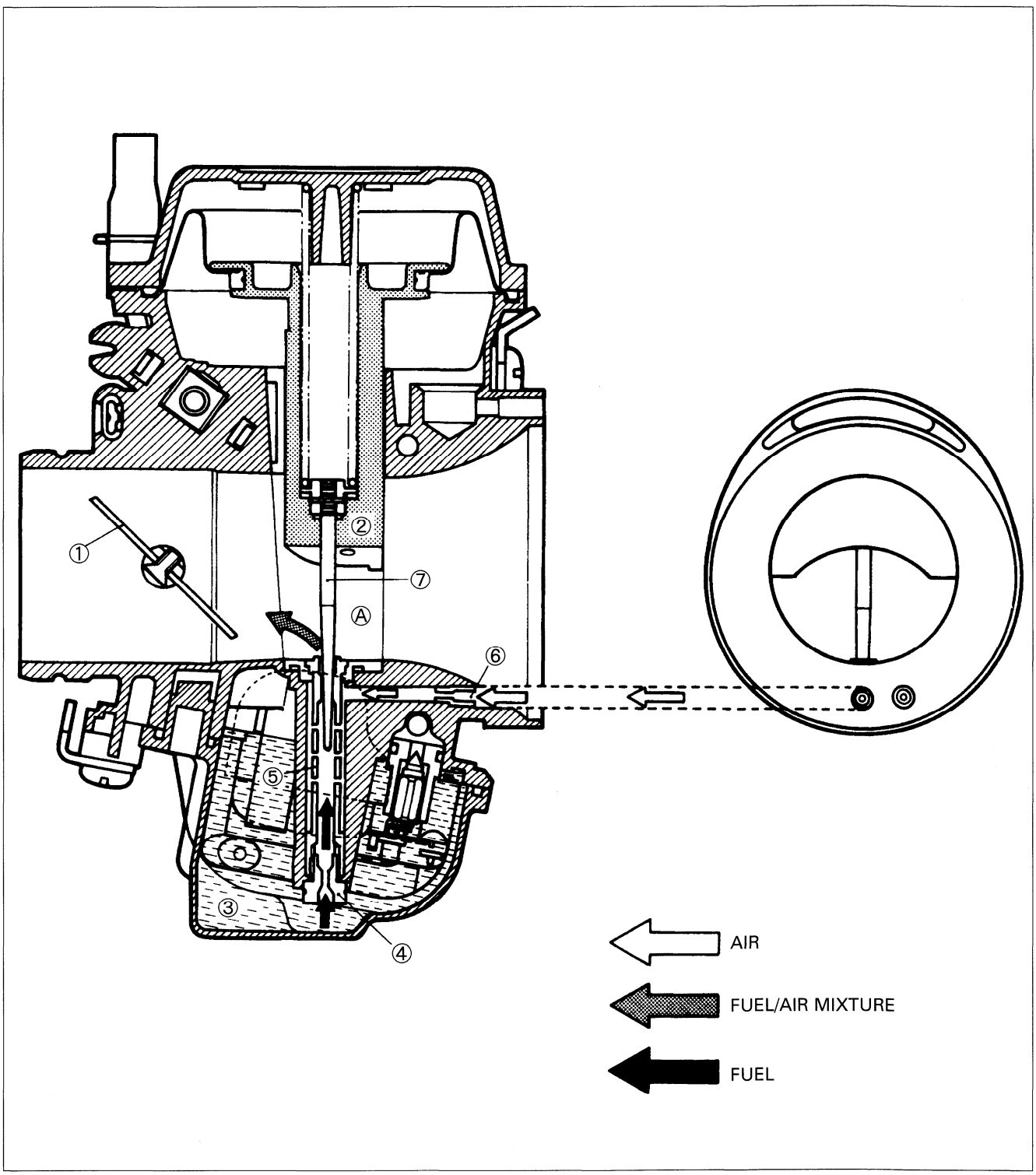

STARTER (ENRICHENER) SYSTEM

Pulling up the starter shaft ①, fuel is drawn into the starter circuit from the float chamber ②. Starter jet ③ meters this fuel, which then flows into fuel pipe ④ and mixes with the air coming from the float chamber ②. The mixture, rich in fuel content, reaches starter plunger ⑤ and mixes again with the air coming through a passage extending from behind the diaphragm.
The two successive mixings of fuel with air are such that proper fuel/air mixture for starting is produced when the mixture is sprayed out through starter outlet port ⑥ into the main bore.

NOTE:
An enrichener (starter) is operated almost the same way as a choke.

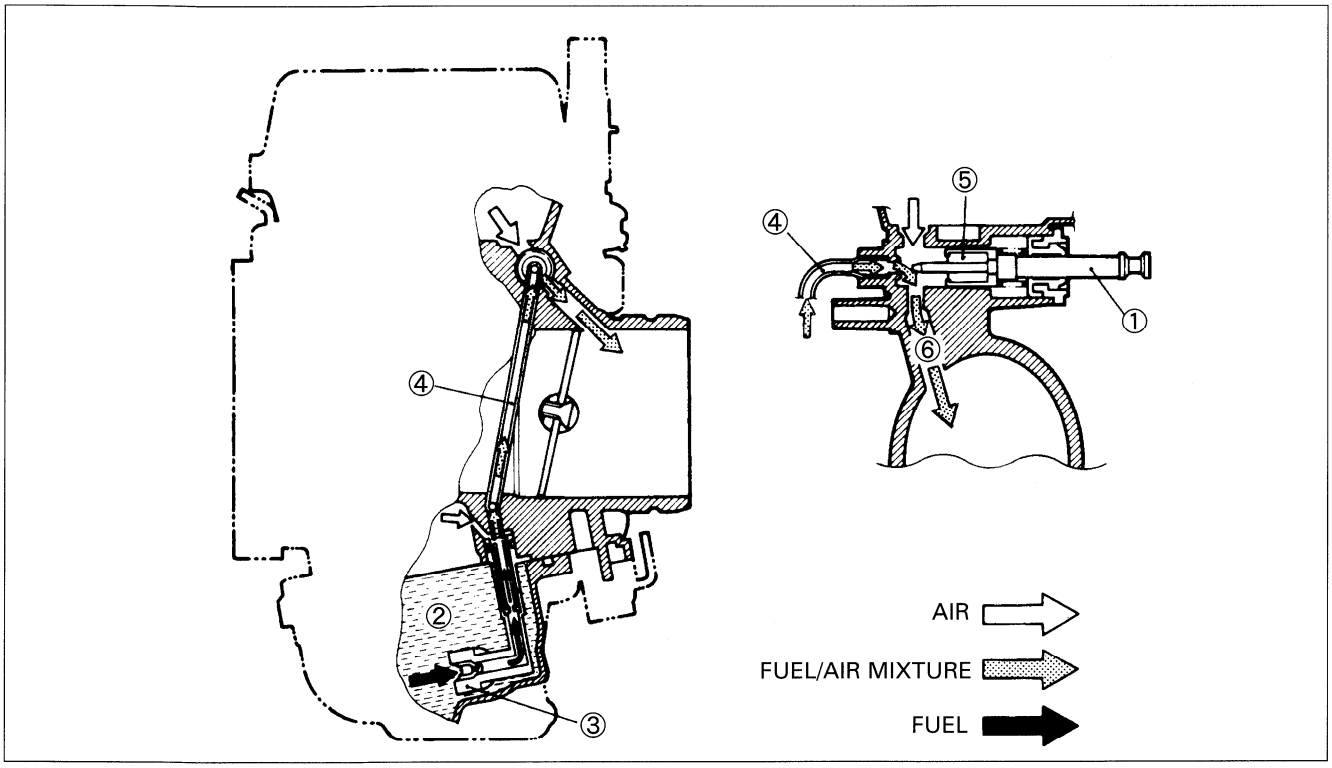

FLOAT SYSTEM

Floats ① and needle valve ② are associated with the same mechanism, so that, as the floats ① move up and down, the needle valve ② too moves likewise.
When fuel level is up in float chamber ③, floats ① are up and needle valve ② remains pushed up against valve seat.
Under this condition, no fuel enters the float chamber ③. As the fuel level falls, floats ① go down and needle valve ② unseats itself to admit fuel into the chamber ③.
In this manner, needle valve ② admits and shuts off fuel alternately to maintain a practically constant fuel level inside the float chamber ③.

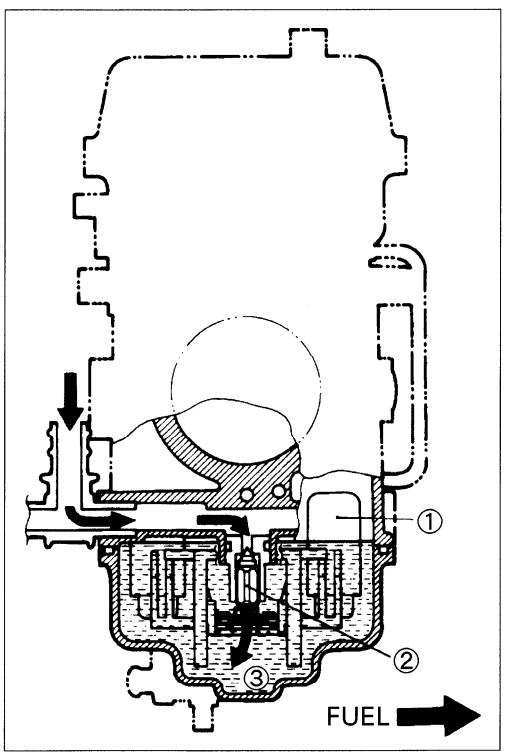

REMOVAL

- Remove the carburetor assembly. (Refer to page 3-5.)

DISASSEMBLY

Before disassembly, prepare a clean and well lit work place where carburetor components can be laid out nearly and will not get lost. Study the service manual carburetor diagram and familiarize yourself with component locations and the different fuel circuits and their routing through the carburetor.

- Disassemble the carburetor as shown in the illustration on page 4-4.

⚠ CAUTION

Prior to disassembly, mark with a paint or notch the initial position of the throttle sensor which is PRE-SET accurately at the factory.
Avoid removing the throttle position sensor from the carburetor body unless you really need to do so.

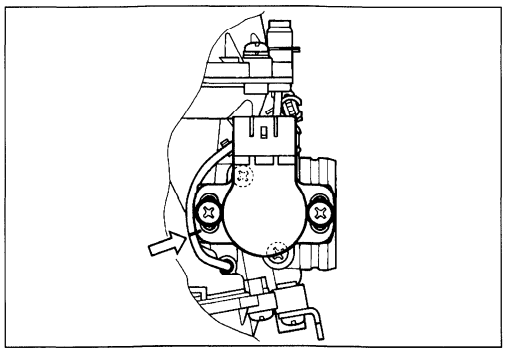

⚠ CAUTION

Do not blow the carburetor body with compressed air, before removing the diaphragm ①. It may cause a damage to the diaphragm ①.

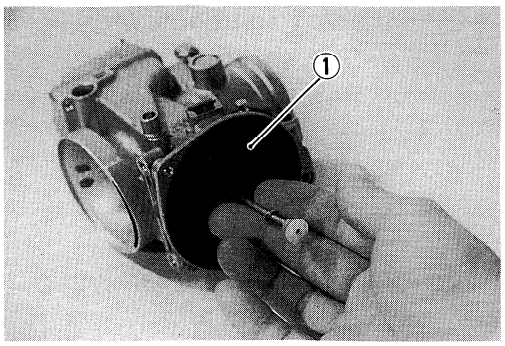

⚠ CAUTION

These two screws are locked by punching these ends. Once removing the screws, they will be damaged.

NOTE:
Apply a small quantity of THREAD LOCK "1342" to the screws, when installing the throttle valve to its shaft.

1342 99000-32050: THREAD LOCK "1342"

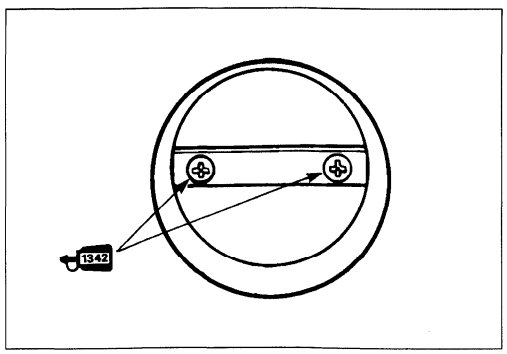

⚠ CAUTION

Face the stamped side of throttle valve to outside.

(For E-18 model)

- Use a 1/8" size drill bit with a drill-stop to remove the pilot screw plug. Set the drill-stop 6 mm from the end of the bit to prevent drilling into the pilot screw. Carefully drill through the plug.
  Thread a self-tapping sheet metal screw into the plug. Pull on the screw head with pliers to remove the plug. Carefully clean any metal shavings from the area.

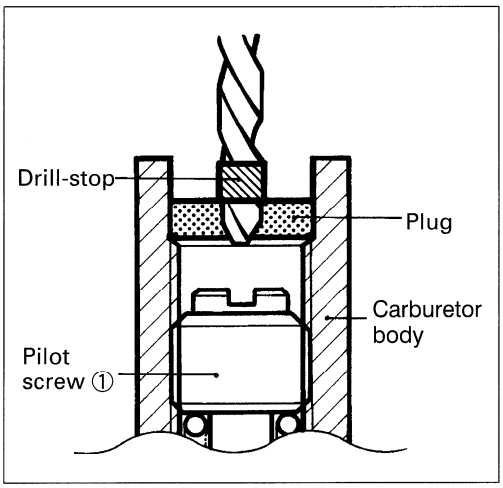

⚠ CAUTION

Replace the plug with a new one.

- Slowly turn the pilot screw ① in clockwise and count the number of turns until the screw is lightly seated. Make a note of how many turns were made so the screw can be reset correctly after cleaning.
- Remove the pilot screw ① with the spring, washer and O-ring.

CARBURETOR CLEANING

⚠ WARNING

Some carburetor cleaning chemicals, especially dip-type soaking solutions, are very corrosive and must be handled carefully. Always follow the chemical manufacturer's instructions on proper use, handling and strage.

- Clean all jets with a spray-type carburetor cleaner and blow dry with compressed air.
- Clean all circuits of the carburetor thoroughly - not just the perceived problem area. Clean the circuits in the carburetor body with a spray-type cleaner and allow each circuit to soak if necessary to loosen dirt and varnish. Blow the body dry with compressed air.

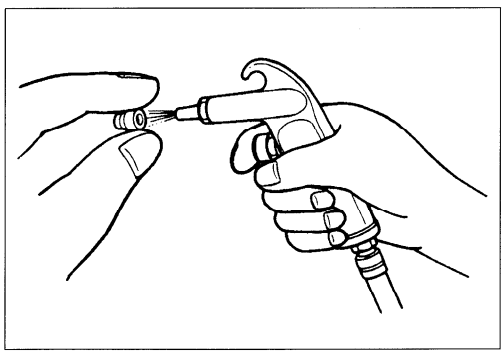

⚠ CAUTION

Do not use wire to clean jets or passageways. Wire can damage jets and passageways. If the components cannot be cleaned with a spray cleaner it may be necessary to use a dip-type cleaning solution and allow them to soak. Always follow the chemical manufacturer's instructions for proper use and cleaning of the carburetor components.

- After cleaning, reassemble the carburetor with new seals and gaskets.

CARBURETOR JET INSPECTION

Check following items for any damage or clogging.

* Pilot jet
* Main jet
* Main air jet
* Pilot air jet
* Needle jet air bleeding hole
* Float
* Needle valve
* Starter (Enrichener) jet
* Gasket and O-ring
* Throttle shaft oil seal
* Diaphragm
* Pilot outlet and by-pass holes

THROTTLE POSITION SENSOR INSPECTION

Using pocket tester, measure the resistance between the terminals as shown in the right illustration.

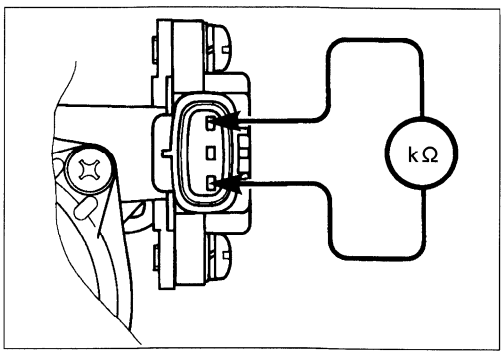

TOOL 09900-25002: Pocket tester

Tester knob indication: × 1kΩ range

Throttle position sensor resistance: 3.5–6.5 kΩ

NOTE:
When making above test, it is not necessary to remove the throttle position sensor.

NEEDLE VALVE INSPECTION

If foreign matter is caught between the valve seat and the needle, the gasoline will continue flowing and cause it to overflow. If the seat and needle are worn beyond the permissible limits, similar trouble will occur. Conversely, if the needle sticks, the gasoline will not flow into the float chamber. Clean the float chamber and float parts with gasoline. If the needle is worn as shown in the illustration, replace it together with a valve seat. Clean the fuel passage of the mixing chamber with compressed air.

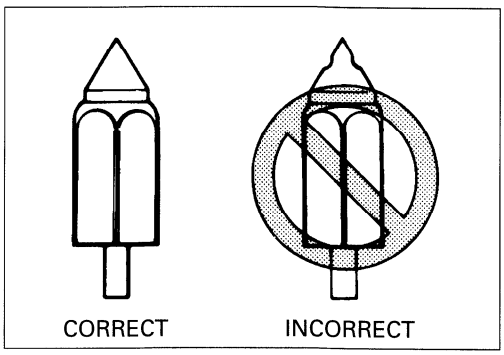

FLOAT HEIGHT ADJUSTMENT

To check the float height, invert the carburetor body, with the float arm kept free, measure the height Ⓐ while float arm is just in contact with needle valve by using calipers. Bend the tongue Ⓑ as necessary to bring the height Ⓐ to this value.

Float height Ⓐ : 14.6 ± 1.0 mm (0.58 ± 0.04 in)

TOOL 09900-20102: Vernier calipers

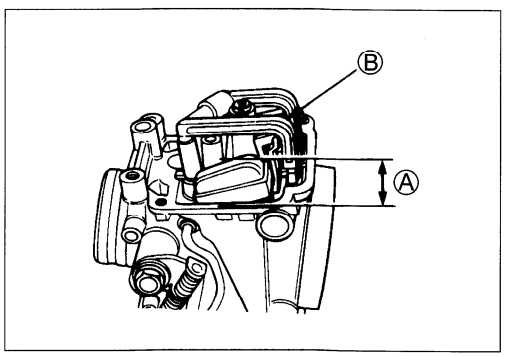

REASSEMBLY AND REMOUNTING

Reassemble and remount the carburetor assembly in the reverse order of disassembly and removal.
Pay attention to the following points:

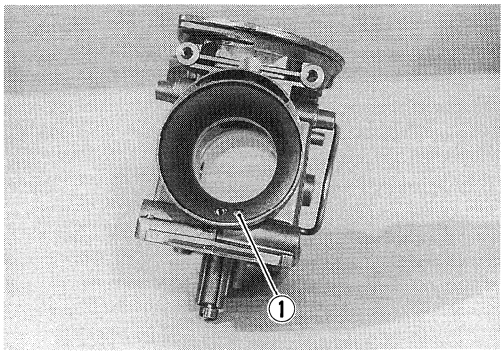

PILOT AIR JET, PILOT JET AND MAIN JET

- Tighten the pilot air jet ①, pilot jet ② and main jet ③ to the specified torque.

Pilot air jet ① : 0.7 N·m (0.07 kg-m, 0.5 lb-ft)
Pilot jet ② : 1.0 N·m (0.1 kg-m, 0.7 lb-ft)
Main jet ③ : 1.8 N·m (0.18 kg-m, 0.8 lb-ft)

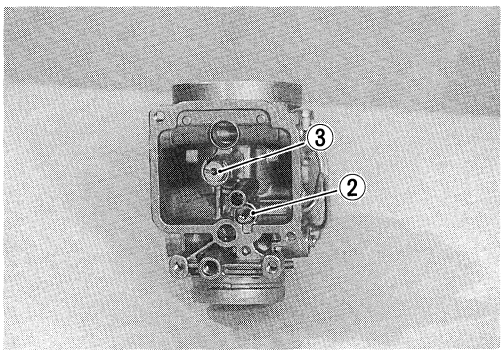

PILOT SCREW

- After cleaning, reinstall the pilot screw to the original setting by turning the screw in until it lightly seats, and then backing it out the same number of turns counted during disassembly.
- Install new plug Ⓐ by tapping it into place with a punch. (For E-18 model)

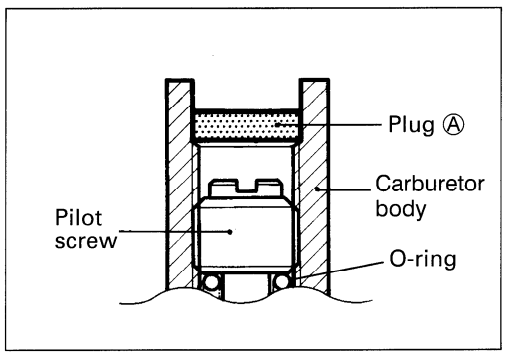

⚠ CAUTION

Replace the O-ring with a new one.

VALVE SEAT AND NEEDLE VALVE

- Press-fit the valve seat ①.

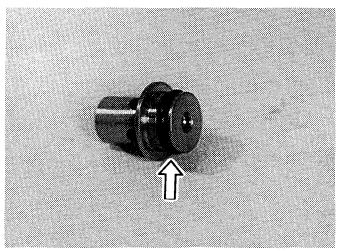

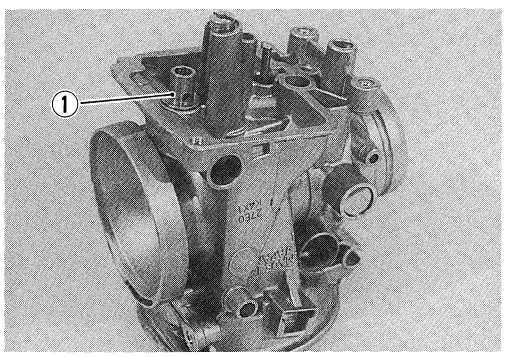

- Install the needle valve ② to the float arm properly.
- Install the O-ring ③.

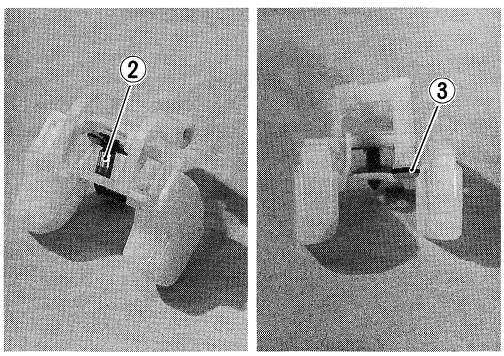

⚠ CAUTION

Replace the O-rings with new ones.

FLOAT CHAMBER

- Install the new O-ring ① and tighten the float chamber mounting screws to the specified torque.

Float chamber mounting screw: 3.5 N·m (0.35 kg-m, 2.5 lb-ft)

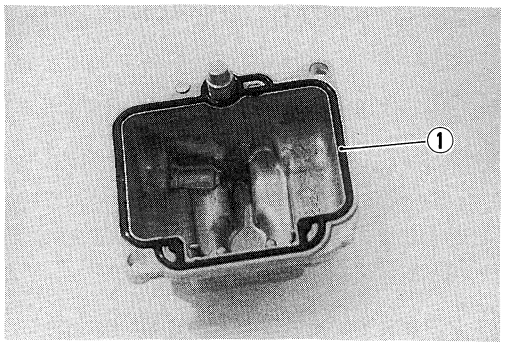

▲ CAUTION

Replace the O-ring with a new one.

STARTER PLUNGER

- Engage the hooked parts Ⓐ of the starter plunger retainer to the carburetor body properly.

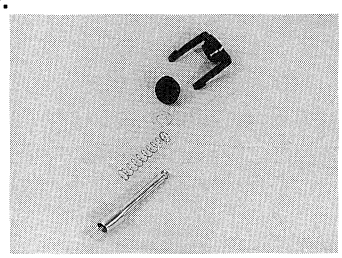

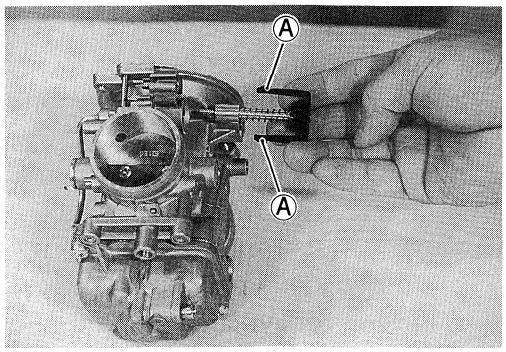

JET NEEDLE, PISTON VALVE AND DIAPHRAGM

- Install the piston valve with diaphragm ① into the carburetor body.
- Install the jet needle ② into the piston valve.

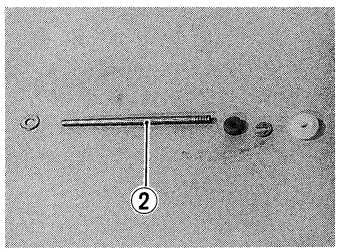

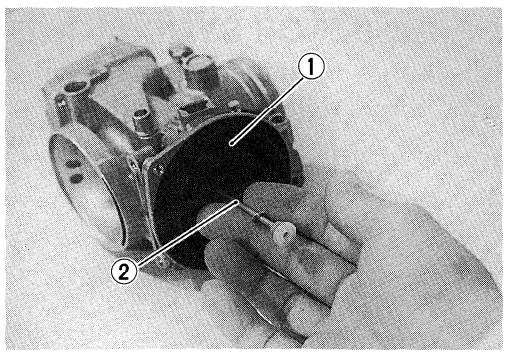

- Install the piston valve return spring ③ and O-ring ④.
- Tighten the top cap screws to the specified torque.

Top cap screw: 3.5 N·m (0.35 kg-m, 2.5 lb-ft)

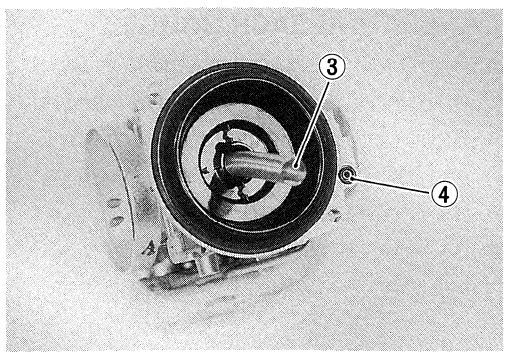

- When engaging two carburetors, position the throttle valve control lever ① correctly.

▲ CAUTION

- **Replace the O-rings and seals with new ones.**
- **Make sure that the pipes and seals are positioned correctly, when engaging the carburetors.**

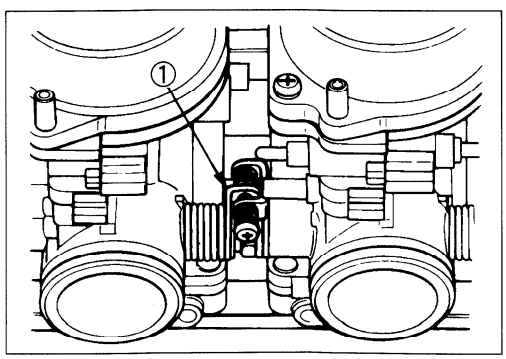

- Apply THREAD LOCK "1342" to the upper and lower plate's screws.

99000-32050: THREAD LOCK "1342"

- When tightening the upper and lower plate's screws, locate the carburetor assembly on the surface plate with the engine side of the carburetor assembly to face the surface plate.

Plate screw: 3.5 N·m (0.35 kg-m, 2.5 lb-ft)

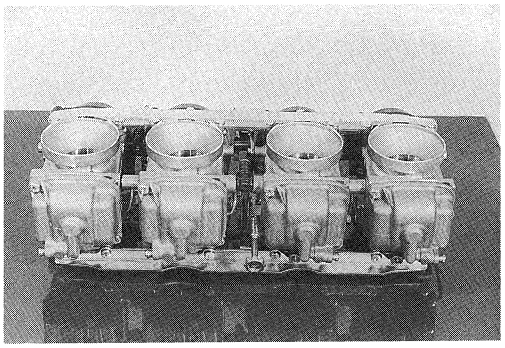

- Set each throttle valve in such a way that its top end ① meets the foremost by-pass ② . This is accomplished by turning the throttle stop screw and throttle valve balance screw.
- After all work is completed, mount the carburetors on the engine and the following adjustments are necessary.
  * Engine idle r/min ..... Page 2- 9
  * Throttle cable play ..... Page 2- 9
  * Carburetor synchronization ..... Page 4-15

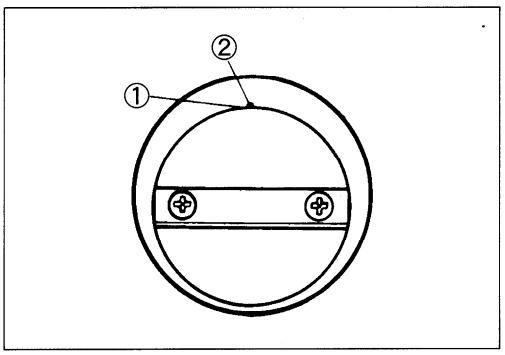

CARBURETOR SYNCHRONIZATION

Check and adjust the carburetor synchronization among four carburetors following the procedures below.

NOTE:
When synchronize the carburetors, remove the fuel tank and fuel should be supplied by a separate fuel tank Ⓐ .

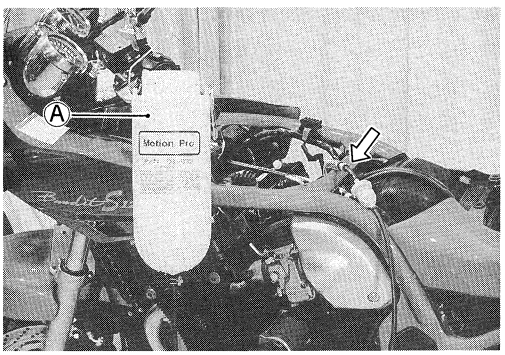

CALIBRATING EACH GAUGE

- Remove the vacuum hose from No.3 carburetor and fit a proper cap to the vacuum inlet of the No.3 carburetor.
- Start up the engine and run it in idling condition for warming up.
- Stop the warmed-up engine.
- Remove the vacuum inlet cap ① for No.1 or No.4 carburetor.

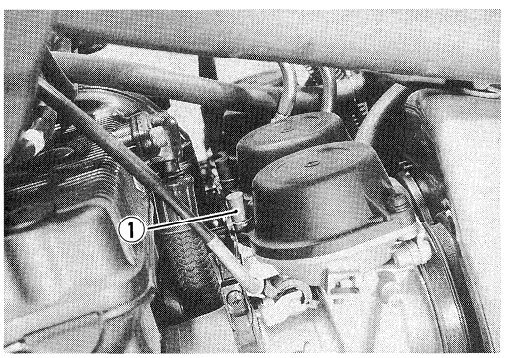

- Connect one of the four rubber hoses of balancer gauge to this nipple.

09913-13121: Carburetor balancer

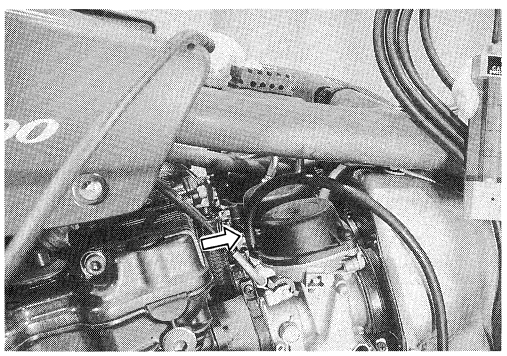

- Start up the engine and keep it running at 1 750 r/min by turning throttle stop screw.

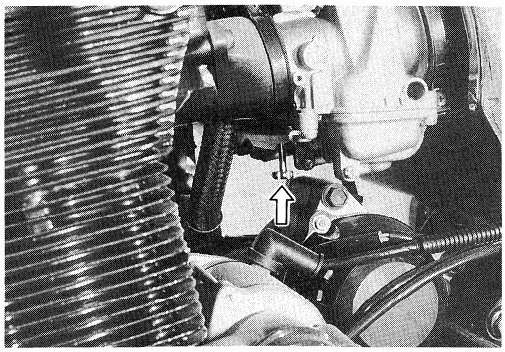

- Turn the air screw ① of the gauge so that the vacuum acting on the tube of that hose will bring the steel ball ② in the tube to the center line ③ .

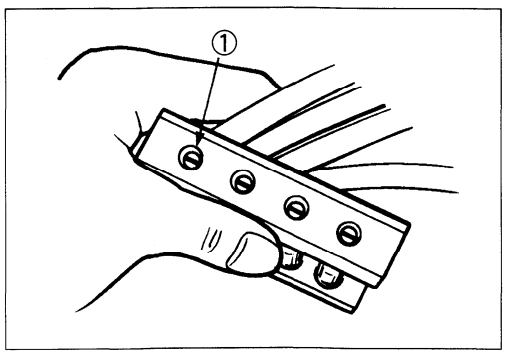

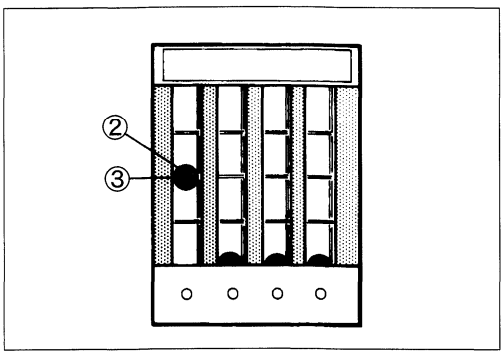

- After making sure that the steel ball stays steady at the center line, disconnect the hose from nipple and connect the next hose to the nipple.
- Turn air screw to bring the other steel ball ④ to the center line.
- Repeat the above process on the third and fourth hoses. The balancer gauge is now ready for use in balancing the carburetors.

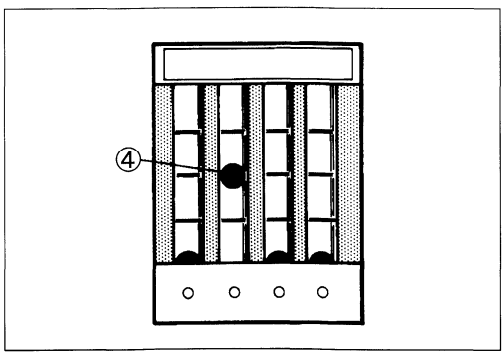

CARBURETOR SYNCHRONIZATION

To synchronize carburetor throttle valves, remove all the vacuum nipple caps from each carburetor. Connect the balancer gauge hoses to vacuum nipples and adjust the balance of four carburetors as follows:

- Start up the engine and keep it running at 1 750 r/min to see engine tachometer reading.

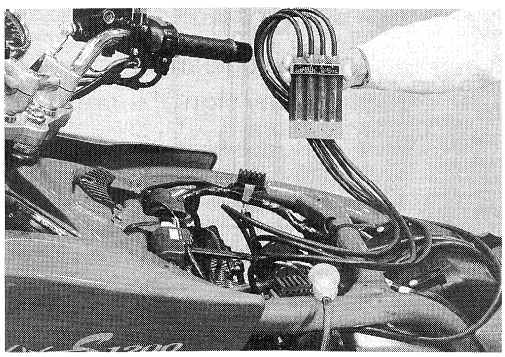

A correctly adjusted carburetor has the steel balls in the Nos. 1 through 4 tubes at the same level.

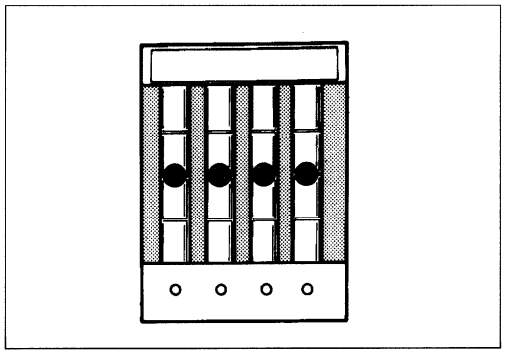

- If the steel balls are not aligned, adjust the throttle valve balance screws properly to align the balls.
- Adjusting order is as follows.

① ↓ ② ↓ ③

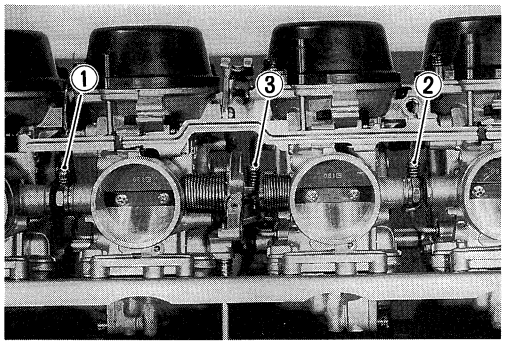

- Remove the balancer gauge hose from carburetor nipples and install nipple caps and vacuum hose respectively.
- After completing the carburetor synchronization, set there speed between 1 100 and 1 300 r/min. by turning the throttle stop screw referring engine tachometer reading.

Idle r/min: 1 200 $^{+100}_{-50}$ r/min ..... E-18 model
1 200 ± 100 r/min ..... Other models

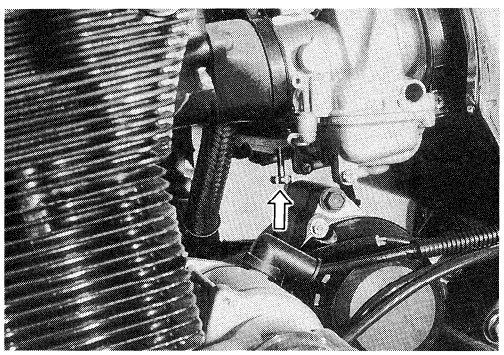

LUBRICATION SYSTEM

OIL PRESSURE

Refer to page 2-21.

OIL FILTER

Refer to page 2-7.

OIL SUMP FILTER

When washing the oil pan, check to be sure that the oil sump filter is free from any sign of rupture, also wash the filter clean periodically.

⚠ CAUTION

Replace the oil pan gasket with a new one to prevent oil leakage.

(Refer to pages 3-19 and 3-53.)

ENGINE LUBRICATION SYSTEM CHART

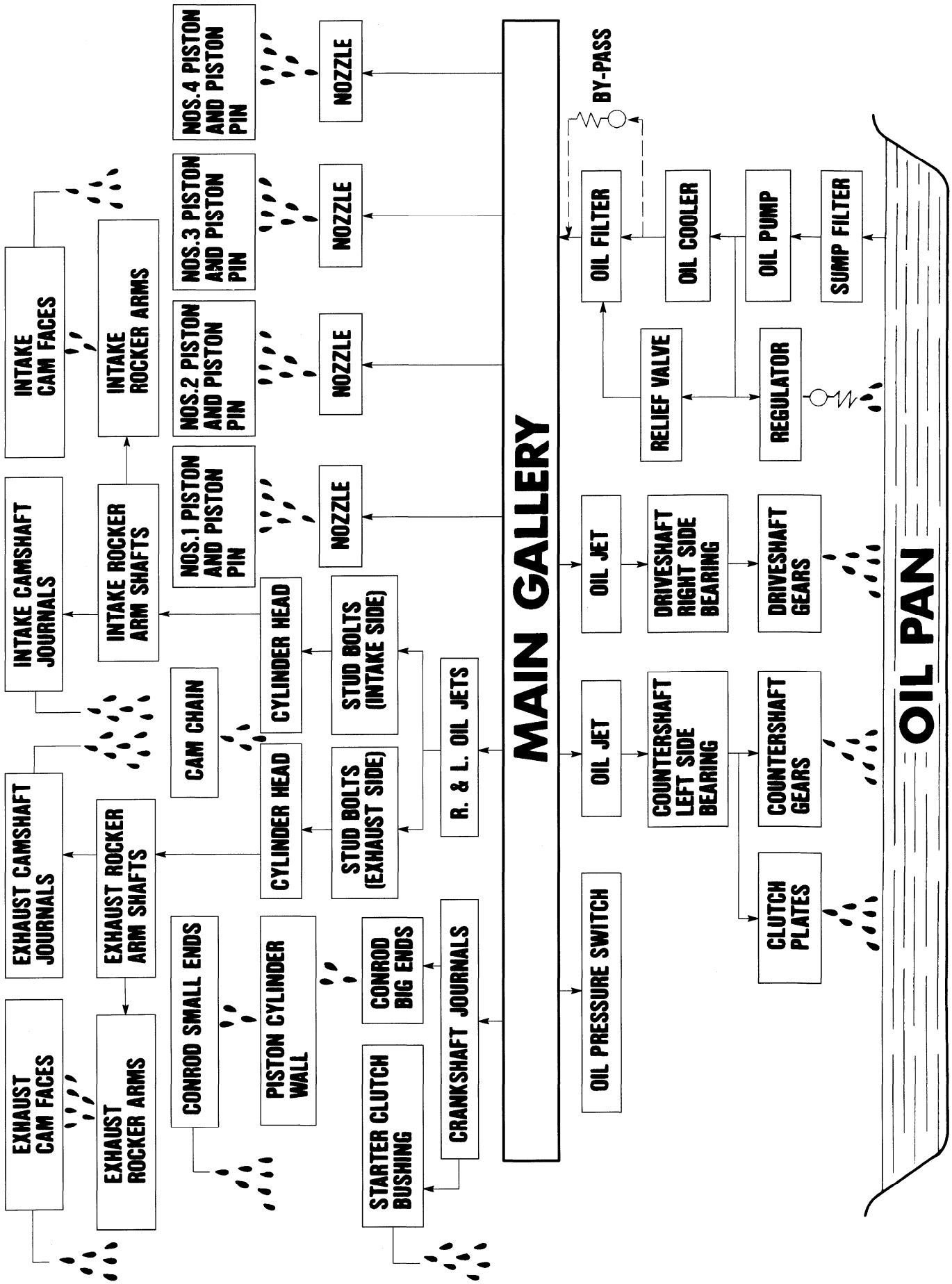

ENGINE LUBRICATION SYSTEM

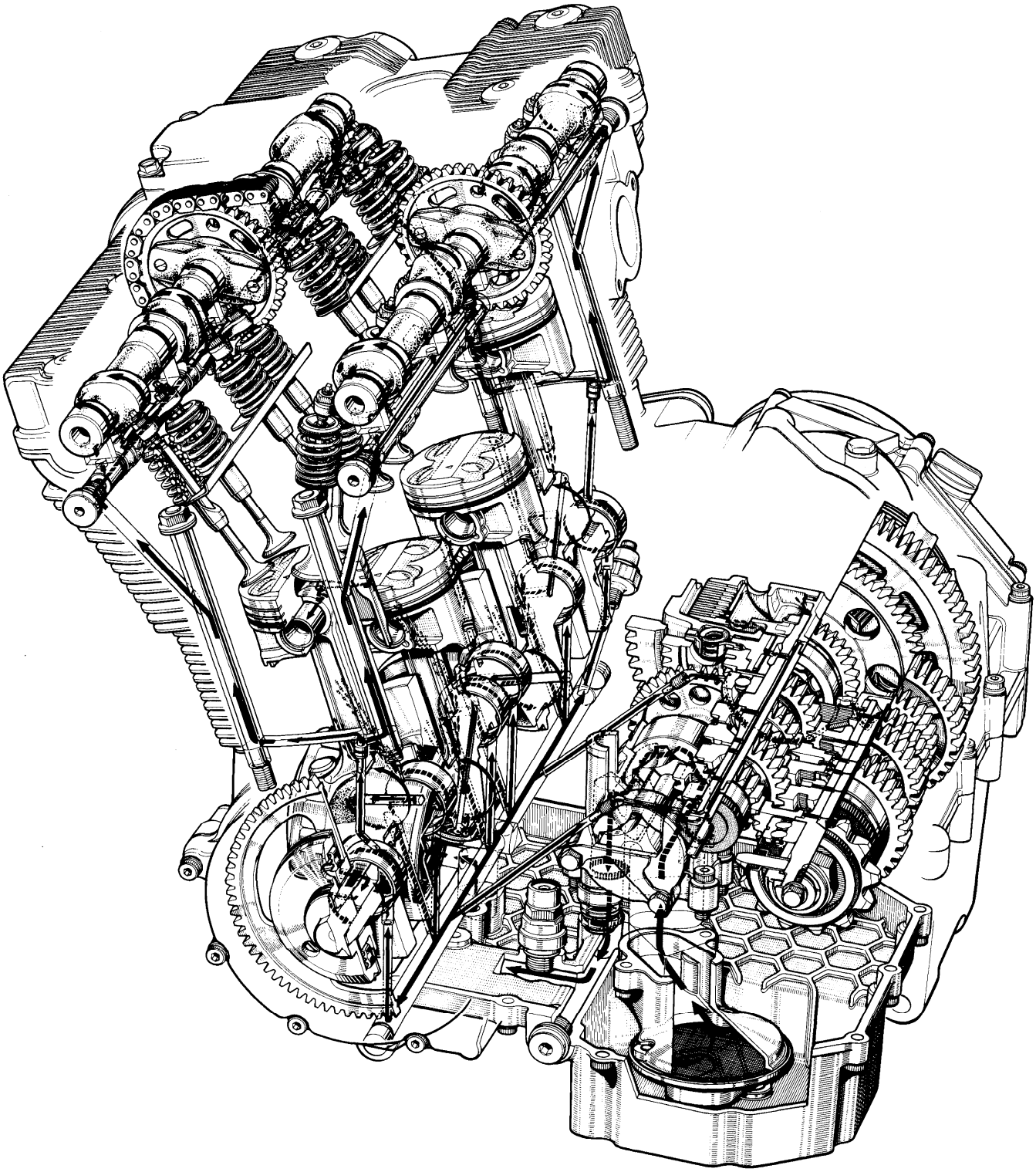

CYLINDER HEAD COOLING SYSTEM CHART

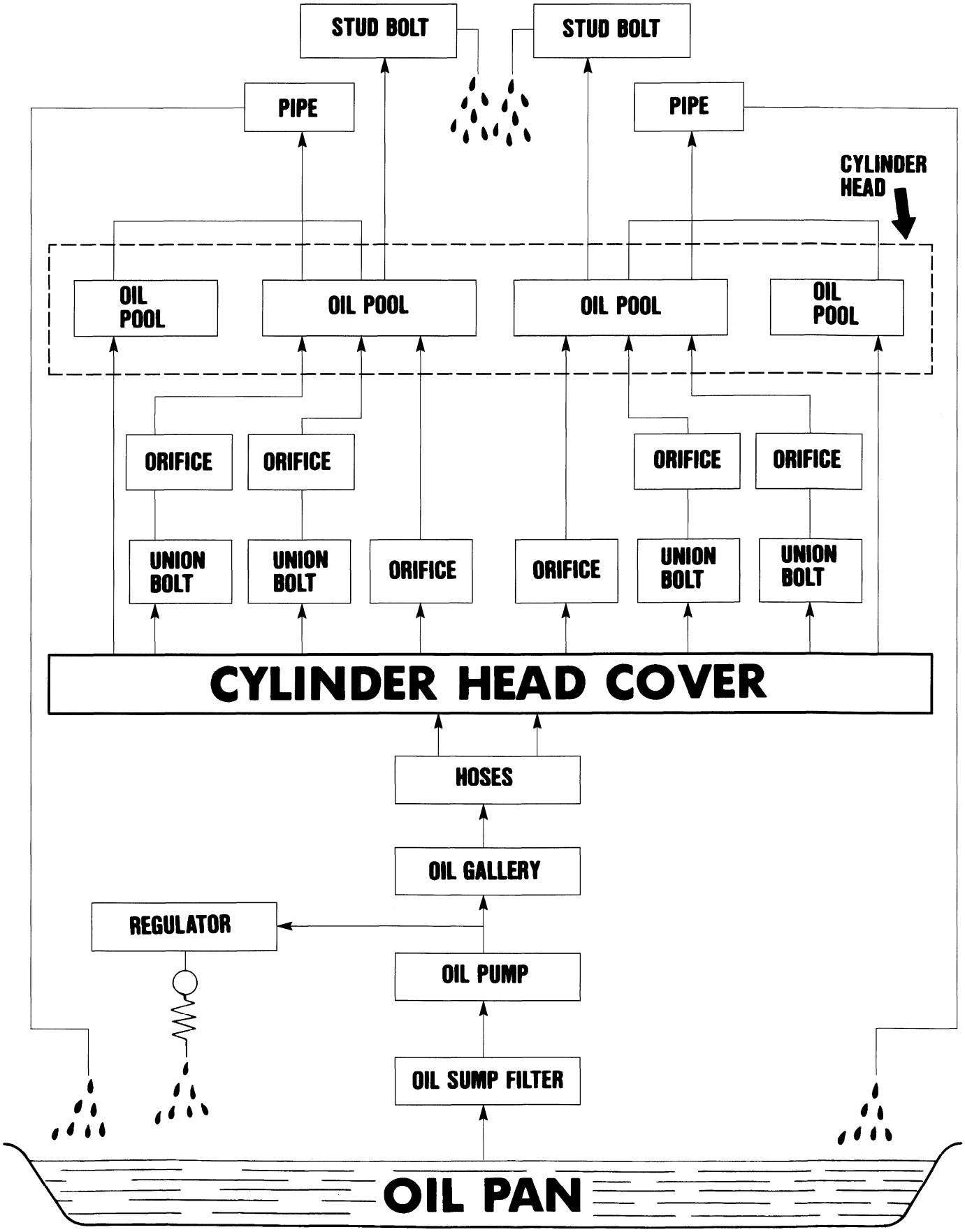

CYLINDER HEAD COOLING SYSTEM

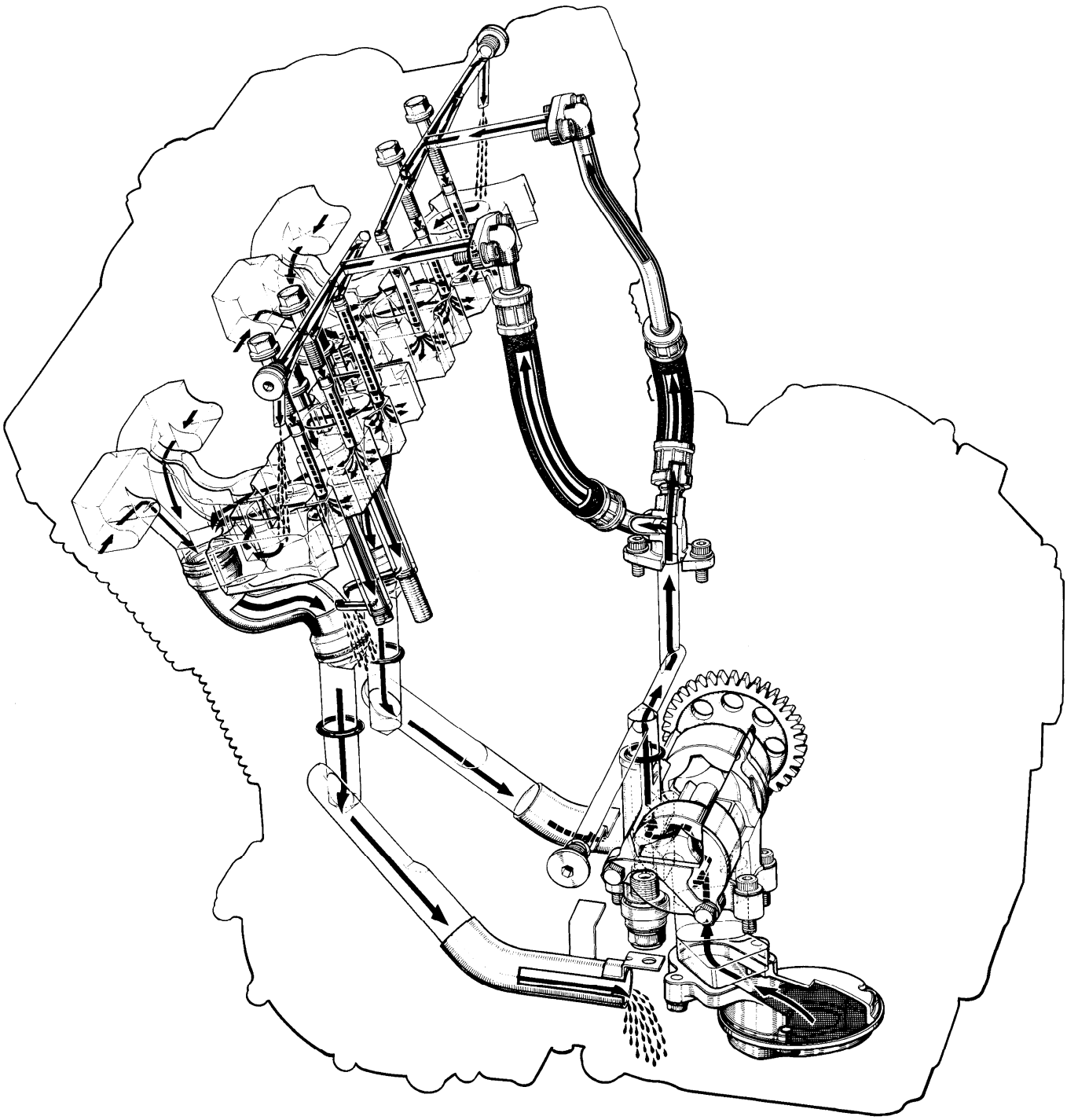

ENGINE OIL COOLING SYSTEM

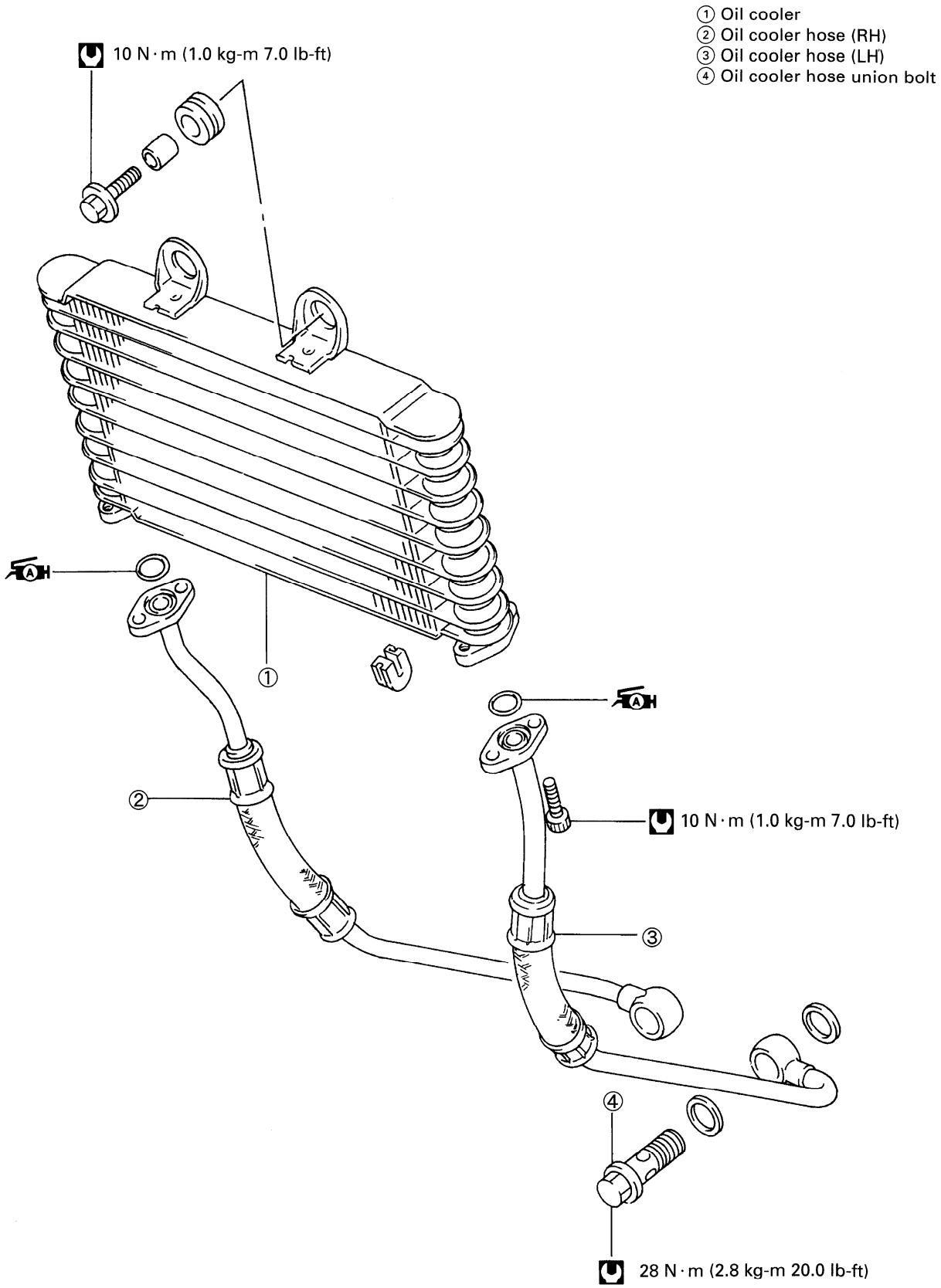

CHASSIS

CONTENTS

EXTERIOR PARTS 5- 1
REMOVAL 5- 2
REMOUNTING 5- 4
FRONT WHEEL 5- 5
REMOVAL 5- 5
INSPECTION AND DISASSEMBLY 5- 6
REASSEMBLY AND REMOUNTING 5- 7
TIRE AND WHEEL 5-10
TIRE REMOVAL 5-10
INSPECTION 5-12
TIRE INSTALLATION 5-13
FRONT BRAKE 5-15
BRAKE PAD REPLACEMENT 5-16
BRAKE FLUID REPLACEMENT 5-16
CALIPER REMOVAL AND DISASSEMBLY 5-17
CALIPER INSPECTION 5-18
CALIPER REASSEMBLY AND REMOUNTING 5-18
BRAKE DISC INSPECTION 5-19
MASTER CYLINDER REMOVAL AND DISASSEMBLY 5-20
MASTER CYLINDER INSPECTION 5-21
MASTER CYLINDER REASSEMBLY AND REMOUNTING 5-21
FRONT FORK 5-22
REMOVAL AND DISASSEMBLY 5-22
INSPECTION 5-25
REASSEMBLY AND REMOUNTING 5-25
SUSPENSION SETTING 5-28
STEERING 5-29
REMOVAL AND DISASSEMBLY 5-29
INSPECTION AND DISASSEMBLY 5-32
REASSEMBLY AND REMOUNTING 5-32
STEERING TENSION ADJUSTMENT 5-35
REAR WHEEL 5-36
REMOVAL 5-36
INSPECTION AND DISASSEMBLY 5-38
REASSEMBLY AND REMOUNTING 5-38
REAR BRAKE 5-41
BRAKE PAD REPLACEMENT 5-42
BRAKE FLUID REPLACEMENT 5-42
CALIPER REMOVAL AND DISASSEMBLY 5-43
CALIPER INSPECTION 5-44
CALIPER REASSEMBLY AND REMOUNTING 5-44
MASTER CYLINDER REMOVAL AND DISASSEMBLY 5-45
MASTER CYLINDER INSPECTION 5-46
MASTER CYLINDER REASSEMBLY AND REMOUNTING 5-46
REAR SUSPENSION 5-47
REMOVAL 5-48
INSPECTION AND DISASSEMBLY 5-50
REASSEMBLY AND REMOUNTING 5-51
FINAL INSPECTION AND ADJUSTMENT 5-53
SUSPENSION SETTING 5-53
CLUTCH MASTER CYLINDER 5-54

EXTERIOR PARTS

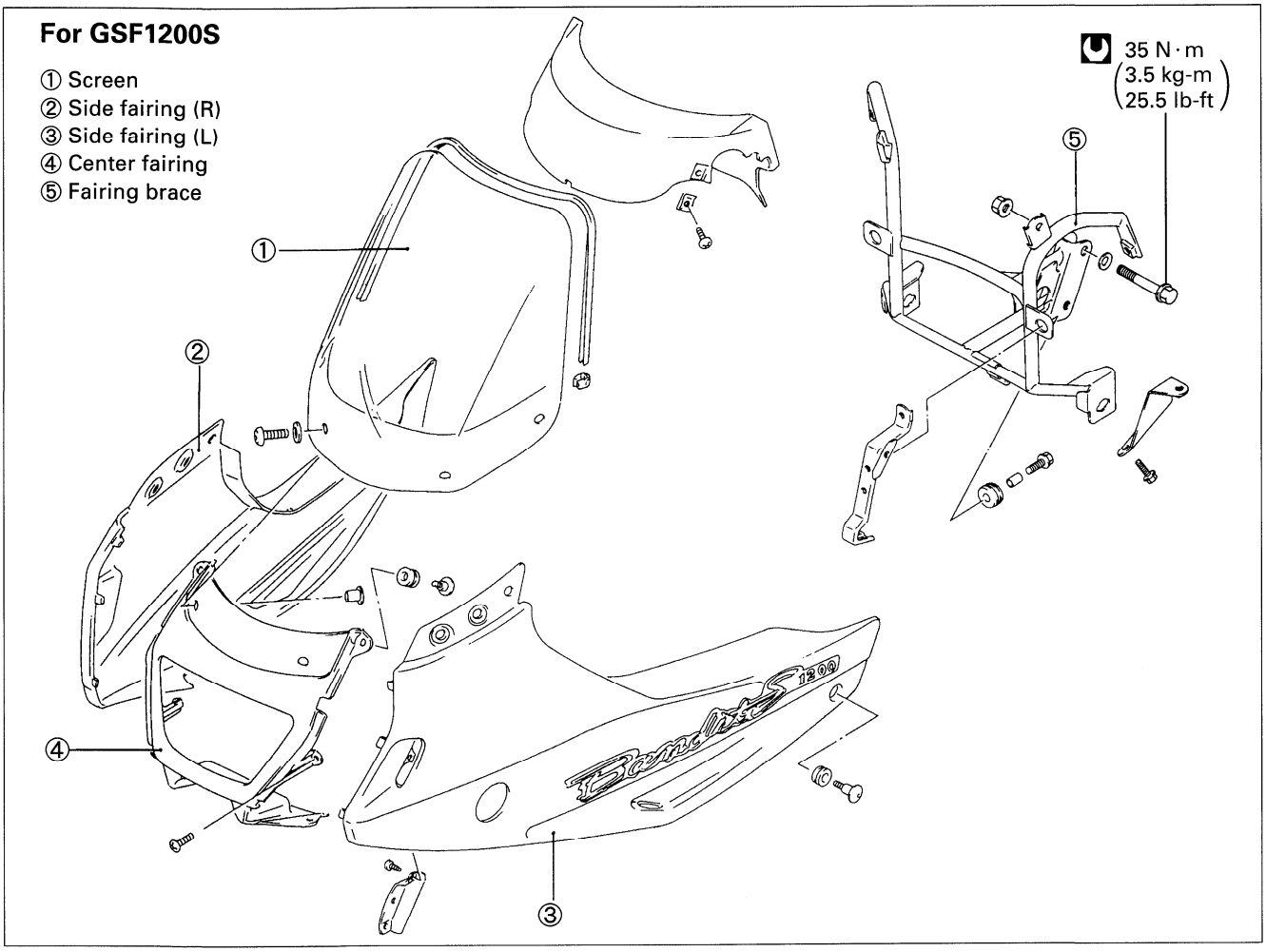

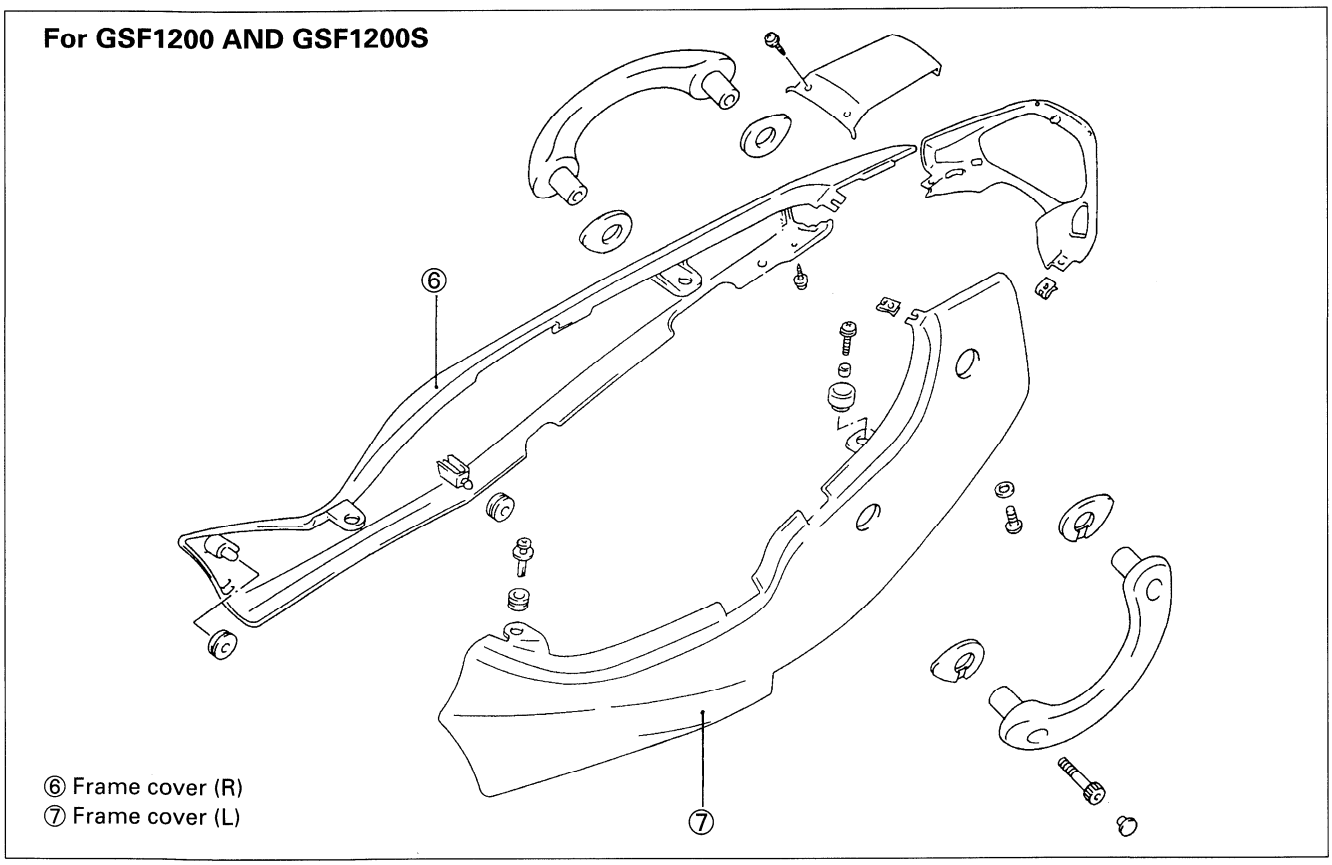

REMOVAL

FAIRING AND FAIRING BRACE (Except for GSF1200)

- Remove the screen.

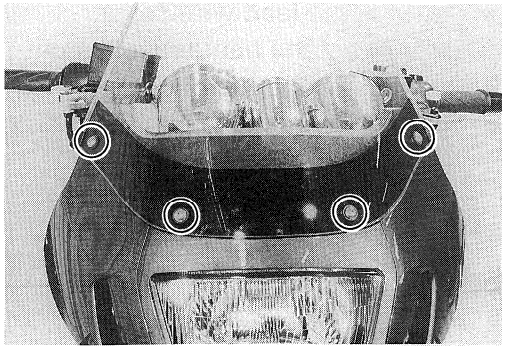

- Remove the panel.

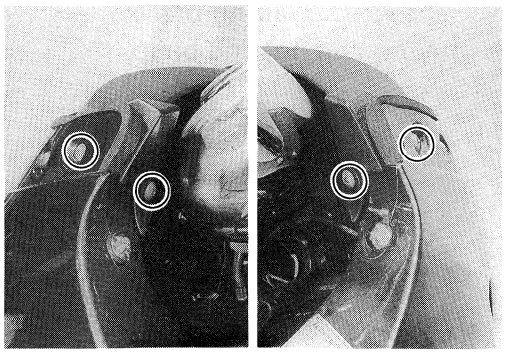

- Remove the front turn signal lights.

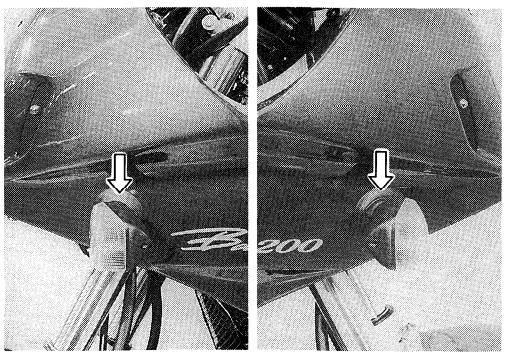

- Remove the left and right side fairings.

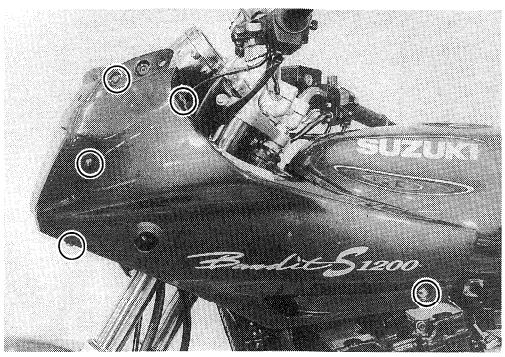

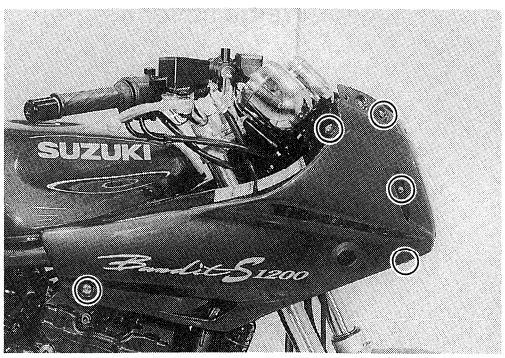

- Remove the lead wire cover ①.
- Disconnect the handlebar switches and meter lead wires.
- Disconnect the headlight lead wire coupler and position light lead wires (except for E-24, 28 models).

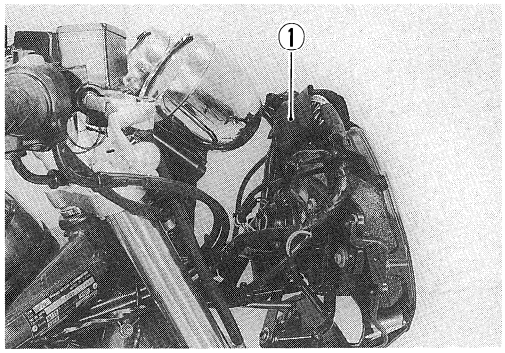

- Remove the fairing brace along with the headlight by removing the nut and bolts.

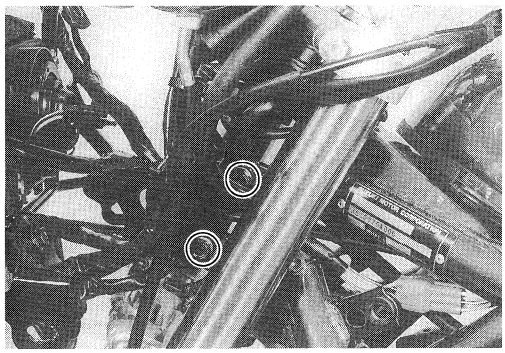

SEAT

- Remove the seat with the ignition key.

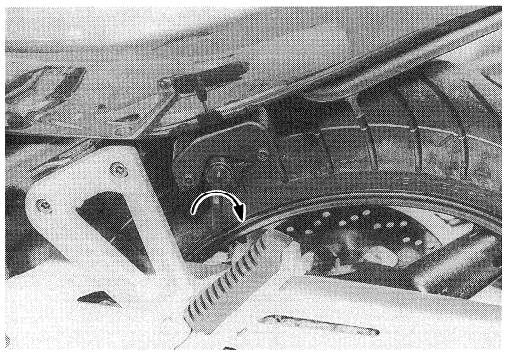

FRAME COVER

- Remove the seat.
- Remove the grabbers by removing the mounting bolts.

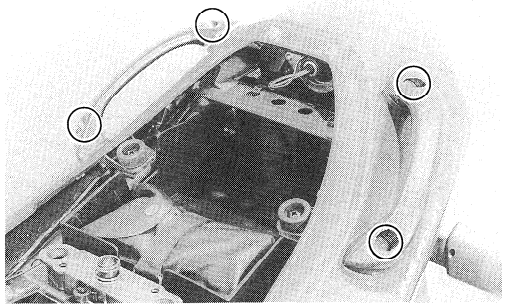

- Remove the frame cover mounting screws.

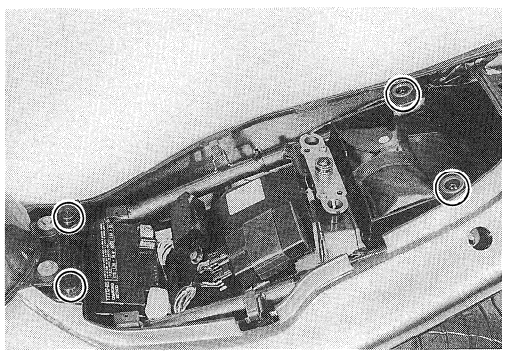

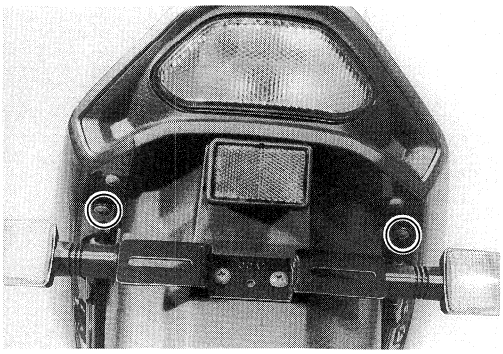

- Extract the hooked parts of frame cover, left and right.

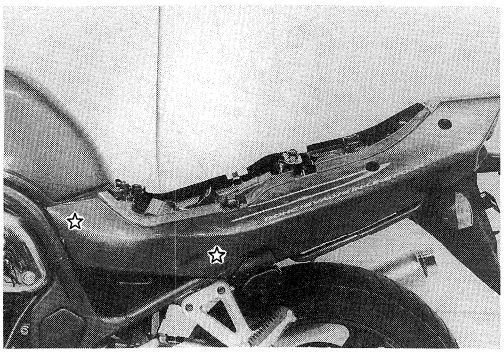

☆: hooked part

- Remove the frame cover after disconnecting the tail/brake light lead wire coupler.

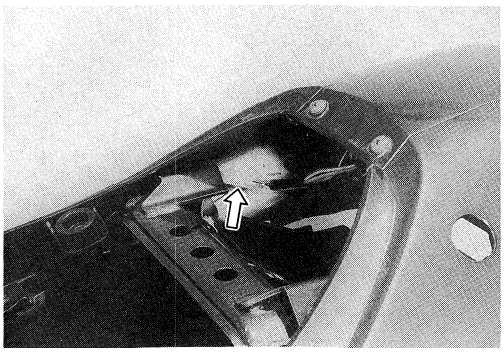

REMOUNTING

Remount the fairings, seat and frame cover in the reverse order of removal.

FRONT WHEEL

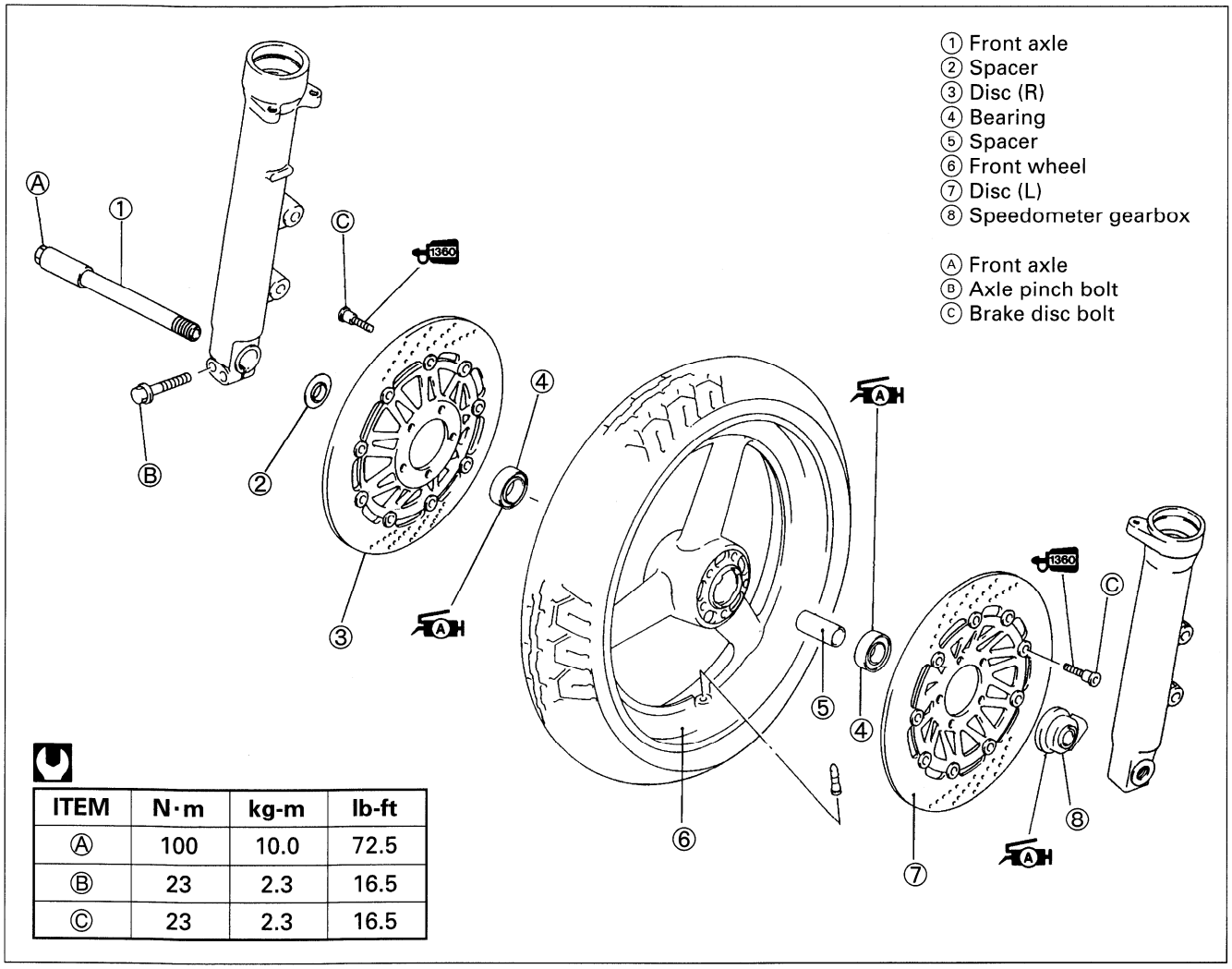

ITEM	N·m	kg-m	lb-ft
Ⓐ	100	10.0	72.5
Ⓑ	23	2.3	16.5
Ⓒ	23	2.3	16.5

REMOVAL

- Remove the brake calipers, left and right.

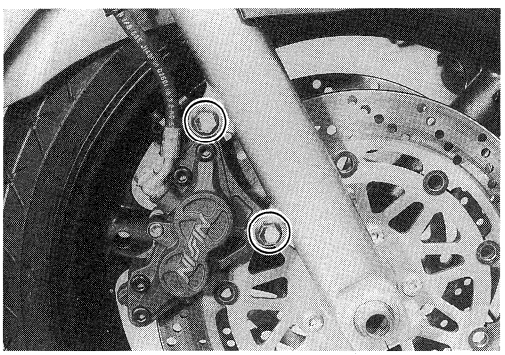

- Loosen the axle pinch bolts ①.
- Loosen the front axle ②.
- Raise the front wheel off the ground with a jack or wooden block.
- Remove the axle and front wheel.

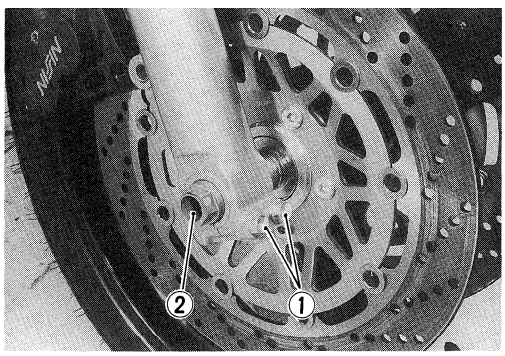

▲ CAUTION

Do not operate the brake lever while removing the calipers.

NOTE:
After removing the front wheel, fit the calipers temporarily to the original positions.

- Remove the brake discs from the front wheel.

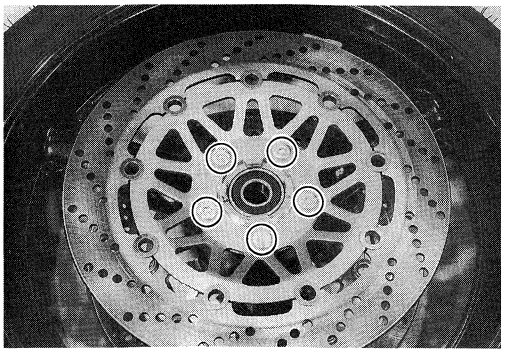

INSPECTION AND DISASSEMBLY

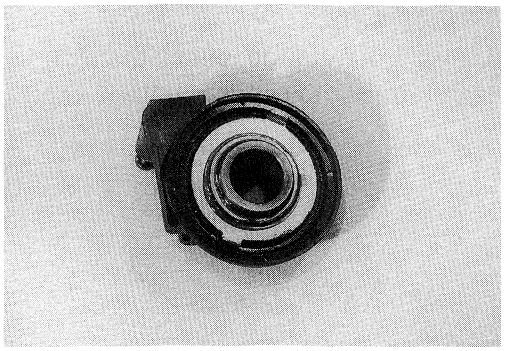

SPEEDOMETER GEARBOX DUST SEAL

Inspect the lip of the dust seal for damage.

TIRE

Refer to page 5-10.

FRONT WHEEL

Inspect the wheel runout.
Excessive runout is usually due to worn or loosen wheel bearings and can be reduced by replacing the bearings.
If bearing replacement fails to reduce the runout, replace the wheel.

Service Limit (Axial and Radial): 2.0 mm (0.08 in)

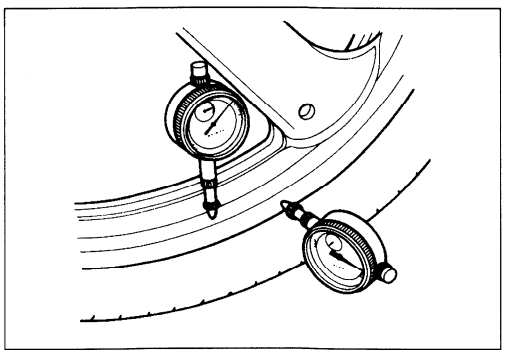

WHEEL BEARING

Rotate the inner race by finger to inspect for abnormal play, noise and smooth rotation while the wheel bearings are in the wheel.
Replace the bearing in the following procedure if there is anything unusual.

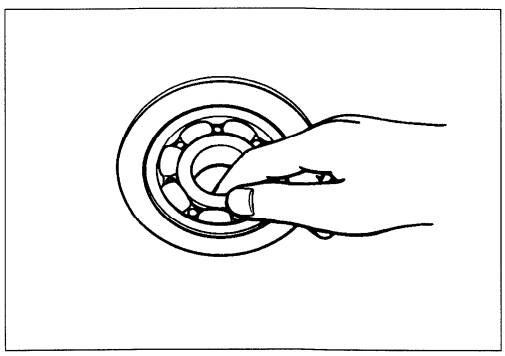

- Insert the attachment of bearing remover to the bearing as shown.
- Insert the wedge of bearing remover to the attachment from the opposite side, lock the wedge in the slit of attachment.

TOOL 09941-50111: Bearing remover

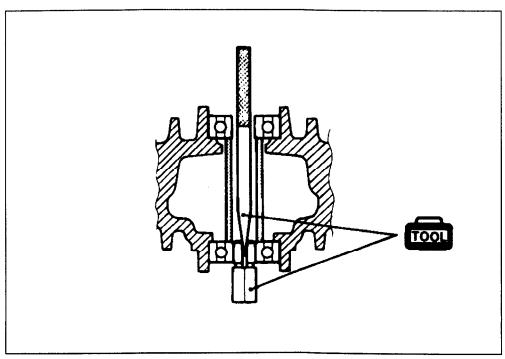

- Drive out the wheel bearings by knocking the bearing remover.

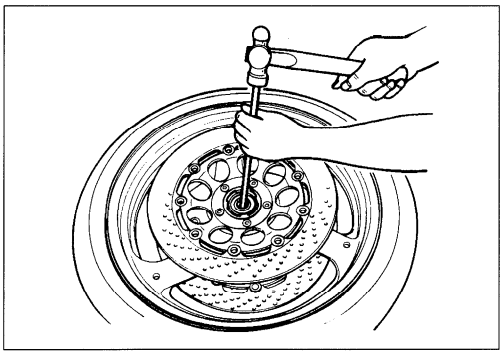

⚠ CAUTION

The removed bearings should be replaced with new ones.

FRONT AXLE

Using a dial gauge, check the axle for runout.
If the runout exceeds the limit, replace the axle.

Service Limit: 0.25 mm (0.010 in)

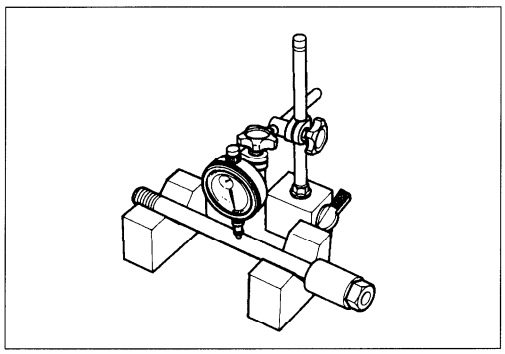

REASSEMBLY AND REMOUNTING

Reassemble and remount the front wheel in the reverse order of removal and disassembly. Pay attention to the following points:

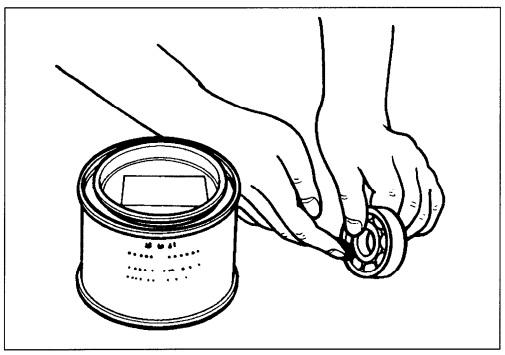

WHEEL BEARING

- Apply SUZUKI SUPER GREASE "A" to the bearings before installing.

99000-25010: SUZUKI SUPER GREASE "A"

- Install the wheel bearings as follows by using the used bearing and special tool.

09924-84510: Bearing installer set

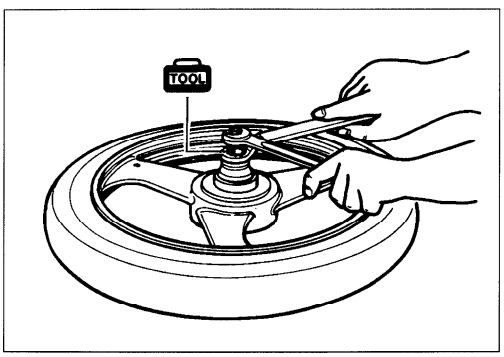

⚠ CAUTION

First install the left wheel bearing, then install the right wheel bearing. Refer to page 5-9 for details.
The sealed cover on the bearing must face to the outside.

BRAKE DISC

- Make sure that the brake disc is clean and free of any greasy matter. Apply THREAD LOCK SUPER "1360" to the disc mounting bolts and tighten them to the specified torque.

99000-32130: THREAD LOCK SUPER "1360"

Brake disc bolt: 23 N·m (2.3 kg-m, 16.5 lb-ft)

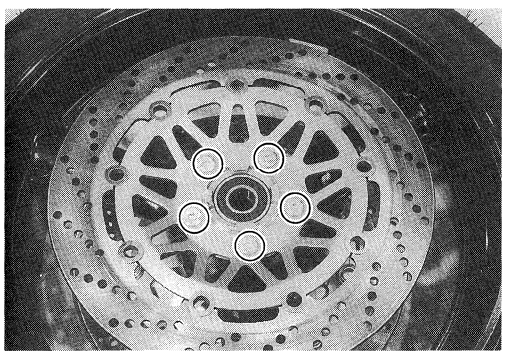

SPEEDOMETER GEARBOX

- Before installing the speedometer gearbox, apply grease to its dust seal lip and align the drive lugs ① to the recesses ② of the wheel hub and attach the speedometer gearbox to the wheel hub.

99000-25010: SUZUKI SUPER GREASE "A"

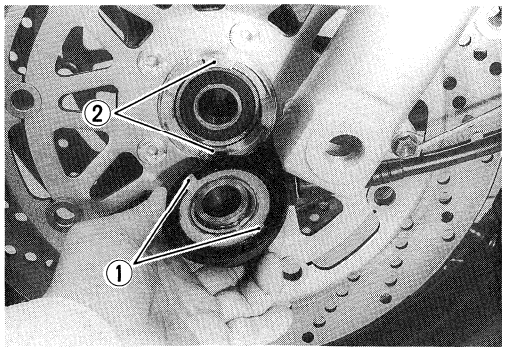

- Touch the stopper ③ on the speedometer gearbox to the lug ④ on the left front fork.

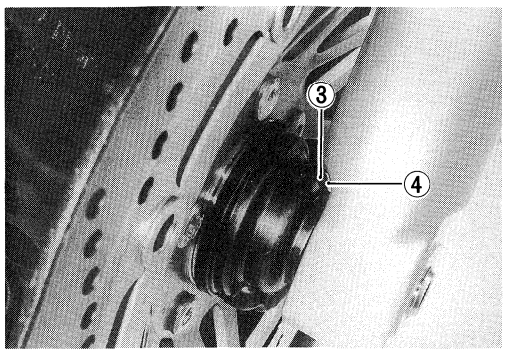

FRONT AXLE

- Tighten the front axle to the specified torque and then moving the motorcycle up and down.
- Tighten the pinch bolts to the specified torque.

Front axle ⑤: 100 N·m (10.0 kg-m, 72.5 lb-ft)
Pinch bolt ⑥: 23 N·m (2.3 kg-m, 16.5 lb-ft)

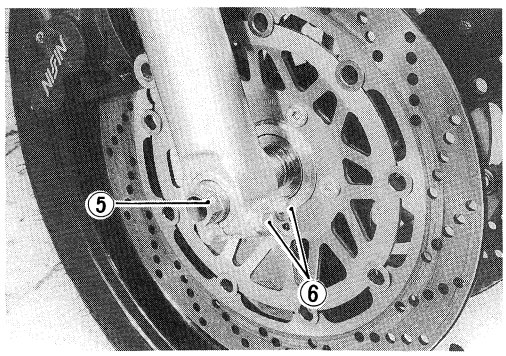

BRAKE CALIPER

- Tighten the brake caliper mounting bolts to the specified torque.

Caliper mounting bolt: 39 N·m (3.9 kg-m, 28.0 lb-ft)

NOTE:
Push the pistons all the way into the caliper and remount the calipers.

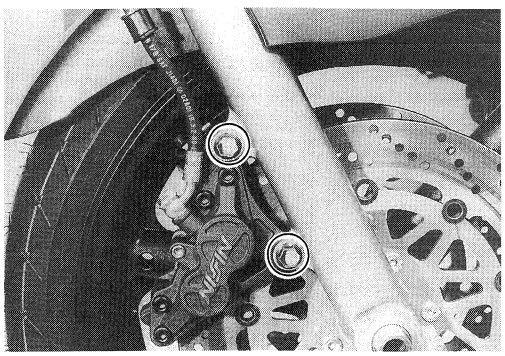

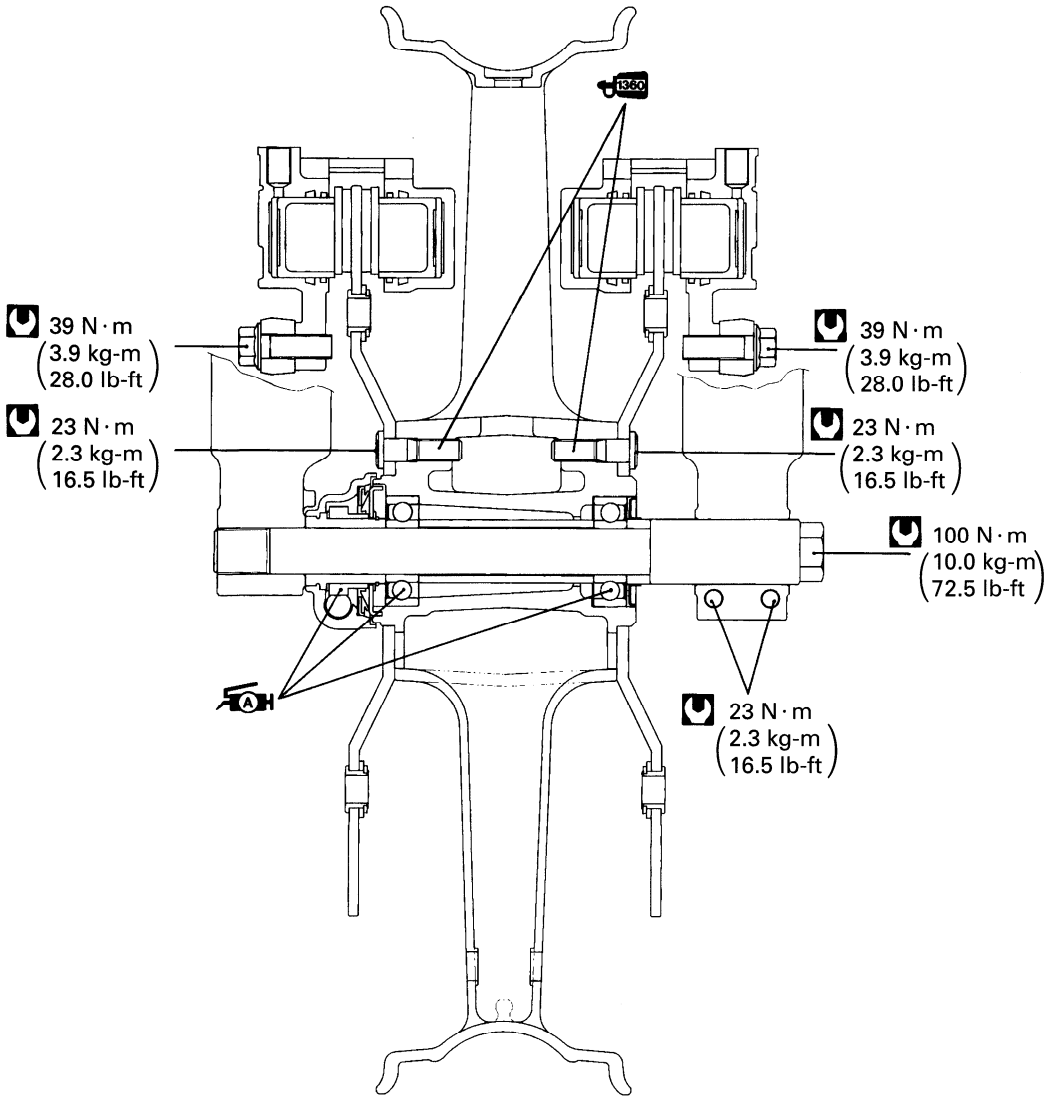
1360
39 N·m
(3.9 kg-m
28.0 lb-ft)
23 N·m
(2.3 kg-m
16.5 lb-ft)
39 N·m
(3.9 kg-m
28.0 lb-ft)
23 N·m
(2.3 kg-m
16.5 lb-ft)
100 N·m
(10.0 kg-m
72.5 lb-ft)
A
23 N·m
(2.3 kg-m
16.5 lb-ft)

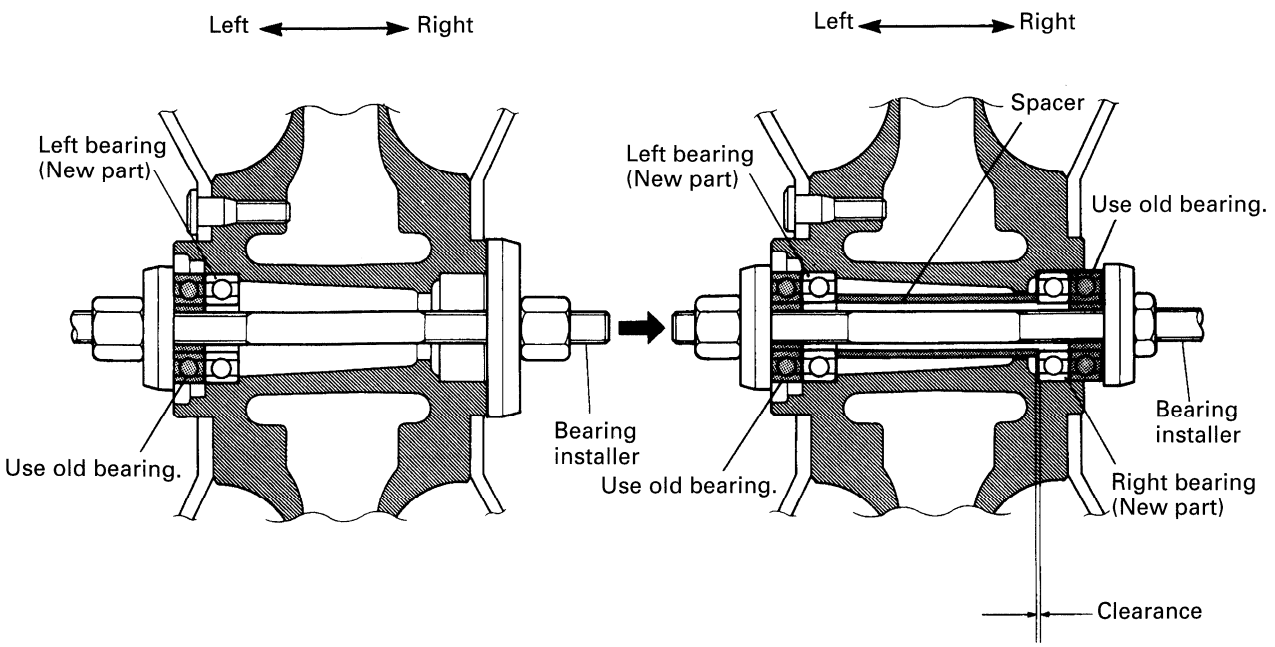
Left
Right
Left bearing
(New part)
Use old bearing.
Bearing
installer
Left
Right
Spacer
Left bearing
(New part)
Use old bearing.
Bearing
installer
Use old bearing.
Right bearing
(New part)
Clearance

TIRE AND WHEEL

TIRE REMOVAL

The most critical factor of a tubeless tire is the seal between the wheel rim and the tire bead. Because of this, we recommend using a tire changer which is also more efficient than tire levers.
For tire removal, the following tools are required.

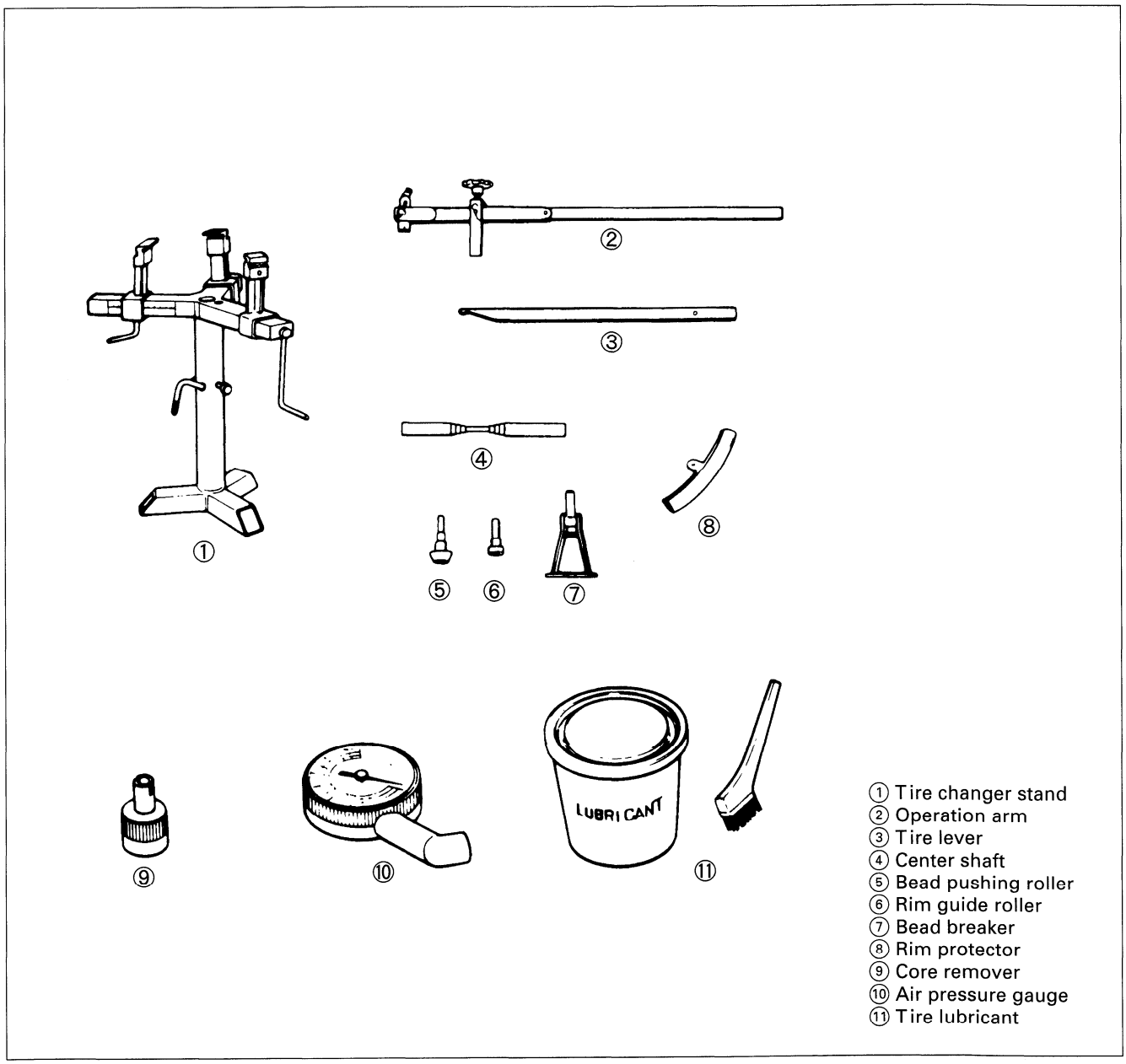

- Remove the valve core from the valve stem, and deflate the tire completely.

NOTE:
Mark the tire with chalk to note the position ① of the tire on the rim and rotational direction ② of the tire.

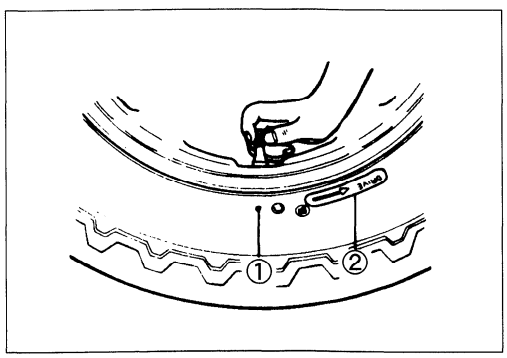

- Place the center shaft ① to the wheel, and fix the wheel with the rim holder ② .

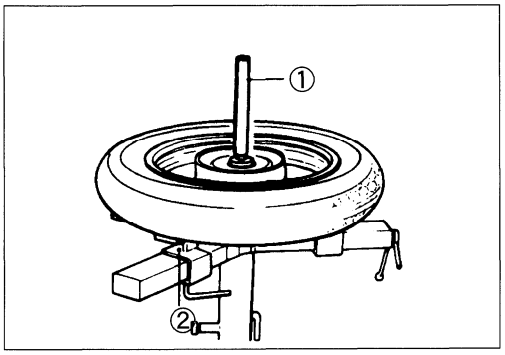

- Attach the operation arm ③ to the center shaft.

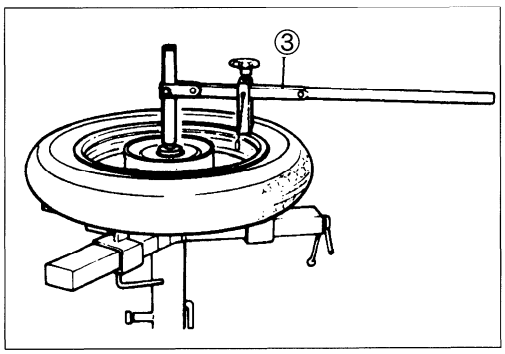

- Attach the bead breaker ④ to the operation arm, and dismount the bead from the rim. Turn the wheel over and dismount the other bead from the rim.

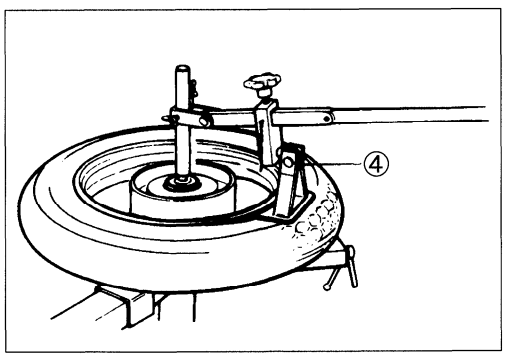

- Install the rim guide roller ⑤ .
- Install the rim protector ⑥ , and raise the bead with the tire lever ⑦ .

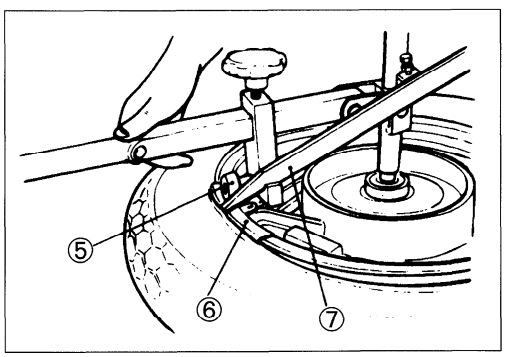

- Set the tire lever against the operation arm, and rotate the lever around the rim. Repeat this procedure to remove the other bead from the rim.

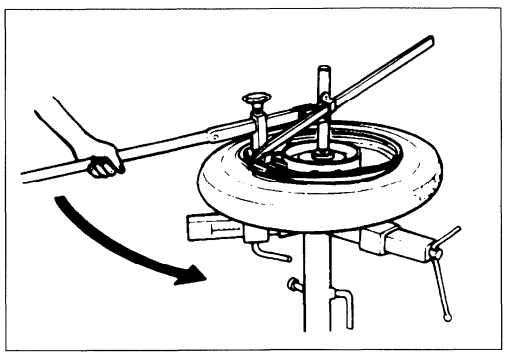

INSPECTION

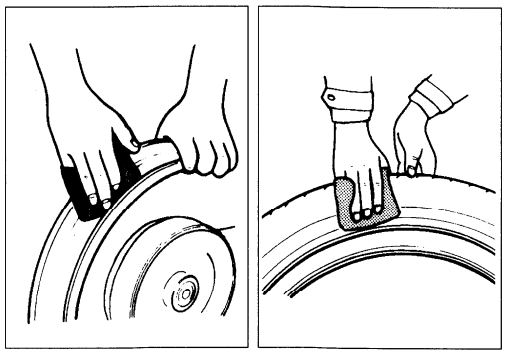

WHEEL

Wipe off any rubber substance or rust from the wheel, and inspect the wheel rim. If any one of the following items is observed, replace it with a new wheel.

* A distortion or crack.
* Any scratches or flaws in the bead seating area.
* Wheel runout (Axial & Radial) of more than 2.0 mm (0.08 in).

TIRE

Thoroughly inspect the removed tire, and if any one of the following items is observed, do not repair the tire. Replace with a new one.

* A puncture or a split whose total length or diameter exceeds 6.0 mm (0.24 in).
* A scratch or split at the side wall.
* Tread depth less than 1.6 mm (0.06 in) in the front tire and less than 2.0 mm (0.08 in) in the rear tire.

TOOL 09900-20805: Tire depth gauge

* Ply separation.
* Tread separation.
* Tread wear is extraordinarily deformed or distributed around the tire.
* Scratches at the bead.
* Cord is cut.
* Damage from skidding (flat spots).
* Abnormality in the inner liner.

NOTE:
When repairing a flat tire, follow the repair instructions and use only recommended repairing materials.

VALVE INSPECTION

Inspect the valve after the tire is removed from the rim, and replace with a new valve if the seal rubber has any splits or scratches.

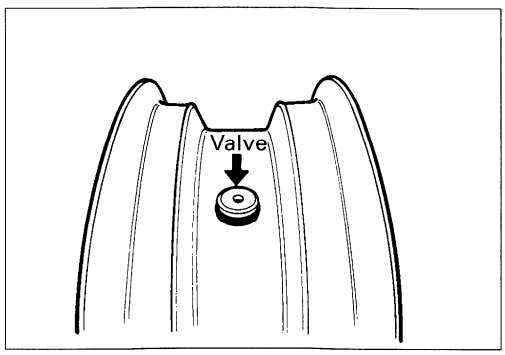

Inspect the removed valve core and replace with the new one if the seal is abnormally deformed or worn.

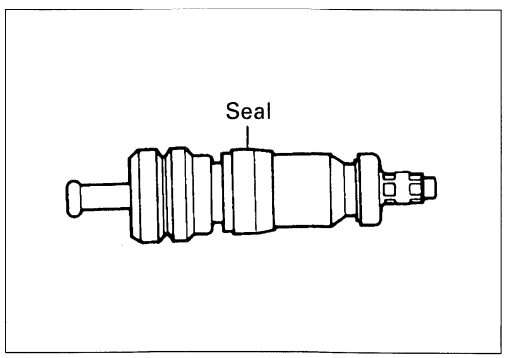

VALVE INSTALLATION

Any dust or rust around the valve hole must be cleaned off. Then install the valve in the rim.

NOTE:
To properly install the valve into the valve hole, apply a special tire lubricant or neutral soapy liquid to the valve.

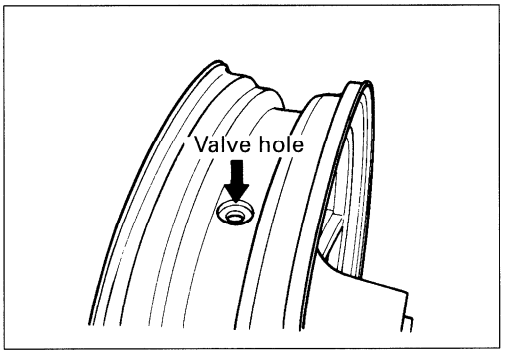

⚠ CAUTION

Be careful not to damage the lip of valve.

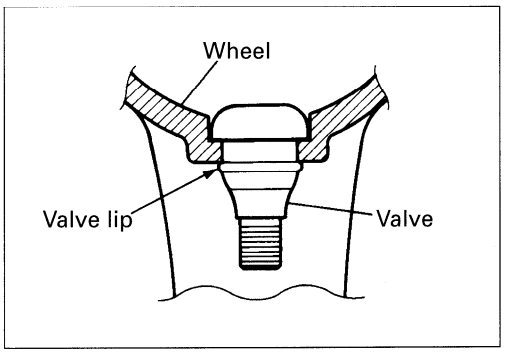

TIRE INSTALLATION

- Apply a special tire lubricant or neutral soapy liquid to the tire bead.

⚠ CAUTION

Never apply grease, oil or gasoline to the tire bead.

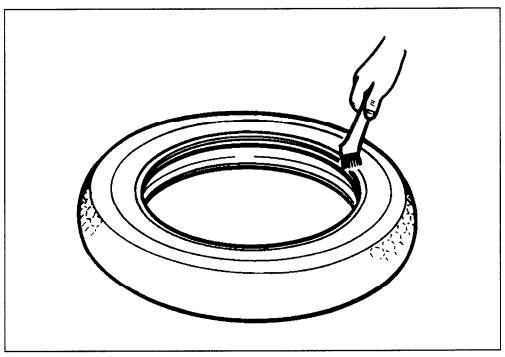

- When installing the tire, make certain that the directional arrow faces the direction of wheel rotation and align the balancing mark of the tire with the valve as shown.

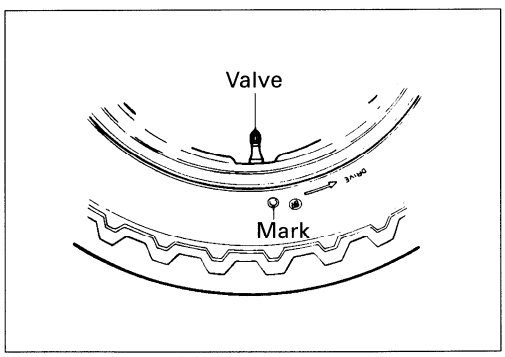

- Set the bead pushing roller ①.
- Rotate the operation arm around the rim to mount the bead completely. Do the bottom bead first, then the upper bead.
- Remove the wheel from the tire changer, and install the valve core in the valve stem.

NOTE:
Before installing the valve core, inspect the core.

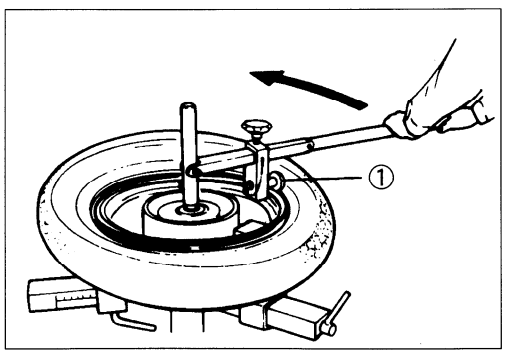

- Bounce the tire several times while rotating. This makes the tire bead expand outwards, and thus makes inflation easier.

NOTE:
Before inflating, confirm that the balance mark lines up with the valve stem.

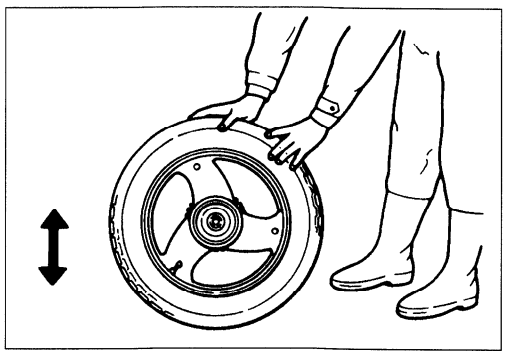

- Pump up the tire with air.

⚠WARNING

Do not inflate the tire to more than 400 kPa (4.0 kg/cm^2, 56 psi). The tire could burst with sufficient force to cause severe injury. Never stand directly over the tire while inflating it.

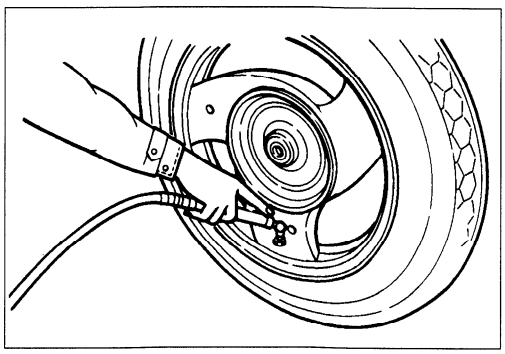

NOTE:
Check the "rim line" cast on the tire side walls. It must be equidistant from the wheel rim all the way around. If the distance between the rim line and wheel rim varies, this indicates that the bead is not properly seated. If this is so, deflate the tire completely, and unseat the bead for both sides. Coat the bead with lubricant, and try again.

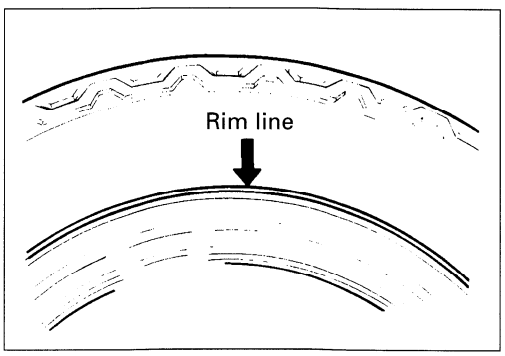

- After tire is properly seated to the wheel rim, adjust the air-pressure to the recommended pressure. Correct the wheel balance if necessary.

⚠WARNING

* **Do not run a repaired tire more than 50 km/h (30 mph) within 24 hours after tire repairing, since the patch may not be completely cured.**
* **Do not exceed 130 km/h (80 mph) with a repaired tire.**

TIRE PRESSURE

COLD INFLATION TIRE PRESSURE	SOLO RIDING			DUAL RIDING		
	kPa	kg/cm^2	psi	kPa	kg/cm^2	psi
FRONT	250	2.50	36	250	2.50	36
REAR	250	2.50	36	250	2.50	36

FRONT BRAKE

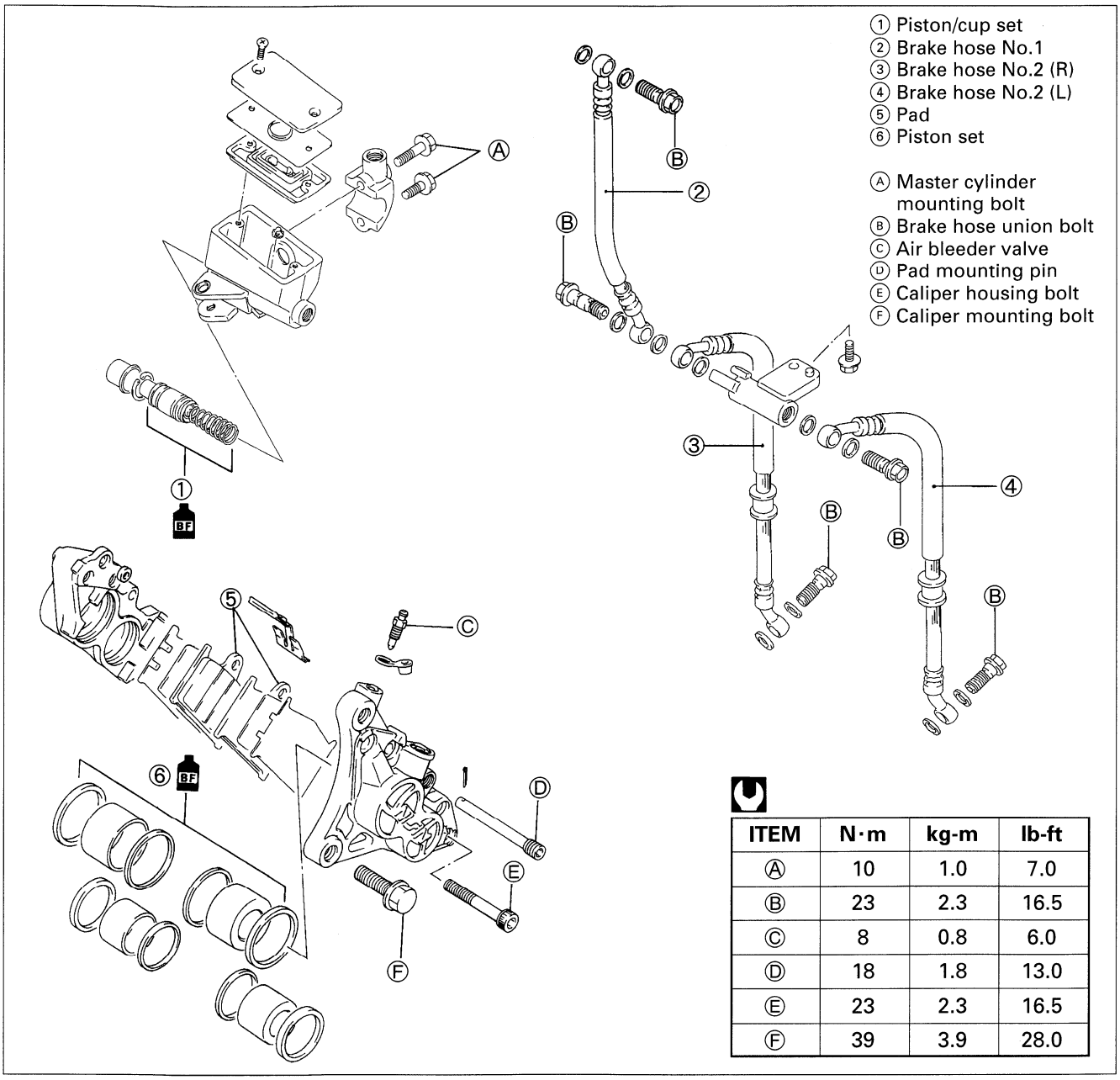

ITEM	N·m	kg-m	lb-ft
Ⓐ	10	1.0	7.0
Ⓑ	23	2.3	16.5
Ⓒ	8	0.8	6.0
Ⓓ	18	1.8	13.0
Ⓔ	23	2.3	16.5
Ⓕ	39	3.9	28.0

⚠ WARNING

* **This brake system is filled with a ethylene glycol-based DOT 4 brake fluid. Do not use or mix different types of fluid such as silicone-based or petroleum-based.**
* **Do not use any brake fluid taken from old, used or unsealed containers. Never reuse brake fluid left over from the last servicing or stored for long periods.**
* **When storing the brake fluid, seal the container completely and keep away from children.**
* **When replenishing brake fluid, take care not to get dust into fluid.**
* **When washing brake components, use fresh brake fluid. Never use cleaning solvent.**
* **A contaminated brake disc or brake pad reduces braking performance. Discard contaminated pads and clean the disc with high quality brake cleaner or neutral detergent.**

⚠ CAUTION

Handle brake fluid with care: the fluid reacts chemically with paint, plastics, rubber materials etc.

BRAKE PAD REPLACEMENT

- Remove the brake pads by removing the clip ①, pad mounting pin ② and spring ③.

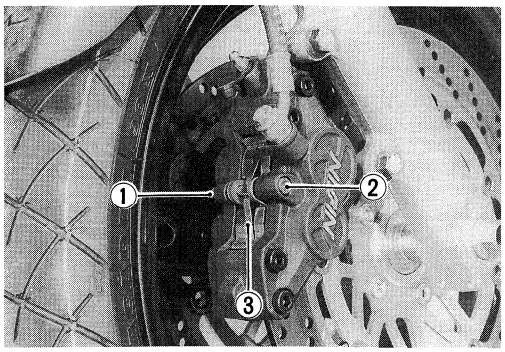

⚠ CAUTION

> * **Do not operate the brake lever while dismounting the pads.**
> * **Replace the brake pads as a set, otherwise braking performance will be adversely affected.**

- Remount the new pads.

NOTE:
After replacing the brake pads, pump with the brake lever few times to operate the brake correctly and then check the brake fluid level.

BRAKE FLUID REPLACEMENT

- Place the motorcycle on a level surface and keep the handlebars straight.
- Remove the master cylinder reservoir cap ① and diaphragm ②.
- Suck up the old brake fluid as much as possible.
- Fill the reservoir with fresh brake fluid.

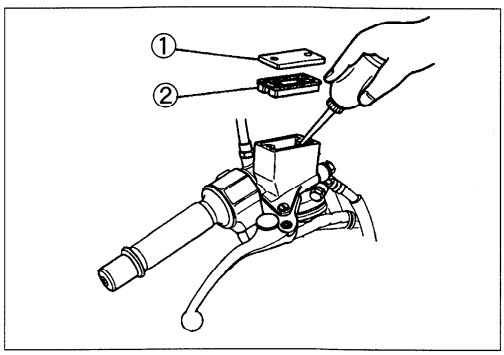

BF Specification and Classification: DOT 4

- Connect a clear hose ③ to the air bleeder valve ④, and insert the free end of hose into a receptacle.

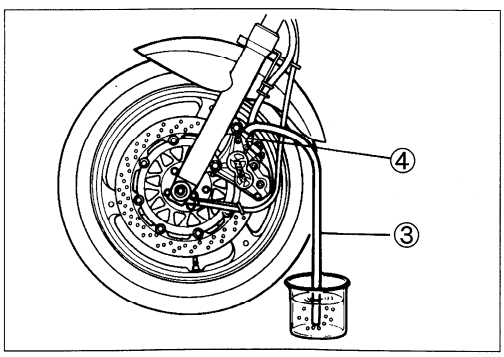

- Loosen the bleeder valve and pump the brake lever until no more old brake fluid flows out of the bleeder valve.
- Close the air bleeder valve, and disconnect a clear hose. Fill the reservoir with fresh brake fluid to the upper end of the inspection window.

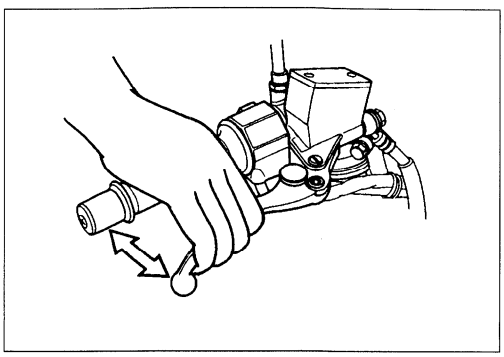

⚠ CAUTION

> **Bleed air in the brake fluid circuit. (Refer to page 2-15.)**

CALIPER REMOVAL AND DISASSEMBLY

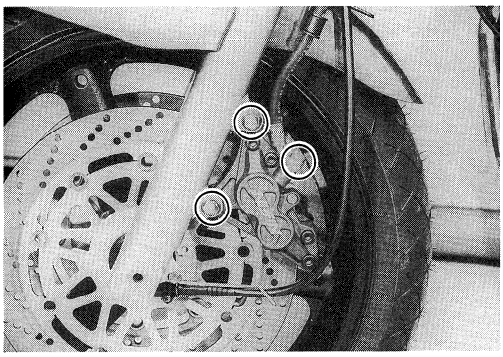

- Disconnect the brake hose from the caliper by removing the union bolt and catch the brake fluid in a suitable receptacle.
- Remove the brake caliper by removing the caliper mounting bolts.

⚠ CAUTION

Never reuse the brake fluid left over from previous servicing and stored for long periods.

⚠ WARNING

Brake fluid, if it leaks, will interfere with safe running and discolor painted surfaces. Check the brake hose and hose joints for cracks and fluid leakage.

NOTE:
Slightly loosen the caliper housing bolts ① to facilitate later disassembly before removing the caliper mounting bolts.

- Remove the pads. (Refer to page 5-16.)
- Remove the caliper housing bolts ①.

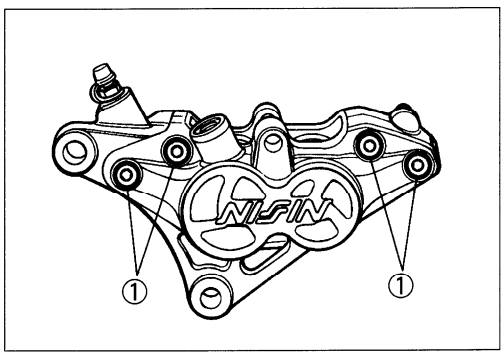

- Separate the caliper halves.
- Remove the O-rings ②.

⚠ CAUTION

Do not reuse the O-ring to prevent fluid leakage.

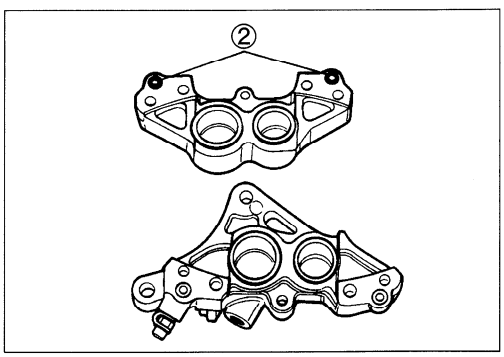

- Place a rag over the piston to prevent its popping out and push out the pistons with an air gun.

⚠ CAUTION

Do not use high pressure air to prevent piston damage.

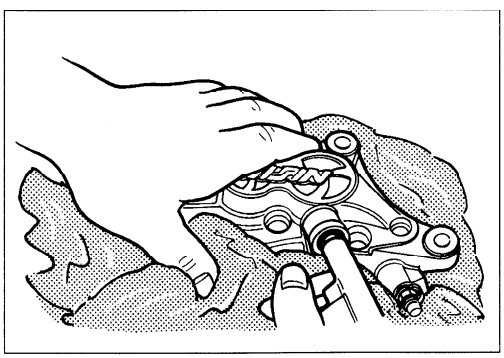

- Remove the dust seals and piston seals.

⚠ CAUTION

Do not reuse the dust seals and piston seals to prevent fluid leakage.

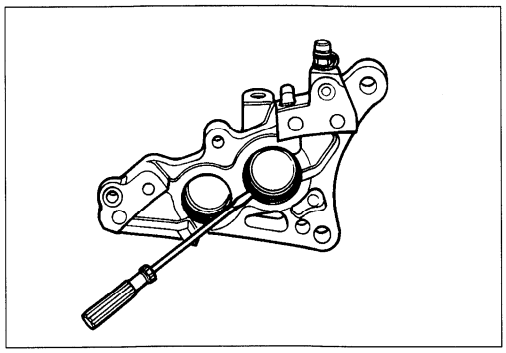

CALIPER INSPECTION

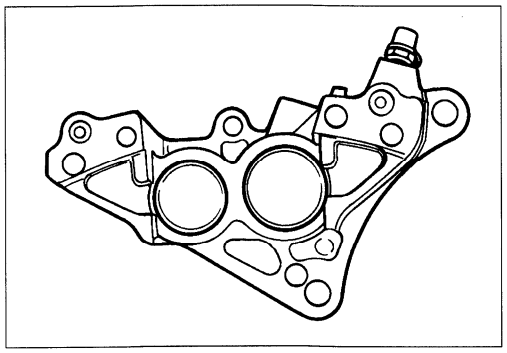

CALIPER

Inspect the caliper cylinder wall for nicks, scratches or other damage.

PISTON

Inspect the piston surface for any scratches or other damage.

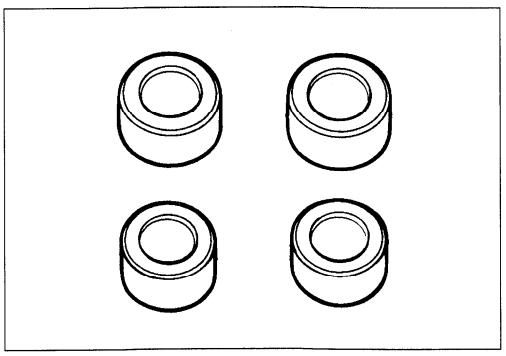

CALIPER REASSEMBLY AND REMOUNTING

Reassemble the caliper in the reverse order of removal and disassembly. Pay attention to the following points:

- Wash the caliper bores and pistons with specified brake fluid. Particularly wash the dust seal grooves and piston seal grooves.

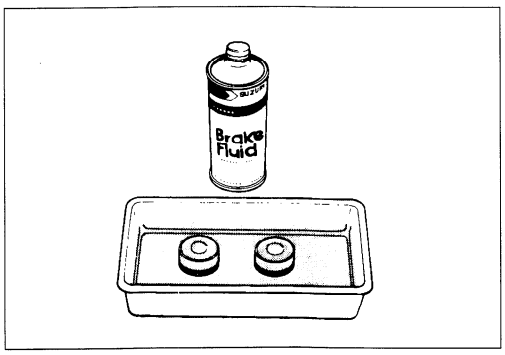

BF Specification and Classification: DOT 4

⚠ CAUTION

- **Wash the caliper components with fresh brake fluid before reassembly.**
- **Do not wipe the brake fluid off after washing the components.**
- **When washing the components, use the specified brake fluid. Never use different types of fluid or cleaning solvent such as gasoline, kerosine or the others.**
- **Replace the piston seals and dust seals with new ones when reassembly. Apply the brake fluid to both seals when installing them.**

- Tighten each bolt to the specified torque.

Caliper mounting bolt ① : 39 N·m (3.9 kg-m, 28.0 lb-ft)
Caliper housing bolt ② : 23 N·m (2.3 kg-m, 16.5 lb-ft)
Pads mounting pin ③ : 18 N·m (1.8 kg-m, 13.0 lb-ft)
Brake hose union bolt ④ : 23 N·m (2.3 kg-m, 16.5 lb-ft)

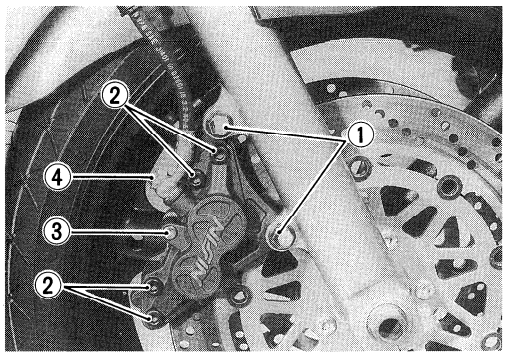

NOTE:
Before remounting the caliper, push the piston all the way into the caliper.

⚠ CAUTION

Bleed air from the system after reassembling the caliper. (Refer to page 2-15.)

BRAKE DISC INSPECTION

- Remove the front and rear wheels. (Refer to pages 5-5 and 5-36.)

Visually check the brake disc for damage or cracks.
Measure the thickness with a micrometer
Replace the disc if the thickness is less than the service limit or if damage is found.

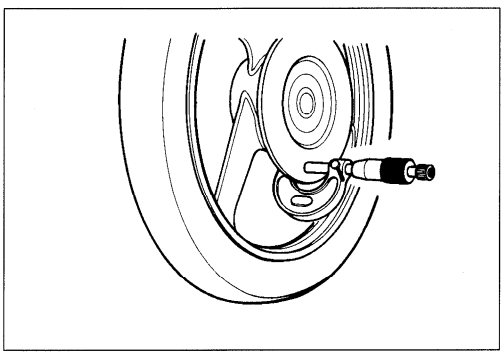

Service Limit
Front disc: 4.0 mm (0.16 in)
Rear disc: 4.5 mm (0.18 in)

TOOL 09900-20205: Micrometer (0–25 mm)

Measure the runout with a dial gauge.
Replace the disc if the runout exceeds the service limit.

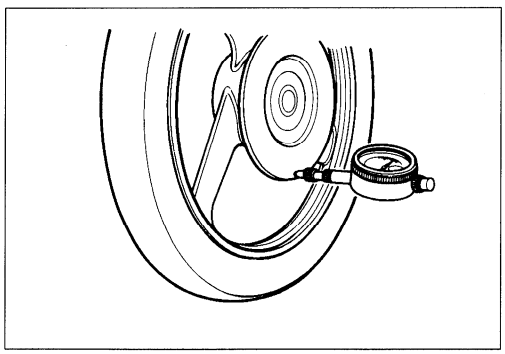

Service Limit
Front and Rear disc: 0.3 mm (0.012 in)

TOOL 09900-20606: Dial gauge (1/100 mm)
09900-20701: Magnetic stand

Replacement of the brake disc
- Remove the disc. (Refer to pages 5-6 and 5-37.)
- Install the disc. (Refer to pages 5-7 and 5-39.)

MASTER CYLINDER REMOVAL AND DISASSEMBLY

- Place a rag underneath the union bolt on the master cylinder to catch any spilled drops of brake fluid. Remove the union bolt and disconnect the brake hose/master cylinder joint.

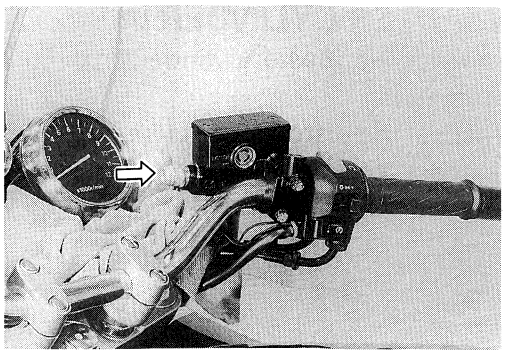

⚠ CAUTION

Immediately and completely wipe off any brake fluid contacting any part of the motorcycle. The fluid reacts chemically with paint, plastics and rubber materials, etc. and will damage them severely.

- Disconnect the front brake switch lead wires.
- Remove the master cylinder assembly.

- Remove the brake lever ① and brake light switch ②.

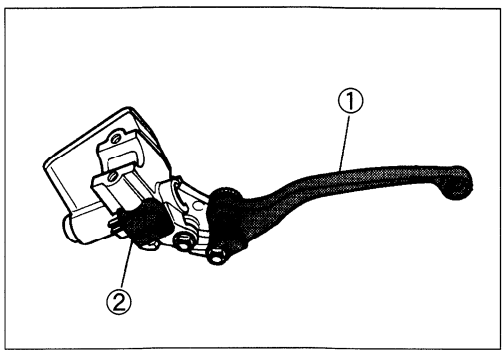

- Remove the reservoir cap and diaphragm.
- Drain brake fluid.

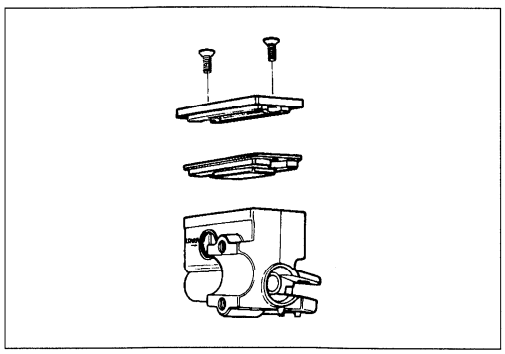

- Remove the circlip after removing the boot.

TOOL 09900-06108: Snap ring pliers

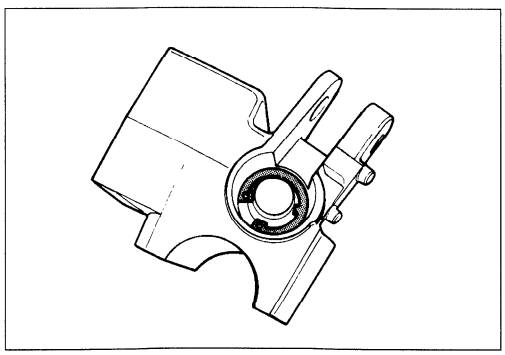

- Remove the piston/secondary cup, primary cup and spring.

③ Secondary cup
④ Piston
⑤ Primary cup
⑥ Return spring

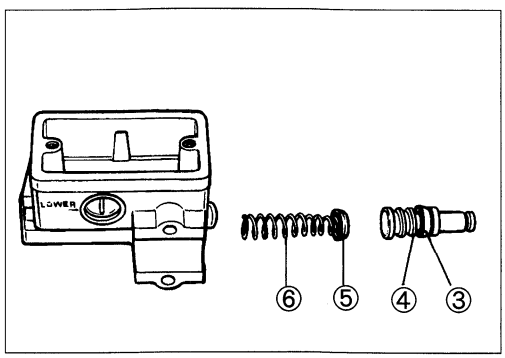

MASTER CYLINDER INSPECTION

Inspect the master cylinder bore for any scratches or other damage.
Inspect the piston surface for any scratches or other damage.
Inspect the primary cup, secondary cup and dust seal for wear or damage.

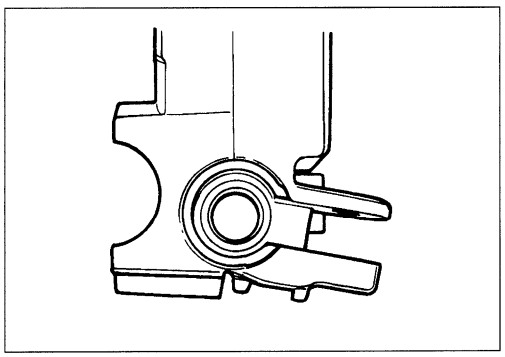

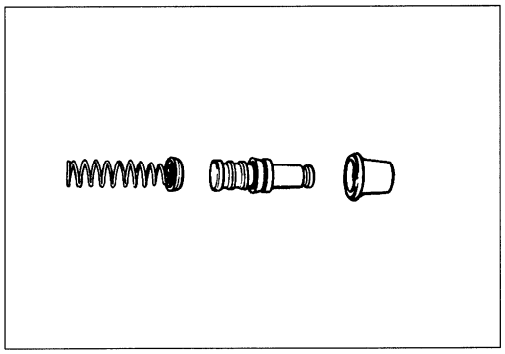

MASTER CYLINDER REASSEMBLY AND REMOUNTING

Reassemble the master cylinder in the reverse order of removal and disassembly. Pay attention to the following points:

▲ CAUTION

- **Wash the master cylinder components with fresh brake fluid before reassembly. Never use cleaning solvent or gasoline to wash them.**
- **Do not wipe the components with a rag.**
- **Apply brake fluid to the cylinder bore and all the component to be inserted into the bore.**

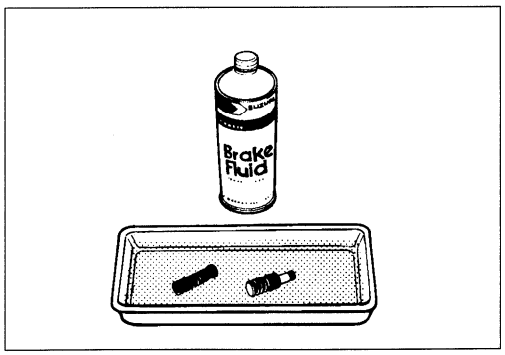

BF Specification and Classification: DOT 4

- When remounting the master cylinder on the handlebars, align the master cylinder holder's mating surface ① with punched mark ② on the handlebars and tighten the upper clamp bolt first as shown in the illustration.

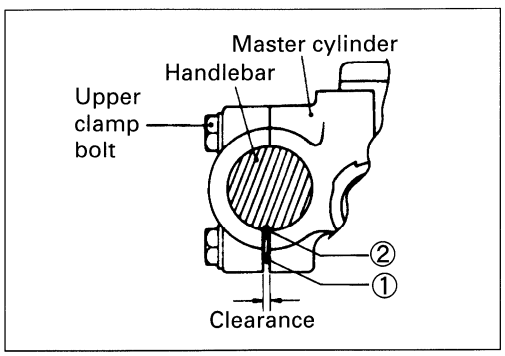

Front brake master cylinder mounting bolt ③: 10 N·m (1.0 kg-m, 7.0 lb-ft)

- Tighten the brake hose union bolt ④ to the specified torque.

Brake hose union bolt: 23 N·m (2.3 kg-m, 16.5 lb-ft)

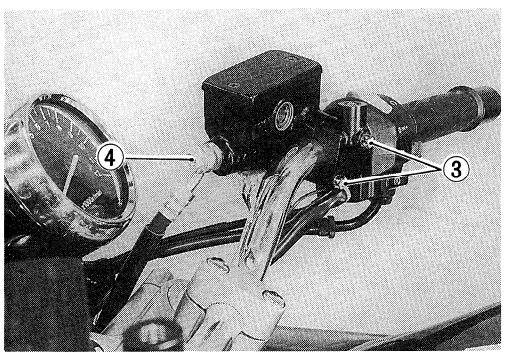

▲ CAUTION

Bleed air from the system after reassembling master cylinder. (Refer to page 2-15.)

FRONT FORK

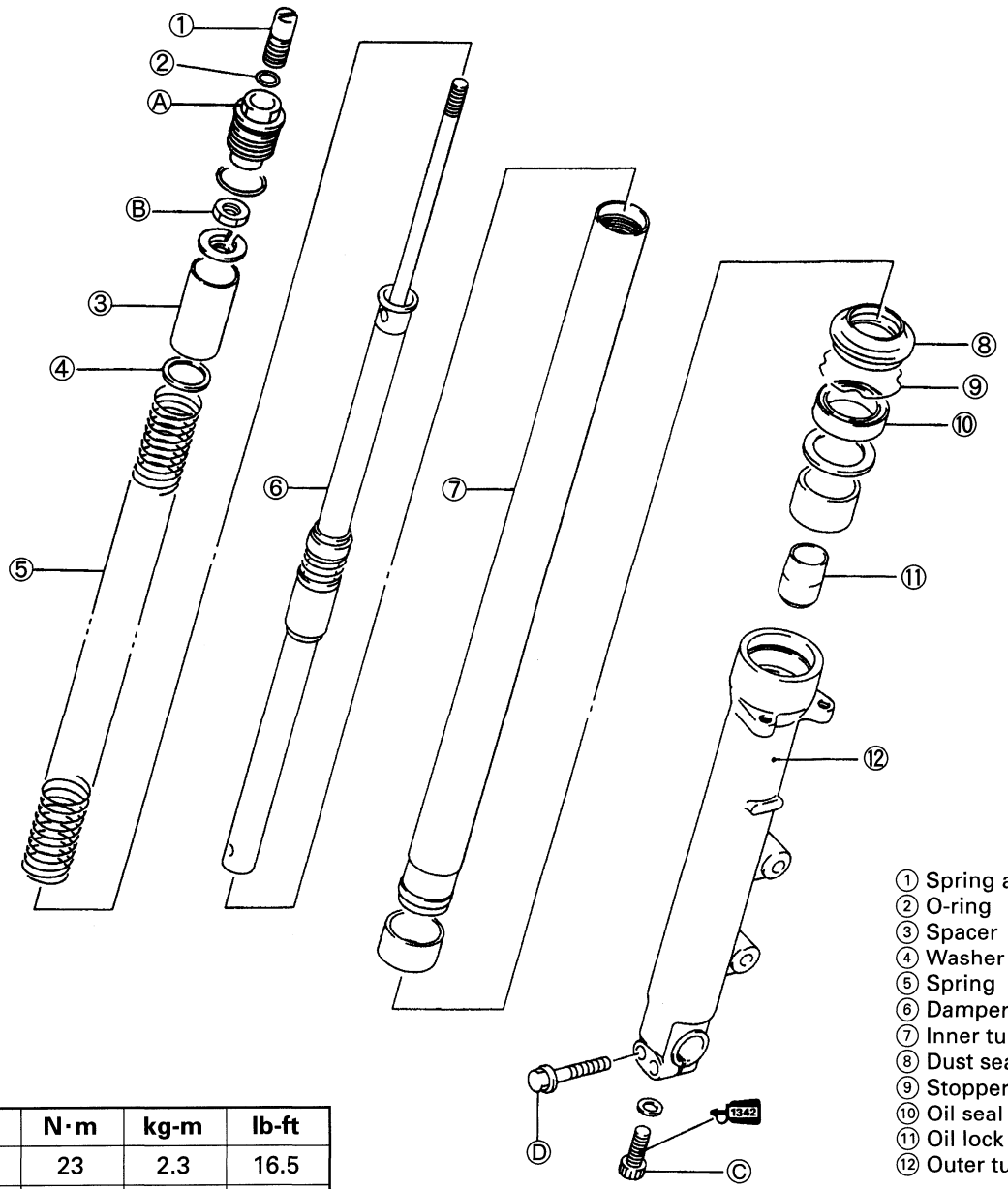

ITEM	N·m	kg-m	lb-ft
Ⓐ	23	2.3	16.5
Ⓑ	20	2.0	14.5
Ⓒ	20	2.0	14.5
Ⓓ	23	2.3	16.5

① Spring adjuster
② O-ring
③ Spacer
④ Washer
⑤ Spring
⑥ Damper
⑦ Inner tube
⑧ Dust seal
⑨ Stopper ring
⑩ Oil seal
⑪ Oil lock piece
⑫ Outer tube

Ⓐ Cap bolt
Ⓑ Inner rod lock nut
Ⓒ Damper rod bolt
Ⓓ Axle pinch bolt

REMOVAL AND DISASSEMBLY

- Remove the right and left side fairings. (Refer to page 5-2.)
- Remove the front wheel. (Refer to page 5-5.)
- Remove the front fender by removing the four screws ①.
- Remove the front fender brace by removing the four screws ②.

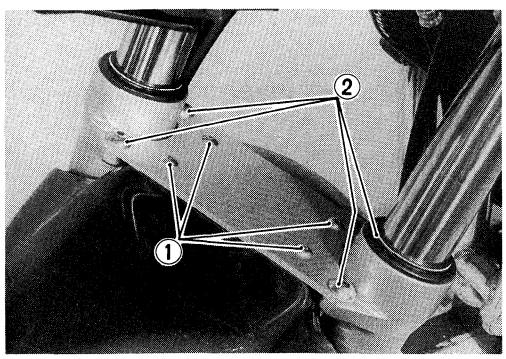

- Remove the speedometer cable guide.

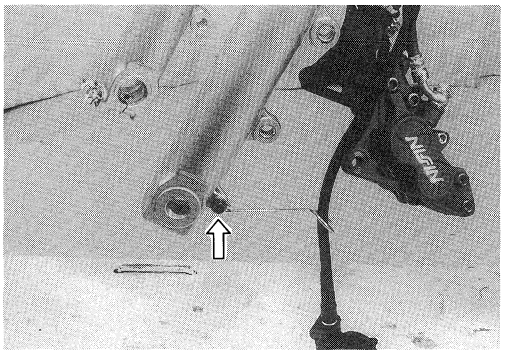

- Remove the front fork after loosening the front fork upper and lower clamp bolts.

NOTE:
Slightly loosen the front fork cap bolt to facilitate later disassembly.

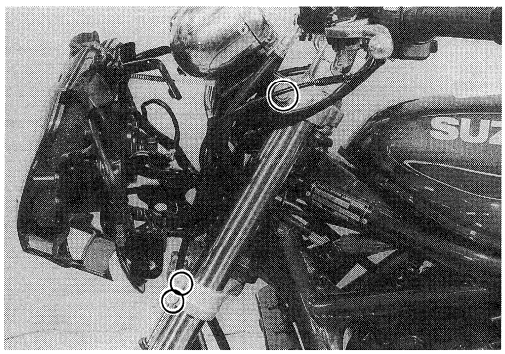

- Remove the front fork cap bolt with spring adjuster ① by loosening the inner rod lock nut ②.
- Remove the spacer seat ③.

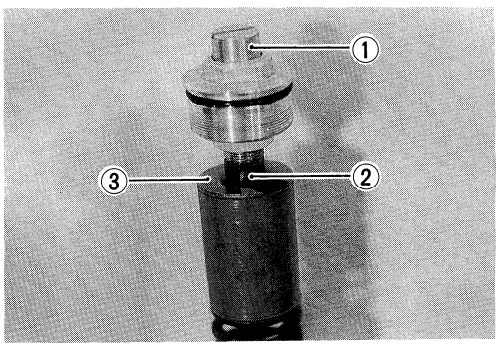

- Remove the spacer, washer and spring.

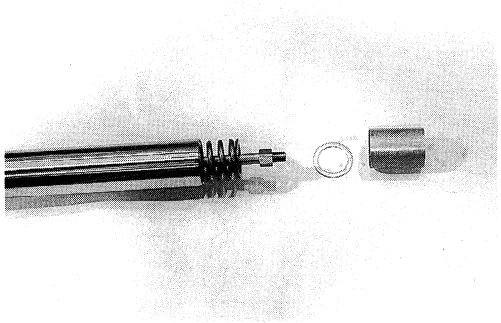

- Invert the fork and stroke it several times to drain out fork oil.
- Hold the fork inverted for a few-minutes to drain oil.

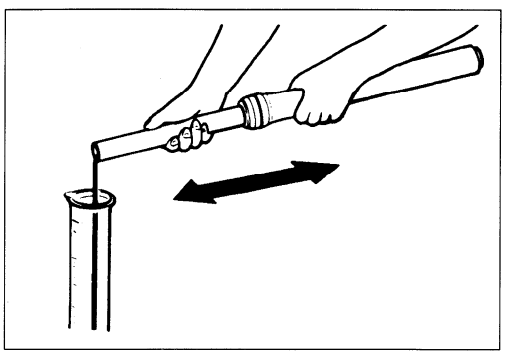

- Remove the damper rod bolt with a 6-mm hexagon wrench.
- Remove the inner rod cylinder.

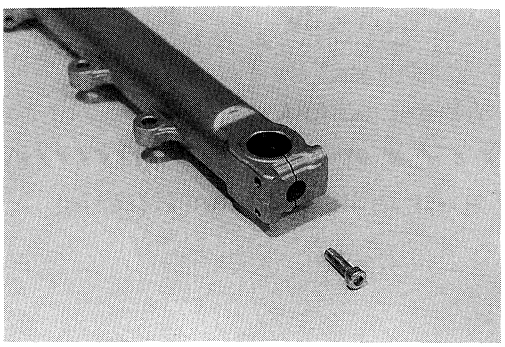

- Remove the dust seal ① and stopper ring ②.

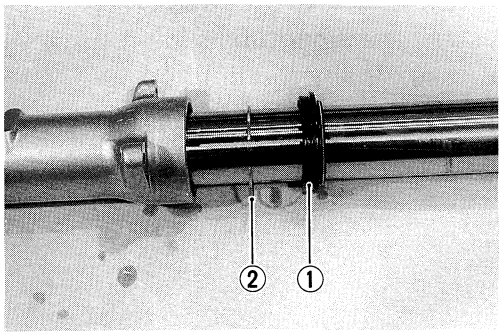

- Remove the oil seal by slowly pulling out the inner tube.

NOTE:
Be careful not to damage the inside of the tube.

⚠ CAUTION

The outer tube and inner tube "ANTI-FRICTION" metals must be replaced along with oil seal and dust seal, when assembling the front fork.

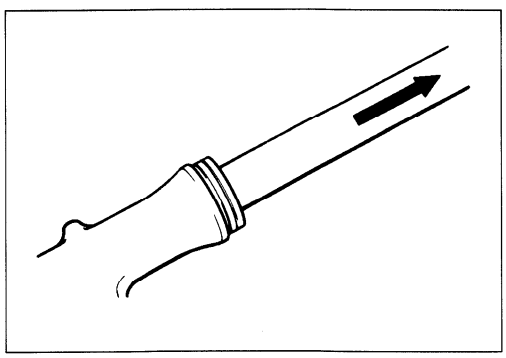

- Remove the oil lock piece.

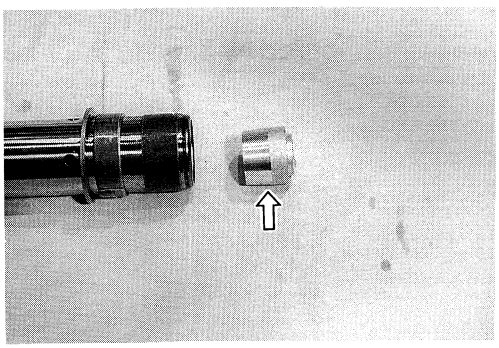

INSPECTION

FORK SPRING

Measure the fork spring free length. If it is shorter than the service limit, replace it with a new one.

Service Limit: 362.1 mm (14.26 in)

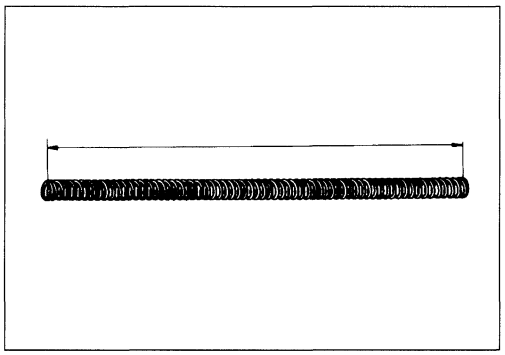

INNER AND OUTER TUBE

Inspect the inner tube sliding surface and outer tube sliding surface for any scuffing.

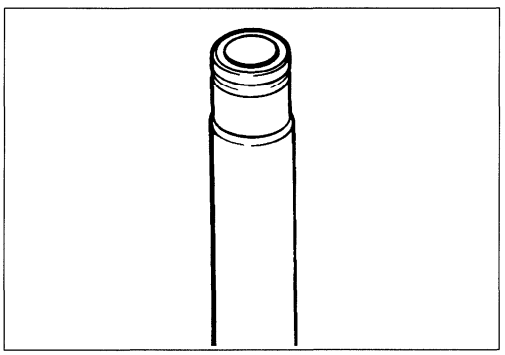

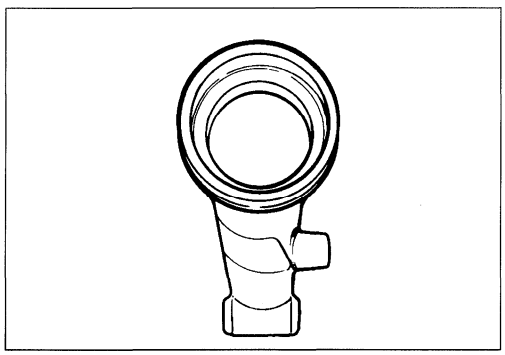

DAMPER ROD

Move the inner rod by hand to inspect it if operating smoothly.

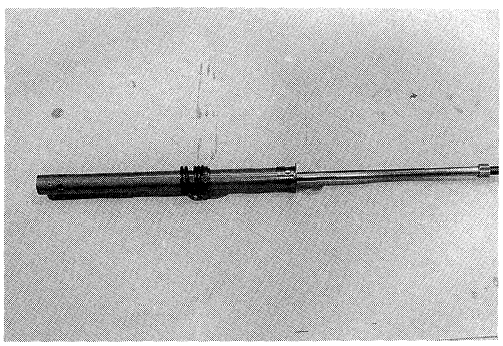

REASSEMBLY AND REMOUNTING

Reassemble and remount the front fork in the reverse order of removal and disassembly. Pay attention to the following points:

TUBE METALS AND SEALS

- Hold the inner tube vertically and clean the metal groove and install the ANTI-FRICTION metal by hand as shown.

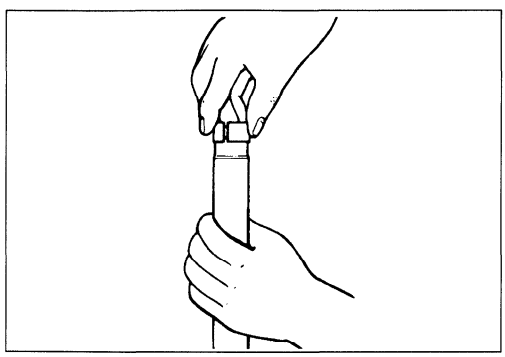

- Install the outer tube metal ① , washer ② and oil seal ③ with the special tool.

TOOL 09940-52860: Front fork oil seal installer

⚠ CAUTION

Use special care to prevent damage to the "Teflon" coated surface of the Anti-friction metal when mounting it.

- Install the oil seal stopper ring ④ .

⚠ CAUTION

Make sure that the oil seal stopper ring fitted securely.

- Install the dust seal ⑤.

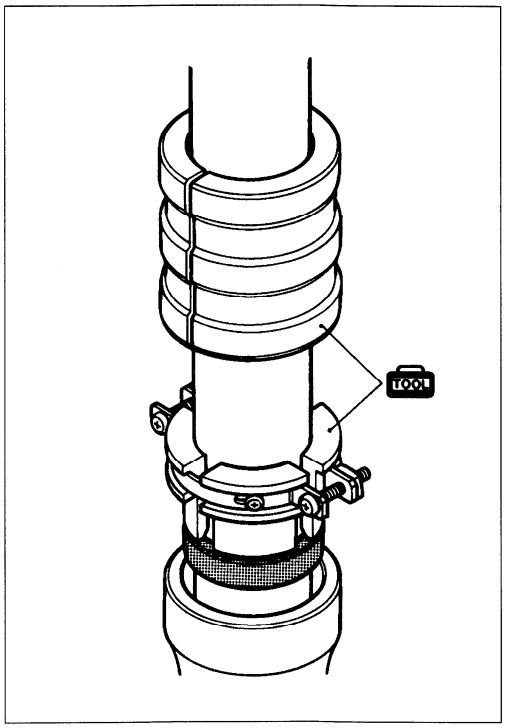

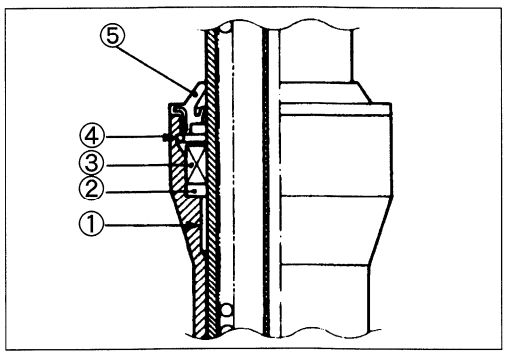

DAMPER ROD BOLT

Apply THREAD LOCK "1342" to the damper rod bolt and tighten it to the specified torque with a 6-mm hexagon wrench and special tools.

1342 99000-32050: THREAD LOCK "1342"

Damper rod bolt: 20 N·m (2.0 kg-m, 14.5 lb-ft)

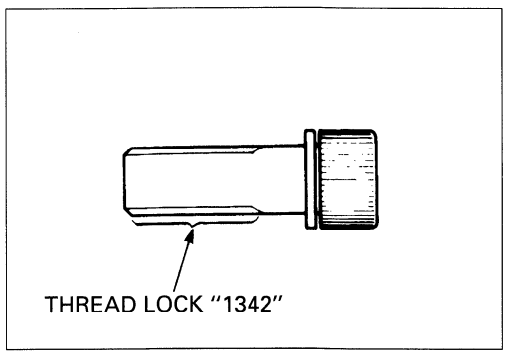

FORK OIL

- Pour specified fork oil into the inner tube.

FORK Fork oil type: Fork oil #10
99000-99044-10G: SUZUKI FORK OIL #10

Capacity (each leg): 516 ml (17.4/18.2 US/Imp oz)

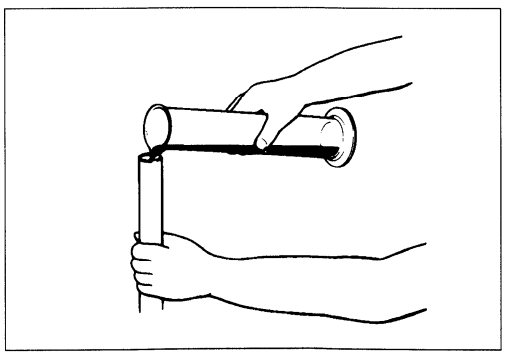

- Hold the front fork vertical and adjust the fork oil level with the special tool.

TOOL 09943-74111: Fork oil level gauge

Oil level: 99 mm (3.9 in)

NOTE:
When adjusting the oil level, remove the fork spring and compress the inner tube fully.

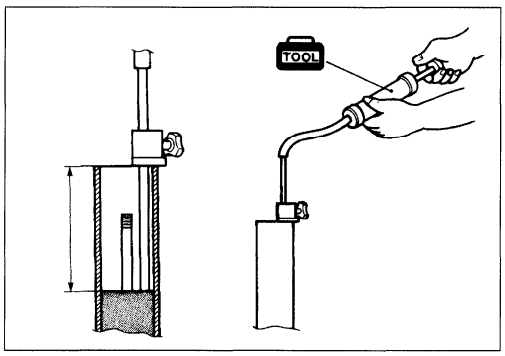

FORK SPRING

- Install the fork spring as shown in the illustration.

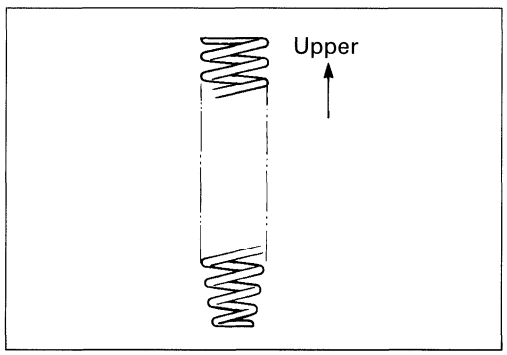

INNER ROD AND LOCK NUT

- Install the special tool and pull up the inner rod.

TOOL 09940-52840: Front fork inner rod holder

NOTE:
Before installing the front fork cap, turn the inner rod lock nut ① to the lower position as shown in the photograph.

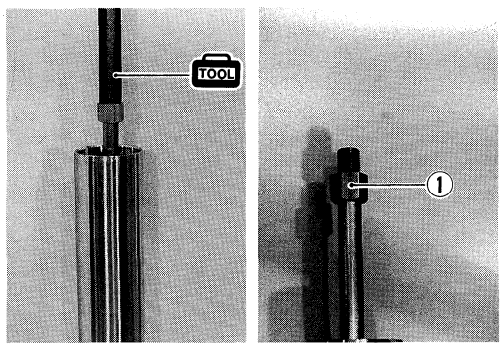

- Tighten the front fork spring adjuster with finger, and tighten the lock nut to the specified torque.

Lock nut: 20 N·m (2.0 kg-m, 14.5 lb-ft)

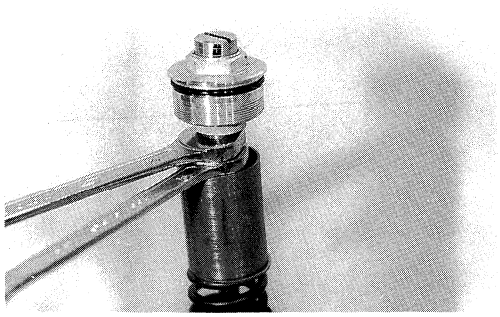

- When remounting the front fork assembly, align the upper surface ② of the inner tube with the upper surface ③ of the steering stem upper bracket.

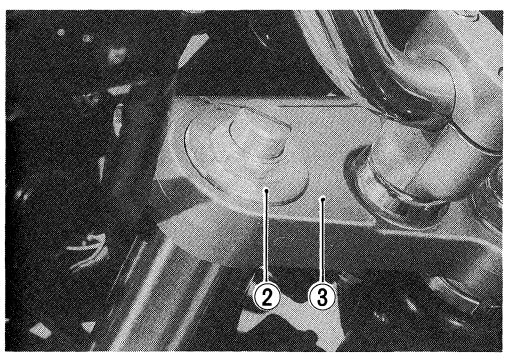

- Tighten the bolts to the specified torque.

ITEM	N·m	kg-m	lb-ft
① Fork lower clamp bolt	23	2.3	16.5
② Fork cap bolt	23	2.3	16.5
③ Fork upper clamp bolt	23	2.3	16.5

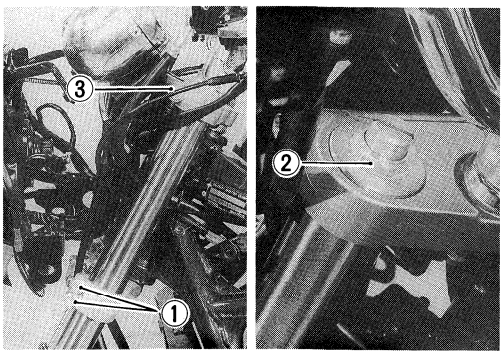

- Install the front fender brace and tighten the mounting screws ④ with finger.
- Install the front wheel. (Refer to page 5-8.)
- Securely tighten the fender brace mounting screws ④.

NOTE:
Before tightening the fender brace mounting screws, move the front fork up and down 4 or 5 times.

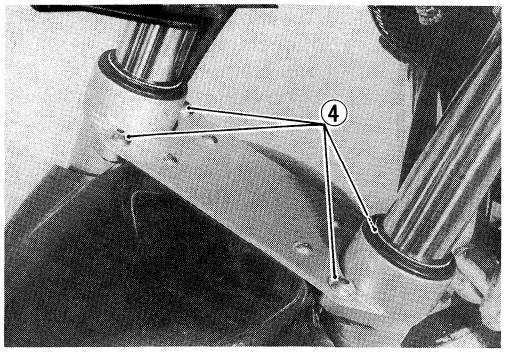

SUSPENSION SETTING

After installing the front fork, adjust the spring pre-load as follows.

SPRING PRE-LOAD ADJUSTMENT

There are four grooved lines on the side of the spring adjuster. Position 0 provides the maximum spring pre-load and position 5 provides the minimum spring pre-load.
(STD position: "3")

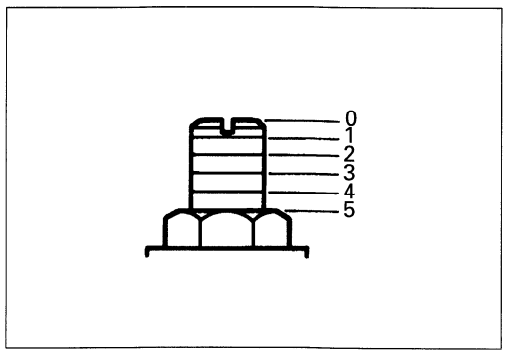

⚠ WARNING

Be sure to adjust the spring pre-load on both front fork legs equally.

STEERING

① Steering stem
② Bearing
③ Bearing
④ Dust seal
⑤ Steering stem nut
⑥ Steering stem upper bracket
⑦ Washer
⑧ Handlebar holder
⑨ Cushion damper rubber
⑩ Handlebar holder bolt

Ⓐ Steering stem head nut
Ⓑ Front fork upper clamp bolt
Ⓒ Front fork lower clamp bolt
Ⓓ Handlebar clamp bolt
Ⓔ Handlebar holder nut

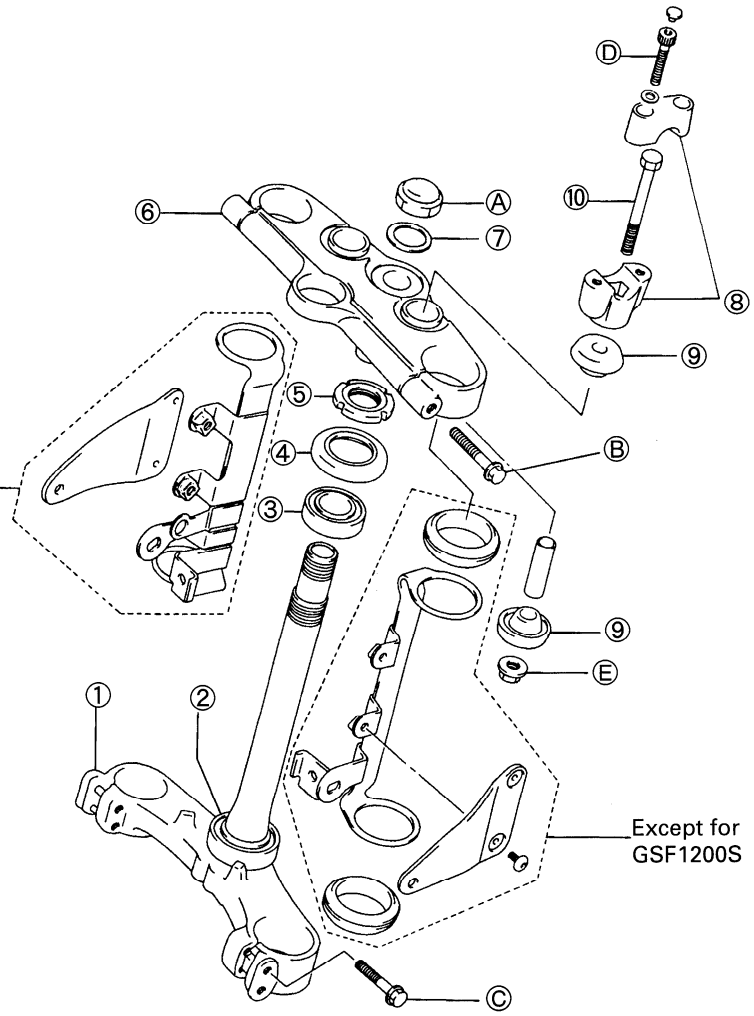

ITEM	N·m	kg-m	lb-ft
Ⓐ	65	6.5	47.0
Ⓑ	23	2.3	16.5
Ⓒ	23	2.3	16.5
Ⓓ	23	2.3	16.5
Ⓔ	45	4.5	32.5

REMOVAL AND DISASSEMBLY

GSF1200

- Remove the front wheel. (Refer to page 5-5.)
- Remove the front fork. (Refer to page 5-22.)
- Remove the headlight and disconnect the lead wire couplers.

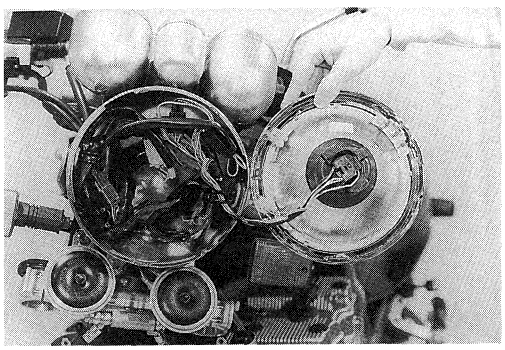

- Remove the headlight housing ①, turn signal lights ② and housing brackets ③.

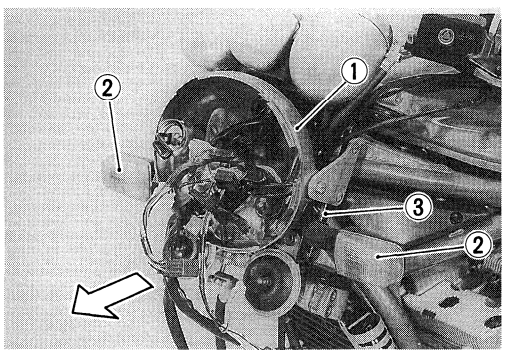

GSF1200S

- Remove the fairing and fairing brace. (Refer to page 5-2.)
- Remove the front wheel. (Refer to page 5-5.)
- Remove the front fork. (Refer to page 5-22.)

GSF1200 and GSF1200S

- Remove the clamp ①.
- Remove the speedometer cable and speedometer.

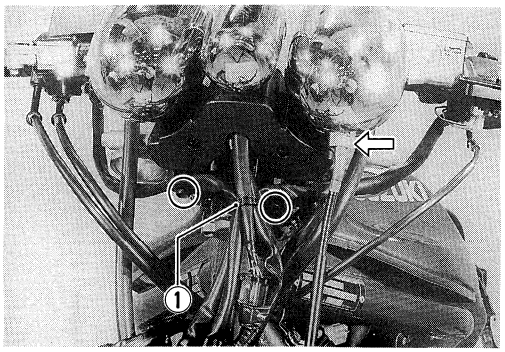

- Remove the right and left handlebar switches.
- Remove the throttle cables and starter cable from the throttle grip and starter lever.

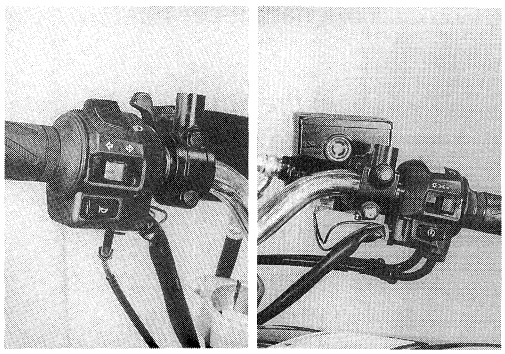

- Remove the front brake master cylinder with brake hose and calipers.

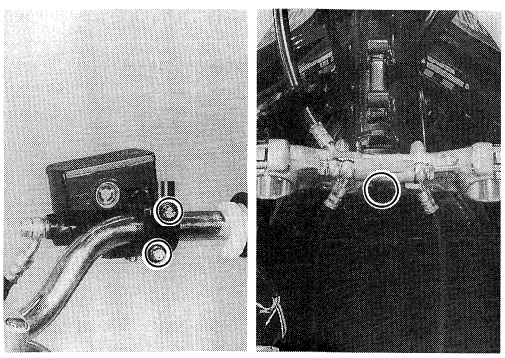

- Remove the clutch master cylinder.

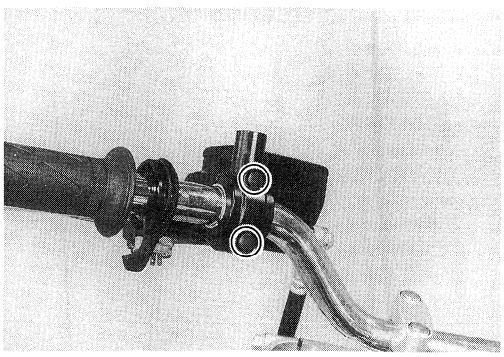

- Remove the handlebars by removing the clamp bolt caps and clamp bolts.

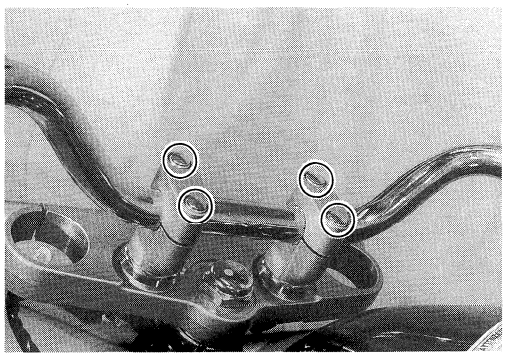

- Disconnect the ignition switch lead wire coupler.
- Remove the steering stem upper bracket by removing the nut.

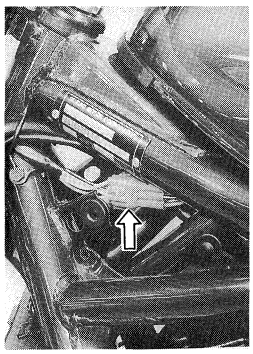

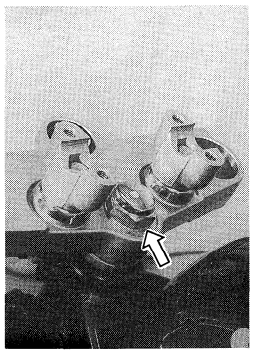

- Remove the handlebar holders by removing the nuts ①.

NOTE:
Slightly loosen the nuts ① to facilitate later disassembly before removing the steering stem upper bracket.

- Remove the ignition switch by removing the bolts ② with the special tools.

TOOL 09930-11920: Torx bit JT40H
09930-11940: Bit holder

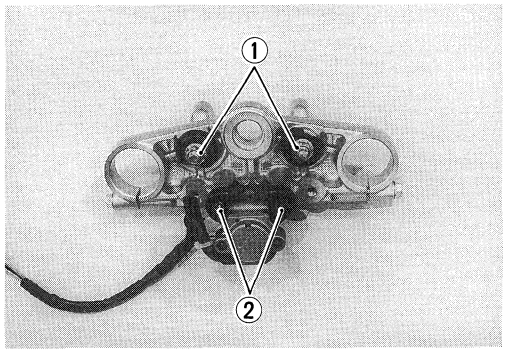

- Remove the steering stem nut with the special tool.

TOOL 09940-14911: Steering stem nut wrench

- Draw out the steering stem lower bracket.

NOTE:
Hold the steering stem lower bracket by hand to prevent it from falling.

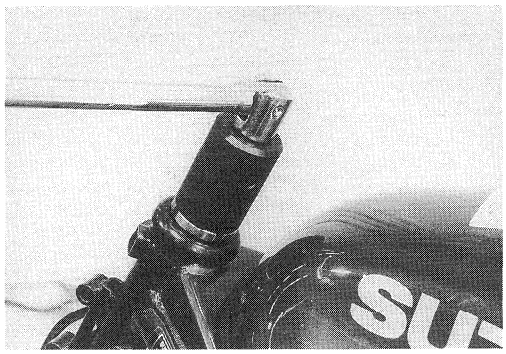

- Remove the steering stem upper bearing.

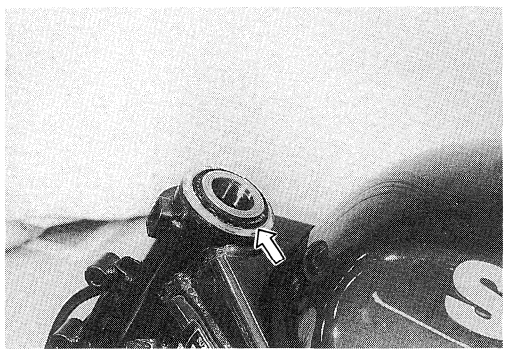

INSPECTION AND DISASSEMBLY

Inspect the removed parts for the following abnormalities.

* Handlebars distortion
* Race wear and brinelling
* Bearing wear or damage
* Abnormal noise of bearing
* Distortion of steering stem

- Remove the steering stem lower bearing with a chisel.

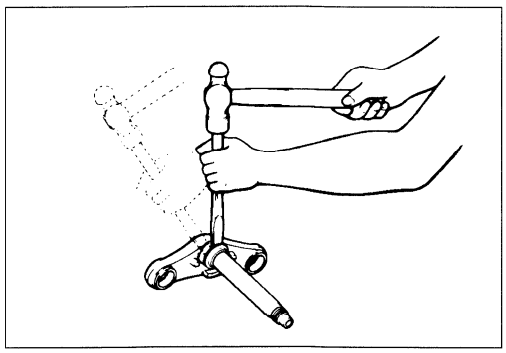

⚠ CAUTION

The removed bearing should be replaced with a new one.

- Drive out the steering stem bearing races, upper and lower with the special tools.

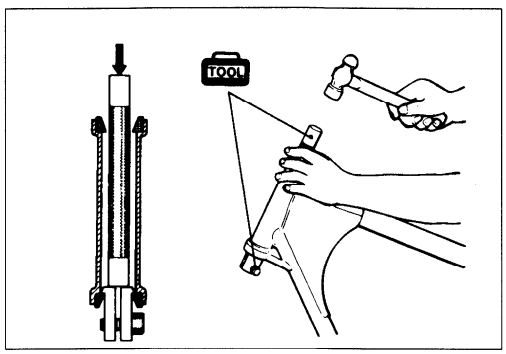

TOOL 09941-54911: Bearing outer race remover
09941-74910: Steering bearing installer

REASSEMBLY AND REMOUNTING

Reassemble and remount the steering stem in the reverse order of removal and disassembly. Pay attention to the following points:

OUTER RACE

- Press in the upper and lower outer races with the special tool.

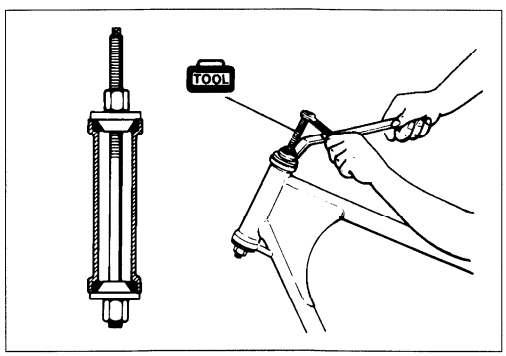

TOOL 09941-34513: Steering outer race installer

BEARING

- Press in the lower bearing with the special tool.

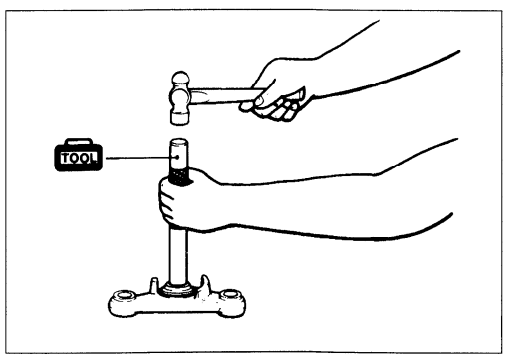

TOOL 09941-74910: Steering bearing installer

- Apply grease to the upper and lower bearings before remounting the steering stem.

99000-25010: SUZUKI SUPER GREASE "A"

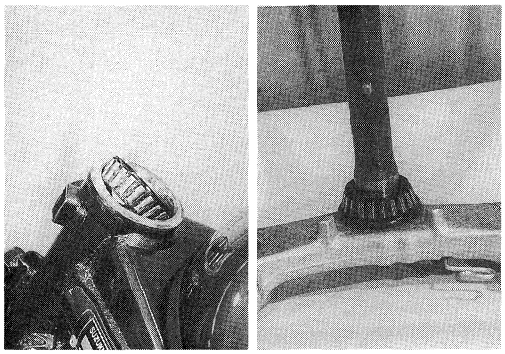

STEERING STEM NUT

- Tighten the steering stem nut to the specified torque.

09940-14911: Steering stem nut wrench

Stem nut: 45 N·m (4.5 kg-m, 32.5 lb-ft)

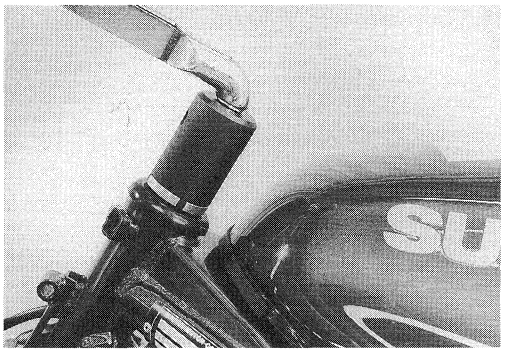

- Turn the steering stem lower bracket about five or six times to the left and right so that the taper roller bearing will be seated properly.
- Turn back the stem nut by 1/4–1/2 turn.

NOTE:
This adjustment will vary from motorcycle to motorcycle.

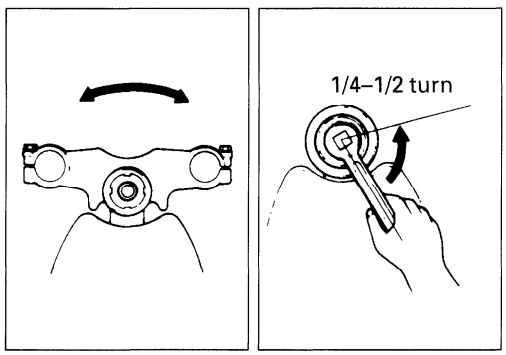

- Tighten the steering stem head nut to the specified torque.

Steering stem head nut: 65 N·m (6.5 kg-m, 47.0 lb-ft)

NOTE:
Before tighten the steering stem head nut, install the front forks temporarily.

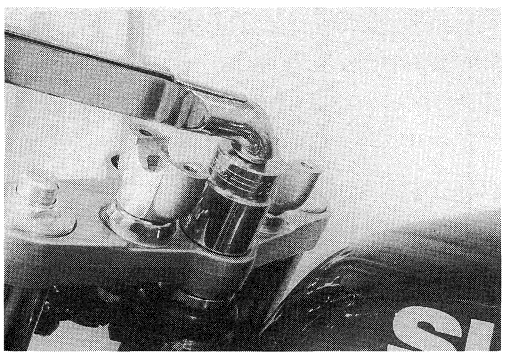

- Tighten the handlebar holder nuts to the specified torque.

Handlebar holder nut: 45 N·m (4.5 kg-m, 32.5 lb-ft)

NOTE:
Before tightening the handlebar holder nuts, install the handlebars temporarily.

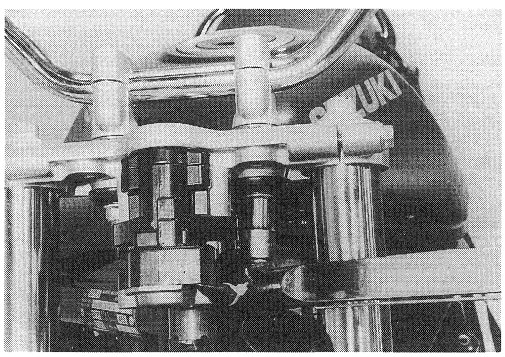

HANDLEBARS

- Set the handlebars to match its punched mark to the matting face of the handlebar clamps as shown in the photograph.

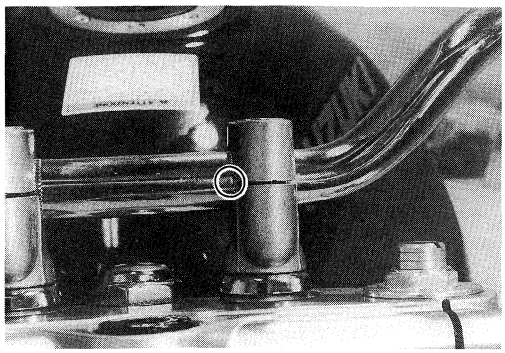

- Secure each handlebar clamp in such a way that the clearances Ⓐ ahead and behind the handlebars are equalized.

Handlebar clamp bolt: 23 N·m (2.3 kg-m, 16.5 lb-ft)

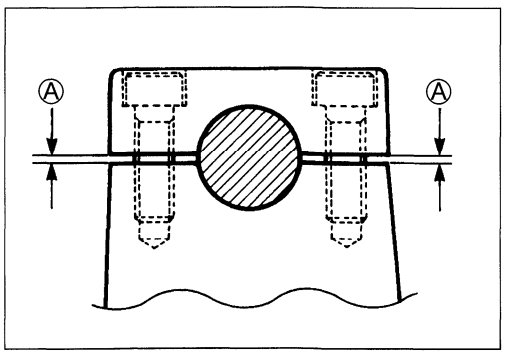

- Apply grease to the throttle grip ① and starter lever ② before installing the inner cables.

99000-25010: SUZUKI SUPER GREASE "A"

- Installing the front brake master cylinder. (Refer to page 5-21.)

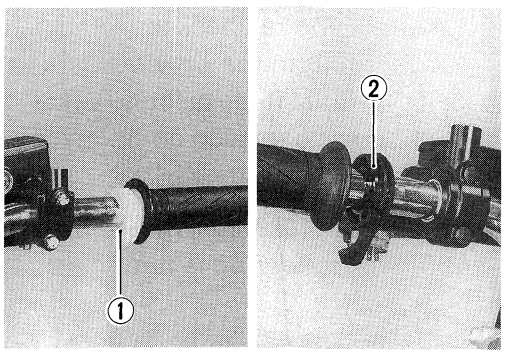

- Align the punched mark ③ with slit ④ of clutch master cylinder spacer.

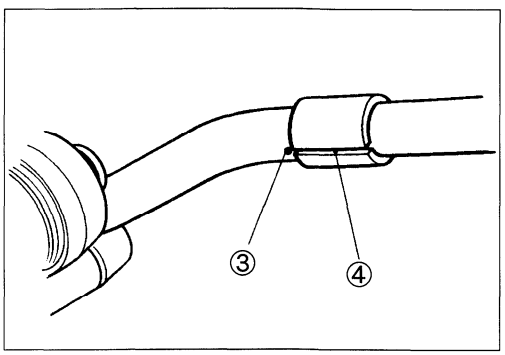

- When installing the clutch master cylinder, align the master cylinder holder's mating surface ⑤ with slit ④ of spacer and tighten the bolt to the specified torque.

Clutch master cylinder bolt:
10 N·m (1.0 kg-m, 7.0 lb-ft)

- Adjust the throttle cable play. (Refer to page 2-9.)

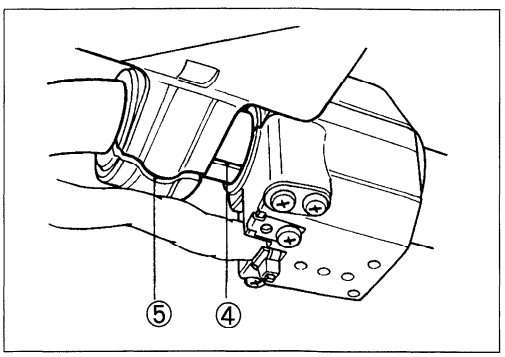

STEERING TENSION ADJUSTMENT

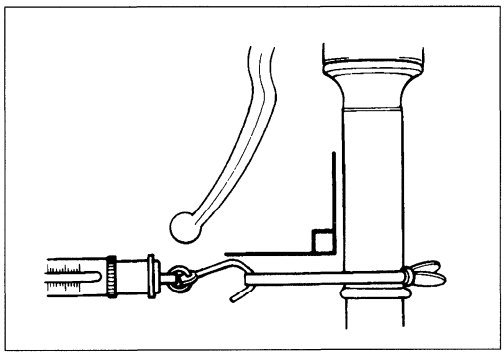

Check the steering movement in the following procedure.

- By supporting the motorcycle with a jack, lift the front wheel until it is off the floor by 20–30 mm (0.8–1.2 in).
- Check to make sure that the cables and wire harnesses are properly routed.
- With the front wheel in the straight ahead state, hitch the spring scale (special tool) on one handlebar grip end as shown in the figure and read the graduation when the handlebars starts moving. Do the same on the other grip end.

Initial force: 200–500 grams

TOOL 09940-92710: Spring scale

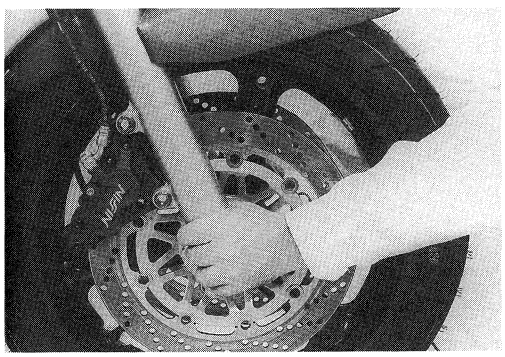

- If the initial force read on the scale when the handlebars starts turning is either too heavy or too light, adjust it till it satisfies the specification.
  1) First, loosen the front fork upper clamp bolts and steering stem head nut, and then adjust the steering stem nut by loosening or tightening it.
  2) Tighten the head nut and clamp bolts to the specified torque and re-check the initial force with the spring scale according to the previously described procedure.
  3) If the initial force is found within the specified range, adjustment has been completed.

NOTE:
Hold the front fork legs, move them back and forth and make sure that the steering is not loose.

REAR WHEEL

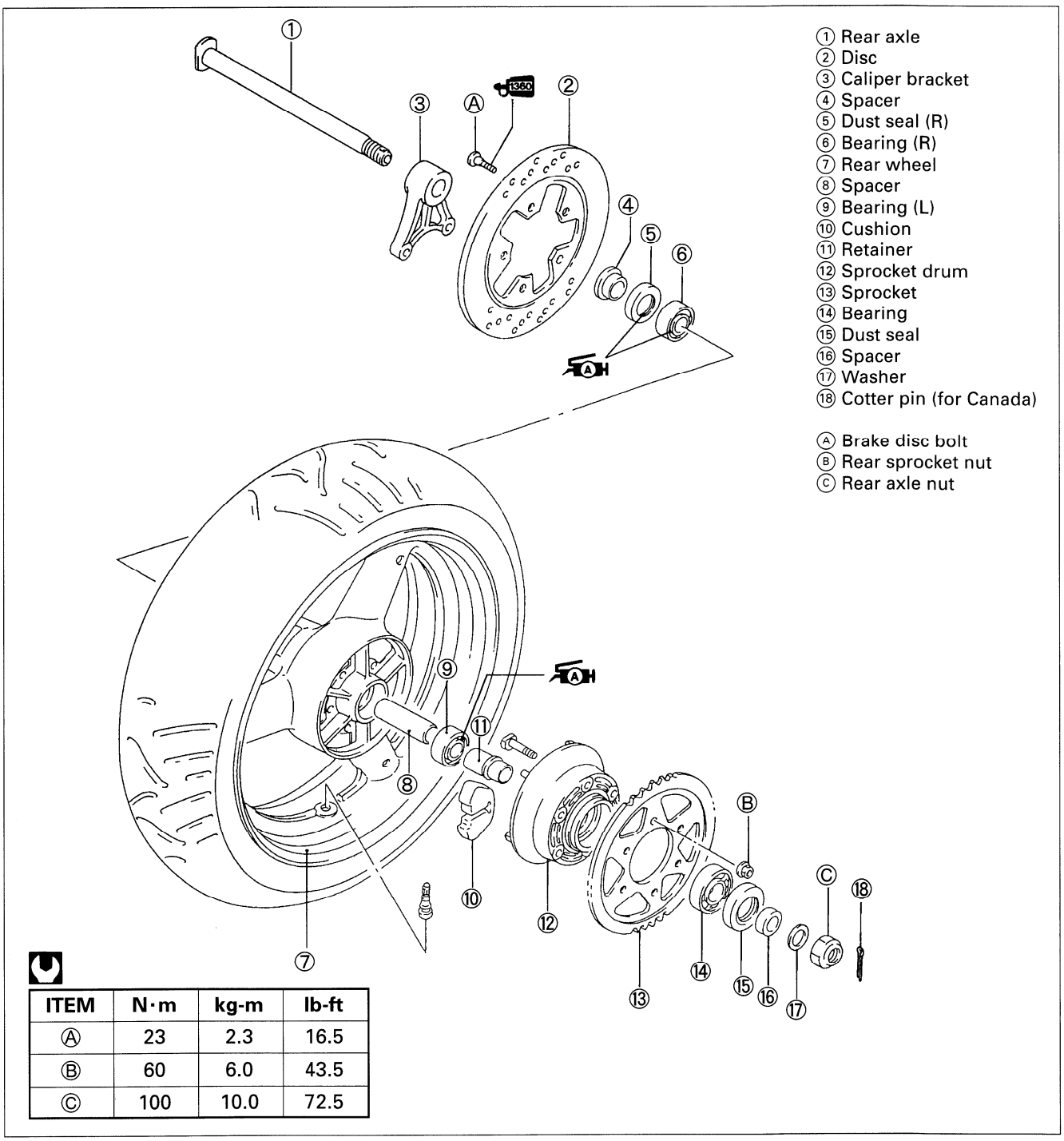

ITEM	N·m	kg-m	lb-ft
Ⓐ	23	2.3	16.5
Ⓑ	60	6.0	43.5
Ⓒ	100	10.0	72.5

REMOVAL

- Support the motorcycle with center stand.
- Remove the chain case and cotter pin (For Canadian model).
- Remove the axle nut and rear axle.
- Remove the rear wheel by disengaging the drive chain.

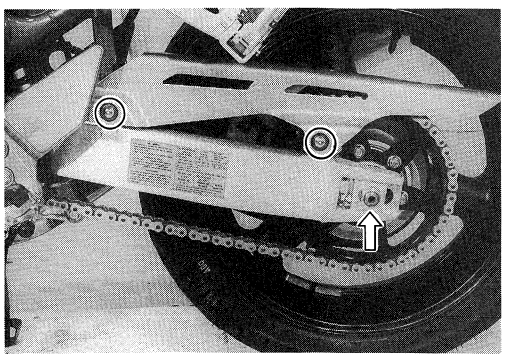

⚠ CAUTION

Do not operate the brake pedal while dismounting the rear wheel.

- Draw out the rear sprocket mounting drum from the wheel.

NOTE:
Slightly loosen the rear sprocket mounting nuts to facilitate later disassembly before separate the mounting drum.

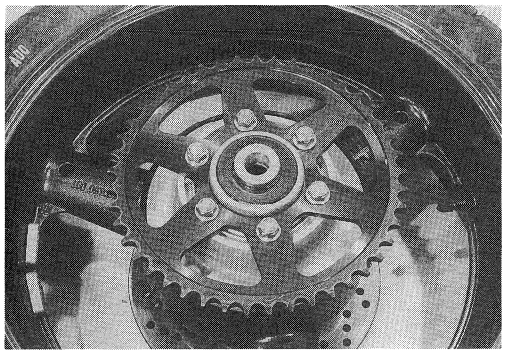

- Remove the rear sprocket ① from its mounting drum.
- Remove the spacer ② and dust seal ③ .

⚠ CAUTION

The removed dust seal should be replaced with a new one.

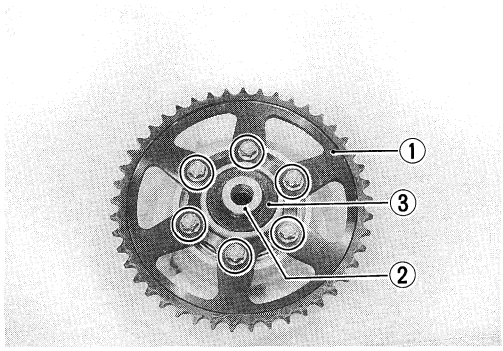

- Remove the drum retainer, draw out the sprocket mounting drum bearing ④ using an appropriate tool.

⚠ CAUTION

The removed bearing should be replaced with a new one.

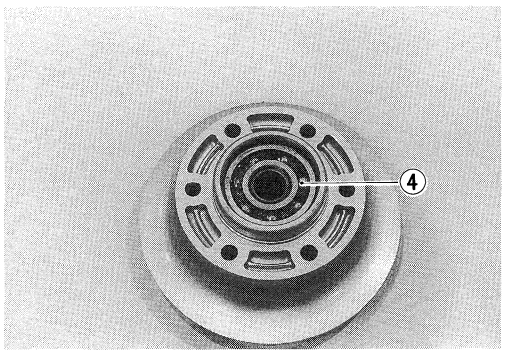

- Remove the cushions.

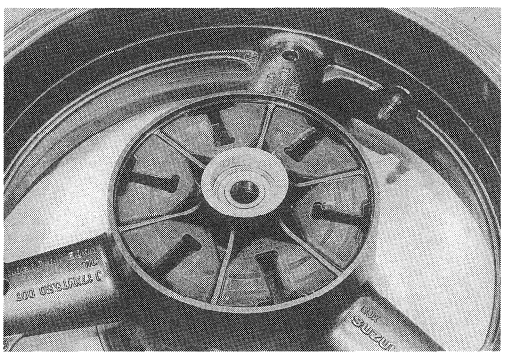

- Remove the brake disc from the wheel.

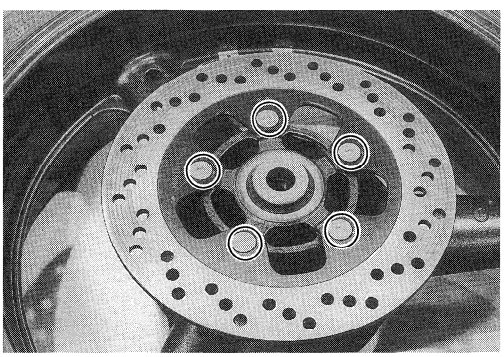

INSPECTION AND DISASSEMBLY

TIRE ..... **Refer to page 5-10.**
REAR WHEEL ..... **Refer to page 5-6.**
WHEEL BEARING ..... **Refer to page 5-6.**

REAR AXLE

Using a dial gauge, check the rear axle for runout.
If the runout exceeds the limit, replace the rear axle.

Service Limit: 0.25 mm (0.010 in)

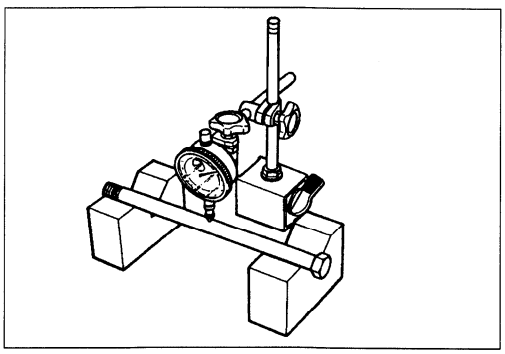

CUSHION

Inspect the cushion for wear and damage.

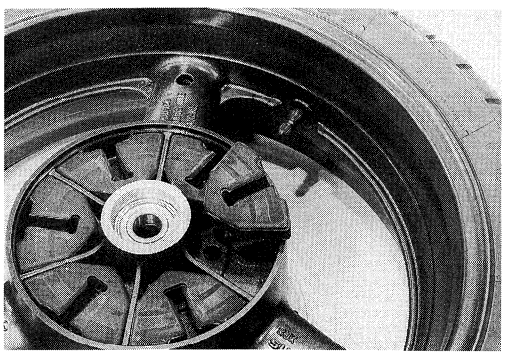

SPROCKET

Inspect the sprocket teeth for wear. If they are worn as shown, replace the sprockets and drive chain as a set.

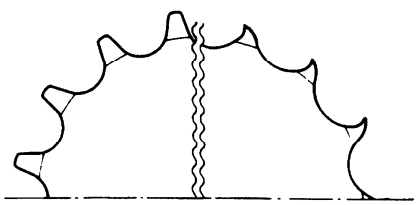

REASSEMBLY AND REMOUNTING

Reassemble and remount the rear wheel in the reverse order of removal and disassembly. Pay attention to the following points:

WHEEL BEARING

- Apply grease to the bearings before installing.

99000-25010: SUZUKI SUPER GREASE "A"

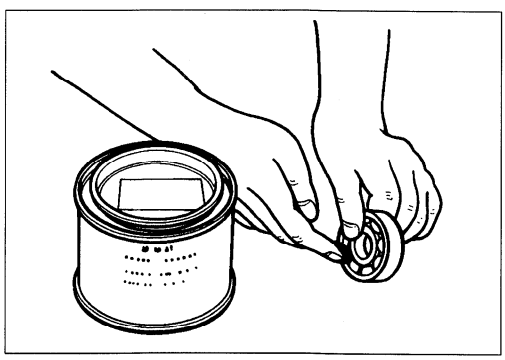

- Install the wheel bearings with the special tool.

TOOL 09941-34513: Bearing installer set

NOTE:
First install the right wheel bearing, then install the left wheel bearing.

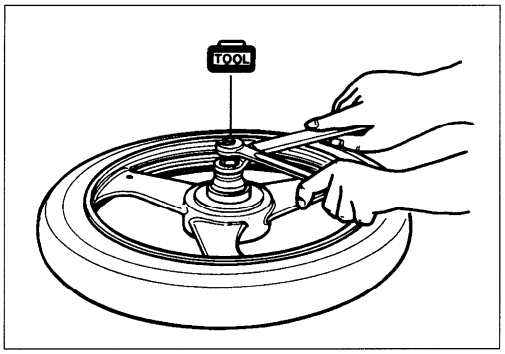

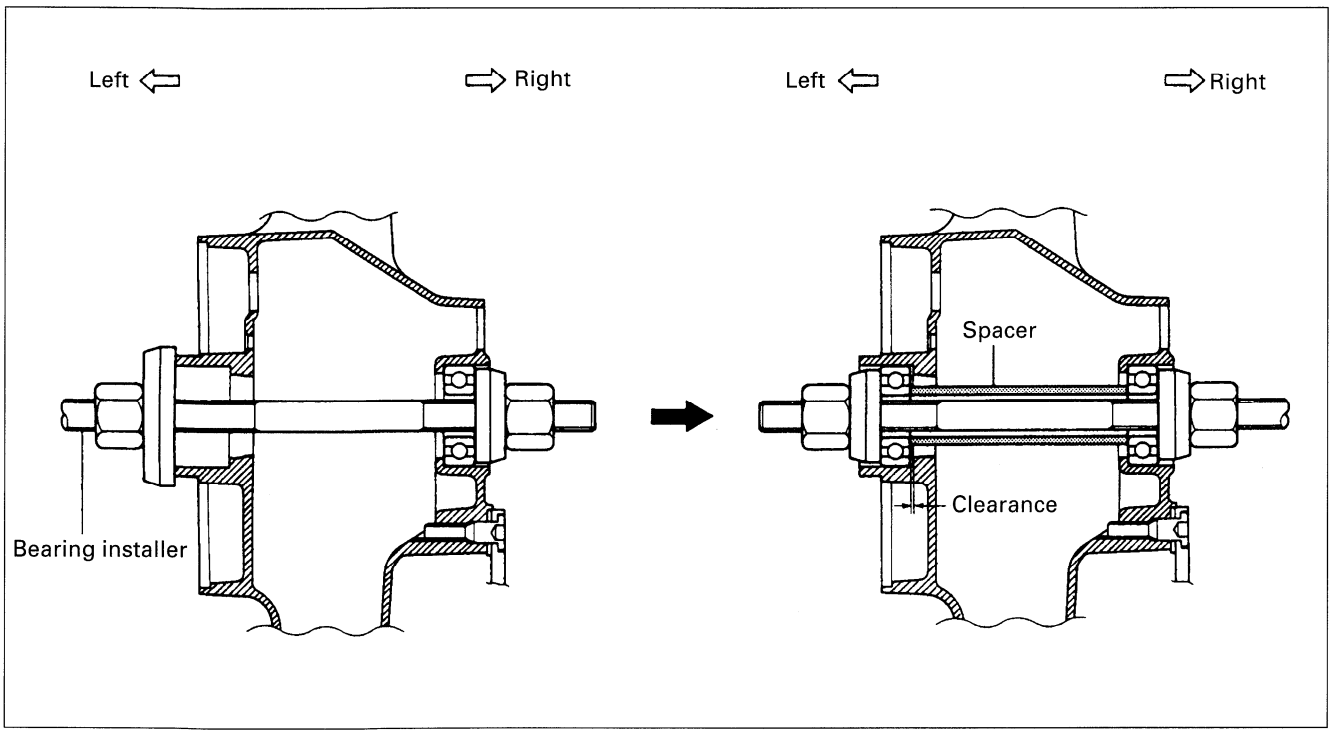

MOUNTING DRUM BEARING

- Install the new bearing with the special tool.

TOOL 09913-75520: Bearing installer

NOTE:
Apply grease to the bearing and oil seal lip before assembling rear wheel.

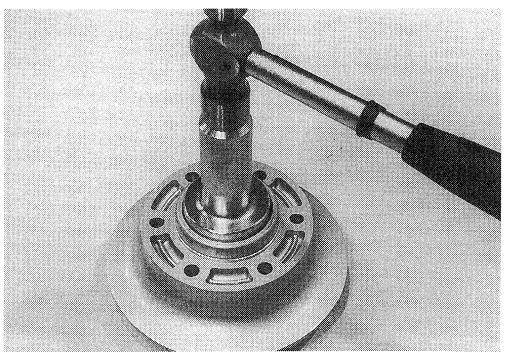

BRAKE DISC

- Apply THREAD LOCK SUPER "1360" to the disc bolts and tighten them to the specified torque.

NOTE:
Make sure that the brake disc is clean and free of any greasy matter.

1360 99000-32130: THREAD LOCK SUPER "1360"

Brake disc bolt: 23 N·m (2.3 kg-m, 16.5 lb-ft)

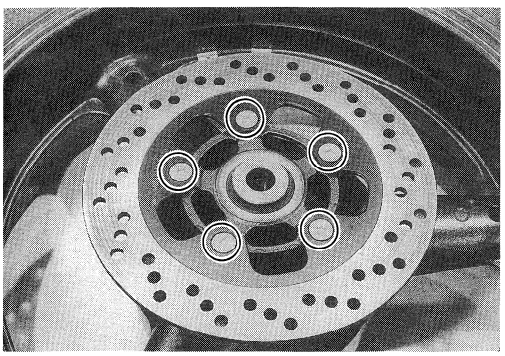

REAR SPROCKET

- Tighten the sprocket mounting nuts to the specified torque.

Rear sprocket nut: 60 N·m (6.0 kg-m, 43.5 lb-ft)

NOTE:
Face the stamped mark on the sprocket to outside.

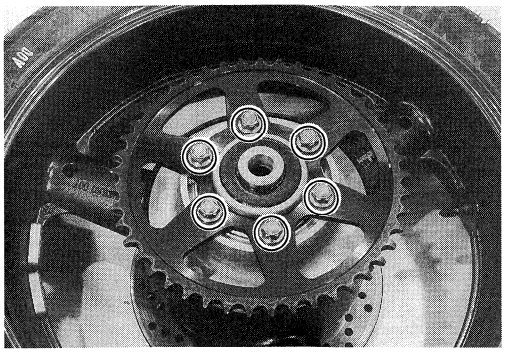

REAR AXLE

- Adjust the chain slack after rear wheel installation. (Refer to page 2-11.)
- Tighten the rear axle nut to the specified torque.

Rear axle nut: 100 N·m (10.0 kg-m, 72.5 lb-ft)

- Tighten both chain adjuster nuts securely.
- Install the new cotter pin (For Canadian model).

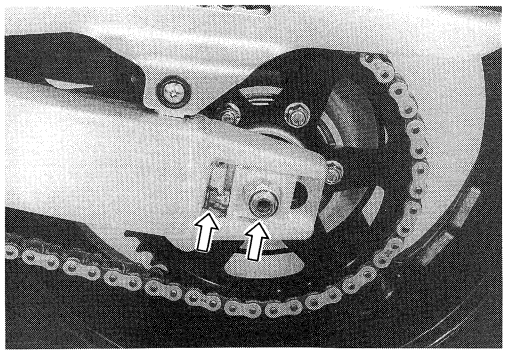

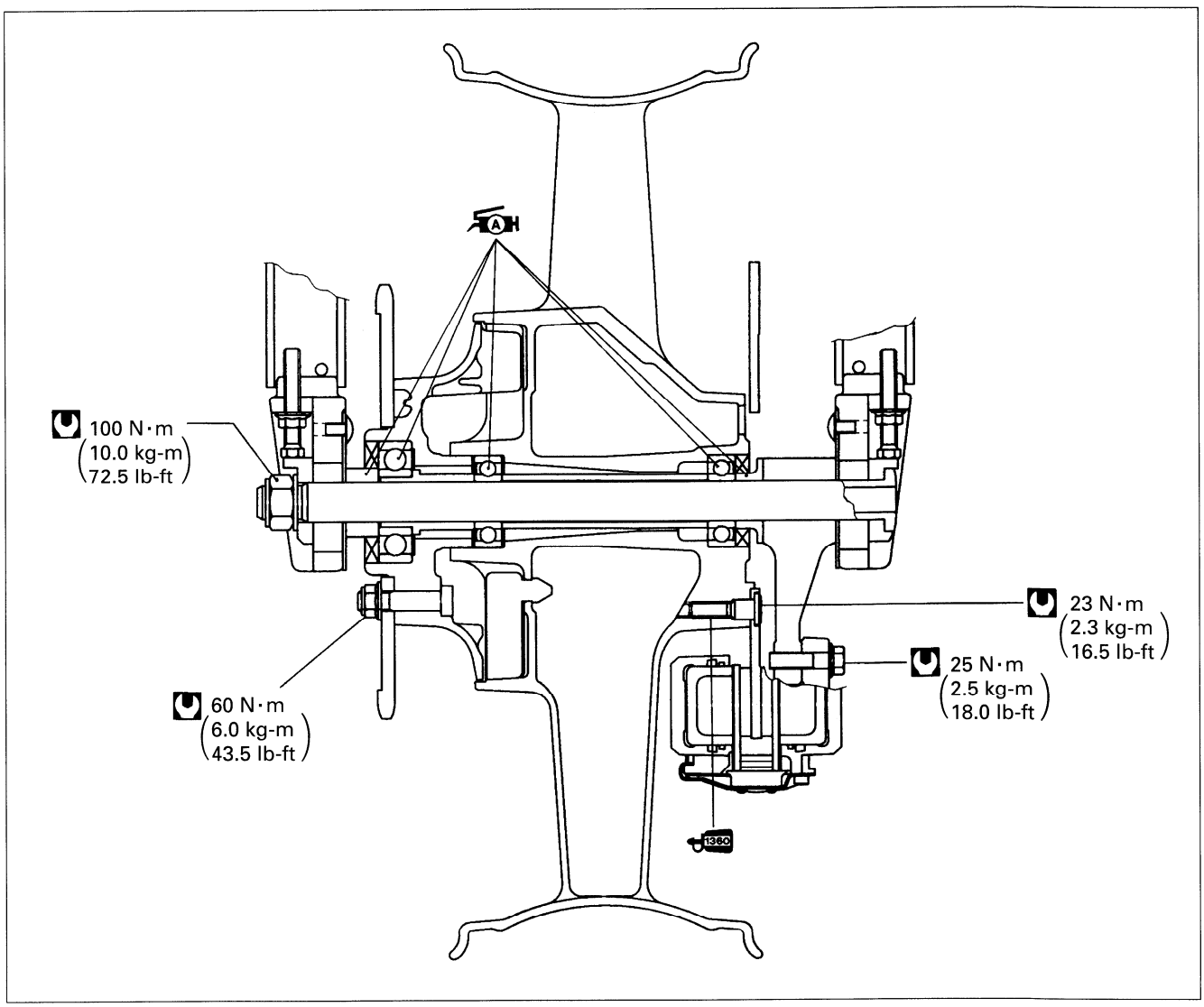

REAR BRAKE

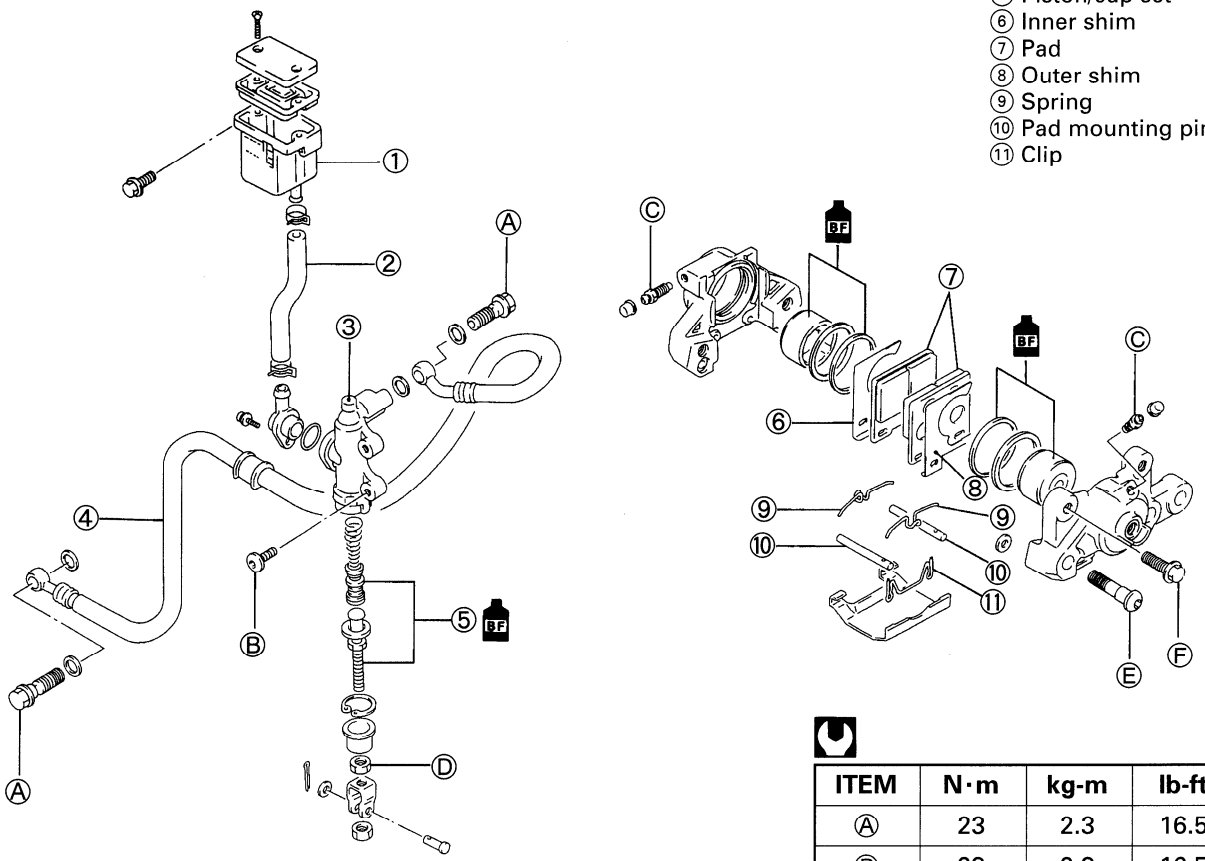

ITEM	N·m	kg-m	lb-ft
Ⓐ	23	2.3	16.5
Ⓑ	23	2.3	16.5
Ⓒ	8	0.8	6.0
Ⓓ	18	1.8	13.0
Ⓔ	30	3.0	21.5
Ⓕ	25	2.5	18.0

Ⓐ Brake hose union bolt
Ⓑ Master cylinder mounting bolt
Ⓒ Air bleeder valve
Ⓓ Master cylinder rod lock nut
Ⓔ Caliper housing bolt
Ⓕ Caliper mounting bolt

⚠ WARNING

- **This brake system is filled with a ethylene glycol-based DOT 4 brake fluid. Do not use or mix different types of fluid such as silicone-based or petroleum-based.**
- **Do not use any brake fluid taken from old, used or unsealed containers. Never reuse brake fluid left over from the last servicing or stored for long periods.**
- **When storing the brake fluid, seal the container completely and keep away from children.**
- **When replenishing brake fluid, take care not to get dust into fluid.**
- **When washing brake components, use fresh brake fluid. Never use cleaning solvent.**
- **A contaminated brake disc or brake pad reduces braking performance. Discard contaminated pads and clean the disc with high quality brake cleaner or neutral detergent.**

⚠ CAUTION

Handle brake fluid with care: the fluid reacts chemically with paint, plastics, rubber materials etc.

BRAKE PAD REPLACEMENT

- Remove the cover.

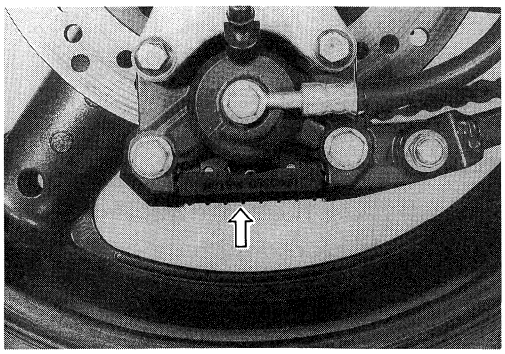

- Remove the clip ①.
- Remove the pads with shims by removing the pad mounting pins ② and springs ③.

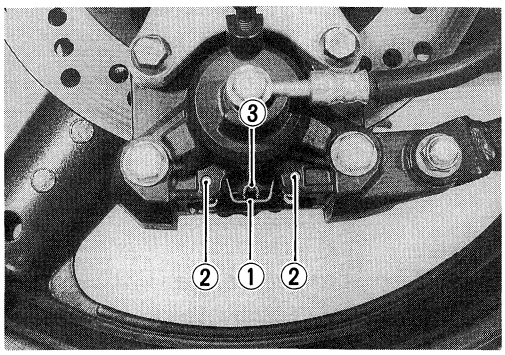

⚠ CAUTION

> *** Do not operate the brake pedal while dismounting the pads.**
> *** Replace the brake pad as a set, otherwise braking performance will be adversely affected.**

- Remount the new brake pads and shims.

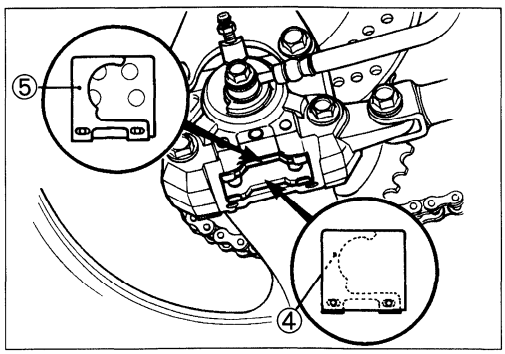

⚠ CAUTION

> **Be sure to install the shims (④, ⑤) properly as shown in the illustration.**

NOTE:
After replacing the brake pads, pump with the brake pedal few times to operate the brake correctly and then check the brake fluid level.

BRAKE FLUID REPLACEMENT

- Remove the seat. (Refer to page 5-3.)
- Remove the frame cover. (Refer to page 5-3.)
- Replace the brake fluid in the same manner of the front brake.

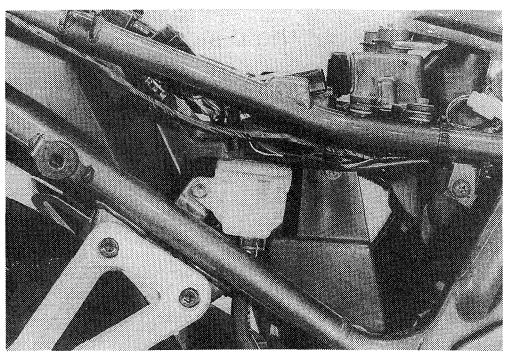

BF Specification and Classification: DOT 4

⚠ CAUTION

> **Bleed air in the brake fluid circuit. (Refer to page 2-15.)**

CALIPER REMOVAL AND DISASSEMBLY

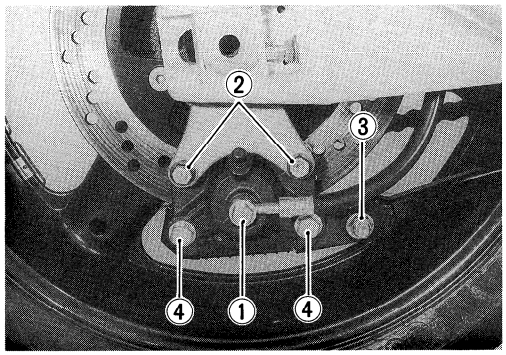

- Remove the union bolt ① and catch the brake fluid in a suitable receptacle.

⚠ CAUTION

Never reuse the brake fluid left over from previous servicing and stored for long periods.

⚠ WARNING

Brake fluid, if it leaks, will interfere with safe running and discolor painted surfaces. Check the brake hose and hose joints for cracks and oil leakage.

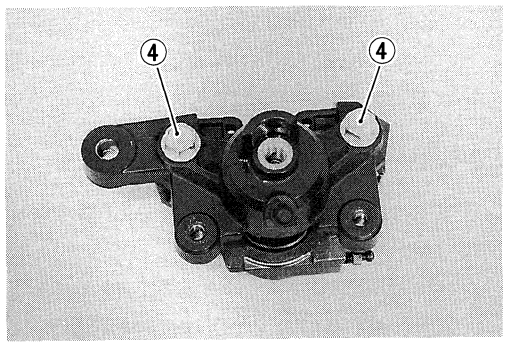

- Remove the caliper mounting bolts ②, rear torque link nut ③ and bolt.

NOTE:
Slightly loosen the caliper housing bolts ④ to facilitate later disassembly before removing the caliper mounting bolts.

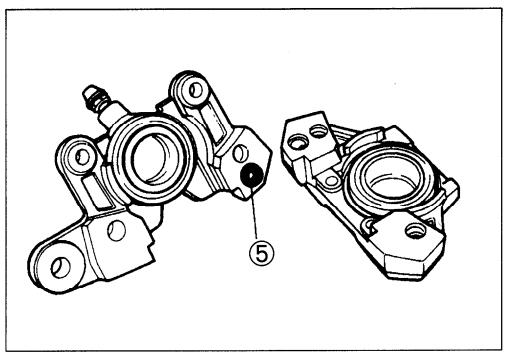

- Remove the pads. (Refer to page 5-42.)
- Remove the caliper housing bolts ④.
- Separate the caliper halves.
- Remove the O-ring ⑤ .

NOTE:
Once separate the caliper halves, replace the O-ring ⑤ with a new one.

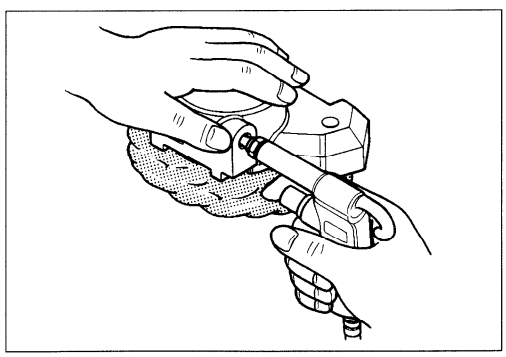

- Place a rag over the piston to prevent it from popping out and push out the piston by using an air gun.

⚠ CAUTION

Do not use high pressure air to prevent piston damage.

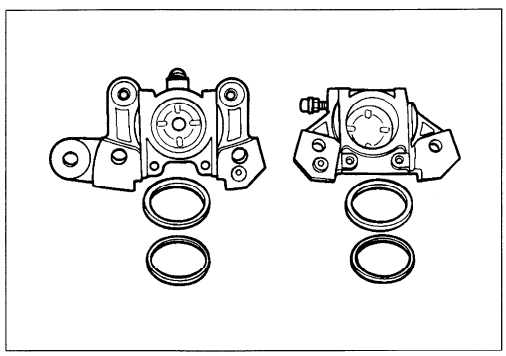

- Remove the dust seals and piston seals.

⚠ CAUTION

Do not reuse the dust seals and piston seals to prevent fluid leakage.

CALIPER INSPECTION

CYLINDER ..... **Refer to page 5-18.**
PISTON ..... **Refer to page 5-18.**
DISC ..... **Refer to page 5-19.**

CALIPER REASSEMBLY AND REMOUNTING

Reassemble and remount the caliper in the reverse order of removal and disassembly. Pay attention to the following points:

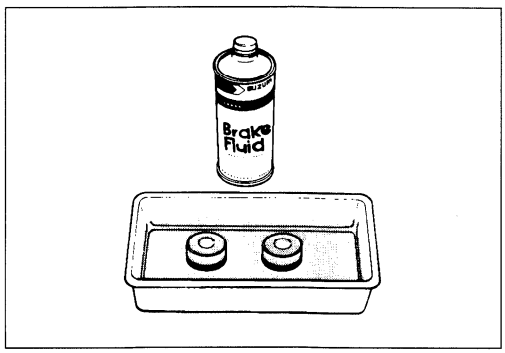

▲ CAUTION

- **Wash the caliper components with fresh brake fluid before reassembly. Never use cleaning solvent or gasoline to wash them.**
- **Apply brake fluid to the caliper bore and piston to be inserted into the bore.**

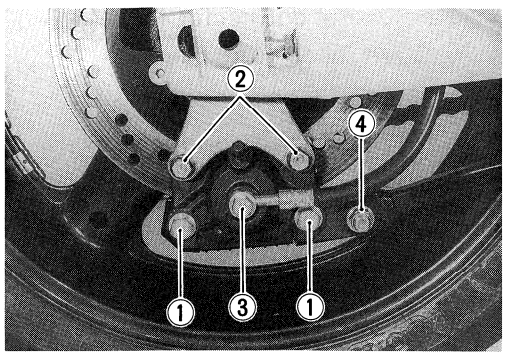

BF Specification and Classification: DOT 4

- Tighten each bolt to the specified torque.

Rear brake caliper
housing bolt ① : 30 N·m (3.0 kg-m, 21.5 lb-ft)

Rear brake caliper
mounting bolt ② : 25 N·m (2.5 kg-m, 18.0 lb-ft)

Brake hose
union bolt ③: 23 N·m (2.3 kg-m, 16.5 lb-ft)

Rear torque link
nut ④: 35 N·m (3.5 kg-m, 25.5 lb-ft)

▲ CAUTION

Bleed air from the system after reassembling the caliper. (Refer to page 2-15.)

MASTER CYLINDER REMOVAL AND DISASSEMBLY

- Remove the seat. (Refer to page 5-3.)
- Remove the frame cover. (Refer to page 5-3.)
- Place a cloth underneath the union bolt ① on the master cylinder to catch spilled drops of brake fluid.
- Loosen the lock nut ② .
- Remove the master cylinder mounting bolts ③ .

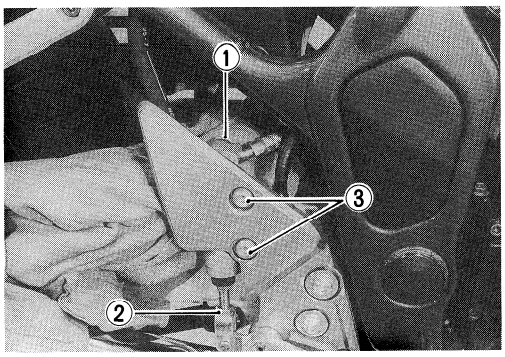

⚠ CAUTION

Immediately and completely wipe off any brake fluid contacting any part of the motorcycle. The fluid reacts chemically with paint, plastics and rubber materials, etc. and will damage them severely.

- Remove the reservoir tank by removing the mounting bolt ④ and brake hose ⑤.

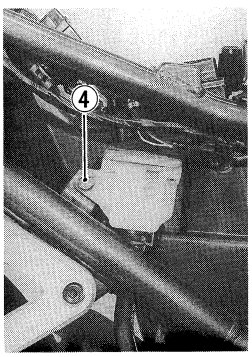

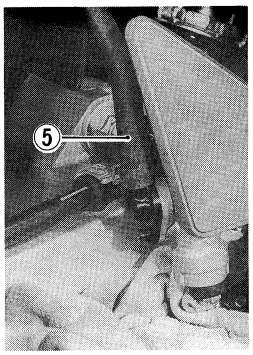

- Remove the connector by removing the circlip.
- Remove the O-ring ⑥.

NOTE:
Once separate the connector from the master cylinder, replace the O-ring ⑥ with a new one.

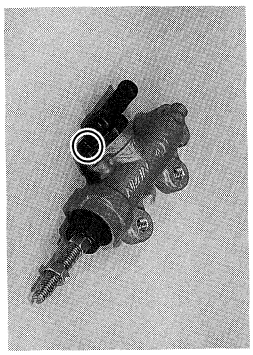

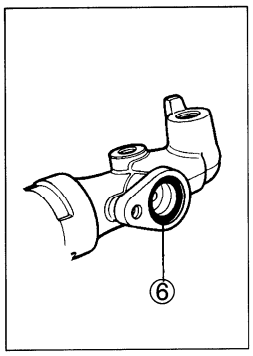

- Pull out the dust seal then remove the circlip with the special tool.

TOOL 09900-06108: Snap ring pliers

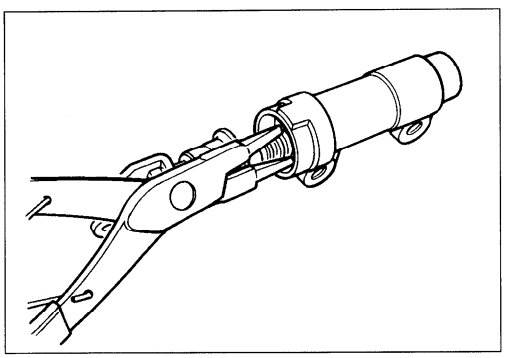

- Remove the push rod, piston/primary cup and spring.

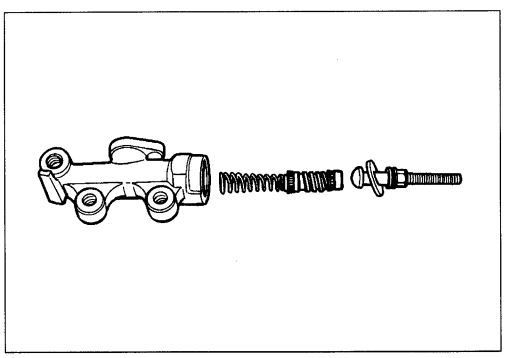

MASTER CYLINDER INSPECTION

CYLINDER, PISTON AND CUP SET

Inspect the cylinder bore wall for any scratches or other damage.
Inspect the piston surface for any scratches or other damage.
Inspect the cup set and each rubber part for damage.

MASTER CYLINDER REASSEMBLY AND REMOUNTING

Reassemble and remount the master cylinder in the reverse order of removal and disassembly. Pay attention to the following points:

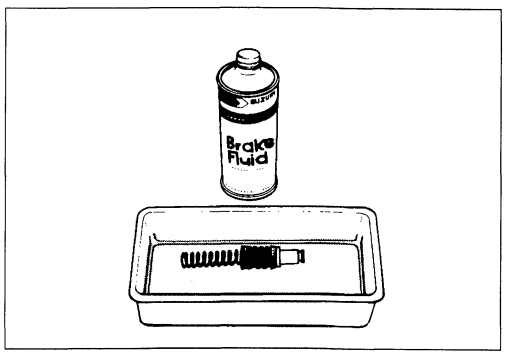

⚠ CAUTION

- **Wash the master cylinder components with fresh brake fluid before reassembly. Never use cleaning solvent or gasoline to wash them.**
- **Apply brake fluid to the cylinder bore and all the component to be inserted into the bore.**

BF Specification and Classification: DOT 4

MASTER CYLINDER BOLTS

- Tighten each bolt to the specified torque.

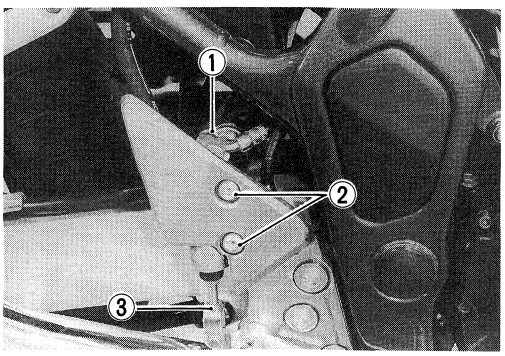

Brake hose union bolt ①: 23 N·m (2.3 kg-m, 16.5 lb-ft)

Master cylinder mounting bolt ②: 23 N·m (2.3 kg-m, 16.5 lb-ft)

Master cylinder rod lock nut ③: 18 N·m (1.8 kg-m, 13.0 lb-ft)

⚠ CAUTION

Bleed air from the system after reassembling master cylinder. (Refer to page 2-15.)

REAR SUSPENSION

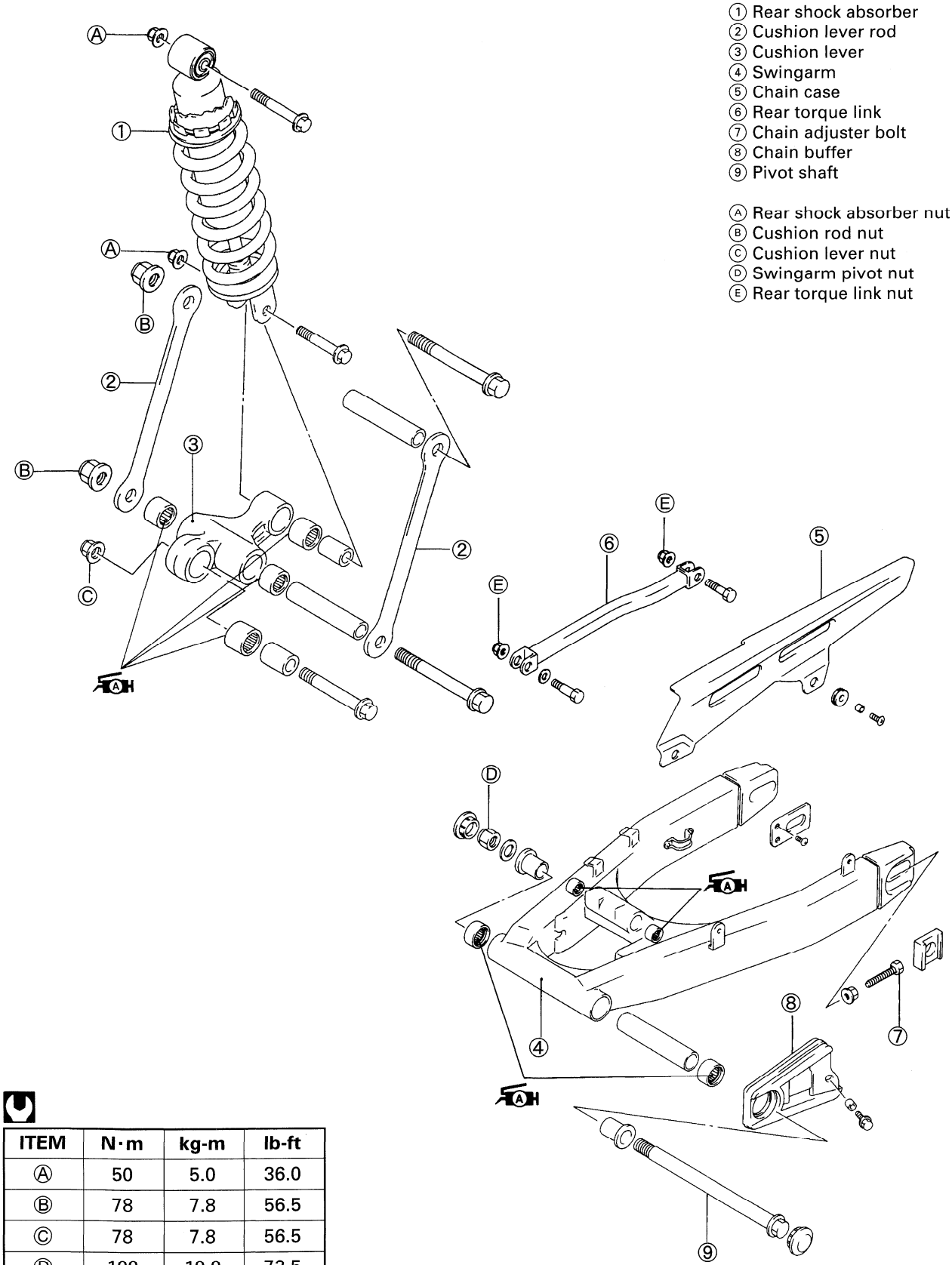

ITEM	N·m	kg-m	lb-ft
Ⓐ	50	5.0	36.0
Ⓑ	78	7.8	56.5
Ⓒ	78	7.8	56.5
Ⓓ	100	10.0	72.5
Ⓔ	35	3.5	25.5

REMOVAL

- Remove the rear wheel. (Refer to page 5-36.)
- Remove the brake caliper union bolt ①.
- Remove the rear torque link mounting nuts and bolts ②.

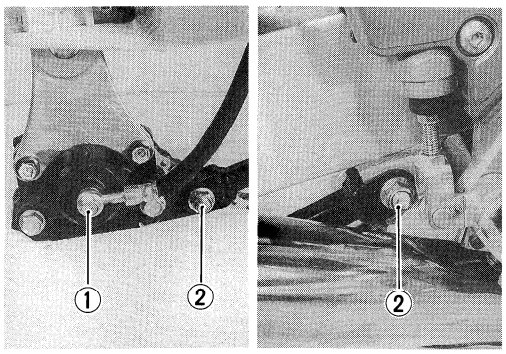

- Remove the brake hose from the brake hose guide and hose clamps.

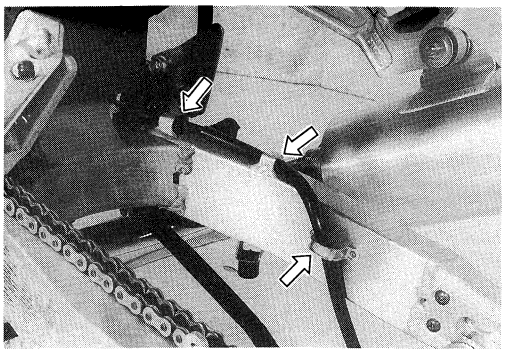

- Remove the cushion lever and shock absorber lower mounting nuts and bolts.

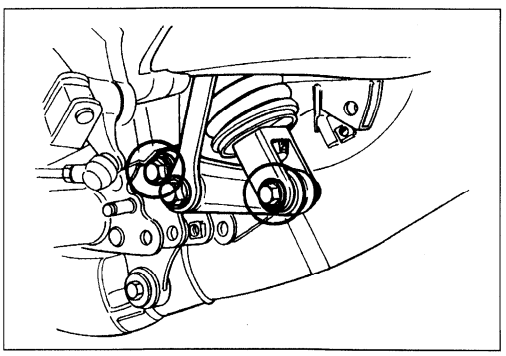

- Remove the right and left caps.
- Remove the swingarm by removing the pivot nut and shaft.

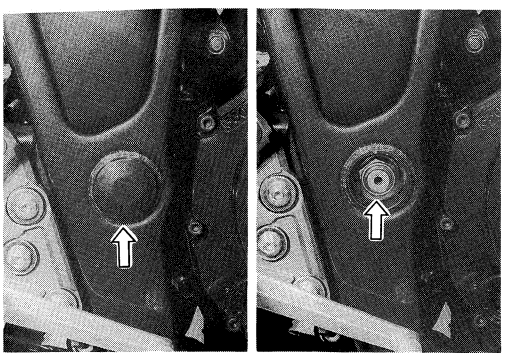

- Remove the left frame body cover.
- Remove the shock absorber mounting nut and bolt.

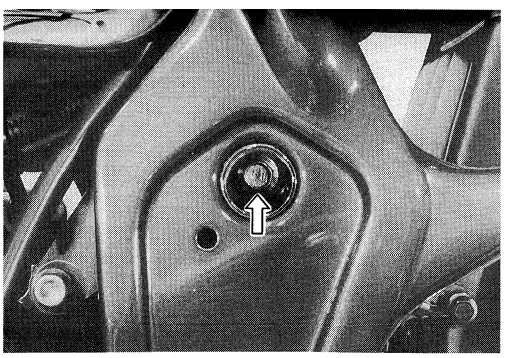

- Remove the cushion rod with cushion lever.

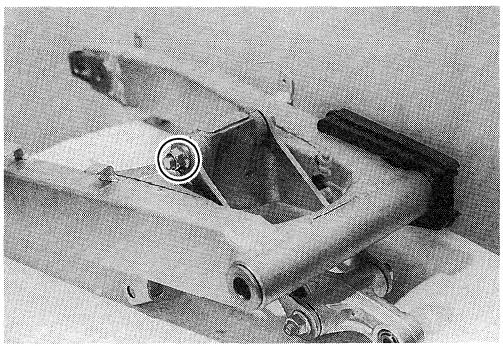

- Remove the chain buffer.

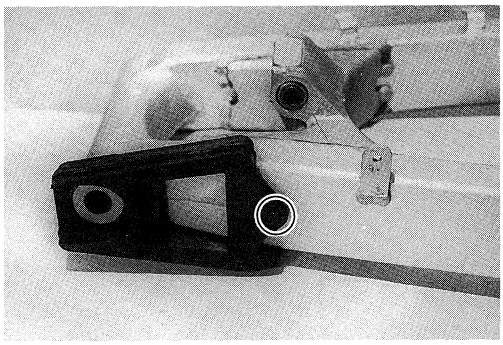

- Remove the swingarm spacers.

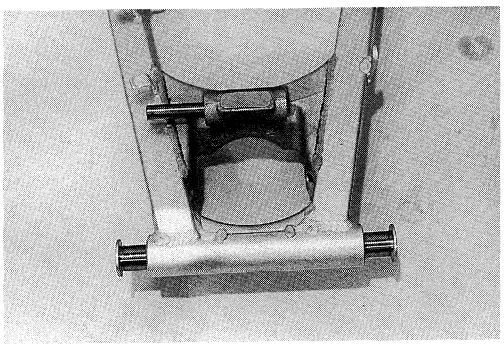

- Remove the cushion rods.

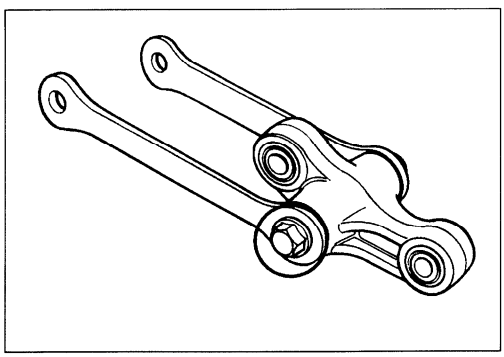

- Remove the cushion lever spacers.

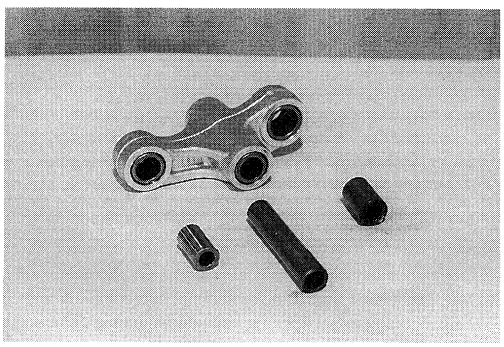

INSPECTION AND DISASSEMBLY

SWINGARM

Inspect the spacer for any flaws or other damage.
Inspect the swingarm for wear or damage.
Insert the spacer into bearing and check the play to move the spacer up and down.
If excessive play is noted, replace the bearing with a new one.

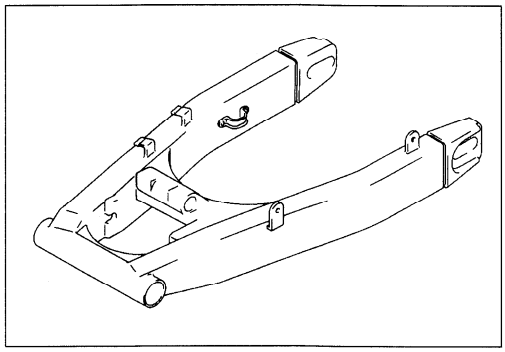

- Draw out the swingarm bearings and spacer with the special tools.

TOOL 09923-74510: Bearing remover
09930-30102: Sliding shaft

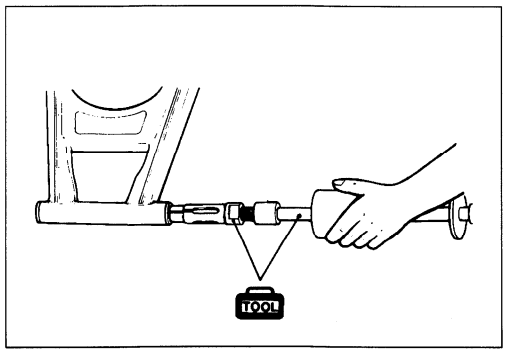

⚠ CAUTION

The removed bearing should be replaced with new ones.

CUSHION LEVER

Inspect the spacer for any flaws or other damage.
Insert the spacer into bearing and check the play to move the spacer up and down. If an excessive play is noted, replace the bearing with a new one.

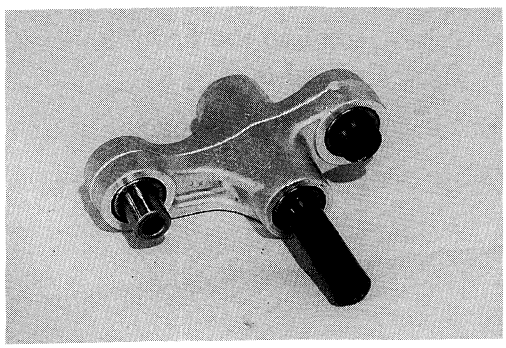

- Draw out the bearing with the special tools.

TOOL 09923-73210: Bearing remover
09930-30102: Sliding shaft

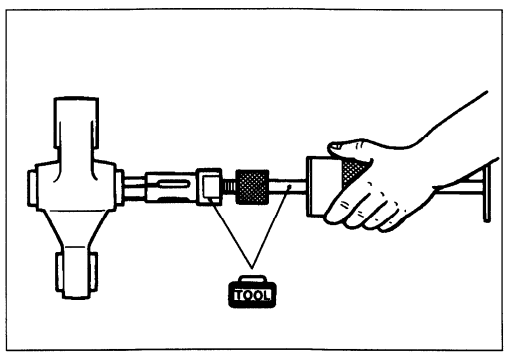

⚠ CAUTION

The removed bearings should be replaced with new ones.

SHOCK ABSORBER

Inspect the shock absorber body for damage and oil leakage.
If any defects are found, replace the shock absorber with new one.

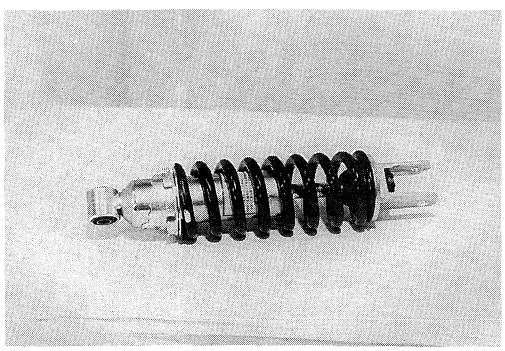

⚠ CAUTION

Do not attempt to disassemble the rear shock absorber unit. It is unserviceable.

SWINGARM PIVOT SHAFT

Using a dial gauge, check the pivot shaft runout and replace it if the runout exceeds the limit.

TOOL 09900-20606: Dial gauge (1/100 mm)
09900-20701: Magnetic stand
09900-21304: V-block (100 mm)

Service Limit: 0.3 mm (0.01 in)

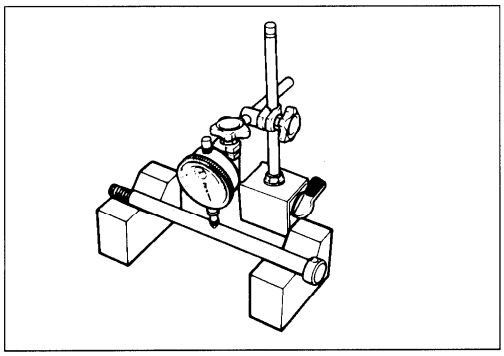

REASSEMBLY AND REMOUNTING

Reassemble and remount the swingarm and shock absorber in the reverse order of removal and disassembly, and also carry out the following steps:

SWINGARM AND CUSHION LEVER BEARINGS

- Press the bearings into the swingarm and cushion lever with the special tool.

TOOL 09941-34513: Steering race installer

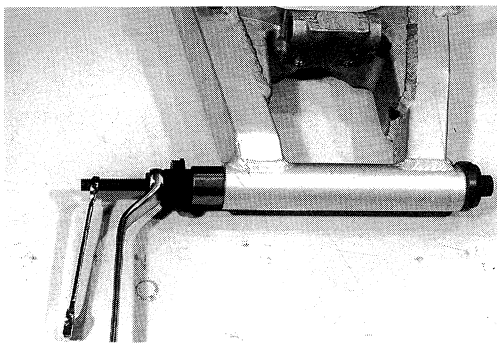

NOTE:
When reinstalling the bearing, stamped mark of bearing is positioned outside.

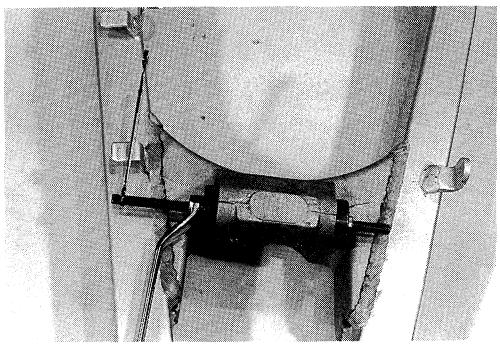

- Apply grease to the spacers and bearings.

A H 99000-25010: SUZUKI SUPER GREASE "A"

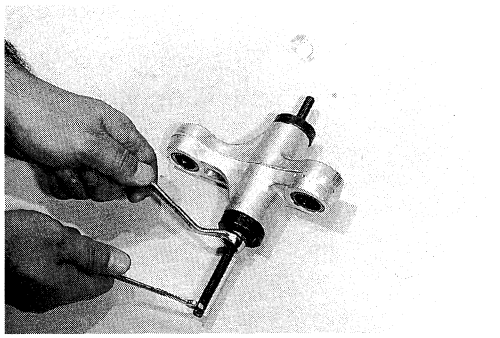

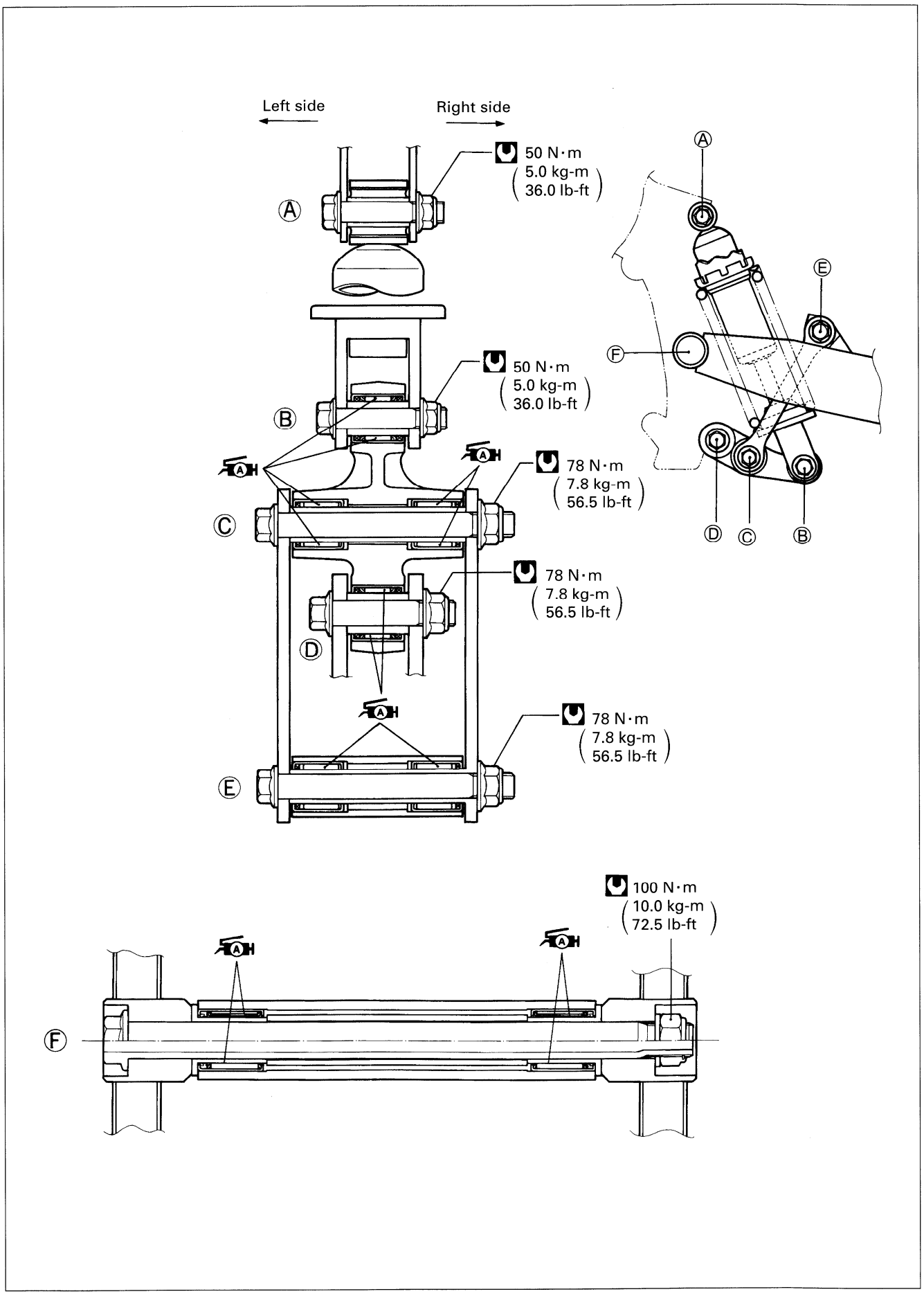
Left side
Right side
50 N·m
5.0 kg-m
36.0 lb-ft
50 N·m
5.0 kg-m
36.0 lb-ft
78 N·m
7.8 kg-m
56.5 lb-ft
78 N·m
7.8 kg-m
56.5 lb-ft
78 N·m
7.8 kg-m
56.5 lb-ft
100 N·m
10.0 kg-m
72.5 lb-ft
A
B
C
D
E
F

FINAL INSPECTION AND ADJUSTMENT

After installing the rear suspension and wheel, the following adjustments are required before driving.

* Drive chain ..... Refer to page 2-11.
* Rear brake pedal height ..... Refer to page 2-14.
* Tire pressure ..... Refer to page 2-16.

SUSPENSION SETTING

After installing the rear suspension, adjust the spring pre-load as follows.

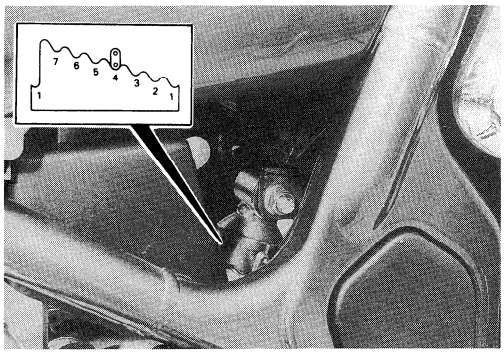

SPRING PRE-LOAD ADJUSTMENT

The set position "7" provides the stiffest spring pre-load.
The set position "1" provides the softest spring pre-load.
(STD position: "4")

REBOUND DAMPING FORCE ADJUSTMENT

The set position "4" provides the stiffest rebound damping force.
The set position "1" provides the softest rebound damping force.
(STD position: "2")

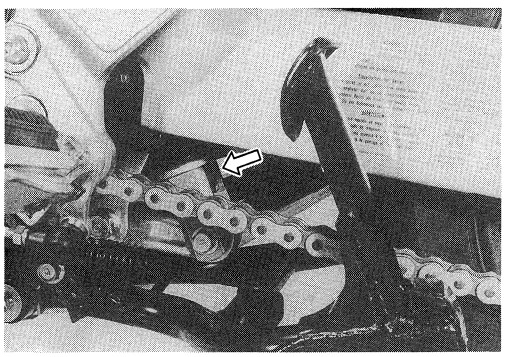

CLUTCH MASTER CYLINDER

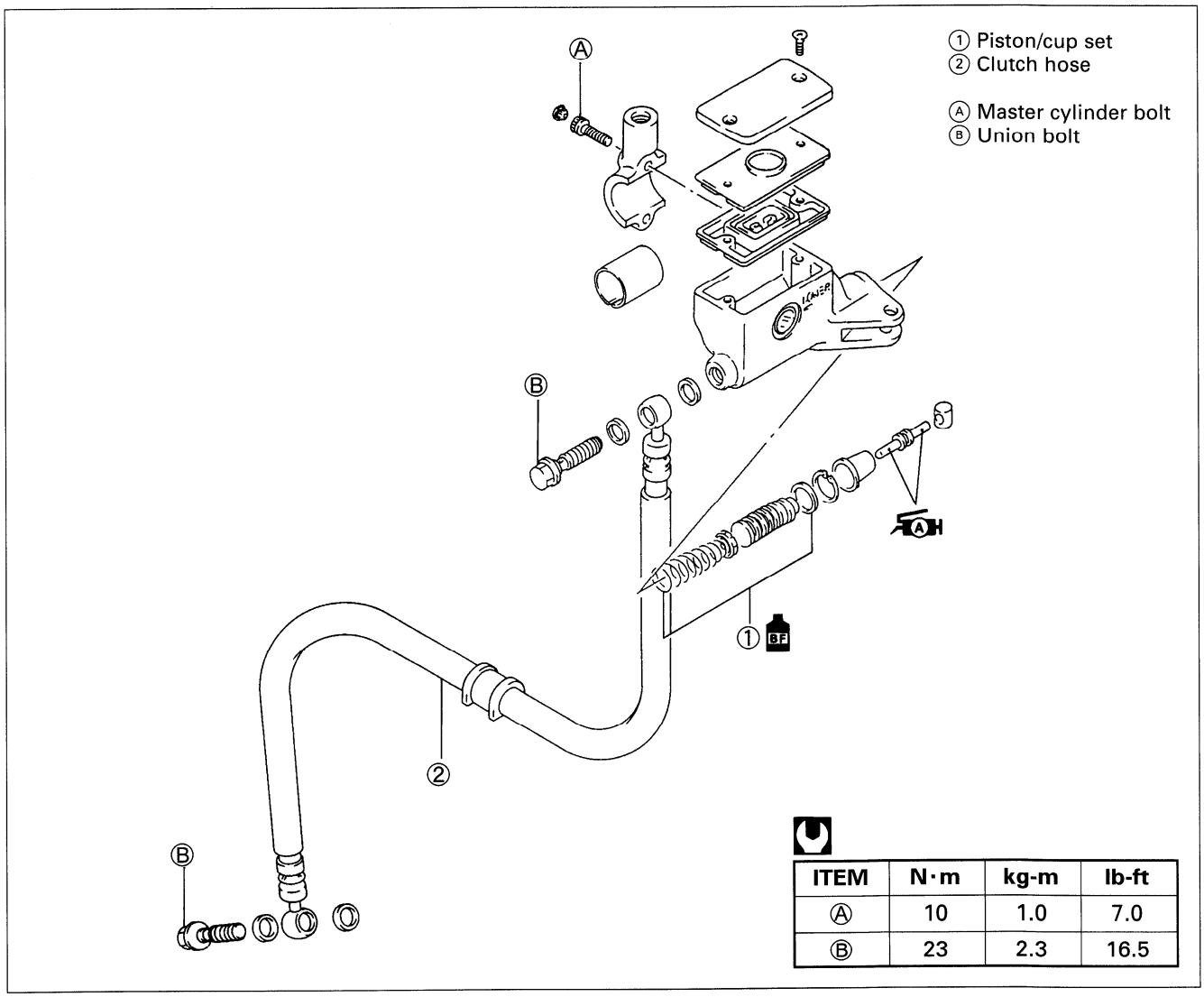

ITEM	N·m	kg-m	lb-ft
Ⓐ	10	1.0	7.0
Ⓑ	23	2.3	16.5

REMOVAL

- Disconnect the clutch lever position switch lead wires.
- Place a rag underneath the union bolt on the master cylinder to catch spilled drops of brake fluid. Unscrew the union bolt and disconnect the clutch hose from the master cylinder.

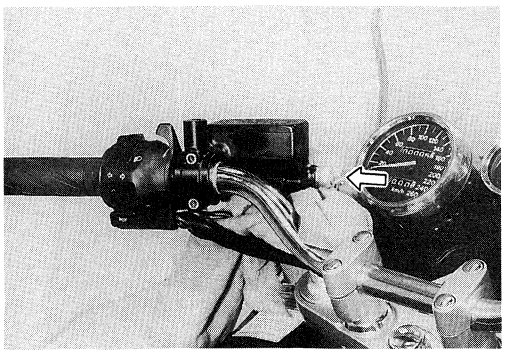

⚠ CAUTION

Completely wipe off any brake fluid adhering to any parts of motorcycle. The fluid reacts chemically with paint, plastics, rubber materials, etc. and will damage them severely.

- Remove the clutch master cylinder by removing its clamp bolts.

DISASSEMBLY AND REASSEMBLY

Disassemble and reassemble the clutch master cylinder in the same manner of the front brake master cylinder.
(Refer to pages 5-20, 5-21 and 5-34.)

ELECTRICAL SYSTEM

CONTENTS

CAUTIONS IN SERVICING 6- 1
LOCATION OF ELECTRICAL COMPONENTS 6- 3
CHARGING SYSTEM 6- 4
DESCRIPTION 6- 4
TROUBLESHOOTING 6- 5
INSPECTION 6- 6
REMOVAL AND DISASSEMBLY 6- 7
INSPECTION 6- 9
REASSEMBLY AND REMOUNTING 6-12
REASSEMBLY INFORMATION 6-13
STARTER SYSTEM AND SIDE-STAND/IGNITION INTERLOCK SYSTEM 6-14
STARTER SYSTEM DESCRIPTION 6-14
SIDE-STAND/IGNITION INTERLOCK SYSTEM DESCRIPTION 6-14
TROUBLESHOOTING 6-16
STARTER MOTOR REMOVAL AND DISASSEMBLY 6-17
STARTER MOTOR INSPECTION 6-17
STARTER MOTOR REASSEMBLY 6-18
STARTER RELAY INSPECTION 6-19
SIDE-STAND/IGNITION INTERLOCK SYSTEM INSPECTION 6-20
IGNITION SYSTEM (DIGITAL IGNITOR) 6-22
DESCRIPTION 6-22
TROUBLESHOOTING 6-23
INSPECTION 6-24
COMBINATION METER 6-28
REMOVAL AND DISASSEMBLY 6-28
INSPECTION 6-28
FUEL METER 6-30
FUEL METER INSPECTION 6-30
FUEL LEVEL GAUGE REMOVAL/INSTALLATION 6-30
FUEL LEVEL GAUGE INSPECTION 6-31
LAMPS 6-31
HEADLIGHT AND POSITION LIGHT 6-31
TAIL/BRAKE LIGHT AND LICENSE PLATE LIGHT 6-32
TURN SIGNAL LIGHT 6-33
RELAY 6-34
STARTER RELAY 6-34
SIDE-STAND RELAY 6-34
TURN SIGNAL RELAY 6-34
SWITCHES 6-35
BATTERY 6-36
SPECIFICATIONS 6-36
INITIAL CHARGING 6-36
SERVICING 6-37
RECHARGING OPERATION 6-38

CAUTIONS IN SERVICING

CONNECTOR

- When connecting a connector, be sure to push it in until a click is felt.
- Inspect the connector for corrosion, contamination and breakage in its cover.

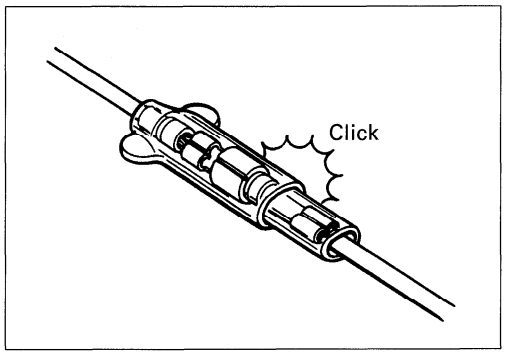

COUPLER

- With a lock type coupler, be sure to release the lock before disconnecting it and push it in fully till the lock works when connecting it.
- When disconnecting the coupler, be sure to hold the coupler itself and do not pull the lead wires.
- Inspect each terminal on the coupler for being loose or bent.
- Inspect each terminal for corrosion and contamination.

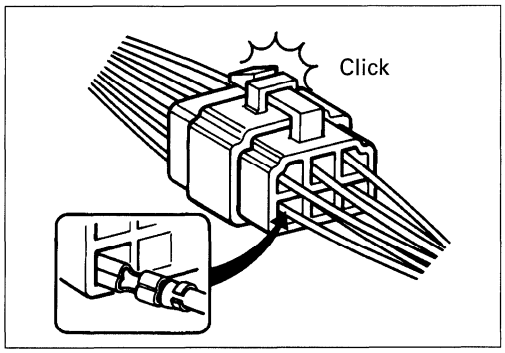

CLAMP

- Clamp the wire harness at such positions as indicated in "WIRE HARNESS ROUTING". (Refer to page 7-13.)
- Bend the clamp properly so that the wire harness is clamped securely.
- In clamping the wire harness, use care not to allow it to hang down.
- Do not use wire or any other substitute for the band type clamp.

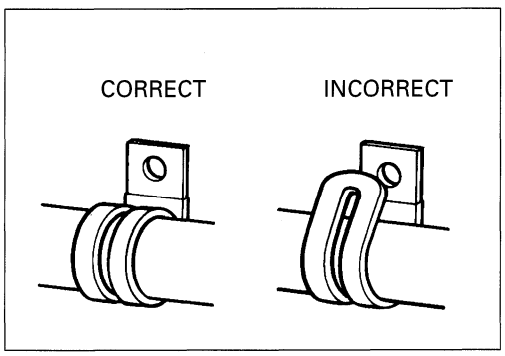

FUSE

- When a fuse blows, always investigate the cause, correct it and then replace the fuse.
- Do not use a fuse of a different capacity.
- Do not use wire or any other substitute for the fuse.

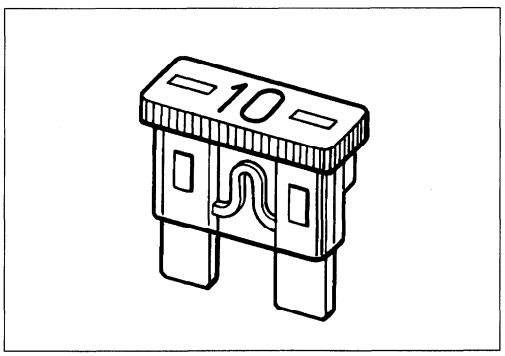

SEMI-CONDUCTOR EQUIPPED PART

- Be careful not to drop the part with a semi-conductor built in such as a ignitor unit.
- When inspecting this part, follow inspection instruction strictly. Neglecting proper procedure may cause damage to this part.

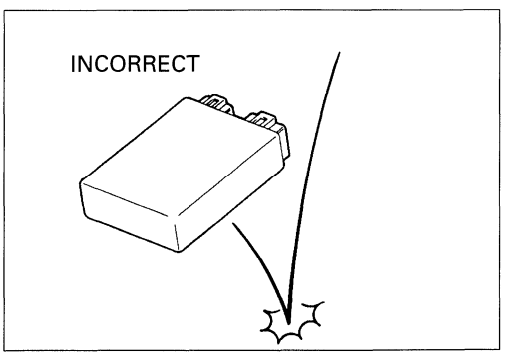

BATTERY

- The MF battery used in this vehicle does not require maintenance as inspection of electrolyte level and replenishment of water.
- No hydrogen gas is produced during normal charging of the battery, but such gas may be produced when it is overcharged. Therefore, do not bring fire near the battery while it is being charged.
- Note that the charging system for the MF battery is different from that of an ordinary battery. Do not replace with an ordinary battery.

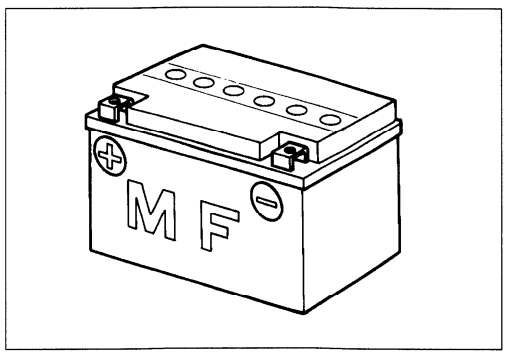

CONNECTING BATTERY

- When disconnecting terminals from the battery for disassembly or servicing, be sure to disconnect the negative (⊖) terminal first.
- When connecting terminals to the battery, be sure to connect the positive (⊕) terminal first.
- If the terminal is found corroded, remove the battery, pour warm water over it and clean with a wire brush.
- Upon completion of connection, apply grease lightly.
- Put a cover over the positive (⊕) terminal.

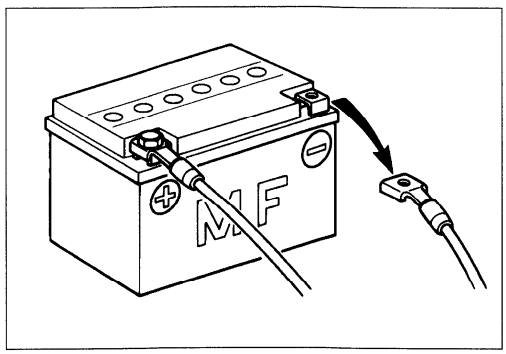

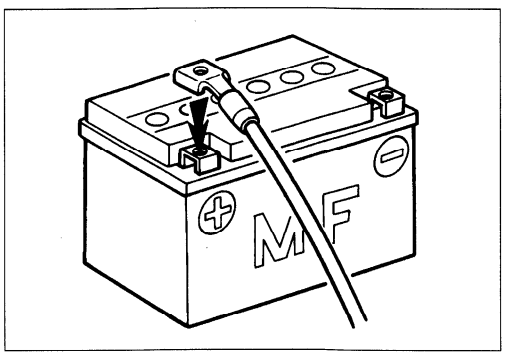

WIRING PROCEDURE

- Route the wire harness properly according to "WIRE HARNESS ROUTING". (Refer to page 7-13.)

USING POCKET TESTER

- Be sure to use positive (⊕) and negative (⊖) probes of the tester properly. Their false use may cause damage in the tester.
- If the voltage and current values are not known, start measuring in the higher range.
- Before measuring the resistance and after changing the resistance range, always perform 0 Ω adjustment.
- Taking a measurement where voltage is applied in the resistance range may cause damage in the tester. When measuring resistance, check to make sure that no voltage is applied there.
- After using the tester, turn the switch to the OFF position.

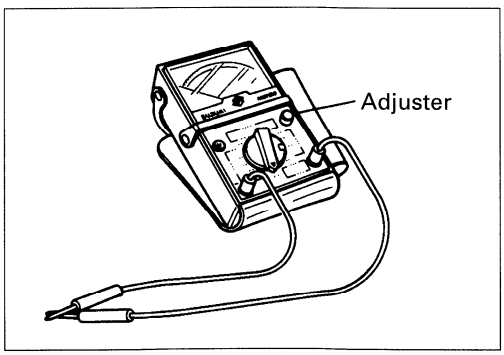

LOCATION OF ELECTRICAL COMPONENTS

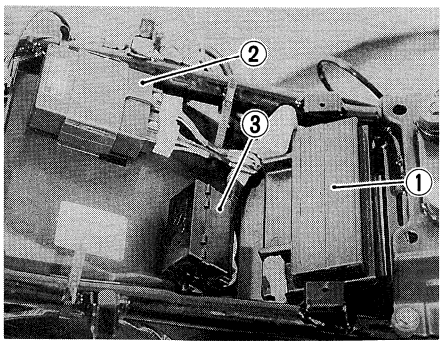

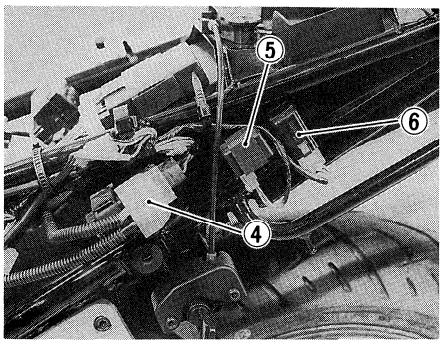

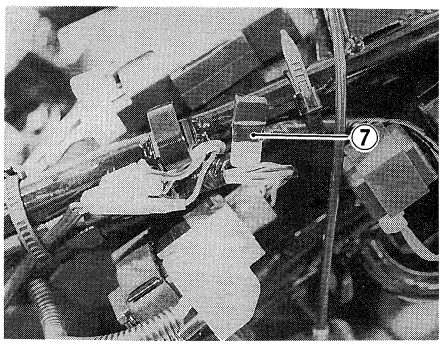

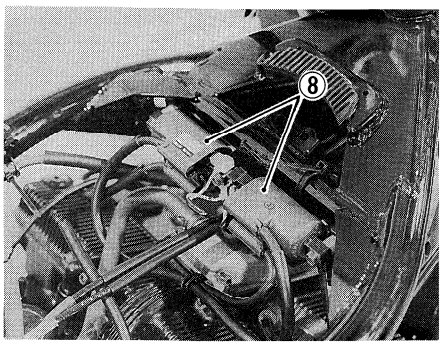

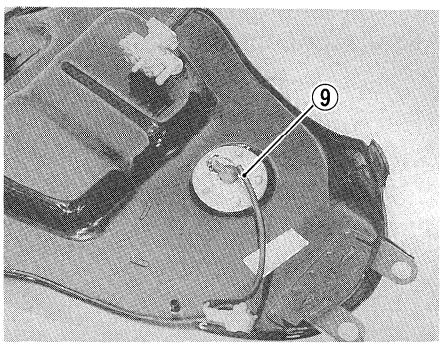

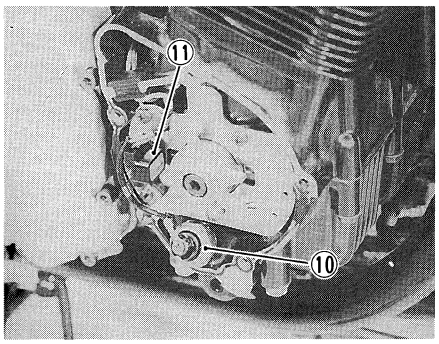

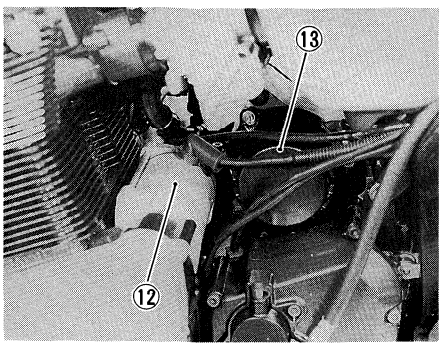

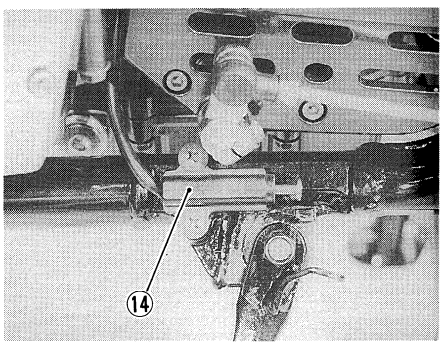

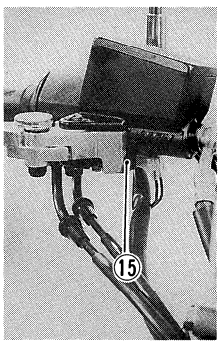

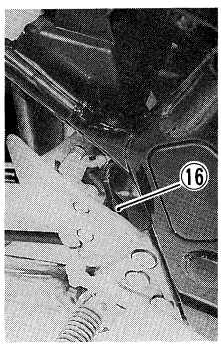

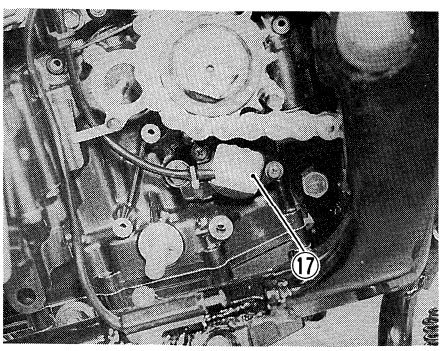

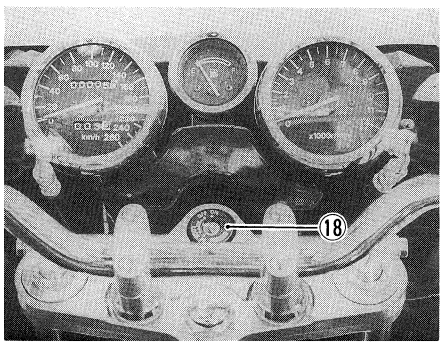

① : Battery
② : Ignitor
③ : Fuse box
④ : Starter relay and main fuse
⑤ : Turn signal relay
⑥ : Side-stand relay
⑦ : Diode
⑧ : Ignition coil
⑨ : Fuel level gauge
⑩ : Oil pressure switch
⑪ : Signal generator
⑫ : Starter motor
⑬ : Generator
⑭ : Side-stand switch
⑮ : Front brake light switch
⑯ : Rear brake light switch
⑰ : Neutral switch
⑱ : Ignition switch

CHARGING SYSTEM

DESCRIPTION (GENERATOR WITH IC REGULATOR)

The generator features a solid-state regulator that is mounted inside the generator. All regulator components are enclosed into a solid mold, and this unit is attached to the brush holder frame. The regulator voltage setting cannot be adjusted.

Two brushes carry current through the two slip rings to the rotor coil mounted on the rotor.

The stator windings are assembled on the inside of a laminated core that forms part of the generator housing. A rectifier bridge connected to the stator windings contains six diodes, and electrically changes the stator A.C. voltages to a D.C. voltage which appears at the generator output terminal.

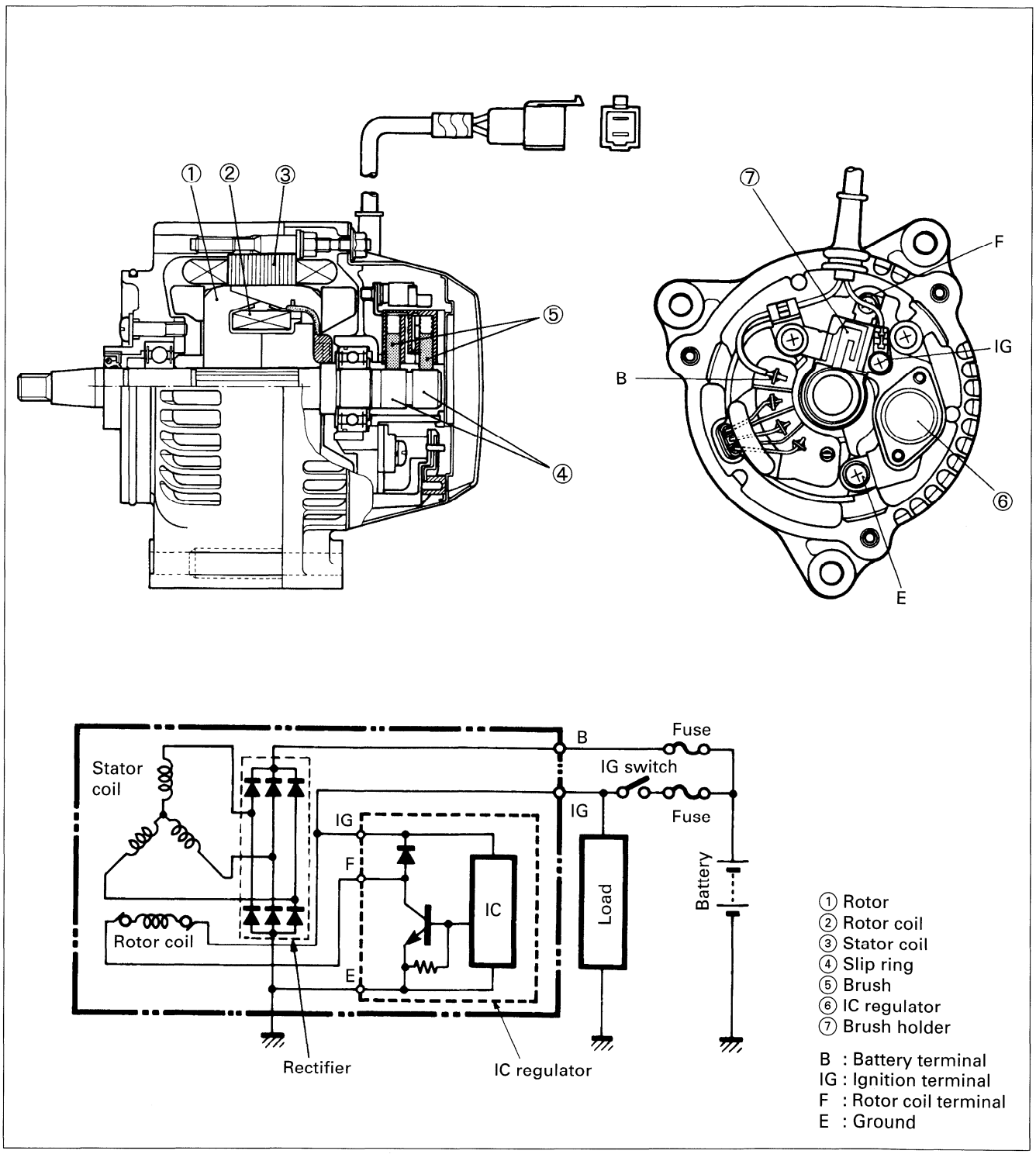

TROUBLESHOOTING

Battery runs down quickly.

- Check accessories which excessively waste electric power.
  - Installed → • Remove accessories
  - Not installed ↓
- Inspect battery leak current. (Refer to page 6-6.)
  - Leak → • Short circuit of wire harness • Loose or disconnected wires • Faulty battery
  - No leak ↓
- Inspect charging voltage between battery terminals. (Refer to page 6-6.)
  - Correct → • Faulty battery • Abnormal driving condition
  - Incorrect ↓
- Inspect continuity generator stator coil and rotor coil. (Refer to page 6-9.)
  - No continuity → • Faulty stator coil or disconnected lead wires
  - Correct ↓
- Inspect generator slip ring and carbon brush. (Refer to pages 6-9 and 10.)
  - Incorrect → • Faulty slip ring or carbon brush
  - Correct ↓
- Inspect generator rectifier and IC regulator. (Refer to pages 6-10 and 11.)
  - Incorrect → • Faulty rectifier or IC regulator
  - Correct ↓
- Inspect wirings.
  - Incorrect → • Short circuit of wire harness • Poor contact of couplers
  - Correct → • Faulty battery

Others

Battery overcharge	• Faulty generator IC regulator • Faulty battery • Poor contact of generator lead wire coupler

INSPECTION

BATTERY LEAK CURRENT INSPECTION

- Turn the ignition switch to the OFF position.
- Remove the seat.
- Disconnect the battery ⊖ lead wire.

Note that leakage is indicated if the needle swings even a little when the milliampere meter of the pocket tester is connected between a ⊖ terminal and the lead wire of the battery as shown.

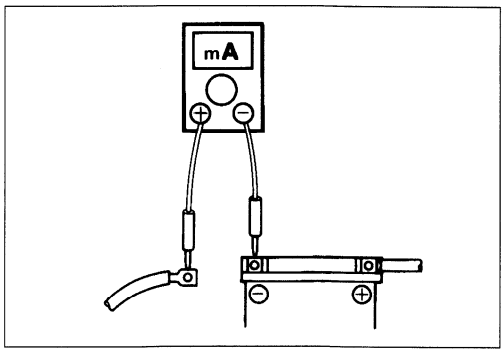

TOOL 09900-25002: Pocket tester

⚠ CAUTION

> *** Because the leak current might be large, turn the tester to high range first when connecting an ammeter.**
> *** Do not turn the ignition switch to the ON position when measuring current.**

When leakage is found, look for the part where the needle does not swing through the couplers and connectors are removed one by one.

CHARGING OUTPUT INSPECTION

- Remove the seat.
- Start the engine and keep it running at 5 000 r/min.

Measure the DC voltage between the battery terminals ⊕ and ⊖ with a pocket tester. If the tester reads under 13.5V, check the stator coil, rectifier and IC regulator mounted in the generator.

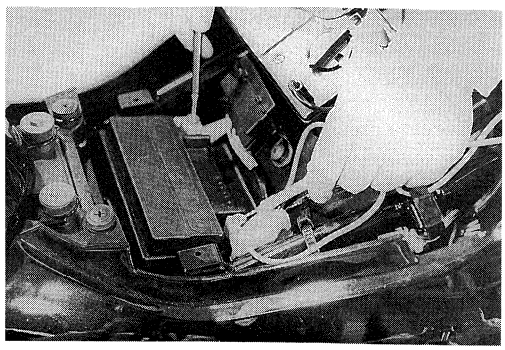

⚠ CAUTION

> **If the pocket tester is set to read current or resistance and a voltage is applied across the test probes, damage will result. Therefore, it is important that the tester knob on the pocket tester be set the proper position before making any measurements.**

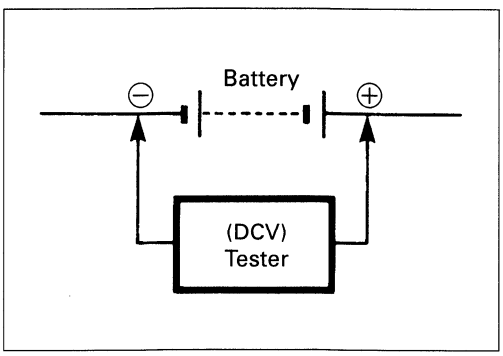

NOTE:
When making this test, be sure that the battery is fully-charged condition.

TOOL 09900-25002: Pocket tester

Tester knob indication: DC 25V

Charging output
Standard: Above 13.5V at 5 000 r/min.

REMOVAL AND DISASSEMBLY

- Remove the seat and frame cover assembly. (Refer to page 5-3.)
- Disconnect the generator lead wire coupler ①.

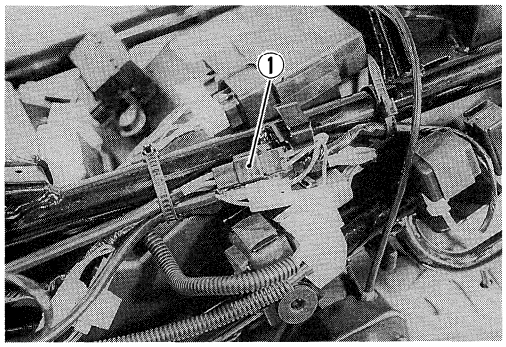

- Remove the starter motor lead wire ②.

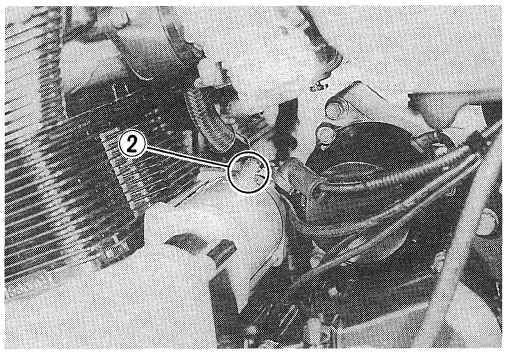

- Remove the generator by removing the mounting bolts.

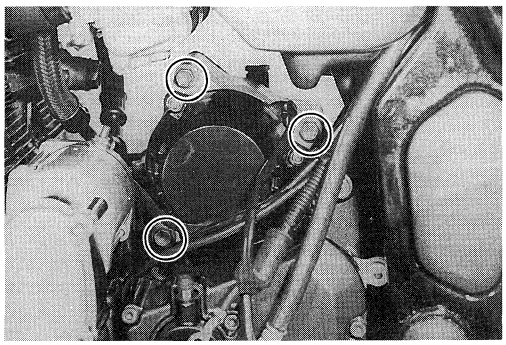

- Hold the generator driven gear to use a vise and proper pieces of woods, and remove the generator driven gear nut.

⚠ CAUTION

Do not hold the damper housing with a vise, or damage or breakage of damper housing will result.

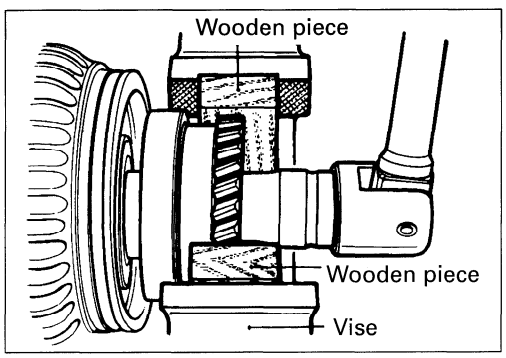

- Remove the damper housing ① with bearing remover.

TOOL 09913-61510: Bearing remover

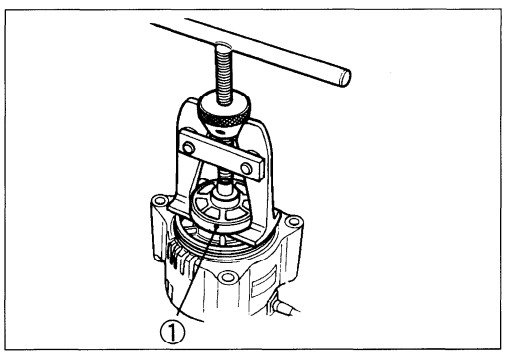

- Remove the generator end cover.

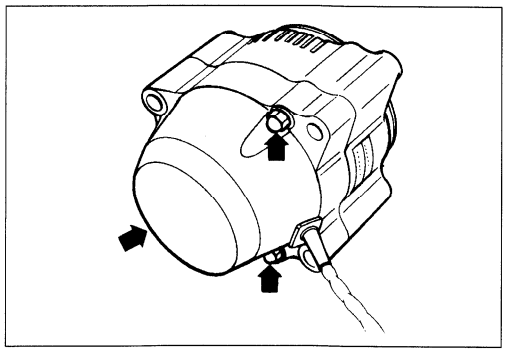

- Disconnect the stator coil lead wires ① and battery lead wire ② to use a soldering iron.
- Remove the brush holder, IC regulator and rectifier to remove three screws.

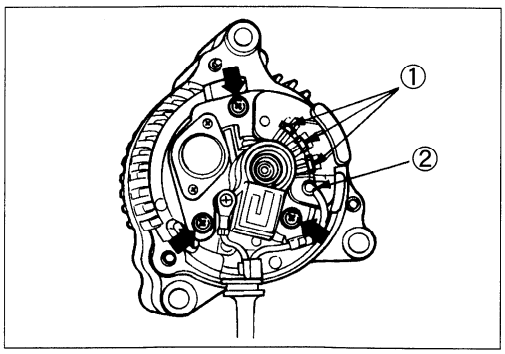

- Remove the three bearing retainer screws.

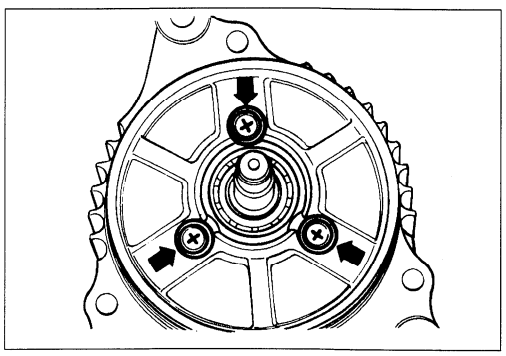

- Separate the generator housing ③ from generator end housing ④.

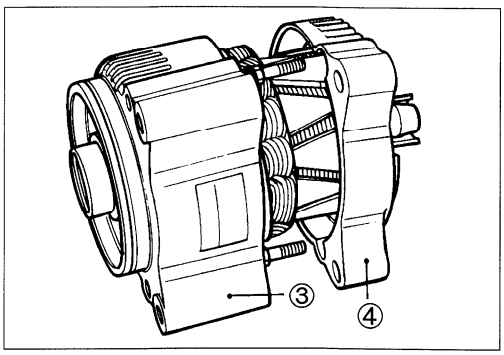

- Remove the rotor ⑤ from generator end housing ⑥ to use a hand-press ⑦ as shown.

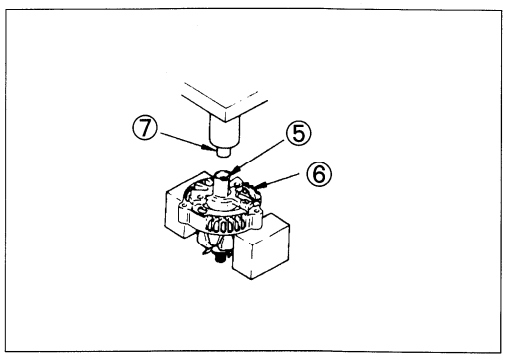

INSPECTION

ROTOR BEARING

Inspect the rotor bearings for abnormal noise and smooth rotation to rotate them by hand.
If there is anything unusual, remove the bearing with a bearing remover.

09913-60910: Bearing remover

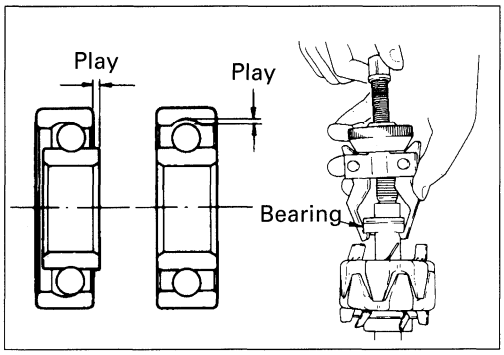

⚠ CAUTION

The removed bearing should be replaced with a new one.

GENERATOR DRIVEN GEAR DAMPER

Inspect the dampers for wear and damage. If any defects are found, replace the dampers as a set.

NOTE:
When installing the dampers, apply MOLY PASTE to the damper surface.

99000-25140: SUZUKI MOLY PASTE

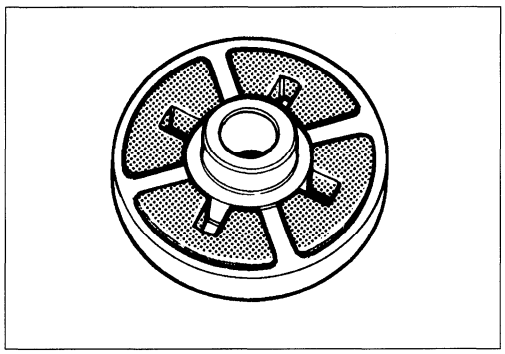

STATOR COIL CONTINUITY CHECK

Check the continuity between the lead wires of the stator with a pocket tester.
If there is no continuity, replace the stator.
Also check that the stator core is insulated.

09900-25002: Pocket tester

Tester knob indication: ×1Ω range

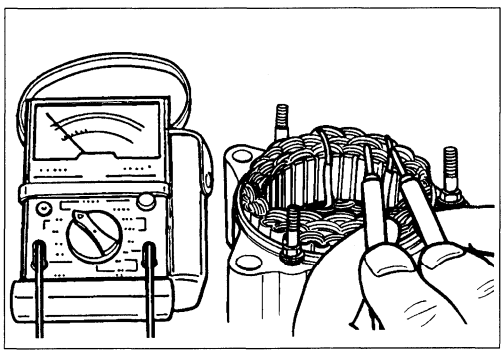

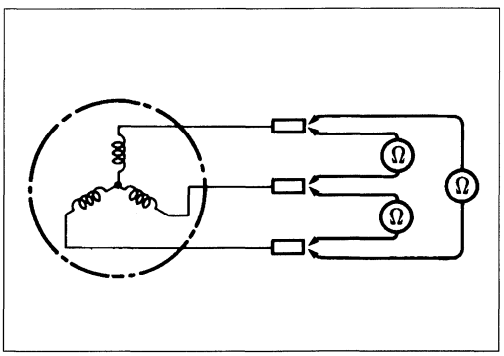

ROTOR COIL CONTINUITY CHECK

Check the continuity between the two slip rings of the rotor with a pocket tester.
If there is no continuity, replace the rotor.
Also check that the rotor is insulated.

09900-25002: Pocket tester

Tester knob indication: ×1Ω range

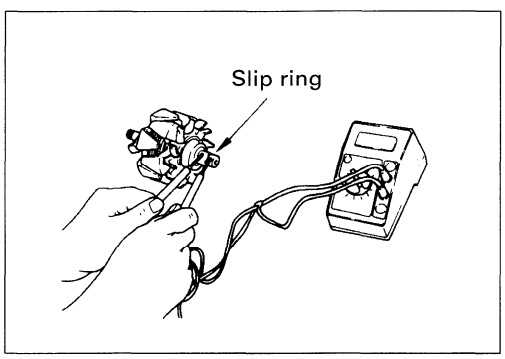

SLIP RING

If the slip ring surface is dirty, polish it with #400 fine emery paper to protect the charging performance. After polishing, wipe the slip ring with a clean dry cloth.

TOOL 09900-20102: Vernier calipers (200 mm)

Slip ring O.D.
Service Limit: 14.0 mm (0.55 in)

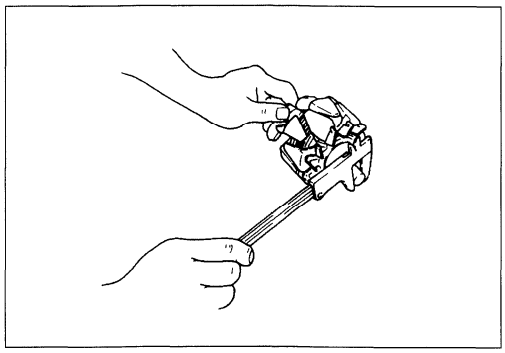

CARBON BRUSH

Measure the length of the brushes as shown. If it less than the service limit, replace them with new ones.

TOOL 09900-20102: Vernier calipers (200 mm)

Brush length
Service Limit: 4.5 mm (0.18 in)

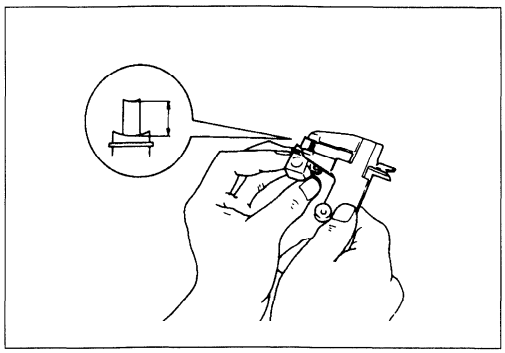

RECTIFIER

Check the continuity between terminals and ground. Put one tester lead to terminal "B" and the other lead to ground or other terminals; then swap the two leads. Of the two tester indications, one should be continuity, and the other should be infinity (non continuity). If not, replace the rectifier assembly.

TOOL 09900-25002: Pocket tester

Tester knob indication: ×1Ω range

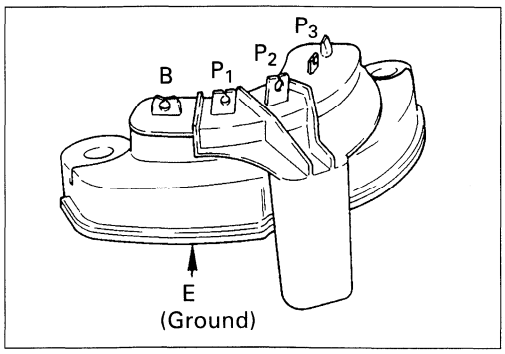

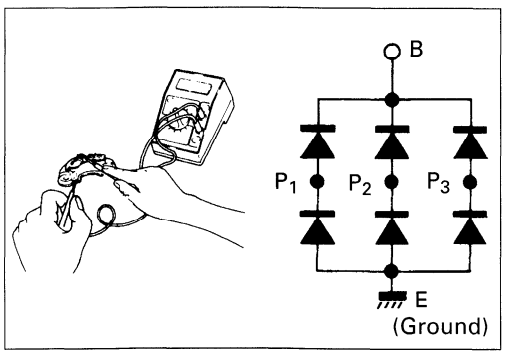

IC REGULATOR

Use a variable DC power source, switch, bulb and pocket tester, check the IC regulator, which requires two steps described below:

First check:

Set the variable DC power source to 12V and turn the switch to the ON position. If the bulb does not light, replace the IC regulator. If the bulb is lighting ON, this IC regulator has passed the first check.

Second check:

Under the above condition, set the variable DC power source to 14.5V, if the bulb goes out, the IC regulator is in good condition. If the bulb remains lit, replace the IC regulator.

09900-25002: Pocket tester

Tester knob indication: DC25V

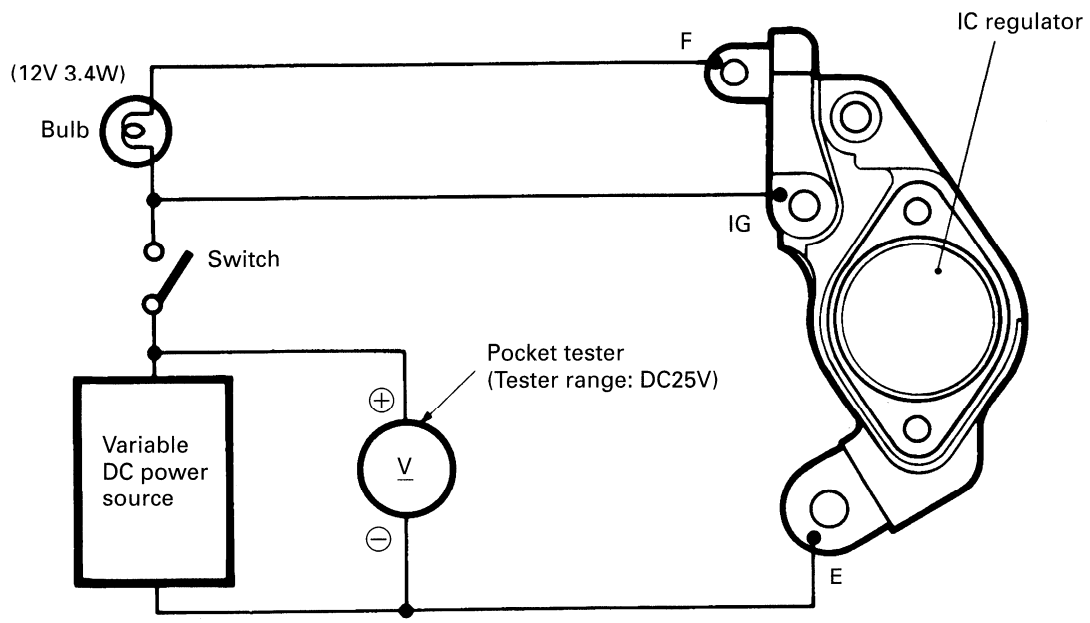

F : Rotor coil terminal
IG : Ignition terminal
E : Ground

REASSEMBLY AND REMOUNTING

Reassemble and remount the generator in the reverse order of removal and disassembly. Pay attention to the following points:

⚠ CAUTION

The removed oil seal should be replaced with a new one.

- Apply grease to the lip of the oil seal.

99000-25010: SUZUKI SUPER GREASE "A"

- Install the bearing and rotor by using a hand-press.

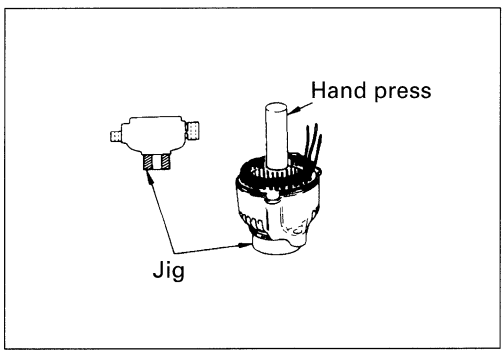

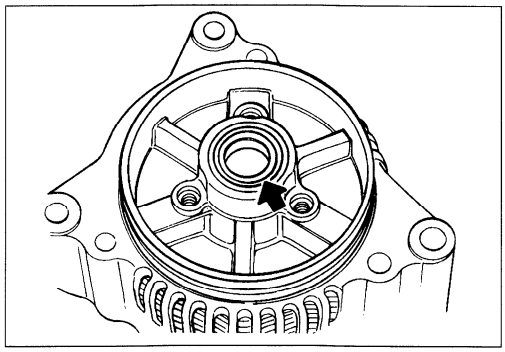

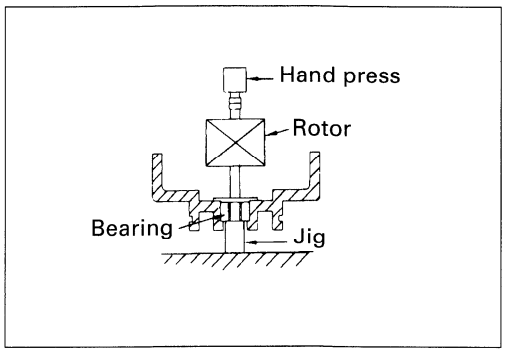

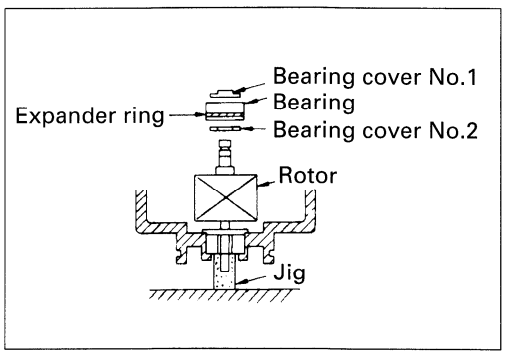

NOTE:
Before reinstalling the slip ring side bearing to the generator end housing, turn the expander ring and align the expander ring lug with the center of the chamfer of the bearing outer race.

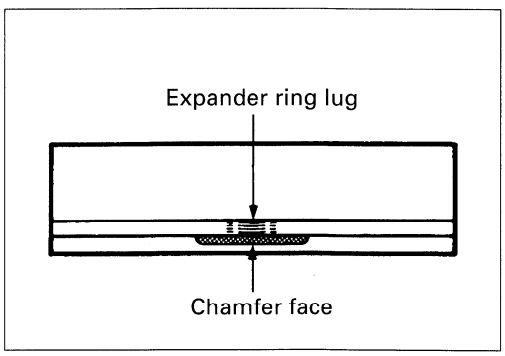

- Fit the three O-rings to the bearing retainer screws.
- Apply a small quantity of Thread Lock "1342" to the bearing retainer screws.

1342 99000-32050: THREAD LOCK "1342"

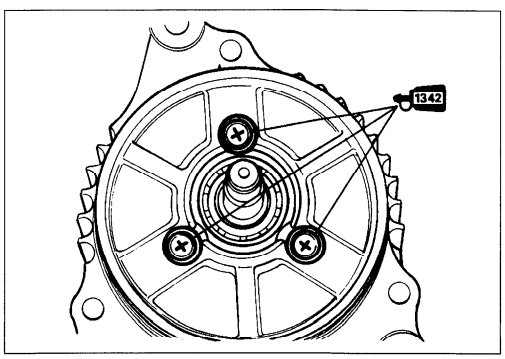

REASSEMBLY INFORMATION

① Generator driven gear
② Damper (4 pcs)
③ Damper housing
④ Oil seal
⑤ O-ring
⑥ O-ring
⑦ Generator housing
⑧ Spacer
⑨ Bearing cover
⑩ Bearing
⑪ Retainer
⑫ Stud bolt
⑬ Rotor
⑭ Bearing cover No.2
⑮ Bearing (Slip ring side)
⑯ Bearing cover No.1
⑰ Generator end housing
⑱ Rectifier
⑲ Brush holder
⑳ IC regulator
㉑ Generator end cover

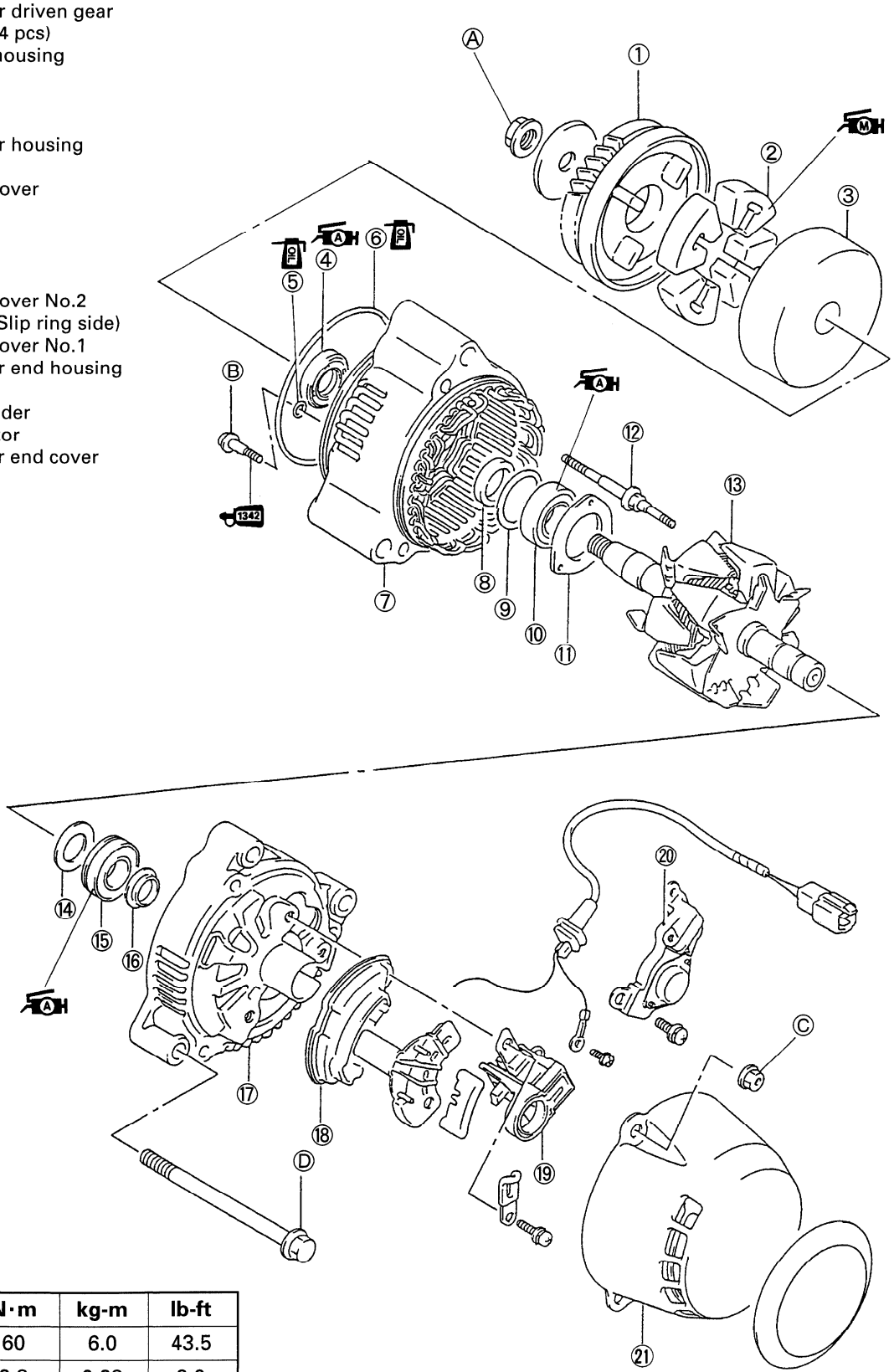

ITEM	N·m	kg-m	lb-ft
Ⓐ	60	6.0	43.5
Ⓑ	2.8	0.28	2.0
Ⓒ	4.6	0.46	3.5
Ⓓ	25	2.5	18.0

STARTER SYSTEM AND SIDE-STAND/IGNITION INTERLOCK SYSTEM

STARTER SYSTEM DESCRIPTION

The starter system is shown in the diagram below: namely, the starter motor, starter relay, side-stand relay, side-stand switch, neutral switch, clutch lever position switch, starter switch, engine stop switch, IG switch and battery.

Depressing the starter switch (on the right handlebars switch box) energizes the relay, causing the contact points to close which connects the starter motor to the battery. The motor draws about 80 amperes to start the engine.

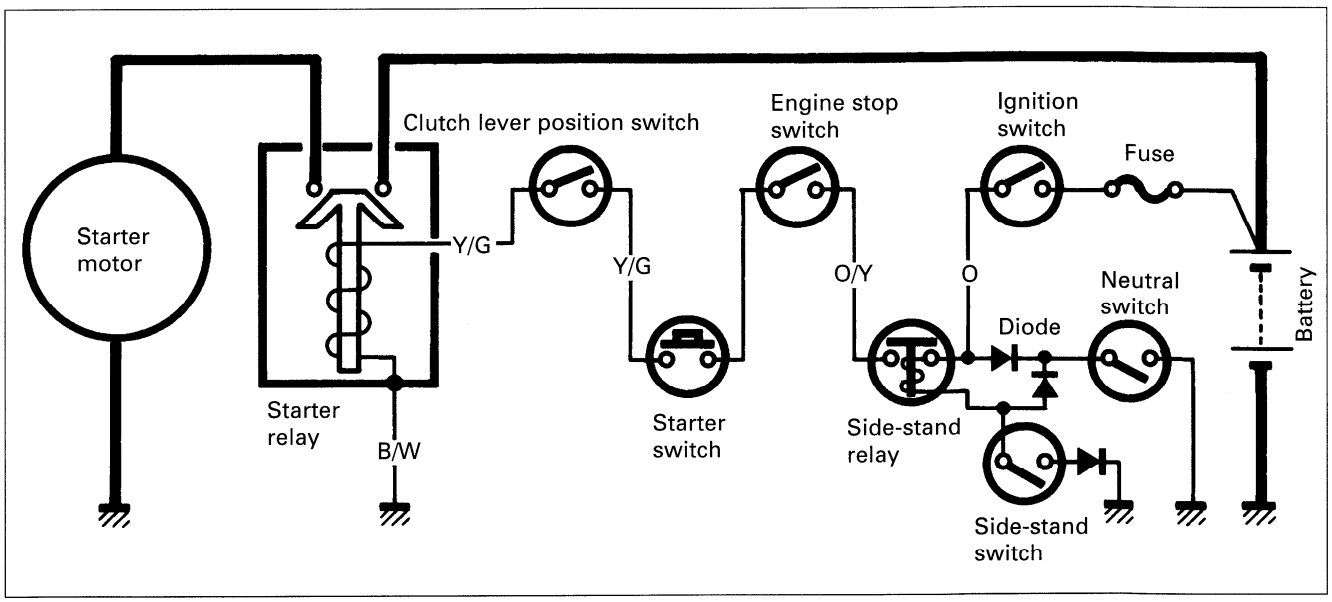

SIDE-STAND/IGNITION INTERLOCK SYSTEM DESCRIPTION

This side-stand/ignition interlock system is to prevent starting the motorcycle with the side-stand left down. The system is operated by an electric circuit provided between the battery and ignition coil.

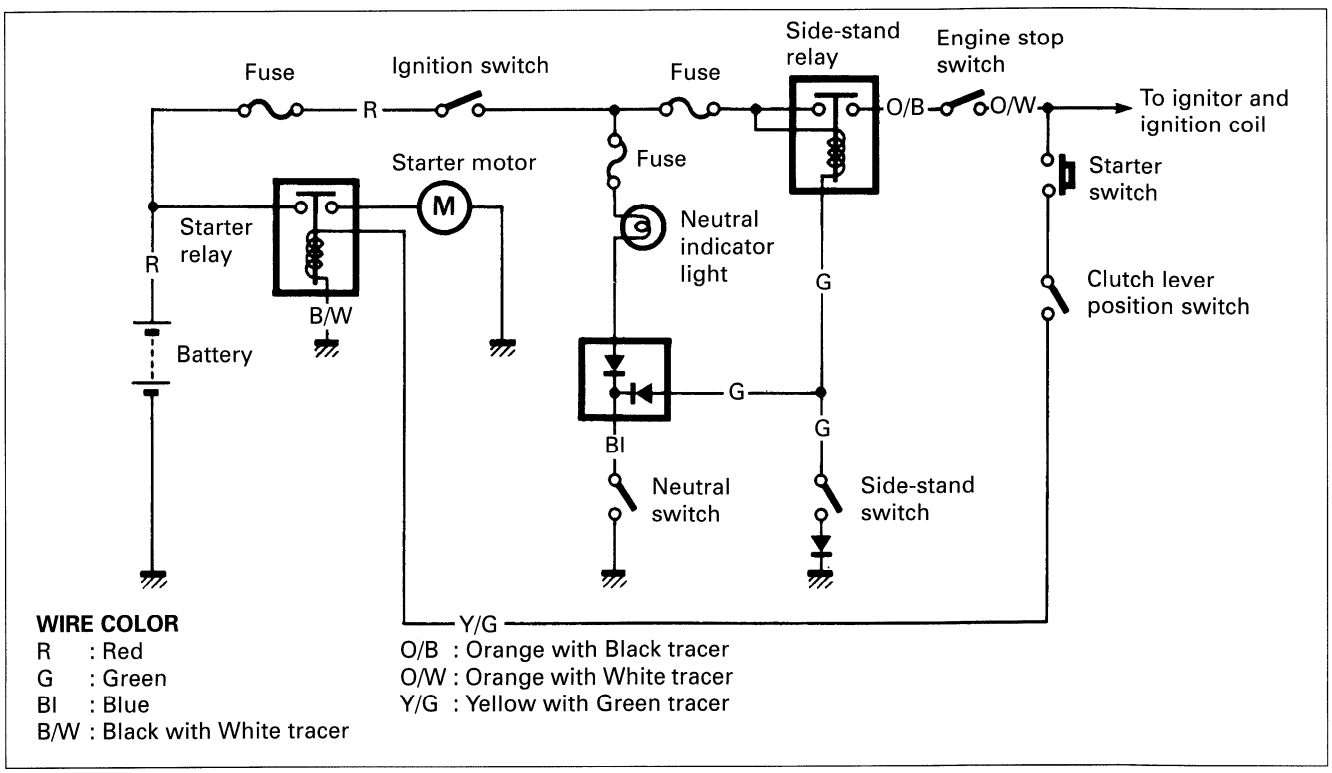

The circuit consists of relay, lamp, diode and switches and decides to live the ignition coil depending on the position of the TRANSMISSION and SIDE-STAND with the neutral and side-stand switches working mutually.
The ignition coil lives only in two situations as follows.

1. Transmission: "NEUTRAL (ON)" Side-stand: "DOWN (OFF)"
   The current flow Ⓐ turns "ON" the relay and the ignition coil lives even the side-stand is kept down. This is or warming up the engine.

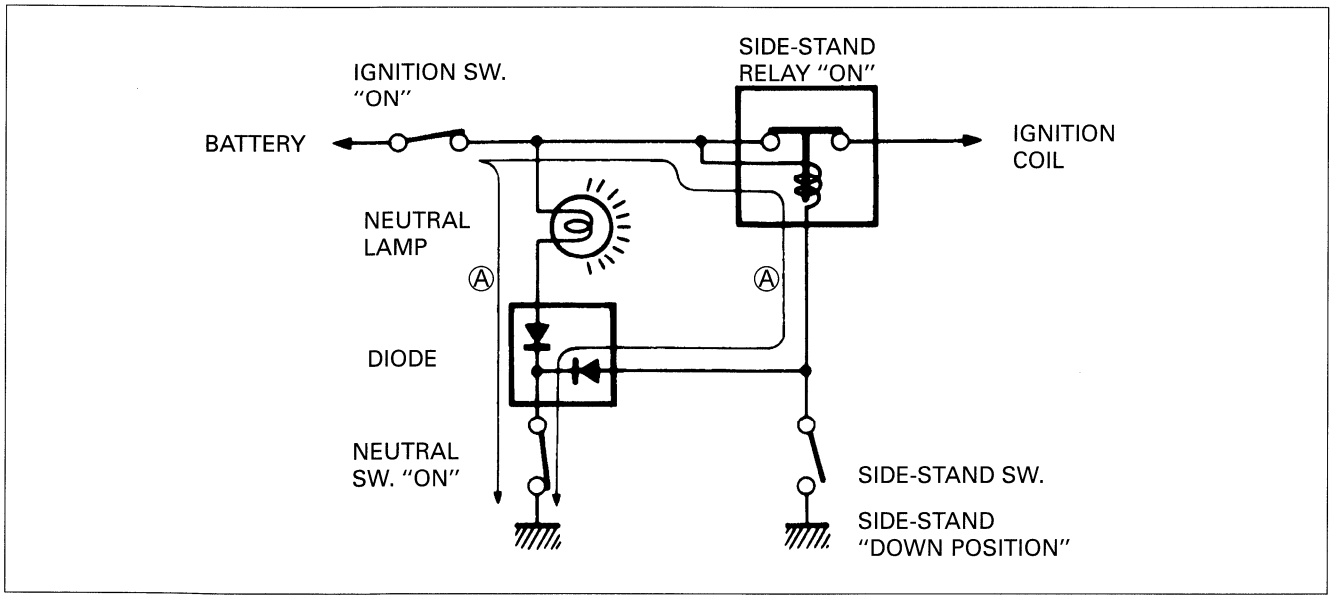

2. Side-stand: "UP-RIGHT (ON)"
   The current flow Ⓑ turns "ON" the relay and the ignition coil lives. The engine can be easily started at any transmission position.

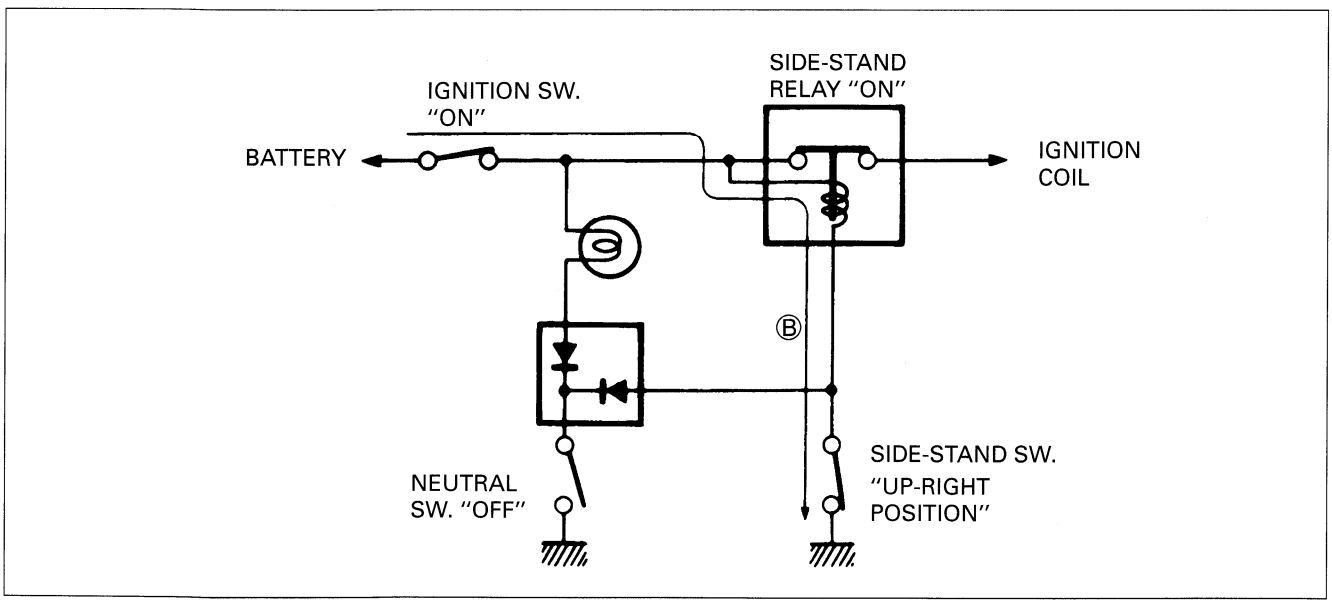

TROUBLESHOOTING

Starter motor will not run.

The transmission is in neutral. Turn on the ignition switch with the engine stop switch in "RUN" position. Check whether to hear the click noise from the starter relay when the starter button is pushed.

Clicks →

Check whether to run the starter motor when connect the starter motor terminal to the battery ⊕ terminal directly. (Do not use thin wire, because a large amount of current flows.)

Run →
- Faulty starter relay
- Loosen or disconnected starter motor lead wire

Not run →
- Faulty starter motor

No click ↓

Measure the starter relay voltage at the starter relay connectors (between Y/G ⊕ and B/W ⊖) when the starter button is pushed.

No voltage →
- Faulty ignition switch
- Faulty engine stop switch
- Faulty neutral switch
- Faulty diode
- Faulty side-stand relay
- Faulty starter button
- Faulty clutch lever position switch
- Poor contact of connector
- Open circuit in wiring harness

Voltage measured ↓

Check the starter relay. (Refer to page 6-19.)

Incorrect →
- Faulty starter relay

Correct →
- Poor contact of the starter relay

Starter motor runs when the transmission is in neutral, but does not run with the transmission in any position except neutral, with the side-stand up position.

Check the side-stand switch. (Refer to page 6-21.)

Incorrect →
- Faulty side-stand switch

Correct →
- Open circuit in wiring harness
- Poor contact of connector

Others

Engine does not turn though starter motor runs.	• Faulty starter clutch

STARTER MOTOR REMOVAL AND DISASSEMBLY

- Disconnect the starter motor lead wire ① and remove the starter motor by removing the mounting bolts ②.

NOTE:
If it is difficult to remove the starter motor, remove the oil hose mounting bolts ③ to provide additional space.

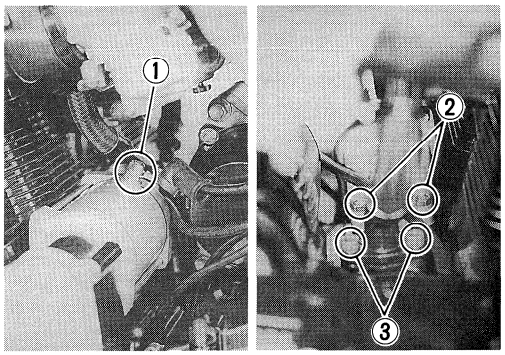

- Disassemble the starter motor as shown in the illustration.

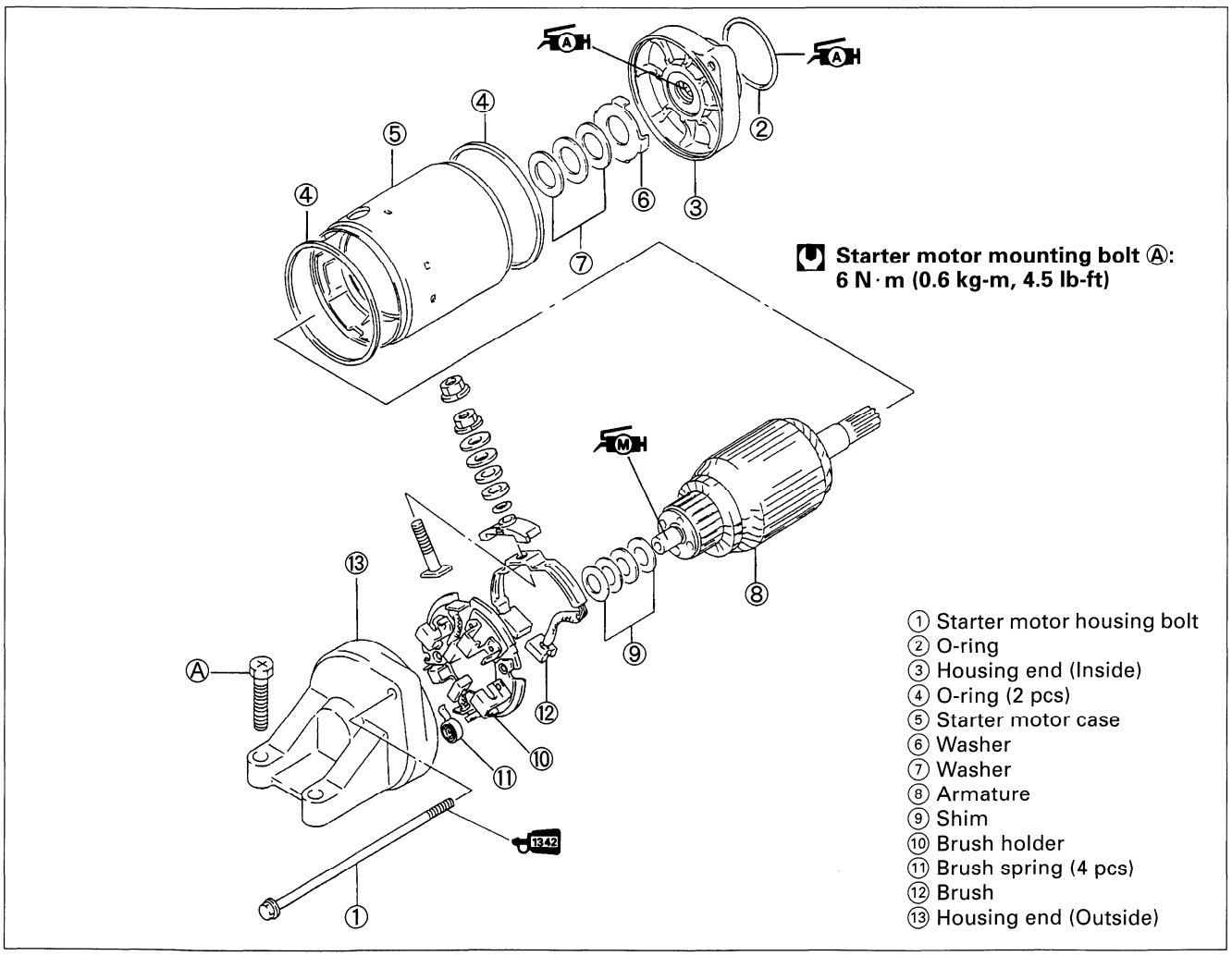

STARTER MOTOR INSPECTION

CARBON BRUSH

Inspect the brushed for abnormal wear, crack or smoothness in the brush holder.
If the brush has failed, replace the brush sub ass'y.

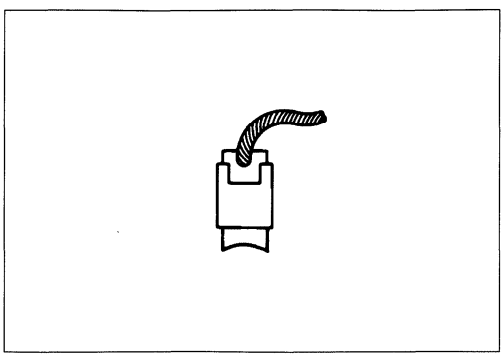

COMMUTATOR

Inspect the commutator for discoloration, abnormal wear or undercut Ⓐ.
If the commutator is abnormally worn, replace the armature.
When surface is descolored, polish it with #400 sand paper and clean it with dry cloth.
If there is no undercut, scrape out the insulator ① with saw blade.

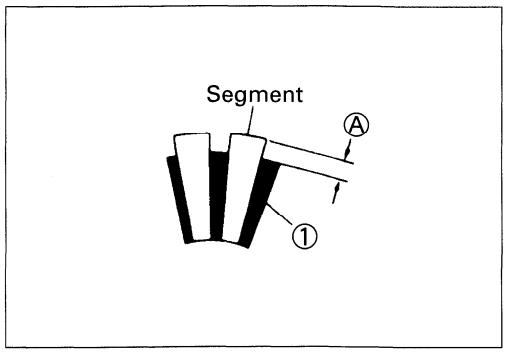

ARMATURE COIL INSPECTION

Check for continuity between each segment.
Check for continuity between each segment and the armature shaft.
If there is no continuity between the segments or there is continuity between the segments and shaft, replace the armature with a new one.

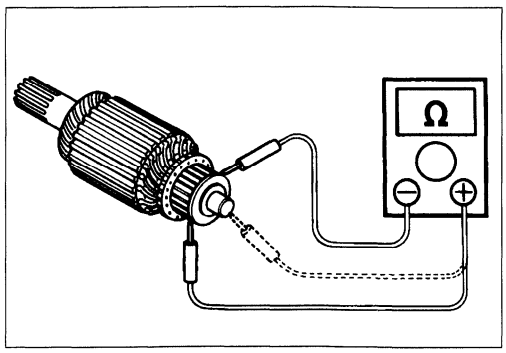

OIL SEAL INSPECTION

Check the seal lip for damage or leakage.
If any damage is found, replace the bracket.

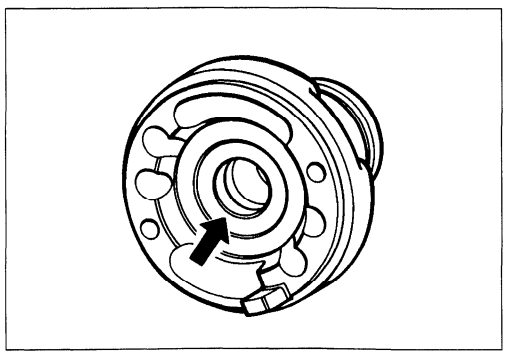

STARTER MOTOR REASSEMBLY

Reassemble the starter motor in the reverse order of disassembly. Pay attention to the following points:

⚠ CAUTION

Replace the O-rings with new ones to prevent oil leakage and moisture.

- Apply SUZUKI SUPER GREASE "A" to the lip of the oil seal.

99000-25010: SUZUKI SUPER GREASE "A"

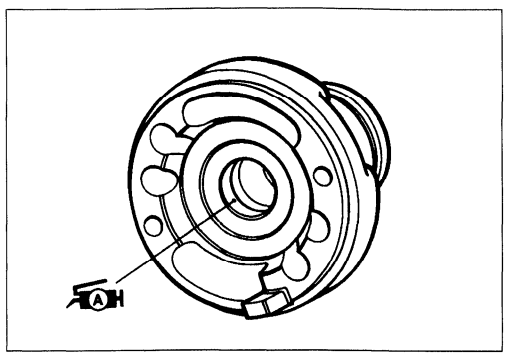

- Apply a small quantity of MOLY PASTE to the armature shaft.

99000-25140: SUZUKI MOLY PASTE

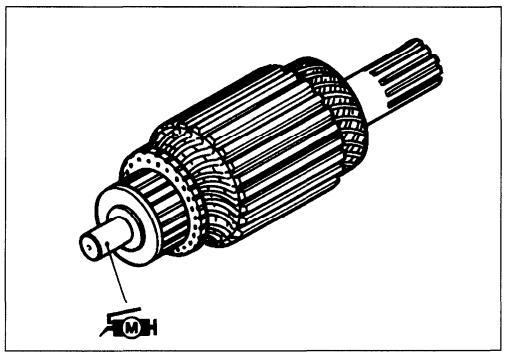

- Apply a small quantity of THREAD LOCK "1342" to the starter motor housing bolts.

99000-32050: THREAD LOCK "1342"

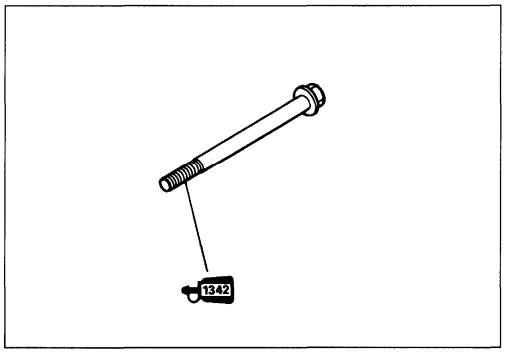

STARTER RELAY INSPECTION

- Remove the seat and frame cover assembly. (Refer to page 5-3.)
- Remove the cover.
- Disconnect the starter motor lead wire and battery lead wire at the starter relay which is located behind the left frame cover.
- Disconnect the lead wire coupler from the starter relay.

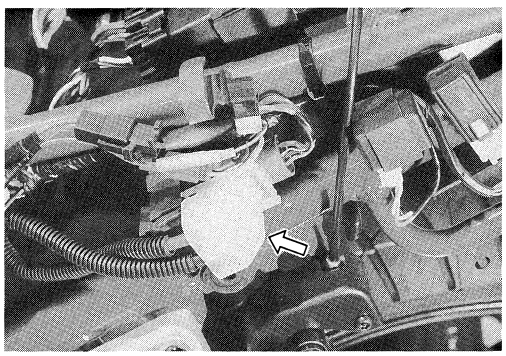

Apply 12 volts to ① and ② terminals, inspect the continuity between the terminals, positive and negative.
If the starter relay is in sound condition, continuity is found.

09900-25002: Pocket tester

Tester knob indication: ×1Ω range

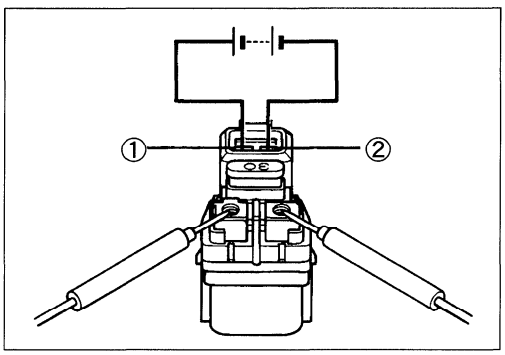

⚠ CAUTION

Do not apply a battery voltage more than 5 seconds to the starter relay as it may overheat and cause damage to the relay coil.

Check the coil for "open", "ground" and ohmic resistance. The coil is in good condition if the resistance is as follows.

09900-25002: Pocket tester

Tester knob indication: ×1Ω range

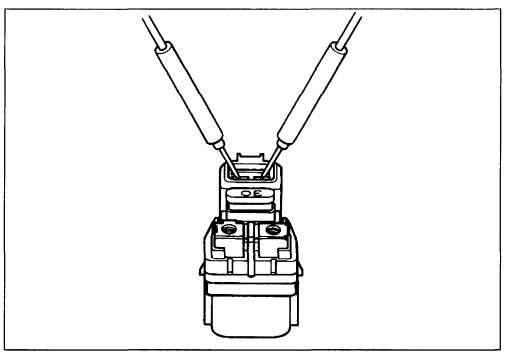

Starter relay resistance
Standard: 3—5Ω

STARTER RELAY CIRCUIT DIAGRAM

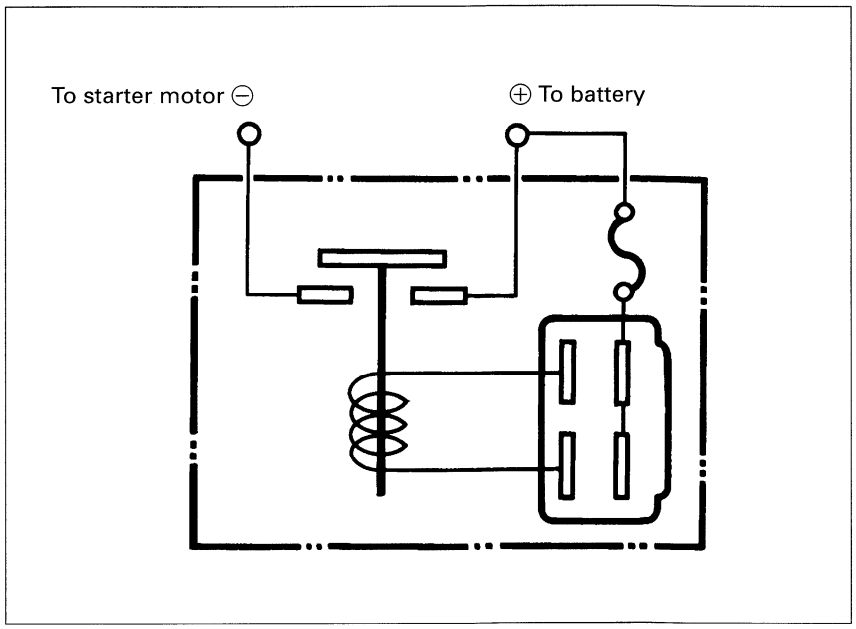

SIDE-STAND/IGNITION INTERLOCK SYSTEM INSPECTION

If the interlock system does not operate properly, check each component. If any abnormality is found, replace the component with a new one.

TOOL 09900-25002: Pocket tester

DIODE

The diode is located behind the left frame cover.
The diode can pass current only in one direction.
Check the continuity between ① and ②. If one way continuity the diode is in good condition.
Also check the continuity between ② and ③ as required.

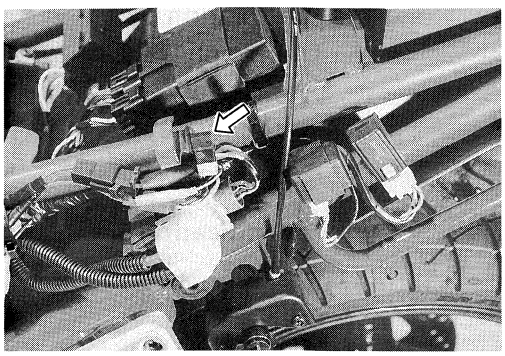

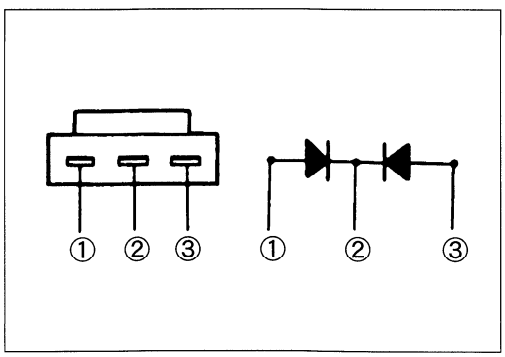

NEUTRAL SWITCH

The neutral lead wire coupler is located behind the left frame cover.

- Remove the seat and frame cover assembly. (Refer to page 5-3.)
- Disconnect the neutral switch lead and check the continuity between Blue and Ground with the transmission in "NEUTRAL".

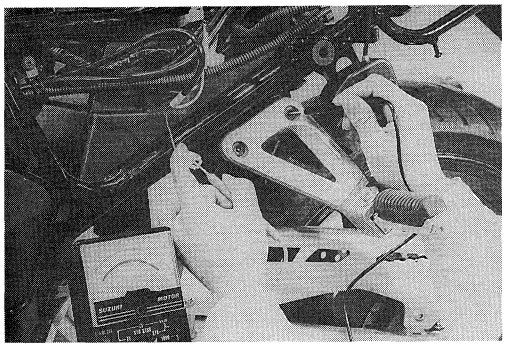

SIDE-STAND SWITCH

	Green (⊖ Probe)	Black/White (⊕ Probe)
ON (UP-right position)	○————	————○
OFF (Down position)		

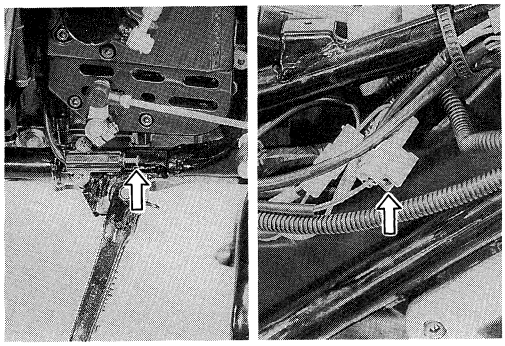

SIDE-STAND/IGNITION INTERLOCK RELAY

The side-stand/ignition interlock relay is located behind the left frame cover.

- Remove the seat and frame cover assembly.
- Remove the side-stand/ignition interlock relay Ⓐ.

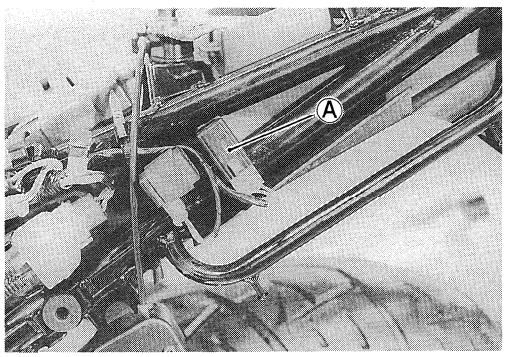

First, check the insulation between ① and ② terminals with pocket tester. Then apply 12 volts to ③ and ④ terminals, ⊕ to ③ and ⊖ to ④, and check the continuity between ① and ②. If there is no continuity, replace it with a new one.

TOOL 09900-25002: Pocket tester

Tester knob indication: × 1Ω range

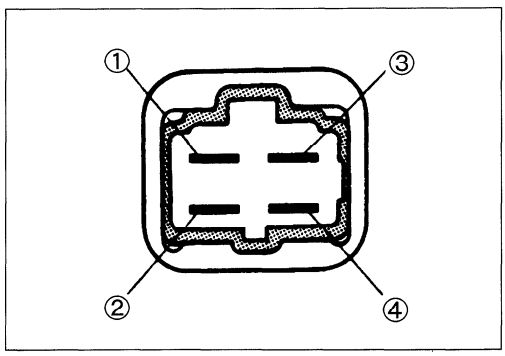

IGNITION SYSTEM (DIGITAL IGNITOR)

DESCRIPTION

The fully transistorized ignition system consists of a signal generator, ignitor unit (including 8-BIT MICROCOMPUTER and CERAMIC 4MHZ VIBRATOR), ignition coils and spark plugs. The characteristic of the ignition timing is programmed and stored in the "ROM" (READ ONLY MEMORY) of the ignitor unit.

The signal generator comprises the rotor tip and pickup coil.

The signal generator is mounted at the right end of the crankshaft. The induced signal in the signal generator is sent to wave-form arrangement circuit, and CPU receives this signal and calculates the best ignition timing from the signal of ceramic vibrator and data stored in the ROM. The CPU outputs signal to the transistor of the I.G. coil output circuit which is connected to the primary windings of the ignition coil which is turned OFF and ON accordingly, thus it induces the secondary current on the ignition coil secondary windings and produce the spark between spark plug gaps.

Ignition cut-off circuit is incorporated in the ignitor unit to prevent over-running engine. If engine r/min. reaches 10 900 r/min., this circuit cuts off the ignition primary current for all spark plugs.

⚠ CAUTION

Engine can run over 10 900 r/min. without load, even if the ignition cut-off circuit is effective, and it may cause engine damage. Do not run the engine without load over 10 900 r/min. at anytime.

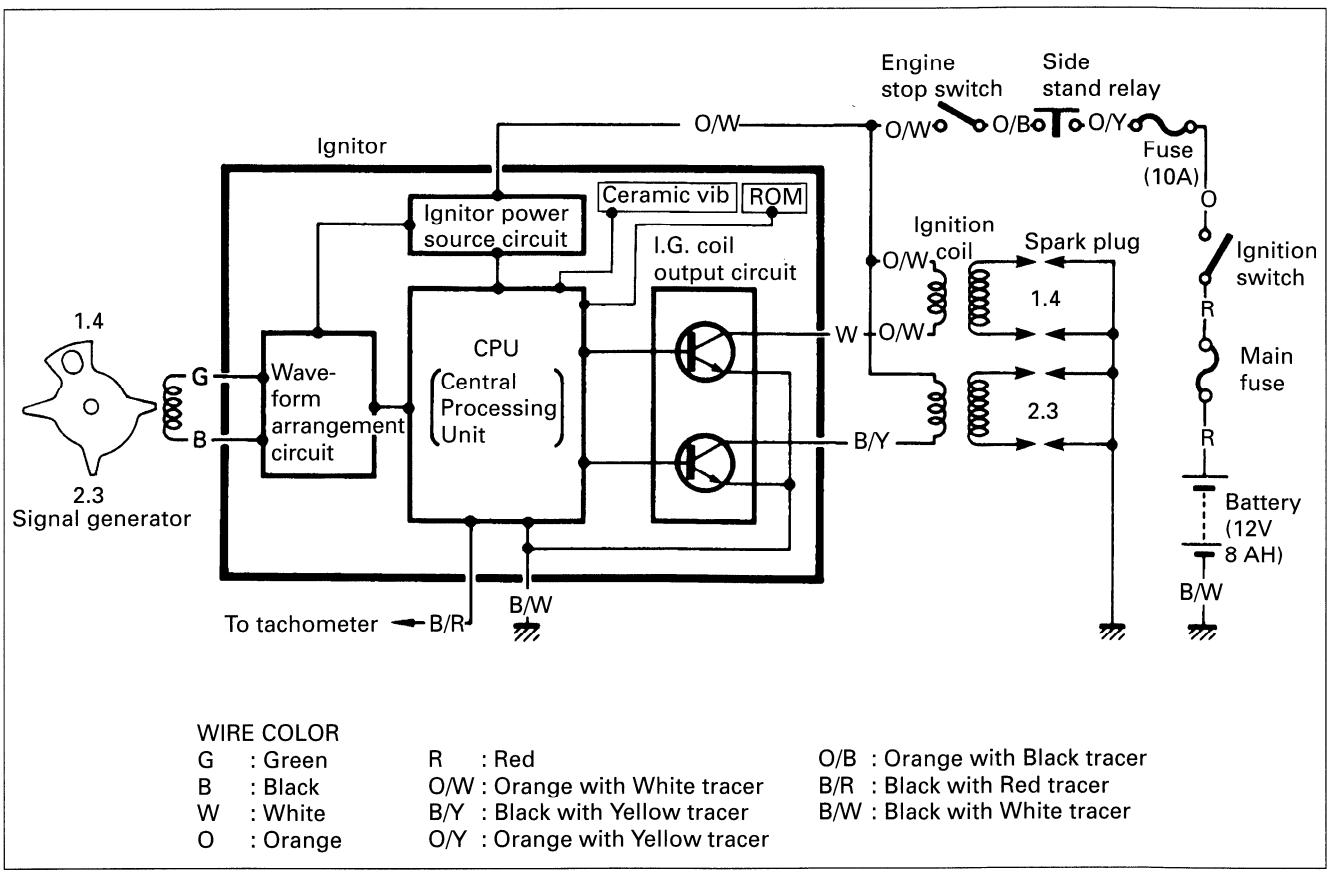

TROUBLESHOOTING

No spark at all plugs

* Check that the transmission is in neutral position and the engine stop switch is in the RUN position. Inspect that the fuse is not blown before the diagnosis.

Check the ignitor coupler for poor contact.
- Looseness → • Poor contact of coupler

Correct ↓

Inspect the battery voltage between input lead wires (O/W and B/W) at the ignitor unit with the ignition switch "ON" position.
- Incorrect →
  - Faulty ignition switch
  - Faulty side-stand relay
  - Faulty engine stop switch
  - Broken wire harness or poor contact of related circuit connecters

Correct ↓

Inspect the resistance of signal generator (B and G) or (Y and B/Bl). (Refer to page 6-24.)
- Incorrect → • Faulty signal generator

Correct →
- Faulty ignitor
- Faulty ignition coil

No spark at #1, 4 or #2, 3 plugs

* If only one spark plug does not spark, it is defective or high-tension cord is disconnected because one ignition coil furnishes two spark plugs.

Check the spark by changing the ignition coils with each other.
- Spark → Inspect the ignition coil (Refer to page 6-24.)
  - Normal ↓
  - Abnormal ↓ • Faulty ignition coil
  - Normal ↓
    - Poor contact of primary coil
    - Faulty high-tension cord

No spark ↓

Inspect the ignitor with ignitor checker. (Refer to page 6-26.)
- Incorrect → • Faulty ignitor

Correct →
- Poor contact of coupler

INSPECTION

IGNITION COIL (Checking with Electro Tester)

- Remove the seat. (Refer to page 5-3.)
- Remove the fuel tank. (Refer to page 4-3.)
- Remove the ignition coils Ⓐ.

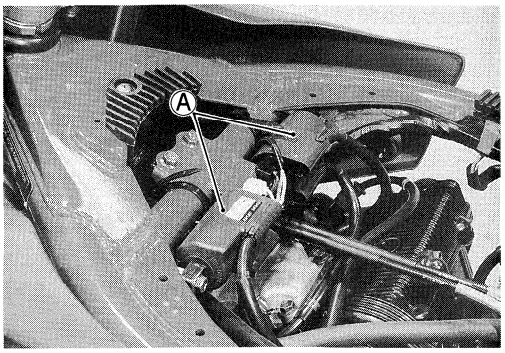

NOTE:
Make sure that the three-needle sparking distance of electro tester is set at 8 mm (0.3 in).

With the tester and jumper wire, test the ignition coil for sparking performance in accordance with the following two steps.

STEP① : Connect the jumper wire to the spark plug cap and ignition coil ground.

STEP② : Switch over the jumper wire to the other plug cap and ground.

If no sparking or orange color sparking occurs in the above conditions, it may be caused by defective coil.

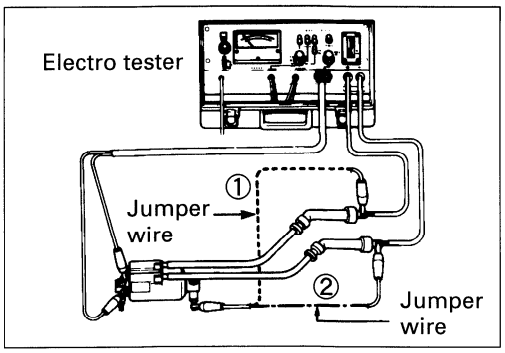

TOOL 09900-28106: Electro tester

Spark performance: Over 8 mm (0.3 in)

IGNITION COIL (Checking with Pocket Tester)

A SUZUKI pocket tester or an ohm meter may be used, instead of the electro tester. In either case, the ignition coil is to be checked for continuity in both primary and secondary windings. Exact ohmic readings are not necessary, but, if the windings are in sound condition, their continuity will be noted with these approximate ohmic values.

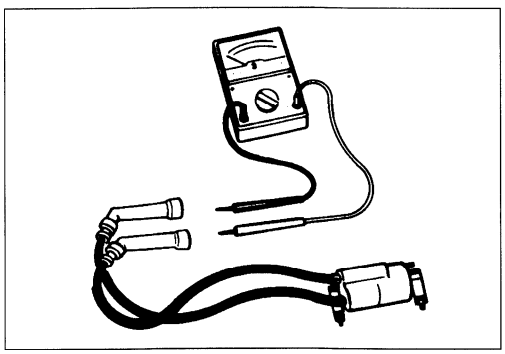

TOOL 09900-25002: Pocket tester

Ignition coil resistance
Primary: 2—4Ω (⊕ tap–⊖ tap)

Tester knob indication: ×1Ω range

Secondary: 30—40 kΩ (Plug cap–Plug cap)

Tester knob indication: ×1kΩ range

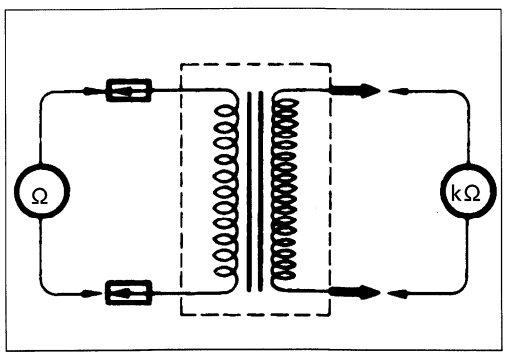

SIGNAL GENERATOR (Checking with Pocket Tester)

- Remove the seat and frame cover assembly. (Refer to page 5-3.)
- Disconnect the lead wire coupler ①.

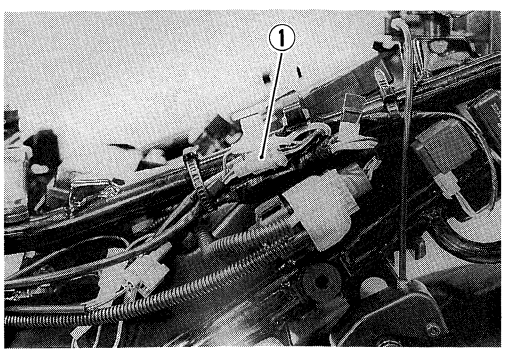

Measure the resistance between lead wires. If the resistance is infinity or less than the specifications, the signal generator must be replaced.

TOOL 09900-25002: Pocket tester

Signal coil resistance: Approx. 135—200Ω (Yellow–Black/Blue)

Tester knob indication: ×1Ω range

SPARK PLUGS

- Remove the fuel tank. (Refer to page 4-3.)
- Remove all the spark plugs.

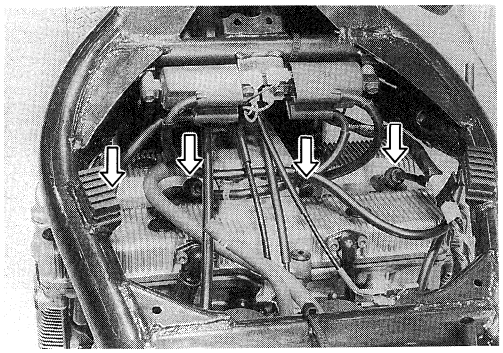

Carbon Deposit

Check to see the carbon deposit on the plug.
If the carbon is deposited, remove it with a spark plug cleaner machine or carefully using a tool with a pointed end.

Spark Plug Gap

Measure the plug gap with a thickness gauge if it is correct. If not, adjust it to the following gap.

TOOL 09900-20803: Thickness gauge

Spark plug gap
Standard: 0.6—0.7 mm (0.024—0.028 in)

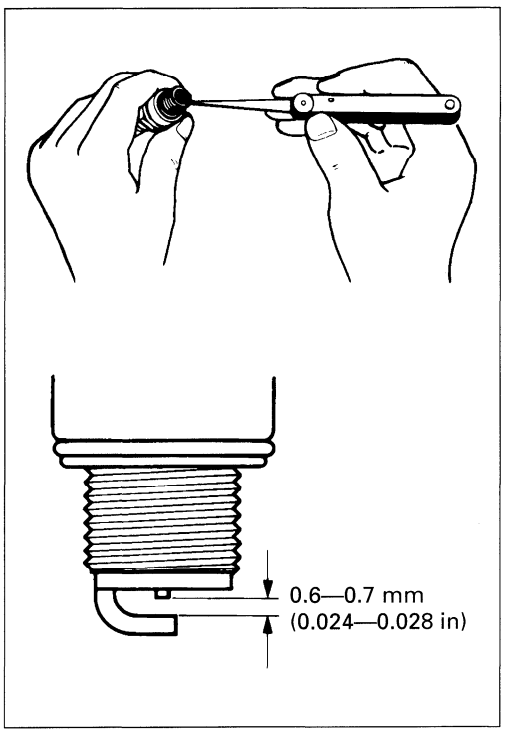

Electrode's Condition

Check to see a worn or burnt condition of the electrode. If it is extremely worn or burnt, replace the plug. Also replace the plug if it has a broken insulator, damaged thread, etc.

Heat Range

NGK JR9B should be used as the standard. However, the heat range of the spark plug should be selected to meet the requirements of speed, actual load, fuel and etc. Proper heat range would be indicated if all insulators were LIGHT BROWN in color. If they are baked white, they should be replaced with a cold type plug NGK JR10B.

	Standard	Cold type	Hot type
NGK	JR9B	JR10B	JR8B

⚠ CAUTION

Confirm the thread size and reach when replacing the plug. If the reach is too short, carbon will be deposited on the screw portion of the plug hole and engine damage may result.

IGNITOR UNIT (Checking with Digital Ignitor Checker)

This section explains the checking procedure for the ignitor unit using Digital Ignitor Checker (special tool).

With this checker, the ignitor unit can be checked either on the machine or off the machine. The following explains the checking procedure on the machine.

TOOL 09931-94490: Digital ignitor checker
09931-61740: Extension lead wire MODE 1-A3

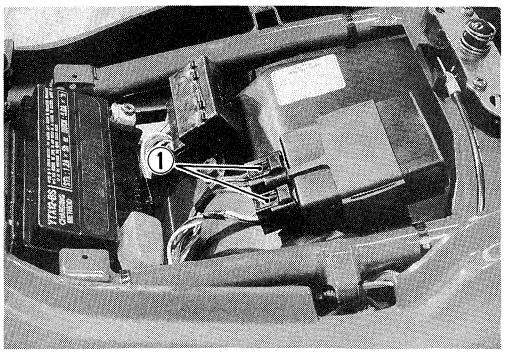

WIRING PROCEDURE:

- Remove the seat.
- Disconnect two ignitor lead wire couplers ① at the ignitor unit.

- Connect the lead wire "MODE 1-A" ②, lead wire "MODE 1-A3" ③ and power source leads ④ as shown in the following illustration.

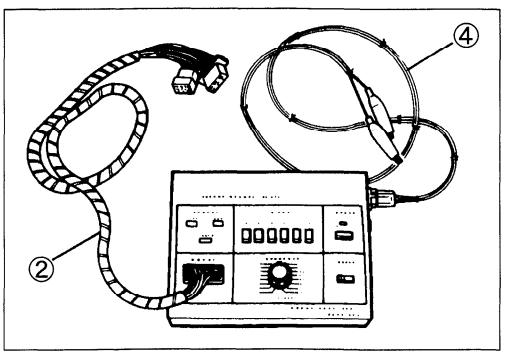

⚠ CAUTION

- **Be sure that the BLACK lead is connected to the battery ⊖ terminal and RED lead to the ⊕ terminal.**
- **Before connecting the power source leads, make sure that both "POWER" button and "START" switch are in "off" position (POWER button not depressed).**

NOTE:
Be sure that the battery used is in fully-charged condition.

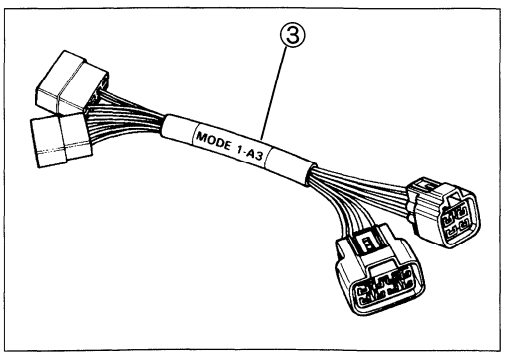

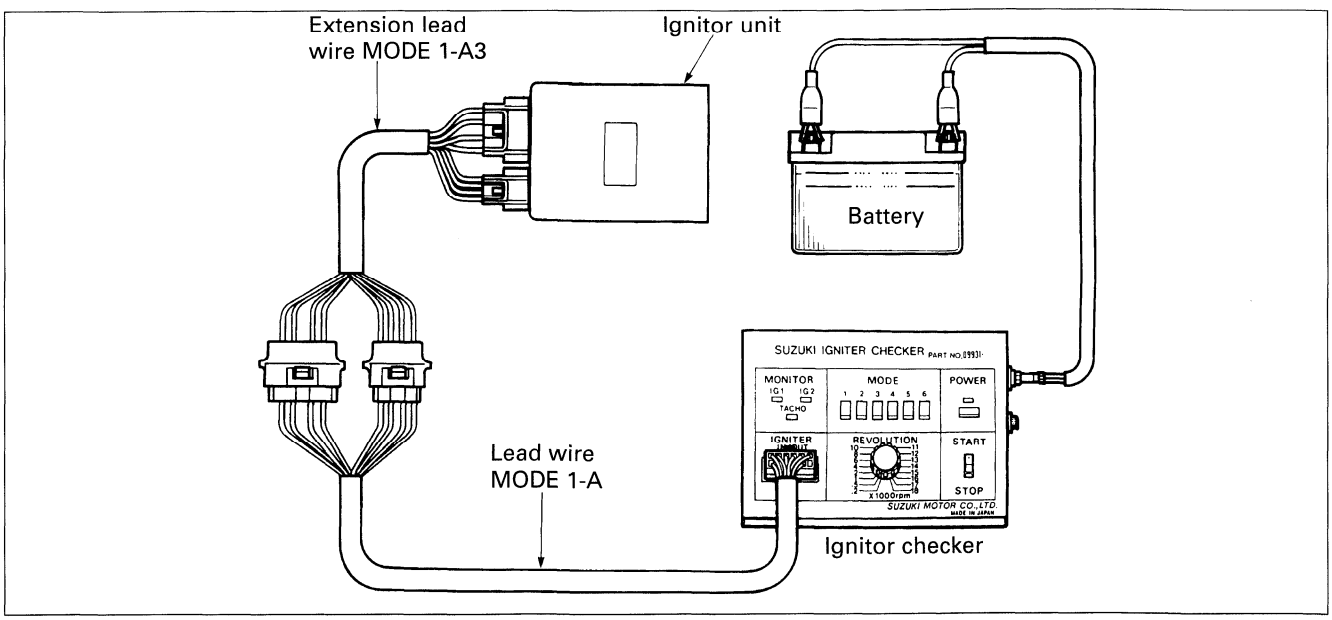

CHECK PROCEDURE:
With all the lead wires properly connected, check the ignitor unit in the following four steps.

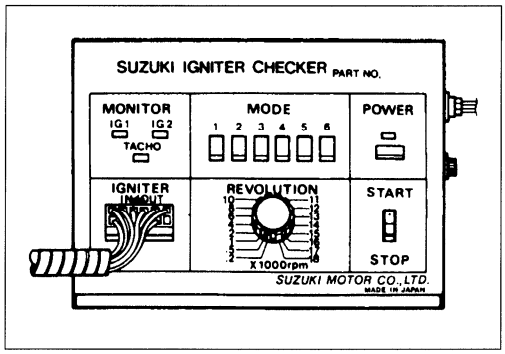

First Step:
Depress "MODE 1" button then "POWER" button. This time, "POWER" lamp should come on, if not, battery is under-charged.

Second Step:
Set "REVOLUTION" dial pointer to ".2" position in which the checker produces the ignition primary current pulses simulating 200 r/min of engine revolution when "START" switch is turned on. With "START" switch is turned to ON position, check that three "MONITOR" lamps turn on and off in slow frequency in order of ①–②–③ or ①–③–② as illustrated.

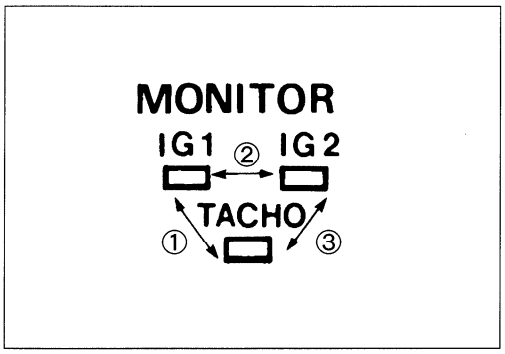

Third Step:
Turn "REVOLUTION" dial up gradually (assuming the engine gradually revved up) and check that the MONITOR lamp flash frequency as explained in the second step above increases. As the dial pointer passes beyond the graduation "4" (4 000 r/min), all the three lamps should show continuously lighted. When REVOLUTION dial pointer reaches "11" (11 000 r/min), MONITOR "IG1" and "IG2" lamps should go off while "TACHO" lamp stays on. This is because the ignition "cut-off" provided in this motorcycle ignition system functions at 10 900 ± 100 r/min. If the lamps go off at the graduation below "12", the engine can not perform properly and therefore the ignitor unit must be replaced.

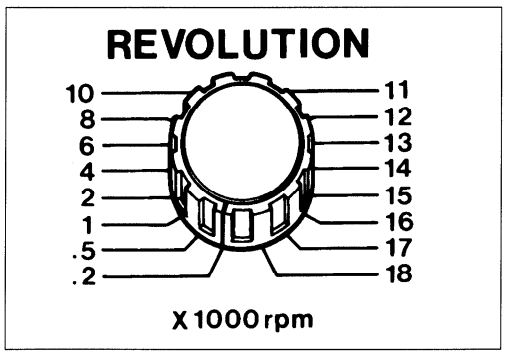

Fourth Step:
Set "REVOLUTION" dial pointer to ".5" or "1" position.
Turn "START" switch to STOP position. If the "IG1" or "IG2", or both lamps remain light more than 5 seconds, the ignitor unit must be replaced.

COMBINATION METER

REMOVAL AND DISASSEMBLY

- Remove the combination meter. (Refer to page 5-4.)
- Disassemble the combination meter as follows.

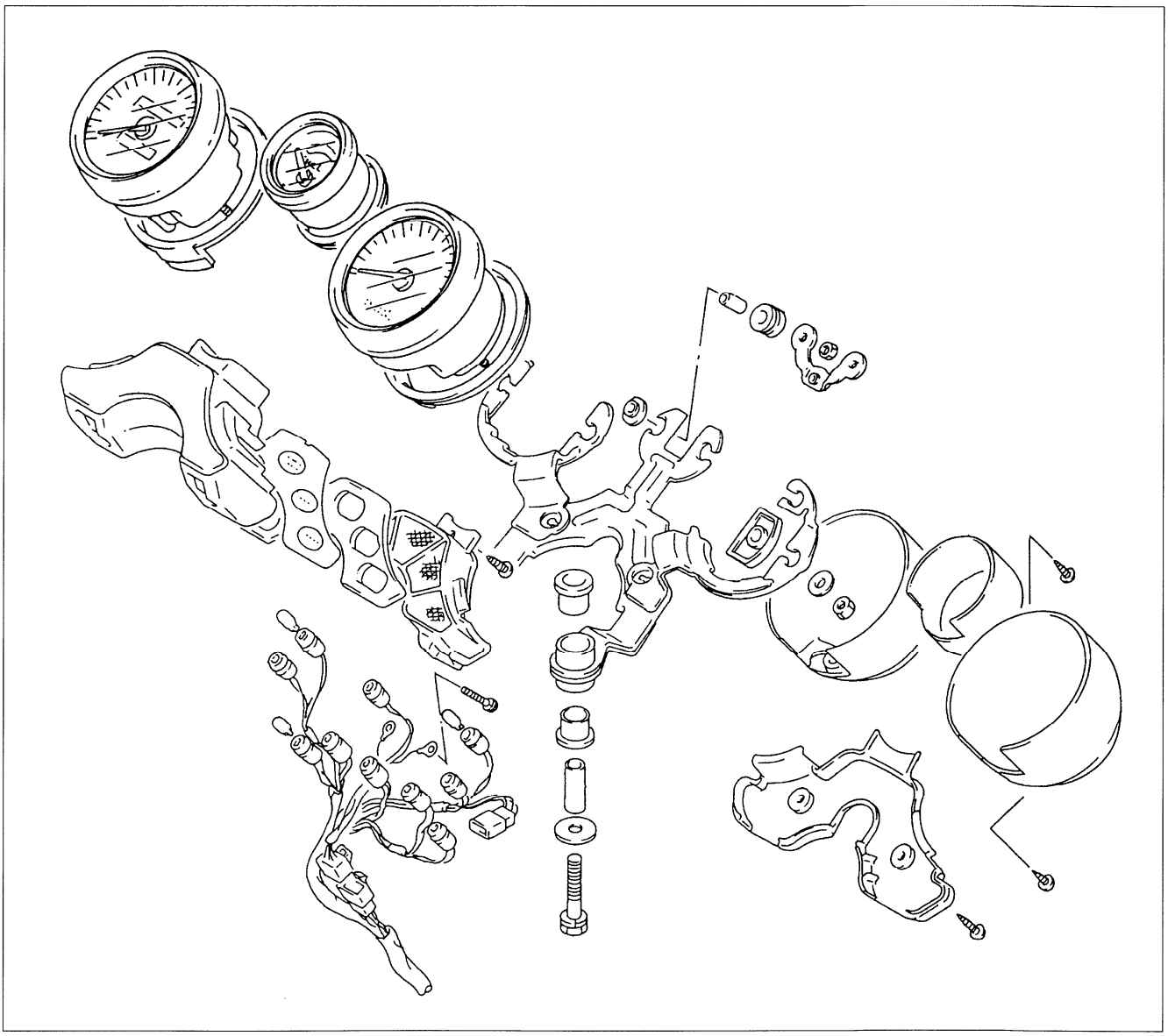

INSPECTION

Using the pocket tester, check the continuity between lead wires in the diagram on next page.
If the continuity measured is incorrect, replace the respective parts.

09900-25002: Pocket tester

Tester knob indication: ×1Ω range

NOTE:
When making this test, it is not necessary to remove the combination meter.

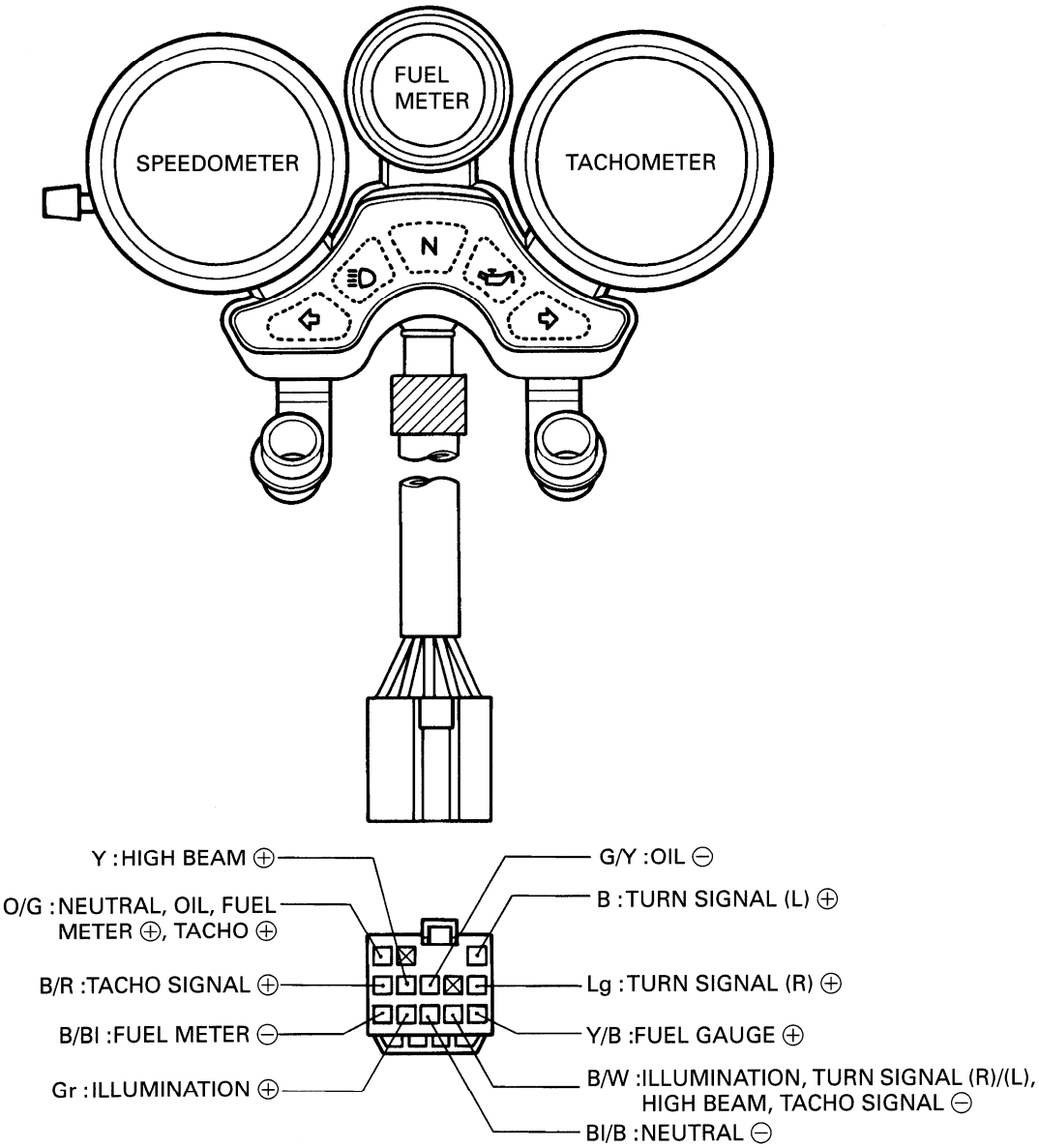

ITEM	⊕ Probe of tester to:	⊖ Probe of tester to:
OIL	O/G	G/Y
TURN (L)	B	B/W
TACHO SIGNAL	B/R	B/W
HIGH BEAM	Y	B/W
TURN (R)	Lg	B/W
NEUTRAL	O/G	Bl/B
ILLUMI	Gr	B/W
TACHO	O/G	B/W
FUEL METER	O/G	B/W
	Y/B	B/W

G/Y : Green with Yellow tracer
B : Black
B/R : Black with Red tracer
Y : Yellow
Lg : Light green
Gr : Gray
Bl/B: Blue with Black tracer
B/W: Black with White tracer
O/G : Orange with Green tracer
Y/B : Yellow with Black tracer

FUEL METER

FUEL METER INSPECTION

- Disconnect the fuel level gauge lead wire coupler. (Refer to page 4-3.)

To test the fuel meter two different checks may be used.
The first, connect a jumper wire between B/W and Y/B wires coming from the main wiring harness. With the ignition switch turned ON, the fuel meter should indicate "F".

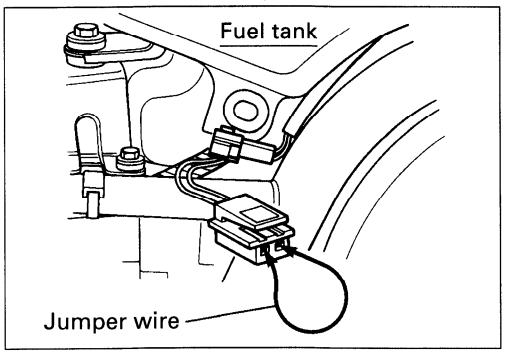

The second test will check the accuracy of the meter in the full and empty positions. Connect a new fuel level gauge as shown in the illustration.
Fuel meter is normal if its pointer indicates the E (empty) position when the specified resistance is applied to the circuit and if its pointer indicates the F (full) position when the resistor is changed to the specified values. If either one or both indications are abnormal, replace the fuel meter with a new one.

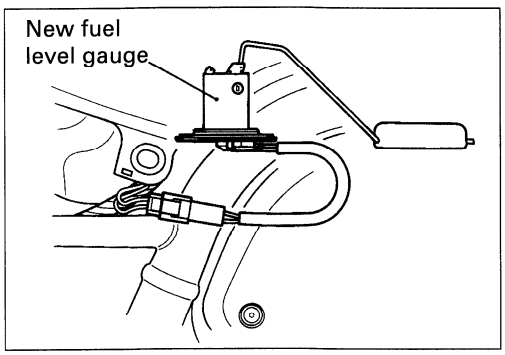

Resistance	1—5 Ω	103—117 Ω
Float position	Full (F)	Empty (E)

⚠ CAUTION

When inspecting the gauge resistance, be sure to disconnect the battery lead wire, or a pocket tester may be damaged.

O/G : Orange with Green tracer
B/Bl : Black with Blue tracer
Y/B : Yellow with Black tracer
B/W Black with White tracer

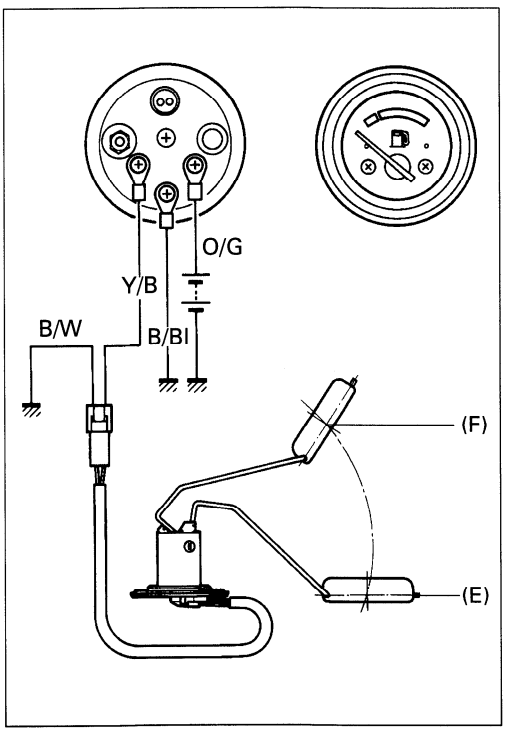

FUEL LEVEL GAUGE REMOVAL/ INSTALLATION

- Remove the fuel tank. (Refer to page 4-3.)
- Remove the fuel level gauge ① by removing the bolts.
- Install the fuel level gauge in the reverse order of removal.

⚠ CAUTION

Replace the gasket with a new one.

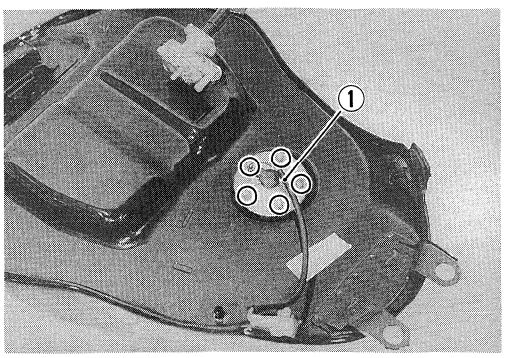

FUEL LEVEL GAUGE INSPECTION

- Remove the fuel tank and fuel level gauge. (Refer to pages 4-3 and 6-30.)

Check the resistance of each float position with a pocket tester.

If the resistance measured is incorrect, replace the fuel gauge assembly with a new one.

The relation between the position of the fuel gauge float and resistance is shown in the following table.

Float position	Resistance
Full (F)	1—5 Ω
Empty (E)	103—117 Ω

09900-25002: Pocket tester

Tester knob indication: × 1 Ω range

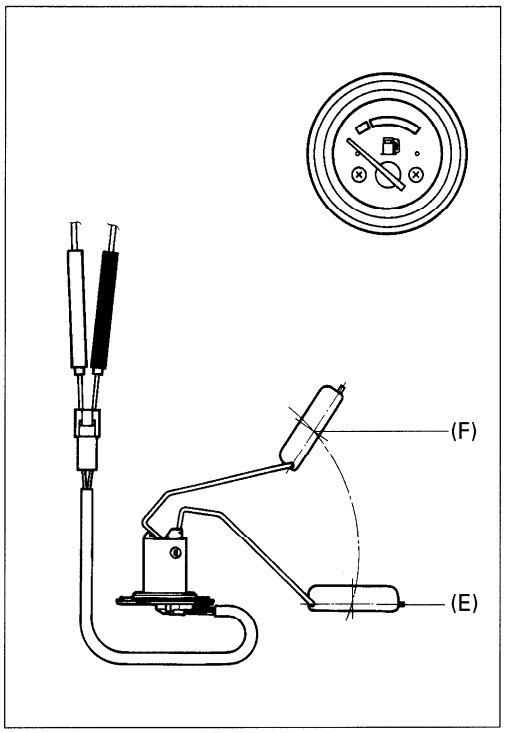

LAMPS

HEADLIGHT AND POSITION LIGHT

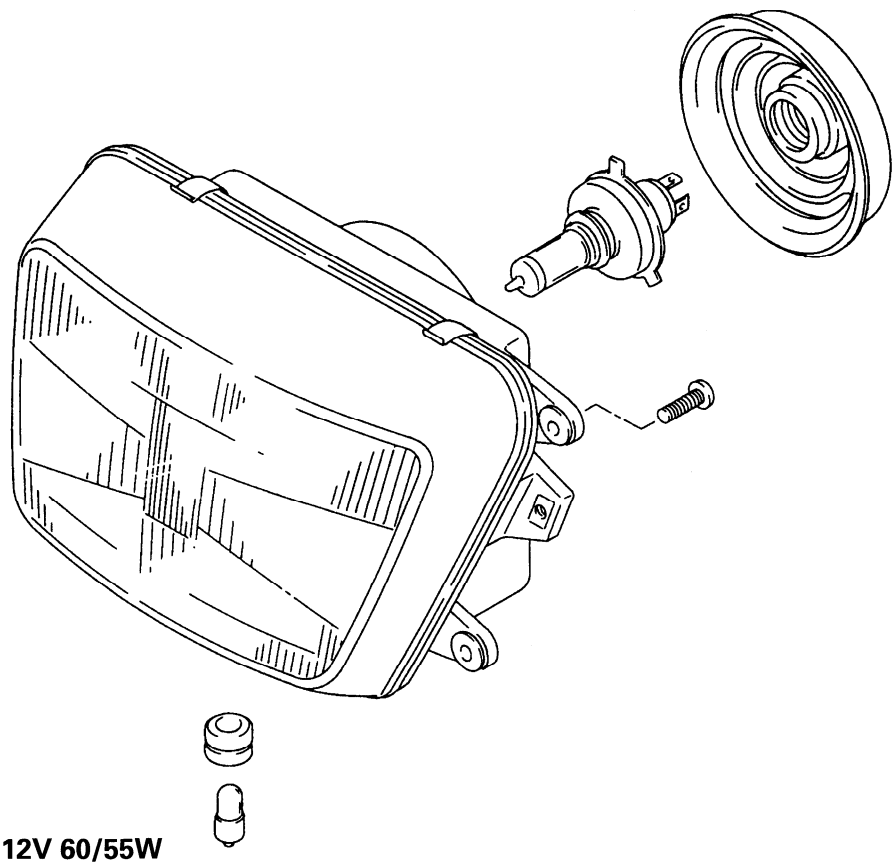

Headlight bulb: 12V 60/55W
Position light bulb: 12V 4W

NOTE:
Adjust the headlight, both vertical and horizontal, after reassembling.

HEADLIGHT BULB REPLACEMENT

- Disconnect the socket from the headlight and remove the rubber cap.
- Remove the bulb by removing the bulb holder spring.
- Reinstall the bulb in the reverse order of removal.

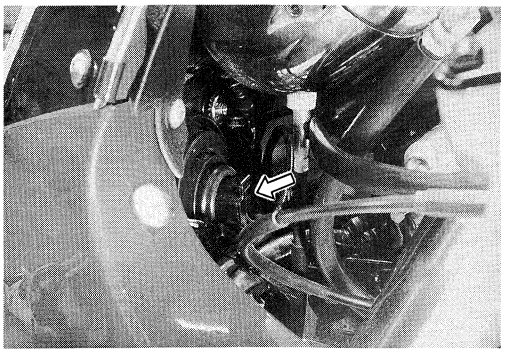

⚠ CAUTION

If you touch the bulb with your bare hands, clean it with a cloth moistened with alcohol or soapy water to prevent early failure.

POSITION LIGHT BULB REPLACEMENT

- Remove the position light along with the socket which is located beneath the headlight.
- Push in on the bulb, turn it to the left, and pull it out.
- Reinstall the bulb in the reverse order of removal.

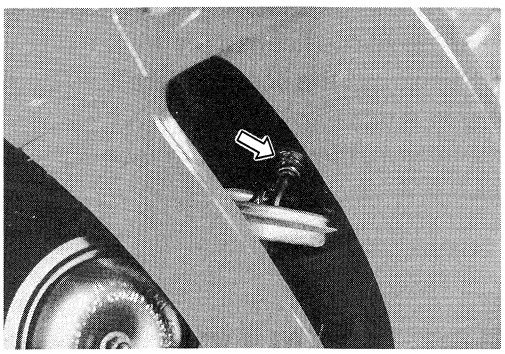

TAIL/BRAKE LIGHT AND LICENSE PLATE LIGHT

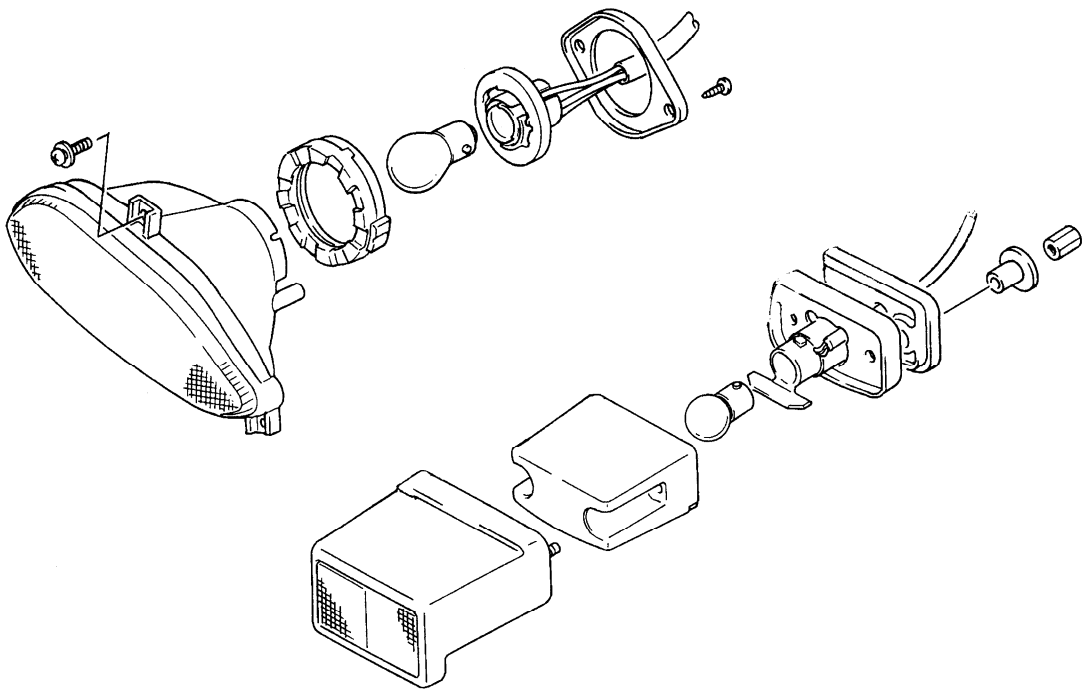

Tail/Brake light bulb: 12V 5/21W
License plate light bulb: 12V 5W

TAIL/BRAKE LIGHT BULB REPLACEMENT

- Remove the seat.
- Remove the tail/brake light ① along with the socket by turning it to the left.
- Push in on the tail/brake light bulb, turn it to the left, and pull it out.
- Reinstall the bulb in the reverse order of removal.

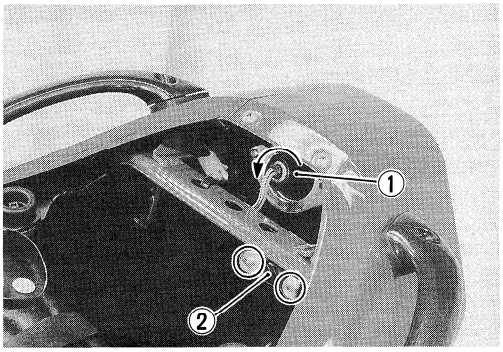

LICENSE PLATE LIGHT BULB REPLACEMENT

- Remove the seat.
- Remove the license plate light ② by removing the nuts.
- Push in on the license plate light bulb, turn it to the left, and pull it out.
- Reinstall the bulb in the reverse order of removal.

TURN SIGNAL LIGHT

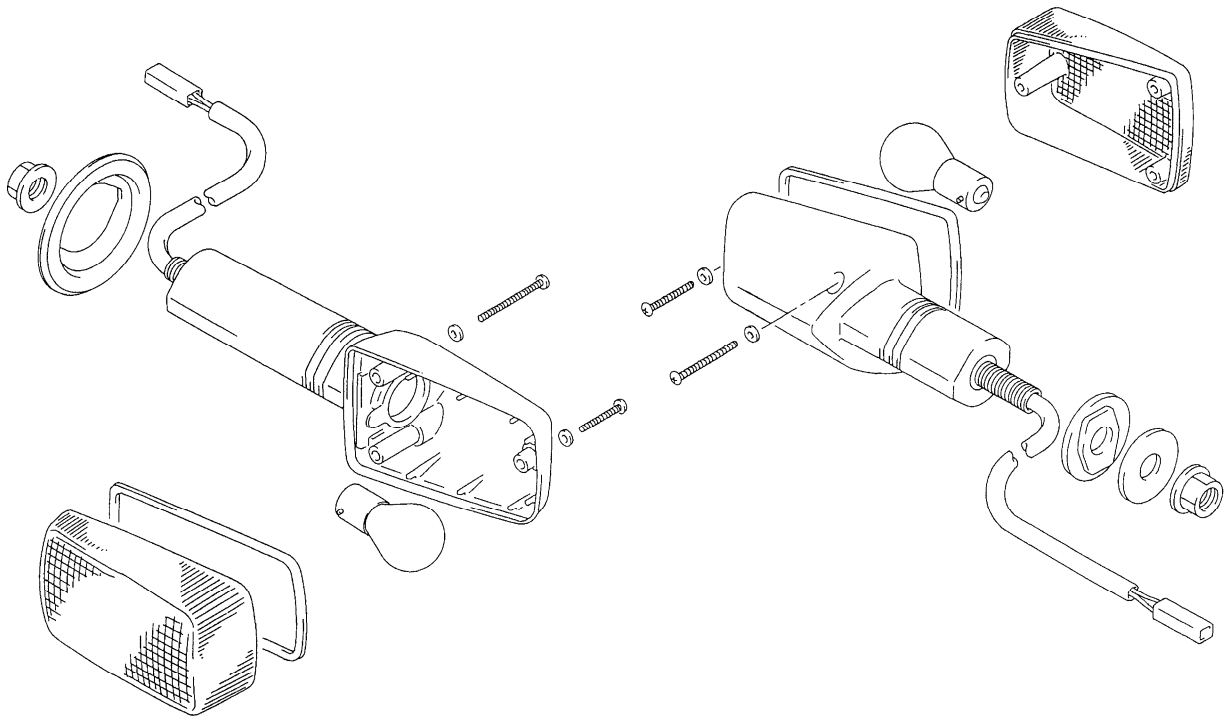

Turn signal light bulb: 12V 21W

⚠ CAUTION **Do not overtighten the lens fitting screws.**

TURN SIGNAL LIGHT BULB REPLACEMENT

- Remove the turn signal light lens.
- Push in on the turn signal light bulb, turn it to the left, and pull it out.
- Reinstall the bulb in the reverse order of removal.

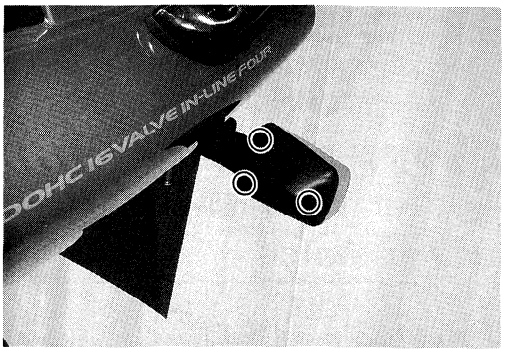

⚠ CAUTION

Do not overtighten the lens fitting screws.

RELAY

STARTER RELAY

The starter relay is located behind the left frame cover. (Refer to page 6-19 for details.)

SIDE-STAND RELAY

The side-stand relay is located behind the left frame cover. (Refer to page 6-21 for details.)

TURN SIGNAL RELAY

The turn signal relay ① is located behind the left frame cover. If the turn signal light dose not light, inspect the bulb or repair the circuit connection.
If the bulb, turn signal switch and circuit connection checked are all right, the turn signal relay may be faulty, replace it with a new one.

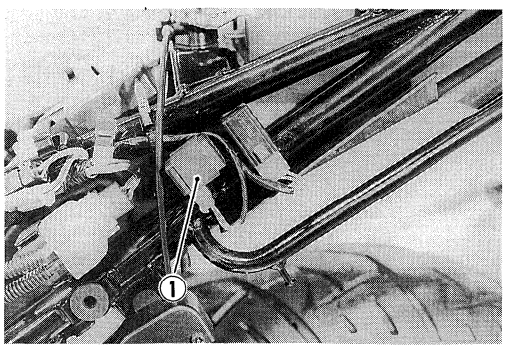

NOTE:
Be sure that the battery used is in full-charged condition.

SWITCHES

Inspect each switch for continuity with the pocket tester. If any abnormality is found, replace the respective switch assemblies with new ones.

09900-25002: Pocket tester

Tester knob indication: ×1Ω range

IGNITION SWITCH

Position \ Color	R	O	Gr	Br	O/Y	B/W
OFF						
ON	○	○	○	○	○	○
LOCK						
P	○			○		

IGNITION SWITCH (For E-24, 28 markets)

Position \ Color	R	O	O/Y	B/W
OFF				
ON	○	○	○	○
LOCK				

LIGHTING SWITCH (Except for E-24, 28 markets)

Position \ Color	O/Bl	Gr	O/R	Y/W
OFF				
•	○	○		
ON	○	○	○	○

DIMMER SWITCH

Position \ Color	Y/W	W	Y
HI	○		○
LO	○	○	

TURN SIGNAL SWITCH

Position \ Color	Lg	Lbl	B
L		○	○
PUSH			
R	○	○	

PASSING LIGHT SWITCH

Position \ Color	O/R	Y
•		
PUSH	○	○

ENGINE STOP SWITCH

Position \ Color	O/B	O/W
OFF		
RUN	○	○

STARTER BUTTON

Position \ Color	O/W	Y/G
•		
PUSH	○	○

HORN BUTTON

Position \ Color	B/Bl	B/W
•		
PUSH	○	○

FRONT BRAKE SWITCH

Position \ Color	B/R	B
OFF		
ON	○	○

REAR BRAKE SWITCH

Position \ Color	O/G	W/B
OFF		
ON	○	○

CLUTCH LEVER POSITION SWITCH

Position \ Color	B/Y	B/Y
OFF		
ON	○	○

WIRE COLOR

B : Black
Br : Brown
Gr : Gray
Lbl : Light blue
Lg : Light green
O : Orange
R : Red
Y : Yellow
W : White
B/Bl : Black with Blue tracer
B/R : Black with Red tracer
B/W : Black with White tracer
B/Y : Black with Yellow tracer
O/B : Orange with Black tracer
O/Bl : Orange with Blue tracer
O/G : Orange with Green tracer
O/R : Orange with Red tracer
O/W : Orange with White tracer
O/Y : Orange with Yellow tracer
W/B : White with Black tracer
Y/W : Yellow with White tracer

BATTERY

SPECIFICATIONS

Type designation	YTX12-BS
Capacity	12V, 36 kC (10 Ah)/10HR
Standard electrolyte S.G.	1.320 at 20°C (68°F)

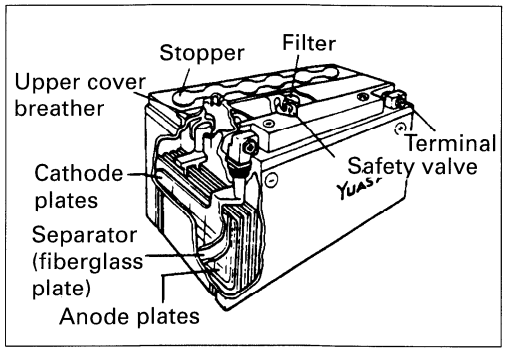

INITIAL CHARGING

Filling electrolyte

- Remove the aluminum tape ① sealing the battery electrolyte filler holes.

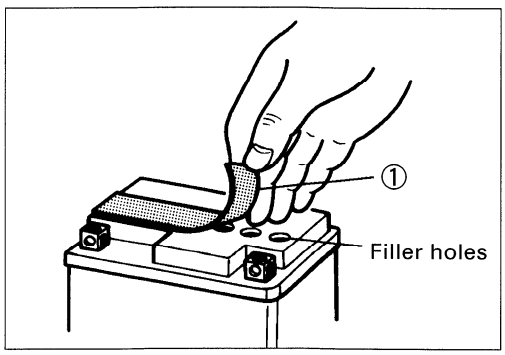

- Remove the caps ②.

NOTE:

** After filling the electrolyte completely, use the removed cap ② as the sealed caps of battery-filler holes.*

** Do not remove or pierce the sealed areas ③ of the electrolyte container.*

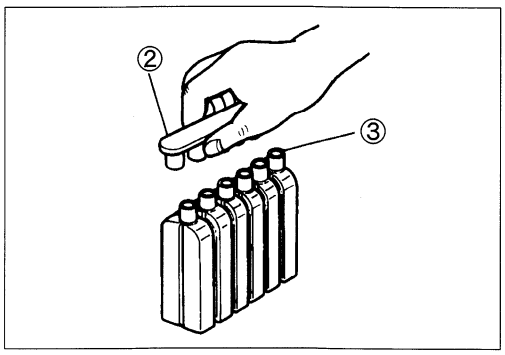

- Insert the nozzles of the electrolyte container into the battery's electrolyte filler holes, holding the container firmly so that it does not fall. Take precaution not to allow any of the fluid to spill.

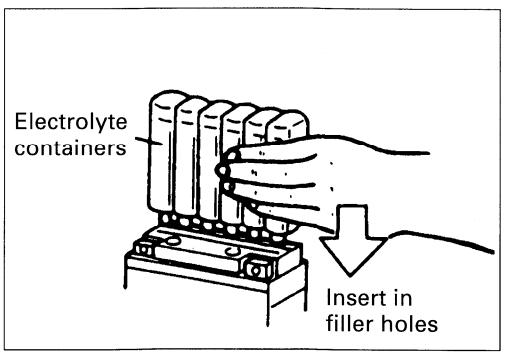

- Make sure air bubbles are coming up each electrolyte container, and leave in this position for about more than 20 minutes.

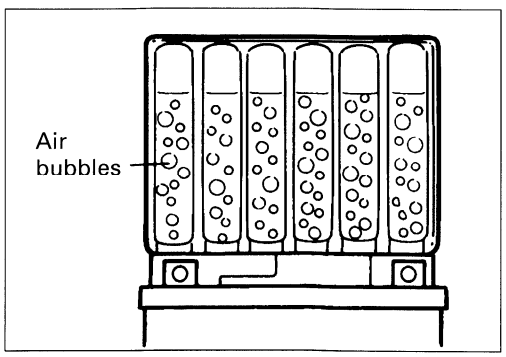

NOTE:
If no air bubbles are coming up from a filler port, tap the bottom of the two or three times.
Never remove the container from the battery.

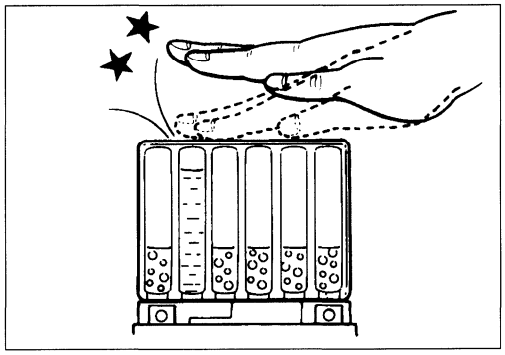

- After confirming that the electrolyte has entered the battery completely, remove the electrolyte containers from the battery. Wait for around 20 minutes.
- Insert the caps into the filler holes, pressing in firmly so that the top of the caps do not protrude above the upper surface of the battery's top cover.

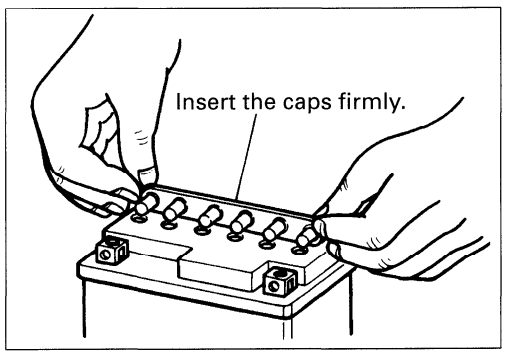

⚠ CAUTION

- **Never use anything except the specified battery.**
- **Once install the caps to the battery; do not remove the caps.**

- Using SUZUKI pocket tester, measure the battery voltage. The tester should indicate more than 12.5–12.6V (DC) as shown in the Fig. If the battery voltage is lower than the specification, charge the battery with a battery charger. (Refer to the recharging operation.)

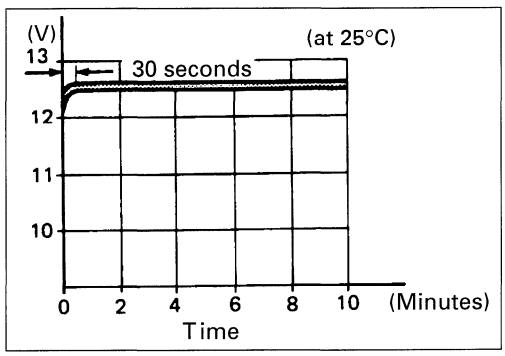

NOTE:
Initial charging for a new battery is recommended if two years have elapsed since the date of manufacture.

SERVICING

Visually inspect the surface of the battery container. If any signs of cracking or electrolyte leakage from the sides of the battery have occurred, replace the battery with a new one. If the battery terminals are found to be coated with rust or an acidic white powdery substance, then this can be cleaned away with sandpaper.

RECHARGING OPERATION

- Using the pocket tester, check the battery voltage. If the voltage reading is less than the 12.0V (DC), recharge the battery with a battery charger.

⚠ CAUTION

When recharging the battery, remove the battery from the motorcycle.

NOTE:
Do not remove the caps on the battery top while recharging.

Recharging time: 5A for one hour or 1.2A for 5 hours

⚠ CAUTION

Be careful not to permit the charging current to exceed 5A at any time.

- After recharging, wait for more than 30 minutes and check the battery voltage with a pocket tester.
- If the battery voltage is less than the 12.5V, recharge the battery again.
- If battery voltage is still less than 12.5V, after recharging, replace the battery with a new one.
- When the motorcycle is not used for a long period, check the battery every 1 month to prevent the battery discharge.

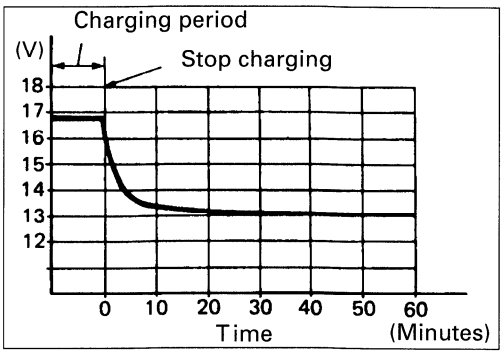

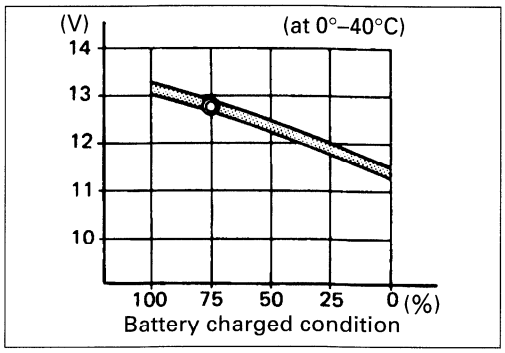

SERVICING INFORMATION

CONTENTS

TROUBLESHOOTING 7- 1
WIRING DIAGRAM 7- 8
WIRE HARNESS, CABLE AND HOSE ROUTING 7-13
FAIRING SET UP 7-24
FUEL TANK CUSHION 7-25
SIDE-STAND AND CENTER STAND SPRINGS 7-25
SPECIAL TOOLS 7-26
TIGHTENING TORQUE 7-29
SERVICE DATA 7-32

TROUBLESHOOTING

ENGINE

Complaint	Symptom and possible causes	Remedy
Engine will not start, or is hard to start.	**Compression too low**	
	1. Out of adjustment valve clearance.	Adjust.
	2. Worn valve guides or poor seating of valves.	Repair or replace.
	3. Mistiming valves.	Adjust.
	4. Excessively worn piston rings.	Replace.
	5. Worn-down cylinder bores.	Replace or rebore.
	6. Too slowly starter motor cranks.	See electrical section.
	7. Poor seating of spark plugs.	Retighten.
	Plugs not sparking	
	1. Fouled spark plugs.	Clean.
	2. Wet spark plugs.	Clean and dry.
	3. Defective ignition coil.	Replace.
	4. Open or short in high-tension cords.	Replace.
	5. Defective signal generator or ignitor unit.	Replace.
	No fuel reaching the carburetors	
	1. Clogged fuel tank vent hose.	Clean or replace.
	2. Clogged or defective fuel valve.	Clean or replace.
	3. Defective carburetor needle valve.	Replace.
	4. Clogged fuel hose or fuel filter.	Clean or replace.
Engine stalls easily.	1. Fouled spark plugs.	Clean.
	2. Defective signal generator or ignitor unit.	Replace.
	3. Clogged fuel hose.	Clean.
	4. Clogged jets in carburetors.	Clean.
	5. Out of adjustment valve clearance.	Adjust.
Noisy engine.	**Excessive valve chatter**	
	1. Too large valve clearance.	Adjust.
	2. Weakened or broken valve springs.	Replace.
	3. Worn down rocker arm or rocker arm shaft.	Replace.
	4. Worn and burnt camshaft journal.	Replace.
	Noise seems to come from piston	
	1. Worn down pistons or cylinders.	Replace.
	2. Fouled with carbon combustion chambers.	Clean.
	3. Worn piston pins or piston pin bore.	Replace.
	4. Worn piston rings or ring grooves.	Replace.
	Noise seems to come from timing chain	
	1. Stretched chain.	Replace.
	2. Worn sprockets.	Replace.
	3. Not working tension adjuster.	Repair or replace.
	Noise seems to come from clutch	
	1. Worn splines of countershaft or hub.	Replace.
	2. Worn teeth of clutch plates.	Replace.
	3. Distorted clutch plates, driven and drive.	Replace.
	4. Worn clutch release bearing.	Replace.
	5. Weakened clutch dampers.	Replace the primary driven gear.

Complaint	Symptom and possible causes	Remedy
Noisy engine.	**Noise seems to come from crankshaft**	
	1. Due to wear rattling bearings.	Replace.
	2. Worn and burnt big-end bearings.	Replace.
	3. Worn and burnt journal bearings.	Replace.
	4. Too large thrust clearance.	Replace thrust bearing.
	Noise seems to come from transmission	
	1. Worn or rubbing gears.	Replace.
	2. Badly worn splines.	Replace.
	3. Worn or rubbing primary gears.	Replace.
	4. Badly worn bearings.	Replace.
Slipping clutch.	1. Out of adjustment or loss of play clutch control.	Adjust.
	2. Weakened clutch springs.	Replace.
	3. Worn or distorted pressure plate.	Replace.
	4. Distorted clutch plates, driven and drive.	Replace.
Dragging clutch.	1. Leakage of clutch fluid.	Repair.
	2. Worn or damaged clutch master cylinder/clutch release cylinder.	Replace.
	3. Damaged oil seal/clutch hose.	Replace.
	4. Some clutch springs weakened while others are not.	Replace.
	5. Distorted pressure plate or clutch plate.	Replace.
Transmission will not shift.	1. Broken gearshift cam.	Replace.
	2. Distorted gearshift forks.	Replace.
	3. Worn gearshift pawl.	Replace.
Transmission will not shift back.	1. Broken return spring on shift shaft.	Replace.
	2. Rubbing or stickly shift shaft.	Repair or replace.
	3. Distorted or worn gearshift forks.	Replace.
Transmission jumps out of gear.	1. Worn shifting gears on driveshaft or countershaft.	Replace.
	2. Distorted or worn gearshift forks.	Replace.
	3. Weakened stopper spring on gearshift stopper.	Replace.
	4. Worn gearshift pawl.	Replace.
Engine idles poorly.	1. Out of adjustment valve clearance.	Adjust.
	2. Poor seating of valves.	Replace or repair.
	3. Defective valve guides.	Replace.
	4. Worn rocker arms or arm shafts.	Replace.
	5. Too wide spark plug gaps.	Adjust or replace.
	6. Defective ignition coil.	Replace.
	7. Defective signal generator or ignitor unit.	Replace.
	8. Out of adjustment in carburetors float-chamber fuel level.	Adjust.
	9. Clogged jets or imbalance of carburetors.	Clean or adjust.

Complaint	Symptom and possible causes	Remedy
Engine runs poorly in high speed range	1. Weakened valve springs. 2. Worn camshafts. 3. Valve timing out of adjustment. 4. Too narrow spark plug gaps. 5. Ignition not advanced sufficiently due to poorly working timing advance circuit. 6. Defective ignition coil. 7. Defective signal generator or ignitor unit. 8. Too low float-chamber fuel level. 9. Clogged air cleaner element. 10. Clogged fuel hose, resulting in inadequate fuel supply to carburetors.	Replace. Replace. Adjust. Adjust. Replace ignitor unit. Replace. Replace. Adjust. Clean. Clean and prime.
Dirty or heavy exhaust smoke.	1. Too much engine oil in the engine. 2. Worn piston rings or cylinders. 3. Worn valve guides. 4. Scored or scuffed cylinder walls. 5. Worn valves stems. 6. Defective stem seal. 7. Worn oil ring side rails.	Check with inspection window drain out excess oil. Replace. Replace. Rebore or replace. Replace. Replace. Replace.
Engine lacks power.	1. Loss of valve clearance. 2. Weakened valve springs. 3. Out of adjustment valve timing. 4. Worn piston rings or cylinders. 5. Poor seating of valves. 6. Fouled spark plug. 7. Incorrect spark plug. 8. Clogged jets in carburetors. 9. Out of adjustment float-chamber fuel level. 10. Clogged air cleaner element. 11. Loose carburetor balancing screw. 12. Sucking air from intake pipe. 13. Too much engine oil.	Adjust. Replace. Adjust. Replace. Repair. Clean or replace. Adjust or replace. Clean. Adjust. Clean. Retighten. Retighten or replace. Drain out excess oil.
Engine overheats.	1. Heavy carbon deposit on piston crowns. 2. Not enough oil in the engine. 3. Defective oil pump or clogged oil circuit. 4. Too low in float chambers fuel level. 5. Sucking air from intake pipes. 6. Use incorrect engine oil.	Clean. Add oil. Replace or clean. Adjust. Retighten or replace. Change.

CARBURETOR

Complaint	Symptom and possible causes	Remedy
Trouble with starting.	1. Clogged starter jet. 2. Clogged starter pipe. 3. Air leaking from a joint between starter body and carburetor. 4. Air leaking from carburetor's joint or vacuum gauge joint. 5. Not operation properly starter plunger.	Clean. Clean. Check starter body and carburetor for tightness, adjust and replace gasket. Check and adjust. Check and adjust.
Idling or low-speed trouble.	1. Clogged or loose pilot jet, pilot air jet. 2. Air leaking from carburetor's joint, vacuum gauge joint, or starter. 3. Clogged pilot outlet or bypass. 4. Not fully closed starter plunger.	Check and clean. Check and adjust. Check and clean. Check and adjust.
Medium-or high speed trouble.	1. Clogged main jet or main air jet. 2. Clogged needle jet. 3. Not operating properly throttle valve. 4. Clogged fuel filter.	Check and clean. Check and clean. Check throttle valve for operation. Check and clean.
Overflow and fuel level fluctuations.	1. Worn or damaged needle valve. 2. Broken spring in needle valve. 3. Not working properly float. 4. Foreign matter has adhered to needle valve. 5. Too high or low fuel level.	Replace. Replace. Check and adjust. Clean. Adjust float height.

CHASSIS

Complaint	Symptom and possible causes	Remedy
Heavy steering.	1. Overtightened steering stem nut. 2. Broken bearing in steering stem. 3. Distorted steering stem. 4. Not enough pressure in tires.	Adjust. Replace. Replace. Adjust.
Wobbly handlebars.	1. Loss of balance between right and left front forks. 2. Distorted front fork. 3. Distorted front axle or crooked tire.	Replace. Repair or replace. Replace.
Wobby front wheel.	1. Distorted wheel rim. 2. Worn front wheel bearings. 3. Defective or incorrect tire. 4. Loose axle or axle pinch bolts. 5. Incorrect front fork oil level.	Replace. Replace. Replace. Retighten. Adjust.
Front suspension too soft.	1. Weakened springs. 2. Inproperly set front fork spring adjuster. 3. Not enough fork oil.	Replace. Adjust Replenish.
Front suspension too stiff.	1. Too viscous fork oil. 2. Inproperly set front fork spring adjuster. 3. Too much fork oil.	Replace. Adjust Drain excess oil.
Noisy front suspension.	1. Not enough fork oil. 2. Loose bolts on suspension.	Replenish. Retighten.

Complaint	Symptom and possible causes	Remedy
Wobbly rear wheel.	1. Distorted wheel rim. 2. Worn rear wheel bearing or swingarm bearings. 3. Defective or incorrect tire. 4. Worn swingarm and rear suspension related bearings. 5. Loose nuts or bolts on rear suspensions.	Replace. Replace. Replace. Replace. Retighten.
Rear suspension too soft.	1. Weakened shock absorber spring. 2. Improperly set rear suspension adjuster. 3. Leakage oil of shock absorber.	Replace. Adjust. Replace.
Rear suspension too stiff.	1. Improperly set rear suspension adjuster. 2. Bent shock absorber shaft. 3. Bent swingarm. 4. Worn swingarm and rear suspension related bearings.	Adjust. Replace. Replace. Replace.
Noisy rear suspension.	1. Loose nuts or bolts on rear suspension. 2. Worn swingarm and rear suspension related bearings.	Retighten. Replace.

BRAKES

Complaint	Symptom and possible causes	Remedy
Insufficient brake power.	1. Leakage of brake fluid from hydraulic system. 2. Worn pads. 3. Oil adhesion of engaging surface of pads. 4. Worn disc. 5. Air in hydraulic system.	Repair or replace. Replace. Clean disc and pads. Replace. Bleed air.
Brake squeaking.	1. Carbon adhesion on pad surface. 2. Tilted pad. 3. Damaged wheel bearing. 4. Loosen front-wheel axle or rear-wheel axle. 5. Worn pads. 6. Foreign material in brake fluid. 7. Clogged return port of master cylinder.	Repair surface with sandpaper. Modify pad fitting or replace. Replace. Tighten to specified torque. Replace. Replace brake fluid. Disassemble and clean master cylinder.
Excessive brake lever or pedal stroke.	1. Air in hydraulic system. 2. Insufficient brake fluid. 3. Improper quality of brake fluid.	Bleed air. Replenish fluid to specified level; bleed air. Replace with correct fluid.
Leakage of brake fluid	1. Insufficient tightening of connection joints. 2. Cracked hose. 3. Worn piston and/or cup.	Tighten to specified torque. Replace. Replace piston and/or cup.

ELECTRICAL

Complaint	Symptom and possible causes	Remedy
No sparking or poor sparking.	1. Defective ignition coil. 2. Defective spark plugs. 3. Defective signal generator or ignitor unit.	Replace. Replace. Replace.
Spark plug soon become fouled with carbon.	1. Mixture too rich. 2. Idling speed set too high. 3. Incorrect gasoline. 4. Dirty element in air cleaner. 5. Too cold spark plugs.	Adjust carburetors. Adjust carburetors. Change. Clean. Replace with hot type plugs.
Spark plugs become fouled too soon.	1. Worn piston rings. 2. Worn piston or cylinders. 3. Excessive clearance of valve stems in valve guides. 4. Worn stem oil seal.	Replace. Replace. Replace. Replace.
Spark plug electrodes overheat or burn.	1. Too hot spark plugs. 2. Overheated the engine. 3. Loose spark plugs. 4. Too lean mixture.	Replace with cold type plugs. Tune up. Retighten. Adjust carburetors.
Generator does not charge.	1. Open or short lead wires, or loose lead connections. 2. Shorted, grounded or open generator coils. 3. Shorted or panctured IC regulator or rectifier.	Repair or replace or retighten. Replace. Replace.
Generator does charge, but charging rate is below the specification.	1. Lead wires tend to get shorted or open-circuited or loosely connected at terminals. 2. Grounded or open-circuited stator coils or generator. 3. Defective IC regulator or rectifier. 4. Defective cell plates in the battery.	Repair or retighten. Replace. Replace. Replace the battery.
Generator overcharges.	1. Internal short-circuit in the battery. 2. Damaged or defective IC regulator. 3. Poorly grounded IC regulator.	Replace the battery. Replace. Clean and tighten ground connection.
Unstable charging.	1. Lead wire insulation frayed due to vibration, resulting in intermittent shorting. 2. Internally shorted generator. 3. Defective IC regulator or rectifier.	Repair or replace. Replace. Replace.
Starter button is not effective.	1. Run down battery. 2. Defective switch contacts. 3. Not seating properly brushes on commutator in starter motor. 4. Defective starter relay/starter interlock switch.	Repair or replace. Replace. Repair or replace. Replace.

BATTERY

Complaint	Symptom and possible causes	Remedy
"Sulfation", acidic white powdery substance or spots on surfaces of cell plates.	1. Cracked battery case. 2. Battery has been left in a run-down condition for a long time.	Replace the battery. Replace the battery.
Battery runs down quickly.	1. Not correct the charging system. 2. Cell plates have lost much of their active material as a result of overcharging. 3. A short-circuit condition exists within the battery. 4. Too low battery voltage. 5. Too old battery.	Check the generator, IC regulator or rectifier and circuit connections and make necessary adjustments to obtain specified charging operation. Replace the battery, and correct the charging system. Replace the battery. Recharge the battery fully. Replace the battery.
Battery "sulfation".	1. Too low or too high charging rate. (When not in use batteries should be checked at least once a month to avoid sulfation.) 2. Left unused the battery for too long in cold climate.	Replace the battery. Replace the battery, if badly sulfated.
Battery discharges too rapidly.	Dirty container top and sides.	Clean.

WIRING DIAGRAM

GSF1200 (For Australia)

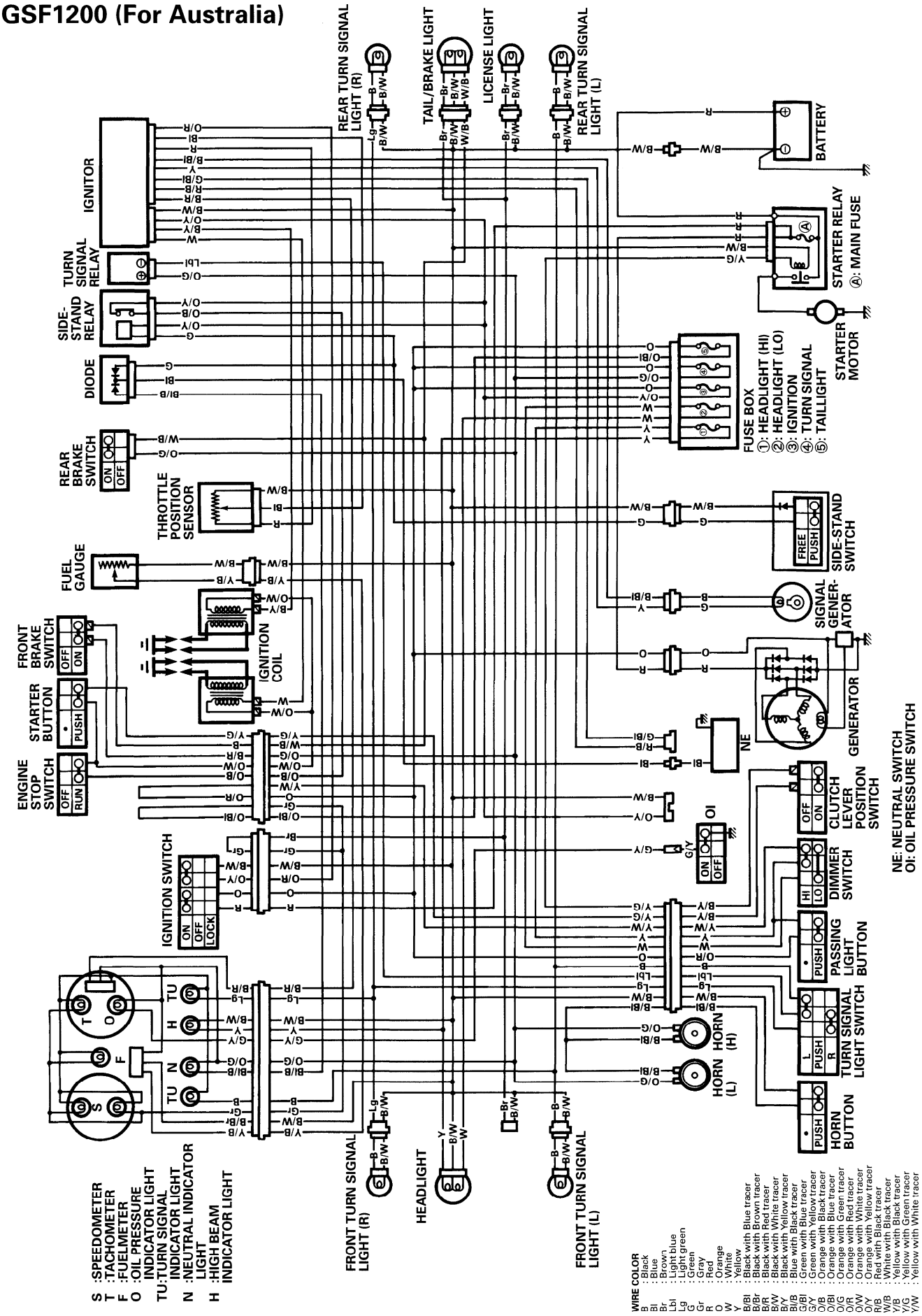

GSF1200 (For the others)

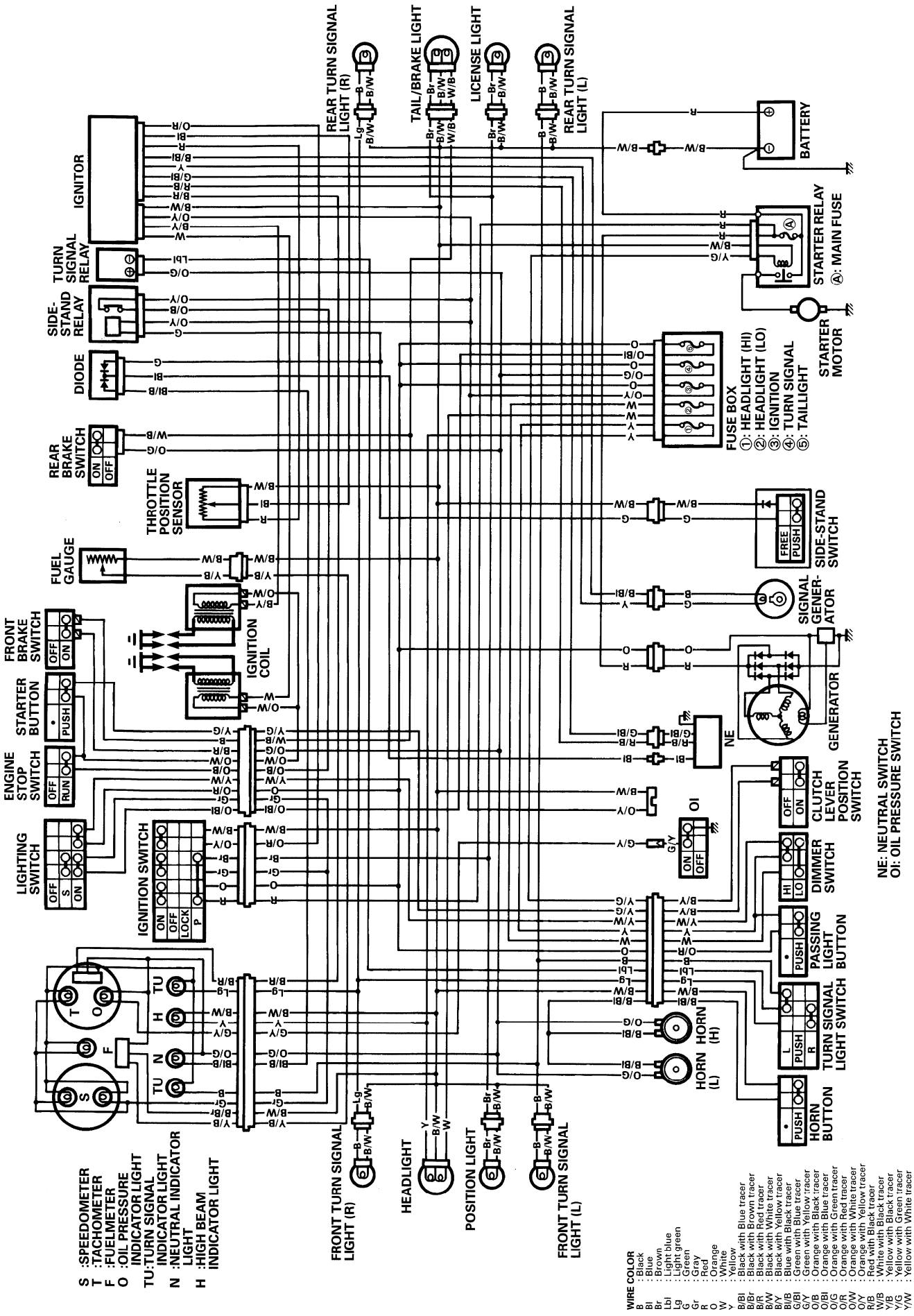

GSF1200S (For Australia)

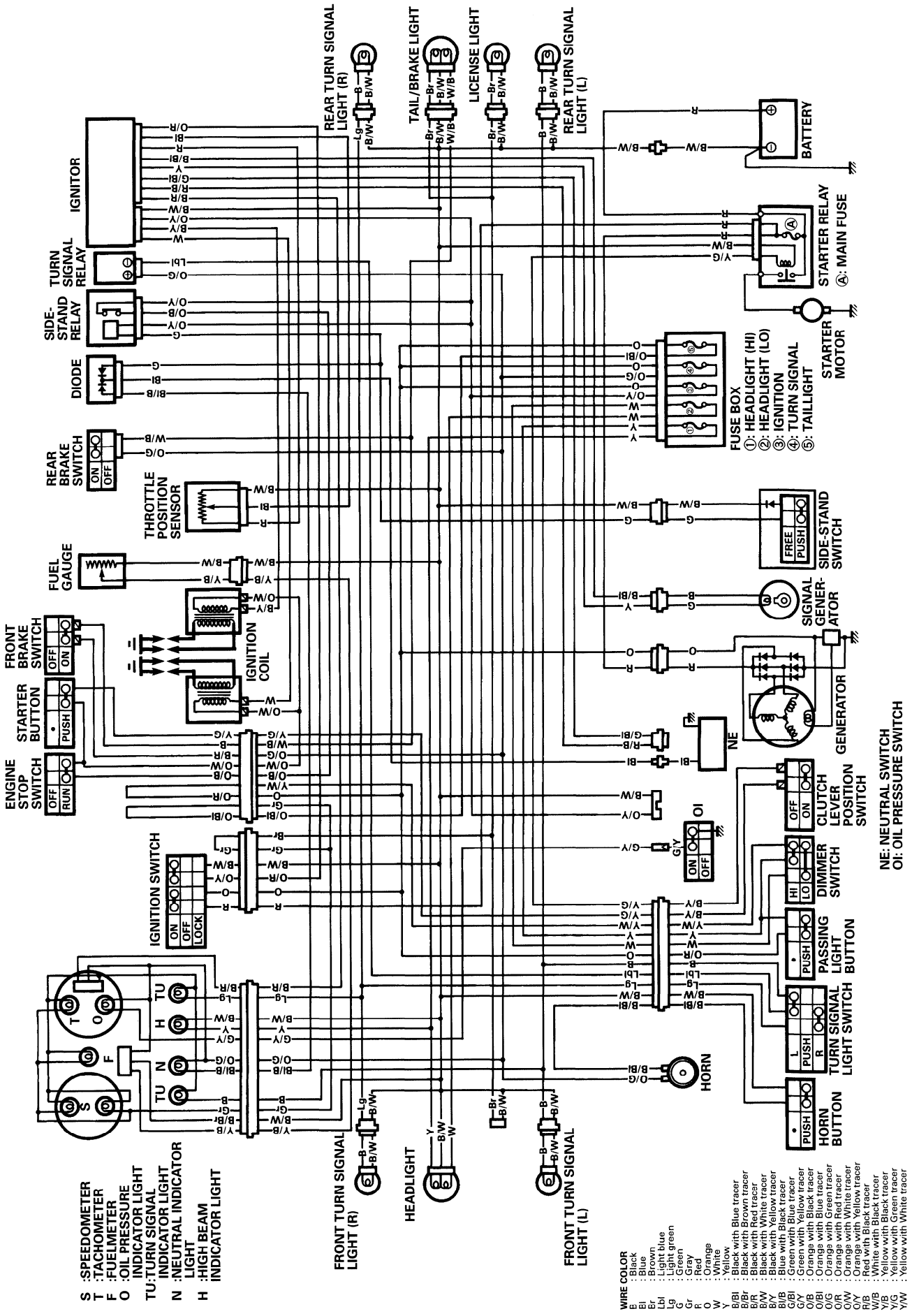

GSF1200S (For Canada)

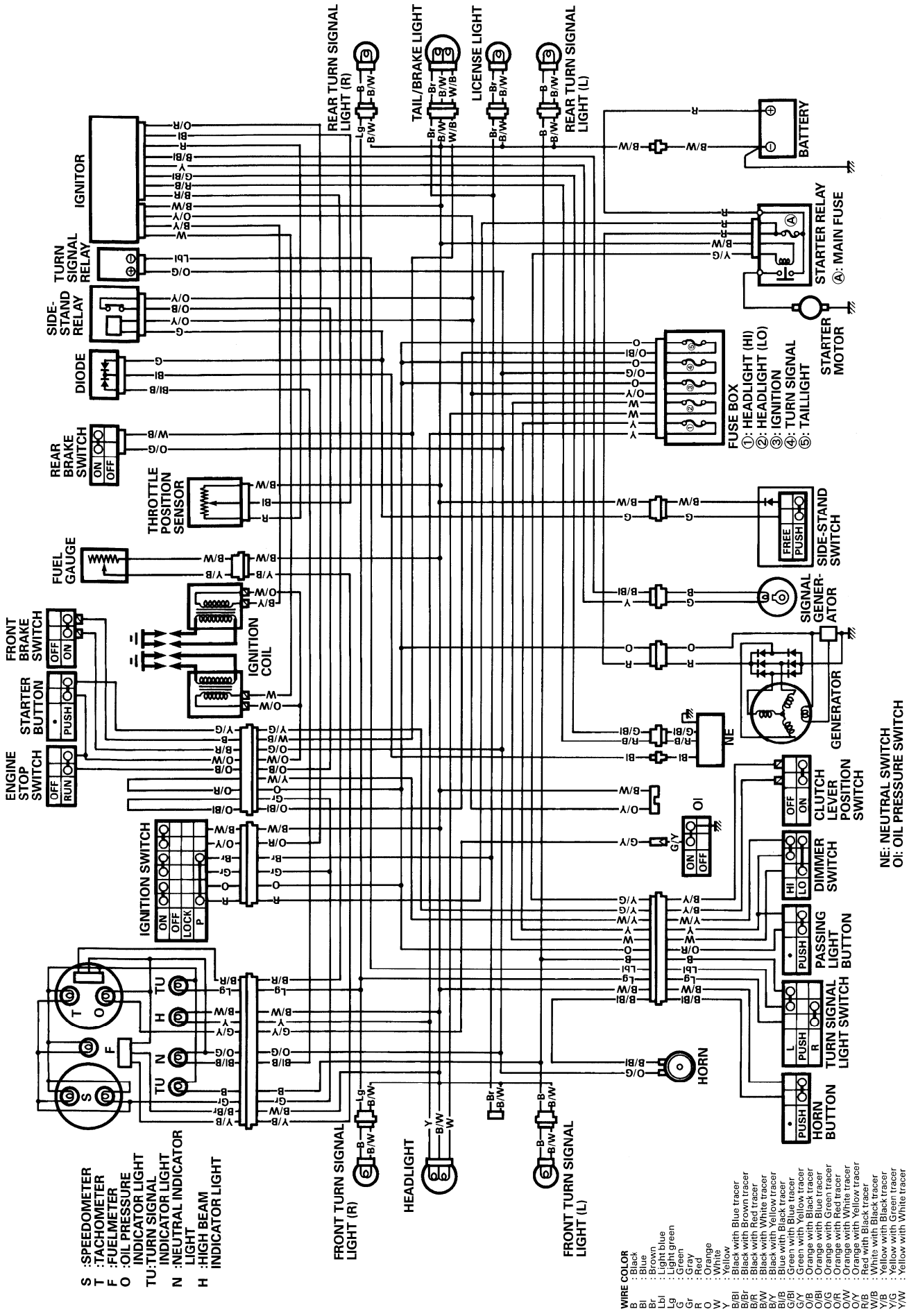

GSF1200S (For the others)

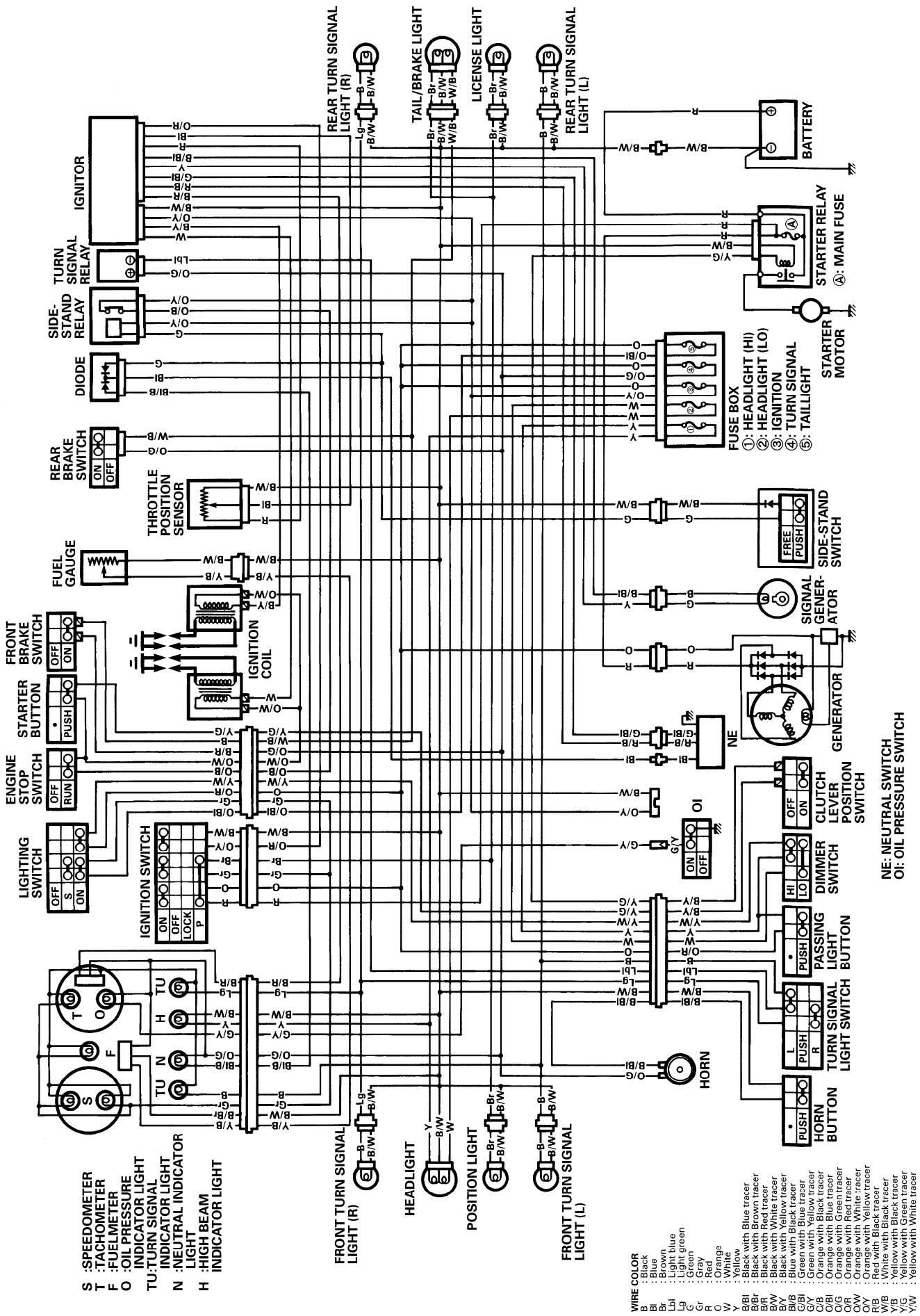

WIRE HARNESS, CABLE AND HOSE ROUTING

WIRE HARNESS ROUTING

GSF1200

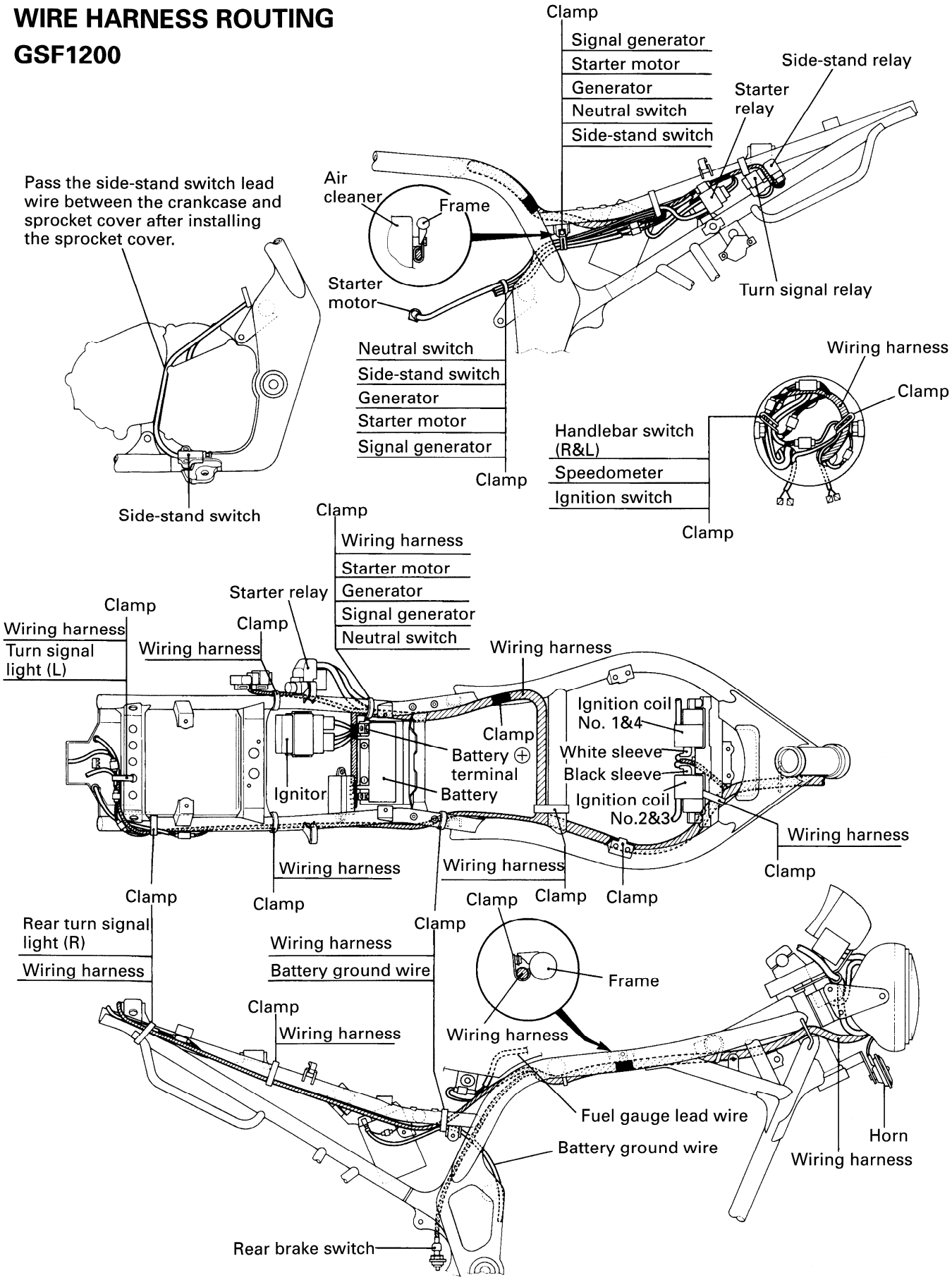

GSF1200S

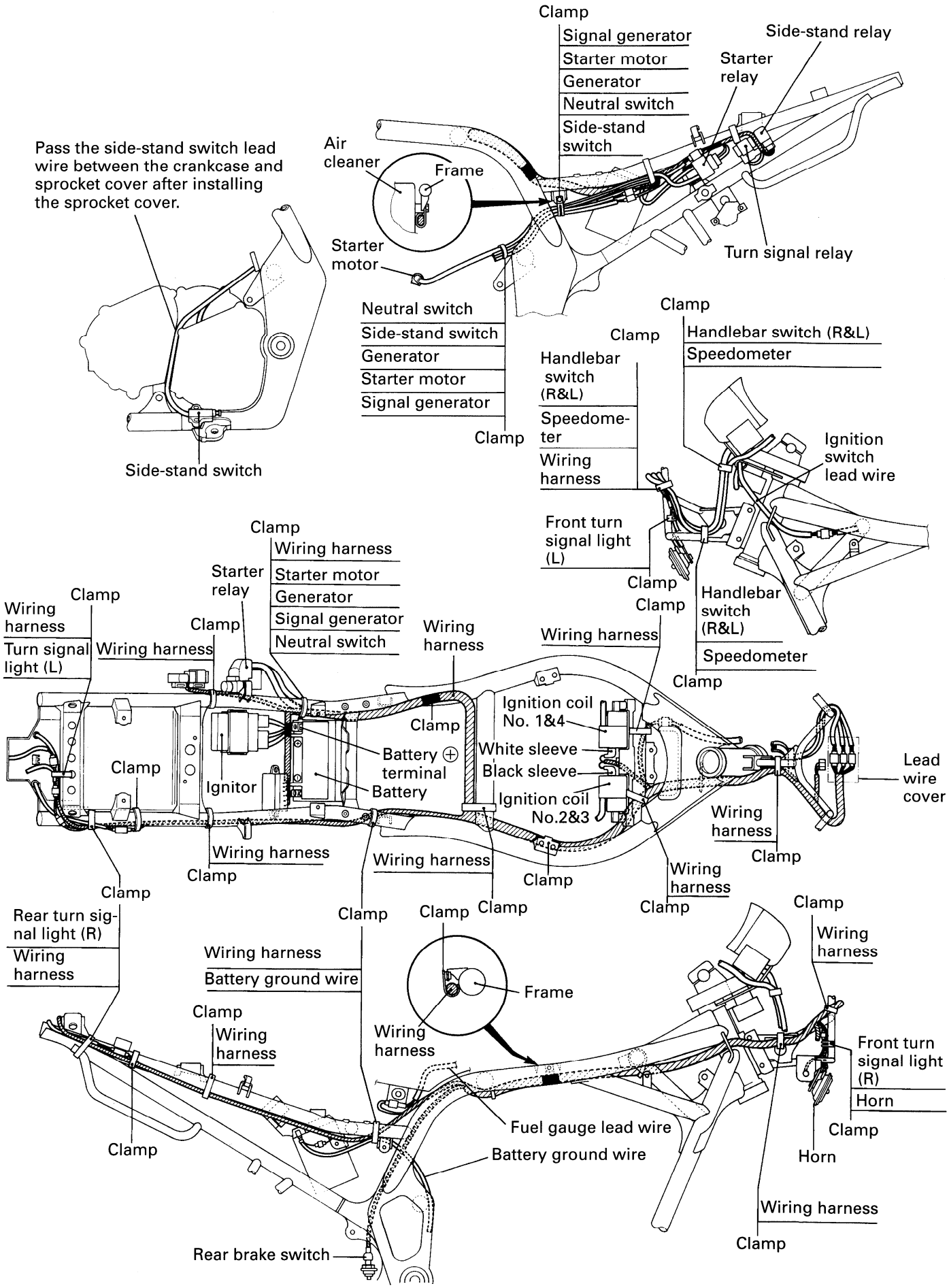
Clamp
Signal generator
Starter motor
Generator
Neutral switch
Side-stand switch
Side-stand relay
Starter relay
Pass the side-stand switch lead wire between the crankcase and sprocket cover after installing the sprocket cover.
Air cleaner
Frame
Starter motor
Turn signal relay
Neutral switch
Side-stand switch
Generator
Starter motor
Signal generator
Clamp
Side-stand switch
Clamp
Handlebar switch (R&L)
Speedometer
Clamp
Handlebar switch (R&L)
Speedometer
Wiring harness
Clamp
Ignition switch lead wire
Front turn signal light (L)
Clamp
Handlebar switch (R&L)
Speedometer
Clamp
Clamp
Wiring harness
Starter relay
Starter motor
Generator
Signal generator
Neutral switch
Clamp
Wiring harness
Turn signal light (L)
Wiring harness
Clamp
Wiring harness
Wiring harness
Clamp
Ignition coil No. 1&4
White sleeve
Black sleeve
Ignition coil No.2&3
Battery ⊕ terminal
Battery
Clamp
Ignitor
Clamp
Lead wire cover
Wiring harness
Clamp
Wiring harness
Clamp
Wiring harness
Clamp
Wiring harness
Clamp
Clamp
Clamp
Clamp
Clamp
Rear turn signal light (R)
Wiring harness
Wiring harness
Battery ground wire
Frame
Clamp
Wiring harness
Wiring harness
Clamp
Wiring harness
Front turn signal light (R)
Horn
Fuel gauge lead wire
Clamp
Battery ground wire
Horn
Wiring harness
Clamp
Rear brake switch

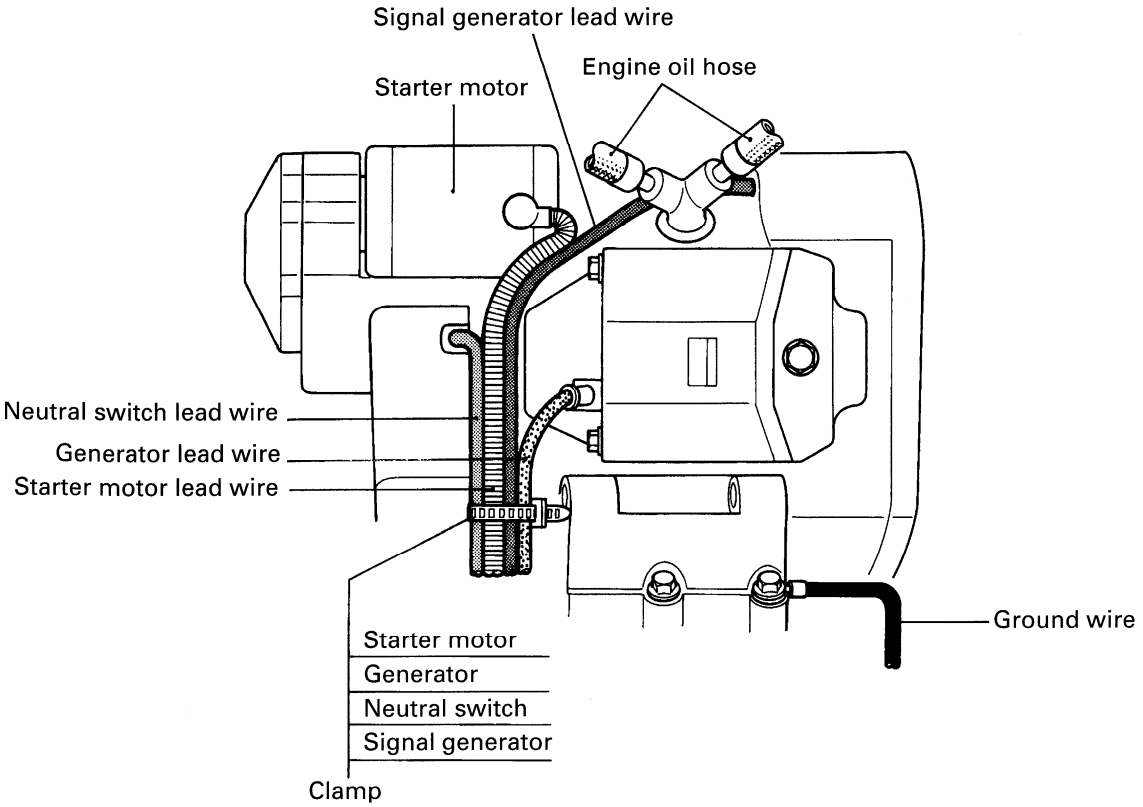

HIGH-TENSION CORD ROUTING

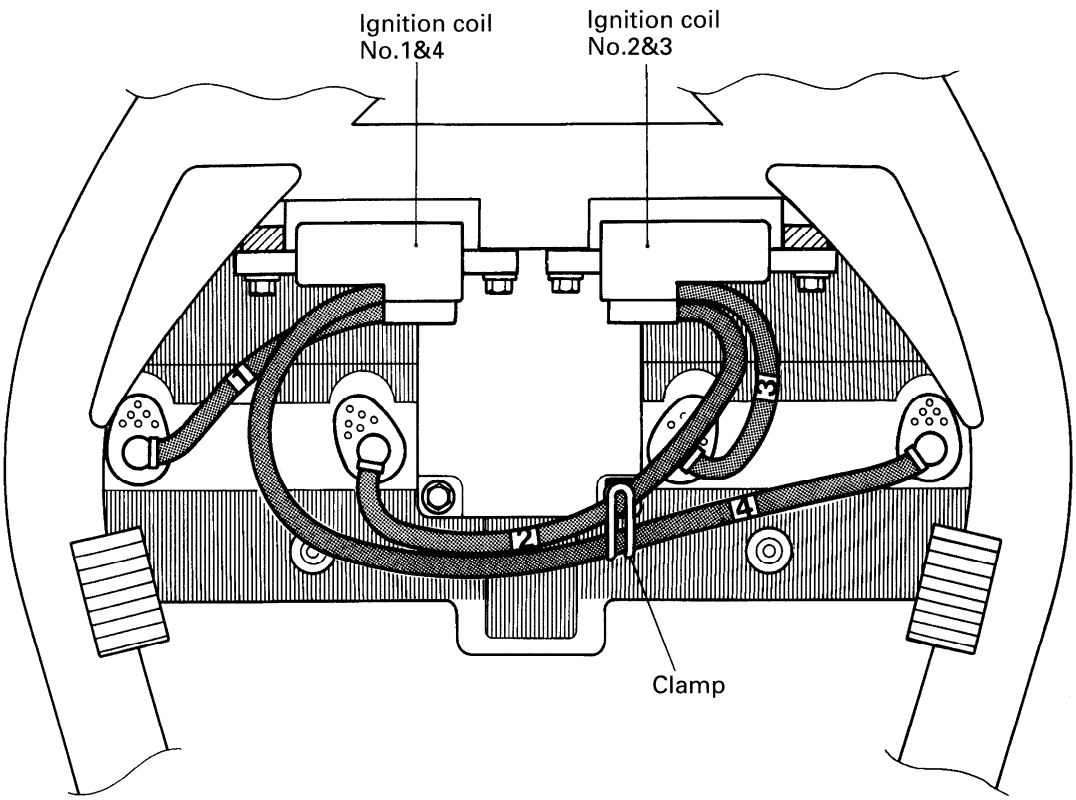

CABLE ROUTING

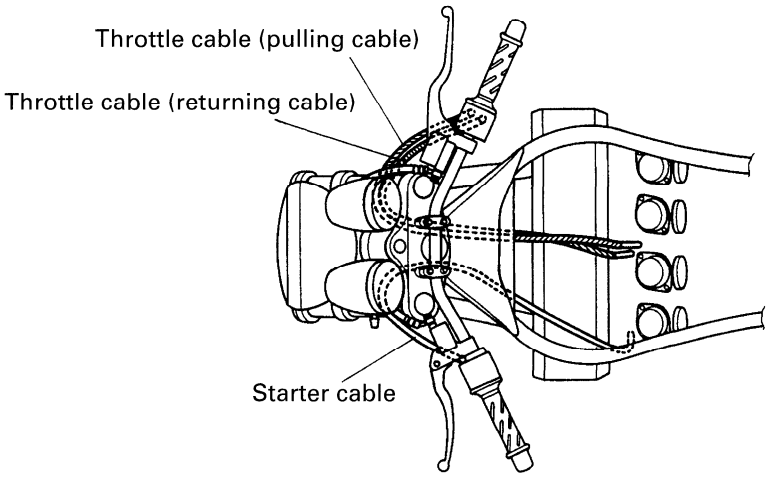

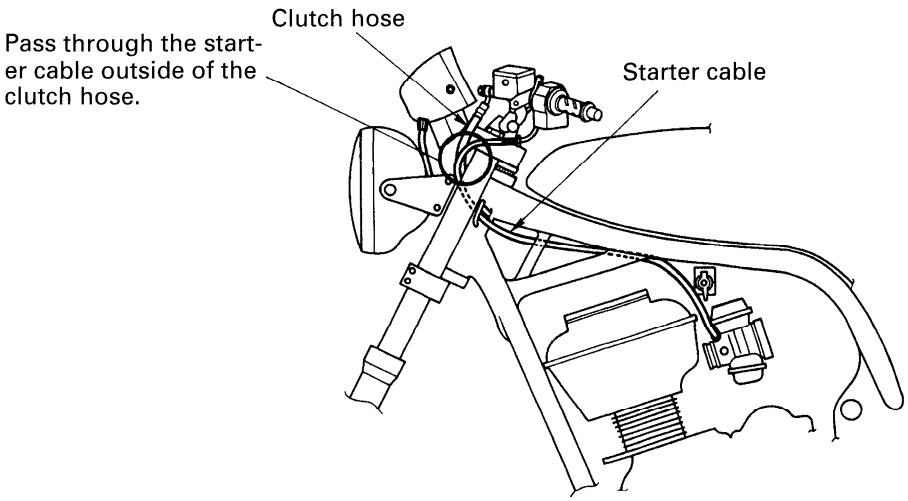

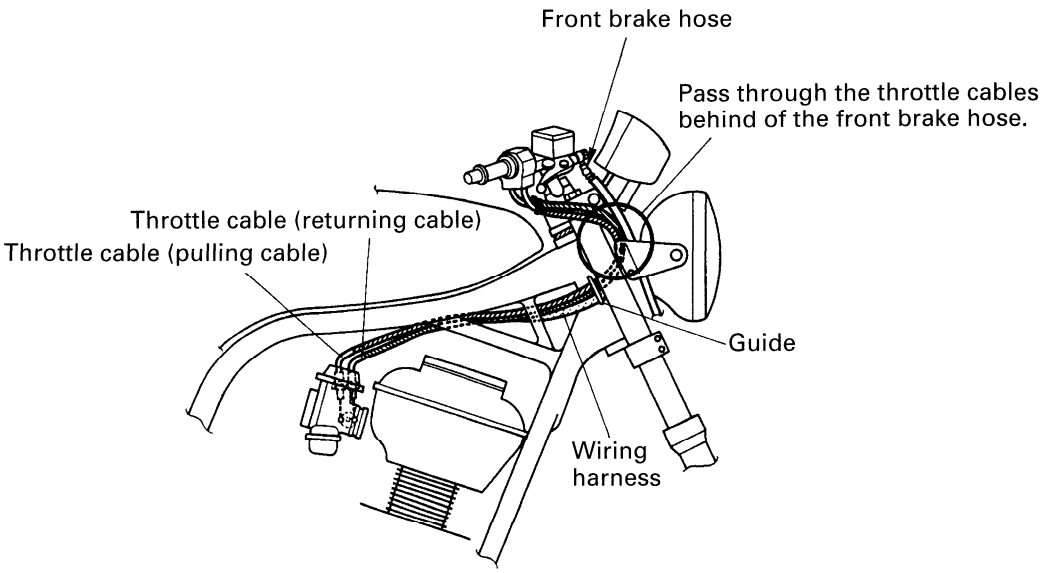

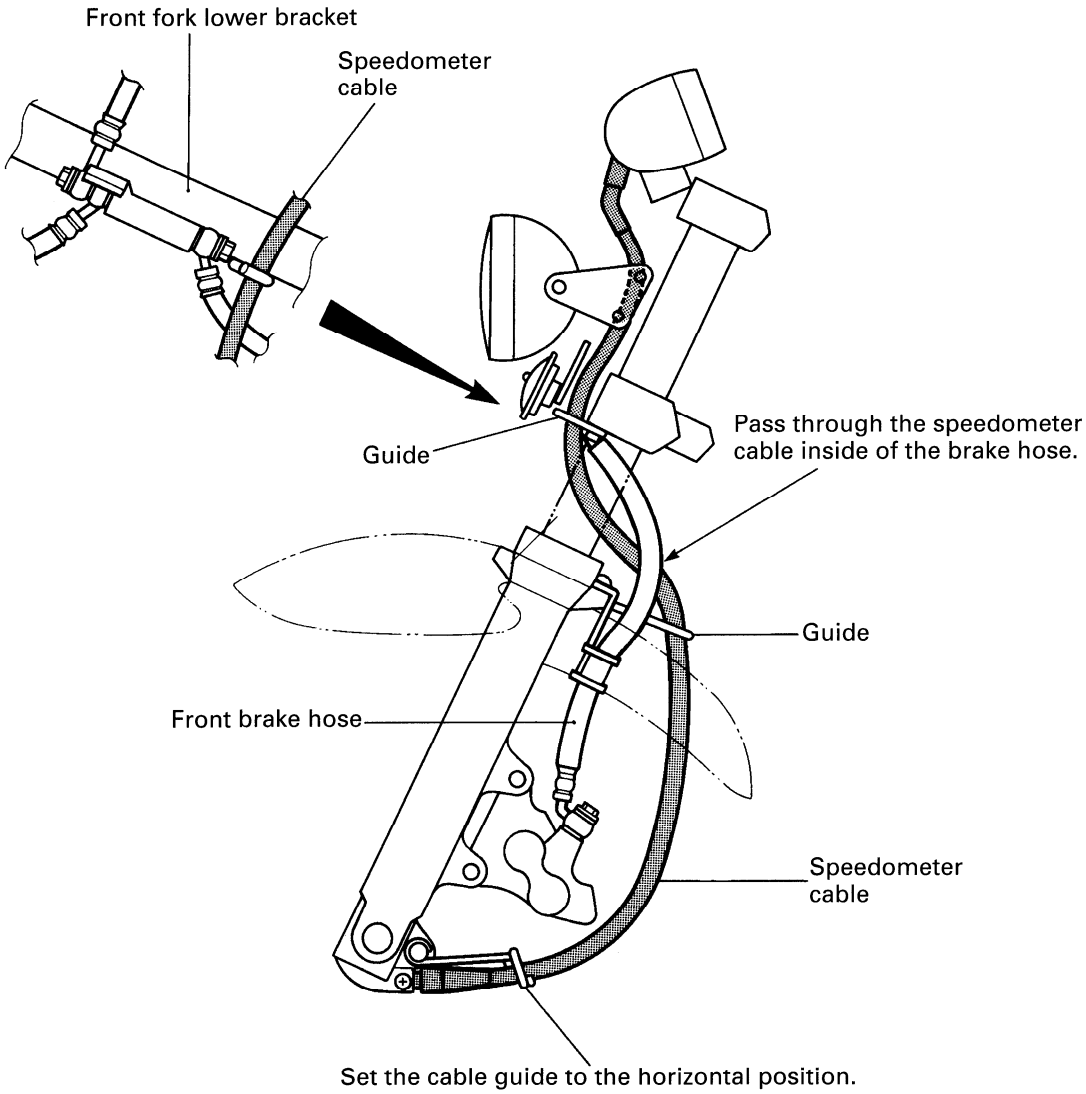

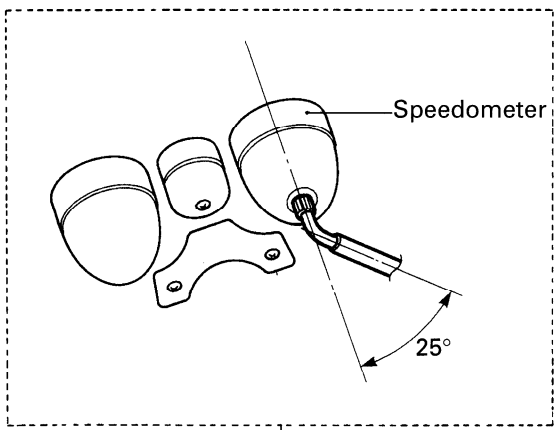

For GSF1200S

FUEL SYSTEM HOSE ROUTING

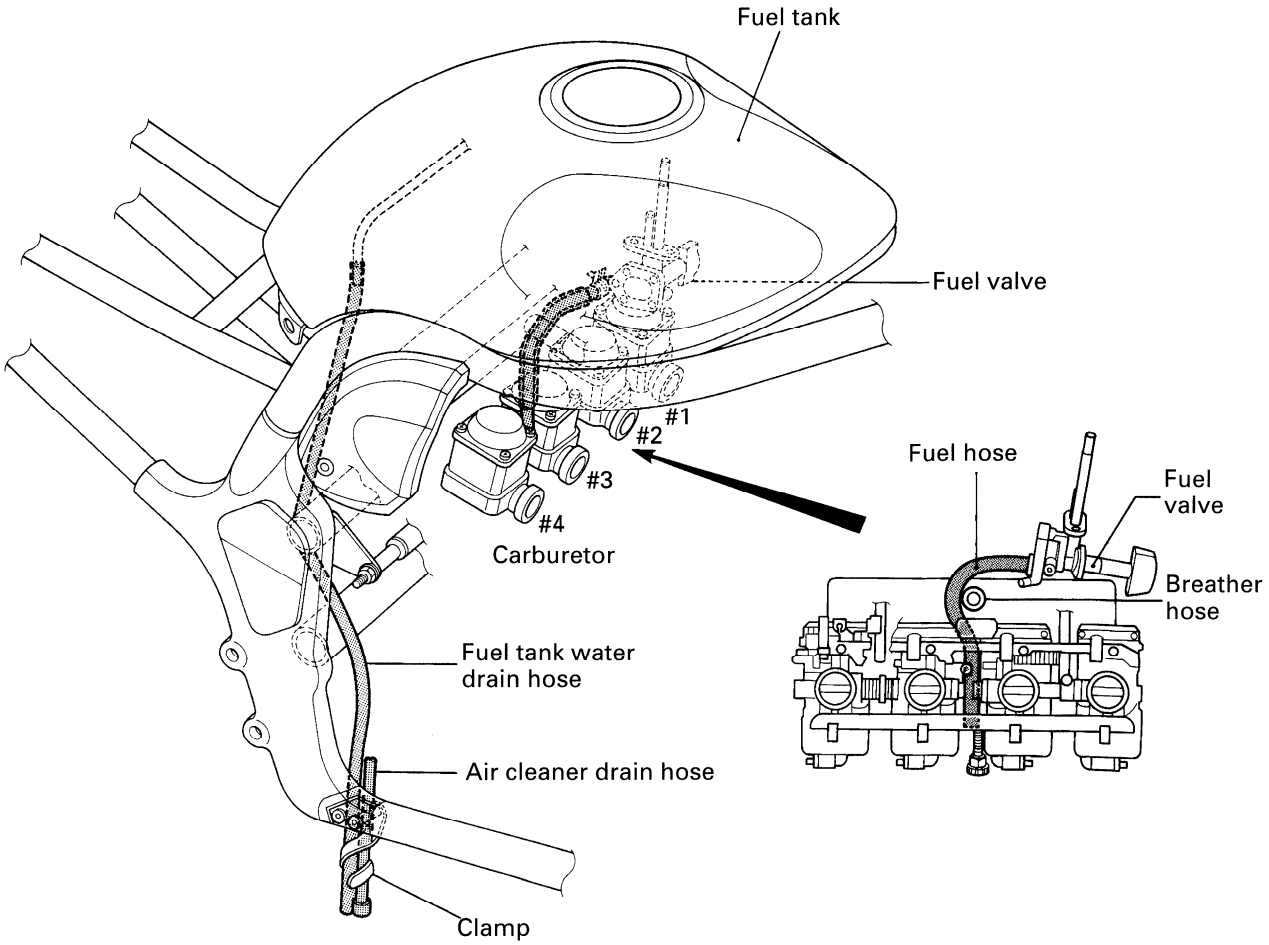

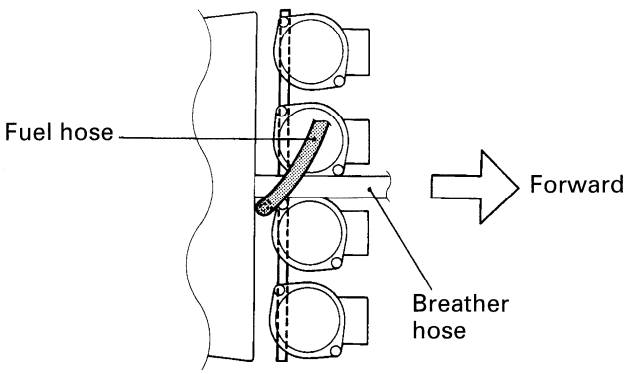

CARBURETOR HOSE ROUTING

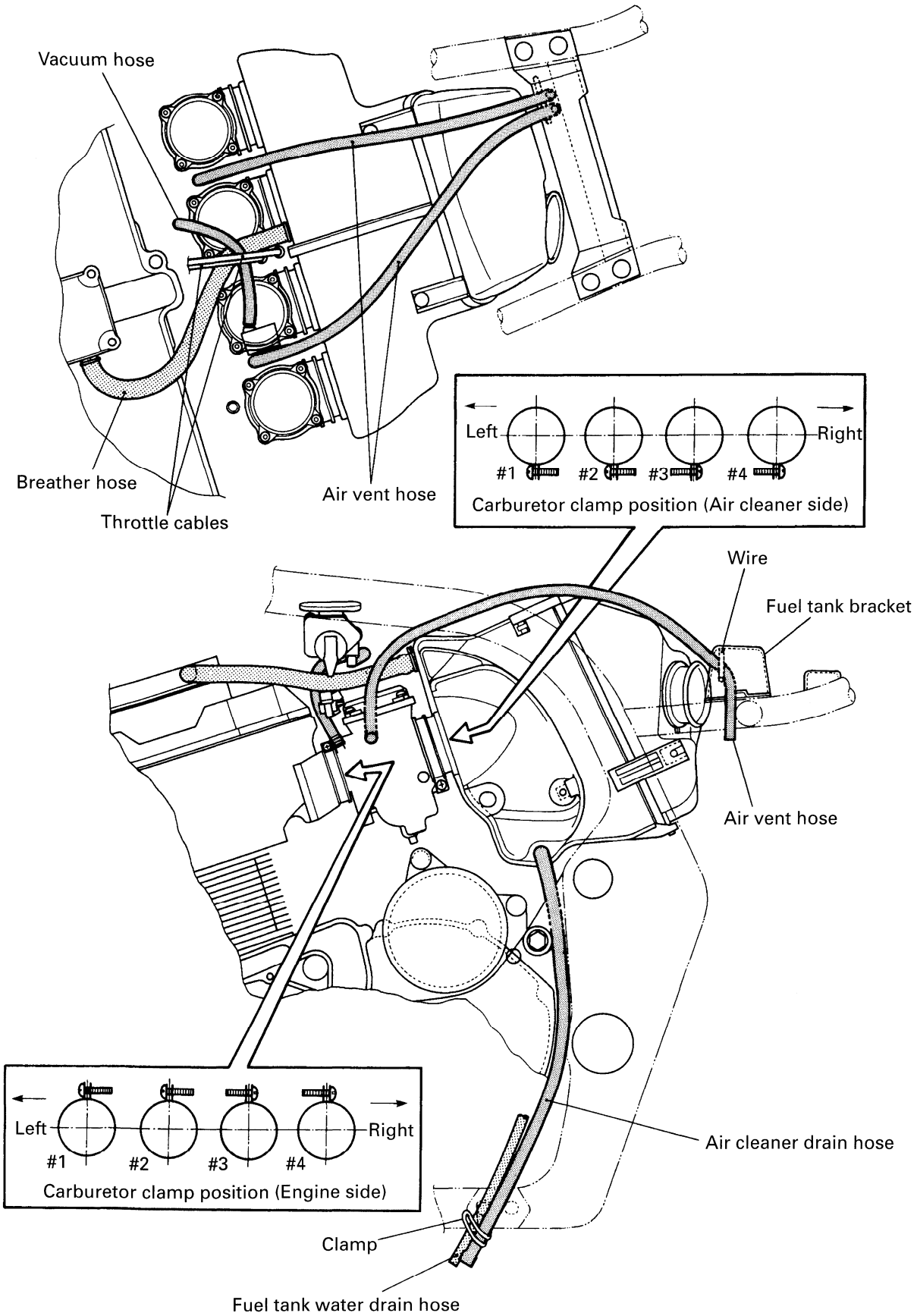

FRONT BRAKE HOSE ROUTING

GSF1200

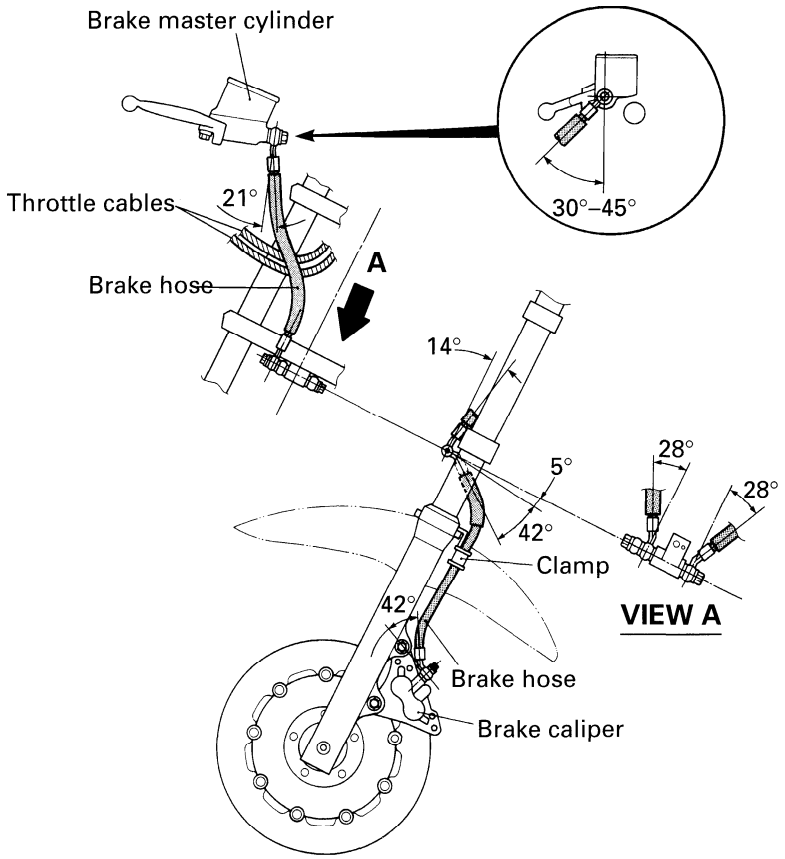

GSF1200S

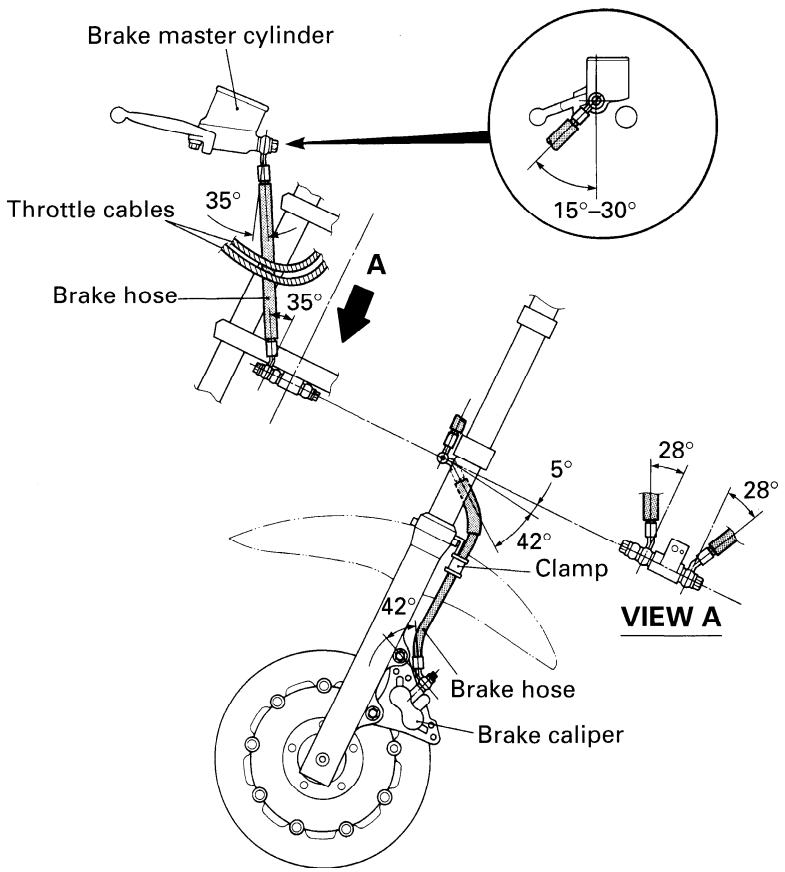

REAR BRAKE HOSE ROUTING

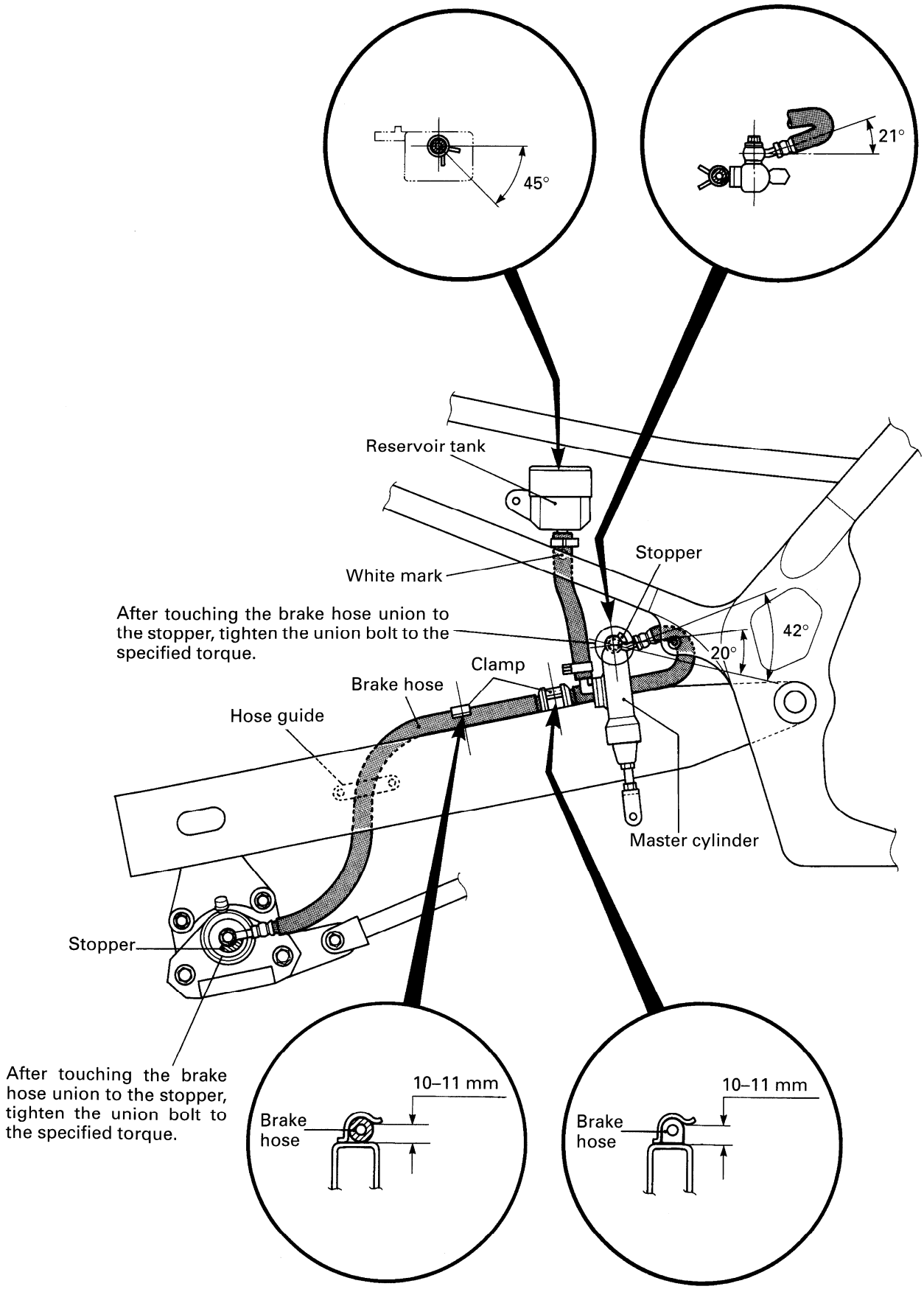

CLUTCH HOSE ROUTING

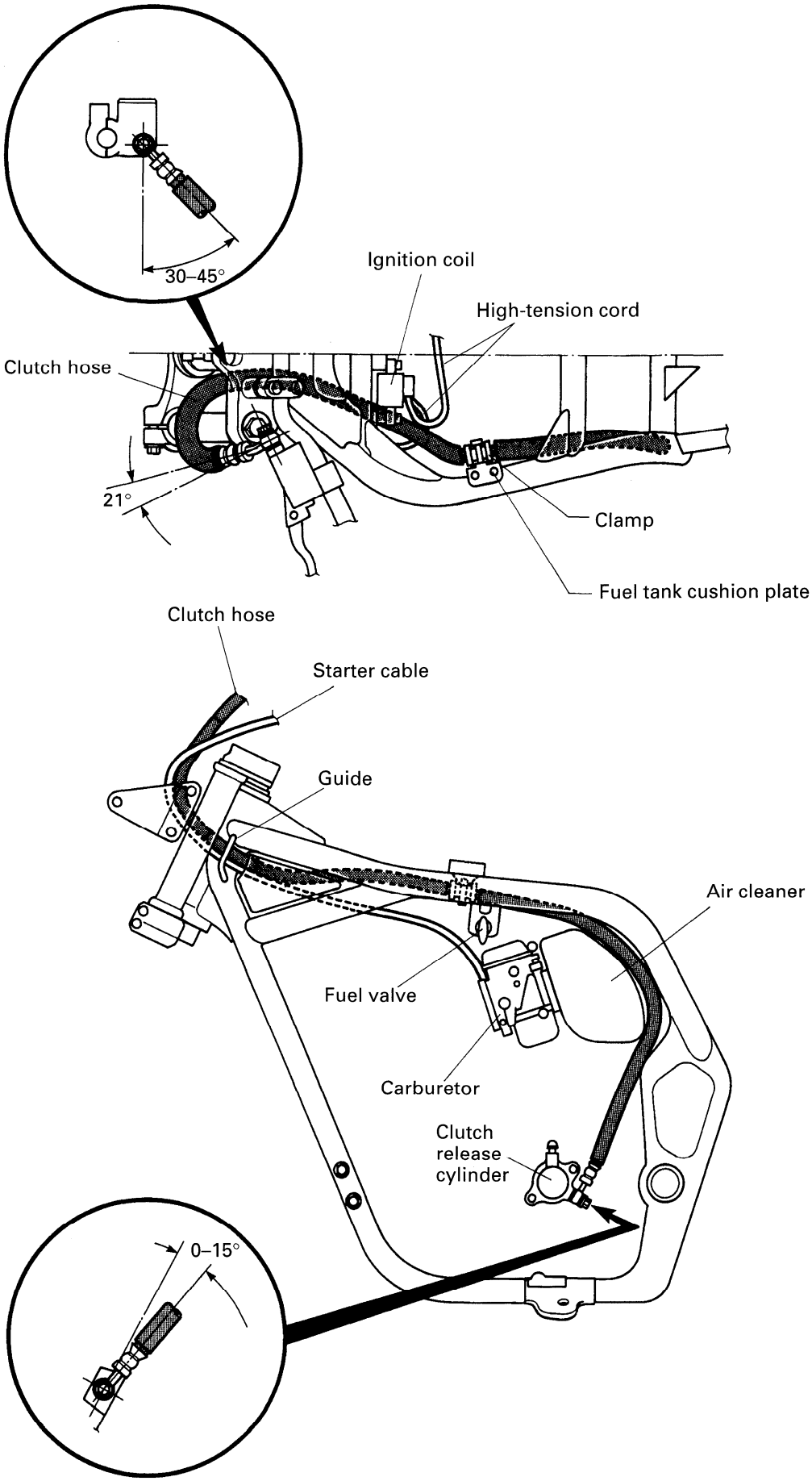

PAIR (AIR SUPPLY) SYSTEM HOSE ROUTING (FOR E-18 MODEL)

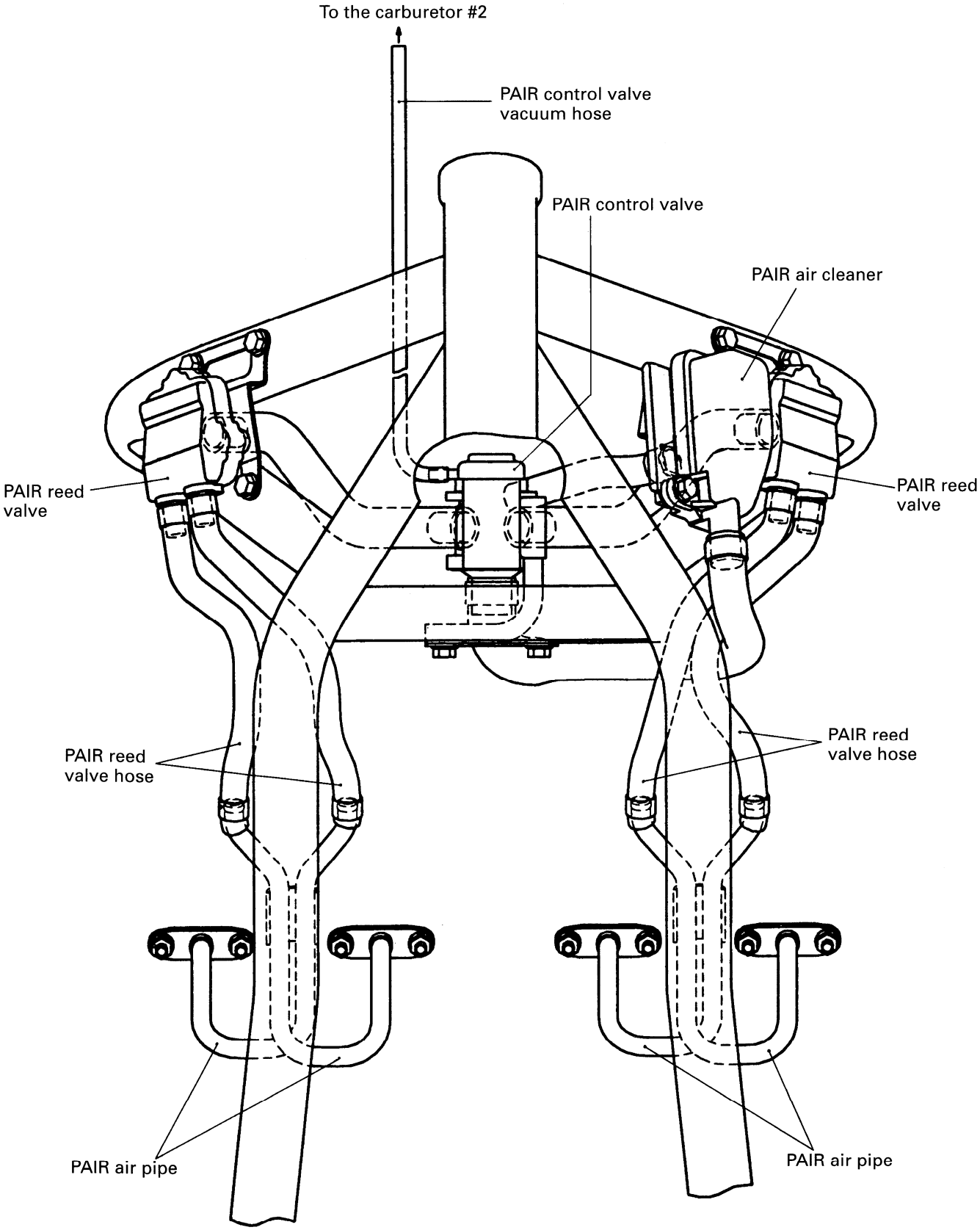

FAIRING SET UP

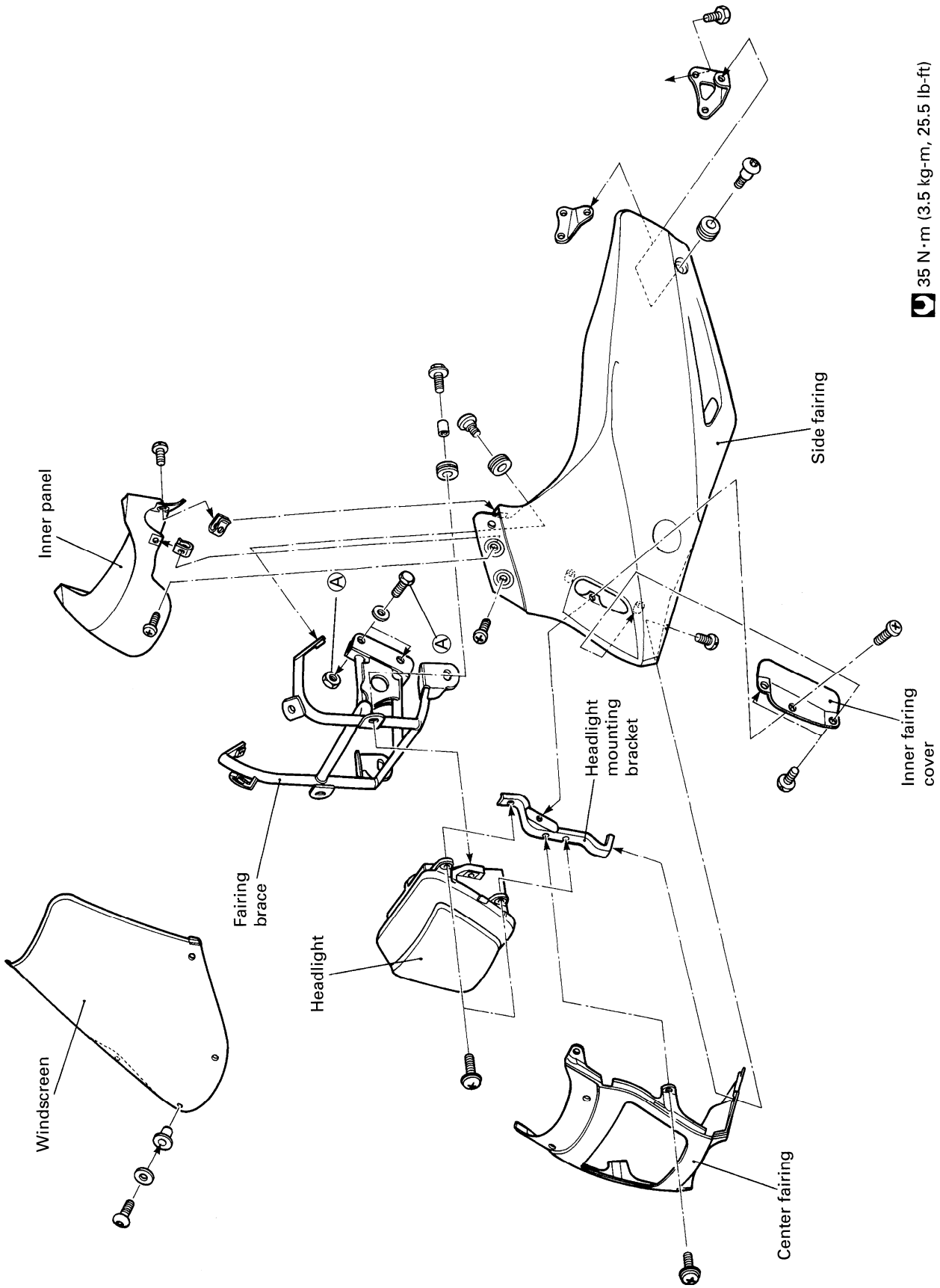

FUEL TANK CUSHION

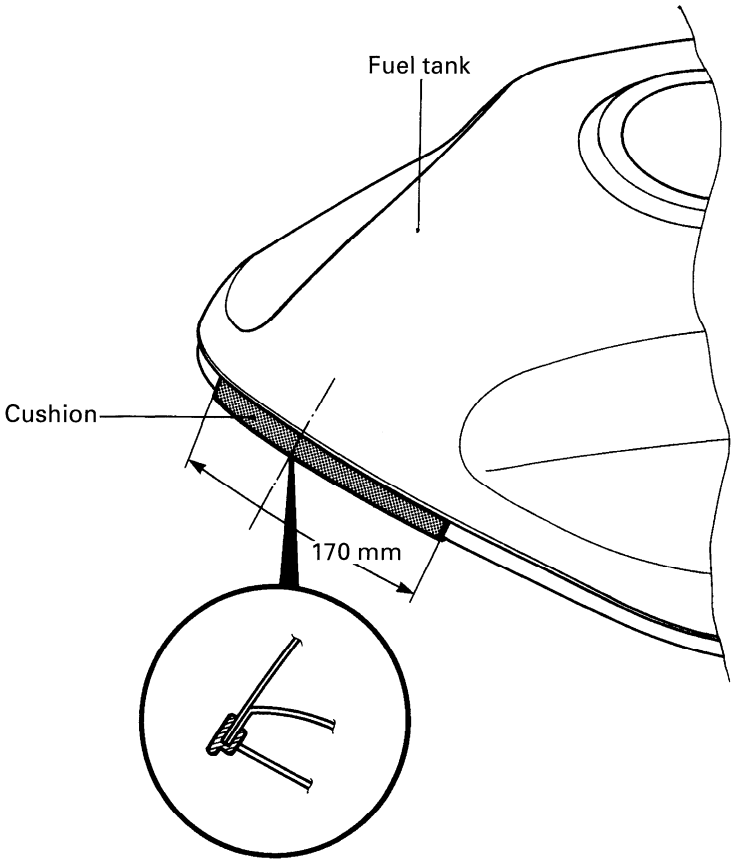

SIDE-STAND AND CENTER STAND SPRINGS

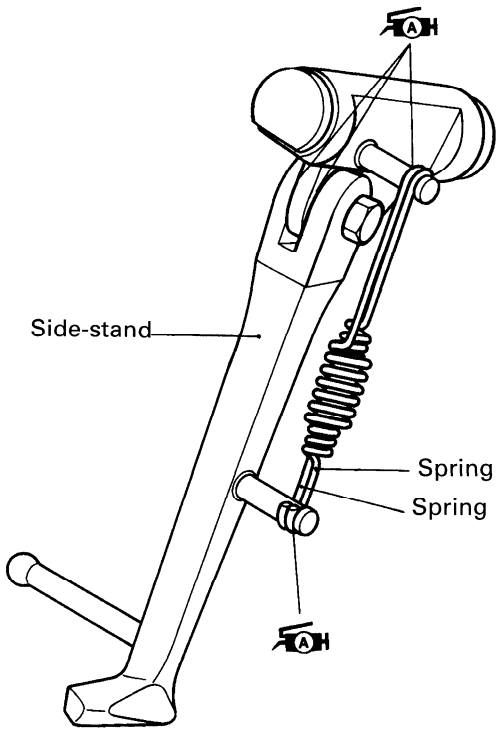

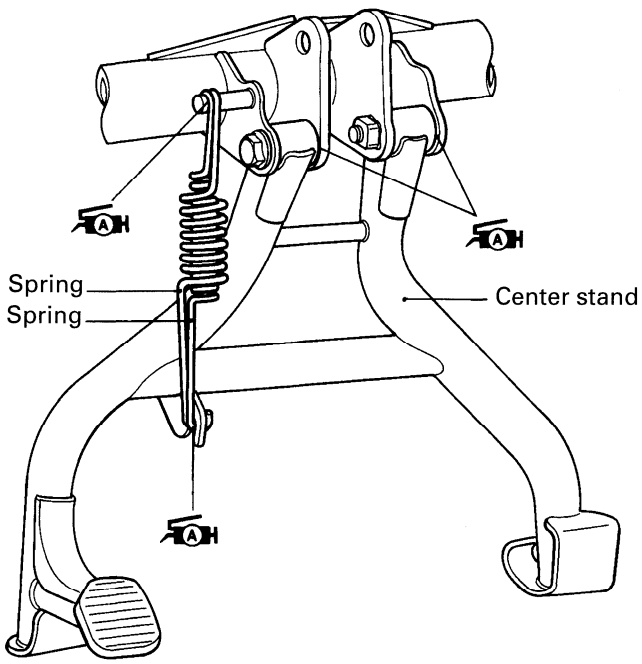

SPECIAL TOOLS

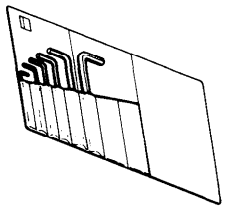 09900-00401 "L" type hexagon wrench set	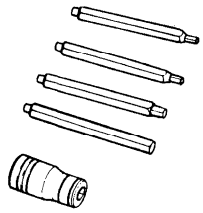 09900-00410 Hexagon wrench set	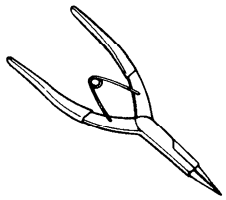 09900-06107 Snap ring pliers	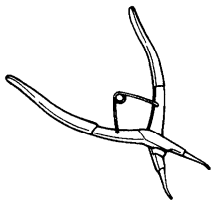 09900-06108 Snap ring pliers	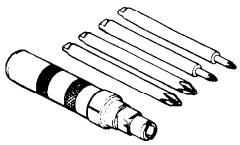 09900-09003 Impact driver set
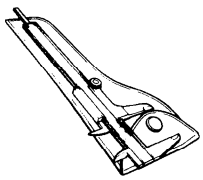 09900-20102 Vernier calipers (1/20 mm, 200 mm)	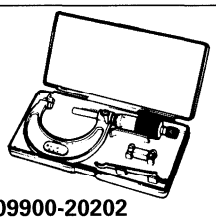 09900-20202 Micrometer (1/100 mm, 25–50 mm)	09900-20204 Micrometer (1/100 mm, 75–100 mm)	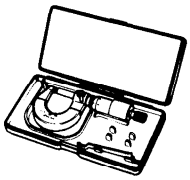 09900-20205 Micrometer (1/1000 mm, 0–25 mm)	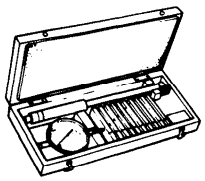 09900-20508 Cylinder gauge set (1/100 mm, 40–80 mm)
09900-20602 Dial gauge (1/1000 mm, 1 mm)	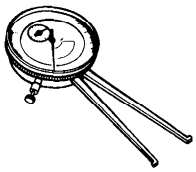 09900-20605 Dial calipers (1/100 mm, 10–34 mm)	09900-20606 Dial gauge (1/100 mm, 10 mm)	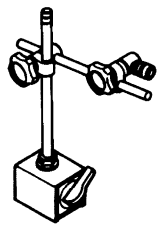 09900-20701 Magnetic stand	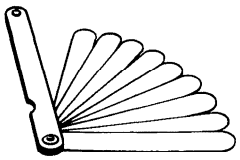 09900-20803 Thickness gauge
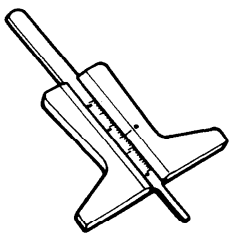 09900-20805 Tire depth gauge	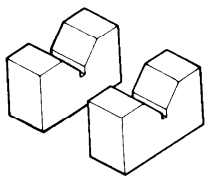 09900-21304 V-block set (100 mm)	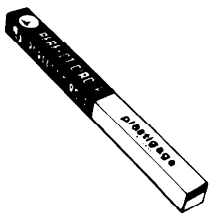 09900-22301 Plastigauge	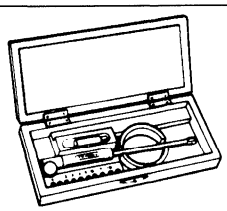 09900-22403 Small bore gauge (18–35 mm)	09900-25002 Pocket tester
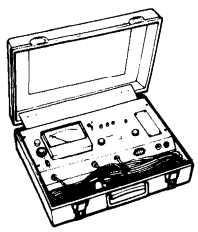 09900-28106 Electro tester	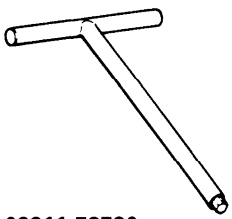 09911-73730 "T" type hexagon wrench (5 mm)	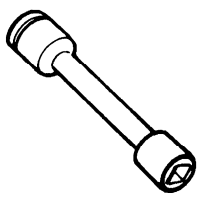 09911-74510 Long socket (14 mm)	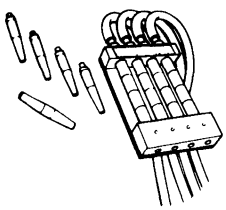 09913-13121 Carburetor balancer	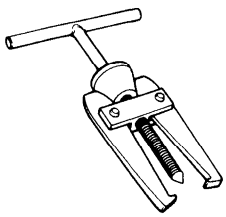 09913-60910 Bearing remover
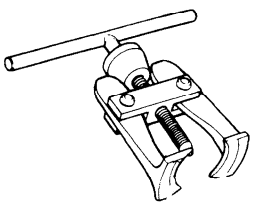 09913-61510 Bearing remover	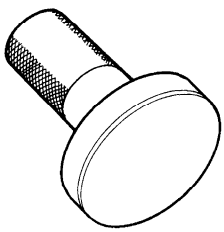 09913-75520 Bearing installer	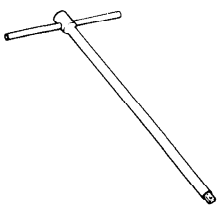 09914-24510 T-handle	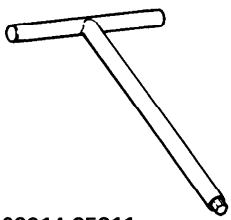 09914-25811 "T" type hexagon wrench (6 mm)	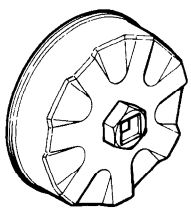 09915-40610 Oil filter wrench

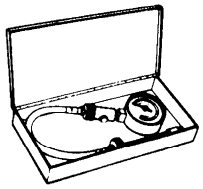 09915-64510 Compression gauge 09915-63210 (Adaptor)	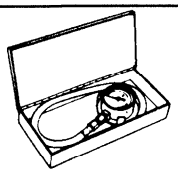 09915-74510 Oil pressure gauge 09915-77330 (for high pressure meter)	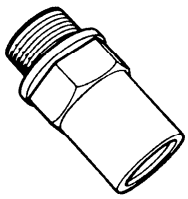 09915-74540 Oil pressure gauge adaptor	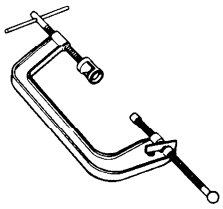 09916-14510 Valve lifter	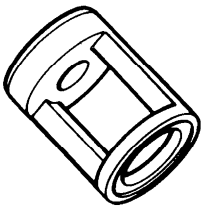 09916-14910 Valve lifter attachment
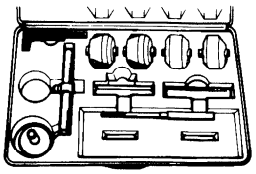 09916-21110 Valve seat cutter set	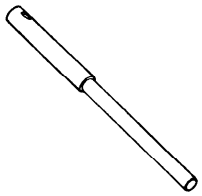 09916-24311 Solid pilot (N-100-5.0)	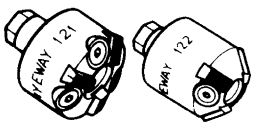 See page 3-26. Valve seat cutter head (N-121, 122)	09916-34542 Valve guide reamer handle	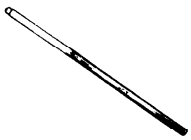 09916-34570 Valve guide reamer (5.0 mm)
09916-34580 Valve guide reamer (10.8 mm)	09916-44310 Valve guide remover/ installer	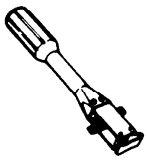 09916-74521 Piston ring compressor body	09916-74540 Piston ring compressor band	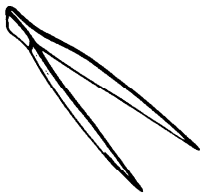 09916-84511 Tweezers
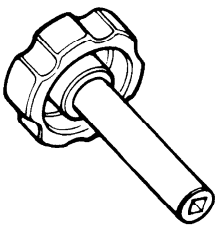 09917-14920 Valve adjust driver	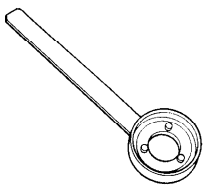 09920-34810 Starter clutch holder	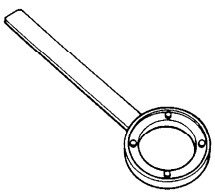 09920-34820 Clutch pressure plate holder	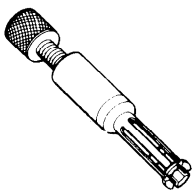 09923-73210 Bearing remover (17–20 mm)	09923-74510 Bearing remover (20–35 mm)
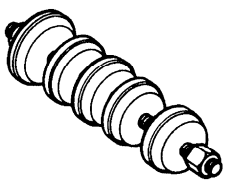 09924-84510 Bearing installer set	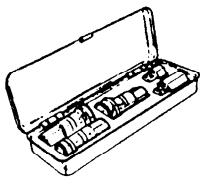 09930-10121 Spark plug socket wrench set	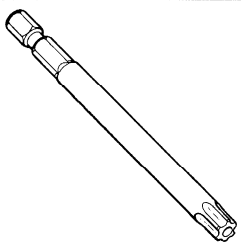 09930-11920 Torx bit JT40H	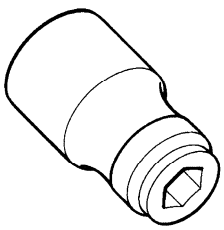 09930-11940 Bit holder	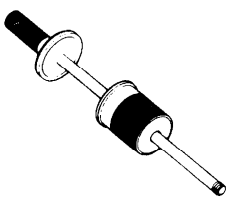 09930-30102 Sliding shaft
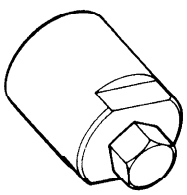 09930-33720 Rotor remover	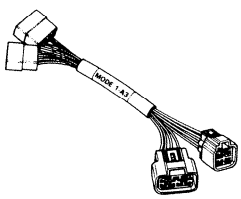 09931-61740 Extension lead wire MODE 1-A3	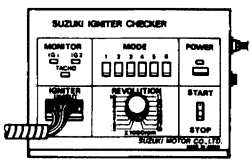 09931-94490 Ignitor checker (Digital type)	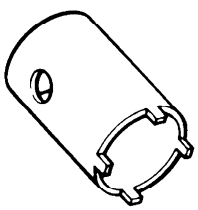 09940-14911 Steering stem nut wrench	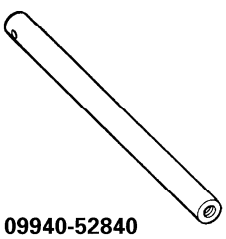 09940-52840 Front fork inner rod holder

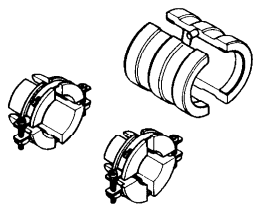 **09940-52860** **Front fork oil seal installer**	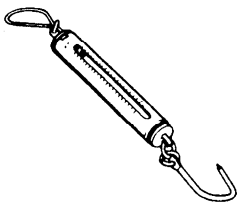 **09940-92710** **Spring scale**	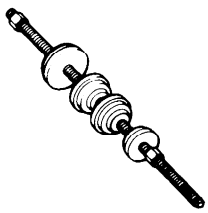 **09941-34513** **Steering outer race installer**	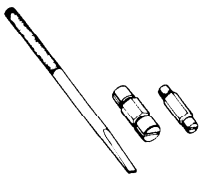 **09941-50111** **Bearing remover**	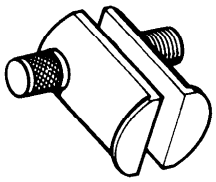 **09941-54911** **Bearing outer race remover**
09941-74910 **Steering bearing installer**	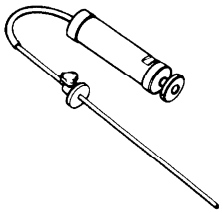 **09943-74111** **Front fork oil level gauge**			

NOTE:
When ordering the special tool, please confirm whether it is available or not.

TIGHTENING TORQUE

ENGINE

ITEM	N·m	kg-m	lb-ft
Cylinder head cover bolt (10 pcs)	14	1.4	10.0
Cylinder head cover plug	15	1.5	11.0
Cylinder head cover union bolt	16	1.6	11.5
Cylinder head nut [M: 10]	38	3.8	27.5
Cylinder head bolt [M: 6]	10	1.0	7.0
Cylinder head plug	28	2.8	20.0
Cylinder base nut	9	0.9	6.5
Cylinder stud bolt	16	1.6	11.5
Valve clearance adjuster lock nut	10	1.0	7.0
Rocker arm shaft set bolt	9	0.9	6.5
Camshaft journal holder bolt	10	1.0	7.0
Cam sprocket bolt	25	2.5	18.0
Oil cooler hose union bolt	28	2.8	20.0
Oil hose mounting bolt	10	1.0	7.0
Cam chain tension adjuster mounting bolt	7	0.7	5.0
Cam chain spring holder bolt	35	3.5	25.5
Cam chain guide mounting bolt	6	0.6	4.5
Conrod bearing cap nut	50	5.0	36.0
Starter clutch mounting bolt	150	15.0	108.5
Signal generator bolt	25	2.5	18.0
Crankcase bolt [M: 6]	13	1.3	9.5
[M: 8]	22	2.2	16.0
Oil pump mounting bolt	14	1.4	10.0
Oil drain plug	23	2.3	16.5
Oil pan bolt	14	1.4	10.0
Gearshift cam stopper bolt	10	1.0	7.0
Clutch sleeve hub nut	150	15.0	108.5
Exhaust pipe bolt	23	2.3	16.5
Muffler mounting bolt	29	2.9	21.0
Engine sprocket nut	115	11.5	83.0
Engine mounting bolt [L: 25 and 50]	23	2.3	16.5
Engine mounting bolt [L: 30 and 33]	50	5.0	36.0
Engine mounting bolt [L: 55 and 75]	55	5.5	40.0
Engine mounting bolt [L:140 and 180]	88	8.8	63.5
Generator driven gear nut	60	6.0	43.5
Generator mounting bolt	25	2.5	18.0
Oil cooler mounting bolt	10	1.0	7.0
Oil pressure regulator	28	2.8	20.0
Oil pressure switch	14	1.4	10.0
Starter motor mounting bolt	6	0.6	4.5
Main oil gallery plug	40	4.0	29.0

CHASSIS

ITEM	N·m	kg-m	lb-ft
Steering stem head nut	65	6.5	47.0
Front fork upper clamp bolt	23	2.3	16.5
Front fork lower clamp bolt	23	2.3	16.5
Front fork cap bolt	23	2.3	16.5
Front fork inner rod lock nut	20	2.0	14.5
Front fork damper rod bolt	20	2.0	14.5
Front axle	100	10.0	72.5
Front axle pinch bolt	23	2.3	16.5
Handlebar clamp bolt	23	2.3	16.5
Handlebar holder nut	45	4.5	32.5
Front brake master cylinder mounting bolt	10	1.0	7.0
Front brake caliper mounting bolt	39	3.9	28.0
Front brake caliper housing bolt	23	2.3	16.5
Front brake caliper pad mounting pin	18	1.8	13.0
Brake hose union bolt (Front & Rear)	23	2.3	16.5
Air bleeder valve (Brake & Clutch)	8	0.8	6.0
Brake disc bolt (Front & Rear)	23	2.3	16.5
Front footrest bracket mounting bolt	23	2.3	16.5
Front footrest bolt	39	3.9	28.0
Swingarm pivot nut	100	10.0	72.5
Rear shock absorber mounting nut (Upper & Lower)	50	5.0	36.0
Rear cushion lever/rod mounting nut	78	7.8	56.5
Rear brake caliper mounting bolt	25	2.5	18.0
Rear brake caliper housing bolt	30	3.0	21.5
Rear brake master cylinder mounting bolt	23	2.3	16.5
Rear brake master cylinder rod lock nut	18	1.8	13.0
Rear axle nut	100	10.0	72.5
Rear sprocket nut	60	6.0	43.5
Rear torque link nut	35	3.5	25.5
Clutch master cylinder mounting bolt	10	1.0	7.0
Clutch hose union bolt	23	2.3	16.5

TIGHTENING TORQUE CHART

For other bolts and nuts listed previously, refer to this chart:

Bolt Diameter Ⓐ (mm)	Conventional or "4" marked bolt			"7" marked bolt		
	N·m	kg-m	lb-ft	N·m	kg-m	lb-ft
4	1.5	0.15	1.0	2.3	0.23	1.5
5	3	0.3	2.0	4.5	0.45	3.0
6	5.5	0.55	4.0	10	1.0	7.0
8	13	1.3	9.5	23	2.3	16.5
10	29	2.9	21.0	50	5.0	36.0
12	45	4.5	32.5	85	8.5	61.5
14	65	6.5	47.0	135	13.5	97.5
16	105	10.5	76.0	210	21.0	152.0
18	160	16.0	115.5	240	24.0	173.5

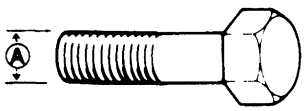

Conventional bolt

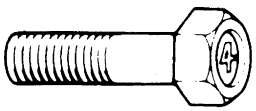

''4'' marked bolt

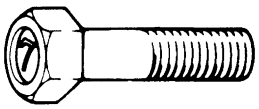

''7'' marked bolt

SERVICE DATA

VALVE + GUIDE

Unit: mm (in)

ITEM	STANDARD		LIMIT
Valve diam.	IN.	28.5 (1.12)	———
	EX.	25 (1.0)	———
Valve clearance (when cold)	IN.	0.10–0.15 (0.004–0.006)	———
	EX.	0.18–0.23 (0.007–0.009)	———
Valve guide to valve stem clearance	IN.	0.020–0.047 (0.0008–0.0019)	———
	EX.	0.040–0.067 (0.0016–0.0026)	———
Valve stem deflection	IN. & EX.	———	0.35 (0.014)
Valve guide I.D.	IN. & EX.	5.000–5.012 (0.1969–0.1973)	———
Valve stem O.D.	IN.	4.965–4.980 (0.1955–0.1961)	———
	EX.	4.945–4.960 (0.1947–0.1953)	———
Valve stem runout	IN. & EX.	———	0.05 (0.002)
Valve head thickness	IN. & EX.	———	0.5 (0.02)
Valve stem end length	IN. & EX.	———	2.5 (0.10)
Valve seat width	IN. & EX.	0.9–1.1 (0.035–0.043)	———
Valve head radial runout	IN. & EX.	———	0.03 (0.001)
Valve spring free length (IN. & EX.)	INNER	———	35.0 (1.38)
	OUTER	———	37.8 (1.49)
Valve spring tension (IN. & EX.)	INNER	5.3–6.5 kg (11.7–14.3 lbs) at length 28 mm (1.1 in)	———
	OUTER	13.1–15.1 kg (28.9–33.3 lbs) at length 31.5 mm (1.2 in)	———

CAMSHAFT + CYLINDER HEAD

Unit: mm (in)

ITEM	STANDARD		LIMIT
Cam height	IN.	33.58–33.62 (1.3220–1.3236)	33.28 (1.3102)
	EX.	33.41–33.45 (1.3154–1.3170)	33.11 (1.3035)
Camshaft journal oil clearance	IN. & EX.	0.032–0.066 (0.0013–0.0026)	0.150 (0.0059)
Camshaft journal holder I.D.	IN. & EX.	22.012–22.025 (0.8666–0.8671)	———

ITEM	STANDARD		LIMIT
Camshaft journal O.D.	IN. & EX.	21.959–21.980 (0.8645–0.8654)	———
Camshaft runout	IN. & EX.	———	0.10 (0.004)
Cam chain pin (at arrow "3")	24th pin		———
Rocker arm I.D.	IN. & EX.	12.000–12.018 (0.4724–0.4731)	———
Rocker arm shaft O.D.	IN. & EX.	11.973–11.984 (0.4714–0.4718)	———
Cylinder head distortion	———		0.20 (0.008)

CYLINDER + PISTON + PISTON RING

Unit: mm (in)

ITEM	STANDARD			LIMIT
Compression pressure	1 250 kPa (12.5 kg/cm^2 178 psi)			875 kPa (8.75 kg/cm^2 124 psi)
Compression pressure difference	———			200 kPa (2 kg/cm^2 28 psi)
Piston to cylinder clearance	0.040–0.070 (0.0016–0.0028)			0.120 (0.0047)
Cylinder bore	79.000–79.015 (3.1102–3.1108)			79.080 (3.1134)
Piston diam.	78.945–78.960 (3.1081–3.1087) Measure at 15 mm (0.6 in) from the skirt end.			78.880 (3.1055)
Cylinder distortion	———			0.20 (0.008)
Piston ring free end gap	1st	R	Approx. 10.0 (0.39)	8.0 (0.31)
	2nd	R	Approx. 12.0 (0.47)	9.6 (0.38)
Piston ring end gap	1st		0.20–0.35 (0.008–0.014)	0.5 (0.02)
	2nd		0.35–0.50 (0.014–0.020)	1.0 (0.04)
Piston ring to groove clearance	1st		———	0.180 (0.007)
	2nd		———	0.150 (0.006)
Piston ring groove width	1st		1.01–1.03 (0.040–0.041)	———
	2nd		1.01–1.03 (0.040–0.041)	———
	Oil		2.01–2.03 (0.079–0.080)	———
Piston ring thickness	1st		0.97–0.99 (0.038–0.039)	———
	2nd		0.97–0.99 (0.038–0.039)	———
Piston pin bore	20.002–20.008 (0.7875–0.7877)			20.030 (0.7886)
Piston pin O.D.	19.996–20.000 (0.7872–0.7874)			19.980 (0.7866)

CONROD + CRANKSHAFT

Unit: mm (in)

ITEM	STANDARD		LIMIT
Corod small end I.D.	20.010–20.018 (0.7878–0.7881)		20.040 (0.7890)
Conrod big end side clearance	0.10–0.20 (0.004–0.008)		0.30 (0.01)
Conrod big end width	20.95–21.00 (0.825–0.827)		———
Crank pin width	21.10–21.15 (0.831–0.833)		———
Conrod big end oil clearance	0.032–0.056 (0.0013–0.0022)		0.080 (0.0031)
Crank pin O.D.	37.976–38.000 (1.4951–1.4961)		———
Crankshaft journal oil clearance	0.020–0.044 (0.0008–0.0017)		0.080 (0.0031)
Crankshaft journal O.D.	35.976–36.000 (1.4164–1.4173)		———
Crankshaft thrust clearance	0.04–0.08 (0.002–0.003)		———
Crankshaft thrust bearing thickness	Left side	2.36–2.52 (0.093–0.099)	———
	Right side	2.42–2.44 (0.095–0.096)	———
Crankshaft runout	———		0.05 (0.002)

OIL PUMP

ITEM	STANDARD	LIMIT
Oil pump reduction ratio	1.703 (72/46 × 37/34)	———
Oil pressure (at 60°C, 140°F)	Above 300 kPa (3.0 kg/cm^2, 43 psi) Below 600 kPa (6.0 kg/cm^2, 85 psi) at 3 000 r/min.	———

CLUTCH

Unit: mm (in)

ITEM	STANDARD		LIMIT
Drive plate thickness	No.1 & No.2	2.92–3.08 (0.115–0.121)	———
Drive plate claw width	———		13.0 (0.51)
Driven plate distortion	———		0.10 (0.004)
Clutch spring free height	———		2.9 (0.11)
Clutch master cylinder bore	14.000–14.043 (0.5511–0.5529)		———
Clutch master cylinder piston diam.	13.957–13.984 (0.5495–0.5506)		———
Clutch release cylinder bore	35.700–35.762 (1.4055–1.4079)		———
Clutch release cylinder piston diam.	35.650–35.675 (1.4035–1.4045)		———

TRANSMISSION + DRIVE CHAIN

Unit: mm (in) Except ratio

ITEM		STANDARD		LIMIT
Primary reduction ratio		1.565 (72/46)		———
Final reduction ratio		3.000 (45/15)		———
Gear ratios	Low	2.384 (31/13)		———
	2nd	1.631 (31/19)		———
	3rd	1.250 (25/20)		———
	4th	1.045 (23/22)		———
	Top	0.913 (21/23)		———
Shift fork to groove clearance		No.1, No.2 & No.3	0.1–0.3 (0.004–0.012)	0.50 (0.020)
Shift fork groove width		No.1, No.2 & No.3	5.0–5.1 (0.197–0.201)	———
Shift fork thickness		No.1, No.2 & No.3	4.8–4.9 (0.189–0.193)	———
Drive chain		Type	RK GB50MFOZ1	———
		Links	110 links	———
		20-pitch length	———	319.4 (12.6)
Drive chain slack		20–30 (0.8–1.2)		———
Gearshift lever height		55 (2.2)		———

CARBURETOR

ITEM		SPECIFICATION		
		E-02,04,17,22, 24,25,28,34	E-18	E-37
Carburetor type		MIKUNI BST36SS	←	←
Bore size		36 mm (1.4 in)	←	←
I.D. No.		27E1	27E3	27E4
Idle r/min.		1 200 ± 100 r/min.	$1\,200^{+100}_{-50}$ r/min.	1 200 ± 100 r/min.
Float height		14.6 ± 1.0 mm (0.58 ± 0.04 in)	←	←
Main jet	(M.J.)	#102.5	←	←
Jet needle	(J.N.)	5D76-4th	5D55-2nd	5D76-4th
Needle jet	(N.J.)	O-8	←	←
Throttle valve	(Th.V.)	#120	←	←
Pilot jet	(P.J.)	#37.5	←	←
Pilot screw	(P.S.)	PRE-SET (1-3/4 turns back)	←	←
Throttle cable play		0.5–1.0 mm (0.02–0.04 in)	←	←

ELECTRICAL

Unit: mm (in)

ITEM		SPECIFICATION		NOTE
Ignition timing		7° B.T.D.C. Below 1 500 r/min.		
Firing order		1·2·4·3		
Spark plug		Type	NGK: JR9B	
		Gap	0.6–0.7 (0.024–0.028)	
Spark performance		Over 8 (0.3) at 1 atm.		
Signal coil resistance		Approx. 135–200 Ω		Tester range: (× 100 Ω)
Ignition coil resistance		Primary	⊕ tap–⊖ tap Approx. 2–4 Ω	Tester range: (× 1 Ω)
		Secondary	Plug cap–Plug cap Approx. 30–40 kΩ	Tester range: (× 1 kΩ)
Generator		Slip ring O.D.	Limit: 14.0 (0.55)	
		Brush length	Limit: 4.5 (0.18)	N.D.
Generator Max. output		Approx. 405W at 5 000 r/min.		The rotation of the generator
Regulated voltage		Above 13.5V at 5 000 r/min.		
Starter relay resistance		3–5 Ω		
Battery	Type designation	YTX12-BS		
	Capacity	12V 36 kC (10 Ah)/10HR		
	Standard electrolyte S.G.	1.320 at 20°C (68°F)		
Fuse size	Headlight	HI	15A	
		LO	15A	
	Turn signal	15A		
	Ignition	10A		
	Taillight	10A		
	Main	30A		

WATTAGE

Unit: W

ITEM		SPECIFICATION	
		E-24, 28 models	For the other models
Headlight	HI	60	←
	LO	55	←
Parking or position light			4
Tail/Brake light		5/21	←
Turn signal light		21 × 4	←
Speedometer light		1.7 × 2	←
Tachometer light		1.7	←
Fuel meter light		1.7	←
Turn signal indicator light		3 × 2	←
High beam indicator light		3	←
Neutral indicator light		3	←
Oil pressure indicator light		3	←
License plate light		5	←

BRAKE + WHEEL

Unit: mm (in)

ITEM		STANDARD		LIMIT
Rear brake pedal height			55 (2.2)	———
Brake disc thickness		Front	4.5 ± 0.2 (0.177 ± 0.008)	4.0 (0.15)
		Rear	5.0 ± 0.2 (0.197 ± 0.008)	4.5 (0.18)
Brake disc runout			———	0.30 (0.012)
Master cylinder bore		Front	15.870–15.913 (0.6248–0.6264)	———
		Rear	12.700–12.743 (0.5000–0.5017)	———
Master cylinder piston diam.		Front	15.827–15.854 (0.6231–0.6242)	———
		Rear	12.657–12.684 (0.4983–0.4994)	———
Brake caliper cylinder bore	Leading	Front	30.230–30.280 (1.1902–1.1921)	———
	Trailing		33.960–34.010 (1.3370–1.3390)	———
		Rear	38.180–38.256 (1.5031–1.5061)	———
Brake caliper piston diam.	Leading	Front	30.160–30.180 (1.1874–1.1882)	———
	Trailing		33.878–33.928 (1.3338–1.3357)	———
		Rear	38.098–38.148 (1.5000–1.5019)	———
Wheel rim runout (Front & Rear)		Axial	———	2.0 (0.08)
		Radial	———	2.0 (0.08)
Wheel axle runout		Front	———	0.25 (0.010)
		Rear	———	0.25 (0.010)
Wheel rim size		Front	J17 × MT3.50	———
		Rear	J17 × MT5.50	———
Tire size		Front	120/70 ZR17	———
		Rear	180/55 ZR17	———
Tire tread depth		Front	———	1.6 (0.06)
		Rear	———	2.0 (0.08)

SUSPENSION

Unit: mm (in)

ITEM	STANDARD	LIMIT	NOTE
Front fork stroke	130 (5.1)	———	
Front fork spring free length	———	362.1 (14.26)	
Front fork oil level	99 (3.9)	———	

ITEM	STANDARD	LIMIT	NOTE
Rear wheel travel	134 (5.3)	———	
Swingarm pivot shaft runout	———	0.3 (0.01)	

TIRE PRESSURE

COLD INFLATION TIRE PRESSURE	SOLO OR DUAL RIDING		
	kPa	kg/cm^2	psi
FRONT	250	2.50	36
REAR	250	2.50	36

FUEL + OIL

ITEM	SPECIFICATION		NOTE
Fuel type	Use only unleaded gasoline of at least 87 pump octane ($\frac{R+M}{2}$) or 91 octane or higher rated by the research method.		For Canada model
	Gasoline used should be graded 85-95 octane or higher. An unleaded gasoline is recommended.		For the other models
Fuel tank including reserve	19.0 L (5.0/4.1 US/Imp gal)		
reserve	4.5 L (1.1/0.9 US/Imp gal)		
Engine oil type	SAE 10W/40, API SE, SF or SG		
Engine oil capacity	Change	3 300 ml (3.4/2.9 US/Imp qt)	
	Filter change	3 500 ml (3.6/3.0 US/Imp qt)	
	Overhaul	4 600 ml (4.9/4.0 US/Imp qt)	
Front fork oil type	Fork oil #10		
Front fork oil capacity (each leg)	516 ml (17.4/18.2 US/Imp oz)		
Brake fluid type	DOT 4		

GSF1200V/SV ('97-MODEL)

CONTENTS

SPECIFICATIONS 8- 1
SERVICE DATA 8- 2

NOTE:
The specifications and service data are the same as those of the '96-MODEL.

SPECIFICATIONS

DIMENSIONS AND DRY MASS

Overall length	2 165 mm (85.2 in) ... E17, 22
	2 225 mm (87.6 in) ... E18, 39
	2 095 mm (82.5 in) ... Others
Overall width	790 mm (31.1 in)
Overall height	1 215 mm (47.8 in) ... GSF1200S
	1 100 mm (43.3 in) ... GSF1200
Wheelbase	1 435 mm (56.5 in)
Ground clearance	130 mm (5.1 in)
Seat height	835 mm (32.9 in)
Dry mass	214 kg (471 lbs) ... GSF1200S
	211 kg (465 lbs) ... GSF1200

ENGINE

Type	4-stroke, air-cooled with SACS, DOHC, TSCC
Number of cylinders	4
Bore	79.0 mm (3.110 in)
Stroke	59.0 mm (2.323 in)
Displacement	1 157 cm^3 (70.6 cu. in)
Compression ratio	9.5: 1
Carburetor	BST36, four
Air cleaner	Non-woven fabric element
Starter system	Electric
Lubrication system	Wet sump

TRANSMISSION

Clutch	Wet multi-plate type
Transmission	5-speed constant mesh
Gearshift pattern	1-down, 4-up
Primary reduction ratio	1.565 (72/46)
Gear ratios, Low	2.384 (31/13)
2nd	1.631 (31/19)
3rd	1.250 (25/20)
4th	1.045 (23/22)
Top	0.913 (21/23)
Final reduction ratio	3.000 (45/15)
Drive chain	RK GB50MFOZ1, 110 links

CHASSIS

Front suspension	Telescopic, coil spring, oil damped, spring pre-load fully adjustable
Rear suspension	Link type, coil spring, oil damped, spring pre-load 7-way adjustable rebound damping force 4-way adjustable
Front fork storke	130 mm (5.1 in)
Rear wheel travel	134 mm (5.3 in)
Steering angle	35° (right & left)
Caster	25° 36'
Trail	107 mm (4.2 in)
Turning radius	2.8 m (9.2 ft)
Front brake	Disc brake, Twin
Rear brake	Disc brake
Front tire size	120/70 ZR17
Rear tire size	180/55 ZR17

ELECTRICAL

Ignition type	Electronic ignition (Transistorized)
Ignition timing	7° B.T.D.C. at 1 500 r/min
Spark plug	NGK JR9B
Battery	12V 36 kC (10 Ah)/10 HR
Generator	Three-phase A.C. generator
Main fuse	30A
Fuse	15/15/10/15/10 A
Headlight	12V 60/55W
Position light	12V 4W .... Except E03,24,28,33
Turn signal light	12V 21W × 4
Tail/brake light	12V 5/21W
Licence plate light	12V 5W
Speedometer light	12V 1.7W × 2
Tachometer light	12V 1.7W
Fuel indicator light	12V 1.7W
Neutral indicator light	12V 3.0W
High beam indicator light	12V 3.0W
Turn signal indicator light	12V 3.0W × 2
Oil pressure indicator light	12V 3.0W

CAPACITIES

Fuel tank, including reserve	19.0 L (5.0/4.1 US/Imp gal)
Reserve	4.5 L (1.1/0.9 US/Imp gal)
Engine oil, oil change	3 300 ml (3.4/2.9 US/Imp qt)
with filter change	3 500 ml (3.6/3.0 US/Imp qt)
overhaul	4 600 ml (4.9/4.0 US/Imp qt)

SERVICE DATA

VALVE + GUIDE

Unit: mm (in)

ITEM	STANDARD		LIMIT
Valve diam.	IN.	28.5 (1.12)	———
	EX.	25 (1.0)	———
Valve clearance (when cold)	IN.	0.10–0.15 (0.004–0.006)	———
	EX.	0.18–0.23 (0.007–0.009)	———
Valve guide to valve stem clearance	IN.	0.020–0.047 (0.0008–0.0019)	———
	EX.	0.040–0.067 (0.0016–0.0026)	———
Valve stem deflection	IN. & EX.	———	0.35 (0.014)
Valve guide I.D.	IN. & EX.	5.000–5.012 (0.1969–0.1973)	———
Valve stem O.D.	IN.	4.965–4.980 (0.1955–0.1961)	———
	EX.	4.945–4.960 (0.1947–0.1953)	———
Valve stem runout	IN. & EX.	———	0.05 (0.002)
Valve head thickness	IN. & EX.	———	0.5 (0.02)
Valve stem end length	IN. & EX.	———	2.5 (0.10)
Valve seat width	IN. & EX.	0.9–1.1 (0.035–0.043)	———
Valve head radial runout	IN. & EX.	———	0.03 (0.001)
Valve spring free length (IN. & EX.)	INNER	———	35.0 (1.38)
	OUTER	———	37.8 (1.49)
Valve spring tension (IN. & EX.)	INNER	5.3–6.5 kg (11.7–14.3 lbs) at length 28 mm (1.1 in)	———
	OUTER	13.1–15.1 kg (28.9–33.3 lbs) at length 31.5 mm (1.2 in)	———

CAMSHAFT + CYLINDER HEAD

Unit: mm (in)

ITEM	STANDARD		LIMIT
Cam height	IN.	33.58–33.62 (1.3220–1.3236)	33.28 (1.3102)
	EX.	33.41–33.45 (1.3154–1.3170)	33.11 (1.3035)
Camshaft journal oil clearance	IN. & EX.	0.032–0.066 (0.0013–0.0026)	0.150 (0.0059)
Camshaft journal holder I.D.	IN. & EX.	22.012–22.025 (0.8666–0.8671)	———
Camshaft journal O.D.	IN. & EX.	21.959–21.980 (0.8645–0.8654)	———
Camshaft runout	IN. & EX.	———	0.10 (0.004)
Cam chain pin (at arrow "3")	24th pin		———
Rocker arm I.D.	IN. & EX.	12.000–12.018 (0.4724–0.4731)	———
Rocker arm shaft O.D.	IN. & EX.	11.973–11.984 (0.4714–0.4718)	———
Cylinder head distortion	———		0.20 (0.008)

CYLINDER + PISTON + PISTON RING

Unit: mm (in)

ITEM	STANDARD			LIMIT
Compression pressure	1 250 kPa (12.5 kg/cm^2 178 psi)			875 kPa (8.75 kg/cm^2 124 psi)
Compression pressure difference	———			200 kPa (2 kg/cm^2 28 psi)
Piston to cylinder clearance	0.040–0.070 (0.0016–0.0028)			0.120 (0.0047)
Cylinder bore	79.000–79.015 (3.1102–3.1108)			79.080 (3.1134)
Piston diam.	78.945–78.960 (3.1081–3.1087) Measure at 15 mm (0.6 in) from the skirt end.			78.880 (3.1055)
Cylinder distortion	———			0.20 (0.008)
Piston ring free end gap	1st	R	Approx. 10.0 (0.39)	8.0 (0.31)
	2nd	R	Approx. 12.0 (0.47)	9.6 (0.38)
Piston ring end gap	1st		0.20–0.35 (0.008–0.014)	0.5 (0.02)
	2nd		0.35–0.50 (0.014–0.020)	1.0 (0.04)
Piston ring to groove clearance	1st		———	0.180 (0.007)
	2nd		———	0.150 (0.006)

ITEM	STANDARD		LIMIT
Piston ring groove width	1st	1.01–1.03 (0.040–0.041)	———
	2nd	1.01–1.03 (0.040–0.041)	———
	Oil	2.01–2.03 (0.079–0.080)	———
Piston ring thickness	1st	0.97–0.99 (0.038–0.039)	———
	2nd	0.97–0.99 (0.038–0.039)	———
Piston pin bore	20.002–20.008 (0.7875–0.7877)		20.030 (0.7886)
Piston pin O.D.	19.996–20.000 (0.7872–0.7874)		19.980 (0.7866)

CONROD + CRANKSHAFT

Unit: mm (in)

ITEM	STANDARD		LIMIT
Corod small end I.D.	20.010–20.018 (0.7878–0.7881)		20.040 (0.7890)
Conrod big end side clearance	0.10–0.20 (0.004–0.008)		0.30 (0.01)
Conrod big end width	20.95–21.00 (0.825–0.827)		———
Crank pin width	21.10–21.15 (0.831–0.833)		———
Conrod big end oil clearance	0.032–0.056 (0.0013–0.0022)		0.080 (0.0031)
Crank pin O.D.	37.976–38.000 (1.4951–1.4961)		———
Crankshaft journal oil clearance	0.020–0.044 (0.0008–0.0017)		0.080 (0.0031)
Crankshaft journal O.D.	35.976–36.000 (1.4164–1.4173)		———
Crankshaft thrust clearance	0.04–0.08 (0.002–0.003)		———
Crankshaft thrust bearing thickness	Left side	2.36–2.52 (0.093–0.099)	———
	Right side	2.42–2.44 (0.095–0.096)	———
Crankshaft runout	———		0.05 (0.002)

OIL PUMP

ITEM	STANDARD	LIMIT
Oil pump reduction ratio	1.703 (72/46 × 37/34)	———
Oil pressure (at 60°C, 140°F)	Above 300 kPa (3.0 kg/cm^2, 43 psi) Below 600 kPa (6.0 kg/cm^2, 85 psi) at 3 000 r/min.	———

CLUTCH

Unit: mm (in)

ITEM	STANDARD		LIMIT
Drive plate thickness	No.1 & No.2	2.92–3.08 (0.115–0.121)	———
Drive plate claw width	———		13.0 (0.51)
Driven plate distortion	———		0.10 (0.004)
Clutch spring free height	———		2.9 (0.11)
Clutch master cylinder bore	14.000–14.043 (0.5511–0.5529)		———
Clutch master cylinder piston diam.	13.957–13.984 (0.5495–0.5506)		———
Clutch release cylinder bore	35.700–35.762 (1.4055–1.4079)		———
Clutch release cylinder piston diam.	35.650–35.675 (1.4035–1.4045)		———

TRANSMISSION + DRIVE CHAIN

Unit: mm (in) Except ratio

ITEM		STANDARD		LIMIT
Primary reduction ratio		1.565 (72/46)		———
Final reduction ratio		3.000 (45/15)		———
Gear ratios	Low	2.384 (31/13)		———
	2nd	1.631 (31/19)		———
	3rd	1.250 (25/20)		———
	4th	1.045 (23/22)		———
	Top	0.913 (21/23)		———
Shift fork to groove clearance		No.1, No.2 & No.3	0.1–0.3 (0.004–0.012)	0.50 (0.020)
Shift fork groove width		No.1, No.2 & No.3	5.0–5.1 (0.197–0.201)	———
Shift fork thickness		No.1, No.2 & No.3	4.8–4.9 (0.189–0.193)	———
Drive chain		Type	RK GB50MFOZ1	———
		Links	110 links	———
		20-pitch length	———	319.4 (12.6)
Drive chain slack		20–30 (0.8–1.2)		———
Gearshift lever height		55 (2.2)		———

CARBURETOR

ITEM		SPECIFICATION		
		E-02,04,17,22, 24,25,34	E-18	E-37
Carburetor type		MIKUNI BST36SS	←	←
Bore size		36 mm (1.4 in)	←	←
I.D. No.		27E1	27E3	27E4
Idle r/min.		1 200 ± 100 r/min.	1 200 $^{+100}_{-50}$ r/min.	1 200 ± 100 r/min.
Float height		14.6 ± 1.0 mm (0.58 ± 0.04 in)	←	←
Main jet	(M.J.)	#102.5	←	←
Jet needle	(J.N.)	5D76-4th	5D55-2nd	5D76-4th
Needle jet	(N.J.)	O-8	←	←
Throttle valve	(Th.V.)	#120	←	←
Pilot jet	(P.J.)	#37.5	←	←
Pilot screw	(P.S.)	PRE-SET (1-3/4 turns back)	←	←
Throttle cable play		0.5–1.0 mm (0.02–0.04 in)	←	←

CARBURETOR

ITEM		SPECIFICATION	
		E-03,28	E-33 (Calif. model)
Carburetor type		MIKUNI BST36SS	←
Bore size		36 mm (1.4 in)	←
I.D. No.		27E5	27E6
Idle r/min.		1 200 ± 50 r/min.	←
Float height		14.6 ± 1.0 mm (0.58 ± 0.04 in)	←
Main jet	(M.J.)	#102.5	←
Jet needle	(J.N.)	5D80	←
Needle jet	(N.J.)	O-8M	←
Throttle valve	(Th.V.)	#120	←
Pilot jet	(P.J.)	#37.5	←
Pilot screw	(P.S.)	PRE-SET	←
Throttle cable play		0.5–1.0 mm (0.02–0.04 in)	←

ELECTRICAL

Unit: mm (in)

ITEM	SPECIFICATION		NOTE
Ignition timing	7° B.T.D.C. Below 1 500 r/min.		
Firing order	1·2·4·3		
Spark plug	Type	NGK: JR9B	
	Gap	0.6–0.7 (0.024–0.028)	
Spark performance	Over 8 (0.3) at 1 atm.		
Signal coil resistance	Approx. 135–200 Ω		Tester range: (× 100 Ω)
Ignition coil resistance	Primary	⊕ tap–⊖ tap Approx. 2–4 Ω	Tester range: (× 1 Ω)
	Secondary	Plug cap–Plug cap Approx. 30–40 kΩ	Tester range: (× 1 kΩ)

ITEM		SPECIFICATION		NOTE
Generator		Slip ring O.D.	Limit: 14.0 (0.55)	
		Brush length	Limit: 4.5 (0.18)	N.D.
Generator Max. output		Approx. 405W at 5 000 r/min.		The rotation of the generator
Regulated voltage		Above 13.5V at 5 000 r/min.		
Starter relay resistance		3–5 Ω		
Battery	Type designation	YTX12-BS		
	Capacity	12V 36 kC (10 Ah)/10HR		
	Standard electrolyte S.G.	1.320 at 20°C (68°F)		
Fuse size	Headlight	HI	15A	
		LO	15A	
	Turn signal	15A		
	Ignition	10A		
	Taillight	10A		
	Main	30A		

WATTAGE

Unit: W

ITEM		SPECIFICATION	
		E-03,24,28,33	For the other markets
Headlight	HI	60	←
	LO	55	←
Parking or position light			4
Tail/Brake light		5/21	←
Turn signal light		21 × 4	←
Speedometer light		1.7 × 2	←
Tachometer light		1.7	←
Fuel meter light		1.7	←
Turn signal indicator light		3 × 2	←
High beam indicator light		3	←
Neutral indicator light		3	←
Oil pressure indicator light		3	←
License plate light		5	←

BRAKE + WHEEL

Unit: mm (in)

ITEM		STANDARD	LIMIT
Rear brake pedal height		55 (2.2)	———
Brake disc thickness	Front	4.5 ± 0.2 (0.177 ± 0.008)	4.0 (0.15)
	Rear	5.0 ± 0.2 (0.197 ± 0.008)	4.5 (0.18)
Brake disc runout		———	0.30 (0.012)
Master cylinder bore	Front	15.870–15.913 (0.6248–0.6264)	———
	Rear	12.700–12.743 (0.5000–0.5017)	———
Master cylinder piston diam.	Front	15.827–15.854 (0.6231–0.6242)	———
	Rear	12.657–12.684 (0.4983–0.4994)	———

ITEM		STANDARD		LIMIT
Brake caliper cylinder bore	Leading	Front	30.230–30.280 (1.1902–1.1921)	———
	Trailing		33.960–34.010 (1.3370–1.3390)	———
		Rear	38.180–38.256 (1.5031–1.5061)	———
Brake caliper piston diam.	Leading	Front	30.160–30.180 (1.1874–1.1882)	———
	Trailing		33.878–33.928 (1.3338–1.3357)	———
		Rear	38.098–38.148 (1.5000–1.5019)	———
Wheel rim runout (Front & Rear)		Axial	———	2.0 (0.08)
		Radial	———	2.0 (0.08)
Wheel axle runout		Front	———	0.25 (0.010)
		Rear	———	0.25 (0.010)
Wheel rim size		Front	J17 × MT3.50	———
		Rear	J17 × MT5.50	———
Tire size		Front	120/70 ZR17	———
		Rear	180/55 ZR17	———
Tire tread depth		Front	———	1.6 (0.06)
		Rear	———	2.0 (0.08)

SUSPENSION

Unit: mm (in)

ITEM	STANDARD	LIMIT	NOTE
Front fork stroke	130 (5.1)	———	
Front fork spring free length	———	360 (14.2)	E-03,28,33
	———	362.1 (14.26)	For the other markets
Front fork oil level	101 (4.0)	———	E-03,28,33
	99 (3.9)	———	For the other markets
Rear wheel travel	134 (5.3)	———	
Swingarm pivot shaft runout	———	0.3 (0.01)	

TIRE PRESSURE (For E-03,28,33)

COLD INFLATION TIRE PRESSURE	SOLO RIDING			DUAL RIDING		
	kPa	kg/cm^2	psi	kPa	kg/cm^2	psi
FRONT	225	2.25	33	250	2.50	36
REAR	225	2.25	33	250	2.50	36

TIRE PRESSURE (For the other markets)

COLD INFLATION TIRE PRESSURE	SOLO OR DUAL RIDING		
	kPa	kg/cm^2	psi
FRONT	250	2.50	36
REAR	250	2.50	36

FUEL + OIL

ITEM	SPECIFICATION		NOTE
Fuel type	Use only unleaded gasoline of at least 87 pump octane ($\frac{R+M}{2}$) or 91 octane or higher rated by the research method. Gasoline containing MTBE (Methyl Tertiary Butyl Ether), less than 10% ethanol, or less than 5% methanol with appropriate cosolvents and corrosion inhibitor is permissible.		E-03,33
	Use only unleaded gasoline of at least 87 pump octane ($\frac{R+M}{2}$) or 91 octane or higher rated by the research method.		E-28
	Gasoline used should be graded 85-95 octane or higher. An unleaded gasoline is recommended.		For the other markets
Fuel tank including reserve	19.0 L (5.0/4.1 US/Imp gal)		
reserve	4.5 L (1.1/0.9 US/Imp gal)		
Engine oil type	SAE 10W/40, API SF or SG		
Engine oil capacity	Change	3 300 ml (3.4/2.9 US/Imp qt)	
	Filter change	3 500 ml (3.6/3.0 US/Imp qt)	
	Overhaul	4 600 ml (4.9/4.0 US/Imp qt)	
Front fork oil type	Fork oil #10		
Front fork oil capacity (each leg)	514 ml (17.3/18.1 US/Imp oz)		E-03,28,33
	516 ml (17.4/18.2 US/Imp oz)		For the other markets
Brake fluid type	DOT 4		

GSF1200SAV ('97-MODEL)

This chapter describes service data, service specifications, ABS and servicing procedures which differ from those of the GSF1200SV ('97-model).

NOTE:
- *Any differences between the GSF1200SV ('97-model) and GSF1200SAV ('97-model) in specifications and service data are indicated with an asterisk mark (*).*
- *Please refer to the chapter 1 through 8 for details which are not given in this chapter.*

CONTENTS

GENERAL INFORMATION 9- 1
SPECIFICATIONS 9- 1
SERVICE DATA 9- 3
INTRODUCTION 9-13
ANTI-LOCK BRAKE SYSTEM (ABS) 9-13
PERIODIC MAINTENANCE 9-25
MAINTENANCE AND TUNE-UP PROCEDURE 9-25
CHASSIS 9-26
FRONT WHEEL 9-26
REAR WHEEL 9-28
REAR SUSPENSION 9-30
ELECTRICAL SYSTEM 9-31
COMBINATION METER 9-31
ABS 9-32
ABS COMPONENTS 9-32
ABS COUPLER CONNECTION DIAGRAM 9-33
ABS WIRING DIAGRAM 9-34
CAUTIONS IN SERVICING 9-35
ABS TROUBLESHOOTING DESCRIPTION 9-38
TROUBLESHOOTING 9-39
ABS COMPONENT REMOVAL, INSPECTION AND REMOUNTING 9-66
SERVICING INFORMATION 9-78
WIRING DIAGRAM 9-78
WIRE HARNESS, CABLE AND HOSE ROUTING 9-81
SPECIAL TOOLS 9-87

SUZUKI
Bandit S1200
ABS

SUZUKI
Bandit S1200
ABS

GENERAL INFORMATION

SPECIFICATIONS

DIMENSIONS AND DRY MASS

Overall length	*2175 mm (85.6 in)	For E-17, 22
	*2235 mm (88.0 in)	For E-18
	*2105 mm (82.9 in)	For other markets
Overall width	790 mm (31.1 in)	
Overall height	1215 mm (47.8 in)	
Wheelbase	*1465 mm (57.7 in)	
Ground clearance	130 mm (5.1 in)	
Seat height	835 mm (32.9 in)	
Dry mass	*221 kg (487 lbs)	
	*224 kg (493 lbs)	E-33 only

ENGINE

Type	Four-stroke, air-cooled, with SACS, DOHC, TSCC
Number of cylinders	Four
Bore	79.0 mm (3.110 in)
Stroke	59.0 mm (2.323 in)
Compression ratio	9.5 : 1
Piston displacement	1157 cm^3 (70.6 cu. in)
Number of carburetors	Four (MIKUNI BST36)
Air cleaner	Non-woven fabric element
Starter system	Electric starter
Lubrication system	Wet sump

TRANSMISSION

Clutch		Wet, multi-plate type
Transmission		5-speed constant mesh
Gearshift pattern		1-down, 4-up
Primary reduction ratio		1.565 (72/46)
Final reduction ratio		3.000 (45/15)
Gear ratios,	1st (low)	2.384 (31/13)
	2nd	1.631 (31/19)
	3rd	1.250 (25/20)
	4th	1.045 (23/22)
	5th (high)	0.913 (21/23)
Drive chain		RK GB50MFOZ1, *114 links

Specifications marked with asterisks (*) are exclusive to GSF1200SAV.
These specifications are subject to change without notice.

CHASSIS

Front suspension	Telescopic, coil spring, oil damped, spring pre-load fully adjustable
Rear suspension	Link type system, oil damped, coil spring, spring pre-load 7-way adjustable, rebound damping force 4-way adjustable
Steering angle	35° (right & left)
Caster	64° 24′
Trail	107 mm (4.2 in)
Turning radius	2.8 m (9.2 ft)
Front brake	Disc brake, twin
Rear brake	Disc brake
Front tire size	120/70 ZR17 (58W)
Rear tire size	180/55 ZR17 (73W)
Front fork stroke	130 mm (5.1 in)
Rear wheel travel	*126 mm (5.0 in)

ELECTRICAL

Ignition type	Electronic Ignition (fully transistorized)
Ignition timing	7° B.T.D.C. at 1500 r/min.
Spark plugs	NGK: JR9B
Battery	12V 36kC (10 Ah)/10 HR
Generator	Three-phase A.C. generator
Main fuse	30 A
Fuses	15/15/10/15/10 A
*ABS circuit breaker	*30 A
Headlight	12 V 60/55 W
Position light	12 V 4 W ..... Except for E-24 and 28 models
Turn signal light	12 V 21 W x 4
Tail/brake light	12 V 5/21 W
License plate light	12 V 5 W
Speedometer light	12 V 1.7 W x 2
Fuel meter light	12 V 1.7 W
Tachometer light	12 V 1.7 W
Neutral indicator light	12 V 3 W
High beam indicator light	12 V 3 W
Turn signal indicator light	12 V 3 W x 2
Oil pressure indicator light	12 V 3 W
*ABS warning indicator light	*12 V 3 W

CAPACITIES

Fuel tank, including reserve	19.0	L (5.0/4.1 US/Imp gal)
reserve	4.5	L (1.1/0.9 US/Imp gal)
Engine oil, oil change	3300	ml (3.4/2.9 US/Imp qt)
oil and filter change	3500	ml (3.6/3.0 US/Imp qt)
engine overhaul	4600	ml (4.9/4.0 US/Imp qt)
Front fork oil (each leg)	514	ml (17.3/18.1 US/Imp oz)..... For E-03,28,33
	516	ml (17.4/18.2 US/Imp oz)..... For other markets

Specifications marked with asterisks (*) are exclusive to GSF1200SAV.
These specifications are subject to change without notice.

SERVICE DATA

VALVE + GUIDE

Unit: mm (in)

ITEM	STANDARD		LIMIT
Valve diameter	IN.	28.5 (1.12)	—
	EX.	25 (1.0)	—
Valve clearance (when cold)	IN.	0.10-0.15 (0.004-0.006)	—
	EX.	0.18-0.23 (0.007-0.009)	—
Valve guide to valve stem clearance	IN.	0.020-0.047 (0.0008-0.0019)	—
	EX.	0.040-0.067 (0.0016-0.0026)	—
Valve stem deflection	IN. & EX.	—	0.35 (0.014)
Valve guide I.D.	IN. & EX.	5.000-5.012 (0.1969-0.1973)	—
Valve stem O.D.	IN.	4.965-4.980 (0.1955-0.1961)	—
	EX.	4.945-4.960 (0.1947-0.1953)	—
Valve stem runout	IN. & EX.	—	0.05 (0.002)
Valve head thickness	IN. & EX.	—	0.5 (0.02)
Valve stem end length	IN. & EX.	—	2.5 (0.10)
Valve seat width	IN. & EX.	0.9-1.1 (0.035-0.043)	—
Valve head radial runout	IN. & EX.	—	0.03 (0.001)
Valve spring free length (IN. & EX.)	INNER	—	35.0 (1.38)
	OUTER	—	37.8 (1.49)
Valve spring tension (IN. & EX.)	INNER	5.3-6.5 kg (11.7-14.3 lbs) at length 28 mm (1.1 in)	—
	OUTER	13.1-15.1 kg (28.9-33.3 lbs) at length 31.5 mm (1.2 in)	—

CAMSHAFT + CYLINDER HEAD

Unit: mm (in)

ITEM	STANDARD		LIMIT
Cam height	IN.	33.58-33.62 (1.3220-1.3236)	33.28 (1.3102)
	EX	33.41-33.45 (1.3154-1.3170)	33.11 (1.3035)
Camshaft journal clearance	IN. & EX.	0.032-0.066 (0.0013-0.0026)	0.150 (0.0059)
Camshaft journal holder I.D.	IN. & EX.	22.012-22.025 (0.8666-0.8671)	—
Camshaft journal O.D.	IN. & EX.	21.959-21.980 (0.8645-0.8654)	—
Camshaft runout	IN. & EX.	—	0.10 (0.004)
Cam chain pin (at arrow "3")	24th pin		—
Rocker arm I.D.	IN. & EX.	12.000-12.018 (0.4724-0.4731)	—
Rocker arm shaft O.D.	IN. & EX.	11.973-11.984 (0.4714-0.4718)	—
Cylinder head distortion	—		0.20 (0.008)

CYLINDER + PISTON + PISTON RING

Unit: mm (in)

ITEM	STANDARD			LIMIT
Compression pressure	1250 kPa (12.5 kg/cm^2) (178 psi)			875 kPa (8.75 kg/cm^2) (124 psi)
Compression pressure difference	—			200 kPa (2 kg/cm^2) (28 psi)
Piston to cylinder clearance	0.040-0.070 (0.0016-0.0028)			0.120 (0.0047)
Cylinder bore	79.000-79.015 (3.1102-3.1108)			79.080 (3.1134)
Piston diameter	78.945-78.960 (3.1081-3.1087) Measure at 15 (0.6) from the skirt end.			78.880 (3.1055)
Cylinder distortion	—			0.20 (0.008)
Piston ring free end gap	1st	R	Approx. 10.0 (0.39)	8.0 (0.31)
	2nd	R	Approx. 12.0 (0.47)	9.6 (0.38)

ITEM	STANDARD		LIMIT
Piston ring end gap	1st	0.20-0.35 (0.008-0.014)	0.5 (0.02)
	2nd	0.35-0.50 (0.014-0.020)	1.0 (0.04)
Piston ring to groove clearance	1st	—	0.180 (0.007)
	2nd	—	0.150 (0.006)
Piston ring groove width	1st	1.01-1.03 (0.040-0.041)	—
	2nd	1.01-1.03 (0.040-0.041)	—
	Oil	2.01-2.03 (0.079-0.080)	—
Piston ring thickness	1st	0.97-0.99 (0.038-0.039)	—
	2nd	0.97-0.99 (0.038-0.039)	—
Piston pin bore	20.002-20.008 (0.7875-0.7877)		20.030 (0.7886)
Piston pin O.D.	19.996-20.000 (0.7872-0.7874)		19.980 (0.7866)

CONROD + CRANKSHAFT

Unit: mm (in)

ITEM	STANDARD	LIMIT
Conrod small end I.D.	20.010-20.018 (0.7878-0.7881)	20.040 (0.7890)
Conrod big end side clearance	0.10-0.20 (0.004-0.008)	0.30 (0.01)
Conrod big end width	20.95-21.00 (0.825-0.827)	—
Crank pin width	21.10-21.15 (0.831-0.833)	—
Conrod big end oil clearance	0.032-0.056 (0.0013-0.0022)	0.080 (0.0031)
Crank pin O.D.	37.976-38.000 (1.4951-1.4961)	—
Crankshaft journal oil clearance	0.020-0.044 (0.0008-0.0017)	0.080 (0.0031)
Crankshaft journal O.D.	35.976-36.000 (1.4164-1.4173)	—
Crankshaft thrust clearance	0.04-0.08 (0.002-0.003)	—

ITEM	STANDARD		LIMIT
Crankshaft thrust bearing thickness	Left side	2.36-2.52 (0.093-0.099)	—
	Right side	2.42-2.44 (0.095-0.096)	—
Crankshaft runout	—		0.05 (0.002)

OIL PUMP

ITEM	STANDARD	LIMIT
Oil pump reduction ratio	1.703 (72/46 x 37/34)	—
Oil pressure (at 60°C, 140°F)	Above 300 kPa (3.0 kg/cm^2, 43 psi) Below 600 kPa (6.0 kg/cm^2, 85 psi) at 3000 r/min.	—

CLUTCH

Unit: mm (in)

ITEM	STANDARD		LIMIT
Drive plate thickness	No.1 & No.2	2.92-3.08 (0.115-0.121)	—
Drive plate claw width	—		13.0 (0.51)
Driven plate distortion	—		0.10 (0.004)
Clutch spring free height	—		2.9 (0.11)
Clutch master cylinder bore	14.000-14.043 (0.5511-0.5529)		—
Clutch master cylinder piston diameter	13.957-13.984 (0.5495-0.5506)		—
Clutch release cylinder bore	35.700-35.762 (1.4055-1.4079)		—
Clutch release cylinder piston diameter	35.650-35.675 (1.4035-1.4045)		—

TRANSMISSION + DRIVE CHAIN

Unit: mm (in) Except ratio

ITEM		STANDARD		LIMIT
Primary reduction ratio		1.565 (72/46)		—
Final reduction ratio		3.000 (45/15)		—
Gear ratios	1st (low)	2.384 (31/13)		—
	2nd	1.631 (31/19)		—
	3rd	1.250 (25/20)		—
	4th	1.045 (23/22)		—
	5th (high)	0.913 (21/23)		—
Shift fork to groove clearance		No.1, No.2 & No.3	0.1-0.3 (0.004-0.012)	0.50 (0.020)
Shift fork groove width		No.1, No.2 & No.3	5.0-5.1 (0.197-0.201)	—
Shift fork thickness		No.1, No.2 & No.3	4.8-4.9 (0.189-0.193)	—
Drive chain		Type	RK GB50MFOZ1	—
		Links	*114 links	—
		20-pitch length	—	319.4 (12.6)
Drive chain slack		20-30 (0.8-1.2)		—
Gearshift lever height		55 (2.2)		—

CARBURETOR

ITEM		SPECIFICATION		
		E-02,04,17,22, 24,25,34	E-18	E-37
Carburetor type		MIKUNI BST36SS	←	←
Bore size		36 mm (1.4 in)	←	←
I.D. No.		27E1	*27E7	27E4
Idle r/min.		1200 ± 100 r/min.	1200 $^{+100}_{-50}$ r/min.	1200 ± 100 r/min.
Float height		14.6 ± 1.0 mm (0.58 ± 0.04 in)	←	←
Main jet	(M.J.)	#102.5	←	←
Jet needle	(J.N.)	5D76-4th	5D55-2nd	5D76-4th
Needle jet	(N.J.)	O-8	←	←
Throttle valve	(Th.V.)	#120	←	←
Pilot jet	(P.J.)	#37.5	←	←
Pilot screw	(P.S.)	PRE-SET (1-3/4 turns back)	PRE-SET (1-7/8 turns back)	PRE-SET (1-3/4 turns back)
Throttle cable play		0.5-1.0 mm (0.02-0.04 in)	←	←

CARBURETOR

ITEM		SPECIFICATION	
		E-03,28	E-33 (Calif. model)
Carburetor type		MIKUNI BST36SS	←
Bore size		36 mm (1.4 in)	←
I.D. No.		27E5	27E6
Idle r/min.		1200 ± 50 r/min.	←
Float height		14.6 ± 1.0 mm (0.58 ± 0.04 in)	←
Main jet	(M.J.)	#102.5	←
Jet needle	(J.N.)	5D80	←
Needle jet	(N.J.)	0-8M	←
Throttle valve	(Th.V.)	#120	←
Pilot jet	(P.J.)	#37.5	←
Pilot screw	(P.S.)	PRE-SET	←
Throttle cable play		0.5-1.0 mm (0.02-0.04 in)	←

ELECTRICAL

Unit: mm (in)

ITEM		SPECIFICATION		NOTE
Ignition timing		7° B.T.D.C. below 1500 r/min.		
Firing order		1•2•4•3		
Spark plug		Type	NGK: JR9B	
		Gap	0.6-0.7 (0.024-0.028)	
Spark performance		Over 8 (0.3) at 1 atm.		
Signal coil resistance		Approx. 135-200 Ω		Tester range: (x 100 Ω)
Ignition coil resistance		Primary	⊕ tap - ⊖ tap Approx. 2-4 Ω	Tester range: (x 1 Ω)
		Secondary	Spark plug cap-Spark plug cap Approx. 30-40 kΩ	Tester range: (x 1 kΩ)
Generator		Slip ring O.D.	Limit: 14.0 (0.55)	
		Brush length	Limit: 4.5 (0.18)	N.D.
Generator maximum output		Approx. 405 W at 5000 r/min.		The rotation of the generator
Regulated voltage		Above 13.5 V at 5000 r/min.		
Starter relay resistance		3-5 Ω		
Battery	Type designation	YTX12-BS		
	Capacity	12 V 36 kC (10 Ah)/10HR		
	Standard electrolyte S.G.	1.320 at 20°C (68°F)		

ITEM		SPECIFICATION		NOTE
Fuse size	Headlight	HI	15 A	
		LO	15 A	
	Turn signal	15 A		
	Ignition	10 A		
	Main	30 A		
	*ABS	*10 A		
*ABS circuit breaker		*30 A		

WATTAGE

Unit: W

ITEM		SPECIFICATION	
		E-30,24,28,33	For the other markets
Headlight	HI	60	←
	LO	55	←
Parking or position light			4
Tail/brake light		5/21	←
Turn signal light		21 x 4	←
Speedometer light		1.7 x 2	←
Tachometer light		1.7	←
Fuel meter light		1.7	←
Turn signal indicator light		3 x 2	←
High beam indicator light		3	←
Neutral indicator light		3	←
Oil pressure indicator light		3	←
*ABS warning indicator light		*3	←
License plate light		5	←

BRAKE + WHEEL

Unit: mm (in)

ITEM		STANDARD	LIMIT
Rear brake pedal height		55 (2.2)	—
Brake disc thickness	Front	4.5 ± 0.2 (0.177 ± 0.008)	4.0 (0.15)
	Rear	5.0 ± 0.2 (0.197±0.008)	4.5 (0.18)
Brake disc runout		—	0.30 (0.012)
Master cylinder bore	Front	15.870-15.913 (0.6248-0.6264)	—
	Rear	*14.000-14.043 (0.5512-0.5529)	—

ITEM		STANDARD		LIMIT
Master cylinder piston diameter		Front	15.827-15.854 (0.6231-0.6242)	—
		Rear	*13.959-13.984 (0.5496-0.5506)	—
Brake caliper cylinder bore	Leading	Front	30.230-30.280 (1.1902-1.1921)	—
	Trailing		*32.030-32.080 (1.2610-1.2630)	—
		Rear	38.180-38.256 (1.5031-1.5061)	—
Brake caliper piston diameter	Leading	Front	30.148-30.198 (1.1869-1.1889)	—
	Trailing		*31.948-31.998 (1.2578-1.2598)	—
		Rear	38.098-38.148 (1.5000-1.5019)	—
Wheel rim runout (front & rear)		Axial	—	2.0 (0.08)
		Radial	—	2.0 (0.08)
Wheel axle runout		Front	—	0.25 (0.010)
		Rear	—	0.25 (0.010)
Wheel rim size		Front	J17 x MT3.50	—
		Rear	J17 x MT5.50	—
Tire size		Front	120/70 ZR17 (58 W)	—
		Rear	180/55 ZR17 (73 W)	—
Tire tread depth		Front	—	1.6 (0.06)
		Rear	—	2.0 (0.08)

ABS

ITEM		SPECIFICATION	NOTE
Front/rear wheel speed sensor resistance (O-W)		*800-1200 Ω	Tester range: (x 100 Ω)
Hydraulic unit	F/R solenoid valve (Y/W -R/W, Y/R-P/W)	*0.06-1.30 Ω	Tester range: (x 1 Ω)
Hydraulic unit solenoid valve relay resistance (O/W – Bl)		*92-114 Ω	Tester range: (x 10 Ω)
Hydraulic unit motor relay resistance (O/W – Y)		*42-48 Ω	Tester range: (x 10 Ω)

SUSPENSION

Unit: mm (in)

ITEM	STANDARD	LIMIT	NOTE
Front fork stroke	130 (5.1)	—	
Front fork spring free length	—	360 (14.2)	E-03,28,33
	—	362.1 (14.26)	For the other markets
Front fork oil level	101 (4.0)	—	E-03,28,33
	99 (3.9)	—	For the other markets
Rear wheel travel	134 (5.3)	—	
Pivot shaft runout	—	0.3 (0.01)	

TIRE PRESSURE (for E-03,28,33)

COLD INFLATION TIRE PRESSURE	SOLO RIDING			DUAL RIDING		
	kPa	kg/cm^2	psi	kPa	kg/cm^2	psi
FRONT	225	2.25	33	250	2.50	36
REAR	225	2.25	33	250	2.50	36

TIRE PRESSURE (for the other markets)

COLD INFLATION TIRE PRESSURE	SOLO OR DUAL RIDING		
	kPa	kg/cm^2	psi
FRONT	250	2.50	36
REAR	250	2.50	36

FUEL + OIL

ITEM	SPECIFICATION		NOTE
Fuel type	Use only unleaded gasoline of at least 87 octane rated by the pump octane method ($\frac{R+M}{2}$) or 91 octane or higher rated by the research octane method. Gasoline which contains MTBE (Methyl Tertiary Butyl Ether), less than 10% ethanol, or less than 5% methanol with appropriate co-solvents and corrosion inhibitors is permissible.		E-03,33
	Use unleaded gasoline of at least 87 octane rated by the pump octane method ($\frac{R+M}{2}$) or 91 octane or higher rated by the research octane method.		E-28
	Use gasoline graded 85-95 octane or higher. Unleaded gasoline is recommended.		For the other markets
Fuel tank capacity	Including reserve	19.0L (5.0/4.1 US/Imp gal)	
	Only reserve	4.5L (1.1/0.9 US/Imp gal)	
Engine oil type	SAE 10W/40, API SF or SG		

ITEM	SPECIFICATION		NOTE
Engine oil capacity	Oil change	3300 ml (3.4/2.9 US/Imp qt)	
	Oil and filter change	3500 ml (3.6/3.0 US/Imp qt)	
	Engine overhaul	4600 ml (4.9/4.0 US/Imp qt)	
Front fork oil type	Fork oil #10		
Front fork oil capacity (each leg)	514 ml (17.3/18.1 US/Imp oz)		E-03,28,33
	516 ml (17.4/18.2 US/Imp oz)		For the other markets
Brake fluid type	DOT 4		

INTRODUCTION

ANTI-LOCK BRAKE SYSTEM (ABS)

This system not only prevents the wheels from locking while braking, but also provides more stable braking by controlling the wheel speed so as to maximize the friction between the tire and road surface. If the wheels lock up, the motorcycle cannot be steered and may fall over. If this occurs on a slippery road that has a surface with a low friction coefficient, such as on a wet or gravel-covered road, it is very difficult for even a skilled rider to determine the braking efficiency correctly.
This system monitors the wheel speed and controls the braking force even while riding on slippery roads or when braking suddenly during an emergency. The main components of the ABS are: a front and rear wheel speed sensor, an electrical control unit (ECU) and a hydraulic unit. These components work together to optimize braking.

WHEEL SPEED SENSOR:
Measures the wheel speed.
ECU:
Calculates the ideal wheel speed from the measured wheel speed and decreases, increases and maintains the brake fluid pressure.
HYDRAULIC UNIT:
Decreases, increases, and maintains the brake fluid pressure according to the ECU commands.

BASIC ABS PRINCIPLES

In order to understand the operation of the ABS, it is necessary to understand the movement and characteristics of the motorcycle and its wheels, during braking. The necessary terminology and theory are explained below.

SLIP RATIO

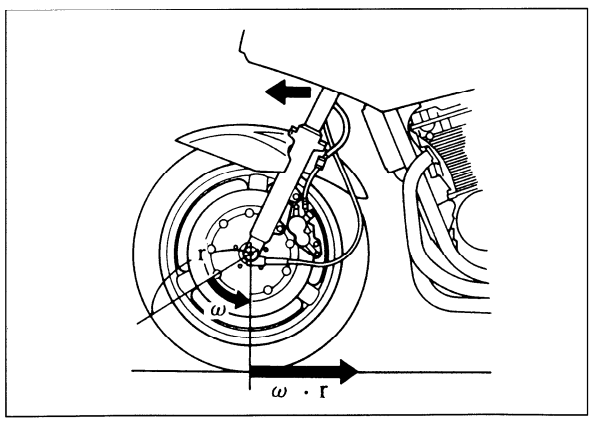

While the motorcycle speed is constant, the wheel speed is equal to the motorcycle speed. However, applying the brakes adds a braking torque which decreases the wheel speed resulting in a difference between it and the motorcycle speed. This causes slipping between the tire and the road surface.
The slip ratio is defined as the difference between the motorcycle speed and the wheel speed, divided by the motorcycle speed and expressed in percents. The slip ratio (λ) is therefore expressed as follows:

$\lambda = (V - Vw) / V \times 100\ (\%)$ ..... ①

$Vw = \omega \cdot r$ ..... ②

From ① and ②:

$\lambda = (V - \omega \cdot r) / V \times 100\ (\%)$

λ : Slip ratio
V : Motorcycle speed
Vw : Wheel speed
ω : Angular velocity
r : Wheel radius

RELATIONSHIP BETWEEN THE SLIP RATIO, SIDE FORCE AND THE FRICTION BETWEEN THE TIRE AND ROAD SURFACE

The relationship between the slip ratio, the side force and the friction between the tire and road surface is shown in the following graph.

*"Side force" is the force that supports the motorcycle sides.

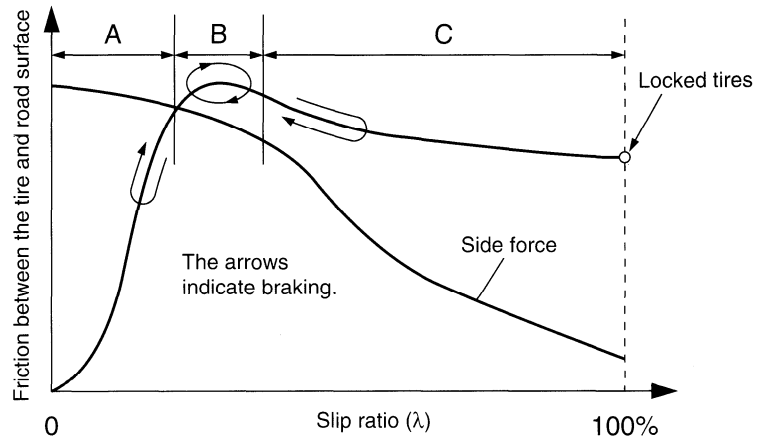

The friction between the tire and road surface is generally at its maximum when the slip ratio is within section B and the friction is at its lowest when the wheels are locked (100% slip ratio). In addition, since braking reduces the side force, suddenly braking when there is a large slip ratio reduces the supporting force on the sides of the motorcycle and decreases the motorcycle's stability. The above graph shows that optimal braking occurs within section B, where the friction between the tire and road surface is maximum and the side force is not significantly reduced.

PERFECT CONTROL

The brake fluid pressure is adjusted to provide the proper braking force.

While the slip ratio is within section B, the brake fluid pressure is slightly increased, decreased or maintained. If the slip ratio enters section C due to changes in road conditions, the brake fluid pressure is quickly decreased so that the slip ratio returns to section B. If the slip ratio enters section A, the brake fluid pressure is quickly increased so that the slip ratio returns to section B.

It is very difficult for a person to make these types of adjustments quickly and accurately. The ABS, which is a control system that uses electrical and hydraulic technology, makes these adjustments automatically to provide the ideal braking force.

ABS CONTROL CYCLE

In order to understand the ABS control cycle, it is necessary to understand the normal control cycle on a slippery road. The ABS control flow at various wheel speeds and brake fluid pressure changes, are shown in the following graph.

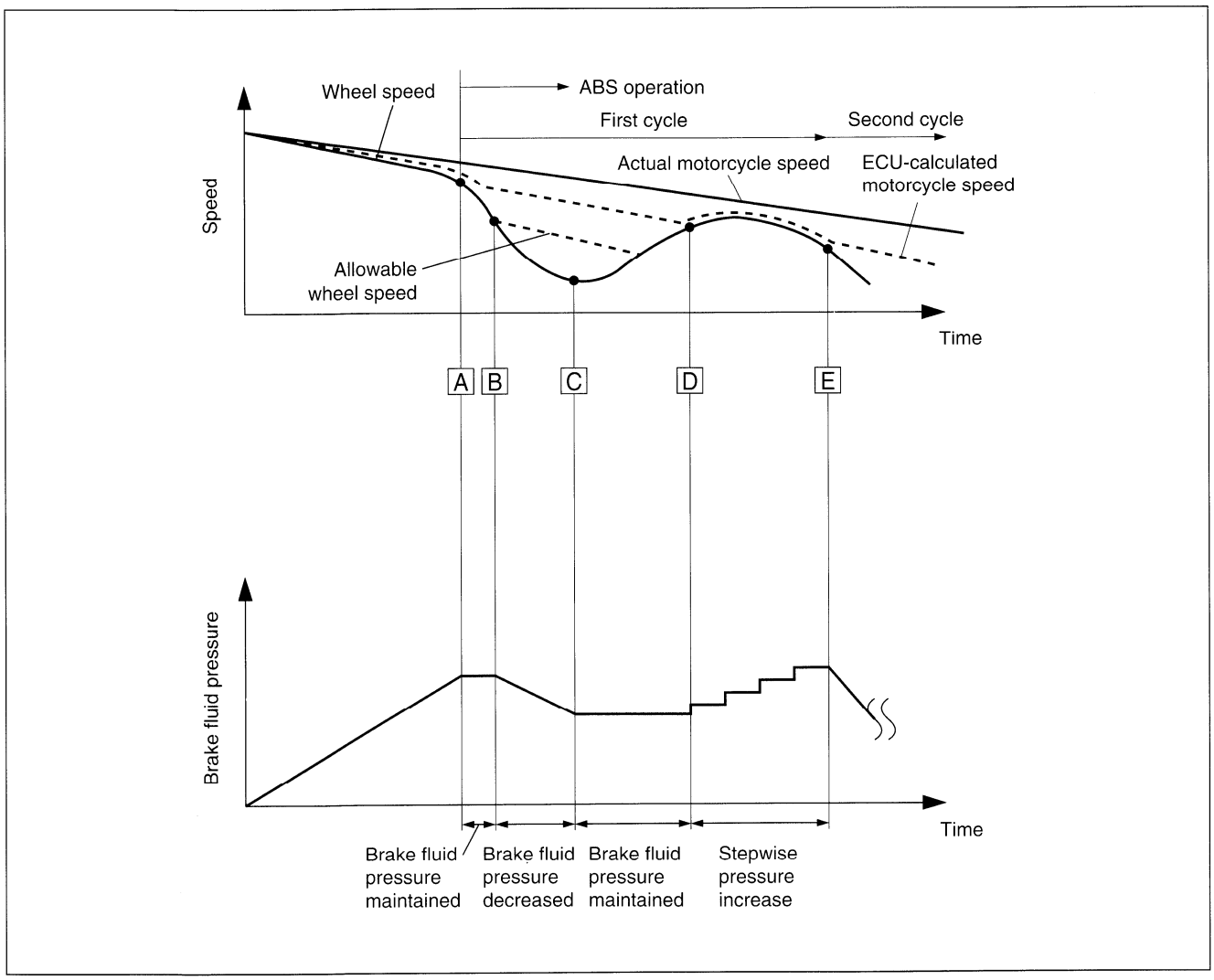

A When the brakes are suddenly applied, the brake fluid pressure is maintained in order to determine the change in wheel speed.

B When the wheel speed keeps decreasing and the wheels are almost locking, the brake fluid pressure is decreased.

C When the wheel speed increases and prevents the wheels from locking, the brake fluid pressure is maintained in order to maintain the braking force.

D When increasing road surface friction forces cause the wheel speed to increase, the brake fluid pressure is increased gradually.

E When the wheel speed is again decreased, the brake fluid pressure is decreased.

ABS COMPONENTS

① Front brake light switch
② ABS warning indicator light
③ Front wheel speed sensor rotor
④ Front wheel speed sensor
⑤ Front brake diode
⑥ Rear brake diode
⑦ Rear brake light switch
⑧ Hydraulic unit
⑨ Rear wheel speed sensor
⑩ Rear wheel speed sensor rotor
⑪ ABS warning indicator light diode
⑫ ECU
⑬ Hydraulic unit motor relay
⑭ Hydraulic unit solenoid valve relay
⑮ Fuse box
⑯ ABS circuit breaker

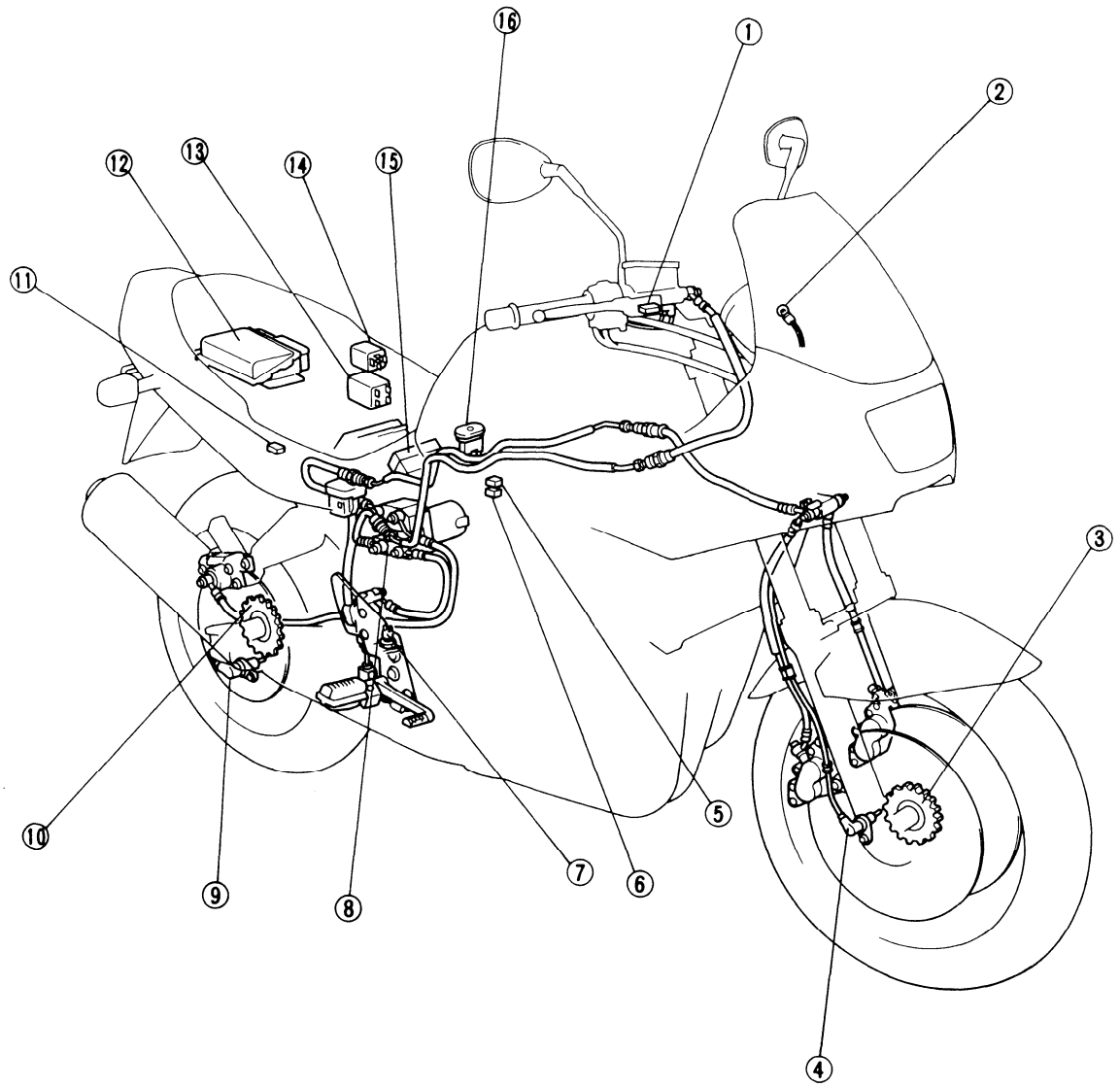

FRONT AND REAR WHEEL SPEED SENSORS

The wheel speed sensor is an induction coil ① installed in front of an indented rotor ②. When a projection of the rotor passes by the coil, induction occurs in the coil, resulting in an electrical signal. The frequency of the signal is used by the ECU to determine the wheel speed.

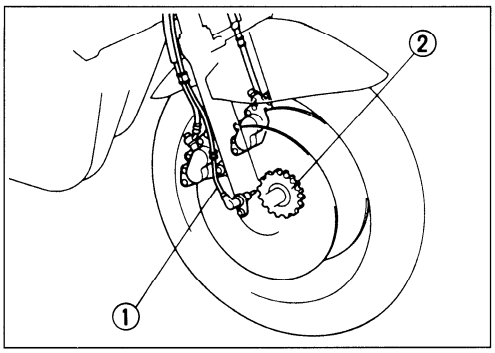

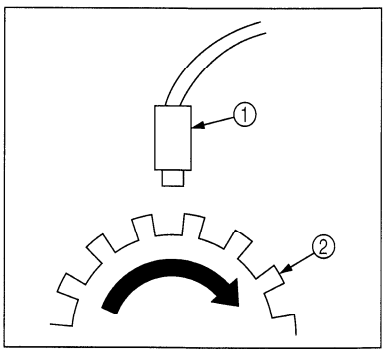

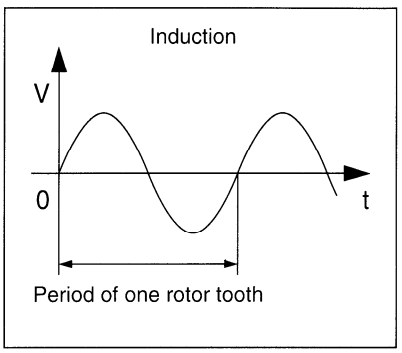

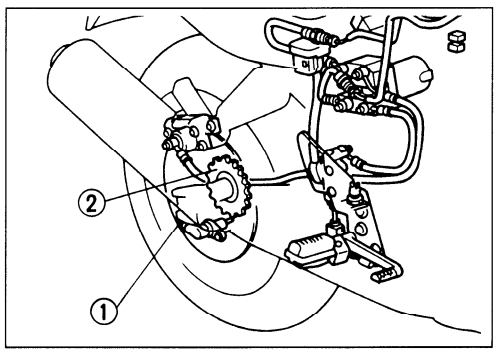

ECU

The ECU is composed of two controller microcomputers and controls the ABS and self-diagnosis function. When a signal is input into the ECU the two microcomputers carry out calculations independently and the ECU adjusts the controls only if the results are compatible.

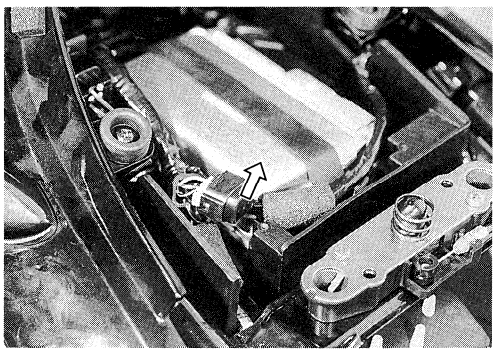

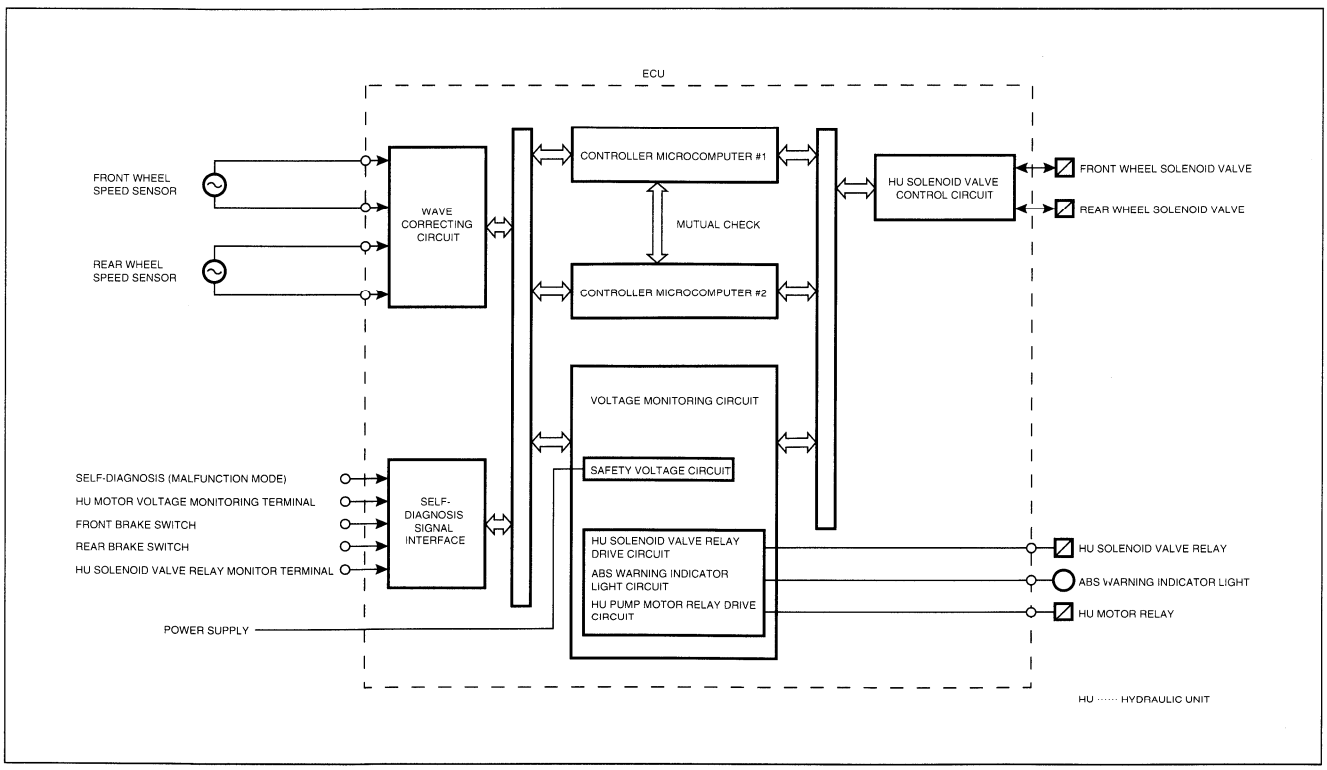

ECU CALCULATING PROCESS

The ABS control and its calculations, in addition to the self-diagnosing and the fail-safe processes, occur during the ECU calculating process. ABS control is performed in one cycle every 4/1000 second. In addition, if a malfunction is detected by the self-diagnosis function, the brake stops being controlled by the ABS and a malfunction code is stored.

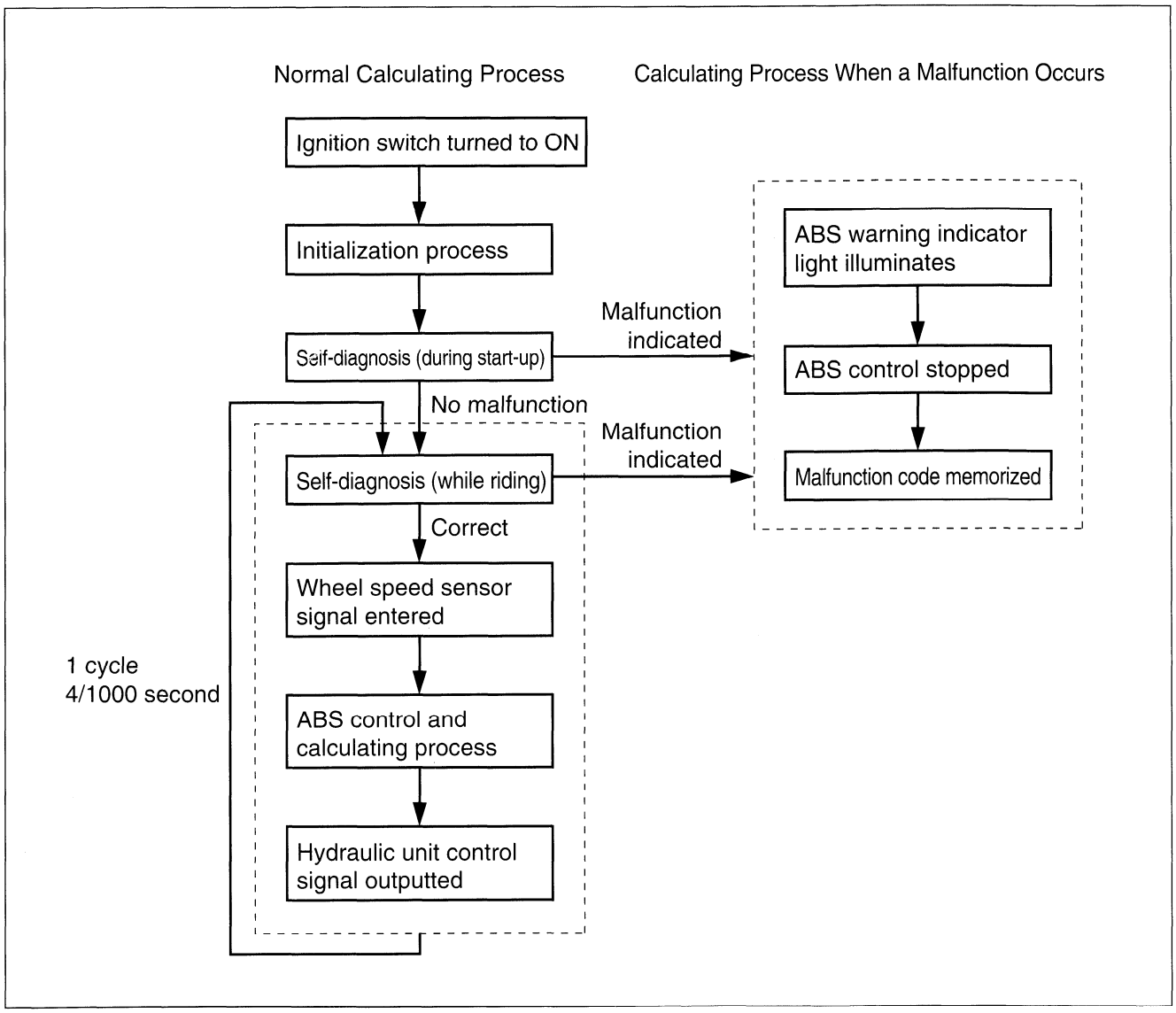

HYDRAULIC UNIT

The hydraulic unit controls the front and rear brake systems individually by operating separate components for the front and the rear, except for the pump drive motor, which is shared by both systems. The hydraulic unit operates the solenoid valve(s) based upon the signal which is output from the ECU. The brake fluid pressure is then adjusted accordingly.

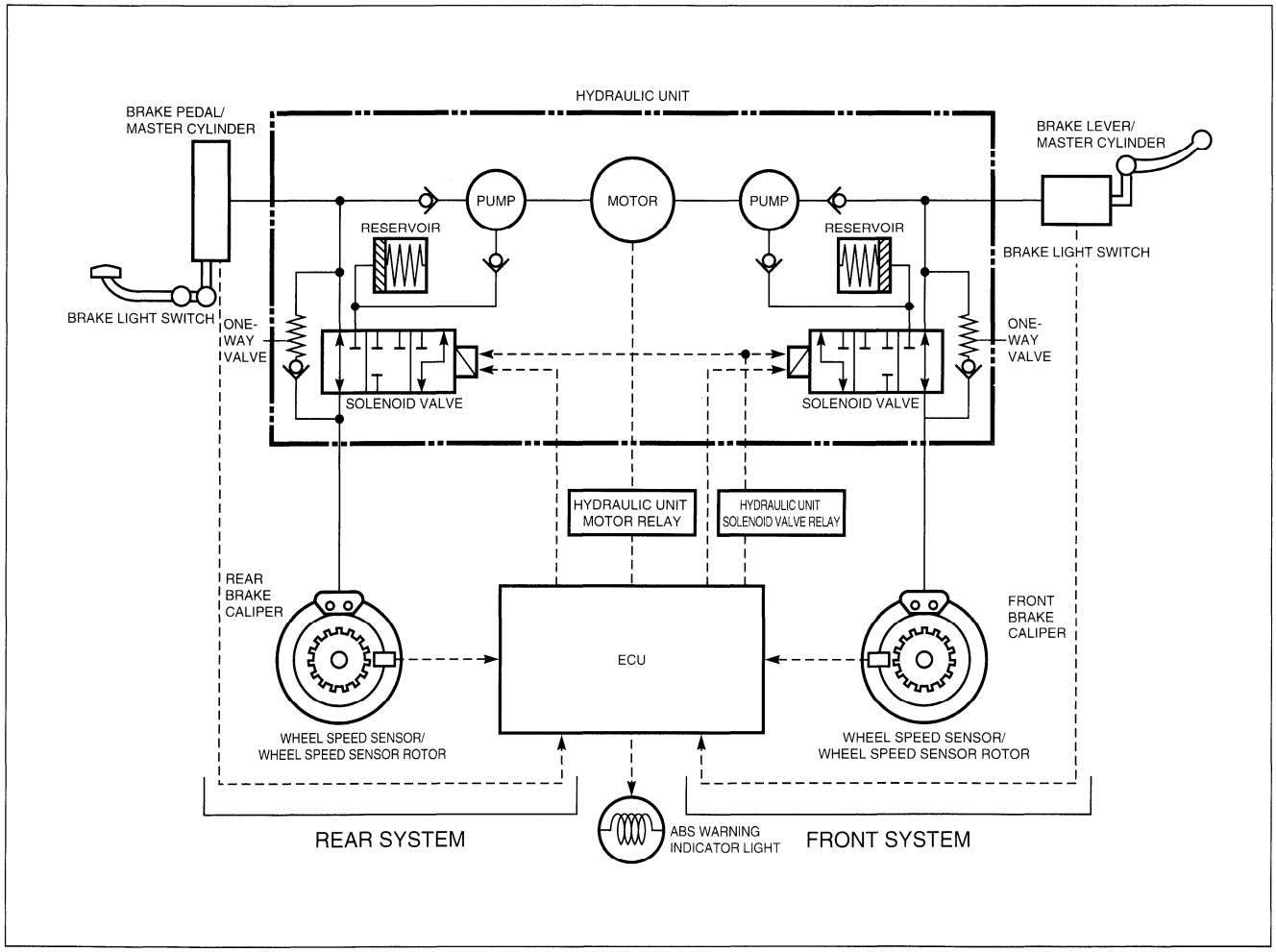

HYDRAULIC UNIT SOLENOID VALVE

The solenoid valve switches the circuit to one of three positions (increasing, decreasing or maintaining pressure) according to the signal which is output by the ECU. As the ECU energizes the solenoid, section Ⓐ moves to open and close the valves.

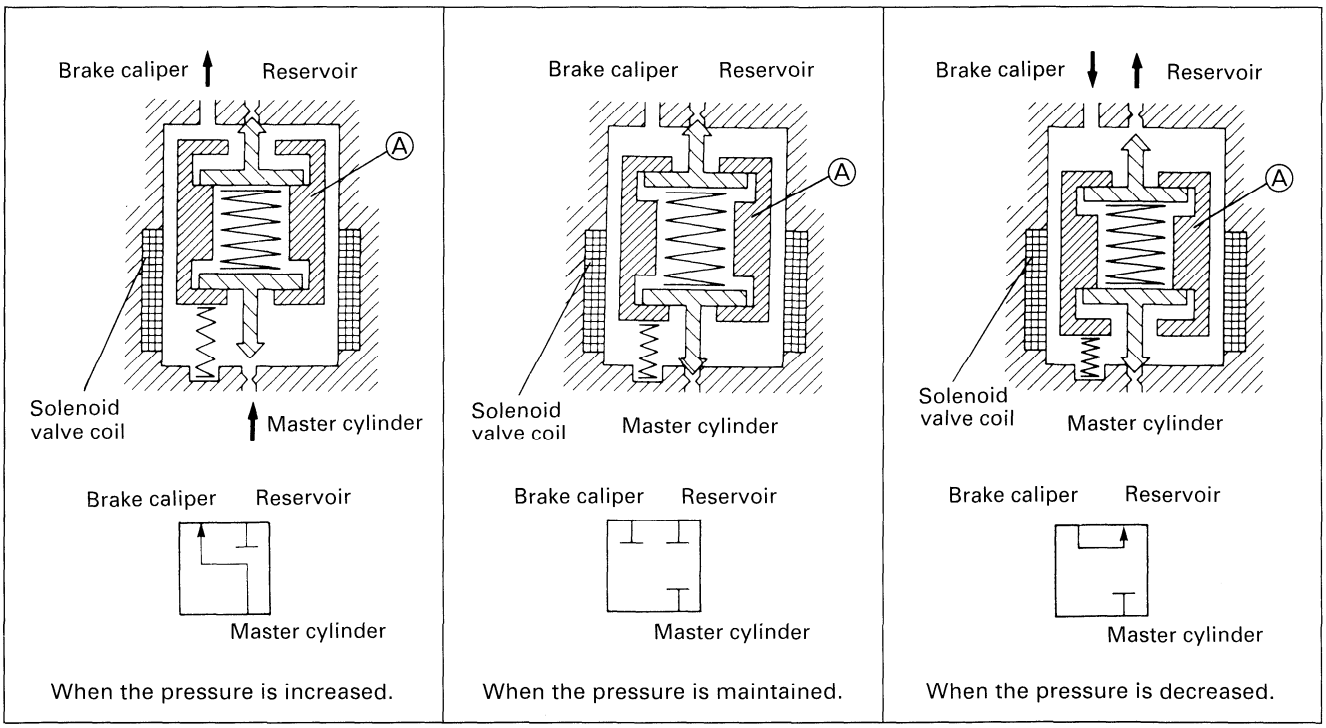

PRESSURIZED BRAKE FLUID ROUTE

The brake fluid route for the ABS is divided into two systems: one for the front wheel and one for the rear wheel. Both the front and rear brake systems are the same; only one system will be explained.

WHEN NOT OPERATING THE ABS (WHEN THE ABS IS NOT ACTIVATED OR AN ABS MALFUNCTION HAS OCCURRED)

When the ABS is not activated, the solenoid valve coil is not energized (no signal is sent from the ECU). In this case, solenoid valves Ⓐ and Ⓑ are open. If the pressure is increased in the master cylinder, the pressurized brake fluid travels from the master cylinder to the brake caliper. If the brake lever is released and the master cylinder causes the brake fluid pressure to decrease, the brake fluid flows back to the master cylinder through the one-way valve ① and from Ⓑ to Ⓐ.

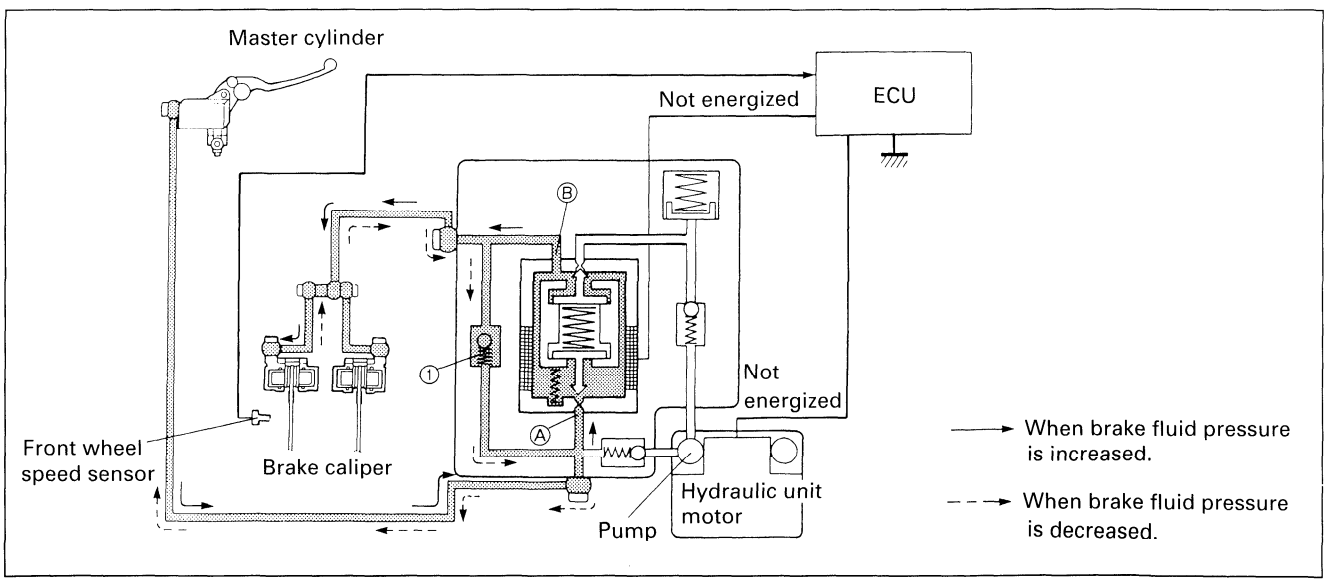

WHEN OPERATING THE ABS

Brake fluid pressure-maintaining mode

If the braking or accelerating wheel speed exceeds a set value, the ABS temporarily maintains the proper brake fluid pressure, regardless of whether there is a pressure increase in the master cylinder. The ECU then outputs the signal to maintain the pressure, causing the solenoid valve coil to be energized and closing solenoid valves Ⓐ, Ⓑ and Ⓒ.

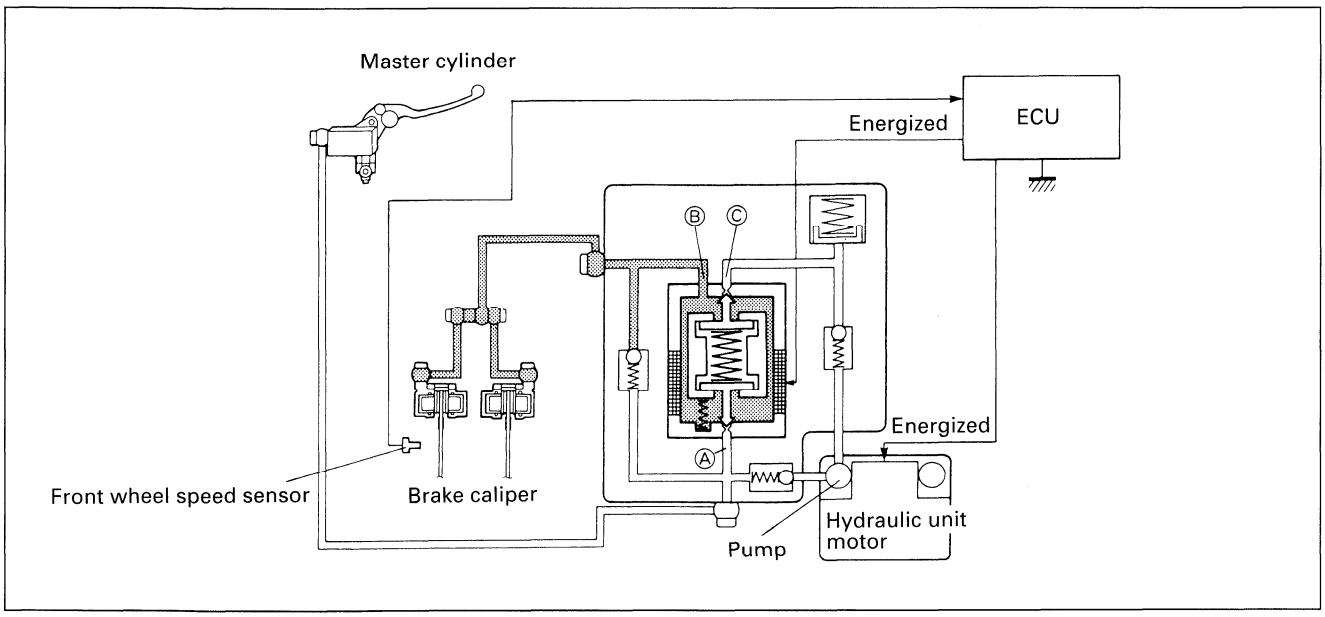

Brake fluid pressure-decreasing mode

If the slip ratio exceeds a set value, or if a decrease of brake fluid pressure does not accelerate the wheel to a set speed, high enough for the brake fluid pressure to be maintained constant, the ABS will lower the brake fluid pressure to prevent the wheels from locking.

At this time, the ECU outputs the signal to decrease the pressure. The solenoid valve coil is energized and opens solenoid valve Ⓐ and closes valves Ⓑ and Ⓒ. The brake fluid flows through valve Ⓒ, collects in the reservoir and then is pumped to the master cylinder.

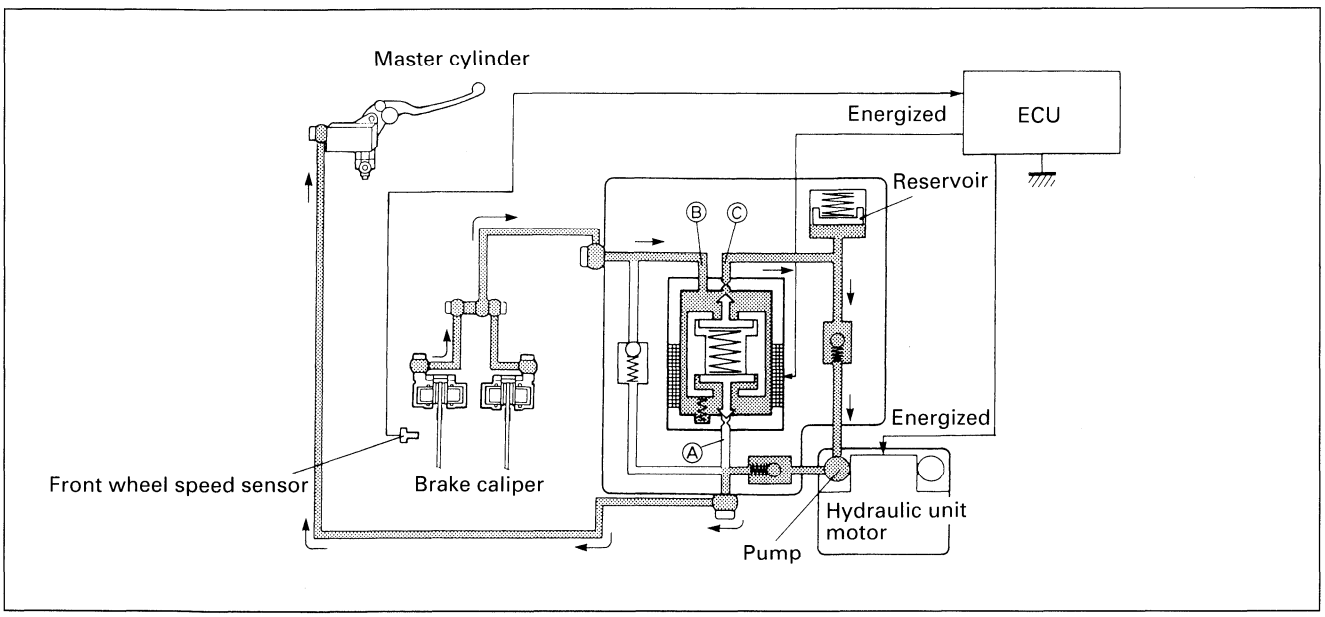

Brake fluid pressure-increasing mode

If the accelerating wheel speed exceeds a set value, the ABS increases the pressure. At this time, the ECU outputs the signal to stop the solenoid valve coil from being energized, opening solenoid valves Ⓐ and Ⓑ, and sending the pressurized brake fluid from the master cylinder to the brake caliper. In addition, during a stepwise brake fluid pressure increase, the mode switches between the pressure-maintaining and pressure-increasing modes.

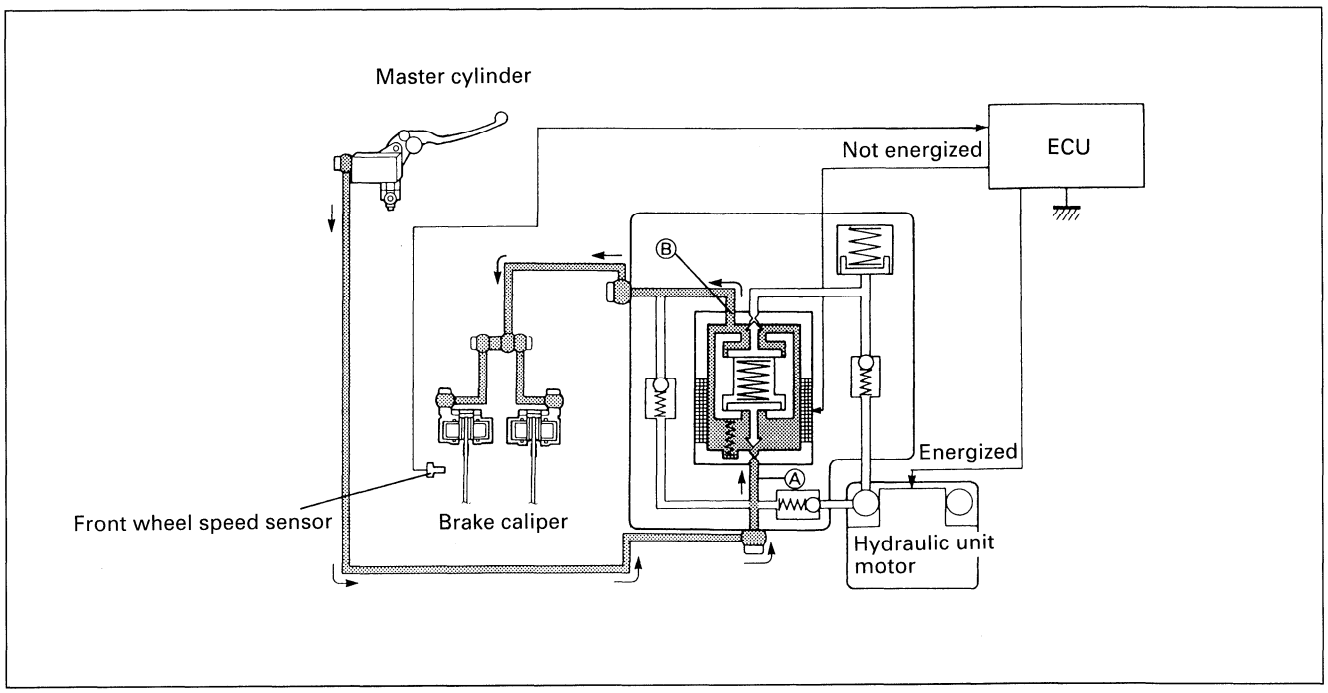

FAIL-SAFE FUNCTION

Normally, the ECU monitors the solenoid valves and relay, and the hydraulic unit motor and relay, and causes the ABS warning indicator light to illuminate if a malfunction occurs. The ECU turns off the hydraulic unit motor relay and solenoid valve relay, preventing the solenoid valves and hydraulic unit motor from energizing. This causes the brakes to operate without the ABS functioning.

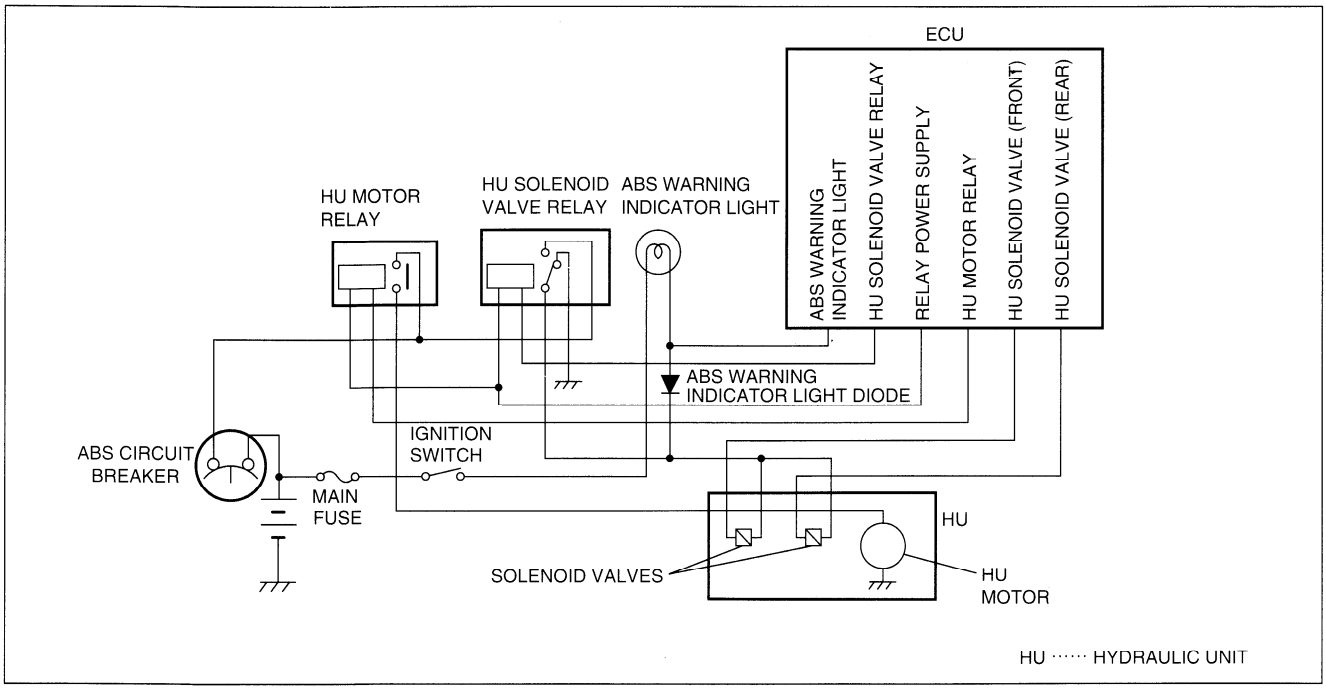

SELF-DIAGNOSIS FUNCTION AND ABS WARNING INDICATOR LIGHT

The ECU performs the self-diagnosis and can store any electronically detected malfunctions as malfunction codes. If a malfunction has occurred, the warning indicator light illuminates or flashes, depending on the malfunction, to inform the rider of the malfunction. Only the three most recent malfunction codes are stored and are output through the ABS warning indicator light. The ABS test switch coupler, when connected to the ECU check coupler, enables the ABS warning indicator light to display the malfunction codes.

ABS WARNING INDICATOR LIGHT

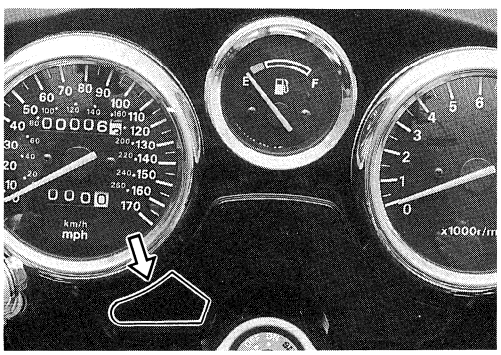

The ABS warning indicator light informs the rider of any ABS malfunctions. If a malfunction occurred, the ABS warning indicator light flashes, during the self-diagnosis, to indicate the malfunction code so that the correct part can be repaired.

- If no ABS malfunction has occurred when the ignition switch is set to ON, the ABS warning indicator light should illuminate to indicate that the bulb is not burnt out. The light will go off after the motorcycle is ridden at more than 6 km/h.
- If an ABS malfunction had occurred, the ABS warning indicator light will flash or illuminate.

- If a malfunction occurred in the ABS, connect the ABS test switch coupler to the ECU check coupler to display the malfunction codes on the ABS warning indicator light.

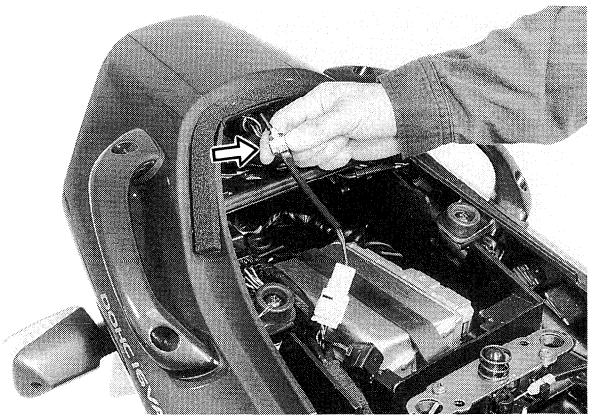

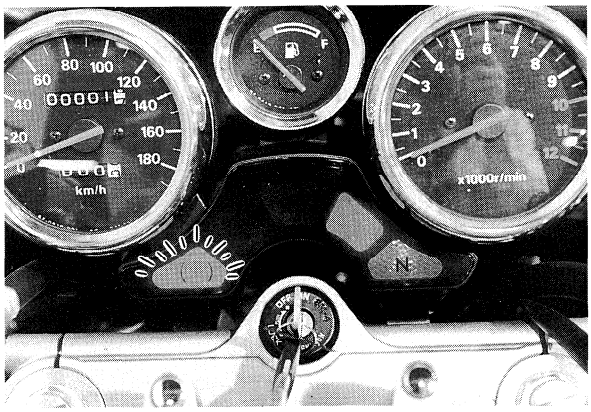

A two-digit malfunction code is shown through the lighting pattern of the ABS warning indicator light. A number between 1 and 9 is represented by the number of times that the ABS warning indicator light illuminates for 0.4 second and the separation between the tens and ones are indicated by the light staying off for 1.6 seconds. In addition, the separation between the start code and the malfunction code is indicated by the light being off for 3.6 seconds.
After the start code is displayed, up to three malfunction codes appear. This cycle repeats for five minutes.
If no malfunction codes were memorized, only start code 12 is displayed continuously.

Malfunction Code Display Example (no malfunction occurred)

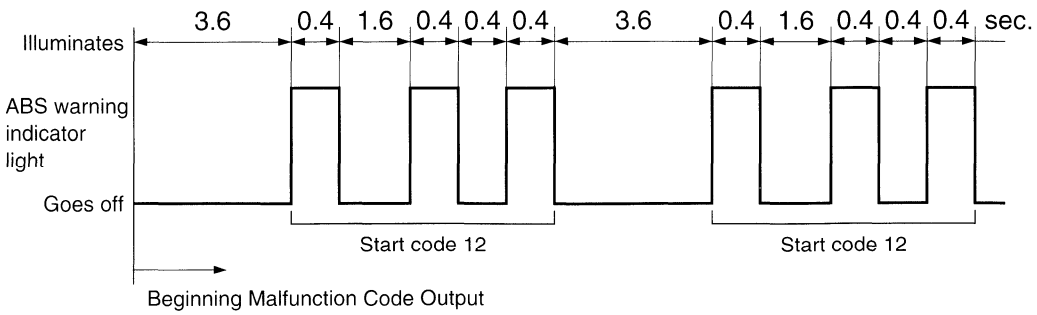

PERIODIC MAINTENANCE

MAINTENANCE AND TUNE-UP PROCEDURE

BRAKES

BRAKE PADS

The extent of brake pad wear can be checked by observing the wear-limit grooves ① or the grooved limit line ② on the pad. When the wear exceeds the wear-limit grooves ① or the grooved limit line ②, replace the pads with new ones. (Refer to pages 5-16 and 5-42 of the GSF1200S.)

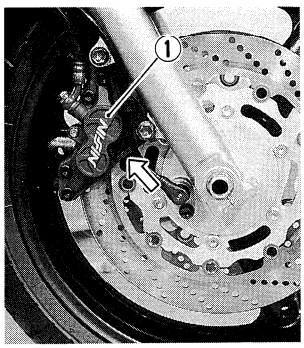

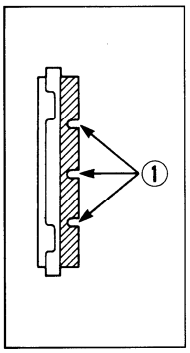

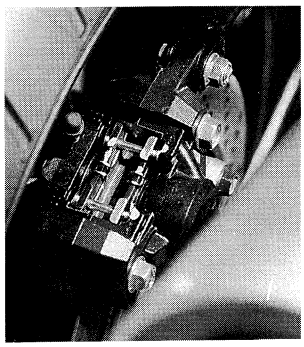

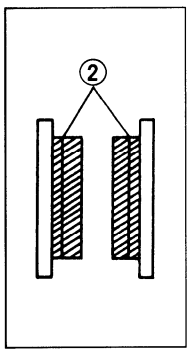

⚠ CAUTION

Replace the brake pads as a set, otherwise braking performance will be adversely affected.

CHASSIS

FRONT WHEEL

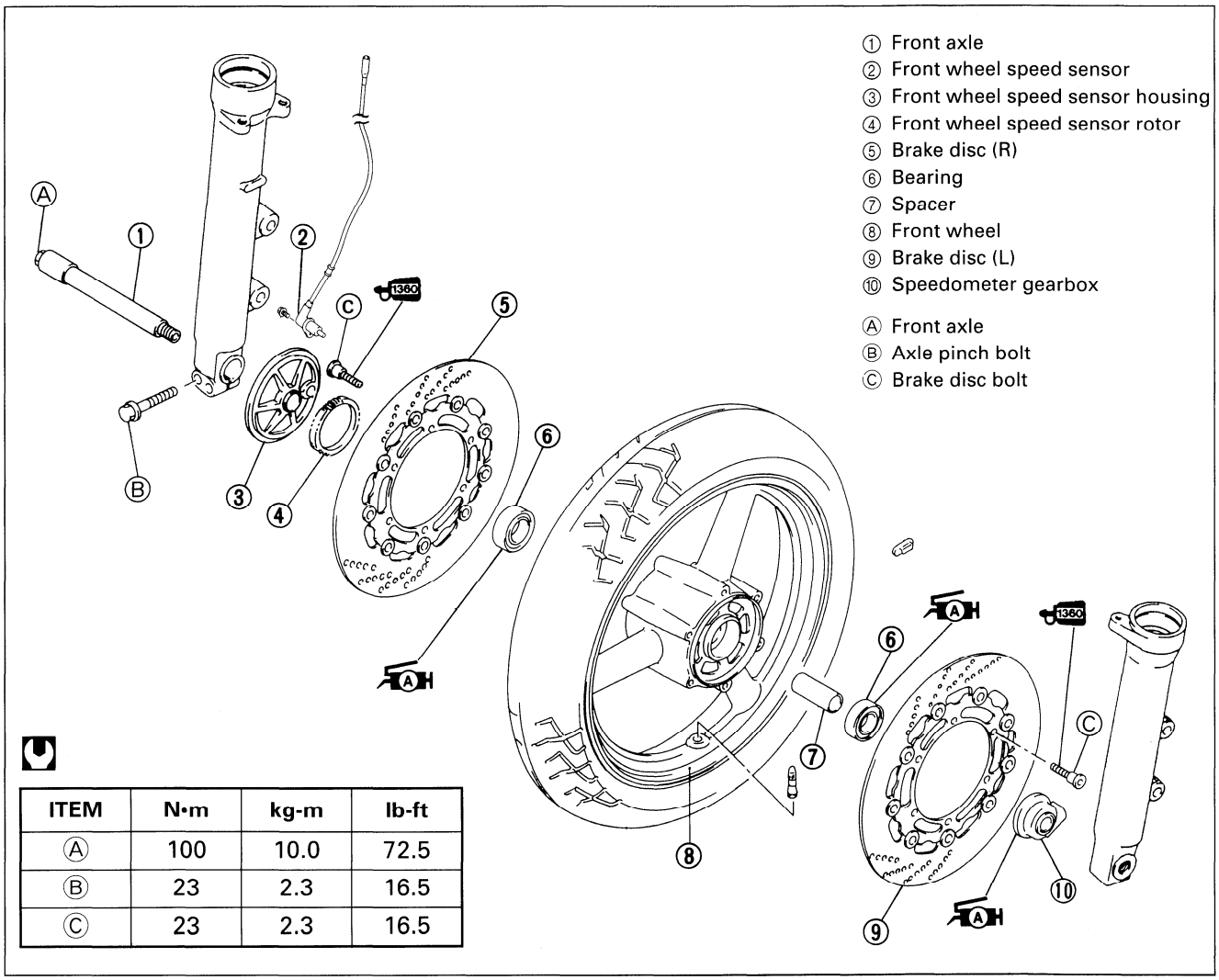

ITEM	N•m	kg-m	lb-ft
Ⓐ	100	10.0	72.5
Ⓑ	23	2.3	16.5
Ⓒ	23	2.3	16.5

REMOVAL

- Remove the left and right brake calipers.

⚠ CAUTION

Do not operate the brake lever when removing the brake calipers.

NOTE:
After removing the front wheel, temporarily reinstall the brake calipers.

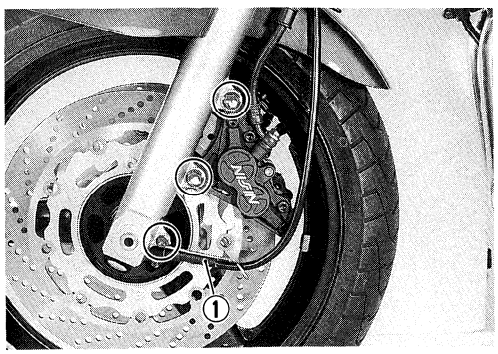

- Remove the speedometer cable ①.

⚠ CAUTION

The ABS is made up of many precision parts; never subject it to strong impacts or allow it to become dirty or dusty.

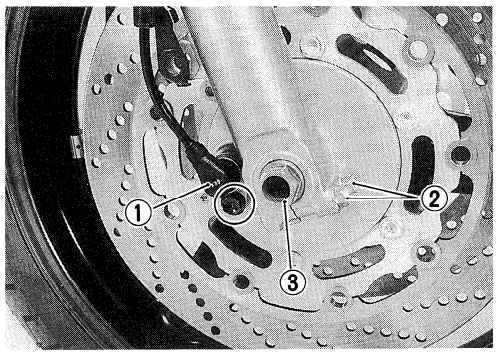

- Remove the front wheel speed sensor ①.
- Loosen the axle pinch bolts ②.
- Loosen the front axle ③.
- Raise the front wheel off the ground with a jack or wooden block.
- Remove the front axle and front wheel.
- Remove the front wheel speed sensor housing ④.

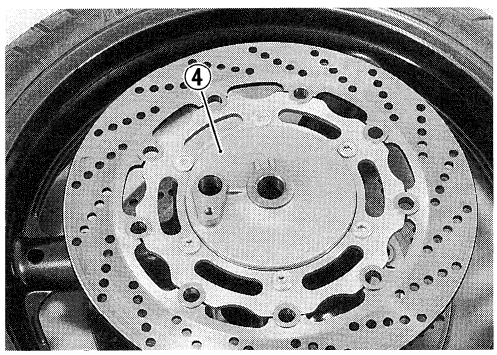

NOTE:
For other removal details, refer to the GSF1200S.

REASSEMBLY AND REMOUNTING

Reassemble and remount the front wheel in the reverse order of removal and disassembly. Pay attention to the following points:

NOTE:
For details other than the following, refer to the GSF1200S.

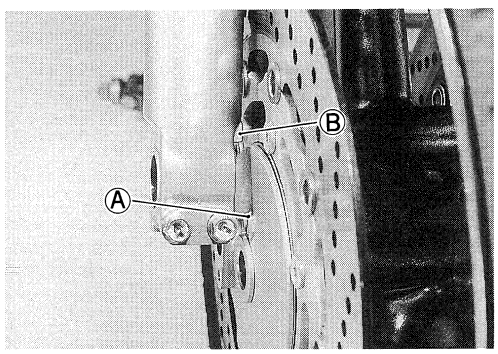

FRONT WHEEL SPEED SENSOR HOUSING

- Align the groove Ⓐ on the front wheel speed sensor housing with the stopper Ⓑ on the right front fork leg.

REAR WHEEL

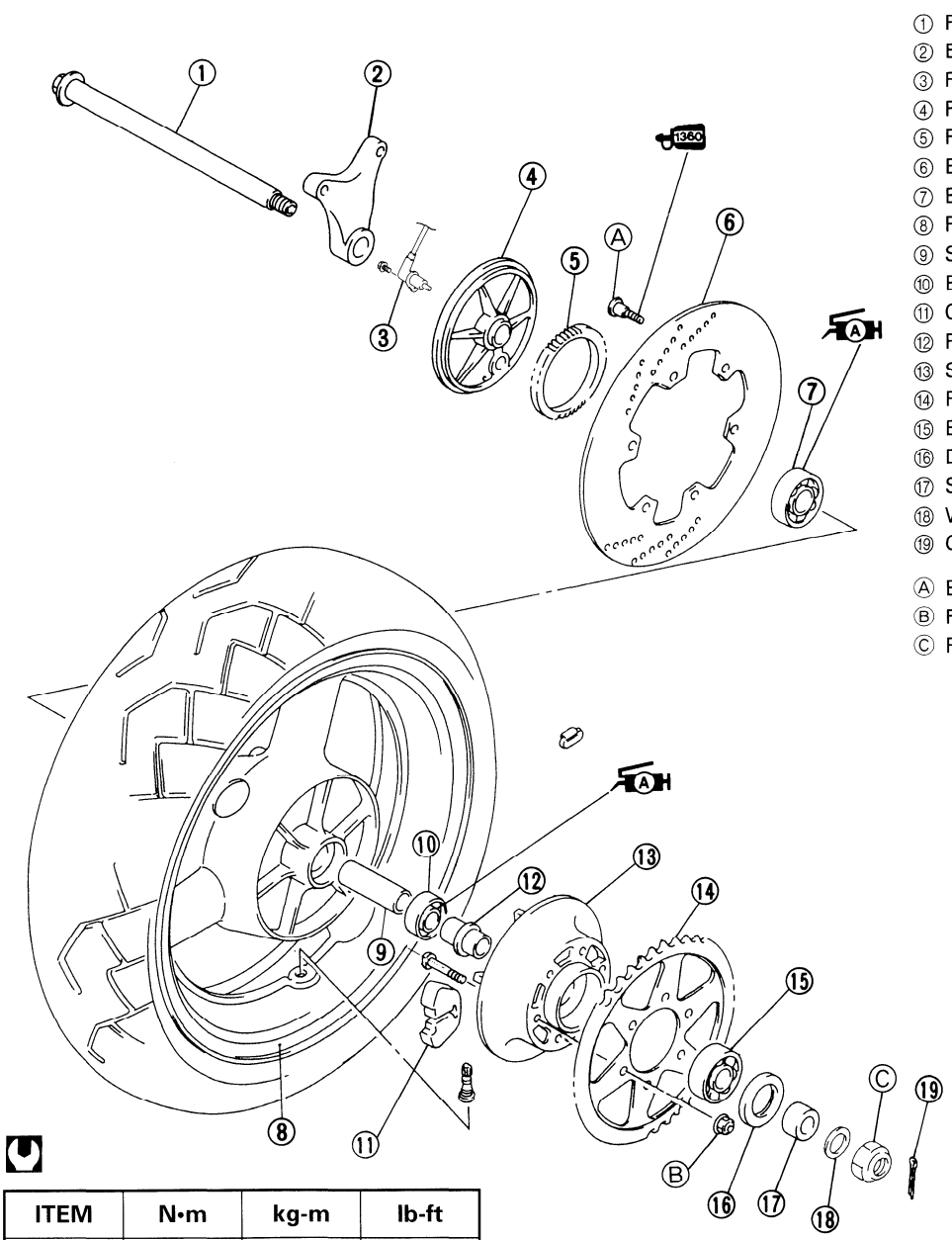

① Rear axle
② Brake caliper bracket
③ Rear wheel speed sensor
④ Rear wheel speed sensor housing
⑤ Rear wheel speed sensor rotor
⑥ Brake disc
⑦ Bearing (R)
⑧ Rear wheel
⑨ Spacer
⑩ Bearing (L)
⑪ Cushion
⑫ Retainer
⑬ Sprocket drum
⑭ Rear sprocket
⑮ Bearing
⑯ Dust seal
⑰ Spacer
⑱ Washer
⑲ Cotter pin (for Canada)

Ⓐ Brake disc bolt
Ⓑ Rear sprocket nut
Ⓒ Rear axle nut

ITEM	N•m	kg-m	lb-ft
Ⓐ	23	2.3	16.5
Ⓑ	60	6.0	43.5
Ⓒ	100	10.0	72.5

REMOVAL

- Support the motorcycle with the centerstand.
- Remove the brake caliper.

⚠ CAUTION

Do not operate the brake pedal when removing the rear wheel.

- Remove the rear wheel speed sensor ①.

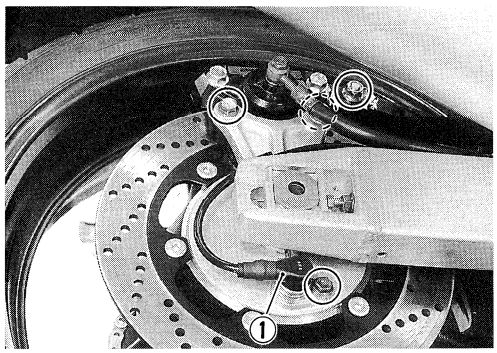

⚠ CAUTION

The ABS is made up of many precision parts; never subject it to strong impacts or allow it to become dirty or dusty.

NOTE:
For other removal details, refer to the GSF1200S.

- Remove the chain case and cotter pin.
- Remove the rear axle nut and rear axle.
- Remove the rear wheel by disengaging the drive chain.

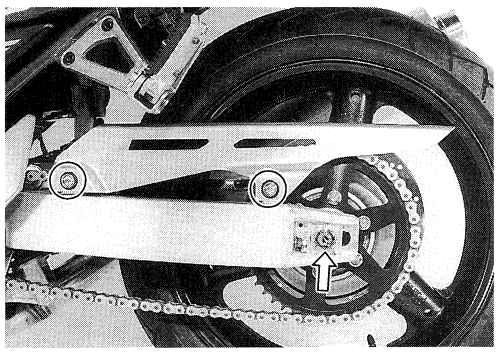

REASSEMBLY AND REMOUNTING

Reassemble and remount the rear wheel in the reverse order of removal and disassembly. Pay attention to the following points:

NOTE:
For details other than the following, refer to the GSF1200S.

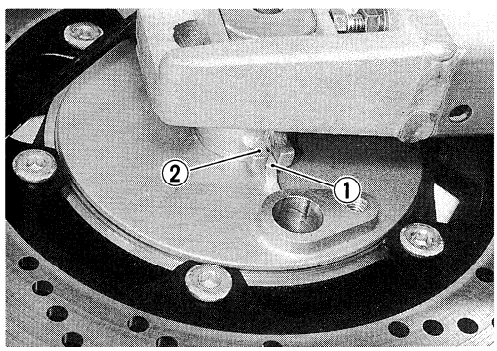

REAR WHEEL SPEED SENSOR HOUSING

- Align the lug ① on the rear wheel speed sensor housing with the grooved stopper ② on the brake caliper mounting bracket.

REAR SUSPENSION

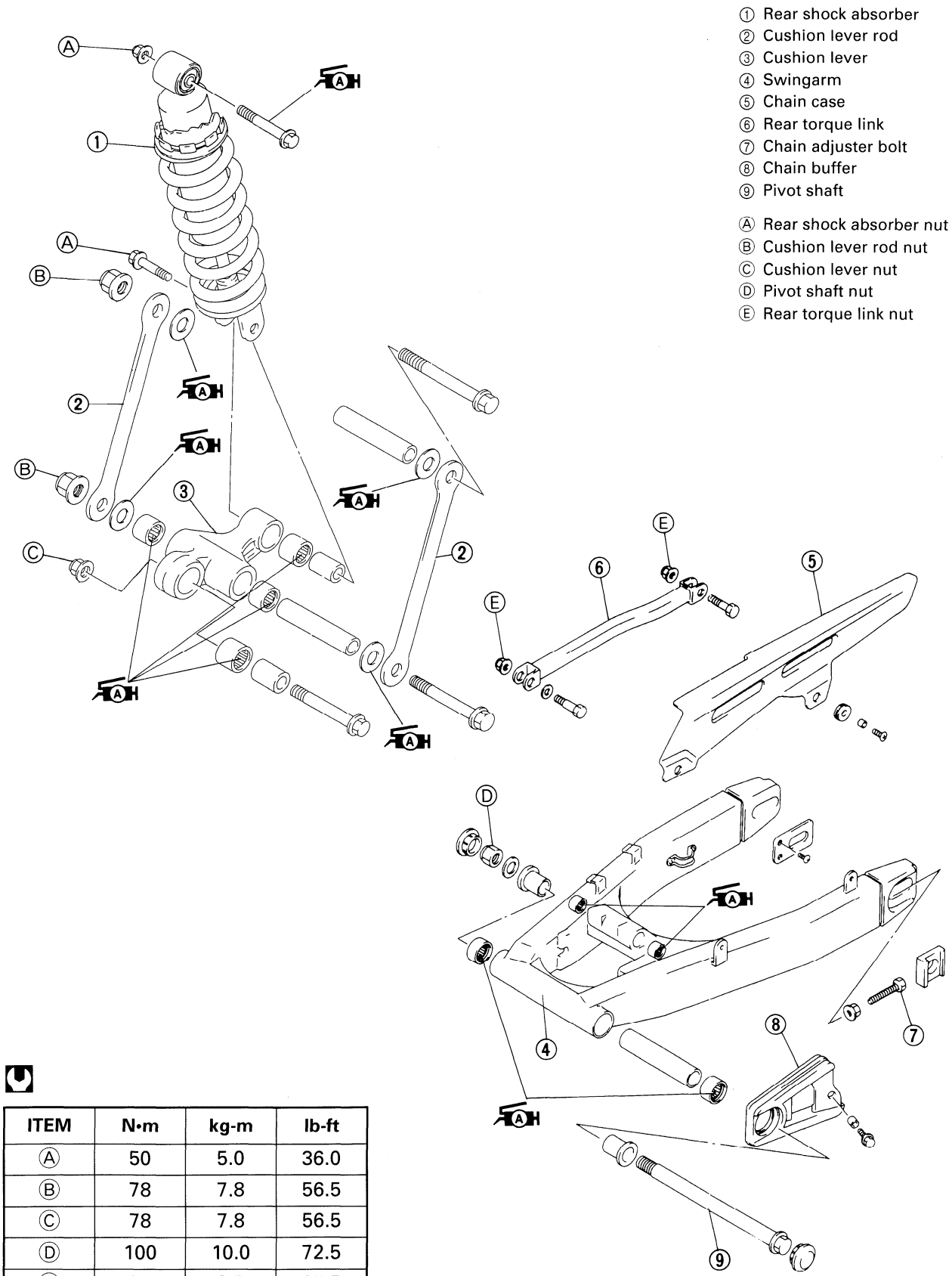

ITEM	N•m	kg-m	lb-ft
Ⓐ	50	5.0	36.0
Ⓑ	78	7.8	56.5
Ⓒ	78	7.8	56.5
Ⓓ	100	10.0	72.5
Ⓔ	35	3.5	25.5

ELECTRICAL SYSTEM

COMBINATION METER

INSPECTION

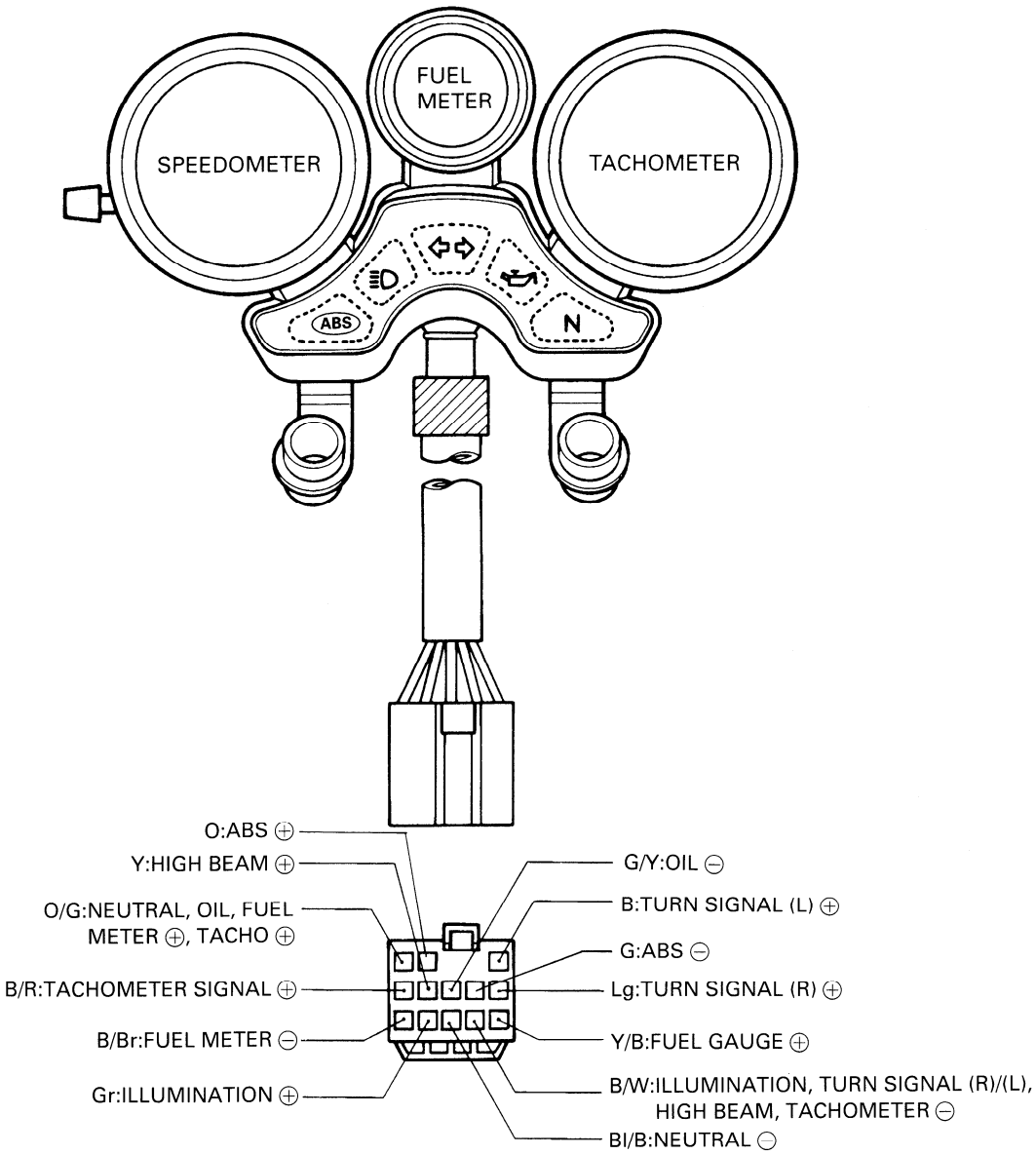

ITEM	⊕ tester probe to:	⊖ tester probe to:
OIL	O/G	G/Y
TURN SIGNAL (L)	B	B/W
TACHOMETER SIGNAL	B/R	B/W
HIGH BEAM	Y	B/W
TURN SIGNAL (R)	Lg	B/W
NEUTRAL	O/G	Bl/B
ABS	O	G
ILLUMINATION	Gr	B/W
TACHOMETER	O/G	B/W
FUEL METER	O/G	B/W
	Y/B	B/W

G/Y : Green with Yellow tracer
B : Black
B/R : Black with Red tracer
Y : Yellow
Lg : Light green
Gr : Gray
Bl/B : Blue with Black tracer
B/W : Black with White tracer
O/G : Orange with Green tracer
Y/B : Yellow with Black tracer
O :Orange
G :Green

ABS

ABS COMPONENTS

① Front brake light switch
② ABS warning indicator light
③ Front wheel speed sensor rotor
④ Front wheel speed sensor
⑤ Front brake diode
⑥ Rear brake diode
⑦ Rear brake light switch
⑧ Hydraulic unit
⑨ Rear wheel speed sensor
⑩ Rear wheel speed sensor rotor
⑪ ABS warning indicator light diode
⑫ ECU
⑬ Hydraulic unit motor relay
⑭ Hydraulic unit solenoid valve relay
⑮ Fuse box
⑯ ABS circuit breaker

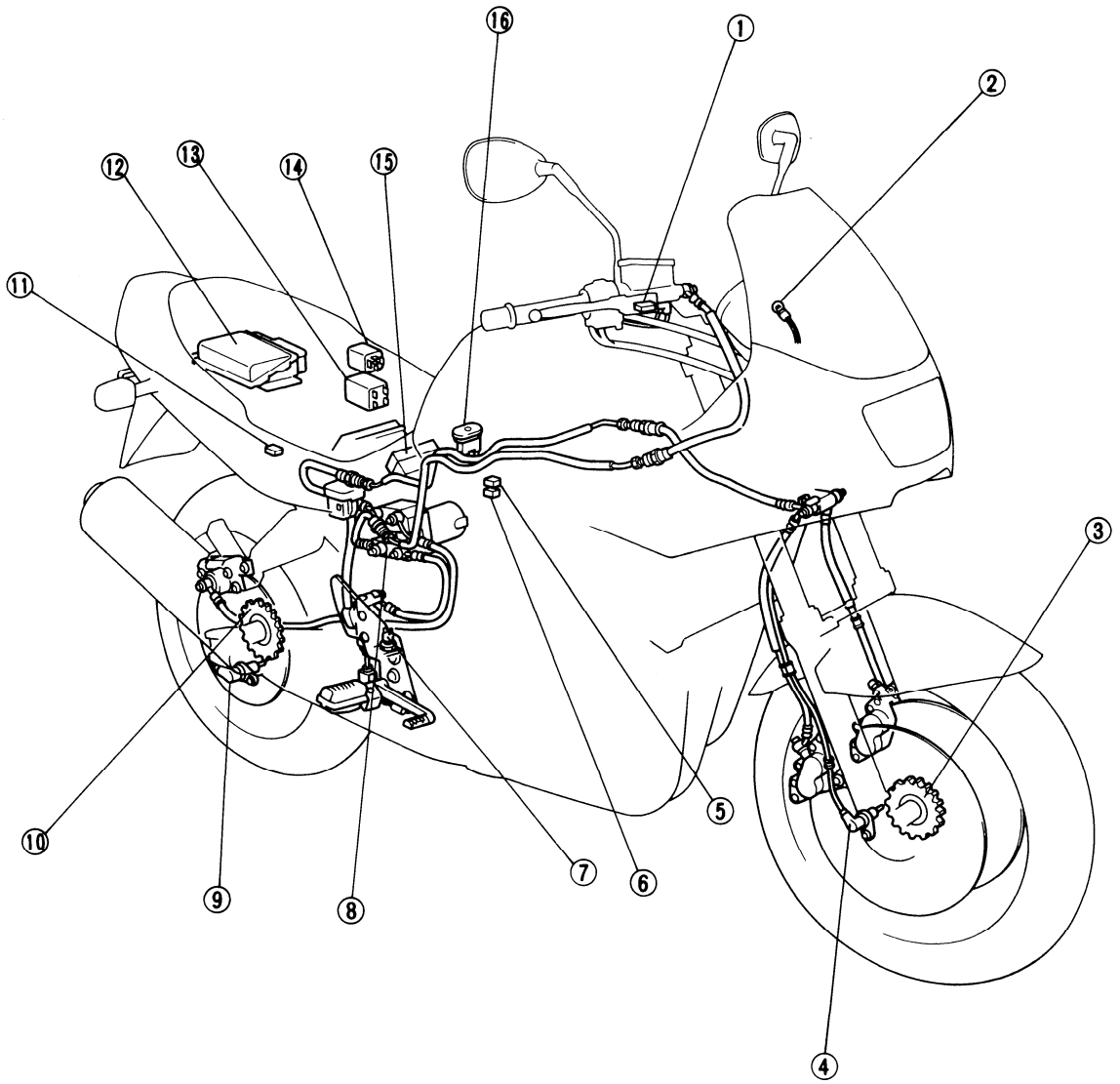

ABS COUPLER CONNECTION DIAGRAM

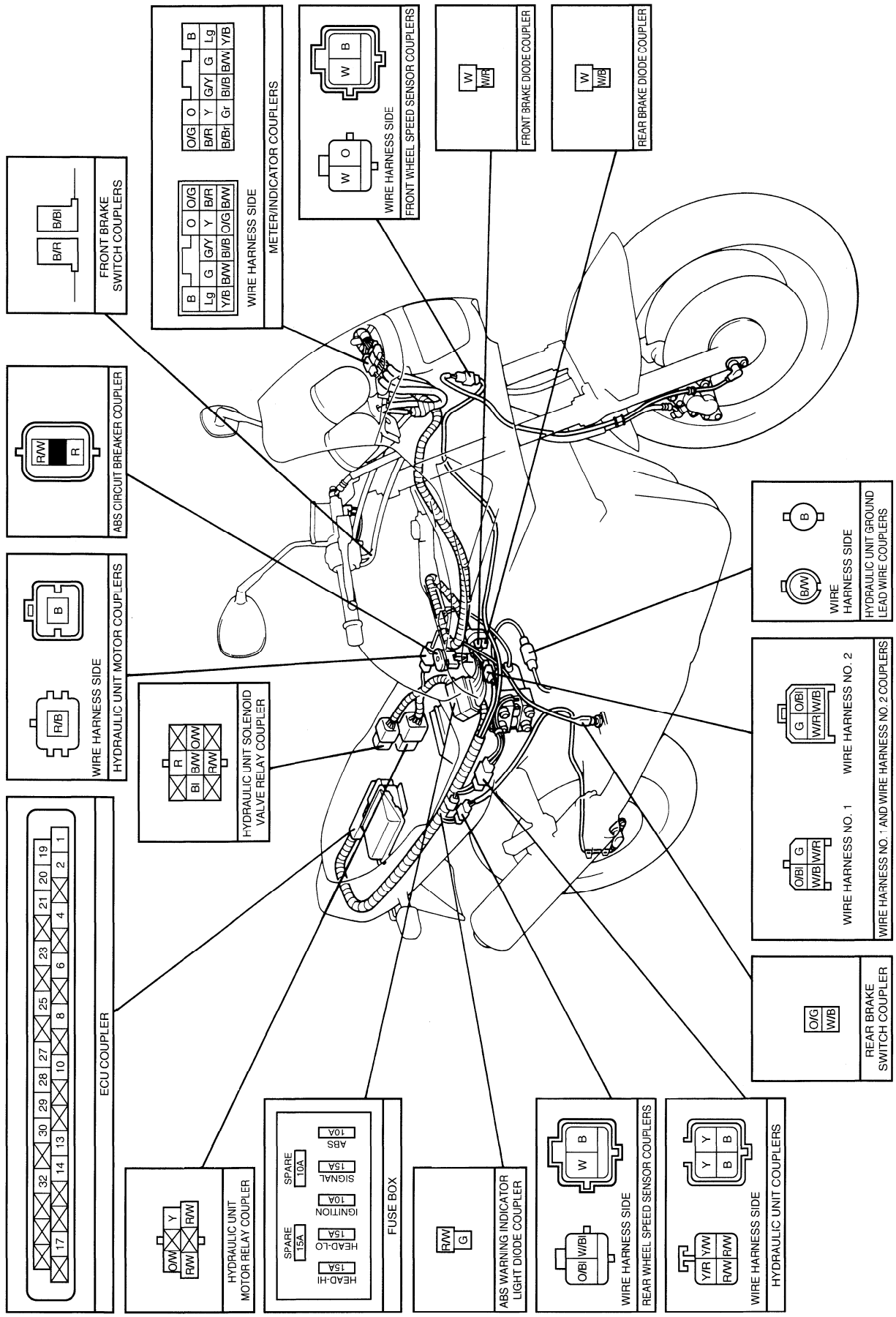

ABS WIRING DIAGRAM

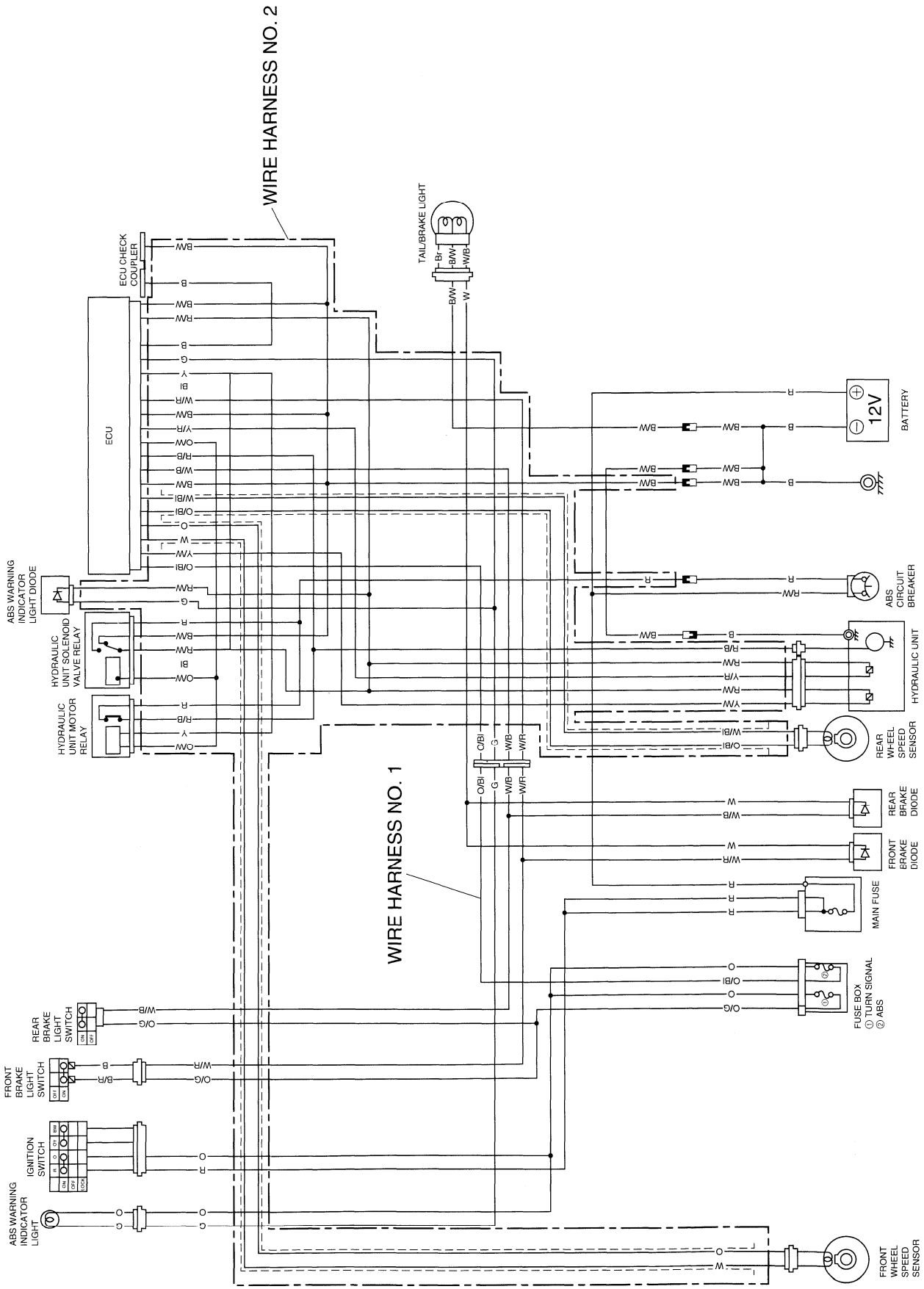

CAUTIONS IN SERVICING

ABS WIRING

- The ABS parts are connected to various lead wires. The coupler and lead wire connections, as well as the lead wire and wire harness routings must be done correctly. Make sure that the proper clamps are used and positioned correctly.

NOTE:
If all of the connections are not properly connected, the ABS may not operate correctly. For connector, coupler and fastener precautions, refer to page 6-1 of the GSF1200S.

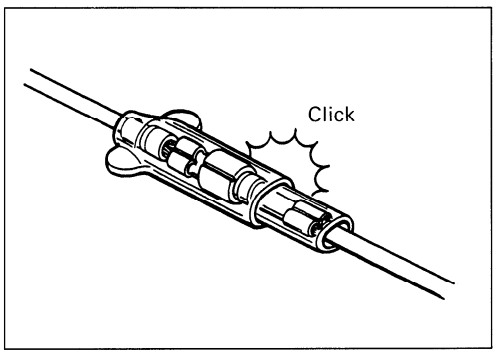

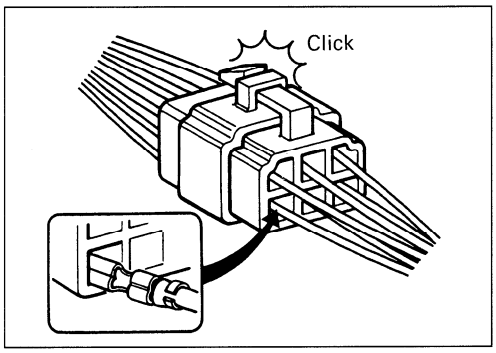

FUSES AND ABS CIRCUIT BREAKER

- If a fuse is blown or the ABS circuit breaker was activated, find the cause of the problem and correct it before replacing the fuse or resetting the circuit breaker.
- Only use a fuse of the specified rating.
- Never improvise when replacing a fuse.

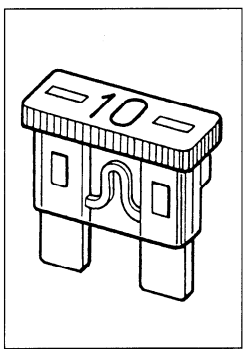

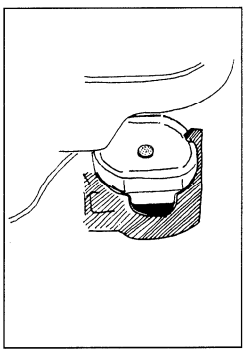

BATTERY

- Only use a fully charged battery.
- In order to prevent damage to the ECU, be sure to connect the battery properly.
- Never disconnect the battery or any other lead wires while the engine is running.

NOTE:
For battery and battery connection precautions, refer to page 6-2 of the GSF1200S.

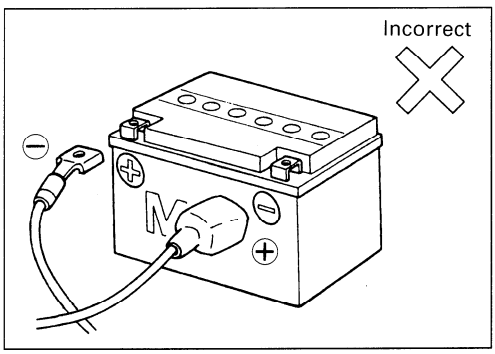

ABS PARTS

- Never allow dust or water to contact the ABS parts.

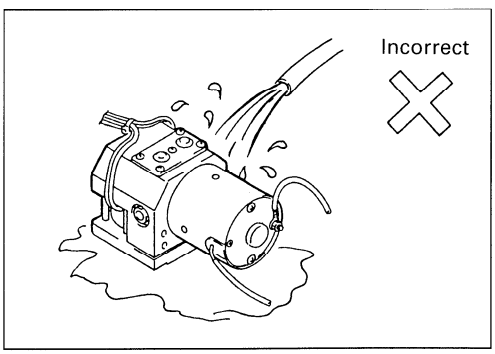

- Never subject the ABS parts to strong impacts or allow them to be dropped.

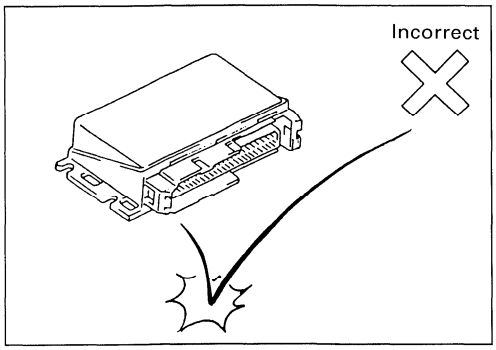

- The ABS parts cannot be disassembled. Replace any broken parts.
- If the wheel speed sensor rotor is malfunctioning, replace the entire wheel assembly.

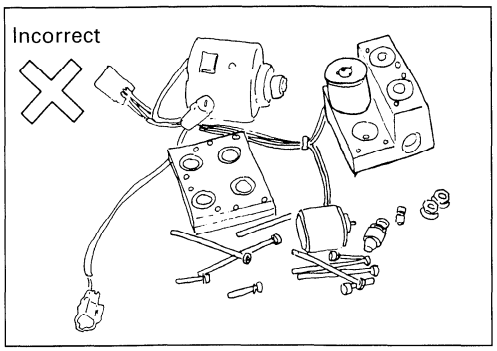

BRAKE HOSES

- If a brake hose or the hydraulic unit is removed, be sure to bleed the air from the brake system.
- Be sure to route the brake hoses correctly.

SELF-DIAGNOSIS FUNCTION

- If the ignition switch is turned to ON with the ABS lead wires disconnected, a new malfunction code will be stored.
- If the malfunction codes are to be output for a long time, remove the HEAD-LO fuse in order to prevent the battery from discharging.
- If the motorcycle is put on its centerstand and the rear wheel is rotated, a new malfunction code is stored.
- After finishing any work on the ABS, be sure to delete the malfunction codes. Afterwards, take a test ride and activate the ABS to check whether any malfunction codes remain.

* The ABS controls the rotation of both the front and rear wheels. If one wheel is not rotating, the ABS determines that there is a short-circuit in the sensor output of that wheel.

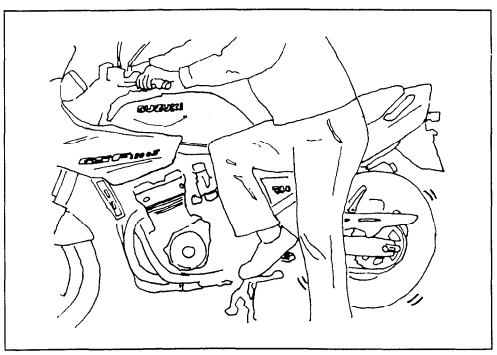

ABS ACTIVATION

- The ABS does not shorten the motorcycle's braking distance. When riding down slopes or on wet, snow-covered or bumpy roads the braking distance is lengthened as compared to a motorcycle without ABS. In addition, braking distance increases the more slippery the road is.
- The ABS does not control slides which may occur when braking while turning. As with a motorcycle that does not have ABS, it is best not apply the brakes while turning.
- The brake lever or brake pedal may move by themselves when they are applied. This is not a malfunction.
- Only use the specified tires.

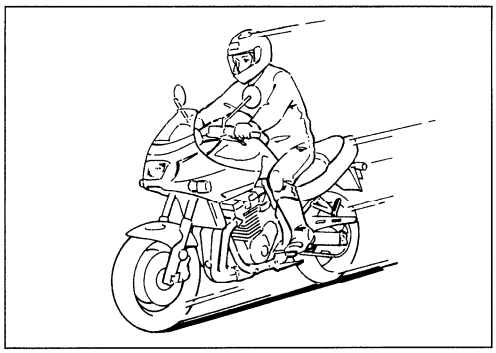

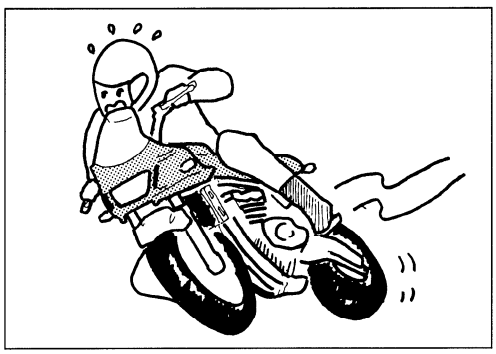

USING TESTERS

- Use the Suzuki pocket tester (09900-25002) or Suzuki multi-circuit tester (09900-25008).
- Use well-charged batteries in the tester.
- Be sure to set the tester to the correct testing range.
- Since the resistance may differ depending on the tester used and the temperature, the resistance should be set to the specification.

Using the tester

- Incorrectly connecting the ⊕ and ⊖ probes may cause the inside of the tester to burnout.
- If the voltage and current are not known, make measurements using the highest range.
- Reset the pocket tester to 0 Ω before measuring each resistance or after changing the resistance range.
- When measuring the resistance with the multi-circuit tester, also measure the resistance with no load. Subtract that resistance from the resistance measured under load in order to get the true resistance.

(Measured resistance) – (No-load resistance) = (True resistance)

- When measuring the resistance with the multi-circuit tester, ∞ becomes 10.00 MΩ and "1" flashes in the display.
- Check that no voltage is applied before making the measurement. If voltage is applied, the tester may be damaged.
- After using the tester, turn it off.

TOOL Pocket tester: 09900-25002

Multi-circuit tester: 09900-25008

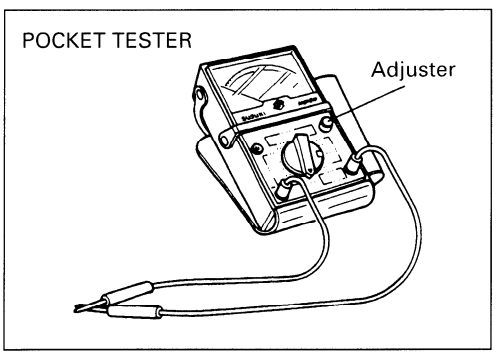

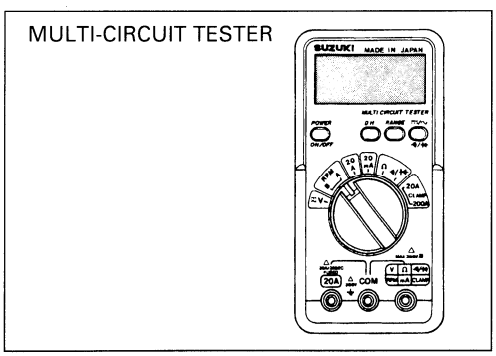

ABS TROUBLESHOOTING DESCRIPTION

The many ABS malfunction diagnosing operations are performed by checking the wiring continuity. Quick and accurate detection of malfunctions within the complex circuitry assures the proper operation of the ABS. Before beginning any repairs, thoroughly read and understand this Supplementary Service Manual.

The ABS is equipped with a self-diagnosis function. The cause of the detected malfunction is stored as a malfunction code which causes the ABS warning indicator light to illuminate or flash in set patterns to indicate the malfunction. Malfunction codes are stored even when the ignition switch is turned to OFF and they can only be erased manually.

In order to repair the ABS correctly, ask the customer for the exact circumstances under which the malfunction occurred, then check the ABS warning indicator light and the output malfunction codes. Explain to the customer that depending on how the motorcycle is operated (e.g., if the front wheel is off the ground), the ABS warning indicator light may illuminate even though the ABS is operating correctly.

ABS OPERATION AND ABS WARNING INDICATOR LIGHT

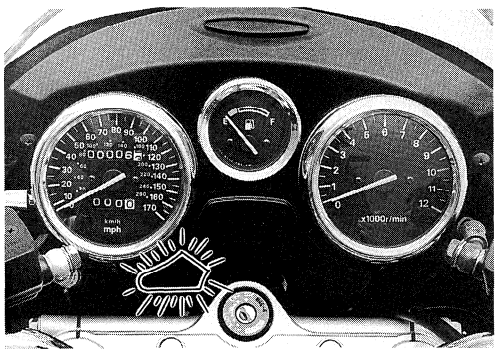

The ABS warning indicator light shows the ABS operating condition.

During normal operation, the ABS warning indicator light illuminates when the ignition switch is turned to ON and goes off after the motorcycle is ridden at more than 6 km/hr. If a malfunction has occurred, the ABS warning indicator light illuminates or flashes according to the operating condition of the ABS.

The ABS warning indicator light goes off while riding the motorcycle.	The ABS is operating normally. However, if the light goes off before riding the motorcycle after the ignition switch is turned to ON, the ABS is malfunctioning.
The ABS warning indicator light flashes either while riding or while the motorcycle is stopped.	The ABS is operating, but some malfunction has occurred.
The ABS warning indicator light illuminates while riding.	The brakes are applied while the ABS is not operating.

STORED MALFUNCTION CODES

Only the three most recent malfunction codes are stored.
Older malfunction codes are deleted when new codes are added. Therefore, after repairing the ABS and deleting the malfunction codes, ride the motorcycle and operate the ABS to check that no malfunction codes remain.

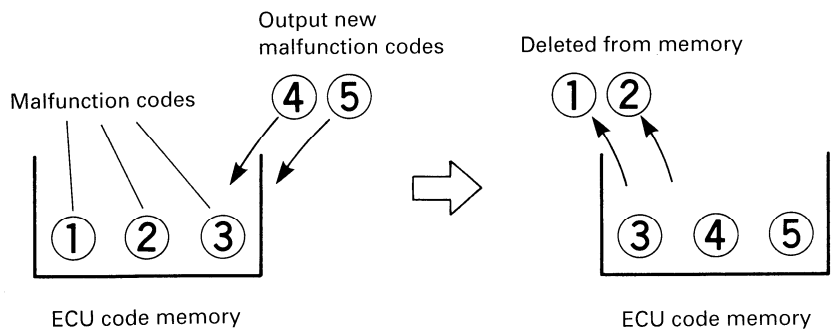

TROUBLESHOOTING

TROUBLESHOOTING PROCEDURE

Troubleshooting should proceed as follows. If the order is performed incorrectly or any part is omitted, a misdiagnosis may result.

I Gather information from the customer. (Refer to page 41.)
II Perform the pre-diagnosis inspection. (Refer to page 42.)
III Check for the malfunction indicated by the ABS warning indicator light. (Refer to page 45.)
IV Check the malfunction codes stored in the ECU. (Refer to page 48.)
V Perform appropriate troubleshooting procedures according to the malfunction codes indicated. If troubleshooting procedures cannot be performed, try to determine the cause of the malfunction according to the information gathered in I through IV and inspect the wiring. (Refer to page 51.)
VI Inspect the ABS parts. (Refer to page 66.)
VII Delete the malfunction codes. (Refer to page 77.)

BASIC TROUBLESHOOTING DIAGRAM

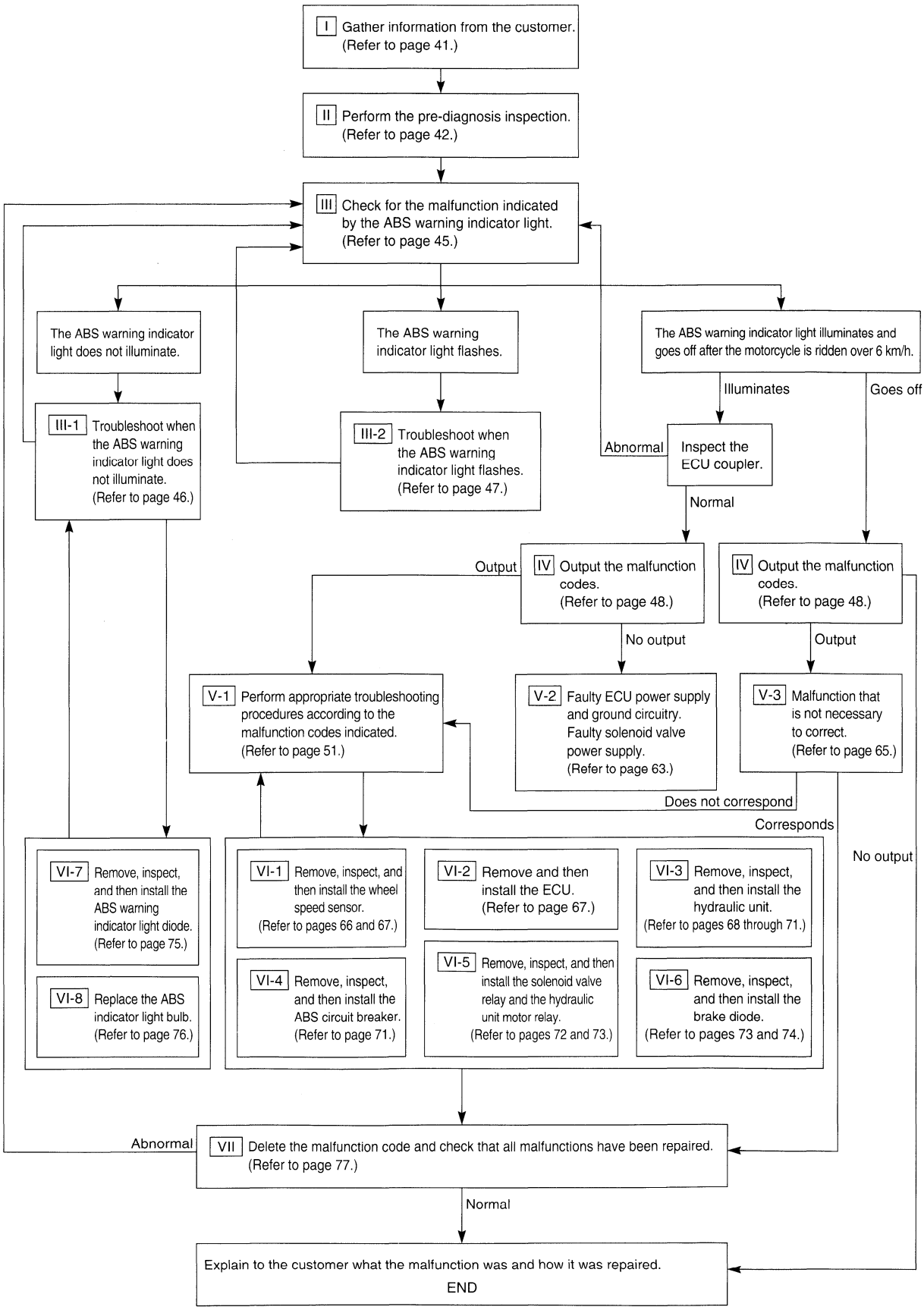

[I] INFORMATION - GATHERING

To properly diagnose a malfunction one must not make guesses or assumptions about the circumstances that caused it.
Proper diagnosis and repair requires duplicating the situation in which the malfunction occurred. If a diagnosis is made without duplicating the malfunction, even an experienced service technician may make a misdiagnosis and not perform the servicing procedure correctly, resulting in the malfunction not being repaired. For example, a malfunction that occurs only while braking on slippery surfaces will not occur if the motorcycle is ridden on a non-slippery surface. Therefore, in order to properly diagnose and repair the motorcycle, the customer must be questioned about the conditions at the time that the malfunction occurred, making "information-gathering" very important.
In order for the information obtained from the customer to be used as a reference during troubleshooting, it is necessary to ask certain important questions concerning the malfunction. Therefore, a questionnaire has been created to improve the information-gathering procedure.

Questionnaire Example

Customer's Name:	License Plate No.:
Frame Serial No.:	Year First Registered:
Mileage:	Date Malfunction Occurred:
Frequency of Occurrence:	Weather on the Date of Occurrence:
ABS Operating Conditions: ☐ ABS does not work. ☐ ABS often does not work. ☐ The stopping distance is long. ☐ Others ( )	Past Malfunctions and Repairs:
Road Surface Conditions: ☐ Paved road ☐ Dry ☐ Other ☐ Wet ☐ Unpaved road ☐ Gravel ☐ Muddy ☐ Uneven ☐ Other	Tire Conditions: ☐ Allowed to get cold ☐ Tread depth (mm) ☐ Specified tire ☐ Normal tire pressure
ABS Warning Indicator Light: ☐ Does not light up ☐ The ABS operates correctly ☐ Lights up ☐ Lights up over 10 km/h ☐ Flashes ☐ Flashes for 10 seconds and then stays lit ☐ Flashes while riding ☐ Flashes and then goes off over 40 km/h	Riding Conditions: ☐ While stopped ☐ Over 6 km/h ☐ While turning ☐ Others
Brake Operating Conditions: ☐ Normal braking ☐ Quick braking	Operating Conditions: ☐ Strong pulsations when the brake lever or brake pedal is operated ☐ Large brake lever or brake pedal strokes
Other Conditions: ☐ An unusual noise is produced. ☐ The brake produces unusual noises. ☐ Vibrations are produced.	Notes:

II PRE-DIAGNOSIS INSPECTION

The mechanical and hydraulic components of the brake system should be inspected prior to performing any electrical checks. These inspections may find problems that the ABS could not detect; thus, shortening repair time.

BRAKE FLUID LEVEL

- Refer to page 2-13 of the GSF1200S.

BRAKE HOSES

- Inspect the surface of the brake hoses for bulges, cracks or other damage or wear.
- Check that brake fluid does not leak from the brake hose connection points.

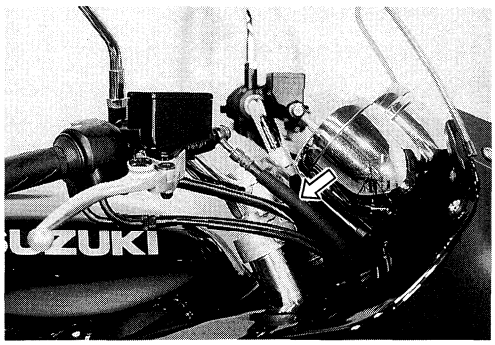

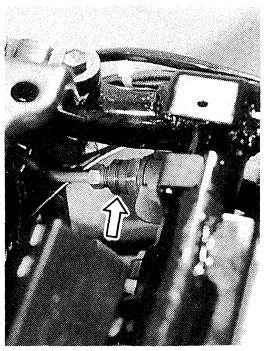

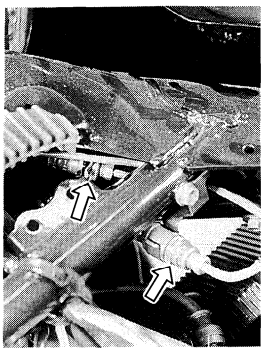

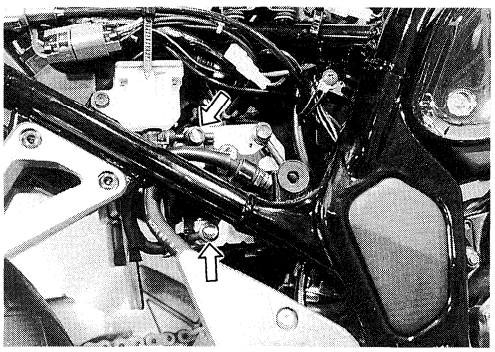

BRAKE PADS

- Refer to page 25.

BRAKE LEVER

- Inspect the brake lever free play.

Brake lever free play: 5–20 mm (0.20–0.79 in)

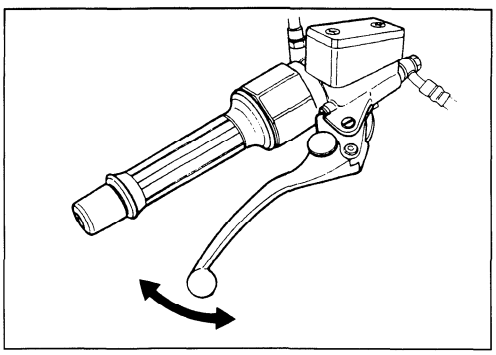

BRAKE PEDAL

- Inspect the brake pedal free play.

Brake pedal free play: 5–15 mm (0.20–0.59 in)

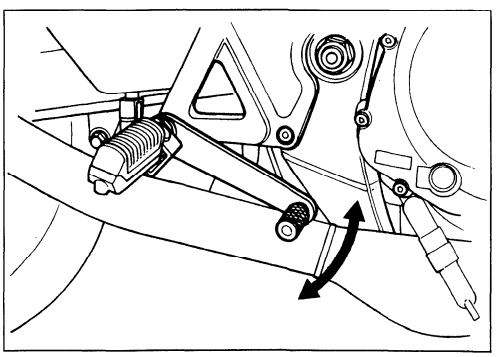

TIRE TREAD CONDITION

Operating the motorcycle with excessively worn tires will decrease riding stability and consequently invite a dangerous situation. It is highly recommended to replace a tire when the remaining depth of the tire tread reaches the following specification.

Tire tread depth limit: FRONT 1.6 mm (0.06 in)
REAR 2.0 mm (0.08 in)

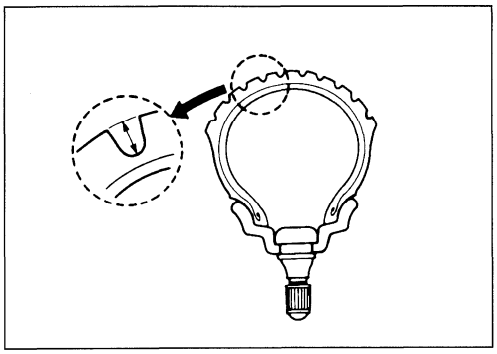

TIRE PRESSURE

If the tire pressure is too high or too low, steering will be adversely affected and tire wear will increase. Therefore, maintain the correct tire pressure for good roadability and a longer tire life. Cold inflation tire pressure is as follows.

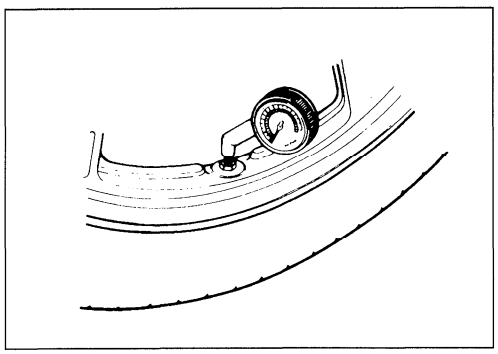

(For E-03, 28, 33)

COLD INFLATION TIRE PRESSURE	SOLO RIDING			DUAL RIDING		
	kPa	kg/cm^2	psi	kPa	kg/cm^2	psi
FRONT	225	2.25	33	250	2.50	36
REAR	225	2.25	33	250	2.50	36

(For the other markets)

COLD INFLATION TIRE PRESSURE	SOLO OR DUAL RIDING		
	kPa	kg/cm^2	psi
FRONT	250	2.50	36
REAR	250	2.50	36

⚠ CAUTION

The standard tire fitted on this motorcycle is a 120/70 ZR17 (58W) for the front (BRIDGESTONE BT-54F F) and a 180/55 ZR17 (73W) for the rear (BRIDGESTONE BT-54R G). The use of tires other than those specified may cause instability. It is highly recommended to use the specified tires.

WHEELS

Inspect the wheel runout.

Excessive runout is usually due to worn or loose wheel bearings and can be corrected by replacing the bearings.

If bearing replacement fails to reduce the runout, replace the wheel. (Refer to page 5-6 in the GSF1200S.)

Service limit (axial and radial): 2.0 mm (0.08 in)

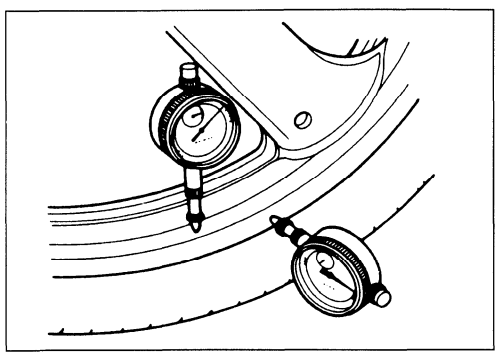

BATTERY VOLTAGE

Measure the DC voltage between the ⊕ and ⊖ battery terminals, with a pocket tester. If the voltage reading is less than 12.0V, recharge the battery with a battery charger.

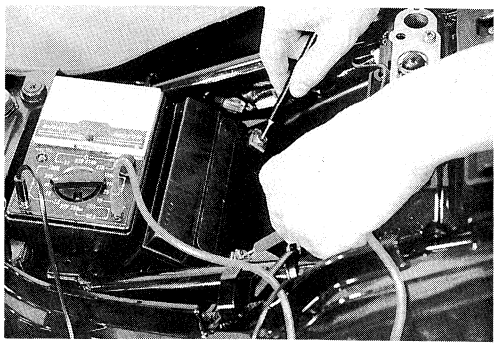

TOOL 09900-25002: Pocket tester

Tester knob indication: DC 25V

ECU GROUND WIRE INSPECTION

- Turn the ignition switch to OFF.
- Disconnect the coupler at the ECU, then measure the continuity between the ground and the ⊖ battery terminal.

If there is no continuity, repair the coupler or replace the wire harness.

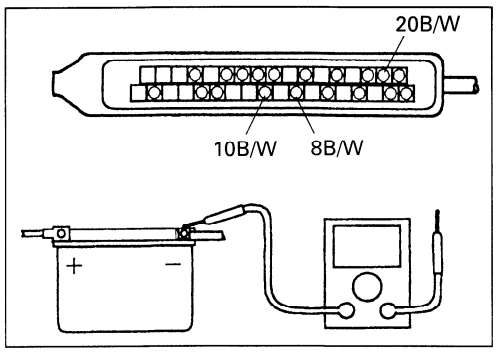

TOOL 09900-25002: Pocket tester

8 B/W — ⊖ Battery terminal: 0Ω

10 B/W — ⊖ Battery terminal: 0Ω

20 B/W — ⊖ Battery terminal: 0Ω

Tester knob indication: × 1Ω range

HYDRAULIC UNIT GROUND WIRE INSPECTION

- Turn the ignition switch to OFF.
- Measure the continuity between the hydraulic unit ground ① and the ⊖ battery terminal.
  If there is no continuity, check if the hydraulic unit ground wire is disconnected or replace the wire harness.

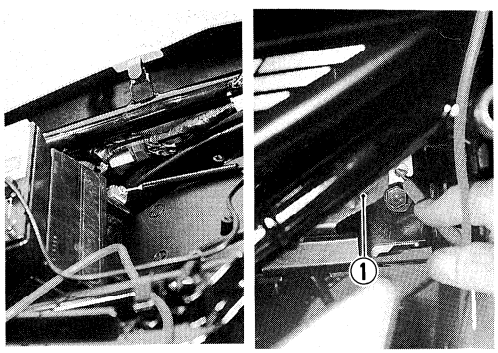

TOOL 09900-25002: Pocket tester

Hydraulic unit ground wire — ⊖ Battery terminal: 0Ω

Tester knob indication: × 1Ω range

- Disconnect the hydraulic unit coupler.
- Measure the continuity between the hydraulic unit coupler on the wire harness (R/W) and the ⊖ battery terminal.

If there is no continuity, inspect the hydraulic unit solenoid valve relay. (Refer to page 72.) Afterwards, repair the coupler or replace the wire harness.

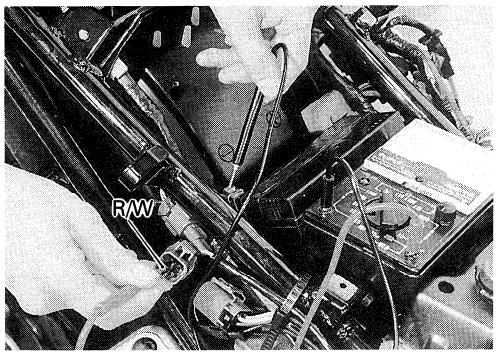

TOOL 09900-25002: Pocket tester

R/W wire — ⊖ Battery terminal: 0Ω

Tester knob indication: × 1Ω range

III ABS WARNING INDICATOR LIGHT INSPECTION

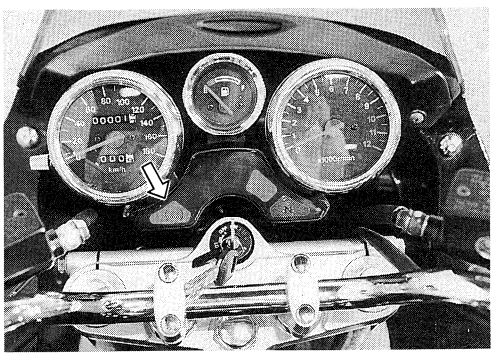

- ABS warning indicator light inspection when turning the ignition switch from OFF to ON

The ABS warning indicator light does not illuminate. III-1 (Refer to page 46.)	The ABS warning indicator light flashes. III-2 (Refer to page 47.)	The ABS warning indicator light illuminates. (Refer to page 40.)

Ⅲ-1 The ABS warning indicator light does not illuminate.

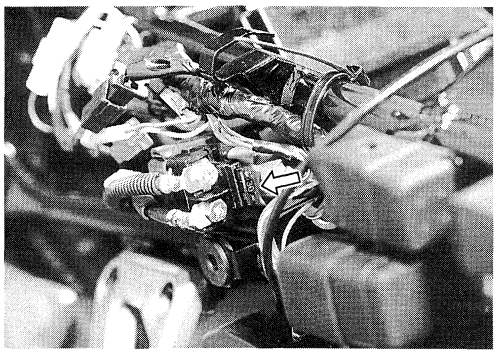

- Does any other indicator light up? — Yes → Check whether the ABS warning indicator light bulb is burnt out.
- No → Inspect the main fuse.
  - No good → Replace the fuse.
  - OK → Is each coupler properly connected? Check that the battery is properly connected.
    - Improperly connected → Properly connect all connections.
    - Properly connected → Check whether the ABS warning indicator light bulb is burnt out.
      - No good → Replace the bulb. (Refer to page 76.)
      - OK → Turn the ignition switch to OFF. Disconnect the couplers on wire harness No.1 and No.2, ground terminal G on wire harness No.1, and then check whether the ABS warning indicator light illuminates.
        - No good → Replace wire harness No.1.
        - OK → Check the solenoid valve relay and ABS warning indicator light diode. (Refer to pages 72 and 75.)
          - No good → Replace the solenoid valve relay and ABS warning indicator light diode.
          - OK → Disconnect the ECU coupler, the couplers on wire harnesses No.1 and No.2, and the ground terminal on wire harness No.2, then check for continuity between the G terminal and ground terminal B/W on wire harness No.2 coupler.
            When using pocket tester, connect the ⊕ probe to B/W.
            G — B/W : ∞ Ω
            Measuring range: kΩ
            When using the multi-circuit tester, connect the ⊖ probe to B/W.
            G — B/W : ∞ Ω
            Measuring range: Ω
            - Other than ∞ Ω → Inspect the ground wiring. (Refer to page 44.)
            - ∞ Ω → Replace wire harness No.2.

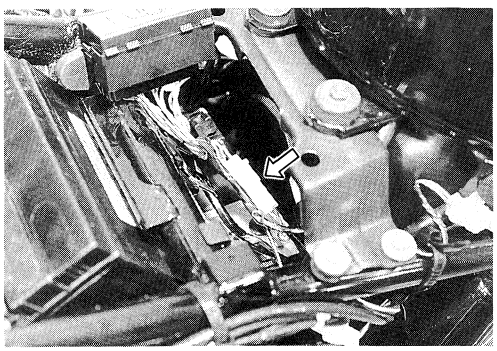

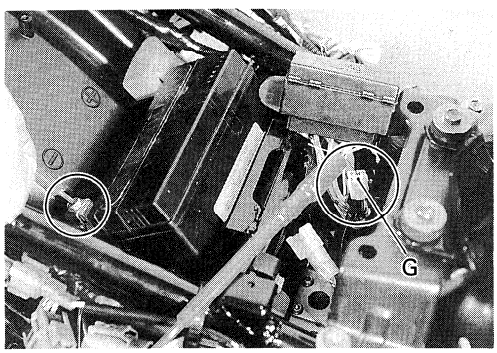

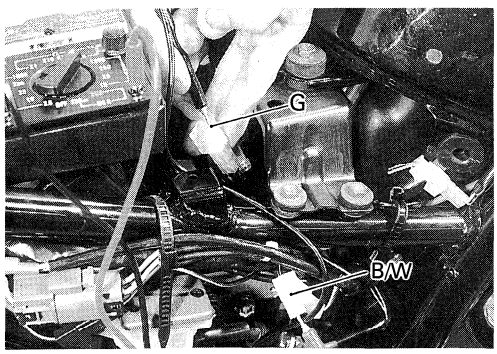

Ⅲ-2 The ABS warning indicator light flashes.

Check that the ABS test switch coupler is not connected to the ECU check coupler.
- Connected → Disconnect the ABS test switch coupler.
- Not connected ↓

Operate the brake lever or pedal and check the tail/brake light bulb.
- No good → Replace the tail/brake light bulb.
- OK ↓

Check that the front and rear brake diodes operate correctly. (Refer to page 74.)
- No good → Replace the front and rear brake diodes.
- OK ↓

Turn the ignition switch to OFF. Disconnect the coupler at the ECU. Disconnect the couplers on wire harness No.1 and No.2. Check for continuity between W/B and W/R of wire harness No.2.

W/B — 13W/B : 0Ω
W/R — 25W/R : 0Ω
Measuring range: 1Ω

- Incorrect → Replace wire harness No.2.
- Correct ↓

Turn the ignition switch to OFF, then disconnect the coupler at the ECU. Check for continuity between 13W/B and 10B/W and between 25W/R and 10B/W of the wire harness coupler.
When using the pocket tester, connect the ⊕ probe to 10B/W.

13B/W — 10B/W : ∞ Ω
25W/R — 10W/R : ∞ Ω
Measuring range: kΩ

When using the multi-circuit tester, connect the ⊖ probe to 10B/W.

13B/W — 10B/W : ∞ Ω
25W/R — 10W/R : ∞ Ω
Measuring range: Ω

- ∞ Ω ↓

Replace wire harness No.1.

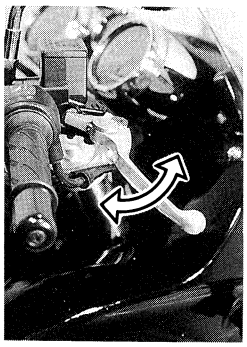

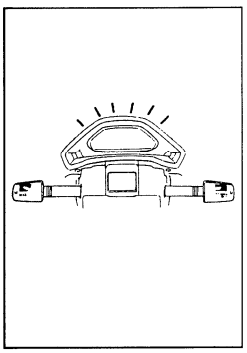

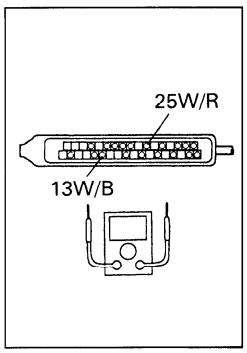

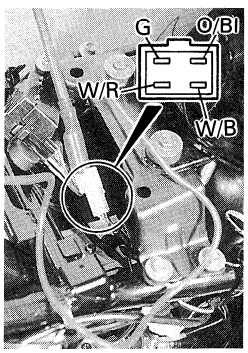

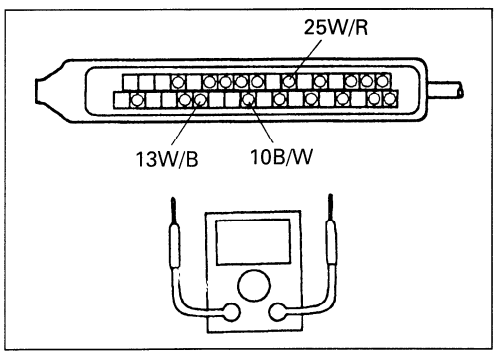

Ⅳ MALFUNCTION CODE OUTPUT

- The ABS test switch coupler must be connected to the ECU check coupler in order for the ABS warning indicator light to output the malfunction codes.
- Turn the ignition switch to OFF.

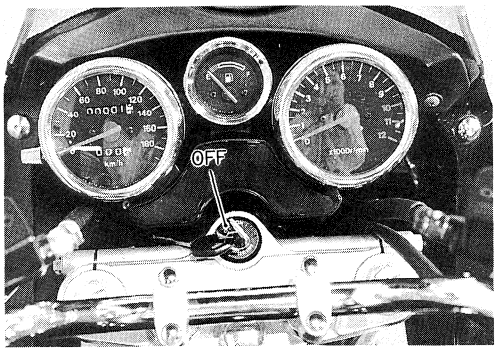

- Remove the seat and the ECU cover ①.

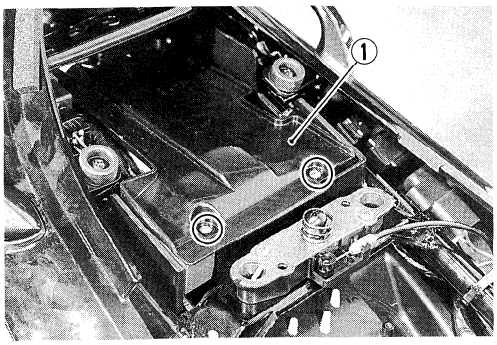

- Remove the ECU check coupler cover ② and connect the ABS test switch ③.

TOOL ABS test switch: 09930-82710

⚠ CAUTION

Be sure that the ABS test switch is set to ON.

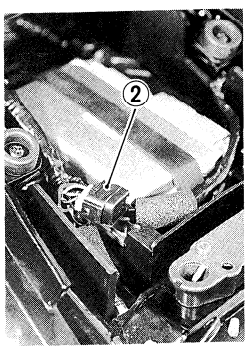

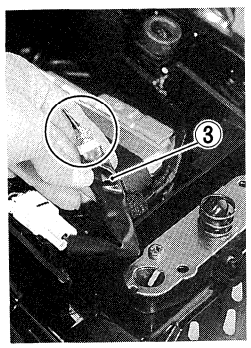

- Turn the ignition switch to ON and after about 3.6 seconds, the ABS warning indicator light will flash to show the malfunction codes.

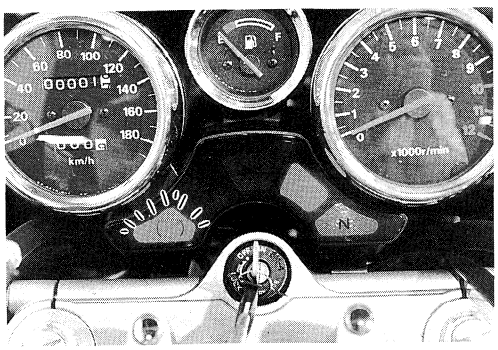

The malfunction codes will continue being output for 5 minutes. If the front or rear brake is applied, the malfunction codes will no longer be output. The ABS warning indicator light remains lit after the malfunction codes are output. To output the malfunction codes again, turn the ignition switch to OFF, then back to ON.

NOTE:
If the malfunction codes are to be output for a long time, remove the HEAD-LO fuse in order to prevent the battery from discharging.

Understanding the Malfunction Codes

Only the three most recent malfunction codes are stored.

When the malfunction codes are output, first the start code is shown, then a maximum of three malfunction codes are shown cyclically for 5 minutes. If no malfunction occurred, only the start code is shown. The flashes of the ABS warning indicator light represent a number.

Malfunction Code Example

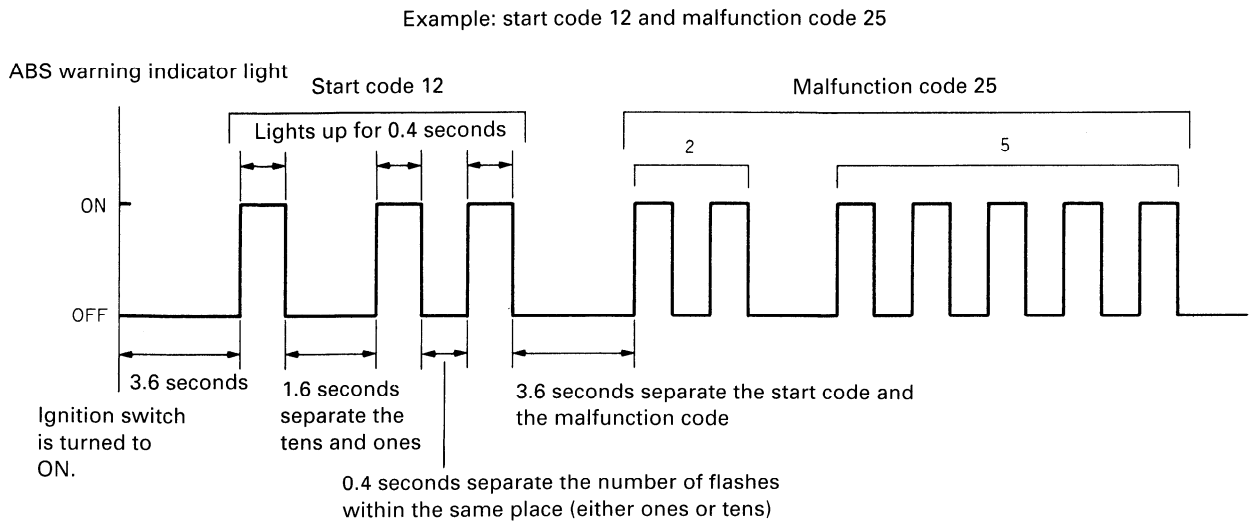

Cyclic flashing of the malfunction codes

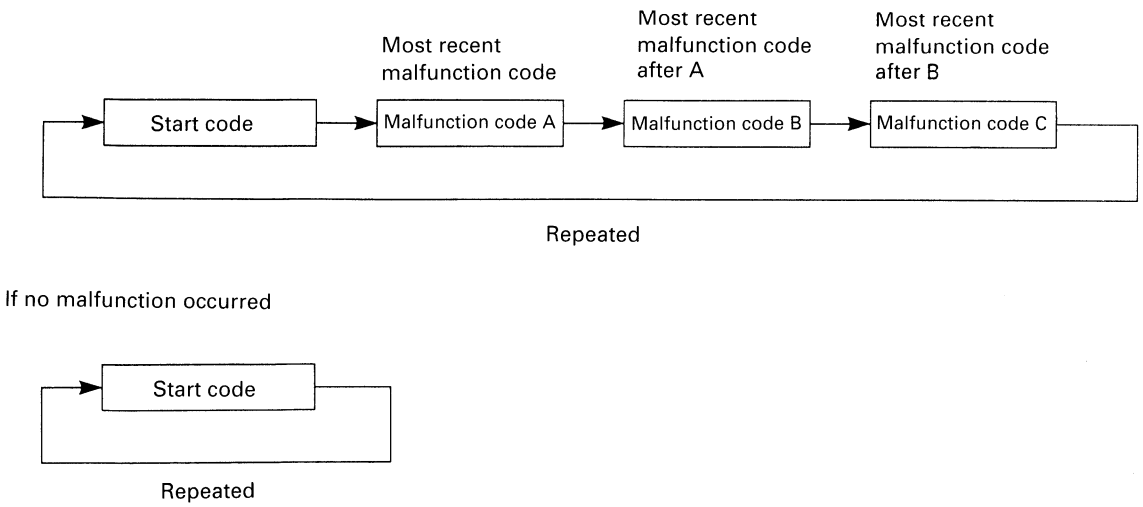

Troubleshooting Chart

Malfunction Code	Malfunction Cause	Indicator Status
12	Start code (normal)	Goes off
15	Hydraulic unit solenoid valve (rear wheel) discontinuity, short-circuit, or faulty lead wire (*3)	Lights up
16	Hydraulic unit solenoid valve (front wheel) discontinuity, short-circuit, or faulty lead wire (*3)	Lights up
19	Faulty hydraulic unit solenoid valve relay (relay power supply line, drive line or valve power supply monitor line discontinuity, drive line short-circuit, or poor relay contact) (*3)	Lights up
25	Incorrect tire size, poor tire pressure, deformed wheel, or incorrect number of wheel speed sensor rotor teeth (*6)	Flashes and then lights up while the motorcycle is moving
35	Faulty hydraulic unit motor wiring (motor relay drive line discontinuity or short-circuit; stuck or poor motor relay contact; motor power supply voltage monitor line discontinuity; poor motor rotation)	Lights up
37	Front brake light switch discontinuity, burnt out brake light bulb (*6)	Flashes and then goes off over 40 km/h
38	Rear brake light switch discontinuity, burnt out brake light bulb (*6)	Flashes and then goes off over 40 km/h
42	Faulty front wheel speed sensor wiring (no discontinuity, short-circuit, faulty rotor, large clearance) (*1, 4)	Goes off and then lights up again over 10 km/h
43	Front wheel speed sensor wiring discontinuity (*1)	Flashes for 10 seconds and then stays lit
44	Faulty rear wheel speed sensor wiring (no discontinuity, short-circuit, faulty rotor, large clearance) (*1, 5)	Goes off and then lights up again over 10 km/h
45	Rear wheel speed sensor wiring discontinuity (*1)	Flashes for 10 seconds and then stays lit
48	Low battery voltage (*2)	Flashes for 10 seconds and then stays lit
55	Faulty ECU (faulty operation, discontinuity, short-circuit) (*3)	Lights up
61	Incorrect hydraulic unit solenoid valve operation, abnormal coil resistance (*3)	Lights up
None (lit)	Faulty ECU power supply or ground wiring (*3)	Lights up
None (lit)	Faulty hydraulic unit solenoid valve power supply wiring, stuck hydraulic unit motor relay contact (*3)	Lights up

*1 The wheel speed sensor lead wire is connected to the ECU, but a short-circuit or faulty continuity inside the ECU caused this malfunction code to appear, therefore, the ECU must be replaced. An insufficient wheel speed sensor output voltage is the cause of a malfunction in which the ABS is activated even if the brakes are not applied suddenly. If this occurs frequently even though the wheel speed sensor is operating correctly, the ECU should be replaced.

*2 The ECU stops the ABS and the brakes operate normally. After voltage returns, the ABS warning indicator light goes off and the ABS can operate.

*3 The ABS does not operate and the brakes operate normally.

*4 The malfunction occurs while executing a wheelie or when the motorcycle is put on its centerstand and only the rear wheel is rotated.

*5 This occurs if only the front wheel is rotating.

*6 The ABS does not stop operating.

V MALFUNCTION CODE TROUBLESHOOTING

V-1 Malfunction Code Troubleshooting

Before performing the troubleshooting procedures, remove the HEAD-LO fuse in order to prevent the battery from discharging. The voltages mentioned in the following procedures are measured with the HEAD-LO fuse removed. In addition, when disconnecting couplers and turning the ignition switch to ON, disconnect the ECU coupler in order to prevent a malfunction code from being stored. Each time a resistance is measured, the ignition switch should be set to OFF.

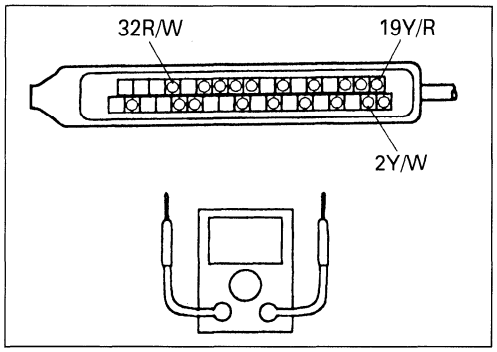

Malfunction codes 15 and 16 – Faulty front and rear wheel solenoid valve wiring

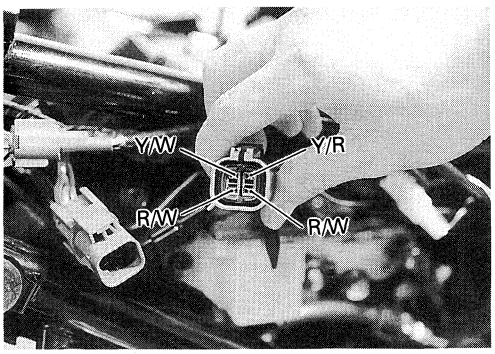

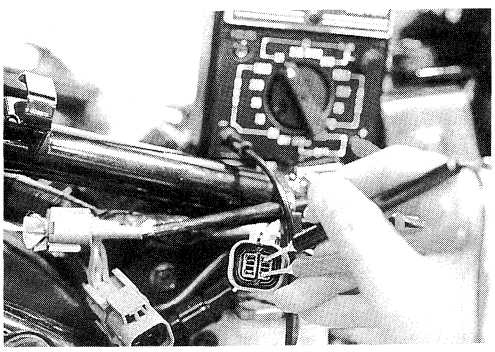

- Turn the ignition switch to OFF and disconnect the ECU.
- Measure the resistance between the ECU connector terminals.

Malfunction code 15 (rear wheel solenoid valve wiring)

32R/W — 19Y/R : 0.06–1.30Ω

Malfunction code 16 (front wheel solenoid valve wiring)

32R/W — 2Y/W : 0.06–1.30Ω

Measuring range: 1Ω

Correct → Replace the ECU.

Incorrect ↓

- Disconnect the hydraulic unit solenoid valve coupler, then measure the solenoid valve resistance.

Malfunction code 15 (rear wheel solenoid valve wiring)

Y/R — R/W : 0.06–1.30Ω

Malfunction code 16 (front wheel solenoid valve wiring)

Y/W — R/W : 0.06–1.30Ω

Measuring range: 1Ω

Incorrect ↓ Replace the hydraulic unit. (Refer to pages 68 through 71.)

Correct ↓ Replace wire harness No.2 between the ECU and hydraulic unit.

Malfunction code 19 – Faulty hydraulic unit solenoid valve relay wiring

Hydraulic unit solenoid valve relay power supply line discontinuity

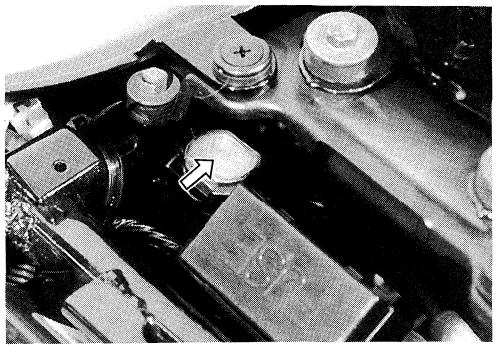

Check that the ABS circuit breaker is not activated.

→ **Activated**: Reset the ABS circuit breaker.

↓ **Not activated**

Turn the ignition switch to OFF. Disconnect the ABS circuit breaker coupler, then measure the voltage between the ABS circuit breaker R/W and the ⊖ battery terminal.

R/W — ⊖ battery terminal : about 12.3V

Measuring range: 25V

→ **Incorrect**: Replace the ⊕ battery terminal lead wire.

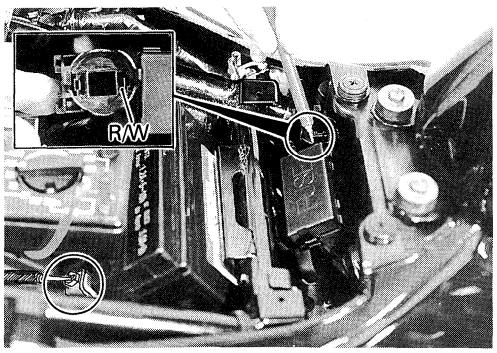

↓ **Correct**

Disconnect the hydraulic unit solenoid valve relay coupler, then measure the voltage between R on the wire harness and the ⊖ battery terminal.

R — ⊖ battery terminal : about 12.3V

Measuring range: 25V

→ **Incorrect**: Replace wire harness No.2.

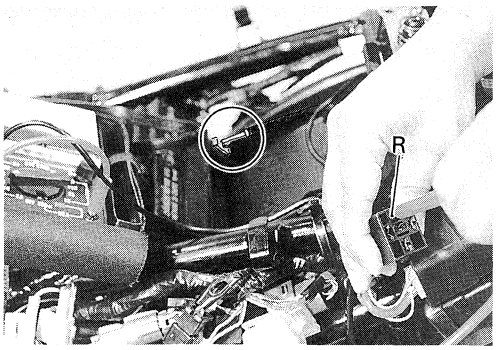

↓ **Correct**

Faulty hydraulic unit solenoid valve power supply monitor line

Disconnect the hydraulic unit solenoid valve relay coupler and ECU coupler, then measure the continuity between the wire harnesses.

32R/W — R/W : 0Ω

Measuring range: 1Ω

→ **Incorrect**: Replace wire harness No.2.

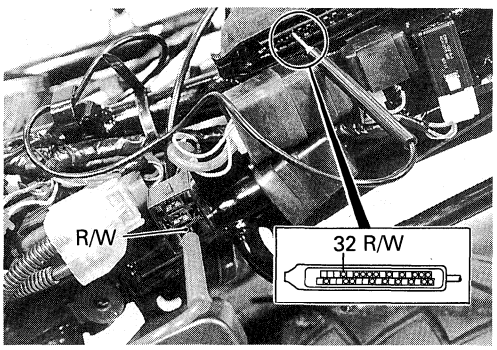

↓ **Correct**

Inspect the hydraulic unit solenoid valve relay. (Refer to page 72.)

→ **No good**: Replace the hydraulic unit solenoid valve relay.

↓

(A)

(A)

↓

Faulty hydraulic unit solenoid valve relay drive line

Disconnect the hydraulic unit solenoid valve relay coupler and ECU coupler, then measure the continuity between the wire harnesses.
27Bl — Bl: 0Ω
17O/W — O/W : 0Ω
Measuring range: 1Ω

→ **Incorrect** → Replace wire harness No.2.

↓ **Correct**

Replace the ECU.

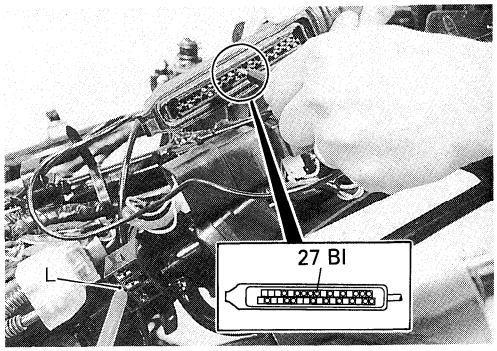

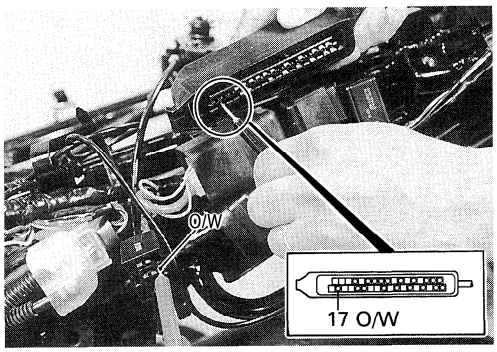

Malfunction code 25 – Inaccurate front and rear wheel speed sensors

Check that the specified tire is installed.
TIRE SIZES AND TYPES
Front wheel:
Size 120/70ZR17 (58W)
Type BRIDGESTONE BT-54F F
Rear wheel:
Size 180/55ZR17 (73W)
Type BRIDGESTONE BT-54R G

→ **Incorrect** → Use the specified tire.

↓ **Correct**

Is the tire pressure correct?
TIRE PRESSURE
SOLO RIDING:
Front wheel 2.50 kg/cm²
Rear wheel 2.50 kg/cm²
DUAL RIDING:
Front wheel 2.50 kg/cm²
Rear wheel 2.50 kg/cm²

→ **Incorrect** → Adjust the tire pressure.

↓ **Correct**

(B)

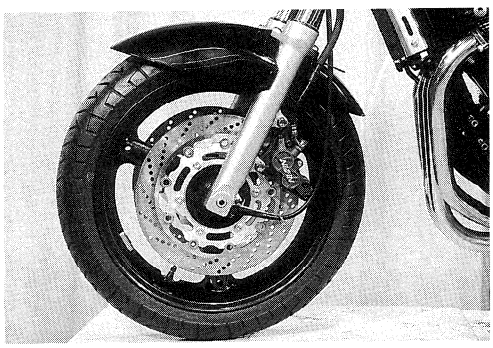

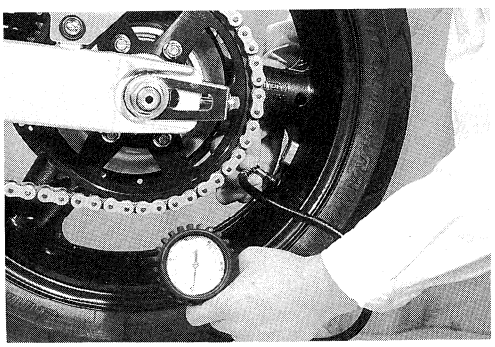

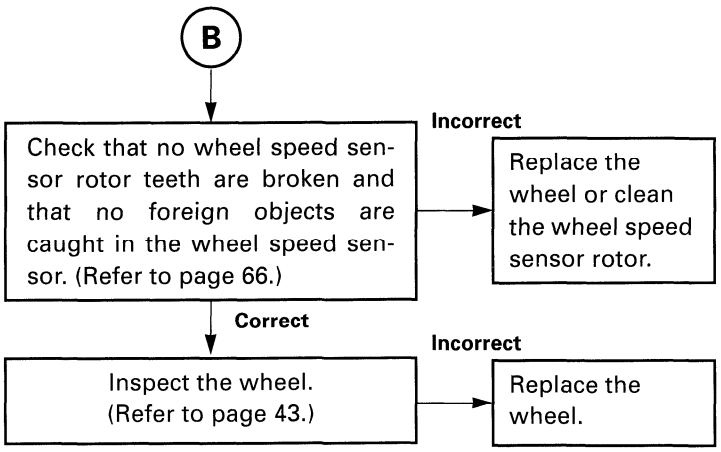

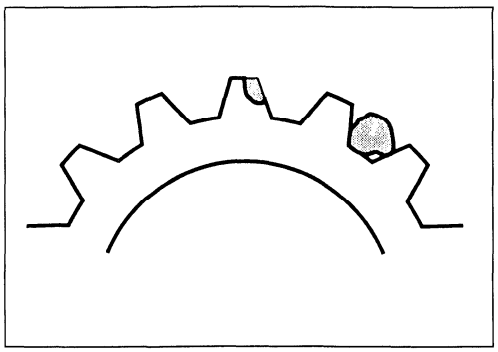

Malfunction code 35 – Faulty hydraulic unit motor and hydraulic unit motor relay wiring
Relay power supply line discontinuity

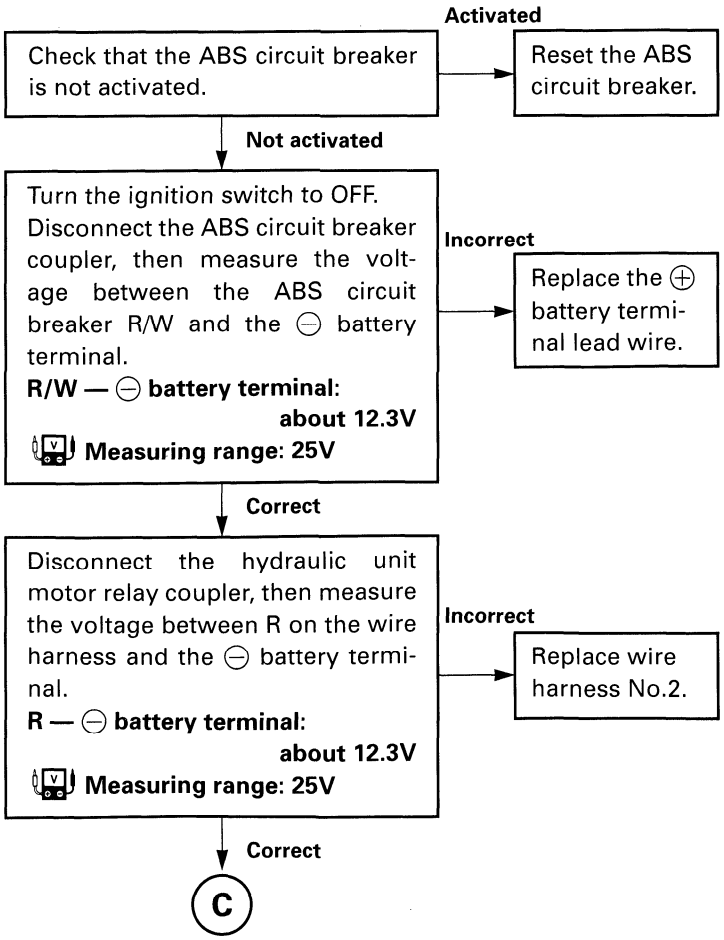

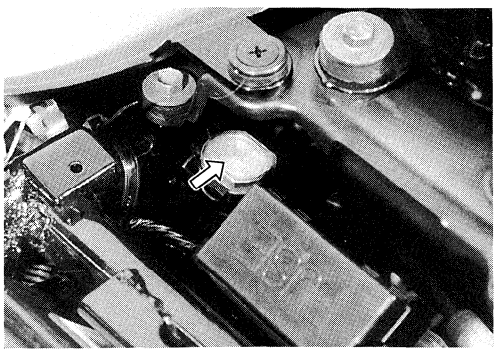

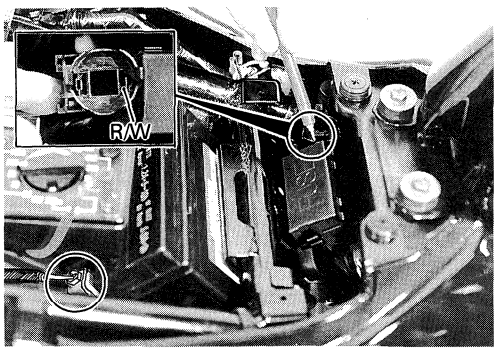

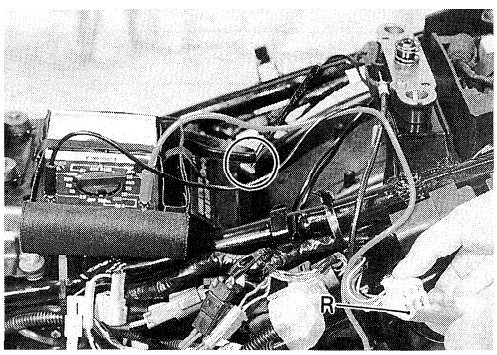

Ⓒ

Faulty power supply monitor line

Disconnect the hydraulic unit motor relay and ECU couplers, then measure the continuity between the wire harnesses.
14R/B — R/B : 0Ω
Measuring range: 1Ω

Incorrect → Replace wire harness No.2.

Correct ↓

Inspect the hydraulic unit solenoid valve relay. (Refer to page 72.)

No good → Replace the solenoid valve relay.

OK ↓

Faulty hydraulic unit motor relay drive line

Disconnect the hydraulic unit motor relay coupler and ECU coupler, then measure the continuity between the wire harnesses.
28Y — Y : 0Ω
17O/W — O/W : 0Ω
Measuring range: 1Ω

Incorrect → Replace wire harness No.2.

Correct ↓

Inspect the hydraulic unit motor relay. (Refer to page 73.)

No good → Replace the hydraulic unit motor relay.

OK ↓

Disconnect the hydraulic unit motor coupler, then connect R/B lead wire to the ⊕ battery terminal and check that the motor rotates smoothly.

⚠ WARNING
In order to prevent damaging the hydraulic unit motor, do not rotate it for more than 5 seconds.

No good → Inspect the hydraulic unit motor.

OK ↓

Replace the ECU.

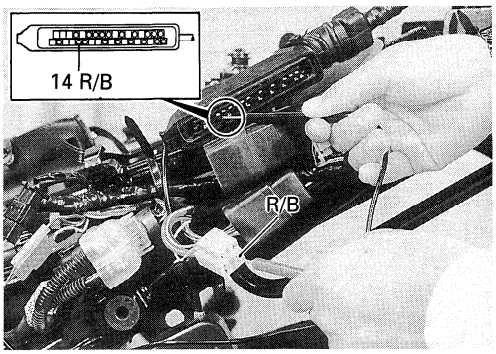

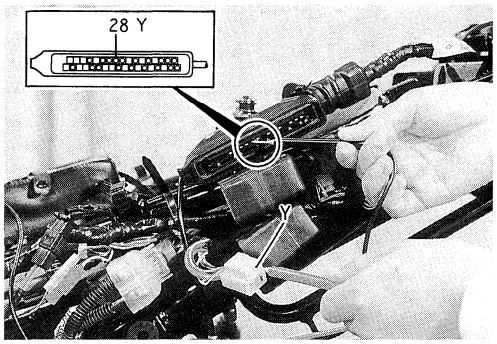

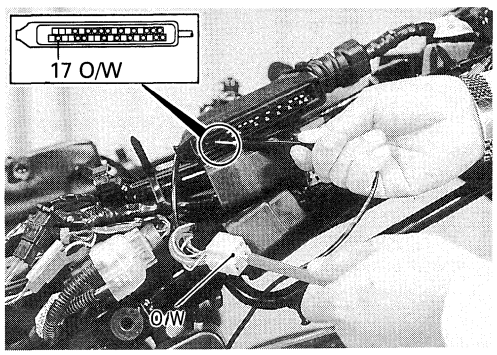

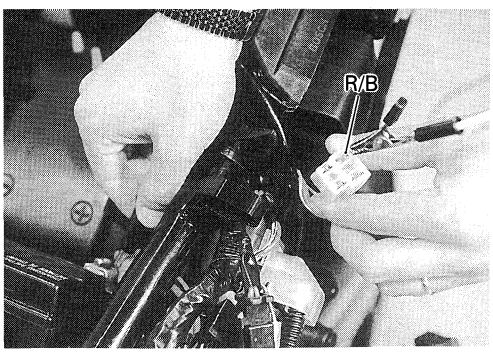

Malfunction code 37 – Front brake light switch wiring discontinuity

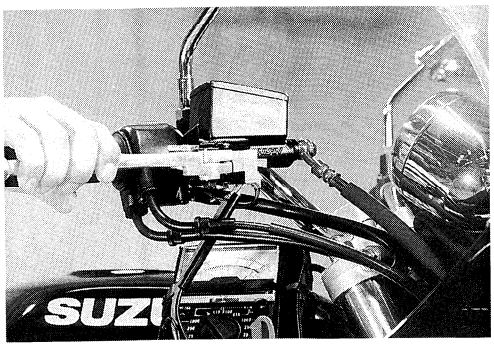

Disconnect the front brake light switch lead wires and check the front brake light switch for continuity.
When the brake lever is squeezed:
0Ω
When the brake lever is released:
∞ Ω
Measuring range: 1Ω

Incorrect → Replace the front brake light switch.

Correct ↓

Inspect the front brake diode. (Refer to page 74.)

No good → Replace the front brake light diode.

OK ↓

Turn the ignition switch to OFF. Disconnect the ECU coupler and the couplers on wire harness No.1 and No.2, then check for continuity on wire harness No.2.
W/R — 25W/R : 0Ω
Measuring range: 1Ω

Incorrect → Replace wire harness No.2.

Correct ↓

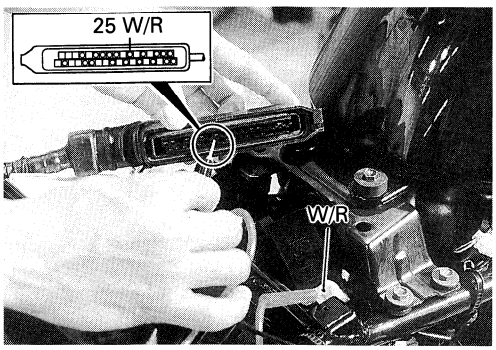

Turn the ignition switch to OFF. Disconnect the ECU coupler, remove the front brake diode, then check for continuity between the wire harnesses.
W/R — 25W/R : 0Ω
Measuring range: 1Ω

Incorrect → Replace wire harness No.1.

Correct ↓

D

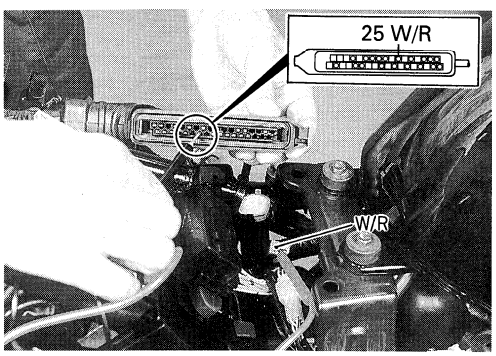

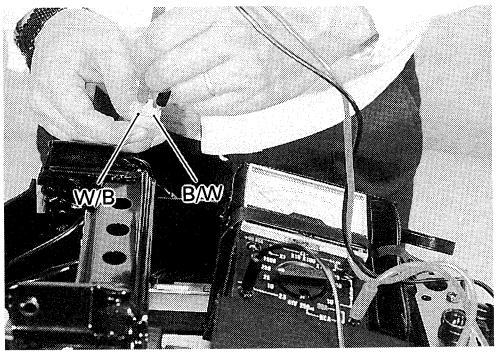

(D)

Turn the ignition switch to OFF. Disconnect the ECU and the tail/brake light couplers, squeeze the front brake lever, then measure the voltage between W/B and B/W on the wire harness.
W/B — B/W: about 11.1V
Measuring range: 25V
Turn the ignition switch to OFF, then measure the continuity between B/W and the ⊖ battery terminal.
B/W — ⊖ battery terminal: 0Ω
Measuring range: 1Ω

Incorrect → Replace wire harness No.1.

Correct ↓

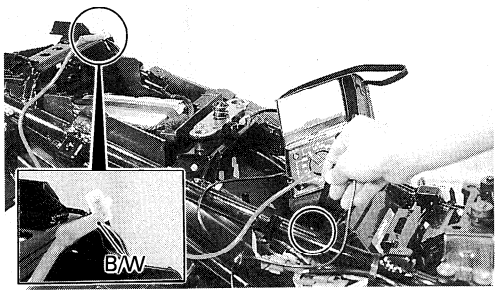

Squeeze the brake lever and check that the tail/brake light lights up.

No good → Replace the tail/brake light bulb.

OK ↓

Replace the ECU.

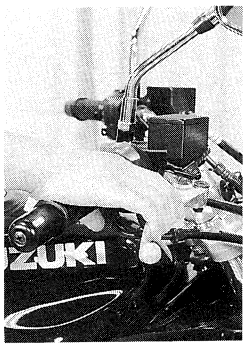

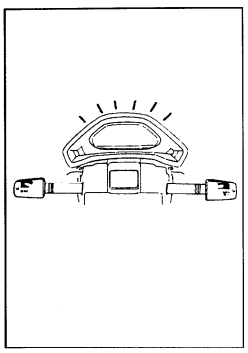

Malfunction code 38 – Rear brake light switch wiring discontinuity

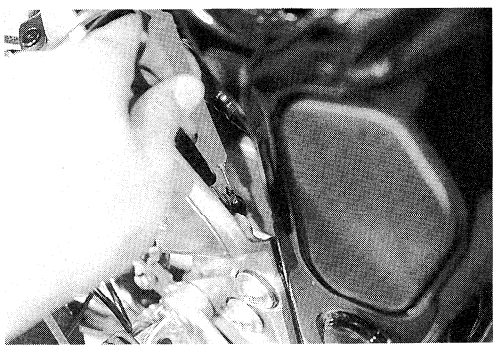

Disconnect the rear brake light switch coupler and check the rear brake light switch for continuity.
When the brake pedal is depressed: 0Ω
When the brake pedal is released: ∞ Ω
Measuring range: 1Ω

Incorrect → Replace the rear brake light switch.

Correct ↓

Inspect the rear brake diode. (Refer to page 74.)

Incorrect → Replace the rear brake light diode.

OK ↓

(E)

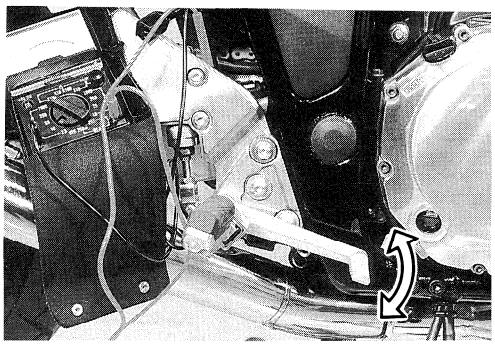

E

Turn the ignition switch to OFF. Disconnect the ECU coupler and the couplers on wire harness No.1 and No.2, then check for continuity on wire harness No.2.
W/B — 13W/B : 0Ω
Measuring range: 1Ω

Incorrect → Replace wire harness No.2.

Correct ↓

Turn the ignition switch to OFF. Disconnect the ECU coupler, remove the rear brake diode, then check for continuity between the wire harnesses.
W/B — 13W/B : 0Ω
Measuring range: 1Ω

Incorrect → Replace wire harness No.1.

Correct ↓

Turn the ignition switch to ON. Remove the ECU and the tail/brake light couplers, depress the brake pedal, then measure the voltage between W/B and B/W on the wire harness.
W/B — B/W : about 11.1V
Measuring range: 25V
Turn the ignition switch to OFF, then measure the continuity between BW and the ⊖ battery terminal.
B/W — ⊖ battery terminal: 0Ω
Measuring range: 1Ω

Incorrect → Replace wire harness No.1.

Correct ↓

Depress the brake pedal and check that the tail/brake light lights up.

No good → Replace the tail/brake light bulb.

OK ↓

Replace the ECU.

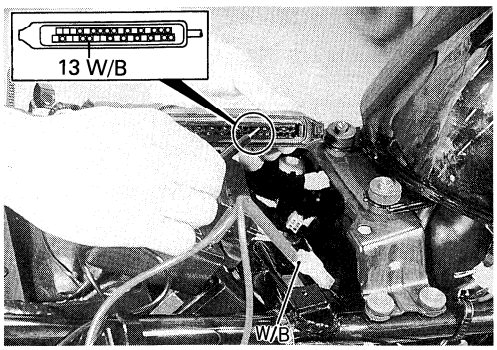

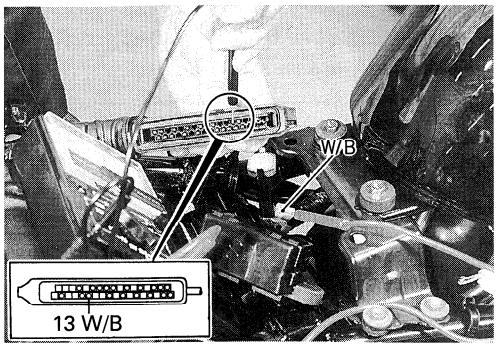

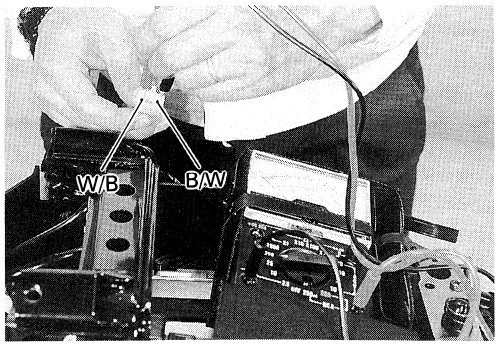

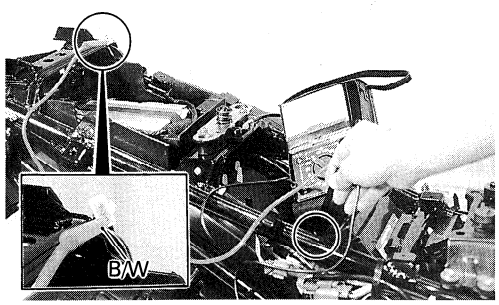

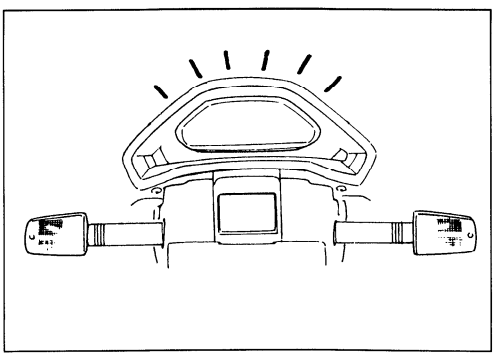

Malfunction codes 42 and 44 – Faulty front and rear wheel speed sensor wiring (other than discontinuity)

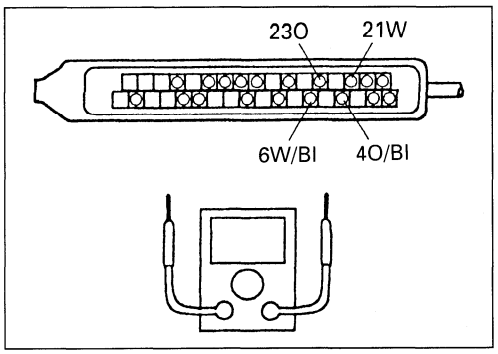

Turn the ignition switch to OFF and disconnect the coupler at the ECU.
Measure the resistance between the ECU coupler terminals.
Malfunction code 42 (front wheel speed sensor wiring)
21W — 23O : 800–1200Ω
Malfunction code 44 (rear wheel speed sensor wiring)
4O/Bl — 6W/Bl : 800–1200Ω
Measuring range: 100Ω

Correct → Replace the ECU.

Incorrect ↓

Disconnect the wheel speed sensor coupler and measure the wheel speed sensor resistance.
Malfunction code 42 (front wheel speed sensor wiring)
B — W : 800–1200Ω
Malfunction code 44 (rear wheel speed sensor wiring)
B — W : 800–1200Ω
Measuring range: 100Ω

Incorrect ↓ Replace the wheel speed sensor. (Refer to pages 27 and 29.)

Correct ↓ Replace wire harness No.2 between the ECU and the wheel speed sensor.

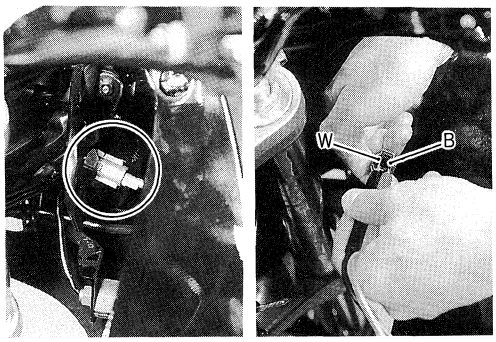

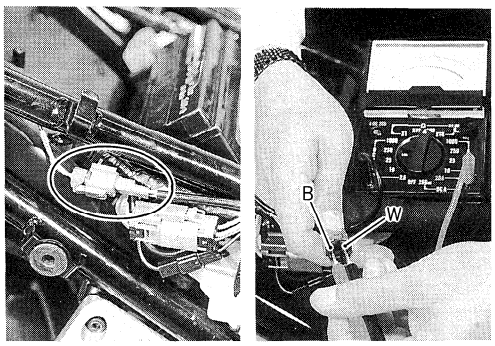

Malfunction codes 43 and 45 – Front and rear wheel speed sensor wiring discontinuity

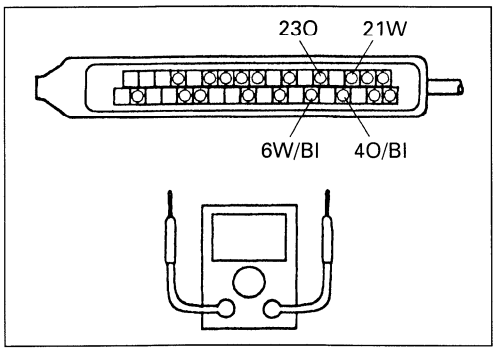

Turn the ignition switch to OFF and disconnect the coupler at the ECU.
Measure the resistance between the ECU coupler terminals.
Malfunction code 43 (front wheel speed sensor wiring)
21W — 23O : 800–1200Ω
Malfunction code 45 (rear wheel speed sensor wiring)
4O/BI — 6W/BI : 800–1200Ω
Measuring range: 100Ω

Correct → Replace the ECU.

Incorrect ↓

Disconnect the wheel speed sensor coupler and measure the wheel speed sensor resistance.
Malfunction code 43 (front wheel speed sensor wiring)
B — W : 800–1200Ω
Malfunction code 45 (rear wheel speed sensor wiring)
B — W : 800–1200Ω
Measuring range: 100Ω

Incorrect ↓ Replace the wheel speed sensor. (Refer to pages 66 and 67.)

Correct ↓ Replace wire harness No.2 between the ECU and the wheel speed sensor.

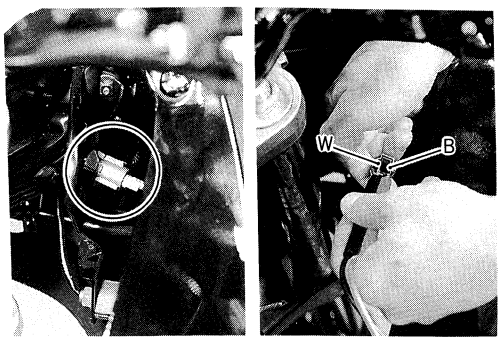

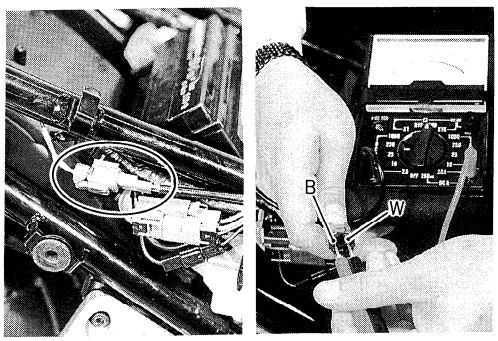

Malfunction code 48 – Low battery voltage

Inspect the ABS fuse in the fuse box.

No good → Replace the ABS fuse.

OK ↓

Disconnect the coupler at the ECU and turn the ignition switch to ON. Disconnect the couplers on wire harness No.1 and No.2, then measure the voltage between O/Bl on wire harness No.1 and the ⊖ battery terminal.

O/Bl — ⊖ battery terminal: about 11.6V

Measuring range: 25V

Incorrect → Replace wire harness No.1.

Correct ↓

Disconnect the coupler at the ECU and turn the ignition switch to ON, then measure the voltage between 1O/Bl on the wire harness and the ⊖ battery terminal.

1O/Bl — ⊖ battery terminal: about 11.6V

Measuring range: 25V

Incorrect → Replace wire harness No.2.

Correct ↓

Replace the ECU.

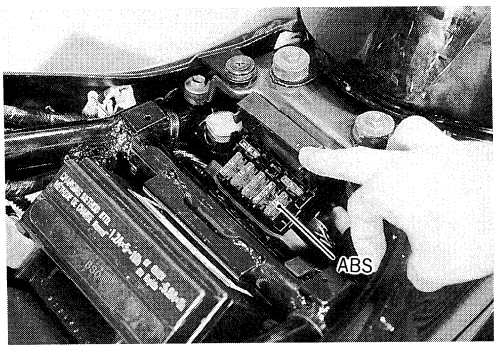

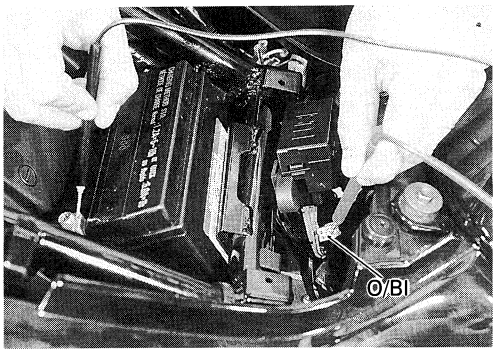

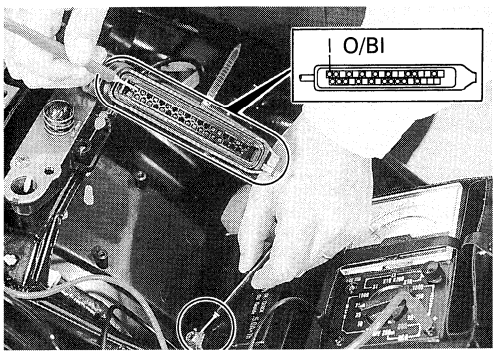

Malfunction code 55 – Faulty ECU

Cancel the malfunction code and check if the malfunction is output again. Is malfunction code 55 output again?

Output → Replace the ECU.

No output ↓

Perform appropriate troubleshooting procedures according to the malfunction codes indicated.

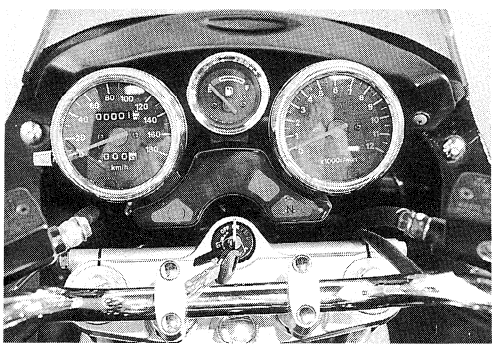

Malfunction code 61 – Abnormal hydraulic unit solenoid valve coil resistance

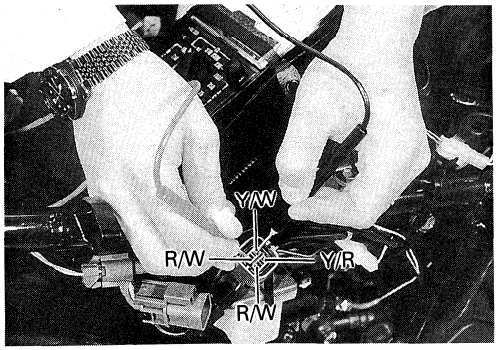

Turn the ignition switch to OFF.
Disconnect the hydraulic unit coupler, then measure the hydraulic unit solenoid valve resistance.

Y/R — R/W : 0.06–1.30Ω
Y/W — R/W : 0.06–1.30Ω
Measuring range: 1Ω

Incorrect → Replace the hydraulic unit.

Correct ↓ Repair or replace the wire harness coupler.

V-2 Faulty ECU power supply and ground wiring

No good

Inspect the ABS fuse in the fuse box. → Replace the ABS fuse.

OK

Disconnect the coupler at the ECU and turn the ignition switch to ON. Disconnect the couplers on wire harness No.1 and No.2, then measure the voltage between O/Bl on wire harness no. 1 and the ⊖ battery terminal.
O/Bl — ⊖ battery terminal: about 11.6V
Measuring range: 25V

Incorrect → Replace wire harness No.1.

Correct

Turn the ignition switch to ON. Disconnect the coupler at the ECU, then measure the voltage between 1O/Bl on the wire harness and the ⊖ battery terminal.
1O/Bl — ⊖ battery terminal: about 11.6V
Measuring range: 25V

Incorrect → Replace wire harness No.2.

Correct

Turn the ignition switch to OFF and disconnect the coupler at the ECU. Measure the countinuity between each terminal on the wire harness and the ⊖ battery terminal.
8B/W — ⊖ battery terminal : 0Ω
10B/W — ⊖ battery terminal : 0Ω
20B/W — ⊖ battery terminal : 0Ω
Measuring range: 1Ω

Incorrect → Replace wire harness No.2.

Correct

Replace the ECU.

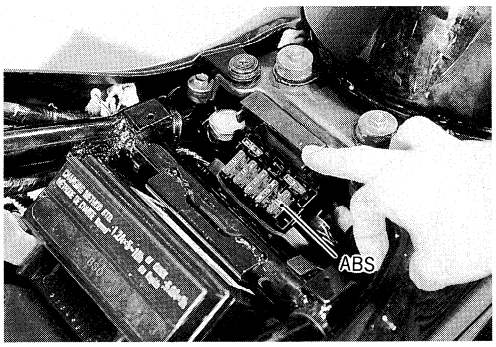

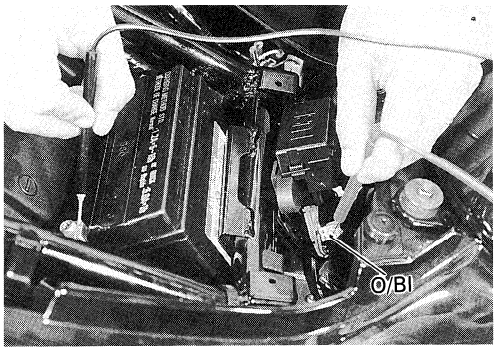

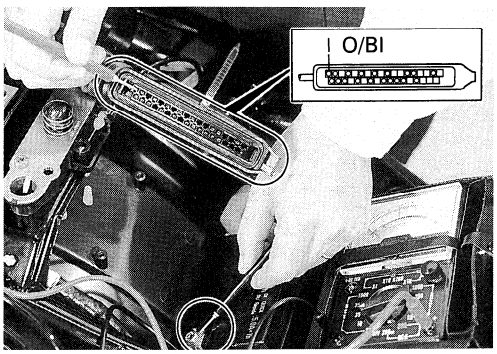

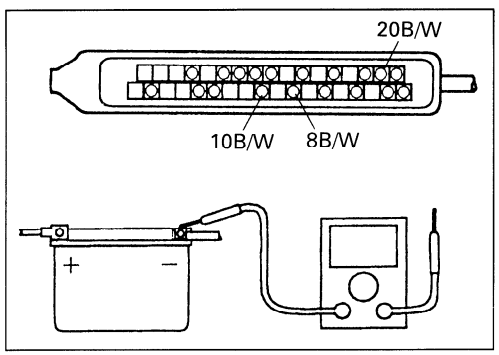

Faulty hydraulic unit solenoid valve power supply wiring relay power supply line discontinuity

Check that the ABS circuit breaker is not activated.

→ **Activated**: Reset the ABS circuit breaker.

↓ **Not activated**

Turn the ignition switch to OFF. Disconnect the ABS circuit breaker coupler, then measure the voltage between the ABS circuit breaker R/W and the ⊖ battery terminal.
R/W — ⊖ battery terminal: about 12.3V
Measuring range: 25V

→ **Incorrect**: Replace the ⊕ battery terminal lead wire.

↓ **Correct**

Disconnect the solenoid valve relay coupler, then measure the voltage between R on the wire harness and the ⊖ battery terminal.
R — ⊖ battery terminal: about 12.3V
Measuring range: 25V

→ **Incorrect**: Replace wire harness No.2.

↓ **Correct**

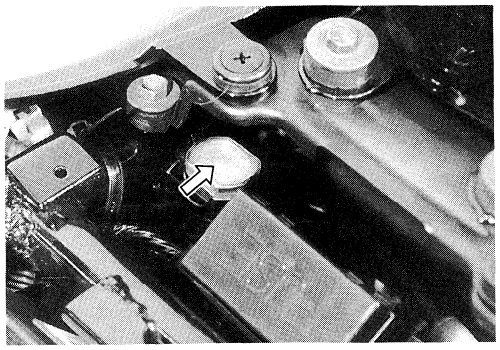

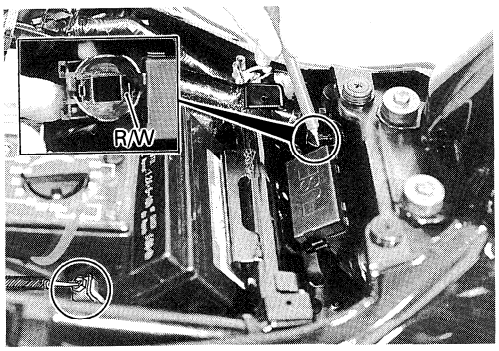

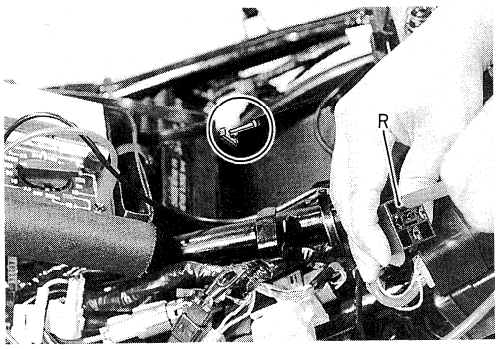

Faulty hydraulic unit solenoid valve power supply monitor line

Disconnect the coupler at the hydraulic unit solenoid valve relay and the the coupler at the ECU, then measure the continuity between the wire harnesses.
32R/W — R/W : 0Ω
Measuring range: 1Ω

→ **Incorrect**: Replace wire harness No.2.

↓ **Correct**

(F)

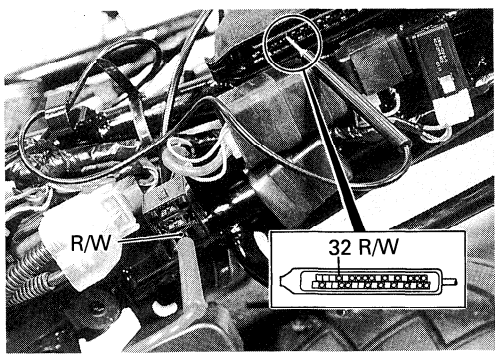

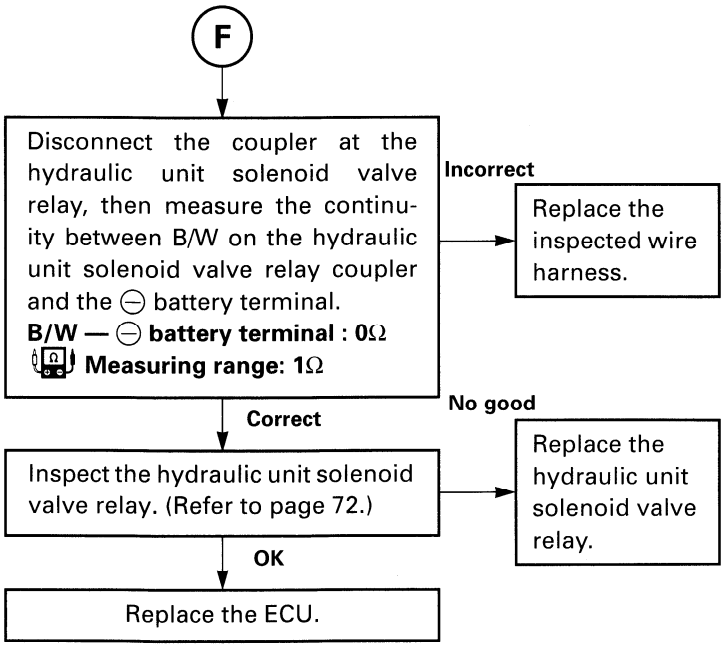

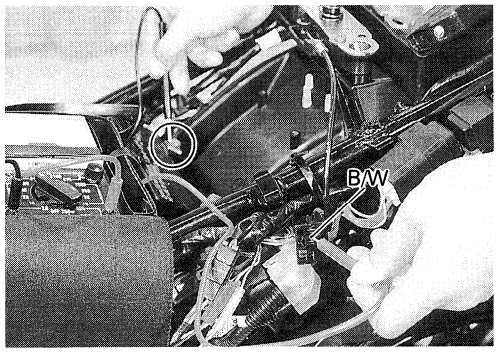

V-3 Irreparable Malfunctions

- Even though the ABS is operating correctly, a malfunction code is memorized in any of the following conditions.

Conditions	Malfunction code
• If the motorcycle is continuously ridden on bumpy roads.	25
• If the motorcycle is put on its centerstand, the engine is started and only the rear wheel is rotated. • If the motorcycle is ridden with its front wheel off the ground.	42
• If the ABS receives strong radio interference.	55
• Previous malfunctions were repaired, but the malfunction codes were not deleted.	Previous malfunction code

- After deleting the malfunction codes and checking the operation (Refer to page 77.), explain to the customer that the ABS is operating properly.

VI ABS COMPONENT REMOVAL, INSPECTION AND REMOUNTING

VI-1 WHEEL SPEED SENSOR AND WHEEL SPEED SENSOR HOUSING REMOVAL

⚠ CAUTION

- **The ABS is made up of many precision parts; never subject it to strong impacts or allow it to become dirty or dusty.**
- **The wheel speed sensor cannot be disassembled.**

- Remove the front wheel speed sensor and front wheel speed sensor housing. (Refer to page 27.)
- Remove the rear wheel speed sensor and rear wheel speed sensor housing. (Refer to page 29.)

VI-1 WHEEL SPEED SENSOR INSPECTION

- Inspect the wheel speed sensor for cracks, bends, or other damage.
- Measure the resistance between the terminals.
  If the resistance is infinity or less than specification, the wheel speed sensor must be replaced.

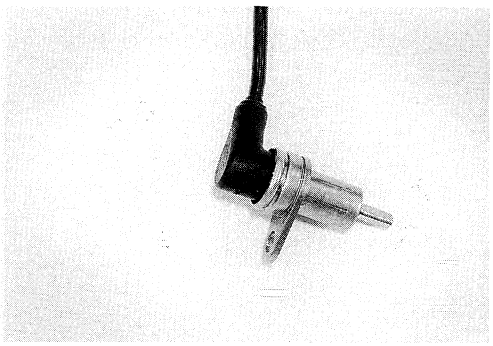

TOOL 09900-25002: Pocket tester

Tester knob indication: × 100Ω range

Wheel speed sensor resistance: 800–1200Ω (White-Black)

VI-1 WHEEL SPEED SENSOR ROTOR INSPECTION

- Inspect the wheel speed sensor rotor for broken teeth ① or foreign objects stuck between the teeth ②.
  Clean the rotor or replace the wheel if there are any broken teeth.

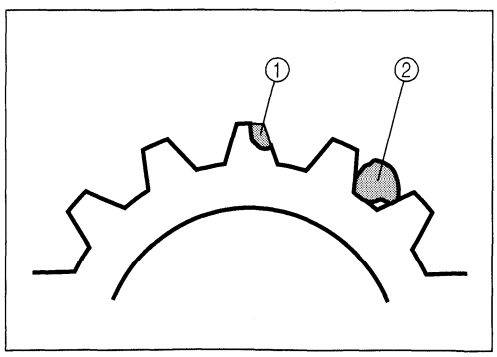

VI-1 WHEEL SPEED SENSOR AND WHEEL SPEED SENSOR HOUSING REMOUNTING

Remount the wheel speed sensor and wheel speed sensor housing in the reverse order of removal. (Refer to pages 27 and 29.)

VI-2 ECU REMOVAL

⚠ CAUTION

- **The ABS is made up of many precision parts; never subject it to strong impacts or allow it to become dirty or dusty.**
- **The ECU cannot be disassembled.**

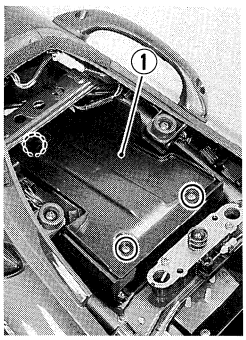

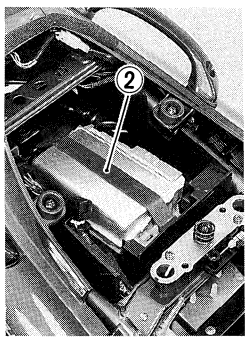

- Remove the seat.
- Remove the ECU cover ①.
- Remove the ECU band ②.
- Push the lock tab ③ and disconnect the ECU coupler.

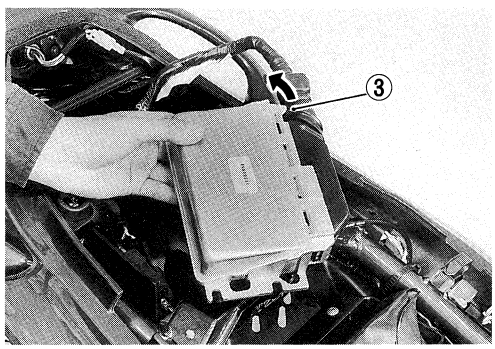

VI-2 ECU REMOUNTING

Remount the ECU in the reverse order of removal. Pay attention to the following points:

- Fit the coupler projection Ⓐ into the ECU stopper Ⓑ and install the ECU.

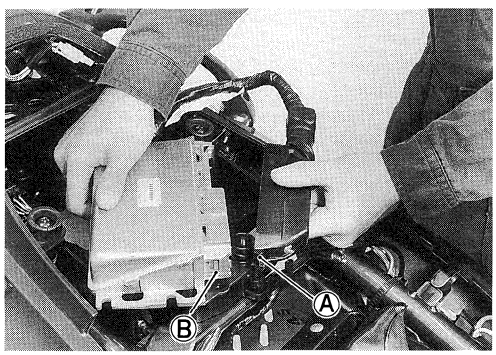

- Insert the projection Ⓒ on the ECU cover into the hole Ⓓ in the rear fender, then install the screw.

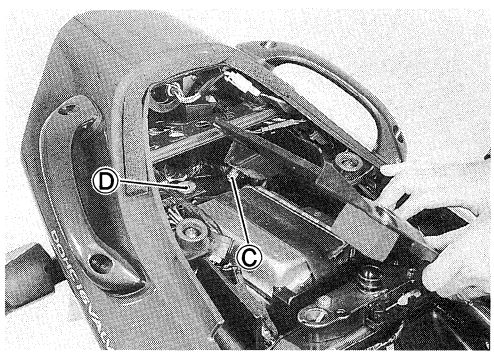

VI-3 HYDRAULIC UNIT REMOVAL

WARNING

* **This brake system is filled with an ethylene glycol-based DOT 4 brake fluid. Do not use or mix different types of fluid such as silicone-based or petroleum-based brake fluids.**
* **Do not use any brake fluid taken from old, used or unsealed containers. Never reuse brake fluid left over from the last servicing or stored for long periods of time.**
* **When storing brake fluid, seal the container completely and keep it away from children.**
* **When replenishing brake fluid, take care not to get dust into the fluid.**
* **When washing brake components, use fresh brake fluid. Never use cleaning solvent.**
* **A contaminated brake disc or brake pad reduces braking performance. Discard contaminated pads and clean the disc with high quality brake cleaner or a neutral detergent.**

CAUTION

- **The ABS is made up of many precision parts; never subject it to strong impacts or allow it to become dirty or dusty.**
- **The hydraulic unit cannot be disassembled.**
- **Handle brake fluid with care: the fluid reacts chemically with paint, plastic, rubber materials, etc.**
- **If the hydraulic unit is removed, air bleed the brake system before riding the motorcycle.**

- Drain the brake fluid from the front and rear brakes.
  (Refer to page 5-16 in the GSF1200S.)
- Remove the seat and frame cover.
  (Refer to page 5-3 and 5-4 in the GSF1200S.)
- Remove the ECU.
  (Refer to page 67.)
- Remove the tool box ①.
- Remove the battery ②.
  (Refer to page 6-2 in the GSF1200S.)

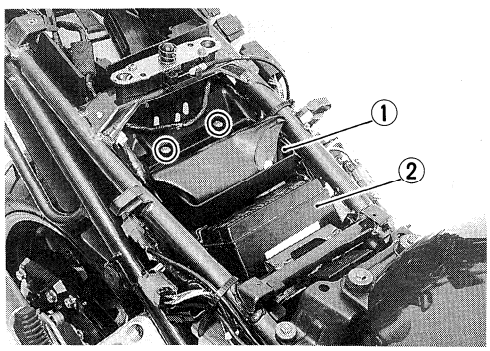

- Disconnect the ignitor unit couplers ①.
- Remove the clamp ②.
- Disconnect the license plate light coupler and rear turn signal coupler.

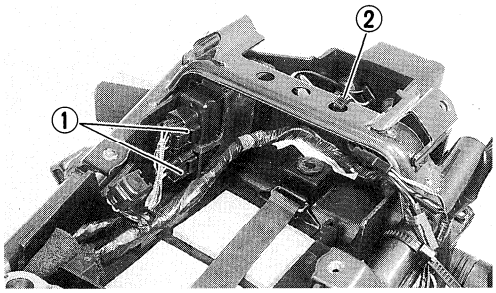

- Remove the rear fender ③.

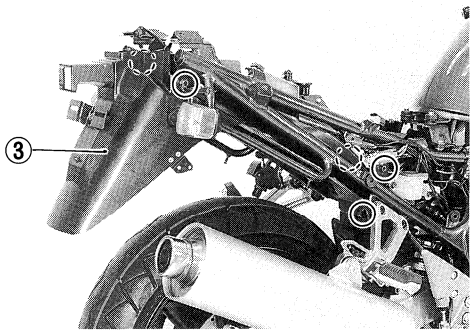

- Disconnect the hydraulic unit coupler ④, then remove the hydraulic unit lead wire from the clamp ⑤.

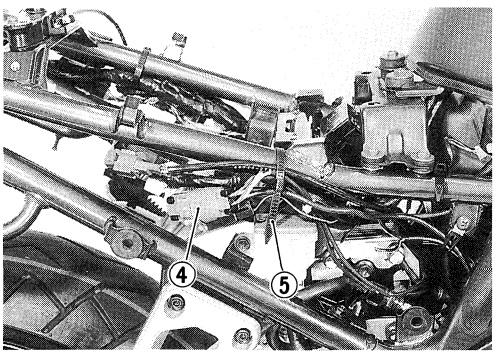

- Disconnect the hydraulic unit coupler ⑥ and the hydraulic unit ground wire ⑦, and then remove the hydraulic unit motor lead wire from the clamp ⑧.

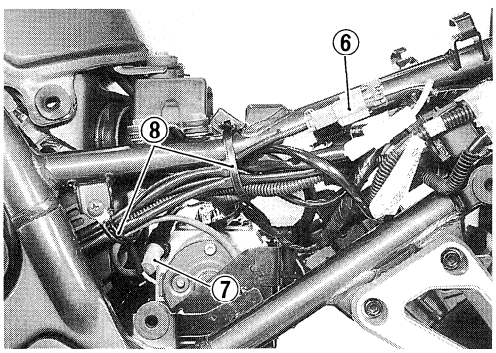

- Remove the union bolts ⑨ and brake hoses ⑩.

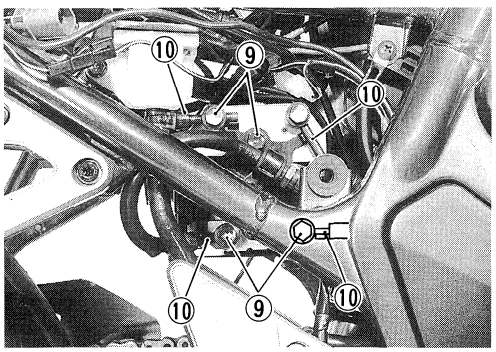

- Remove the bolts ⑪, then remove the hydraulic unit from the rear of the motorcycle.

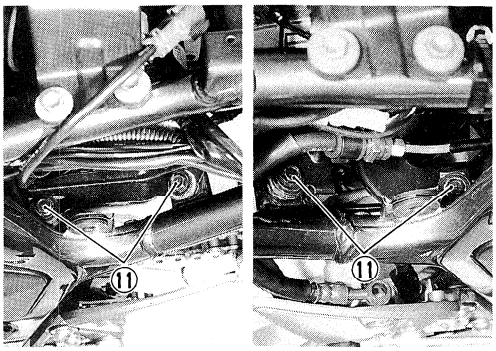

VI-3 HYDRAULIC UNIT INSPECTION

- Measure the resistance of the hydraulic unit solenoid valve between the hydraulic unit lead wire couplers. If the resistance is not within the ranges specified below, replace the hydraulic unit.

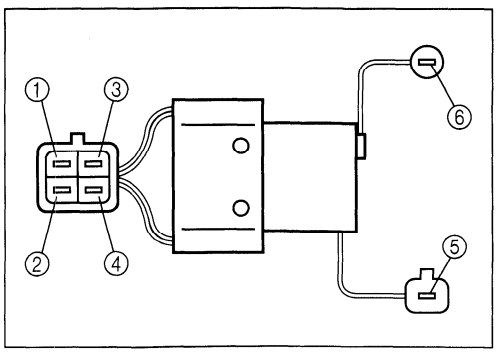

TOOL 09900-25002: Pocket tester

Tester knob indication: × 1Ω range

Hydraulic unit solenoid valve resistance:
0.06–1.30Ω (Yellow ① — Black ②)
0.06–1.30Ω (Yellow ③ — Black ④)

- Connect the hydraulic unit motor lead wire coupler ⑤ to the ⊕ battery terminal ⑥, then connect the hydraulic unit ground wire terminal to the ⊖ battery terminal. If the hydraulic unit motor does not make an operating sound, replace it with a new one.

⚠ CAUTION

Do not operate the hydraulic unit motor for more than five seconds.

- Inspect the hydraulic unit for cracks and damage.

VI-3 HYDRAULIC UNIT REMOUNTING

Remount the hydraulic unit in the reverse order of removal. Pay attention to the following points:

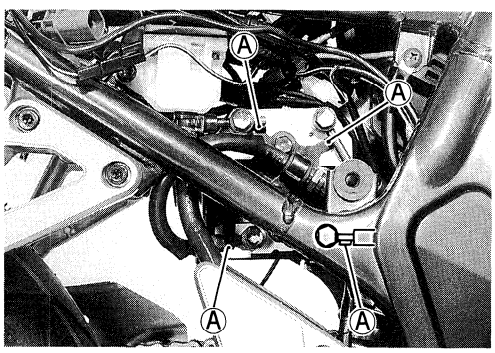

HYDRAULIC UNIT

- The brake hoses should contact the stopper Ⓐ on the hydraulic unit bracket; then tighten the union bolts.

- Tighten the brake hose union bolts to the specified torque.

Brake hose union bolt: 23 N•m (2.3 kg-m, 16.5 lb-ft)

CAUTION

Refer to the brake hose routing diagram (page 81) to correctly install the hydraulic unit.

- Pour new brake fluid into the master cylinder reservoir, then air bleed the brake system.

VI-4 ABS CIRCUIT BREAKER REMOVAL

CAUTION

- **The ABS is made up of many precision parts; never subject it to strong impacts or allow it to become dirty or dusty.**
- **The ABS circuit breaker cannot be disassembled.**

- Remove the seat.
- Remove the ABS circuit breaker ① from the frame.
- Pull out the hooks ②, then pull the ABS circuit breaker ① up and out of the coupler.

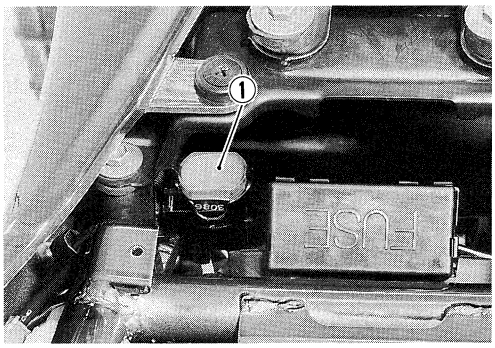

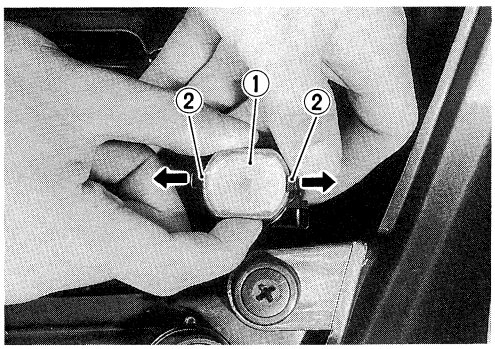

VI-4 ABS CIRCUIT BREAKER INSPECTION

- Check that the red button ① on the top of the ABS circuit breaker has not popped out. If it has, press it back in.
- Check the continuity between terminals ② and ③, with a pocket tester.
  If there is no continuity, replace the ABS circuit breaker.

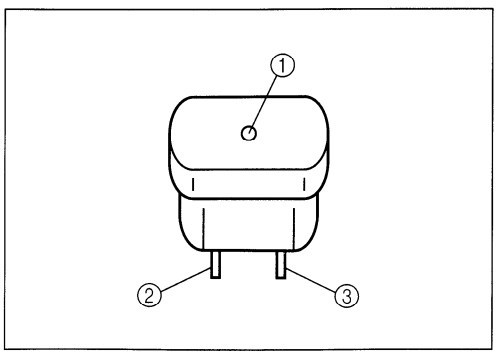

VI-4 ABS CIRCUIT BREAKER REMOUNTING

Remount the ABS circuit breaker in the reverse order of removal.

VI-5 HYDRAULIC UNIT SOLENOID VALVE RELAY AND HYDRAULIC UNIT MOTOR RELAY REMOVAL

- Remove the seat and frame cover.

- Remove the hydraulic unit solenoid valve relay ① from the frame, then disconnect the relay coupler ②.
- Remove the hydraulic unit motor relay ③ from the frame, then disconnect its coupler ④.

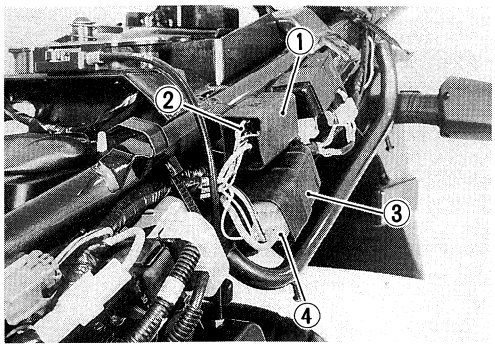

VI-5 HYDRAULIC UNIT SOLENOID VALVE RELAY INSPECTION

- Measure the resistance between terminals ① and ②.
  If the resistance is not within the specified range, replace the relay.

TOOL 09900-25002: Pocket tester

Tester knob indication: × 10Ω range

Hydraulic unit solenoid valve relay resistance:
92–114Ω (① - ②)

- Check for continuity between terminals ③ and ④, with a pocket tester. If there is no continuity, replace the hydraulic unit solenoid valve relay.
- Connect the ⊕ terminal of a 12 volt battery to terminal ① and the ⊖ battery terminal to terminal ②, then check that there is no continuity between terminals ③ and ④, and that there is continuity between terminals ③ and ⑤. If the continuity is not within the specified range, replace the hydraulic unit solenoid valve relay.

TOOL 09900-25002: Pocket tester

Tester knob indication: × 1Ω range

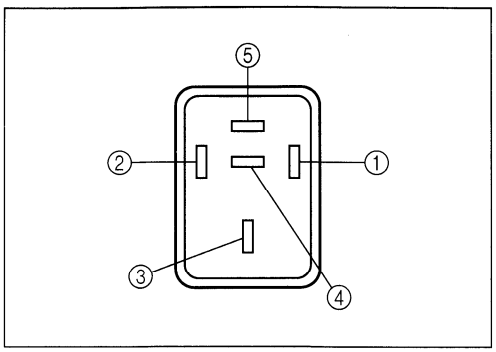

VI-5 HYDRAULIC UNIT MOTOR RELAY INSPECTION

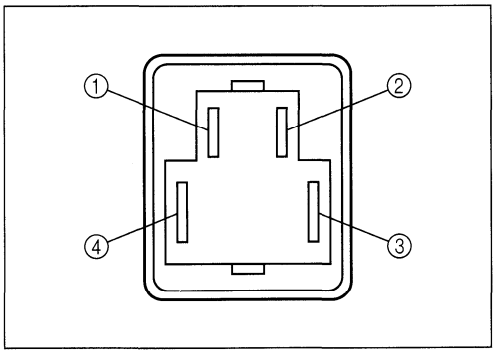

- Measure the resistance between terminals ① and ②. If the resistance is not within the specified range, replace the hydraulic unit motor relay.

TOOL 09900-25002: Pocket tester

Tester knob indication: × 10Ω range

Hydraulic unit motor relay resistance:
42–48Ω (① - ②)

- Check that there is no continuity between terminals ③ and ④, with a pocket tester. If there is continuity, replace the relay.
- Connect the ⊕ terminal of a 12 volt battery to terminal ① and the ⊖ battery terminal to terminal ②, then check that there is continuity between terminals ③ and ④. If there is no continuity, replace the hydraulic unit motor relay.

TOOL 09900-25002: Pocket tester

Tester knob indication: × 1Ω range

VI-5 HYDRAULIC UNIT SOLENOID VALVE RELAY AND HYDRAULIC UNIT MOTOR RELAY REMOUNTING

Remount the hydraulic unit solenoid valve relay and hydraulic unit motor relay in the reverse order of removal.

VI-6 FRONT BRAKE DIODE AND REAR BRAKE DIODE REMOVAL

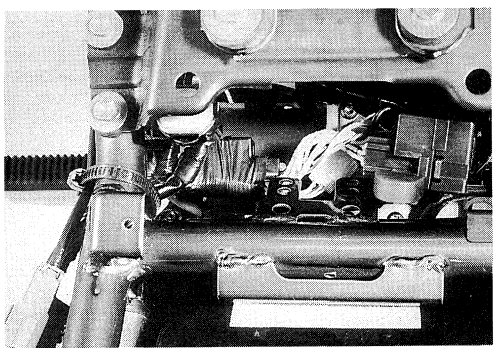

- Remove the seat and frame cover.
- Remove the fuse box from the frame.
- Cut off the tape around wire harness No.1 and the ABS warning indicator light diode.

⚠ CAUTION

When cutting off the tape around the diodes, do not cut the lead wires or wire harness No.1.

- Remove the front brake diode ① and rear brake diode ②, then disconnect their couplers.

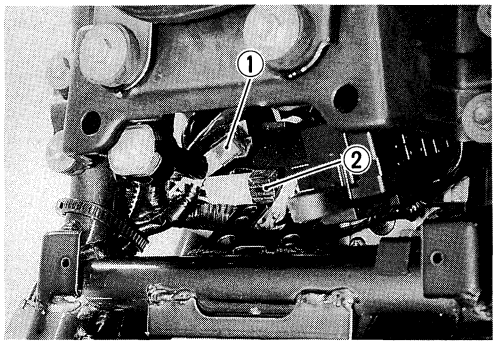

VI-6 FRONT BRAKE DIODE AND REAR BRAKE DIODE INSPECTION

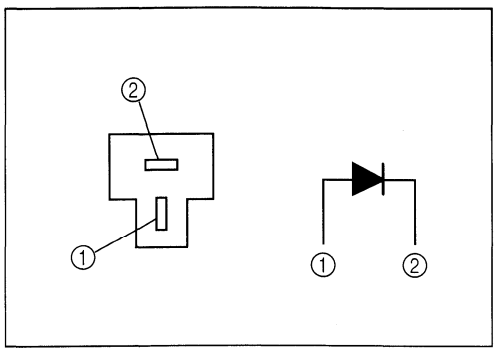

- Check the continuity between terminals ① and ②, with a pocket tester. If the readings are out of specification, replace the diode.

TOOL 09900-25002: Pocket tester

Tester knob indication: × 1Ω range

Tester ⊕ to ① and tester ⊖ to ②: No continuity
Tester ⊕ to ② and tester ⊖ to ①: Continuity

- Measure the voltage between terminals ① and ②, with the multi-circuit tester set. If the voltage is out of specification, replace the diode.

TOOL 09900-25008: Multi-circuit tester set

Tester knob indication: ⊣▶⊢ range

Tester ⊕ to ① and tester ⊖ to ②: About 0.5V
Tester ⊕ to ② and tester ⊖ to ①: About 1.5V

VI-6 FRONT BRAKE DIODE AND REAR BRAKE DIODE REMOUNTING

Remount the front brake diode and rear brake diode in the reverse order of removal. Pay attention to the following points:

- Retape the area in the same way that it was taped before.

VI-7 ABS WARNING INDICATOR LIGHT DIODE REMOVAL

- Remove the seat and frame cover.
- Cut off the tape around wire harness No.2 and the ABS warning indicator light diode.

⚠ CAUTION

When cutting off the tape around the diode, do not cut the lead wires or wire harness No.2.

- Remove the ABS warning indicator light diode ①, then disconnect the coupler.

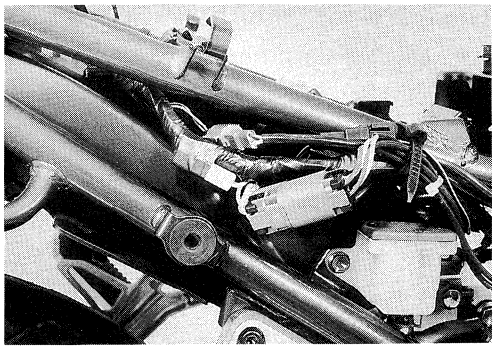

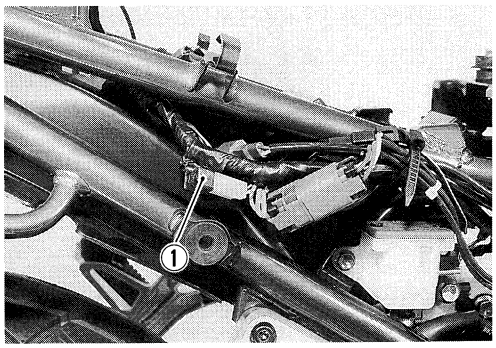

VI-7 ABS WARNING INDICATOR LIGHT DIODE INSPECTION

- Check the continuity between terminals ① and ②, with a pocket tester. If the readings are out of specification, replace the diode.

TOOL 09900-25002: Pocket tester

Tester knob indication: × 1Ω range

Tester ⊕ to ① and tester ⊖ to ②: No continuity
Tester ⊕ to ② and tester ⊖ to ①: Continuity

- Measure the voltage between terminals ① and ②, with a multi-circuit tester set. If the voltage is out of specification, replace the diode.

TOOL 09900-25008: Multi-circuit tester

Tester knob indication: ⊣▶⊢ range

Tester ⊕ to ① and tester ⊖ to ②: About 0.5 V
Tester ⊕ to ② and tester ⊖ to ①: About 1.5 V

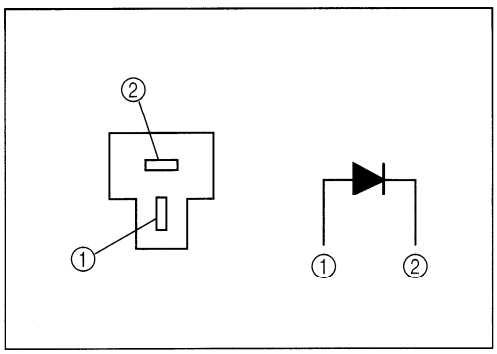

VI-7 ABS WARNING INDICATOR LIGHT DIODE REMOUNTING

Remount the ABS warning indicator light diode in the reverse order of removal. Pay attention to the following points:

- Retape the area in the same way that it was taped before.

VI-8 ABS WARNING INDICATOR LIGHT BULB REPLACEMENT

- Remove the side fairings.
  (Refer to pages 5-1 and 5-2 of the GSF1200S.)
- Disconnect the speedometer cable ① from the speedometer.
- Remove the meter covers ②.

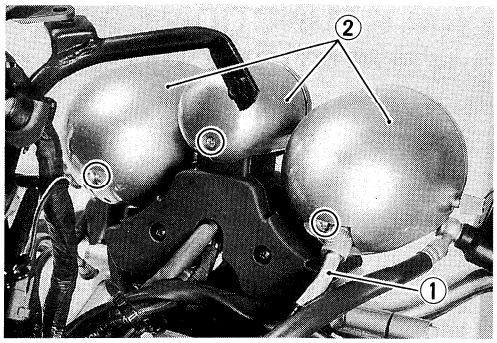

- Remove the indicator cover ③.

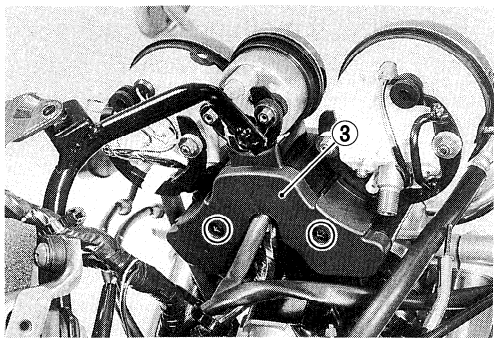

- Remove the ABS warning indicator light bulb socket ④ from the indicator unit.

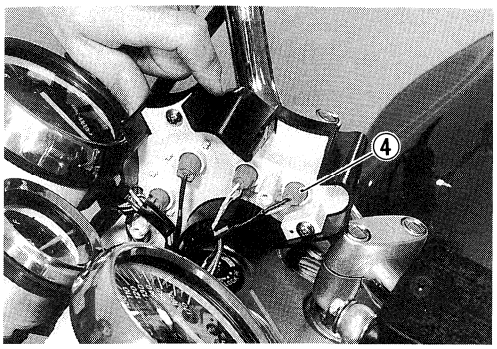

- Remove the ABS warning indicator light bulb ⑤ from the socket.
- Install a new bulb.
  Only use a bulb with the specified wattage.

ABS warning indicator light bulb: 12 V 3 W

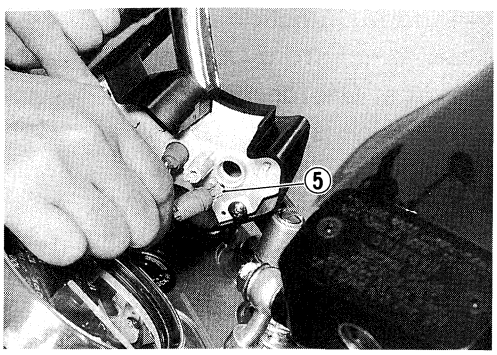

⚠ CAUTION

If you touch the bulb with your bare hands, wipe off the bulb with a cloth moistened with alcohol or soapy water. If the bulb is dirty, it may break when lit.

- Reinstall the removed parts.

VII MALFUNCTION CODES DELETED AND OPERATION CHECK

OPERATION CHECK

- After repairing the problem, be sure to clear the malfunction codes. Before returning the motorcycle to the customer, take a test ride. When the motorcycle goes over 20 km/h activate the ABS, then execute the self-diagnosis function to check that only start code 12 is output (indicating proper ABS operation). If any malfunction codes remain, perform the appropriate procedures, then delete the codes. If malfunction codes are left stored, confusion may occur and unnecessary repairs may be made.
  Afterwards, ride the motorcycle at more than 30 km/h and quickly apply the brakes to check that the ABS activates correctly.

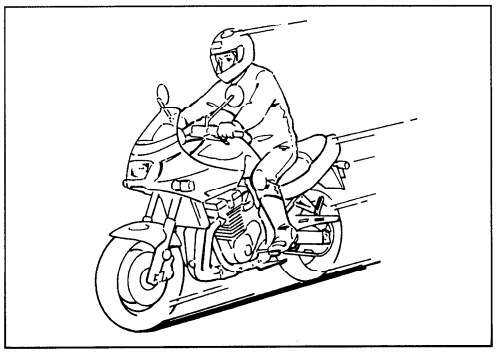

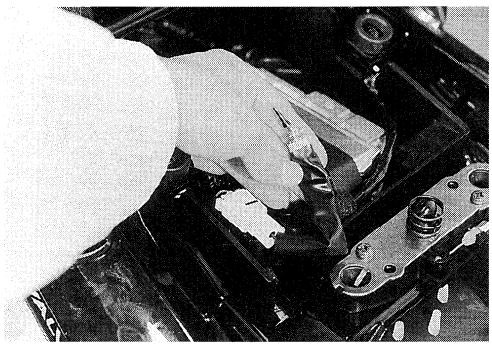

MALFUNCTION CODE DELETING

- Delete the malfunction codes by switching the ABS test switch to ON and then to OFF. Check the malfunction codes that are output.
- While the malfunction codes are being output, set the ABS test switch to OFF. The malfunction code deletion mode begins 12.5 seconds after the ABS test switch is set to OFF.

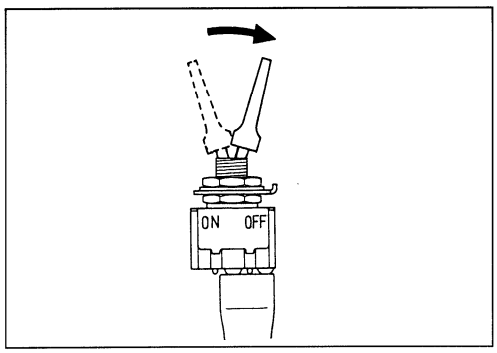

- In the malfunction code deletion mode, switch the ABS test switch from OFF to ON three times, each time leaving it at ON for more than 1 second. The third time that the switch is set to OFF a relay will be heard and the malfunction codes will be deleted.

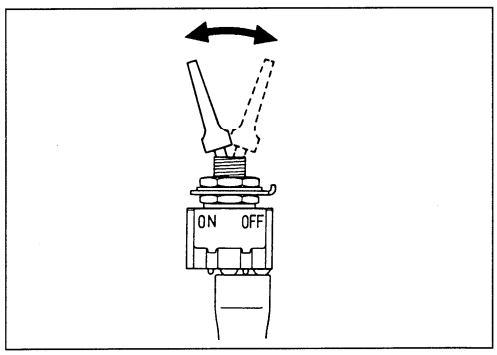

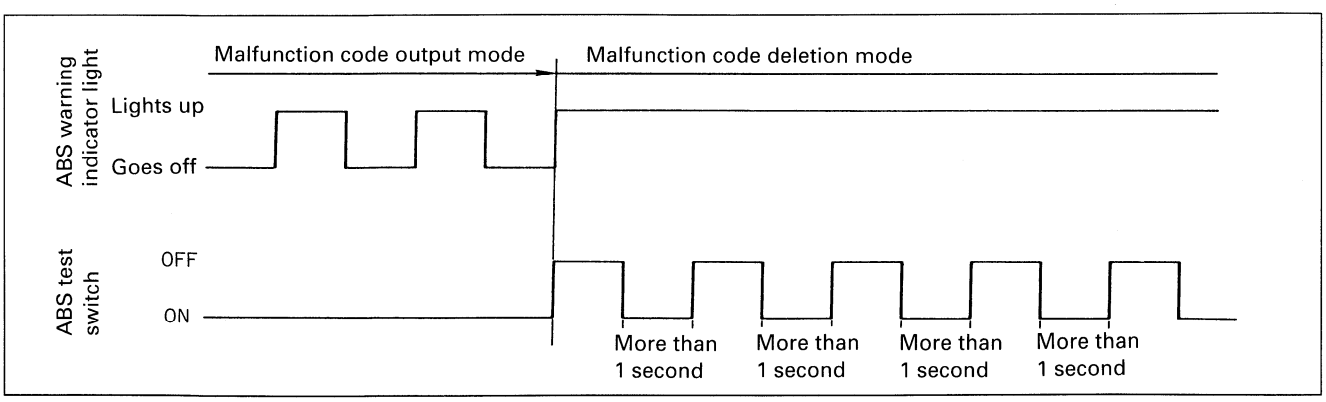

SERVICING INFORMATION

WIRNIG DIAGRAM
(For U.S.A.)

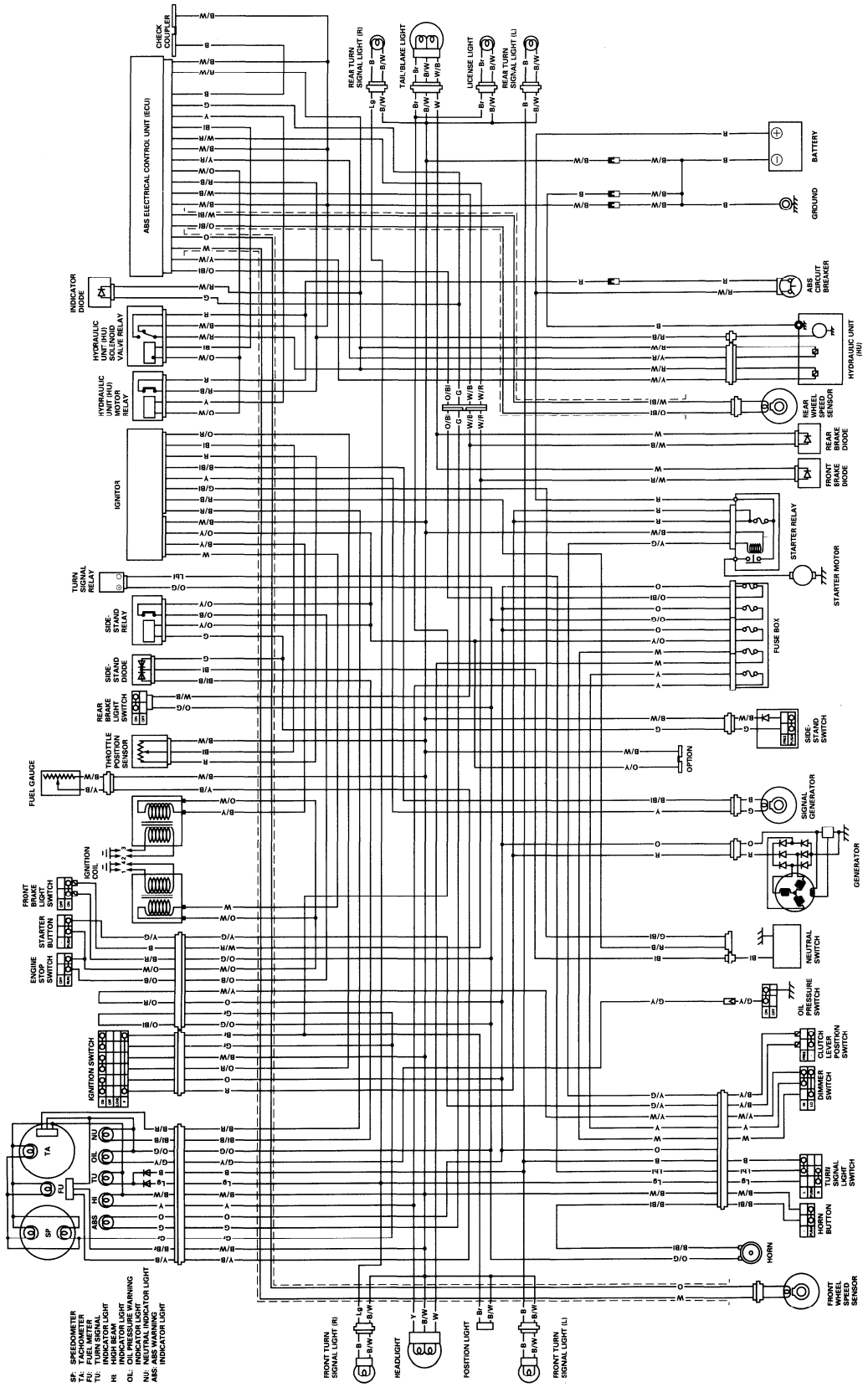

(For Australia)

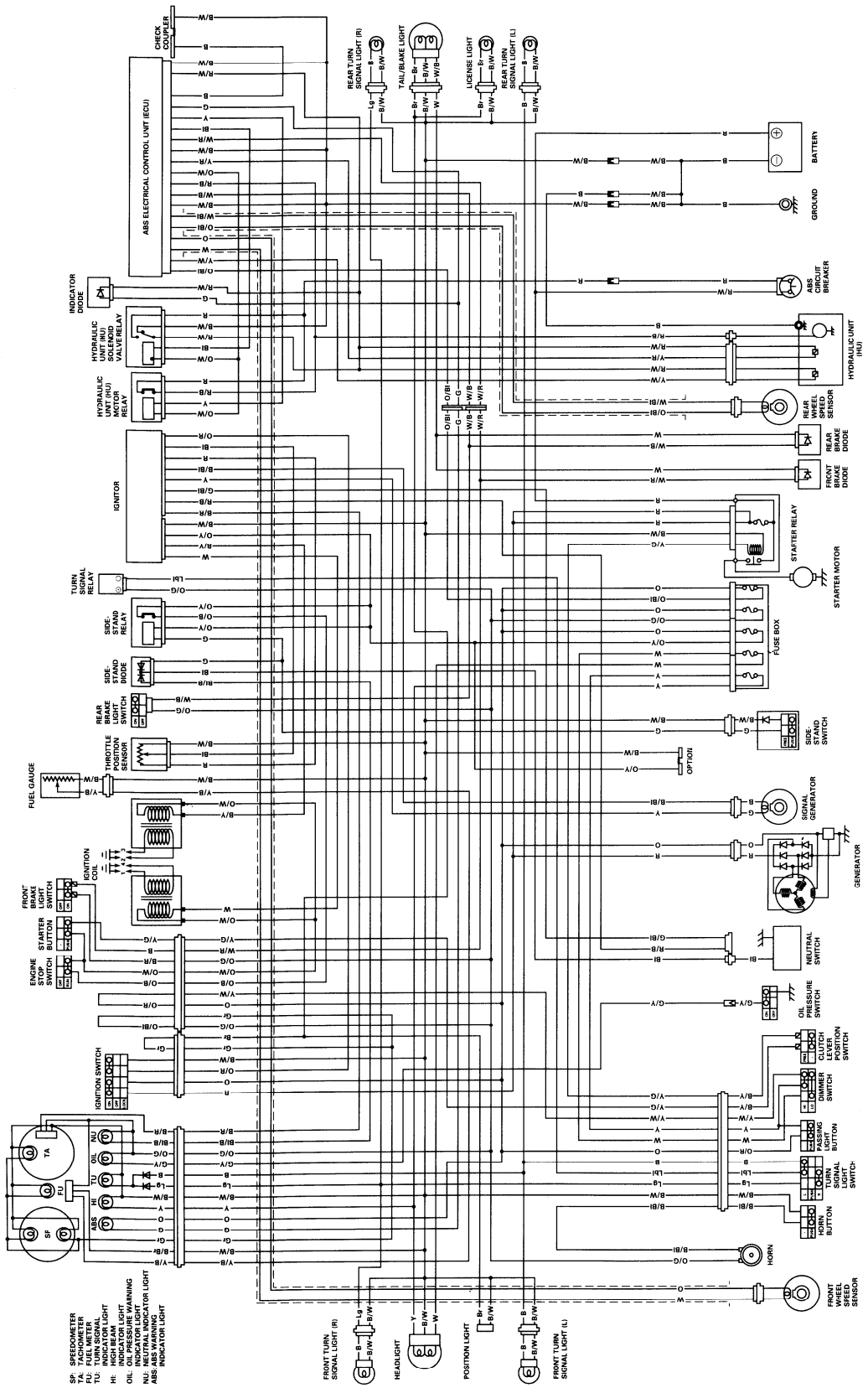

(For the others)

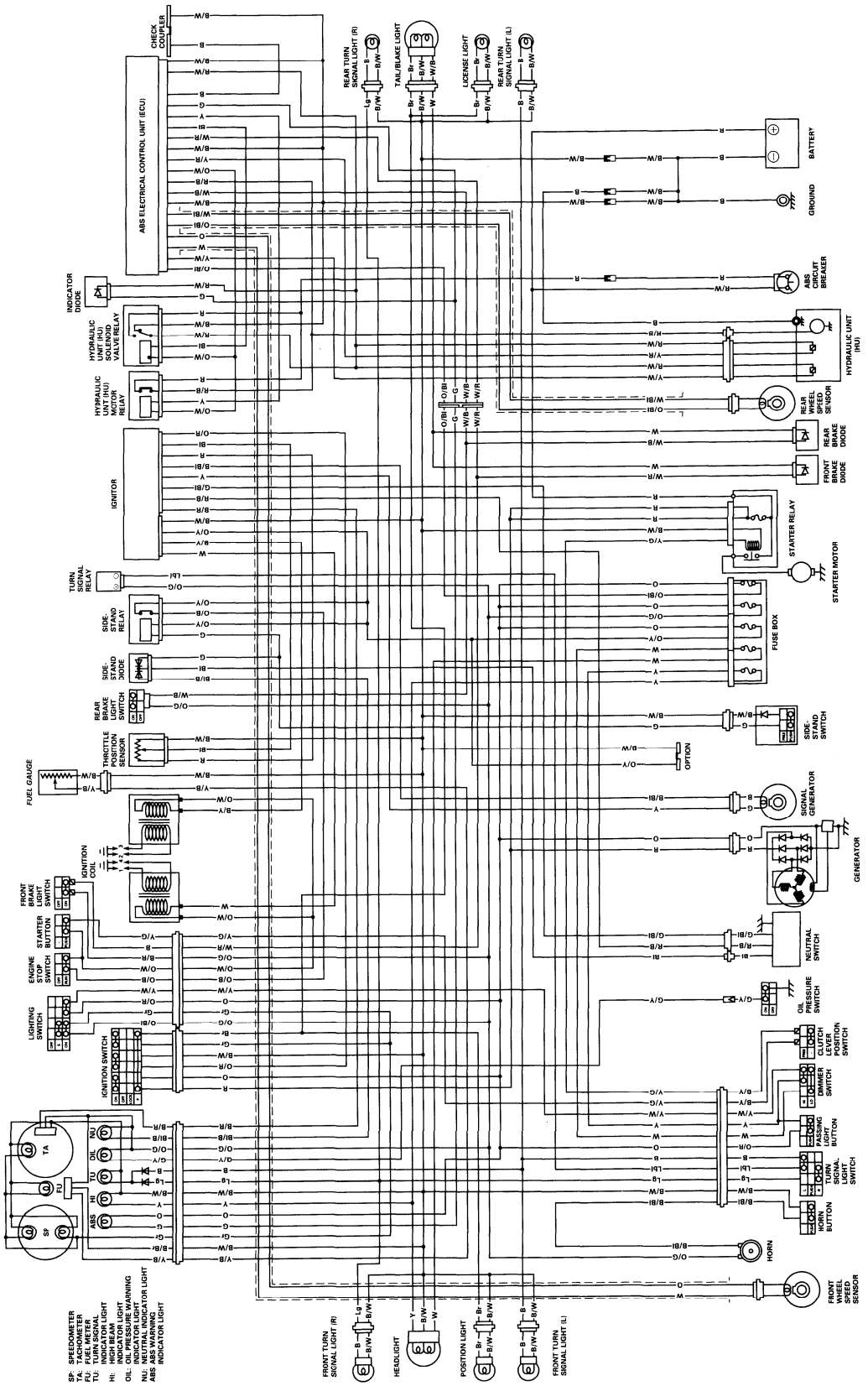

WIRE COLOR

B . . . . . Black
Bl . . . . Blue
Br . . . . Brown
G . . . . . Green
Gr . . . . Gray
Lbl . . . . Light blue
Lg . . . . Light green
O . . . . . Orange
R . . . . . Red
W . . . . . White
Y . . . . . Yellow
B/Bl . . . . Black with Blue tracer
B/Br . . . . Black with Brown tracer
B/R . . . . Black with Red tracer
B/W . . . . Black with White tracer
B/Y . . . . Black with Yellow tracer
Bl/B . . . . Blue with Black tracer
G/Bl . . . . Green with Blue tracer
G/Y . . . . Green with Yellow tracer
O/B . . . . Orange with Black tracer
O/Bl . . . . Orange with Blue tracer
O/G . . . . Orange with Green tracer
O/R . . . . Orange with Red tracer
O/W . . . . Orange with White tracer
O/Y . . . . Orange with Yellow tracer
R/B . . . . Red with Black tracer
R/W . . . . Red with White tracer
Y/B . . . . Yellow with Black tracer
Y/G . . . . Yellow with Green tracer
Y/R . . . . Yellow with Red tracer
Y/W . . . . Yellow with White tracer
W/B . . . . White with Black tracer
W/Bl . . . . White with Blue tracer
W/R . . . . White with Red tracer

WIRE HARNESS, CABLE AND HOSE ROUTING

WIRE HARNESS ROUTING

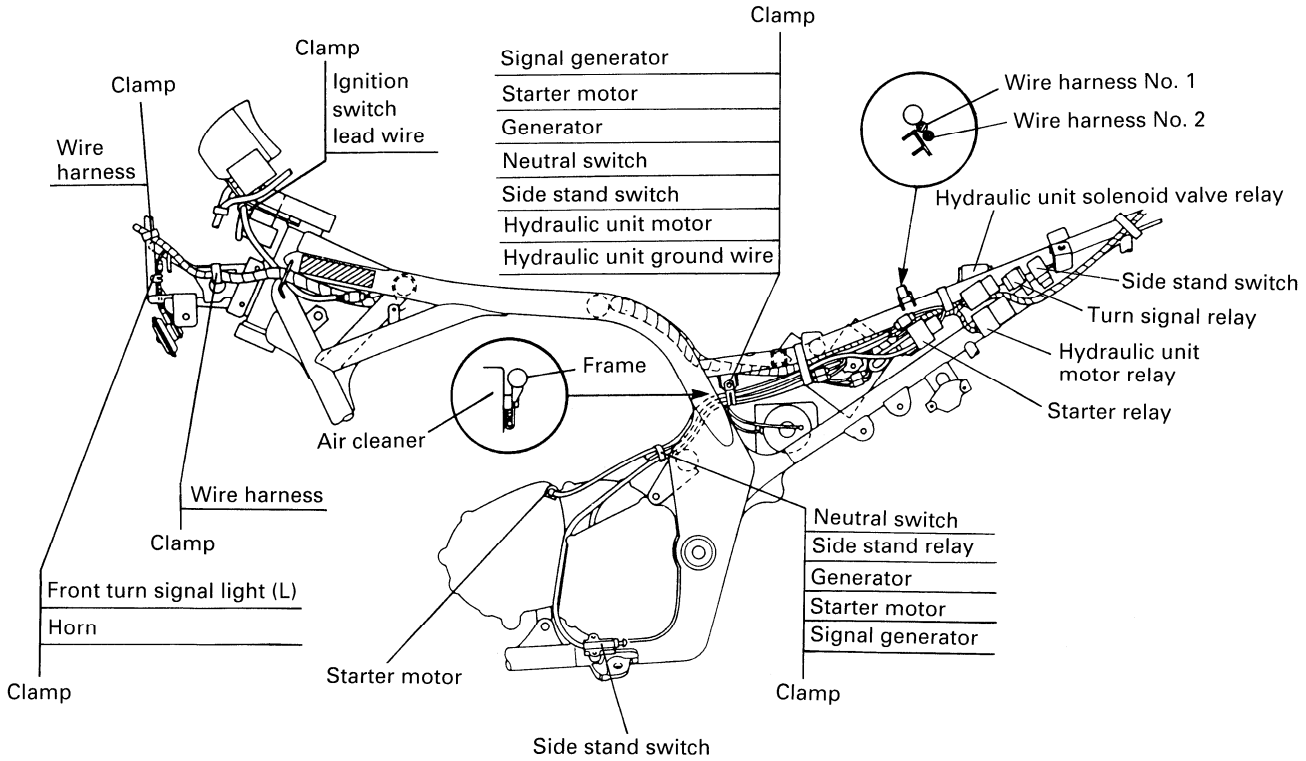

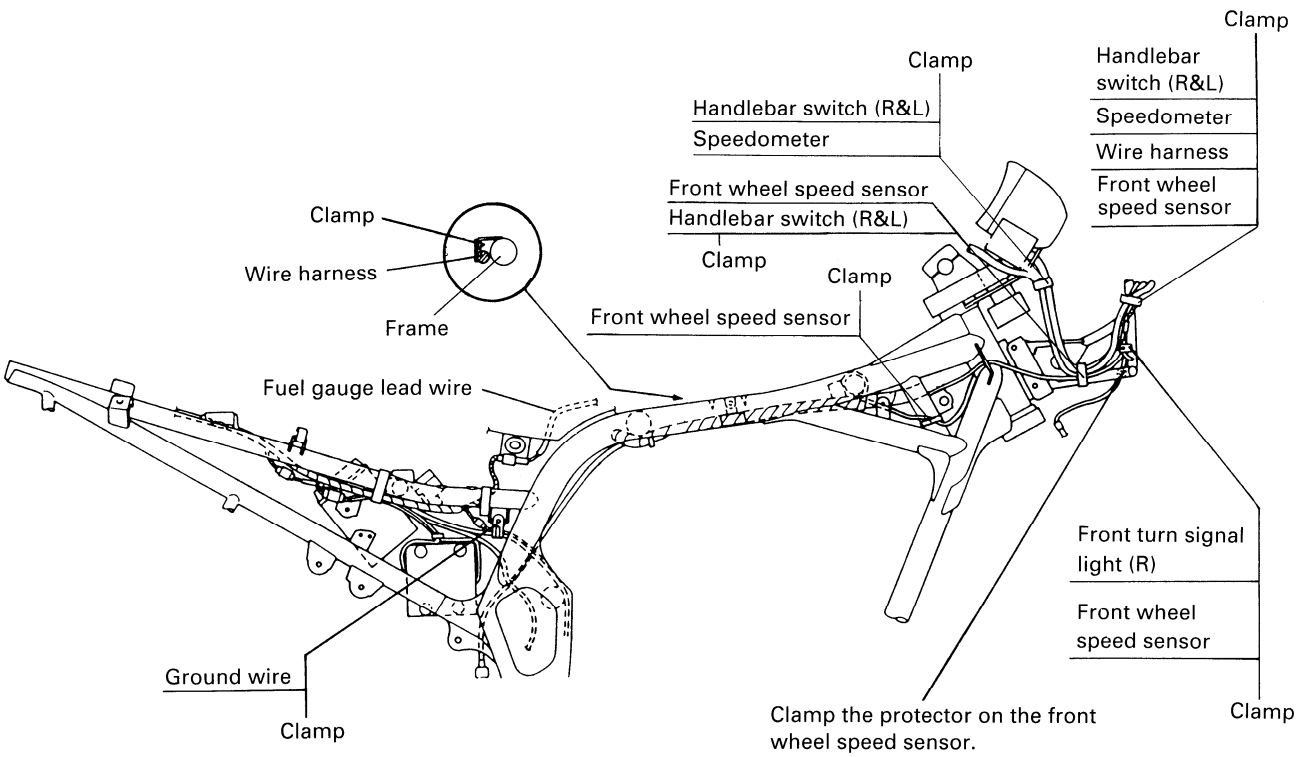

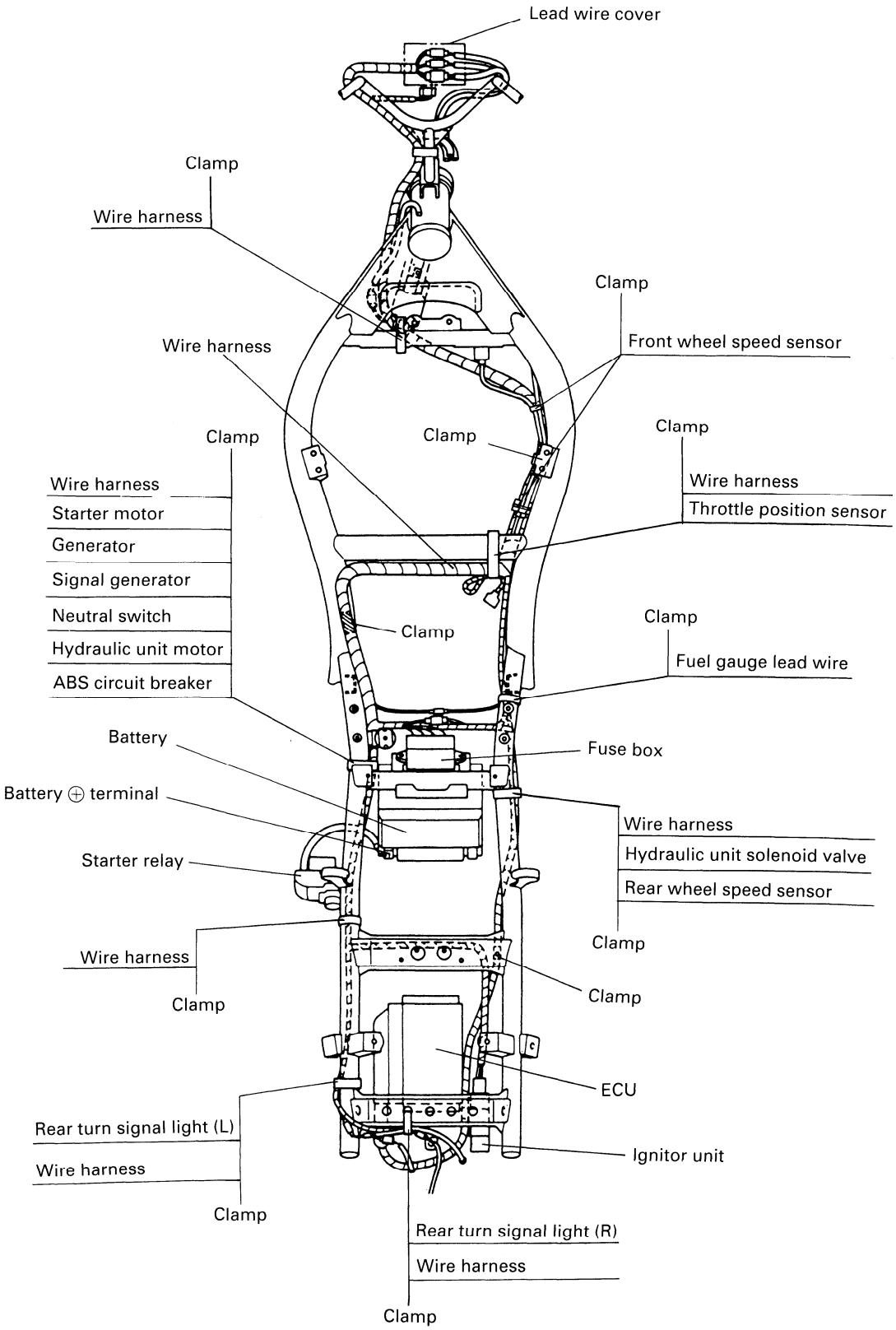
Lead wire cover
Clamp
Wire harness
Clamp
Front wheel speed sensor
Wire harness
Clamp
Clamp
Clamp
Wire harness
Starter motor
Generator
Signal generator
Neutral switch
Hydraulic unit motor
ABS circuit breaker
Wire harness
Throttle position sensor
Clamp
Clamp
Fuel gauge lead wire
Battery
Fuse box
Battery ⊕ terminal
Wire harness
Hydraulic unit solenoid valve
Rear wheel speed sensor
Starter relay
Clamp
Wire harness
Clamp
Clamp
ECU
Rear turn signal light (L)
Wire harness
Ignitor unit
Clamp
Rear turn signal light (R)
Wire harness
Clamp

HIGH-TENSION CORD ROUTING

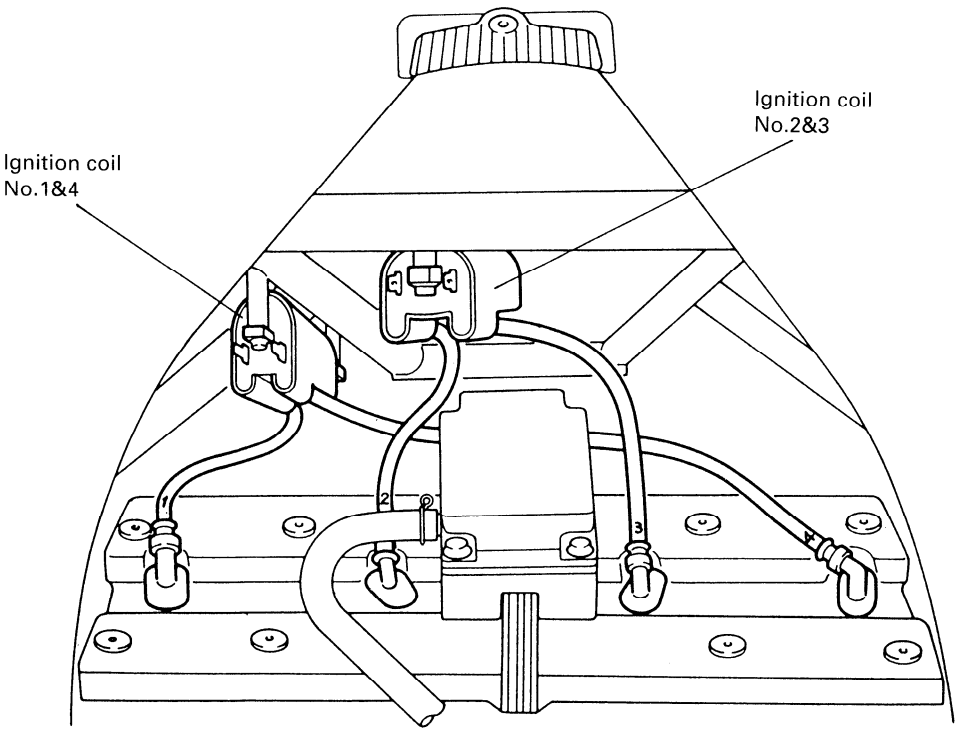

BRAKE HOSE ROUTING

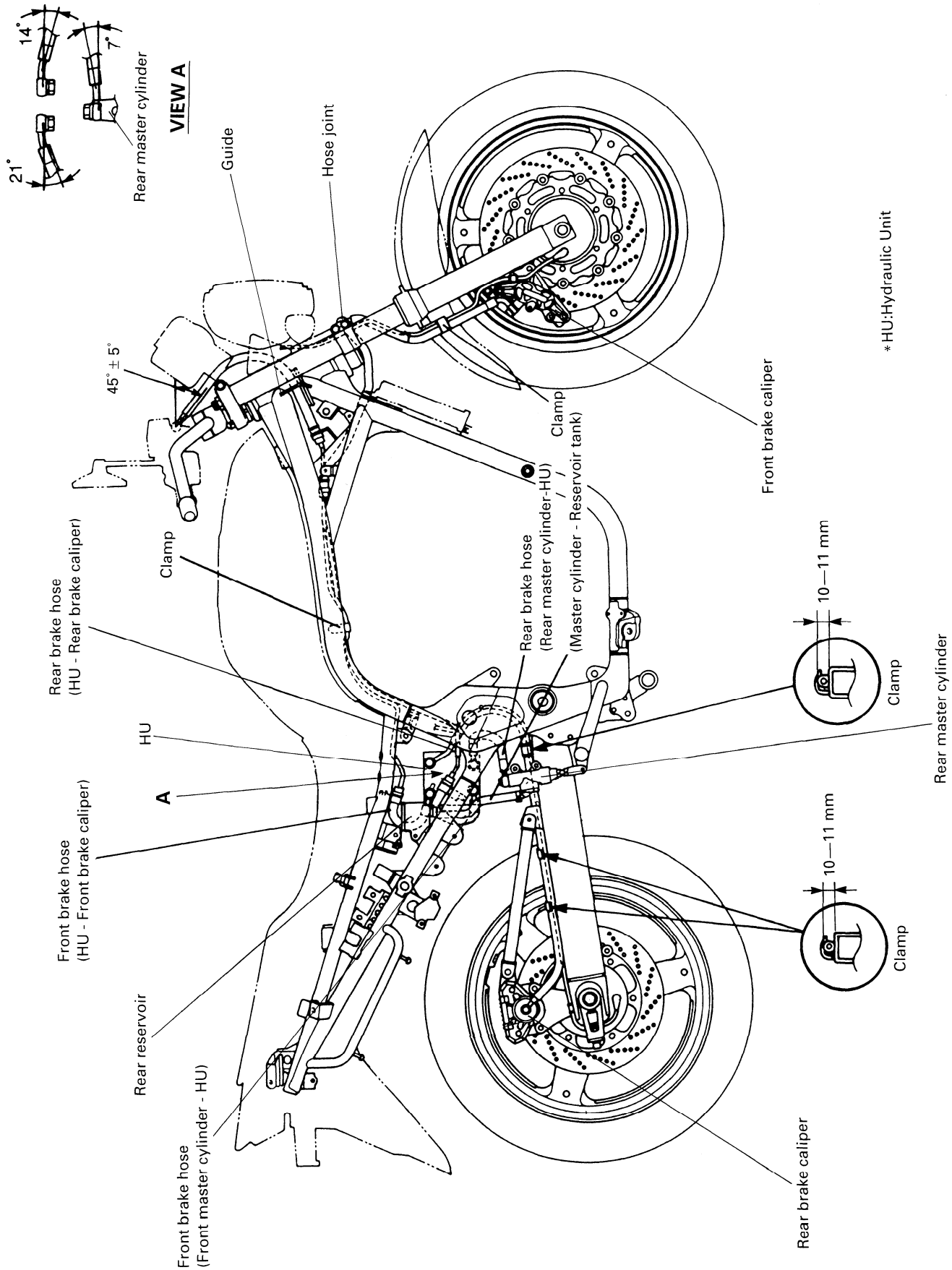

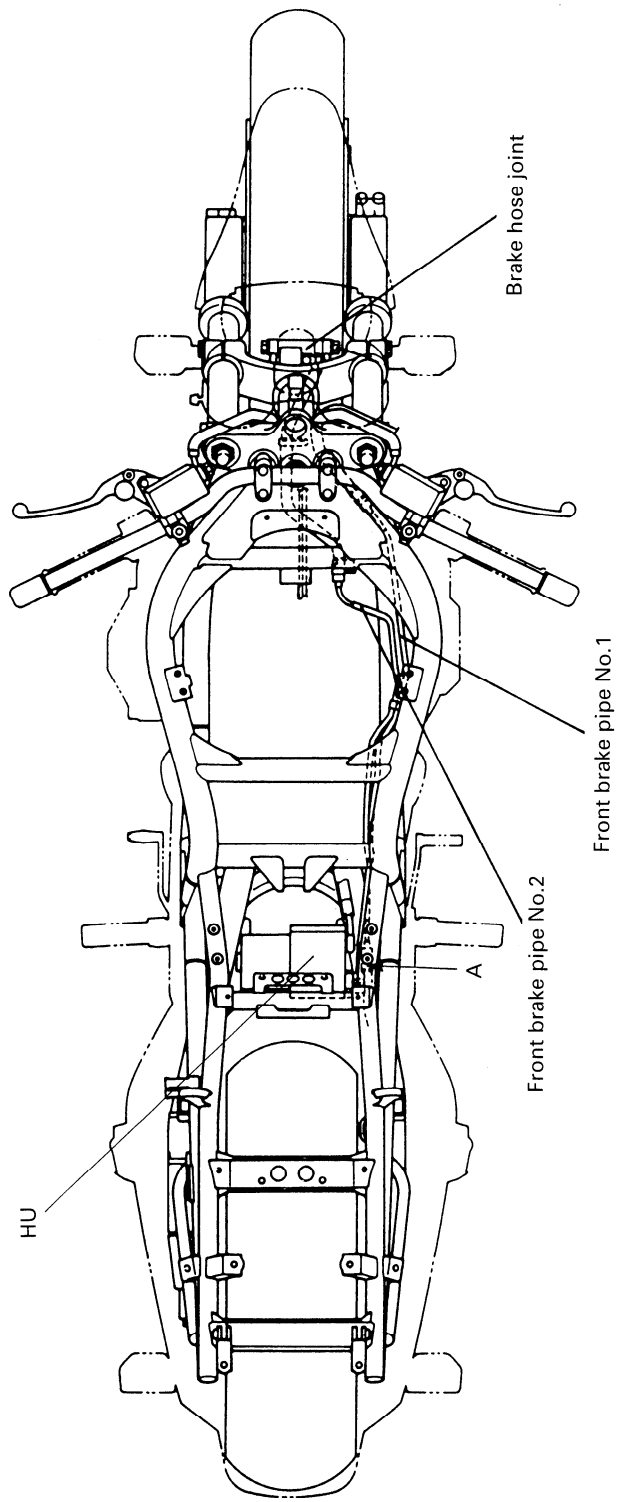

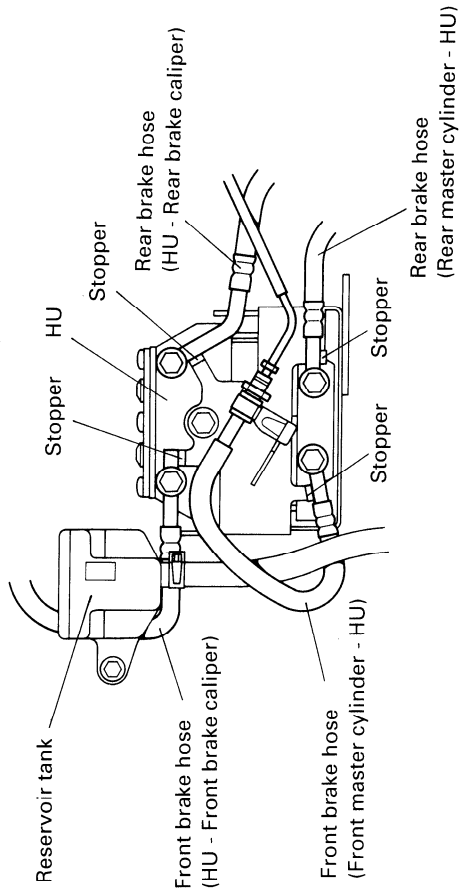

VIEW A

* HU: Hydraulic Unit

CLUTCH HOSE ROUTING

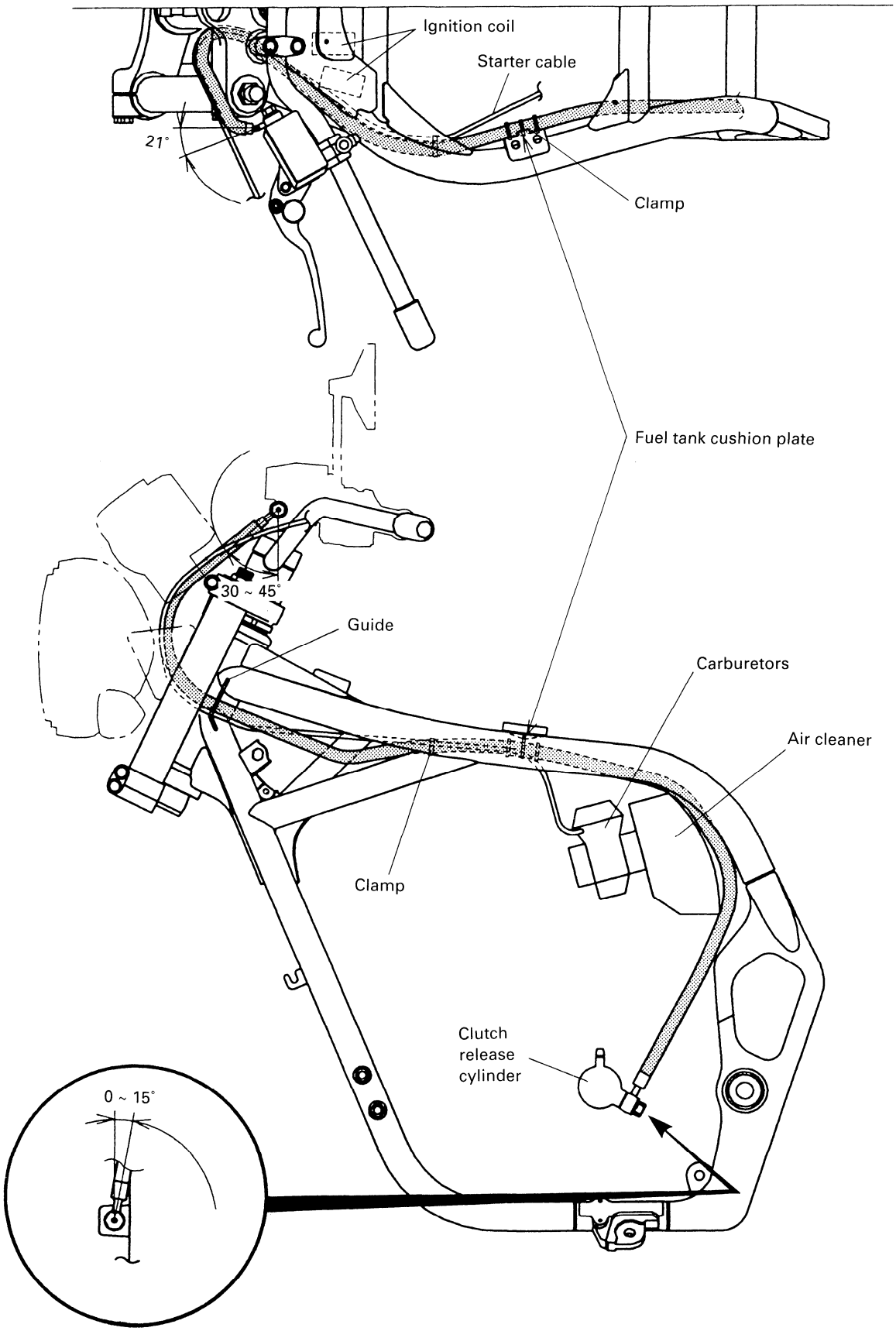

SPECIAL TOOLS

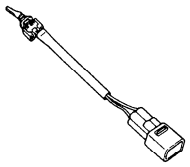	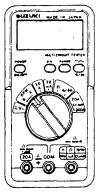
09930-82710 **ABS test switch**	**09900-25008** **Multi-circuit tester**

GSF1200W/SW ('98-MODEL)
GSF1200X/SX ('99-MODEL)

CONTENTS

SPECIFICATIONS **10- 1**
SERVICE DATA **10- 2**

NOTE:
The specifications and service data are the same as those of the '97-MODEL.

SPECIFICATIONS

DIMENSIONS AND DRY MASS	
Overall length	2 165 mm (85.2 in) E-17, 22
	2 225 mm (87.6 in) E-18
	2 095 mm (82.5 in) ..... Others
Overall width	790 mm (31.1 in)
Overall height	1 215 mm (47.8 in) GSF1200S
	1 100 mm (43.3 in) GSF1200
Wheelbase	1 435 mm (56.5 in)
Ground clearance	130 mm (5.1 in)
Seat height	835 mm (32.9 in)
Dry mass	214 kg (471 lbs) GSF1200S
	211 kg (465 lbs) GSF1200
ENGINE	
Type	4-Stroke, air-cooled with SACS, DOHC, TSCC
Number of cylinders	4
Bore	79.0 mm (3.110 in)
Stroke	59.0 mm (2.323 in)
Displacement	1 157 cm^3 (70.6 cu. in)
Compression ratio	9.5 : 1
Carburetor	BST36, four
Air cleaner	Non-woven fabric element
Starter system	Electric
Lubrication system	Wet sump
TRANSMISSION	
Clutch	Wet multi-plate type
Transmission	5-speed constant mesh
Gearshift pattern	1-down, 4-up
Primary reduction ratio	1.565 (72/46)
Gear ratios, Low	2.384 (31/13)
2nd	1.631 (31/19)
3rd	1.250 (25/20)
4th	1.045 (23/22)
Top	0.913 (21/23)
Final reduction ratio	3.000 (45/15)
Drive chain	RK GB50MFOZ1, 110 links
CHASSIS	
Front suspension	Telescopic, coil spring, oil damped, spring pre-load fully adjustable
Rear suspension	Link type, coil spring, oil damped, spring pre-load 7-way adjustable, rebound damping force 4-way adjustable
Front fork stroke	130 mm (5.1 in)
Rear wheel travel	134 mm (5.3 in)
Steering angle	35° (right & left)
Caster	25° 36′
Trail	107 mm (4.2 in)
Turning radius	2.8 m (9.2 ft)
Front brake	Disc brake, Twin
Rear brake	Disc brake
Front tire size	120/70 ZR17 (58W)
Rear tire size	180/55 ZR17 (73W)
ELECTRICAL	
Ignition type	Electronic ignition (Transistorized)
Ignition timing	7° B.T.D.C. at 1 500 r/min
Spark plug	NGK JR9B
Battery	12V 36 kC (10 Ah)/10 HR
Generator	Three-phase A.C. generator
Main fuse	30A
Fuse	15/15/10/15/10A
Headlight	12V 60/55W
Position light	12V 4W ..... Except E-03, 24, 28, 33
Turn signal light	12V 21W × 4
Brake light/Taillight	12V 21/5W
License plate light	12V 5W
Speedometer light	12V 1.7W × 2
Tachometer light	12V 1.7W
Fuel indicator light	12V 1.7W
Neutral indicator light	12V 3.0W
High beam indicator light	12V 3.0W
Turn signal indicator light	12V 3.0W × 2
Oil pressure indicator light	12V 3.0W
CAPACITIES	
Fuel tank, including reserve	19.0 L (5.0/4.1 US/Imp gal)
Reserve	4.5 L (1.1/0.9 US/Imp gal)
Engine oil oil change	3 300 ml (3.4/2.9 US/Imp qt)
with filter change	3 500 ml (3.6/3.0 US/Imp qt)
overhaul	4 600 ml (4.9/4.0 US/Imp qt)

SERVICE DATA

VALVE + GUIDE

Unit: mm (in)

ITEM	STANDARD		LIMIT
Valve diam.	IN.	28.5 (1.12)	———
	EX.	25 (1.0)	———
Valve clearance (when cold)	IN.	0.10–0.15 (0.004–0.006)	———
	EX.	0.18–0.23 (0.007–0.009)	———
Valve guide to valve stem clearance	IN.	0.020–0.047 (0.0008–0.0019)	———
	EX.	0.040–0.067 (0.0016–0.0026)	———
Valve stem deflection	IN. & EX.	———	0.35 (0.014)
Valve guide I.D.	IN. & EX.	5.000–5.012 (0.1969–0.1973)	———
Valve stem O.D.	IN.	4.965–4.980 (0.1955–0.1961)	———
	EX.	4.945–4.960 (0.1947–0.1953)	———
Valve stem runout	IN. & EX.	———	0.05 (0.002)
Valve head thickness	IN. & EX.	———	0.5 (0.02)
Valve stem end length	IN. & EX.	———	2.5 (0.10)
Valve seat width	IN. & EX.	0.9–1.1 (0.035–0.043)	———
Valve head radial runout	IN. & EX.	———	0.03 (0.001)
Valve spring free length (IN. & EX.)	INNER	———	35.0 (1.38)
	OUTER	———	37.8 (1.49)
Valve spring tension (IN. & EX.)	INNER	5.3–6.5 kg (11.7–14.3 lbs) at length 28 (1.1)	———
	OUTER	13.1–15.1 kg (28.9–33.3 lbs) at length 31.5 (1.2)	———

CAMSHAFT + CYLINDER HEAD

Unit: mm (in)

ITEM	STANDARD		LIMIT
Cam height	IN.	33.58–33.62 (1.3220–1.3236)	33.28 (1.3102)
	EX.	33.41–33.45 (1.3154–1.3170)	33.11 (1.3035)
Camshaft journal oil clearance	IN. & EX.	0.032–0.066 (0.0013–0.0026)	0.150 (0.0059)
Camshaft journal holder I.D.	IN. & EX.	22.012–22.025 (0.8666–0.8671)	———
Camshaft journal O.D.	IN. & EX.	21.959–21.980 (0.8645–0.8654)	———
Camshaft runout	IN. & EX.	———	0.10 (0.004)
Cam chain pin (at arrow "3")	24th pin		———
Rocker arm I.D.	IN. & EX.	12.000–12.018 (0.4724–0.4731)	———
Rocker arm shaft O.D.	IN. & EX.	11.973–11.984 (0.4714–0.4718)	———
Cylinder head distortion	———		0.20 (0.008)

CYLINDER + PISTON + PISTON RING

Unit: mm (in)

ITEM	STANDARD			LIMIT
Compression pressure	1 250 kPa (12.5 kg/cm^2 178 psi)			875 kPa (8.75 kg/cm^2 124 psi)
Compression pressure difference	———			200 kPa (2 kg/cm^2 28 psi)
Piston to cylinder clearance	0.040–0.070 (0.0016–0.0028)			0.120 (0.0047)
Cylinder bore	79.000–79.015 (3.1102–3.1108)			79.080 (3.1134)
Piston diam.	78.945–78.960 (3.1081–3.1087) Measure at 15 (0.6) from the skirt end.			78.880 (3.1055)
Cylinder distortion	———			0.20 (0.008)
Piston ring free end gap	1st	R	Approx. 10.0 (0.39)	8.0 (0.31)
	2nd	R	Approx. 12.0 (0.47)	9.6 (0.38)
Piston ring end gap	1st		0.20–0.35 (0.008–0.014)	0.5 (0.02)
	2nd		0.35–0.50 (0.014–0.020)	1.0 (0.04)
Piston ring to groove clearance	1st		———	0.180 (0.007)
	2nd		———	0.150 (0.006)

ITEM	STANDARD		LIMIT
Piston ring groove width	1st	1.01–1.03 (0.040–0.041)	———
	2nd	1.01–1.03 (0.040–0.041)	———
	Oil	2.01–2.03 (0.079–0.080)	———
Piston ring thickness	1st	0.97–0.99 (0.038–0.039)	———
	2nd	0.97–0.99 (0.038–0.039)	———
Piston pin bore	20.002–20.008 (0.7875–0.7877)		20.030 (0.7886)
Piston pin O.D.	19.996–20.000 (0.7872–0.7874)		19.980 (0.7866)

CONROD + CRANKSHAFT

Unit: mm (in)

ITEM	STANDARD		LIMIT
Conrod small end I.D.	20.010–20.018 (0.7878–0.7881)		20.040 (0.7890)
Conrod big end side clearance	0.10–0.20 (0.004–0.008)		0.30 (0.01)
Conrod big end width	20.95–21.00 (0.825–0.827)		———
Crank pin width	21.10–21.15 (0.831–0.833)		———
Conrod big end oil clearance	0.032–0.056 (0.0013–0.0022)		0.080 (0.0031)
Crank pin O.D.	37.976–38.000 (1.4951–1.4961)		———
Crankshaft journal oil clearance	0.020–0.044 (0.0008–0.0017)		0.080 (0.0031)
Crankshaft journal O.D.	35.976–36.000 (1.4164–1.4173)		———
Crankshaft thrust clearance	0.04–0.08 (0.002–0.003)		———
Crankshaft thrust bearing thickness	Left side	2.36–2.52 (0.093–0.099)	———
	Right side	2.42–2.44 (0.095–0.096)	———
Crankshaft runout	———		0.05 (0.002)

OIL PUMP

ITEM	STANDARD	LIMIT
Oil pump reduction ratio	1.703 (72/46 × 37/34)	———
Oil pressure (at 60°C, 140°F)	Above 300 kPa (3.0 kg/cm^2, 43 psi) Below 600 kPa (6.0 kg/cm^2, 85 psi) at 3 000 r/min.	———

CLUTCH

Unit: mm (in)

ITEM	STANDARD		LIMIT
Drive plate thickness	No.1 & No.2	2.92–3.08 (0.115–0.121)	———
Drive plate claw width	———		13.0 (0.51)
Driven plate distortion	———		0.10 (0.004)
Clutch spring free height	———		2.9 (0.11)
Clutch master cylinder bore	14.000–14.043 (0.5511–0.5529)		———
Clutch master cylinder piston diam.	13.957–13.984 (0.5495–0.5506)		———
Clutch release cylinder bore	35.700–35.762 (1.4055–1.4079)		———
Clutch release cylinder piston diam.	35.650–35.675 (1.4035–1.4045)		———

TRANSMISSION + DRIVE CHAIN

Unit: mm (in) Except ratio

ITEM		STANDARD		LIMIT
Primary reduction ratio		1.565 (72/46)		———
Final reduction ratio		3.000 (45/15)		———
Gear ratios	Low	2.384 (31/13)		———
	2nd	1.631 (31/19)		———
	3rd	1.250 (25/20)		———
	4th	1.045 (23/22)		———
	Top	0.913 (21/23)		———
Shift fork to groove clearance		No.1, No.2 & No.3	0.1–0.3 (0.004–0.012)	0.50 (0.020)
Shift fork groove width		No.1, No.2 & No.3	5.0–5.1 (0.197–0.201)	———
Shift fork thickness		No.1, No.2 & No.3	4.8–4.9 (0.189–0.193)	———
Drive chain		Type	RK GB50MFOZ1	———
		Links	110 links	———
		20-pitch length	———	319.4 (12.6)
Drive chain slack		20–30 (0.8–1.2)		———
Gearshift lever height		55 (2.2)		———

CARBURETOR

ITEM		SPECIFICATION		
		E-02,04,17,22, 24,25,34	E-18 (GSF1200S)	E-18 (GSF1200)
Carburetor type		MIKUNI BST36SS	←	←
Bore size		36 mm (1.4 in)	←	←
I.D. No.		27E1	27E3	27E7
Idle r/min.		1 200 ± 100 r/min.	1 200 $^{+100}_{-50}$ r/min.	←
Float height		14.6 ± 1.0 mm (0.58 ± 0.04 in)	←	←
Main jet	(M.J.)	#102.5	←	←
Jet needle	(J.N.)	5D76-4th	5D55-2nd	←
Needle jet	(N.J.)	O-8	←	←
Throttle valve	(Th.V.)	#120	←	←
Pilot jet	(P.J.)	#37.5	←	←
Pilot screw	(P.S.)	PRE-SET (1-$^{3}/_{4}$ turns back)	PRE-SET (1-$^{7}/_{8}$ turns back)	←
Throttle cable play		0.5–1.0 mm (0.02–0.04 in)	←	←

CARBURETOR

ITEM		SPECIFICATION		
		E-03,28	E-33 (Calif. model)	P-37
Carburetor type		MIKUNI BST36SS	←	←
Bore size		36 mm (1.4 in)	←	←
I.D. No.		27E5	27E6	27E4
Idle r/min.		1 200 ± 50 r/min.	←	1 200 ± 100 r/min.
Float height		14.6 ± 1.0 mm (0.58 ± 0.04 in)	←	←
Main jet	(M.J.)	#102.5	←	#102.5
Jet needle	(J.N.)	5D80	←	5D76-4th
Needle jet	(N.J.)	O-8M	←	O-8
Throttle valve	(Th.V.)	#120	←	←
Pilot jet	(P.J.)	#37.5	←	#37.5
Pilot screw	(P.S.)	PRE-SET	←	PRE-SET (1-$^{3}/_{4}$ turns back)
Throttle cable play		0.5–1.0 mm (0.02–0.04 in)	←	←

ELECTRICAL

Unit: mm (in)

ITEM	SPECIFICATION		NOTE
Ignition timing	7° B.T.D.C. Below 1 500 r/min.		
Firing order	1-2-4-3		
Spark plug	Type	NGK: JR9B	
	Gap	0.6–0.7 (0.024–0.028)	
Spark performance	Over 8 (0.3) at 1 atm.		

ITEM		SPECIFICATION		NOTE
Signal coil resistance		Approx. 135–200 Ω		Tester range: (×100 Ω)
Ignition coil resistance		Primary	⊕ tap–⊖ tap Approx. 2–4 Ω	Tester range: (×1 Ω)
		Secondary	Plug cap–Plug cap Approx. 30–40 kΩ	Tester range: (×1 kΩ)
Generator		Slip ring O.D.	Limit: 14.0 (0.55)	
		Brush length	Limit: 4.5 (0.18)	N.D.
Generator Max. output		Approx. 405W at 5 000 r/min.		The rotation of the generator
Regulated voltage		Above 13.5V at 5 000 r/min.		
Starter relay resistance		3–5 Ω		
Battery	Type designation	YTX12-BS		
	Capacity	12V 36 kC (10 Ah)/10HR		
	Standard electrolyte S.G.	1.320 at 20°C (68°F)		
Fuse size	Headlight	HI	15A	
		LO	15A	
	Turn signal	15A		
	Ignition	10A		
	Taillight	10A		
	Main	30A		

WATTAGE

Unit: W

ITEM		SPECIFICATION	
		E-03,24,28,33	For the other markets
Headlight	HI	60	←
	LO	55	←
Parking or position light			4
Brake light/Taillight		21/5	←
Turn signal light		21×4	←
Speedometer light		1.7×2	←
Tachometer light		1.7	←
Fuel meter light		1.7	←
Turn signal indicator light		3×2	←
High beam indicator light		3	←
Neutral indicator light		3	←
Oil pressure indicator light		3	←
License plate light		5	←

BRAKE + WHEEL

Unit: mm (in)

ITEM		STANDARD	LIMIT
Rear brake pedal height		55 (2.2)	———
Brake disc thickness	Front	4.5±0.2 (0.177±0.008)	4.0 (0.15)
	Rear	5.0±0.2 (0.197±0.008)	4.5 (0.18)
Brake disc runout		———	0.30 (0.012)

ITEM		STANDARD		LIMIT
Master cylinder bore		Front	15.870–15.913 (0.6248–0.6264)	———
		Rear	12.700–12.743 (0.5000–0.5017)	———
Master cylinder piston diam.		Front	15.827–15.854 (0.6231–0.6242)	———
		Rear	12.657–12.684 (0.4983–0.4994)	———
Brake caliper cylinder bore	Leading	Front	30.230–30.280 (1.1902–1.1921)	———
	Trailing		33.960–34.010 (1.3370–1.3390)	———
		Rear	38.180–38.256 (1.5031–1.5061)	———
Brake caliper piston diam.	Leading	Front	30.160–30.180 (1.1874–1.1882)	———
	Trailing		33.878–33.928 (1.3338–1.3357)	———
		Rear	38.098–38.148 (1.5000–1.5019)	———
Wheel rim runout (Front & Rear)		Axial	———	2.0 (0.08)
		Radial	———	2.0 (0.08)
Wheel axle runout		Front	———	0.25 (0.010)
		Rear	———	0.25 (0.010)
Wheel rim size		Front	J17 × MT3.50	———
		Rear	J17 × MT5.50	———
Tire size		Front	120/70 ZR17	———
		Rear	180/55 ZR17	———
Tire tread depth		Front	———	1.6 (0.06)
		Rear	———	2.0 (0.08)

SUSPENSION

Unit: mm (in)

ITEM	STANDARD	LIMIT	NOTE
Front fork stroke	130 (5.1)	———	
Front fork spring free length	———	360 (14.2)	E-03,28,33
	———	362.1 (14.26)	For the other markets
Front fork oil level	101 (4.0)	———	E-03,28,33
	99 (3.9)	———	For the other markets
Rear wheel travel	134 (5.3)	———	
Swingarm pivot shaft runout	———	0.3 (0.01)	

TIRE PRESSURE (for E-03,28,33)

COLD INFLATION TIRE PRESSURE	SOLO RIDING			DUAL RIDING		
	kPa	kg/cm^2	psi	kPa	kg/cm^2	psi
FRONT	225	2.25	33	250	2.50	36
REAR	225	2.25	33	250	2.50	36

TIRE PRESSURE (for the other markets)

COLD INFLATION TIRE PRESSURE	SOLO OR DUAL RIDING		
	kPa	kg/cm^2	psi
FRONT	250	2.50	36
REAR	250	2.50	36

FUEL + OIL

ITEM	SPECIFICATION		NOTE
Fuel type	Use only unleaded gasoline of at least 87 pump octane ($\frac{R+M}{2}$) or 91 octane or higher rated by the research method. Gasoline containing MTBE (Methyl Tertiary Butyl Ether), less than 10% ethanol, or less than 5% methanol with appropriate cosolvents and corrosion inhibitor is permissible.		E-03,33
	Use only unleaded gasoline of at least 87 pump octane ($\frac{R+M}{2}$) or 91 octane or higher rated by the research method.		E-28
	Gasoline used should be graded 91 octane or higher. An unleaded gasoline is recommended.		For the other markets
Fuel tank capacity	Including reserve	19.0 L (5.0/4.1 US/Imp gal)	
	Only reserve	4.5 L (1.1/0.9 US/Imp gal)	
Engine oil type	SAE 10W/40, API SF or SG		
Engine oil capacity	Oil change	3 300 ml (3.4/2.9 US/Imp qt)	
	Oil and filter change	3 500 ml (3.6/3.0 US/Imp qt)	
	Engine overhaul	4 600 ml (4.9/4.0 US/Imp qt)	
Front fork oil type	Fork oil #10		
Front fork oil capacity (each leg)	514 ml (17.3/18.1 US/Imp oz)		E-03,28,33
	516 ml (17.4/18.2 US/Imp oz)		For the other markets
Brake fluid type	DOT 4		

GSF1200SAW ('98-MODEL)
GSF1200SAX ('99-MODEL)

CONTENTS

SPECIFICATIONS 11- 1
SERVICE DATA 11- 3

NOTE:
The specifications and service data are the same as those of the '97-MODEL.

SPECIFICATIONS

DIMENSIONS AND DRY MASS

Overall length	2 175 mm (85.6 in) ..... For E-17, 22
	2 235 mm (88.0 in) ..... For E-18
	2 105 mm (82.9 in) ..... For other markets
Overall width	790 mm (31.1 in)
Overall height	1 215 mm (47.8 in)
Wheelbase	1 465 mm (57.7 in)
Ground clearance	130 mm (5.1 in)
Seat height	835 mm (32.9 in)
Dry mass	221 kg (487 lbs)
	224 kg (493 lbs) ..... E-33 only

ENGINE

Type	Four-stroke, air-cooled with SACS, DOHC, TSCC
Number of cylinders	Four
Bore	79.0 mm (3.110 in)
Stroke	59.0 mm (2.323 in)
Compression ratio	9.5 : 1
Piston displacement	1 157 cm^3 (70.6 cu. in)
Carburetor	Four (MIKUNI BST36)
Air cleaner	Non-woven fabric element
Starter system	Electric starter
Lubrication system	Wet sump

TRANSMISSION

Clutch	Wet multi-plate type
Transmission	5-speed constant mesh
Gearshift pattern	1-down, 4-up
Primary reduction ratio	1.565 (72/46)
Final reduction ratio	3.000 (45/15)
Gear ratios, 1st (low)	2.384 (31/13)
2nd	1.631 (31/19)
3rd	1.250 (25/20)
4th	1.045 (23/22)
5th (high)	0.913 (21/23)
Drive chain	RK GB50MFOZ1, 114 links

These specifications are subject to change without notice.

CHASSIS

Front suspension	Telescopic, coil spring, oil damped, spring pre-load fully adjustable
Rear suspension	Link type system, oil damped, coil spring, spring pre-load 7-way adjustable, rebound damping force 4-way adjustable
Steering angle	35° (right & left)
Caster	64° 24′
Trail	107 mm (4.2 in)
Turning radius	2.8 m (9.2 ft)
Front brake	Disc brake, twin
Rear brake	Disc brake
Front tire size	120/70 ZR17 (58W)
Rear tire size	180/55 ZR17 (73W)
Front fork stroke	130 mm (5.1 in)
Rear wheel travel	126 mm (5.0 in)

ELECTRICAL

Ignition type	Electronic Ignition (fully transistorized)
Ignition timing	7° B.T.D.C. at 1 500 r/min
Spark plug	NGK: JR9B
Battery	12V 36 kC (10 Ah)/10 HR
Generator	Three-phase A.C. generator
Main fuse	30A
Fuse	15/15/10/15/10A
ABS circuit breaker	30A
Headlight	12V 60/55W
Position light	12V 4W ..... Except for E-24 and 28 models
Turn signal light	12V 21W × 4
Brake light/Taillight	12V 21/5W
License plate light	12V 5W
Speedometer light	12V 1.7W × 2
Fuel meter light	12V 1.7W
Tachometer light	12V 1.7W
Neutral indicator light	12V 3W
High beam indicator light	12V 3W
Turn signal indicator light	12V 3W × 2
Oil pressure indicator light	12V 3W
ABS warning indicator light	12V 3W

CAPACITIES

Fuel tank,	including reserve	19.0 L (5.0/4.1 US/Imp gal)
	reserve	4.5 L (1.1/0.9 US/Imp gal)
Engine oil	oil change	3 300 ml (3.4/2.9 US/Imp qt)
	oil and filter change	3 500 ml (3.6/3.0 US/Imp qt)
	engine overhaul	4 600 ml (4.9/4.0 US/Imp qt)
Front fork oil (each leg)		514 ml (17.3/18.1 US/Imp oz) .... For E-03, 28, 33
		516 ml (17.4/18.2 US/Imp oz) .... For other markets

These specifications are subject to change without notice.

SERVICE DATA

VALVE + GUIDE

Unit: mm (in)

ITEM	STANDARD		LIMIT
Valve diam.	IN.	28.5 (1.12)	———
	EX.	25 (1.0)	———
Valve clearance (when cold)	IN.	0.10–0.15 (0.004–0.006)	———
	EX.	0.18–0.23 (0.007–0.009)	———
Valve guide to valve stem clearance	IN.	0.020–0.047 (0.0008–0.0019)	———
	EX.	0.040–0.067 (0.0016–0.0026)	———
Valve stem deflection	IN. & EX.	———	0.35 (0.014)
Valve guide I.D.	IN. & EX.	5.000–5.012 (0.1969–0.1973)	———
Valve stem O.D.	IN.	4.965–4.980 (0.1955–0.1961)	———
	EX.	4.945–4.960 (0.1947–0.1953)	———
Valve stem runout	IN. & EX.	———	0.05 (0.002)
Valve head thickness	IN. & EX.	———	0.5 (0.02)
Valve stem end length	IN. & EX.	———	2.5 (0.10)
Valve seat width	IN. & EX.	0.9–1.1 (0.035–0.043)	———
Valve head radial runout	IN. & EX.	———	0.03 (0.001)
Valve spring free length (IN. & EX.)	INNER	———	35.0 (1.38)
	OUTER	———	37.8 (1.49)
Valve spring tension (IN. & EX.)	INNER	5.3–6.5 kg (11.7–14.3 lbs) at length 28 mm (1.1 in)	———
	OUTER	13.1–15.1 kg (28.9–33.3 lbs) at length 31.5 mm (1.2 in)	———

CAMSHAFT + CYLINDER HEAD

Unit: mm (in)

ITEM	STANDARD		LIMIT
Cam height	IN.	33.58–33.62 (1.3220–1.3236)	33.28 (1.3102)
	EX.	33.41–33.45 (1.3154–1.3170)	33.11 (1.3035)
Camshaft journal oil clearance	IN. & EX.	0.032–0.066 (0.0013–0.0026)	0.150 (0.0059)
Camshaft journal holder I.D.	IN. & EX.	22.012–22.025 (0.8666–0.8671)	———
Camshaft journal O.D.	IN. & EX.	21.959–21.980 (0.8645–0.8654)	———
Camshaft runout	IN. & EX.	———	0.10 (0.004)
Cam chain pin (at arrow "3")	24th pin		———
Rocker arm I.D.	IN. & EX.	12.000–12.018 (0.4724–0.4731)	———
Rocker arm shaft O.D.	IN. & EX.	11.973–11.984 (0.4714–0.4718)	———
Cylinder head distortion	———		0.20 (0.008)

CYLINDER + PISTON + PISTON RING

Unit: mm (in)

ITEM	STANDARD			LIMIT
Compression pressure	1 250 kPa (12.5 kg/cm^2 178 psi)			875 kPa (8.75 kg/cm^2 124 psi)
Compression pressure difference	———			200 kPa (2 kg/cm^2 28 psi)
Piston to cylinder clearance	0.040–0.070 (0.0016–0.0028)			0.120 (0.0047)
Cylinder bore	79.000–79.015 (3.1102–3.1108)			79.080 (3.1134)
Piston diam.	78.945–78.960 (3.1081–3.1087) Measure at 15 mm (0.6) from the skirt end.			78.880 (3.1055)
Cylinder distortion	———			0.20 (0.008)
Piston ring free end gap	1st	R	Approx. 10.0 (0.39)	8.0 (0.31)
	2nd	R	Approx. 12.0 (0.47)	9.6 (0.38)
Piston ring end gap	1st		0.20–0.35 (0.008–0.014)	0.5 (0.02)
	2nd		0.35–0.50 (0.014–0.020)	1.0 (0.04)
Piston ring to groove clearance	1st		———	0.180 (0.007)
	2nd		———	0.150 (0.006)

ITEM	STANDARD		LIMIT
Piston ring groove width	1st	1.01–1.03 (0.040–0.041)	———
	2nd	1.01–1.03 (0.040–0.041)	———
	Oil	2.01–2.03 (0.079–0.080)	———
Piston ring thickness	1st	0.97–0.99 (0.038–0.039)	———
	2nd	0.97–0.99 (0.038–0.039)	———
Piston pin bore	20.002–20.008 (0.7875–0.7877)		20.030 (0.7886)
Piston pin O.D.	19.996–20.000 (0.7872–0.7874)		19.980 (0.7866)

CONROD + CRANKSHAFT

Unit: mm (in)

ITEM	STANDARD		LIMIT
Conrod small end I.D.	20.010–20.018 (0.7878–0.7881)		20.040 (0.7890)
Conrod big end side clearance	0.10–0.20 (0.004–0.008)		0.30 (0.01)
Conrod big end width	20.95–21.00 (0.825–0.827)		———
Crank pin width	21.10–21.15 (0.831–0.833)		———
Conrod big end oil clearance	0.032–0.056 (0.0013–0.0022)		0.080 (0.0031)
Crank pin O.D.	37.976–38.000 (1.4951–1.4961)		———
Crankshaft journal oil clearance	0.020–0.044 (0.0008–0.0017)		0.080 (0.0031)
Crankshaft journal O.D.	35.976–36.000 (1.4164–1.4173)		———
Crankshaft thrust clearance	0.04–0.08 (0.002–0.003)		———
Crankshaft thrust bearing thickness	Left side	2.36–2.52 (0.093–0.099)	———
	Right side	2.42–2.44 (0.095–0.096)	———
Crankshaft runout	———		0.05 (0.002)

OIL PUMP

ITEM	STANDARD	LIMIT
Oil pump reduction ratio	1.703 (72/46 × 37/34)	———
Oil pressure (at 60°C, 140°F)	Above 300 kPa (3.0 kg/cm^2, 43 psi) Below 600 kPa (6.0 kg/cm^2, 85 psi) at 3 000 r/min.	———

CLUTCH

Unit: mm (in)

ITEM	STANDARD		LIMIT
Drive plate thickness	No.1 & No.2	2.92–3.08 (0.115–0.121)	———
Drive plate claw width	———		13.0 (0.51)
Driven plate distortion	———		0.10 (0.004)
Clutch spring free height	———		2.9 (0.11)
Clutch master cylinder bore	14.000–14.043 (0.5511–0.5529)		———
Clutch master cylinder piston diam.	13.957–13.984 (0.5495–0.5506)		———
Clutch release cylinder bore	35.700–35.762 (1.4055–1.4079)		———
Clutch release cylinder piston diam.	35.650–35.675 (1.4035–1.4045)		———

TRANSMISSION + DRIVE CHAIN

Unit: mm (in) Except ratio

ITEM		STANDARD		LIMIT
Primary reduction ratio		1.565 (72/46)		———
Final reduction ratio		3.000 (45/15)		———
Gear ratios	Low	2.384 (31/13)		———
	2nd	1.631 (31/19)		———
	3rd	1.250 (25/20)		———
	4th	1.045 (23/22)		———
	Top	0.913 (21/23)		———
Shift fork to groove clearance		No.1, No.2 & No.3	0.1–0.3 (0.004–0.012)	0.50 (0.020)
Shift fork groove width		No.1, No.2 & No.3	5.0–5.1 (0.197–0.201)	———
Shift fork thickness		No.1, No.2 & No.3	4.8–4.9 (0.189–0.193)	———
Drive chain		Type	RK GB50MFOZ1	———
		Links	114 links	———
		20-pitch length	———	319.4 (12.6)
Drive chain slack		20–30 (0.8–1.2)		———
Gearshift lever height		55 (2.2)		———

CARBURETOR

ITEM		SPECIFICATION		
		E-02,04,17,22, 24,25,34	E-18	E-37
Carburetor type		MIKUNI BST36SS	←	←
Bore size		36 mm (1.4 in)	←	←
I.D. No.		27E1	27E7	27E4
Idle r/min.		1 200 ± 100 r/min.	1 200 $^{+100}_{-50}$ r/min.	1 200 ± 100 r/min.
Float height		14.6 ± 1.0 mm (0.58 ± 0.04 in)	←	←
Main jet	(M.J.)	#102.5	←	←
Jet needle	(J.N.)	5D76-4th	5D55-2nd	5D76-4th
Needle jet	(N.J.)	O-8	←	←
Throttle valve	(Th.V.)	#120	←	←
Pilot jet	(P.J.)	#37.5	←	←
Pilot screw	(P.S.)	PRE-SET (1-$^{3}/_{4}$ turns back)	PRE-SET (1-$^{7}/_{8}$ turns back)	PRE-SET (1-$^{3}/_{4}$ turns back)
Throttle cable play		0.5–1.0 mm (0.02–0.04 in)	←	←

CARBURETOR

ITEM		SPECIFICATION	
		E-03,28	E-33 (Calif. model)
Carburetor type		MIKUNI BST36SS	←
Bore size		36 mm (1.4 in)	←
I.D. No.		27E5	27E6
Idle r/min.		1 200 ± 50 r/min.	←
Float height		14.6 ± 1.0 mm (0.58 ± 0.04 in)	←
Main jet	(M.J.)	#102.5	←
Jet needle	(J.N.)	5D80	←
Needle jet	(N.J.)	O-8M	←
Throttle valve	(Th.V.)	#120	←
Pilot jet	(P.J.)	#37.5	←
Pilot screw	(P.S.)	PRE-SET	←
Throttle cable play		0.5–1.0 mm (0.02–0.04 in)	←

ELECTRICAL

Unit: mm (in)

ITEM	SPECIFICATION		NOTE
Ignition timing	7° B.T.D.C. Below 1 500 r/min.		
Firing order	1·2·4·3		
Spark plug	Type	NGK: JR9B	
	Gap	0.6–0.7 (0.024–0.028)	
Spark performance	Over 8 (0.3) at 1 atm.		
Signal coil resistance	Approx. 135–200 Ω		Tester range: (×100 Ω)
Ignition coil resistance	Primary	⊕ tap–⊖ tap Approx. 2–4 Ω	Tester range: (×1 Ω)
	Secondary	Plug cap–Plug cap Approx. 30–40 kΩ	Tester range: (×1 kΩ)

ITEM		SPECIFICATION		NOTE
Generator		Slip ring O.D.	Limit: 14.0 (0.55)	
		Brush length	Limit: 4.5 (0.18)	N.D.
Generator Max. output		Approx. 405W at 5 000 r/min.		The rotation of the generator
Regulated voltage		Above 13.5V at 5 000 r/min.		
Starter relay resistance		3–5 Ω		
Battery	Type designation	YTX12-BS		
	Capacity	12V 36 kC (10 Ah)/10HR		
	Standard electrolyte S.G.	1.320 at 20°C (68°F)		
Fuse size	Headlight	HI	15A	
		LO	15A	
	Turn signal	15A		
	Ignition	10A		
	Main	30A		
	ABS	10A		
ABS circuit breaker		30A		

WATTAGE

Unit: W

ITEM		SPECIFICATION	
		E-03,24,28,33	For the other markets
Headlight	HI	60	←
	LO	55	←
Parking or position light			4
Brake light/Taillight		21/5	←
Turn signal light		21 × 4	←
Speedometer light		1.7 × 2	←
Tachometer light		1.7	←
Fuel meter light		1.7	←
Turn signal indicator light		3 × 2	←
High beam indicator light		3	←
Neutral indicator light		3	←
Oil pressure indicator light		3	←
ABS indicator light		3	←
License plate light		5	←

BRAKE + WHEEL

Unit: mm (in)

ITEM		STANDARD	LIMIT
Rear brake pedal height		55 (2.2)	———
Brake disc thickness	Front	4.5 ± 0.2 (0.177 ± 0.008)	4.0 (0.15)
	Rear	5.0 ± 0.2 (0.197 ± 0.008)	4.5 (0.18)
Brake disc runout		———	0.30 (0.012)

ITEM			STANDARD	LIMIT
Master cylinder bore		Front	15.870–15.913 (0.6248–0.6264)	———
		Rear	14.000–14.043 (0.5512–0.5529)	———
Master cylinder piston diam.		Front	15.827–15.854 (0.6231–0.6242)	———
		Rear	13.957–13.984 (0.5495–0.5506)	———
Brake caliper cylinder bore	Leading	Front	30.230–30.280 (1.1902–1.1921)	———
	Trailing		32.030–32.080 (1.2610–1.2630)	———
		Rear	38.180–38.256 (1.5031–1.5061)	———
Brake caliper piston diam.	Leading	Front	30.148–30.198 (1.1869–1.1889)	———
	Trailing		31.984–31.998 (1.2578–1.2598)	———
		Rear	38.098–38.148 (1.5000–1.5019)	———
Wheel rim runout (Front & Rear)		Axial	———	2.0 (0.08)
		Radial	———	2.0 (0.08)
Wheel axle runout		Front	———	0.25 (0.010)
		Rear	———	0.25 (0.010)
Wheel rim size		Front	17 × MT3.50	———
		Rear	17 × MT5.50	———
Tire size		Front	120/70 ZR17 (58W)	———
		Rear	180/55 ZR17 (73W)	———
Tire tread depth		Front	———	1.6 (0.06)
		Rear	———	2.0 (0.08)

SUSPENSION

Unit: mm (in)

ITEM	STANDARD	LIMIT	NOTE
Front fork stroke	130 (5.1)	———	
Front fork spring free length	———	360 (14.2)	E-03,28,33
	———	362.1 (14.26)	For the other markets
Front fork oil level	101 (4.0)	———	E-03,28,33
	99 (3.9)	———	For the other markets
Rear wheel travel	134 (5.3)	———	
Swingarm pivot shaft runout	———	0.3 (0.01)	

ABS

ITEM		SPECIFICATION	NOTE
Front/Rear wheel speed sensor resistance (O–W)		800–1 200 Ω	Tester range: (×100 Ω)
Hydraulic unit	F/R solenoid valve (Y/W–R/W, Y/R–P/W)	0.06–1.30 Ω	Tester range: (×1 Ω)
Hydraulic unit solenoid valve relay resistance (O/W–Bl)		92–114 Ω	Tester range: (×10 Ω)
Hydraulic unit motor relay resistance (O/W–Y)		42–48 Ω	Tester range: (×10 Ω)

TIRE PRESSURE (For E-03,28,33)

COLD INFLATION TIRE PRESSURE	SOLO RIDING			DUAL RIDING		
	kPa	kg/cm^2	psi	kPa	kg/cm^2	psi
FRONT	225	2.25	33	250	2.50	36
REAR	225	2.25	33	250	2.50	36

TIRE PRESSURE (For the other markets)

COLD INFLATION TIRE PRESSURE	SOLO OR DUAL RIDING		
	kPa	kg/cm^2	psi
FRONT	250	2.50	36
REAR	250	2.50	36

FUEL + OIL

ITEM		SPECIFICATION		NOTE
Fuel type		Use only unleaded gasoline of at least 87 pump octane ($\frac{R+M}{2}$) or 91 octane or higher rated by the research method. Gasoline containing MTBE (Methyl Tertiary Butyl Ether), less than 10% ethanol, or less than 5% methanol with appropriate cosolvents and corrosion inhibitor is permissible.		E-03,33
		Use only unleaded gasoline of at least 87 pump octane ($\frac{R+M}{2}$ method) or 91 octane or higher rated by the Research Method.		E-28
		Gasoline used should be graded 91 octane or higher. An unleaded gasoline is recommended.		For the other markets
Fuel tank including	reserve	19.0 L (5.0/4.1 US/Imp gal)		
	reserve	4.5 L (1.1/0.9 US/Imp gal)		
Engine oil type		SAE 10W/40, API SF or SG		
Engine oil capacity		Change	3 300 ml (3.4/2.9 US/Imp qt)	
		Filter change	3 500 ml (3.6/3.0 US/Imp qt)	
		Overhaul	4 600 ml (4.9/4.0 US/Imp qt)	
Front fork oil type		Fork oil #10		
Front fork oil capacity (each leg)		514 ml (17.3/18.1 US/Imp oz)		E-03,28,33
		516 ml (17.4/18.2 US/Imp oz)		For the other markets
Brake fluid type		DOT 4		

Prepared by

SUZUKI MOTOR CORPORATION

Motorcycle Service Department
4th Ed. July, 1998
1st Ed. February, 1996
Part No. 99500-39134-01E
Printed in Japan

SUZUKI MOTOR CORPORATION

Printed in Japan TK
T V W X