MAINTENANCE 1

Table Of Contents

SUBJECT **PAGE NO.**

1.1 General 1-1
1.2 Maintenance Schedule 1-6
1.3 Engine Oil/Filter 1-9
1.4 Air Cleaner 1-11
1.5 Tires 1-13
1.6 Wheel Spokes 1-14
1.7 Primary Chain/Lubricant 1-15
1.8 Clutch Adjustment 1-17
1.9 Transmission Lubricant 1-19
1.10 Drive Belt 1-20
1.11 Throttle Cables 1-23
1.12 Enrichener Control 1-26
1.13 Fuel System 1-27
1.14 Brakes 1-29
1.15 Spark Plugs 1-30
1.16 Engine Idle Speed 1-31
1.17 Front Fork Oil 1-32
1.18 Steering Head Bearings 1-33
1.19 Critical Fasteners 1-34
1.20 Battery 1-36
1.21 Troubleshooting 1-37

GENERAL 1.1

REPAIR NOTES

General maintenance practices are given in this section. All special tools and torque values are noted at the point of use and all required parts or materials can be found in the appropriate PARTS CATALOG.

Safety

Safety is always the most important consideration when performing any job. Be sure you have a complete understanding of the task to be performed. Use common sense. Use the proper tools. Don't just do the job – do the job safely.

Removing Parts

Always consider the weight of a part when lifting. Use a hoist whenever necessary. Do not lift heavy parts by hand. A hoist and adjustable lifting beam or sling are needed to remove some parts. The lengths of chains or cables from the hoist to the part should be equal and parallel, and should be positioned directly over the center of the part. Be sure that no obstructions will interfere with the lifting operation. Never leave a part suspended in mid-air.

Always use blocking or proper stands to support the part that has been hoisted. If a part cannot be removed, verify that all bolts and attaching hardware have been removed. Check to see if any parts are in the way of the part being removed.

When removing hoses, wiring or tubes, always tag each part to ensure proper installation.

Cleaning

If you intend to reuse parts, follow good shop practice and thoroughly clean the parts before assembly. Keep all dirt out of parts; the unit will perform better and last longer. Seals, filters and covers are used in this motorcycle to keep out environmental dirt and dust. These items must be kept in good condition to ensure satisfactory operation.

Clean and inspect all parts as they are removed. Be sure all holes and passages are clean and open. After cleaning, cover all parts with clean lint-free cloth, paper or other material. Be sure the part is clean when it is installed.

Always clean around lines or covers before they are removed. Plug, tape or cap holes and openings to keep out dirt, dust and debris.

Always verify cleanliness of blind holes before assembly. Tightening screws with dirt, water or oil in the holes can cause castings to crack or break.

Disassembly and Assembly

Always assemble or disassemble one part at a time. Do not work on two assemblies simultaneously. Be sure to make all necessary adjustments. Recheck your work when finished. Be sure that everything is done.

Operate the motorcycle to perform any final check or adjustments. If all is correct, the motorcycle is ready to go back to the customer.

Checking Torques on Fasteners with Lock Patches

To check the torque on a fastener that has a lock patch:

1. Set the torque wrench for the lowest setting in the specified torque range.
2. Attempt to tighten fastener to set torque. If fastener does not move and lowest setting is satisfied (torque wrench clicks), then the proper torque has been maintained.

REPAIR AND REPLACEMENT PROCEDURES

Hardware and Threaded Parts

Install helical thread inserts when inside threads in castings are stripped, damaged or not capable of withstanding specified torque.

Replace bolts, nuts, studs, washers, spacers and small common hardware if missing or in any way damaged. Clean up or repair minor thread damage with a suitable tap or die.

Replace all damaged or missing lubrication fittings.

Use Teflon tape on pipe fitting threads.

Wiring, Hoses and Lines

Replace hoses, clamps, electrical wiring, electrical switches or fuel lines if they do not meet specifications.

Instruments and Gauges

Replace broken or defective instruments and gauges. Replace dials and glass that are so scratched or discolored that reading is difficult.

Bearings

Anti-friction bearings must be handled in a special way. To keep out dirt and abrasives, cover the bearings as soon as they are removed from the package.

Wash bearings in a non-flammable cleaning solution. Knock out packed lubricant inside by tapping the bearing against a wooden block. Wash bearings again. Cover bearings with clean material after setting them down to dry. Never use compressed air to dry bearings.

Coat bearings with clean oil. Wrap bearings in clean paper.

Be sure that the chamfered side of the bearing always faces the shoulder (when bearings installed against shoulders). Lubricate bearings and all metal contact surfaces before pressing into place. Only apply pressure on the part of the bearing that makes direct contact with the mating part.

Always use the proper tools and fixtures for removing and installing bearings.

Bearings do not usually need to be removed. Only remove bearings if necessary.

Bushings

Do not remove a bushing unless damaged, excessively worn or loose in its bore. Press out bushings that must be replaced.

When pressing or driving bushings, be sure to apply pressure in line with the bushing bore. Use a bearing/bushing driver or a bar with a smooth, flat end. Never use a hammer to drive bushings.

Inspect the bushing and the mated part for oil holes. Be sure all oil holes are properly aligned.

Gaskets

Always discard gaskets after removal. Replace with new gaskets. Never use the same gasket twice (unless instructed otherwise). Be sure that gasket holes match up with holes in the mating part.

If a gasket must be made, be sure to cut holes that match up with the mating part. Serious damage can occur if any flange holes are blocked by the gasket. Use material that is the right type and thickness.

Lip Type Seals

Lip seals are used to seal oil or grease and are usually installed with the sealing lip facing the contained lubricant. Seal orientation, however, may vary under different applications.

Seals should not be removed unless necessary. Only remove seals if required to gain access to other parts or if seal damage or wear dictates replacement.

Leaking oil or grease usually means that a seal is damaged. Replace leaking seals to prevent overheated bearings.

Always discard seals after removal. Do not use the same seal twice.

O-Rings (Preformed Packings)

Always discard O-rings after removal. Replace with new O-rings. To prevent leaks, lubricate the O-rings before installation. Apply the same type of lubricant as that being sealed. Be sure that all gasket, O-ring and seal mating surfaces are thoroughly clean before installation.

Gears

Always check gears for damaged or worn teeth.

Remove burrs and rough spots with a honing stone or crocus cloth before installation. Lubricate mating surfaces before pressing gears on shafts.

Shafts

If a shaft does not come out easily, check that all nuts, bolts or retaining rings have been removed. Check to see if other parts are in the way before using force.

Shafts fitted to tapered splines should be very tight. If shafts are not tight, disassemble and inspect tapered splines. Discard parts that are worn. Be sure tapered splines are clean, dry and free of burrs before putting them in place. Press mating parts together tightly.

Clean all rust from the machined surfaces of new parts.

Part Replacement

Always replace worn or damaged parts with new parts.

CLEANING

Part Protection

Before cleaning, protect rubber parts (such as hoses, boots and electrical insulation) from cleaning solutions. Use a grease-proof barrier material. Remove the rubber part if it cannot be properly protected.

Cleaning Process

Any cleaning method may be used as long as it does not result in parts damage. Thorough cleaning is necessary for proper parts inspection. Strip rusted paint areas to bare metal before repainting.

Rust or Corrosion Removal

Remove rust and corrosion with a wire brush, abrasive cloth, sand blasting, vapor blasting or rust remover. Use buffing crocus cloth on highly polished parts that are rusted.

Bearings

Remove shields and seals from bearings before cleaning. Clean bearings with permanent shields and seals in solution.

Clean open bearings by soaking them in a petroleum cleaning solution. Never use a solution that contains chlorine.

Let bearings stand and dry. Do not dry using compressed air. Do not spin bearings while they are drying.

TOOL SAFETY

AIR TOOLS

- Always use approved eye protection equipment when performing any task using air-operated tools.
- On all power tools, use only recommended accessories with proper capacity ratings.
- Do not exceed air pressure ratings of any power tools.
- Bits should be placed against work surface before air hammers are operated.
- Disconnect the air supply line to an air hammer before attaching a bit.
- Never point an air tool at yourself or another person.
- Protect bystanders with approved eye protection.

WRENCHES

- Never use an extension on a wrench handle.
- If possible, always pull on a wrench handle and adjust your stance to prevent a fall if something lets go.
- Never cock a wrench.
- Never use a hammer on any wrench other than a Striking Face wrench.
- Discard any wrench with broken or battered points.
- Never use a pipe wrench to bend, raise, or lift a pipe.

PLIERS/CUTTERS/PRYBARS

- Plastic or vinyl covered pliers handles are not intended to act as insulation; don't use on live electrical circuits.
- Don't use pliers or cutters for cutting hardened wire unless they were designed for that purpose.
- Always cut at right angles.
- Don't use any prybar as a chisel, punch, or hammer.

HAMMERS

- Never strike one hammer against a hardened object, such as another hammer.
- Always grasp a hammer handle firmly, close to the end.
- Strike the object with the full face of the hammer.
- Never work with a hammer which has a loose head.
- Discard hammer if face is chipped or mushroomed.
- Wear approved eye protection when using striking tools.
- Protect bystanders with approved eye protection.

PUNCHES/CHISELS

- Never use a punch or chisel with a chipped or mushroomed end; dress mushroomed chisels and punches with a file.
- Hold a chisel or a punch with a tool holder if possible.
- When using a chisel on a small piece, clamp the piece firmly in a vise, and chip toward the stationary jaw.
- Wear approved eye protection when using these tools.
- Protect bystanders with approved eye protection.

SCREWDRIVERS

- Don't use a screwdriver for prying, punching, chiseling, scoring, or scraping.
- Use the right type of screwdriver for the job; match the tip to the fastener.
- Don't interchange POZIDRIV®, PHILLIPS®, or REED AND PRINCE screwdrivers.
- Screwdriver handles are not intended to act as insulation; don't use on live electrical circuits.
- Don't use a screwdriver with rounded edges because it will slip – redress with a file.

RATCHETS AND HANDLES

- Periodically clean and lubricate ratchet mechanisms with a light grade oil. Do not replace parts individually; ratchets should be rebuilt with the entire contents of service kit.
- Never hammer or put a pipe extension on a ratchet or handle for added leverage.
- Always support the ratchet head when using socket extensions, but do not put your hand on the head or you may interfere with the action of its reversing mechanism.
- When breaking loose a fastener, apply a small amount of pressure as a test to be sure the ratchet's gear wheel is engaged with the pawl.

SOCKETS

- Never use hand sockets on power or impact wrenches.
- Select the right size socket for the job.
- Never cock any wrench or socket.
- Select only impact sockets for use with air or electric impact wrenches.
- Replace sockets showing cracks or wear.
- Keep sockets clean.
- Always use approved eye protection when using power or impact sockets.

STORAGE UNITS

- Don’t open more than one loaded drawer at a time. Close each drawer before opening up another.
- Close lids and lock drawers and doors before moving storage units.
- Don’t pull on a tool cabinet; push it in front of you.
- Set the brakes on the locking casters after the cabinet has been rolled to your work.

MAINTENANCE SCHEDULE 1.2

GENERAL

The table below lists the maintenance requirements for Touring models. If you are familiar with the procedures, just refer to the table for the recommended service interval. If necessary, see the quick reference table on the next page for the required specifications. If more detailed information is needed, turn to the sections which follow for step-by-step instructions.

Table 1-1. Scheduled Maintenance Intervals

ITEM	PROCEDURE	1000 mi 1600 km	5000 mi 8000 km	10,000 mi 16,000 km	15,000 mi 24,000 km	20,000 mi 32,000 km	25,000 mi 40,000 km	NOTES
Engine oil and filter	Replace	X	X	X	X	X	X	
Oil lines and brake system	Inspect for leaks	X	X	X	X	X	X	1
Air cleaner	Inspect, service as required	X	X	X	X	X	X	
Tires	Check pressure, inspect tread	X	X	X	X	X	X	
Wheel spokes	Check tightness	X	X			X		1, 4
Primary chain tension	Check adjustment	X	X	X	X	X	X	
Primary chaincase lubricant	Replace	X		X		X		
Clutch	Check adjustment	X	X	X	X	X	X	1
Transmission lubricant	Replace	X				X		
Drive belt and sprockets	Inspect, adjust belt	X	X	X	X	X	X	1
Throttle, brake, clutch and enrichener controls	Check, adjust and lubricate	X	X	X	X	X	X	1, 4
Jiffy stand	Inspect and lubricate	X	X	X	X	X	X	1
Fuel valve, lines and fittings	Inspect for leaks	X	X	X	X	X	X	1, 4
Fuel filter	Clean (EFI: replace)						X	1
Brake fluid	Check levels and condition	X	X	X	X	X	X	5
Brake pads and discs	Inspect for wear	X	X	X	X	X	X	
Spark plugs	Inspect	X	X		X		X	
	Replace			X		X		
Electrical equipment and switches	Check operation	X	X	X	X	X	X	
Engine idle speed	Check adjustment	X	X	X	X	X	X	1
Front fork oil	Replace							1, 2
Steering head bearings	Lubricate	X		X		X		2
	Adjust						X	1
Air suspension	Check pressure, operation and leakage	X	X	X	X	X	X	1
Windshield bushings	Inspect			X		X		1
Cruise control	Inspect disengage switch and components	X	X	X	X	X	X	1
Fuel door, Tour-pak, saddlebags	Lubricate hinges and latches	X	X	X	X	X	X	
Critical fasteners	Check tightness	X		X		X		1
Engine mounts and stabilizer links	Inspect			X		X		1
Battery	Check battery and clean connections							3
Road test	Verify component and system functions	X	X	X	X	X	X	

NOTES:

1. Should be performed by an authorized Harley-Davidson dealer, unless you have the proper tools, service data and are mechanically qualified.
2. Disassemble, lubricate and inspect every 50,000 miles (80,000 km).
3. Perform annually.
4. Not all vehicles are equipped with enrichener, fuel valve or spoke wheels.
5. Change DOT 4 brake fluid and flush every two years.

Table 1-2. Quick Reference Data

ITEM	SPECIFICATION	DATA
Engine oil and filter	Drain plug torque	14-21 ft-lbs (19-28 Nm)
	Oil capacity	4 qt. (3.8 L)
	Filter	Hand tighten 1/2-3/4 turn after gasket contact
	Chrome filter part number	63798-99
	Black filter part number	63731-99
Air cleaner	Air cleaner cover bracket screw torque	40-60 **in-lbs** (5-7 Nm)
	Air cleaner cover screw torque	36-60 **in-lbs** (4-7 Nm)
	Air cleaner cover screw threadlocker	Loctite Medium Strength Threadlocker 243 (blue), Part No. 99642-97 (6 ml)
Tire condition and pressure	Pressure: solo rider	Front: 36 psi (2.5 bar), Rear: 36 psi (2.5 bar)
	Pressure: rider with passenger	Front: 36 psi (2.5 bar), Rear: 40 psi (2.8 bar)
	Wear	Replace tire if 1/32 in. (0.8 mm) or less of tread pattern remains
Wheel spokes	Spoke nipple torque	40-50 **in-lbs** (4.5-5.6 Nm)
Primary chain tension	Deflection with engine cold	5/8-7/8 in. (15.9-22.2 mm)
	Deflection with engine hot	3/8-5/8 in. (9.5-15.9 mm)
	Chain tensioner nut torque	21-29 ft-lbs (29-39 Nm)
	Primary chain inspection cover torque	84-108 **in-lbs** (10-12 Nm)
Primary chaincase lubricant	Lubricant capacity	32 oz (946 mL)
	Primary chaincase drain plug torque	36-60 **in-lbs** (4-7 Nm)
	FORMULA+ TRANSMISSION AND PRIMARY CHAINCASE LUBRICANT part number	99851-05 (qt)
Clutch adjustment	Free play at adjuster screw	1/2-1 turn
	Free play at hand lever	1/16-1/8 in. (1.6-3.2 mm)
	Adjuster screw locknut torque	72-120 **in-lbs** (8-14 Nm)
	Clutch inspection cover torque	84-108 **in-lbs** (10-12 Nm)
Transmission lubricant	Lubricant level	Dipstick at FULL with motorcycle level and filler plug resting on threads
	Lubricant capacity	20-24 oz (590-710 mL)
	FORMULA+ TRANSMISSION AND PRIMARY CHAINCASE LUBRICANT part number	99851-05 (qt)
	Transmission drain plug torque	14-21 ft-lbs (19-28 Nm)
	Filler plug torque	25-75 **in-lbs** (3-9 Nm)
Drive belt	Upward force at midpoint of bottom belt strand	10 lb. (4.5 kg)
	Deflection with motorcycle on jiffy stand without rider or luggage and 10 psi (69 kPa) in rear shocks	1/4 - 5/16 in. (6.4-7.9 mm)
	Deflection with motorcycle upright and rear wheel in the air	3/16 - 1/4 in. (4.8-6.4 mm)
Throttle and clutch cables	Lubricant part number	*Super Oil*, 94968-85TV (1/4 fl. oz)
	Handlebar clamp screw torque	60-80 **in-lbs** (6.8-9.0 Nm)
	Handlebar switch housing screw torque	35-45 **in-lbs** (4-5 Nm)
Enrichener control	Hex nut torque	20-35 **in-lbs** (2-4 Nm)
Fuel filter	Hex jam nut torque	15-20 ft-lbs (20-27 Nm)
Brake Fluid Reservoir Level	*DOT 4 Brake Fluid* part number	99953-99A (12 oz)
	Level	1/ 8 inch (3.2 mm) from the top
	Master cylinder reservoir cover torque	6-8 **in-lbs** (0.7-0.9 Nm)

Table 1-2. Quick Reference Data

ITEM	SPECIFICATION	DATA
Brake pad linings and discs	Minimum brake pad thickness	0.04 in. (1.02 mm)
	Minimum brake disc thickness	See stamp on side of disc
Spark plugs	Type	HD-6R12
	Gap	0.038-0.043 in. (0.97-1.09 mm)
	Torque	12-18 ft-lbs (16-24 Nm)
Engine idle speed	Idle speed	950-1050 rpm
Front Fork Oil	*Hydraulic Fork Oil (Type E)* part number	99884-80 (16 oz)
	Amount	See Section 2.15 FRONT FORKS
Steering head bearings	Neck fitting lubricant	*Special Purpose Grease*, 99857-97 (14 oz cartridge)
Critical fasteners, engine mounts and stabilizer links	See Section 1.19 CRITICAL FASTENERS.	
Battery	Lubricant part number	*Electrical Contact Lubricant*, 99861-02 (1 oz)
	Terminal bolt torque	60-96 **in-lbs** (6.8-10.9 Nm)
	Hold-down clamp screw torque	15-20 ft-lbs (20-27 Nm)

ENGINE OIL/FILTER 1.3

GENERAL

See Section 1.2 MAINTENANCE SCHEDULE for the required service interval.

NOTE

If the motorcycle is ridden hard, under dusty conditions, or in cold weather, the engine oil and filter should be changed more often.

PROCEDURE

1. Ride motorcycle until engine is at normal operating temperature.
2. Locate oil filler plug/dipstick on right side of motorcycle at top of transmission case. To remove the oil filler plug, pull steadily while moving plug back and forth.
3. Locate oil drain plug at front left side of the oil pan. Remove the oil drain plug and allow oil to drain completely.
4. Inspect the oil drain plug O-ring for cuts, tears or signs of deterioration. Replace as necessary.
5. Remove the oil filter as follows:
   a. Obtain the OIL FILTER WRENCH (HD-42311). The tool allows easy removal of the oil filter without risk of damage to the CKP sensor or cable.
   b. Place the jaws of the wrench over the oil filter with the tool oriented vertically. See Figure 1-1.
   c. Using a 3/8 inch drive with a 4 inch extension, turn wrench in a counterclockwise direction. Do not use with air tools.

NOTE

Use OIL FILTER WRENCH (HD-44067) if HD-42311 is not available.

6. Clean the oil filter mount flange of any old gasket material.
7. Lubricate gasket with clean engine oil and install **new** oil filter on filter mount. Hand tighten oil filter 1/2-3/4 turn after gasket first contacts filter mounting surface. Do **NOT** use OIL FILTER WRENCH for oil filter installation.

NOTE

Use of the Premium 5 micron synthetic media oil filter is highly recommended, Part No. 63798-99A (Chrome) or 63731-99A (Black).

8. Install engine oil drain plug and tighten to 14-21 ft-lbs (19-28 Nm).

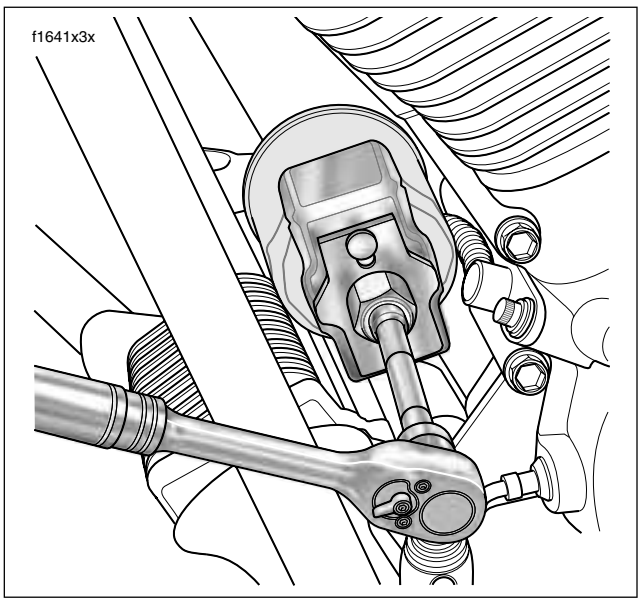

Figure 1-1. Remove Engine Oil Filter

9. With motorcycle resting on jiffy stand, add 3-1/2 quarts (3.3 liters) engine oil as specified in Table 1-3. Use the proper grade of oil for the lowest temperature expected before the next oil change.

Table 1-3. Recommended Engine Oils

Harley-Davidson Type	Viscosity	Harley-Davidson Rating	Lowest Ambient Temperature	Cold Weather Starts Below 50˚F (10˚C)
HD Multi-grade	SAE 10W40	HD 360	Below 40˚F (4˚C)	Excellent
HD Multi-grade	SAE 20W50	HD 360	Above 40˚F (4˚C)	Good
HD Regular Heavy	SAE 50	HD 360	Above 60˚F (16˚C)	Poor
HD Extra Heavy	SAE 60	HD 360	Above 80˚F (27˚C)	Poor

CAUTION

Oil level cannot be accurately measured on a cold engine. For pre-ride inspection, with motorcycle leaning on jiffy stand on level ground, oil should register on dipstick between arrows when engine is cold. Do not add oil to bring the level to the FULL mark on a COLD engine. (00185a)

10. Perform engine oil level **COLD CHECK** as follows:

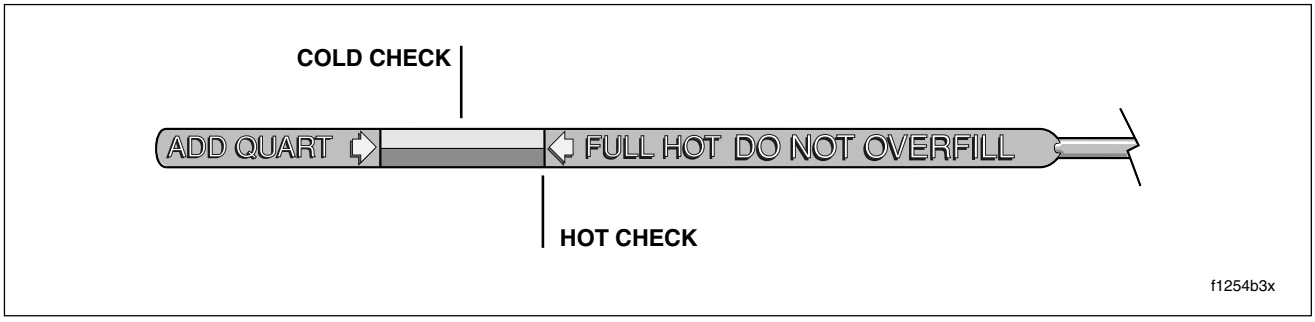

Figure 1-2. Engine Oil Dipstick

a. With the motorcycle resting on the jiffy stand on level ground, wipe off the dipstick and insert it back into the oil pan with the plug pushed completely into the fill spout.

b. Remove the dipstick and note the level of the oil. Oil level should register between the two arrows on the dipstick. See Figure 1-2. If oil level is at or below the lower arrow, add only enough oil to bring the level between the two arrows on the dipstick.

11. Perform engine oil level **HOT CHECK** as follows:

a. Ride motorcycle until engine is at normal operating temperature.

b. With the motorcycle resting on the jiffy stand on level ground, allow engine to idle for 1-2 minutes. Turn engine off.

c. Wipe off the dipstick and insert it back into the oil pan with the plug pushed completely into the fill spout.

d. Remove the dipstick and note the level of the oil. Add only enough oil to bring the level to the FULL mark on the dipstick. See Figure 1-2. Do not overfill.

12. Start engine and carefully check for leaks around hoses, drain plug and oil filter.

AIR CLEANER 1.4

GENERAL

See Section 1.2 MAINTENANCE SCHEDULE for the required service interval.

PROCEDURE

1. Remove large allen head socket screw in center of air cleaner cover. Remove air cleaner cover with rubber seal. See Figure 1-3.
2. Remove three T27 TORX screws to release cover bracket from filter element.

CAUTION

Never run the engine with the filter element removed. The filter prevents dirt and dust from entering the engine.

3. Remove filter element pulling two breather tubes from holes on inboard side.
4. Remove gasket from sleeve on inboard side of filter element. Discard gasket.
5. Remove breather tubes from fittings on two cylinder head breather bolts.
6. Thoroughly clean air cleaner cover, breather tubes and backplate with warm, soapy water.
7. Inspect the breather tubes and rubber seal for cuts, tears, holes or signs of deterioration. Replace as necessary. Direct compressed air through the breather tubes to be sure that they are not plugged.
8. Clean the filter element as follows:
   a. Wash the filter element in warm, soapy water. To remove soot and carbon, soak element for 30 minutes in warm water with mild detergent.

⚠WARNING

Do not use gasoline or solvents to clean filter element. Flammable cleaning agents can cause an intake system fire, which could result in death or serious injury. (00101a)

⚠WARNING

Compressed air can pierce the skin and flying debris from compressed air could cause serious eye injury. Wear safety glasses when working with compressed air. Never use your hand to check for air leaks or to determine air flow rates. (00061a)

   b. Dry the filter element using low pressure compressed air (32 psi/221 kPa maximum). Rotate the element while moving air nozzle up and down the element interior. Do not rap the element on a hard surface.

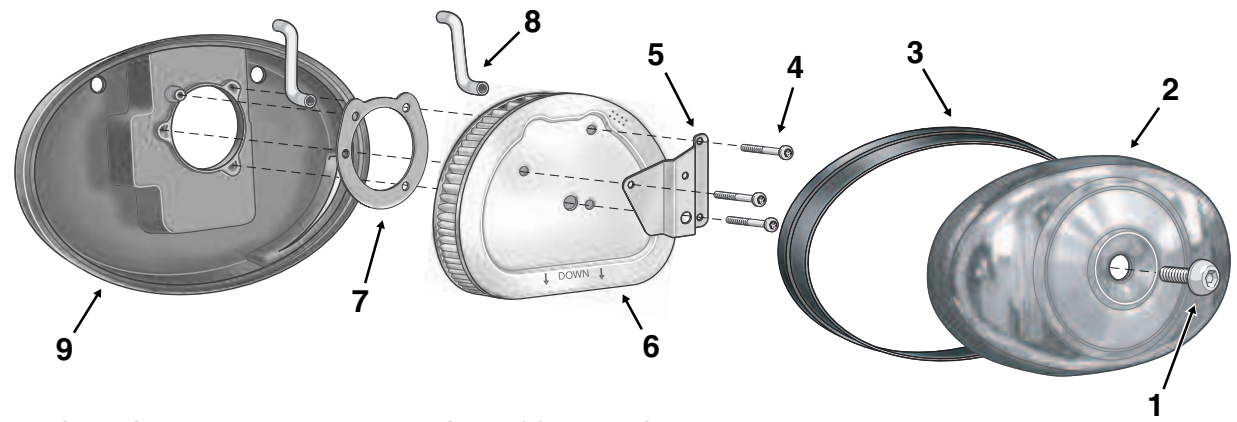

1. Cover Screw
2. Air Cleaner Cover
3. Rubber Seal
4. T27 Torx Screw (3)
5. Cover Bracket
6. Filter Element
7. Gasket
8. Breather Tube (2)
9. Backplate

f1721x4x

Figure 1-3. Air Cleaner Assembly

c. Hold the filter element up to a strong light source. The element can be considered sufficiently clean if light is uniformly visible through the media.

NOTE

Replace the filter element if damaged or if filter media cannot be adequately cleaned.

9. Slide **new** gasket over sleeve on inboard side of filter element. Be sure holes in gasket are aligned with those in filter.
10. Insert breather tubes about 1/4 inch (6.4 mm) into holes on inboard side of filter element.
11. Install breather tubes onto fittings of two cylinder head breather bolts.

NOTE

Air cleaner mounting without installation of the breather tubes allows crankcase vapors to be vented into the atmosphere in violation of legal emissions standards.

12. Place filter element onto backplate with the flat side down, so that hole on inboard side of element fits over molded boss in backplate.
13. Align holes in cover bracket with those in filter element and start three T27 TORX screws. Stamp on cover bracket points to downside. Alternately tighten screws to 40-60 **in-lbs** (4.5-6.8 Nm) in a crosswise pattern.
14. Verify that rubber seal is properly seated around perimeter of air cleaner cover.
15. Fit air cleaner cover into backplate. Apply a small dab of Loctite Medium Strength Threadlocker 243 (blue) to threads of large allen head socket screw. Install screw in center of air cleaner cover. Tighten screw to 36-60 **in-lbs** (4.1-6.8 Nm).

TIRES 1.5

GENERAL

See Section 1.2 MAINTENANCE SCHEDULE for the required service interval.

PROCEDURE

1. Inspect for wear as follows:
   a. Locate the arrows on the tire sidewalls. The arrows point to location of the tread wear indicator bars. See upper frame of Figure 1-4.
   b. Immediately replace tires if any tread wear indicator bar is on the tire tread surface, indicating that 1/32 inch (0.8 mm) or less of tire tread pattern remains. See lower frame of Figure 1-4.

NOTE

Harley-Davidson recommends that the tires be replaced ***BEFORE*** *the tread wear indicator bars are on the tire tread surface.*

2. Inspect for damage. Replace tires if:
   - Cords or fabric become visible through cracked sidewalls, snags or deep cuts.
   - Bump, bulge or split line is observed.
   - Puncture, deep cut or other damage is present that is not repairable.
3. Check tire pressure.

Table 1-4. Tire Pressure (Cold)

DUNLOP TIRES ONLY	FRONT		REAR	
	PSI	BARS	PSI	BARS
Solo Rider	36	2.5	36	2.5
Rider & One Passenger	36	2.5	40	2.8

⚠WARNING

Do not inflate tire beyond maximum pressure as specified on sidewall. Over inflated tires can blow out, which could result in death or serious injury. (00027a)

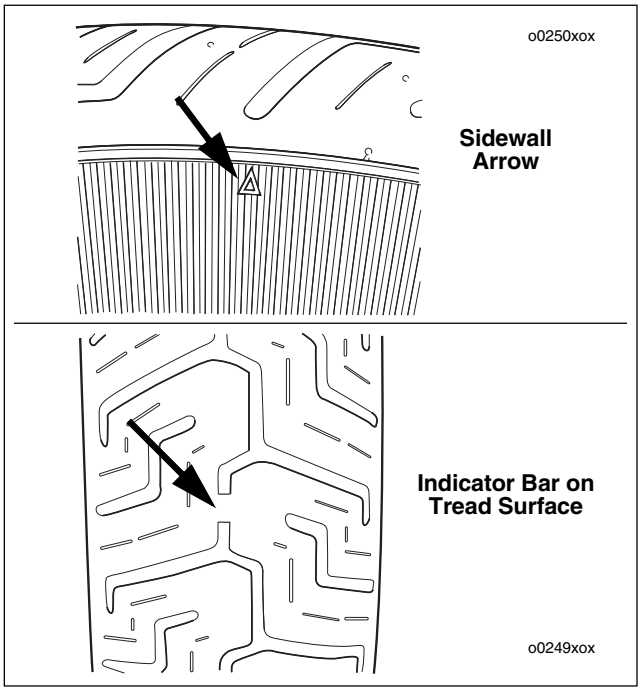

Figure 1-4. Tread Wear Indicator Bars

WHEEL SPOKES 1.6

GENERAL

See Section 1.2 MAINTENANCE SCHEDULE for the required service interval.

PROCEDURE

1. Raise wheel off the ground.

CAUTION

If nipples require more than one full turn to tighten spoke, remove tire to check that spoke protrusion has not damaged tube.

2. Lightly tap each spoke with a spoke wrench. Loose spokes will sound dull and must be tightened. Tighten spokes to 40-50 **in-lbs** (4.5-5.6 Nm). If more than a few spokes are loose, true the entire wheel following the procedure under Section 2.7 TRUING LACED WHEEL.

PRIMARY CHAIN/LUBRICANT 1.7

GENERAL

See Section 1.2 MAINTENANCE SCHEDULE for the required service interval.

PROCEDURE

PRIMARY CHAIN ADJUSTMENT

1. Remove seat. See Section 2.25 SEAT, REMOVAL.

WARNING

To prevent accidental vehicle start-up, which could cause death or serious injury, disconnect negative (-) battery cable before proceeding. (00048a)

2. Unthread bolt and remove battery negative cable (black) from battery negative (-) terminal.

3. See Figure 1-5. Remove four T27 TORX screws to free the primary chain inspection cover from the primary chaincase cover.

4. Check the primary chain tension. Push on the upper strand to verify that it has free up and down movement midway between the engine compensating sprocket (front) and the clutch sprocket (rear).

5. Measure the free play to be sure that it falls within the range specified for a hot or cold engine. Refer to Table 1-5.

Table 1-5. Primary Chain Adjustment

(Free Play)	Inches	Millimeters
COLD ENGINE	5/8-7/8 inch	15.9-22.2 mm
HOT ENGINE	3/8-5/8 inch	9.5-15.9 mm

6. If the chain is too tight or too loose, then adjust as follows:

   a. Locate the primary chain tensioner assembly and loosen the top center nut a maximum of two turns. See Figure 1-6.

   b. Raise or lower the chain tensioner assembly as necessary to obtain the specified free play.

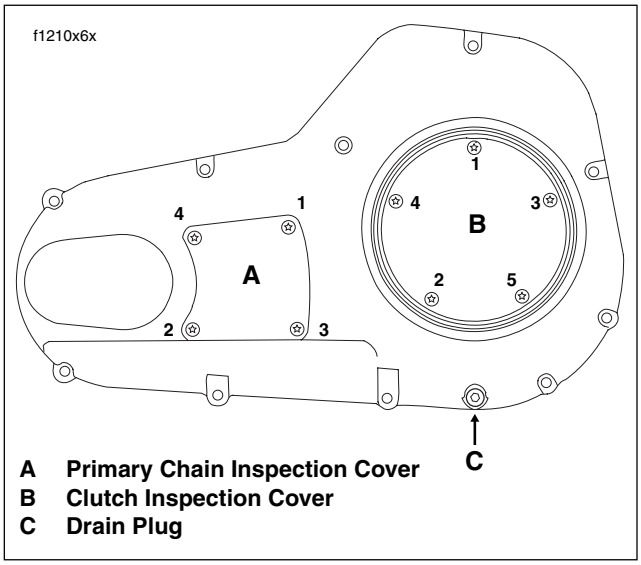

A Primary Chain Inspection Cover
B Clutch Inspection Cover
C Drain Plug

Figure 1-5. Primary Chaincase Cover

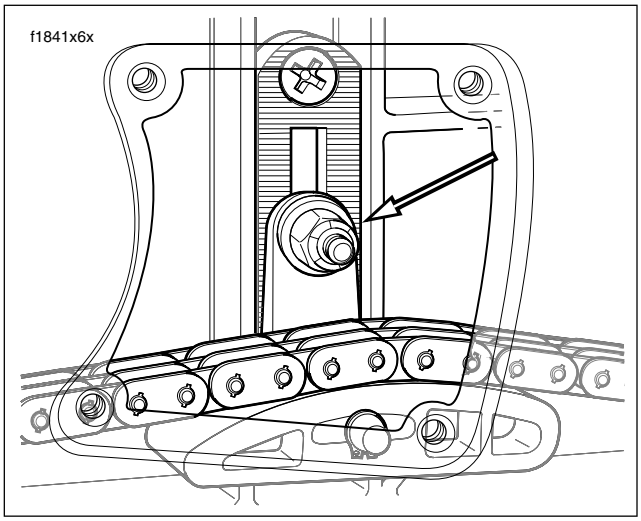

Figure 1-6. Primary Chain Tensioner Assembly

NOTE

As chains stretch and wear, they run tighter at one spot than another. Always adjust the free play at the tightest spot in the chain. Replace the primary chain if it is worn to the point where it cannot be properly adjusted.

CAUTION

Always keep the primary chain properly adjusted. Allowing the chain to run too tight or too loose will result in excessive chain and sprocket wear.

c. Tighten the top center nut of the chain tensioner assembly to 21-29 ft-lbs (29-39 Nm).

7. Align holes in **new** gasket with holes in the primary chaincase cover. Install four T27 TORX screws to secure primary chain inspection cover to primary chaincase cover. Alternately tighten screws to 84-108 **in-lbs** (10-12 Nm) in a crosswise pattern. See Figure 1-5.

8. Insert bolt through battery negative cable (black) into threaded hole of battery negative (-) terminal. Tighten bolt to 60-96 **in-lbs** (6.8-10.9 Nm).

9. Install seat. See Section 2.25 SEAT, INSTALLATION.

PRIMARY CHAIN LUBRICANT

1. Remove five T27 TORX screws (with captive washers) to free clutch inspection cover from primary chaincase cover.

2. Remove magnetic drain plug at bottom of primary chaincase cover. Drain lubricant into suitable container. See Figure 1-5.

3. Clean drain plug. If plug has accumulated a lot of debris, inspect the condition of chaincase components.

4. Inspect drain plug O-ring for cuts, tears or signs of deterioration. Replace as necessary.

5. Install drain plug back into primary chaincase cover. Tighten plug to 36-60 **in-lbs** (4.1-6.8 Nm).

CAUTION

Do not overfill the primary chaincase with lubricant. Overfilling can cause rough clutch engagement, incomplete disengagement, clutch drag and/or difficulty in finding neutral at engine idle. (00199b)

⚠WARNING

Be sure that no lubricant gets on tires, wheels or brakes when changing fluid. Traction can be adversely affected, which could result in loss of control of the motorcycle and death or serious injury. (00047c)

6. Pour 32 ounces (946 ml) of Harley-Davidson FORMULA+ TRANSMISSION AND PRIMARY CHAINCASE LUBRICANT through the clutch inspection cover opening, Part No. 99851-05 (quart). See Figure 1-7.

7. To avoid punching holes in the clutch inspection cover gasket or enlarging existing holes, install clutch inspection cover and **new** gasket as follows:

   a. Align the triangular shaped hole in the gasket with the top hole in the clutch inspection cover. Be sure the rubber molding and the words “towards clutch” face the motorcycle.

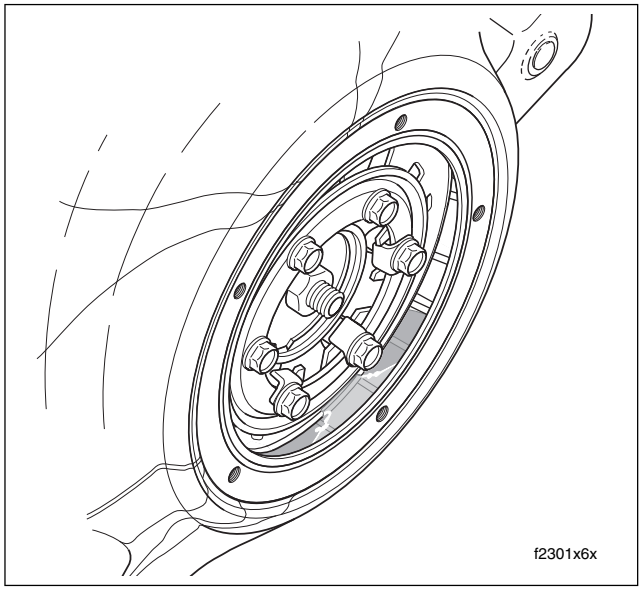

Figure 1-7. Add Primary Chaincase Lubricant

   b. Insert screw (with captive washer) through clutch inspection cover and carefully thread it all the way through triangular shaped hole in gasket. Do not push screw through hole.

   c. Hang the clutch inspection cover on the primary chaincase cover flange by starting the top cover screw.

   d. Start the remaining four screws (with captive washers).

   e. Using a T27 TORX drive head, alternately tighten screws to 84-108 **in-lbs** (10-12 Nm) in the pattern shown in Figure 1-5.

CLUTCH ADJUSTMENT 1.8

GENERAL

See Section 1.2 MAINTENANCE SCHEDULE for the required service interval.

PROCEDURE

CAUTION

Perform the clutch adjustment with the motorcycle at room temperature. The clearance at the adjuster screw will increase as the powertrain temperature increases. If adjuster screw is adjusted while the powertrain is hot, clearance at push rod bearing could be insufficient with powertrain cold and clutch slippage could occur.

NOTE

Perform adjustment procedure whenever any clutch components are replaced. Then repeat adjustment after first 500 miles (800 km) of use.

1. Stand motorcycle upright and level.
2. Remove five T27 TORX screws (with captive washers) to free clutch inspection cover from primary chaincase cover.
3. See Figure 1-8. Slide rubber boot off cable adjuster. Holding cable adjuster with 1/2 inch wrench, loosen jam nut using a 9/16 inch wrench. Back jam nut away from cable adjuster. Move adjuster toward jam nut to introduce a large amount of free play at hand lever.

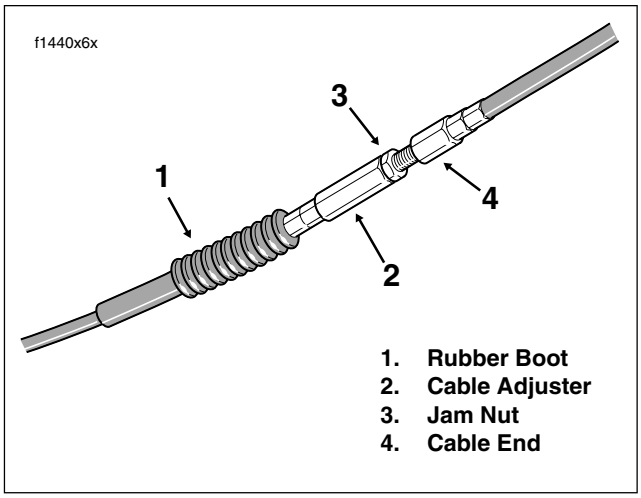

Figure 1-8. Clutch Cable Adjuster Mechanism

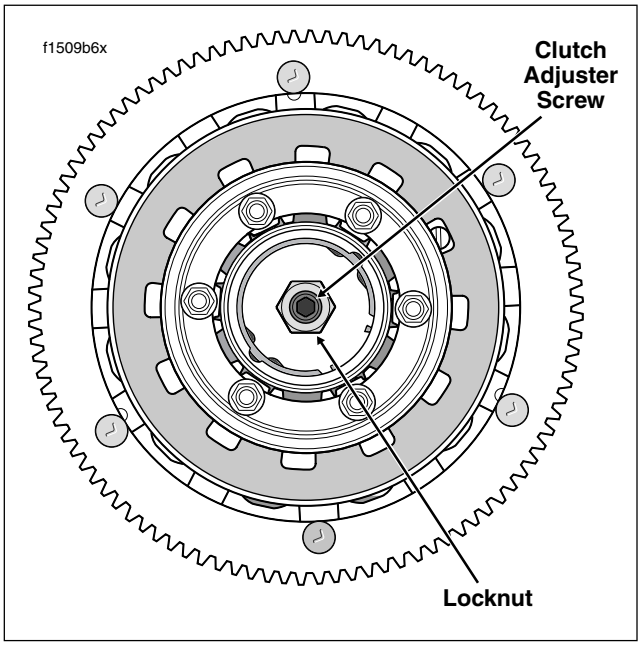

Figure 1-9. Clutch Assembly

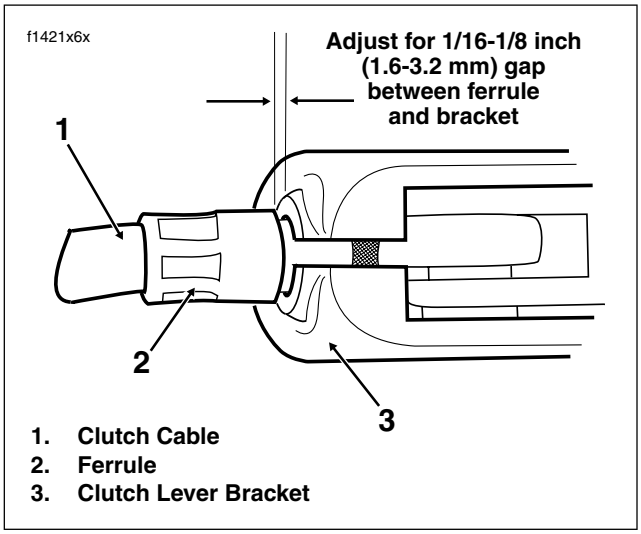

Figure 1-10. Adjust Clutch Free Play

4. See Figure 1-9. Loosen locknut on clutch adjuster screw. To take up all free play in push rods, turn screw inward (clockwise) until lightly seated.
5. Back out adjuster screw 1/2 to 1 turn. While holding adjuster screw with an allen wrench, tighten locknut to 72-120 **in-lbs** (8-14 Nm).
6. Squeeze clutch lever to maximum limit three times to set ball and ramp release mechanism.

7. Turn cable adjuster away from jam nut until slack is eliminated at hand lever. Pull clutch cable ferrule away from clutch lever bracket to check free play. Turn cable adjuster as necessary to obtain 1/16 to 1/8 inch (1.6-3.2 mm) free play between end of cable ferrule and clutch lever bracket, as shown in Figure 1-10.

8. Hold adjuster with 1/2 inch wrench. Using 9/16 inch wrench, tighten jam nut against cable adjuster. Cover cable adjuster mechanism with rubber boot.

9. To avoid punching holes in the clutch inspection cover gasket or enlarging existing holes, install clutch inspection cover and **new** gasket as follows:

   a. Align the triangular shaped hole in the gasket with the top hole in the clutch inspection cover. Be sure the rubber molding and the words “towards clutch” face the motorcycle.

   b. Insert screw (with captive washer) through clutch inspection cover and carefully thread it all the way through triangular shaped hole in gasket. Do not push screw through hole.

   c. Hang the clutch inspection cover on the primary chaincase cover flange by starting the top cover screw.

   d. Start the remaining four screws (with captive washers).

   e. Using a T27 TORX drive head, alternately tighten screws to 84-108 **in-lbs** (10-12 Nm) in the pattern shown in Figure 1-5.

TRANSMISSION LUBRICANT 1.9

GENERAL

See Section 1.2 MAINTENANCE SCHEDULE for the required service interval.

PROCEDURE

1. Remove the filler plug from the clutch release cover on the right side of the transmission case. See Figure 1-11. Check the O-ring for tears, cuts or general deterioration. Replace as necessary. See Figure 1-12.
2. Locate transmission drain plug on the right side of the oil pan. Remove the magnetic plug and drain the transmission lubricant into a suitable container.
3. Remove any foreign material from the drain plug. Check the O-ring on the drain plug for tears, cuts or general deterioration. Replace as necessary.
4. Install the transmission lubricant drain plug and tighten to 14-21 ft-lbs (19-28 Nm).

WARNING

When adding lubricant, do not allow dirt, debris or other contaminants to enter the transmission case. Exercise caution so that lubricant does not contact rear wheel, tire and brake components. Such contact can adversely affect traction and may lead to loss of vehicle control, which could result in death or serious injury.

5. Fill the transmission with 20-24 oz. (590-710 ml) of transmission lubricant or until the lubricant level on the dipstick of the filler plug is at the F(ULL) mark with the motorcycle in a level, upright position and the filler plug resting on the threads.

   Use only Harley-Davidson FORMULA+ TRANSMISSION AND PRIMARY CHAINCASE LUBRICANT, Part No. 99851-05 (quart).

6. Install the transmission filler plug/dipstick in the clutch release cover. Tighten the plug to 25-75 **in-lbs** (2.8-8.5 Nm).

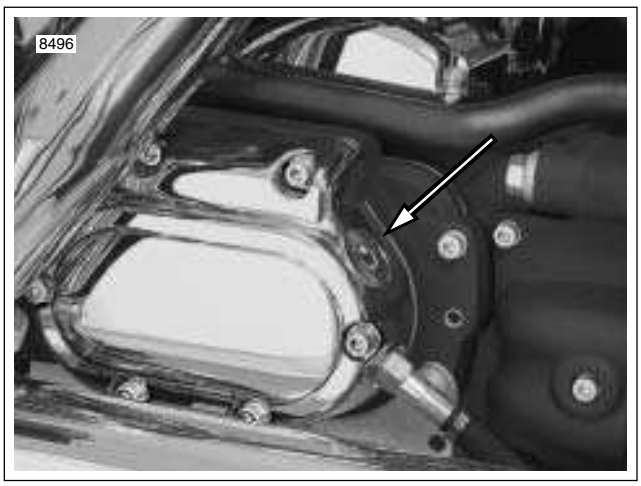

Figure 1-11. Clutch Release Cover

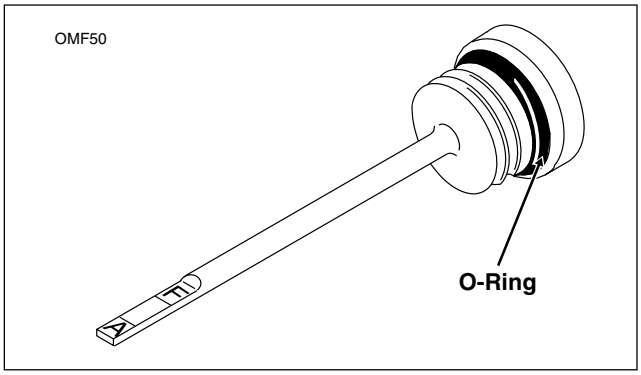

Figure 1-12. Transmission Lubricant Filler Plug/Dipstick

DRIVE BELT 1.10

GENERAL

See Section 1.2 MAINTENANCE SCHEDULE for the required service interval.

PROCEDURE

1. Remove left side saddlebag. See Section 2.26 SADDLEBAG, REMOVAL.
2. Obtain BELT TENSION GAUGE (HD-35381A), or install adapter (HD-35381-3) on old style gauge. See Figure 1-13.
3. Apply 10 lbs. (4.5 kg) of force at the midpoint of the bottom belt strand. See Figure 1-14. Check deflection at the loosest spot in the belt with the transmission in neutral and the motorcycle cold. Belt deflection should be as follows:

Table 1-6. Belt Deflection

Orientation	Inches	Millimeters
On Jiffy Stand Without Rider or Luggage 10 psi (69 kPa) in Rear Shocks	1/4 - 5/16	6.4 - 7.9
Motorcycle Upright With Rear Wheel in the Air	3/16 - 1/4	4.8 - 6.4

If belt deflection is within specification, install left side saddlebag. If adjustment is necessary, move to step 4.

4. Remove right side saddlebag. See Section 2.26 SADDLEBAG, REMOVAL.
5. Standing on right side of motorcycle, remove E-clip from groove at end of axle.
6. Obtain torque wrench with 1/2 inch drive head and AXLE NUT TORQUE ADAPTER (HD-47925). Proceed as follows:

NOTE

The Axle Nut Torque Adapter simplifies the belt adjustment procedure by allowing the cone nut to be properly tightened without having to remove the right side muffler. The tool also can be used to loosen the cone nut, as well as rotate the weld nut on the left side.

a. Install torque adapter perpendicular to torque wrench as shown in Figure 1-15.

b. Insert tool up between rear wheel and muffler to capture cone nut. For best clearance with muffler, be sure torque adapter is on the outboard side.

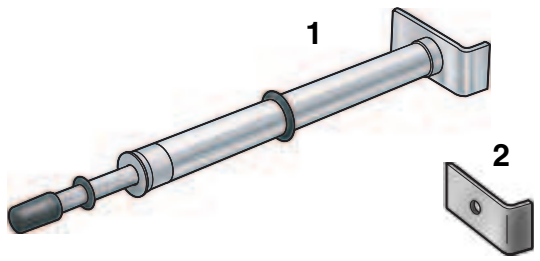

1. **Belt Tension Gauge (Part No. HD-35381A)**
2. **Belt Tension Gauge Adapter (Part No. HD-35381-3)**

Figure 1-13. Obtain Belt Tension Gauge

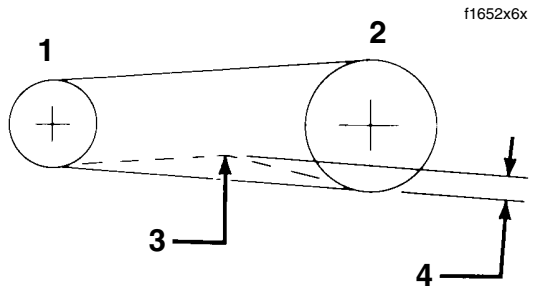

1. **Transmission Sprocket**
2. **Rear Wheel Sprocket**
3. **10 lbs. (4.5 kg) of Force**
4. **Refer to Table 1-6.**

Figure 1-14. Check and Adjust Belt Deflection

CAUTION

Since any extension can act as a torque multiplier, the torque wrench must be perpendicular to the torque adapter when the cone nut is tightened. The 90 degree orientation between the tools cancels the multiplier effect and prevents the cone nut from being over-tightened. If the torque adapter is kept inline with the torque wrench, the multiplier effect is in force and parts damage will occur.

c. Loosen cone nut, and then snug to 15-20 ft-lbs (20-27 Nm). See Figure 1-16.

7. If belt is too tight, move to step 8 to increase belt deflection. If belt is too loose, reduce belt deflection as follows:

a. Rotate weld nut on left side of axle in a clockwise direction.

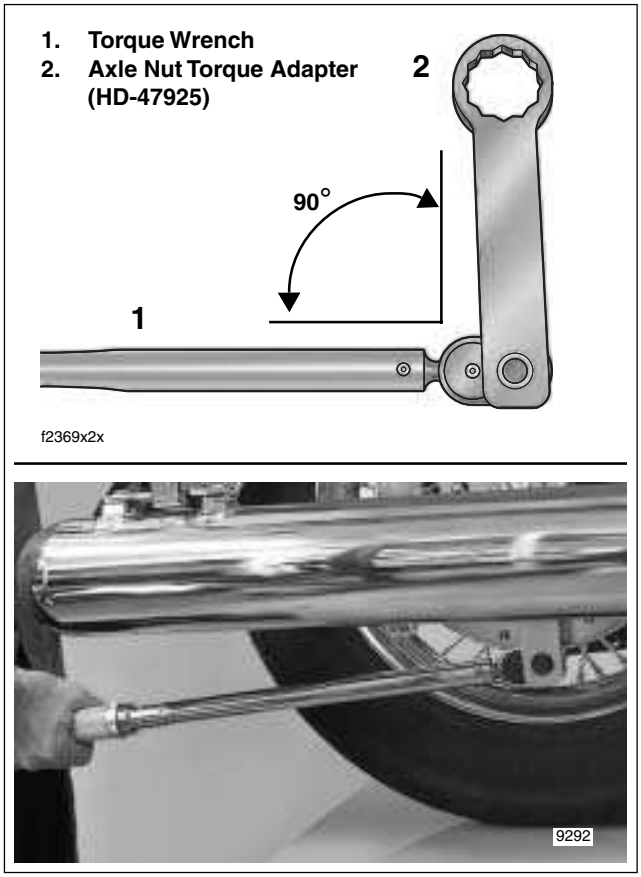

Figure 1-15. Install Tool Perpendicular to Torque Wrench

b. Check belt deflection. Apply 10 lbs. (4.5 kg) of force at the midpoint of the bottom belt strand. Belt deflection should be within the range specified in Table 1-6.

c. If belt is still too loose, repeat steps 7(a) through 7(b). If belt is now too tight, move to step 8.

8. If belt is too tight, increase belt deflection as follows:

a. Using a hydraulic center stand, raise motorcycle so that the rear wheel is off the ground.

b. Rotate weld nut on left side of axle in a counter-clockwise direction.

c. Push wheel forward slightly so that adjuster cam just contacts weld nub on both sides of rear swing-arm. See Figure 1-16.

d. Check belt deflection. Apply 10 lbs. (4.5 kg) of force at the midpoint of the bottom belt strand. Belt deflection should be within the range specified in Table 1-6.

e. If belt is still too tight, repeat steps 8(b) through 8(d). If belt is now too loose, move to step 7.

9. **Holding** weld nut on left side of axle, tighten cone nut on right side to 95-105 ft-lbs (128.8-142.4 Nm).

NOTE

If the axle moves during tightening of the cone nut, then the belt deflection procedure must be restarted.

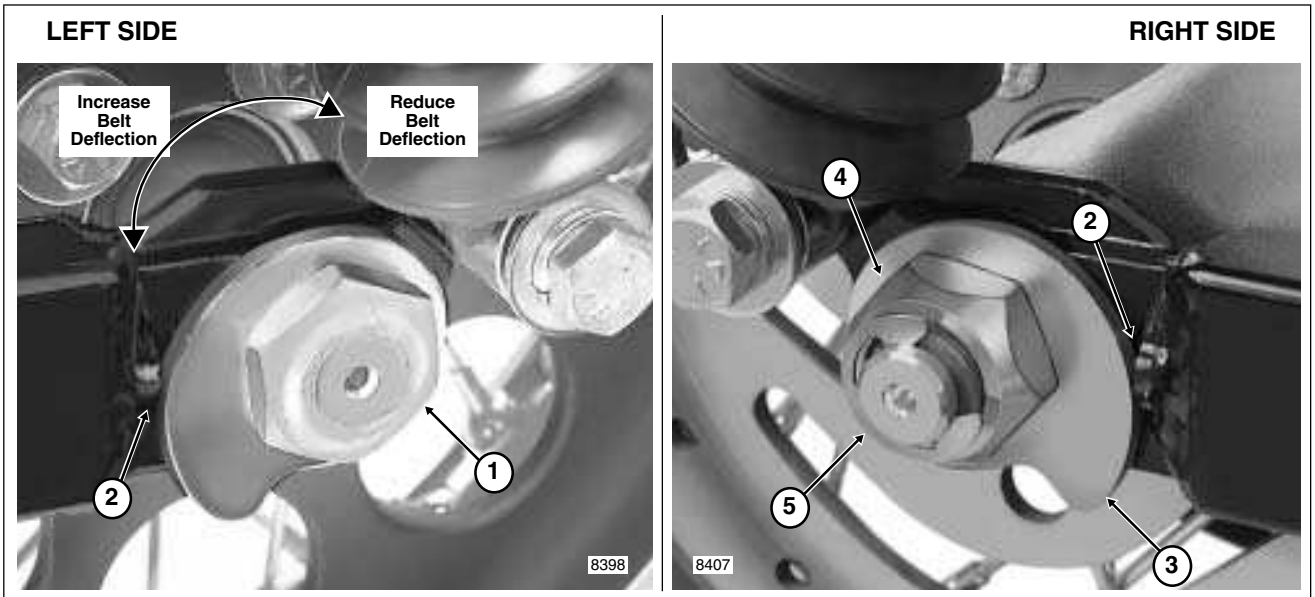

1. Weld Nut
2. Weld Nub
3. Adjuster Cam
4. Cone Nut
5. E-Clip

Figure 1-16. Move Rear Wheel Forward Until Adjuster Cams Just Contact Weld Nubs

10. Recheck belt deflection to verify that it is still within specification.

    If the belt deflection is not within specification, loosen cone nut and then snug to 15-20 ft-lbs (20-27 Nm) before returning to step 7.

11. With the flat side out, install **new** E-clip in groove on right side of axle.

12. Install saddlebags. See Section 2.26 SADDLEBAG, INSTALLATION.

THROTTLE CABLES 1.11

GENERAL

See Section 1.2 MAINTENANCE SCHEDULE for the required service interval.

PROCEDURE

LUBRICATION

CAUTION

Do not remove the switch housing assembly without first placing the 5/32 inch (4.0 mm) cardboard insert between the brake lever and lever bracket. Removal without the insert may result in damage to the rubber boot and plunger of the Front Stoplight Switch.

NOTE

Use the eyelet of an ordinary cable strap if the cardboard insert is not available.

1. Place the cardboard insert between the brake lever and lever bracket. See Figure 1-17.
2. Using a T25 TORX drive head, remove the upper and lower switch housing screws.
3. Using a T27 TORX drive head, loosen the upper screw securing the handlebar clamp to the master cylinder housing. Remove the lower clamp screw with flat washer.
4. Remove the brass ferrules from the notches on the inboard side of the throttle grip. Remove the ferrules from the cable end fittings. See Figure 1-18.

NOTE

On non cruise equipped models, remove the friction shoe from the end of the tension adjuster screw. The friction shoe is a loose fit and may fall out or become dislodged if the lower switch housing is turned upside down or shaken.

5. Remove the throttle grip from the end of the handlebar.
6. Move upper switch housing to the side in order to access lower housing.

⚠CAUTION

Lubit-8 Tufoil Chain and Cable Lube contains detergents. Avoid contact with eyes. Keep out of reach of children.

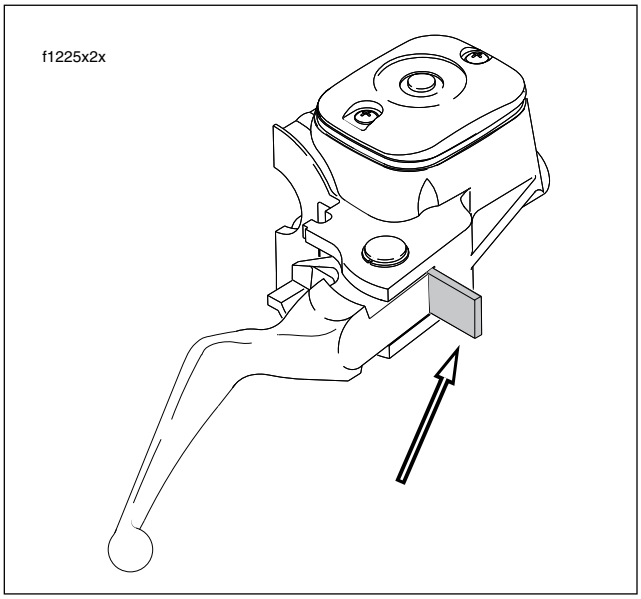

Figure 1-17. Install Cardboard Insert

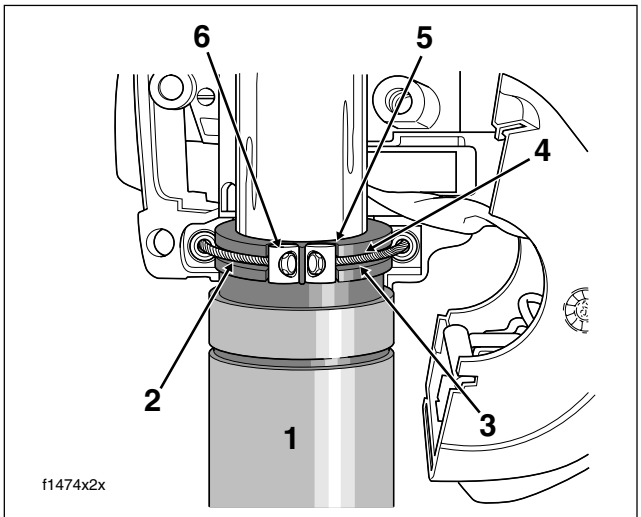

1.	Throttle Grip	4.	Groove
2.	Idle Cable	5.	Notch
3.	Throttle Cable	6.	Ferrule

Figure 1-18. Remove Throttle/Idle Cables

7. Obtain tube of Lubit-8 Tufoil Chain and Cable Lube (HD Part No. 94968-85TV- 1/4 fl. oz.). Insert pin of tube between throttle cable and cable housing inside lower switch housing. Squeeze tube to squirt a quantity of lubricant into cable housing moving pin around cable OD. See Figure 1-19.

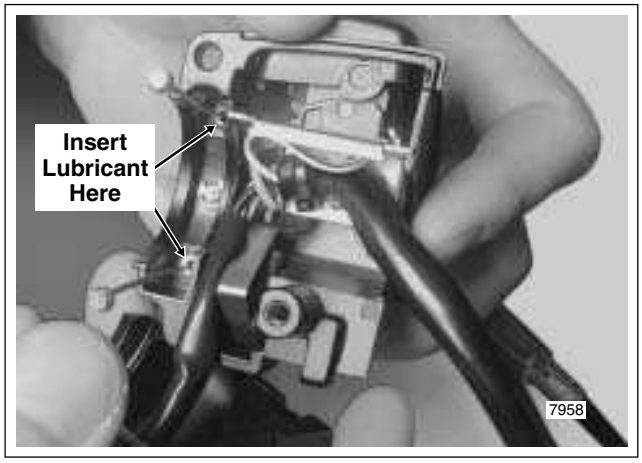

Figure 1-19. Lubricate Throttle/Idle Cables

8. Repeat the procedure squirting a quantity of lubricant between the idle cable and cable housing.

NOTE

On non cruise equipped models, install the friction shoe with the concave side up so that the pin hole is over the point of the adjuster screw. The friction shoe is a loose fit and may fall out or become dislodged if the lower switch housing is turned upside down or shaken.

9. Apply a light coating of graphite to the handlebar.
10. Slide the throttle grip over the end of the right handlebar until it bottoms against the closed end. Rotate the grip so that the ferrule notches are at the top. To prevent binding, pull the grip back about 1/8 inch (3.2 mm).
11. Position the lower switch housing beneath the throttle grip. Install the brass ferrules onto the cables so that the end fittings seat in the ferrule recess. Seat the ferrules in their respective notches on the throttle grip. Verify that the cables are captured in the grooves molded into the grip. See Figure 1-18.
12. Position the upper switch housing over the handlebar and lower switch housing. Verify that the wire harness conduit runs in the depression at the bottom of the handlebar.
13. Start the upper and lower switch housing screws, but do not tighten.
14. Position the brake lever/master cylinder assembly inboard of the switch housing assembly engaging the tab on the lower switch housing in the groove at the top of the brake lever bracket.
15. Align the holes in the handlebar clamp with those in the master cylinder housing and start the lower screw (with flat washer). Position for rider comfort. Beginning with the top screw, tighten the screws to 60-80 **in-lbs** (6.8-9.0 Nm) torque using a T27 TORX drive head.
16. Using a T25 TORX drive head, tighten the lower and upper switch housing screws to 35-45 **in-lbs** (4-5 Nm).

NOTE

Always tighten the lower switch housing screw first so that any gap between the upper and lower housings is at the front of the switch assembly.

17. Remove the cardboard insert between the brake lever and lever bracket.
18. Turn the Ignition/Light Key Switch to IGNITION and apply brake lever to test operation of brake lamp.

ADJUSTMENT

NOTE

For throttle and idle cable adjustment on cruise equipped models, see Section 8.31 CRUISE CONTROL (FLHRC, FLHTCU, FLTR).

1. Slide rubber boot off throttle cable adjuster mechanism. See Figure 1-20. Holding cable adjuster with a 3/8 inch wrench, loosen jam nut turning in a clockwise direction. Back jam nut away from cable adjuster until it stops. Turn cable adjuster clockwise until it contacts jam nut. Repeat procedure on idle cable adjuster.
2. Point the front wheel straight ahead. Gently turn the throttle grip so that the throttle is wide open (fully counterclockwise) and then hold in position. Now turn the cable adjuster counterclockwise until the throttle cam stop just touches the stop plate on the carburetor/induction module. See Figure 1-21. Release the throttle grip, turn cable adjuster counterclockwise an additional 1/2-1 full turn, and then tighten the jam nut against the cable adjuster. Cover cable adjuster mechanism with rubber boot.

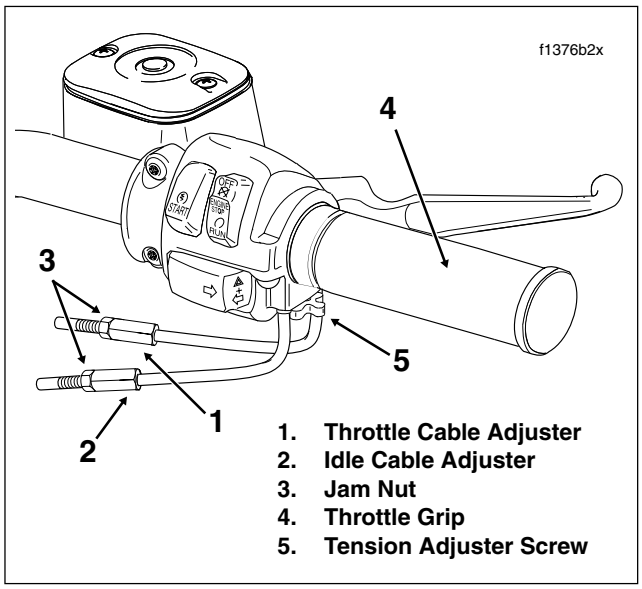

Figure 1-20. Throttle Cable Assembly - Throttle Side (FLHR/S)

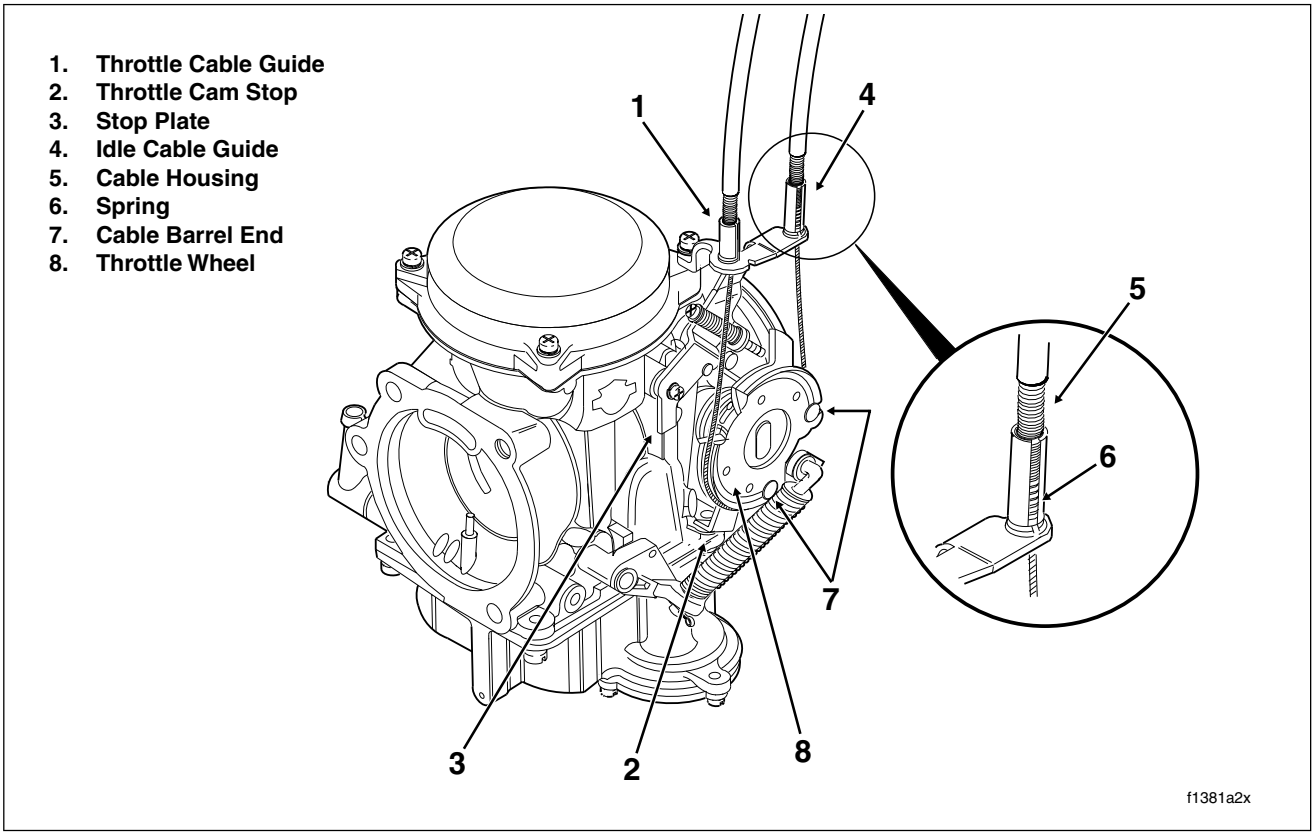

Figure 1-21. Throttle Cable Assembly - Carburetor Side

3. Turn the front wheel full right. Turn the idle cable adjuster counterclockwise until the cable housing just touches the spring in the cable guide (as seen through slot). Work the throttle grip to verify that the throttle cable returns to the idle position when released. If the cable does not return to idle, turn the cable adjuster clockwise slightly until the correct response is achieved. Tighten jam nut against the cable adjuster and cover cable adjuster mechanism with rubber boot.

4. Verify that the throttle control operates freely without binding. With the tension adjuster screw backed off, the throttle grip must freely return to the closed (idle) position. The throttle control also must open and close freely when the front wheel is turned to both the right and left fork stops. If the throttle grip does not return to the idle position freely, check the adjuster screw tension (if present). If the adjuster screw is backed off, inspect the cables for short bends.

ENRICHENER CONTROL 1.12

GENERAL

See Section 1.2 MAINTENANCE SCHEDULE for the required service interval.

PROCEDURE

NOTE

The fuel enrichener knob should open, remain open and then close without binding. The knurled plastic nut next to the enrichener knob controls the ease at which the cable slides within the conduit.

If adjustment is needed, proceed as follows:

1. See Figure 1-22. Loosen hex nut at backside of mounting bracket.
2. Move cable assembly free of slot in mounting bracket.
3. Hold cable assembly at flat with adjustable wrench. Hand turn knurled nut counterclockwise to reduce sliding resistance until knob slides inward unaided.
4. Turn knurled nut clockwise to increase sliding resistance until knob remains fully out without holding and then closes with relative ease.
5. Slide enrichener cable into slot of mounting bracket. Flat on threads must face rear of motorcycle for script on enrichener knob to be right side up. With external tooth lockwasher and hex nut positioned on the inboard side of the mounting bracket, tighten hex nut to 20-35 **in-lbs** (2.3-4.0 Nm).

CAUTION

Do not lubricate the cable or inside of conduit. The cable must have sliding resistance to work properly.

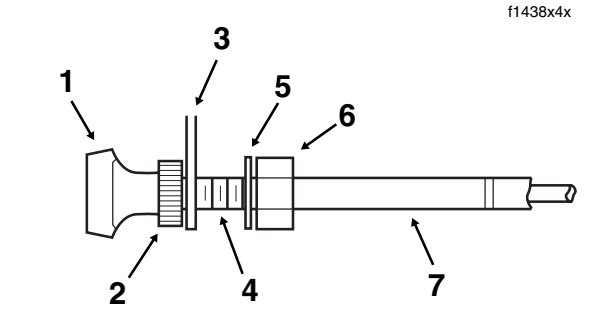

1. **Enrichener Knob**
2. **Knurled Nut**
3. **Mounting Bracket**
4. **Flat**
5. **Lockwasher**
6. **Hex Nut**
7. **Enrichener Cable**

Figure 1-22. Enrichener Control

FUEL SYSTEM 1.13

GENERAL

See Section 1.2 MAINTENANCE SCHEDULE for the required service interval.

PROCEDURE

LINES AND FITTINGS

Carefully inspect fuel system lines and fittings for leaks or damage.

FUEL FILTER (CARBURETED)

WARNING

When servicing the fuel system, do not smoke or allow open flame or sparks in the vicinity. Gasoline is extremely flammable and highly explosive, which could result in death or serious injury. (00330a)

1. Turn handle of fuel valve to OFF.

WARNING

Gasoline can drain from the carburetor fuel line when disconnected from fuel valve fitting. Gasoline is extremely flammable and highly explosive, which could result in death or serious injury. Wipe up spilled fuel immediately and dispose of rags in a suitable manner. (00256a)

2. Using a side cutters, cut clamp and remove hose from fuel outlet fitting at front of fuel valve. See Figure 1-23. Drain free end of hose into a suitable container.
3. Remove elbow of intake manifold vacuum tube from fitting on inboard side of fuel valve.
4. Attach a length of fuel hose to the fuel outlet fitting. The hose must be long enough to reach a suitable gasoline container.
5. Turn handle of fuel valve to RES(ERVE).
6. Using the correct hose adapter, connect the Mity-Vac® Hand Pump (HD-23738A) to vacuum fitting.

CAUTION

To avoid damage to the diaphragm of the fuel valve, do not apply a vacuum greater than 25 inches of Mercury (Hg) to vacuum fitting.

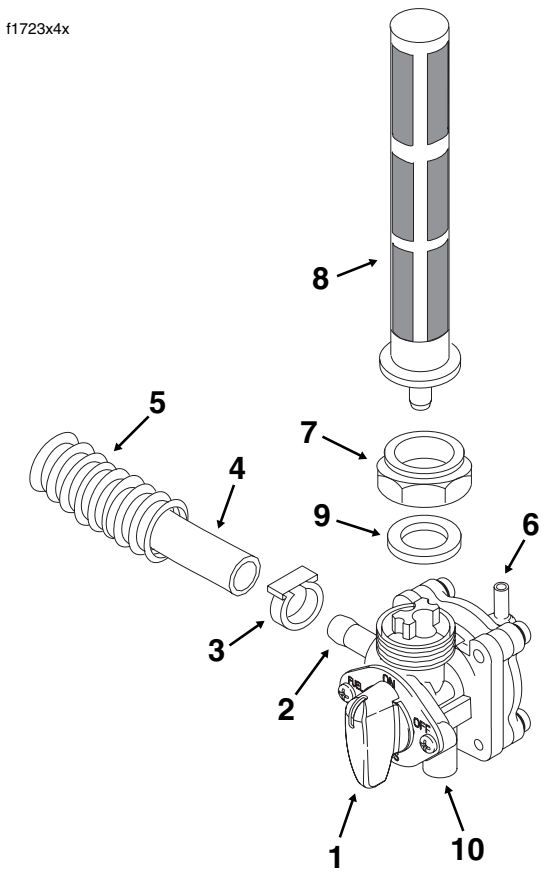

1. **Valve Handle**
2. **Fuel Outlet Fitting**
3. **Hose Clamp**
4. **Carburetor Fuel Inlet Hose**
5. **Convoluted Tubing**
6. **Vacuum Fitting**
7. **Jam Nut**
8. **Filter Strainer**
9. **Gasket**
10. **Atmospheric Pressure Port**

Figure 1-23. Vacuum Operated Fuel Valve

7. Gently apply a vacuum of 1-10 inches of Mercury (Hg) to vacuum fitting to get a good flow of gasoline through the valve.
8. When fuel tank is completely drained, remove Mity-Vac® Hand Pump from the vacuum fitting.
9. Holding fuel tank adapter, turn the hex jam nut in a clockwise direction to remove fuel valve assembly.
10. Remove fuel filter strainer from the valve head. Clean or replace.

11. Remove hex jam nut from the fuel valve.

12. Remove gasket from the valve head. Discard the gasket.

13. Install a **new** gasket on the valve head.

14. Install the fuel filter strainer fitting the internal tube into the larger hole in the valve head.

15. Clean threads and sealing surface of fuel tank adapter and inspect for damage. Replace if necessary.

16. With hex side down, turn jam nut two full turns in a counterclockwise direction to thread onto fuel tank adapter.

17. Insert fuel filter strainer into fuel tank. Holding hex jam nut to prevent rotation, turn fuel valve two full turns in a clockwise direction to thread onto hex jam nut.

⚠WARNING

Do not thread fuel valve onto hex jam nut more than two turns or nut may "bottom" on valve, a condition which may result in a gasoline leak. Any gasoline leak is a potential fire hazard that could result in death or serious injury.

18. Holding fuel valve to prevent rotation, turn hex jam nut in a counterclockwise direction until snug. Tighten hex jam nut to 15-20 ft-lbs (20.3-27.1 Nm).

CAUTION

Do not allow dirt or fluids to get into the vacuum tube that connects the fuel valve to the intake manifold. Contaminants can block the vacuum signal which could cause the fuel valve to malfunction.

19. Connect elbow of intake manifold vacuum tube to fitting on inboard side of fuel valve.

20. Slide **new** clamp onto free end of carburetor fuel inlet hose. Install hose onto fuel outlet fitting at front of fuel valve. Crimp clamp using HOSE CLAMP PLIERS (HD-97087-65B).

21. Turn handle of fuel valve to OFF and fill the fuel tank. Carefully inspect for leaks at fitting.

22. Turn valve handle to ON and start engine. No priming or special procedures are required to start fuel flow. Carefully inspect for leaks at fitting.

23. Stop engine and return valve to the OFF position.

FUEL FILTER CANISTER (FUEL INJECTED)

See Section 9.4 FUEL TANK (FUEL INJECTED), FUEL FILTER CANISTER, for replacement procedure.

BRAKES 1.14

GENERAL

See Section 1.2 MAINTENANCE SCHEDULE for the required service interval.

PROCEDURE

BRAKE FLUID

Inspect the brake fluid condition and level. Proceed as follows:

CAUTION

DOT 4 brake fluid will damage painted and molded-in color surfaces it comes in contact with. Always use caution and protect surfaces from spills whenever brake work is performed. Failure to comply can result in cosmetic damage. (00239a)

IMPORTANT NOTE

Immediately wipe up any brake fluid spillage with a clean, dry, soft cloth. Follow up by thoroughly wiping affected area with a clean, damp, soft cloth (small spills) or washing with a large quantity of soapy water (large spills).

CAUTION

To prevent dirt and other contaminants from entering the master cylinder reservoir, thoroughly clean the cover before removal.

1. Remove two Phillips screws from cover of master cylinder reservoir. Remove cover (with gasket).

WARNING

Use only fresh, uncontaminated DOT 4 brake fluid. Fluid containers that have been opened may have been contaminated by dirt or moisture. Use of contaminated brake fluid may adversely affect braking ability and lead to brake failure which could result in death or serious injury.

IMPORTANT NOTE

The shelf life of a bottle of unopened DOT 4 brake fluid is one year. The shelf life of an uncontaminated bottle that has been opened and then resealed is one week.

2. Stand the motorcycle upright so that the master cylinder reservoir is in a level position. Fluid level should be 1/4 inch (6.4 mm) from the top. Add fluid as necessary.

NOTE

Use only Harley-Davidson DOT 4 BRAKE FLUID, Part No. 99953-99A (12 ounce bottle), from a sealed container.

3. Install cover (with gasket) on the master cylinder reservoir. Install two Phillips screws and tighten to 6-8 **in-lbs** (0.7-0.9 Nm).

WARNING

After repairing the brake system, test brakes at low speed. If brakes are not operating properly, testing at high speeds can cause loss of control, which could result in death or serious injury. (00289a)

BRAKE PADS AND DISCS

Inspect the brake pads and discs as follows:

Brake Pads

If brake pad friction material is worn to 0.04 inch (1.02 mm) or less, replace the entire set of pads.

WARNING

Always replace brake pads in complete sets for correct and safe brake operation. Improper brake operation could result in death or serious injury. (00111a)

Brake Discs

The minimum brake disc thickness is stamped on the side of the disc.

When checking the brake pads and discs, inspect the brake lines and hoses for damage or leaks.

SPARK PLUGS 1.15

GENERAL

See Section 1.2 MAINTENANCE SCHEDULE for the required service interval.

PROCEDURE

WARNING

Never disconnect a spark plug cable with the engine running. Doing so will result in an electric shock from the ignition system that could result in death or serious injury.

1. Disconnect spark plug cables from spark plug terminals.
2. Remove spark plug using a 5/8 inch spark plug socket.
3. Examine plugs as soon as they have been removed. The deposits on the plug base are an indication of the plug efficiency and are a guide to the general condition of rings, valves, carburetor and ignition system.
   a. A wet black and shiny deposit on plug base, electrodes and ceramic insulator tip indicate an oil fouled plug. The condition may be caused by worn rings and pistons, loose valves or seals, weak battery or faulty ignition.
   b. A dry fluffy or sooty black deposit indicates a too rich carburetor air-fuel mixture or long periods of engine idling. Excessive use of the enrichener may also cause this condition.
   c. An overheated plug can be identified by a light brown, glassy deposit. This condition may be accompanied by cracks in the insulator or by erosion of the electrodes. This condition is caused by too lean an air-fuel mixture, a hot running engine, valves not seating or improper ignition timing. The glassy deposit on the spark plug is a conductor when hot and may cause high speed misfiring. A plug with eroded electrodes, heavy deposits or a cracked insulator should be replaced.
   d. A plug with white, yellow or light tan to rusty brown powdery deposit indicates balanced combustion. The deposits may be cleaned off at regular intervals if desired.
4. Set the spark plug gap using a wire-type gauge. Bend the outside electrode so only a slight drag on the gauge is felt when passing it between electrodes. Never make adjustments by bending the center electrode. Set gap on all plugs at 0.038-0.043 in. (0.97-1.09 mm)
5. Before installing spark plugs, check condition of threads in cylinder head and on plug. If necessary soften deposits with penetrating oil and clean out with a thread chaser.
6. Apply a very light coating of ANTISEIZE LUBRICANT to spark plug threads.
7. Install spark plug finger tight and then torque to 12-18 ft-lbs (16-24 Nm).

NOTE

If a torque wrench is not available, finger tighten spark plug and then using a spark plug wrench, tighten plug an additional 1/4 turn.

Table 1-7. Spark Plug Data

SIZE	12 mm
GAP	0.038-0.043 in. (0.97-1.09 mm)
TYPE	HD-6R12 (No Substitute)

NOTE

The number 6R12 plug is supplied as original equipment and is the only plug that should be used. The resistor plug reduces radio interference created by the ignition system and will not adversely affect performance or fuel economy.

8. Install spark plug cable from left side coil tower onto front cylinder spark plug. Install spark plug cable from right side coil tower onto rear cylinder spark plug.

ENGINE IDLE SPEED 1.16

GENERAL

See Section 1.2 MAINTENANCE SCHEDULE for the required service interval.

PROCEDURE

Inspect the engine idle speed as follows:

NOTES

- *The C.V. carburetor has an enrichener circuit that will cause the engine to idle at approximately 1500 rpm with the engine at normal operating temperature and the enrichener knob pulled fully out.*
- *The increase in idle speed is intended to alert the rider that the engine is warmed up to normal operating temperature and the enrichener knob should be pushed all the way in.*
- *Continuing to use the enrichener when the engine is at full operating temperature WILL CAUSE FOULED PLUGS.*
- *TECHNICIAN – Be sure the engine is warmed up to normal operating temperature and the enrichener knob is pushed all the way in BEFORE adjusting engine idle speed. Be aware that because there are variations in individual components, it is possible for a properly warmed up engine to idle at 2000 rpm with the enrichener knob pulled PARTIALLY OUT.*

1. See Figure 1-24. With the engine at normal operating temperature and the enrichener all the way in (enrichener valve closed) adjust the throttle stop screw so the engine idles at 950-1050 rpm.

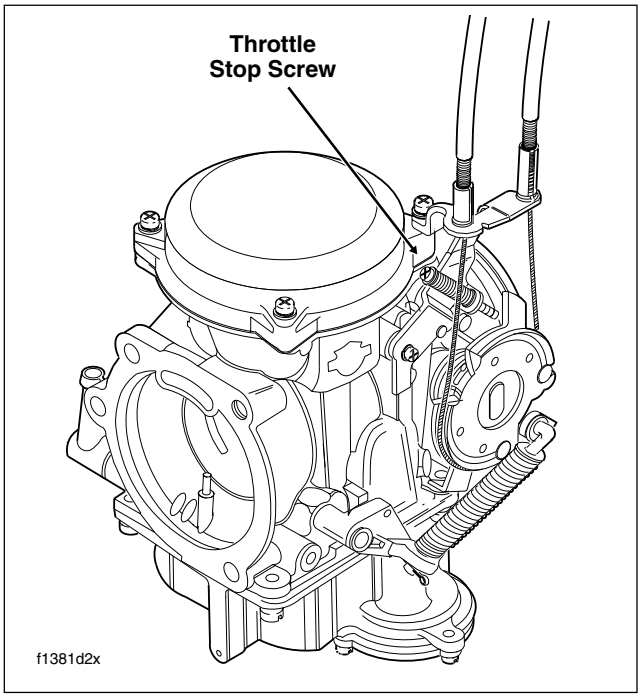

Figure 1-24. Idle Speed Adjustment

NOTE

To measure engine rpm on models without tachometers, use a test tachometer connected to the negative ignition coil terminal.

FRONT FORK OIL 1.17

GENERAL

See Section 1.2 MAINTENANCE SCHEDULE for the required service interval.

PROCEDURE

See Section 2.15 FRONT FORKS for detailed instructions.

STEERING HEAD BEARINGS 1.18

GENERAL

See Section 1.2 MAINTENANCE SCHEDULE for the required service interval.

PROCEDURE

GREASING

1. Turn handlebar full right to access the grease fitting at the left side of the steering head. See Figure 1-25.
2. Using SPECIAL PURPOSE GREASE (Part No. 99857-97), connect grease gun to fitting and inject grease until it exudes from top and bottom of steering head.

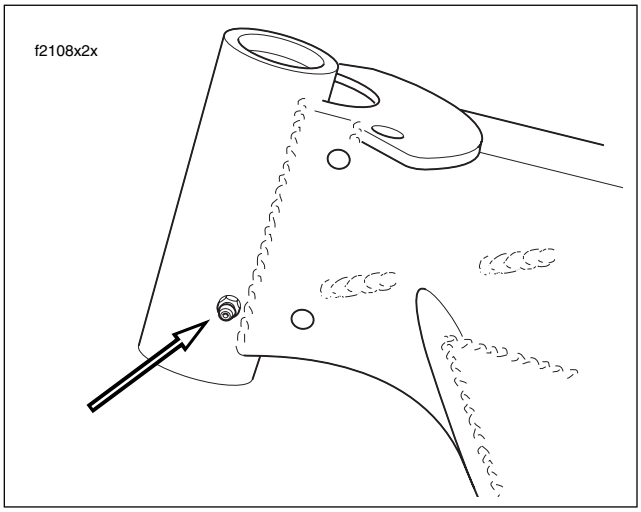

Figure 1-25. Steering Head Bearing Grease Fitting

CHECKING

Check the swing-by and adjust as necessary. See Section 2.17 STEERING HEAD BEARINGS for more information.

INSPECTING/REPLACING

Disassemble the steering head and inspect the bearings for brinelling, scoring, or other damage. Replace and/or repack the bearings as required. See Section 2.17 STEERING HEAD BEARINGS for more information.

CRITICAL FASTENERS 1.19

GENERAL

See Section 1.2 MAINTENANCE SCHEDULE for the required service interval.

PROCEDURE

ENGINE MOUNTS

Inspect the condition and tightness of the stabilizer links and engine mounts. Replace fastener if damaged. Proceed as follows:

NOTE

Raise fuel tank to access top engine stabilizer bolts and jam nuts. For carbureted models, see Section 4.7 FUEL TANK (CARBURETED), PARTIAL REMOVAL, FLHX, FLHT, or FLHR/S. For fuel injected models, see Section 9.4 FUEL TANK (FUEL INJECTED), PARTIAL REMOVAL, FLHXI, FLHT/C/U/I, FLTRI, or FLHR/C/S/I.

Top

- On left side of motorcycle, tighten top engine mounting bracket bolts to front and rear cylinder heads to 35-40 ft-lbs (48-54 Nm). See A of Figure 1-26.
- Top stabilizer link - tighten eyelet bolt to top engine mounting bracket to 18-22 ft-lbs (24-30 Nm). See B of Figure 1-26.
- Moving to right side of motorcycle, tighten eyelet bolt to frame weldment to 18-22 ft-lbs (24-30 Nm). See C of Figure 1-26.
- Verify tightness of jam nuts on top stabilizer link.

Bottom

- Front stabilizer link - on left side of motorcycle, tighten eyelet bolt to frame weldment to 18-22 ft-lbs (24-30 Nm). See D of Figure 1-26.
- Moving to right side of motorcycle, tighten eyelet bolt to block on front engine mounting bracket to 18-22 ft-lbs (24-30 Nm). See E of Figure 1-26.
- Verify tightness of jam nuts on front stabilizer link.
- Tighten center front engine mounting bracket to rubber mount bolt to 15-20 ft-lbs (20-27 Nm). See F of Figure 1-26.
- Tighten the two front engine mount to frame crossmember bolts to 15-20 ft-lbs (20-27 Nm). See G of Figure 1-26.
- Tighten two engine to front engine mounting bracket bolts to 33-38 ft-lbs (45-52 Nm). See H of Figure 1-26.
- Tighten four engine to transmission bolts to 30-35 ft-lbs (41-48 Nm).

NOTE

Install fuel tank. For carbureted models, see Section 4.7 FUEL TANK (CARBURETED), INSTALLATION (AFTER PARTIAL REMOVAL), INSTALLATION (AFTER PARTIAL REMOVAL), or FLHR/S. For fuel injected models, see Section 9.4 FUEL TANK (FUEL INJECTED), INSTALLATION (AFTER PARTIAL REMOVAL), FLHXI, FLHT/C/U/I, FLTRI, or FLHR/C/S/I.

OTHER FASTENERS

Inspect the condition and tightness of other critical fasteners. Replace fastener if damaged. Proceed as follows:

Table 1-8. Critical Fastener Torque

Fastener	ft/in-lbs	Nm
Axle		
Front axle nut	50-55 ft-lbs	68-75 Nm
Rear axle cone nut	95-105 ft-lbs	129-142 Nm
Brakes		
Banjo Bolts	17-22 ft-lbs	23-30 Nm
Front Brake Disc Mounting Screws	16-24 ft-lbs	22-33 Nm
Front Brake Caliper Mounting Bolts	28-38 ft-lbs	38-52 Nm
Brake Caliper Pad Pins	180-200 **in-lbs**	20-23 Nm
Rear Brake Disc Mounting Screws	30-45 ft-lbs	41-61 Nm
Rear Master Cylinder Mounting Nut	30-40 ft-lbs	41-54 Nm
Reservoir Cover Screws	6-8 **in-lbs**	0.7-0.9 Nm
Front Forks		
Axle Holder Nuts	132-180 **in-lbs**	14.9-20.3 Nm
Hand Controls		
Clutch Lever/Handlebar Clamp	60-80 **in-lbs**	6.8-9.0 Nm
Master Cylinder/Handlebar Clamp Screws	60-80 **in-lbs**	6.8-9.0 Nm
Upper/Lower Switch Housing Screws	35-45 **in-lbs**	4-5 Nm
Handlebars		
Lower Clamp (Riser) Bolts	30-40 ft-lbs	40.7-54.2 Nm
Pivot Shaft		
Locknuts	40-45 ft-lbs	54-61 Nm
Swingarm Bracket Bolts	34-42 ft-lbs	46-57 Nm

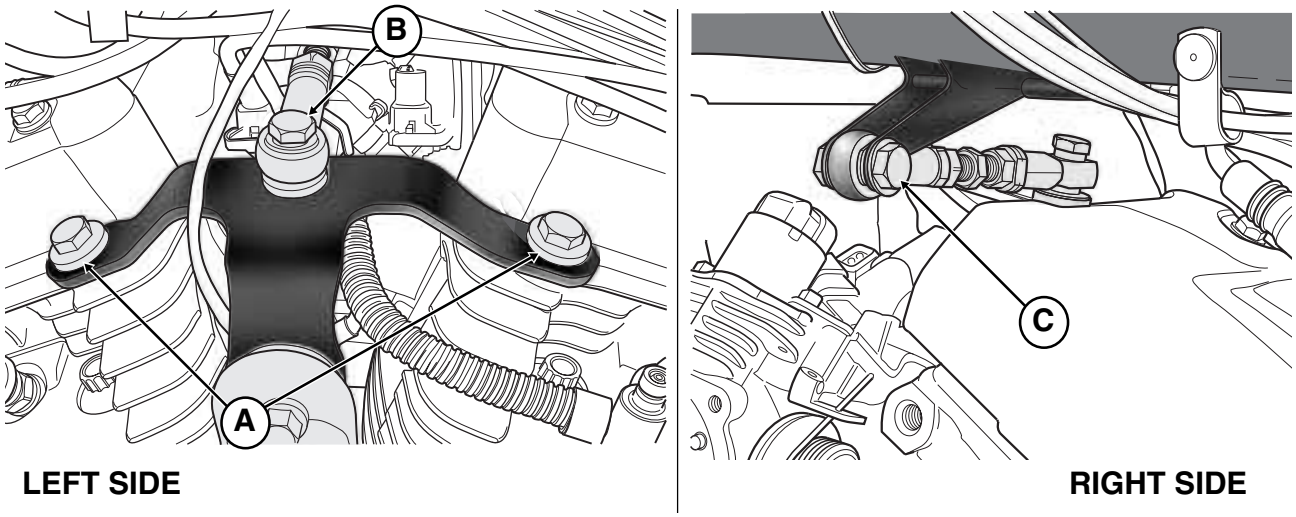

Top Stabilizer Link and Engine Mounting Bracket

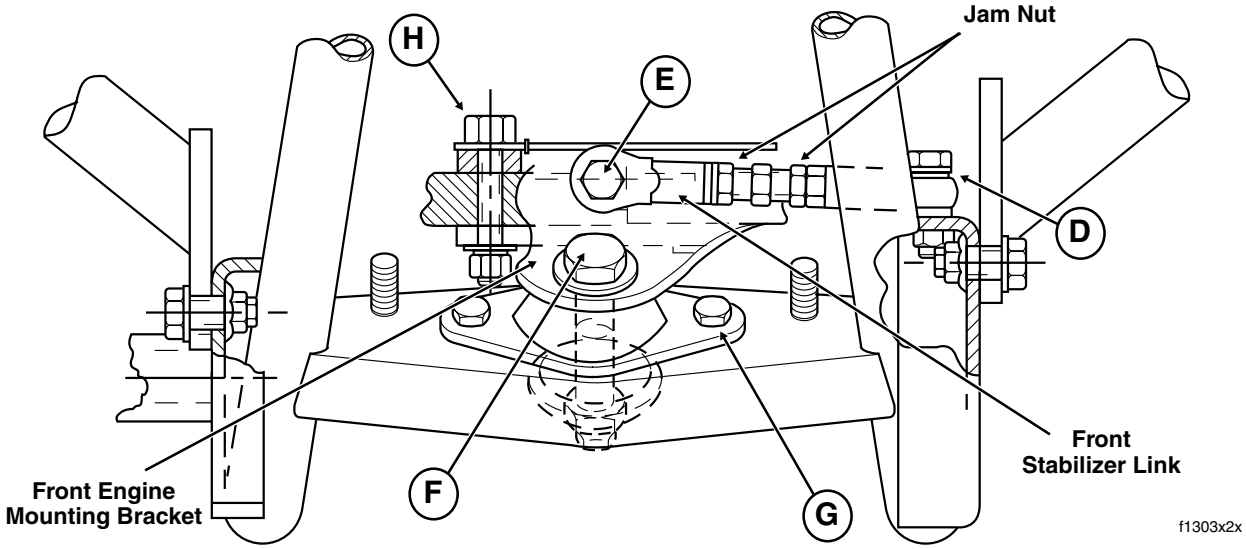

Front Stabilizer Link and Engine Mounting Bracket

Top

- **A** Top Engine Mounting Bracket to Cylinder Heads
- **B** Eyelet to Top Engine Mounting Bracket
- **C** Eyelet to Frame Weldment

Bottom

- **D** Eyelet to Frame Weldment
- **E** Eyelet to Front Engine Mounting Bracket
- **F** Front Engine Mounting Bracket to Rubber Mount
- **G** Front Engine Mount to Frame Crossmember
- **H** Engine to Front Engine Mounting Bracket

Figure 1-26. Engine Mounting Bracket Bolts

BATTERY 1.20

GENERAL

See Section 1.2 MAINTENANCE SCHEDULE for the required service interval.

PROCEDURE

1. Verify that battery top is clean and dry. Dirt on top of battery may cause it to self-discharge at a faster than normal rate.

2. Inspect battery clamp, screws and cables for breakage, loose connections and corrosion. Clean or replace as necessary.

3. Inspect battery for discoloration, raised top, or warped case, which may indicate that battery has been overheated or overcharged. Inspect battery case for cracks or leaks. Replace battery if any of these conditions are found.

NOTE

For testing or charging information, see Section 8.10 BATTERY.

4. Coat battery terminals with ELECTRICAL CONTACT LUBRICANT, Part No. 99861-02 (1 oz tube).

TROUBLESHOOTING 1.21

GENERAL

The following check list of possible operating troubles and their probable causes will be helpful in keeping your motorcycle in good operating condition. More than one of these conditions may be causing the trouble and all should be carefully checked.

⚠WARNING

The troubleshooting section of this manual is a guide to diagnose problems. Read the appropriate sections of this manual before performing any work. Improper repair and/or maintenance could result in death or serious injury.

ENGINE

Starter Motor Does Not Operate or Does Not Turn Engine Over

1. Ignition/Light Key Switch not in IGNITION position.
2. Engine Stop switch in the OFF position.
3. Discharged battery, loose or corroded connections (solenoid chatters).
4. TSM/TSSM BAS tripped and Ignition/Light Key Switch not cycled to OFF and then back to IGNITION.
5. Starter control circuit, relay or solenoid faulty.
6. Electric starter shaft pinion gear not engaging or overrunning clutch slipping.

Engine Turns Over But Does Not Start

1. Fuel tank empty.
2. Fuel supply valve turned to OFF.
3. Fouled spark plugs.
4. Engine flooded with gasoline as a result of over use of enrichener.
5. Fuel valve or filter clogged.
6. Vacuum hose to automatic fuel supply valve disconnected, leaking or pinched.
7. Discharged battery, loose or broken battery terminal connections.
8. Loose wire connection at coil, battery or plug between ignition sensor and module.
9. Spark plug cables in bad condition and shorting, cable connections loose, or cables connected to wrong cylinders.
10. Ignition timing incorrect due to faulty ignition coil, ignition module or sensors (MAP, CKP and/or TSM/TSSM).
11. Engine lubricant too heavy (winter operation).

NOTE
Always disengage clutch for cold weather starts.

12. Sticking or damaged valve or push rod wrong length.
13. Primary cam sprocket spline sheared or missing spacer.

Starts Hard

1. Spark plugs in bad condition, have improper gap or are partially fouled.
2. Spark plug cables in bad condition.
3. Battery nearly discharged.
4. Loose wire connection at one of the battery terminals, ignition coil or plug between ignition sensor and module.
5. Carburetor controls not adjusted correctly.
6. Water or dirt in fuel system and carburetor.
7. Intake air leak.
8. Fuel tank vent hose and vapor valve plugged, or carburetor fuel line closed off and restricting fuel flow.
9. Enrichener valve inoperative.
10. Engine lubricant too heavy (winter operation).

NOTE
Always disengage clutch for cold weather starts.

11. Ignition not functioning properly (possible sensor failure).
12. Faulty ignition coil.
13. Valves sticking.

Starts But Runs Irregularly or Misses

1. Spark plugs in bad condition or partially fouled.
2. Spark plug cables in bad condition and leaking.
3. Spark plug gap too close or too wide.
4. Faulty ignition coil, module and/or sensor.
5. Battery nearly discharged.
6. Damaged wire or loose connection at battery terminals, ignition coil, or plug between ignition sensor and module.
7. Intermittent short circuit due to damaged wire insulation.
8. Water or dirt in fuel system, carburetor or filter.
9. Fuel tank vent system plugged or carburetor vent line closed off.
10. Carburetor controls misadjusted.
11. Damaged carburetor.

12. Loose or dirty ignition module connector at crankcase.
13. Faulty MAP and/or CKP Sensor.
14. Incorrect valve timing.
15. Weak or broken valve springs.
16. Damaged intake or exhaust valve.

A Spark Plug Fouls Repeatedly

1. Fuel mixture too rich or enrichener left out too long.
2. Incorrect spark plug for the kind of service.
3. Piston rings badly worn or broken.
4. Valve guides or seals badly worn.

Pre-Ignition or Detonation (Knocks or Pings)

1. Fuel octane rating too low.
2. Faulty spark plugs.
3. Incorrect spark plug for the kind of service.
4. Excessive carbon deposit on piston head or in combustion chamber.
5. Ignition timing advanced due to faulty sensor inputs (MAP, CKP).

Overheating

1. Insufficient oil supply or oil not circulating.
2. Insufficient air flow over engine.
3. Heavy carbon deposit.
4. Ignition timing retarded due to faulty MAP and/or CKP Sensor.
5. Leaking valve.

Valve Train Noise

1. Low oil pressure caused by oil feed pump not functioning properly or oil passages obstructed.
2. Faulty hydraulic lifters.
3. Bent push rod.
4. Incorrect push rod length.
5. Rocker arm binding on shaft.
6. Valve sticking in guide.
7. Chain tensioner spring or shoe worn.

Excessive Vibration

1. Wheels and/or tires worn or damaged.
2. Engine/transmission/motorcycle not aligned properly.
3. Primary chain badly worn or links tight as a result of insufficient lubrication or misalignment.
4. Engine to transmission mounting bolts loose.
5. Upper engine mounting bracket loose.
6. Ignition timing incorrect/poorly tuned engine.
7. Internal engine problem.
8. Broken frame.
9. Stabilizer links worn or loose.
10. Rubber mounts loose or worn.
11. Rear fork pivot shaft nuts loose.
12. Front engine mounting bolts loose.

Check Engine Lamp Illuminates During Operation

1. Fault detected. Check for trouble codes.

LUBRICATION SYSTEM

Oil Does Not Return To Oil Pan

1. Oil pan empty.
2. Oil pump not functioning.
3. Restricted oil lines or fittings.
4. Restricted oil filter.
5. Oil pump misaligned or in poor condition.
6. O-ring damaged or missing from oil pump/crankcase junction (also results in poor engine performance).

Engine Uses Too Much Oil Or Smokes Excessively

1. Oil pan overfilled.
2. Restricted oil return line to pan.
3. Restricted breather operation.
4. Restricted oil filter.
5. Oil pump misaligned or in poor condition.
6. Piston rings badly worn or broken.
7. Valve guides or seals worn.
8. O-ring damaged or missing from oil pump/crankcase junction (also results in poor engine performance).

Engine Leaks Oil From Case, Push Rods, Hoses, Etc.

1. Loose parts.
2. Imperfect seal at gaskets, push rod cover, washers, etc.
3. Restricted oil return line to pan.
4. Restricted breather hose to air cleaner.
5. Restricted oil filter.

6. Oil pan overfilled.
7. Rocker housing gasket (bottom) installed upside down.

Low Oil Pressure

1. Oil pan underfilled.
2. Faulty low oil pressure switch.
3. Oil pump O-ring(s) damaged or missing.
4. Oil pressure relief valve stuck in open position.
5. Ball missing from cam support plate.

High Oil Pressure

1. Oil pan overfilled.
2. Oil pressure relief valve stuck in closed position.

ELECTRICAL SYSTEM

Alternator Does Not Charge

1. Module not grounded.
2. Engine ground wire loose or broken.
3. Faulty regulator-rectifier module.
4. Loose or broken wires in charging circuit.
5. Faulty stator and/or rotor.

Alternator Charge Rate Is Below Normal

1. Weak or damaged battery.
2. Loose connections.
3. Faulty regulator-rectifier module.
4. Faulty stator and/or rotor.

Speedometer Operates Erratically

1. Contaminated speedometer sensor (remove sensor and clean off metal particles).
2. Loose connections.

CARBURETOR

Carburetor Floods

1. Dirt or other foreign matter between valve and its seat.
2. Inlet valve sticking.
3. Inlet valve and/or valve seat worn or damaged.
4. Float misadjusted.
5. Leaky or damaged float.
6. Excessive “pumping” of hand throttle grip.
7. See TROUBLESHOOTING CHART in Section 4.

TRANSMISSION

Transmission Shifts Hard

1. Clutch dragging slightly.
2. Primary chaincase overfilled with lubricant.
3. Corners worn off shifter clutch dogs.
4. Shifter return spring bent or broken.
5. Bent shifter rod.
6. Shifter forks sprung.
7. Transmission lubrication too heavy (winter operation).

Jumps Out Of Gear

1. Shifter rod improperly adjusted.
2. Shifter drum damaged.
3. Shifter engaging parts (inside transmission) badly worn and rounded.
4. Shifter forks bent.
5. Damaged gears.

Clutch Slips

1. Clutch controls improperly adjusted.
2. Insufficient clutch spring tension.
3. Worn friction discs.

Clutch Drags Or Does Not Release

1. Clutch controls improperly adjusted.
2. Lubricant level too high in primary chaincase.
3. Primary chain badly misaligned.
4. Clutch discs warped.
5. Insufficient clutch spring tension.

Clutch Chatters

1. Friction discs or steel discs worn or warped.

BRAKES

Brake Does Not Hold Normally

1. Master cylinder reservoir low on fluid.
2. Brake system contains air bubbles.
3. Master or wheel cylinder piston worn or parts damaged.
4. Brake pads contaminated with grease or oil.
5. Brake pads badly worn- friction material 0.04 inch (1.02 mm) thick or less.
6. Brake disc badly worn or warped.
7. Brake fades due to heat build up – brake pads dragging or excessive braking.
8. Brake drags – insufficient brake pedal free play.

HANDLING

Irregularities

1. Improperly loaded motorcycle. Non-standard equipment on the front end such as heavy radio receivers, extra lighting equipment or luggage tends to cause unstable handling.
2. Incorrect air suspension pressure.
3. Damaged tire(s) or improper front-rear tire combination.
4. Irregular or peaked front tire tread wear.
5. Incorrect tire pressure.
6. Shock absorber not functioning normally.
7. Loose wheel axle nuts. Tighten to recommended tightness.
8. Excessive wheel hub bearing play.
9. Improper vehicle alignment.
10. Steering head bearings improperly adjusted. Correct adjustment and replace pitted or worn bearings and races.
11. Tire and wheel unbalanced.
12. Rims and tires out-of-round or eccentric with hub.
13. Rims and tires out-of-true sideways.
14. Shock absorber improperly adjusted.
15. Worn engine stabilizer links.
16. Damaged rear engine isolation mounts.
17. Swingarm pivot shaft nut improperly tightened or assembled.

Table Of Contents

CHASSIS 2

SUBJECT **PAGE NO.**

2.1 Specifications 2-1
2.2 Vehicle Identification Number (V.I.N.) 2-5
2.3 Front Wheel 2-6
2.4 Rear Wheel 2-11
2.5 Checking Rim Runout 2-18
2.6 Wheel Lacing–16 Inch Rim 2-19
2.7 Truing Laced Wheel 2-22
2.8 Tires And Tubes 2-24
2.9 Vehicle Alignment 2-28
2.10 Front Brake Master Cylinder 2-34
2.11 Rear Brake Master Cylinder 2-39
2.12 Front Brake Caliper 2-48
2.13 Rear Brake Caliper 2-55
2.14 Bleeding Hydraulic Brake System 2-62
2.15 Front Forks 2-64
2.16 Lower Fork Bracket Cover/Air Dam 2-70
2.17 Steering Head Bearings 2-71
2.18 Rear Air Suspension 2-75
2.19 Rear Shock Absorbers 2-79
2.20 Rear Swingarm 2-81
2.21 Throttle Cables (Non-Cruise) 2-88
2.22 Clutch Cable 2-93
2.23 Handlebars 2-97
2.24 Mirrors 2-101
2.25 Seat 2-102
2.26 Saddlebag 2-106
2.27 Tour-Pak 2-113
2.28 Tour-Pak Lights/Backrest/Speaker Box 2-121
2.29 Lower Fairing/Engine Guard 2-126
2.30 Upper Fairing/Windshield (FLHX, FLHT/C/U) 2-129
2.31 Upper Fairing/Windshield (FLTR) 2-136
2.32 Windshield/Headlamp Nacelle (FLHR/C/S) 2-146
2.33 Front Fender 2-150
2.34 Rear Fender 2-152
2.35 Rear Facia (FLHX) 2-156
2.36 Jiffy Stand 2-158
2.37 Footboards/Footrests 2-160
2.38 Exhaust System 2-164

Table Of Contents

CHASSIS 2

SUBJECT **PAGE NO.**

2.1 Specifications 2-1
2.2 Vehicle Identification Number (V.I.N.) 2-5
2.3 Front Wheel 2-6
2.4 Rear Wheel 2-11
2.5 Checking Rim Runout 2-18
2.6 Wheel Lacing–16 Inch Rim 2-19
2.7 Truing Laced Wheel 2-22
2.8 Tires And Tubes 2-24
2.9 Vehicle Alignment 2-28
2.10 Front Brake Master Cylinder 2-34
2.11 Rear Brake Master Cylinder 2-39
2.12 Front Brake Caliper 2-48
2.13 Rear Brake Caliper 2-55
2.14 Bleeding Hydraulic Brake System 2-62
2.15 Front Forks 2-64
2.16 Lower Fork Bracket Cover/Air Dam 2-70
2.17 Steering Head Bearings 2-71
2.18 Rear Air Suspension 2-75
2.19 Rear Shock Absorbers 2-79
2.20 Rear Swingarm 2-81
2.21 Throttle Cables (Non-Cruise) 2-88
2.22 Clutch Cable 2-93
2.23 Handlebars 2-97
2.24 Mirrors 2-101
2.25 Seat 2-102
2.26 Saddlebag 2-106
2.27 Tour-Pak 2-113
2.28 Tour-Pak Lights/Backrest/Speaker Box 2-121
2.29 Lower Fairing/Engine Guard 2-126
2.30 Upper Fairing/Windshield (FLHX, FLHT/C/U) 2-129
2.31 Upper Fairing/Windshield (FLTR) 2-136
2.32 Windshield/Headlamp Nacelle (FLHR/C/S) 2-146
2.33 Front Fender 2-150
2.34 Rear Fender 2-152
2.35 Rear Facia (FLHX) 2-156
2.36 Jiffy Stand 2-158
2.37 Footboards/Footrests 2-160
2.38 Exhaust System 2-164

SPECIFICATIONS 2.1

DIMENSIONS (IN.)

	FLHX FLHT/C/U	FLHR/C/S	FLTR
Wheel Base	63.5	63.5	63.5
Overall Length	94.5 93.7/97.5/98.3	93.7	93.7
Overall Width	39.0	34.5/34.5/39.4	35.8
Road Clearance	4.7 5.1/5.1/5.1	5.1/5.1/4.7	5.1
Overall Height	52.2 61.0/61.0/61.0	55.1/55.1/46.4	55.0
Saddle Height*	26.3 27.3/27.3/27.3	27.3/26.9/26.1	26.9

* With 180 Lb. Rider

DIMENSIONS (MM)

	FLHX FLHT/C/U	FLHR/C/S	FLTR
Wheel Base	1613	1613	1613
Overall Length	2400 2380/2476/2497	2380	2380
Overall Width	991	876/876/1001	909
Road Clearance	119 130/130/130	130/130/119	130
Overall Height	1326 1549/1549/1549	1399/1399/1179	1397
Saddle Height*	668 693/693/693	693/683/663	683

* With 81.6 kg Rider

WEIGHT (LBS.)

	FLHX FLHT/C/U	FLHR/C/S	FLTR
DRY WEIGHT**	745 758/776/788	723/710/721	731
GVWR	1259	1259	1259
GAWR – Front	500	500	500
GAWR – Rear	827	827	827

** As shipped from the factory

NOTE

Gross Vehicle Weight Rating (GVWR) (maximum allowable loaded vehicle weight) and corresponding Gross Axle Weight Ratings (GAWR) are given on a label located on the inside of the right front frame downtube.

WEIGHT (KG)

	FLHX FLHT/C/U	FLHR/C/S	FLTR
DRY WEIGHT**	338 344/352/358	328/322/327	332
GVWR	571	571	571
GAWR – Front	227	227	227
GAWR – Rear	375	375	375

** As shipped from the factory

CAPACITIES (U.S.)

	FLHX FLHT/C/U		FLHR/C/S		FLTR	
Fuel Tank (gallons) Total*** Reserve	5 0.9		5 0.9		5 0.9	
Oil Tank (quarts) with filter	4		4		4	
Transmission (Ounces, approximate)	20-24		20-24		20-24	
Primary Chaincase (Ounces, approximate)	32		32		32	
Front Fork (Ounces)	Left	Right	Left	Right	Left	Right
	10.8	10.8	11.1	11.1	10.8	10.8

*** Includes Reserve on Carbureted Models

CAPACITIES (METRIC)

	FLHX FLHT/C/U		FLHR/C/S		FLTR	
Fuel Tank (liters) Total*** Reserve	18.9 3.4		18.9 3.4		18.9 3.4	
Oil Tank (liters) with filter	3.78		3.78		3.78	
Transmission (Milliliters)	591-710		591-710		591-710	
Primary Chaincase (Milliliters)	946		946		946	
Front Fork (Milliliters)	Left	Right	Left	Right	Left	Right
	319	319	328	328	319	319

*** Includes Reserve on Carbureted Models

TIRE DATA

⚠WARNING

Match tires, tubes, air valves and caps to the correct wheel rim. Contact a Harley-Davidson dealer. Mismatching can result in damage to the tire bead, allow tire slippage on the rim or cause tire failure, which could result in death or serious injury. (00023a)

⚠WARNING

Using tires in ways other than those specified below may adversely affect motorcycle stability. Instability may lead to loss of vehicle control, which could result in death or serious injury.

- **Use tubeless tires on all Harley-Davidson cast and disc wheels.**
- **Tubeless tires fitted with the correct size inner tubes also may be used on all Harley-davidson laced wheels, but protective rubber rim strips must be installed to prevent damage to the inner tubes.**
- **Do not use inner tubes in radial tires. Do not use radial tires on laced wheels.**
- **Always use the correct size tires and tubes. Tire sizes are molded on the tire sidewall. Tube sizes are printed on the tube.**

⚠WARNING

Do not inflate tire beyond maximum pressure as specified on sidewall. Over inflated tires can blow out, which could result in death or serious injury. (00027a)

Dunlop Tires Only	Tire Pressure (Cold)			
	Front		Rear	
	PSI	BARS	PSI	BARS
Solo Rider	36	2.5	36	2.5
Rider & One Passenger	36	2.5	40	2.8

REAR WHEEL SPROCKET

70 teeth

TORQUE VALUES

Item	ft/in-lbs	Nm
Front brake disc TORX screws	16-24 ft-lbs	22-33 Nm
Front axle nut	50-55 ft-lbs	68-75 Nm
Front axle holder nuts	132-180 **in-lbs**	14.9-20.3 Nm
Front brake caliper mounting bolts	28-38 ft-lbs	37.9-51.5 Nm
Rear brake disc TORX screws	30-45 ft-lbs	41-61 Nm
Rear wheel sprocket bolts	55-65 ft-lbs	75-88 Nm
Rear axle cone nut	95-105 ft-lbs	129-142 Nm
Wheel spokes	40-50 **in-lbs**	4.5-5.6 Nm
Front engine mount to frame bolts	15-20 ft-lbs	20-27 Nm
Front engine mounting bracket to rubber mount bolt	15-20 ft-lbs	20-27 Nm
Voltage regulator locknuts	70-100 **in-lbs**	7.9-11.3 Nm
Handlebar clamp to master cylinder housing TORX screws	60-80 **in-lbs**	6.8-9.0 Nm
Brake caliper bleeder valve	80-100 **in-lbs**	9.0-11.3 Nm
Rear brake pedal shaft locknut	15-20 ft-lbs	20-27 Nm
Brake pedal/master cylinder assembly to mounting bracket hex nut	30-40 ft-lbs	41-54 Nm
Banjo bolt to master cylinder	17-22 ft-lbs	23-30 Nm
Banjo bolt to brake caliper	17-22 ft-lbs	23-30 Nm
Fairing lower U-bolt retainer locknuts	35-40 **in-lbs**	4.0-4.5 Nm
Fairing lower to engine guard clamp TORX screw	90-100 **in-lbs**	10.2-11.3 Nm
Fairing lower cap screws	10-15 **in-lbs**	1.1-1.7 Nm
Front brake master cylinder reservoir cover screws	6-8 **in-lbs**	0.7-0.9 Nm
Rear brake master cylinder reservoir cover screws	6-8 **in-lbs**	0.7-0.9 Nm
Brake caliper pad pins	180-200 **in-lbs**	20-23 Nm
Brake caliper bridge bolts	28-38 ft-lbs	38-52 Nm
Mirror stem acorn nut	60-96 **in-lbs**	6.8-10.8 Nm
Mirror flange nut (FLHX)	20-30 **in-lbs**	2.3-3.4 Nm
Rear bumper fender weld stud flange nut	45-85 **in-lbs**	5.1-9.6 Nm

Continued ...

TORQUE VALUES (CONT.'D)

Item	ft/in-lbs	Nm
Fork oil drain plugs	72-96 **in-lbs**	8-11 Nm
Fork pinch bolts	30-35 ft-lbs	41-48 Nm
Fork stem nut	60-80 ft-lbs	81-109 Nm
Fork tube plug	22-58 ft-lbs	30-79 Nm
Fork cap bolt	50-60 ft-lbs	68-81 Nm
Damper rod 6mm screw	132-216 **in-lbs**	14.9-24.4 Nm
Shock bottom mounting bolt	35-40 ft-lbs	47-54 Nm
Shock top mounting bolt	33-35 ft-lbs	45-48 Nm
Rear swingarm bracket bolts	34-42 ft-lbs	46-57 Nm
Rear swingarm pivot shaft locknut	40-45 ft-lbs	54-61 Nm
Handlebar switch housing TORX screws	35-45 **in-lbs**	4-5 Nm
Handlebar clamp to clutch lever bracket screws	60-80 **in-lbs**	6.8-9.0 Nm
Clutch release cover socket head screws	84-132 **in-lbs**	9.5-14.9 Nm
Clutch cable fitting	36-60 **in-lbs**	4-7 Nm
Transmission lubricant drain plug	14-21 ft-lbs	19-28 Nm
Transmission filler plug/dip-stick	25-75 **in-lbs**	2.8-8.5 Nm
Battery cable bolt	60-96 **in-lbs**	6.8-10.9 Nm
Tour-Pak mounting bolts	96-108 **in-lbs**	10.8-12.2 Nm
Tour-Pak speaker box bolts	25-35 **in-lbs**	2.8-4.0 Nm
Tour-Pak metal plate flange nuts	65-70 **in-lbs**	7.3-7.9 Nm
Side marker light TORX screws	25-35 **in-lbs**	2.8-4.0 Nm
Inner fairing screws	20-30 **in-lbs**	2.3-3.4 Nm
Outer fairing screws (below windshield)	25-30 **in-lbs**	2.8-3.4 Nm
Fairing cap TORX screws	25-30 **in-lbs**	2.8-3.4 Nm
Speedometer/tachometer bracket socket screws	10-20 **in-lbs**	1.1-2.3 Nm
2 inch diameter gauge nuts	10-20 **in-lbs**	1.1-2.3 Nm
Auxiliary lamp bracket to fork bracket TORX bolts	15-20 ft-lbs	20-27 Nm
Windshield wellnut screws (FLTR)	6-13 **in-lbs**	0.7-1.5 Nm
Front turn signal lamp bracket stud acorn nuts (FLTR)	40-50 **in-lbs**	4.5-5.7 Nm
Short fairing screws (FLTR)	6-12 **in-lbs**	0.7-1.4 Nm
Long fairing screws (FLTR)	10-15 **in-lbs**	1.1-1.7 Nm
Instrument bezel TORX screws (FLTR)	25-35 **in-lbs**	2.8-4.0 Nm

Continued ...

Item	ft/in-lbs	Nm
Instrument nacelle to fork bracket TORX bolts (FLTR)	15-20 ft-lbs	20-27 Nm
Fairing bracket/steering head thru bolt (FLTR)	20-30 ft-lbs	27.1-40.7 Nm
Radio bracket/inner fairing to fairing bracket stud lock-nuts (FLTR)	96-144 **in-lbs**	10.9-16.3 Nm
Headlamp nacelle handle-bar clamp shroud Phillips screw	10-20 **in-lbs**	1.1-2.3 Nm
Headlamp nacelle trim strip flange nut	15-20 **in-lbs**	1.7-2.3 Nm
Auxiliary lamp bracket to fork bracket stud acorn nuts	72-108 **in-lbs**	8.1-12.2 Nm
Front fender mounting bolts	16-20 ft-lbs	22-27 Nm
Rear fender TORX bolts	15-20 ft-lbs	20-27 Nm
Jiffy stand leg stop flange nut	43-53 ft-lbs	58-72 Nm
Intake flange adapter screws	96-144 **in-lbs**	10.9-16.3 Nm
Exhaust flange adapter nuts	100-120 **in-lbs**	11.3-13.6 Nm
Exhaust pipe TORCA clamps	45-60 ft-lbs	61-81 Nm
Heat shield worm drive clamps	20-40 **in-lbs**	2.3-4.5 Nm
Transmission exhaust bracket clamp bolt	60-96 **in-lbs**	6.8-10.8 Nm
Passenger footboard/ footrest socket screws	30-35 ft-lbs	40.7-47.5 Nm
Rider footboard pivot bolt nut	84-108 **in-lbs**	9.5-12.2 Nm
Air valve mount hex nut	40-50 **in-lbs**	4.5-5.6 Nm
Handlebar upper clamp screws	12-16 ft-lbs	16.3-21.7 Nm
Handlebar lower clamp bolts (risers)	30-40 ft-lbs	40.7-54.2 Nm
Ignition switch nut	125-150 **in-lbs**	14.1-16.9 Nm
Throttle cable J-clamp screw to wellnut (FLHR/C)	9-18 **in-lbs**	1.0-2.0 Nm
Frame tube cover screw	25-40 **in-lbs**	2.8-4.5 Nm
Seat screw	20-40 **in-lbs**	2.3-4.5 Nm
Seat strap bracket screw (FLHT/C/U)	48-72 **in-lbs**	5.4-8.1 Nm
Rear facia flange nuts (FLHX) — New Stud Plate	80 **in-lbs**	9.0 Nm
Rear facia flange nuts (FLHX) — Used Stud Plate	20-30 **in-lbs**	2.3-3.4 Nm
Rear facia lamp TORX screws (FLHX)	18-22 **in-lbs**	2.0-2.5 Nm

NOTES

VEHICLE IDENTIFICATION NUMBER (V.I.N.) 2.2

See Figure 2-1. The full 17-digit serial number, or Vehicle Identification Number (V.I.N.), is stamped on the right side of the frame backbone at the rear of the steering head (and under the main harness conduit). A label bearing the V.I.N. code is also affixed to the left side of the steering head. An abbreviated V.I.N. is stamped between the front and rear cylinders on the left side of the crankcase.

Sample V.I.N. as it appears on the steering head – **1HD1DJV136Y110000**

Sample abbreviated V.I.N. as it appears on the crankcase – **DJV6110000**

NOTE

Always give the complete V.I.N. when ordering parts or making an inquiry about your motorcycle.

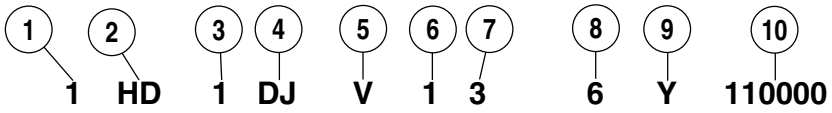

Figure 2-1. Vehicle Identification Number (V.I.N.)

Table 2-1. V.I.N. Description

ITEM	DESCRIPTION	VALUE
1	Market destination	1=Domestic 5=International
2	Manufacturer	HD=Harley-Davidson
3	Motorcycle type	1=Heavyweight
4	Model designation	See Table 2-2.
5	Engine type	V=Carbureted W=Fuel injected
6	Introduction	1=Regular 3=California 2=Mid-year 4=Anniversary
7	V.I.N. check digit	Can be 0-9 or X
8	Model year	6=2006
9	Assembly plant	K=Kansas City, MO Y=York, PA
10	Sequential number (last 6 digits)	Varies

Table 2-2. Model Designation

CODE	MODEL	CODE	MODEL
DD	FLHT	FS	FLTRI
FB	FLHRI	FV	FLHTI
FC	FLHTCUI	FW	FLHRI Shrine
FD	FLHR	FX	FLHRS
FF	FLHTCI	FY	FLHRSI
FG	FLHTCUI W/SC	KA	FLHX
FL	FLHTCUI Shrine	KB	FLHXI
FR	FLHRCI		

FRONT WHEEL 2.3

GENERAL

Maximum tire mileage and good handling qualities are directly related to care given wheels and tires. Wheels and tires should be regularly inspected for wear. If handling problems occur, see Section 1.21 TROUBLESHOOTING, HANDLING, for possible causes.

Always keep tires inflated to the recommended pressure and balance the wheel whenever a tire or tube is replaced.

PRELIMINARY INSPECTION

1. Measure brake disc thickness for excessive wear. Minimum acceptable thickness is stamped on side of disc. Also replace discs if warped or badly scored. Obtain **new** T40 TORX screws if brake discs were removed.
2. Whenever the wheel is removed for tire replacement or any other purpose, inspect the wheel bearings as follows:
   a. Insert finger into wheel bearing and rotate the inner race in both directions. Repeat step on opposite side of wheel.
   b. Replace the wheel bearings if there is rough rotation, abnormal noise or anything unusual. Always replace wheel bearings as a set. Never replace just one wheel bearing.

REMOVAL

1. Use shop rag or tape to protect fender area adjacent to caliper, as incidental contact can occur during caliper removal.

Figure 2-2. Inspect Wheel Bearings

2. Remove both the upper and lower mounting bolts from lugs of front fork leg to release brake caliper assembly.
3. Lift caliper upward to remove from brake disc. Allow the caliper to hang loose.
4. Repeat steps 1 thru 3 to release caliper on opposite side of wheel.

NOTE

Do not operate the front brake hand lever with the front wheel removed or the caliper pistons may be forced out. Reseating pistons requires disassembly of the caliper.

5. Insert screwdriver or steel rod through hole in axle on right side of vehicle. While holding axle stationary, remove the axle nut, lockwasher and flat washer on the left side.
6. Loosen the two axle holder nuts at bottom of right side fork leg.
7. With soft mallet, tap axle toward right side of vehicle until loose. Catching external spacers on left and right side, pull axle from hub while supporting wheel.
8. Move wheel to bench area and inspect bearings. See PRELIMINARY INSPECTION on this page.

DISASSEMBLY

1. If wheel bearing replacement is necessary, proceed as follows:
   a. Obtain the WHEEL BEARING REMOVER/INSTALLER (HD-44060). Pick out the wheel bearing remover tools for the front wheel. See Figure 2-3.
   b. To prolong service life and ensure smooth operation, sparingly apply graphite lubricant to threads of forcing screw.
   c. Install hex nut, flat washer and Nice bearing on forcing screw. Insert end of forcing screw through hole in bridge.
   d. Install steel ball inside **larger** collet. Install collet at end of forcing screw.
   e. Insert collet into bearing ID. Feel for inside edge of bearing using lip at end of collet and then back off slightly.
   f. Holding forcing screw to prevent rotation, turn hex on collet until lip makes firm contact with inside edge of bearing. See upper frame of Figure 2-4.

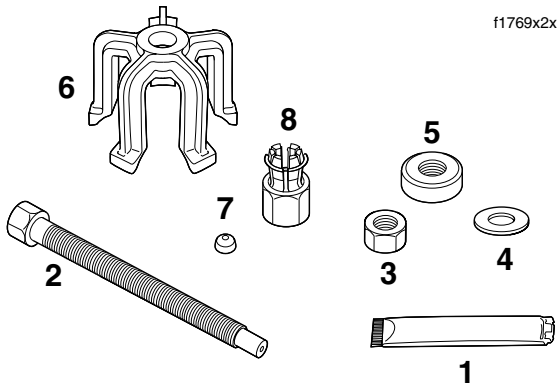

1. **Graphite Lubricant**
2. **Forcing Screw**
3. **Hex Nut**
4. **Flat Washer**
5. **Nice Bearing**
6. **Bridge**
7. **Steel Ball**
8. **Larger Collet (1 Inch)**

Figure 2-3. Front Wheel Bearing Remover Tools (Part No. HD-44060)

g. Holding forcing screw, turn hex nut until bearing is free. See lower frame of Figure 2-4.

h. Remove spacer sleeve from wheel hub.

i. Repeat procedure to remove bearing on opposite side of wheel. Discard bearings.

2. If necessary, remove five T40 TORX screws to release brake disc from hub. Discard screws. Repeat procedure to remove disc on opposite side of wheel. If the wheel is to be assembled with the same discs, mark both the wheel and discs, so that they can be installed in their original positions.

3. If tire replacement is necessary, see Section 2.8 TIRES AND TUBES.

4. If the wheel is laced, and hub, spoke or rim replacement is necessary, loosen all spoke nipples and disassemble hub from rim.

CLEANING AND INSPECTION

1. Thoroughly clean all parts in solvent.

2. Inspect all parts for damage or excessive wear.

3. Always replace bearing assemblies as a complete set.

4. Inspect brake discs. Replace discs if warped or badly scored. Measure disc thickness for excessive wear. Minimum acceptable thickness is stamped on side of disc.

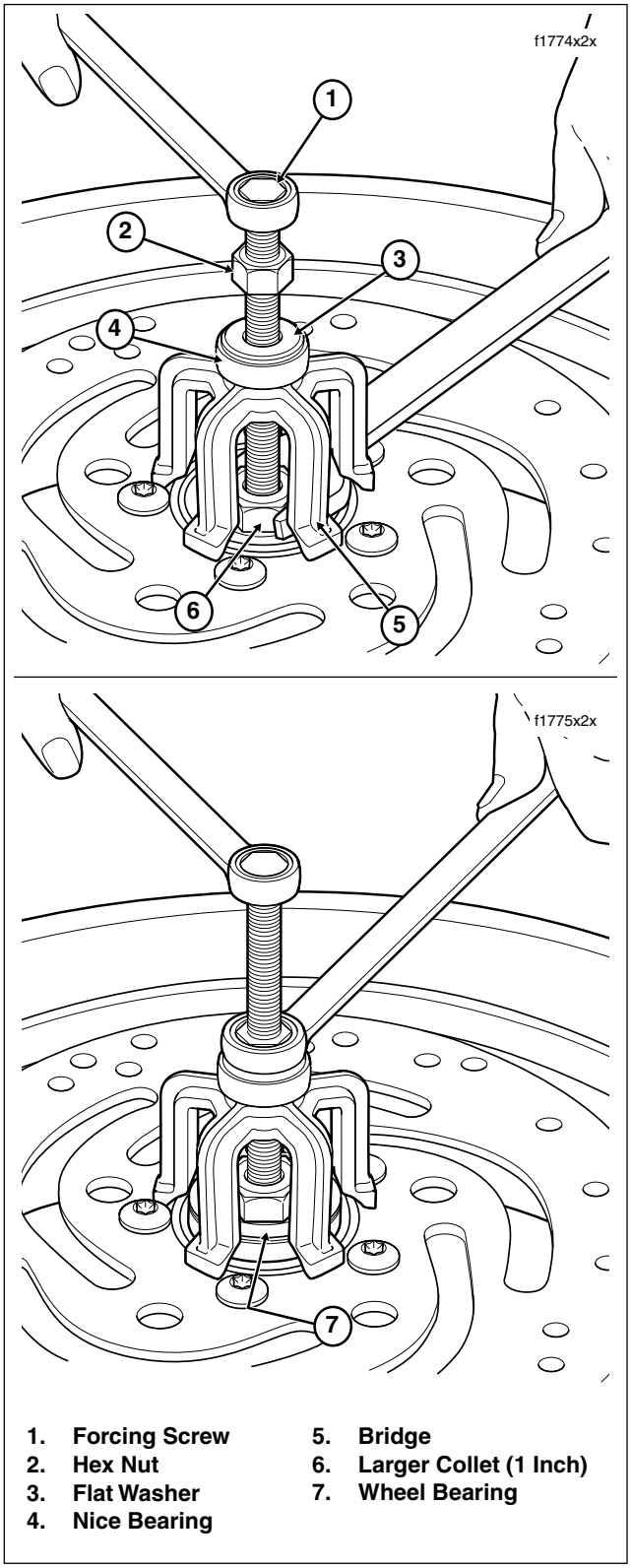

1. **Forcing Screw**
2. **Hex Nut**
3. **Flat Washer**
4. **Nice Bearing**
5. **Bridge**
6. **Larger Collet (1 Inch)**
7. **Wheel Bearing**

Figure 2-4. Remove Sealed Wheel Bearings

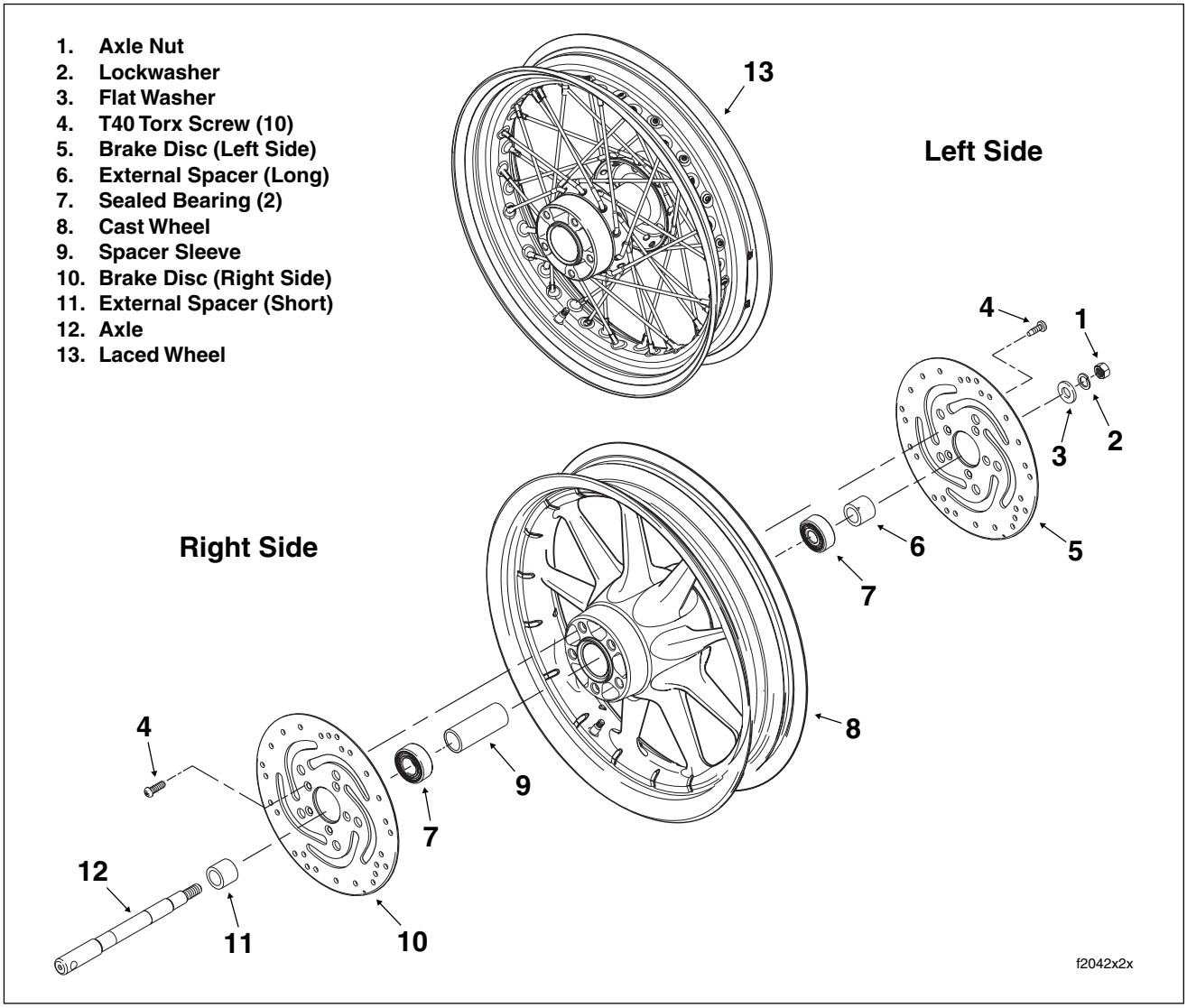

Figure 2-5. Front Wheel (Exploded View)

ASSEMBLY

1. On laced wheels, if the hub and rim were disassembled, assemble the hub, spokes and rim. See Section 2.6 WHEEL LACING–16 INCH RIM.

⚠WARNING

Be sure that brake fluid or other lubricants do not contact brake pads or discs. Such contact can adversely affect braking ability, which could cause loss of control, resulting in death or serious injury. (00290a)

2. If removed, install **new** T40 TORX screws to fasten brake discs to hub. Be sure to install discs in their original positions. Alternately tighten screws to 16-24 ft-lbs (22-33 Nm).

3. Install **new** wheel bearings as follows:

NOTE

Always install first of two bearings on the left side (opposite the valve stem side of the wheel).

a. Obtain the WHEEL BEARING REMOVER/INSTALLER (HD-44060). Pick out the wheel bearing installer tools for the front wheel. See Figure 2-6.

b. To prolong service life and ensure smooth operation, sparingly apply graphite lubricant to threads of threaded rod.

c. Slide support plate onto threaded rod. Slide rod through hub on the valve stem side of the wheel. See upper frame of Figure 2-7.

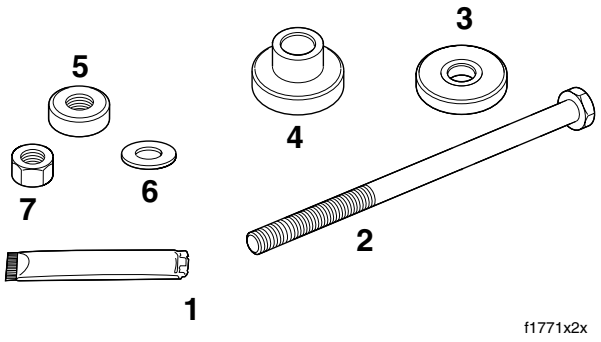

1. Graphite Lubricant
2. Threaded Rod
3. Support Plate
4. Larger Pilot (1 Inch)
5. Nice Bearing
6. Flat Washer
7. Hex Nut

Figure 2-6. Front Wheel Bearing Installer Tools (Part No. HD-44060)

d. On opposite side of wheel, slide bearing onto threaded rod with lettered side facing outboard.

e. Install **larger** pilot, Nice bearing, flat washer and hex nut onto rod.

f. Holding threaded rod on opposite side of wheel to prevent rotation, turn hex nut to install bearing. See lower frame of Figure 2-7. Bearing is fully seated when it makes firm contact with the counterbore.

g. Disassemble and remove tool, but leave support plate on threaded rod.

h. Slide threaded rod through installed wheel bearing and hub of wheel.

i. On the valve stem side of the wheel, slide spacer sleeve down threaded rod until it contacts installed wheel bearing.

j. Repeat steps 3(d) through 3(g) to complete installation of second wheel bearing. Bearing is fully seated when hex nut can no longer be turned.

4. Verify that wheel is true. See CHECKING CAST RIM RUNOUT or TRUING LACED WHEEL, whichever applies.

5. Install rim strip on wheel rim, if applicable. Install tube and tire, if applicable. Verify that wheel is balanced.

INSTALLATION

1. Place wheel into position between forks with the valve stem on the right side of the vehicle.

2. Coat the axle with ANTI-SEIZE LUBRICANT.

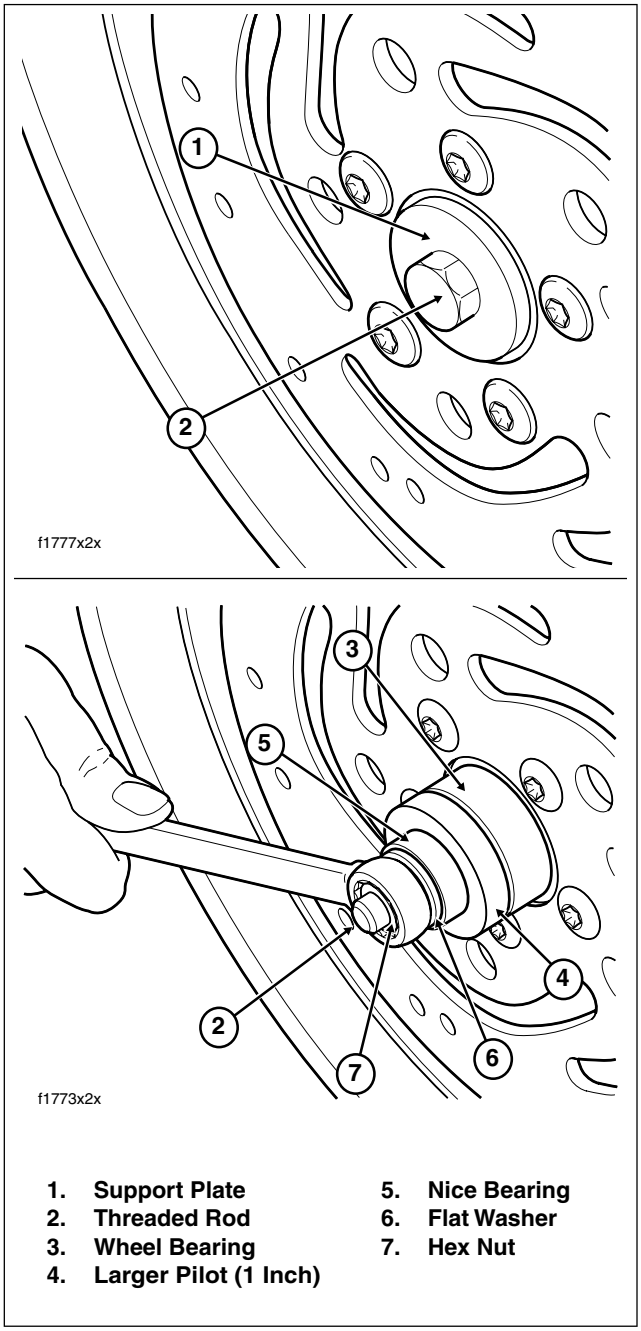

1. Support Plate
2. Threaded Rod
3. Wheel Bearing
4. Larger Pilot (1 Inch)
5. Nice Bearing
6. Flat Washer
7. Hex Nut

Figure 2-7. Install Sealed Wheel Bearings

3. Supporting wheel, insert threaded end of axle through right fork leg. Push axle through fork, **short** external spacer and wheel hub until it begins to emerge from left side.

4. With the three notches on the bearing side, push axle through **long** external spacer and left fork leg until axle shoulder contacts external spacer on right fork side.

5. Install flat washer, lockwasher and axle nut.

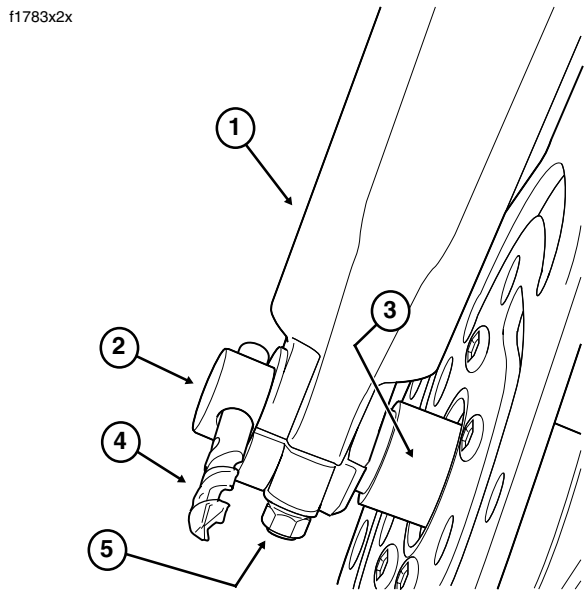

1. **Fork Leg (Right Side)**
2. **Axle**
3. **Short Spacer**
4. **7/16 Inch Drill Bit**
5. **Axle Holder Nuts**

Figure 2-8. Align Front Wheel

6. Insert screwdriver or steel rod through hole in axle on right side of vehicle. While holding axle stationary, tighten axle nut to 50-55 ft-lbs (68-75 Nm).
7. Insert 7/16 inch drill bit into hole in axle. See Figure 2-8.
8. Pull fork leg so that it just contacts drill bit, and then tighten axle holder nuts to 132-180 **in-lbs** (14.9-20.3 Nm).
9. Remove drill bit from axle hole.
10. Install brake caliper as follows:
    a. Use shop rag or tape to protect fender area adjacent to caliper, as incidental contact can occur during caliper installation.
    b. With the bleeder valve topside, position caliper so that brake disc is situated between friction pads. Pry inner and outer brake pads back for additional clearance, if necessary.
    c. Align upper mounting hole in caliper with upper mounting lug on fork leg. Loosely install long caliper mounting bolt into upper lug of fork leg.
    d. Install short caliper mounting bolt into lower lug of fork leg. Tighten lower mounting bolt to 28-38 ft-lbs (37.9-51.5 Nm).
    e. Tighten upper caliper mounting bolt to 28-38 ft-lbs (37.9-51.5 Nm).
    f. Repeat step 10 to install caliper on opposite side of wheel.

⚠WARNING

After servicing brakes and before moving motorcycle, pump brakes to build brake system pressure. Insufficient pressure can adversely affect brake performance, which could result in death or serious injury. (00279a)

11. Depress front brake hand lever several times to set brake pads to proper operating position within caliper.

REAR WHEEL 2.4

GENERAL

Maximum tire mileage and good handling qualities are directly related to care given wheels and tires. Wheels and tires should be regularly inspected for wear. If handling problems occur, see Section 1.21 TROUBLESHOOTING, HANDLING, for possible causes.

Always keep tires inflated to the recommended pressure and balance the wheel whenever a tire or tube is replaced.

PRELIMINARY INSPECTION

1. Measure brake disc thickness for excessive wear. Minimum acceptable thickness is stamped on side of disc. Also replace disc if warped or badly scored.
2. Whenever the wheel is removed for tire replacement or any other purpose, inspect the wheel bearings as follows:
   a. Insert finger into wheel bearing and rotate the inner race. Repeat step on opposite side of wheel.
   b. Replace the wheel bearings if there is rough rotation, abnormal noise or anything unusual. Always replace wheel bearings as a set. Never replace just one wheel bearing.

REMOVAL

1. Remove saddlebags. See Section 2.26 SADDLEBAG, REMOVAL.
2. Remove left side muffler as follows:
   a. Open worm drive clamps to remove heat shield from crossover pipe.
   b. Using a bungee cord, tie the muffler to the lower saddlebag support rail.
   c. Loosen TORCA clamp between crossover pipe and muffer.

NOTE

To facilitate removal, spray PB Blaster or other suitable penetrating oil in and around joint of exhaust pipes. For best results, be sure to allow sufficient time for the penetrating oil to work.

   d. Remove two screws (with lockwashers) to detach muffler from lower saddlebag support rail.
   e. Remove bungee cord to release muffler from lower saddlebag support rail.
3. On models equipped with low profile shock absorbers (FLHS and FLHX), remove left side lower saddlebag support rail as follows:
   a. Remove outside T40 TORX screw (and flange nut) to release saddlebag support rail from saddlebag support bracket.
   b. Remove T40 TORX screw to release opposite end of saddlebag support rail from frame weldment.
4. Standing on right side of vehicle, remove E-clip from groove at end of axle.
5. Remove cone nut and adjuster cam from axle.
6. Using a soft mallet, gently tap end of axle towards left side to loosen. Catching external spacers on right and left side of hub, pull axle free of wheel and rear swingarm.
7. Pull wheel to release brake disc from caliper. Pry inner and outer brake pads back for additional clearance, if necessary. Use a putty knife with a wide thin blade to avoid scoring or scratching the brake disc.
8. Remove caliper from anchor weldment on rear swingarm, and carefully hang over lower saddlebag support rail.
9. Move wheel forward and slip belt off sprocket.
10. Move wheel to bench area and inspect bearings. See PRELIMINARY INSPECTION on this page.

NOTE

Do not operate the rear brake pedal with the rear wheel removed or the caliper pistons may be forced out. Reseating pistons requires disassembly of the caliper.

DISASSEMBLY

1. If wheel bearing replacement is necessary, proceed as follows:
   a. Remove five bolts (with flat washers) securing belt sprocket to hub.
   b. Obtain the WHEEL BEARING REMOVER/INSTALLER (HD-44060). Pick out the wheel bearing remover tools for the rear wheel. See Figure 2-9.

NOTE

The smaller 3/4 inch collet (and pilot) is only used to replace the rear wheel bearings on 2000-01 Touring models.

   c. To prolong service life and ensure smooth operation, sparingly apply graphite lubricant to threads of forcing screw.

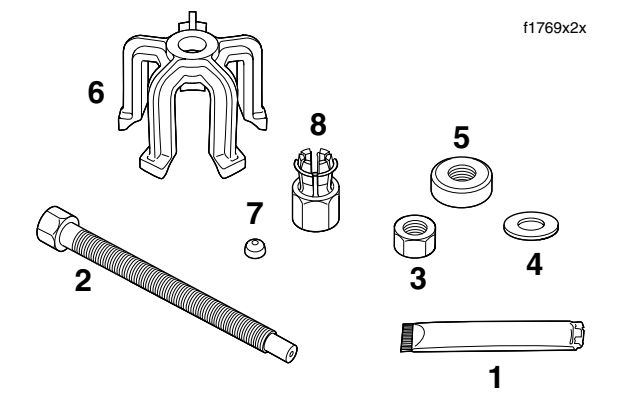

1. Graphite Lubricant
2. Forcing Screw
3. Hex Nut
4. Flat Washer
5. Nice Bearing
6. Bridge
7. Steel Ball
8. Larger Collet (1 Inch)

Figure 2-9. Rear Wheel Bearing Remover Tools (Part No. HD-44060)

d. Install hex nut, flat washer and Nice bearing on forcing screw. Insert end of forcing screw through hole in bridge.

e. Install steel ball inside **larger** collet. Install collet at end of forcing screw.

f. Insert collet into bearing ID. Feel for inside edge of bearing using lip at end of collet and then back off slightly.

g. Holding forcing screw to prevent rotation, turn hex on collet until lip makes firm contact with inside edge of bearing. See upper frame of Figure 2-10.

h. Holding forcing screw, turn hex nut until bearing is free. See lower frame of Figure 2-10.

i. Remove spacer sleeve from wheel hub.

j. Repeat procedure to remove bearing on opposite side of wheel. Discard bearings.

2. If necessary, remove five T45 TORX screws to release brake disc from hub. If the wheel is to be assembled with the same disc, mark both the wheel and disc, so that it can be installed in its original position.

3. Remove tire, if necessary. Remove tube from the rim, if applicable. See Section 2.8 TIRES AND TUBES.

4. If it is necessary to remove the hub from a laced wheel, loosen all spoke nipples and remove the rim and spokes.

CLEANING AND INSPECTION

1. Thoroughly clean all parts in solvent.

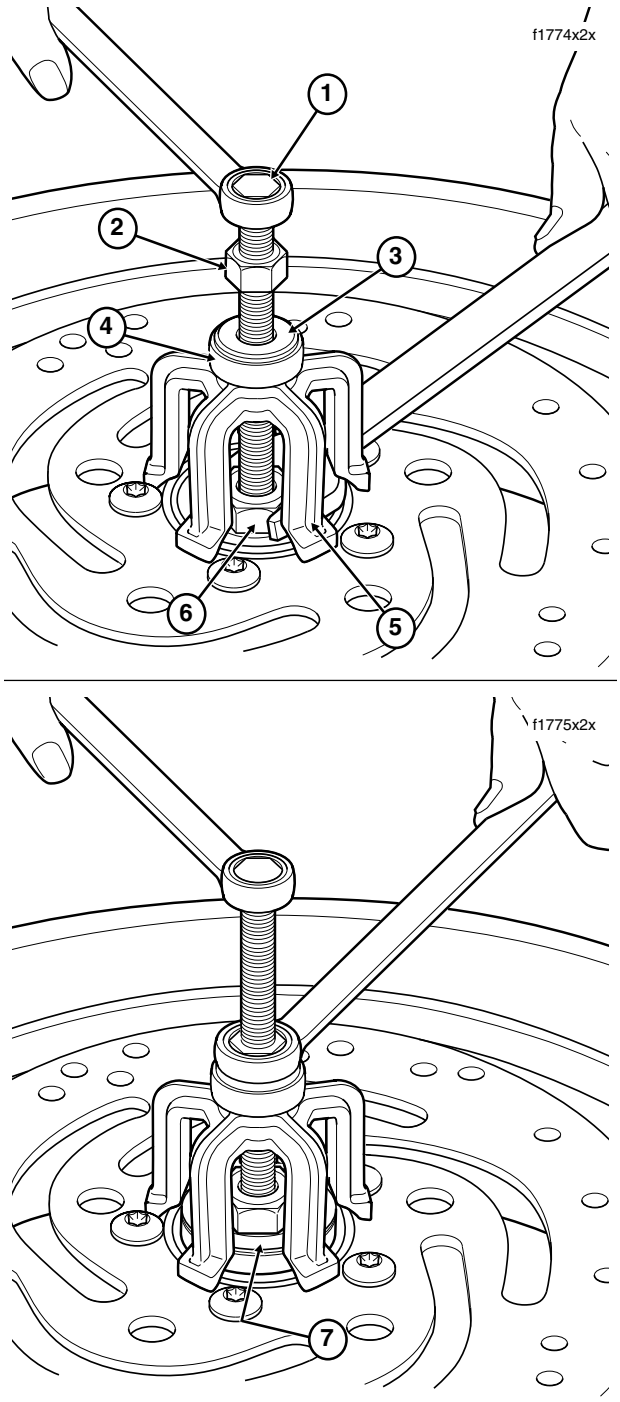

1. Forcing Screw
2. Hex Nut
3. Flat Washer
4. Nice Bearing
5. Bridge
6. Larger Collet (1 Inch)
7. Wheel Bearing

Figure 2-10. Remove Sealed Wheel Bearings

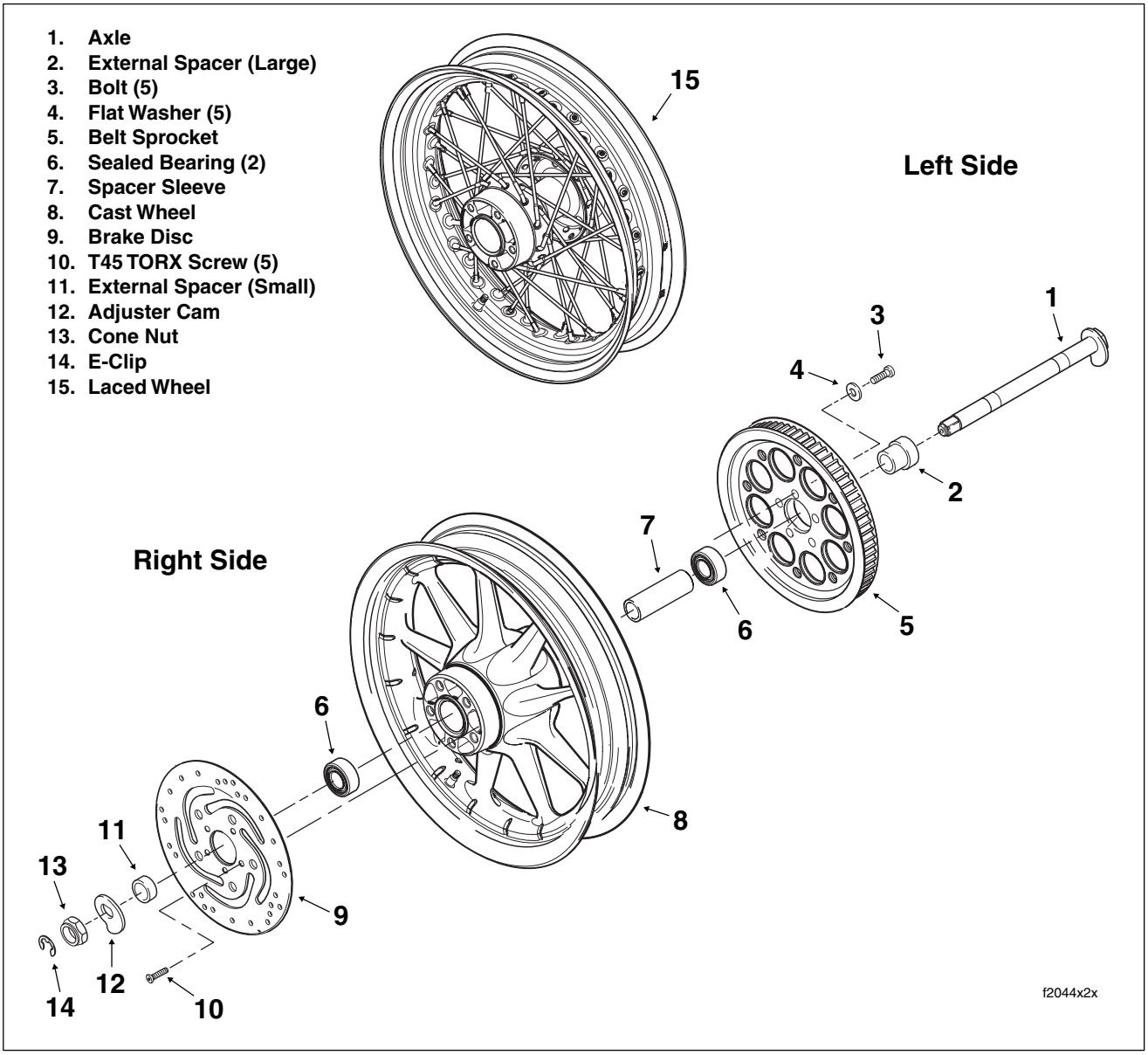

Figure 2-11. Rear Wheel (Exploded View)

2. Inspect all parts for damage or excessive wear.
3. Always replace bearings as a complete set.
4. Inspect brake disc. Replace disc if warped or badly scored. Measure disc thickness for excessive wear. Minimum acceptable thickness is stamped on side of disc.
5. Check the belt sprocket for wear, tooth damage, cracks or pitting. Replace if necessary.
6. On laced wheels, replace spokes, rim or hub if damaged.

ASSEMBLY

1. On laced wheels, if the hub and rim were disassembled, assemble the hub, spokes and rim. See Section 2.6 WHEEL LACING–16 INCH RIM.
2. Verify that wheel is true. See Section 2.5 CHECKING RIM RUNOUT or Section 2.7 TRUING LACED WHEEL, whichever applies.

⚠WARNING

Be sure that brake fluid or other lubricants do not contact brake pads or discs. Such contact can adversely affect braking ability, which could cause loss of control, resulting in death or serious injury. (00290a)

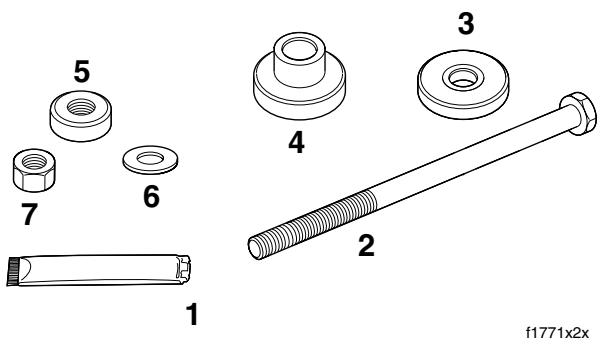

1. Graphite Lubricant
2. Threaded Rod
3. Support Plate
4. Larger Pilot (1 Inch)
5. Nice Bearing
6. Flat Washer
7. Hex Nut

Figure 2-12. Rear Wheel Bearing Installer Tools (Part No. HD-44060)

3. If removed, install five T45 TORX screws (and locknuts on laced wheels) to fasten brake disc to hub. Always install brake disc in its original position. Use **new** screws after three use cycles. Alternately tighten screws to 30-45 ft-lbs (41-61 Nm).
4. Install **new** wheel bearings as follows:

NOTE

Always install first of two bearings on the right side (the valve stem side of the wheel).

   a. Obtain the WHEEL BEARING REMOVER/INSTALLER (HD-44060). Pick out the wheel bearing installer tools for the rear wheel. See Figure 2-12.
   b. To prolong service life and ensure smooth operation, sparingly apply graphite lubricant to threads of threaded rod.
   c. Slide support plate onto threaded rod. Slide rod through hub on the sprocket side of the wheel. See upper frame of Figure 2-13.
   d. On the valve stem side of the wheel, slide bearing onto threaded rod with lettered side facing outboard.
   e. Install **larger** pilot, Nice bearing, flat washer and hex nut onto rod.
   f. Holding threaded rod on opposite side of wheel to prevent rotation, turn hex nut to install bearing. See lower frame of Figure 2-13. Bearing is fully seated when it makes firm contact with the counterbore.
   g. Disassemble and remove tool, but leave support plate on threaded rod.
   h. Slide threaded rod through installed wheel bearing and hub of wheel.

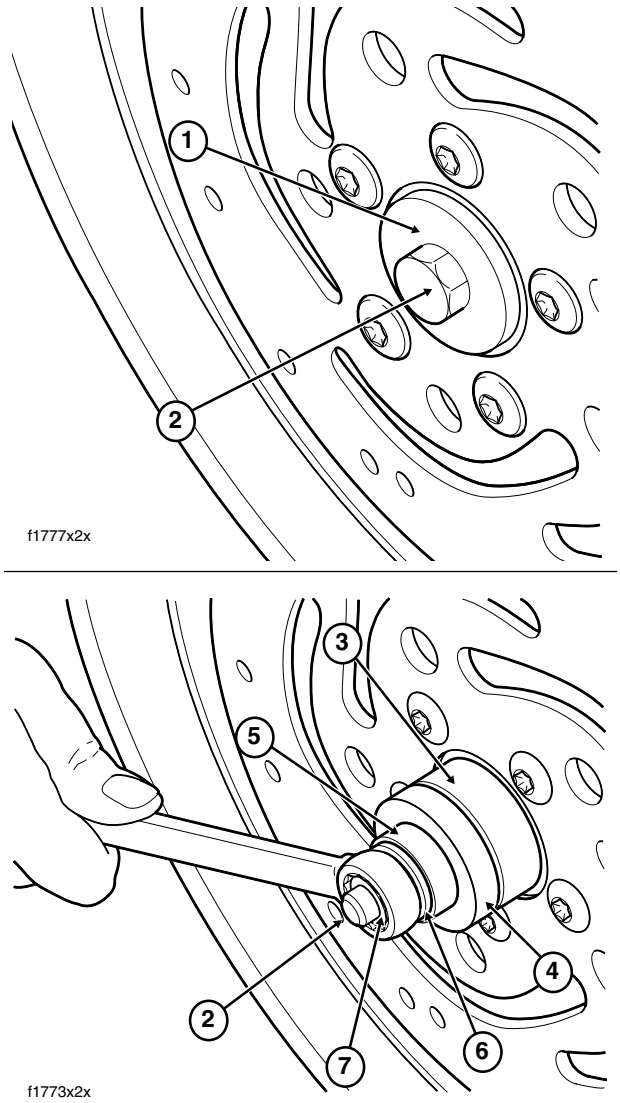

1. Support Plate
2. Threaded Rod
3. Wheel Bearing
4. Larger Pilot (1 Inch)
5. Nice Bearing
6. Flat Washer
7. Hex Nut

Figure 2-13. Install Sealed Wheel Bearings

   i. On the other side of the wheel, slide spacer sleeve down threaded rod until it contacts installed wheel bearing.
   j. Repeat steps 4(d) through 4(g) to complete installation of second wheel bearing. Bearing is fully seated when hex nut can no longer be turned.

5. Install rim strip on wheel rim, if applicable. Install tube and tire, if applicable. Verify that wheel is balanced.

6. Apply two drops of Loctite High Strength Threadlocker 271 (red) to threads of five belt sprocket bolts. Always use **new** bolts after three use cycles. Install bolts with flat washers to secure sprocket to hub. Alternately tighten bolts to 55-65 ft-lbs (75-88 Nm).

INSTALLATION

1. Place wheel in rear swingarm. Slide wheel far enough forward to slip belt over sprocket and then slide the wheel back.

CAUTION

Do not bend or fold belt backward or into loops smaller than 5 inches (127 mm) in diameter. Sharp bending can weaken the belt and cause premature failure.

2. Seat caliper on anchor weldment of rear swingarm. Position wheel in swingarm, so that brake disc is centered between brake pads.
3. Coat the axle with ANTI-SEIZE LUBRICANT.
4. With the larger OD on the outboard side, hold external spacer between rear swingarm and belt sprocket. Slide axle through left side of rear swingarm, external spacer, and belt sprocket into wheel hub.
5. When axle emerges from hub on brake disc side of wheel, push axle through **short** external spacer, caliper bracket and right side of rear swingarm.
6. Rotate axle so that the flat on the threaded end is topside. With the thumb down and the cam forward, install adjuster cam on end of axle.
7. Apply a thin film of ANTI-SEIZE LUBRICANT to the inboard side of the cone nut avoiding contact with threads. Install cone nut on axle, but finger tighten only.
8. Obtain torque wrench with 1/2 inch drive head and AXLE NUT TORQUE ADAPTER (HD-47925). Proceed as follows:

NOTE

The Axle Nut Torque Adapter simplifies the belt adjustment procedure by allowing the cone nut to be properly tightened without having to remove the right side muffler. The tool also can be used to loosen the cone nut, as well as rotate the weld nut on the left side.

a. Install torque adapter perpendicular to torque wrench as shown in Figure 2-14.

b. Insert tool up between rear wheel and muffler to capture cone nut. For best clearance with muffler, be sure torque adapter is on the outboard side.

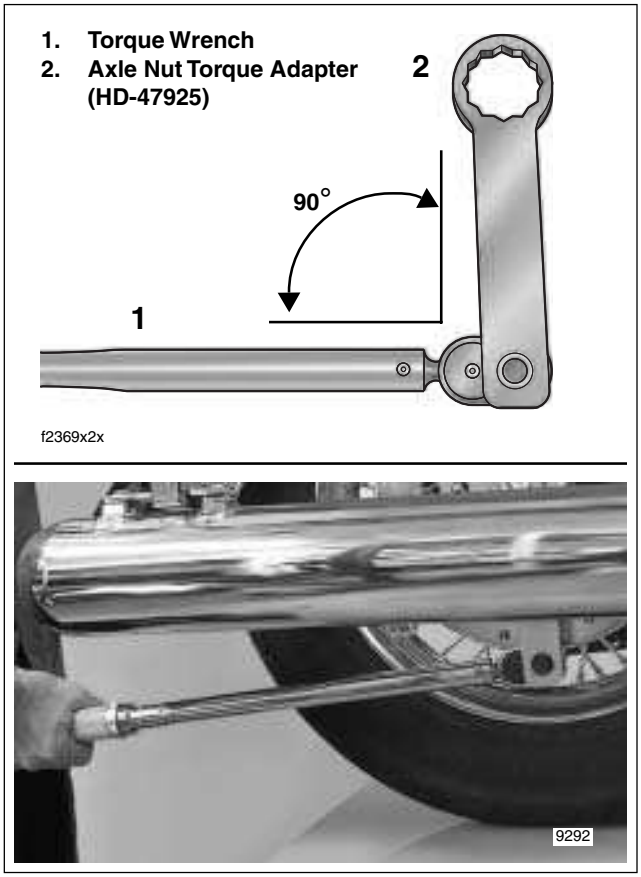

Figure 2-14. Install Tool Perpendicular to Torque Wrench

CAUTION

Since any extension can act as a torque multiplier, the torque wrench must be perpendicular to the torque adapter when the cone nut is tightened. The 90 degree orientation between the tools cancels the multiplier effect and prevents the cone nut from being over-tightened. If the torque adapter is kept inline with the torque wrench, the multiplier effect is in force and parts damage will occur.

c. Verify that adjuster cam just contacts weld nub on both sides of rear swingarm. If necessary, push wheel forward slightly to achieve the desired result. Snug the cone nut to 15-20 ft-lbs (20-27 Nm). See Figure 2-15.

9. Check deflection at the loosest spot in the belt. Use BELT TENSION GAUGE (HD-35381A), or install adapter (HD-35381-3) on old style gauge, and apply 10 lbs. (4.5 kg) of force at the midpoint of the bottom belt strand. Belt deflection should be as follows:

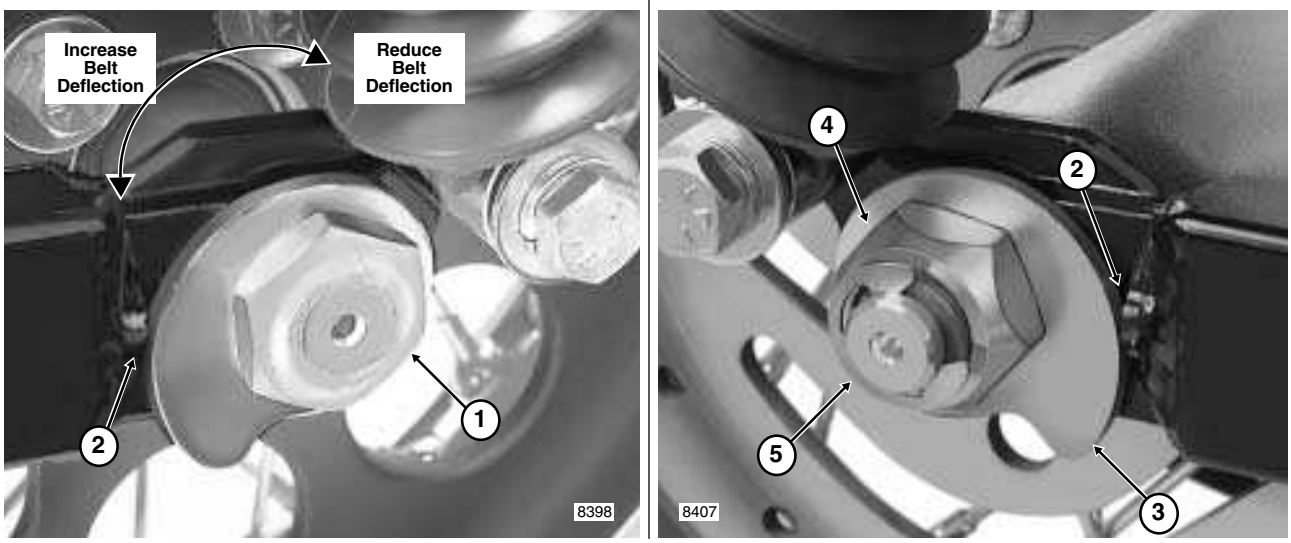

1. Weld Nut
2. Weld Nub
3. Adjuster Cam
4. Cone Nut
5. E-Clip

Figure 2-15. Move Rear Wheel Forward Until Adjuster Cams Just Contact Weld Nubs

Table 2-3. Belt Deflection in the Air

Orientation	Inches	Millimeters
Motorcycle Upright With Rear Wheel in the Air	3/16 - 1/4	4.8 - 6.4
NOTE *See Section 1.10 DRIVE BELT for belt deflection specification with motorcycle on jiffy stand.*		

10. If belt is too tight, move to step 11 to increase belt deflection. If belt is too loose, reduce belt deflection as described below:
    a. Rotate weld nut on left side of axle in a clockwise direction.
    b. Check belt deflection. Apply 10 lbs. (4.5 kg) of force at the midpoint of the bottom belt strand. Belt deflection should be within the range specified in Table 2-3.
    c. If belt is still too loose, repeat steps 10(a) through 10(b). If belt is now too tight, move to step 11.
11. If belt is too tight, increase belt deflection as follows:
    a. Rotate weld nut on left side of axle in a counter-clockwise direction.
    b. Push wheel forward slightly so that adjuster cam just contacts weld nub on both sides of rear swing-arm. See Figure 2-15.
    c. Check belt deflection. Apply 10 lbs. (4.5 kg) of force at the midpoint of the bottom belt strand. Belt deflection should be within the range specified in Table 2-3.
    d. If belt is still too tight, repeat steps 11(a) through 11(c). If belt is now too loose, move to step 10.
12. **Holding** weld nut on left side of axle, tighten cone nut on right side to 95-105 ft-lbs (128.8-142.4 Nm).

NOTE

If the axle moves during tightening of the cone nut, then the belt deflection procedure must be restarted.

13. Recheck belt deflection to verify that it is still within specification.

    If the belt deflection is not within specification, loosen cone nut and then snug to 15-20 ft-lbs (20-27 Nm) before returning to step 10.
14. With the flat side out, install **new** E-clip in groove on right side of axle.
15. On models equipped with low profile shock absorbers (FLHS and FLHX), install left side lower saddlebag support rail as follows:
    a. At rear left side of motorcycle, start outside T40 TORX screw (and flange nut) to fasten saddlebag support rail to saddlebag support bracket.

b. Start T40 TORX screw to fasten opposite end of saddlebag support rail to frame weldment.

c. Alternately tighten screws to 15-20 ft-lbs (20-27 Nm).

16. Install left side muffler as follows:

NOTE

TORCA clamps have eliminated the need for silicone or graphite tape during assembly. To ensure sealing integrity and prevent the possibility of leakage, always discard TORCA clamps whenever they are removed.

a. Slide **new** TORCA clamp onto free end of crossover pipe.

b. Using a bungee cord, tie muffler to lower saddlebag support rail. Install muffler on crossover pipe. Place TORCA clamp into position between crossover and muffler.

c. Install two screws (with lockwashers) to fasten the muffler to the lower saddlebag support rail. Alternately tighten screws to 96-144 **in-lbs** (10.8-16.3 Nm).

d. Verify that exhaust pipes are in alignment and do not contact the vehicle frame or mounted components.

e. Tighten the TORCA clamp to 45-60 ft-lbs (61-81 Nm).

f. Open worm drive clamps and install heat shield on crossover pipe. Position each worm drive clamp so that screw is on the outboard side in the most accessible position and then tighten to 20-40 **in-lbs** (2.3-4.5 Nm).

g. Remove bungee cord from muffler.

⚠WARNING

After servicing brakes and before moving motorcycle, pump brakes to build brake system pressure. Insufficient pressure can adversely affect brake performance, which could result in death or serious injury. (00279a)

17. Depress rear brake pedal several times to set brake pads to proper operating position within caliper.

18. Install saddlebags. See Section 2.26 SADDLEBAG, INSTALLATION.

CHECKING RIM RUNOUT 2.5

INSPECTION

Check wheels for lateral and radial runout before installing a new tire or tube.

1. Install truing arbor in wheel hub and place wheel in WHEEL TRUING STAND, Part No. HD-99500-80.
2. See Figure 2-16. To check rim lateral runout, place a gauge rod or dial indicator near the rim bead. If lateral runout exceeds 0.040 inch (1.02 mm), replace the wheel if cast. Retrue the wheel if laced.
3. See Figure 2-17. Check the rim radial runout as shown. If radial runout exceeds 0.030 inch (0.76 mm), replace the wheel if cast. Retrue the wheel if laced.

NOTE

Rim lateral and radial runout is adjustable on laced wheels. See Section 2.7 TRUING LACED WHEEL.

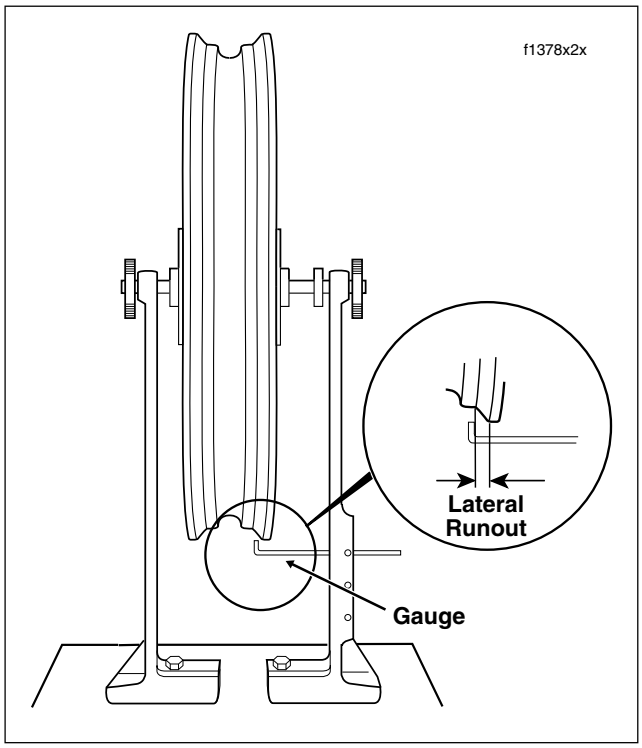

Figure 2-16. Checking Rim Lateral Runout

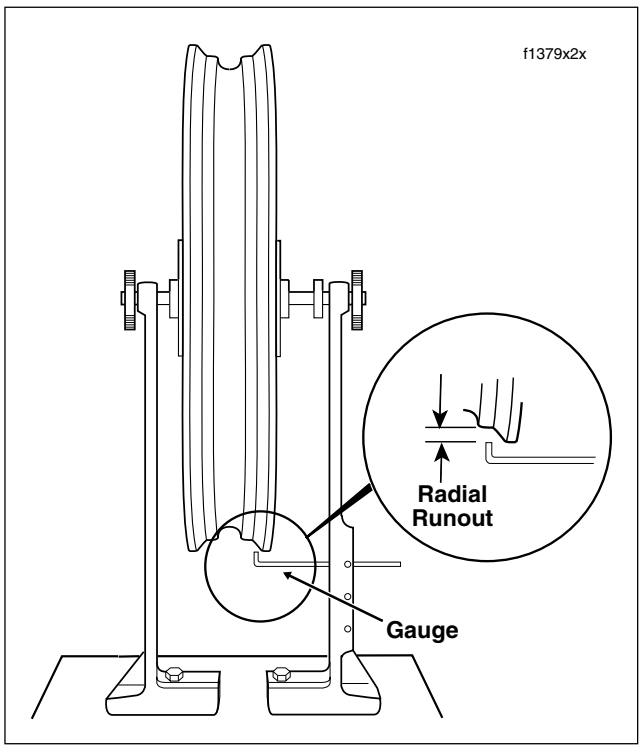

Figure 2-17. Checking Rim Radial Runout

4. If working with a laced wheel, proceed to Section 2.7 TRUING LACED WHEEL to check the wheel offset dimension.

WHEEL LACING–16 INCH RIM 2.6

GENERAL

CAUTION

While the steel laced and chrome aluminum laced profile wheels use the same hub, exercise caution to avoid mixing or interchanging any other parts. Do not install the chrome plated spokes and/or spoke nipples on a steel rim. Likewise, do not install the zinc plated spokes and/or spoke nipples on a chrome plated rim. Mixing or interchanging parts can result in wheel damage.

The spoke nipple fittings use a TORX style fastener and requires a special T-30 I.P. (TORX Plus) driver (HD-42135) for removal and installation. See A of Figure 2-18. Use of a standard T-30 TORX bit will result in nipple damage.

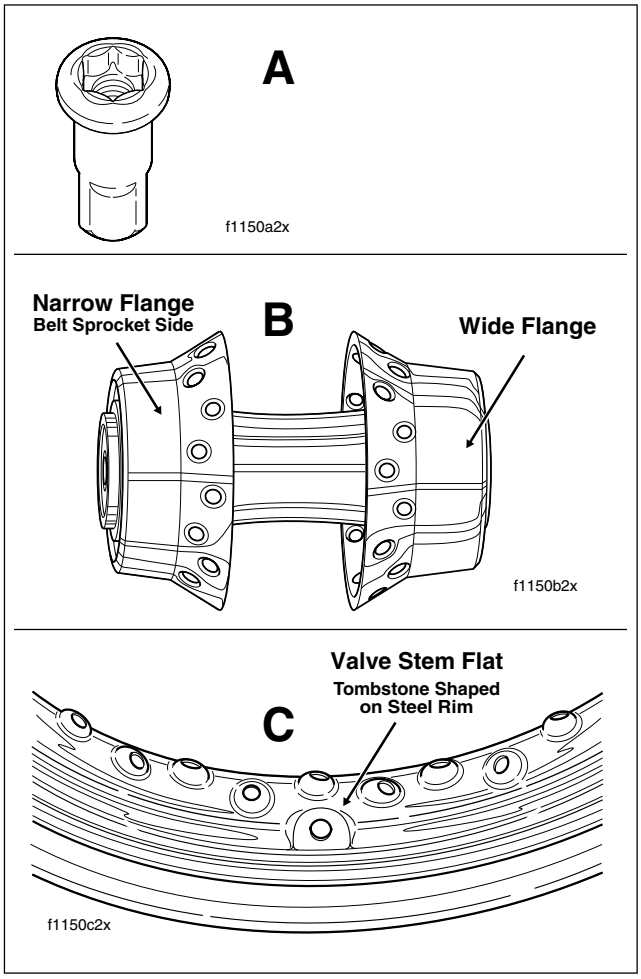

Figure 2-18. Spoke Nipple, Hub and Rim

WHEEL LACING

1. If front wheel, place the hub on a table with the wider flange side up. If rear wheel, place hub so that brake disc side is up. Insert a spoke in each hole of the lower row as shown below. Angle the spokes in a clockwise direction.

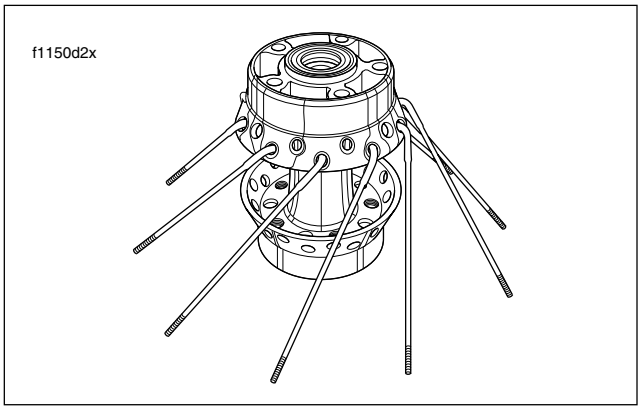

Figure 2-19.

2. Center rim over hub with the valve stem side up. Using any lower row spoke, place the first spoke into the rim hole to the left of the valve stem hole on the upper half of the rim centerline.

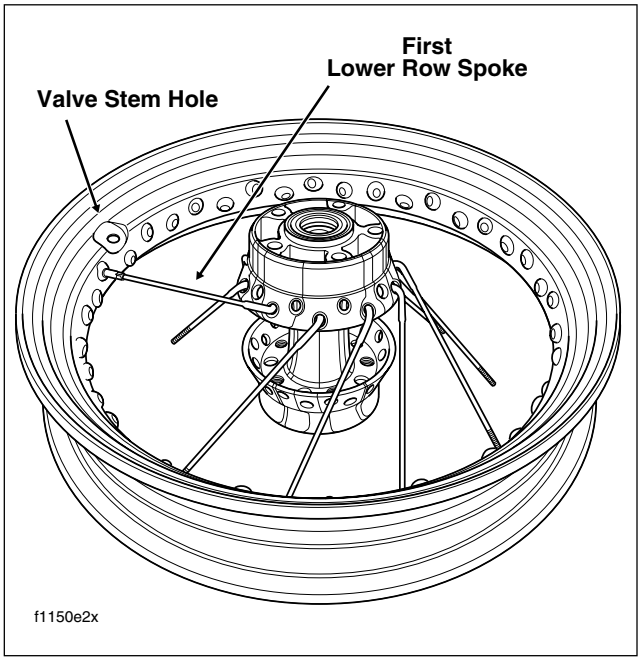

Figure 2-20.

3. Install the rest of the lower row spokes in every fourth hole.

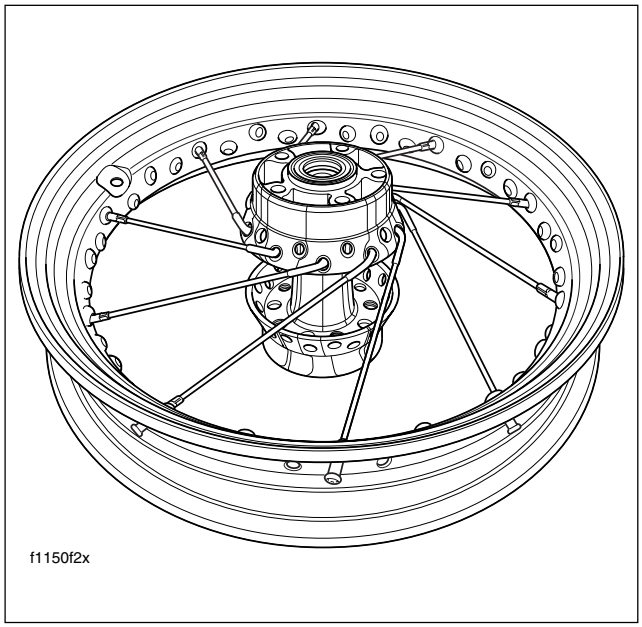

Figure 2-21.

4. Place the first upper row spoke into the hub as shown below. Angle the spoke counterclockwise crossing four lower row spokes. The spoke must enter the hole to the left of the valve stem hole.

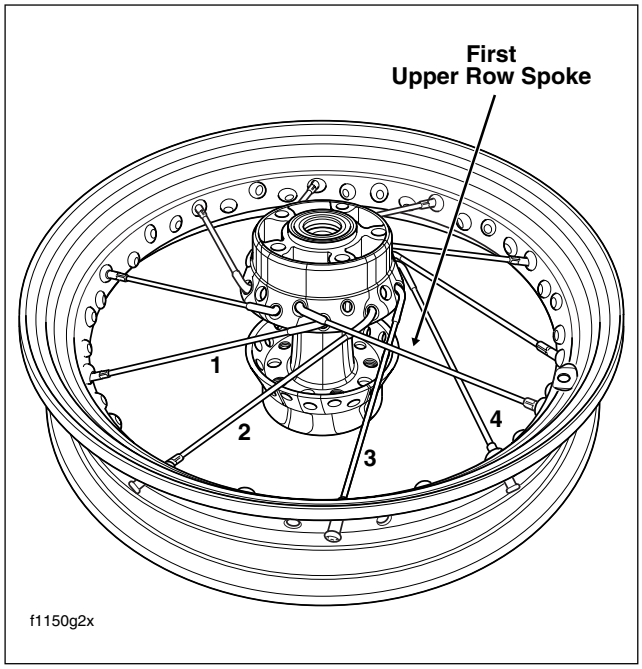

Figure 2-22.

5. Install the nine remaining upper row spokes into every fourth hole remaining above the rim centerline.

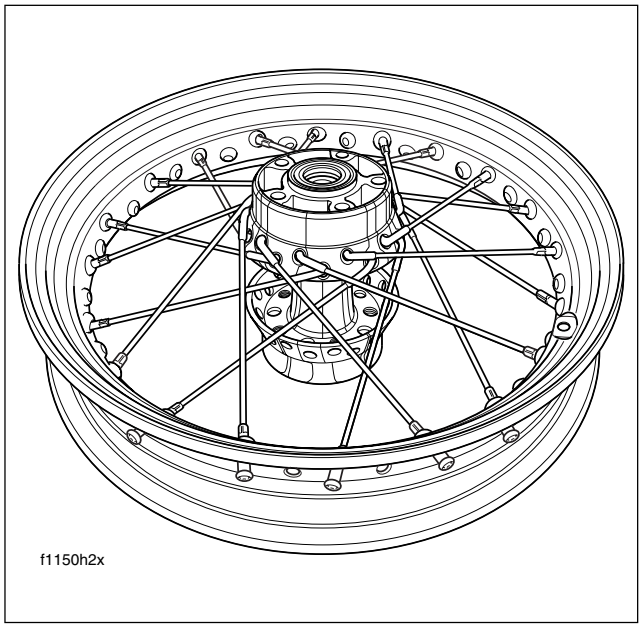

Figure 2-23.

6. Turn the wheel over. Place any lower row spoke into the hub. Angle the spoke clockwise and place into rim hole angled to accept it.

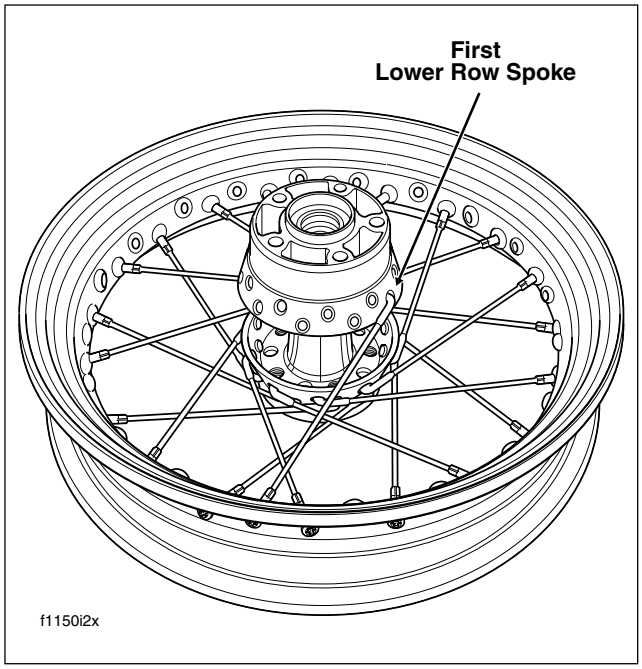

Figure 2-24.

7. Angled clockwise, place the nine remaining lower row spokes into hub and rim.

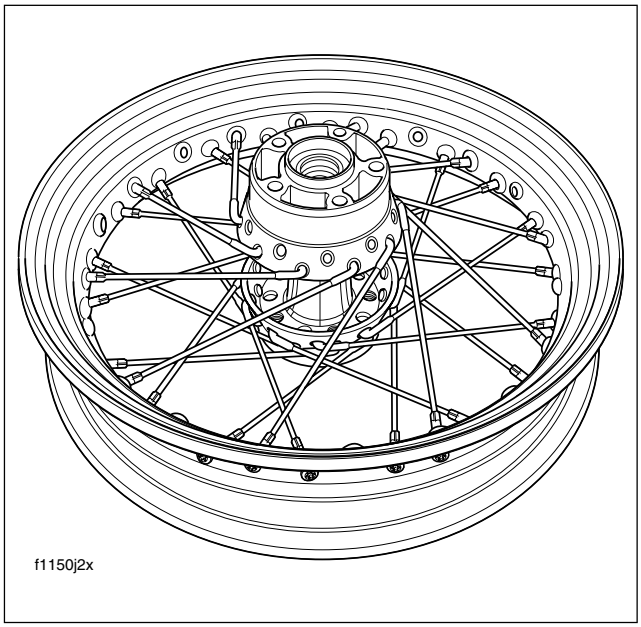

Figure 2-25.

8. Insert any upper row spoke into the hub and angle spoke counterclockwise. Place spoke into appropriate rim hole crossing four lower row spokes.

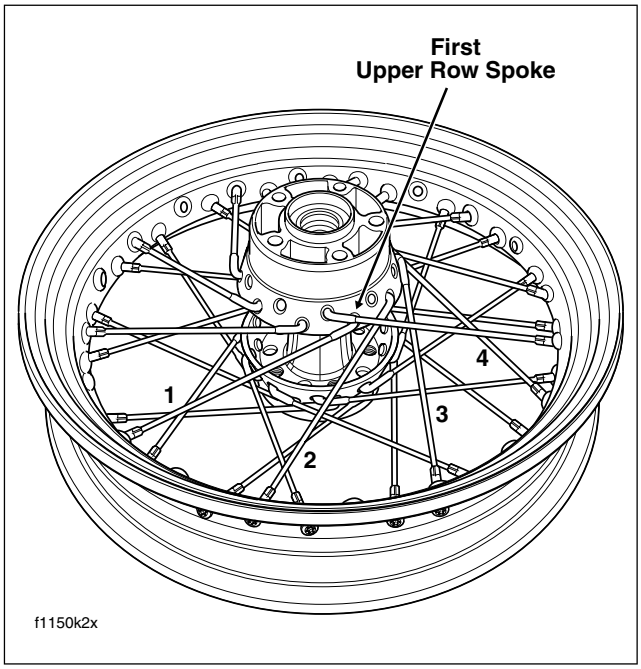

Figure 2-26.

9. Install the nine remaining upper row spokes into hub and rim.

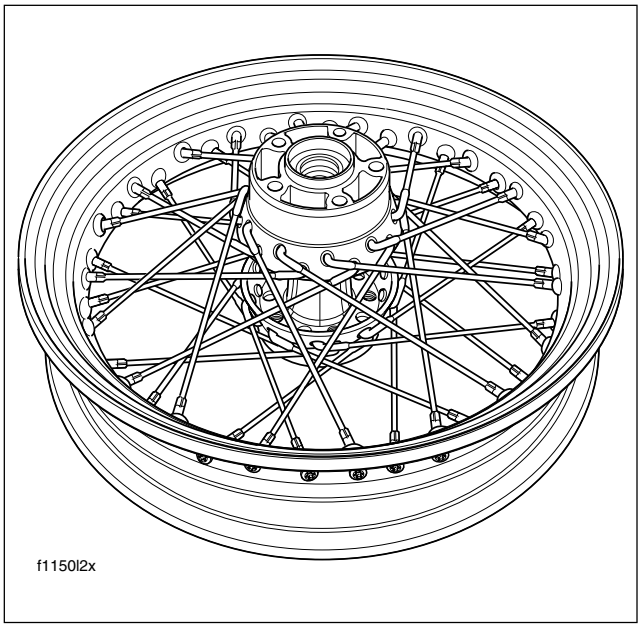

Figure 2-27.

CAUTION

The hub is made of aluminum alloy and should not be clamped in a vise or gripped with pliers, or the hub material may be damaged.

10. Verify that wheel is true. See Section 2.7 TRUING LACED WHEEL for truing procedure and spoke torque specification.

SPOKE TIGHTNESS

See Section 1.6 WHEEL SPOKES.

TRUING LACED WHEEL 2.7

PROCEDURE

1. Divide the wheel spokes into ten groups of four and mark the center of each group with a piece of tape. The groups should be directly across from one another and approximately 90° apart. Tighten the spokes in these four groups finger tight, leaving all others loose.
2. See Figure 2-29. Install truing arbor in wheel hub and place wheel in WHEEL TRUING STAND, Part No. HD-99500-80. Tighten arbor nuts so hub will turn on its bearings.
3. Lay a straightedge across the hub brake disc flange (valve stem side of dual disc front wheel) and one of the marked spoke groups. Measure the distance from the straightedge to the edge of the rim as shown in Figure 2-28. Be sure to subtract the thickness of the straightedge.

   See Figure 2-30. The offset dimension must be as follows:

Table 2-4. Offset Dimensions

RIM TYPE	RIM SIZE	IN.	MM.
Steel Laced			
Front	16	1.555–1.575	39.5–40.0
Rear	16	1.472–1.492	37.4–37.9
Chrome Aluminum Laced Profile			
Front	16	1.270–1.290	32.3–32.8
Rear	16	1.190–1.210	30.2–30.7

If the dimension is not correct, tighten the four spokes accordingly. Use the special T-30 I.P. (TORX Plus) driver (HD-42135). For example, If the measurement on the right rim edge side is less than it should be, loosen the two spokes attached to the hub right side and tighten the two spokes attached to the hub left side. Turn all four spokes an equal number of turns until offset dimension is correct.

CAUTION

Always loosen the appropriate spokes before tightening the other two. Reversing this procedure will cause the rim to become out-of-round.

4. Repeat Step 3 for all four groups on the wheel.
5. See Figure 2-29. After rim has been trued sideways it must be checked and trued radially. Adjust truing stand gauge to the rim's tire bead seat as shown. The rim should be trued within 1/32 inch (0.79 mm).

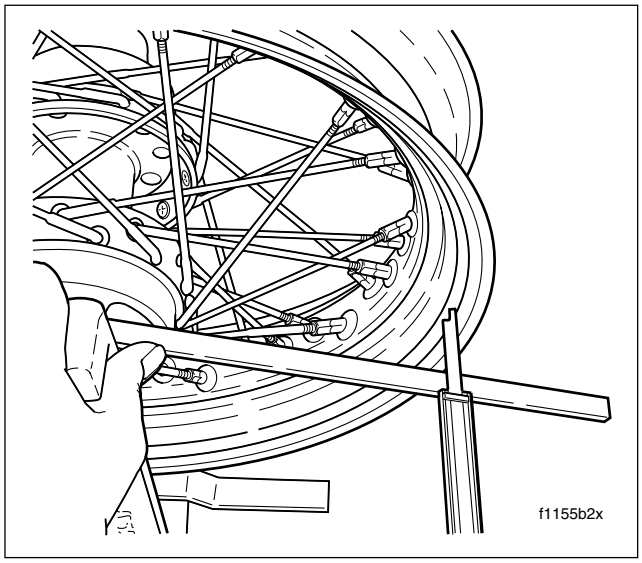

Figure 2-28. Checking Steel Laced Hub Offset Dimension

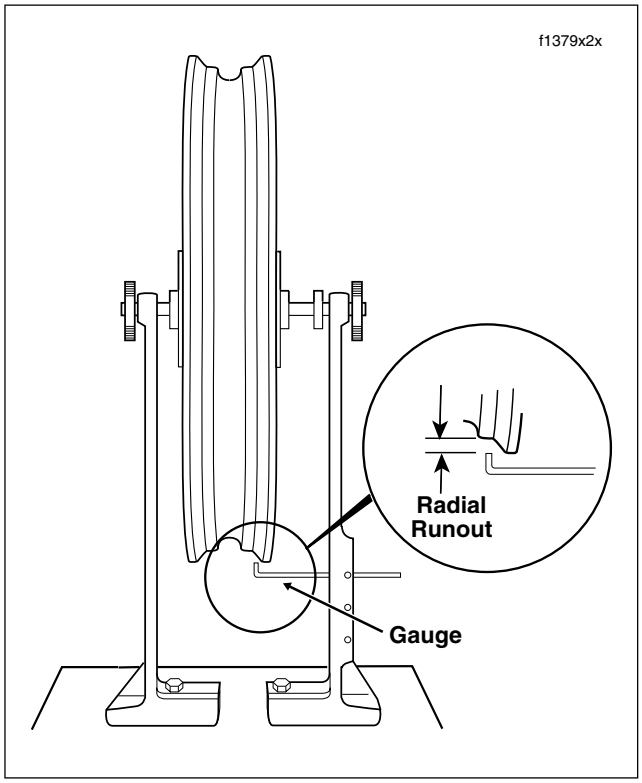

Figure 2-29. Truing Steel Laced Rim Radially

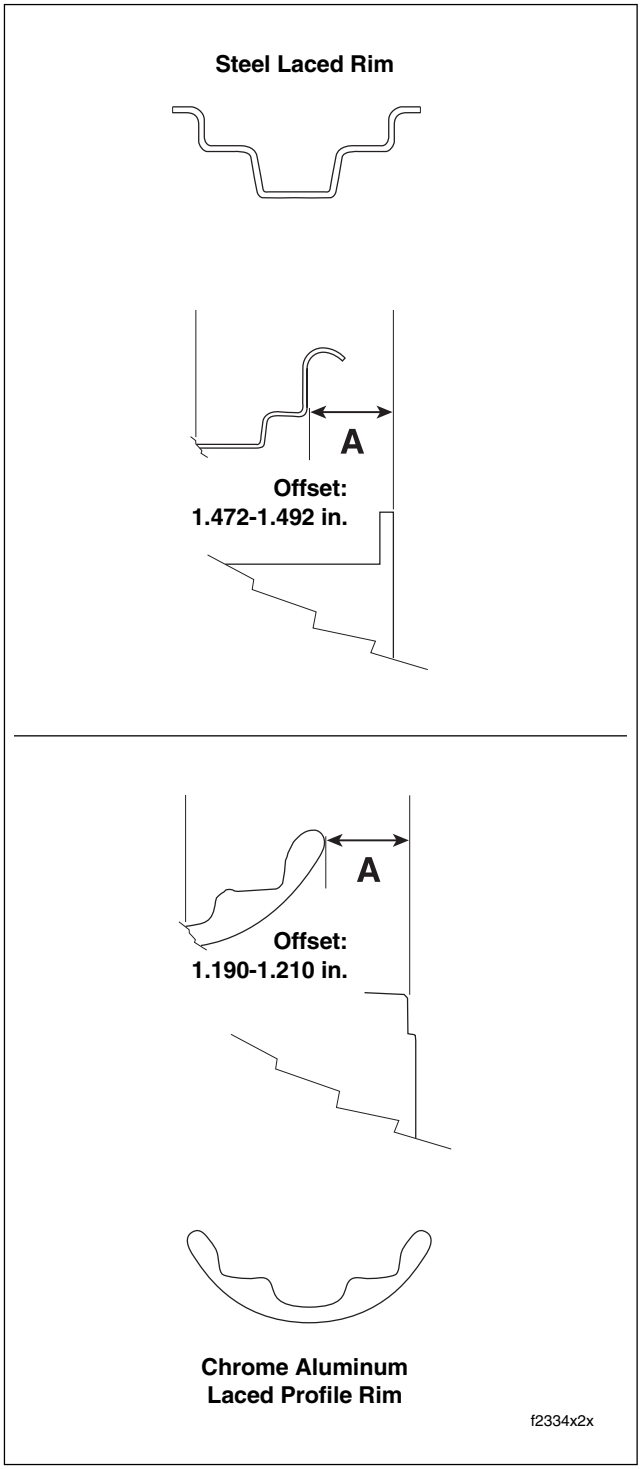

Figure 2-30. Laced Hub Offset Dimension (16 Inch Rear)

6. Spin the rim slowly. If the rim contacts the gauge on or near a marked group of spokes, loosen the spokes in the marked group on the opposite side of the rim. Now tighten the spokes in the group where the rim makes contact. Loosen and tighten spokes an equal number of turns.
7. If the rim contacts the gauge between two marked groups, loosen the spokes in both opposite groups and tighten the spoke groups on the side of the rim that makes contact.
8. When the wheel is centered and trued, start at the valve stem hole and tighten the rest of the spoke nipples one turn at a time until they are snug. Repeat step tightening each spoke nipple to 40-50 **in-lbs** (4.5-5.6 Nm).

⚠WARNING

Spokes that are too tight can draw nipples through the rim or distort hub flanges. Spokes that are too loose can continue to loosen when put in service. Either condition can adversely affect stability and handling, which could result in death or serious injury. (00286a)

9. File or grind off ends of spokes protruding through nipples to prevent puncturing tube when tire is mounted.
10. Check the rim lateral and radial runout as described under Section 2.5 CHECKING RIM RUNOUT.

NOTE

After installation of front wheel, visually check the relationship of the front wheel to the fork fender bosses. The front wheel should be approximately centered between the bosses.

GENERAL

Tires should be inspected for punctures, cuts, breaks and wear at least weekly.

Whenever a tube type tire is replaced, the tube should also be replaced. Inner tubes should be patched only as an emergency measure. Replace a damaged tube as soon as possible. Inner tubes must be used on all Harley-Davidson laced wheels.

⚠WARNING

Excessively worn tires are more susceptible to penetrations. Always remove tires from service before they reach the tread wear indicator bars, which indicates that 1/32 inch (0.79 mm) tread pattern depth remains. Worn/unworn tire combinations and worn tires used in wet conditions can ad-versely affect handling and lead to loss of vehicle control, which could result in death or serious injury.

⚠WARNING

Tubeless tires may be repaired in the tread area only and then the puncture must be 1/4 inch (6.4 mm) or smaller. Never repair a tire with less than 1/16 inch (1.6 mm) tread depth. All repairs must be made from inside the tire. Use of faulty or defective tires can adversely affect handling and lead to loss of vehicle control, which could result in death or serious injury.

NOTE

Acceptable repair methods include a patch and plug combination, chemical or hot vulcanizing patches or head-type plugs.

When repairing tubeless tires, use TIRE SPREADER, Part No. HD-21000 to spread the tire sidewalls.

⚠WARNING

Always check both tire sidewalls for arrows indicating proper forward tire rotation. Some tires require different tire rotation depending on whether tire is used on front or rear wheel. Improper mounting can result in poor tire mileage. In wet weather, improper mounting can adversely affect handling and lead to loss of vehicle control, which could result in death or serious injury.

REMOVAL

1. Remove wheel from motorcycle. Let the air out of the tube or tire.

Figure 2-31. Starting Bead Off Rim

2. Loosen both tire beads from rim flange. See Figure 2-31. In most cases, a bead breaker machine will be required to loosen the bead from the rim.
3. Using tire tools (not sharp instruments), and RIM PROTECTORS, Part No. HD-01289, start upper bead over edge of rim at valve. Do not use excessive force when starting bead over rim. Bead wires may be damaged ruining the tire. Repeat all around rim until first bead is over rim. Remove the tube.

NOTE

It is not necessary to use tools to remove tubeless tires. Make sure beads are well lubricated before removing from rim.

4. Push lower bead into rim well on one side and insert tire tool underneath bead from opposite side. Pry bead over rim edge. Remove tire from rim.

NOTE

It is not always necessary to completely remove tire from rim. Removing one side allows the tube to be replaced and allows for inspection of tire.

CLEANING AND INSPECTION

1. Clean the inside of tire, rim and tube. If rim is dirty or rusty, clean with a stiff wire brush.

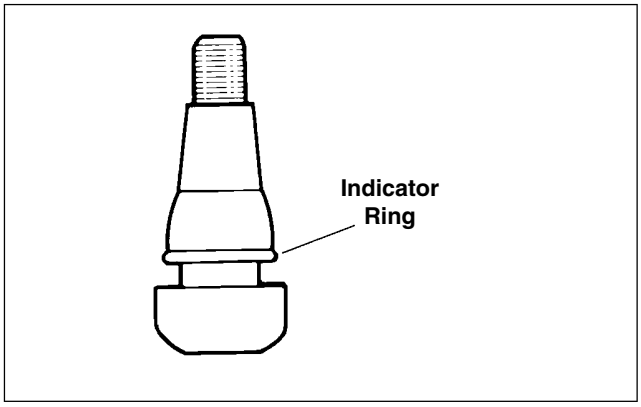

Figure 2-32. Snap-in Tubeless Tire Valves

2. Inspect the tire and tube for wear.

INSTALLATION

⚠WARNING

Use the correct inner tube and tire. See TIRE DATA in SPECIFICATIONS. Use of incorrect tires or tubes can adversely affect handling or result in tire failure, which could result in death or serious injury.

⚠WARNING

Only install original equipment tire valves and valve caps. A valve, or valve and cap combination, that is too long or too heavy can strike adjacent components and damage the valve, causing rapid tire deflation. Rapid tire deflation can cause loss of vehicle control, which could result in death or serious injury. (00281a)

1. On tubeless wheels, damaged or leaking valves must be replaced. To replace a snap-in type valve proceed as follows:
   a. See Figure 2-32. Moisten the valve with water and insert valve stem through rim hole.
   b. Thread plug tool on valve stem and pull valve through rim until all of the indicator ring is visible.
2. On laced wheels, install a rim strip into the rim well. Make sure no spokes protrude through nipples and be sure to align the valve stem hole in rim strip with hole in rim.
3. Thoroughly lubricate the rim flanges and both beads of the tire with tire lubricant. Install RIM PROTECTORS, Part No. HD-01289 to prevent scarring rims.
4. See Figure 2-33. Starting at the valve stem, start the first bead into the rim well. Work the bead on as far as possible by hand. Use the tire tool to pry the remaining bead over the rim flange. If tire has colored dot on sidewall, it is a balance mark and should be located next to valve stem hole.

Figure 2-33. Starting Bead on Rim

Figure 2-34. Starting Second Bead on Rim

5. Inflate tube just enough to round it out. Lubricate thoroughly 360˚ around the tube base. Insert tube in tire with valve stem in hole.
6. See Figure 2-34. Starting 180˚ from valve stem, start the second bead onto the rim. Work the bead onto the rim with tire tools, working toward valve in both directions. Remove the valve core from the rim hole before prying the remaining bead over the rim flange.

   Make sure inner tube valve stem moves in and out freely, then inflate the tire to recommended pressure to seat the bead. See TIRE DATA at the beginning of this section. Deflate tire to allow inner tube to smooth out, and then inflate again to recommended pressure to seat the bead.

NOTE

Do not inflate tire over 40 psi (2.8 bars) to seat beads. If the beads fail to seat, deflate and relubricate the bead and rim. Reinflate to seat beads, but do not exceed 40 psi (2.8 bars).

⚠WARNING

Do not exceed manufacturer's recommended pressure to seat beads. Exceeding recommended bead seat pressure can cause tire rim assembly to burst, which could result in death or serious injury. (00282a)

CAUTION

When mounting tire and tube on the rim, use extreme care so the inner tube is not pinched.

7. Use the BEAD EXPANDER (Part No. HD-28700) to seat beads on tubeless tires.

Checking Tire Radial Runout

1. Check runout by turning wheel on axle, measuring amount of radial displacement from a fixed point near the tire. See Figure 2-35.
2. Tire tread runout should be no more than 0.090 inch (2.28 mm) If tire tread runout exceeds this specification, remove tire from rim and check rim runout to see if rim is at fault. (See Section 2.5 CHECKING RIM RUNOUT).

NOTE

Make sure bead is properly seated on rim. Deflate and reseat tire if necessary.

3. If rim runout is less than 1/32 inch (0.79 mm), tire is at fault and should be replaced. If rim runout exceeds this specification, correct by replacing cast wheel or truing laced wheel.

Checking Tire Lateral Runout

1. Check runout by turning wheel on axle, measuring tread runout. See Figure 2-36.
2. Tire tread runout should be no more than 0.080 inch (2.03 mm). If tire tread runout exceeds this specification, remove tire from rim and check rim bead runout to see if rim is at fault (see Section 2.5 CHECKING RIM RUNOUT).

NOTE

Make sure bead is properly seated on rim. Deflate and reseat tire if necessary.

3. If rim bead runout is less than 1/32 inch (0.79 mm), tire is at fault and should be replaced. If rim bead runout exceeds this specification, correct by replacing cast wheel or truing laced wheel.

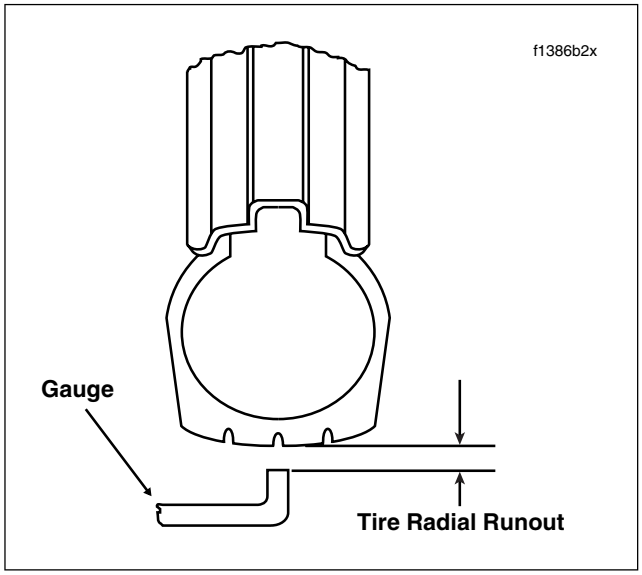

Figure 2-35. Checking Tire Radial Runout

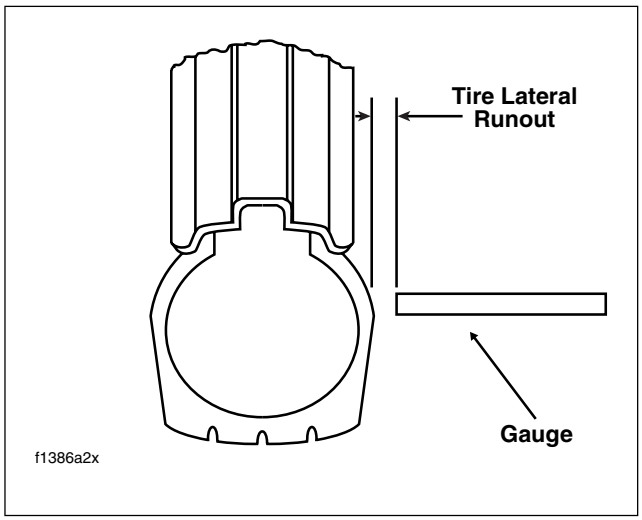

Figure 2-36. Checking Tire Lateral Runout

Wheel Balancing

Wheel balancing is recommended to improve handling and reduce vibration, especially at high road speeds. Cast aluminum wheels require special self-adhesive weights. Gold Color – 1 oz. (28g) weight, 1/2 oz. (14g) weight, Silver Color 1/2 oz. (14g) and 1/4 oz. (7g), and Black 1/4 oz. (7g) weight.

Laced wheels use balance weights which press over the spoke nipples. 1 oz. (28g), 3/4 oz. (21g) and 1/2 oz. (14g) weights are available.

1. Self adhesive wheel weights should be applied to the flat surface of the rim. Make sure that area of application is completely clean, dry and free of oil and grease.

NOTE

If 1 oz. (28g) or more weight must be added at one location, split the amount so that half is applied to each side of the rim.

2. Remove paper backing from weight and apply three drops of Loctite® SUPERBONDER® 420 to the adhesive side of the weight. Place the weight on rim, press firmly in place and hold for 10 seconds. Full adhesive cure takes 8 hours.
3. In most cases, static balancing using WHEEL TRUING STAND, Part No. HD-99500-80, will produce satisfactory results. However, dynamic balancing, utilizing a wheel spinner, should be used to produce finer tolerances for best high and low speed handling characteristics. Follow the instructions supplied with the balance machine you are using. Wheels should be balanced to within 1/2 oz. (14g) at 60 mph (96 km/h). The maximum permissible weight to accomplish balance is 3-1/2 oz. (99g) total.

VEHICLE ALIGNMENT 2.9

WARNING

Check vehicle alignment according to following procedures. Incorrect alignment can adversely affect stability and handling, which could result in death or serious injury. (00287a)

METHOD A

NOTE

Use this procedure to realign the powertrain to the frame whenever major disassembly or engine replacement occurs. For acceptable results, a careful inspection should be performed (wheel and tire runout, laced wheel offset, rubber mount condition, etc.) to ensure that it is conducted with serviceable components. See INSPECTION for more information.

1. Place the motorcycle on a hydraulic center stand or place blocking under the frame to support the vehicle and lift the rear wheel off the ground. Be sure the motorcycle is positioned as level as possible.
2. Remove socket screw with lockwasher to remove left passenger footboard from rear swingarm bracket. Tighten both rear swingarm bracket bolts to 34-42 ft-lbs (46-57 Nm). Repeat step on right side of motorcycle.
3. Remove the decorative chrome plug from both rear swingarm brackets. While holding the left side pivot shaft locknut, tighten the right side locknut to 40-45 ft-lbs (54-61 Nm). Then hold the right side pivot shaft locknut and tighten the left side locknut to 40-45 ft-lbs (54-61 Nm).
4. Verify that belt deflection is within specification and that adjuster cams are tight against rear swingarm weld nubs. **Holding** weld nut on left side of axle, tighten cone nut on right side to 95-105 ft-lbs (128.8-142.4 Nm).
5. Remove seat. See Section 2.25 SEAT, REMOVAL.
6. Partially remove fuel tank to gain access to top engine mounting bracket and stabilizer link. See Section 4.7 FUEL TANK (CARBURETED), PARTIAL REMOVAL, FLHX, FLHT, or FLHR/S. For fuel injected models, see Section 9.4 FUEL TANK (FUEL INJECTED), PARTIAL REMOVAL, FLHXI, FLHT/C/U/I, FLTRI, or FLHR/C/S/I.
7. Top Engine Mount:
   a. On left side of motorcycle, tighten the two top engine mounting bracket to front and rear cylinder head bolts to 35-40 ft-lbs (48-54 Nm). See A of Figure 2-39.
   b. Moving to right side of motorcycle, tighten the top stabilizer link eyelet to frame weldment bolt to 18-22 ft-lbs (24-30 Nm). See C of Figure 2-39.

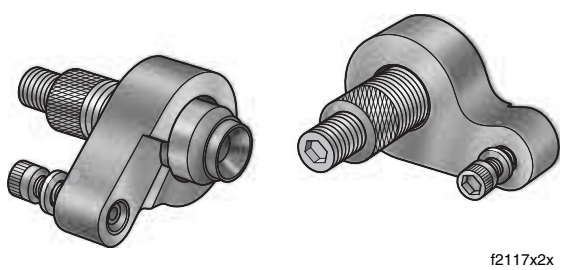

Figure 2-37. Vehicle Alignment Tool (Part No. HD-46247)

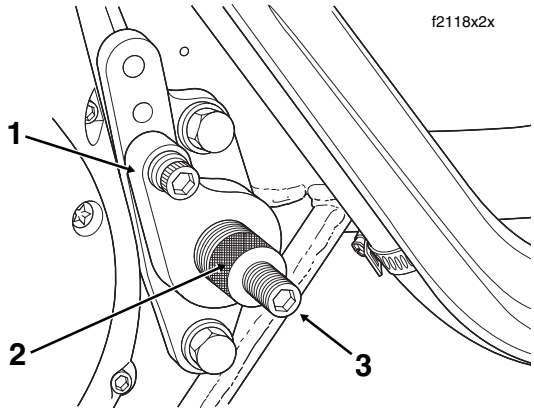

1. **Alignment Fixture**
2. **Pilot**
3. **Alignment Screw**

Figure 2-38. Install Vehicle Alignment Tool (Left Side)

   c. Loosen both top stabilizer link jam nuts.
   d. Remove the top stabilizer link eyelet to top engine mounting bracket bolt. See B of Figure 2-39.
8. Front Engine Mount:
   a. Remove flange locknuts from studs on lower frame crossmember. Remove voltage regulator from studs and allow to hang by cables at front of motorcycle.
   b. Tighten two engine to front engine mounting bracket bolts to 33-38 ft-lbs (45-52 Nm). See H of Figure 2-39.
   c. Tighten front stabilizer link eyelet bolt to block on front engine mounting bracket to 18-22 ft-lbs (24-30 Nm). See E of Figure 2-39.
   d. Loosen both front stabilizer link jam nuts.

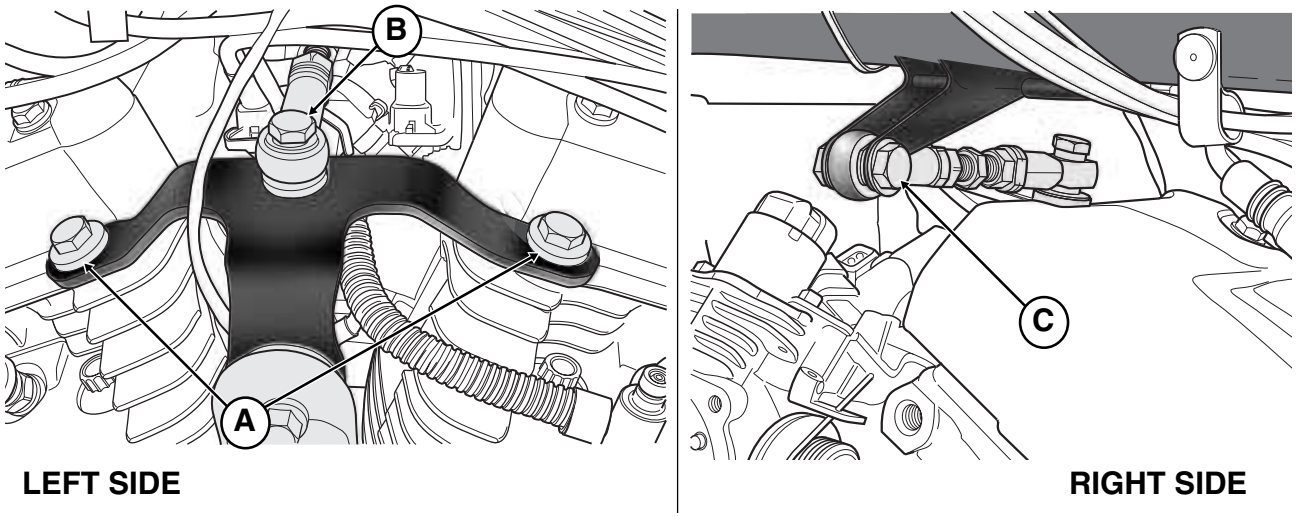

Top Stabilizer Link and Engine Mounting Bracket

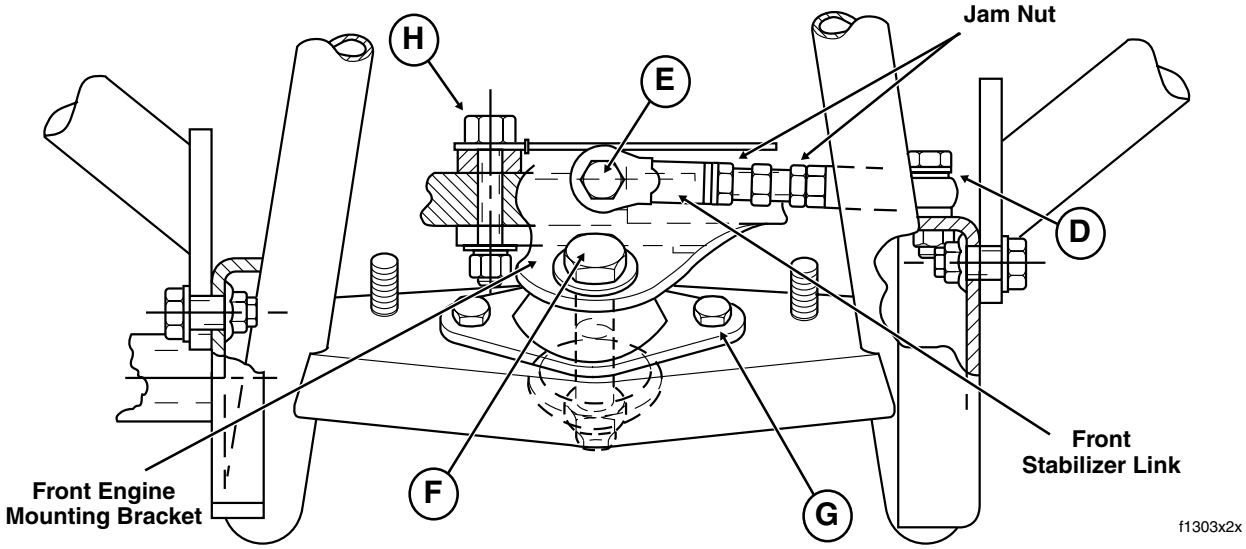

Front Stabilizer Link and Engine Mounting Bracket

Top

- **A** Top Engine Mounting Bracket to Cylinder Heads
- **B** Eyelet to Top Engine Mounting Bracket
- **C** Eyelet to Frame Weldment

Bottom

- **D** Eyelet to Frame Weldment
- **E** Eyelet to Front Engine Mounting Bracket
- **F** Front Engine Mounting Bracket to Rubber Mount
- **G** Front Engine Mount to Frame Crossmember
- **H** Engine to Front Engine Mounting Bracket

Figure 2-39. Engine Mounting Bracket Bolts

e. Remove front stabilizer link eyelet to frame weldment bolt. See D of Figure 2-39.

f. Remove the center front engine mounting bracket to rubber mount bolt (with washers and nut). See F of Figure 2-39.

9. Obtain Vehicle Alignment Tool (HD-46247). See Figure 2-37. Proceed as follows:
   a. Back off alignment screws and pilot so that no contact is made with pivot shaft during initial installation.
   b. Position alignment fixture so that pilot begins to engage hole in rear swingarm bracket and then start 5/16 allen head screw (with flat washer) into lower hole of passenger footboard mount. Leave fixture loosely installed. Repeat step on other side of motorcycle.

NOTE

Alignment fixtures are stamped L(eft) and R(ight) for easy identification. When installing alignment fixture on right side of motorcycle, first remove hex screw to free brake hose P-clamp from rear swingarm bracket. The relief in right side fixture accommodates hex screw boss.

   c. Holding alignment fixture tight against rear swingarm bracket, use knurling to rotate pilot until it bottoms in rear swingarm bracket. Without disturbing setting of pilot, tighten allen head screw to passenger footboard mount to 18-22 ft-lbs (24-30 Nm). Repeat step on other side of motorcycle.
   d. Hand turn alignment screw until it bottoms against end of pivot shaft. Repeat step on other side of motorcycle.
   e. Tighten alignment screw to 60-80 **in-lbs** (6.8-9.0 Nm). Repeat step on other side of motorcycle. See Figure 2-38.
10. Adjust each stabilizer link as follows:
   a. Install bolts removed under steps 7(d) and 8(e), and using the center hex to maintain equal thread engagement at both eyelets, adjust stabilizer links so that bolts thread in without any stress or engine movement. See B and D of Figure 2-39.
   b. Alternately tighten bolts to 18-22 ft-lbs (24-30 Nm).
   c. Holding the stabilizer link adjuster and mounting eyelets to prevent movement or binding, tighten jam nuts on top and front stabilizer links.
11. Remove vehicle alignment tool from rear swingarm brackets.
12. Snap the chrome plugs back into the rear swingarm brackets.
13. Install socket screw with lockwasher to fasten passenger footboard to rear swingarm bracket. Tighten screw to 30-35 ft-lbs (40.7-47.5 Nm). Repeat step on other side of motorcycle.
14. Verify that front rubber mount is centered under the front mounting plate bolt hole and has not been bound by the plate dragging across the isolator.
   a. If the front rubber mount is centered and free of binding, proceed as follows:
      - Tighten the two front engine mount to frame crossmember bolts to 15-20 ft-lbs (20-27 Nm). See G of Figure 2-39.
      - Install center front engine mounting bracket to rubber mount bolt (with washers and nut) and tighten to 15-20 ft-lbs (20-27 Nm). See F of Figure 2-39.
   b. If centering or relaxation of the mount is required, proceed as follows:
      - Loosen the two front engine mount to frame crossmember bolts. See G of Figure 2-39.
      - Push on the rubber mount to center it with the thru bolt hole in the mounting plate. It may be necessary to bounce or wiggle the engine to unload any binding of the rubber mount on the mounting plate.
      - After the mount is centered, tighten the two front engine mount to frame crossmember bolts to 15-20 ft-lbs (20-27 Nm). See G of Figure 2-39.
      - Install center front engine mounting bracket to rubber mount bolt (with washers and nut) and tighten to 15-20 ft-lbs (20-27 Nm). See F of Figure 2-39.
15. Slide voltage regulator over studs on lower frame crossmember at front of vehicle. Install flange locknuts on studs and tighten to 70-100 **in-lbs** (7.9-11.3 Nm).
16. Install fuel tank. For carbureted models, see Section 4.7 FUEL TANK (CARBURETED), INSTALLATION (AFTER PARTIAL REMOVAL), INSTALLATION (AFTER PARTIAL REMOVAL), or FLHR/S. For fuel injected models, see Section 9.4 FUEL TANK (FUEL INJECTED), INSTALLATION (AFTER PARTIAL REMOVAL), FLHXI, FLHT/C/U/I, FLTRI, or FLHR/C/S/I.
17. Verify **minimum clearance** between the powertrain and the following frame mounted components:
   a. Top Engine/Horn Mounting Bracket to Fuel Tank: 0.328 inch (8.3 mm).
   b. Rocker Covers to Fuel Tank: 0.375 inch (9.5 mm).
   c. Carburetor Top Cover to Fuel Tank: 0.375 inch (9.5 mm).
   d. Rear Spark Plug Boot to Fuel Valve: 0.250 inch (6.4 mm).
   e. Top Stabilizer Link to Induction Module: 0.375 inch (9.5 mm).
   f. Front Stabilizer Link to Voltage Regulator: 0.375 inch (9.5 mm).
   g. Inner Primary Chaincase to Lower Frame Tube: 0.187 inch (4.8 mm).
   h. Exhaust Crossover Pipe to Primary Housing: 0.125 inch (3.2 mm).
   i. Tire to Rear Fender: 0.100 inch (2.5 mm).
   j. Perform the procedure under Method B to troubleshoot clearance problems and to identify offending component(s).

18. Install seat. See Section 2.25 SEAT, INSTALLATION.
19. Test ride the motorcycle.

NOTE

Vehicle leads that require more than 2-lbs pull to correct need further diagnosis. Perform the procedure under Method B in this section.

METHOD B

NOTE

Use this procedure to determine the cause of vehicle misalignment and to locate clearance problems, or as an alternative to use of the Vehicle Alignment Tool (HD-46247) described under Method A. For acceptable results, a careful inspection should be performed (wheel and tire runout, laced wheel offset, rubber mount condition, etc.) to ensure that it is conducted with serviceable components. See INSPECTION for more information.

1. Place the motorcycle on a hydraulic center stand or place blocking under the frame to support the vehicle and lift the rear wheel off the ground. Be sure the motorcycle is positioned as level as possible.
2. Remove socket screw with lockwasher to remove left passenger footboard from rear swingarm bracket. Tighten both rear swingarm bracket bolts to 34-42 ft-lbs (46-57 Nm). Repeat step on right side of motorcycle.
3. Remove the decorative chrome plug from both rear swingarm brackets. While holding the left side pivot shaft locknut, tighten the right side locknut to 40-45 ft-lbs (54-61 Nm). Then hold the right side pivot shaft locknut and tighten the left side locknut to 40-45 ft-lbs (54-61 Nm).
4. Verify that belt deflection is within specification and that adjuster cams are tight against rear swingarm weld nubs. **Holding** weld nut on left side of axle, tighten cone nut on right side to 95-105 ft-lbs (128.8-142.4 Nm).
5. Remove seat. See Section 2.25 SEAT, REMOVAL.
6. Partially remove fuel tank to gain access to top engine mounting bracket and stabilizer link. See Section 4.7 FUEL TANK (CARBURETED), PARTIAL REMOVAL, FLHX, FLHT, or FLHR/S. For fuel injected models, see Section 9.4 FUEL TANK (FUEL INJECTED), PARTIAL REMOVAL, FLHXI, FLHT/C/U/I, FLTRI, or FLHR/C/S/I.
7. Top Engine Mount:
   a. On left side of motorcycle, tighten the two top engine mounting bracket to front and rear cylinder head bolts to 35-40 ft-lbs (48-54 Nm). See A of Figure 2-39.
   b. Moving to right side of motorcycle, tighten the top stabilizer link eyelet to frame weldment bolt to 18-22 ft-lbs (24-30 Nm). See C of Figure 2-39.
   c. Loosen both top stabilizer link jam nuts.
   d. Remove the top stabilizer link eyelet to top engine mounting bracket bolt. See B of Figure 2-39.
8. Front Engine Mount:
   a. Remove flange locknuts from studs on lower frame crossmember. Remove voltage regulator from studs and allow to hang by cables at front of motorcycle.
   b. Tighten two engine to front engine mounting bracket bolts to 33-38 ft-lbs (45-52 Nm). See H of Figure 2-39.
   c. Tighten front stabilizer link eyelet to frame weldment bolt to 18-22 ft-lbs (24-30 Nm). See D of Figure 2-39.
   d. Tighten front stabilizer link eyelet bolt to block on front engine mounting bracket to 18-22 ft-lbs (24-30 Nm). See E of Figure 2-39.
   e. Remove the center front engine mounting bracket to rubber mount bolt (with washers and nut). See F of Figure 2-39.
9. To verify alignment, install alignment bars or other suitable device on both the left and right side of motorcycle. Proceed as follows:

NOTE

If the front tire is wider than the rear, then the alignment bars must either be shimmed out equally at the points of contact on the rear tire, notched at the front to clear the front tire, or attached to the front tire with all measurements performed at the rear. For explanatory purposes, the following procedure assumes the alignment bars are secured to the rear tire.

   a. Place a set of straightedges on both the left and right sides of the motorcycle alongside the front and rear tires.
   b. Verify that both alignment bars firmly contact the rear wheel at two points. Use clamp or bungee cords to hold the bars in place. Tension should be equal to avoid spreading or pinching the bars.
   c. Verify that the bars are straight by matching the width measurements at both ends.
   d. Straighten the front end and verify that the measurements from the front wheel to the bar on one side of the motorcycle are equal at two points, both fore and aft.
   e. Measure the front wheel to the bar on the other side of the motorcycle, both fore and aft, and compare the results to the measurements obtained under step 9(d). Measurements from left to right should be equal +/- 0.030 inch (0.76 mm).
   f. Loosen jam nuts, and using the center hex, adjust the front stabilizer link as required to obtain equal measurements at all four points (+/- 0.030 inch or 0.76 mm). See Figure 2-40.

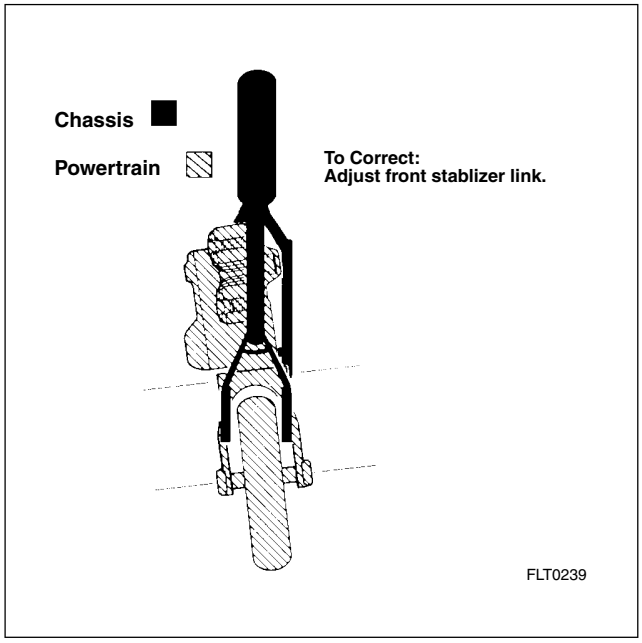

Figure 2-40. Horizontally Misaligned

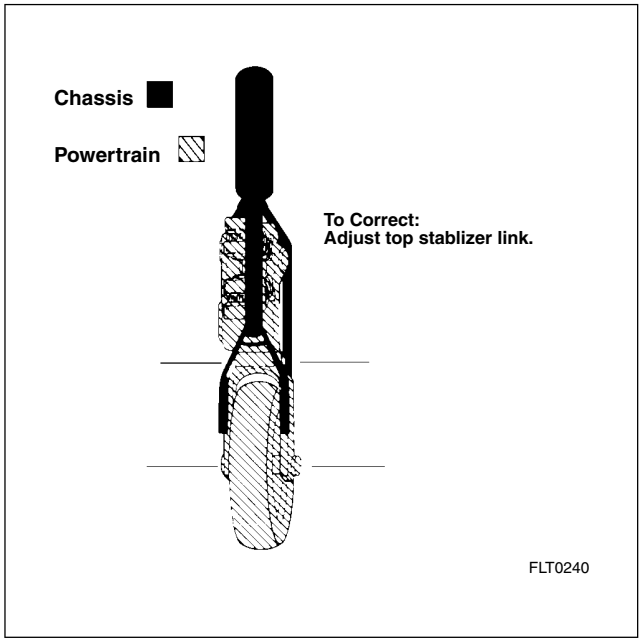

Figure 2-41. Vertically Misaligned

NOTE

After each adjustment, unload any binding of the front rubber mount and verify that the alignment bars and front wheel are still correctly positioned.

g. Holding the front stabilizer link adjuster and mounting eyelets to prevent movement or binding, tighten both jam nuts.

h. Verify that the front rubber mount is centered under the thru bolt hole in the mounting plate.

i. If the front rubber mount is centered and free of binding, proceed as follows:

- Tighten the two front engine mount to frame crossmember bolts to 15-20 ft-lbs (20-27 Nm). See G of Figure 2-39.
- Install center front engine mounting bracket to rubber mount bolt (with washers and nut) and tighten to 15-20 ft-lbs (20-27 Nm). See F of Figure 2-39.

j. If centering or relaxation of the mount is required, proceed as follows:

- Loosen the two front engine mount to frame crossmember bolts. See G of Figure 2-39.
- Push on the rubber mount to center it with the thru bolt hole in the mounting plate. It may be necessary to bounce or wiggle the engine to unload any binding of the rubber mount on the mounting plate.
- After the mount is centered, tighten the two front engine mount to frame crossmember bolts to 15-20 ft-lbs (20-27 Nm). See G of Figure 2-39.
- Install center front engine mounting bracket to rubber mount bolt (with washers and nut) and tighten to 15-20 ft-lbs (20-27 Nm). See F of Figure 2-39.

10. Slide voltage regulator over studs on lower frame crossmember at front of vehicle. Install flange locknuts on studs and tighten to 70-100 **in-lbs** (7.9-11.3 Nm).

11. Adjust the top stabilizer link as follows:

    a. Using the center hex to maintain equal thread engagement at both eyelets, adjust stabilizer link so that bolt removed under step 7(d) threads in without any stress or engine movement.

    b. Tighten the stabilizer link eyelet to top engine mounting bracket bolt to 18-22 ft-lbs (24-30 Nm). See B of Figure 2-39.

    c. Holding the top stabilizer link adjuster and mounting eyelets to prevent movement or binding, tighten both jam nuts.

12. Lower motorcycle to floor and remove hydraulic center stand or blocking.

13. After verifying that the motorcycle is level, check vertical alignment placing an inclinometer on both front and rear brake rotors. Front and rear lean angles should be equal +/- 1/2 degree. See Figure 2-41. If vertical alignment exceeds specification, proceed as follows:

a. Loosen the top stabilizer link eyelet to top engine mounting bracket bolt. See B of Figure 2-39. Verify that bolt is unloaded and threads freely in and out of the mounting bracket hole. If necessary, loosen jam nuts and adjust stabilizer link to a achieve a free state. Tighten bolt to 18-22 ft-lbs (24-30 Nm) and then tighten jam nuts before rechecking vertical alignment.

b. Look for components that are worn, damaged or out of specification. See INSPECTION on the next page.

14. Remove the alignment bars from both the left and right side of the motorcycle.

15. Snap the chrome plugs back into the rear swingarm brackets.

16. Install socket screw with lockwasher to fasten passenger footboard to rear swingarm bracket. Tighten screw to 30-35 ft-lbs (40.7-47.5 Nm). Repeat step on other side of motorcycle.

17. Install fuel tank. For carbureted models, see Section 4.7 FUEL TANK (CARBURETED), INSTALLATION (AFTER PARTIAL REMOVAL), INSTALLATION (AFTER PARTIAL REMOVAL), or FLHR/S. For fuel injected models, see Section 9.4 FUEL TANK (FUEL INJECTED), INSTALLATION (AFTER PARTIAL REMOVAL), FLHXI, FLHT/C/U/I, FLTRI, or FLHR/C/S/I.

18. Verify **minimum clearance** between the powertrain and the following frame mounted components:

    a. Top Engine/Horn Mounting Bracket to Fuel Tank: 0.328 inch (8.3 mm).

    b. Rocker Covers to Fuel Tank: 0.375 inch (9.5 mm).

    c. Carburetor Top Cover to Fuel Tank: 0.375 inch (9.5 mm).

    d. Rear Spark Plug Boot to Fuel Valve: 0.250 inch (6.4 mm).

    e. Top Stabilizer Link to Induction Module: 0.375 inch (9.5 mm).

    f. Front Stabilizer Link to Voltage Regulator: 0.375 inch (9.5 mm).

    g. Inner Primary Chaincase to Lower Frame Tube: 0.187 inch (4.8 mm).

    h. Exhaust Crossover Pipe to Primary Housing: 0.125 inch (3.2 mm).

    i. Tire to Rear Fender: 0.100 inch (2.5 mm).

19. Install seat. See Section 2.25 SEAT, INSTALLATION.

20. Test ride the motorcycle.

NOTE

Vehicle leads that require more than 2-lbs pull to correct need further diagnosis. See INSPECTION on this page.

INSPECTION

See Section 1.2 MAINTENANCE SCHEDULE for the required service interval. Perform inspection sooner if any sag in the powertrain is observed or abnormal handling characteristics/vibrations are experienced.

Front Rubber Mount

1. Verify condition and torque of the mounting hardware. Visually inspect for wear, damage or improper installation. Replace hardware as necessary.

2. Examine carefully at the bottom of the motorcycle paying special attention to the area between the large flat metal washer and the bracket on the frame. There should be a gap between the mounting plate and the cushion portion of the rubber mount.

3. Replace the rubber mount if there are any signs of cracking or shearing.

Rear Swingarm Mounts

1. Verify condition and torque of the mounting hardware. Visually inspect for wear, damage or improper installation. Replace hardware as necessary.

2. Examine rubber mount to be sure there is no twisting or binding at the parting line.

Engine Stabilizer Links

1. Verify condition and torque of the mounting hardware. Visually inspect for wear, damage or improper installation. Replace hardware as necessary.

2. Using flats machined into the stabilizer eyelet, gently rock the link and check for separation of the molded-in sleeve. Replace as necessary.

   Wear in the link also can be measured with a dial indicator by hand compressing and then releasing the link. Replace any link that exceeds 0.025 inch (0.64 mm) of play or wear.

FRONT BRAKE MASTER CYLINDER 2.10

GENERAL

Master cylinders designed for dual disc (two caliper) operation have an 11/16 inch bore, while those that are designed for single disc (one caliper) operation have a 9/16 inch bore. The bore size is stamped on the master cylinder assembly inboard of the handlebar clamp bracket. See Figure 2-42.

WARNING

Do not use parts from single caliper repair kits (9/16 inch bore) on dual caliper models. Likewise, do not use parts from dual caliper repair kits (11/16 inch bore) on single caliper models. Using incorrect parts can cause brake failure, which could result in death or serious injury. (00278a)

REMOVAL/DISASSEMBLY

CAUTION

DOT 4 brake fluid will damage painted and molded-in color surfaces it comes in contact with. Always use caution and protect surfaces from spills whenever brake work is performed. Failure to comply can result in cosmetic damage. (00239a)

IMPORTANT NOTE

Immediately wipe up any brake fluid spillage with a clean, dry, soft cloth. Follow up by thoroughly wiping affected area with a clean, damp, soft cloth (small spills) or washing with a large quantity of soapy water (large spills).

1. Remove banjo bolt and two steel/rubber washers to disconnect fitting of hydraulic brake line from master cylinder housing. Hold suitable container under banjo bolt bore to allow reservoir to drain. Discard steel/rubber washers.

CAUTION

Do not remove or install the master cylinder assembly without first positioning a 5/32-inch (4 mm) thick insert between the brake lever and lever bracket. Removing or installing the master cylinder assembly without the insert in place may result in damage to the rubber boot and plunger on the front stoplight switch. (00324a)

NOTE

Use the eyelet of a small cable strap if the cardboard insert is not available.

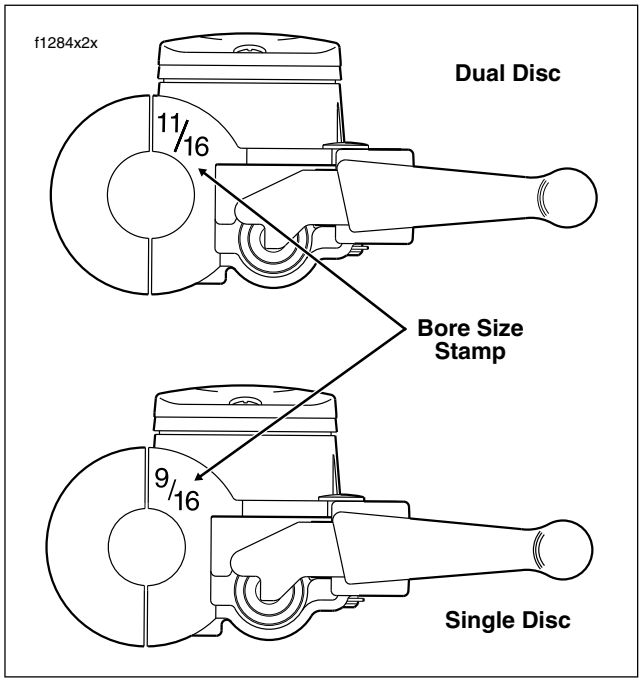

Figure 2-42. Verify Correct Bore Size Before Use

2. Place the cardboard insert between the brake lever and lever bracket. See Figure 2-43.
3. Remove two T27 TORX screws with flat washers to release handlebar clamp from the master cylinder housing. Remove the clamp and brake lever/master cylinder assembly from the handlebar. See Figure 2-44.
4. Remove the cardboard insert (or cable strap eyelet) between the brake lever and lever bracket.

WARNING

Wear safety glasses or goggles when removing or installing retaining rings. Retaining rings can slip from the pliers and could be propelled with enough force to cause serious eye injury. (00312a)

5. Remove retaining ring from pivot pin groove at bottom of master cylinder bracket. Discard retaining ring.
6. Remove pivot pin and brake hand lever from master cylinder assembly.
7. Carefully remove wiper with pick or similar tool.
8. Remove piston cap.
9. Remove piston with O-ring and primary cup.

Figure 2-43. Install Cardboard Insert

10. Remove spring.

CAUTION

To prevent dirt and other contaminants from entering the master cylinder reservoir, thoroughly clean the cover before removal.

11. Remove two Phillips screws to release cover from master cylinder reservoir.

CLEANING AND INSPECTION

⚠WARNING

Do not use parts from single caliper repair kits (9/16 inch bore) on dual caliper models. Likewise, do not use parts from dual caliper repair kits (11/16 inch bore) on single caliper models. Using incorrect parts can cause brake failure, which could result in death or serious injury. (00278a)

1. Always reassemble the master cylinder using **new** parts from the correct repair kit.
2. Clean all parts with denatured alcohol or DOT 4 BRAKE FLUID. Do not contaminate with mineral oil or other solvents. Wipe dry with a clean, lint free cloth. Blow out drilled passages and bore with a clean air supply. Do not use a wire or similar instrument to clean drilled passages in bottom of reservoir.

⚠WARNING

Use denatured alcohol to clean brake system components. Do not use mineral-based solvents (such as gasoline or paint thinner), which will deteriorate rubber parts even after assembly. Deterioration of these components can cause brake failure, which could result in death or serious injury. (00291a)

3. Carefully inspect all parts for wear or damage and replace as necessary.
4. Inspect the piston bore in the master cylinder housing for scoring, pitting or corrosion. Replace the housing if any of these conditions are found.
5. Inspect the outlet port that mates with the brake line fitting. As a critical sealing surface, replace the housing if any scratches, dents or other damage is noted.
6. Inspect the cover gasket for cuts, tears or general deterioration. If gasket and/or sight glass replacement is necessary, proceed as follows:
   a. From inboard side, push sight glass toward top of cover until free.
   b. Pull rubber gasket from cover.
   c. Fit nipple of **new** gasket into hole of cover aligning gasket and cover thru holes.
   d. From bottom of gasket, push flat end of sight glass through nipple until top of glass is flush with top of gasket. Verify that glass is square in bore. If some lubrication is necessary, use a small quantity of clean brake fluid.

ASSEMBLY/INSTALLATION

1. Fit O-ring into groove on outboard side of piston (pin side). See Figure 2-44.
2. Fit primary cup over lip on inboard side of piston, so that closed side (smaller OD) contacts shoulder.
3. Coat piston bore of master cylinder reservoir with special lubricant supplied in the service parts kit. Also apply the lubricant to OD of installed O-ring and primary cup.
4. Insert metal retainer end of spring into piston bore, so that it seats against counterbore (recess) at bottom.
5. Slide piston over spring.
6. Fit wiper over piston cap so that flat side of wiper contacts cap shoulder.
7. Fit piston cap over piston pin.
8. Press down on wiper until it contacts the counterbore. Larger OD of wiper must be completely seated in groove on outlet side of piston bore.

1. Phillips Screw
2. Sight Glass
3. Cover
4. Gasket
5. Master Cylinder Reservoir
6. Spring
7. Primary Cup
8. Piston
9. O-Ring
10. Piston Cap
11. Wiper
12. T27 TORX Screw
13. Flat Washer
14. Handlebar Clamp
15. Pivot Pin
16. Bushing
17. Retaining Ring
18. Brake Hand Lever
19. Lubricant

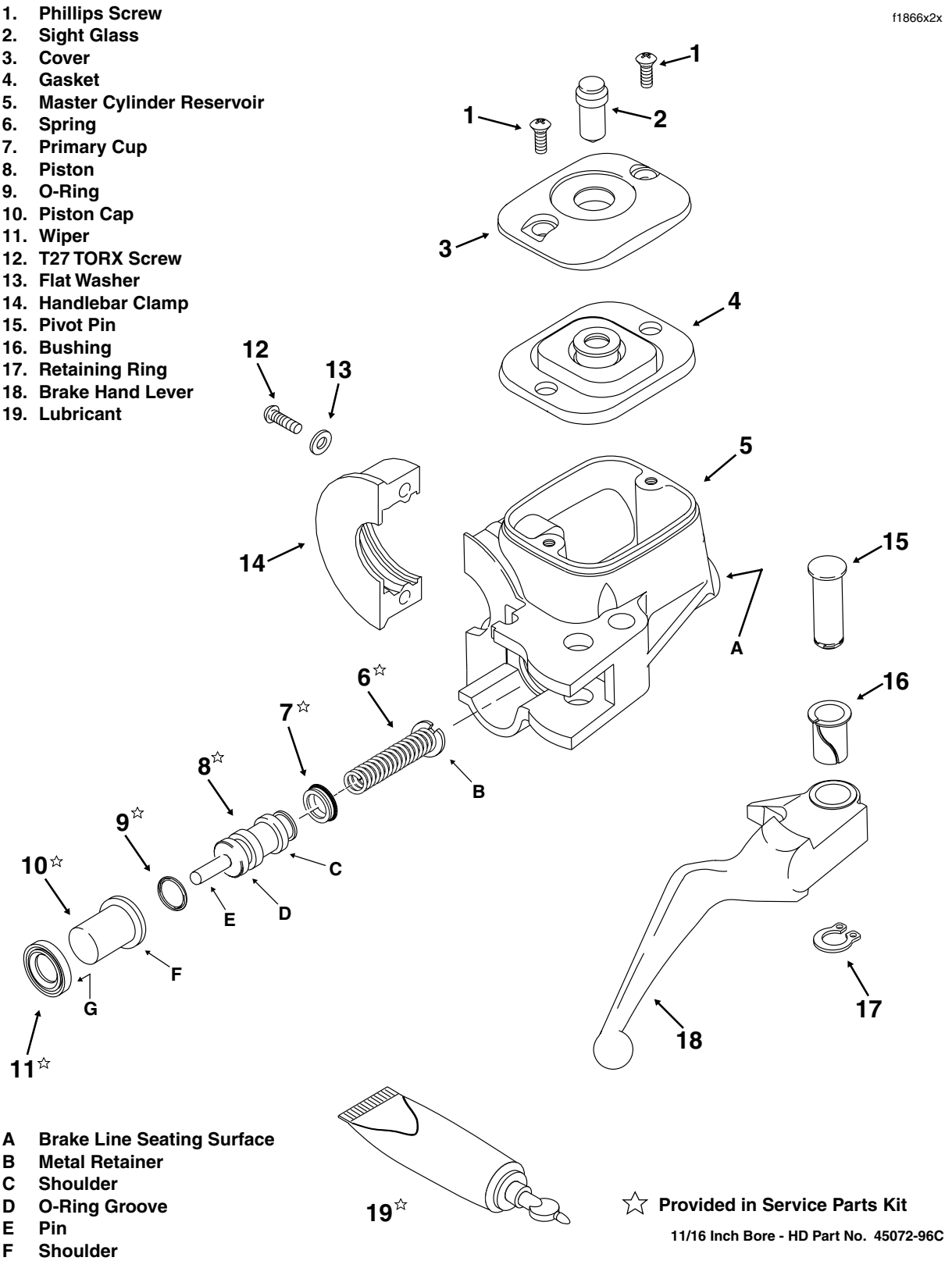

A Brake Line Seating Surface
B Metal Retainer
C Shoulder
D O-Ring Groove
E Pin
F Shoulder
G Flat Side

☆ Provided in Service Parts Kit

11/16 Inch Bore - HD Part No. 45072-96C

Figure 2-44. Front Brake Master Cylinder Assembly

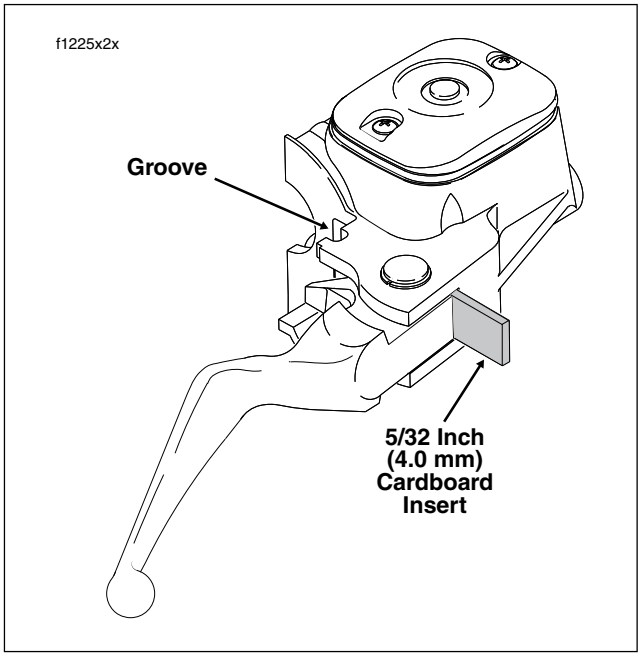

Figure 2-45. Install Cardboard Insert Before Installing Master Cylinder Assembly

9. Install the master cylinder reservoir cover. Install two Phillips screws to fasten cover to the reservoir, but do not tighten at this time.

10. Align hole in brake hand lever with hole in master cylinder bracket. From the top of the assembly, slide pivot pin through bracket and hand lever.

WARNING

Wear safety glasses or goggles when removing or installing retaining rings. Retaining rings can slip from the pliers and could be propelled with enough force to cause serious eye injury. (00312a)

11. Install **new** retaining ring in pivot pin groove. Verify that retaining ring is completely seated in groove.

CAUTION

Do not remove or install the master cylinder assembly without first positioning a 5/32-inch (4 mm) thick insert between the brake lever and lever bracket. Removing or installing the master cylinder assembly without the insert in place may result in damage to the rubber boot and plunger on the front stoplight switch. (00324a)

12. Place the cardboard insert between the brake lever and lever bracket. Use the eyelet of an ordinary cable strap if the cardboard insert is not available. See Figure 2-45.

13. Position the brake lever/master cylinder assembly inboard of the switch housing assembly engaging the tab on the lower switch housing in the groove at the top of the brake lever bracket. See Figure 2-46.

14. Align the holes in the handlebar clamp with those in the master cylinder housing and start the two T27 TORX screws (with flat washers). Position for rider comfort. Beginning with the top screw, tighten the screws to 60-80 **in-lbs** (6.8-9.0 Nm).

CAUTION

To avoid leakage, verify that the steel/rubber washers, banjo bolt, brake line fitting and master cylinder bore are completely clean.

15. Position **new** steel/rubber washers on each side of hydraulic brake line fitting. Insert banjo bolt through washers and fitting. Thread bolt into master cylinder housing and tighten to 17-22 ft-lbs (23-30 Nm).

16. Remove the master cylinder reservoir cover. If the motorcycle is resting on jiffy stand, turn front wheel as necessary until the master cylinder reservoir is level.

WARNING

Use only fresh, uncontaminated DOT 4 brake fluid. Fluid containers that have been opened may have been contaminated by dirt or moisture. Use of contaminated brake fluid may adversely affect braking ability and lead to brake failure which could result in death or serious injury.

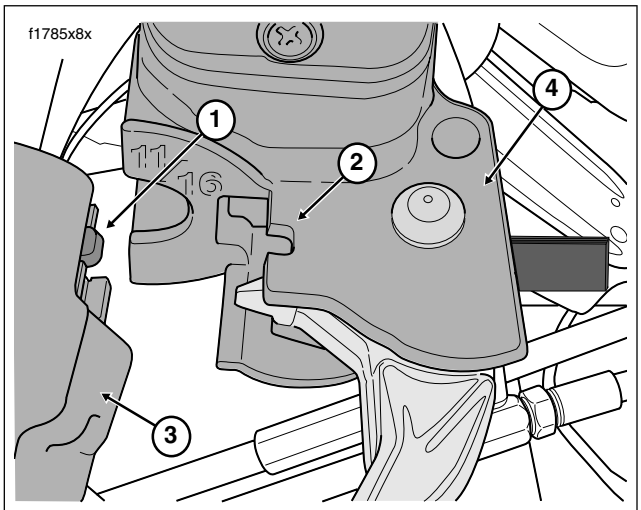

1. Tab
2. Groove
3. Switch Housing Assembly
4. Brake Lever Bracket

Figure 2-46. Fit Brake Lever/Master Cylinder to Right Handlebar Switch Housings

IMPORTANT NOTE

The shelf life of a bottle of unopened DOT 4 brake fluid is one year. The shelf life of an uncontaminated bottle that has been opened and then resealed is one week.

17. Add DOT 4 BRAKE FLUID to the master cylinder reservoir until the fluid level is 1/4 inch (6.4 mm) from the top.

NOTE

Use only Harley-Davidson DOT 4 BRAKE FLUID, Part No. 99953-99A (12 ounce bottle), from a sealed container.

⚠WARNING

A plugged or covered relief port can cause brake drag or lock-up, which could lead to loss of control, resulting in death or serious injury. (00288a)

18. Verify proper operation of the master cylinder relief port. Actuate the brake hand lever. A slight spurt of fluid will break the fluid surface in the reservoir compartment if all internal components are working properly.
19. Remove cap from bleeder valve on front brake caliper. Install end of a length of clear plastic tubing over caliper bleeder valve, while placing free end in a suitable container.
20. Depress and hold the brake hand lever to build up hydraulic pressure.
21. Open bleeder valve about 1/2-turn. Brake fluid will flow from bleeder valve through tubing. Close bleeder valve when brake hand lever has moved 1/2 to 3/4 of its full range of travel. Allow brake hand lever to return slowly to its released position.
22. Add brake fluid to the master cylinder reservoir until the fluid level is about 1/4 inch (6.4 mm) from the top.
23. Repeat steps 20-22 until all air bubbles are purged.
24. Final tighten the bleeder valve to 80-100 **in-lbs** (9.0-11.3 Nm). Install the bleeder valve cap.
25. Install the master cylinder reservoir cover, but first verify that the cover gasket bellows is not extended or brake fluid will be ejected from the reservoir. Install two Phillips screws and alternately tighten to 6-8 **in-lbs** (0.7-0.9 Nm).

NOTE

Note that one side of the master cylinder reservoir cover is thicker than the other. Install the cover with the thicker side closest to the brake line fitting.

26. With the Ignition/Light Key Switch turned to IGNITION, actuate the front brake hand lever to verify operation of the brake lamp.

⚠WARNING

After repairing the brake system, test brakes at low speed. If brakes are not operating properly, testing at high speeds can cause loss of control, which could result in death or serious injury. (00289a)

27. Test ride the motorcycle. If the brake feels spongy, repeat the bleeding procedure.

NOTE

A sight glass enables the rider to visually check the brake fluid level without removing the master cylinder cover. When the reservoir is full, the sight glass is dark. As the fluid level drops, the glass lightens up to indicate this condition to the rider.

REAR BRAKE MASTER CYLINDER 2.11

REMOVAL

PRELIMINARY INSTRUCTIONS

1. Remove right fairing lower, if present. See Section 2.29 LOWER FAIRING/ENGINE GUARD, LOWER FAIRING (FLHTCU), REMOVAL.
2. Remove two allen head socket screws (with lock washers and flat washers) to release right side front footboard brackets from frame weldment. For best results, approach from left side of vehicle using a 3/8 inch ball allen with extension.
3. Remove right side saddlebag. See Section 2.26 SADDLEBAG, REMOVAL.
4. Gently pull side cover from frame downtube (no tools required).

CAUTION

DOT 4 brake fluid will damage painted and molded-in color surfaces it comes in contact with. Always use caution and protect surfaces from spills whenever brake work is performed. Failure to comply can result in cosmetic damage. (00239a)

IMPORTANT NOTE

Immediately wipe up any brake fluid spillage with a clean, dry, soft cloth. Follow up by thoroughly wiping affected area with a clean, damp, soft cloth (small spills) or washing with a large quantity of soapy water (large spills).

5. Remove bleeder valve cap on rear brake caliper. Install end of a length of clear plastic tubing over caliper bleeder valve, while placing free end in a suitable container. Open bleeder valve about 1/2-turn. Pump brake pedal to drain brake fluid. Close bleeder valve.

BRAKE PEDAL/MASTER CYLINDER ASSEMBLY, REMOVAL

1. See PRELIMINARY INSTRUCTIONS on this page.
2. Remove banjo bolt and two steel/rubber washers to disconnect brake line front fitting from master cylinder assembly. Discard washers.
3. Release rear brake line as needed to move front fitting forward far enough to access hex nut. For further instructions See REAR BRAKE LINE, REMOVAL, steps 3-6, in this section.
4. Using 1-1/8 inch wrench, remove hex nut to free brake pedal/master cylinder assembly from mounting bracket.

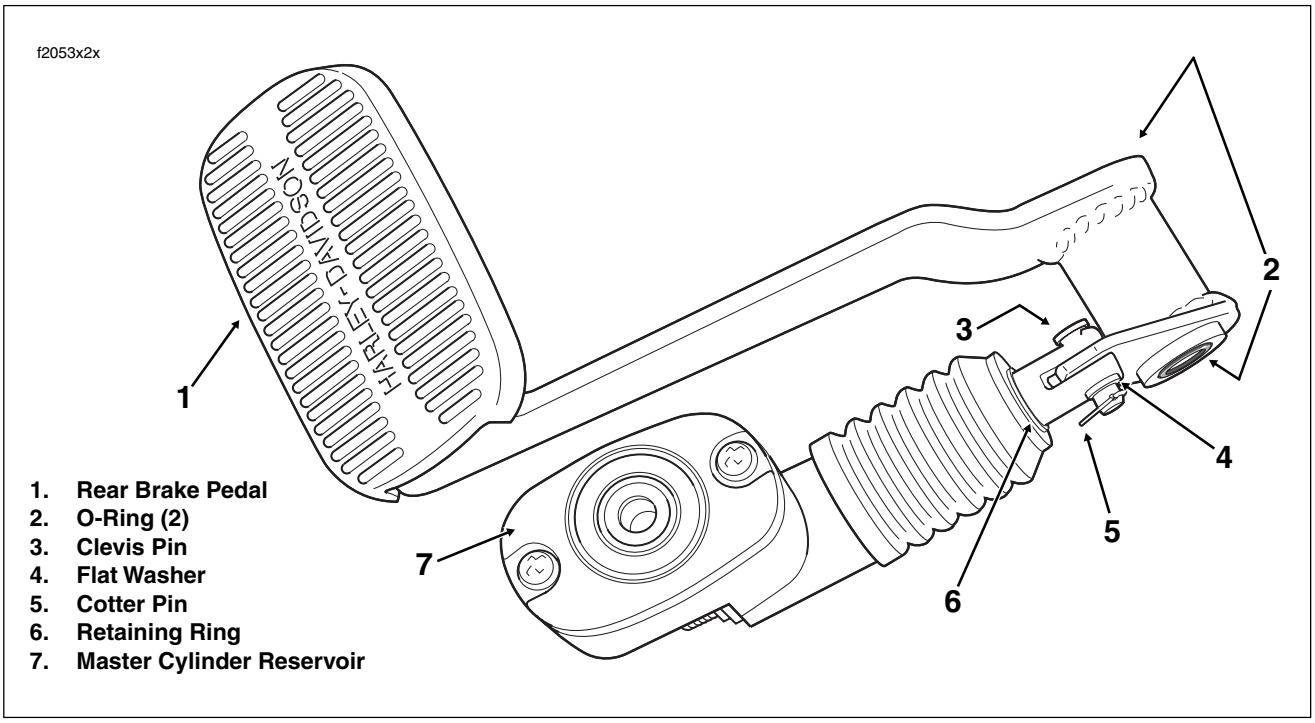

Figure 2-47. Rear Brake Pedal/Master Cylinder Assembly

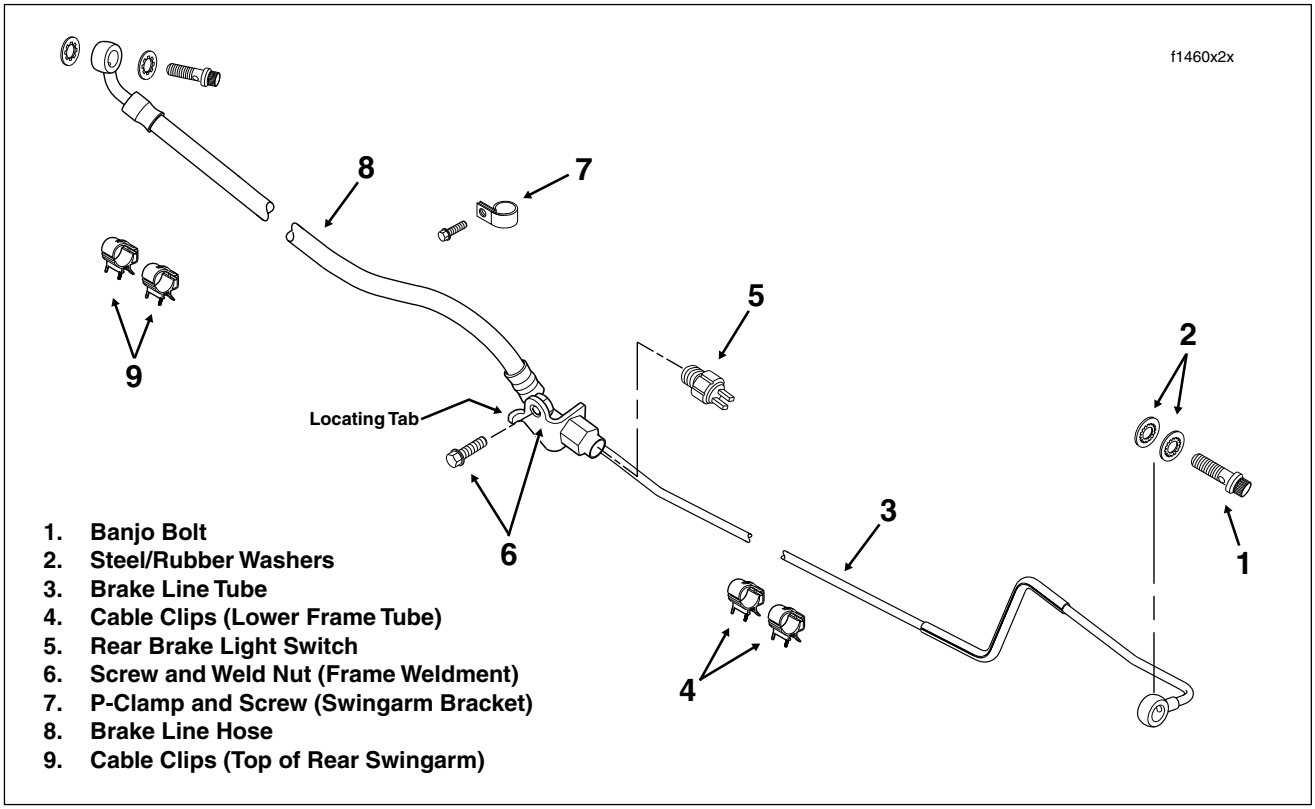

Figure 2-48. Rear Brake Line Assembly

5. Remove locknut with flat washer to free brake pedal/master cylinder assembly from pedal shaft. Remove assembly from vehicle. Remove and discard O-ring on each side of brake pedal shaft bore. See Figure 2-47.
6. Remove cotter pin and flat washer from clevis pin. Supporting rear brake pedal/master cylinder assembly in vise, tap out clevis pin using a brass drift. Remove master cylinder assembly from brake pedal flange.
7. For further instructions, see MASTER CYLINDER, DISASSEMBLY, in this section.

BRAKE PEDAL/MASTER CYLINDER ASSEMBLY, INSTALLATION

1. If master cylinder was disassembled, see MASTER CYLINDER, ASSEMBLY, in this section, for instructions.
2. Install master cylinder assembly on brake pedal flange. Supporting assembly in vise, tap in clevis pin using a brass drift. Install flat washer and cotter pin on clevis pin. See Figure 2-47.
3. Install **new** O-ring on each side of brake pedal shaft bore.
4. Apply a light coat of *Wheel Bearing Grease (Part No. 99855-89)* to the brake pedal shaft and bore. Install brake pedal/master cylinder assembly on the pedal shaft fitting collar on cartridge body into square-shaped hole in mounting bracket. Install flat washer and **new** locknut on pedal shaft and tighten to 15-20 ft-lbs (20-27 Nm).
5. Apply Loctite Medium Strength Threadlocker 243 (blue) to threads of hex nut. Install hex nut on threaded end of cartridge body and tighten to 30-40 ft-lbs (41-54 Nm).
6. Position **new** steel/rubber washers on each side of brake line fitting. Insert banjo bolt through washers and fitting. Thread bolt into master cylinder assembly and tighten to 17-22 ft-lbs (23-30 Nm).
7. Secure rear brake line if released during master cylinder removal. For further instructions, see REAR BRAKE LINE, INSTALLATION, steps 4-7, in this section.
8. See FINAL INSTRUCTIONS on the next page.

REAR BRAKE LINE, REMOVAL

1. See PRELIMINARY INSTRUCTIONS on the previous page.
2. Remove banjo bolt and two steel/rubber washers to disconnect brake line front fitting from master cylinder assembly. Discard washers. See Figure 2-48.
3. Open two cable clips on lower frame tube T-studs. Free rear brake line from cable clips.

NOTE

For best results, insert blade of small screwdriver into gap at side of clip and gently rotate end of screwdriver to pop open.

4. Remove hex screw to free brake hose P-clamp from rear swingarm bracket (passenger footboard bracket).
5. Remove socket terminals from rear brake light switch spade contacts. Cut cable strap to free rear brake light switch wires from lower frame tube, if necessary.
6. Remove hex screw to free brake light switch bracket from frame weldment. Push on bracket to release locating tab from slot in frame weldment.
7. Open two cable clips on rear swingarm T-studs. Free rear brake line hose from cable clips.

NOTE

For best results, insert blade of small screwdriver into gap at side of clip and gently rotate end of screwdriver to pop open.

8. Remove banjo bolt and two steel/rubber washers to disconnect brake line fitting from rear brake caliper. Discard washers.
9. Feed rear brake line hose forward to area in front of rear swingarm bracket. Remove rear brake line assembly from vehicle.

REAR BRAKE LINE, INSTALLATION

1. Place rear brake line into approximate position along top of lower right frame tube. From area in front of rear swingarm bracket, feed brake line hose rearward following top of rear swingarm.
2. Position **new** steel/rubber washers on each side of brake line rear fitting. Insert banjo bolt through washers and fitting. Thread bolt into rear brake caliper and tighten to 17-22 ft-lbs (23-30 Nm).
3. Capture rear brake line hose in two cable clips on rear swingarm T-studs. Snap cable clips closed. See Figure 2-49.
4. Index locating tab on brake light switch bracket in slot of frame weldment. Install hex screw to secure brake light switch bracket to frame weldment.
5. Install socket terminals onto rear brake light switch spade contacts. If removed, install **new** cable strap to secure rear brake light switch wires (and main harness conduit) to lower frame tube.
6. Install hex screw to secure brake hose P-clamp to rear swingarm bracket (passenger footboard bracket).
7. Capture rear brake line in two cable clips on lower frame tube T-studs. Snap cable clips closed.

NOTE

Cable clips also capture main harness conduit (to oil pressure sender, voltage regulator and CKP sensor connectors).

8. Position **new** steel/rubber washers on each side of brake line front fitting. Insert banjo bolt through washers and fitting. Thread bolt into master cylinder assembly and tighten to 17-22 ft-lbs (23-30 Nm).
9. See FINAL INSTRUCTIONS on this page.

INSTALLATION

FINAL INSTRUCTIONS

1. Insert two allen head socket screws (with lockwashers and flat washers) through frame weldment into right side front footboard brackets. For best results, approach from left side of vehicle using a 3/8 inch ball allen with extension. Alternately tighten socket screws to 30-35 ft-lbs (41-48 Nm).
2. Install length of clear plastic tubing over caliper bleeder valve, if removed. Place free end of tube in a suitable container.
3. Remove the master cylinder cover, if installed. Stand the motorcycle upright so that the master cylinder is in a level position.

⚠WARNING

Use only fresh, uncontaminated DOT 4 brake fluid. Fluid containers that have been opened may have been contaminated by dirt or moisture. Use of contaminated brake fluid may adversely affect braking ability and lead to brake failure which could result in death or serious injury.

IMPORTANT NOTE

The shelf life of a bottle of unopened DOT 4 brake fluid is one year. The shelf life of an uncontaminated bottle that has been opened and then resealed is one week.

CAUTION

DOT 4 brake fluid will damage painted and molded-in color surfaces it comes in contact with. Always use caution and protect surfaces from spills whenever brake work is performed. Failure to comply can result in cosmetic damage. (00239a)

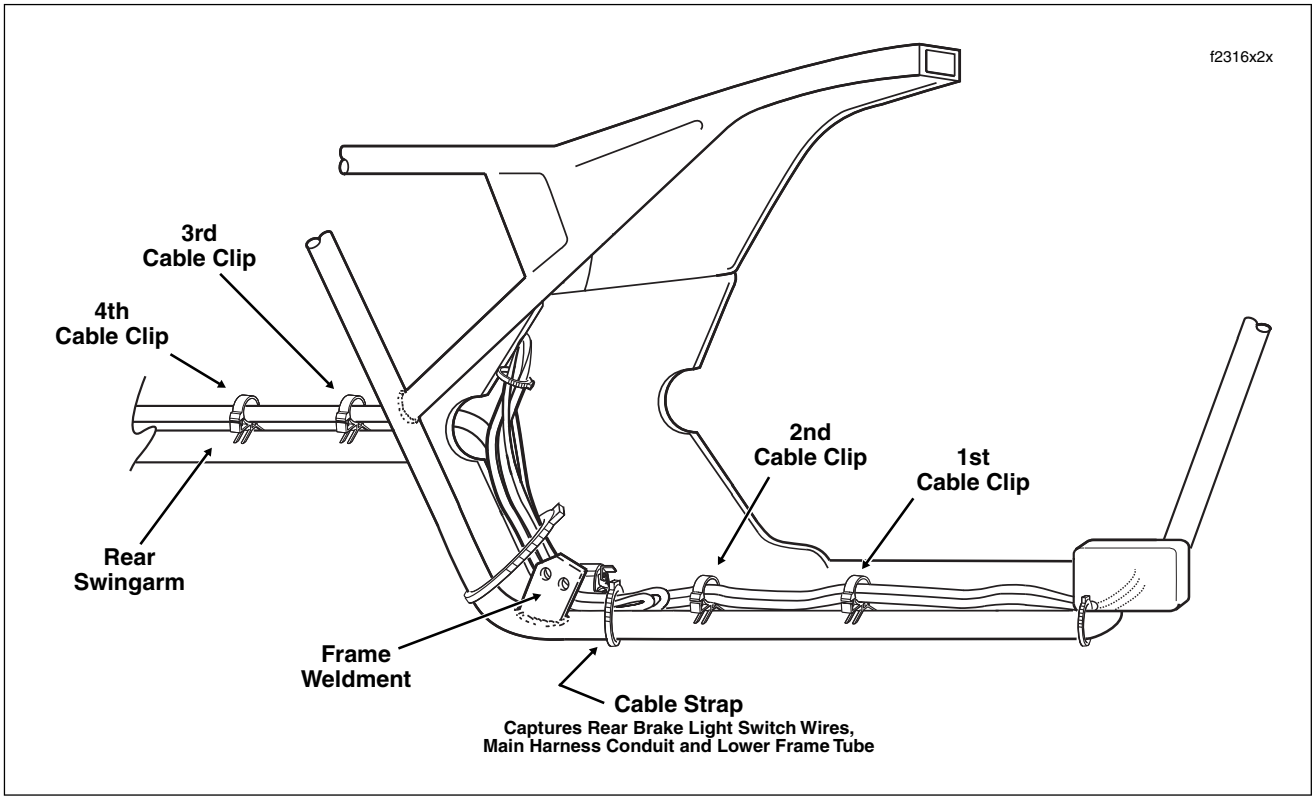

Figure 2-49. Rear Brake Line Routing (Right Side View)

IMPORTANT NOTE

Immediately wipe up any brake fluid spillage with a clean, dry, soft cloth. Follow up by thoroughly wiping affected area with a clean, damp, soft cloth (small spills) or washing with a large quantity of soapy water (large spills).

4. Add DOT 4 BRAKE FLUID to the master cylinder reservoir until the fluid level is 1/4 inch (6.4 mm) from the top.

NOTE

Use only Harley-Davidson DOT 4 BRAKE FLUID, Part No. 99953-99A (12 ounce bottle), from a sealed container.

5. Depress and hold the rear brake pedal to build up hydraulic pressure.
6. Open bleeder valve about 1/2-turn. Brake fluid will flow from bleeder valve through tubing. Close bleeder valve when rear brake pedal has moved 1/2 to 3/4 of its full range of travel. Allow rear brake pedal to return slowly to its released position.
7. Repeat steps 4-6 until all air bubbles are purged.
8. Final tighten the bleeder valve to 80-100 **in-lbs** (9.0-11.3 Nm). Install the bleeder cap.
9. Add brake fluid to the master cylinder reservoir until the fluid level is about 1/4 inch (6.4 mm) from the top.
10. Install the master cylinder reservoir cover, but first verify that the cover gasket bellows is not extended or brake fluid will be ejected from the reservoir. Install two Phillips screws and alternately tighten to 6-8 **in-lbs** (0.7-0.9 Nm).
11. With the Ignition/Light Key Switch turned to IGNITION, actuate the rear brake pedal to verify operation of the brake lamp.
12. Install right fairing lower, if present. See Section 2.29 LOWER FAIRING/ENGINE GUARD, LOWER FAIRING (FLHTCU), INSTALLATION.
13. Align barbed studs in side cover with grommets in frame downtubes and push firmly into place (no tools required).
14. Install right side saddlebag. See Section 2.26 SADDLEBAG, INSTALLATION.

⚠WARNING

After repairing the brake system, test brakes at low speed. If brakes are not operating properly, testing at high speeds can cause loss of control, which could result in death or serious injury. (00289a)

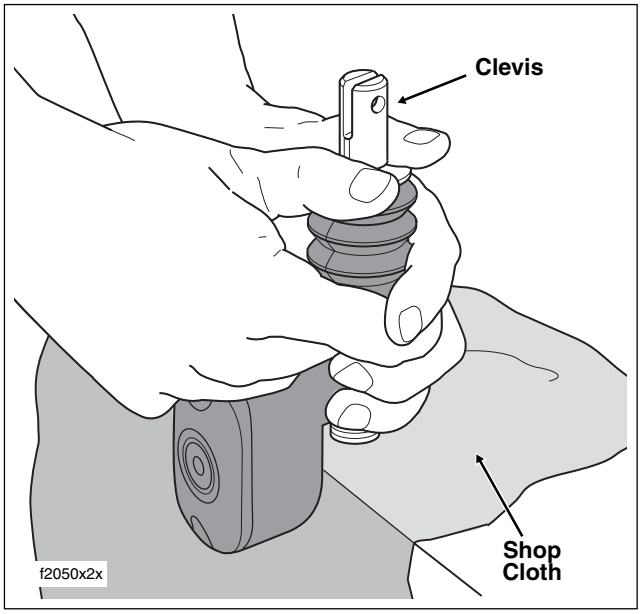

Figure 2-50. Compress Spring and Remove Retaining Ring

15. Test ride the motorcycle. If the brake feels spongy, repeat the bleeding procedure.

NOTE

A sight glass enables the rider to visually check the brake fluid level without removing the master cylinder cover. The sight glass is dark when the reservoir is full, but as the fluid level drops, the glass lightens to alert the rider of this condition.

MASTER CYLINDER

DISASSEMBLY

NOTE

If installing the Master Cylinder Reservoir Kit (Part No. 42454-99A), see steps 1-7 below. If installing the Push Rod Kit (Part No. 41957-97A) or the assembled cartridge body from the Master Cylinder Repair Kit (Part No. 42382-87C), see steps 1-9.

1. See BRAKE PEDAL/MASTER CYLINDER ASSEMBLY, REMOVAL, in this section.
2. Thoroughly clean exterior of master cylinder assembly with denatured alcohol.
3. Stand master cylinder assembly upright on banjo sealing surface. For best results, suspend reservoir over edge of table. Be sure to lay down a clean shop cloth to protect the sealing surface from damage.

⚠WARNING

Wear safety glasses or goggles when removing or installing retaining rings. Retaining rings can slip from the pliers and could be propelled with enough force to cause serious eye injury. (00312a)

4. Push down on large flat washer to compress spring. While holding the spring in a compressed state, remove retaining ring from groove in clevis and then carefully release spring. See Figure 2-50. Discard retaining ring.

NOTE

The push rod, clevis and spacer washer are a one-piece assembly.

5. Remove the large flat washer, dust boot and spring from the cartridge body. Remove spring and spring retainer from dust boot.
6. Push on threaded end of cartridge body to remove from reservoir adapter. Use hand pressure only. Exercise caution to keep cartridge body free of dirt and grease. See Figure 2-51.
7. Carefully remove two O-rings from cartridge body. Exercise caution to avoid scratching O-ring grooves.
8. Remove small retaining ring from groove in cartridge body bore. Piston assembly is spring loaded so be sure to hold parts together as retaining ring is removed.

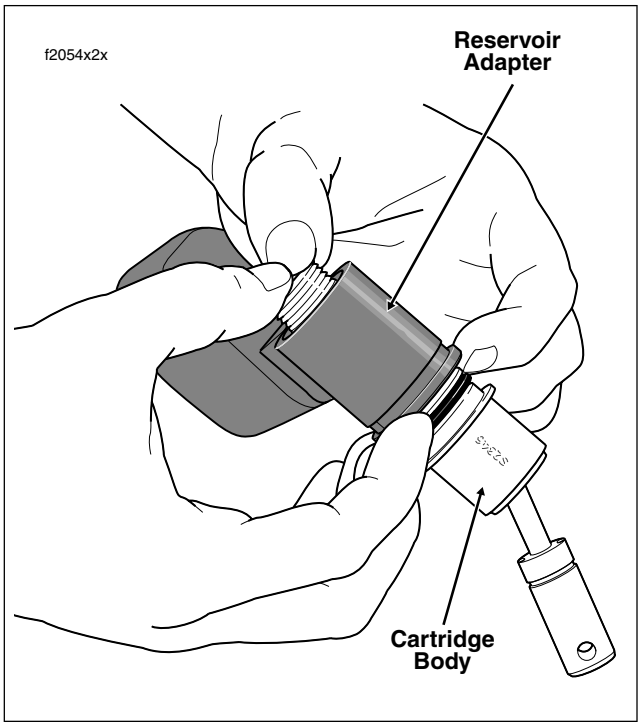

Figure 2-51. Remove Cartridge From Reservoir Adapter

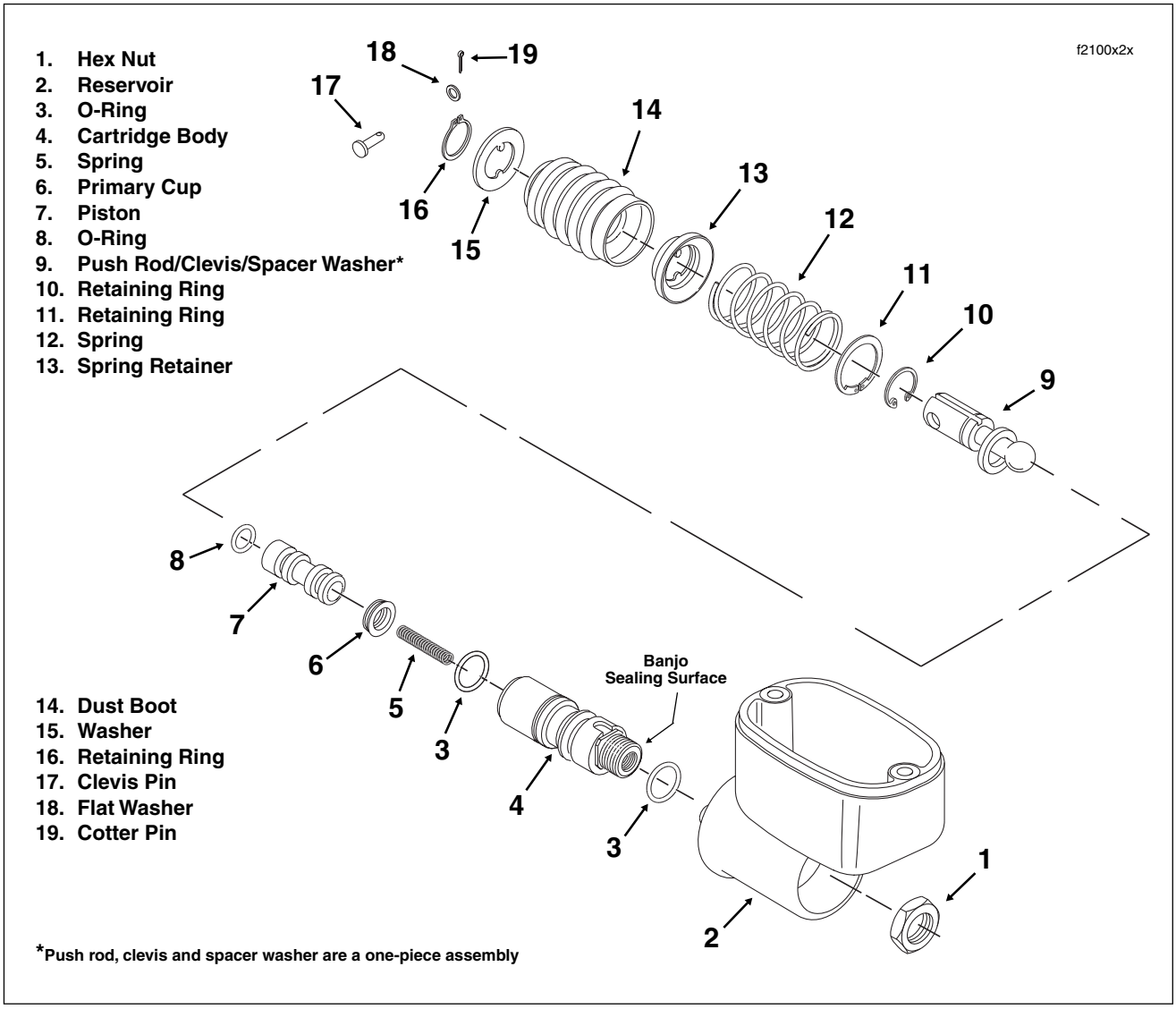

Figure 2-52. Rear Brake Master Cylinder Assembly (Exploded View)

9. Remove push rod with captured spacer washer from cartridge body. Remove small retaining ring from push rod, if attached. Discard retaining ring.

NOTE

Do not disassemble the cartridge body. The cartridge body components are not sold separately. If piston seal leakage is evident, replace the entire cartridge body assembly.

CLEANING AND INSPECTION

⚠WARNING

Use denatured alcohol to clean brake system components. Do not use mineral-based solvents (such as gasoline or paint thinner), which will deteriorate rubber parts even after assembly. Deterioration of these components can cause brake failure, which could result in death or serious injury. (00291a)

1. Clean all metal parts, except the cartridge body assembly, and blow dry with compressed air. Clean all rubber parts using denatured alcohol.

2. Inspect the reservoir adapter bore for scratches. Replace the reservoir if scratches are present.
3. Check the dust boot for cuts or tears. Replace as necessary.
4. Inspect the threads on the cartridge body. Replace if threads are damaged.
5. Inspect the spring for distortion, cracks or broken coils. Replace as necessary.
6. Inspect O-ring grooves on the cartridge body for dirt. Carefully clean grooves using a soft cotton cloth moistened with alcohol and allow to dry. Inspect O-ring grooves for scratches. Replace cartridge body if grooves are scratched.
7. Inspect the reservoir cover gasket for cuts, tears or general deterioration. If gasket and/or sight glass replacement is necessary, proceed as follows:
   a. From inboard side, push sight glass toward top of cover until free.
   b. Pull rubber gasket from cover.
   c. Fit nipple of **new** gasket into hole of cover aligning gasket and cover thru holes.
   d. From bottom of gasket, push flat end of sight glass through nipple until top of glass is flush with top of gasket. Verify that glass is square in bore. If some lubrication is necessary, use a small quantity of clean brake fluid.

ASSEMBLY

NOTE

If installing assembled cartridge body from Master Cylinder Repair Kit (Part No. 42382-87C), begin at step 2 below. If installing the Push Rod Kit (Part No. 41957-97A), begin at step 3. If installing the Master Cylinder Reservoir Kit (Part No. 42454-99A), start at step 7.

1. To install piston in cartridge body, proceed as follows:
   a. Install small spring into cartridge body making sure that spring is seated in counterbore.
   b. Lightly lubricate primary cup and O-ring on piston with DOT 4 BRAKE FLUID.
   c. Install piston over spring.
2. Install **new** large retaining ring in groove on push rod side of cartridge body.
3. Position **new** retaining ring on push rod between spacer washer and clevis, or on clevis inboard of the retaining ring groove.

NOTE

The push rod, clevis and spacer washer are a one-piece assembly.

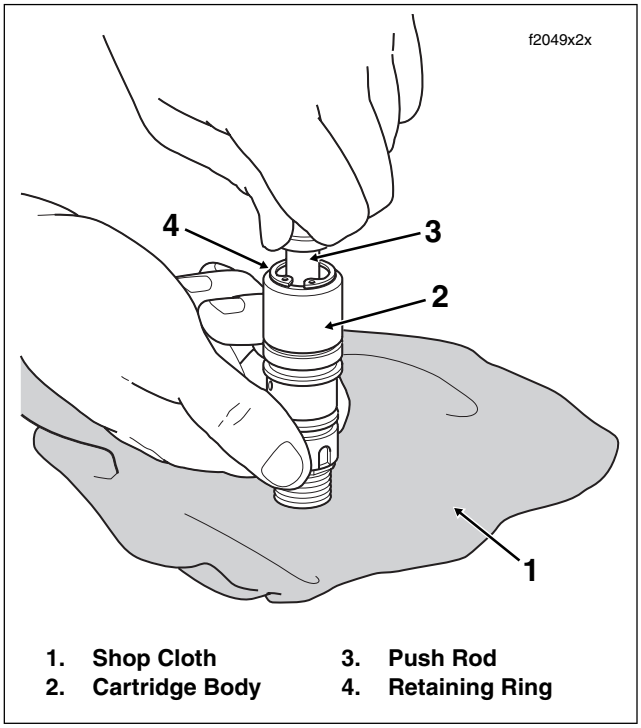

Figure 2-53. Compress Spring and Install Retaining Ring

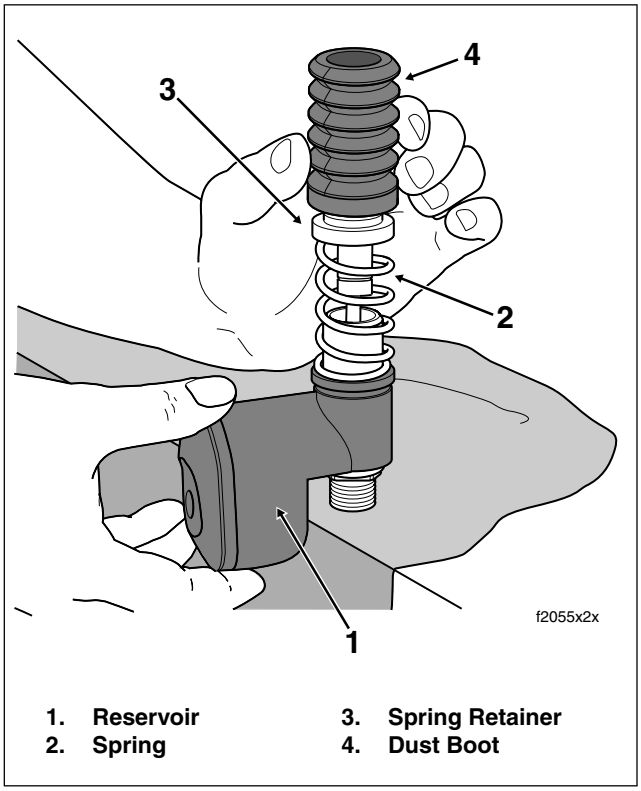

Figure 2-54. Install Spring, Spring Retainer and Dust Boot

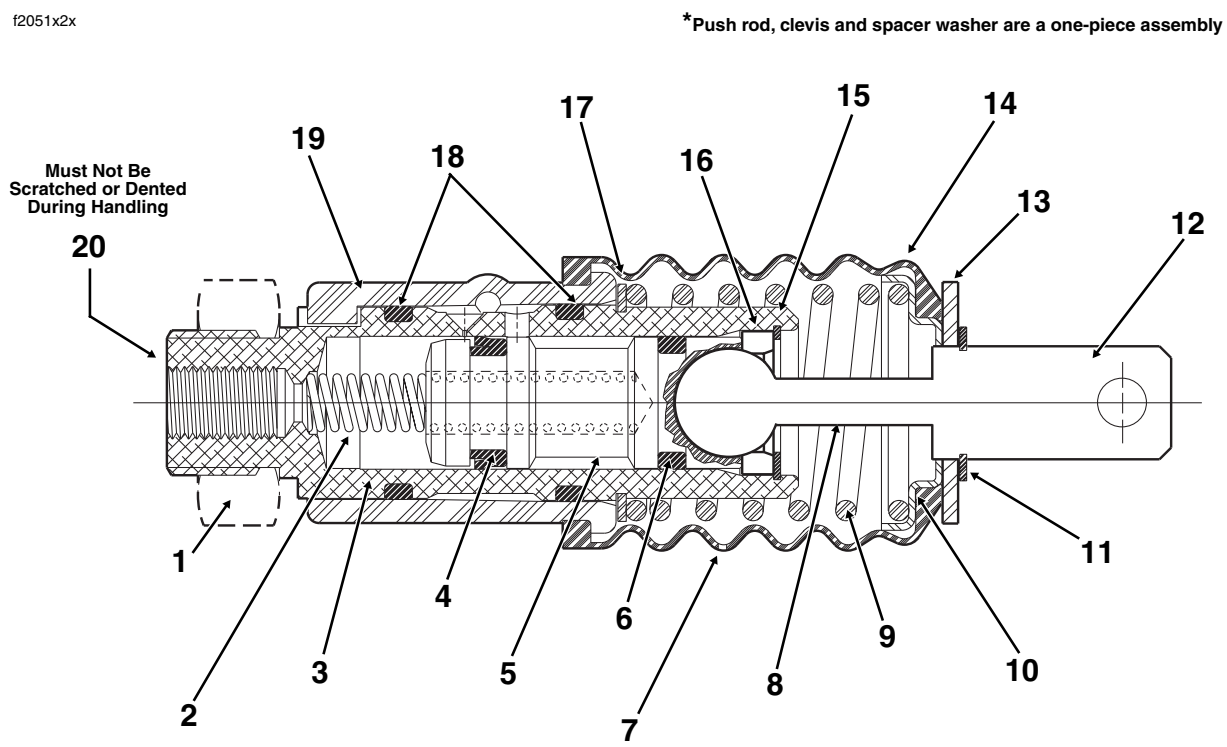

1. Mounting 1-1/8 Inch Hex Nut
2. Spring
3. Cartridge Body
4. Primary Cup
5. Piston
6. O-Ring
7. Drain/Air Hole
8. Push Rod*
9. Spring
10. Spring Retainer
11. Retaining Ring
12. Clevis*
13. Flat Washer
14. Dust Boot
15. Retaining Ring
16. Spacer Washer*
17. Retaining Ring
18. O-Ring
19. Reservoir Adapter
20. Brake Line Seating Surface

Figure 2-55. Rear Brake Master Cylinder Assembly (Cross Sectional View)

4. Stand cartridge body upright on banjo sealing surface. Lay down a clean shop cloth to protect the sealing surface from damage. See Figure 2-53.

⚠WARNING

Wear safety glasses or goggles when removing or installing retaining rings. Retaining rings can slip from the pliers and could be propelled with enough force to cause serious eye injury. (00312a)

5. Insert ball end of push rod into piston cup. Pushing down on push rod to compress spring, fit captured spacer washer into cartridge body. Further compressing spring as necessary, install retaining ring positioned in step 3 in groove of cartridge body bore.
6. Verify that retaining ring is completely seated in groove and that push rod rotates freely.
7. Lubricate **new** O-rings with DOT 4 BRAKE FLUID and carefully install in grooves on outside of cartridge body.
8. Wipe bore of reservoir adapter with DOT 4 BRAKE FLUID.
9. Insert cartridge body into reservoir adapter indexing tab on adapter in slot on threaded end of cartridge. Use hand pressure only. Cartridge body is fully installed when reservoir adapter contacts large retaining ring.
10. Stand master cylinder assembly upright on banjo sealing surface. For best results, suspend reservoir over edge of table. Be sure to lay down a clean shop cloth to protect the sealing surface from damage.

11. Install spring over push rod and cartridge body until it contacts side of large retaining ring. See Figure 2-54.
12. Place concave side of spring retainer over end of spring fitting inside tabs in slot of clevis.
13. Slide dust boot over spring and spring retainer.
14. Place large flat washer on top of dust boot fitting inside tabs in slot of clevis.
15. Push down on large flat washer to compress spring. While holding spring in a compressed state, install **new** retaining ring in groove of clevis.
16. Pull down dust boot as necessary to seat over lip on reservoir adapter.
17. Rotate boot so that drain/air hole is at the bottom.
18. See BRAKE PEDAL/MASTER CYLINDER ASSEMBLY, INSTALLATION, in this section.

FRONT BRAKE CALIPER 2.12

INSPECTION

Check brake pads and discs:

- At every scheduled service interval.
- Whenever the components are removed during normal service procedures.

BRAKE DISC THICKNESS/WARPAGE

The minimum brake disc thickness is stamped on the side of the disc. Replace disc if excessively worn or badly scored. Maximum brake disc lateral runout or warpage is 0.008 inch (0.20 mm) when measured near the outside diameter. Replace disc if warped beyond specification. For replacement instructions, see Section 2.3 FRONT WHEEL, DISASSEMBLY.

BRAKE PADS

NOTE

Brake pad inspection can be performed without removing the caliper.

1. Look up at the back of the right side caliper. See Figure 2-56.
2. Place a thin plastic 6 inch rule against the brake disc and measure the friction material of the brake outer pad. Using a small hand mirror, visually check the friction material of the inner pad.
3. Repeat above checks at the front of the right side caliper. Replace both pads If the friction material above the backing plate on either pad is 0.04 inch (1.02 mm) thick or less.
4. Repeat steps 1-3 on the left side of the vehicle.

WARNING

Always replace brake pads in complete sets for correct and safe brake operation. Improper brake operation could result in death or serious injury. (00111a)

5. See FRONT BRAKE PAD REPLACEMENT on this page.

BRAKE LINE/HOSE INSPECTION

When checking brake pads and discs, take the time to inspect the brake lines and hoses for damage or wear. Replace as necessary.

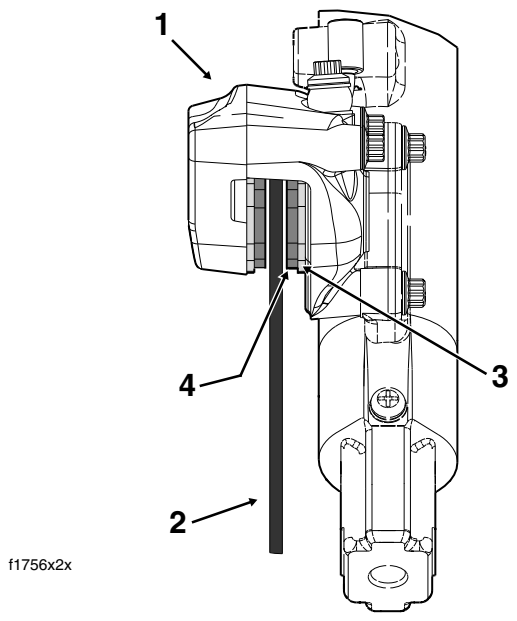

1. **Right Front Brake Caliper (Bottom View)**
2. **Brake Disc**
3. **Backing Plate**
4. **Outer Pad Friction Material**

Figure 2-56. Measure Brake Pad Wear

FRONT BRAKE PAD REPLACEMENT

PAD REMOVAL

1. Use shop rag or tape to protect fender area adjacent to caliper, as incidental contact can occur during caliper removal.
2. Loosen two pad pins, but do not remove. See Figure 2-57.
3. Remove upper and lower caliper mounting bolts from front fork mounting lugs. Lift caliper upward to remove from brake disc.

CAUTION

DOT 4 brake fluid will damage painted and molded-in color surfaces it comes in contact with. Always use caution and protect surfaces from spills whenever brake work is performed. Failure to comply can result in cosmetic damage. (00239a)

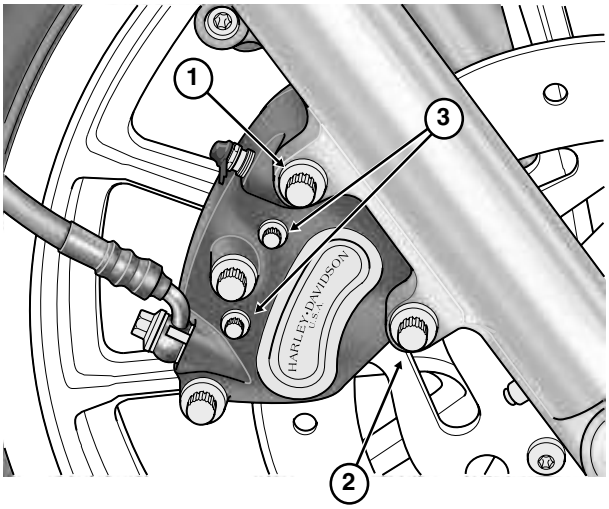

1. **Upper Caliper Mounting Bolt (Long)**
2. **Lower Caliper Mounting Bolt (Short)**
3. **Pad Pins**

f1767x2x

Figure 2-57. Loosen Pad Pins and Remove Caliper Mounting Bolts (Right Side View)

IMPORTANT NOTE

Immediately wipe up any brake fluid spillage with a clean, dry, soft cloth. Follow up by thoroughly wiping affected area with a clean, damp, soft cloth (small spills) or washing with a large quantity of soapy water (large spills).

4. If the motorcycle is resting on jiffy stand, turn front wheel as necessary until the master cylinder reservoir is level.

CAUTION

To prevent dirt and other contaminants from entering the master cylinder reservoir, thoroughly clean the cover before removal.

5. Remove two Phillips screws to release cover from front master cylinder reservoir.

NOTE

As the pistons are pushed back into the caliper, fluid level may rise more than 1/4 inch (6.4 mm) and overflow the reservoir. Watch the fluid level as the pistons are retracted and remove fluid from the reservoir if necessary.

6. Pry back inner and outer brake pads pushing the four pistons back into their bores.
7. With the pistons retracted, remove two pad pins and both inner and outer brake pads. Inspect pad pins. See CLEANING AND INSPECTION, step 4.

NOTE

Replacing one pad at a time keeps the anti-rattle spring in place. Remove both pads to remove or replace the spring.

PAD INSTALLATION

NOTE

Both front calipers (as well as the rear brake caliper) use the same brake pad set.

1. Install **new** brake pads into caliper with the friction material facing the brake disc opening. Be sure that the pad is oriented so that the curved side faces the rear of the vehicle when the caliper is installed. See Figure 2-58.

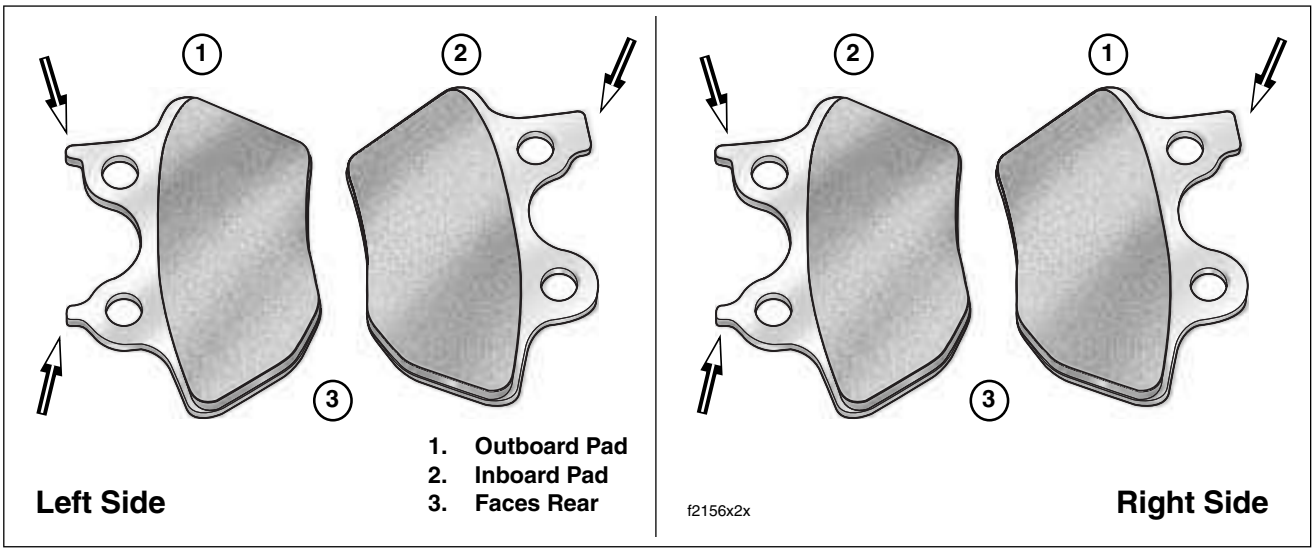

Figure 2-58. Front Brake Pad Locations

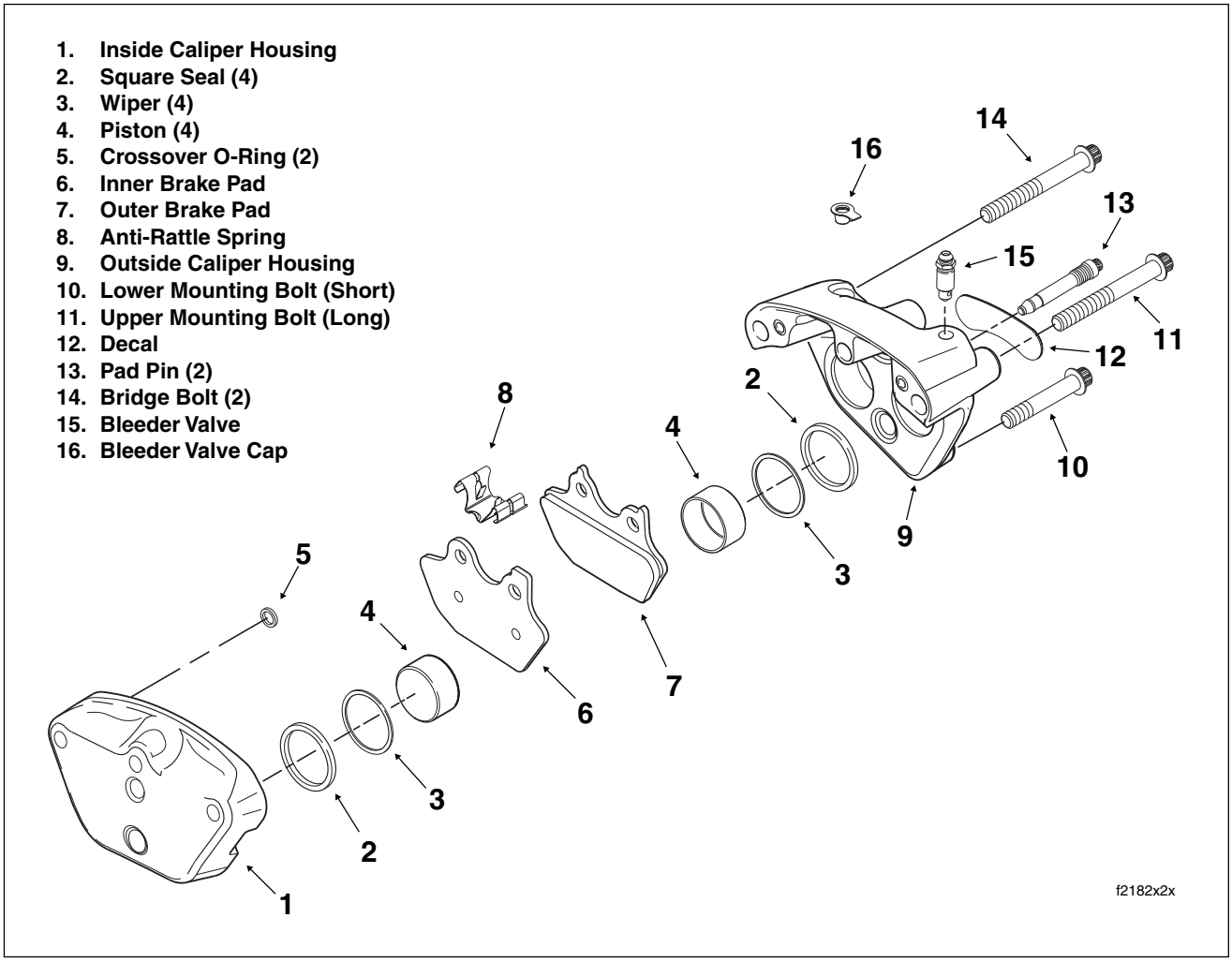

Figure 2-59. Front Brake Caliper Assembly (Left Side)

Furthermore, note that the backing plate of each brake pad has either one or two tabs. On the right side of the vehicle, the pad with two tabs is installed on the inboard side of the caliper, the pad with the single tab is installed on the outboard side.

On the left side of the vehicle, the pad location is reversed. Therefore, the pad with the single tab is installed on the inboard side of the caliper, while the pad with two tabs is installed on the outboard side.

2. Install pad pins, but do not fully tighten at this time.
3. Install calipers as follows:
   a. Use shop rag or tape to protect fender area adjacent to caliper, as incidental contact can occur during caliper installation.
   b. Place caliper over brake disc with bleeder valve topside.
   c. Loosely install long caliper mounting bolt into upper lug of front fork leg.
   d. Install short caliper mounting bolt into lower lug of front fork leg. Tighten lower mounting bolt to 28-38 ft-lbs (37.9-51.5 Nm).
   e. Tighten upper caliper mounting bolt to 28-38 ft-lbs (37.9-51.5 Nm).
   f. Tighten pad pins to 180-200 **in-lbs** (20.3-22.6 Nm).

⚠WARNING

After servicing brakes and before moving motorcycle, pump brakes to build brake system pressure. Insufficient pressure can adversely affect brake performance, which could result in death or serious injury. (00279a)

4. Pump brake hand lever until pistons contact brake pads and pads contact brake discs. Verify piston location against pads. If the front wheel is off the ground, rotate wheel to check for excessive brake pad drag.
5. Verify that brake fluid level is 1/4 inch (6.4 mm) below top of reservoir with master cylinder in a level position. Add DOT 4 BRAKE FLUID, if necessary.
6. Install the master cylinder reservoir cover, but first verify that the cover gasket bellows is not extended or brake fluid will be ejected from the reservoir. Install two Phillips screws and alternately tighten to 6-8 **in-lbs** (0.7-0.9 Nm).

NOTE

Note that one side of the master cylinder reservoir cover is thicker than the other. Install the cover with the thicker side closest to the brake line fitting.

7. Test operation of brake lamp with the front brake applied and the Ignition/Light Key Switch turned to IGNITION.

WARNING

After repairing the brake system, test brakes at low speed. If brakes are not operating properly, testing at high speeds can cause loss of control, which could result in death or serious injury. (00289a)

8. Test ride the motorcycle. If the brakes feel spongy, bleed the system. See Section 2.14 BLEEDING HYDRAULIC BRAKES.

NOTE

To allow new brake pads to "wear in" properly with the brake disc, avoid making hard stops for the first 100 miles (160 km).

CALIPER REMOVAL

NOTE

If only replacing brake pads, see FRONT BRAKE PAD REPLACEMENT in this section.

CAUTION

Damaged banjo bolt surfaces will leak when reassembled. Prevent damage to seating surfaces by carefully removing brake line components.

1. Remove banjo bolt and two steel/rubber washers to detach front brake line from caliper. Discard washers.
2. Use shop rag or tape to protect fender area adjacent to caliper, as incidental contact can occur during caliper removal.
3. Remove upper and lower caliper mounting bolts from front fork mounting lugs. Lift caliper upward to remove from brake disc.

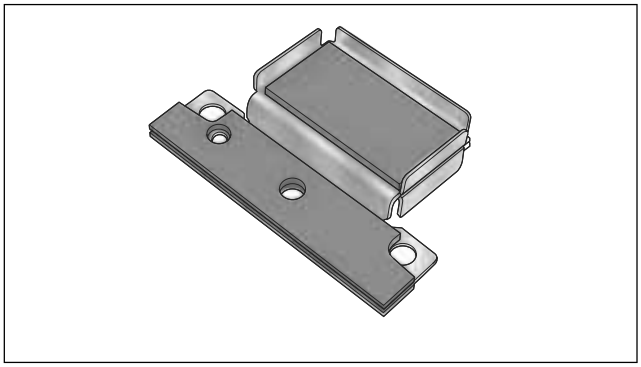

Figure 2-60. Brake Caliper Piston Remover (Part No. HD-43293A)

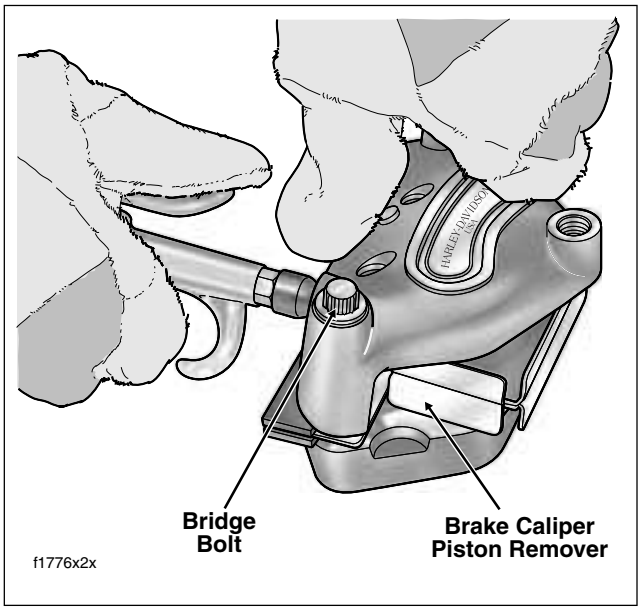

Figure 2-61. Direct Compressed Air Into Banjo Bolt Hole

CALIPER DISASSEMBLY

1. See Figure 2-57. Remove two pad pins. Remove brake pads from caliper housings.
2. Remove two bridge bolts and separate inside and outside caliper housings.
3. Remove anti-rattle spring from channel around boss in outside caliper housing.
4. Remove bleeder valve, if damaged.

WARNING

Compressed air can pierce the skin and flying debris from compressed air could cause serious eye injury. Wear safety glasses when working with compressed air. Never use your hand to check for air leaks or to determine air flow rates. (00061a)

5. Remove four pistons as follows:
   a. Obtain BRAKE CALIPER PISTON REMOVER (Part No. HD-43293A). See Figure 2-60.
   b. Seat tool in outside caliper housing aligning outside holes in tool with bridge bolt holes in housing. Place inside caliper housing over tool aligning bridge bolt holes with outside holes in tool.
   c. Install bridge bolts and tighten securely.
   d. If the bleeder valve was removed, reinstall finger tight or place a gloved finger over the valve hole.

CAUTION

To prevent air from escaping through the banjo bolt hole, and to avoid scratching or nicking the banjo seating surface, use only a tapered, rubber tipped nozzle on air hose. Loss of air pressure will keep the pistons from moving, while any damage to the banjo seating surface requires caliper replacement.

   e. Using a tapered, rubber-tipped nozzle on the air hose, apply low pressure compressed air into the banjo bolt hole to force pistons into contact with cushion of tool. See Figure 2-61.
   f. Remove bridge bolts and separate caliper housings.
   g. Remove pistons from caliper piston bores. For best results, wiggle pistons slightly while pulling.
6. Remove two crossover O-rings from inside caliper housing. Discard O-rings.

CAUTION

Do not use metal objects to remove parts from caliper piston bores or damage will occur. Damaged pistons or bores will leak when reassembled. Use a wooden toothpick to assist in the removal of parts, if necessary.

7. Using a wooden toothpick, remove wiper and square seal from each piston bore. Discard wipers and seals. See Figure 2-62.

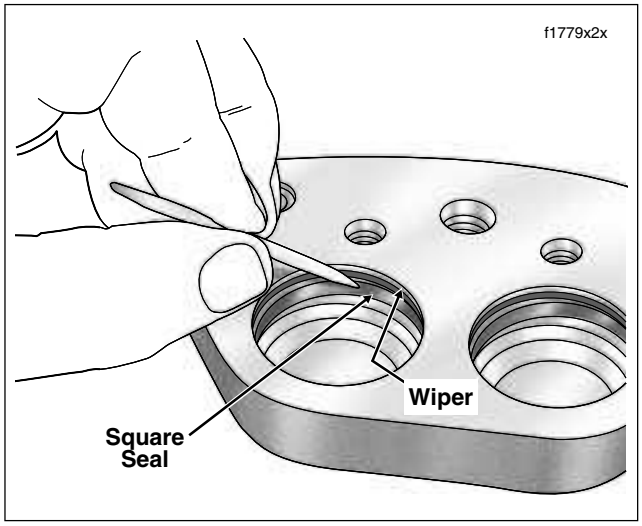

Figure 2-62. Remove Wipers and Square Seals From Piston Bores

CLEANING AND INSPECTION

⚠WARNING

Use denatured alcohol to clean brake system components. Do not use mineral-based solvents (such as gasoline or paint thinner), which will deteriorate rubber parts even after assembly. Deterioration of these components can cause brake failure, which could result in death or serious injury. (00291a)

1. Clean all parts with denatured alcohol or DOT 4 BRAKE FLUID. Wipe parts dry with a clean, lint free cloth. Blow out drilled passages and bores with a clean air supply. Do not use a wire or similar instrument to clean drilled passages.
2. Carefully inspect all components. Replace any parts that appear damaged or worn.
   a. Check pistons for pitting, scratching or corrosion on face and also on ground surfaces.
   b. Inspect caliper piston bore. Replace caliper if bore shows signs of pitting or corrosion. Do not hone bore for reuse.
   c. Always replace wipers, square seals and crossover O-rings after caliper disassembly.

⚠WARNING

Always replace brake pads in complete sets for correct and safe brake operation. Improper brake operation could result in death or serious injury. (00111a)

3. Inspect brake pads and discs. See INSPECTION at the beginning of this section.
4. Inspect pad pins for wear and grooving. Replace both pins if wear of either pin exceeds 0.015 inch (0.38 mm).

CALIPER ASSEMBLY

1. Install **new** square seals into caliper piston bores.
2. Install **new** wipers into caliper piston bores.

CAUTION

Do not use DOT 4 brake fluid for lubrication or increased lever travel will result.

3. Lubricate the following areas using a thin film of G.E. VERSILUBE® #G322L SILICONE GREASE (marked “Piston Lube” in the service parts kit):

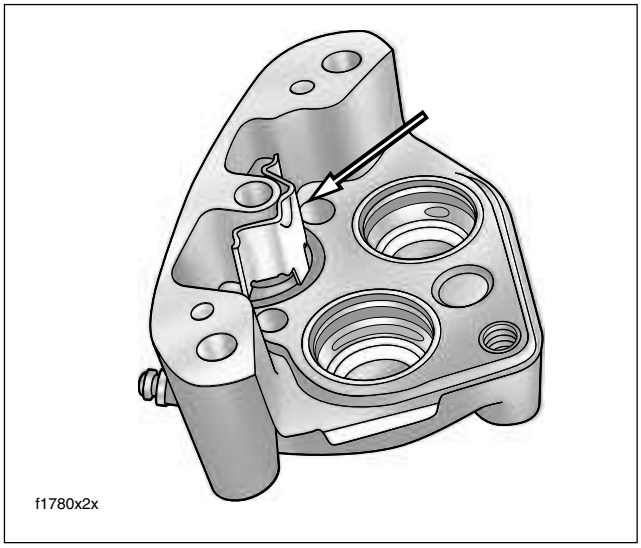

Figure 2-63. Install Anti-Rattle Spring

- Inside diameter of square seals and wipers.
- Caliper piston bores.
- Nose radius and outside diameter of piston.

NOTE

All other surfaces must be kept clean and dry for assembly.

4. Carefully insert pistons into bores by hand. If resistance is felt, remove piston and verify that both seal and wiper are properly installed.
5. Install **new** crossover O-rings into two grooves on inside caliper housing.
6. Assemble caliper housings as follows:
   a. Install bleeder valve on outside caliper housing, if removed. Tighten valve to 80-100 **in-lbs** (9.0-11.3 Nm). Install bleeder valve cap.
   b. Place outside caliper housing on workbench with decal side down. Place anti-rattle spring in channel around boss. Spring is not directional. See Figure 2-63.
   c. Mate inside and outside caliper housings and loosely install two bridge bolts.
   d. Verify that anti-rattle spring is still seated.
   e. Tighten bridge bolts to 28-38 ft-lbs (37.9-51.5 Nm).

NOTE

Both front calipers (as well as the rear brake caliper) use the same brake pad set.

7. Install **new** brake pads into caliper with the friction material facing the brake disc opening. Also, be sure that the pad is oriented so that the curved side faces the rear of the vehicle when the caliper is installed. See Figure 2-58.

   Furthermore, note that the backing plate of each brake pad has either one or two tabs. On the right side of the vehicle, the pad with two tabs is installed on the inboard side of the caliper, the pad with the single tab is installed on the outboard side.

   On the left side of the vehicle, the pad location is reversed. Therefore, the pad with the single tab is installed on the inboard side of the caliper, while the pad with two tabs is installed on the outboard side.
8. Install pad pins and tighten to 180-200 **in-lbs** (20.3-22.6 Nm).

NOTE

If pad pins do not fit, verify the following: (1) Proper pad set is being used, not two identical pads. (2) Anti-rattle spring is installed as shown in Figure 2-63. (3) Pads are pushed tight against anti-rattle spring.

CALIPER INSTALLATION

1. Install calipers as follows:
   a. Use shop rag or tape to protect fender area adjacent to caliper, as incidental contact can occur during caliper installation.
   b. Place caliper over brake disc with bleeder valve topside.
   c. Loosely install long caliper mounting bolt into upper lug of front fork leg.
   d. Install short caliper mounting bolt into lower lug of front fork leg. Tighten lower mounting bolt to 28-38 ft-lbs (37.9-51.5 Nm).
   e. Tighten upper caliper mounting bolt to 28-38 ft-lbs (37.9-51.5 Nm).
   f. Repeat step to install second caliper.

CAUTION

To avoid leakage, verify that the washers, banjo bolt, brake line and caliper bore are completely clean.

2. Connect brake line to caliper using two **new** steel/rubber washers and banjo bolt. Tighten bolt to 17-22 ft-lbs (23.0-29.8).
3. Remove two Phillips screws to release cover from front brake master cylinder reservoir. Verify that brake fluid level is 1/4 inch (6.4 mm) below top of reservoir with master cylinder in a level position. Add DOT 4 BRAKE FLUID, if necessary.

⚠WARNING

A plugged or covered relief port can cause brake drag or lock-up, which could lead to loss of control, resulting in death or serious injury. (00288a)

4. Actuate the brake lever. A slight spurt of fluid will break the surface if all internal components are working properly.

⚠WARNING

After servicing brakes and before moving motorcycle, pump brakes to build brake system pressure. Insufficient pressure can adversely affect brake performance, which could result in death or serious injury. (00279a)

5. Depress front brake hand lever several times to set brake pads to proper operating position within caliper. Bleed brake system. See Section 2.14 BLEEDING HYDRAULIC BRAKES.

6. Install the master cylinder reservoir cover, but first verify that the cover gasket bellows is not extended or brake fluid will be ejected from the reservoir. Install two Phillips screws and alternately tighten to 6-8 **in-lbs** (0.7-0.9 Nm).

NOTE

Note that one side of the master cylinder reservoir cover is thicker than the other. Install the cover with the thicker side closest to the brake line fitting.

7. Test operation of brake lamp with the front brake applied and the Ignition/Light Key Switch turned to IGNITION.

⚠WARNING

After repairing the brake system, test brakes at low speed. If brakes are not operating properly, testing at high speeds can cause loss of control, which could result in death or serious injury. (00289a)

8. Test ride the motorcycle. If the brakes feel spongy, bleed the system again. See Section 2.14 BLEEDING HYDRAULIC BRAKES.

NOTE

To allow new brake pads to “wear in” properly with the brake disc, avoid making hard stops for the first 100 miles (160 km).

INSPECTION

Check brake pads and discs:

- At every scheduled service interval.
- Whenever the components are removed during service procedures.

BRAKE DISC THICKNESS/WARPAGE

The minimum brake disc thickness is stamped on the side of the disc. Replace disc if excessively worn or badly scored. Maximum brake disc lateral runout or warpage is 0.008 inch (0.2 mm) when measured near the outside diameter. Replace disc if warped beyond specification. For replacement instructions, see Section 2.4 REAR WHEEL, DISASSEMBLY.

BRAKE PADS

NOTE

Brake pad inspection can be performed without removing the caliper.

1. Look down at the back of the rear caliper. See Figure 2-64.
2. Place a thin plastic 6 inch rule against the brake disc and measure the friction material of the brake outer pad. Using a small hand mirror, visually check the friction material of the inner pad.
3. Repeat above checks at the front of the rear caliper.

   Replace both pads If the friction material above the backing plate on either pad is 0.04 inch (1.02 mm) thick or less.

WARNING

Always replace brake pads in complete sets for correct and safe brake operation. Improper brake operation could result in death or serious injury. (00111a)

4. See REAR BRAKE PAD REPLACEMENT on this page.

BRAKE LINE/HOSE INSPECTION

When checking brake pads and discs, take the time to inspect the brake lines and hoses for damage or wear. Replace as necessary.

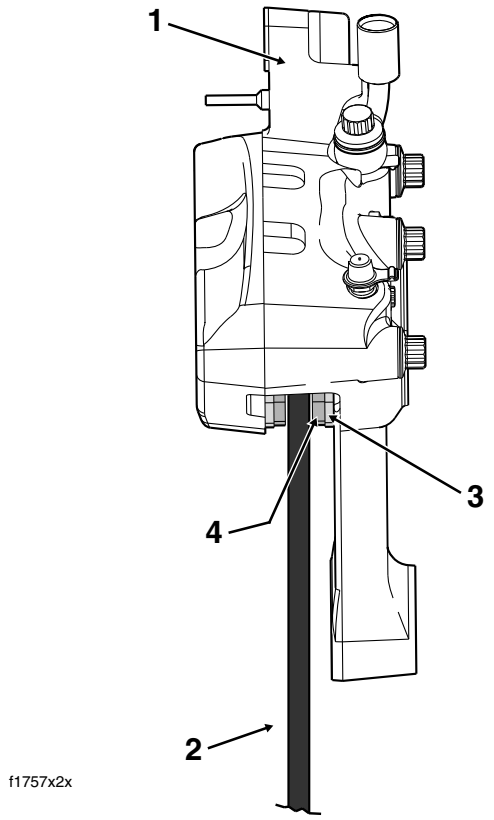

1. **Rear Brake Caliper (Top View)**
2. **Brake Disc**
3. **Backing Plate**
4. **Outer Pad Friction Material**

Figure 2-64. Measure Brake Pad Wear

REAR BRAKE PAD REPLACEMENT

PAD REMOVAL/INSTALLATION

1. Remove right side saddlebag. See Section 2.26 SADDLEBAG, REMOVAL.
2. Loosen both pad pins, but do not remove. See Figure 2-65.

CAUTION

DOT 4 brake fluid will damage painted and molded-in color surfaces it comes in contact with. Always use caution and protect surfaces from spills whenever brake work is performed. Failure to comply can result in cosmetic damage. (00239a)

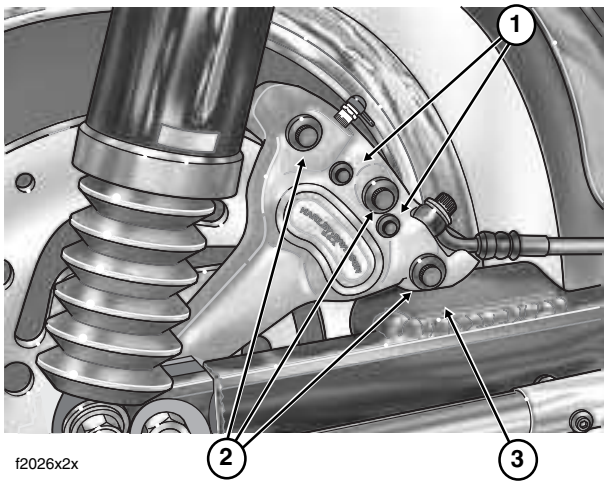

1. **Pad Pins**
2. **Bridge Bolts**
3. **Anchor Weldment**

Figure 2-65. Loosen Both Pad Pins

IMPORTANT NOTE

Immediately wipe up any brake fluid spillage with a clean, dry, soft cloth. Follow up by thoroughly wiping affected area with a clean, damp, soft cloth (small spills) or washing with a large quantity of soapy water (large spills).

CAUTION

To prevent dirt and other contaminants from entering the master cylinder reservoir, thoroughly clean the cover before removal.

3. Remove two Phillips screws to release cover from rear master cylinder reservoir.

NOTE

As the pistons are pushed back into the caliper, fluid level may rise more than 1/4 inch (6.4 mm) and overflow the reservoir. Watch the fluid level as the pistons are retracted and remove fluid from the reservoir if necessary.

4. Pry the inside pad back pushing the pistons into their bores. Use a putty knife with a wide thin blade to avoid scoring or scratching the brake disc.

NOTE

Do not completely pull pad pins from caliper during the next step. Completely removing pad pins at this time will make assembly difficult.

5. Once the pistons have been retracted, pull the pad pins part way out until the inside pad drops free. Note the orientation of the pad.
6. Install **new** inside brake pad using the same orientation. Curved portion of pad must face rear of motorcycle.
7. Install pad pins, but do not fully tighten.
8. Pump rear brake pedal to move inside pistons out until they contact inside brake pad.
9. Pry the outside pad back pushing the pistons into their bores. Use a putty knife with a wide thin blade to avoid scoring or scratching the brake disc.
10. Verify that inside pad is captured between brake disc and pistons. Completely remove pad pins to free outside brake pad. Note the orientation of the pad.
11. Install **new** outside brake pad using the same orientation. Curved portion of pad must face rear of motorcycle. If the inside pad moved during the previous step, reinstall.

NOTE

Replacing one pad at a time keeps the anti-rattle spring in place. Remove both pads to remove or replace the spring.

12. Inspect pad pins. See CLEANING AND INSPECTION, step 4.
13. Install two pad pins and tighten to 180-200 **in-lbs** (20.3-22.6 Nm).

⚠WARNING

After servicing brakes and before moving motorcycle, pump brakes to build brake system pressure. Insufficient pressure can adversely affect brake performance, which could result in death or serious injury. (00279a)

14. Pump rear brake pedal to move pistons out until they contact both brake pads. Verify piston location against pads.

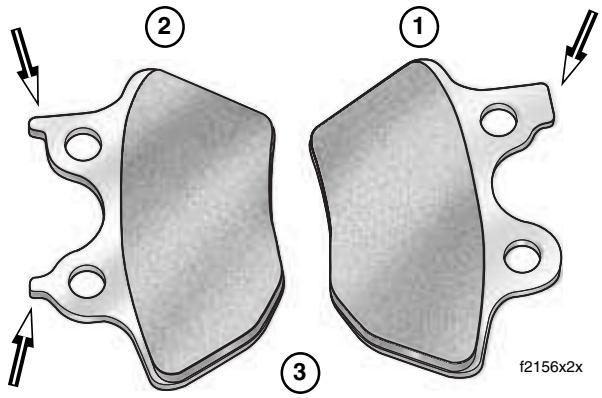

Right Side

1. **Outboard Pad**
2. **Inboard Pad**
3. **Faces Rear**

Figure 2-66. Rear Brake Pad Locations

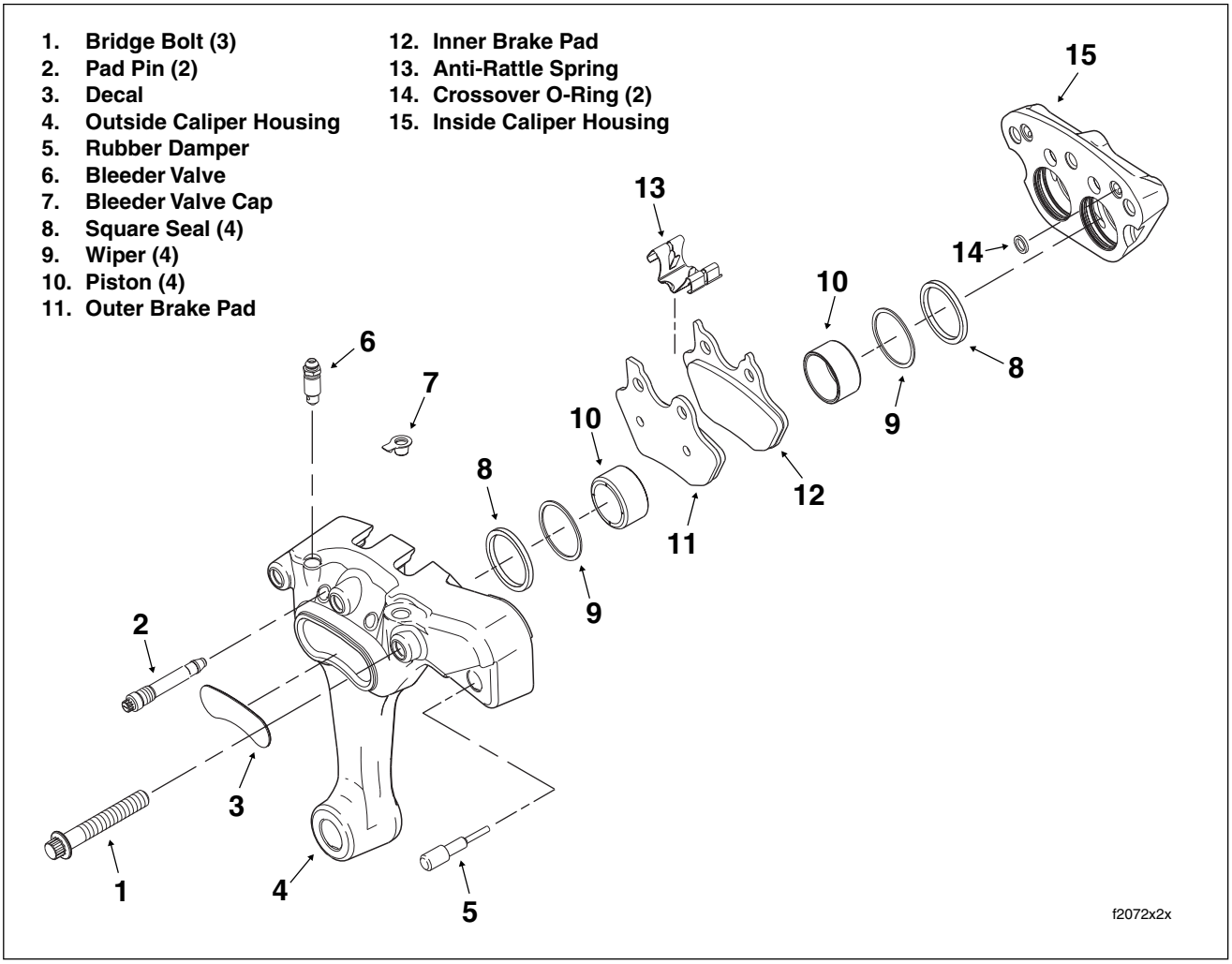

Figure 2-67. Rear Brake Caliper Assembly (Right Side)

15. Verify that brake fluid level is 1/4 inch (6.4 mm) below top of reservoir with master cylinder in a level position. Add DOT 4 BRAKE FLUID, if necessary.

16. Install the master cylinder reservoir cover, but first verify that the cover gasket bellows is not extended or brake fluid will be ejected from the reservoir. Install two Phillips screws and alternately tighten to 6-8 **in-lbs** (0.7-0.9 Nm).

17. Install master cylinder reservoir cover. Install two Phillips screws to fasten cover to reservoir and tighten to 6-8 **in-lbs** (0.7-0.9 Nm).

18. Install right side saddlebag. See Section 2.26 SADDLEBAG, INSTALLATION.

19. Test operation of brake lamp with the rear brake applied and the Ignition/Light Key Switch turned to IGNITION.

⚠WARNING

After repairing the brake system, test brakes at low speed. If brakes are not operating properly, testing at high speeds can cause loss of control, which could result in death or serious injury. (00289a)

20. Test ride the motorcycle. If the brakes feel spongy, bleed the system again. See Section 2.14 BLEEDING HYDRAULIC BRAKES.

NOTE

To allow new brake pads to "wear in" properly with the brake disc, avoid making hard stops for the first 100 miles (160 km).

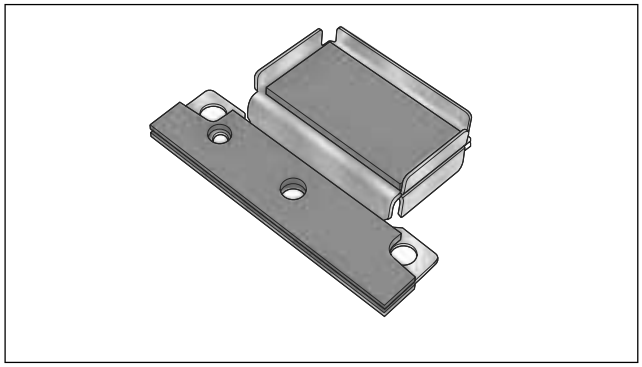

Figure 2-68. Brake Caliper Piston Remover (Part No. HD-43293A)

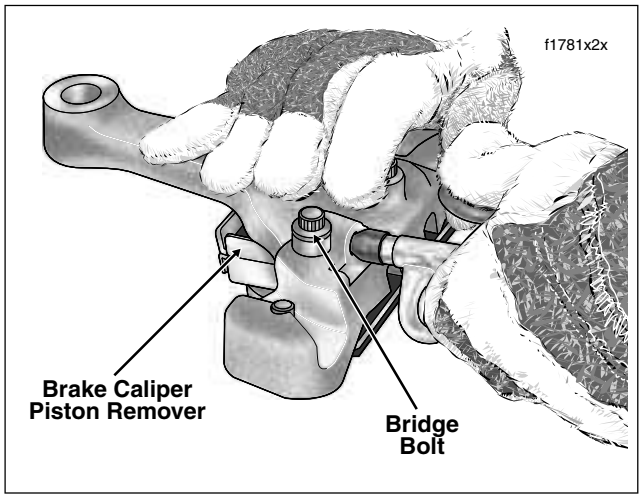

Figure 2-69. Direct Compressed Air Into Banjo Bolt Hole

CALIPER REMOVAL

NOTE

If only replacing brake pads, see REAR BRAKE PAD REPLACEMENT in this section.

1. Block motorcycle underneath frame so rear wheel is raised off the ground.
2. Remove saddlebags. See Section 2.26 SADDLEBAG, REMOVAL.

CAUTION

Damaged banjo bolt surfaces will leak when reassembled. Prevent damage to seating surfaces by carefully removing brake line components.

3. Remove banjo bolt and two steel/rubber washers to detach rear brake line from caliper. Discard washers.
4. Remove rear wheel. See Section 2.4 REAR WHEEL, REMOVAL, steps 2-7.
5. Remove caliper from anchor weldment on rear swingarm.

CALIPER DISASSEMBLY

1. See Figure 2-65. Remove two pad pins. Remove brake pads from caliper housings.
2. Remove three bridge bolts and separate inside and outside caliper housings.
3. Remove anti-rattle spring from channel around boss in outside caliper housing.
4. If damaged, cut anchor of rubber damper and remove.
5. Remove bleeder valve, if damaged.

⚠WARNING

Compressed air can pierce the skin and flying debris from compressed air could cause serious eye injury. Wear safety glasses when working with compressed air. Never use your hand to check for air leaks or to determine air flow rates. (00061a)

6. Remove four pistons as follows:
   a. Obtain BRAKE CALIPER PISTON REMOVER (Part No. HD-43293A). See inset of Figure 2-68.
   b. Seat tool in outside caliper housing aligning holes in tool with three bridge bolt holes in housing. Place inside caliper housing over tool aligning bridge bolt holes with three holes in tool.
   c. Install bridge bolts and tighten securely.
   d. If the bleeder valve was removed, reinstall finger tight or place a gloved finger over the valve hole.

CAUTION

To prevent air from escaping through the banjo bolt hole, and to avoid scratching or nicking the banjo seating surface, use only a tapered, rubber tipped nozzle on air hose. Loss of air pressure will keep the pistons from moving, while any damage to the banjo seating surface requires caliper replacement.

   e. Using a tapered, rubber-tipped nozzle on the air hose, apply low pressure compressed air into the banjo bolt hole to force pistons into contact with cushion of tool. See Figure 2-69.
   f. Remove bridge bolts and separate caliper housings.
   g. Remove pistons from caliper piston bores. For best results, wiggle pistons slightly while pulling.
7. Remove two crossover O-rings from inside caliper housing. Discard O-rings.

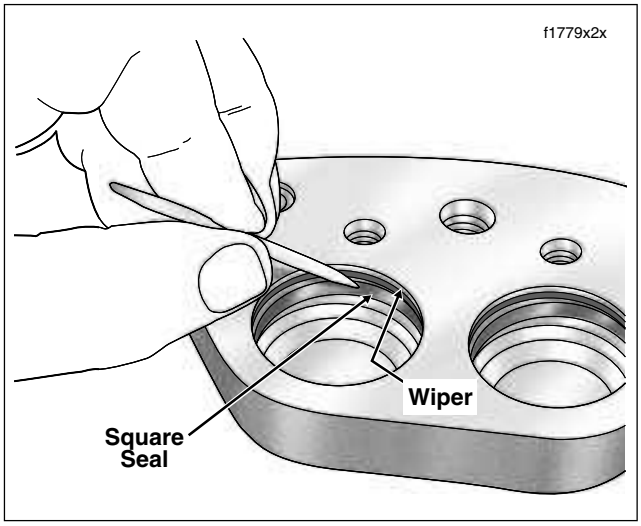

Figure 2-70. Remove Wipers and Square Seals From Piston Bores

CAUTION

Do not use metal objects to remove parts from caliper piston bores or damage will occur. Damaged pistons or bores will leak when reassembled. Use a wooden toothpick to assist in the removal of parts, if necessary.

8. Using a wooden toothpick, remove wiper and square seal from each piston bore. Discard wipers and seals. See Figure 2-70.

CLEANING AND INSPECTION

WARNING

Use denatured alcohol to clean brake system components. Do not use mineral-based solvents (such as gasoline or paint thinner), which will deteriorate rubber parts even after assembly. Deterioration of these components can cause brake failure, which could result in death or serious injury. (00291a)

1. Clean all parts with denatured alcohol or DOT 4 BRAKE FLUID. Wipe parts dry with a clean, lint free cloth. Blow out drilled passages and bores with a clean air supply. Do not use a wire or similar instrument to clean drilled passages.
2. Carefully inspect all components. Replace any parts that appear damaged or worn.
   a. Check pistons for pitting, scratching or corrosion on face and also on ground surfaces.
   b. Inspect caliper piston bore. Replace caliper if bore shows signs of pitting or corrosion. Do not hone bore for reuse.
   c. Check rubber damper for cuts, tears or signs of deterioration.
   d. Always replace wipers, square seals and crossover O-rings after caliper disassembly.

WARNING

Always replace brake pads in complete sets for correct and safe brake operation. Improper brake operation could result in death or serious injury. (00111a)

3. Inspect brake pads and discs. See INSPECTION at the beginning of this section.
4. Inspect pad pins for wear and grooving. Replace both pins if wear of either pin exceeds 0.015 inch (0.38 mm).

CALIPER ASSEMBLY

1. Install **new** square seals into caliper piston bores.
2. Install **new** wipers into caliper piston bores.

CAUTION

Do not use DOT 4 brake fluid for lubrication or increased lever travel will result.

3. Lubricate the following areas using a thin film of G.E. VERSILUBE® #G322L SILICONE GREASE (marked “Piston Lube” in the service parts kit):
   - Inside diameter of square seals and wipers.
   - Caliper piston bores.
   - Nose radius and outside diameter of piston.

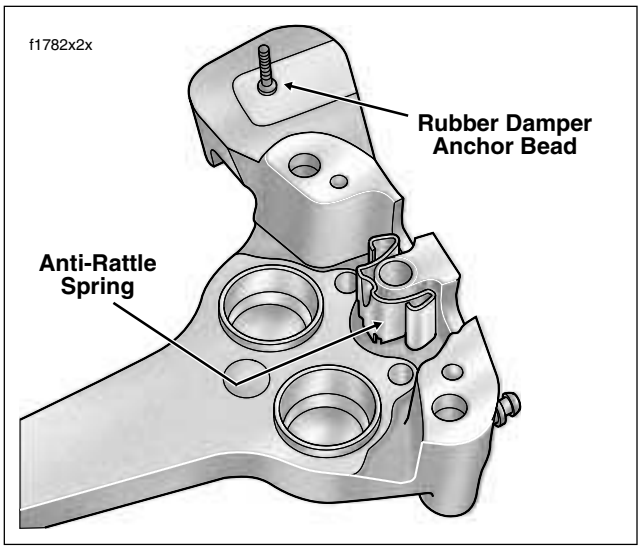

Figure 2-71. Install Anti-Rattle Spring

NOTE

All other surfaces must be kept clean and dry for assembly.

4. Carefully insert pistons into bores by hand. If resistance is felt, remove piston and verify that both seal and wiper are properly installed.
5. Install **new** crossover O-rings into two grooves on inside caliper housing.
6. Assemble caliper housings as follows:
   a. Install bleeder valve on outside caliper housing, if removed. Tighten valve to 80-100 **in-lbs** (9.0-11.3 Nm). Install bleeder valve cap.
   b. Place outside caliper housing on workbench with decal side down. Place anti-rattle spring in channel around boss. Spring is not directional. See Figure 2-71.
   c. Mate inside and outside caliper housings and loosely install two bridge bolts.
   d. Tighten bridge bolts to 28-38 ft-lbs (37.9-51.5 Nm).
   e. If rubber damper was removed, lubricate anchor of **new** damper with isopropyl alcohol or glass cleaner and install by pulling rubber bead through hole in outside caliper housing, as shown in Figure 2-71.
   f. Verify that anti-rattle spring is still seated.

NOTE

All calipers (both front and rear) use the same brake pad set.

7. Install **new** brake pads into caliper with the friction material facing the brake disc opening. Also, be sure that the pad is oriented so that the curved side faces the rear of the vehicle when the caliper is installed. See Figure 2-66.

   Furthermore, note that the backing plate of each brake pad has either one or two tabs. The pad with two tabs is installed on the inboard side of the caliper, the pad with the single tab is installed on the outboard side.
8. Install pad pins and tighten to 180-200 **in-lbs** (20.3-22.6 Nm).

NOTE

If pad pins do not fit, verify the following: (1) Proper pad set is being used, not two identical pads. (2) Anti-rattle spring is installed as shown in Figure 2-71. (3) Pads are pushed tight against anti-rattle spring.

CALIPER INSTALLATION

1. Install rear wheel. See Section 2.4 REAR WHEEL, INSTALLATION, steps 1-16.

CAUTION

To avoid leakage, verify that the washers, banjo bolt, brake line and caliper bore are completely clean.

2. Connect brake line to caliper using two **new** steel/rubber washers and banjo bolt. Tighten bolt to 17-22 ft-lbs (23.0-29.8).

CAUTION

DOT 4 brake fluid will damage painted and molded-in color surfaces it comes in contact with. Always use caution and protect surfaces from spills whenever brake work is performed. Failure to comply can result in cosmetic damage. (00239a)

IMPORTANT NOTE

Immediately wipe up any brake fluid spillage with a clean, dry, soft cloth. Follow up by thoroughly wiping affected area with a clean, damp, soft cloth (small spills) or washing with a large quantity of soapy water (large spills).

⚠WARNING

Use only fresh, uncontaminated DOT 4 brake fluid. Fluid containers that have been opened may have been contaminated by dirt or moisture. Use of contaminated brake fluid may adversely affect braking ability and lead to brake failure which could result in death or serious injury.

IMPORTANT NOTE

The shelf life of a bottle of unopened DOT 4 brake fluid is one year. The shelf life of an uncontaminated bottle that has been opened and then resealed is one week.

3. Remove two Phillips screws to release cover from rear brake master cylinder reservoir. Verify that brake fluid level is 1/4 inch (6.4 mm) below top of reservoir with master cylinder in a level position. Add DOT 4 BRAKE FLUID, if necessary.

⚠WARNING

After servicing brakes and before moving motorcycle, pump brakes to build brake system pressure. Insufficient pressure can adversely affect brake performance, which could result in death or serious injury. (00279a)

4. Depress rear brake pedal several times to set brake pads to proper operating position within caliper. Bleed brake system. See Section 2.14 BLEEDING HYDRAULIC BRAKES.
5. Install the master cylinder reservoir cover, but first verify that the cover gasket bellows is not extended or brake fluid will be ejected from the reservoir. Install two Phillips screws and alternately tighten to 6-8 **in-lbs** (0.7-0.9 Nm).

6. Install saddlebags. See Section 2.26 SADDLEBAG, INSTALLATION.
7. Test operation of brake lamp with the rear brake applied and the Ignition/Light Key Switch turned to IGNITION.

⚠WARNING

After repairing the brake system, test brakes at low speed. If brakes are not operating properly, testing at high speeds can cause loss of control, which could result in death or serious injury. (00289a)

8. Test ride the motorcycle. If the brakes feel spongy, bleed the system again. See Section 2.14 BLEEDING HYDRAULIC BRAKES.

NOTE

To allow new brake pads to "wear in" properly with the brake disc, avoid making hard stops for the first 100 miles (160 km).

BLEEDING HYDRAULIC BRAKES 2.14

GENERAL

Bleed the hydraulic brake system any time a brake line, master cylinder or brake caliper has been opened or disassembled, or whenever the brake lever/pedal operation feels "spongy." Bleeding evacuates air from the system leaving only incompressible hydraulic fluid.

NOTE

Harley-Davidson recommends that all brake service be performed by a Harley-Davidson dealer or other qualified technician.

NOTE

Hydraulic brake fluid bladder-type pressure equipment can be used to fill brake master cylinders through the bleeder valve. Remove master cylinder reservoir cover so that system cannot pressurize. Do not use pressure bleeding equipment when the hydraulic system is sealed with master cylinder reservoir cover and gasket in place.

CAUTION

DOT 4 brake fluid will damage painted and molded-in color surfaces it comes in contact with. Always use caution and protect surfaces from spills whenever brake work is performed. Failure to comply can result in cosmetic damage. (00239a)

IMPORTANT NOTE

Immediately wipe up any brake fluid spillage with a clean, dry, soft cloth. Follow up by thoroughly wiping affected area with a clean, damp, soft cloth (small spills) or washing with a large quantity of soapy water (large spills).

⚠WARNING

Use only fresh, uncontaminated DOT 4 brake fluid. Fluid containers that have been opened may have been contaminated by dirt or moisture. Use of contaminated brake fluid may adversely affect braking ability and lead to brake failure which could result in death or serious injury.

IMPORTANT NOTE

The shelf life of a bottle of unopened DOT 4 brake fluid is one year. The shelf life of an uncontaminated bottle that has been opened and then resealed is one week.

1. Install end of a length of plastic tubing over caliper bleeder valve. Place free end of tube in a clean container. See Figure 2-72. Stand motorcycle upright.

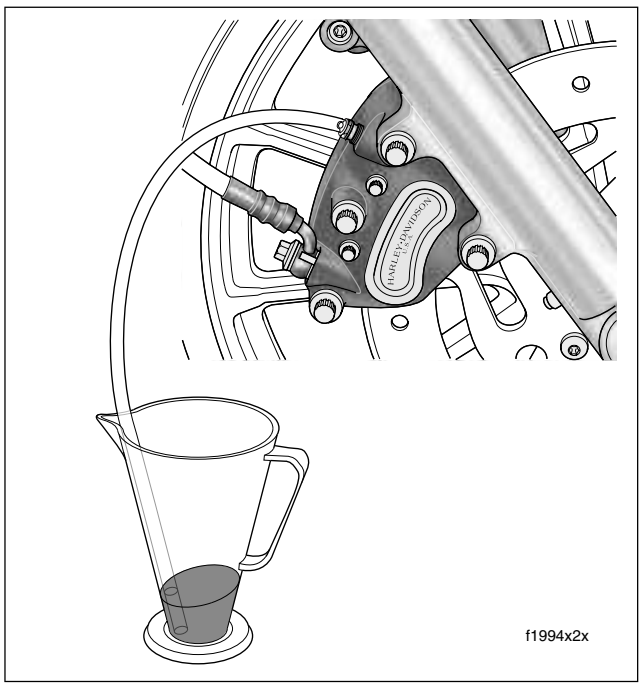

Figure 2-72. Bleeding Hydraulic System

CAUTION

To prevent dirt and other contaminants from entering the master cylinder reservoir, thoroughly clean the cover before removal.

2. Remove the two Phillips screws to release cover from the master cylinder reservoir.
3. Add DOT 4 BRAKE FLUID to the master cylinder reservoir until the fluid level is 1/4 inch (6.4 mm) from the top. Do not reuse old brake fluid. Use only DOT 4 fluid from a sealed container.
4. Depress and hold brake lever/pedal to build up hydraulic pressure.
5. Open bleeder valve about 1/2 turn. Brake fluid will flow from bleeder valve through tubing. Close bleeder valve when brake lever/pedal has moved 1/2 to 3/4 of its full range of travel. Allow brake lever/pedal to return slowly to its released position.
6. Repeat steps 3-5 until all air bubbles are purged.
7. Final tighten the bleeder valve to 80-100 **in-lbs** (9.0-11.3 Nm). Install the bleeder cap.
8. Add brake fluid to the master cylinder reservoir until the fluid level is about 1/4 inch (6.4 mm) from the top. Do not reuse brake fluid.

9. Install the master cylinder reservoir cover, but first verify that the cover gasket bellows is not extended or brake fluid will be ejected from the reservoir. Install two Phillips screws and alternately tighten to 6-8 **in-lbs** (0.7-0.9 Nm).

WARNING

After repairing the brake system, test brakes at low speed. If brakes are not operating properly, testing at high speeds can cause loss of control, which could result in death or serious injury. (00289a)

10. Test ride motorcycle. Repeat the bleeding procedure if brakes feel spongy.

CHANGING FORK OIL

NOTE

If changing the fork oil at the 50,000 mile (80,000 km) service interval, or if fork is leaking or fails visual inspection, see REMOVAL and DISASSEMBLY, as complete disassembly and inspection of the fork is required. However, if a decision has been made to replace the fork oil before the recommended service interval, and the fork passes visual inspection, see steps 1-5 below.

1. Disassemble motorcycle and remove fork. See REMOVAL.
2. Partially disassemble fork. See DISASSEMBLY, steps 1-8.
3. Position fork assembly upside down over drain pan. Allow sufficient time for fork to thoroughly drain (about 10-15 minutes).
4. Fill and assemble fork. See ASSEMBLY, steps 14-21.
5. Install fork and assemble motorcycle. See INSTALLATION.

REMOVAL

1. Place suitable blocking under frame to raise front wheel several inches off the floor. For best results, use an hydraulic center stand on a level surface.
2. Remove the front wheel and fender. See Section 2.33 FRONT FENDER, REMOVAL.
3. Proceed as follows:

   FLHR/C/S:

   a. Remove headlamp nacelle. See Section 2.32 WINDSHIELD/HEADLAMP NACELLE (FLHR/C/S), NACELLE REMOVAL (FLHR/C) or NACELLE REMOVAL (FLHRS).

   FLHX, FLHT/C/U:

   a. Loosen two outer fairing screws outboard of the speakers on the left and right side. Remove two outer fairing screws reaching in below the left and right sides of the fairing cap. If necessary, see Section 2.30 UPPER FAIRING/WINDSHIELD (FLHX, FLHT/C/U), OUTER FAIRING/WINDSHIELD, REMOVAL.

   b. Remove fairing cap. See Section 2.30 UPPER FAIRING/WINDSHIELD (FLHX, FLHT/C/U), FAIRING CAP, REMOVAL.

   c. Remove two lower fork bracket screws to release front turn signal lamp/auxiliary lamp bracket, chrome skirt and inner fairing. If necessary, see Section 8.16 TURN SIGNAL LAMPS, FRONT TURN SIGNAL LAMP, FLHX, REMOVAL, or Section 8.13 AUXILIARY LAMPS, AUXILIARY LAMP BRACKET, REMOVAL.

   FLTR:

   a. Remove instrument nacelle. See Section 2.31 UPPER FAIRING/WINDSHIELD (FLTR), INSTRUMENT NACELLE, REMOVAL.

4. Standing at front of motorcycle, loosen fork cap bolt from fork tube plug at top of fork tube, but do not remove.
5. Loosen pinch bolt (with lockwasher) on left side of lower fork bracket, but do not remove. See Figure 2-73.
6. Spray glass cleaner on fork tube above the rubber fork stop. After lubricating surfaces, move fork stop up fork tube until it contacts bottom of upper fork bracket.
7. Holding fork slider to prevent fork from dropping, remove fork cap bolt from fork tube plug. Slide fork tube down and out of upper fork bracket, fork stop, lower fork bracket, and slider cover.
8. Thread fork cap bolt back into fork tube plug to prevent loss of fork oil while handling.
9. Move front fork to bench area. Place suitable drain pan on floor beneath vise.
10. Repeat steps 4-9 to remove right fork.

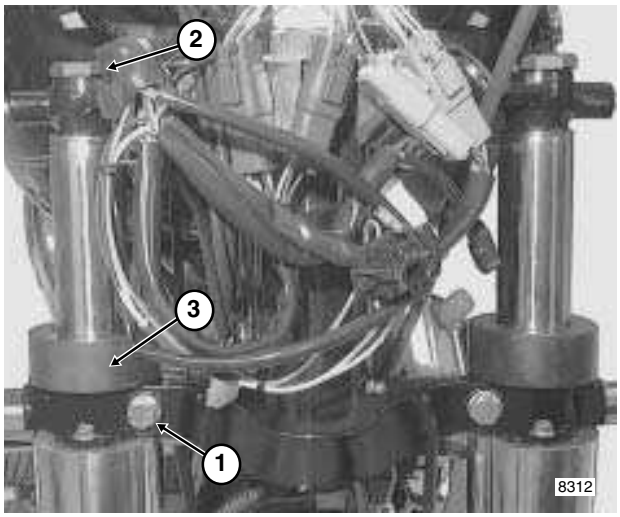

1. **Pinch Bolt**
2. **Fork Cap Bolt**
3. **Fork Stop**

Figure 2-73. Remove Fork Cap Bolt (FLHR/C/S Shown)

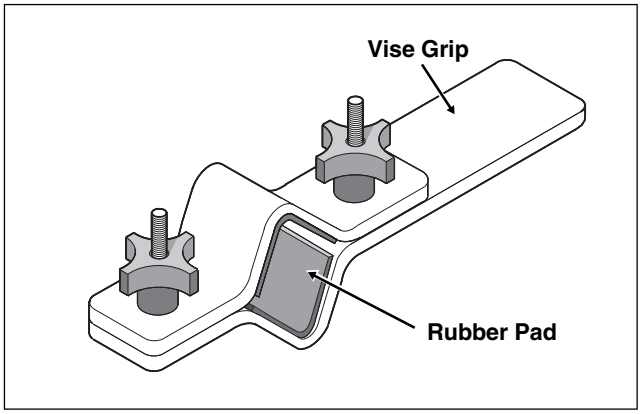

Figure 2-74. Fork Tube Holder (HD-41177)

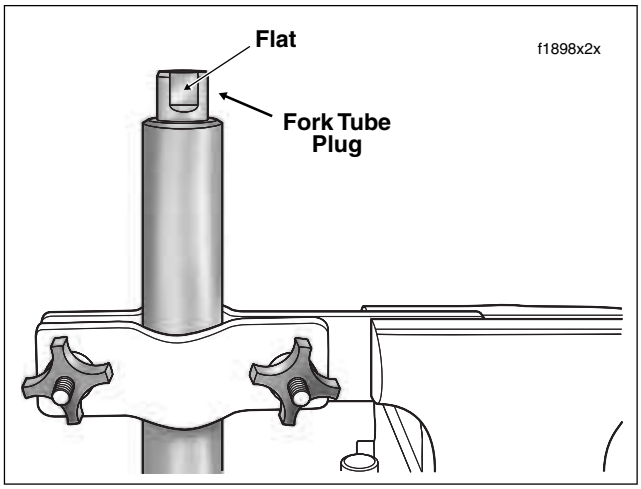

Figure 2-75. Install Fork Tube Into Fork Holder

DISASSEMBLY

1. Remove the fork assembly. See REMOVAL in this section.
2. On right side fork, remove nuts, lockwashers, flat washers and axle holder from studs at end of fork slider.

CAUTION

Exercise caution to avoid scratching or nicking fork tube. Damaging tube can result in fork oil leaks after assembly.

3. Obtain the FORK TUBE HOLDER (HD-41177). See Figure 2-74. Proceed as follows:
   a. Clamp end of tool in vise in a horizontal position with plastic knobs facing toward you.
   b. With the fork cap bolt topside, clamp fork tube between rubber pads on inboard side of tool. Tighten knobs until fork tube is securely held. See Figure 2-75.
4. Remove fork cap bolt from fork tube plug. Remove and discard quad ring seal.
5. Using flat, slowly unthread fork tube plug from fork tube. Be aware that fork tube plug is under spring pressure, so have a firm grasp on plug as the last thread is turned. Remove O-ring from fork tube plug. Discard O-ring.
6. Remove fork spring from fork tube.
7. Remove fork assembly from fork tube holder.
8. Turning fork upside down, drain fork oil into drain pan. For best results, slowly pump fork tube and slider at least ten times. Be aware that damper valve, if equipped, may fall out of inverted fork tube while draining. With the wear ring at the bottom (spring side up), slide damper valve back into fork tube when drained.

NOTE

If just changing the fork oil, continue procedure at ASSEMBLY, step 14. If overhauling the fork assembly, continue with step below.

9. Install fork spring back into fork tube.
10. Place a shop rag on the floor, and turning fork assembly upside down, press end of spring against rag. While compressing spring to prevent rotation of damper tube, remove 6mm screw from end of fork slider. Use an air impact wrench for best results. Discard 6mm screw and copper crush washer.
11. Remove fork spring, damper valve (if equipped) and damper tube from fork tube.
12. Remove wear ring and rebound spring from damper tube. Remove wear ring from damper valve, if equipped.

CAUTION

Do not expand or stretch retaining clip to remove from fork tube or clip may become bent or distorted.

13. Using pick tool, remove retaining clip between fork slider and fork tube.
14. Remove fork tube from fork slider.

NOTE

To overcome any resistance, use the fork tube as a slide hammer, that is, first push fork tube into fork slider and then pull it outward with a moderate amount of force. Repeat this sequence until fork tube separates from fork slider.

15. Slide fork oil seal, slider spacer and slider bushing off end of fork tube. Discard fork oil seal and slider bushing.
16. Gently pry at split line to expand fork leg bushing, and then remove from groove at end of fork tube. Discard fork leg bushing.
17. Remove lower stop from fork slider.

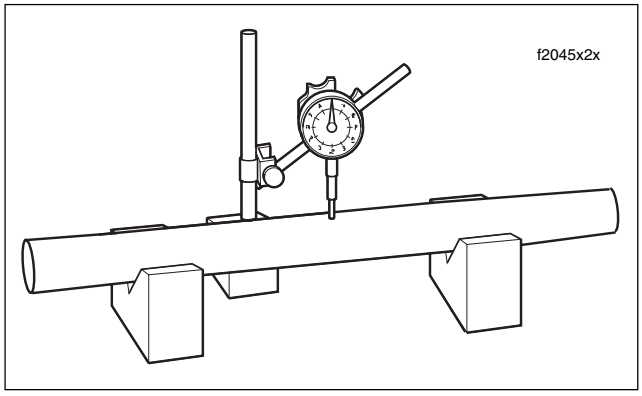

Figure 2-76. Measure Fork Tube Runout

CLEANING AND INSPECTION

1. Thoroughly clean and inspect all parts. Replace any parts that are bent, broken or obviously damaged.
2. Inspect fork cap bolt quad ring seal and fork tube plug O-ring for cuts, tears or signs of deterioration. Replace if necessary.
3. Replace the retaining clip if bent or distorted.
4. Check the slider and fork leg bushings for scratches or excessive wear. Always replace bushings in a set if either bushing is damaged or worn.
5. Check the fork tube and slider for scoring, scratches and excessive or abnormal wear. Replace parts as necessary. Set the fork tube on V-blocks and measure the runout using a dial indicator gauge. Replace fork if runout exceeds 0.008 inch (0.2 mm). See Figure 2-76.
6. Inspect upper fork spring and rebound spring for damage or distortion. Replace upper fork spring if free length is less than 18.4 inches (467.3 mm). Replace rebound spring if free length is less than 15/16 inches (23.8 mm) or whenever the upper fork spring requires replacement.

ASSEMBLY

CAUTION

Exercise caution to avoid scratching or nicking fork tube. Damaging tubes can result in fork oil leaks after assembly.

1. Coat fork leg bushing ID with clean fork oil. Expand fork leg bushing at split line only so far as required to slip over end and into groove of fork tube.
2. Install **new** wear ring in groove at top of damper tube. Install rebound spring on opposite end.
3. With the wear ring topside, slide damper tube into fork tube, so that tube end drops through hole at bottom of fork tube. Install lower stop at end of damper tube.
4. Install fork slider in fork tube holder. Slide fork tube into fork slider.
5. Coat slider bushing ID with clean fork oil. Slide slider bushing down fork tube.
6. Slide slider spacer down fork tube until it contacts slider bushing.
7. Obtain the FORK OIL SEAL INSTALLER (HD-34634). See Figure 2-77. Proceed as follows:
   a. Slide the fork oil seal installer down the fork tube, and using the tool like a slide hammer, drive slider bushing into counterbore of fork slider. Remove tool.

NOTE

Place masking tape over edge of fork tube to avoid damaging lip of fork oil seal during installation.

   b. Coat **new** fork oil seal ID with clean fork oil. With the lip garter spring side facing down (toward the fork slider), slide seal down fork tube until it contacts slider spacer. Remove masking tape from edge of fork tube.

Figure 2-77. Fork Oil Seal Installer (HD-34634)

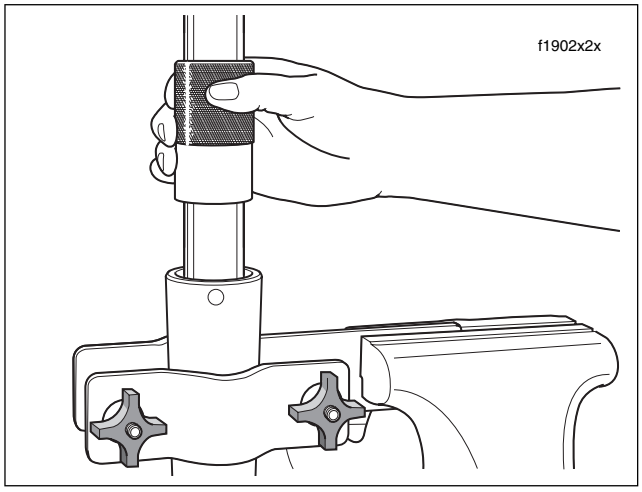

Figure 2-78. Install Fork Oil Seal

c. Slide the fork oil seal installer down the fork tube until it contacts the fork oil seal.

d. Using the tool like a slide hammer, drive fork oil seal down fork tube until retaining clip groove is visible in fork slider ID. See Figure 2-78. Remove tool.

CAUTION

Do not expand or stretch retaining clip to install on fork tube or clip may become bent or distorted.

e. Slide the retaining clip down the fork tube until it contacts the fork oil seal. Install retaining clip in the fork slider groove.

8. Install fork spring into fork tube.
9. Remove fork assembly from fork tube holder.
10. Place a shop rag on the floor, and turning fork assembly upside down, press end of spring against rag.
11. Install **new** 6mm screw with copper crush washer. Slide screw through hole at bottom of fork slider and start into end of damper tube.
12. While compressing spring to prevent rotation of damper tube, tighten 6mm screw to 132-216 **in-lbs** (14.9-24.4 Nm).
13. Remove fork spring from fork tube.
14. With the fork tube topside, clamp fork slider (not the fork tube) into fork tube holder.
15. Install the drain plug at the bottom of the fork slider, if removed. Tighten plug to 72-96 **in-lbs** (8-11 Nm).

NOTE

All touring models with the exception of Road King have the damper valve type fork on both the left and right sides. Road King uses the conventional type fork on both sides. See step 16 to set fork oil level on a damper valve type fork; see step 17 to set fork oil level on a conventional type fork.

16. Set fork oil level on damper valve type fork as follows:

Damper Valve Type Fork: FLHX, FLHT/C/U, FLTR

a. Pour slightly more than 10.8 ounces (319 ml) of Harley-Davidson Type E Fork Oil directly into the fork tube.

b. Slowly pump fork tube until some resistance is felt and then pump a few more times.

c. Install **new** wear ring in groove of damper valve. With the wear ring at the bottom (spring side up), slide damper valve into fork tube.

d. Install fork spring into fork tube. Use fork spring to push damper valve to bottom of fork tube. Remove fork spring from fork tube.

e. Slowly pump fork tube a few more times to discharge air from damper valve.

f. See Figure 2-79. Obtain the FRONT FORK OIL LEVEL GAUGE (HD-59000B).

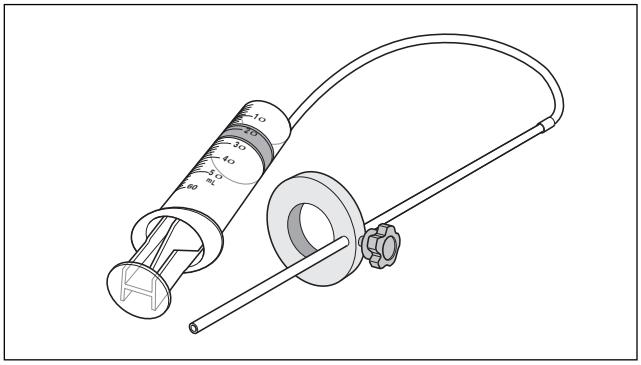

Figure 2-79. Front Fork Oil Level Gauge (HD-59000B)

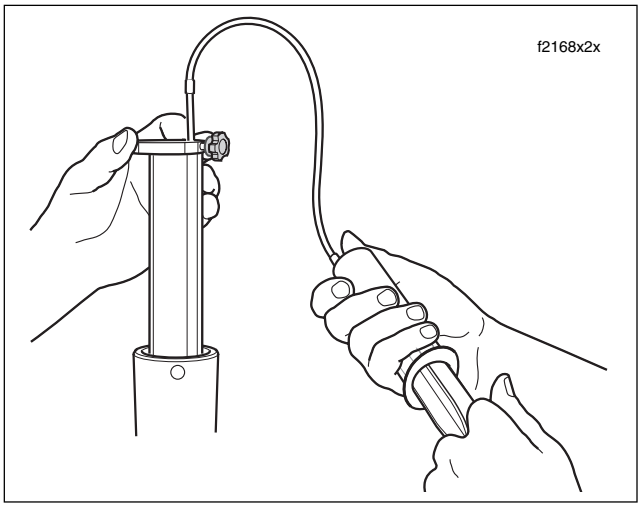

Figure 2-80. Remove Excess Fork Oil

Table 2-5. Fork Oil Requirements

MODEL	FORK TYPE	AMOUNT			
		OZ.	ML	IN.	MM
All models **except** Road King	Damper Valve	10.8	319	5.59	142
Road King	Conventional	11.1	328	5.24	133

g. Loosen thumbscrew on metal ring of tool and move it up or down the rod until bottom of ring is 5.59 inches (142 mm) from end of rod. Tighten thumbscrew.

h. Push the plunger on the cylinder all the way in.

i. With the fork tube bottomed in the fork slider, insert rod until metal ring rests flat on top of fork tube. See Figure 2-80.

j. Pull out plunger to suck fork oil from fork tube. Observe fork oil through transparent tube as it is drawn into cylinder. If no oil is drawn through transparent tube, add enough oil so that tool usage sets fork oil level.

k. Remove rod from fork tube. Push plunger into cylinder to eject excess fork oil into suitable container.

l. If necessary, repeat steps 16(i) thru 16(k). Level is correct when no fork oil is observed being drawn through transparent tube.

WARNING

Be sure fork oil level is correct. The incorrect amount of fork oil can adversely affect handling and may lead to loss of vehicle control, which could result in death or serious injury.

17. Set fork oil level on conventional type fork as follows:

Conventional Type Fork: FLHR/C/S

a. Pour slightly more than 11.1 ounces (328 ml) of Harley-Davidson Type E Fork Oil directly into the fork tube.

b. Slowly pump fork tube until some resistance is felt and then pump a few more times.

c. See Figure 2-79. Obtain the FRONT FORK OIL LEVEL GAUGE (HD-59000B).

d. Loosen thumbscrew on metal ring of tool and move it up or down the rod until the bottom of ring is 5.24 inches (133 mm) from end of rod. Tighten thumbscrew.

e. Push the plunger on the cylinder all the way in.

f. With the fork tube bottomed in the fork slider, insert rod until metal ring rests flat on top of fork tube. See Figure 2-80.

g. Pull out plunger to suck fork oil from fork tube. Observe fork oil through transparent tube as it is drawn into cylinder. If no oil is drawn through transparent tube, add enough oil so that tool usage sets fork oil level.

h. Remove rod from fork tube. Push plunger into cylinder to eject excess fork oil into suitable container.

i. If necessary, repeat steps 17(f) thru 17(h). Level is correct when no fork oil is observed being drawn through transparent tube.

WARNING

Be sure fork oil level is correct. The incorrect amount of fork oil can adversely affect handling and may lead to loss of vehicle control, which could result in death or serious injury.

18. With the closer spaced coils at the bottom, slide fork spring into fork tube.

19. Remove fork slider from fork tube holder. Clamp fork tube into fork tube holder.

20. Install **new** O-ring onto fork tube plug. Compressing fork spring with end of fork tube plug, thread fork tube plug into fork tube. Tighten fork tube plug to 22-58 ft-lbs (30-79 Nm).

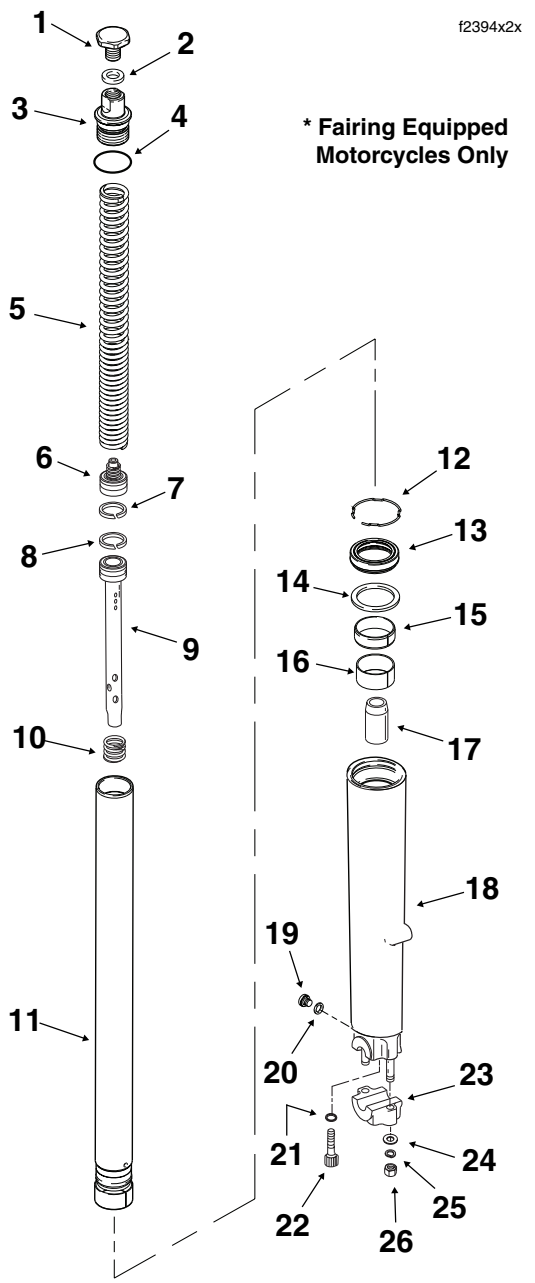

1. Fork cap bolt	14. Slider spacer
2. Quad ring seal	15. Slider bushing
3. Fork tube plug	16. Fork leg bushing
4. O-Ring	17. Lower stop
5. Spring	18. Fork slider
6. Damper valve*	19. Plug
7. Wear ring*	20. Flat Washer
8. Wear ring	21. Copper washer
9. Damper tube	22. Screw (6mm)
10. Rebound spring	23. Axle holder
11. Fork tube	24. Flat washer (2)
12. Retaining clip	25. Lockwasher (2)
13. Lip seal	26. Nut (2)

Figure 2-81. Right Side Fork

21. Install **new** quad ring seal onto fork cap bolt. Thread fork cap bolt into fork tube plug to prevent loss of fork oil while handling.
22. On right side fork, loosely install axle holder, flat washers, lockwashers and nuts on studs at end of fork slider.

INSTALLATION

1. Remove fork cap bolt.
2. Standing at front of motorcycle, slide fork tube up and into slider cover, lower fork bracket, fork stop, and upper fork bracket. Install fork cap bolt.
3. Move rubber fork stop down fork tube until it contacts top of lower fork bracket. Lubricate surfaces with glass cleaner, if necessary.
4. Install pinch bolt (with lockwasher) on left side of lower fork bracket. See Figure 2-73. Tighten pinch bolt to 30-35 ft-lbs (41-48 Nm).
5. Tighten fork cap bolt to 50-60 ft-lbs (68-81 Nm).
6. Repeat steps 1-5 on other fork, if removed.
7. Install the front fender and wheel. See Section 2.33 FRONT FENDER, INSTALLATION.
8. Proceed as follows:

   FLHR/C/S:

   a. Install headlamp nacelle. See Section 2.32 WINDSHIELD/HEADLAMP NACELLE (FLHR/C/S), NACELLE INSTALLATION (FLHR/C) or NACELLE INSTALLATION (FLHRS).

   FLHX, FLHT/C/U:

   a. Slide chrome skirt into position between the inner fairing and the front turn signal lamp/auxiliary lamp bracket. Install two screws to fasten auxiliary lamp/front turn signal lamp bracket, chrome skirt and inner fairing to lower fork bracket. If necessary, see Section 8.16 TURN SIGNAL LAMPS, FRONT TURN SIGNAL LAMP, FLHX, INSTALLATION, or Section 8.13 AUXILIARY LAMPS, AUXILIARY LAMP BRACKET, INSTALLATION.

   b. Install fairing cap. See Section 2.30 UPPER FAIRING/WINDSHIELD (FLHX, FLHT/C/U), FAIRING CAP, INSTALLATION.

   c. Install two outer fairing screws reaching in below the left and right sides of the fairing cap. Tighten two outer fairing screws outboard of the speakers on the left and right side. If necessary, see Section 2.30 UPPER FAIRING/WINDSHIELD (FLHX, FLHT/C/U), OUTER FAIRING/WINDSHIELD, INSTALLATION.

   FLTR:

   a. Install instrument nacelle. See Section 2.31 UPPER FAIRING/WINDSHIELD (FLTR), INSTRUMENT NACELLE, INSTALLATION.

LOWER FORK BRACKET COVER/AIR DAM 2.16

LOWER FORK BRACKET COVER (FLHRS)

REMOVAL

1. Moving to the back of the lower fork bracket, remove two hex screws (with flat washers) to release cover flange.
2. Holding cover to prevent from dropping, remove T40 TORX screw at bottom.

INSTALLATION

1. With the concave side up, align holes in cover flange with holes at back of the lower fork bracket. Start two hex screws (with flat washers).

NOTE

Plastic plug(s) at back of lower fork bracket will prevent proper cover installation. Remove and discard plug(s), if present.

3. Start T40 TORX screw at bottom of cover engaging offset hole in front brake line bracket.
4. Alternately tighten two hex screws to 70-110 **in-lbs** (7.9-12.4 Nm).
5. Tighten T40 TORX screw to 120-180 **in-lbs** (13.6-20.3 Nm).
6. Verify that cover does not contact brake lines to front brake calipers or master cylinder reservoir. Adjust either brake line bracket or cover if necessary.

Figure 2-82. Air Dam

AIR DAM (FLTR)

REMOVAL

NOTE

By allowing the flow of air to pass under the fuel tank and over the cylinder heads, removing the air dam evacuates heated air and provides some relief to the rider in warmer temperatures (70˚ F. or above).

1. Moving to the back of the lower fork bracket, remove two hex screws (with flat washers) to release air dam. See Figure 2-82.
2. Reinstall two hex screws (with flat washers) to keep dirt and debris out of holes in lower fork bracket. Tighten screws to 120-144 **in-lbs** (13.6-16.3 Nm).

INSTALLATION

NOTE

Reinstall air dam in colder weather.

1. With the concave side down, align holes in air dam with holes at back of the lower fork bracket. Start two hex screws (with flat washers).

NOTE

Plastic plug(s) at back of lower fork bracket will prevent proper cover installation. Remove and discard plug(s), if present.

2. Alternately tighten hex screws to 120-144 **in-lbs** (13.6-16.3 Nm).

STEERING HEAD BEARINGS 2.17

LUBRICATION

At the 1000 mile (1600 km) service interval, and at every 10,000 mile (16,000 km) service interval thereafter, grease the steering head bearings using *Special Purpose Grease, Part No. 99857-97*. Turn handlebar full right to access the grease fitting at the left side of the steering head. Connect grease gun to fitting and inject grease until it exudes from top and bottom of steering head. See Figure 2-83.

At every 25,000 mile (40,000 km) service interval, check the swing-by following the CHECKING procedure below.

At every 50,000 mile (80,000 km) service interval, disassemble the steering head and inspect the bearings for brinelling, scoring, or other damage. Replace and/or repack the bearings as required.

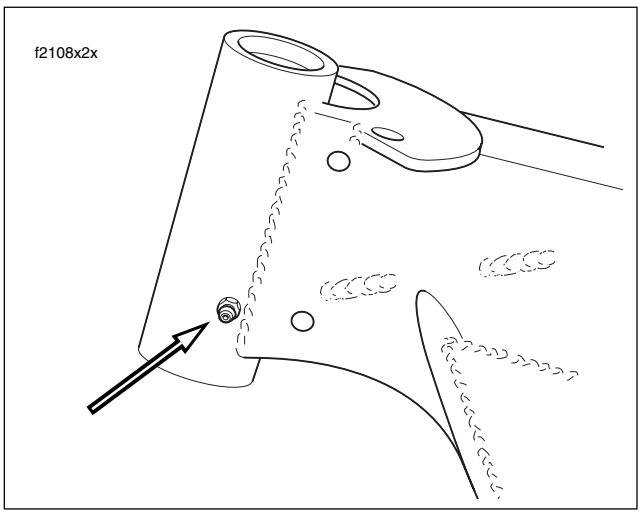

Figure 2-83. Steering Head Bearing Grease Fitting

CHECKING

1. Using an hydraulic center stand on a level surface, raise the vehicle so that the front and rear tires are the same distance from the floor.
2. Verify that motorcycle is in stock configuration. Remove all non-factory accessories, since they can influence front end swing momentum (and lead to improper adjustment).
3. Turn the front wheel until contact is made with the left fork stop and then let go. The wheel should swing right, left, then right and stop. The wheel need not stop near the center or straight-forward position, but it must move to the right making a partial third swing. See frame C of Figure 2-84.
4. To correct a swing pattern that is too short or too long, see ADJUSTMENT below.

ADJUSTMENT

1. On FLHX, FLHT/C/U models, remove outer fairing and radio (storage box on FLHT). On FLHR/C/S, remove headlamp nacelle. On FLTR models, remove the instrument bezel.
2. Loosen the pinch bolts on the lower fork bracket and slide the rubber fork stops up slightly on the fork tubes. This will prevent any binding of the front end when the adjustment is made. See Figure 2-73.
3. Bend tab on lock plate away from flat of fork stem nut. Loosen the fork stem nut. See Figure 2-85.
4. Fashion a bearing adjuster tool using a drill rod 16 inches long. See lower frame of Figure 2-86.

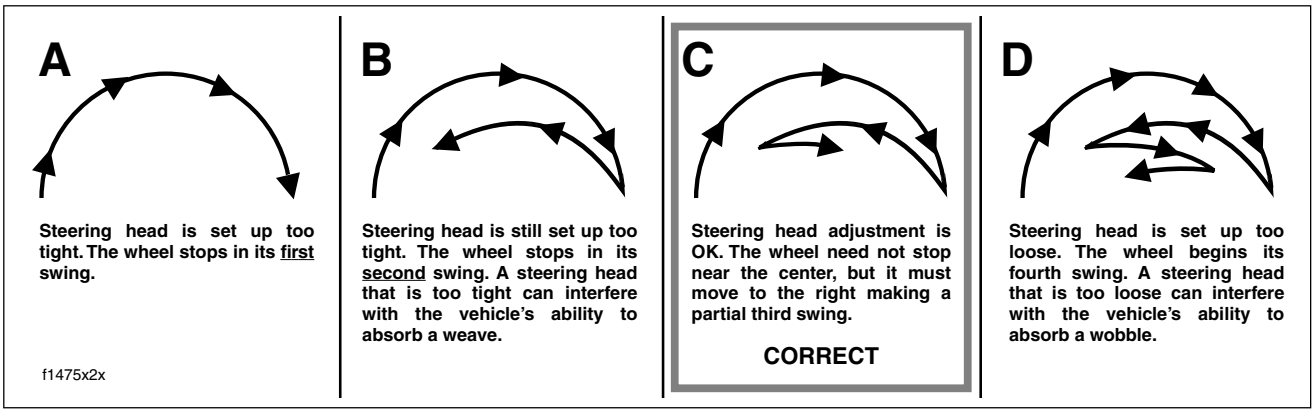

Figure 2-84. Check Steering Head Bearing Swing-By

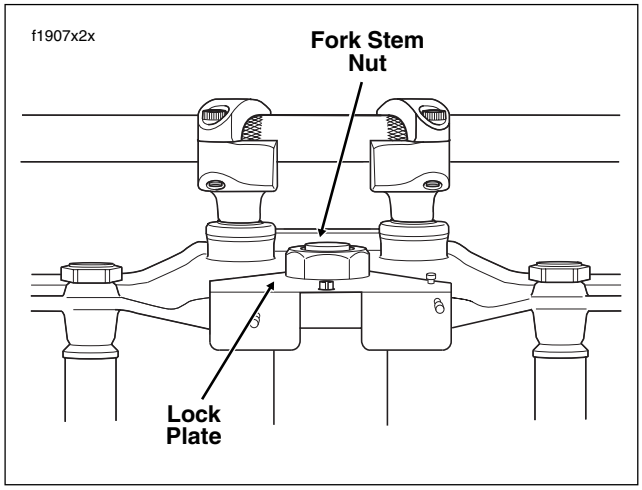

Figure 2-85. Fork Stem Nut

To decrease the number of swings, stand on the left side of the vehicle and insert the rod to engage the notches of the bearing adjuster (star) nut under the fork bracket. Push forward to rotate the nut clockwise.

NOTE

Turning the bearing adjuster nut as little as one notch will make a noticeable difference in the swing pattern.

To increase the number of swings, stand on the right side of the vehicle and insert the rod to engage the notches of the bearing adjuster nut. Push forward to rotate the nut counterclockwise.

5. Tighten the fork stem nut to 60-80 ft-lbs (81-109 Nm). The tightness of the nut will affect the swing pattern.
6. Recheck the swing pattern. See step 3 under CHECKING. Repeat steps 4-6 above until swing pattern is correct.
7. Tighten pinch bolts to 30-35 ft-lbs (41-48 Nm) and properly position the rubber fork stops.
8. Verify that the fork stem nut is tightened to 60-80 ft-lbs (81-109 Nm). Bend tab on lockplate against flat of fork stem nut.
9. On FLHX, FLHT/C/U models, install radio (storage box on FLHT) and outer fairing. On FLHR/C/S, install headlamp nacelle. On FLTR models, install the instrument bezel.
10. Recheck the swing pattern. See step 3 under CHECKING. Repeat ADJUSTMENT procedure if swing pattern is not correct.

REMOVAL

1. On FLHX, FLHT/C/U models, remove the auxiliary lamp bracket, outer fairing and radio (storage box on FLHT). On FLHR/ C, remove headlamp nacelle. On FLTR models, remove the instrument nacelle.

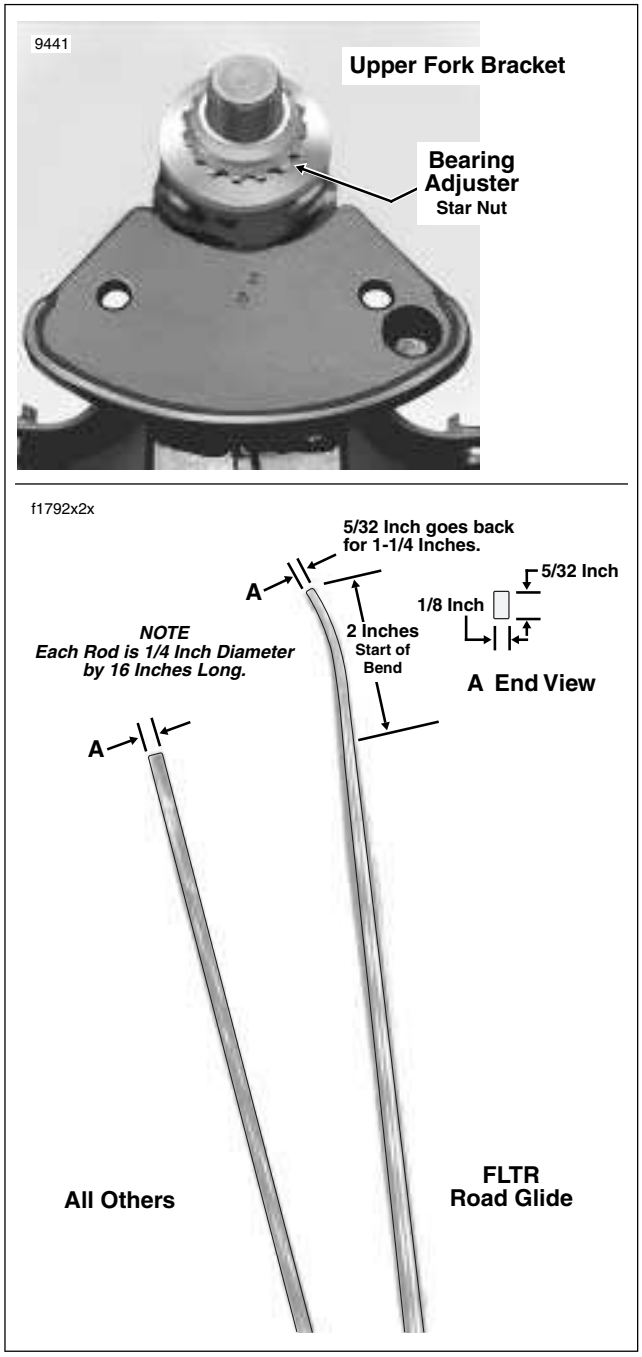

Figure 2-86. Fashion Steering Head Bearing Adjustment Tool From Drill Rod

2. Remove the front wheel and fork assemblies. Remove brake line from lower fork bracket.
3. Bend tab away from flat of fork stem nut. Remove nut.
4. Remove the bearing adjuster and fork stem assembly. See upper frame of Figure 2-86. Remove dust shield and bearing from top of steering head.

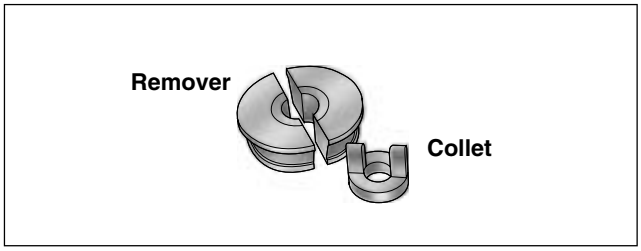

Figure 2-87. Steering Head Bearing Race Remover (Part No. HD-39301A)

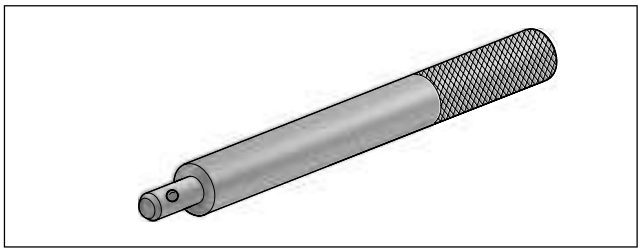

Figure 2-88. Universal Driver (Part No. HD-33416)

INSPECTION

1. Check the bearing races in the steering head. If pitted or grooved, replace both the bearings and races.
2. Turn bearings in races. Replace the bearings if they do not move freely and smoothly. Always replace both races and bearings even if one race and bearing appears good.

STEERING HEAD BEARING RACE REMOVAL

NOTE

To remove the upper and lower steering head bearing races, use the Steering Head Bearing Race Remover (Part No. HD-39301A) with the Universal Driver (Part No. HD-33416). See Figure 2-87 and Figure 2-88.

Proceed as follows:

1. With the tapered side down, seat the two-piece remover tool on the upper bearing race leaving a gap in the middle. See Figure 2-89.
2. Install the collet on the driver.
3. Insert the driver at the bottom of the steering head tube, and while holding the remover tool on the race, center the collet in the gap. Tap the driver to remove the upper race.
4. Reverse the tool and repeat the procedure to remove the lower bearing race.

REMOVING BEARING FROM FORK STEM

1. Chisel cage retaining rollers off bearing on fork stem.

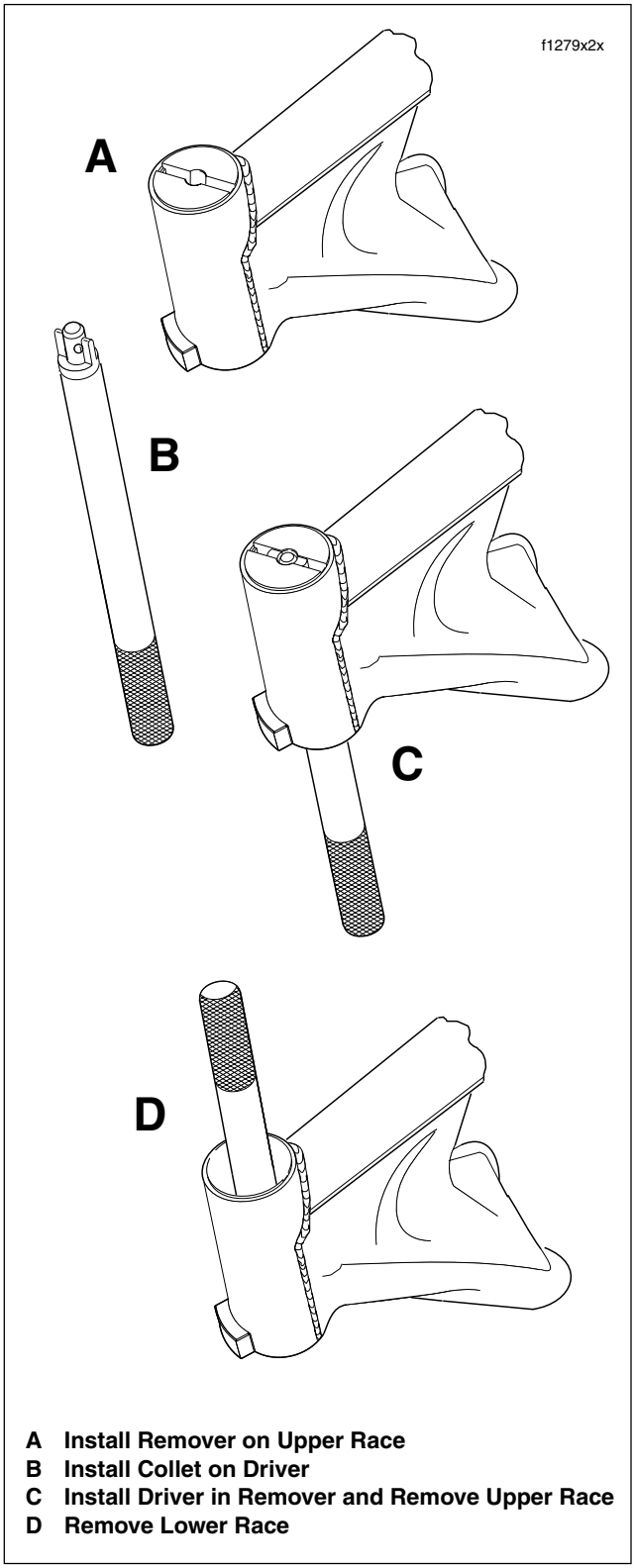

Figure 2-89. Remove Upper and Lower Steering Head Bearing Races

2. Turn the stem upside down while heating the inner race. Race will expand and fall free.

ASSEMBLY

1. Pack **new** bearings with Harley-Davidson SPECIAL PURPOSE GREASE, Part No. 99857-97.
2. Install dust shield on fork stem. Use a sleeve that will contact only the inner race of the new bearing, then press the bearing into place on fork stem.
3. Install new bearing races in steering head using STEERING HEAD BEARING RACE INSTALLATION TOOL, Part No. HD-39302.

INSTALLATION

1. Install the fork stem assembly into the steering head. Install the bearings and dust shield. Install the bearing adjuster nut. Snug the adjuster nut down until bearing play is taken up and the fork stem turns freely. Overtightening the nut will cause excessive bearing wear.

⚠WARNING

Be sure fork stem nut adjustment is correct. An improperly adjusted nut can adversely affect handling and may lead to loss of vehicle control, which could result in death or serious injury.

2. Install upper fork bracket and fork stem nut. Tighten nut to 60-80 ft-lbs (81-109 Nm). Bend the lockplate tab against the nut flat. See Figure 2-85.
3. Install fork assemblies, radio (storage box on FLHT), outer fairing and auxiliary lamp bracket. On FLHR/C/S, install headlamp nacelle. On FLTR models, install the instrument bezel.
4. Install the front wheel and bleed the front brake. Check swing-by under CHECKING in this section.

REAR AIR SUSPENSION 2.18

GENERAL

All models feature air-adjustable rear suspension. Air pressure may be varied to suit load conditions, riding style and personal comfort. Less initial pressure does not necessarily result in a softer ride. See the table below for the recommended air suspension pressures.

Table 2-6. Rear Air Suspension Pressures

Shock Loading	Recommended Pressures	
	PSI	kPa
All Models Except FLHRS, FLHX - Standard Shocks		
Solo rider up to 150 lbs. (68 kg), hereafter referred to as “Average”	0	0
Solo rider 150-200 lbs. (68-91 kg)	0-10	0-69
Solo rider 200-250 lbs. (91-113 kg)	5-15	35-103
Average rider with passenger up to 150 lbs. (68 kg)	10-15	69-103
Average rider with passenger up to 200 lbs. (91 kg)	20-25	138-172
Maximum GVWR (see Section 2.1 Specifications)	20-35	138-241
FLHRS, FLHX Only - Low Profile Shocks		
Solo rider up to 160 lbs. (73 kg), hereafter referred to as “Average”	0-5	0-35
Solo rider 160-200 lbs. (73-91 kg)	0-10	0-69
Solo rider over 200 lbs. (91 kg)	5-10	35-69
Average rider with passenger up to 150 lbs. (68 kg)	20-30	138-207
Average rider with passenger over 150 lbs. (68 kg)	25-35	172-241
Maximum GVWR (see Section 2.1 Specifications)	40-50	276-345

⚠WARNING

Use this table as a starting point in determining suitable rear air suspension pressures. Do not exceed maximum GVWR when loading vehicle and do not pressurize system in excess of 50 psi (345 kPa) for FLHRS, FLHX models and 35 psi (241 kPa) for all others. Excessive load weight and/or air suspension pressure can adversely affect handling and lead to loss of vehicle control, which could result in death or serious injury.

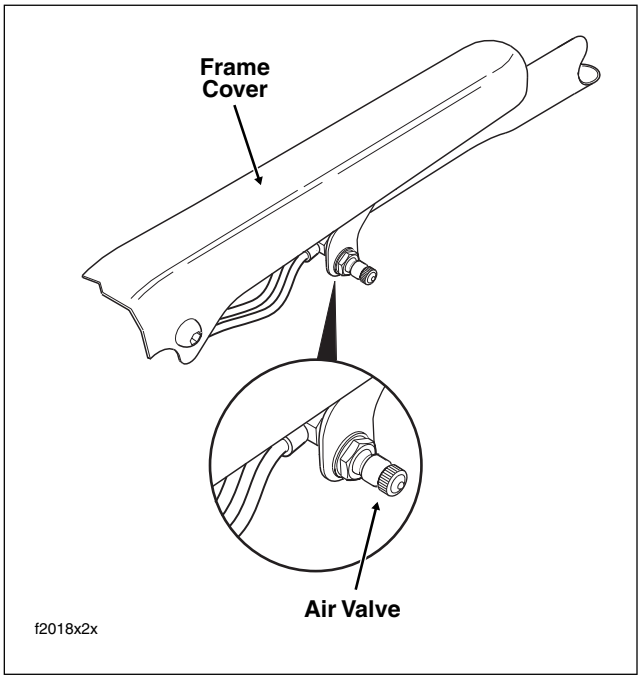

Figure 2-90. Rear Air Suspension Air Valve (Under Protective Cap)

CAUTION

Improper inflation of rear air suspension components also can result in a reduction of available suspension travel, reduced rider comfort and possible damage to shock absorbers.

CAUTION

All air components fill rapidly. Use low air line pressure to avoid possible damage. A small hand or foot operated air pump is the best way to add air to suspension components.

CAUTION

Use a no-loss air gauge to check air pressure. Check pressure in shocks weekly if in daily use or before each trip if only used occasionally.

NOTE

An AIR SUSPENSION PUMP AND GAUGE (Part No. HD-34633A) is available at your Harley-Davidson dealer.

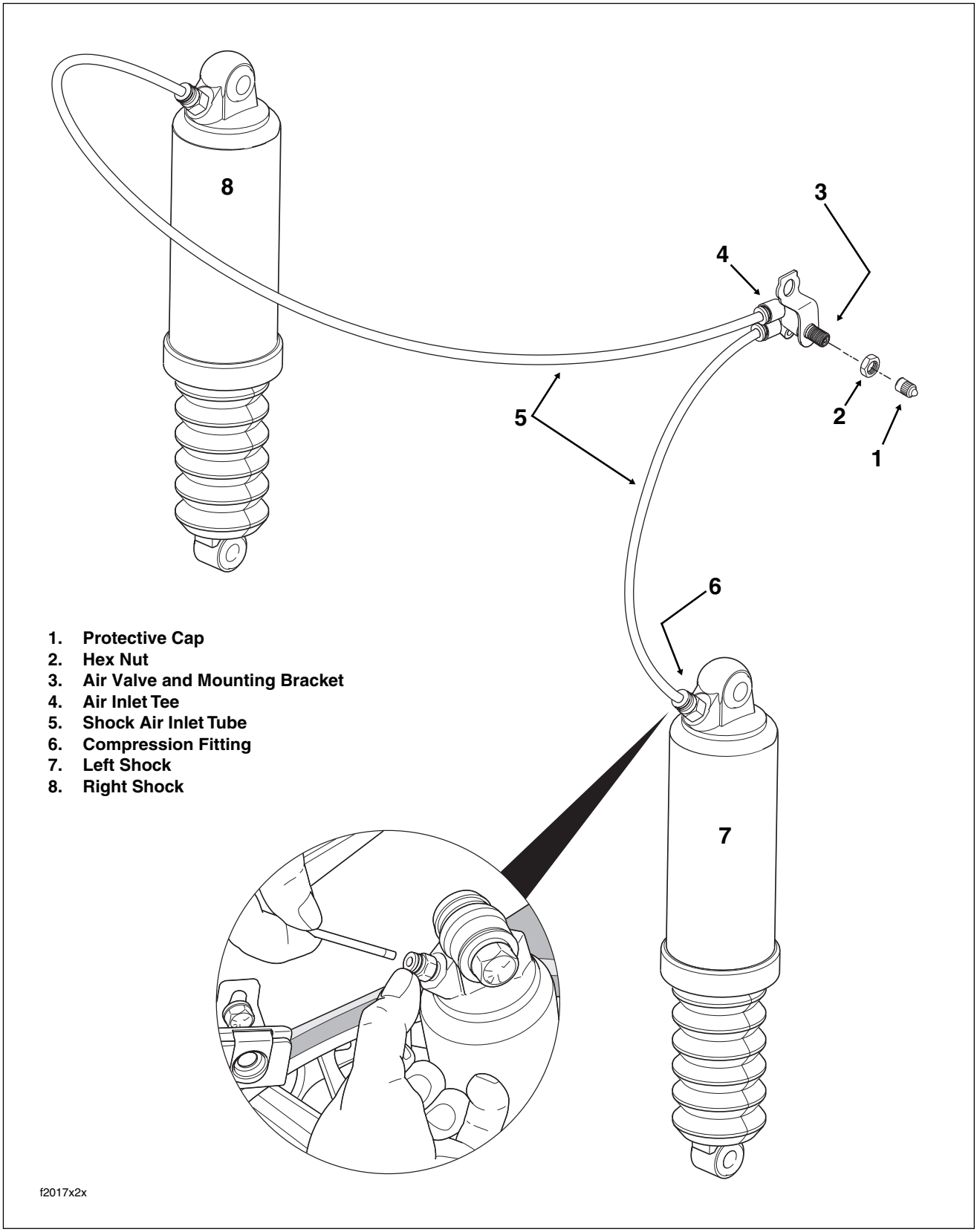

Figure 2-91. Rear Air Suspension System

⚠WARNING

Exercise caution when bleeding air from the air valve. Moisture combined with lubricant (either from shock assembly or drip oiler in the air compressor lines) may be ejected onto the rear wheel, tire and/or brake components and adversely affect traction and/or braking efficiency, which could result in death or serious injury.

REAR AIR SUSPENSION

Adjust the rear shock air suspension pressure by adding or removing air from the air valve located just below the frame cover on the left side of the vehicle. See Figure 2-90. Always adjust pressures with the vehicle on the jiffy stand.

REMOVAL/INSTALLATION

Remove and replace components as necessary. Check for air leaks as follows:

1. Remove left side saddlebag. See Section 2.26 SADDLEBAG, REMOVAL.
2. Remove protective cap from air valve. Install the no-loss air gauge and set to correct pressure. See Table 2-6. Remove the gauge and wait overnight.
3. Recheck air pressure. If no leakage is observed, move to step 8. If a loss of 5-10 psi (34.5-68.9 kPa) is noted, then proceed to step 4.
4. Pressurize rear air suspension system and check for leaks as described below.

Compression Fitting

5. Spray or brush a light film of soapy water on the compression fitting at the top of each shock absorber. If no leakage is observed, move to step 6. If leakage is noted, proceed as follows:

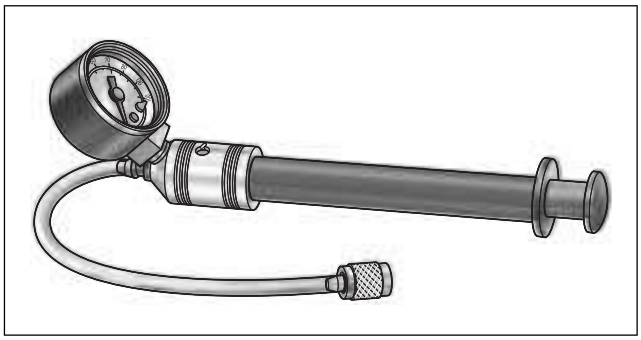

Figure 2-92. Air Suspension Pump and Gauge (Part No. HD-34633A)

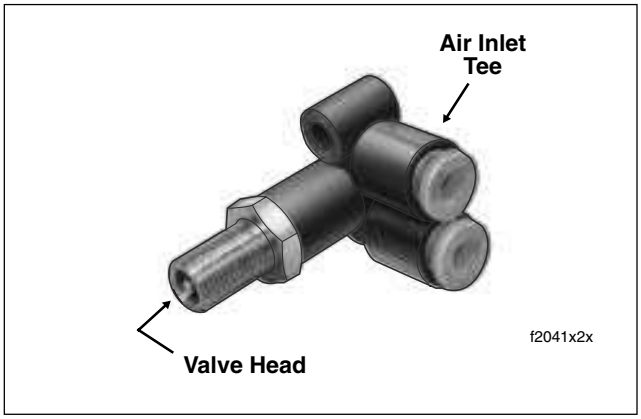

Figure 2-93. Air Valve Assembly

a. Depress pin in valve to bleed air from shocks. To purge lines of any oil, add 3-5 psi (20.7-34.5 kPa) before releasing air.

b. Depress collar on compression fitting and pull out air tube. See inset of Figure 2-91. Inspect the tube end for burrs or damage. If either condition is observed, snip off the end of the tube and insert it back into the compression fitting until it bottoms. Gently tug on tube to verify that it is locked in place.

c. Pressurize rear air suspension system and check for leaks. If leakage continues, proceed to step 5(d).

d. Depress collar on compression fitting and pull out air tube. Remove compression fitting from shock absorber.

e. Apply PIPE SEALANT WITH TEFLON to the threads of a **new** compression fitting and install in shock absorber.

f. Insert air tube into the compression fitting until it bottoms. Gently tug on tube to verify that it is locked in place.

g. Pressurize rear air suspension system and check for leaks. If no leakage is observed, move to step 8. If leakage continues, proceed to step 6.

Air Valve Assembly

6. Spray or brush a light film of soapy water into the valve head and where the air tubes exit the air inlet tee. If leakage is not observed at either location, move to step 7. If leakage is noted, proceed as follows:

   a. If leakage is at the air inlet tee, proceed to step 6(b). If leakage is at the valve head, proceed to step 6(e).

   b. Depress pin in valve to bleed air from shocks. To purge lines of any oil, add 3-5 psi (20.7-34.5 kPa) before releasing air.

c. Depress collar on air inlet tee and pull out air tube. Inspect the tube end for burrs or damage. If either condition is observed, snip off the end of the tube and insert it back into the air inlet tee until it bottoms. Gently tug on tube to verify that it is locked in place. Repeat step with remaining tube.

d. Pressurize rear air suspension system and check for leaks. If no leakage is observed, move to step 8. If leakage continues, proceed to step 6(e).

e. Using a valve core tool, verify that valve core is properly tightened. If leakage continues, proceed to step 6(f).

f. Depress pin in valve to bleed air from shocks. To purge lines of any oil, add 3-5 psi (20.7-34.5 kPa) before releasing air.

g. Remove hex nut from valve head. See Figure 2-91.

h. Push on valve head to free air valve assembly from mounting bracket. See Figure 2-93.

i. Depress collars on air inlet tee and pull out air tubes.

j. Insert air tubes into air inlet tee of **new** air valve assembly.

k. From inboard side, insert valve head through hole in mounting bracket. Install hex nut on valve head (flat side facing inboard). Tighten nut to 40-50 **in-lbs** (4.5-5.6 Nm).

l. Pressurize rear air suspension system and check for leaks.

m. If no leakage is observed, move to step 8. If leakage continues, reinstall old air valve assembly and proceed to step 7.

Air Tubes

7. Inspect air tubes for kinks, cuts, holes, chafing or other damage that may result in air leaks. If tube replacement is necessary, proceed as follows:

   a. Remove seat. See Section 2.25 SEAT, REMOVAL.

   b. Depress pin in valve to bleed air from shocks. To purge lines of any oil, add 3-5 psi (20.7-34.5 kPa) before releasing air.

   c. Depress collars on air inlet tee and pull out air tubes. Remove opposite end of tubes from compression fittings. See Figure 2-91.

   d. Cut bulk tube to proper length.

   e. Insert **new** tubes into air inlet tee. Install opposite end of tubes into compression fittings.

   f. Pressurize rear air suspension system.

   g. Install seat. See Section 2.25 SEAT, INSTALLATION.

8. Install protective cap on air valve.

9. Install left side saddlebag. See Section 2.26 SADDLEBAG, INSTALLATION.

REAR SHOCK ABSORBERS 2.19

ADJUSTMENT

For the correct air pressure, see Section 2.18 REAR AIR SUSPENSION.

REMOVAL

NOTE

If replacing both shock absorbers, remove and install one shock at a time. Remove and install the second shock only after the first shock is installed, but before the air suspension system is pressurized.

1. Place the motorcycle on a hydraulic center stand with the rear wheel raised off the ground.
2. Remove saddlebags. See Section 2.26 SADDLEBAG, REMOVAL.

WARNING

Exercise caution when bleeding air from the air valve. Moisture combined with lubricant (either from shock assembly or drip oiler in the air compressor lines) may be ejected onto the rear wheel, tire and/or brake components and adversely affect traction and/or braking efficiency, which could result in death or serious injury.

3. Remove protective cap from air valve. Using a no-loss AIR SUSPENSION PUMP AND GAUGE (Part No. HD-34633), add 3-5 psi (20.7-34.5 kPa) to purge lines of any oil.
4. Depress pin in valve to bleed air from shocks.
5. Depress collar on compression fitting to release air tube. See Figure 2-94.
6. Remove the upper shock mounting bolt with lockwasher and flat washer. See lower frame of Figure 2-95.
7. Remove the lower shock mounting bolt with lockwasher and flat washer. Remove the shock absorber assembly from the motorcycle.

CAUTION

Never lay the shock absorber down. Always keep the shock absorber upright in a fully vertical position. Laying the shock absorber down with the air line removed can cause the oil to drain out through the compression fitting. Any loss of oil requires replacement of the shock absorber.

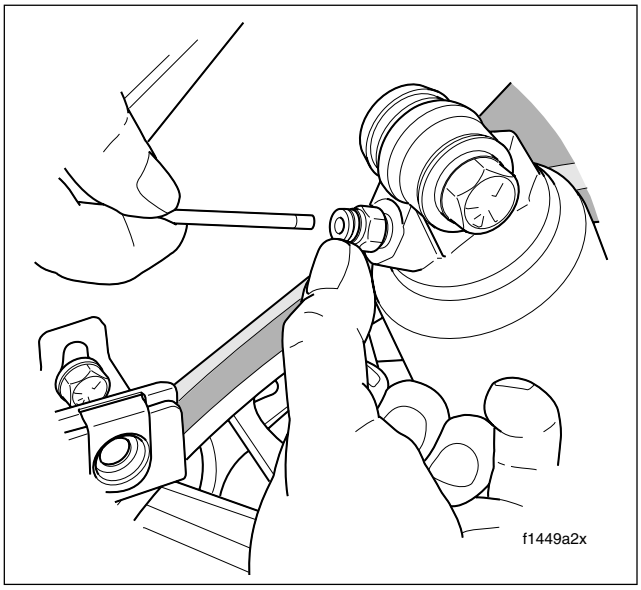

Figure 2-94. Depress Collar on Fitting and Pull Out Air Inlet Tube

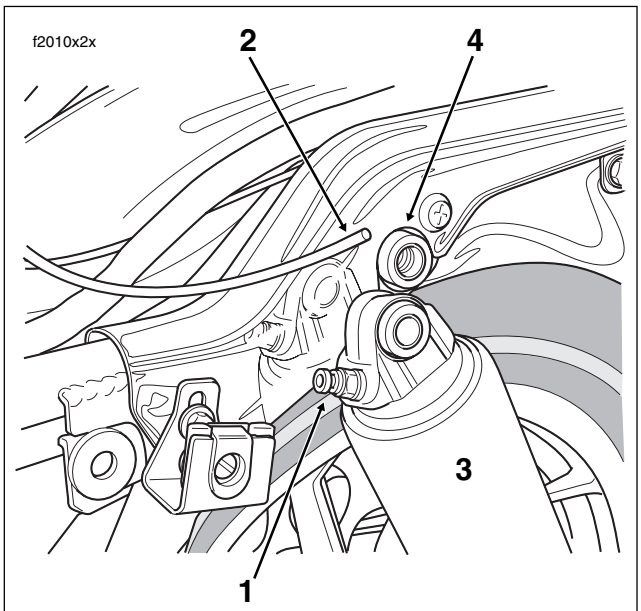

1. Compression Fitting
2. Air Inlet Tube
3. Shock Absorber
4. Frame Boss

Figure 2-95. Remove Upper Shock Mounting Bolt (Left Side View)

DISASSEMBLY

NOTE

Air shocks are not repairable. Replace the shocks if damaged, worn or any sign of leakage is observed.

CLEANING AND INSPECTION

1. Examine the rubber mounting bushings for cracks or wear. Examine the shock for leaks. The unit should not leak and should compress slightly easier than it extends. Compare the action of the shock with a new one to judge if it is worn. Replace the shock if necessary.
2. Clean and examine the shock mounting hardware. Replace parts that are worn or damaged.

ASSEMBLY

NOTE

If the compression fittings were removed, apply PIPE SEALANT WITH TEFLON to the threads before assembly.

INSTALLATION

CAUTION

Never lay the shock absorber down. Always keep the shock absorber upright in a fully vertical position. Laying the shock absorber down with the air line removed can cause the oil to drain out through the compression fitting. Any loss of oil requires replacement of the shock absorber.

1. Install lockwasher and flat washer on the lower shock mounting bolt. Insert bolt through the shock bottom bushing.
2. Apply two or three drops of Loctite Medium Strength Threadlocker 243 (blue) to threads.
3. Start bolt into rear swingarm mount. Tighten bolt to 35-40 ft-lbs (47-54 Nm).
4. Install lockwasher and flat washer on the upper shock mounting bolt. Insert bolt through the shock upper bushing
5. Apply two or three drops of Loctite Medium Strength Threadlocker 243 (blue) to threads.
6. Start bolt into frame boss. Tighten bolt to 33-35 ft-lbs (45-48 Nm).
7. Insert air tube into compression fitting until it bottoms. Gently tug on tube to verify that it is locked in place.

NOTE

If replacing both shock absorbers, remove and install the other shock at this time.

8. Pressurize rear air suspension system and check for leaks. For the correct air pressure, see Section 2.18 REAR AIR SUSPENSION.
9. Install saddlebags. See Section 2.26 SADDLEBAG, INSTALLATION.

REAR SWINGARM 2.20

REMOVAL

1. Remove saddlebags. See Section 2.26 SADDLEBAG, REMOVAL.
2. Remove socket screw with lockwasher to remove passenger footboard from rear swingarm bracket. Repeat step on opposite side of motorcycle.
3. Remove left side muffler as follows:
   a. Open worm drive clamps to remove heat shield from crossover pipe in front of muffler.
   b. Using a bungee cord, tie the muffler to the lower saddlebag support rail.
   c. Loosen TORCA clamp between crossover pipe and muffer.

NOTE

To facilitate removal, spray PB Blaster or other suitable penetrating oil in and around joint of exhaust pipes. For best results, be sure to allow sufficient time for the penetrating oil to work.

   d. Remove two screws (with lockwashers) to detach muffler from lower saddlebag support rail.
   e. Remove bungee cord to release muffler from lower saddlebag support rail.
4. On models equipped with low profile shock absorbers (FLHS and FLHX), remove left side lower saddlebag support rail as follows:
   a. Remove outside T40 TORX screw (and flange nut) to release saddlebag support rail from saddlebag support bracket.
   b. Remove T40 TORX screw to release opposite end of saddlebag support rail from frame weldment.
5. Place the motorcycle on a hydraulic center stand. Slide a block of wood beneath the oil pan to support the weight of the transmission once the pivot shaft is removed.
6. Standing on right side of motorcycle, remove E-clip from groove at end of axle.
7. Remove cone nut and adjuster cam from axle.
8. Using a soft mallet, gently tap end of axle towards left side to loosen. Catching external spacers on right and left side of hub, pull axle free of wheel and rear swingarm.
9. Pull wheel to release brake disc from caliper. Pry inner and outer brake pads back for additional clearance, if necessary. Use a putty knife with a wide thin blade to avoid scoring or scratching the brake disc.

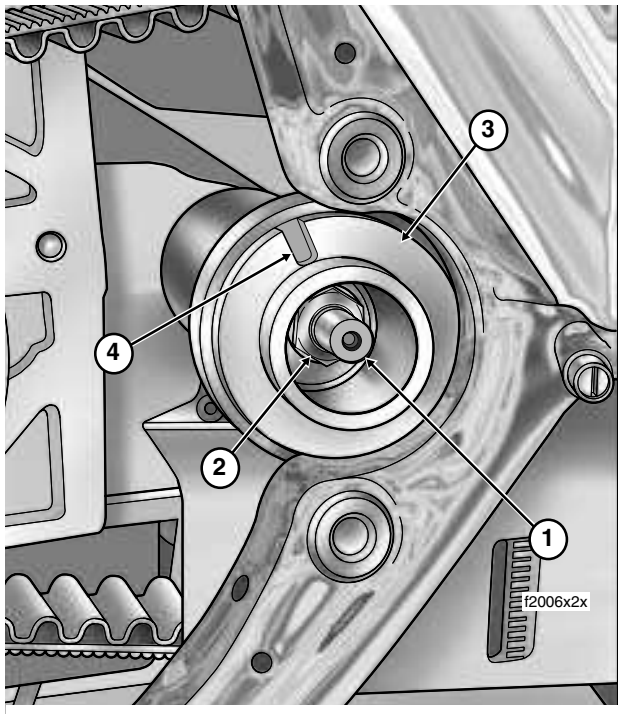

1.	Pivot Shaft	3.	Rubber Mount
2.	Locknut	4.	Slot

Figure 2-96. Remove Rear Swingarm Bracket (Left Side View)

10. Remove caliper from anchor weldment on rear swingarm, and carefully hang over lower saddlebag support rail.
11. Roll wheel forward and slip belt off sprocket. Move wheel out from beneath rear fender.
12. Remove belt guard from bottom of left side swingarm. First remove two rear screws, and then loosen front screw. Push belt guard toward the front of the motorcycle until screw engages large end of slot, and then remove.
13. Remove lower shock mounting bolt (with lockwasher and flat washer) to release shock absorber from rear swingarm mount. Repeat step on opposite side of motorcycle.
14. Remove two bolts (with lockwashers) to free rear swingarm bracket from left side of motorcycle frame. See Figure 2-96.
15. Moving to right side of motorcycle, leave rear swingarm bracket installed, but remove decorative chrome plug.

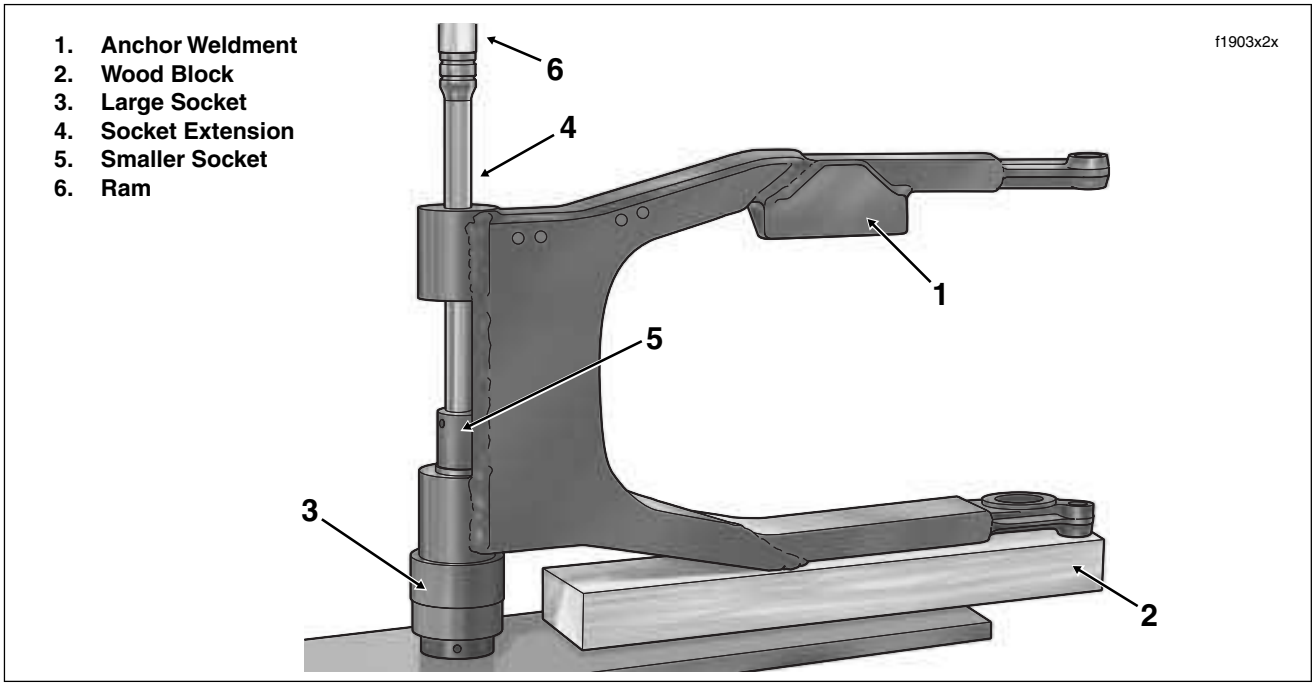

Figure 2-97. Press Out Drive Side Bearing

16. Open two cable clips on T-studs at top of right side swingarm. Free rear brake line hose from cable clips.

NOTE

For best results, insert blade of small screwdriver into gap at side of clip and gently rotate end of screwdriver to pop open.

17. Holding left side nut within rubber mount, remove right side locknut from end of pivot shaft. Remove cup washer.
18. Using a suitable drift, tap pivot shaft toward left side of motorcycle.
19. Moving to left side, pull pivot shaft assembly (pivot shaft, locknut, cup washer, rubber mount and outer spacer) out of transmission mount and left side swingarm. See Figure 2-101.
20. Standing at rear of motorcycle, work rear swingarm free of transmission mount and rear swingarm brackets.
21. Remove outer spacer from right side swingarm tube.
22. Remove rubber mount from behind right side swingarm bracket.

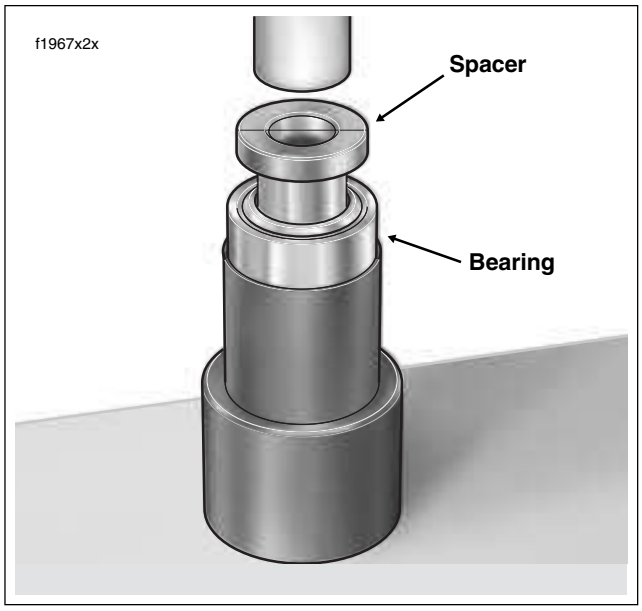

Figure 2-98. Press Spacer Into Bearing

DISASSEMBLY/ASSEMBLY

Bearing Removal

1. Move rear swingarm to an hydraulic press.
2. Place swingarm on its side, so that the brake side is on top. The brake side is easily recognized by the anchor weldment for mounting of the brake caliper.
3. Support the swingarm with a block of wood and a large socket as shown in Figure 2-97. Verify that assembly is square and the bearing bore is completely vertical.

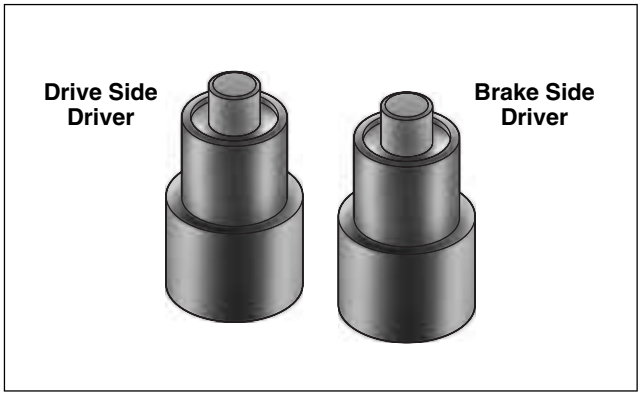

Figure 2-99. Rear Swingarm Bearing Installer (HD-45327)

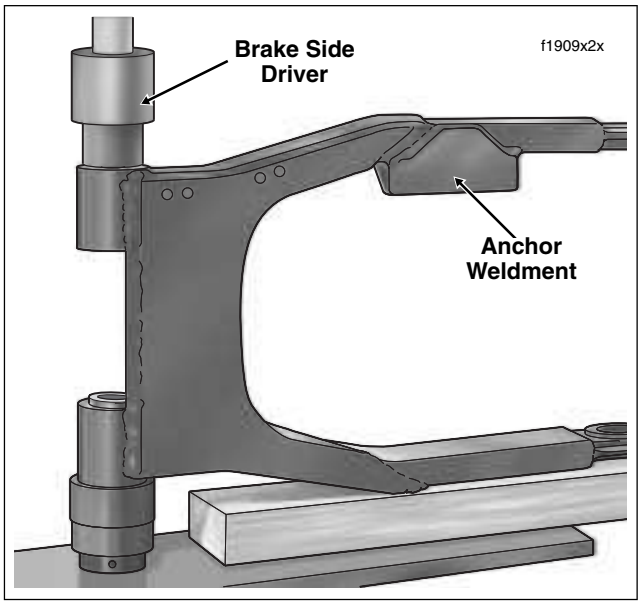

Figure 2-100. Press In Brake Side Bearing

4. Slide driver handle (or long socket extension) through the brake side swingarm tube and bearing until it contacts driver (or smaller socket) placed on inboard side of drive side bearing.
5. Center driver handle (or long socket extension) under ram and press drive side bearing from rear swingarm.
6. Remove tools from rear swingarm. Turn swingarm over and repeat steps 3-5 to press out brake side bearing.

Bearing Installation

1. Obtain **new** rear swingarm bearings. Bearings and spacers must be assembled before installation. Proceed as follows:
   a. Obtain REAR SWINGARM BEARING INSTALLER (HD-45327). See Figure 2-99.
   b. With the nose topside, center one of the drivers under ram of hydraulic press.
   c. Place bearing over nose of driver. With the collar topside, place spacer over nose and into bearing. See Figure 2-98.
   d. Apply pressure to spacer until it bottoms in bearing.
   e. Repeat step to assemble second swingarm bearing.
2. Install assembled bearings into rear swingarm. Proceed as follows:
   a. Place swingarm on its side, so that the brake side is on top. The brake side is easily recognized by the anchor weldment for mounting of the brake caliper.
   b. With the spacer inboard, insert bearing into outboard side of brake side swingarm tube.
   c. Insert driver stamped “Brake Side” into swingarm tube until it contacts installed bearing. Center driver under ram and press on brake side bearing until shoulder on tool makes contact with casting of swingarm. See Figure 2-100.
   d. Remove tool and turn rear swingarm over. With the spacer inboard, insert bearing into outboard side of drive side swingarm tube.
   e. Insert driver stamped “Drive Side” into swingarm tube until it contacts installed bearing. Center driver under ram and press on drive side bearing until it bottoms. Shoulder on tool will **not** make contact with casting of swingarm.
   f. Remove tool from swingarm. Remove swingarm from hydraulic press.

Pivot Shaft Disassembly

1. Partially install locknut on right side of pivot shaft. Install second locknut on right side until it contacts the first. Holding first locknut to prevent rotation of shaft, remove left side locknut. See Figure 2-101.
2. Remove cup washer, rubber mount and outer spacer.
3. Remove right side locknuts from pivot shaft.

Pivot Shaft Assembly

1. With larger OD outboard, slide outer spacer onto left side of pivot shaft until counterbore contacts shoulder on shaft.
2. Install rubber mount with the flat side inboard toward outer spacer.
3. Install cup washer with the concave side facing in toward the rubber mount.
4. Apply two drops of Loctite Medium Strength Threadlocker 243 (blue) to threads of left side locknut, and then start on shaft.

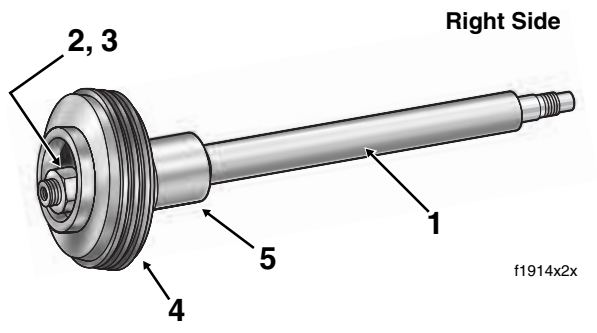

1. Pivot Shaft
2. Locknut
3. Cup Washer
4. Rubber Mount
5. Outer Spacer

Figure 2-101. Pivot Shaft Assembly

5. Partially install locknut on right side of pivot shaft. Install second locknut on right side until it contacts the first. Holding second locknut to prevent rotation of shaft, tighten left side locknut to 40-45 ft-lbs (54-61 Nm).
6. Remove right side locknuts from pivot shaft.

INSTALLATION

1. With the slot on the outboard side between the twelve and one o'clock positions, install rubber mount behind rear swingarm bracket on right side of motorcycle. Be sure that index tab cast on inboard side of bracket fully engages slot in rubber mount.
2. Place outer spacer into right side swingarm tube.
3. With the belt on the inboard side of the left side swingarm, work the rear swingarm into position between the transmission mount and the rear swingarm brackets. Use a rubber mallet and carefully tap swingarm into position, if necessary.
4. The pivot shaft secures the rear swingarm and transmission to the motorcycle frame. See Figure 2-101. Install the pivot shaft as follows:
   a. Coat pivot shaft with Loctite ANTI-SEIZE LUBRICANT.
   b. From left side of motorcycle, slide pivot shaft assembly (pivot shaft, locknut, cup washer, rubber mount and outer spacer) through left side swingarm and transmission mount. After exiting right side swingarm, guide end of pivot shaft through holes in rubber mount and right side swingarm bracket.
   c. With the concave side inboard, slide cup washer onto end of pivot shaft.
   d. Install locknut on pivot shaft. Holding left side nut on pivot shaft, tighten locknut to 40-45 ft-lbs (54-61 Nm). Now hold right side nut and tighten left side locknut using the same torque value.
   e. Carefully raise swingarm up and down slightly to verify movement (and that assembly is not in a bind).
   f. Install decorative chrome plug in right side rear swingarm bracket.
   g. Moving to left side of motorcycle, rotate the rubber mount so that the slot is between the eleven and twelve o'clock positions. Install left side swingarm bracket fitting index tab into rubber mount slot. See Figure 2-96.
   h. Install two bolts (with lockwashers) to secure left side swingarm bracket to motorcycle frame. Tighten bolts to 34-42 ft-lbs (46-57 Nm).
5. Install lockwasher and flat washer on the lower shock mounting bolt. Insert bolt through the shock bottom bushing. Apply two or three drops of Loctite Medium Strength Threadlocker 243 (blue) to threads. Start bolt into rear swingarm mount. Tighten bolt to 35-40 ft-lbs (47-54 Nm). Repeat step on opposite side of motorcycle.
6. Install belt guard at bottom of left side swingarm. Push belt guard toward the rear of the motorcycle until front screw engages small end of slot. Install two rear screws, and then tighten front screw.
7. Capture rear brake line hose in two cable clips at top of right side swingarm. Snap cable clips closed.
8. Place wheel in rear swingarm. Slide wheel far enough forward to slip belt over sprocket and then slide the wheel back.

CAUTION

Do not bend or fold belt backward or into loops smaller than 5 inches (127 mm) in diameter. Sharp bending can weaken the belt and cause premature failure.

9. Seat caliper on anchor weldment of rear swingarm. Position wheel in swingarm, so that brake disc is centered between brake pads.
10. Coat the axle with Loctite ANTI-SEIZE LUBRICANT.
11. With the larger OD on the outboard side, hold external spacer between rear swingarm and belt sprocket. Slide axle through left side of rear swingarm, external spacer, and belt sprocket into wheel hub.
12. When axle emerges from hub on brake disc side of wheel, push axle through **short** external spacer, caliper bracket and right side of rear swingarm.

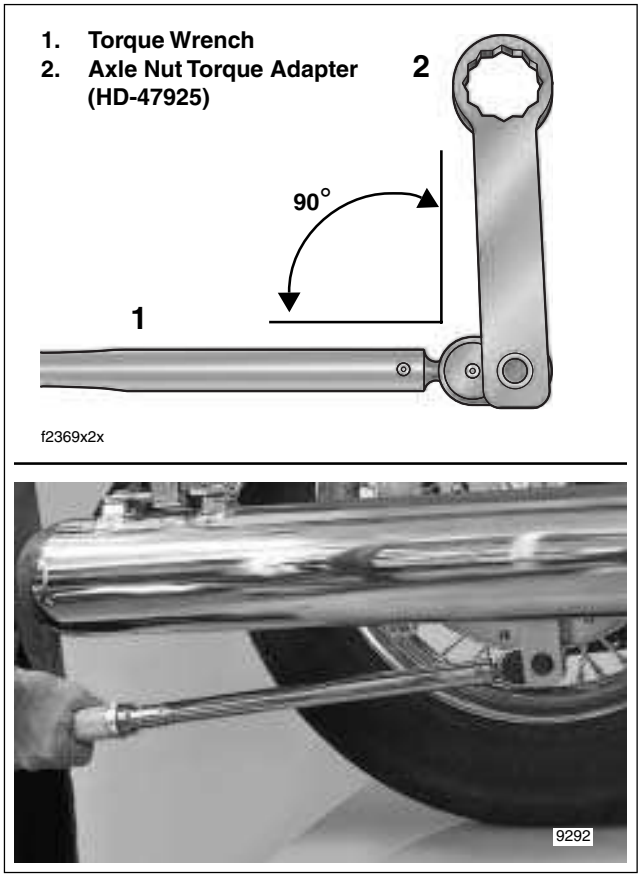

Figure 2-102. Install Tool Perpendicular to Torque Wrench

13. Rotate axle so that the flat on the threaded end is topside. With the thumb down and the cam forward, install adjuster cam on end of axle.

14. Apply a thin film of ANTI-SEIZE LUBRICANT to the inboard side of the cone nut avoiding contact with threads. Install cone nut on axle, but finger tighten only.

15. Obtain torque wrench with 1/2 inch drive head and AXLE NUT TORQUE ADAPTER (HD-47925). Proceed as follows:

NOTE

The Axle Nut Torque Adapter simplifies the belt adjustment procedure by allowing the cone nut to be properly tightened without having to remove the right side muffler. The tool also can be used to loosen the cone nut, as well as rotate the weld nut on the left side.

   a. Install torque adapter perpendicular to torque wrench as shown in Figure 2-102.

   b. Insert tool up between rear wheel and muffler to capture cone nut. For best clearance with muffler, be sure torque adapter is on the outboard side.

CAUTION

Since any extension can act as a torque multiplier, the torque wrench must be perpendicular to the torque adapter when the cone nut is tightened. The 90 degree orientation between the tools cancels the multiplier effect and prevents the cone nut from being over-tightened. If the torque adapter is kept inline with the torque wrench, the multiplier effect is in force and parts damage will occur.

   c. Verify that adjuster cam just contacts weld nub on both sides of rear swingarm. If necessary, push wheel forward slightly to achieve the desired result. Snug the cone nut to 15-20 ft-lbs (20-27 Nm). See Figure 2-103.

16. Obtain the BELT TENSION GAUGE (HD-35381A), or install adapter (HD-35381-3) on old style gauge. See Figure 2-104.

    Apply 10 lbs. (4.5 kg) of force at the midpoint of the bottom belt strand. At the loosest spot in the belt, deflection should be as follows:

Table 2-7. Belt Deflection in the Air

Orientation	Inches	Millimeters
Motorcycle Upright With Rear Wheel in the Air	3/16 - 1/4	4.8 - 6.4
NOTE *See Section 1.10 DRIVE BELT for belt deflection specification with motorcycle on jiffy stand.*		

17. If belt is too tight, move to step 18 to increase belt deflection. If belt is too loose, reduce belt deflection as described below:

   a. Rotate weld nut on left side of axle in a clockwise direction.

   b. Check belt deflection. Apply 10 lbs. (4.5 kg) of force at the midpoint of the bottom belt strand. Belt deflection should be within the range specified in Table 2-7.

   c. If belt is still too loose, repeat steps 17(a) through 17(b). If belt is now too tight, move to step 18.

18. If belt is too tight, increase belt deflection as follows:

   a. Rotate weld nut on left side of axle in a counterclockwise direction.

   b. Push wheel forward slightly so that adjuster cam just contacts weld nub on both sides of rear swingarm. See Figure 2-103.

   c. Check belt deflection. Apply 10 lbs. (4.5 kg) of force at the midpoint of the bottom belt strand. Belt deflection should be within the range specified in Table 2-7.

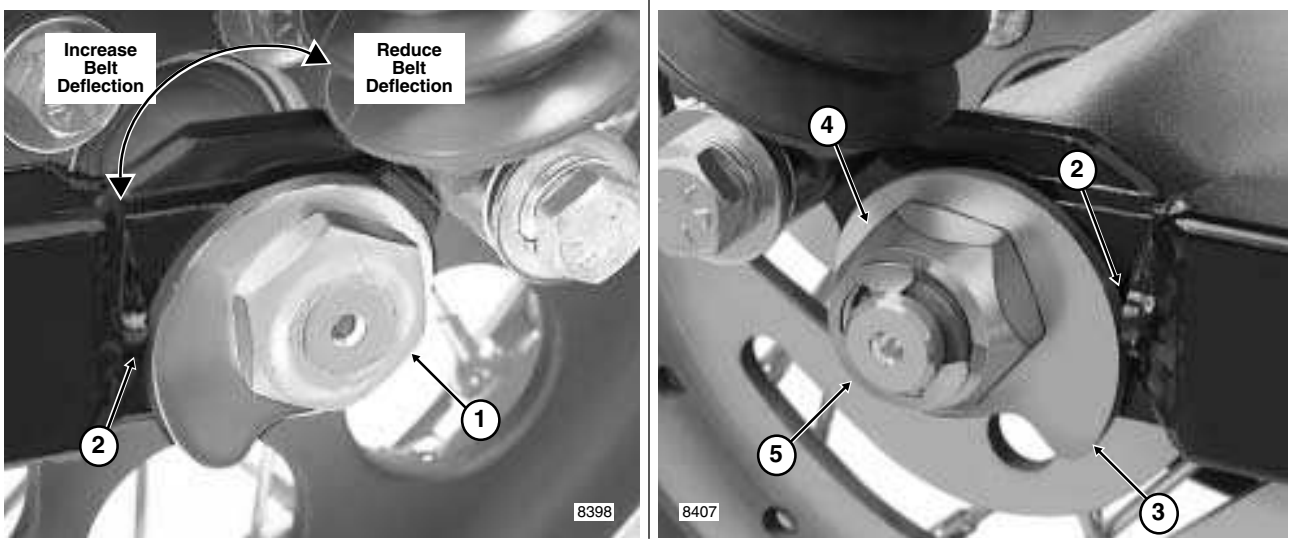

1. Weld Nut
2. Weld Nub
3. Adjuster Cam
4. Cone Nut
5. E-Clip

Figure 2-103. Move Rear Wheel Forward Until Adjuster Cams Just Contact Weld Nubs

d. If belt is still too tight, repeat steps 18(a) through 18(c). If belt is now too loose, move to step 17.

19. **Holding** weld nut on left side of axle, tighten cone nut on right side to 95-105 ft-lbs (128.8-142.4 Nm).

NOTE

If the axle moves during tightening of the cone nut, then the belt deflection procedure must be restarted.

20. Recheck belt deflection to verify that it is still within specification.

    If the belt deflection is not within specification, loosen cone nut and then snug to 15-20 ft-lbs (20-27 Nm) before returning to step 17.

21. With the flat side out, install **new** E-clip in groove on right side of axle.

22. Depress rear brake pedal several times to set brake pads to proper operating position within caliper.

WARNING

After servicing brakes and before moving motorcycle, pump brakes to build brake system pressure. Insufficient pressure can adversely affect brake performance, which could result in death or serious injury. (00279a)

23. On models equipped with low profile shock absorbers (FLHS and FLHX), install left side lower saddlebag support rail as follows:

    a. At rear left side of motorcycle, start outside T40 TORX screw (and flange nut) to fasten saddlebag support rail to saddlebag support bracket.

    b. Start T40 TORX screw to fasten opposite end of saddlebag support rail to frame weldment.

    c. Alternately tighten screws to 15-20 ft-lbs (20-27 Nm).

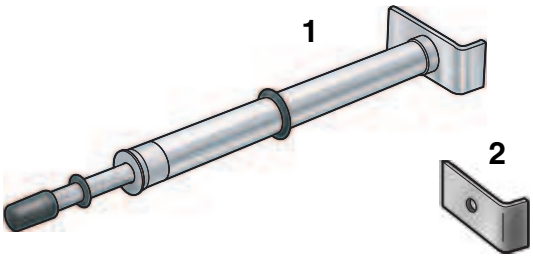

1. Belt Tension Gauge (Part No. HD-35381A)
2. Belt Tension Gauge Adapter (Part No. HD-35381-3)

Figure 2-104. Obtain Belt Tension Gauge

24. Install left side muffler as follows:

NOTE

TORCA clamps have eliminated the need for silicone or graphite tape during assembly. To ensure sealing integrity and prevent the possibility of leakage, always discard TORCA clamps whenever they are removed.

a. Slide **new** TORCA clamp onto free end of crossover pipe.

b. Using a bungee cord, tie muffler to lower saddlebag support rail. Install muffler on crossover pipe. Place TORCA clamp into position between crossover pipe and muffler.

c. Install two screws (with lockwashers) to fasten the muffler to the lower saddlebag support rail. Alternately tighten screws to 96-144 **in-lbs** (10.8-16.3 Nm).

d. Verify that exhaust pipes are in alignment and do not contact the motorcycle frame or mounted components.

e. Tighten the TORCA clamp to 45-60 ft-lbs (61-81 Nm).

f. Open worm drive clamps and install heat shield on crossover pipe. Position each worm drive clamp so that screw is on the outboard side in the most accessible position and then tighten to 20-40 **in-lbs** (2.3-4.5 Nm).

g. Remove bungee cord from muffler.

NOTE

Verify that the exhaust pipes and heat shields do not contact the motorcycle frame or any mounted components. Contact will cancel the effect of the rubber isolation mounts and transmit vibration to the rider.

25. Install socket screw with lockwasher to fasten passenger footboard to rear swingarm bracket. Tighten screw to 30-35 ft-lbs (40.7-47.5 Nm). Repeat step on opposite side of motorcycle.

26. Install saddlebags. See Section 2.26 SADDLEBAG, INSTALLATION.

NOTE

At the required service interval (see Section 1.2 MAINTENANCE SCHEDULE), remove the decorative chrome plugs in the rear swingarm brackets and check the torque on the pivot shaft locknuts. See Figure 2-105. Holding right side nut on the pivot shaft, tighten left side locknut to 40-45 ft-lbs (54-61 Nm). Then hold left side nut and tighten right side locknut using the same torque value.

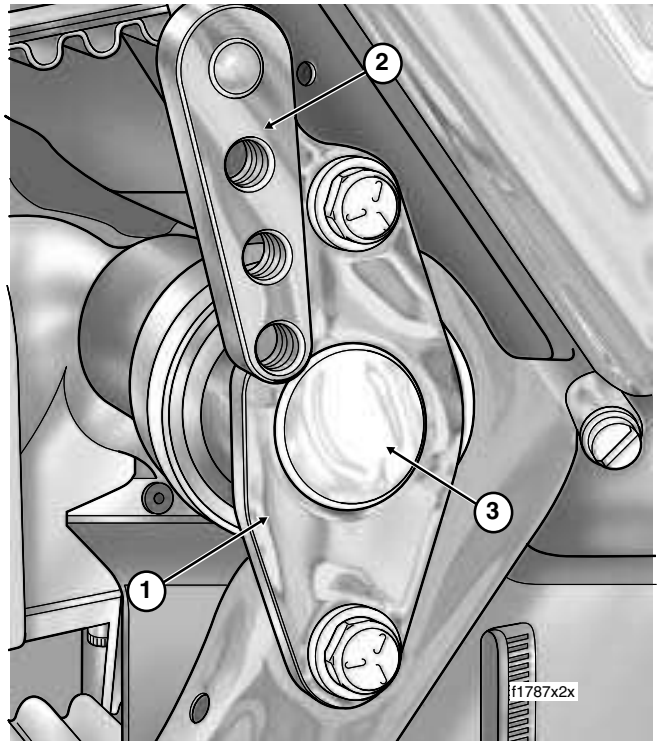

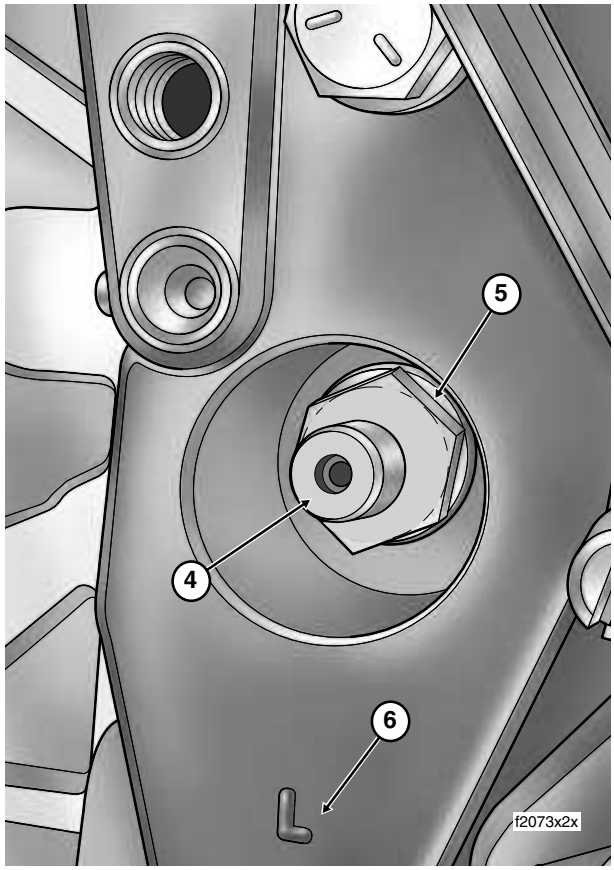

1. **Rear Swingarm Bracket**
2. **Passenger Footboard Bracket**
3. **Chrome Plug**
4. **Pivot Shaft**
5. **Locknut**
6. **L(eft) Side Casting Stamp**

Figure 2-105. Remove Chrome Plugs and Check Pivot Shaft Locknut Torque (Left Side View)

THROTTLE CABLES (NON-CRUISE) 2.21

ADJUSTMENT

NOTE

For throttle and idle cable adjustment or replacement on cruise equipped models, see Section 8.31 CRUISE CONTROL (FLHRC, FLHTCU, FLTR).

The throttle control must operate freely without binding. With the tension adjuster screw backed off, the throttle grip must freely return to the closed (idle) position. The throttle control also must open and close freely when the front wheel is turned to both the right and left fork stops. If the throttle grip does not return to the idle position freely, check the adjuster screw tension. If the adjuster screw is backed off, inspect the cables for short bends.

⚠WARNING

Do not overtighten the tension adjuster screw. An overtightened screw will prevent the engine from automatically returning to idle in an emergency situation. This can lead to loss of vehicle control, which could result in death or serious injury.

1. Slide rubber boot off throttle cable adjuster mechanism. See Figure 2-106. Holding cable adjuster with a 3/8 inch wrench, loosen jam nut turning in a clockwise direction. Back jam nut away from cable adjuster until it stops. Turn cable adjuster clockwise until it contacts jam nut. Repeat procedure on idle cable adjuster.
2. Point the front wheel straight ahead. Gently turn the throttle grip so that the throttle is wide open (fully counterclockwise) and then hold in position. Now turn the cable adjuster counterclockwise until the throttle cam stop just touches the stop plate on the carburetor/induction module. See Figure 2-107. Release the throttle grip, turn cable adjuster counterclockwise an additional 1/2-1 full turn, and then tighten the jam nut against the cable adjuster. Cover cable adjuster mechanism with rubber boot.
3. Turn the front wheel full right. Turn the idle cable adjuster counterclockwise until the cable housing just touches the spring in the cable guide (as seen through slot). Work the throttle grip to verify that the throttle cable returns to the idle position when released. If the cable does not return to idle, turn the cable adjuster clockwise slightly until the correct response is achieved. Tighten jam nut against the cable adjuster and cover cable adjuster mechanism with rubber boot.

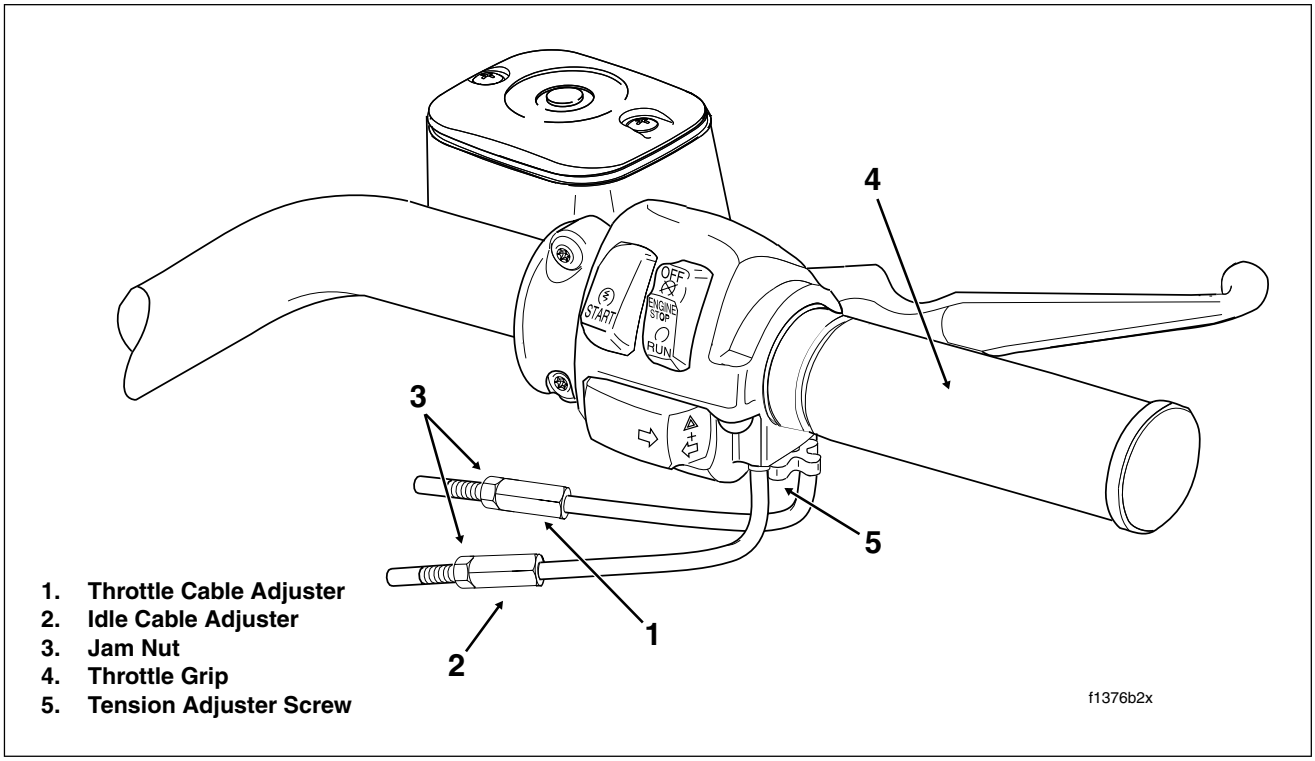

1. **Throttle Cable Adjuster**
2. **Idle Cable Adjuster**
3. **Jam Nut**
4. **Throttle Grip**
5. **Tension Adjuster Screw**

Figure 2-106. Throttle Cable Assembly - Throttle Side (FLHR)

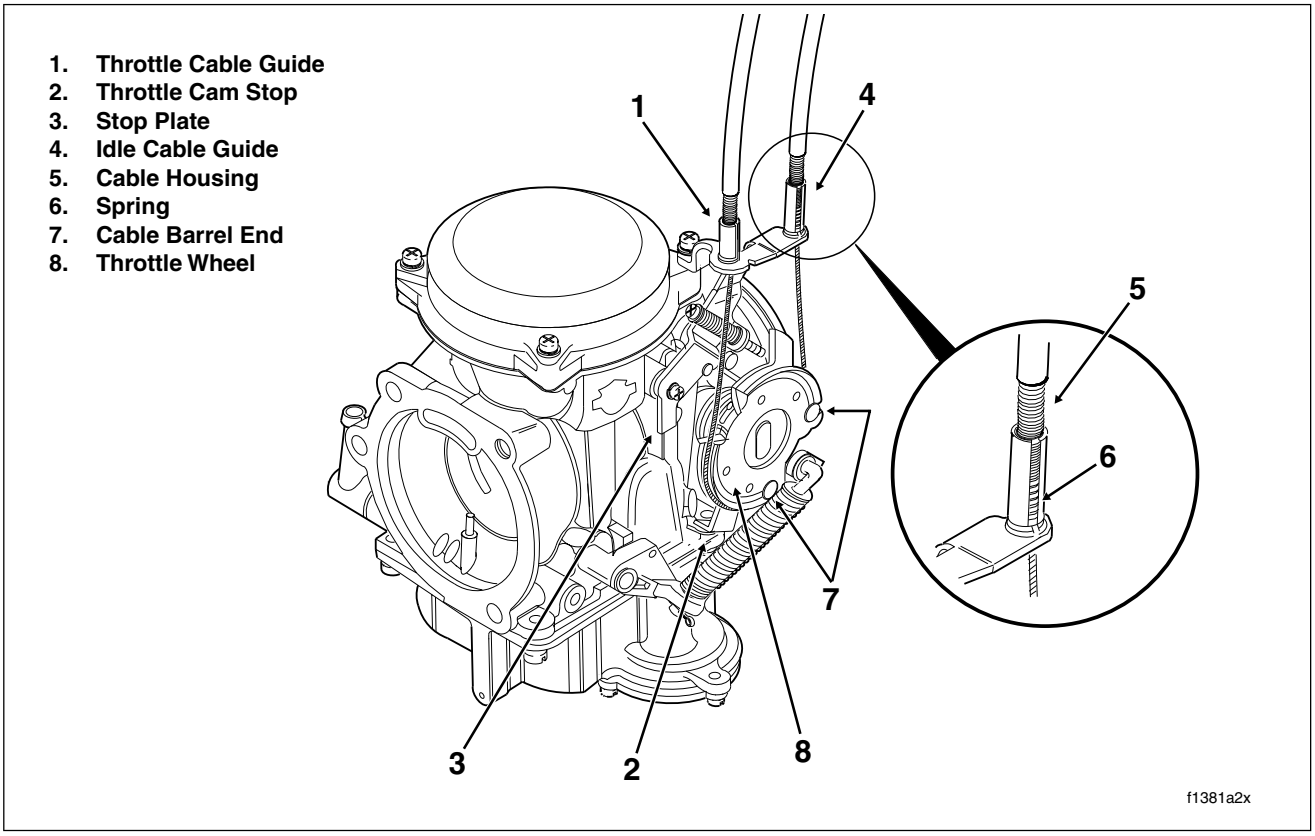

Figure 2-107. Throttle Cable Assembly - Carburetor Side

REMOVAL

THROTTLE SIDE

CAUTION

Do not remove the switch housing assembly without first placing the 5/32 inch (4.0 mm) cardboard insert between the brake lever and lever bracket. Removal without the insert may result in damage to the rubber boot and plunger of the Front Stoplight Switch.

NOTE

Use the eyelet of an ordinary cable strap if the cardboard insert is not available.

1. Place the cardboard insert between the brake lever and lever bracket. See Figure 2-108.
2. Using a T25 TORX drive head, remove the upper and lower switch housing screws.
3. Using a T27 TORX drive head, loosen the upper screw securing the handlebar clamp to the master cylinder housing. Remove the lower clamp screw with flat washer.

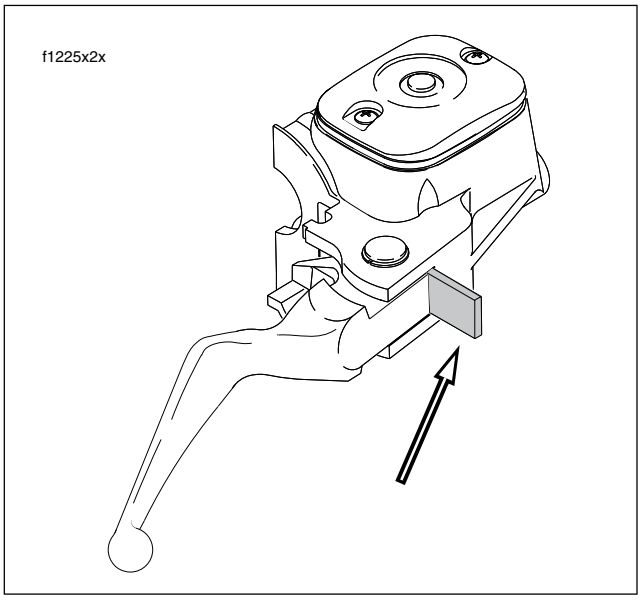

Figure 2-108. Install Cardboard Insert

4. Remove the brass ferrules from the notches on the inboard side of the throttle control grip. Remove the ferrules from the cable end fittings.

5. Remove the friction shoe from the end of the tension adjuster screw.

NOTE

The friction shoe is a loose fit and may fall out or become dislodged if the lower switch housing is turned upside down or shaken.

6. Remove the throttle control grip from the end of the handlebar.

7. Pull the crimped inserts at the end of the throttle and idle cable housings from the lower switch housing.

   For best results, use a rocking motion while pulling. Place a drop of light oil on the retaining rings, if necessary. Remove the cables from the switch housing.

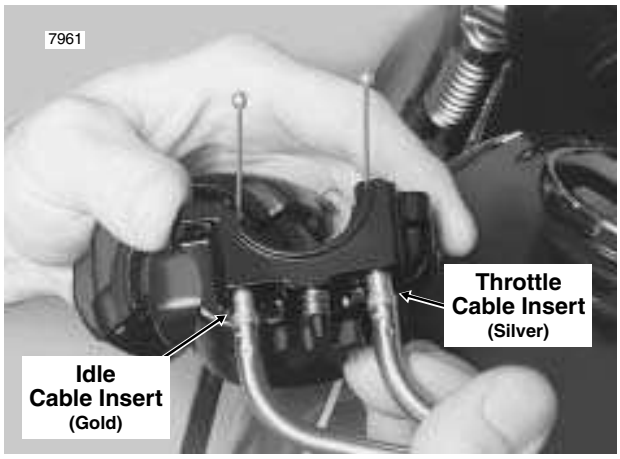

Figure 2-109. Install Throttle/Idle Cables in Lower Switch Housing

CARBURETOR/INDUCTION MODULE SIDE

1. Remove the air cleaner and backplate. See Section 4.5 AIR CLEANER, REMOVAL.

2. Raise fuel tank to access cables in area of frame backbone. For carbureted models, see Section 4.7 FUEL TANK (CARBURETED), PARTIAL REMOVAL, FLHX, FLHT, or FLHR/S. For fuel injected models, see Section 9.4 FUEL TANK (FUEL INJECTED), PARTIAL REMOVAL, FLHXI, FLHT/C/U/I, FLTRI, or FLHR/C/S/I.

3. **Carbureted:** Using a needle nose pliers, carefully pull idle cable barrel from upper inboard hole in throttle wheel. Pull throttle cable barrel from remaining hole. Release idle and throttle cables from guides in throttle cable bracket. See Figure 2-107.

   Induction Module: Using a needle nose pliers, carefully pull idle cable barrel from upper hole in throttle wheel. Pull throttle cable barrel from lower hole. Using slots, release idle and throttle cables from guides in throttle cable bracket. See Figure 2-111.

4. Free cables from J-clamp riveted to right side of frame backbone.

5. If present, remove screw (with flat washer) to release J-clamp from wellnut in right side of steering head. Remove J-clamp from cables.

CLEANING AND INSPECTION

1. Clean all parts in a non-flammable cleaning solvent and blow dry with compressed air.

2. Inspect the cables for damage or wear. Replace the cables if frayed, kinked or bent.

3. Obtain tube of Lubit-8 Tufoil Chain and Cable Lube (HD Part No. 94968-85TV- 1/4 fl. oz.). Insert pin of tube between throttle cable and cable housing. Squirt a few drops of lubricant into cable housing moving pin around cable OD. Repeat the procedure squirting a few drops between the idle cable and cable housing.

INSTALLATION

THROTTLE SIDE

1. Apply a light coating of graphite to the handlebar and inside surface of the switch housings.

2. Push the throttle and idle cables into the lower switch housing until they snap in place. See Figure 2-109. Proceed as follows:

   Note the different diameter inserts crimped into the end of the throttle and idle cable housings.

   Push the larger diameter insert (silver) on the throttle cable housing into the larger hole in front of the tension adjuster screw.

   Push the smaller diameter insert (gold) on the idle cable housing into the smaller hole at the rear of the tension adjuster screw.

NOTE

To aid assembly, place a drop of light oil on the retaining rings of the crimped inserts. Always replace the retaining rings if damaged or distorted.

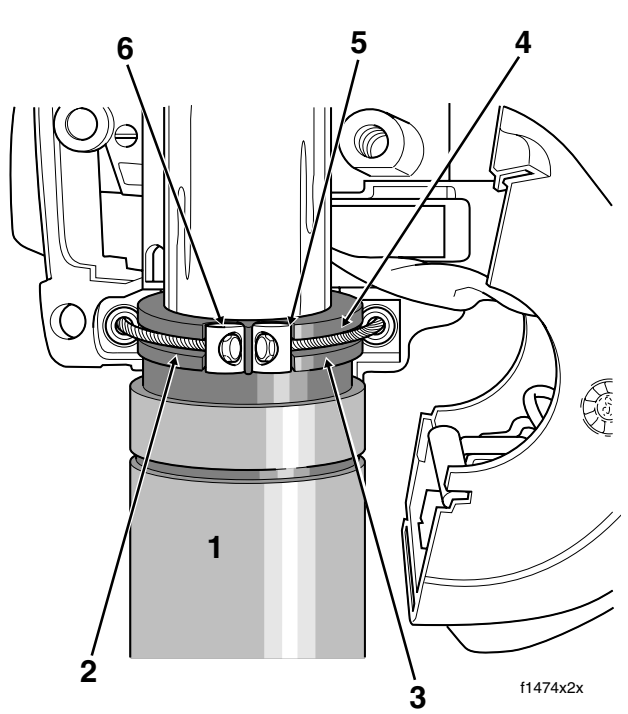

1.	Throttle Grip	4.	Groove
2.	Idle Cable	5.	Notch
3.	Throttle Cable	6.	Ferrule

Figure 2-110. Install Throttle/Idle Cables

3. With the concave side facing upward, install the friction shoe so that the pin hole is over the point of the adjuster screw.

NOTE

The friction shoe is a loose fit and may fall out or become dislodged if the lower switch housing is turned upside down or shaken.

4. Slide the throttle control grip over the end of the right handlebar until it bottoms against the closed end. Rotate the grip so that the ferrule notches are at the top. To prevent binding, pull the grip back about 1/8 inch (3.2 mm).
5. Position the lower switch housing beneath the throttle control grip. Install the brass ferrules onto the cables so that the end fittings seat in the ferrule recess. Seat the ferrules in their respective notches on the throttle control grip. Verify that the cables are captured in the grooves molded into the grip. See Figure 2-110.
6. Position the upper switch housing over the handlebar and lower switch housing. Verify that the wire harness conduit runs in the depression at the bottom of the handlebar.
7. Start the upper and lower switch housing screws, but do not tighten.
8. Position the brake lever/master cylinder assembly inboard of the switch housing assembly engaging the tab on the lower switch housing in the groove at the top of the brake lever bracket.
9. Align the holes in the handlebar clamp with those in the master cylinder housing and start the lower screw (with flat washer). Position for rider comfort. Beginning with the top screw, tighten the screws to 60-80 **in-lbs** (6.8-9.0 Nm) using a T27 TORX drive head.
10. Using a T25 TORX drive head, tighten the lower and upper switch housing screws to 35-45 **in-lbs** (4-5 Nm).

NOTE

Always tighten the lower switch housing screw first so that any gap between the upper and lower housings is at the front of the switch assembly.

11. Remove the cardboard insert between the brake lever and lever bracket.
12. Turn the Ignition/Light Key Switch to IGNITION and apply brake lever to test operation of brake lamp.

CARBURETOR/INDUCTION MODULE SIDE

1. Route the throttle and idle cables as follows:

   FLHX, FLHT/C: Route the cables downward following the brake line to the inner fairing. Pass the cables through the inner fairing grommet and then loop them toward the rear along the right side of the steering head.

   FLHR/C: Route the cables downward following the right handlebar to the handlebar clamp shroud. Pass the cables through the opening in the shroud and then loop them toward the rear along the right side of the steering head. Capture cables in J-clamp and then start screw (with flat washer) to fasten J-clamp to wellnut in right side of steering head. Tighten screw to 9-18 **in-lbs** (1.0-2.0 Nm).
2. Route the throttle and idle cables rearward along the right side of the frame backbone. After passing through J-clamp riveted to frame backbone, route cables downward to carburetor/induction module.
3. **Carbureted:** Install sleeve on throttle cable housing into shorter cable guide in throttle cable bracket. Drawing throttle cable downward, fit barrel end into lower outboard hole in throttle wheel. Install sleeve and spring on idle cable housing into longer cable guide inserting barrel end into upper inboard hole in throttle wheel. See Figure 2-107.

   Induction Module: Install sleeve on throttle cable housing into cable guide at top of throttle cable bracket. Drawing throttle cable downward, fit barrel end into lower hole in throttle wheel. Install sleeve and spring on idle cable housing into cable guide at bottom of throttle cable bracket inserting barrel end into upper hole in throttle wheel. See Figure 2-111.

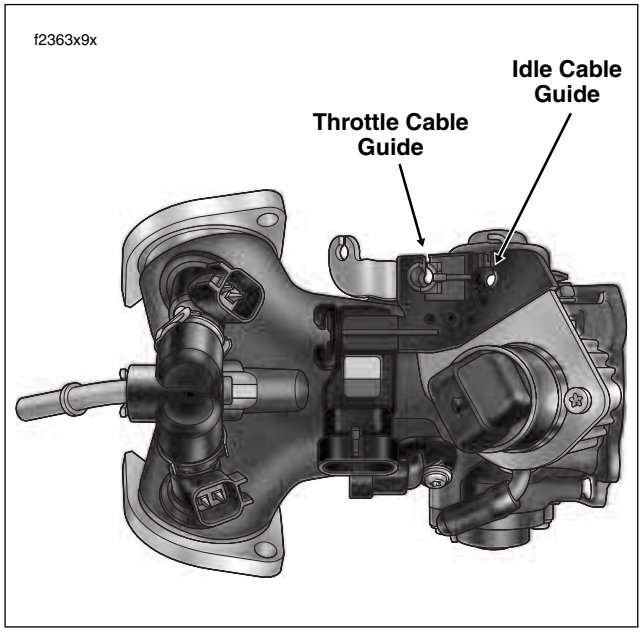

Figure 2-111. Throttle Cable Assembly - Induction Module Side

4. Tighten cables as necessary to keep barrel ends from dislodging. Verify that cables are seated in channel of throttle wheel. Verify operation by turning throttle grip and observing cable action. Adjust throttle cables as described under ADJUSTMENT.

5. Install fuel tank. For carbureted models, see Section 4.7 FUEL TANK (CARBURETED), INSTALLATION (AFTER PARTIAL REMOVAL), INSTALLATION (AFTER PARTIAL REMOVAL), or FLHR/S. For fuel injected models, see Section 9.4 FUEL TANK (FUEL INJECTED), INSTALLATION (AFTER PARTIAL REMOVAL), FLHXI, FLHT/C/U/I, FLTRI, or FLHR/C/S/I.

6. Install the air cleaner assembly. See Section 4.5 AIR CLEANER, INSTALLATION.

LUBRICATION

1. See REMOVAL, THROTTLE SIDE, in this section, steps 1-5.

2. Move upper switch housing to the side in order to access lower housing.

⚠CAUTION

Lubit-8 Tufoil Chain and Cable Lube contains detergents. Keep out of reach of children. Contact with eyes may result in minor or moderate injury.

3. Obtain tube of Lubit-8 Tufoil Chain and Cable Lube (HD Part No. 94968-85TV- 1/4 fl. oz.). Insert pin of tube between throttle cable and cable housing inside lower switch housing. Squeeze tube to squirt a quantity of lubricant into cable housing moving pin around cable OD. See Figure 2-112.

4. Repeat the procedure squirting a quantity of lubricant between the idle cable and cable housing.

5. See INSTALLATION, THROTTLE SIDE, in this section, steps 3-12.

6. Turn the Ignition/Light Key Switch to IGNITION and apply brake lever to test operation of brake lamp.

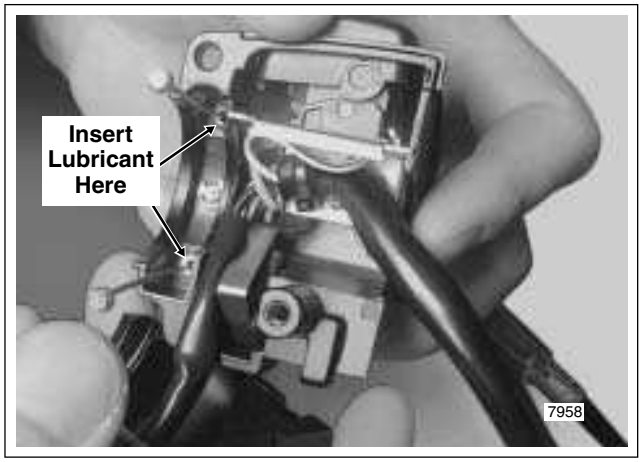

Figure 2-112. Right Handlebar Lower Switch Housing

CLUTCH CABLE 2.22

ADJUSTMENT

See Section 1.8 CLUTCH ADJUSTMENT.

REMOVAL

1. Remove maxi-fuse. See Section 8.3 SYSTEM FUSES, MAXI-FUSE, REMOVAL.
2. To access the clutch release cover assembly, remove right side exhaust system. See Section 2.38 EXHAUST SYSTEM, REMOVAL.
3. Remove the magnetic drain plug at the bottom right side of the oil pan and drain the transmission lubricant into a suitable container. Remove the filler plug/dipstick.
4. Slide rubber boot off clutch cable adjuster. Holding cable adjuster with 1/2 inch wrench, loosen jam nut using 9/16 inch wrench. Back jam nut away from cable adjuster. Move adjuster toward jam nut to introduce free play at hand lever. See Figure 2-113.
5. Remove retaining ring from pivot pin groove at bottom of clutch lever bracket. Remove pivot pin.
6. Remove clutch hand lever from clutch lever bracket. If necessary, remove two T27 TORX screws (with flat washers) to release handelbar clamp from clutch lever bracket.
7. Remove anchor pin and clutch cable eyelet from clutch hand lever. See Figure 2-114.
8. Remove six socket head screws and washers to free clutch release cover from transmission case. Remove and discard gasket. See Figure 2-115.

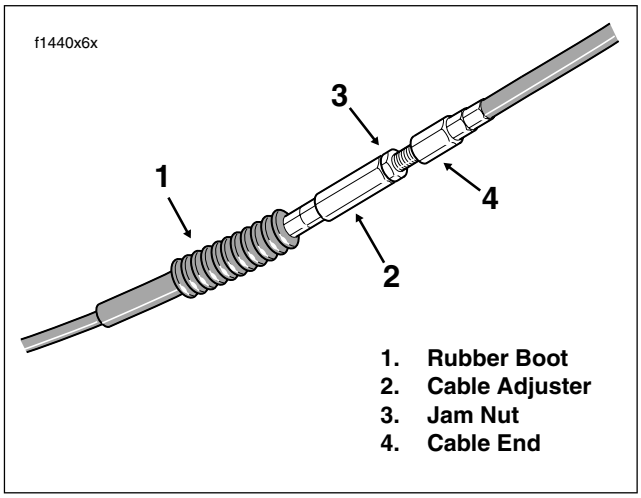

Figure 2-113. Clutch Cable Adjuster Mechanism

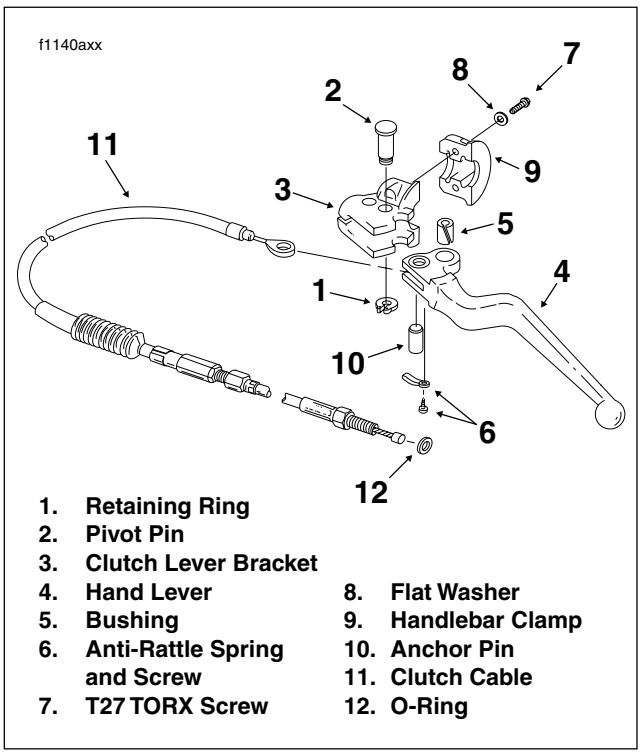

Figure 2-114. Clutch Hand Lever Assembly

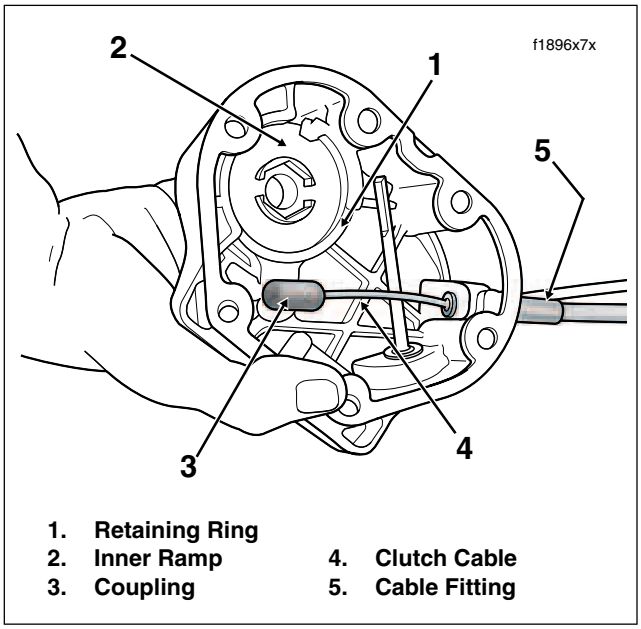

Figure 2-115. Clutch Release Cover Assembly

⚠WARNING

Wear safety glasses or goggles when removing or installing retaining rings. Retaining rings can slip from the pliers and could be propelled with enough force to cause serious eye injury. (00312a)

9. Remove retaining ring securing ball and ramp mechanism to clutch release cover.
10. Lift inner ramp out of clutch release cover and turn the assembly over so that ball sockets are facing outboard. Remove hook of ramp from button on coupling. Remove coupling from clutch cable end.
11. Remove balls from outer ramp sockets. Remove outer ramp from clutch release cover.
12. Unscrew the cable fitting from the clutch release cover. Remove clutch cable and fitting.
13. Cut cable strap in hole of crossbrace to free clutch cable from right frame downtube. See Figure 2-116. Continue as follows:

    FLHR/C/S: Remove T40 TORX screw with flat washer (FLHRS) or acorn nut (FLHR/C) to release clutch cable from P-clamp fastened to upper fork bracket. See Figure 2-117.

    FLTR: Release clutch cable from cable clip anchored in hole on left side of instrument nacelle.

    FLHX, FLHT/C/U: Remove the outer fairing. See Section 2.30 UPPER FAIRING/WINDSHIELD (FLHX, FLHT/C/U), OUTER FAIRING/WINDSHIELD, REMOVAL. Cut cable strap to release clutch cable from left fairing bracket. See Figure 2-118.

14. Remove clutch cable from motorcycle.

NOTE

If ball and ramp or throwout bearing and clutch pushrod need service, see Section 7.5 CLUTCH RELEASE COVER.

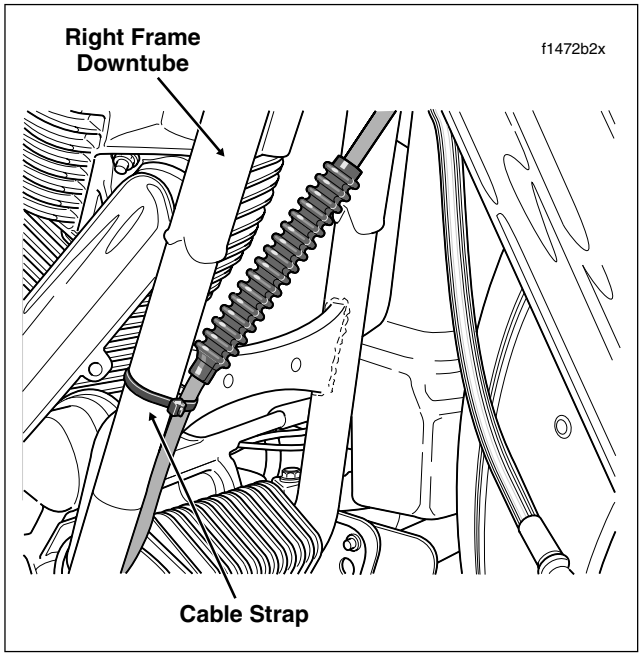

Figure 2-116. Clutch Cable Routing (Right Side View)

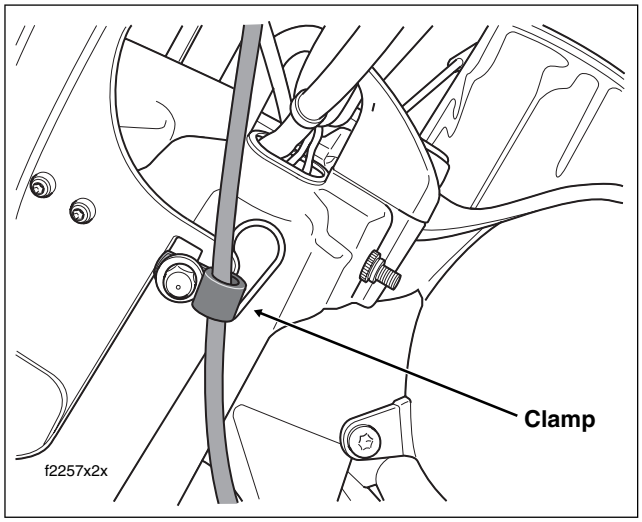

Figure 2-117. Clutch Cable Routing - FLHR/C (Left Side View)

INSTALLATION

1. See Figure 2-114. Insert clutch cable eyelet into groove of clutch hand lever aligning eyelet with hole without bushing. Insert anchor pin through lever and eyelet.
2. Insert lever into groove of clutch lever bracket fitting sleeve at end of cable housing into bore on inboard side of bracket.
3. Align hole in hand lever with hole in bracket and install pivot pin. Install retaining ring in pivot pin groove.
4. If removed, install two T27 TORX screws (with flat washers) to secure handlebar clamp to clutch lever bracket. See Figure 2-114. Starting with the top screw, tighten screws to 60-80 **in-lbs** (6.8-9.0 Nm).
5. Start clutch cable routing as follows:

FLHR/C/S: Capture clutch cable in P-clamp and fasten to upper fork bracket using T40 TORX screw with flat washer (FLHRS) or acorn nut (FLHR/C). Orient P-clamp as shown in Figure 2-117. On left side of steering head, run cable downward between engine guard and front of left frame downtube.

FLTR: Capture clutch cable in cable clip and anchor clip in hole on left side of instrument nacelle. Run cable forward and then rearward beneath instrument nacelle following left side of steering head. Run cable downward between engine guard and front of left frame downtube.

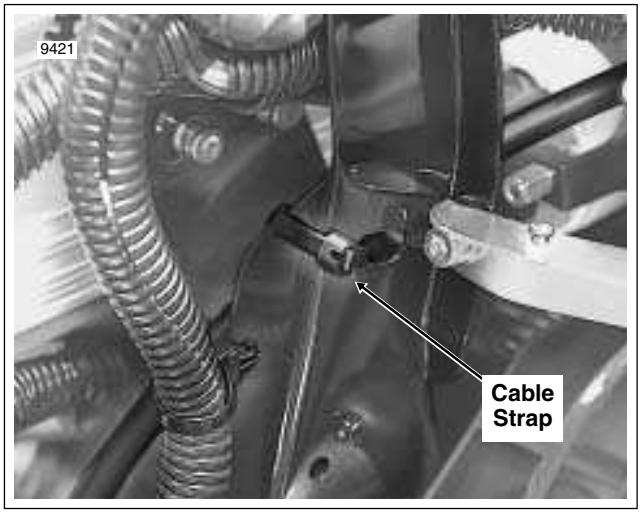

Figure 2-118. Secure Clutch Cable to Fairing Bracket

FLHX, FLHT/C/U: Feed clutch cable through grommet on left side of inner fairing. Route cable on inboard side of left fairing bracket between upper and lower wings of radio (or storage box) support bracket. Cable strap clutch cable to left fairing bracket using oblong hole at this location. See Figure 2-118. Run cable downward along left side of steering head, and then between engine guard and front of left frame downtube. Install the outer fairing. See Section 2.30 UPPER FAIRING/WINDSHIELD (FLHX, FLHT/C/U), OUTER FAIRING/WINDSHIELD, INSTALLATION.

6. Complete clutch cable routing as follows:

   All Models: Continue downward progression while crossing to right side of motorcycle and then run cable between outboard side of voltage regulator and inboard side of right frame downtube. Threading cable strap through hole in crossbrace, secure clutch cable to downtube as shown in Figure 2-116. Following inboard side of frame downtube, route cable between bottom of cam cover and top of lower frame tube to area of clutch release cover.

7. Inspect cable fitting O-ring and replace if damaged or deformed. Install clutch cable fitting into clutch release cover. See Figure 2-115. Do not tighten cable fitting at this time.

8. Place outer ramp in clutch release cover recess with tang in cover slot.

9. Apply a multi-purpose grease to the balls and outer ramp sockets. Place a ball in each of three outer ramp sockets.

10. Hold coupling with button facing outboard. Place cable end in recess of coupling. With ball sockets facing outboard, place hook of inner ramp on button of couplng. Holding inner ramp and coupling together, turn the assembly over.

11. Place inner ramp (ball socket side down) over balls in outer ramp sockets.

⚠WARNING

Wear safety glasses or goggles when removing or installing retaining rings. Retaining rings can slip from the pliers and could be propelled with enough force to cause serious eye injury. (00312a)

12. Install the retaining ring so that the opening is to the right of the outer ramp tang slot in the clutch release cover.

13. Verify that the two locating dowels are in place on the right side of the transmission case. Hang a **new** gasket on the dowels.

14. Holding the clutch release cover in position, install six socket head screws. Tighten screws to 84-132 **in-lbs** (9.5-14.9 Nm).

15. Tighten clutch cable fitting to 36-60 **in-lbs** (4-7 Nm).

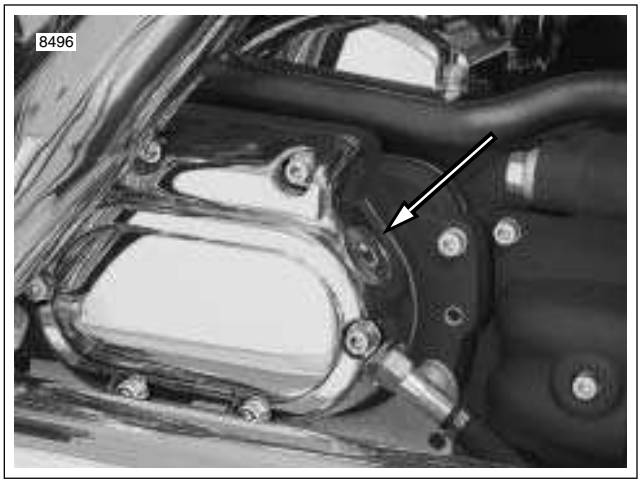

Figure 2-119. Clutch Release Cover

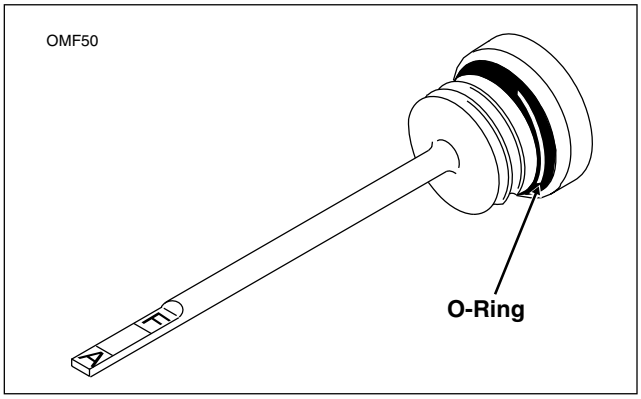

Figure 2-120. Transmission Lubricant Filler Plug/Dipstick

16. Check the O-ring on the transmission drain plug for tears, cuts or general deterioration. Replace as necessary.

CAUTION

Do not overtighten filler plugs or drain plugs. Overtightening plugs can cause leaks.

17. Install transmission the drain plug. Tighten the plug to 14-21 ft-lbs (19-28 Nm).
18. Remove the filler plug from the clutch release cover, if installed. See Figure 2-119. Check the O-ring for tears, cuts or general deterioration. Replace as necessary. See Figure 2-120.
19. Fill the transmission with 20-24 oz. (590-710 ml) of transmission lubricant or until the lubricant level on the dipstick of the filler plug is at the F(ULL) mark with the motorcycle in a level, upright position and the filler plug resting on the threads. Use only Harley-Davidson FORMULA+ TRANSMISSION AND PRIMARY CHAINCASE LUBRICANT, Part No. 99851-05 (quart).
20. Install the transmission filler plug/dipstick in the clutch release cover. Tighten the plug to 25-75 **in-lbs** (2.8-8.5 Nm).
21. Adjust the clutch cable. See Section 1.8 CLUTCH ADJUSTMENT.
22. Install right side exhaust system. See Section 2.38 EXHAUST SYSTEM, INSTALLATION.
23. Install maxi-fuse. See Section 8.3 SYSTEM FUSES, MAXI-FUSE, INSTALLATION.

HANDLEBAR ADJUSTMENT

1. Remove maxi-fuse. See Section 8.3 SYSTEM FUSES, MAXI-FUSE, REMOVAL.
2. **FLHR/C/S:** Remove the handlebar clamp shroud. See Section 2.32 WINDSHIELD/HEADLAMP NACELLE (FLHR/C/S), NACELLE REMOVAL (FLHR/C), steps 1-11, or NACELLE REMOVAL (FLHRS), steps 1-7.

   FLTR: Remove the instrument bezel. See Section 2.31 UPPER FAIRING/WINDSHIELD (FLTR), BEZEL, REMOVAL.

   FLHX, FLHT/C/U: Remove the fairing cap. See Section 2.30 UPPER FAIRING/WINDSHIELD (FLHX, FLHT/C/U), FAIRING CAP, REMOVAL.
3. Loosen rear screws on the upper handlebar clamps. On FLTR models, loosen the front screws instead.
4. Position handlebars for rider posture and comfort.
5. To be sure that the handlebars are centered, verify that the knurled area on the outboard side of the left side handlebar clamp is equal to that on the right side.
6. Snug upper handlebar clamp screws.
7. Slowly turn handlebars to the full right fork stop and then the full left fork stop to be sure there is no contact with the fuel tank. If contact occurs and handlebars are properly aligned, raise handlebars as necessary until the proper clearance is obtained.
8. Tighten the upper handlebar clamp screws to 12-16 ft-lbs (16.3-21.7 Nm).
9. **FLHR/C/S:** Install the handlebar clamp shroud. See Section 2.32 WINDSHIELD/HEADLAMP NACELLE (FLHR/C/S), NACELLE INSTALLATION (FLHR/C), steps 3-15, or NACELLE INSTALLATION (FLHRS), steps 5-13.

   FLTR: Install the instrument bezel. See Section 2.31 UPPER FAIRING/WINDSHIELD (FLTR), BEZEL, INSTALLATION.

   FLHX, FLHT/C/U: Install the fairing cap. See Section 2.30 UPPER FAIRING/WINDSHIELD (FLHX, FLHT/C/U), FAIRING CAP, INSTALLATION.
10. If necessary, adjust left and right handlebar switch controls as follows:
    a. Loosen the two T27 TORX screws securing the handlebar clamp to the clutch lever bracket (left) or master cylinder housing (right).
    b. Position switch controls for rider posture and comfort.
    c. Beginning with the top screw, tighten the screws to 60-80 **in-lbs** (6.8-9.0 Nm).
11. Install maxi-fuse. See Section 8.3 SYSTEM FUSES, MAXI-FUSE, INSTALLATION.

HANDLEBAR REMOVAL

1. Remove maxi-fuse. See Section 8.3 SYSTEM FUSES, MAXI-FUSE, REMOVAL.
2. Place blanket or protective cover over front of fuel tank to protect against scratches or other damage.
3. **FLHR/C/S:** Remove the handlebar clamp shroud. See Section 2.32 WINDSHIELD/HEADLAMP NACELLE (FLHR/C/S), NACELLE REMOVAL (FLHR/C), steps 1-11, or NACELLE REMOVAL (FLHRS), steps 1-7.

   FLTR: Remove the instrument nacelle. See Section 2.31 UPPER FAIRING/WINDSHIELD (FLTR), INSTRUMENT NACELLE, REMOVAL.

   FLHX, FLHT/C/U: Remove the fairing cap. See Section 2.30 UPPER FAIRING/WINDSHIELD (FLHX, FLHT/C/U), FAIRING CAP, REMOVAL. Remove the radio (or storage box). See Section 8.32 ADVANCED AUDIO SYSTEM (FLHX, FLHTC/U, FLTR), RADIO (STORAGE BOX), REMOVAL.
4. Remove the left and right handlebar switch controls. See Section 8.22 HANDLEBAR SWITCHES, REMOVAL.
5. Remove upper handlebar clamp screws (with flat washers). Remove upper handlebar clamps and handlebar.

HANDLEBAR INSTALLATION

1. Place **new** handlebars on lower handlebar clamps. Install upper handlebar clamps and loosely install clamp screws (with flat washers).
2. To be sure that the handlebars are centered, verify that the knurled area on the outboard side of the left side handlebar clamp is equal to that on the right side.
3. Snug upper handlebar clamp screws.
4. Slowly turn handlebars to the full right fork stop and then the full left fork stop to be sure there is no contact with the fuel tank. If contact occurs and handlebars are properly aligned, raise handlebars as necessary until the proper clearance is obtained.

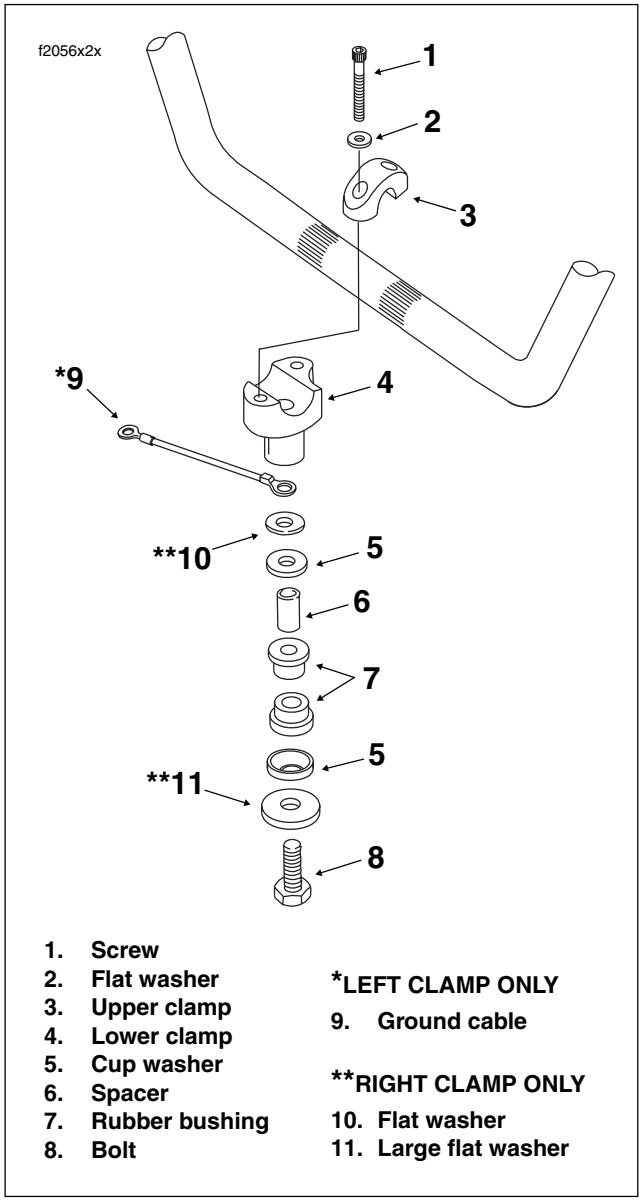

Figure 2-121. Handlebar Clamp Assemblies

5. Tighten upper handlebar clamp screws as follows:
   a. Tighten front screws until upper and lower handlebar clamps make contact.
   b. Tighten rear screws to 12-16 ft-lbs (16.3-21.7 Nm).
   c. Tighten front screws to 12-16 ft-lbs (16.3-21.7 Nm).

NOTE

A slight gap will exist between the upper and lower clamps at the rear of the handlebars after tightening.

6. Install the left hand grip. See LEFT HAND GRIP, INSTALLATION, in this section.
7. Install the left and right handlebar switch controls. See Section 8.22 HANDLEBAR SWITCHES, INSTALLATION.
8. **FLHR/C/S:** Install the handlebar clamp shroud. See Section 2.32 WINDSHIELD/HEADLAMP NACELLE (FLHR/C/S), NACELLE INSTALLATION (FLHR/C), steps 3-15, or NACELLE INSTALLATION (FLHRS), steps 5-13.

   FLTR: Install the instrument nacelle. See Section 2.31 UPPER FAIRING/WINDSHIELD (FLTR), INSTRUMENT NACELLE, INSTALLATION.

   FLHX, FLHT/C/U: Install the fairing cap. See Section 2.30 UPPER FAIRING/WINDSHIELD (FLHX, FLHT/C/U), FAIRING CAP, INSTALLATION. Install the radio (or storage box). See Section 8.32 ADVANCED AUDIO SYSTEM (FLHX, FLHTC/U, FLTR), RADIO (STORAGE BOX), INSTALLATION.
9. Install maxi-fuse. See Section 8.3 SYSTEM FUSES, MAXI-FUSE, INSTALLATION.
10. Turn the ignition/light key switch to IGNITION and test each handlebar switch for proper operation.
11. Apply front brake hand lever to test operation of brake lamp.
12. Adjust idle and throttle control cables as follows:

    Non-Cruise: See Section 2.21 THROTTLE CABLES (NON-CRUISE), ADJUSTMENT.

    Cruise Equipped: See Section 8.31 CRUISE CONTROL (FLHRC, FLHTCU, FLTR), CABLE ADJUSTMENT.

LEFT HAND GRIP

REMOVAL

1. Remove the left handlebar switch controls. See Section 8.22 HANDLEBAR SWITCHES, REMOVAL.
2. Use a sharp blade to carefully cut rubber and then peel off handlebar.
3. Thoroughly clean handlebar to remove all residual adhesive.

INSTALLATION

⚠WARNING

HARLEY-DAVIDSON ADHESIVE contains METHYL ETHYL KETONE, a chemical known to the State of California to cause cancer or other reproductive harm.

⚠WARNING

Use HARLEY-DAVIDSON ADHESIVE in well ventilated areas only. Vapors are flammable and can be harmful to breath. Avoid contact with eyes, mucous membranes, or prolonged contact with skin. Keep out of reach of children.

1. Obtain a **new** left hand grip and HARLEY-DAVIDSON ADHESIVE (Part No. 99839-95). Apply a coat of the adhesive to the inside surface of the grip one inch (25.4 mm) from the open end. Apply a coat to the end of the handlebar.
2. Immediately push grip completely onto end of handlebar using a twisting motion. Do not hesitate when installing grip or adhesive may dry before installation is complete.

NOTE

If the left hand grip is patterned, align it with the pattern on the right grip with the throttle in the fully closed position.

3. Let 6-8 hours elapse (at 70° F.) to allow adhesive to fully cure.
4. Install the left handlebar switch controls. See Section 8.22 HANDLEBAR SWITCHES, INSTALLATION.

RUBBER MOUNTS

NOTE

For complete disassembly of the handlebar clamp assemblies and/or to replace the rubber mounts, proceed as follows.

REMOVAL

General

1. Turn fork to left fork stop and loosen right side bolt at bottom of upper fork bracket. Turn fork to right fork stop and loosen left side bolt at bottom of upper fork bracket.
2. Remove handlebars. See HANDLEBAR REMOVAL in this section.

Right Side

3. Holding lower handlebar clamp to prevent rotation, turn bolt at bottom of upper fork bracket until free.
4. Remove lower handlebar clamp, flat washer and cup washer at top of upper fork bracket. See Figure 2-122.
5. Pull bushing from fork bracket bore and discard. See Figure 2-123.
6. Moving to bottom of upper fork bracket, remove bolt, large flat washer and cup washer. See Figure 2-124.
7. Pull bushing and spacer from fork bracket bore. Remove spacer from bushing. See Figure 2-125. Discard bushing.

Left Side

8. Holding lower handlebar clamp to prevent rotation, turn bolt at bottom of upper fork bracket until free.
9. Remove lower handlebar clamp, ground wire ring terminal and cup washer at top of upper fork bracket.
10. Pull bushing from fork bracket bore and discard. See Figure 2-123.
11. Moving to bottom of upper fork bracket, remove bolt and cup washer.
12. Pull bushing and spacer from fork bracket bore. Remove spacer from bushing. See Figure 2-125. Discard bushing.

INSTALLATION

Right Side

1. Insert spacer into **new** bushing until flush with outboard side of collar. See Figure 2-125.
2. Insert bushing into bore at bottom of upper fork bracket fitting collar of bushing over lip of boss.

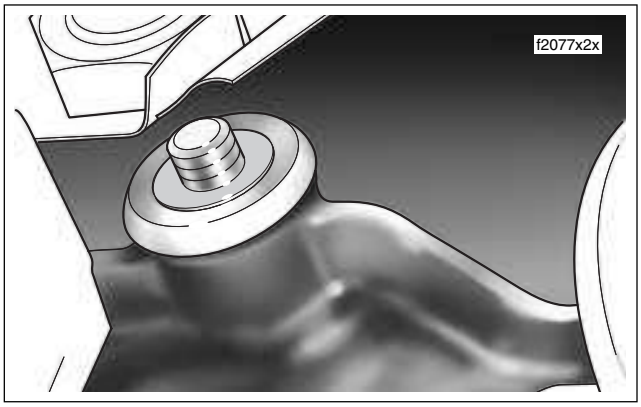

Figure 2-122. Remove Flat Washer and Upper Cup Washer (Right Side)

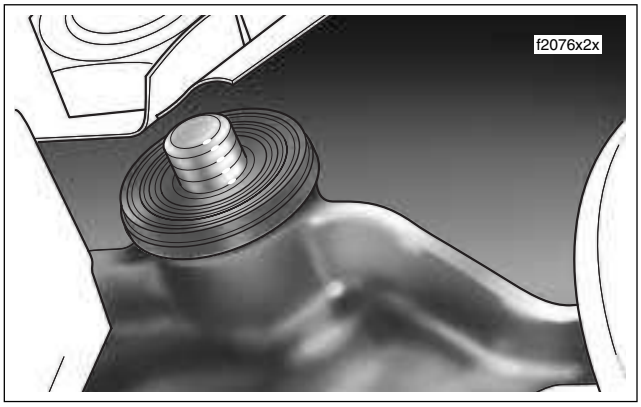

Figure 2-123. Remove Upper Bushing (Right Side)

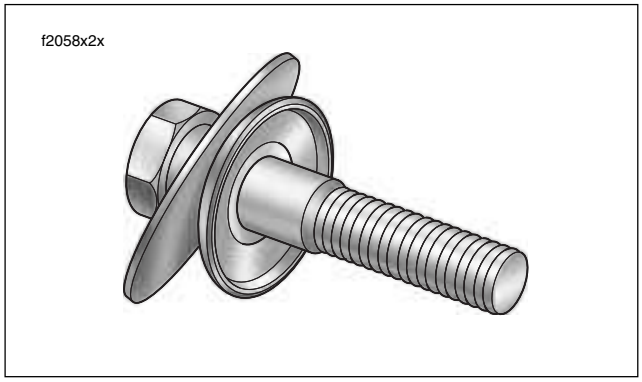

Figure 2-124. Remove Bolt, Large Washer and Lower Cup Washer (Right Side)

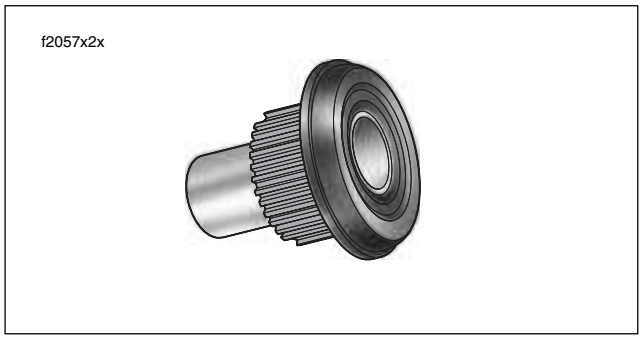

Figure 2-125. Remove Spacer From Lower Bushing

3. Install large flat washer and cup washer on bolt. See Figure 2-124. Insert bolt into bushing fitting concave side of cup washer over collar of bushing.
4. Moving to top of upper fork bracket, insert bushing into bore fitting collar of bushing over lip of boss. See Figure 2-123.
5. Install cup washer over threaded end of bolt fitting concave side over collar of bushing. Install flat washer. See Figure 2-122.
6. Apply two or three drops of Loctite Medium Strength Threadlocker 243 (blue) to threads of bolt and start lower handlebar clamp. Holding clamp to prevent rotation, turn bolt at bottom of upper fork bracket until snug.

Left Side

7. Insert spacer into **new** bushing until flush with outboard side of collar. See Figure 2-125.
8. Insert bushing into bore at bottom of upper fork bracket fitting collar of bushing over lip of boss.
9. Install cup washer on bolt. Insert bolt into bushing fitting concave side of cup washer over collar of bushing.
10. Moving to top of upper fork bracket, insert bushing into bore fitting collar of bushing over lip of boss. See Figure 2-123.
11. Install cup washer over threaded end of bolt fitting concave side over collar of bushing. Install ground wire ring terminal.
12. Apply two or three drops of Loctite Medium Strength Threadlocker 243 (blue) to threads of bolt and start lower handlebar clamp. Holding clamp to prevent rotation, turn bolt at bottom of upper fork bracket until snug.

General

13. Install handlebars and upper handlebar clamps. See HANDLEBAR INSTALLATION in this section, steps 1-5.
14. Turn fork to left fork stop and tighten right side bolt at bottom of upper fork bracket to 30-40 ft-lbs (40.7-54.2 Nm). Turn fork to right fork stop and tighten left side bolt to the same torque value.
15. Complete assembly of motorcycle. See HANDLEBAR INSTALLATION in this section, steps 7-12.

ALL MODELS (EXCEPT FLHX)

Removal

1. Remove acorn nut and lock washer. Remove threaded stem of mirror from hole in clutch or brake lever bracket. See Figure 2-126.

Installation

1. Insert threaded stem of mirror into hole in clutch or brake lever bracket.
2. Install lock washer and acorn nut.
3. Adjust mirror as necessary and tighten acorn nut to 60-96 **in-lbs** (6.8-10.8 Nm).

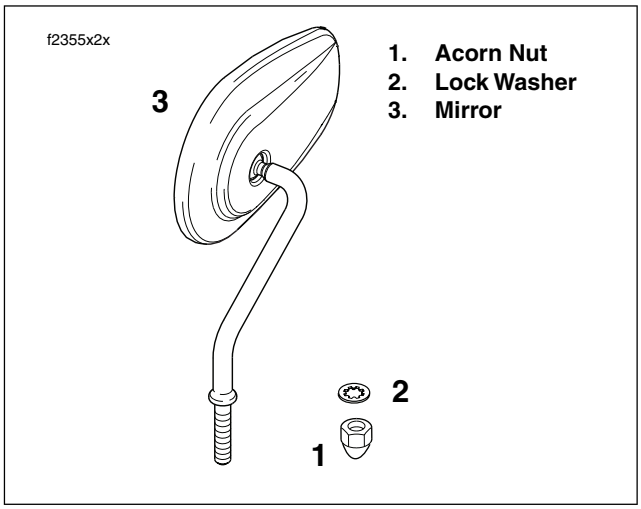

Figure 2-126. Mirror Assembly (All Models Except FLHX)

FLHX

Removal

1. Remove outer fairing. See Section 2.30 UPPER FAIRING/WINDSHIELD (FLHX, FLHT/C/U), OUTER FAIRING/WINDSHIELD, REMOVAL.
2. Standing at front of inner fairing, remove flange nut and plastic washer. Remove mirror. See Figure 2-127.

Installation

1. With the rounded side of the mirror on the outboard side (and the bar and shield logo right side up), insert threaded stud and index pin on swivel block through holes in inner fairing. See Figure 2-128. The letters “L” or “R” are stamped on the swivel blocks to differentiate between left and right side mirrors.
2. With the post on the outboard side, place the plastic washer against the inner fairing engaging two holes in washer with threaded stud and index pin. The letters “L” or “R” are stamped on the posts to differentiate between left and right side washers.
3. Install flange nut on threaded stud and tighten to 20-30 **in-lbs** (2.3-3.4 Nm). See Figure 2-127.
4. Adjust mirror as necessary.
5. Install outer fairing. See Section 2.30 UPPER FAIRING/WINDSHIELD (FLHX, FLHT/C/U), OUTER FAIRING/WINDSHIELD, INSTALLATION.

Figure 2-127. Remove Outer Fairing (FLHX)

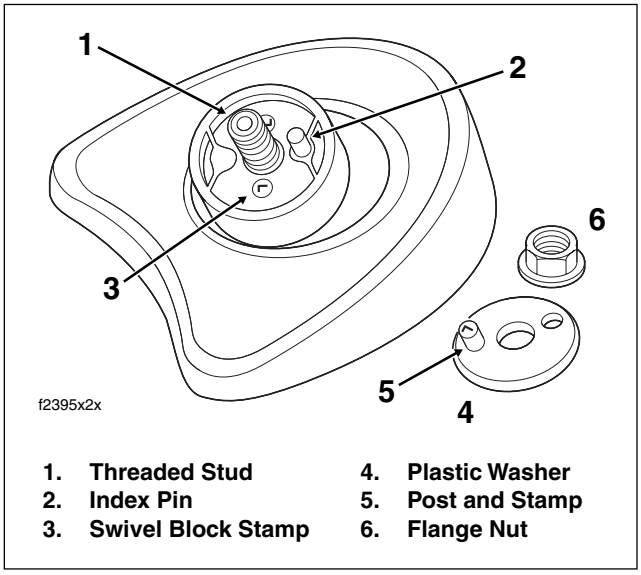

Figure 2-128. Left Side Mirror Assembly (FLHX)

FLHR

REMOVAL

1. Remove Phillips screw to detach passenger seat mounting bracket from top of rear fender. See Figure 2-129. Slightly lift up back of passenger seat and carefully slide toward rear of motorcycle to detach from front seat mounting bracket nuts.

NOTE

The FLHR seat can be converted to a solo seat by removal of the passenger section. When the solo seat configuration is desired, turn the passenger seat upside down and locate the chrome plug pressed into the seat frame hole. See inset of Figure 2-129. Remove the plug and press into the seat retention nut hole using finger pressure only.

2. Using the 5/8 hex, remove two nuts from studs to free front seat mounting bracket from rear fender.

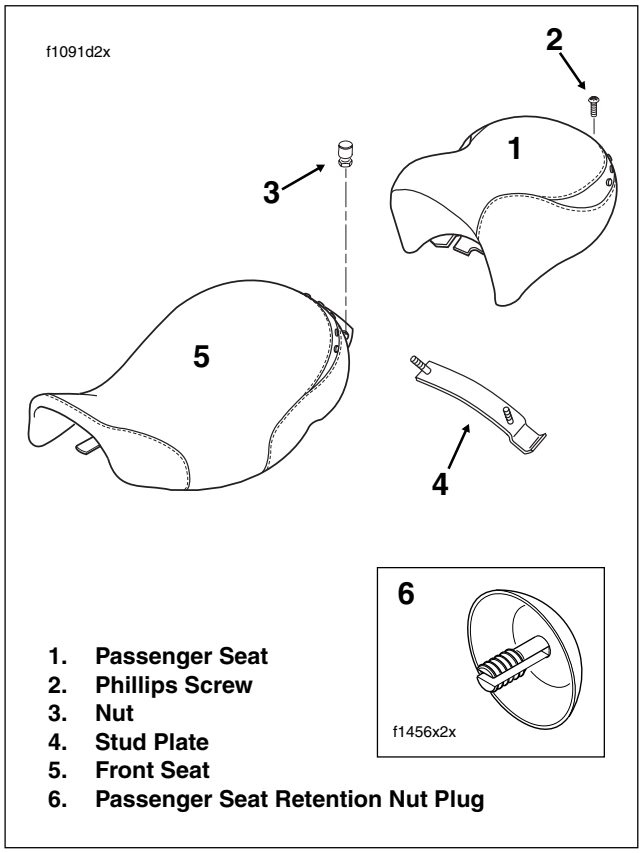

Figure 2-129. Seat Assembly - FLHR

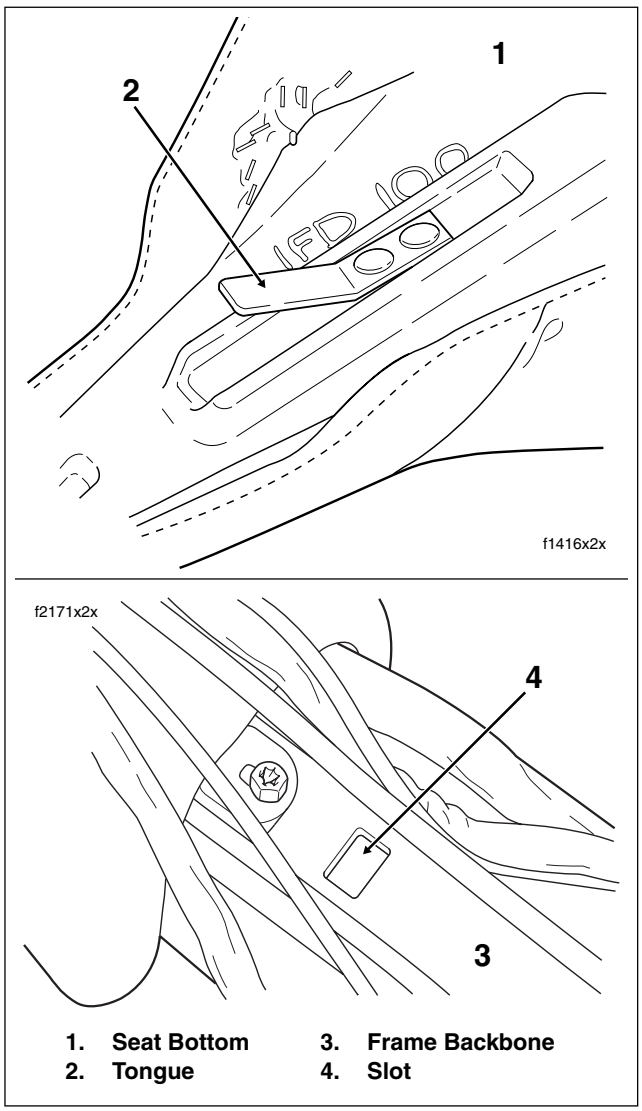

Figure 2-130. Seat Mounting

3. Push front seat rearward to free tongue from slot in frame backbone. See Figure 2-130.

INSTALLATION

1. Position front seat on frame with mounting bracket at rear.
2. Firmly push front of seat downward and rearward until tongue engages slot in frame backbone. See Figure 2-130. Push seat forward until studs are centered in slots of mounting bracket.

3. Using the 5/8 hex, install two nuts on studs to secure front seat mounting bracket to rear fender.
4. Install passenger seat fitting slots on passenger seat front mounting bracket between rounded caps and hex of front seat mounting bracket nuts.
5. Push passenger seat forward until rear fender seat retention nut is centered in hole of rear mounting bracket. Install Phillips screw and tighten to 20-40 **in-lbs** (2.3-4.5 Nm).

NOTE

If seat retention nut is damaged or lost, see SEAT RETENTION NUT REPLACEMENT for instructions.

WARNING

After installing seat, pull upward on front of seat to be sure it is in locked position. While riding, a loose seat can shift causing loss of control, which could result in death or serious injury. (00070a)

FLHRC

REMOVAL

1. Remove right side saddlebag. See Section 2.26 SADDLEBAG, REMOVAL.
2. Remove bolt (with flat washer) to remove passenger seat strap and saddlebag front mounting bracket from chrome frame tube cover.
3. Using slots in seat, carefully pull passenger seat strap from seat. See Figure 2-131.
4. Remove Phillips screw to detach seat mounting bracket from top of rear fender.
5. Push seat rearward to free tongue at front of seat from slot in frame backbone. See Figure 2-130.
6. Remove seat from frame.

INSTALLATION

1. Place seat on frame backbone.
2. Firmly push front of seat downward and rearward until tongue engages slot in frame backbone. See Figure 2-130.
3. Push seat forward until rear fender seat retention nut is centered in hole of mounting bracket. Install Phillips screw and tighten to 20-40 **in-lbs** (2.3-4.5 Nm).

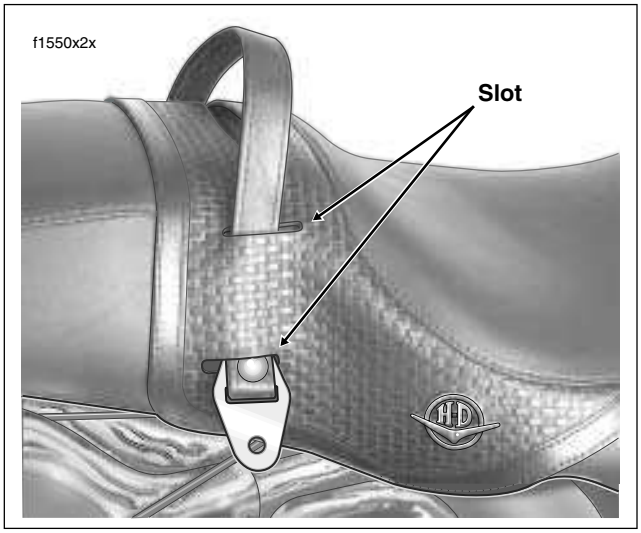

Figure 2-131. Route Passenger Seat Strap Through Slots in Seat - FLHRC

NOTE

If seat retention nut is damaged or lost, see SEAT RETENTION NUT REPLACEMENT for instructions.

WARNING

After installing seat, pull upward on front of seat to be sure it is in locked position. While riding, a loose seat can shift causing loss of control, which could result in death or serious injury. (00070a)

4. Using slots in seat, route free end of passenger seat strap to right side of motorcycle. See Figure 2-131.
5. Insert bolt with flat washer through passenger seat strap and slotted hole of saddlebag front mounting bracket. Insert bolt into forward hole in chrome frame tube cover. Snug saddlebag front mounting bracket bolt, but do not tighten.
6. Install right side saddlebag. See Section 2.26 SADDLEBAG, INSTALLATION.
7. Using an open end/box wrench, tighten saddlebag front mounting bracket bolt to 60-96 **in-lbs** (6.8-10.8 Nm).

FLHRS, FLHX, FLTR

REMOVAL

CAUTION

Removing seat without first removing passenger seat strap will result in damage to rear fender paint.

1. Remove right side saddlebag. See Section 2.26 SADDLEBAG, REMOVAL.
2. Remove bolt (with flat washer) to remove passenger seat strap and saddlebag front mounting bracket from chrome frame tube cover. Draw free end of passenger seat strap to left side of motorcycle.
3. Remove Phillips screw to detach seat mounting bracket from top of rear fender.
4. Push seat rearward to free tongue at front of seat from slot in frame backbone. See Figure 2-130.
5. Remove seat from frame.

INSTALLATION

1. Place seat on frame backbone.
2. Firmly push front of seat downward and rearward until tongue engages slot in frame backbone. See Figure 2-130.
3. Push seat forward until rear fender seat retention nut is centered in hole of mounting bracket. Install Phillips screw and tighten to 20-40 **in-lbs** (2.3-4.5 Nm).

NOTE

If seat retention nut is damaged or lost, see SEAT RETENTION NUT REPLACEMENT for instructions.

WARNING

After installing seat, pull upward on front of seat to be sure it is in locked position. While riding, a loose seat can shift causing loss of control, which could result in death or serious injury. (00070a)

4. Draw free end of passenger seat strap to right side of motorcycle. Insert bolt with flat washer through passenger seat strap and slotted hole of saddlebag front mounting bracket. Insert bolt into forward hole in chrome frame tube cover. Snug saddlebag front mounting bracket bolt, but do not tighten.
5. Install right side saddlebag. See Section 2.26 SADDLEBAG, INSTALLATION.
6. Using an open end/box wrench, tighten saddlebag front mounting bracket bolt to 60-96 **in-lbs** (6.8-10.8 Nm).

FLHT

REMOVAL

CAUTION

Removing seat without first removing passenger seat strap will result in damage to rear fender paint.

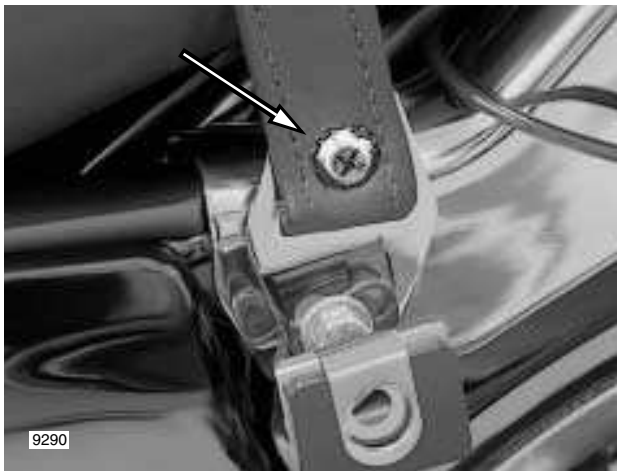

Figure 2-132. Seat Strap Bracket Screw (FLHT/C/U)

1. Remove left side saddlebag. See Section 2.26 SADDLEBAG, REMOVAL.
2. Remove Phillips screw to release passenger seat strap from seat strap bracket. A firm tug may be necessary to free end of strap from slot of seat strap bracket. See Figure 2-132.
3. Draw free end of passenger seat strap to right side of motorcycle.
4. Remove Phillips screw to detach seat mounting bracket from top of rear fender.
5. Push seat rearward to free tongue at front of seat from slot in frame backbone. See Figure 2-130.
6. Remove seat from frame.

INSTALLATION

1. Place seat on frame backbone.
2. Firmly push front of seat downward and rearward until tongue engages slot in frame backbone. See Figure 2-130.
3. Push seat forward until rear fender seat retention nut is centered in hole of mounting bracket. Install Phillips screw and tighten to 20-40 **in-lbs** (2.3-4.5 Nm).

NOTE

If seat retention nut is damaged or lost, see SEAT RETENTION NUT REPLACEMENT for instructions.

WARNING

After installing seat, pull upward on front of seat to be sure it is in locked position. While riding, a loose seat can shift causing loss of control, which could result in death or serious injury. (00070a)

4. Draw free end of passenger seat strap to left side of motorcycle.
5. Start Phillips screw to fasten passenger seat strap to seat strap bracket. Feed end of strap into slot of seat strap bracket and tighten Phillips screw to 48-72 **in-lbs** (5.4-8.1 Nm). See Figure 2-132.
6. Install left side saddlebag. See Section 2.26 SADDLEBAG, INSTALLATION.

FLHTC/U

REMOVAL

1. Remove left side saddlebag. See Section 2.26 SADDLEBAG, REMOVAL.
2. Remove Phillips screw to release passenger seat strap from seat strap bracket. A firm tug may be necessary to free end of strap from slot of seat strap bracket. See Figure 2-132.
3. Draw free end of passenger seat strap to right side of motorcycle.
4. Open Tour-Pak to move passenger seat backrest out of the way.

NOTE

The Tour-Pak must be moved to one of two rearward positions to access the seat mounting bracket screw. If installed in the forward position, remove Tour-Pak and install in a rearward position. See Section 2.27 TOUR-PAK for more information.

5. Remove Phillips screw to detach seat mounting bracket from top of rear fender.
6. To protect finish of Tour-Pak, cover rear seat mounting bracket with palm of hand.
7. While pushing seat forward, raise rear of seat until bracket clears top of Tour-Pak. Push seat rearward slightly to free tongue at front of seat from slot in frame backbone. See Figure 2-130.
8. Remove seat from frame.

INSTALLATION

1. Place seat on frame backbone.
2. To protect finish of Tour-Pak, cover rear seat mounting bracket with palm of hand.
3. While raising rear of seat approximately 3 inches (76.2 mm), use other hand to firmly push front of seat downward and rearward until tongue engages slot in frame backbone. See Figure 2-130.
4. Push seat forward until rear fender seat retention nut is centered in hole of mounting bracket. Install Phillips screw and tighten to 20-40 **in-lbs** (2.3-4.5 Nm).

NOTE

If seat retention nut is damaged or lost, see SEAT RETENTION NUT REPLACEMENT for instructions.

WARNING

After installing seat, pull upward on front of seat to be sure it is in locked position. While riding, a loose seat can shift causing loss of control, which could result in death or serious injury. (00070a)

5. Draw free end of passenger seat strap to left side of motorcycle.
6. Start Phillips screw to fasten passenger seat strap to seat strap bracket. Feed end of strap into slot of seat strap bracket and tighten Phillips screw to 48-72 **in-lbs** (5.4-8.1 Nm). See Figure 2-132.
7. Install left side saddlebag. See Section 2.26 SADDLEBAG, INSTALLATION.

SEAT RETENTION NUT REPLACEMENT

1. Slide retention nut over tapered end of cable strap so that larger OD of nut rests on cable strap eyelet. From bottom of rear fender, feed cable strap up through fender hole.
2. See Figure 2-133. With tab on retention nut seated in notch of fender hole, pull up on cable strap to hold nut snug against underside of rear fender. From the side opposite the tab, slide on the retention washer to lock the position of the retention nut. Remove cable strap.

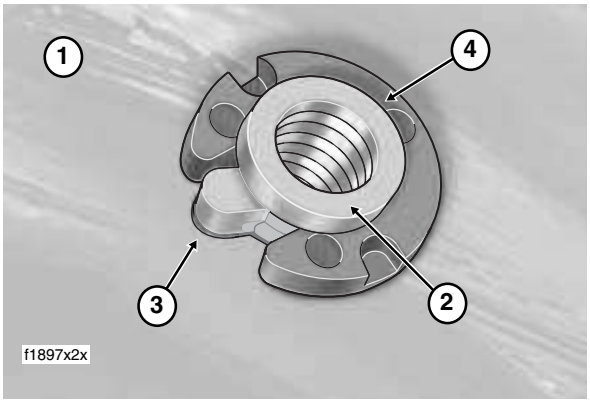

1. **Rear Fender**
2. **Retention Nut**
3. **Tab**
4. **Retention Washer**

Figure 2-133. Seat Retention Nut and Washer

OPENING

NOTE
Maximum recommended load for each saddlebag is 15 lbs.

FLHRC

1. Raise the decorative buckle and press tabs on both sides of catch to release from receptacle. Repeat step to release second catch. See upper frame of Figure 2-134.
2. Rotate hinge on outboard side of saddlebag to open lid.

FLHRS

1. Depress button on front inboard side of saddlebag, and while holding button in, raise lid. See lower frame of Figure 2-134.

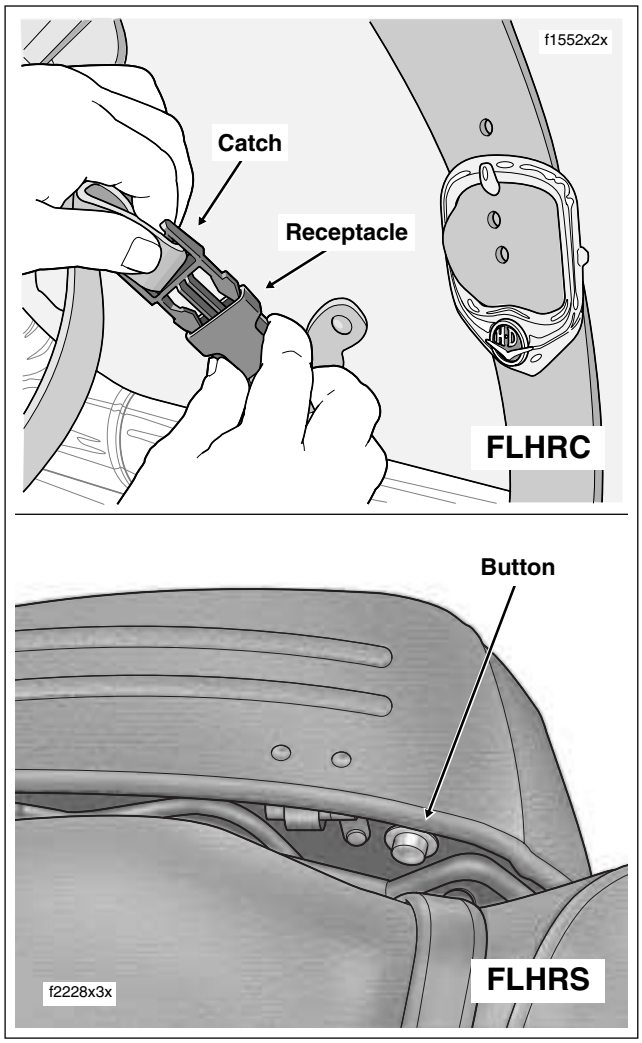

Figure 2-134. Open Saddlebag (FLHRC/S)

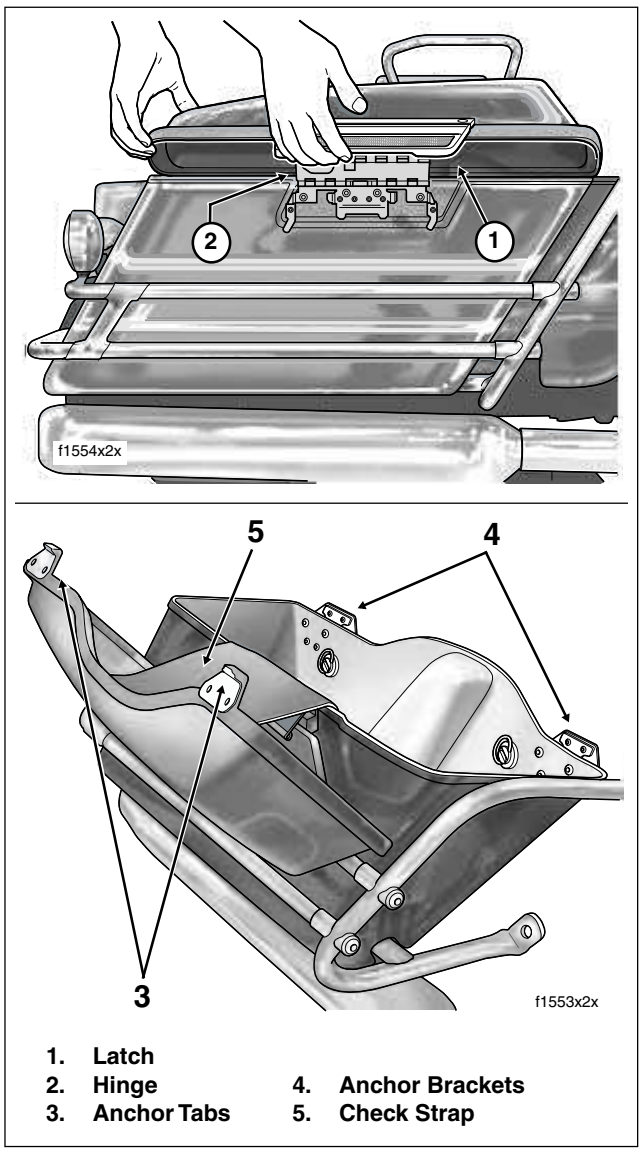

1. Latch
2. Hinge
3. Anchor Tabs
4. Anchor Brackets
5. Check Strap

Figure 2-135. Open Saddlebag (FLHR, FLHX, FLHT/C/U, FLTR)

2. Rotate hinge on inboard side of saddlebag to open lid.

FLHR, FLHX, FLHT/C/U, FLTR

1. Use key to unlock lid latch if locked.
2. Pull bottom of latch outward and then lift upward raising outboard corners of saddlebag lid. See upper frame of Figure 2-135.
3. With top of lid tilted toward motorcycle, carefully lift inboard side of lid upward disengaging front and rear anchor tabs from anchor brackets.

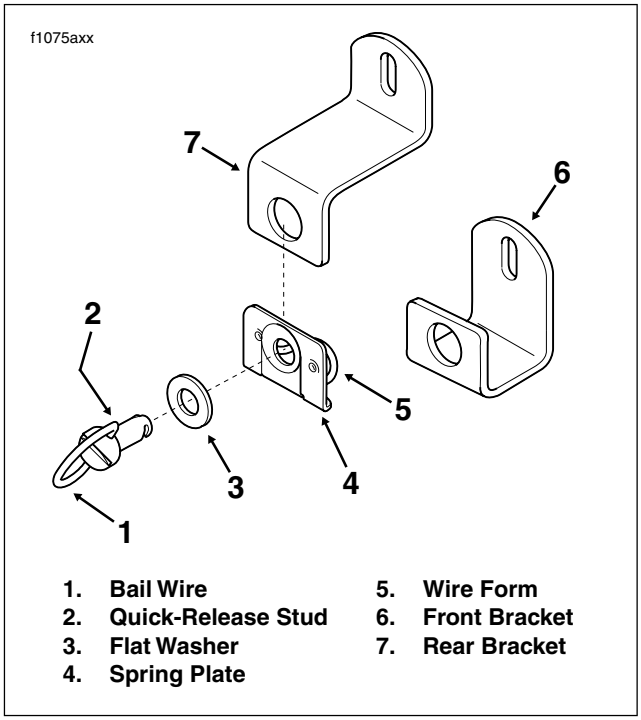

Figure 2-136. Saddlebag Quick-Release Fasteners

4. Pivot lid on latch hinge to open. A nylon check strap suspends the lid in the open position. See lower frame of Figure 2-135.

CLOSING

FLHRC

1. Rotate hinge on outboard side of saddlebag to close lid.
2. Insert catch into receptacle until tabs fully engage. Repeat step to secure second catch. See upper frame of Figure 2-134.

FLHRS

1. Rotate hinge on inboard side of saddlebag to close lid. Lid latches automatically.

FLHR, FLHX, FLHT/C/U, FLTR

1. Rotate lid to closed position engaging both anchor tabs with bottom of anchor brackets. Press bottom of latch inward until it snaps closed. See lower frame of Figure 2-135.
2. Use key to lock lid latch.

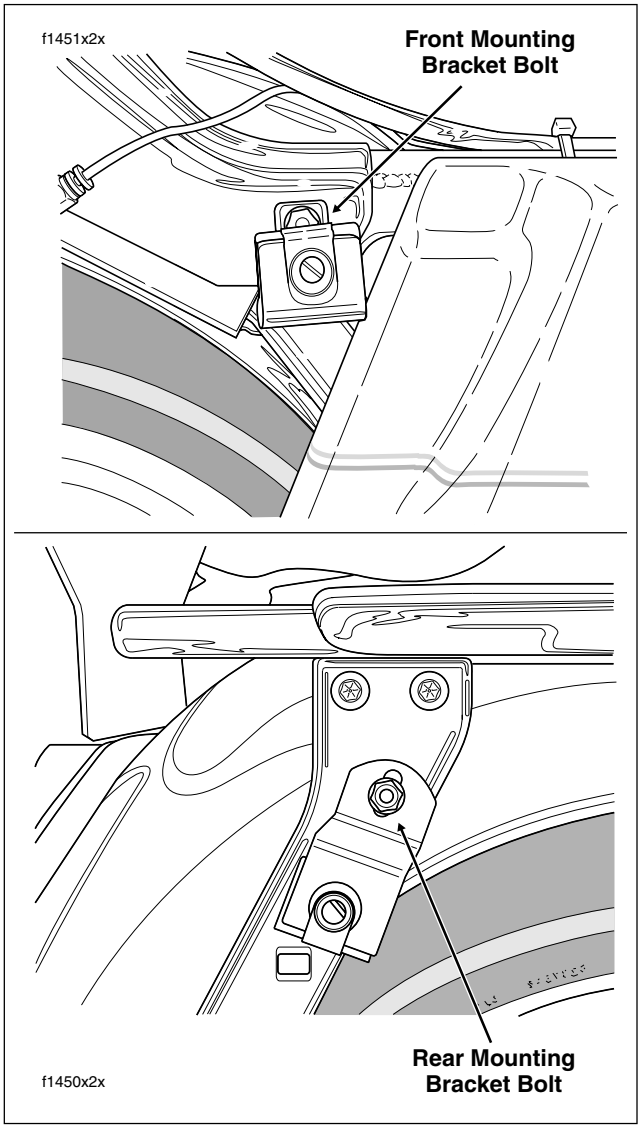

Figure 2-137. Saddlebag Mounting Bracket Bolts (Right Side View)

REMOVAL

1. Open saddlebag. See OPENING in this section.
2. Grasp bail wire inside saddlebag and rotate each stud a full 1/4 turn in a counter-clockwise direction. Remove bail head studs with flat washers. See Figure 2-136.

NOTE

On some HDI motorcycles, the bail wire has been removed from the quick release stud. In these cases, turn the stud by engaging the slotted end with a large screwdriver.

3. Remove saddlebag.

INSTALLATION

1. Position saddlebag on motorcycle.
2. Place flat washers on bail head studs.
3. With groove at end of stud held in a horizontal position, insert stud through holes in saddlebag and front mounting bracket. When groove engages wire form of spring plate on inboard side of bracket, turn stud clockwise a full 1/4 turn until it snaps in place. Install rear bail head stud in the same manner.

NOTE

On some HDI motorcycles, the bail wire has been removed from the quick release stud. In these cases, turn the stud by engaging the slotted end with a large screwdriver.

NOTE

Molded rubber insert at bottom of saddlebag must fit snugly on lower saddlebag support rail. If saddlebag is not fully seated, use an open end/box wrench to loosen bolts securing mounting brackets to saddlebag support and frame. See Figure 2-137. Alternately tighten bolts to 60-96 ***in-lbs*** *(7-11 Nm) after seating saddlebag.*

4. Close saddlebag. See CLOSING in this section.

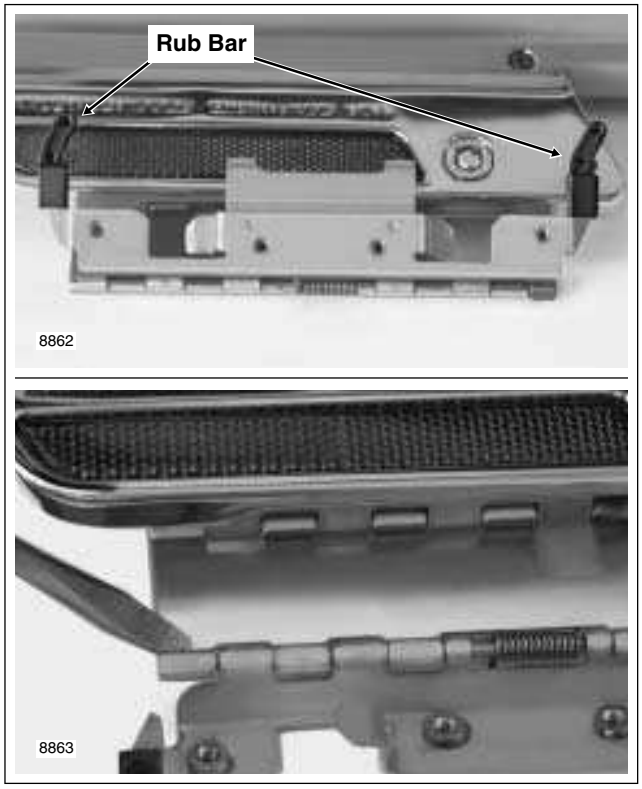

Figure 2-138. Lid Right Side Up With Latch on Near Side

LATCH SPRING REPLACEMENT (FLHR, FLHX, FLHT/C/U, FLTR)

REMOVAL

1. Lay clean pad or blanket on work bench to protect painted surfaces of saddlebag.
2. Remove saddlebag from motorcycle leaving lid open. See REMOVAL in this section.
3. Lay saddlebag flat on pad with the inboard side facing up and the lid closest to you.
4. Remove two T20 TORX screws to release check strap from lid.
5. Remove two T15 TORX screws to release check strap from saddlebag.
6. Remove two remaining T15 TORX screws to remove latch from saddlebag. Move saddlebag back and out of the way.

CAUTION

This procedure assumes that the latch is NOT removed from the saddlebag lid. If there is doubt as to whether the procedure can be accomplished without scratching painted surfaces of the lid, then remove the five remaining T15 TORX screws to completely remove latch.

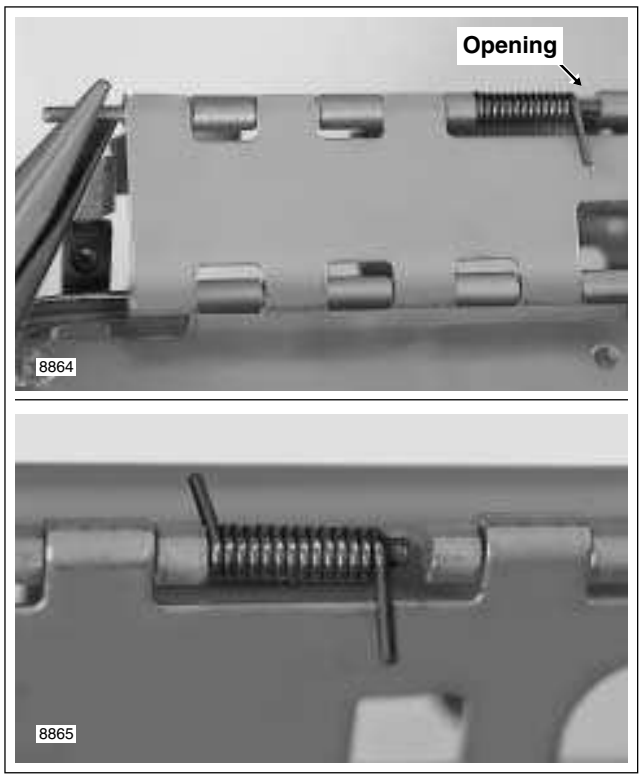

Figure 2-139. Lid Up Side Down With Latch on Far Side

7. Position lid right side up with latch closest to you.
8. Raise latch slightly and rotate hinge on inboard side so that it is topside with the two plastic rub bars pointed upward. See upper frame of Figure 2-138.
9. Rotate rub bar section of hinge to expose hinge pin and spring. Using a flat tip screwdriver, carefully bend crimped end link outward. See lower frame of Figure 2-138.

NOTE

The end link on opposite side of hinge has a weld spot that prevents pin removal.

10. Reposition lid so that it is upside down with the latch farthest from you. Rotate hinge so that plastic rub bars are positioned beneath latch and spring is topside.
11. Using a needle nose pliers, grasp pin through opening just outboard of the spring and push toward the crimped link side. Work pin in this manner until end can be seen exiting crimped link. See upper frame of Figure 2-139. If necessary, pry crimped link outward a little more to achieve the desired result.
12. Grasping end with needle nose pliers, slowly pull pin from links until spring can be slid off opposite end. Only pull pin as far as necessary to remove spring. See lower frame of Figure 2-139.

INSTALLATION

1. Slide **new** spring onto end of pin. Orient spring as shown in lower frame of Figure 2-139.
2. Slide pin back through links. Using tapered end of needle nose pliers, push end of pin into crimped link
3. Reposition lid so that it is right side up with latch closest to you. As before, raise latch slightly and rotate hinge on inboard side so that it is topside with plastic rub bars pointing upward. Now rotate rub bar section of hinge to expose hinge pin and spring. See Figure 2-138.
4. Holding lid down with elbow, if necessary, use a pliers to bend crimped link back into its original position, so that pin is captured and will not back out of hinge.
5. Reposition lid so that it is upside down with the latch farthest from you. Move saddlebag forward for reinstallation of lid. Align four holes in saddlebag with those in latch.
6. Install two inboard T15 TORX screws to fasten latch to saddlebag. Alternately tighten screws to 20-25 **in-lbs** (2.3-2.8 Nm).
7. Align holes in check strap with those in lid and saddlebag. Orient check strap so that logo is topside with the bottom of the bar and shield on the lid side.
8. Install two T15 TORX screws to fasten check strap and latch to saddlebag. Alternately tighten screws to 20-25 **in-lbs** (2.3-2.8 Nm).
9. Install two T20 TORX screws to fasten check strap to lid. Alternately tighten screws to 18-20 **in-lbs** (2.0-2.3 Nm).
10. Close saddlebag and install on motorcycle. See INSTALLATION in this section.

CABLE ASSEMBLY/LATCH/SCRIPT (FLHRS)

CABLE ASSEMBLY

Removal

1. Open saddlebag. See OPENING in this section.
2. Remove two screws on inboard side of saddlebag to release plastic shroud. See upper frame of Figure 2-140.
3. Depress wireform and pull button from hole in saddlebag. See lower frame of Figure 2-140.
4. Remove sleeve from hole in saddlebag.
5. Moving to inboard side of saddlebag lid, remove lock ring from hole at end of latch pin. See left frame of Figure 2-141.
6. Pull latch pin from metal shroud, saddlebag bracket and latch. Remove metal shroud.

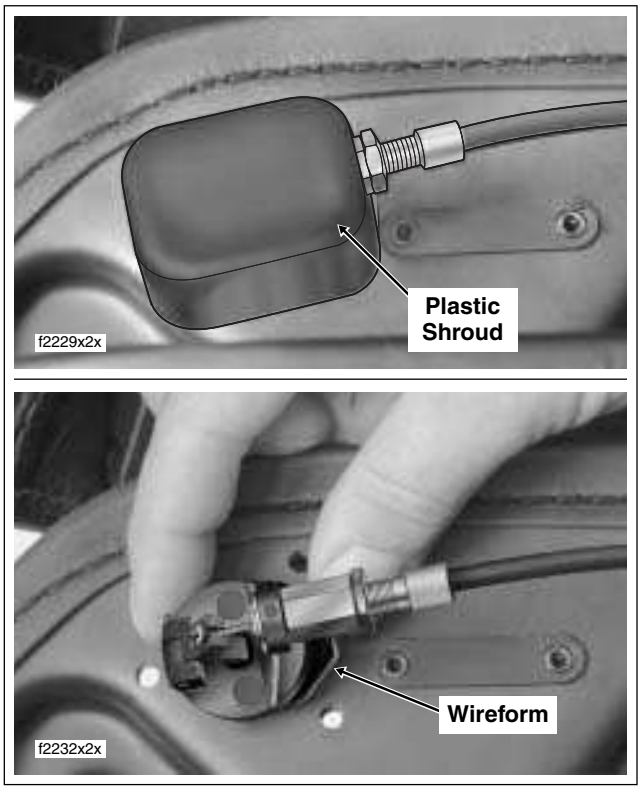

Figure 2-140. Remove Button Assembly

Figure 2-141. Remove Latch Assembly

7. Depress spring and pull on cable ball end to remove from slot in latch. Remove latch.
8. Remove spring from cable. See right frame of Figure 2-141.
9. Remove e-clip from groove in cable end fitting.
10. Pull cable end fitting from hole in saddlebag bracket.
11. Release cable from channel running along inboard edge of saddlebag.

Installation

1. From the outboard side, insert sleeve into hole in saddlebag.
2. On the inboard side, depress wireform and slide button into sleeve. Release wireform. Gently tug on assembly to verify that wireform has engaged groove in sleeve to lock button in place. See lower frame of Figure 2-140.
3. Holding plastic shroud with the relief positioned over the cable adjuster, install two screws from inboard side of saddlebag. See upper frame of Figure 2-140.
4. Capture cable in channel running along inboard edge of saddlebag.
5. Install cable end fitting into hole in saddlebag bracket.
6. With the rounded edge of the e-clip on the same side as the rounded edge of the saddlebag bracket, install e-clip into groove in cable end fitting.
7. Pull up on cable ball end and install spring on cable. See right frame of Figure 2-141.

NOTE

Verify that ball end on opposite side of cable is installed in pivot of button assembly. See Figure 2-142.

8. Position latch between saddlebag bracket with the cable slot inline with the cable ball end. Depress spring and capture cable ball end in slot of latch.
9. Install metal shroud over latch and saddlebag bracket. At rear of assembly, insert latch pin through metal shroud, saddlebag bracket and latch until end exits front hole in shroud.
10. Install lock ring into hole at end of latch pin. See left frame of Figure 2-141.
11. Close and open saddlebag lid several times to verify that latch locks every time. Adjust cable if necessary.

Adjustment

1. Open saddlebag. See OPENING in this section.
2. Remove two screws on inboard side of saddlebag to release plastic shroud. See upper frame of Figure 2-140.
3. Back jam nut away from body hex. See Figure 2-142.
4. Turn body hex toward or away from jam nut until closest part of latch is approximately 3/8 inch (9.5 mm) from inboard side of saddlebag lid.

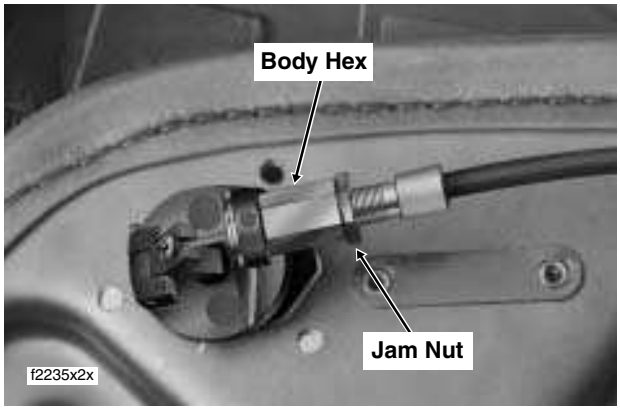

Figure 2-142. Cable Adjustment

5. Turn jam nut until it makes firm contact with body hex.
6. Holding plastic shroud with the relief positioned over the cable adjuster, install two screws from inboard side of saddlebag. See upper frame of Figure 2-140.
7. Close and open saddlebag lid several times to verify that latch locks every time. Readjust if necessary.

LATCH

Removal

1. Open saddlebag. See OPENING in this section.
2. Moving to inboard side of saddlebag lid, remove lock ring from hole at end of latch pin. See left frame of Figure 2-141.
3. Pull latch pin from metal shroud, saddlebag bracket and latch. Remove metal shroud.
4. Depress spring and pull on cable ball end to remove from slot in latch. Remove latch.

Installation

1. Position **new** latch between saddlebag bracket with the cable slot inline with the cable ball end. Depress spring and capture cable ball end in slot of latch.
2. Install metal shroud over latch and saddlebag bracket. At rear of assembly, insert latch pin through metal shroud, saddlebag bracket and latch until end exits front hole in shroud.
3. Install lock ring into hole at end of latch pin. See left frame of Figure 2-141.
4. Close saddlebag. See CLOSING in this section.

SCRIPT

Removal

1. Open saddlebag. See OPENING in this section.

CAUTION

Do not remove push nuts unless script replacement is necessary. Push nuts are damaged during removal and studs on script may be bent or broken.

2. From inside saddlebag, pry push nuts from studs. Discard push nuts.
3. Remove script from side of saddlebag.

Installation

1. Install **new** script on side of saddlebag inserting studs through holes.

CAUTION

Always install push nuts on the end studs first. If center stud is not done last, end stud can sometimes come out of saddlebag hole during installation of the second push nut. If this occurs, forcing the last stud in can bend stud or script and enlarge saddlebag hole.

2. From inside saddlebag, install **new** push nuts onto studs. For best results, install push nuts on the end studs first.
3. Close saddlebag. See CLOSING in this section.

SADDLEBAG GUARD/SUPPORT RAIL

REMOVAL

1. Remove saddlebag from motorcycle. See REMOVAL in this section.
2. Disassemble saddlebag guard, support and/or rails as necessary. See Figure 2-143.

INSTALLATION

1. Assemble saddlebag guard, support and/or rails as necessary. Replace any damaged parts. See Figure 2-143.
2. Install saddlebag on motorcycle. See INSTALLATION in this section.

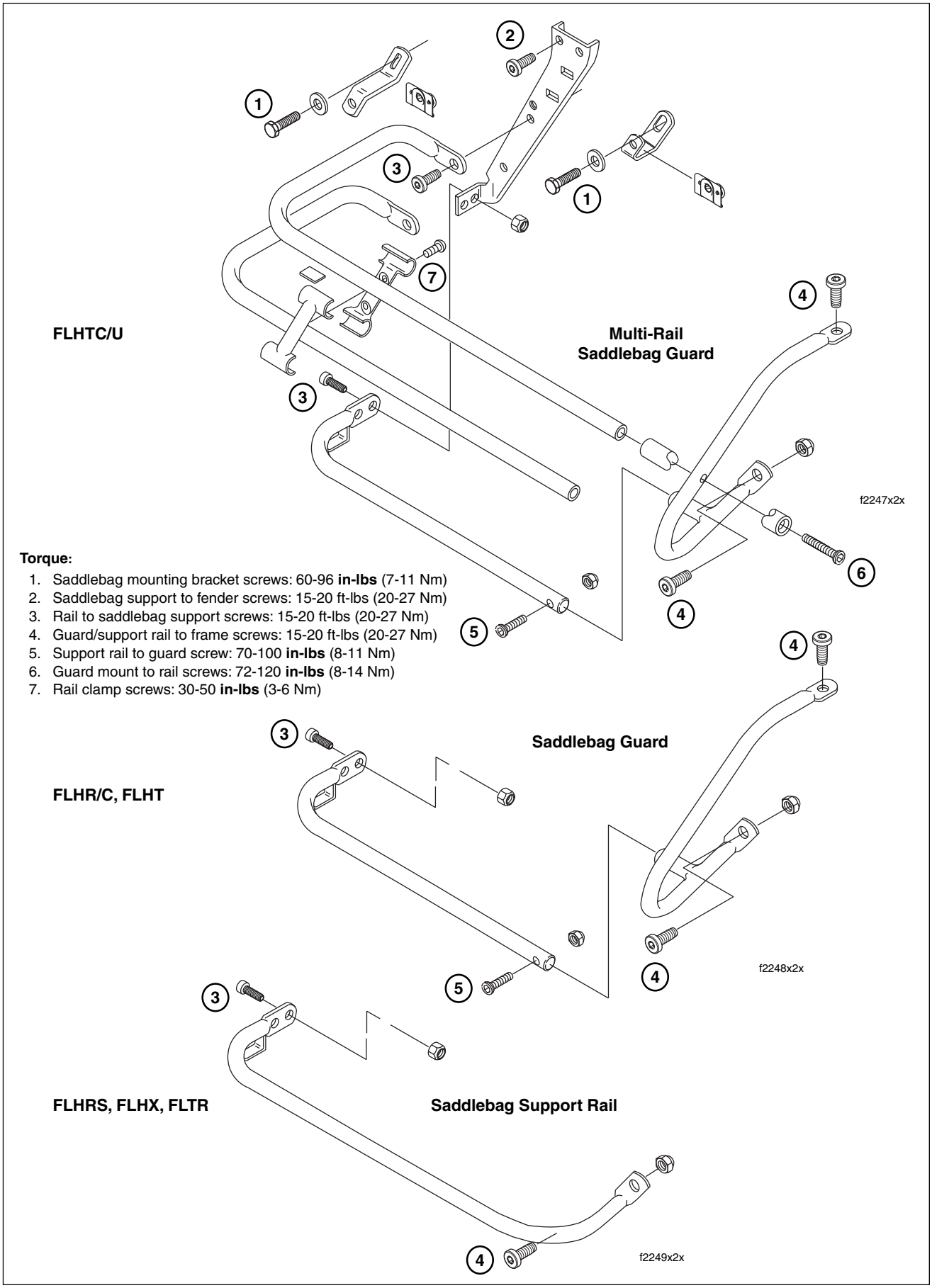

Figure 2-143. Saddlebag Guards/Support Rail

FLHTC

REMOVAL

1. Open Tour-Pak. Remove rubber mat.
2. Rotate knurled lock ring in a counter-clockwise direction to separate pin and socket halves of radio antenna cable connector [51]. Release cable from two adhesive clips at bottom of Tour-Pak.
3. Disconnect Tour-Pak lights connector [12], 3-place Multilock. See Figure 2-144.
4. Pull grommet into Tour-Pak and remove from main harness conduit.
5. Feed main harness conduit and connectors through hole in Tour-Pak. See Figure 2-145.
6. Holding nylon cap locknuts at bottom of luggage rack rail, remove four hex head bolts (with flat washers) from inside Tour-Pak. Luggage rack spacers will become free as locknuts are removed.
7. Holding button head bolt at rear center hole, remove locknut (and flat washer) from inside Tour-Pak to release Tour-Pak from luggage rack. Be sure to have a firm grasp on the Tour-Pak as the bolt is removed. See Figure 2-146.

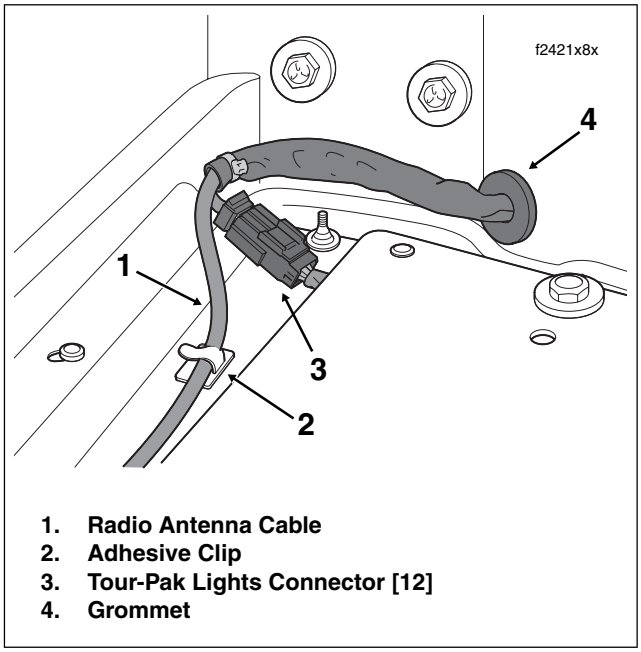

1. **Radio Antenna Cable**
2. **Adhesive Clip**
3. **Tour-Pak Lights Connector [12]**
4. **Grommet**

Figure 2-144. Disconnect Tour-Pak Lights Connector

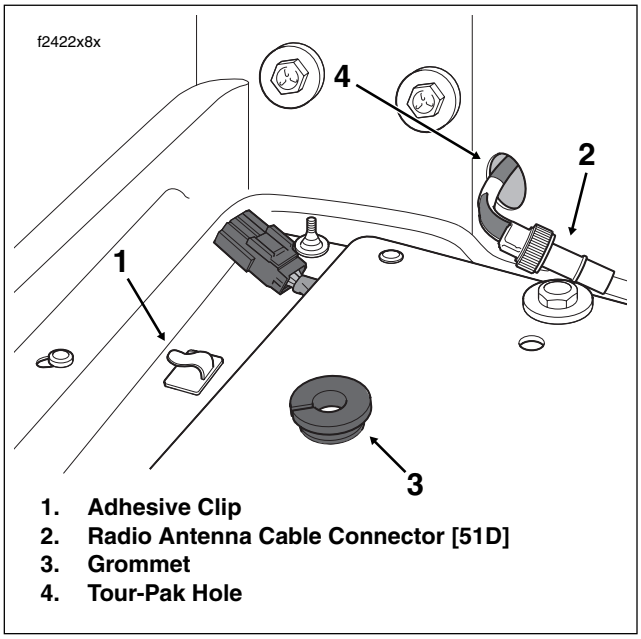

1. **Adhesive Clip**
2. **Radio Antenna Cable Connector [51D]**
3. **Grommet**
4. **Tour-Pak Hole**

Figure 2-145. Feed Main Harness Thru Tour-Pak Hole

INSTALLATION

1. Place Tour-Pak on luggage rack and open lid.
2. Align rear center hole in Tour-Pak with same hole in luggage rack. Slide button head bolt through spacer (concave side up), luggage rack and Tour-Pak holes. From inside Tour-Pak, install flat washer, radio antenna ground ring terminal and locknut on bolt. With concavity on spacer inline with the rail, hold locknut and tighten bolt until snug.

CAUTION

Always install hex head bolts from inside Tour-Pak. If hex head bolts are installed upside down, then loss of a nylon cap could cause the end of a bolt to tear the molded liner and scratch objects, such as helmets, stored inside the Tour-Pak.

3. From inside Tour-Pak, install two hex head bolts (with flat washers) in two front Tour-Pak and luggage rack holes (one each side). At bottom of luggage rack, install spacer (concave side up) and nylon cap locknut on each bolt. With concavity on spacer inline with the rail, hold locknut and tighten each bolt until snug.
4. Position two spacers between bottom of luggage rack and tabs of license plate bracket. Slide two hex head bolts (with flat washers) through two center holes in Tour-Pak and luggage rack, and then through spacers

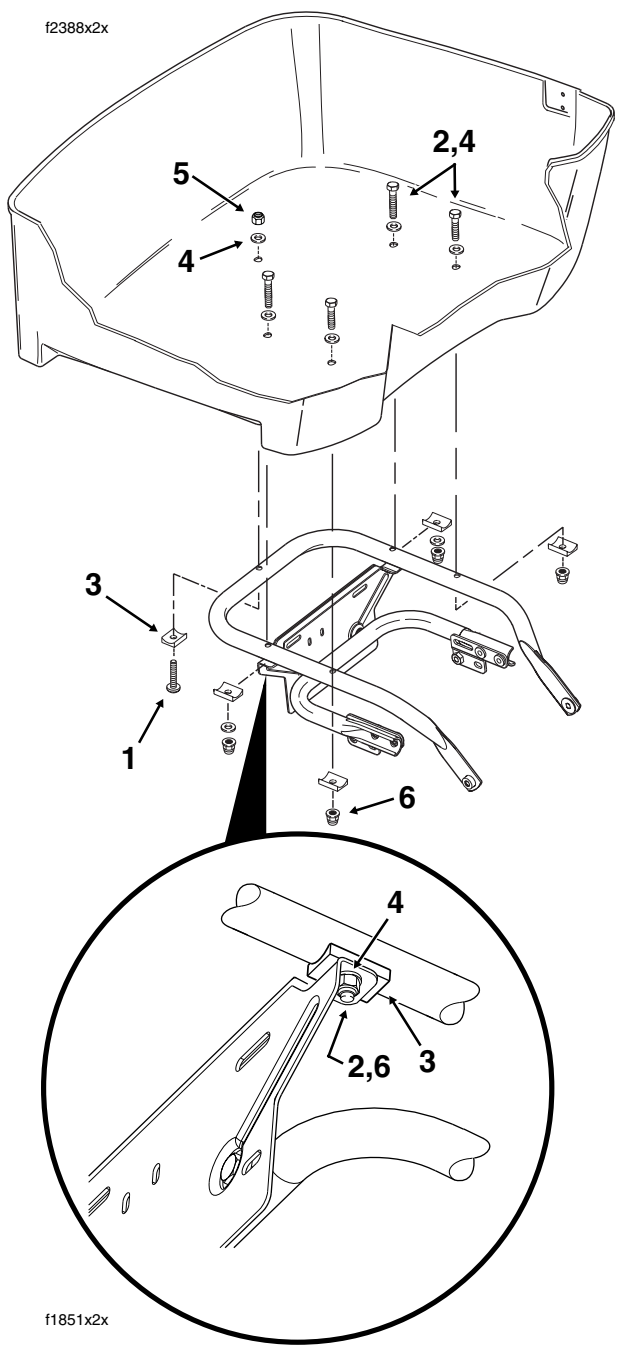

1. **Button Head Bolt- Rear Center Hole (Cap Down)**
2. **Hex Head Bolt (4), 1-3/4 Inch (Cap Up)**
3. **Spacer (5)**
4. **Flat Washer (7)**
5. **Locknut**
6. **Nylon Cap Locknut (4)**

Figure 2-146. Install Tour-Pak Mounting Bolts

and tabs of license plate bracket. If necessary, loosen two hex head bolts at back of license plate bracket to align holes in tabs with bolts. Install flat washers and nylon cap locknuts on bolts and tighten until snug. See inset of Figure 2-146.

5. In a crosswise pattern, alternately tighten five bolts to 96-108 **in-lbs** (10.8-12.2 Nm). Be sure that concavity on each spacer is inline with the rail and has not rotated out of position.
6. Standing on left side of motorcycle, feed socket connectors and main harness conduit through hole in Tour-pak. Capture conduit in grommet. Install grommet in hole with the larger OD facing inside.
7. Connect Tour-pak lights connector [12], 3-place Multilock. See Figure 2-144.
8. Rotate knurled lock ring in a clockwise direction to mate pin and socket halves of radio antenna cable connector [51]. Capture cable in two adhesive clips at bottom of Tour-Pak.
9. Install rubber mat. Close Tour-Pak.

FLHTCU

REMOVAL

1. Open Tour-Pak. Open map pocket and remove acorn nuts (with flat washers). Remove map pocket and molded liner from Tour-Pak.
2. Depress external latch and rotate housing to release bulb socket from left side of Tour-Pak.
3. Rotate knurled lock ring in a counterclockwise direction to separate pin and socket halves of radio antenna cable connector [51]. Release cable from two adhesive clips at bottom of Tour-Pak.
4. Disconnect Tour-Pak lights connector [12], 3-place Multilock. See Figure 2-144.
5. Pull grommet into Tour-Pak and remove from main harness conduit.
6. Feed main harness conduit and connectors through hole in Tour-Pak. See Figure 2-145.
7. Release rear headset receptacle from bracket at bottom of left side speaker box.
8. Remove trim ring and gently pull on wire harness to draw rear speaker/passenger controls connector [42], 6-place Deutsch, out of left side speaker box. Depress external latch and use a rocking motion to separate pin and socket halves.
9. Moving to right side of motorcycle, disconnect CB antenna cable connector [50]. Release cable from two adhesive clips at bottom of Tour-Pak. See Figure 2-147.

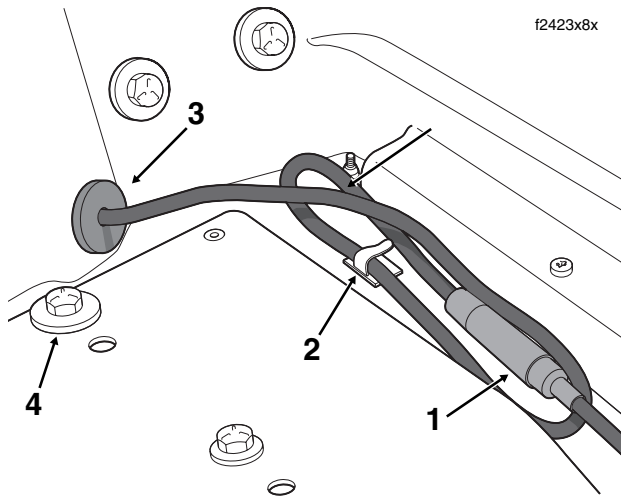

1. **CB Antenna Cable Connector [50]**
2. **Adhesive Clip**
3. **Grommet**
4. **Tour-Pak Mounting Bolt**

Figure 2-147. Disconnect CB Antenna Cable Connector

10. Pull right side grommet into Tour-Pak and remove from CB antenna cable. Feed CB antenna cable through hole in Tour-Pak.
11. Remove trim ring and gently pull on wire harness to draw rear speaker/passenger controls connector [41], 6-place Deutsch, out of right side speaker box. Depress external latch and use a rocking motion to separate pin and socket halves.
12. Holding nylon cap locknuts at bottom of luggage rack rail, remove four hex head bolts (with flat washers) from inside Tour-Pak. Luggage rack spacers will become free as locknuts are removed.
13. Holding button head bolt at rear center hole, remove locknut (and flat washer) from inside Tour-Pak to release Tour-Pak from luggage rack. Be sure to have a firm grasp on the Tour-Pak as the bolt is removed. See Figure 2-146.

INSTALLATION

1. Place Tour-Pak on luggage rack and open lid.
2. Align rear center hole in Tour-Pak with same hole in luggage rack. Slide button head bolt through spacer (concave side up), luggage rack and Tour-Pak holes. From inside Tour-Pak, install flat washer, radio antenna ground ring terminal and locknut on bolt. With concavity on spacer inline with the rail, hold locknut and tighten bolt until snug.

CAUTION

Always install hex head bolts from inside Tour-Pak. If hex head bolts are installed upside down, then loss of a nylon cap could cause the end of a bolt to tear the molded liner and scratch objects, such as helmets, stored inside the Tour-Pak.

3. From inside Tour-Pak, install two hex head bolts (with flat washers) in two front Tour-Pak and luggage rack holes (one each side). At bottom of luggage rack, install spacer (concave side up) and nylon cap locknut on each bolt. With concavity on spacer inline with the rail, hold locknut and tighten each bolt until snug.
4. Position two spacers between bottom of luggage rack and tabs of license plate bracket. Slide two hex head bolts (with flat washers) through two center holes in Tour-Pak and luggage rack, and then through spacers and tabs of license plate bracket. If necessary, loosen two hex head bolts at back of license plate bracket to align holes in tabs with bolts. Install flat washers and nylon cap locknuts on bolts and tighten until snug. See inset of Figure 2-146.
5. In a crosswise pattern, alternately tighten five bolts to 96-108 **in-lbs** (10.8-12.2 Nm). Be sure that concavity on each spacer is inline with the rail and has not rotated out of position.
6. Connect rear speaker/passenger controls connector [41], 6-place Deutsch. Feed connector back up into right side speaker box pressing trim ring into hole.
7. Pass CB antenna cable through hole in Tour-Pak. Capture cable in grommet. Install grommet in hole with the larger OD facing inside.
8. Connect CB antenna cable connector [50]. Capture cable in two adhesive clips at bottom of Tour-Pak. See Figure 2-147.
9. Moving to opposite side of motorcycle, connect rear speaker/passenger controls connector [42], 6-place Deutsch. Feed connector back up into left side speaker box pressing trim ring into hole.
10. Capture rear headset receptacle in bracket at bottom of left side speaker box.
11. Feed socket connectors and main harness conduit through hole in Tour-pak. Capture conduit in grommet. Install grommet in hole with the larger OD facing inside.
12. Connect Tour-pak lights connector [12], 3-place Multilock. See Figure 2-144.
13. Rotate knurled lock ring in a clockwise direction to mate pin and socket halves of radio antenna cable connector [51]. Capture cable in two adhesive clips at bottom of Tour-Pak.
14. Install bulb socket on left side of Tour-pak.

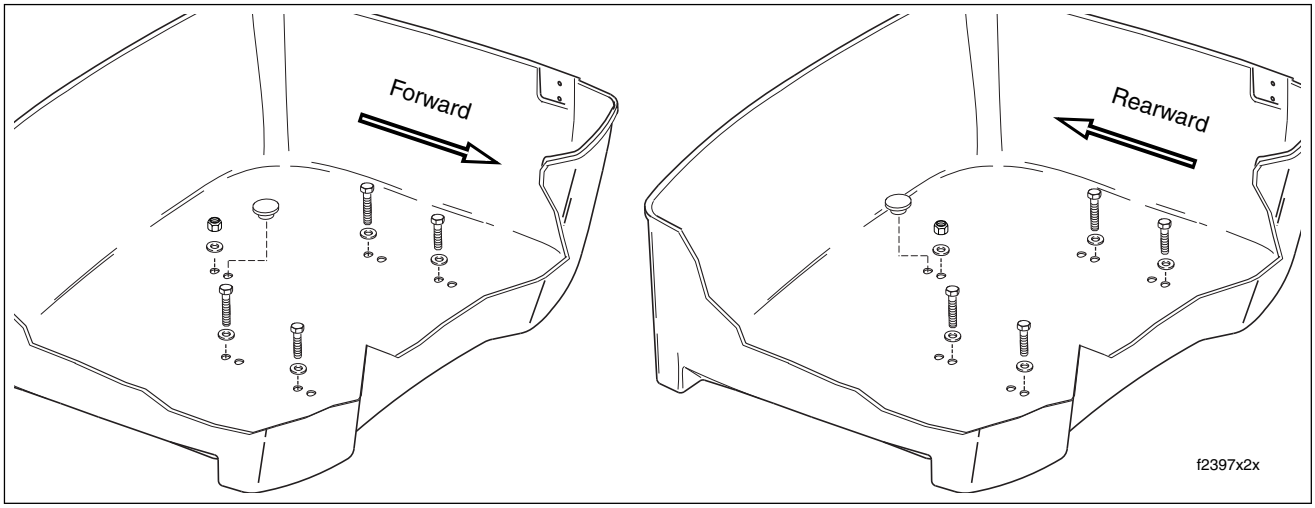

Figure 2-148. Adjust Position of Tour-Pak for Passenger Comfort

15. Install molded liner in Tour-Pak. Install map pocket and secure using acorn nuts (with flat washers). Close Tour-Pak.

ADJUSTMENT

NOTE

The Tour-Pak can be moved forward/rearward approximately one inch for best passenger comfort.

1. Proceed as follows:

   FLHTC: Open Tour-Pak. Remove rubber mat.

   FLHTCU: Open Tour-Pak. Open map pocket and remove acorn nuts (with flat washers). Remove map pocket and molded liner from Tour-Pak.

2. From inside Tour-Pak, remove plastic plug from unused rear center hole.
3. Holding nylon cap locknuts at bottom of luggage rack rail, remove four hex head bolts (with flat washers) from inside Tour-Pak. Luggage rack spacers will become free as locknuts are removed.
4. Holding button head bolt at rear center hole, remove locknut (and flat washer) from inside Tour-Pak to release Tour-Pak from luggage rack. Be sure to have a firm grasp on the Tour-Pak as the bolt is removed. See Figure 2-146.
5. Move Tour-Pak to the forward/rearward position. See Figure 2-148.
6. Align rear center hole in Tour-Pak with same hole in luggage rack. Slide button head bolt through spacer (concave side up), luggage rack and Tour-Pak holes. From inside Tour-Pak, install flat washer, radio antenna ground ring terminal and locknut on bolt. With concavity on spacer inline with the rail, hold locknut and tighten bolt until snug.

CAUTION

Always install hex head bolts from inside Tour-Pak. If hex head bolts are installed upside down, then loss of a nylon cap could cause the end of a bolt to tear the molded liner and scratch objects, such as helmets, stored inside the Tour-Pak.

7. From inside Tour-Pak, install two hex head bolts (with flat washers) in two front Tour-Pak and luggage rack holes (one each side). At bottom of luggage rack, install spacer (concave side up) and nylon cap locknut on each bolt and tighten until snug.
8. Verify that two spacers are in position between bottom of luggage rack and tabs of license plate bracket. Slide two

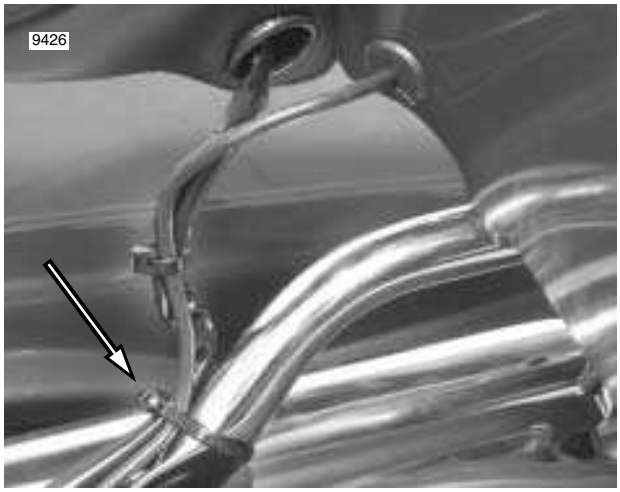

Figure 2-149. Right Side Luggage Rack Rail (FLHTCU)

hex head bolts (with flat washers) through two center holes in Tour-Pak and luggage rack, and then through spacers and tabs of license plate bracket. Install flat washers and nylon cap locknuts on bolts and tighten until snug. See inset of Figure 2-146.

9. In a crosswise pattern, alternately tighten five bolts to 96-108 **in-lbs** (10.8-12.2 Nm).
10. Verify that wire harness to Tour-pak is not bunched or stretched at any point. Rearrange wire harness slightly if necessary. Install **new** cable straps capturing wire harness and luggage rack rails if rearrangement required cutting of existing cable straps. See Figure 2-149.
11. From inside Tour-Pak, install plastic plug in unused rear center hole. See Figure 2-148.
12. Proceed as follows:

    FLHTC: Install rubber mat. Close Tour-Pak.

    FLHTCU: Install molded liner in Tour-Pak. Install map pocket and secure using acorn nuts (with flat washers). Close Tour-Pak.

LOCKSET, HINGES, LATCHES, CATCHES, TETHER, TETHER BRACKETS

LOCKSET

Removal

NOTE

For replacement of the lockset catch, see BODY LATCHES/ LOCKSET CATCH in this section.

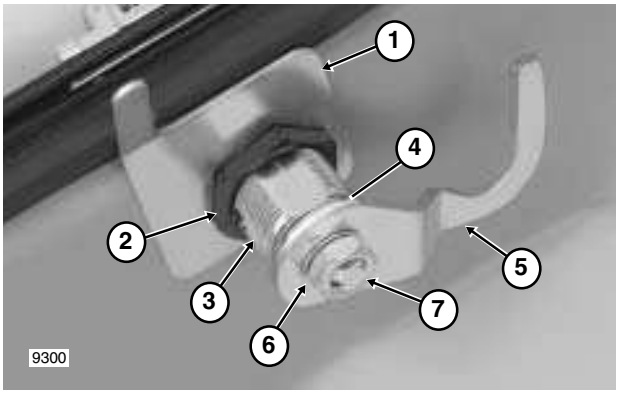

1. Lock Guide
2. Jam Nut
3. Lockset
4. Cam Washer
5. Cam Hook
6. Lockwasher
7. Hex Nut

Figure 2-150. Lockset Assembly

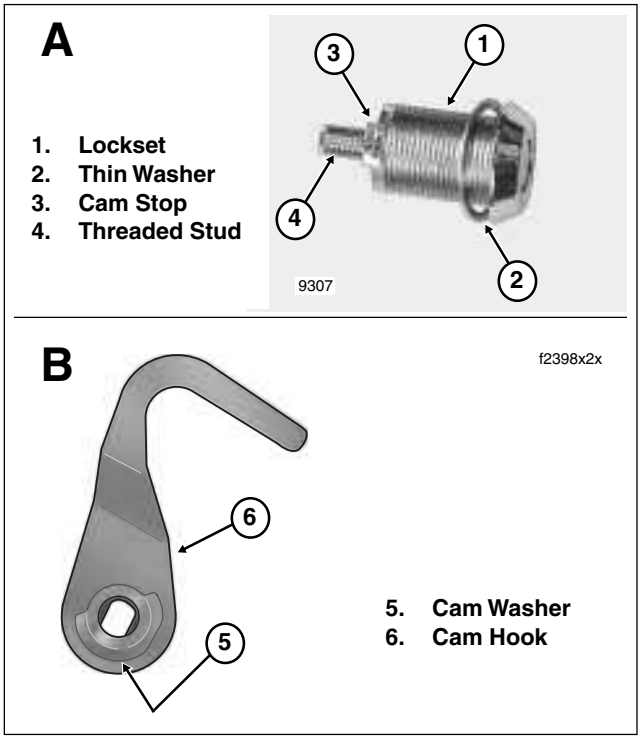

Figure 2-151. Lockset Mechanism

1. At inside of Tour-Pak lid, remove hex nut, internal tooth lockwasher, cam hook and cam washer. Remove jam nut and lock guide. See Figure 2-150.
2. At outside of Tour-Pak, remove lockset. Remove thin washer from threaded body of lockset. See A of Figure 2-151.

Installation

1. Slide thin washer down threaded body of lockset. See A of Figure 2-151.
2. With cam stop facing toward front of Tour-Pak lid, install lockset into hole.
3. Install lock guide over threaded body of lockset oriented with finger at rear and pointing toward bottom of Tour-Pak lid. See Figure 2-150.
4. Install jam nut and tighten to 30-45 **in-lbs** (3.4-5.1 Nm).
5. Verify that groove in threaded stud of lockset is facing rear of Tour-Pak lid. Use key to rotate threaded stud, if necessary.
6. Align cam hook and cam washer as shown in B of Figure 2-151. With the cam hook toward the front of Tour-Pak lid and cam washer on the inboard side, slide assembly down threaded stud.
7. Install internal tooth lockwasher and hex nut onto threaded stud. Tighten hex nut to 25-35 **in-lbs** (2.8-4.0 Nm).

HINGES

Removal

1. Remove tether. See TETHER, REMOVAL, steps 1-2.
2. Holding hinge pin with a T25 TORX bit (inboard side), remove T15 TORX screw (outboard side).
3. Remove hinge pin from hinge.
4. Repeat steps 2-3 to remove second hinge pin. Remove Tour-Pak lid.
5. Using a 3/16 inch drill bit, drill out eight rivets from inside Tour-Pak.
6. Remove hinge and backplates.

Installation

1. With the head of the **new** rivet on the outboard side of the Tour-Pak, slide rivet through holes in hinge, Tour-Pak and backplate.
2. Obtain RIVET TOOL (HD-39787A). See Figure 2-152.
3. Orient tool so that head of rivet is seated in depression of drive head. Turn adjuster thumbscrew in or out of handle until both ends of rivet are captured.
4. Slowly squeeze handle of tool to compress rivet. Turn adjuster thumbscrew slightly in a clockwise direction and then squeeze handle again to further compress rivet. Repeat step as necessary until rivet is fully installed.

NOTE

Compress rivet in small increments only. This method provides for best retention and alignment of parts and avoids possible damage to tool and painted surfaces of Tour-Pak.

5. Repeat steps 1-4 to install remaining rivets.
6. Install lid onto Tour-Pak engaging upper and lower hinges.
7. Install hinge pin with the T25 TORX bit recess on the inboard side of the hinge.

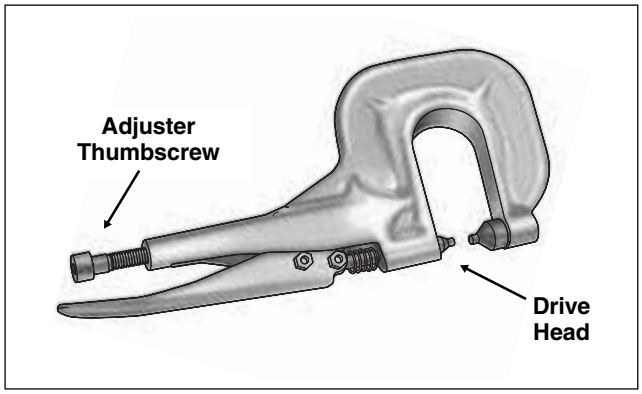

Figure 2-152. Rivet Tool (HD-39787A)

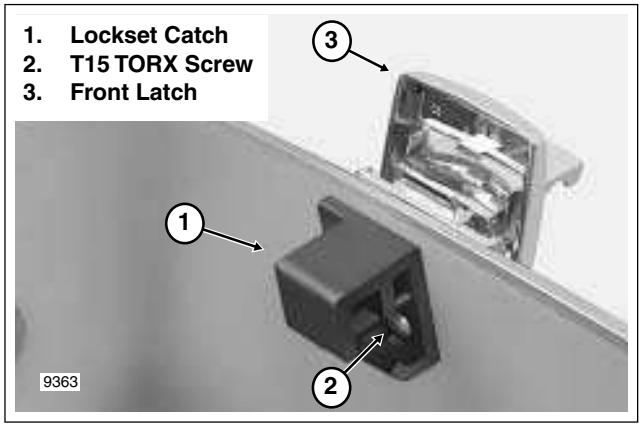

Figure 2-153. Front Latch Assembly

8. Apply a small dab of Loctite High Strength Threadlocker 262 (red) to threads of T15 TORX screw.
9. Install T15 TORX screw into hinge pin and tighten to 20-25 **in-lbs** (2.3-2.8 Nm).
10. Repeat steps 7-9 to install second hinge pin.
11. Install tether. See TETHER, INSTALLATION, steps 1-4.

LATCHES/LOCKSET CATCH

Removal

1. Remove two T15 TORX screws (with flat washers) to release rear latch and spacer from right side of Tour-Pak.
2. Remove two T15 TORX screws to release front latch, spacer and lockset catch from Tour-Pak. See Figure 2-153.

Installation

1. From inside Tour-Pak, slide two short T15 TORX screws (with flat washers) through rear holes on right side of Tour-Pak.
2. With open side of spacer facing Tour-Pak and rib at bottom, slide spacer over ends of screws.
3. Apply a small dab of Loctite Medium Strength Threadlocker 243 (blue) to threads of screws and start into threaded bosses on latch. Properly oriented, portion of latch not mated with spacer should be at the top.
4. Alternately tighten screws to 20-25 **in-lbs** (2.3-2.8 Nm).
5. Slide two long T15 TORX screws through holes in lockset catch. From inside Tour-Pak, slide screws through front holes on right side of Tour-Pak. Properly oriented, flat side of lockset catch should be topside. See Figure 2-153.
6. With open side of spacer facing Tour-Pak and rib at bottom, slide spacer over ends of screws.

7. Apply a small dab of Loctite Medium Strength Threadlocker 243 (blue) to threads of screws and start into threaded bosses on latch. Properly oriented, portion of latch not mated with spacer should be at the top.
8. Alternately tighten screws to 20-25 **in-lbs** (2.3-2.8 Nm).

CATCHES

Removal

1. Using a 3/16 inch drill bit, drill out two rivets from inside Tour-Pak lid.
2. Remove catch and backplate.

Installation

1. With the head of the **new** rivet on the outboard side of the Tour-Pak, slide rivet through holes in catch, Tour-Pak lid and backplate.
2. Install rivets. See HINGES, INSTALLATION, steps 2-4.

TETHER

Removal

CAUTION

Exercise caution to keep lid from opening beyond the normal 90° of travel or damage to painted surfaces can occur.

1. Remove T15 TORX screw from threaded boss on tether bracket. See Figure 2-154.
2. Remove tether eyelet and wave spring from threaded boss.
3. Repeat steps 1-2 to remove opposite end of tether from second tether bracket.

Installation

1. With the concave side toward the tether bracket, install wave spring onto threaded boss.
2. Install tether eyelet onto threaded boss.
3. Apply a small dab of Loctite High Strength Threadlocker 262 (red) to threads of T15 TORX screw.
4. Install screw into threaded boss and tighten to 20-25 **in-lbs** (2.3-2.8 Nm). See Figure 2-154.
5. Repeat steps 1-4 to fasten opposite end of tether to second tether bracket.

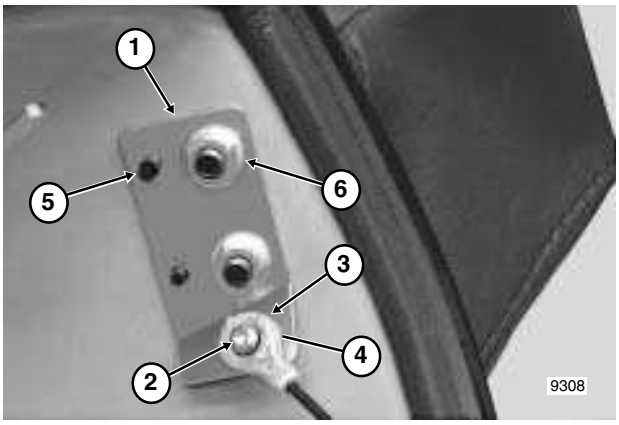

1.	**Tether Bracket (Lid)**	4.	**Wave Spring**
2.	**T15 TORX Screw**	5.	**Black Nylon Rivet**
3.	**Tether Eyelet**	6.	**Flange Nut**

Figure 2-154. Tour-Pak Tether Bracket Assembly

TETHER BRACKETS

Removal

Tour-Pak

1. Remove tether. See TETHER, REMOVAL, steps 1-2.
2. Using a 3/16 inch drill bit, drill out four rivets from inside Tour-Pak.
3. Remove tether bracket and backplate.

Tour-Pak Lid

1. Remove tether. See TETHER, REMOVAL, steps 1-2.
2. From inside Tour-Pak lid, center a 3/32 inch punch on pin at center of black nylon rivet. Using a small hammer, gently tap pin out of rivet. At outside of Tour-Pak, pull rivet from holes in tether bracket, Tour-Pak lid and passenger backrest bracket. Repeat step to remove second nylon rivet. See Figure 2-154.
3. Remove two flange nuts from studs of passenger backrest bracket and remove tether bracket.

Installation

Tour-Pak Lid

1. From inside Tour-Pak lid, install tether bracket on studs of passenger backrest bracket and start flange nuts. See Figure 2-154.

2. At outside of Tour-Pak, insert black nylon rivet through holes in passenger backrest bracket, Tour-Pak lid and tether bracket. Insert pin into head of rivet until flush. Install second rivet in the same manner.
3. Alternately tighten flange nuts to 40-60 **in-lbs** (4.5-6.8 Nm).
4. Install tether. See TETHER, INSTALLATION, steps 1-4.

Tour-Pak

1. With the head of the **new** rivet on the outboard side of the Tour-Pak, slide rivet through holes in backplate, Tour-Pak and tether bracket (with the threaded boss topside).
2. Install rivets. See HINGES, INSTALLATION, steps 2-4.
3. Install tether. See TETHER, INSTALLATION, steps 1-4.

TOUR-PAK LIGHTS/BACKREST/SPEAKER BOX 2.28

GENERAL

All domestic model Ultra Tour-Paks are equipped with side marker lights. Ultra models also have rear wrap-around lights, each of which contains a 2-filament lamp. One filament is a supplemental brake light and the other a supplemental tail lamp.

SIDE MARKER LIGHTS (FLHTCU)

REMOVAL

1. Open Tour-Pak. Open map pocket and remove acorn nuts (with flat washers). Remove map pocket and molded liner from Tour-Pak.
2. Disconnect side marker lights connector, 2-place Multilock.
3. Remove two T15 TORX screws and feed socket through hole in Tour-Pak to release side marker lights. See Figure 2-155.

INSTALLATION

1. Feeding socket through hole in Tour-Pak, place side marker lights into position. See Figure 2-155.
2. Align threaded bosses in side marker lights with holes in Tour-Pak. Install two T15 TORX screws and alternately tighten to 20-25 **in-lbs** (2.3-2.8 Nm).
3. Connect side marker lights connector, 2-place Multilock.
4. Install molded liner in Tour-Pak. Install map pocket and secure using acorn nuts (with flat washers). Close Tour-Pak.

TOUR-PAK LIGHTS HARNESS

REMOVAL

1. Remove Tour-Pak. See Section 2.27 TOUR-PAK, FLHTCU, REMOVAL. Move Tour-Pak to bench area.
2. Open Tour-Pak. Holding hex head screw inside Tour-Pak (rear right corner), remove flange nut at bottom to release loading coil bracket. Remove hex head screw with external tooth lockwasher.
3. Depress external latch and remove bulb socket of both left and right side wrap-around lights. See Figure 2-156.
4. Disconnect two side marker lights connectors, 2-place Multilocks. Release conduit from two adhesive clips at rear of Tour-Pak.

Figure 2-155. Side Marker Lights Assembly (FLHTCU)

5. Close Tour-Pak. Turn Tour-Pak over and remove five remaining flange nuts at bottom.
6. Place Tour-Pak topside up and open lid. Reach inside Tour-Pak and remove metal plate pulling threaded studs from holes at bottom.
7. Remove masking tape as necessary to release Tour-Pak lights harness.

INSTALLATION

1. Place Tour-Pak lights harness at bottom of Tour-Pak as shown in Figure 2-156. Adjust harness so that Multilock connectors are outboard of the metal plate, when installed, and conduit is routed through gaps in ribbing. Use masking tape as necessary to fix position of harness and connectors.

CAUTION

If conduit is not routed through gaps in ribbing, and connectors are not outboard of the metal plate, tightening of the flange nuts can pinch wires or crack connectors.

2. Install metal plate at bottom of Tour-Pak so that threaded studs exit holes at bottom.
3. Connect two side marker lights connectors, 2-place Multilocks. Capture conduit in two adhesive clips at rear of Tour-Pak.
4. Install bulb socket of both left and right side wrap-around lights.
5. Align hole in loading coil bracket with holes in rear right corner of metal plate and Tour-Pak. Slide hex head screw (with external tooth lockwasher) through holes. At bottom of Tour-Pak, install flange nut.

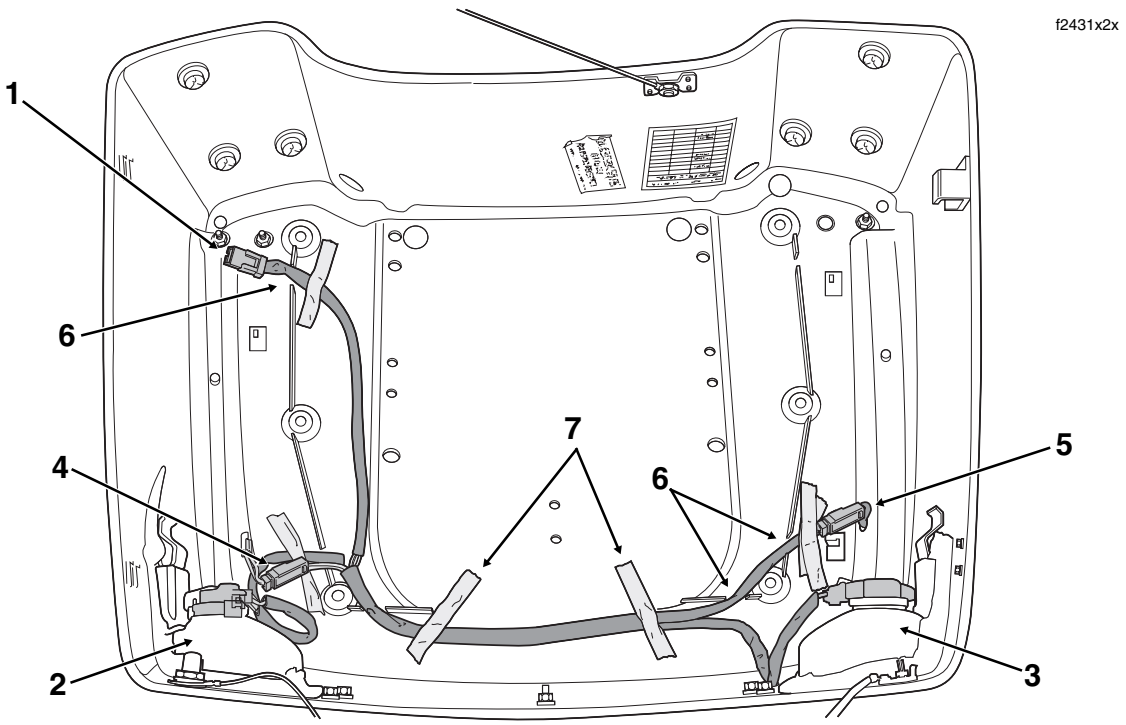

1. **Tour-Pak Lights Harness [12]**
2. **Left Wrap-Around Light**
3. **Right Wrap-Around Light**
4. **Left Side Marker Lights [12-3]**
5. **Right Side Marker Lights [12-2]**
6. **Rib Gap**
7. **Masking Tape**

Figure 2-156. Tour-Pak Lights Harness (FLHTCU)

6. Close lid and turn Tour-Pak over. Install five remaining flange nuts on threaded studs of metal plate. Alternately tighten six flange nuts to 65-70 **in-lbs** (7.3-7.9 Nm).
7. Install Tour-Pak on motorcycle. See Section 2.27 TOUR-PAK, FLHTCU, INSTALLATION.

WRAP-AROUND LIGHTS (FLHTCU)

BULB REPLACEMENT

1. Open Tour-Pak. Open map pocket and remove acorn nuts (with flat washers). Remove map pocket and molded liner from Tour-Pak.
2. Depress external latch and remove bulb socket of left or right side wrap-around light. See Figure 2-156.
3. Remove bulb from socket. Install **new** bulb.
4. Install bulb socket of left or right side wrap-around light.
5. Install molded liner in Tour-Pak. Install map pocket and secure using acorn nuts (with flat washers). Close Tour-Pak.

REMOVAL

1. Open Tour-Pak. Open map pocket and remove acorn nuts (with flat washers). Remove map pocket and molded liner from Tour-Pak.
2. Depress external latch and remove bulb socket of both left and right side wrap-around lights. See Figure 2-156.
3. Disconnect CB antenna cable connector [50] on right side of Tour-Pak. Release cable from rear adhesive clip at bottom of Tour-Pak.
4. Remove Keps nut, ring terminal and flat washer from loading coil stud.
5. Holding hex head screw, remove flange nut at bottom of Tour-Pak to release loading coil bracket. Remove hex head screw (with external tooth lockwasher) and loading coil from motorcycle.
6. Using a 2.5 mm allen head wrench, remove loading coil stud. Remove CB antenna mast from lamp housing.
7. On left side of Tour-Pak, rotate knurled lock ring in a counter-clockwise direction to disconnect radio antenna cable connector [51]. Release cable from rear clip at bottom of Tour-Pak.

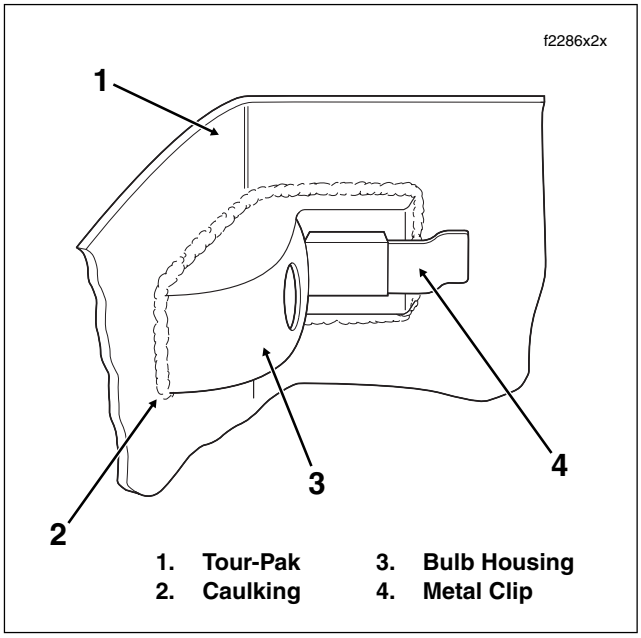

Figure 2-157. Wrap-Around Light Assembly

8. Remove jam nut from radio antenna cable connector at back of Tour-Pak. Remove internal tooth lockwasher, ring terminal and large flat washer from connector.
9. Install jam nut back onto connector. Thread a 1/2 in.-20 UNF nut onto connector until contact is made with jam nut. Turn jam nut to in a counter-clockwise direction to remove connector stud from radio antenna mast. Remove mast from lamp housing.
10. Remove caulking from around light bar. Remove four flange nuts and metal clips to free light bar from Tour-Pak. See Figure 2-157.

INSTALLATION

1. Install light bar, metal clips and flange nuts to secure light bar to Tour-Pak. Inside Tour-Pak, use RTV silicone sealer (Part No. 99710-88) to seal perimeter of light bar. See Figure 2-157.
2. Install radio antenna mast into lamp housing. Thread connector stud into mast. Turn 1/2 in.-20 UNF nut (installed on connector during removal) in a clockwise direction to tighten.
3. Remove 1/2 in.-20 UNF nut and jam nut. Install large flat washer, ring terminal and internal tooth lockwasher onto connector. Reinstall jam nut and tighten.
4. Rotate knurled lock ring in a clockwise direction to mate pin and socket halves of radio antenna cable connector [51]. Capture cable in rear clip at bottom of Tour-Pak.
5. On right side of Tour-Pak, install CB antenna mast into lamp housing. Install stud into mast and tighten with 2.5 mm allen head wrench.
6. Place loading coil into position aligning hole in bracket with hole in rear right corner of Tour-Pak. Slide hex head screw (with external tooth lockwasher) through holes. At bottom of Tour-Pak, install flange nut on hex head screw.
7. Install flat washer, ring terminal and Keps nut onto loading coil stud. Tighten Keps nut.
8. Connect CB antenna cable connector [50]. Capture antenna cable in rear adhesive clip at bottom of Tour-Pak.
9. Install bulb socket of both left and right side wrap-around lights.
10. Install molded liner in Tour-Pak. Install map pocket and secure using acorn nuts. Close Tour-Pak.
11. Check SWR and adjust if necessary. Follow the SWR Adjustment procedure in Section 6 of the 2006 ELECTRICAL DIAGNOSTIC MANUAL (Part No. 99497-06). Remove SWR meter, install antenna connector and tighten antenna connector stud.

PASSENGER BACKREST/RUBBER ISOLATORS (FLHTCU)

PASSENGER BACKREST

REMOVAL

1. Open Tour-Pak.
2. Remove two flange nuts and backplate to release center backrest from Tour-Pak lid. See Figure 2-158.
3. Remove two flange nuts to release left side backrest.

CAUTION

Be sure that black nylon rivets are in place before removing flange nuts to release right side backrest or tether bracket will come free. Unexpected release of the tether bracket can allow the Tour-Pak lid to swing fully open, which may result in damage to hinges and painted surfaces. If black nylon rivets are missing, be sure to hold Tour-Pak lid as the second flange nut is removed.

4. Remove two flange nuts to release right side backrest.
5. Carefully pull studs on backrest brackets from holes in Tour-Pak lid.

INSTALLATION

1. Slide studs on center backrest cushion plate through holes in Tour-Pak lid. With the nylon side facing the Tour-Pak, install backplate on studs and start flange nuts.

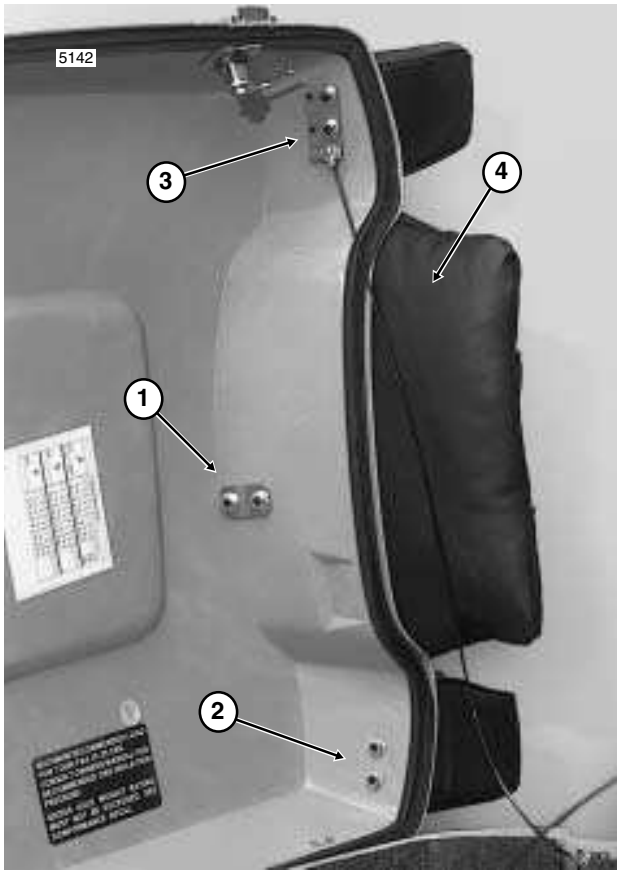

1. **Center Flange Nuts and Backplate**
2. **Left Side Flange Nuts**
3. **Right Side Flange Nuts, Tether Bracket and Black Nylon Rivets**
4. **Passenger Backrest**

Figure 2-158. Tour-Pak Lid (Underside)

2. Slide studs on left side backrest "L" bracket through holes in Tour-Pak lid and start flange nuts.
3. Slide studs on right side backrest "L" bracket through holes in Tour-Pak lid and tether bracket and start flange nuts.
4. Alternately tighten six flange nuts to 40-60 **in-lbs** (4.5-6.8 Nm).
5. Close Tour-Pak.

RUBBER ISOLATORS

Removal

1. Remove passenger backrest. See PASSENGER BACKREST, REMOVAL.
2. Proceed as follows:

   Center isolator: Remove flange nut with lockwasher to release cushion plate from rubber isolator stud. Remove flange nut with lockwasher to release other stud from backrest support bracket. See Figure 2-159.

   Outside isolator: Remove flange nut with lockwasher to release "L" bracket from rubber isolator stud. Rotate rubber isolator to remove other stud from threaded hole in backrest. See Figure 2-160.

Installation

1. Proceed as follows:

   Center isolator: Insert stud of **new** rubber isolator into hole of backrest support bracket and install lockwasher and flange nut. Tighten flange nut until snug. Install cushion plate, lockwasher and flange nut on other stud. Orient cushion plate so that it is parallel to backrest and then finger tighten flange nut only. See Figure 2-159.

CAUTION

Always hold rubber isolator on end to be installed. Do not grasp middle of rubber isolator or opposite end as excessive twisting can result in separation of molded parts or other damage.

   Outside isolator: Install stud of **new** rubber isolator into threaded hole in backrest until snug. Install “L” bracket, lockwasher and flange nut on other stud. Finger tighten flange nut only. See Figure 2-160.

2. Install passenger backrest. See PASSENGER BACKREST, INSTALLATION.
3. Gently pull back cover material of backrest to expose underside and final tighten flange nuts only finger tightened in step 1.
4. Verify that each side of rubber isolator is not twisted or under any torsional load. Loosen flange nuts and adjust rubber isolator if necessary.

PASSENGER BACKREST FLAP (FLHTCU)

BACKREST FLAP

REMOVAL

1. Open Tour-Pak. Open map pocket and remove two acorn nuts (with flat washers). Remove map pocket and molded liner from Tour-Pak.
2. Holding acorn nuts inside Tour-Pak, remove two T25 TORX screws (with flat washers) at front.

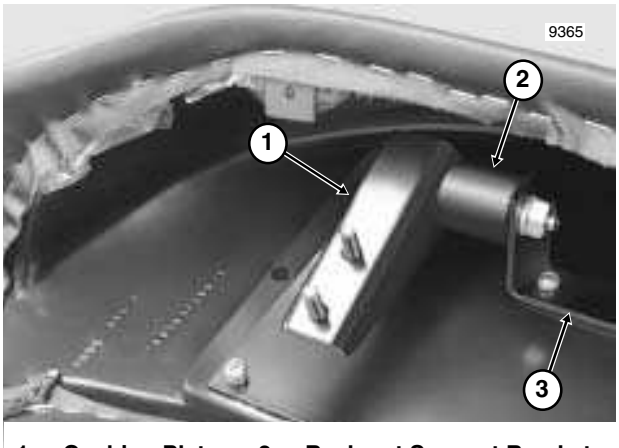

1. Cushion Plate
2. Rubber Isolator
3. Backrest Support Bracket

Figure 2-159. Center Isolator

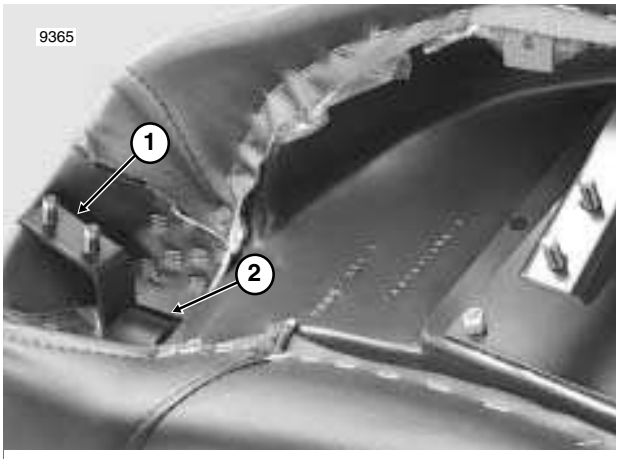

1. "L" Bracket
2. Rubber Isolator

Figure 2-160. Outside Isolator

3. Remove backrest flap.

INSTALLATION

1. Align holes in backrest flap with those at front of Tour-Pak.
2. Slide two T25 TORX screws (with flat washers) through holes in backrest flap and Tour-Pak. Inside Tour-Pak, install acorn nuts.
3. Holding acorn nuts, alternately tighten screws to 21-24 **in-lbs** (2.4-2.7 Nm).
4. Install molded liner in Tour-Pak. Install map pocket and secure using acorn nuts (with flat washers). Close Tour-Pak.

SPEAKER BOX (FLHTCU)

REMOVAL

1. Remove trim ring and gently pull on wire harness to draw rear speaker/passenger controls connector [41/42], 6-place Deutsch, out of speaker box. Depress external latch and use a rocking motion to separate pin and socket halves.
2. Open Tour-Pak. Open map pocket and remove acorn nuts (with flat washers). Remove map pocket and molded liner from Tour-Pak.
3. Remove three bolts with flat washers to free speaker box from Tour-Pak.

INSTALLATION

1. Install three bolts with flat washers to secure speaker box to Tour-Pak. Alternately tighten bolts to 25-35 **in-lbs** (2.8-4.0 Nm).
2. Install molded liner in Tour-Pak. Install map pocket and secure using acorn nuts (with flat washers). Close Tour-Pak.
3. Connect rear speaker/passenger controls connector [41/42], 6-place Deutsch. Feed connector back up into speaker box pressing trim ring into hole.

LOWER FAIRING (FLHTCU)

REMOVAL

1. Unfasten snaps to release glove box door flap. Release anchor on draw string from hole in glove box door. Set door flap aside.
2. Reaching into glove box, remove two flange nuts from clip studs and remove fairing cap. If necessary, push ends of studs through holes in glove box tray and fairing lower to release fairing cap. Do not twist or rotate fairing cap or damage may result. See Figure 2-161.
3. Hold locknut at bottom of fairing lower and turn inside T40 TORX screw to free assembly from engine guard clamp. Discard rubber washer.
4. Repeat steps 1-3 on other side of motorcycle.

INSTALLATION

1. Place fairing lower into position at front of engine guard.
2. Holding screw inside fairing lower, install **new** rubber washer, clamp and locknut to attach bottom of fairing lower to engine guard. Do not tighten locknut.
3. Verify that two clip studs are fully installed on fairing cap.
4. Position fairing cap at front of engine guard and against fairing lower so that clip studs engage holes in fairing lower and glove box tray. Reaching into glove box, start two flange nuts on clip studs.
5. Verify that fairing lower is square, and then alternately tighten flange nuts on clip studs to 35-40 **in-lbs** (4.0-4.5 Nm).
6. Hold locknut at bottom of fairing lower and turn inside T40 TORX screw to fasten assembly to engine guard clamp. Tighten screw to 90-100 **in-lbs** (10.2-11.3 Nm).
7. Repeat steps 1-6 on other side of motorcycle.

DISASSEMBLY

1. See REMOVAL, steps 1-3.
2. Remove three T20 TORX screws to release glove box door and glove box tray from fairing lower.

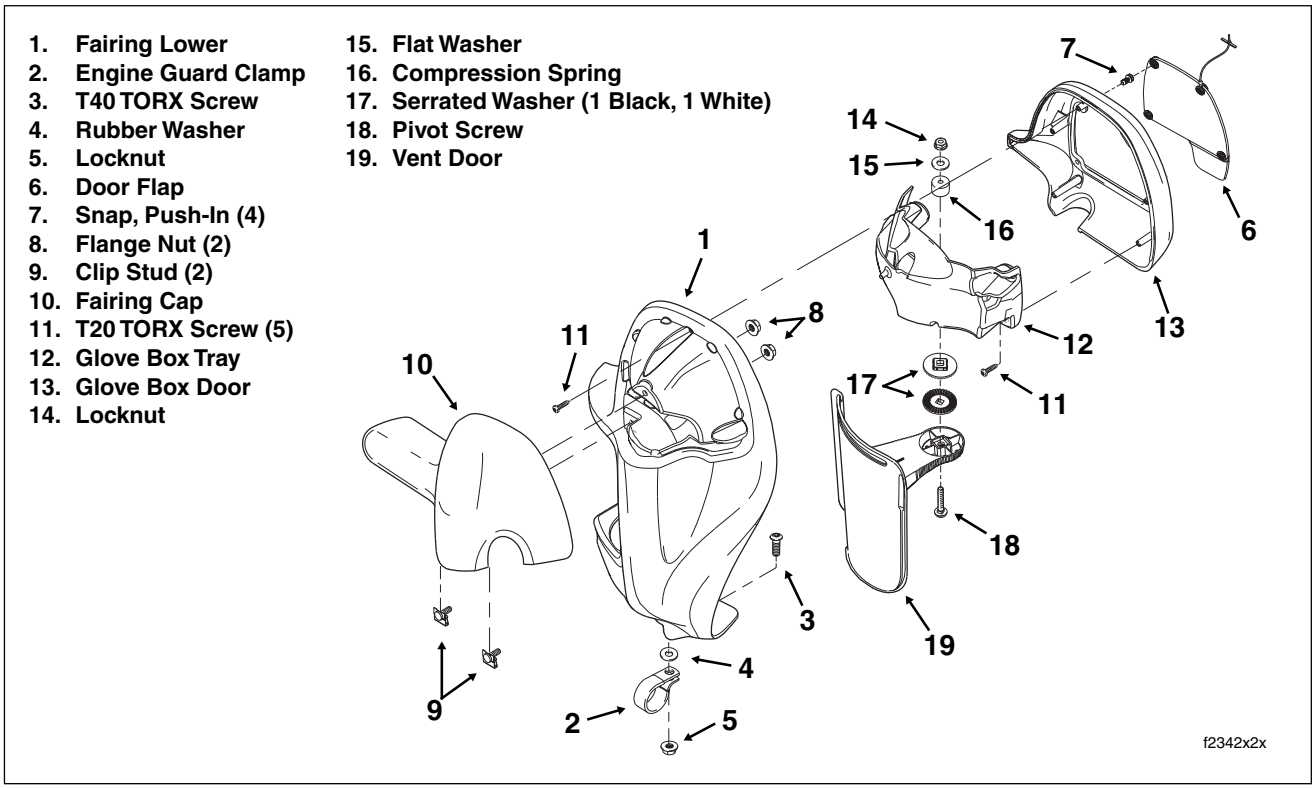

Figure 2-161. Lower Fairing Assembly

3. Remove two T20 TORX screws to release glove box door from glove box tray.
4. Remove locknut, flat washer, compression spring (rubber sleeve), glove box tray and two serrated washers from pivot screw in vent door arm.
5. Remove pivot screw from vent door arm.

ASSEMBLY

1. Slide threaded end of pivot screw up through hole in center of vent door arm.
2. With the teeth facing upward, slide serrated washer over end of pivot screw. Square shaped boss at bottom of serrated washer should engage square recess in vent door arm.
3. Slide second serrated washer over pivot screw so that teeth engage those on first serrated washer.

NOTE

Use one black and one white serrated washer. Using two washers of the same color may result in a chirping noise when the fairing lowers are adjusted.

4. Slide square hole on glove box tray over end of pivot screw until it engages square shaped boss at top of second serrated washer.
5. Install compression spring (rubber sleeve), flat washer and locknut on pivot screw. Verify that pin at front of glove box tray engages slot at top of vent door.
6. Tighten locknut only until flat washer is snug (does not rotate) and then tighten an additional 1-1/2 turns. Verify proper vent door operation.

NOTE

For best results, the 0.50 inch compression spring must be compressed to a height of 0.420 to 0.460 inches (10.7-11.7 mm).

7. Align bottom two holes in glove box tray with bosses on glove box door and start two T20 TORX screws. Alternately tighten screws to 20-25 **in-lbs** (2.3-2.8 Nm).
8. Fit glove box tray into top of fairing lower and align three holes in fairing lower with holes in glove box tray and bosses in glove box door. Install three T20 TORX screws. Alternately tighten screws to 20-25 **in-lbs** (2.3-2.8 Nm).
9. See INSTALLATION, steps 1-6.
10. Install anchor on draw string of glove box door flap into hole in glove box door. Fasten snaps to install glove box door flap.

SERRATED WASHER REPLACEMENT

Removal

1. Unfasten snaps to release glove box door flap.
2. Reaching into glove box, remove locknut, flat washer and compression spring (rubber sleeve) from pivot screw in vent door arm. Remove pivot screw.
3. Carefully extract first serrated washer at top of vent door arm. Remove second washer at bottom of glove box tray. Discard washers.

Installation

1. Obtain two **new** serrated washers.

NOTE

Use one black and one white serrated washer. Using two washers of the same color may result in a chirping noise when the fairing lowers are adjusted.

2. With the teeth up, carefully install first serrated washer at top of vent door arm. Be sure that square shaped boss on washer engages square recess in arm.
3. With the teeth down, carefully install second serrated washer at bottom of glove box tray. Be sure that square shaped boss on washer engages square hole in tray.
4. Slide threaded end of pivot screw up through hole in center of vent door arm.
5. Reaching into glove box, install compression spring (rubber sleeve), flat washer and locknut on pivot screw.
6. Tighten locknut only until flat washer is snug (does not rotate) and then tighten an additional 1-1/2 turns. Verify proper vent door operation.

NOTE

For best results, the 0.50 inch compression spring must be compressed to a height of 0.420 to 0.460 inches (10.7-11.7 mm).

ENGINE GUARD

REMOVAL

1. Remove fairing lowers, if present. See LOWER FAIRING (FLHTCU), REMOVAL, in this section. Remove fairing lower clamps from engine guard.
2. Remove T40 TORX screws (with flanged locknuts) to release ends of engine guard from frame weldments.
3. Remove hex socket screw (with flat washer) to release tab at top of engine guard from slot at base of steering head.

INSTALLATION

1. Insert tab at top of engine guard into slot at base of steering head. Start hex socket screw (with flat washer) to hang engine guard.

2. Position ends of engine guard outboard of frame weldments on each side of motorcycle. Install T40 TORX screws positioning flanged locknuts on inboard side of frame weldments.
3. Alternately tighten three screws to 15-20 ft-lbs (20.3-27.1 Nm).
4. Install fairing lowers, if present, but first install fairing lower clamps on each side of engine guard. See LOWER FAIRING (FLHTCU), INSTALLATION, in this section.

UPPER FAIRING/WINDSHIELD (FLHX, FLHT/C/U) 2.30

OUTER FAIRING/WINDSHIELD

REMOVAL

1. Remove maxi-fuse. See Section 8.3 SYSTEM FUSES, MAXI-FUSE, REMOVAL.
2. Remove the outer fairing and windshield as follows:
   a. Standing at the front of the motorcycle, loosen the three T27 TORX screws (with flat washers) just below the windshield. See Figure 2-162.
   b. Raise and remove the windshield from between the inner and outer fairings.
   c. Moving to the inner fairing side, remove the two screws outboard of the speakers on the left and right side.
   d. Turn the handlebar to the right and remove screw by reaching in below the left side of the fairing cap. Turn the handlebar to the left and remove screw below right side of the fairing cap.

CAUTION

On FLHX models, be sure to hold the outer fairing in position as the last screw is removed. Without auxiliary lamps to hold it in position, the outer fairing will drop, possibly resulting in fairing or fender damage.

   e. Returning to the front of the motorcycle, remove the three screws below the windshield.
   f. Tilting the outer fairing forward, remove headlamp connector [38] at the back of the headlamp assembly.
   g. Lift the outer fairing off the motorcycle.

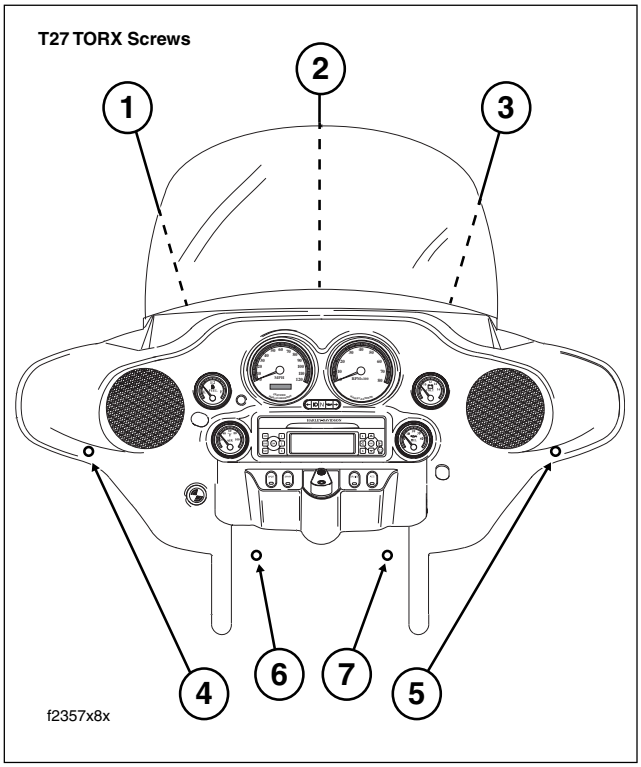

Figure 2-162. Outer Fairing TORX Screw Locations

INSTALLATION

1. Install the outer fairing and windshield as follows:
   a. Place the outer fairing on the motorcycle and install headlamp connector [38] at the back of the headlamp assembly.
   b. Start the three T27 TORX screws (with flat washers) just below the windshield. See Figure 2-162.
   c. Moving to the inner fairing side, start the two screws outboard of the speakers on the left and right side.
   d. Turn the handlebar to the left and start screw by reaching in below the right side of the fairing cap. Turn the handlebar to the right and start screw below left side of the fairing cap.
   e. Alternately tighten the four screws on the inner fairing side to 20-30 **in-lbs** (2.3-3.4 Nm).
   f. Returning to the front of the motorcycle, place the windshield into position between the inner and outer fairings engaging the slotted holes in the windshield with the threaded bosses on the inner fairing.
   g. Alternately tighten the three screws below the windshield to 25-30 **in-lbs** (2.8-3.4 Nm).
2. Install maxi-fuse. See Section 8.3 SYSTEM FUSES, MAXI-FUSE, INSTALLATION.

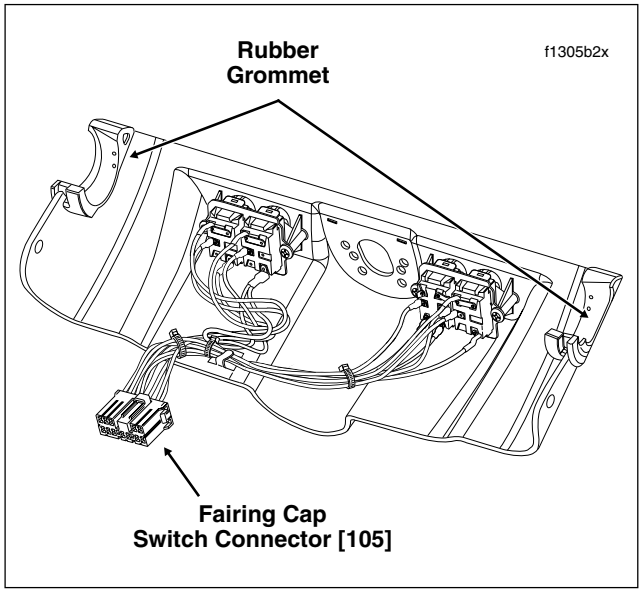

Figure 2-163. Fairing Cap Assembly (FLHX, FLHT/C/U)

FAIRING CAP

REMOVAL

1. Partially disassemble ignition switch. See Section 8.19 IGNITION/LIGHT KEY SWITCH AND FORK LOCK, FLHX, FLHT/C/U, FLTR, REMOVAL, steps 1-5.
2. Remove two T27 TORX screws (with flat washers) to release fairing cap from left and right sides of inner fairing.
3. With the front forks turned to the left fork stop, reach behind right side of fairing cap and disconnect the fairing cap switch connector [105], 12-place Multilock (black).
4. Remove the fairing cap from the motorcycle. See Figure 2-163.

INSTALLATION

1. Verify that the rubber grommets are installed on each side of the fairing cap. Barbs on cap fit into holes in grommets. See Figure 2-163.
2. Connect the fairing cap switch connector [105], 12-place Multilock (black), on right side of the fairing cap.
3. With the front forks turned to the left fork stop, install fairing cap over ignition switch housing. Verify that grommets in fairing cap fully capture handlebar along with throttle and clutch cables.
4. Start two T27 TORX screws (with flat washers) to fasten fairing cap to left and right sides of inner fairing. Alternately tighten screws to 25-30 **in-lbs** (2.8-3.4 Nm).
5. Assemble ignition switch. See Section 8.19 IGNITION/LIGHT KEY SWITCH AND FORK LOCK, FLHX, FLHT/C/U, FLTR, INSTALLATION, steps 6-15.

INNER FAIRING

REMOVAL

CAUTION

To avoid scratches or other damage, place protective material over front fender, fuel tank and fairing lowers, if present.

1. Remove the outer fairing. See OUTER FAIRING/WINDSHIELD, REMOVAL, in this section.
2. Disconnect left and right front turn signal/auxiliary lamp connectors [31L/R], 4-place Multilocks, on T-studs at top of left and right fairing support braces (outboard side). See Figure 2-164.
3. Remove four T40 TORX screws to release auxiliary lamp bracket from upper and lower fork brackets. Remove auxiliary lamp assembly from the motorcycle.

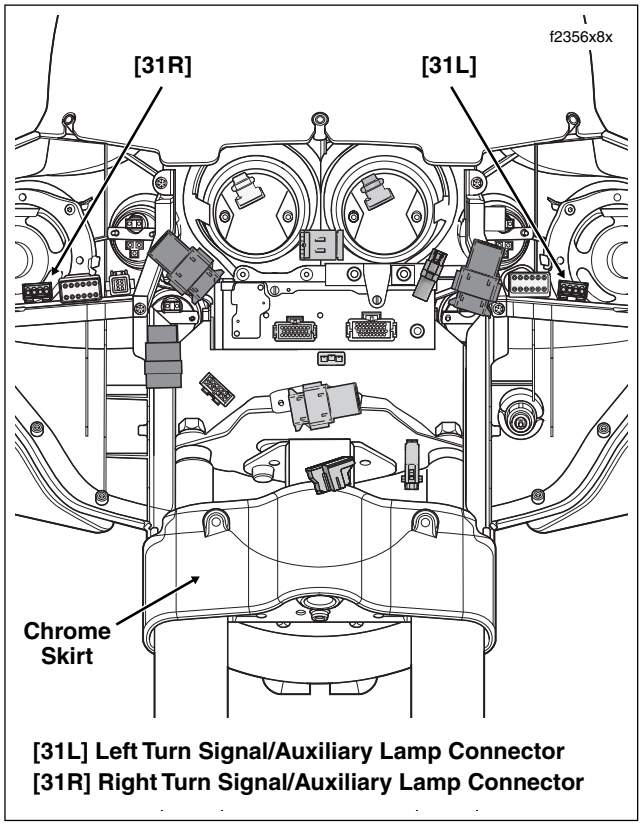

Figure 2-164. Inner Fairing (Front View)

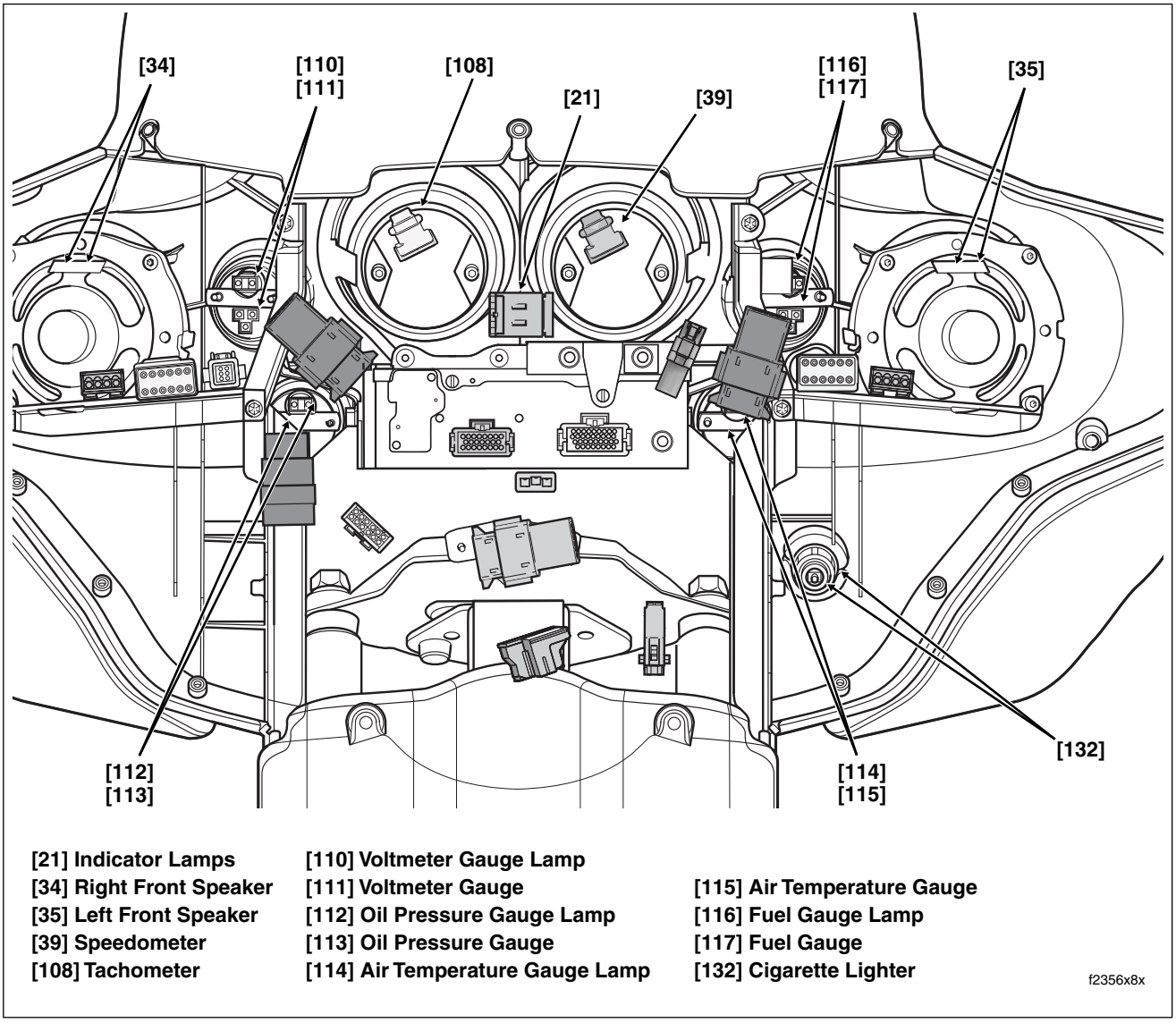

Figure 2-165. Inner Fairing Connectors (FLHX, FLHTC/U)

4. Remove the fairing cap. See FAIRING CAP, REMOVAL, in this section.
5. Pull chrome skirt from inner fairing. See Figure 2-164.
6. Slide rubber boot off clutch cable adjuster. Holding cable adjuster with 1/2 inch wrench, loosen jam nut using 9/16 inch wrench. Back jam nut away from cable adjuster. Move adjuster toward jam nut to introduce free play at hand lever.
7. Remove retaining ring from pivot pin groove at bottom of clutch lever bracket. Remove pivot pin.
8. Remove two T27 TORX screws (with flat washers) to release handlebar clamp from clutch lever bracket. Remove clutch hand lever from clutch lever bracket.
9. Remove anchor pin and clutch cable eyelet from clutch hand lever. See Figure 2-114.
10. Feed clutch cable and cable eyelet through inner fairing grommet to front of motorcycle.

CAUTION

Do not remove the switch housing assembly without first placing a 5/32 inch (4.0 mm) cardboard insert between the brake lever and lever bracket. Removal without the insert may result in damage to the rubber boot and plunger of the front stoplight switch.

NOTE

Use the eyelet of a small cable strap if the cardboard insert is not available.

11. Place the cardboard insert between the brake lever and lever bracket.

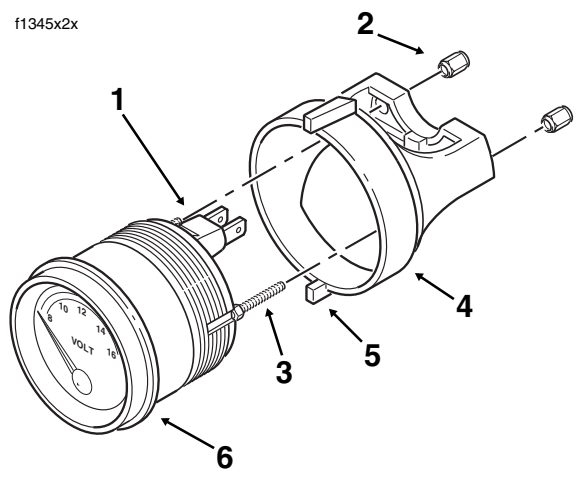

1. Pin Housing
2. Hex Nut
3. Stud
4. Mounting Bracket
5. Tab
6. Gauge

Figure 2-166. Voltmeter Gauge Assembly

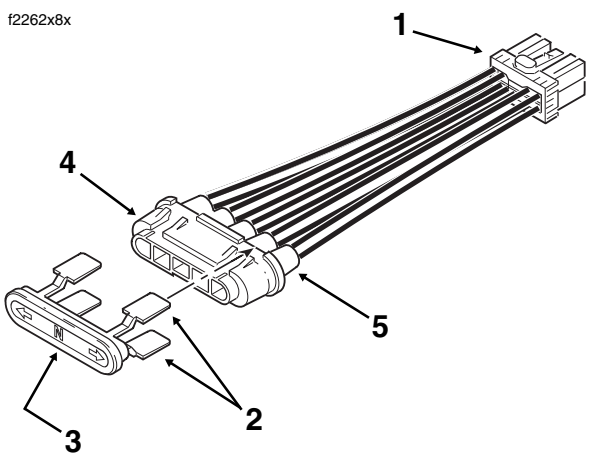

1. Indicator Lamps Connector [21]
2. Paddle
3. Lense
4. Bulb Housing
5. Rubber Boot

Figure 2-167. Indicator Lamp Assembly

12. Using a T25 TORX drive head, remove the upper and lower switch housing screws.

13. Using a T27 TORX drive head, loosen the upper screw securing the handlebar clamp to the master cylinder housing. Remove the lower clamp screw with flat washer.

14. Remove the brass ferrules from the notches on the inboard side of the throttle control grip. For best results, place flat tip screwdriver in slot on outboard side and rotate ferrule in notch. Remove the ferrules from the cable end fittings.

NOTE

On non cruise equipped models, remove the friction shoe from the end of the tension adjuster screw. The friction shoe is a loose fit and may fall out or become dislodged if the lower switch housing is turned upside down or shaken.

15. Remove the throttle control grip from the end of the handlebar.

16. Remove two-sided plastic clip inboard of cable adjuster boots to separate throttle and idle control cable housings. Pull the crimped inserts at the end of the cable housings from the lower handlebar switch housing. For best results, place a drop of light oil on the retaining rings and use a rocking motion while pulling.

17. Feed the throttle and idle control cables through the inner fairing grommet to front of motorcycle.

18. See Figure 2-165. Pull socket terminals [132] from spade contacts on cigarette lighter. Remove cigarette lighter from socket. Holding socket to prevent rotation, unscrew outer shell. Remove socket from inner fairing.

19. Pull socket terminals [35] from left side speaker spade contacts. Remove three T25 TORX screws to release the speaker adapter from the inner fairing. Repeat step on right side of motorcycle.

20. Unthread rubber boot from odometer reset switch. Pull switch from hole in inner fairing.

21. Disconnect speedometer gauge connector [39] and tachometer gauge connector [108]. See Figure 2-165. Leaving anchors on interconnect harness installed in outboard ears of brackets, remove allen head socket screws to remove brackets from gauges. Push gauges toward rear of motorcycle to remove from inner fairing.

22. Disconnect indicator lamps connector [21], 10-place Multilock. See Figure 2-165. Release four paddles to free indicator bulb housing from lense assembly. See Figure 2-167. Remove lense assembly from inner fairing.

23. Disconnect the voltmeter gauge lamp connector [110] and voltmeter gauge connector [111]. Disconnect the fuel gauge lamp connector [116] and fuel gauge connector [117].

24. Remove four socket head screws to free inner fairing from fairing bracket. See Figure 2-168.

25. Spread bottom of inner fairing to free from dowels in lower fork bracket. Spread bottom of fairing bracket to release from same dowels.

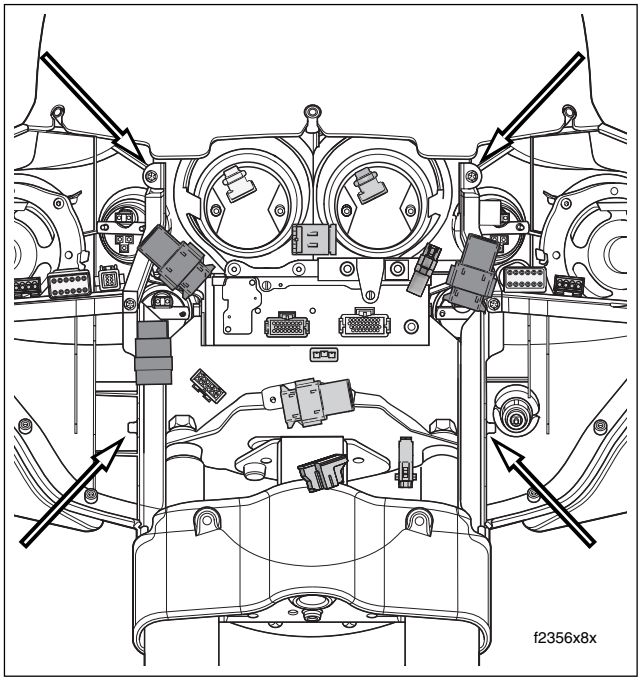

Figure 2-168. Remove Fairing Bracket Screws

26. Raise inner fairing and fairing bracket slightly to prevent reengagement with dowels. On Classic and Ultra models, disconnect the oil pressure gauge lamp connector [112], oil pressure gauge connector [113], air temperature gauge lamp connector [114], and air temperature gauge connector [115].

27. Raise inner fairing and fairing bracket together and then separate by pulling fairing bracket toward the front and inner fairing toward the rear.

28. When inner fairing becomes free of the radio, remove from motorcycle and move to bench area.

29. Install fairing bracket (with radio and interconnect harness) back onto motorcycle aligning holes with dowels in lower fork bracket. Loosely install T40 TORX screws.

30. At bench area, remove hex nuts from studs at back of voltmeter and fuel gauges. Remove mounting brackets from gauges and remove gauges from inner fairing. See Figure 2-166. On Classic and Ultra models, repeat step to remove oil pressure and air temperature gauges.

31. Remove clutch and throttle cable grommets from the inner fairing.

INSTALLATION

1. At bench area, install clutch and throttle cable grommets in inner fairing.

2. Install voltmeter and fuel gauges in inner fairing. Slide mounting brackets over studs. Verify that tabs on top and bottom of brackets engage slots in inner fairing. Loosely install hex nuts on studs. Verify that gauge is properly aligned and tighten nuts to 10-20 **in-lbs** (1.1-2.3 Nm). See Figure 2-166. On Classic and Ultra models, repeat step to install air temperature and oil pressure gauges.

CAUTION

To avoid scratches or other damage, place protective material over front fender, fuel tank and fairing lowers, if present.

3. Remove T40 TORX screws to free fairing bracket (with radio and interconnect harness) from lower fork bracket. Raise fairing bracket and then tilt forward at about a 45 degree angle.

4. Position inner fairing at rear of fairing bracket. Tilting inner fairing rearward at about a 45 degree angle, align upper and lower fork bracket thru holes with those in fairing bracket. Draw fairing bracket and inner fairing together fitting radio into slot in inner fairing.

5. Align upper thru holes in fairing bracket and inner fairing with threaded holes in upper fork bracket and start T40 TORX screws. Align lower thru holes in fairing bracket and inner fairing with dowels in lower fork bracket and start screws. Alternately tighten four T40 TORX screws until snug.

6. Install four socket head screws to attach inner fairing to fairing brackets. See Figure 2-168.

7. Connect the voltmeter gauge lamp connector [110], voltmeter gauge connector [111], fuel gauge lamp connector [116], and fuel gauge connector [117]. On Classic and Ultra models, connect the oil pressure gauge lamp connector [112], oil pressure gauge connector [113], air temperature gauge lamp connector [114], and air temperature gauge connector [115].

8. Place indicator lamp lense assembly into inner fairing. Slot at bottom of lense engages tab in inner fairing to prevent improper orientation. Engage all four paddles on lense assembly with slots on indicator bulb housing. Connect indicator lamps connector [21], 10-place Multilock. See Figure 2-167.

9. Install speedometer and tachometer gauges in inner fairing. Align holes in brackets with those at back of gauges and start two allen head socket screws. Rotate gauges until tabs at top and bottom of brackets engage slots in inner fairing. Verify that gauge is properly aligned and tighten allen head socket screws to 10-20 **in-lbs** (1.1-2.3 Nm). Connect speedometer gauge connector [39] and tachometer gauge connector [108].

10. Slide odometer reset switch through hole in inner fairing. Install rubber boot to secure.

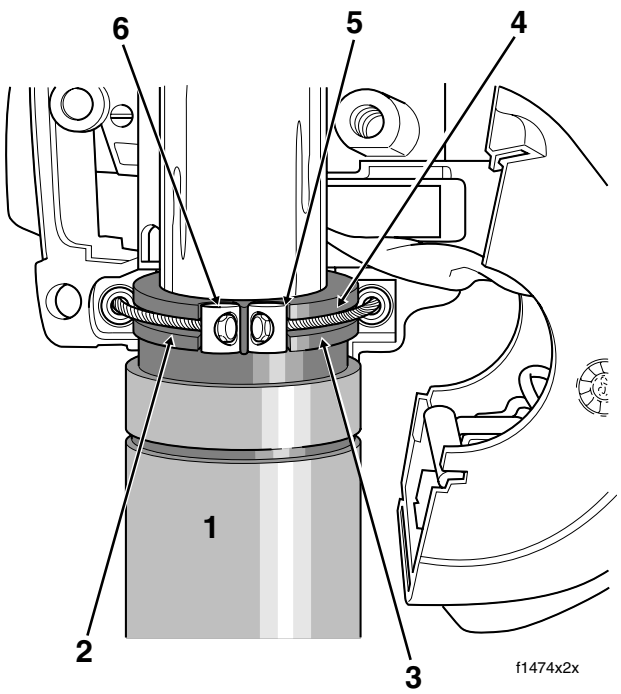

1.	**Throttle Grip**	4.	**Groove**
2.	**Idle Cable**	5.	**Notch**
3.	**Throttle Cable**	6.	**Ferrule**

Figure 2-169. Install Throttle/Idle Cables

11. With the widest edge at the top, align holes in speaker adapter with those in inner fairing. Install two long screws to fasten top of speaker adapter. Capturing fairing support brace, install short screw in lower outboard hole (positioning flat washer between adapter and support brace). Using a T25 TORX drive head, tighten the lower screw to 22-28 **in-lbs** (2.5-3.2 Nm). Tighten the two upper screws to 35-50 **in-lbs** (4.0-5.7 Nm).

NOTE

The screw hole on the lower inboard side of the speaker adapter is not used.

12. Push the socket terminals onto the speaker spade contacts. Different size spade contacts prevent improper assembly.
13. Repeat steps 11-12 on opposite side of motorcycle.
14. From rear of inner fairing, slide socket of cigarette lighter through bore in fairing. Thread outer shell onto socket until tight. Install cigarette lighter in socket. Connect the orange/white wire terminal to the socket spade contact, the black wire terminal to the outer shell contact.
15. Feed the throttle and idle control cables through the right side inner fairing grommet.

NOTE

On non cruise equipped models, install the friction shoe with the concave side up so that the pin hole is over the point of the adjuster screw. The friction shoe is a loose fit and may fall out or become dislodged if the lower switch housing is turned upside down or shaken.

16. Push the throttle and idle control cables into the lower handlebar switch housing until they snap in place. Proceed as follows:
    a. Note the different diameter inserts crimped into the end of the throttle and idle control cable housings.
    b. Push the larger diameter insert (silver) on the throttle cable housing into the larger hole (front).
    c. Push the smaller diameter insert (gold) on the idle cable housing into the smaller hole (rear).

NOTE

To aid assembly, place a drop of light oil on the retaining rings of the crimped inserts. Always replace the retaining rings if damaged or distorted.

17. Slide the throttle control grip over the end of the right handlebar until it bottoms against the closed end. Rotate the grip so that the ferrule notches are at the top. To prevent binding, pull the grip back about 1/8 inch (3.2 mm).
18. Position the lower switch housing beneath the throttle control grip. Install the brass ferrule onto the throttle cable so that the end fitting seats in the ferrule recess. Be sure that ferrule is oriented so that when installed in notch of throttle control grip, slotted end is on the outboard side. Install ferrule in notch of throttle control grip.

    Verify that cable is captured in groove molded into the grip. Repeat step to install idle control cable. See Figure 2-169.
19. Position the upper switch housing over the handlebar and lower switch housing.
20. Verify that the wire harness conduit runs in the depression at the bottom of the handlebar. Also be sure that the upper switch housing harness will not be pinched against the handlebar when the switch housing screws are tightened.
21. Start the upper and lower switch housing screws, but do not tighten.

CAUTION

Do not remove the 5/32 inch (4.0 mm) cardboard insert (or cable strap eyelet) wedged between the brake lever and lever bracket. Removal will result in damage to the rubber boot and plunger of the Front Stoplight Switch during installation of the master cylinder assembly.

22. Position the brake lever/master cylinder assembly inboard of the switch housing assembly engaging the tab on the lower switch housing in the groove at the top of the brake lever bracket.

23. Align the holes in the handlebar clamp with those in the master cylinder housing and start the two screws (with flat washers). Position for rider comfort. Beginning with the top screw, tighten the screws to 60-80 **in-lbs** (6.8-9.0 Nm) using a T27 TORX drive head.
24. Using a T25 TORX drive head, tighten the lower and upper switch housing screws to 35-45 **in-lbs** (4-5 Nm).

NOTE

Always tighten the lower switch housing screw first so that any gap between the upper and lower housings is at the front of the switch.

25. Remove the cardboard insert between the brake lever and lever bracket.
26. Install two-sided plastic clip inboard of cable adjuster boots to hold throttle and idle control cable housings together.
27. Moving to other side of motorcycle, feed clutch cable through left side inner fairing grommet.
28. Insert clutch cable eyelet into groove of clutch hand lever aligning eyelet with hole without bushing. Insert anchor pin through lever and eyelet.
29. Insert lever into groove of clutch lever bracket fitting sleeve at end of cable housing into bore on inboard side of bracket.
30. Align hole in hand lever with hole in bracket and install pivot pin. Install retaining ring in pivot pin groove.
31. Install two T27 TORX screws (with flat washers) to secure handelbar clamp to clutch lever bracket. Starting with the top screw, tighten screws to 60-80 **in-lbs** (6.8-9.0 Nm).
32. Adjust the clutch. See Section 6.3 CLUTCH, ADJUSTMENT.
33. Install the fairing cap. See FAIRING CAP, INSTALLATION, in this section.
34. Remove two T40 TORX screws from lower fork bracket. Install chrome skirt aligning thru holes with screws just removed. Start T40 TORX screws back into lower fork bracket. See Figure 2-164.
35. Loosen two T40 TORX screws from upper fork bracket.
36. Slide slots of auxiliary lamp bracket onto upper and lower fork bracket screws. Alternately tighten four T40 TORX screws to 15-20 ft-lbs (20-27 Nm) in a crosswise pattern.
37. Mate left and right front turn signal/auxiliary lamp connectors [31L/R], 4-place Multilocks. Install on T-studs at top of left and right fairing support braces (outboard side). Verify that conduit is routed inboard using relief in upper outboard corner of chrome skirt.
38. Install the outer fairing. See OUTER FAIRING/WINDSHIELD, INSTALLATION, in this section.

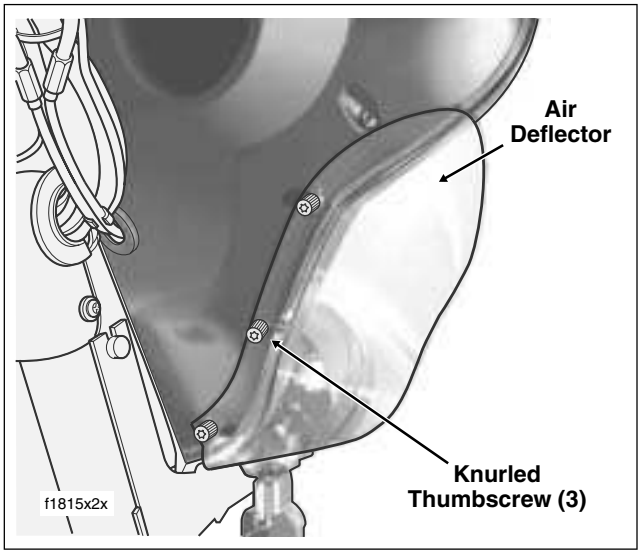

Figure 2-170. Remove/Install Air Deflectors

AIR DEFLECTORS (FLHTCU)

NOTE

By increasing the flow of air behind the fairing, removing the air deflectors evacuates heated air and provides some relief to the rider in warmer temperatures (70˚ F. or above).

REMOVAL

1. Remove three knurled thumbscrews to release air deflector at side of inner fairing. See Figure 2-170.
2. Repeat step to remove air deflector on opposite side of motorcycle.

NOTE

If additional cooling is desired, either vent or remove the fairing lowers, if installed. See Section 2.29 LOWER FAIRING/ENGINE GUARD, LOWER FAIRING (FLHTCU).

INSTALLATION

NOTE

Reinstall air deflectors in colder weather.

1. Install three knurled thumbscrews to fasten air deflector at side of inner fairing.
2. Repeat step to install air deflector on opposite side of motorcycle. See Figure 2-170.

WINDSHIELD ONLY

REMOVAL

1. Standing at front of motorcycle, alternately loosen and then remove five Phillips screws (with plastic flat washers) at base of windshield.
2. Remove windshield from outer fairing.
3. Carefully remove wellnuts (with rubber flat washers) from holes in outer fairing. See Figure 2-171. Exercise caution to avoid pushing wellnuts into fairing during removal. Inspect wellnuts and rubber flat washers for cuts, tears or signs of deterioration. Replace as necessary.

INSTALLATION

1. Preinstall hardware on windshield as follows:
   a. Slide plastic flat washers onto Phillips screws.
   b. Slide Phillips screws through slots in windshield.
   c. Slide rubber flat washers onto wellnuts.
   d. Start wellnuts onto Phillips screws.
2. Moving to front of motorcycle, push wellnuts into holes in outer fairing. See Figure 2-172.

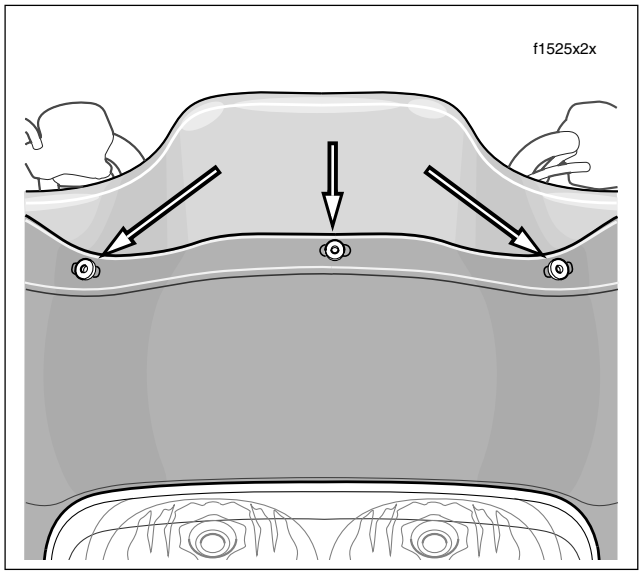

Figure 2-171. Remove Wellnuts From Outer Fairing

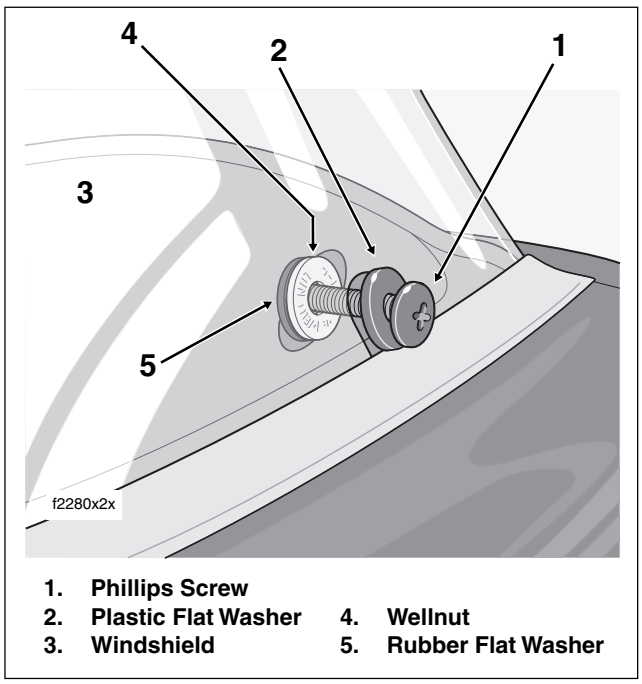

Figure 2-172. Install Windshield (Decal Removed for Illustration Purposes)

3. Starting with center screw, alternately tighten the five Phillips screws to 6-13 **in-lbs** (0.7-1.5 Nm).

OUTER FAIRING

REMOVAL

NOTE

Windshield may be left in place during outer fairing removal.

1. Place protective material on top of front fender to protect paint from scratches or other damage.
2. Obtain ratchet and T25 TORX head bit. Standing on left side of motorcycle, remove screw at edge of fairing outboard of the left speaker. See Figure 2-173. Remove screw outboard of the right speaker.
3. Loosen top left and right screws just outboard of the fuel and volt gauges, respectively.
4. Remove screw just below left side glove compartment. Remove screw below right side glove compartment.
5. On inboard side of right fairing support, remove rear acorn nut (with flat washer) from stud of front turn signal lamp bracket. Remove front acorn nut with flat washer.

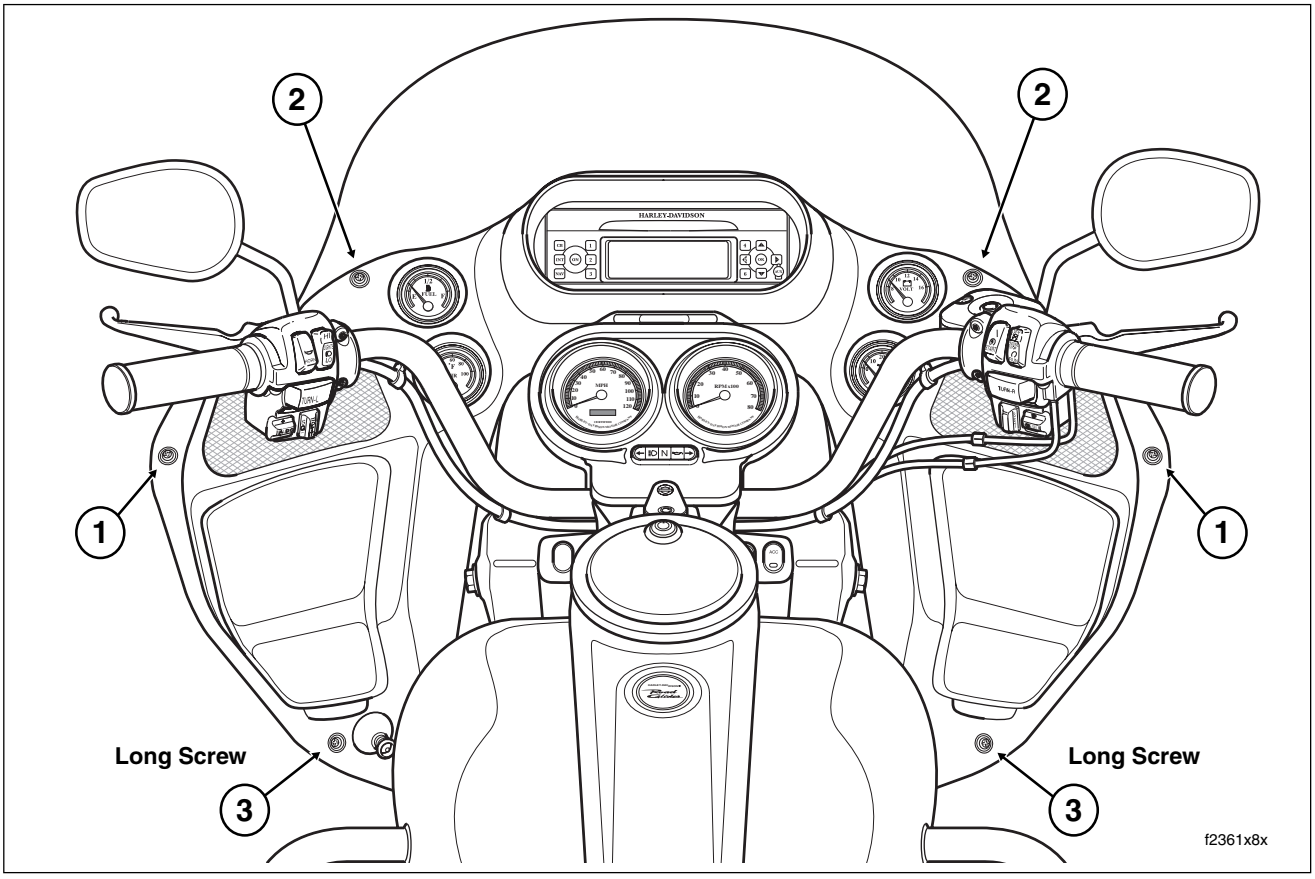

Figure 2-173. Remove/Install Six Outer Fairing Screws

Pull front turn signal lamp assembly from motorcycle and allow to hang at front of engine guard. Repeat step to remove front turn signal lamp assembly on left side. See Figure 2-174.

6. Remove top left and right screws just outboard of the fuel and volt gauges, respectively (previously loosened).
7. Raise outer fairing slightly and then rest on protective fender pad.
8. Squeeze two external tabs to disconnect headlamp jumper harness connector.
9. To avoid possible wire damage, disconnect front turn signal lamp connectors [31L] and [31R], 3-place Multilocks, and move to bench area. See Figure 2-175.

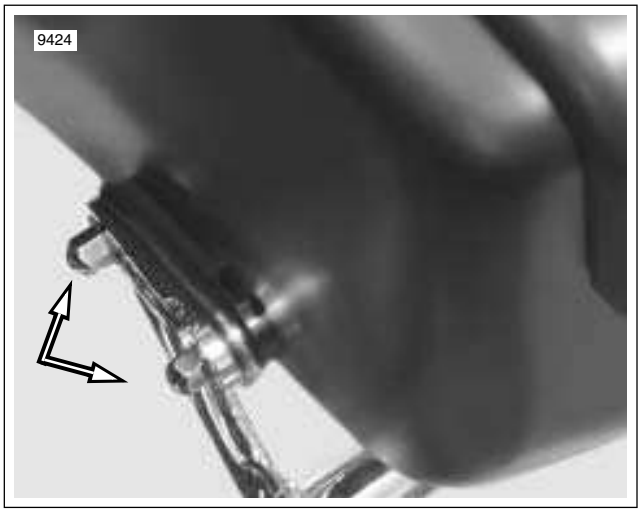

Figure 2-174. Remove Acorn Nuts to Release Turn Signal Lamp and Bracket

INSTALLATION

1. Place protective material on top of front fender to protect paint from scratches or other damage.
2. Connect front turn signal lamp connectors [31L] and [31R], 3-place Multilocks. Capture conduit in adhesive clips on inner fairing. Allow front turn signal lamp assemblies to hang at front of engine guard until outer fairing installation is complete.

NOTE

The front turn signal lamp assemblies are not interchangeable. Note that the letters R(ight) or L(eft) are stamped on the inboard side of the turn signal lamp bracket to help ensure proper assembly.

Figure 2-175. Front Turn Signal Lamp

3. To avoid chafing wires of interconnect harness, verify that trim strips are installed inboard of hooks on radio bracket.
4. Rest outer fairing on front fender pad and connect headlamp jumper harness connector.

CAUTION

If windshield is attached during outer fairing installation, exercise caution to avoid scratching or damaging inner fairing with windshield screws and wellnuts.

5. Place outer fairing against inner fairing. Two slots in outer fairing must engage hooks on radio bracket. Move harness conduit and wiring as necessary to ensure full engagement between outer and inner fairings.
6. Move to side of outer fairing to verify that alignment tabs are properly engaged. Alignment tabs on inner fairing must be positioned outboard of those on the outer fairing. Repeat step on opposite side of motorcycle.

NOTE

Although the tightening sequence described below begins on the left side of the motorcycle, if the left side of the outer fairing fits the inner fairing better than the right, then start the first screw on the right side. In other words, install the first screw on the side that does not have the best fit.

7. Obtain ratchet and T25 TORX head bit. Install screw at edge of fairing outboard of the left speaker. Install screw outboard of the right speaker. Mounting bosses on inner fairing are painted white for easier alignment of holes.
8. Install the top left and right screws just outboard of the fuel and volt gauges, respectively.
9. Moving to left side of motorcycle, install the first of two long screws just below the glove compartment. Install the second long screw below the right side glove compartment.
10. Alternately tighten four short fairing screws to 6-12 **in-lbs** (0.7-1.4 Nm). Alternately tighten two long fairing screws to 10-15 **in-lbs** (1.1-1.7 Nm). Use the torque pattern shown in Figure 2-173.
11. Slide studs on front turn signal lamp bracket through holes in fairings and fairing support. Loosely install acorn nuts with flat washers. Alternately tighten acorn nuts to 40-50 **in-lbs** (4.5-5.7 Nm).
12. Repeat step 11 to install front turn signal lamp assembly on opposite side of motorcycle.

BEZEL

REMOVAL

1. Remove T25 TORX screw on left and right side of instrument bezel. See Figure 2-176.
2. Use thumbs to push tab at rear of bezel from slot in front of ignition switch. Gently raise free side of bezel until tabs at front of instrument nacelle become disengaged from slot at front of bezel (concealed behind decorative adhesive strip).
3. Raising bezel slightly, remove anchor on ambient temperature sensor from hole in bottom inboard ear of speedometer bracket.

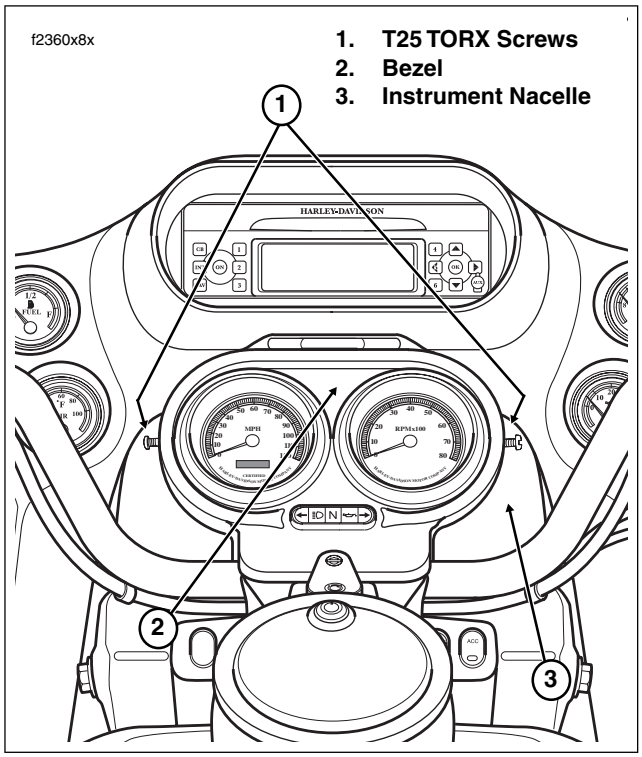

Figure 2-176. Remove Instrument Bezel Screws

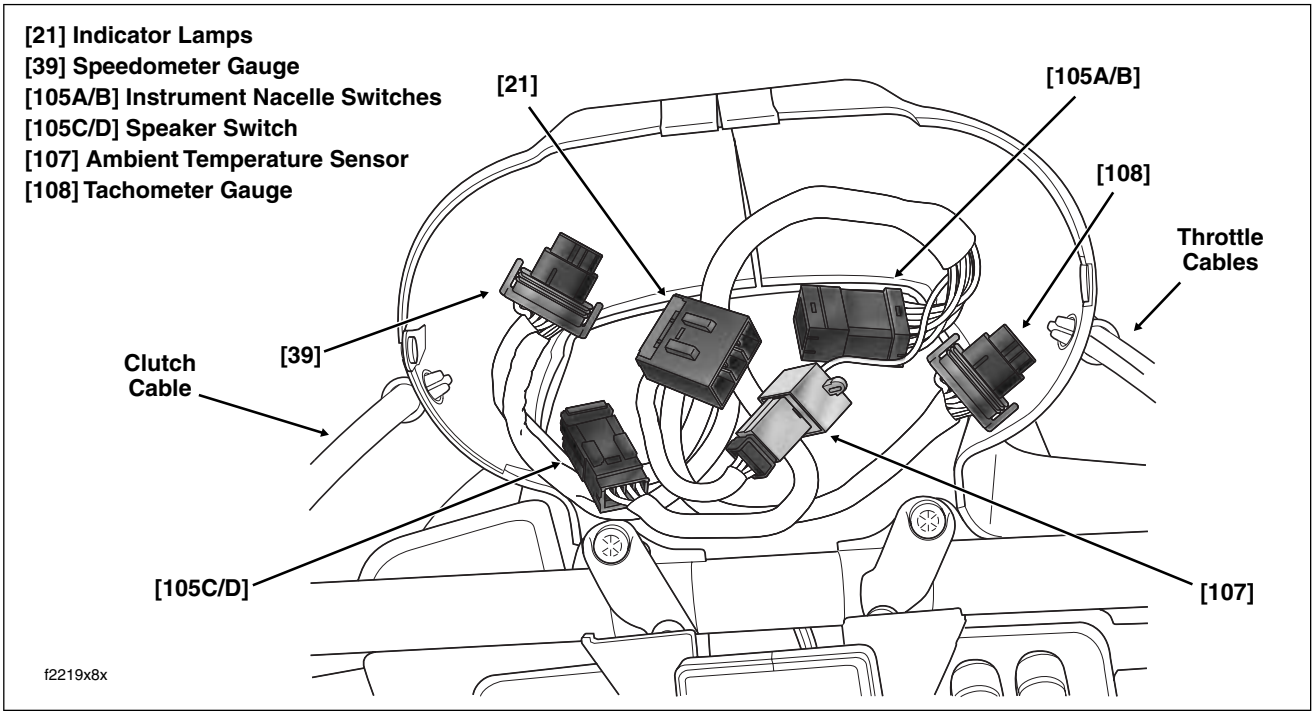

Figure 2-177. Instrument Nacelle (Bezel Removed)

4. See Figure 2-177. Disconnect instruments and indicator lamps from interconnect harness as follows:
   - Speedometer connector [39], 12-place Packard.
   - Tachometer connector [108], 12-place Packard.
   - Indicator lamps connector [21], 10-place Multilock.
5. Remove bezel from motorcycle.

INSTALLATION

1. See Figure 2-177. Looking into the instrument nacelle, connect instruments and indicator lamps to interconnect harness as follows:
   - Speedometer connector [39], 12-place Packard.
   - Tachometer connector [108], 12-place Packard.
   - Indicator lamps connector [21], 10-place Multilock.
2. Install anchor on ambient temperature sensor into hole in bottom inboard ear of speedometer bracket.
3. Verify that left and right sides of instrument nacelle are properly mated. Pins on left side of nacelle must fully engage holes on right.
4. Insert tab at rear of bezel into slot of instrument nacelle (just in front of ignition switch). Holding left and right sides of nacelle together, place bezel over instrument nacelle flange. When properly mated, tabs at front of instrument nacelle engage lip in slot at front of bezel (behind decorative adhesive strip).

NOTE

*If tabs do not properly engage slot at front of bezel, then a loose fit will result. Remove decorative adhesive strip by gently prying up outer edges, and using a flat bladed screwdriver, carefully raise tabs so that they engage lip in slot. If damaged, install **new** decorative adhesive strip.*

5. Install T25 TORX screw on each side of bezel. Alternately tighten screws to 25-35 **in-lbs** (2.8-4.0 Nm). See Figure 2-176.

INSTRUMENT NACELLE

REMOVAL

1. Partially disassemble ignition switch. See Section 8.19 IGNITION/LIGHT KEY SWITCH AND FORK LOCK, FLHX, FLHT/C/U, FLTR, REMOVAL, steps 1-5.
2. Remove bezel. See BEZEL, REMOVAL, in this section.
3. See Figure 2-177. Disconnect left side switch from instrument nacelle switch harness as follows:
   - Speaker Switch connector [105], 4-place Multilock.
4. Pull clutch cable clip from hole on left side of instrument nacelle.

5. Remove two T40 TORX bolts (with flat washers) to release left side of instrument nacelle from upper and lower fork brackets.

6. Unthread rubber boot from odometer reset switch, and while carefully removing left side instrument nacelle from motorcycle, pull odometer reset switch from hole. See Figure 2-178.

7. See Figure 2-179. Disconnect instrument nacelle switches from interconnect harness as follows:

   - Instrument nacelle switch connector [105], 12-place Multilock.

8. Pull throttle cable clip from hole on right side of instrument nacelle.

9. Remove two T40 TORX bolts (with flat washers) to release right side of instrument nacelle from upper and lower fork brackets.

INSTALLATION

1. Install right side of instrument nacelle on motorcycle.
2. See Figure 2-179. Connect instrument nacelle switches to interconnect harness as follows:
   - Instrument nacelle switch connector [105], 12-place Multilock.
3. While carefully placing left side of instrument nacelle on motorcycle, slide odometer reset switch through hole and install rubber boot.

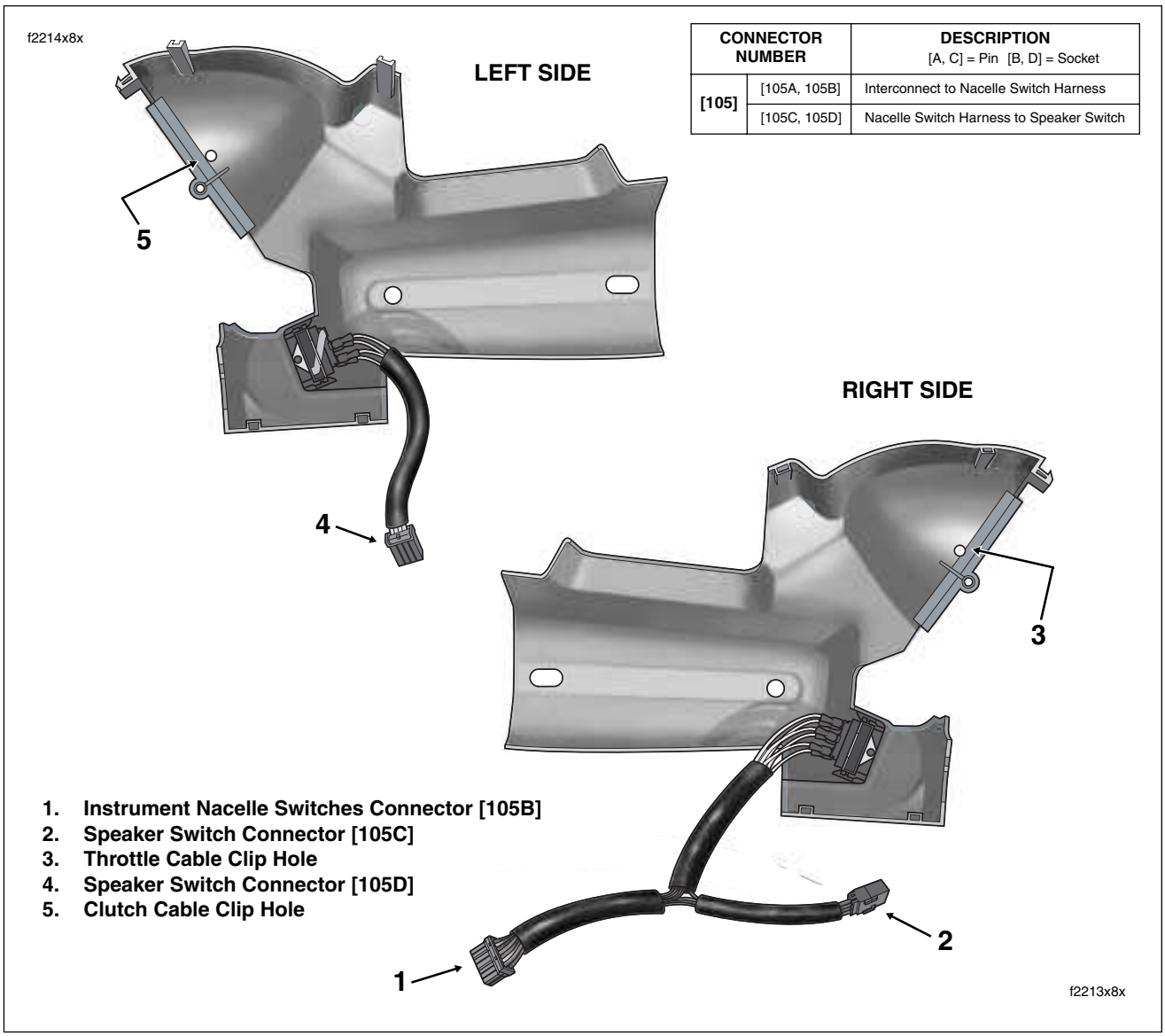

CONNECTOR NUMBER		DESCRIPTION [A, C] = Pin [B, D] = Socket
[105]	[105A, 105B]	Interconnect to Nacelle Switch Harness
	[105C, 105D]	Nacelle Switch Harness to Speaker Switch

1. **Instrument Nacelle Switches Connector [105B]**
2. **Speaker Switch Connector [105C]**
3. **Throttle Cable Clip Hole**
4. **Speaker Switch Connector [105D]**
5. **Clutch Cable Clip Hole**

Figure 2-178. Instrument Nacelle Halves

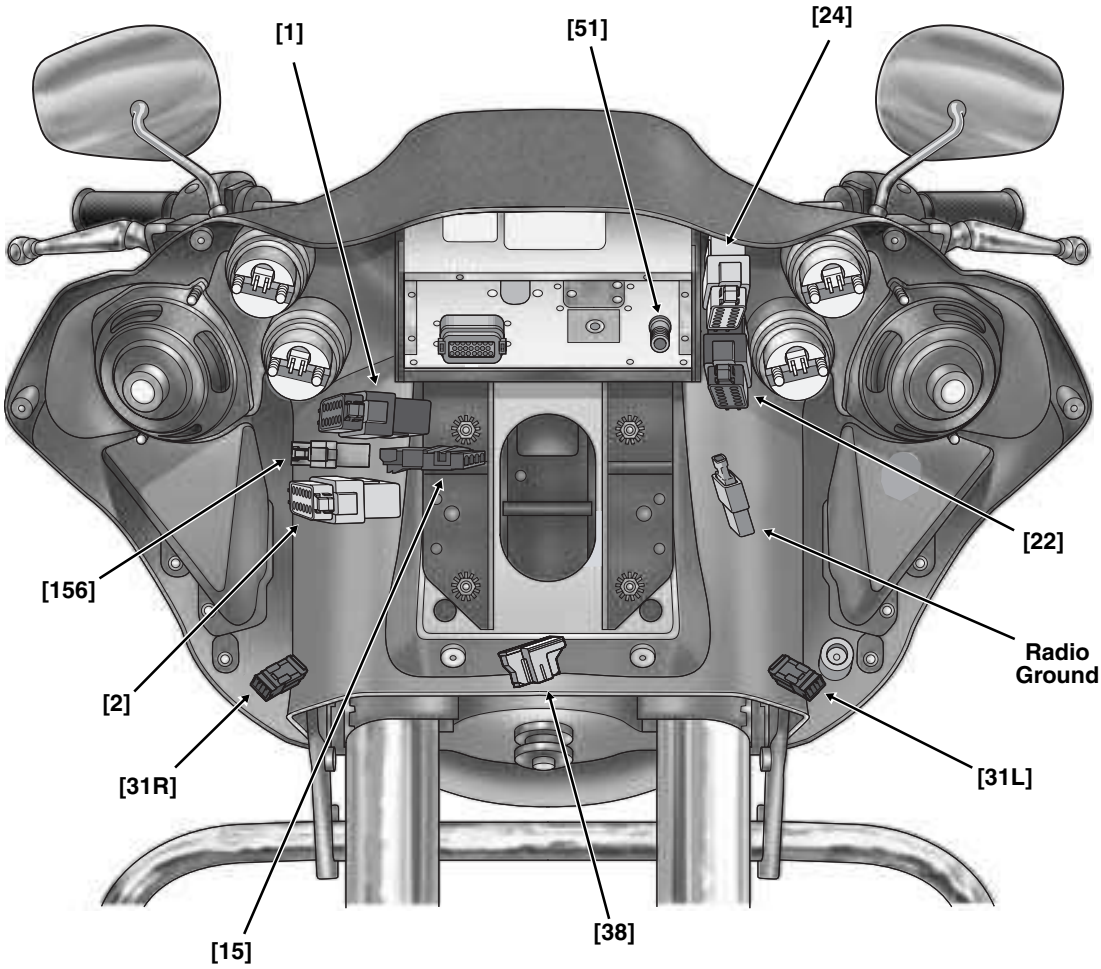

[1] Main to Interconnect Harness
[2] Main to Interconnect Harness
[15] Main to Interconnect Harness
[22] Right Handlebar Switch Controls
[24] Left Handlebar Switch Controls
[27] Radio
[31L] Left Turn Signal
[31R] Right Turn Signal
[38] Headlamp
[51] Radio Antenna Cable
[156] Main to Interconnect Harness

Figure 2-179. Inner Fairing Connectors (FLTR)

4. See Figure 2-179. Connect left side switch to instrument nacelle switch harness as follows:
   - Speaker Switch connector [105], 4-place Multilock.
5. Verify that left and right sides of nacelle are properly mated. Four pins on left side of nacelle must fully engage holes on right.
6. Install two T40 TORX bolts (with flat washers) to fasten left side instrument nacelle to upper and lower fork brackets. Alternately tighten bolts to 15-20 ft-lbs (20-27 Nm).
7. Capture clutch cable in cable clip. Insert cable clip into hole in left side of instrument nacelle.
8. Install two T40 TORX bolts (with flat washers) to fasten right side instrument nacelle to upper and lower fork brackets. Tighten bolts to 15-20 ft-lbs (20-27 Nm).
9. Capture throttle cables in cable clip. Insert cable clip into hole in right side of instrument nacelle.
10. Install bezel. See BEZEL, INSTALLATION, in this section.
11. Assemble ignition switch. See Section 8.19 IGNITION/ LIGHT KEY SWITCH AND FORK LOCK, FLHX, FLHT/ C/U, FLTR, INSTALLATION, steps 6-15.

INNER FAIRING

REMOVAL

1. Place protective material on top of front fender to protect paint from scratches or other damage.
2. Remove the outer fairing. See OUTER FAIRING, REMOVAL, in this section.
3. Carefully cut two cable straps to free wire bundles and conduit from convoluted tubing of interconnect harness and allow to hang naturally.
4. See Figure 2-179. Disconnect main harness from interconnect harness as follows:
   - Main to interconnect harness connector [1], 12-place Deutsch (black); below radio (right side).
   - Main to interconnect harness connector [2], 12-place Deutsch (gray); below radio (right side).
   - Main to interconnect harness connector [15], 4-place Packard (black); below radio (right side).
   - Main to interconnect harness connector [156], 6-place Deutsch (gray); below radio (right side).
5. See Figure 2-179. Disconnect radio antenna cable and radio ground wire. Proceed as follows:
   - Radio antenna cable connector [51]; back of radio (left side).
   - Radio ground; single spade and socket terminal; below radio (left side).
6. See Figure 2-179. Disconnect handlebar switch controls from interconnect harness. Proceed as follows:
   - Left handlebar switch controls connector [24], 12-place Deutsch (gray); T-stud on left side of radio bracket.
   - Right handlebar switch controls connector [22], 12-place Deutsch (black); T-stud on left side of radio bracket.
7. Draw the main harness conduit, handlebar switch control conduit, radio ground wire and radio antenna cable as far forward as possible. Rest the connectors of the longer harnesses on the front fender.
8. Remove left side of instrument nacelle. See INSTRUMENT NACELLE, REMOVAL, in this section, steps 1-6.
9. See Figure 2-177. Disconnect instrument nacelle switches and ambient temperature sensor from interconnect harness as follows:
   - Instrument nacelle switch connector [105], 12-place Multilock.
   - Ambient temperature sensor connector [107], 3-place Multilock.

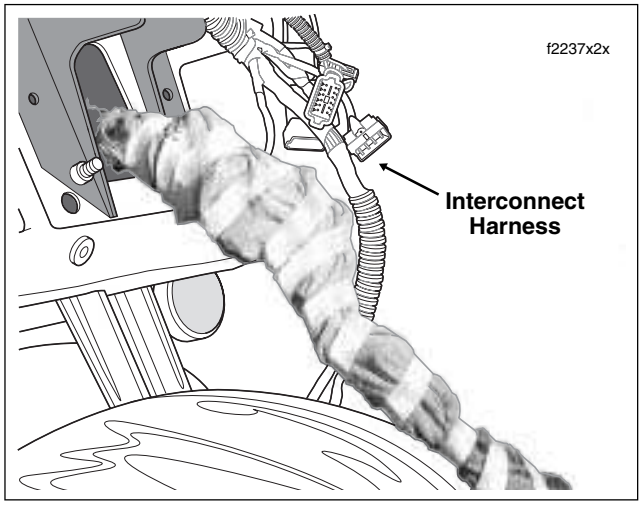

Figure 2-180. Wrap Main Harness in Shop Towels

10. See Figure 2-177. Draw branches of interconnect harness (terminating in odometer reset switch and speedometer, tachometer, indicator lamps, instrument nacelle switch and ambient temperature sensor connectors) from instrument nacelle through tunnel of fairing bracket to front of inner fairing.
11. Disconnect ignition switch connector [33], 3-place Packard, at front of ignition switch housing. Proceed as follows:
    a. Obtain the IGNITION SWITCH CONNECTOR REMOVER (HD-45961).
    b. Gently insert end of tool into slot in ignition switch housing until it stops.
    c. Grasping main harness conduit and tool, pull both at the same time to release socket housing from ignition switch housing.
12. Draw branch of main harness terminating in ignition switch connector from instrument nacelle through tunnel of fairing bracket to front of inner fairing.
13. Separate any branches of the interconnect harness that may be intermingled with the main harness conduit. Allow the interconnect harness to hang along the left side of the front fender.
14. Capturing all connectors, tightly wrap clean shop towels around the main harness conduit, handlebar switch control conduit, radio ground wire and radio antenna cable, and secure with masking tape. See Figure 2-180.
15. Remove four locknuts to release radio bracket and inner fairing from studs of fairing bracket. See Figure 2-181.
16. Lift inner fairing (with attached radio bracket and interconnect harness) from fairing bracket studs and move to bench area.

NOTE

To remove the fairing bracket, proceed with steps 17-22.

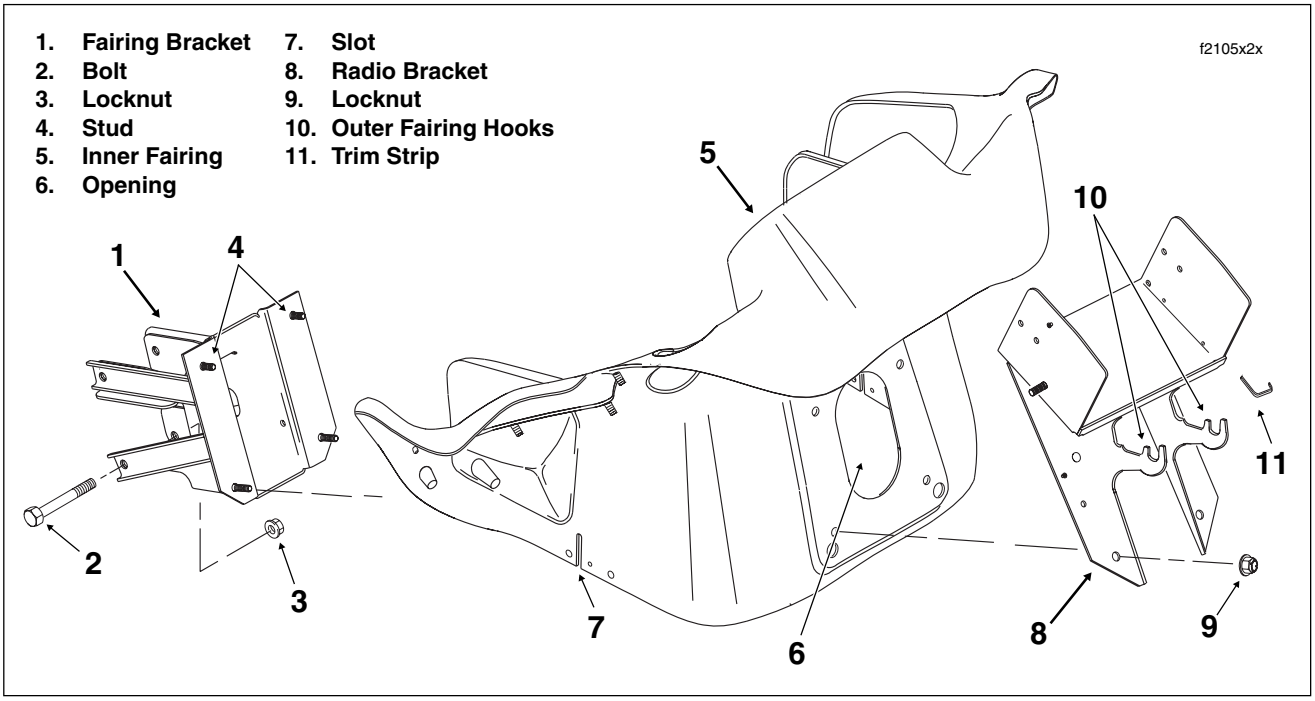

Figure 2-181. Inner Fairing Assembly

17. Remove right side instrument nacelle. See INSTRUMENT NACELLE, REMOVAL, in this section, steps 8-9.
18. Remove shop towels and masking tape from around the harness bundle. Separate main harness conduit, handlebar switch control conduit, radio ground wire and radio antenna cable.
19. Remove screw to release main harness ground ring terminal and brake line P-clamp from front of upper fork bracket.
20. Pull main harness and both radio ground and harness ground ring terminals through opening on right side of fairing bracket allowing conduit and connectors to hang over top of engine guard.
21. Pull handlebar switch control conduit out through opening at top of fairing bracket.
22. Remove locknuts and bolts to release fairing bracket from holes at rear of steering head.

INSTALLATION

NOTE

To install the fairing bracket, begin at step 1. If only the inner fairing was removed, start at step 7.

1. Align holes in fairing bracket with those at rear of steering head. Standing on right side, insert bolts until they exit fairing bracket on left side of motorcycle. Install locknuts and tighten to 20-30 ft-lbs (27.1-40.7 Nm).
2. Route handlebar switch control conduit through opening at top of fairing bracket. See Figure 2-182.
3. Route main harness and both radio ground and harness ground ring terminals through opening on right side of fairing bracket. See Figure 2-182.
4. Install screw to fasten harness ground ring terminal and brake line P-clamp to front of upper fork bracket.
5. Draw wire harnesses and conduit out tunnel of fairing bracket and pull as far forward as possible. Tightly wrap clean shop towels around radio ground, main harness and handlebar switch control conduit and connectors and secure with masking tape. See Figure 2-180.
6. Install right side instrument nacelle. See INSTRUMENT NACELLE, INSTALLATION, in this section, steps 8-9.
7. Place protective material on top of front fender to protect paint from scratches or other damage. Rest inner fairing (with attached radio bracket and interconnect harness) on front fender.
8. Place inner fairing over four fairing bracket studs while feeding end of harness bundle through opening beneath radio. See Figure 2-181. Verify that sides of inner fairing are positioned outboard of both fairing supports (on engine guards).
9. Install four locknuts to secure radio bracket and inner fairing to fairing bracket studs. Tighten locknuts to 96-144 **in-lbs** (10.9-16.3 Nm).

10. Draw the harness bundle as far forward as possible, resting the end of the bundle on the front fender. See Figure 2-180.

11. Find branch of interconnect harness terminating in odometer reset switch and speedometer, tachometer, indicator lamps, instrument nacelle switch and ambient temperature sensor connectors. Feed connectors and conduit from front of inner fairing through tunnel of fairing bracket and then out through opening at top of fairing bracket to instrument nacelle.

12. See Figure 2-177. Connect instrument nacelle switches and ambient temperature sensor to interconnect harness as follows:
    - Instrument nacelle switch connector [105], 12-place Multilock.
    - Ambient temperature sensor connector [107], 3-place Multilock.

13. Returning to front of inner fairing, remove shop towels and masking tape from around the harness bundle. Separate radio ground, main harness and handlebar switch control conduit.

14. Find branch of main harness terminating in ignition switch connector. Feed connector and conduit from front of inner fairing through tunnel of fairing bracket and then out through opening at top of fairing bracket to instrument nacelle.

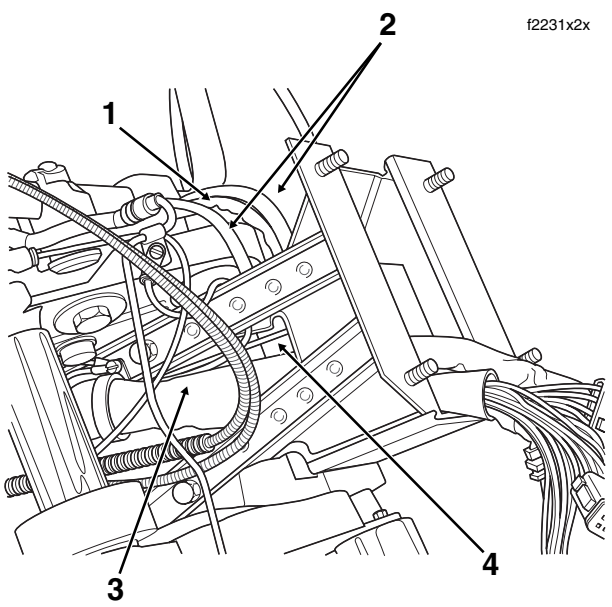

1. **Ignition Switch**
2. **Left and Right Handlebar Controls**
3. **Main Harness**
4. **Radio Ground**

Figure 2-182. Route Main Harness and Conduit Thru Fairing Bracket

15. Connect main harness to ignition switch. Proceed as follows:
    - Ignition switch connector [33], 3-place Packard; front of ignition switch housing.

16. See Figure 2-179. Connect handlebar switch controls to interconnect harness. Proceed as follows:
    - Left handlebar switch controls connector [24], 12-place Deutsch (gray); T-stud on left side of radio bracket.
    - Right handlebar switch controls connector [22], 12-place Deutsch (black); T-stud on left side of radio bracket.

17. See Figure 2-179. Connect main harness to interconnect harness as follows:
    - Main to interconnect harness connector [1], 12-place Deutsch (black); below radio (right side).
    - Main to interconnect harness connector [2], 12-place Deutsch (gray); below radio (right side).
    - Main to interconnect harness connector [15], 4-place Packard (black); below radio (right side).
    - Main to interconnect harness connector [156], 6-place Deutsch (gray); below radio (right side).

18. See Figure 2-179. Connect radio antenna cable and radio ground wire. Proceed as follows:
    - Radio antenna cable connector [51]; back of radio (left side).
    - Radio ground; single spade and socket terminal; below radio (left side).

19. Orient connectors as shown in Figure 2-179. Install two **new** cable straps outboard of radio bracket hooks to secure wire bundles and conduit to convoluted tubing of interconnect harness. Cut any excess cable strap material.

CAUTION

To avoid chafing wires of interconnect harness, verify that trim strips are installed inboard of hooks on radio bracket.

20. Install the outer fairing. See OUTER FAIRING, INSTALLATION, in this section.

21. Install left side of instrument nacelle. See INSTRUMENT NACELLE, INSTALLATION, in this section, steps 5-7 and 9-10.

22. Install bezel. See BEZEL, INSTALLATION, in this section.

GLOVE BOX DOOR/HINGE

REMOVAL

1. Remove the outer fairing. See OUTER FAIRING, REMOVAL, in this section.
2. To access glove box door fasteners, pull out screw cap cover below hinge.
3. Holding locknuts at front of inner fairing, loosen hinge screws (T25 TORX).
4. Hold glove box door closed as hinge screws are completely removed. If not held closed, door will pop open as spring loaded hinge is released and door may be dropped to the floor.
5. If hinge replacement is necessary, remove plastic barrels to release hinge from door.

INSTALLATION

1. Place spring inside hinge inserting spring pin into closest hole. With coil and one spring pin positioned inside hinge, second spring pin is outside.
2. Place hinge into position capturing free end of external spring pin between ribs molded into glove box door.
3. Install plastic barrels to hold hinge in door. Slot in barrel prevents interference with spring pin installed between ribs of door. Push barrels in until tight.

NOTE

*Install **new** glove box door bumpers in inner fairing if damaged or missing. Insert tail of rubber bumper into hole, and moving to front of inner fairing, pull anchor through hole.*

4. Place glove box door into position against inner fairing. Holding locknuts (with flat washers) at front of inner fairing, tighten hinge screws (T25 TORX).
5. To conceal glove door fasteners, snap screw cap cover into place below hinge.
6. Install the outer fairing. See OUTER FAIRING, INSTALLATION, in this section.

WINDSHIELD/HEADLAMP NACELLE (FLHR/C/S) 2.32

WINDSHIELD REMOVAL

1. See Figure 2-183. Standing at the front of the motorcycle, use a finger to raise the wireform latch springs on both sides of the windshield.
2. Gently pull on the top of the windshield until the upper notches on the windshield brackets are free of the upper grommets.
3. Carefully raise the windshield until the lower notches are free of the lower grommets.
4. Remove windshield from motorcycle.

WINDSHIELD INSTALLATION

CAUTION

To avoid scratching headlamp nacelle or auxiliary lamp bracket, be sure that all four notches on the windshield brackets are firmly seated on a rubber grommet.

1. Standing at the front of the motorcycle, carefully insert the windshield brackets between the headlamp nacelle and the auxiliary lamp bracket. Lower the windshield into position until the lower notches on the windshield brackets are seated on the lower grommets.
2. Gently push the top of the windshield toward the rear until the upper notches fully engage the upper grommets. See Figure 2-183.
3. Push down on the wireform latch springs, so that they overhang the rubber grommets. If some adjustment is necessary, loosen the retaining screws and rotate the latch springs into the proper position.

NACELLE REMOVAL (FLHR/C)

1. Remove the windshield. See WINDSHIELD REMOVAL on this page.
2. Remove the Phillips screw at the bottom of the headlamp door (chrome ring). Remove the headlamp door.
3. Remove the seven Phillips screws to free the headlamp housing from the headlamp nacelle.

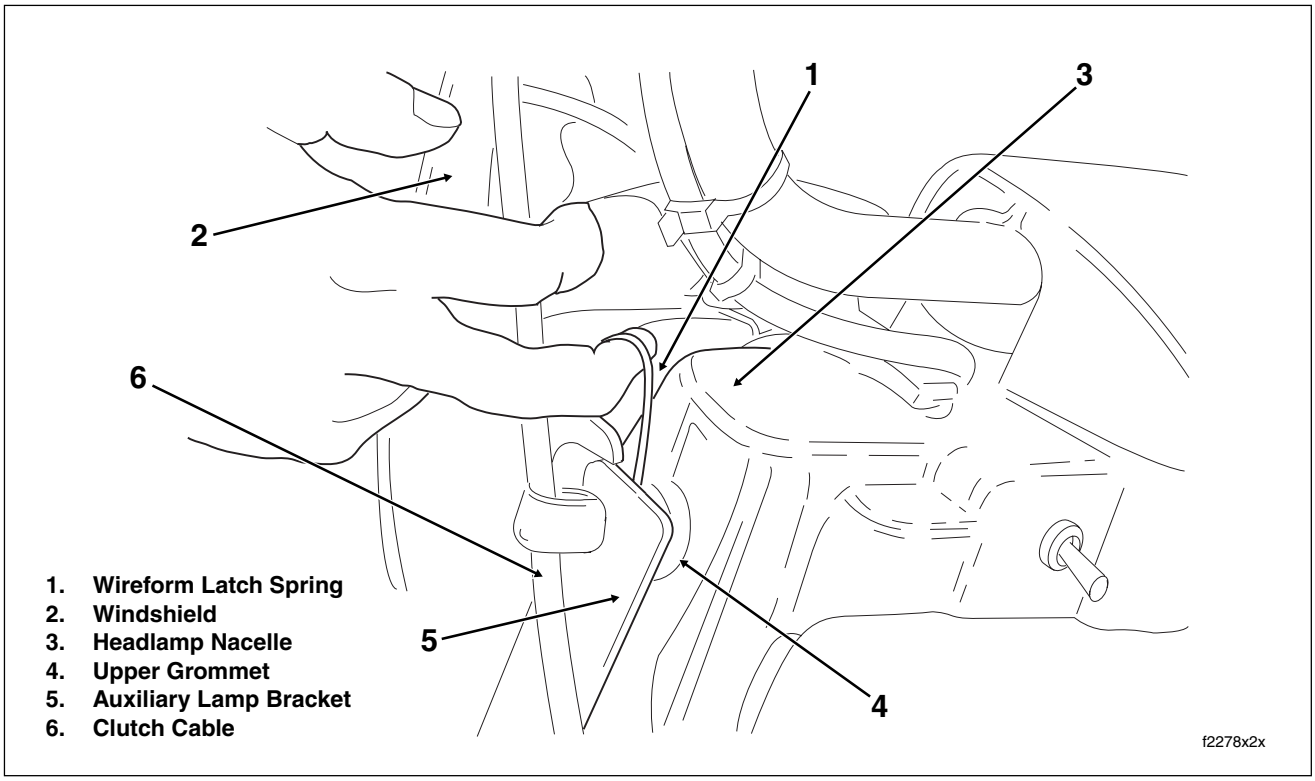

Figure 2-183. Windshield (FLHR/C)

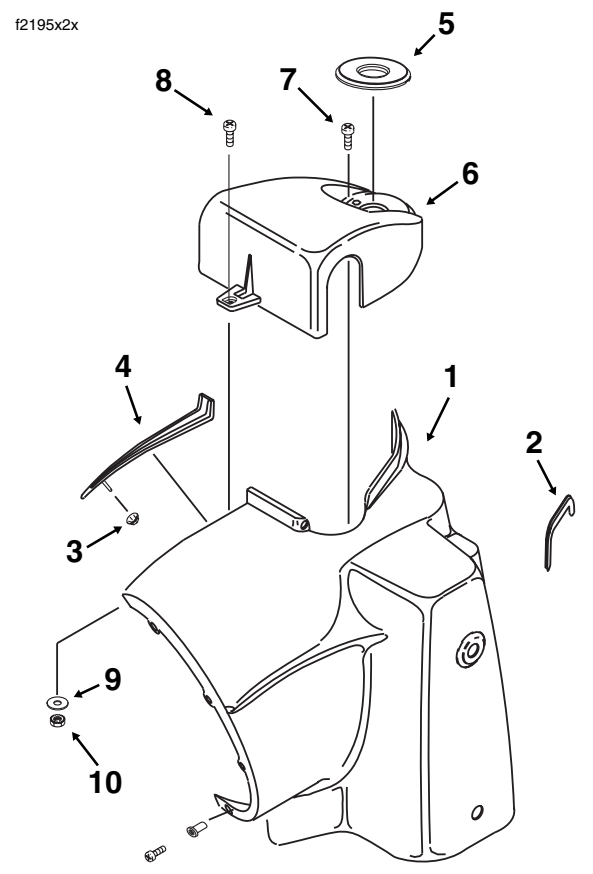

1.	**Headlamp Nacelle (Left Side)**	6.	**Handlebar Clamp Shroud**
2.	**Trim Strip**	7.	**Phillips Screw (2)**
3.	**Flange Nut**	8.	**Phillips Screw**
4.	**Chrome Strip**	9.	**Flat Washer**
5.	**Fork Lock Plate**	10.	**Keps Nut**

Figure 2-184. Headlamp Nacelle Assembly

4. Remove headlamp connector [38] at back of headlamp bulb. Remove the headlamp housing assembly from the motorcycle.
5. Reaching inside the headlamp nacelle, remove the flange nut to release the chrome strip at the top of the nacelle. See Figure 2-184.
6. Carefully pry off the fork lock plate at the rear of the handlebar clamp shroud. Remove two Phillips screws beneath the lock plate.
7. Loosen the Phillips screw from tab at the front of the handlebar clamp shroud (but do not remove Keps nut and flat washer).
8. Remove the two acorn nuts from the left side fork bracket studs. Remove acorn nuts from the right side fork bracket studs.
9. Cover the front fender with suitable material to protect the fender paint. Remove the auxiliary lamp bracket from the left and right side fork bracket studs and carefully set on front fender.
10. Remove the grommets (and clutch cable clamp) from the left and right side fork bracket studs.
11. Raise the handlebar clamp shroud, and after separating the halves of the headlamp nacelle slightly, slide the shroud forward running the shaft of the Phillips screw down the gap. See Figure 2-185.
12. Reaching inside the headlamp nacelle, disconnect accessory switch connector [67] and auxiliary lamp switch connector [109].
13. Carefully separate the halves of the headlamp nacelle and remove from motorcycle.

NACELLE INSTALLATION (FLHR/C)

1. Fit halves of the headlamp nacelle together engaging the holes in the nacelle with the left and right side fork bracket studs.
2. Reaching inside the headlamp nacelle, connect accessory switch connector [67] and auxiliary lamp switch connector [109].
3. If disassembled, install Phillips screw, flat washer and Keps nut on the handlebar clamp shroud as shown in Figure 2-185.
4. Part the halves of the headlamp nacelle slightly. With the flat washer on the inboard side of the nacelle, slide the shroud rearward running the shaft of the Phillips screw down the gap. Position the shroud over the flange at the top of the nacelle.

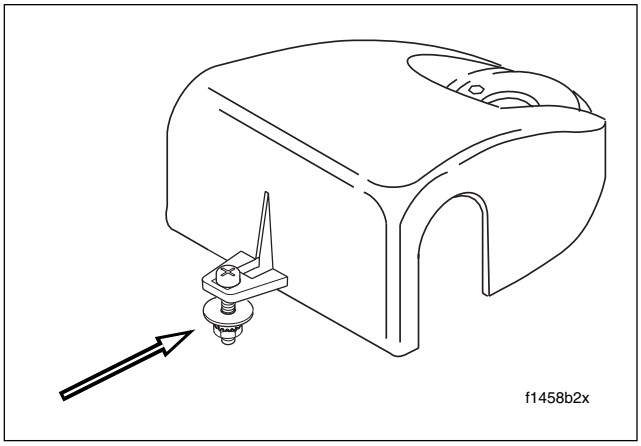

Figure 2-185. Handlebar Clamp Shroud and Screw Assembly

5. Mate the halves of the headlamp nacelle and tighten the Phillips screw to 10-20 **in-lbs** (1.1-2.3 Nm).
6. Install two Phillips screws to secure the handlebar clamp shroud to the fork lock mechanism. Install the fork lock plate.

WARNING

To avoid possible damage to the brake hose, throttle cables and/or handlebar switch wires, verify that trim strips are installed on inside edges of the headlamp nacelle. Cutting or severe chafing of the brake hose, throttle cables and/or handlebar switch wires could cause loss of function while riding, possibly resulting in death or serious injury.

7. Verify that trim strips are installed on inside edges of headlamp nacelle. Install new trim strips if cracked, broken or missing.
8. Inserting the weld stud on the chrome strip into the hole at the top of the headlamp nacelle, reach inside the nacelle to install flange nut. Tighten flange nut to 15-20 **in-lbs** (1.7-2.3 Nm).
9. Install the grommets on the left and right side fork studs.
10. Slide the auxiliary lamp bracket onto the left and right side fork bracket studs. Verify that the four grommets are in place on the inboard side of the auxiliary lamp brackets.
11. Install the acorn nuts on the fork bracket studs and tighten to 72-108 **in-lbs** (8.1-12.2 Nm). Be sure to capture the clutch cable clamp on the upper left stud before installing the acorn nut.
12. Install headlamp connector [38] at back of headlamp bulb.
13. Align holes in headlamp housing with wellnuts in headlamp nacelle (headlamp door bracket at bottom). Install the seven Phillips screws and alternately tighten to 9-18 **in-lbs** (1.0-2.0 Nm).
14. Fit the square-shaped portion of the headlamp door spring into the slot at the top of the headlamp housing and then snap the headlamp door (chrome ring) into place. Install Phillips screw at the bottom of the headlamp door and tighten to 9-18 **in-lbs** (1.0-2.0 Nm).
15. Install the windshield. See WINDSHIELD INSTALLATION in this section.

NACELLE REMOVAL (FLHRS)

1. Remove the Phillips screw at the bottom of the headlamp door (chrome ring). Remove the headlamp door.
2. Remove the seven Phillips screws to free the headlamp housing from the headlamp nacelle.

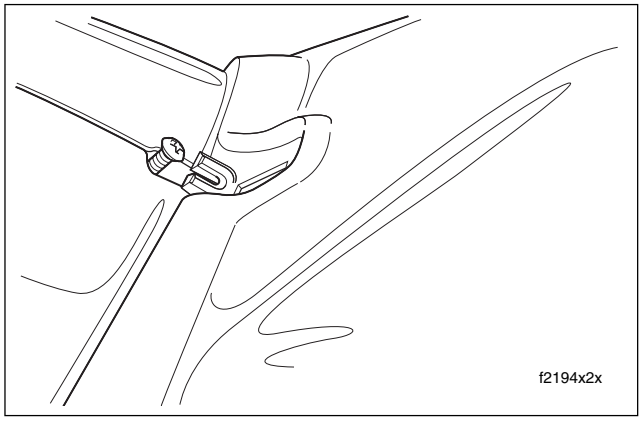

Figure 2-186. Remove Screw From Slot in Wind Deflector

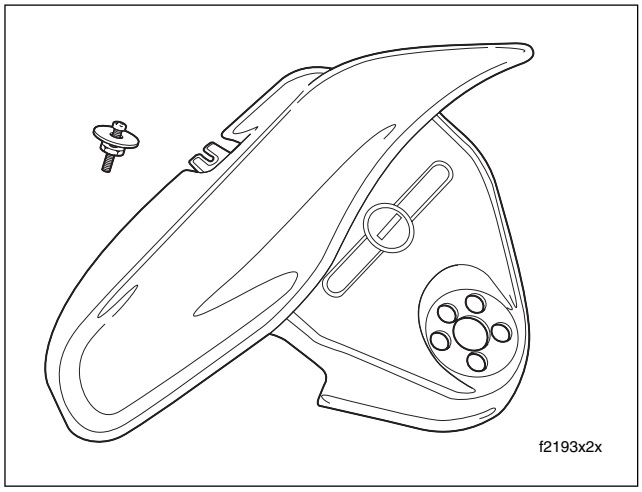

Figure 2-187. Handlebar Clamp Shroud/Wind Deflector and Screw Assembly

3. Remove headlamp connector [38] at back of headlamp bulb. Remove the headlamp housing assembly from the motorcycle.
4. Reaching inside the headlamp nacelle, remove the flange nut to release the chrome strip at the top of the nacelle.
5. Carefully pry off the fork lock plate at the rear of the handlebar clamp shroud. Remove two Phillips screws beneath the lock plate.
6. Loosen Phillips screw at front of wind deflector (but do not remove). Reaching inside the headlamp nacelle, release screw head from slot in tab and then draw screw assembly down and out through headlamp nacelle. See Figure 2-186.
7. Raise handlebar clamp shroud/wind deflector and remove from motorcycle. See Figure 2-187.

NOTE

If necessary, remove three flange bolts to remove handlebar clamp shroud from wind deflector.

8. Reaching inside the headlamp nacelle, disconnect accessory switch connector [67].
9. Using a T40 TORX drive head, remove the two left side fork bracket bolts (with flat washers). Remove the two right side fork bracket bolts (with flat washers).
10. Carefully separate the halves of the headlamp nacelle and remove from motorcycle.

NACELLE INSTALLATION (FLHRS)

1. Fit halves of the headlamp nacelle together aligning the holes in the nacelle with those in the upper and lower fork brackets.
2. Start the two right side fork bracket bolts (with flat washers). Start the two left side fork bracket bolts (with flat washers). Be sure to capture clutch cable clamp when installing upper fork bracket bolt on left side of motorcycle (open side of clamp faces forward).
3. Using a T40 TORX drive head, alternately tighten the fork bracket bolts to 15-20 ft-lbs (20-27 Nm) in a crosswise pattern.
4. Reaching inside the headlamp nacelle, connect accessory switch connector [67].
5. Position the handlebar clamp shroud/wind deflector on flange at top of headlamp nacelle.

NOTE

If separated, install three flange bolts to fasten handlebar clamp shroud to wind deflector. Alternately tighten bolts to 12-18 ft-lbs (16.3-24.4 Nm).

6. If disassembled, assemble screw assembly as shown in Figure 2-187.
7. Holding screw assembly, reach inside headlamp nacelle and insert head of Phillips screw up through opening to engage slot in tab at front of wind deflector. See Figure 2-186. Tighten screw to 10-20 **in-lbs** (1.1-2.3 Nm).
8. Install two Phillips screws to secure the handlebar clamp shroud to the fork lock mechanism. Install the fork lock plate.

⚠WARNING

To avoid possible damage to the brake hose, throttle cables and/or handlebar switch wires, verify that trim strips are installed on inside edges of the headlamp nacelle. Cutting or severe chafing of the brake hose, throttle cables and/or handlebar switch wires could cause loss of function while riding, possibly resulting in death or serious injury.

9. Verify that trim strips are installed on inside edges of headlamp nacelle. Install new trim strips if cracked, broken or missing.
10. Inserting the weld stud on the chrome strip into the hole at the top of the headlamp nacelle, reach inside the nacelle to install flange nut. Tighten flange nut to 15-20 **in-lbs** (1.7-2.3 Nm).
11. Install headlamp connector [38] at back of headlamp bulb.
12. Align holes in headlamp housing with wellnuts in headlamp nacelle (headlamp door bracket at bottom). Install the seven Phillips screws and alternately tighten to 9-18 **in-lbs** (1.0-2.0 Nm).
13. Fit the square-shaped portion of the headlamp door spring into the slot at the top of the headlamp housing and then snap the headlamp door (chrome ring) into place. Install Phillips screw at the bottom of the headlamp door and tighten to 9-18 **in-lbs** (1.0-2.0 Nm).

REMOVAL

NOTE

If fender tip lamp is absent, start procedure at step 4.

1. **FLHT/C/U:** Reaching in below the fairing cap on the left side of the steering head, disconnect front fender tip lamp jumper harness connector [32], 2-place Multilock. See Figure 2-188. Remove the outer fairing only if necessary. See Section 2.30 UPPER FAIRING/WINDSHIELD (FLHX, FLHT/C/U), OUTER FAIRING/WINDSHIELD, REMOVAL.

   FLHR: Remove the Phillips screw at the bottom of the headlamp door (chrome ring). Remove the headlamp door. Remove the seven Phillips screws to free the headlamp housing from the headlamp nacelle. Remove headlamp connector [38] at back of headlamp bulb. Remove the headlamp housing assembly from the motorcycle. Disconnect front fender tip lamp jumper harness connector [32], 2-place Multilock. See Figure 2-189.

2. Draw socket housing down to fender area.

3. Carefully cut cable strap to release front fender tip lamp wires from brake line hose.

4. Place the motorcycle on a hydraulic center stand with the front wheel raised off the ground.

5. Use shop rag or tape to protect fender area adjacent to caliper, as incidental contact can occur during caliper removal.

6. Remove both the upper and lower mounting bolts from lugs of front fork leg to release brake caliper assembly. Lift caliper upward to remove from brake disc. Using thru hole, cable strap caliper to rail of engine guard. Repeat step to release caliper on opposite side of wheel.

NOTE

Do not operate the front brake hand lever with the front wheel removed or the caliper pistons may be forced out. Reseating pistons requires disassembly of the caliper.

7. Insert screwdriver or steel rod through hole in axle on right side of motorcycle. While holding axle stationary, remove the axle nut, lockwasher and flat washer on the left side.

8. Loosen the two axle holder nuts at bottom of right side fork leg.

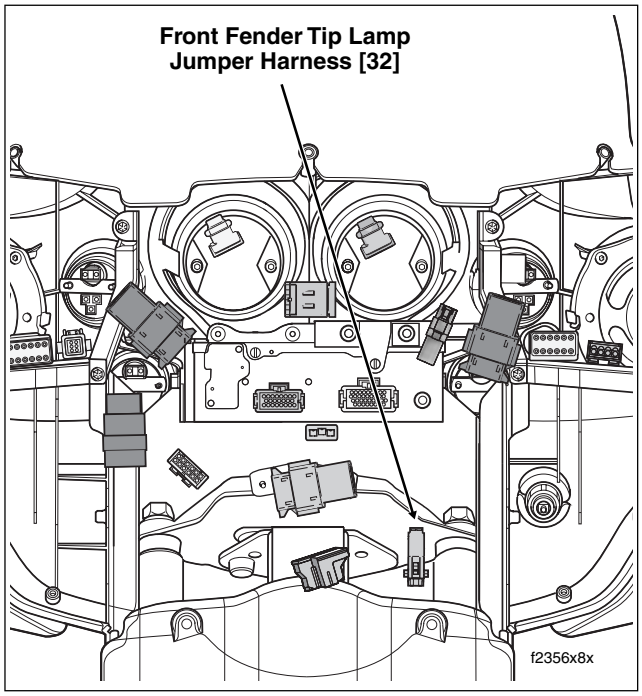

Figure 2-188. Inner Fairing (FLHT/C/U)

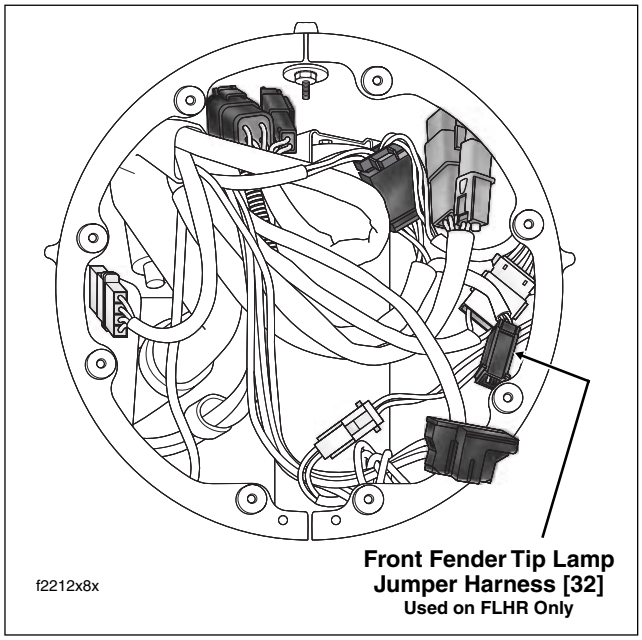

Figure 2-189. Headlamp Nacelle (FLHRC)

9. With soft mallet, tap axle toward right side of motorcycle until loose. Pull axle from hub while supporting wheel. Remove wheel.

10. Bend tabs on lockplates away from flats of four fender mounting bolts. Remove fender mounting bolts and lockplates. Remove fender from motorcycle.

INSTALLATION

NOTE

If fender tip lamp is absent, perform steps 1 and 3-12.

1. Align mounting holes in fender and lockplates with those in fork tubes. Install four fender mounting bolts and tighten to 16-20 ft-lbs (22-27 Nm). Bend tabs on lockplates against flats of fender mounting bolts.
2. Route socket housing upward behind chrome skirt (FLHT/C/U) or through bottom of headlamp nacelle (FLHR) to area beneath upper fork bracket. Connect front fender tip lamp jumper harness connector [32].

NOTE

To connect front fender tip lamp with the outer fairing installed (FLHT/C/U models), reach in below the fairing cap on the left side of the steering head.

3. Place wheel into position between forks with the valve stem on the right side of the motorcycle.
4. Coat the axle with ANTI-SEIZE LUBRICANT.
5. Supporting wheel, insert threaded end of axle through right fork leg. Push axle through fork, **short** external spacer and wheel hub until it begins to emerge from left side.
6. With the three notches on the bearing side, push axle through **long** external spacer and left fork leg until axle shoulder contacts external spacer on right fork side.
7. Install flat washer, lockwasher and axle nut.
8. Insert screwdriver or steel rod through hole in axle on right side of motorcycle. While holding axle stationary, tighten axle nut to 50-55 ft-lbs (68-75 Nm).
9. Insert 7/16 inch drill bit into hole in axle.
10. Pull fork leg so that it just contacts drill bit, and then tighten axle holder nuts to 132-180 **in-lbs** (14.9-20.3 Nm).
11. Remove drill bit from axle hole.
12. Install brake caliper as follows:
    a. Use shop rag or tape to protect fender area adjacent to caliper, as incidental contact can occur during caliper installation.
    b. With the bleeder valve topside, position caliper so that brake disc is situated between friction pads. Now align upper mounting hole in caliper with upper mounting lug on fork leg.
    c. Loosely install long caliper mounting bolt into upper lug of front fork leg.
    d. Install short caliper mounting bolt into lower lug of front fork leg. Tighten lower mounting bolt to 28-38 ft-lbs (37.9-51.5 Nm).
    e. Tighten upper caliper mounting bolt to 28-38 ft-lbs (37.9-51.5 Nm).
    f. Repeat step 12 to install caliper on opposite side of wheel.
13. Install **new** cable strap to secure front fender tip lamp wires to brake line hose. Cut any excess cable strap material.
14. **FLHT/C/U:** Install the outer fairing, if removed. See Section 2.30 UPPER FAIRING/WINDSHIELD (FLHX, FLHT/C/U), OUTER FAIRING/WINDSHIELD, INSTALLATION.

    FLHR: Install headlamp connector [38] at back of headlamp bulb. Align holes in headlamp housing with wellnuts in headlamp nacelle (headlamp door bracket at bottom). Install the seven Phillips screws and alternately tighten to 9-18 **in-lbs** (1.0-2.0 Nm). Install the headlamp door (chrome ring) and door screw. Tighten screw to 9-18 **in-lbs** (1.0-2.0 Nm).

REAR FENDER 2.34

REMOVAL

NOTE

For all models except FLHX, begin procedure at step 2 .

1. On FLHX models, proceed as follows:
   a. Remove rear facia. See Section 2.35 REAR FACIA (FLHX), REMOVAL.
   b. Remove rear facia lamp. See Section 2.35 REAR FACIA (FLHX), REAR FACIA LAMP, REMOVAL.
2. Place the motorcycle on a hydraulic center stand with the rear wheel raised off the ground.
3. Remove seat. See Section 2.25 SEAT, REMOVAL.
4. Remove rear wheel. See Section 2.4 REAR WHEEL, REMOVAL.
5. Disconnect rear fender lights connector [7] anchored at front of rear fender. Release anchor from fender hole. See Figure 2-190.
6. Gently pull side cover from frame downtube (no tools required). Repeat step on opposite side of motorcycle.
7. Remove four hex screws with lockwashers (two each on FLHR/C/S and FLTR) to release license plate bracket from luggage rack.
8. Obtain ratchet and T40 TORX head bit. Standing on left side of motorcycle, remove screw to release front of rear fender from battery box. See Figure 2-191.

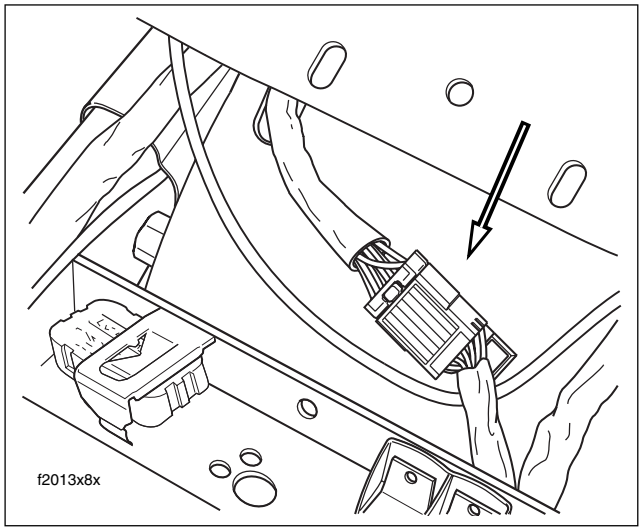

Figure 2-190. Rear Fender Lights Connector [7]

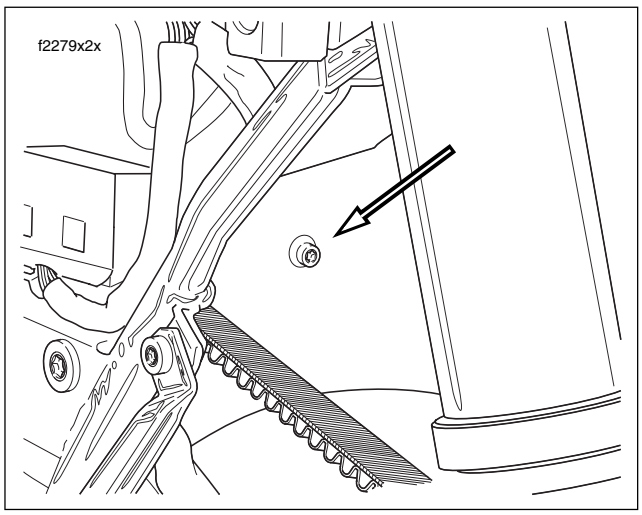

Figure 2-191. Rear Fender Front Screw (T40 TORX)

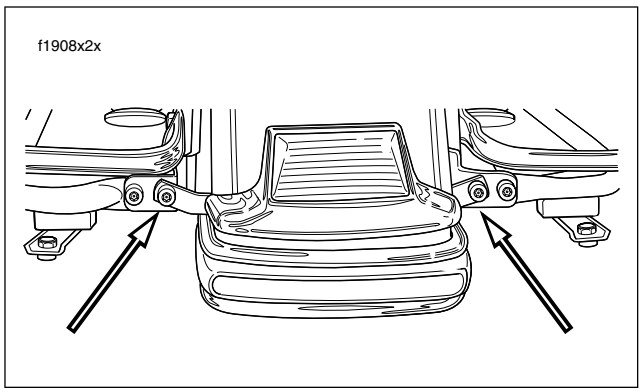

Figure 2-192. Rear Bumper Screws (T40 TORX)

9. At rear of motorcycle, remove inside screw (and flange nut) to release rear bumper bracket from saddlebag support bracket and saddlebag support rail. Repeat step on opposite side of motorcycle. See Figure 2-192.
10. Reaching under rear bumper, remove flange nut (with flat washer) to free rear bumper bracket from weld stud on fender. Remove bumper from motorcycle.
11. Remove fender side mounting screw located just below side cover grommet. Repeat step on opposite side of motorcycle. See Figure 2-193.
12. Remove upper rear screw from saddlebag support bracket. Repeat step on opposite side of motorcycle. See Figure 2-194.
13. Remove upper front screw from saddlebag support bracket. Be aware that rear fender will drop when both forward screws are removed. Repeat step on opposite side of motorcycle.

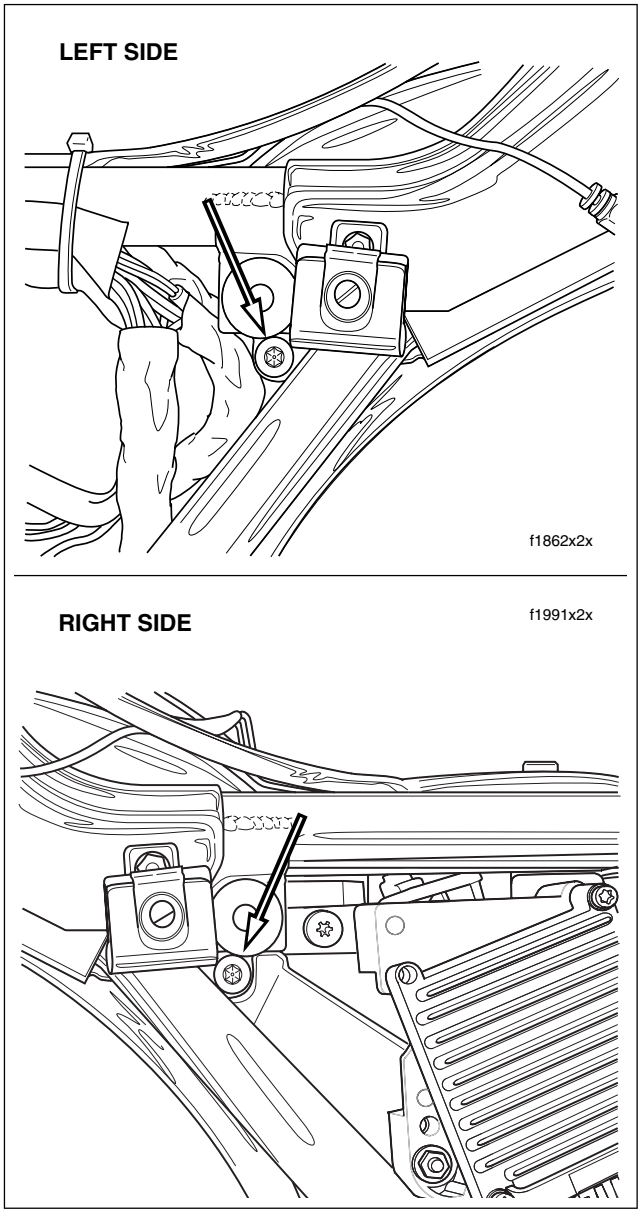

Figure 2-193. Fender Side Mounting Screws (T40 TORX)

14. Exercising caution to avoid scratching fender paint on luggage rack or other bracketry, carefully roll the fender out. See Figure 2-195. If necessary, have one person spread the saddlebag support brackets while the fender is rolled out.

INSTALLATION

1. Exercising caution to avoid scratching fender paint on luggage rack or other bracketry, carefully roll the fender in. See Figure 2-195. If necessary, have one person spread the saddlebag support brackets while the other rolls the fender in.

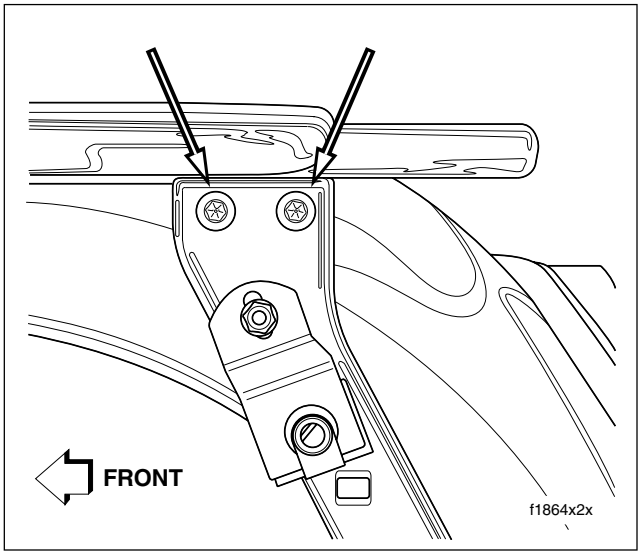

Figure 2-194. Saddlebag Support Bracket Screws (T40 TORX) - Left Side View

2. Obtain ratchet and T40 TORX head bit. Engaging hole of fender rear spacer nut, start upper front screw in saddlebag support bracket. Repeat step on opposite side of motorcycle. See Figure 2-194.

3. Start upper rear screw in saddlebag support bracket. Repeat step on opposite side of motorcycle.

4. Standing on left side of motorcycle, start screw securing front of rear fender to battery box. See Figure 2-191.

5. Engaging hole in frame and fender front spacer nut, start fender side mounting screw located just below side cover grommet. Repeat step on opposite side of motorcycle. See Figure 2-193.

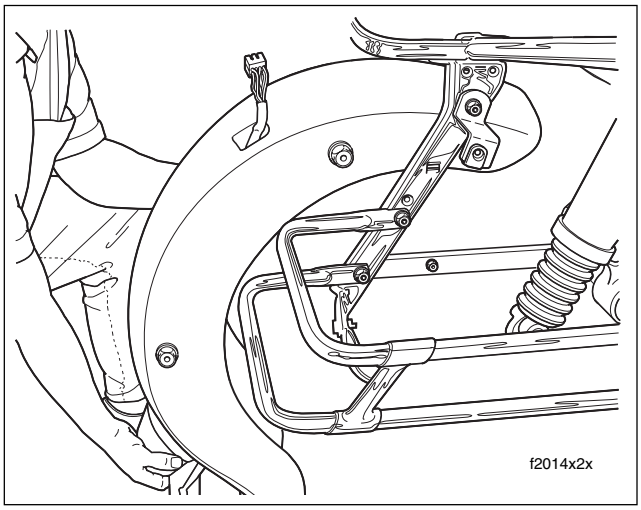

Figure 2-195. Carefully Roll Out Rear Fender

6. Reaching under rear fender, hang rear bumper bracket on weld stud. Install flat washer and start flange nut on weld stud.
7. Start inside screw (with flange nut) to fasten rear bumper bracket to saddlebag support bracket and saddlebag support rail. Repeat step on opposite side of motorcycle. See Figure 2-192.
8. Alternately tighten all rear fender T40 TORX screws to 15-20 ft-lbs (20-27 Nm).
11. Reaching under rear fender, tighten flange nut on weld stud to 45-85 **in-lbs** (5.1-9.6 Nm).
9. Install four hex screws with lockwashers (two each on FLHR/C/S and FLTR) to secure license plate bracket to luggage rack. Alternately tighten screws to 15-20 ft-lbs (20-27 Nm).
10. Connect rear fender lights connector [7] and snap anchor in rear fender hole. See Figure 2-190.
11. Align barbed studs in side cover with grommets in frame downtubes and push firmly into place (no tools required). Repeat step on opposite side of motorcycle.
12. Install rear wheel. See Section 2.4 REAR WHEEL, INSTALLATION.
13. Install seat. See Section 2.25 SEAT, INSTALLATION.
14. On FLHX models, proceed as follows:
    a. Install rear facia lamp. See Section 2.35 REAR FACIA (FLHX), REAR FACIA LAMP, INSTALLATION.
    b. Install rear facia. See Section 2.35 REAR FACIA (FLHX), INSTALLATION.

REAR FENDER LIGHTS CONDUIT

REMOVAL

1. Remove rear fender. See REMOVAL in this section.
2. Remove rear fender lights harness. See Section 8.14 TAIL LAMP ASSEMBLY, REAR FENDER LIGHTS HARNESS, REMOVAL
3. Carefully cut adhesive conduit and remove wire harness.
4. Remove terminals from socket housing of rear fender lights connector [94], 6-place Multilock.

NOTE

For instructions on properly removing wire terminals, see APPENDIX B.2 MULTILOCK ELECTRICAL CONNECTORS, REMOVING SOCKET/PIN TERMINALS.

INSTALLATION

1. Draw rear fender lights harness through **new** adhesive conduit until progress is halted by installed cable strap. If absent, install **new** cable strap as follows:
    a. Adjust conduit so that end is 1/4 inch (6.35 mm) or less from wire end of connector [7B].
    b. Install cable strap 8.75 inches (222.25 mm) from mating end of connector as shown in Figure 2-196. Cut any excess cable strap material.

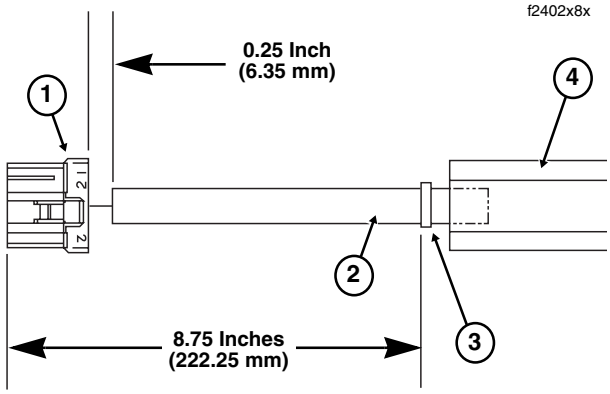

1. Connector [7B]
2. Conduit
3. Cable Strap
4. Adhesive Conduit

Figure 2-196. Install Cable Strap on Conduit

CAUTION

Proper placement of the cable strap prevents rearward movement of the rear fender lights harness. Gradual accumulation or bunching of the harness rear of the adhesive conduit can result in damage through contact with rear tire.

2. Install terminals into socket housing of rear fender lights connector [94], 6-place Multilock.

Table 8-8. Rear Fender Lights [94]

Wire Color	Chamber Number	Wire Color	Chamber Number
Orange/White	1	Red/Yellow	4
Brown	2	Violet	5
Blue	3	Black	6

NOTE

For instructions on properly installing wire terminals, see APPENDIX B.2 MULTILOCK ELECTRICAL CONNECTORS, INSTALLING SOCKET/PIN TERMINALS.

3. Install rear fender lights harness. See Section 8.14 TAIL LAMP ASSEMBLY, REAR FENDER LIGHTS HARNESS, INSTALLATION
4. Install rear fender. See INSTALLATION in this section.

REAR FENDER CLOISONNE

REMOVAL

1. Apply 3M GENERAL PURPOSE ADHESIVE REMOVER (Part No. 051135) to edge of adhesive backing visible behind cloisonne. Allow to soak.

CAUTION

Avoid excess heat which will damage the painted surface.

2. Carefully apply heat directly onto cloisonne with ROBIN-AIR HEAT GUN (HD-25070).
3. Lift the cloisonne from fender.

NOTE

Dental floss can be used to gently saw the heated cloisonne free of the rear fender.

4. Remove remaining adhesive with 3M GENERAL PURPOSE ADHESIVE REMOVER (Part No. 051135).

INSTALLATION

1. Peel paper backing off cloisonne.

Figure 2-197. Rear Fender Cloisonne

2. Place cloisonne into position over recess in rear fender.

NOTE

The cloisonne is centered left to right over the dimpled recess in the rear fender with the bottom edge of the cloisonne 1.75 inches (44.45 mm) above the bottom edge of the fender.

3. Press firmly to affix cloisonne.

REAR FACIA (FLHX) 2.35

REMOVAL

1. Remove saddlebags. See Section 2.26 SADDLEBAG, REMOVAL.
2. Remove six flange nuts from studs at sides of rear fender. See Figure 2-198.
3. On left side of motorcycle, loosen set screw and unthread radio antenna mast.
4. Gently open adhesive conduit at split line to release rear facia lamp wires.
5. At rear of motorcycle, spread top of facia to release from top studs at sides of fender and then pull bottom in a downward direction to release facia from fender. If necessary, gently wiggle facia while pulling.
6. Remove two T20 TORX screws to release lamp assembly from facia.

INSTALLATION

1. Install two T20 TORX screws to fasten lamp assembly to facia. Alternately tighten screws to 18-22 **in-lbs** (2.0-2.5 Nm).
2. At rear of motorcycle, insert flange at top of facia between flap and fender. Notch in flange engages locator bump on flap when facia is fully installed. Spread top of facia to engage top studs at sides of fender.
3. See Figure 2-198. Start six flange nuts on studs at sides of fender. Apply a small dab of Loctite Medium Strength Threadlocker 243 (blue) to threads of studs. Alternately tighten flange nuts to 20-30 **in-lbs** (2.3-3.4 Nm).

NOTE

*As it is necessary to overcome the resistance of the lock patch on the stud threads, note that the flange nut torque specification is higher when using a **new** stud plate.*

4. On left side of motorcycle, gently open adhesive conduit at split line and insert rear facia lamp wires.
5. Install radio antenna mast and tighten set screw.
6. Install saddlebags. See Section 2.26 SADDLEBAG, INSTALLATION.

STUD PLATE

REMOVAL

1. Lower rear wheel. See Section 2.4 REAR WHEEL, REMOVAL, steps 1-6.

Figure 2-198. Remove Flange Nuts

2. Remove flange nuts from studs at sides of rear fender. See Figure 2-198.
3. Reaching into fender well, carefully pry stud plate away from rear fender.

NOTE

Stud plates installed in production use adhesive strips as an assembly aid. Beginning at the edges, carefully work stud plate free using a small putty knife or gasket scraper.

INSTALLATION

1. Install **new** stud plate.
2. Install flange nuts on studs and alternately tighten to 80 **in-lbs** (9.0 Nm). See Figure 2-198.

NOTE

*As it is necessary to overcome the resistance of the lock patch on the stud threads, note that the flange nut torque specification is higher when using a **new** stud plate.*

3. Install rear wheel. See Section 2.4 REAR WHEEL, INSTALLATION, steps 3-18.

REAR FACIA LAMP

REMOVAL

1. Remove rear facia. See REMOVAL in this section.
2. On left side of motorcycle, remove bolt (with flat washer) to remove passenger seat strap and saddlebag front mounting bracket from chrome frame tube cover.
3. Remove Phillips screw and chrome frame tube cover.
4. Release rear facia lamp wires from cable clip at top of radio antenna bracket. See Figure 2-199.
5. Cut cable strap to release rear facia lamp wires and radio antenna cable from slotted hole in rear fender support.
6. Cut cable strap to release rear facia lamp wires and radio antenna cable from shoulder of upper frame tube (just in front of air valve mounting bracket).
7. Disconnect rear facia lamp connector [12], 3-place Multilock, inboard of upper frame tube.

NOTE

Connector [12] serves as the Tour-Pak lights connector on FLHTC/U models.

INSTALLATION

1. Route rear facia lamp wires forward through cable clip at top of radio antenna bracket and then upward in front of saddlebag rear mounting bracket to inboard side of upper frame tube.
2. On inboard side of upper frame tube, mate pin and socket housings of rear facia lamp connector [12], 3-place Multilock.
3. Using slotted hole, install **new** cable strap to secure rear facia lamp wires and radio antenna cable to rear fender support. See Figure 2-199.
4. Install **new** cable strap to secure rear facia lamp wires and radio antenna cable to shoulder of upper frame tube (just in front of air valve mounting bracket).

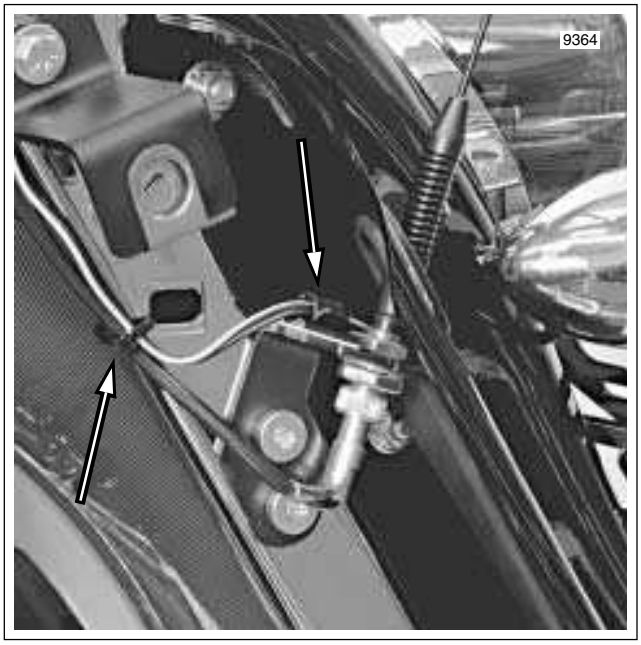

Figure 2-199. Capture Rear Facia Lamp Wires

5. Install chrome frame tube cover on frame tube. Install Phillips screw and tighten to 25-40 **in-lbs** (2.8-4.5 Nm).
6. Insert bolt (with flat washer) through passenger seat strap and slotted hole of saddlebag front mounting bracket. Insert bolt into forward hole in chrome frame tube cover. Snug saddlebag front mounting bracket bolt, but do not tighten.
7. Install rear facia. See INSTALLATION in this section.
8. Using an open end/box wrench, tighten saddlebag front mounting bracket bolt to 60-96 **in-lbs** (6.8-10.8 Nm).

JIFFY STAND 2.36

GENERAL

The jiffy stand (or side stand) locks when placed in the full forward position (down) with the full weight of the motorcycle resting on it.

WARNING

The jiffy stand locks when placed in the full forward (down) position with vehicle weight on it. If the jiffy stand is not in the full forward (down) position with vehicle weight on it, the vehicle can fall over which could result in death or serious injury. (00006a)

WARNING

Always park motorcycle on a level, firm surface. An unbalanced motorcycle can fall over, which could result in death or serious injury. (00039a)

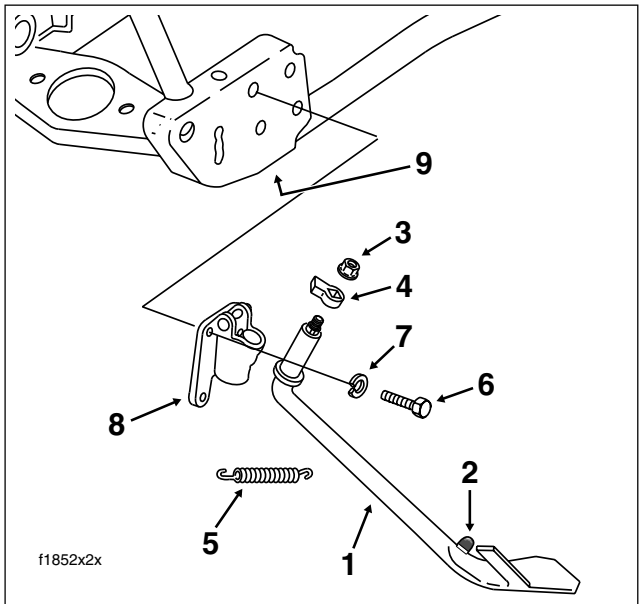

1. Jiffy Stand
2. Rubber Stop
3. Flange Nut
4. Leg Stop
5. Spring
6. Bolt
7. Lockwasher
8. Bracket
9. Frame Hole

Figure 2-200. Jiffy Stand Assembly

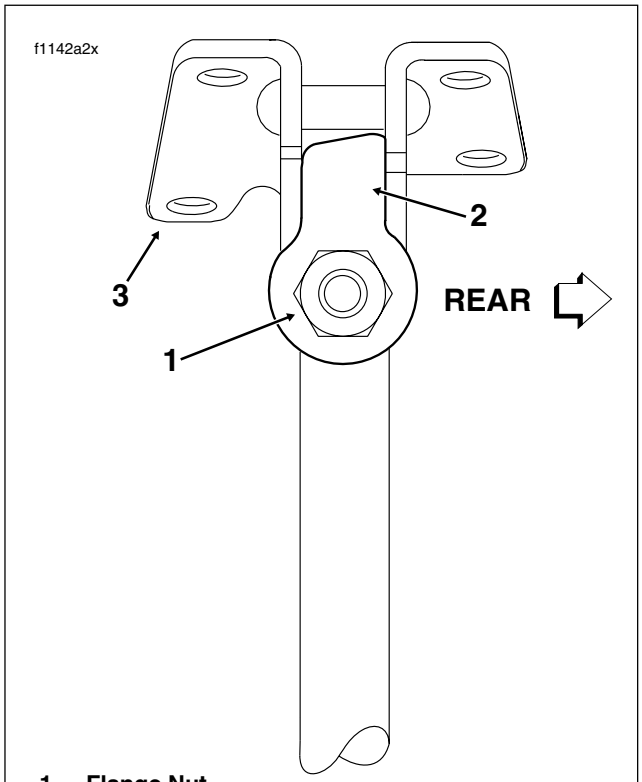

1. Flange Nut
2. Leg Stop (Longer Side Faces Rear)
3. Bracket

Figure 2-201. Leg Stop Orientation (Full Forward Position)

WARNING

Be sure jiffy stand is fully retracted before riding. If jiffy stand is not fully retracted, it can contact the road surface causing a loss of vehicle control, which could result in death or serious injury. (00007a)

REMOVAL

WARNING

Securely block motorcycle under frame to be sure that it will not fall when jiffy stand is removed. Inadequate safety precautions could result in death or serious injury.

1. Block motorcycle under frame, so that motorcycle is securely upright and level. Jiffy stand should be able to move through its full range of travel without the weight of the motorcycle resting on it.

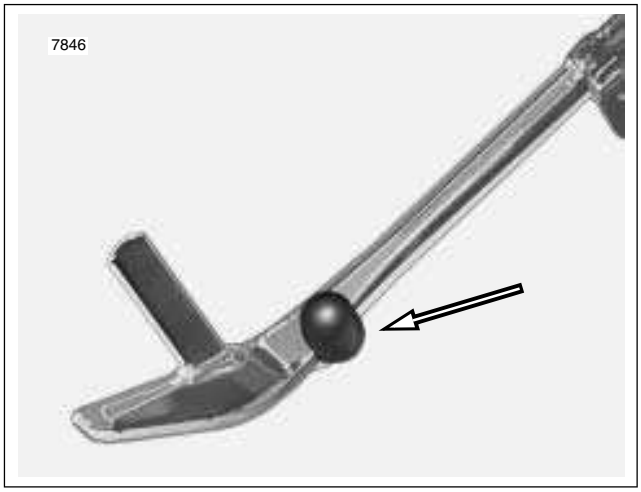

Figure 2-202. Jiffy Stand Rubber Stop

2. See Figure 2-200. Move jiffy stand to the retracted position (up). Remove flange nut and leg stop from threaded end of jiffy stand leg.
3. Move jiffy stand to the full forward position (down). Grasping end of spring as close to frame tube as possible, twist and turn end with needle nose pliers to unhook from frame hole. Remove jiffy stand leg from bracket.
4. Inspect jiffy stand assembly for worn or damaged parts. Replace parts as necessary.

INSTALLATION

1. Lubricate the jiffy stand leg with Loctite Aerosol Anti-Seize Lubricant. Restrict the application to the area of the jiffy stand leg that rotates within the bracket.
2. Insert threaded end of jiffy stand up through bottom of bracket. With jiffy stand in the full forward position, partially place spring end into frame hole. Rap spring with a rubber mallet to fully seat in hole.

NOTE

Verify that opposite end of spring enters hole at front of leg weldment. If end enters hole from rear, spring coil will rub on leg when jiffy stand is exercised.

3. Holding jiffy stand at the full forward position, install leg stop over threaded end with the stamped “side down.” Install flange nut and tighten to 43-53 ft-lbs (58-72 Nm).

⚠WARNING

If leg stop is installed incorrectly, excess wear may cause the motorcycle to fall over when rested on the jiffy stand, which could result in death or serious injury.

4. Verify that the longer side of the leg stop faces the rear of the motorcycle. See Figure 2-201.
5. Extend and retract jiffy stand leg several times to verify proper operation. Jiffy stand should swing freely to the fully extended and fully retracted positions.
6. Move jiffy stand to the full forward position. Carefully remove support blocking from beneath motorcycle frame and rest motorcycle on jiffy stand.

CAUTION

Verify that rubber stop is in place on prong of jiffy stand. Without the rubber stop, the stand will make hard contact with the lower frame tube when retracted, possibly resulting in chipping or nicking of the powder coat. Replace rubber stop if torn or deteriorated. See Figure 2-202.

RIDER FOOTBOARD

REMOVAL

1. Remove right side footboard and bracket assembly as follows:
   a. Remove two allen head socket screws (with lock washers and flat washers) to release footboard brackets from frame weldment. See Figure 2-203. For best results, approach from left side of motorcycle using a 3/8 inch ball allen with extension.
2. Remove left side footboard and bracket assembly as follows:
   a. Raise the motorcycle on a hydraulic center stand so that the weight of the motorcycle is not resting on the jiffy stand.
   b. Remove socket screw (with lockwasher and flat washer) to release footboard forward bracket from frame weldment. See Figure 2-203. For best results, approach from opposite side of motorcycle using a 3/8 inch ball allen with extension.
   c. To free footboard rear bracket from frame weldment and jiffy stand bracket, remove lower hex bolt (with lockwasher) and upper hex bolt (with lockwasher and locknut).

INSTALLATION

1. Install right side footboard and bracket assembly as follows:
   a. Insert two allen head socket screws (with lockwashers and flat washers) through frame weldment into footboard brackets. See Figure 2-203. For best results, approach from left side of motorcycle using a 3/8 inch ball allen with extension.
   b. Alternately tighten socket screws to 30-35 ft-lbs (41-48 Nm).
2. Install left side footboard and bracket assembly as follows:
   a. Insert allen head socket screw (with lockwasher and flat washer) through frame weldment into footboard forward bracket. See Figure 2-203. For best results, approach from opposite side of motorcycle using a 3/8 inch ball allen with extension.
   b. At footboard rear bracket, slide upper hex bolt through frame weldment, jiffy stand bracket and footboard bracket thru hole. Install lockwasher and locknut. Slide lower hex bolt through frame weldment and jiffy stand bracket into threaded hole of footboard bracket.
   c. Tighten front bracket socket screw to 30-35 ft-lbs (41-48 Nm).
   d. Alternately tighten rear bracket hex bolts to 15-20 ft-lbs (20-27 Nm).

DISASSEMBLY

NOTE

If only replacing the rubber pad, refer to step 1 below and then see steps 4-5 under ASSEMBLY.

1. Tilt footboard upward. From bottom of footboard, use a large flat blade screwdriver to push four rubber anchors on pad up through holes in footboard.
2. Remove nuts from pivot bolts at underside of footboard.
3. Remove pivot bolts to release footboard from brackets.
4. Remove footboard brackets. See REMOVAL.

ASSEMBLY

1. Install footboard brackets. See INSTALLATION.
2. Place footboard into position between brackets and install pivot bolts so that the nuts will be on the inboard side.

NOTE

The bottom of FLHRS footboards are stamped L(eft) or R(ight) to ensure proper installation.

3. Install nuts onto pivot bolts and alternately tighten to 84-108 **in-lbs** (9.5-12.2 Nm).
4. Moisten four rubber anchors on **new** pad with soapy water.
5. Place pad into position on footboard. From bottom of footboard, use pliers to pull rubber anchors down through holes in footboard.

PASSENGER FOOTBOARD

REMOVAL

1. Remove socket screw with lockwasher to remove footboard bracket from rear swingarm bracket.

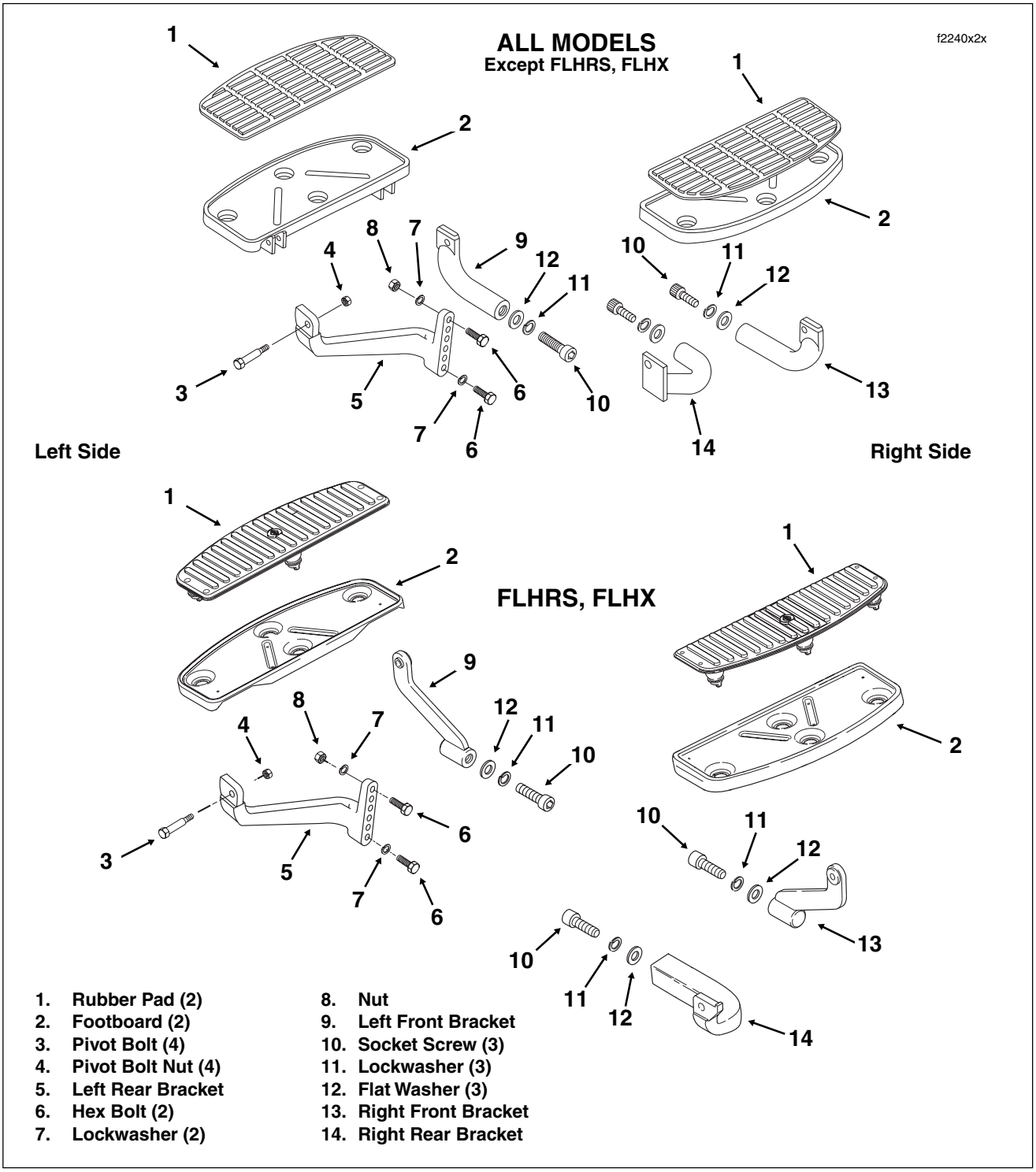

Figure 2-203. Rider Footboards

INSTALLATION

1. Insert pin on footboard bracket into hole in rear swingarm bracket.

NOTE

Passenger footboards can be adjusted to one of three positions. To move footboards to a new position, remove plastic plugs from holes in rear swingarm bracket as necessary.

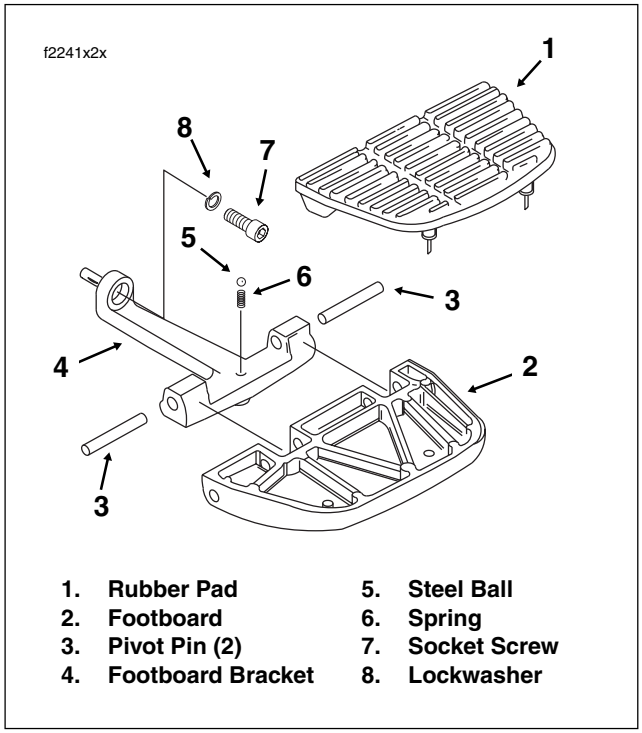

Figure 2-204. Passenger Footboard (All Models Except FLHRS, FLHX)

2. Install socket screw with lockwasher. Tighten socket screw to 30-35 ft-lbs (40.7-47.5 Nm).

DISASSEMBLY

NOTE

If only replacing the rubber pad, refer to step 1 below and then see steps 4-5 under ASSEMBLY.

1. Tilt footboard upward. From bottom of footboard, use a small flat blade screwdriver to push rubber beads on pad up through holes in footboard. Remove pad. See Figure 2-204.
2. Using a brass drift and rubber mallet, tap two pivot pins toward center of footboard and remove.
3. Remove footboard from footboard bracket.
4. Remove steel ball and spring from hole in footboard bracket.
5. Remove footboard bracket from rear swingarm bracket. See REMOVAL.

ASSEMBLY

1. Install footboard bracket. See INSTALLATION.
2. Place spring into hole in footboard bracket. Place ball on top of spring. See Figure 2-204.
3. Place footboard into position on bracket and install pivot pins from the outboard side. Using a brass drift and rubber mallet, tap pins until centered in lugs of bracket.
4. Moisten rubber beads on **new** pad with soapy water. Place pad into position on footboard. From bottom of footboard, use needle nose pliers to pull rubber beads down through holes in footboard.
5. Engage nubs on inboard corners of pad with holes in footboard.

PASSENGER FOOTREST (FLHRS, FLHX)

REMOVAL

1. Remove socket screw with lockwasher to remove footrest bracket from rear swingarm bracket.

INSTALLATION

1. Insert pin on footrest bracket into hole in rear swingarm bracket.

NOTE

Passenger footrests can be adjusted to one of three positions. To move footrests to a new position, remove plastic plugs from holes in rear swingarm bracket as necessary.

2. Install socket screw with lockwasher. Tighten socket screw to 30-35 ft-lbs (40.7-47.5 Nm).

DISASSEMBLY

NOTE

If only replacing the rubber pad, refer to step 1 below and then see steps 7-9 under ASSEMBLY.

1. Remove socket screw from end of footrest. Remove rubber pad from footrest. See Figure 2-205.
2. Remove footrest from footrest mount.
3. Remove retaining ring from groove at end of pivot pin. Remove pivot pin.
4. Remove footrest mount and wave spring from footrest bracket.
5. Remove footrest bracket from rear swingarm bracket. See REMOVAL.

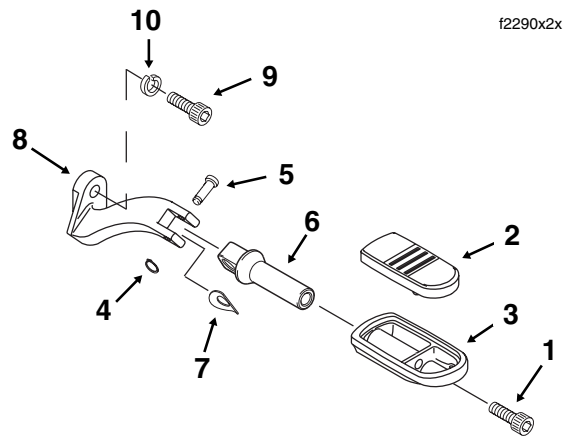

1.	**Socket Screw**	6.	**Footrest Mount**
2.	**Rubber Pad**	7.	**Wave Spring**
3.	**Footrest**	8.	**Footrest Bracket**
4.	**Retaining Ring**	9.	**Socket Screw**
5.	**Pivot Pin**	10.	**Lockwasher**

Figure 2-205. Passenger Footrest (FLHRS, FLHX)

ASSEMBLY

1. Install footrest bracket. See INSTALLATION.
2. Align hole in wave spring with bottom hole in footrest bracket. See Figure 2-205. Be sure that the concave side is down and the flat edge is against the inboard side of the footrest bracket.
3. Holding wave spring in place, install footrest mount between arms of bracket with the rounded side of the pivot pin end up.
4. Install pivot pin into top hole in footrest bracket. Top hole is countersunk so that head of pivot pin is flush after installation.

NOTE

Verify operation of footrest mount before installing retaining ring. The ease with which the footrest mount pivots is based on the curvature of the wave spring. Flattening the wave spring allows the footrest mount to move more easily, while increasing the curvature makes movement more difficult.

5. Install **new** retaining ring in groove at end of pivot pin.
6. Slide footrest onto footrest mount.
7. Place rubber pad into footrest.
8. Apply a small dab of Loctite Medium Strength Thread-locker 243 (blue) to threads of socket screw.
9. Start socket screw into end of footrest. Rotate footrest so that the rubber pad is topside and tighten socket screw to 15-20 ft-lbs (20-27 Nm).

REMOVAL

NOTE

To access engine and/or transmission components, use the following procedure to remove the exhaust with minimal disassembly. To completely disassemble the exhaust system, see DISASSEMBLY in this section.

1. Remove saddlebags. See Section 2.26 SADDLEBAG, REMOVAL.
2. On Ultra models, remove fairing lowers. See Section 2.29 LOWER FAIRING/ENGINE GUARD, LOWER FAIRING (FLHTCU), REMOVAL.
3. Remove two allen head socket screws (with lockwashers and flat washers) to release right side front footboard brackets from frame weldment. For best results, approach from left side of motorcycle using a 3/8 inch ball allen with extension.
4. Remove exhaust system in two sections as follows:
   a. Open worm drive clamps to release heat shield over rear header pipe to crossover pipe connection (above starter). See Figure 2-206.
   b. Loosen TORCA clamp (special) between rear header pipe and crossover pipe. Remove Keps nut and pull bracket tab and stud from slots in TORCA clamp and exhaust support bracket.
   c. Spray PB Blaster or other suitable penetrating oil in and around joint between rear header pipe and crossover pipe.
   d. Moving to left side of motorcycle, remove two screws (with lockwashers) to detach left side muffler from the lower saddlebag support rail.
   e. Pull and twist on crossover pipe to remove left side exhaust from motorcycle. For best results, be sure to allow sufficient time for the penetrating oil to work.
   f. Remove TORCA clamp from crossover pipe. Discard TORCA clamp.
   g. Moving to right side of motorcycle, open worm drive clamps and release heat shield from front header pipe. Using an impact wrench with long 1/2 inch swivel socket, remove two exhaust flange nuts to release front header pipe from studs of front cylinder head. Slide exhaust flange down header pipe to improve clearance around exhaust port.
   h. Open worm drive clamps and release heat shield from rear header pipe. Remove two exhaust flange nuts to release rear header pipe from studs of rear cylinder head.
   i. Open worm drive clamps to release heat shield over front header pipe to rear header pipe connection (outboard of transmission side door).
   j. Remove bolt (with flat washer and locknut) from exhaust bracket clamp on front header pipe. Use a channel lock to open clamp and then remove from header pipe and transmission exhaust bracket.
   k. Remove two screws (with lockwashers) to detach right side muffler from the lower saddlebag support rail.
   l. Depressing rear brake pedal, remove right side exhaust from motorcycle.
   m. Remove and discard gaskets from front and rear exhaust ports.

INSTALLATION

1. See Figure 2-206. Install exhaust system as follows:
   a. Install **new** gaskets in both the front and rear cylinder head exhaust ports (with the tapered side out).
   b. Place right side exhaust into position on motorcycle and start two exhaust flange nuts to secure front header pipe to studs of front cylinder head.
   c. Start two screws (with lockwashers) to secure right side muffler to the lower saddlebag support rail.
   d. Start two exhaust flange nuts to secure rear header pipe to studs of rear cylinder head.
   e. Engaging transmission exhaust bracket, capture front header pipe in exhaust bracket clamp. Use a channel lock to close clamp, if necessary. Finger tighten clamp bolt (with flat washer and locknut).
   f. Moving to left side of motorcycle, slide **new** TORCA clamp (special) onto crossover pipe.
   g. Twist and push crossover pipe onto right side exhaust.
   h. Start two screws (with lockwashers) to secure left side muffler to the lower saddlebag support rail.
   i. Position TORCA clamp (special) between rear header pipe and crossover pipe. Fit bracket tab into slot of TORCA clamp engaging stud in slot of exhaust support bracket. Start Keps nut on stud.

NOTE

Verify that the exhaust pipes do not contact the motorcycle frame or any mounted components. Contact will cancel the effect of the rubber isolation mounts and transmit vibration to the rider.

   j. Tighten the exhaust system as follows:

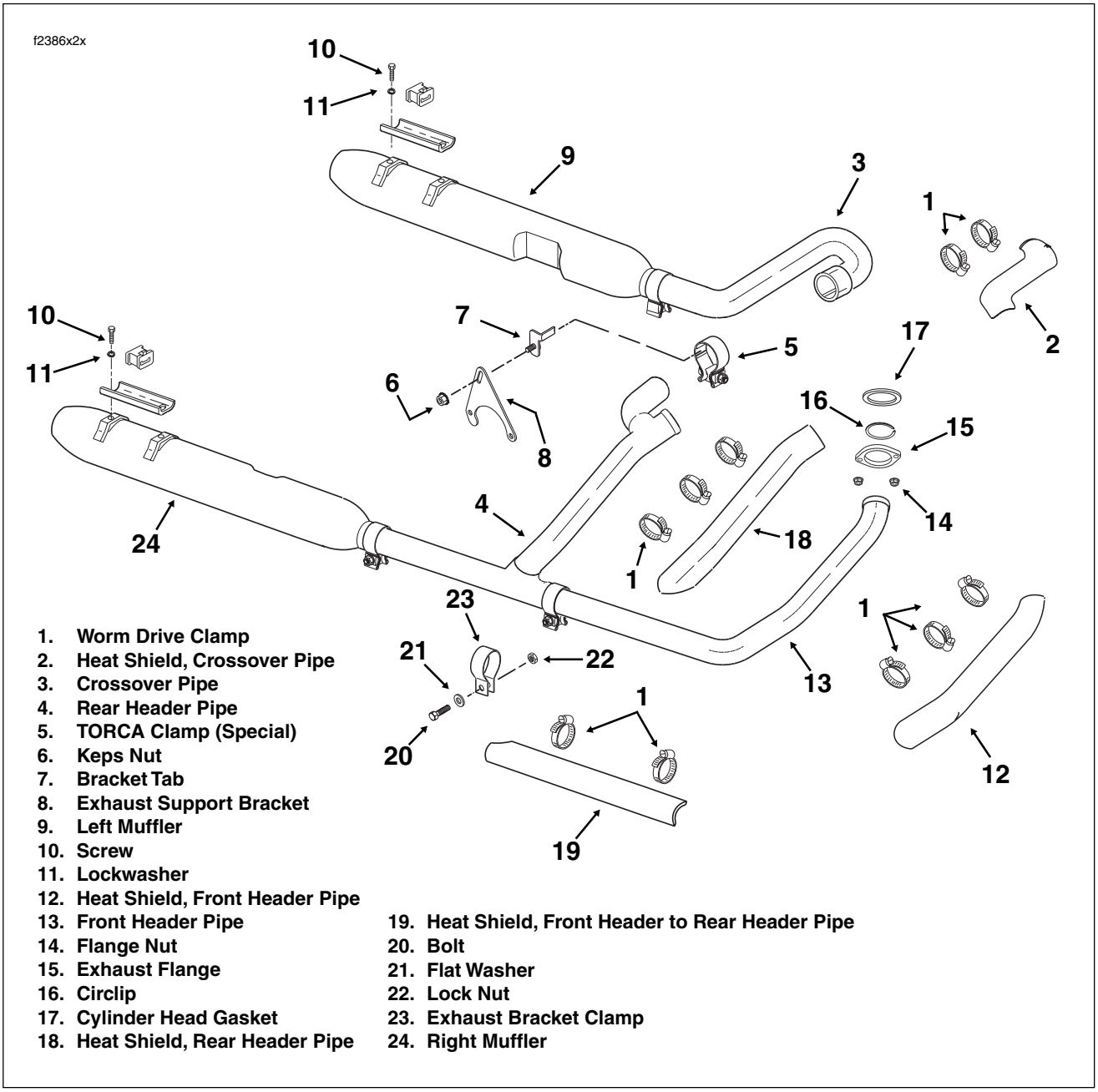

Figure 2-206. Remove/Install Exhaust System

- Using a long 1/2 inch swivel socket, tighten the top nut of the front cylinder head exhaust flange to 9-18 **in-lbs** (1-2 Nm). Tighten the bottom nut to 100-120 **in-lbs** (11.3-13.6 Nm). Final tighten the top nut to 100-120 **in-lbs** (11.3-13.6 Nm).
- Tighten the bottom nut of the rear cylinder head exhaust flange to 9-18 **in-lbs** (1-2 Nm). Tighten the top nut to 100-120 **in-lbs** (11.3-13.6 Nm). Final tighten the bottom nut to 100-120 **in-lbs** (11.3-13.6 Nm).
- Tighten the exhaust bracket clamp bolt to 60-96 **in-lbs** (6.8-10.8 Nm).
- Snug two screws (with lockwashers) holding the right side muffler to the lower saddlebag support rail. Alternately tighten screws to 96-144 **in-lbs** (10.8-16.3 Nm).
- Snug two screws (with lockwashers) holding the left side muffler to the lower saddlebag support rail. Alternately tighten screws to 96-144 **in-lbs** (10.8-16.3 Nm).

- Verify that all exhaust pipes are in alignment and do not contact the motorcycle frame or mounted components.
- Tighten the TORCA clamp (special) between the rear header pipe and crossover pipe to 45-60 ft-lbs (61-81 Nm).
- Tighten Keps nut securing bracket tab to exhaust support bracket.

NOTE

Verify that the heat shields do not contact the motorcycle frame or any mounted components. Contact will cancel the effect of the rubber isolation mounts and transmit vibration to the rider.

k. Open worm drive clamps and install heat shields as follows:

- Over front header pipe (below exhaust port).
- Over rear header pipe (below exhaust port).
- Over front header pipe to rear header pipe connection (outboard of transmission side door).
- Over rear header pipe to crossover pipe connection (above starter).

l. Position each worm drive clamp so that screw is on the outboard side in the most accessible position and then tighten to 20-40 **in-lbs** (2.3-4.5 Nm).

2. Insert two allen head socket screws (with lockwashers and flat washers) through frame weldment into right side front footboard brackets. For best results, approach from left side of motorcycle using a 3/8 inch ball allen with extension. Alternately tighten screws to 30-35 ft-lbs (41-48 Nm).
3. On Ultra models, install fairing lowers. See Section 2.29 LOWER FAIRING/ENGINE GUARD, LOWER FAIRING (FLHTCU), INSTALLATION.
4. Install saddlebags. See Section 2.26 SADDLEBAG, INSTALLATION.

DISASSEMBLY

NOTE

Use the following procedure to completely disassemble the exhaust system. If just removing the exhaust to access engine and/or transmission components, see REMOVAL in this section.

1. Remove saddlebags. See Section 2.26 SADDLEBAG, REMOVAL.
2. On Ultra models, remove fairing lowers. See Section 2.29 LOWER FAIRING/ENGINE GUARD, LOWER FAIRING (FLHTCU), REMOVAL.
3. Remove two allen head socket screws (with lockwashers and flat washers) to release right side front footboard brackets from frame weldment. For best results, approach from left side of motorcycle using a 3/8 inch ball allen with extension.
4. Open worm drive clamps and remove six heat shields from exhaust pipes. Mark the location of the heat shields to ensure proper assembly. See Figure 2-207.
5. Using a bungee cord, tie the muffler on the left side of the motorcycle to the lower saddlebag support rail.
6. Remove the exhaust flange nuts to release the front and rear header pipes from the cylinder head studs. For best results, use impact wrench with long 1/2 inch swivel socket.
7. Loosen the four TORCA clamps as follows:

   Right side of motorcycle

   - front header pipe to rear header pipe
   - rear header pipe to right side muffler

   Left side of motorcycle

   - rear header pipe to crossover pipe
   - crossover pipe to left side muffer

NOTE

To facilitate removal, spray PB Blaster or other suitable penetrating oil in and around joints of exhaust pipes. For best results, be sure to allow sufficient time for the penetrating oil to work.

8. Remove four screws (with lockwashers) to detach left and right side mufflers from the lower saddlebag support rails.
9. Standing on right side of motorcycle, remove muffler from rear header pipe.
10. Remove Keps nut and pull bracket tab and stud from slots in TORCA clamp (special) and exhaust support bracket.
11. Remove rear header pipe from front header pipe, crossover pipe and rear cylinder head. Remove bracket tab from slot in TORCA clamp (special).
12. Remove bolt (with flat washer and locknut) from exhaust bracket clamp on front header pipe. Use a channel lock to open clamp and then remove from front header pipe and transmission exhaust bracket. Remove front header pipe exhaust flange from front cylinder head.
13. Moving to left side of motorcycle, remove crossover pipe from left side muffler.

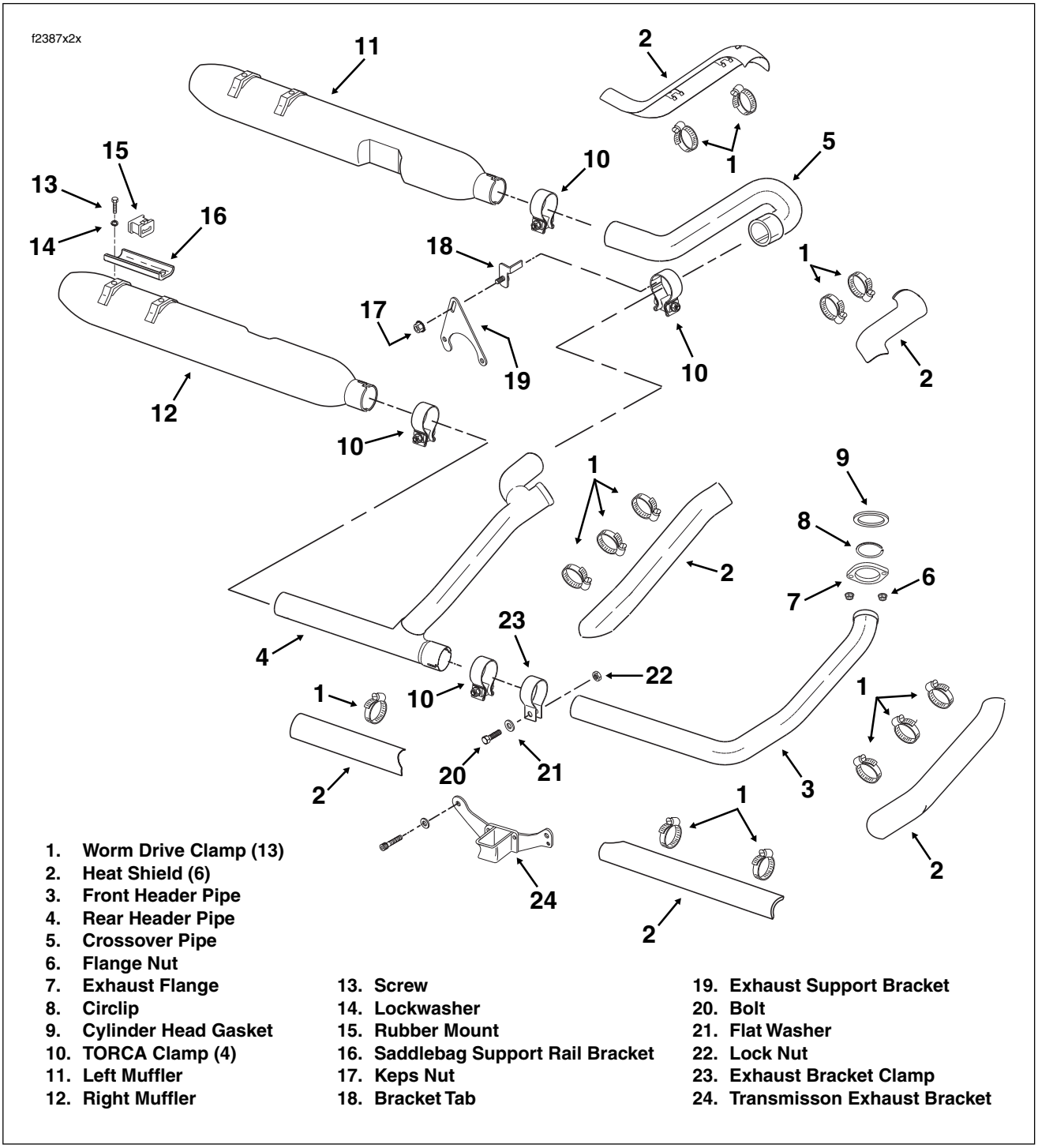

Figure 2-207. Disassemble/Assemble Exhaust System

14. Remove bungee cord to release left side muffler from lower saddlebag support rail.

15. Remove and discard gaskets from front and rear exhaust ports. Discard TORCA clamps.

NOTE

TORCA clamps have eliminated the need for silicone or graphite tape during assembly. To ensure sealing integrity and prevent the possibility of leakage, always discard TORCA clamps whenever they are removed.

ASSEMBLY

NOTE

Always loosely assemble exhaust system on motorcycle before following tightening procedure. Assemble as follows:

1. Install **new** gaskets in both the front and rear cylinder head exhaust ports (with the tapered side out).
2. Install front header pipe exhaust flange onto front cylinder head. Start flange nuts on cylinder head studs.
3. Engaging transmission exhaust bracket, capture front header pipe in exhaust bracket clamp. Use a channel lock to close clamp, if necessary. Finger tighten clamp bolt (with flat washer and locknut).
4. Slide a **new** TORCA clamp onto free end of front header pipe.
5. Install rear header pipe onto rear cylinder head and front header pipe. Start flange nuts on cylinder head studs. Move TORCA clamp into position between front and rear header pipes.
6. Slide **new** TORCA clamps onto free ends of rear header pipe. TORCA clamp to crossover pipe is special in that it has slot for bracket tab to exhaust support bracket.
7. Slide right side muffler onto rear header pipe. Finger tighten two screws (with lockwashers) to attach muffler to lower saddlebag support rail. Place TORCA clamp into position between rear header pipe and right side muffler.
8. Moving to left side of motorcycle, install crossover pipe onto remaining end of rear header pipe (above starter). Place TORCA clamp into position between rear header pipe and crossover pipe.
9. Fit bracket tab into slot of TORCA clamp engaging stud in slot of exhaust support bracket. Start Keps nut on stud.
10. Slide **new** TORCA clamp onto free end of crossover pipe.
11. Using a bungee cord, tie left side muffler to lower saddlebag support rail. Install left side muffler on crossover pipe. Place TORCA clamp into position between crossover pipe and left side muffler. Finger tighten two screws (with lockwashers) to attach muffler to saddlebag support rail.

NOTE

Verify that the exhaust pipes do not contact the motorcycle frame or any mounted components. Contact will cancel the effect of the rubber isolation mounts and transmit vibration to the rider.

12. Tighten the exhaust system as follows:
    a. Tighten the top nut of the front cylinder head exhaust flange to 9-18 **in-lbs** (1-2 Nm). Tighten the bottom nut to 100-120 **in-lbs** (11.3-13.6 Nm). Final tighten the top nut to 100-120 **in-lbs** (11.3-13.6 Nm).
    b. Tighten the bottom nut of the rear cylinder head exhaust flange to 9-18 **in-lbs** (1-2 Nm). Tighten the top nut to 100-120 **in-lbs** (11.3-13.6 Nm). Final tighten the bottom nut to 100-120 **in-lbs** (11.3-13.6 Nm).
    c. Tighten the exhaust bracket clamp bolt to 60-96 **in-lbs** (6.8-10.8 Nm).
    d. Snug two screws (with lockwashers) holding the right side muffler to the lower saddlebag support rail. Alternately tighten screws to 96-144 **in-lbs** (10.8-16.3 Nm).
    e. Snug two screws (with lockwashers) holding the left side muffler to the lower saddlebag support rail. Alternately tighten screws to 96-144 **in-lbs** (10.8-16.3 Nm).
    f. Verify that all exhaust pipes are in alignment and do not contact the motorcycle frame or mounted components.
    g. Tighten the four TORCA clamps to 45-60 ft-lbs (61-81 Nm) in the following order:
    - crossover pipe to left side muffer
    - rear header pipe to right side muffer
    - front header pipe to rear header pipe
    - rear header pipe to crossover pipe
13. Tighten Keps nut securing bracket tab to exhaust support bracket.
14. Open worm drive clamps and install six heat shields on exhaust pipes as marked during removal. See Figure 2-207. Position each clamp so that screw is on the outboard side in the most accessible position and then tighten to 20-40 **in-lbs** (2.3-4.5 Nm).
15. Remove bungee cord from left side muffler.
16. Insert two allen head socket screws (with lockwashers and flat washers) through frame weldment into right side front footboard brackets. For best results, approach from left side of motorcycle using a 3/8 inch ball allen with extension. Alternately tighten screws to 30-35 ft-lbs (41-48 Nm).
17. On Ultra models, install fairing lowers. See Section 2.29 LOWER FAIRING/ENGINE GUARD, LOWER FAIRING (FLHTCU), INSTALLATION.
18. Install saddlebags. See Section 2.26 SADDLEBAG, INSTALLATION.

Table Of Contents

ENGINE 3

SUBJECT	PAGE NO.
3.1 Specifications	3-1
Manufacturing Tolerances	3-1
3.2 Service Wear Limits	3-3
3.3 General Information	3-5
3.4 How To Use This Section	3-14
3.5 Stripping Motorcycle For Service	3-16
3.6 Assembling Motorcycle After Stripping	3-17
3.7 Removing Engine From Chassis	3-19
3.8 Installing Engine In Chassis	3-23
3.9 Top End Overhaul	3-29
Disassembly	3-29
Assembly	3-33
3.10 Bottom End Overhaul	3-41
Disassembly	3-41
Assembly	3-43
3.11 Subassembly Service And Repair	3-51
Breather Assembly	3-51
Rocker Arm Assembly	3-52
Push Rods/Lifters/Covers	3-55
Cylinder Head	3-59
Cylinder	3-68
Piston	3-71
Upper Connecting Rod	3-76
Cam Support Plate	3-81
Oil Pump	3-93
Crankcase	3-95
Flywheel/Connecting Rod Assembly	3-102

SPECIFICATIONS 3.1

MANUFACTURING TOLERANCES

General	
Number of cylinders	2
Type	4-cycle, 45˚V^2, air-cooled
Torque	85 ft-lbs (115.2 Nm) @ 3000 rpm
Bore	3.75 in. (95.25 mm)
Stroke	4.00 in. (101.6 mm)
Piston displacement (approx.)	88 cu. in. (1450 cc)
Compression ratio	9.0:1
Combustion chamber	5.187 cu. in. (85 cc) bathtub
Cam system	Twin cams, chain driven with spring loaded tensioners
Max. sustained engine speed	5500 rpm
Idle speed	1000 rpm +/- 50
Weight	165 lbs (74.8 kg)

Ignition System	
Type	Sequential, non waste spark, MAP-N control
Ignition timing: 1050 rpm (Hot Idle)	20°-30°
Spark plug size	12 mm
Spark plug type	Harley-Davidson 6R12
Spark plug gap	0.038-0.043 in. (0.97-1.09 mm)
Spark plug torque	12-18 ft-lbs (16-24 Nm)

Oiling System	
Pump	Twin gerotor, dual scavenge, crank mounted and driven, internal oil pump, dry sump
Pressure	30-38 psi (207-262 kN/m^2) at 2000 rpm and normal operating temperature of 230° F (110° C)
Filtration	5 micron media, filtered between pump and engine

Rocker Arm	IN.	MM
Shaft fit in bushing (loose)	0.0005-0.0020	0.013-0.051
End clearance	0.003-0.013	0.08-0.33
Bushing fit in rocker arm (tight)	0.002-0.004	0.051-0.102

Rocker Arm Shaft	IN.	MM
Shaft fit in rocker arm support plate (loose)	0.0007-0.0022	0.018-0.056

Hydraulic Lifter	IN.	MM
Fit in crankcase (loose)	0.0008-0.0020	0.02-0.05

Cylinder Head	IN.	MM
Valve guide in head (tight)	0.0020-0.0033	0.051-0.084
Valve seat in head (tight)	0.003-0.0045	0.076-0.114
Head gasket surface (flatness)	0-0.006	0-0.0152

Valve	IN.	MM
Fit in guide: exhaust	0.001-0.003	0.0254-0.0762
Fit in guide: intake	0.001-0.003	0.0254-0.0762
Seat width	0.040-0.062	1.02-1.58
Stem protrusion from cylinder head boss	2.012-2.032	51.10-51.61

Valve Spring	IN.	MM
Closed	135 lbs @ 1.850 in.	61.2 kg @ 47.0 mm
Open	312 lbs @ 1.300 in.	141.5 kg @ 33.0 mm
Free length	2.325 in.	59.1 mm

Piston	IN.	MM
Fit in cylinder:		
Early Style Piston	0.0006-0.0017	0.015-0.043
Late Style Piston	0.0014-0.0025	0.036-0.064
Ring end gap:		
Top compression ring	0.010-0.020	0.25-0.51
2nd compression ring	0.014-0.024	0.36-0.61
Oil control ring	0.010-0.050	0.25-1.27
Ring side clearance:		
Top compression ring	0.0012-0.0037	0.030-0.094
2nd compression ring	0.0012-0.0037	0.030-0.094
Oil control ring	0.0031-0.0091	0.079-0.23
Piston pin fit (loose)	0.0002-0.0005	0.005- 0.013

Connecting Rod	IN.	MM
Piston pin fit (loose)	0.0007-0.0012	0.018-0.030
Side play between flywheels	0.005-0.015	0.13-0.38
Connecting rod to crankpin (loose)	0.0004-0.0017	0.0102-0.0432

MANUFACTURING TOLERANCES (CONT.)

Flywheel	IN.	MM
Runout (flywheels at rim)	0.000-0.010	0.000-0.254
Runout (shaft at flywheel)	0.000-0.002	0.000-0.051
End play	0.003-0.010	0.076-0.254

Crankshaft/Sprocket Shaft Bearings	IN.	MM
Bearing fit (loose)	0.0002-0.0015	0.005-0.038
Crankshaft runout	0.0-0.003	0.0-0.076
Bearing fit in crankcase (tight)	0.0038-0.0054	0.097-0.137
Bearing inner race on crankshaft (tight)	0.0004-0.0014	0.010-0.036

TORQUE VALUES

Item	ft/in-lbs	NM
Breather assembly bolts	90-120 **in-lbs**	10-14 Nm
Cam cover screws	125-155 **in-lbs**	14-18 Nm
Cam cover plate screws	20-30 **in-lbs**	2.3-3.4 Nm
Cam support plate screws	90-120 **in-lbs**	10-14 Nm
Bearing retainer plate screws	20-30 **in-lbs**	2-3 Nm
Crank sprocket flange bolt	15 ft-lbs, loosen one full turn, 24 ft-lbs	20.3 Nm, loosen one full turn, 32.5 Nm
Primary cam sprocket flange bolt	15 ft-lbs, loosen one full turn, 34 ft-lbs	20.3 Nm, loosen one full turn, 46.1 Nm
Crank position sensor screw	90-120 **in-lbs**	10.2-13.6 Nm
Piston jet screws	25-35 **in-lbs**	2.8-4.0 Nm
Transmission housing to crankcase bolts	15 ft-lbs, 30-35 ft-lbs	20 Nm, 41-48 Nm
Crankcase to front engine mounting bracket bolts	33-38 ft-lbs	45-52 Nm
Crankcase bolts	10 ft-lbs, 15-19 ft-lbs	14 Nm, 20-26 Nm
Cylinder head bolts	120-144 **in-lbs**, 15-17 ft-lbs + 90° turn	13.6-16.3 Nm, 20.3-23.1 Nm + 90° turn
Cylinder studs	10-20 ft-lbs	14-27 Nm
Engine oil drain plug	14-21 ft-lbs	19-28 Nm
Lifter cover screws	90-120 **in-lbs**	10-14 Nm
Oil pan screws	84-132 **in-lbs**	9.5-14.9 Nm
Oil filter	1/2-3/4 turn after gasket contact	
Oil filter mount	12-16 ft-lbs	16-22 Nm
Crankcase oil fittings/plugs	120-168 **in-lbs**	13.6-18.9 Nm
Oil hose cover screws	84-108 **in-lbs**	10-12 Nm
Oil pressure switch/sender	96-120 **in-lbs**	11-14 Nm
Rocker arm support plate bolts	18-22 ft-lbs	24-30 Nm
Rocker cover bolts	15-18 ft-lbs	20-24 Nm
Rocker housing bolts	120-168 **in-lbs**	13.6-18.9 Nm
Spark plugs	12-18 ft-lbs	16-24 Nm
Stator screws	55-75 **in-lbs**	6.2-8.5 Nm
Upper engine mounting bracket: To cylinder heads To top stabilizer link	 35-40 ft-lbs 18-22 ft-lbs	 48-54 Nm 24-30 Nm
ET sensor	120-180 **in-lbs**	13.6-20.3 Nm
Intake flange adapter screws	96-144 **in-lbs**	10.9-16.3 Nm
Exhaust flange adapter nuts	100-120 **in-lbs**	11.3-13.6 Nm

SERVICE WEAR LIMITS 3.2

GENERAL

Wear limits can be used as a guide when deciding whether to reuse engine parts. Replace used parts whenever the following wear limits are exceeded.

Rocker Arm/ Rocker Arm Shaft	REPLACE IF	
	IN.	MM
Shaft fit in bushing (loose)	More than 0.0035	More than 0.089
End clearance	More than 0.025	More than 0.635
Shaft fit in rocker arm support plate (loose)	More than 0.0035	More than 0.089

Hydraulic Lifter	REPLACE IF	
	IN.	MM
Fit in crankcase	More than 0.003	More than 0.08
Roller fit	More than 0.0015	More than 0.038
Roller end clearance	More than 0.015	More than 0.38

Cam Support Plate	REPLACE IF	
	IN.	MM
Cam chain tensioner shoe wear	More than 0.090	More than 2.29
	1/2 thickness of shoe	
Crankshaft bushing fit in cam support plate	Less than 0.0008	Less than 0.0203
Crankshaft bushing maximum ID	More than 0.8545	More than 21.704

Cylinder Head	REPLACE IF	
	IN.	MM
Valve guide in head (tight)	Less than 0.002	Less than 0.051
Valve seat in head (tight)	Less than 0.002	Less than 0.051
Head warpage	More than 0.006	More than 0.152

Cylinder	REPLACE IF	
	IN.	MM
Taper	More than 0.002	More than 0.051
Out of round	More than 0.002	More than 0.051
Warpage of gasket or O-ring surfaces: top	More than 0.006	More than 0.152
Warpage of gasket or O-ring surfaces: base	More than 0.004	More than 0.102

Cylinder Bore	REPLACE IF	
	IN.	MM
Standard	More than 3.752	More than 95.301
0.005 in. oversize	More than 3.757	More than 95.428
0.010 in. oversize	More than 3.762	More than 95.555

Piston	REPLACE IF	
	IN.	MM
Fit in cylinder (loose)	More than 0.003	More than 0.076
Piston pin fit (loose)	More than 0.0008	More than 0.020
Ring end gap		
Top compression	More than 0.030	More than 0.76
2nd compression	More than 0.034	More than 0.86
Oil control ring rails	More than 0.050	More than 1.27
Ring side clearance		
Top compression	More than 0.0045	More than 0.11
2nd compression	More than 0.0045	More than 0.11
Oil control ring rails	More than 0.010	More than 0.25

Connecting Rod	REPLACE IF	
	IN.	MM
Piston pin fit (loose)	More than 0.002	More than 0.051
Side play between flywheels	More than 0.020	More than 0.508
Fit on crankpin (loose)	More than 0.002	More than 0.051

Flywheel	REPLACE IF	
	IN.	MM
Runout (flywheels at rim)	More than 0.015	More than 0.381
Runout (shaft at flywheel)	More than 0.005	More than 0.127
End play	More than 0.010	More than 0.254

Crankshaft/Sprocket Shaft Bearings	REPLACE IF	
	IN.	MM
Bearing to shaft clearance	More than 0.0015	More than 0.038
Shaft runout	More than 0.003	More than 0.076
Bearing fit in crankcase (tight)	Less than 0.0038	Less than 0.097
Bearing inner race on shaft (tight)	Less than 0.0004	Less than 0.010

SERVICE WEAR LIMITS (CONT.)

Breather Assembly	REPLACE IF	
	IN.	MM
Breather cover warpage	More than 0.005	More than 0.13
Breather baffle warpage	More than 0.005	More than 0.13

Valve Stem to Guide Clearance	REPLACE IF	
	IN.	MM
Intake	More than 0.0038	More than 0.0965
Exhaust	More than 0.0038	More than 0.0965

FUEL

Use a good quality leaded or unleaded gasoline (91 pump octane or higher). Octane rating is usually posted on the pump.

CAUTION

Using gasolines with alcohol additives (such as methanol) can cause rubber components within the fuel system to fail or result in engine damage.

GASOLINE/ALCOHOL BLENDS

Harley-Davidson motorcycles were designed to give the best performance using unleaded gasoline. Some fuel suppliers sell gasoline/alcohol blends as a fuel. The type and amount of alcohol added to the fuel is important.

- DO NOT USE GASOLINES CONTAINING METHANOL. Using gasoline/methanol blends will result in starting and driveablility deterioration and damage to critical fuel system components.
- ETHANOL is a mixture of 10% ethanol (Grain alcohol) and 90% unleaded gasoline. Gasoline/ethanol blends can be used in your motorcycle if the ethanol content does not exceed 10%.
- REFORMULATED OR OXYGENATED GASOLINES (RFG): “Reformulated gasoline” is a term used to describe gasoline blends that are specifically designed to burn cleaner than other types of gasoline. Your motorcycle will run normally using this type of gas.

You may find that some gasoline blends adversely affect the starting, driveability or fuel efficiency of your bike. If you experience one or more of these problems, we recommend you try a different brand of gasoline or gasoline with a higher octane rating.

LUBRICATION

CHECKING ENGINE OIL LEVEL

CAUTION

Oil level cannot be accurately measured on a cold engine. For preride inspection, with motorcycle leaning on jiffy stand on level ground, oil should register on dipstick between arrows when engine is cold. Do NOT add oil to bring the level to the FULL mark on a COLD engine.

1. Perform engine oil level **COLD CHECK** as follows:
   a. With the vehicle resting on the jiffy stand on level ground, wipe off the dipstick and insert it back into the oil pan with the plug pushed completely into the fill spout.
   b. Remove the dipstick and note the level of the oil. Oil level should register between the two arrows on the dipstick. See Figure 3-1. If oil level is at or below the lower arrow, add only enough oil to bring the level between the two arrows on the dipstick.
2. Perform engine oil level **HOT CHECK** as follows:
   a. Ride vehicle until engine is at normal operating temperature.
   b. With the vehicle resting on the jiffy stand on level ground, allow engine to idle for 1-2 minutes. Turn engine off.
   c. Wipe off the dipstick and insert it back into the oil pan with the plug pushed completely into the fill spout.
   d. Remove the dipstick and note the level of the oil. Add only enough oil to bring the level to the FULL mark on the dipstick. See Figure 3-1. Do not overfill.

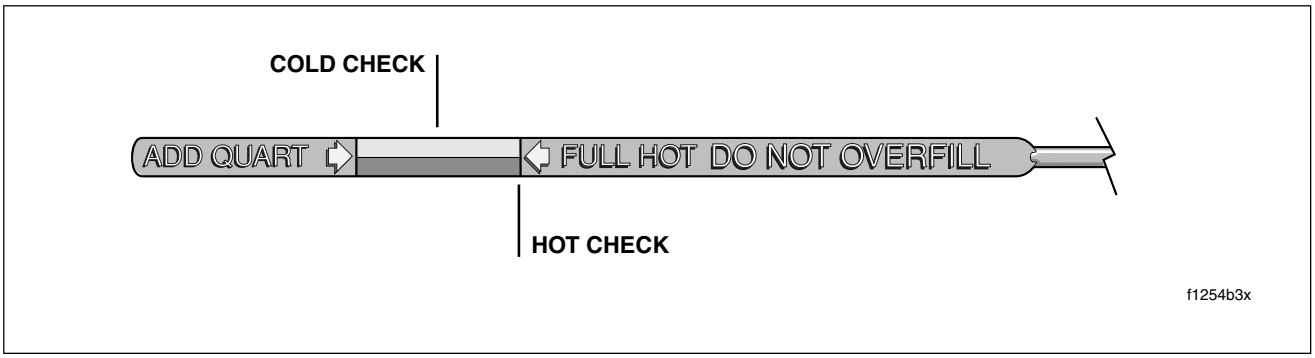

Figure 3-1. Engine Oil Dipstick

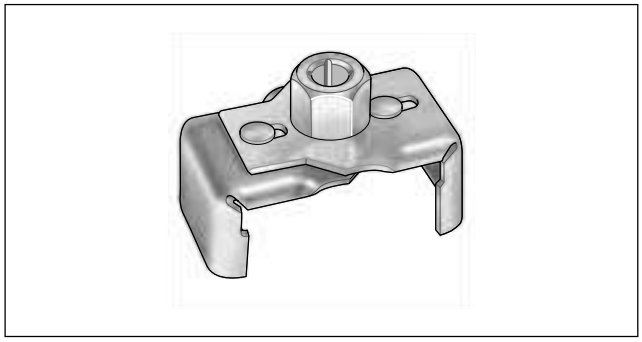

Figure 3-2. Oil Filter Wrench (Part No. HD-42311)

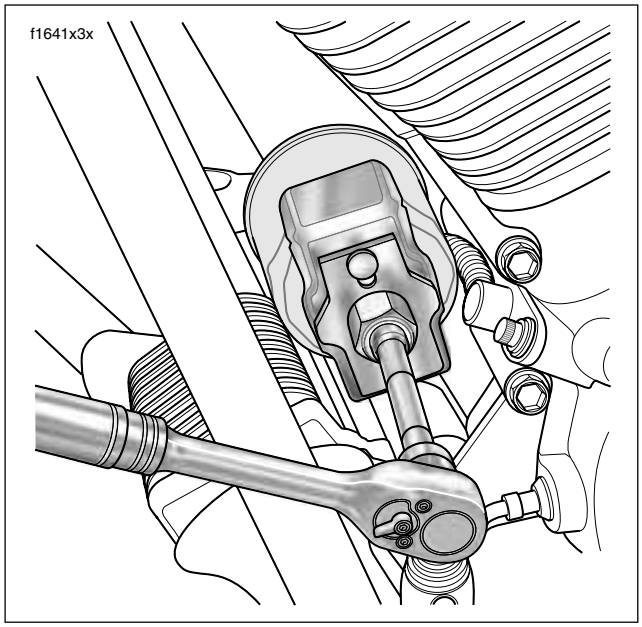

Figure 3-3. Remove Engine Oil Filter

CHANGING ENGINE OIL AND FILTER

NOTE

At the 1000 mile (1600 km) service interval, and at every 5000 mile (8000 km) service interval thereafter, change the engine oil and engine oil filter. If motorcycle is ridden hard, under dusty conditions or in cold weather, change engine oil and filter more often.

1. Ride vehicle until engine is at normal operating temperature.
2. Locate oil filler plug/dipstick on right side of vehicle at top of transmission case. To remove the oil filler plug, pull steadily while moving plug back and forth.
3. Locate oil drain plug at front left side of the oil pan. Remove the oil drain plug and allow oil to drain completely.
4. Inspect the oil drain plug O-ring for cuts, tears or signs of deterioration. Replace as necessary.
5. Remove the oil filter as follows:
   a. Obtain the OIL FILTER WRENCH (HD-42311). The tool allows easy removal of the oil filter without risk of damage to the CKP sensor or cable.
   b. Place the jaws of the wrench over the oil filter with the tool oriented vertically. See Figure 3-3.
   c. Using a 3/8 inch drive with a 4 inch extension, turn wrench in a counterclockwise direction. Do not use with air tools.

NOTE

Use OIL FILTER WRENCH (HD-44067) if HD-42311 is not available.

6. Clean the oil filter mount flange of any old gasket material.
7. Lubricate gasket with clean engine oil and install **new** oil filter on filter mount. Hand tighten oil filter 1/2-3/4 turn after gasket first contacts filter mounting surface. Do **NOT** use OIL FILTER WRENCH for oil filter installation.

NOTE

Use of the Premium 5 micron synthetic media oil filter is highly recommended, Part No. 63798-99A (Chrome) or 63731-99A (Black).

8. Install engine oil drain plug with O-ring. Tighten plug to 14-21 ft-lbs (19-28 Nm).
9. With vehicle resting on jiffy stand, add 3-1/2 quarts (3.3 liters) engine oil as specified in Table 3-1. Use the proper grade of oil for the lowest temperature expected before the next oil change.

Table 3-1. Recommended Engine Oils

Harley-Davidson Type	Viscosity	Harley-Davidson Rating	Lowest Ambient Temperature	Cold Weather Starts Below 50˚F (10˚C)
HD Multi-grade	SAE 10W40	HD 360	Below 40˚F (4˚C)	Excellent
HD Multi-grade	SAE 20W50	HD 360	Above 40˚F (4˚C)	Good
HD Regular Heavy	SAE 50	HD 360	Above 60˚F (16˚C)	Poor
HD Extra Heavy	SAE 60	HD 360	Above 80˚F (27˚C)	Poor

CAUTION

Oil level cannot be accurately measured on a cold engine. For preride inspection, with motorcycle leaning on jiffy stand on level ground, oil should register on dipstick between arrows when engine is cold. Do NOT add oil to bring the level to the FULL mark on a COLD engine.

10. Perform engine oil level **COLD CHECK** as follows:

a. With the vehicle resting on the jiffy stand on level ground, wipe off the dipstick and insert it back into the oil pan with the plug pushed completely into the fill spout.

b. Remove the dipstick and note the level of the oil. Oil level should register between the two arrows on the dipstick. See Figure 3-1. If oil level is at or below the lower arrow, add only enough oil to bring the level between the two arrows on the dipstick.

11. Perform engine oil level **HOT CHECK** as follows:

a. Ride vehicle until engine is at normal operating temperature.

b. With the vehicle resting on the jiffy stand on level ground, allow engine to idle for 1-2 minutes. Turn engine off.

c. Wipe off the dipstick and insert it back into the oil pan with the plug pushed completely into the fill spout.

d. Remove the dipstick and note the level of the oil. Add only enough oil to bring the level to the FULL mark on the dipstick. See Figure 3-1. Do not overfill.

12. Start engine and carefully check for oil leaks around drain plug and oil filter.

WINTER LUBRICATION

Combustion in an engine produces water vapor. During starting and warm-up in cold weather, especially in freezing temperatures, the vapor condenses to water before the crankcase is hot enough to exhaust it through the breather system. If the engine is run long enough for the crankcase to become thoroughly heated, the water returns to vapor and is then exhausted.

An engine used for only short trips, and seldom allowed to thoroughly warm up, accumulates increasing amounts of water in the oil pan. Water mixed with oil forms a sludge that causes accelerated engine wear. In freezing temperatures, the water becomes slush or ice, which may clog oil lines and result in engine failure.

Always change the engine oil more often in winter. If the engine is used for short runs, change the oil even more frequently. The farther below freezing the temperature drops the more often the oil should be changed.

OIL PRESSURE INDICATOR LAMP

The **red** OIL PRESSURE indicator lamp illuminates to indicate improper circulation of the engine oil. The lamp illuminates when the ignition is first turned on (before the engine is started), but should be extinguished once the engine is running.

CAUTION

Check the engine oil level if the oil pressure indicator lamp remains illuminated. If the oil level is normal, stop the engine immediately. Do not ride the vehicle until the probem is located and corrected.

If the indicator lamp is not extinguished, it may be the result of a low oil level or diluted oil supply. In freezing weather, the oil feed and return lines can clog with ice or sludge. A defect in the lamp wiring, faulty oil pressure switch/sender, damaged oil pump, plugged oil filter element, incorrect oil viscosity, broken or weak spring in the oil pressure relief valve and/or damaged or incorrectly installed O-rings in the engine may also cause the indicator lamp to remain on.

To troubleshoot the problem, always check the engine oil level first. If the oil level is OK, determine if oil returns to the pan from the oil return hose. If oil does not return, shut off the engine until the problem is located and corrected.

To check the engine oil pressure, proceed as follows:

1. Verify engine oil level. See CHECKING ENGINE OIL LEVEL in this section.

2. Locate the oil pressure switch/sender at the front right side of the crankcase.

3. On FLHR/C/S models, pull elbow from post of oil pressure switch. On FLHX, FLHT/C/U and FLTR models, pull external latch outward and use rocking motion to remove Delphi connector from oil pressure sender.

4. On FLHR/C/S models, use a 15/16 inch Open End Crow Foot (Snap-On FC30B) to remove oil pressure switch from crankcase. On FLHX, FLHT/C/U and FLTR models, use 1-1/16 inch Open End Crow Foot (Snap-On FC34A) to remove oil pressure sender.

5. Start OIL PRESSURE GAUGE ADAPTER (HD-96921-110) into crankcase bore. Using a 5/8 inch open end/box wrench, turn adapter until snug. See Figure 3-4.

6. Moving to left side of vehicle, route banjo fitting and hose of OIL PRESSURE GAUGE (HD-96921-52B) over shifter lever and oil filter to right side of engine. See Figure 3-5.

7. Slide washer on banjo bolt and insert through banjo fitting on gauge. Install second washer on bolt and thread into adapter until snug.

8. Run vehicle or simulate road running until engine is at normal operating temperature, approximately 230° F. (110° C.). Gauge reading will not be accurate if engine is not completely warmed.

9. Verify that oil pressure is 30-38 psi (207-262 kN/m^{2}) at 2000 rpm.

10. Remove banjo bolt (and washers) from adapter. Remove gauge from vehicle and then remove adapter from crankcase.

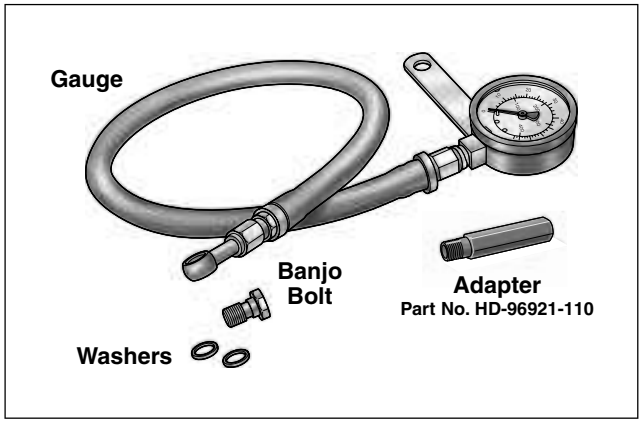

Figure 3-4. Oil Pressure Gauge (Part No. HD-96921-52B)

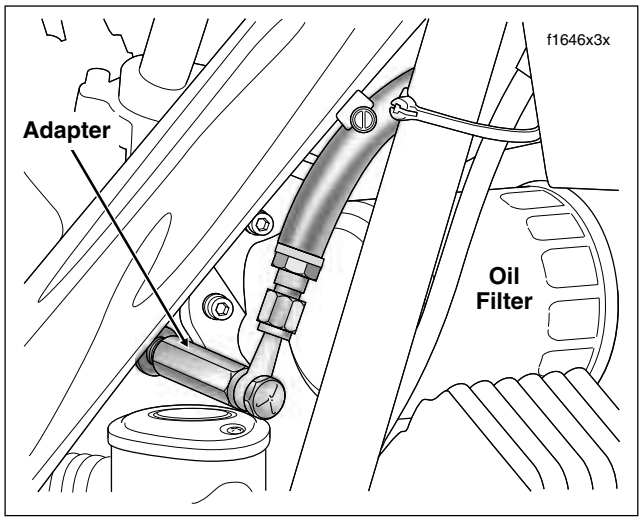

Figure 3-5. Install Adapter and Oil Pressure Gauge

NOTE

If reusing oil pressure switch/sender, apply Loctite Pipe Sealant with Teflon 565 to threads.

11. Start oil pressure switch/sender into crankcase bore.
12. On FLHR/C/S models, use a 15/16 inch Open End Crow Foot (Snap-On FC30B) to tighten oil pressure switch to 96-120 **in-lbs** (11-14 Nm). On FLHX, FLHT/C/U and FLTR models, use 1-1/16 inch Open End Crow Foot (Snap-On FC34A) to tighten oil pressure sender to same torque.
13. On FLHR/C/S models, install elbow on post of oil pressure switch. On FLHX, FLHT/C/U and FLTR models, install Delphi connector to oil pressure sender.

NOTE

If wire socket terminal requires replacement, see APPENDIX B.6 SEALED BUTT SPLICE CONNECTORS.

14. Test oil pressure switch/sender for proper operation.

ENGINE OIL FLOW

CAUTION

The oiling system is carefully designed for optimum efficiency. All oil holes and passageways are specially sized. Exercise caution to avoid enlarging oil holes during cleaning. Any modification of the oiling system will adversely affect oil pressure or cooling and lubrication efficiency.

Oil Feed (Figures 3-6, 3-7)

Oil flows from the oil pan through a passageway at the front of the transmission housing into a flexible hose clamped to the lower fitting (A1) at the rear right side of the crankcase.

Running through a passageway in the crankcase, the oil exits a hole in the crankcase flange (B2) and enters a hole on the inboard side of the cam support plate. Passing through a channel in the cam support plate (A3), the oil enters the feed side of the oil pump. See OIL PUMP OPERATION. The feed gerotors of the pump direct the flow up a second channel in the cam support plate (A4).

A drilling in this channel connects to a pressure relief valve mounted in the bypass port of the cam support plate (A5). When the oil pressure exceeds the setting of the valve spring (35 psi), the orifice opens to bypass excess oil back to the feed side of the pump (A3).

Oil not returned to the feed side exits a hole on the inboard side of the cam support plate and passes through a hole in the crankcase flange (B6). Flowing through a passageway in the crankcase, where a reading is taken by the oil pressure sender (B7), the oil exits the lower hole in the oil filter mount (D8).

After circulating through the oil filter, the flow of oil is directed back into the crankcase through the upper hole in the oil filter mount (D9). Exiting a passageway in the crankcase through a hole in the crankcase flange (B10), the flow of oil reenters the cam support plate.

Filtered oil is then routed to the top and bottom ends of the engine, as described below.

Top End (Figures 3-6, 3-7)

Oil passes through a channel in the cam support plate exiting the inboard side through two holes near the top (A11, A12). Entering two holes in the crankcase flange (B13, B14), one leading to the front cylinder and the other to the rear, the oil travels through passageways in the crankcase to the hydraulic lifter bores (D15).

Exiting a hole in each lifter bore (E16), the oil flows around the lifter and enters a hole at the side of the lifter body. As the chamber inside the lifter body is filled, the push rod socket rises to achieve the no-lash fit of the valve train components. The flow of oil then exits a hole centered in the lifter socket and runs up the hollow push rods.

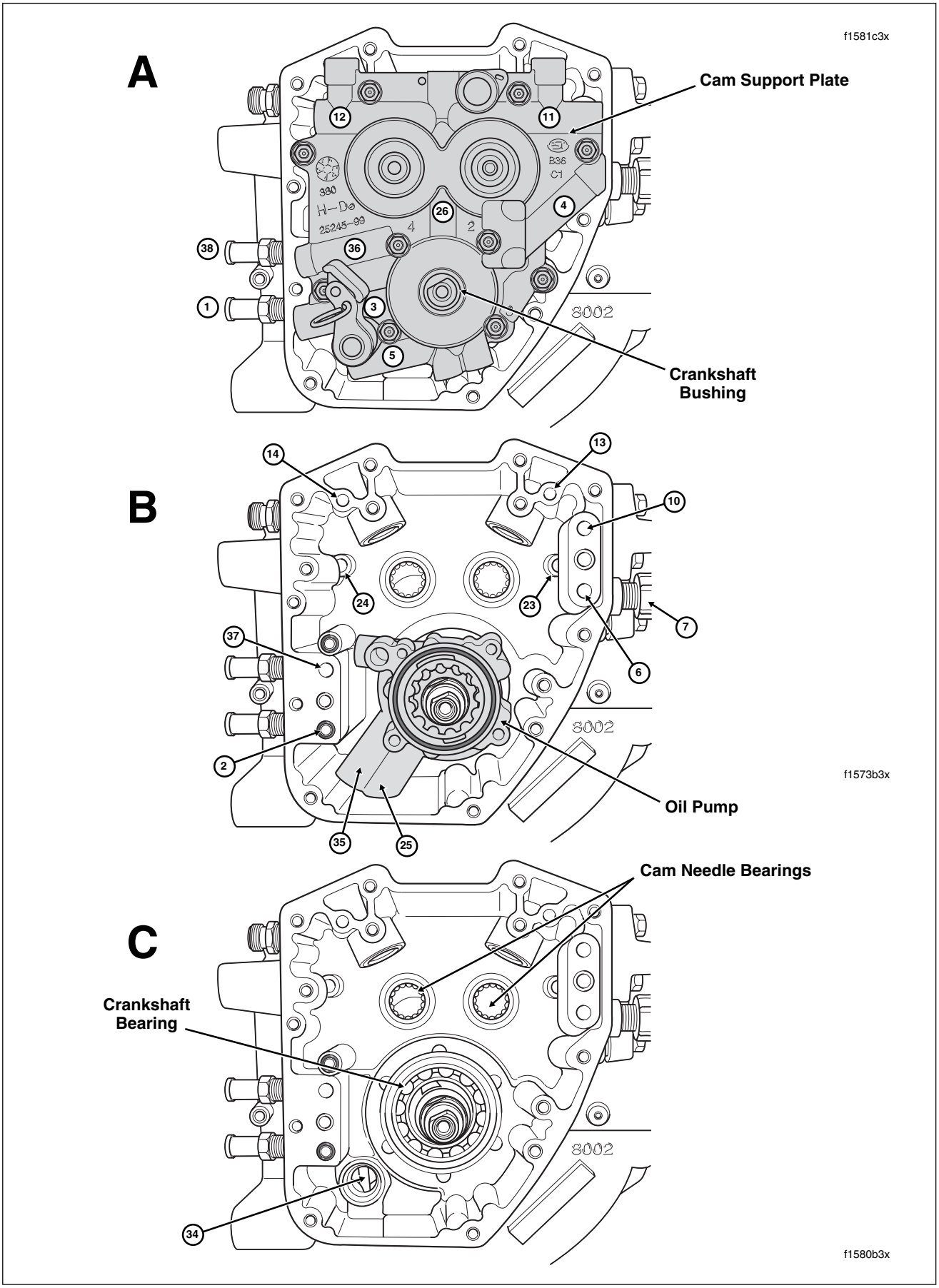

Figure 3-6. Engine Oil Flow - Cam Support Plate/Right Crankcase Half

NOTE

Note that there is one additional hole drilled into the inside lifter bores- while the oblong hole circulates oil around the lifter body as described, the round hole (E17) feeds oil to the piston jets in the flywheel compartment.

Exiting holes at the top of the hollow push rods, oil enters a hole at the bottom of the intake and exhaust rocker arms. Lubricating the rocker arm bushings, oil flows down the rocker arm shafts and exits a pin hole in the outboard side of each rocker arm housing (F18) where it sprays the valve springs and the top of the valve stem.

Oil runs down to the low side of the rocker housing and enters the exhaust valve spring pocket where a drain hole (G19) leads to a passageway in the cylinder head casting.

Oil exits the bottom of the cylinder head and passes through a ring dowel (H20) on the “down side” of the cylinder flange. The oil runs through a vertical passageway in the cylinder, passes through a second ring dowel on the “down side” of the cylinder deck (I21) and enters the left crankcase half.

Flowing through a horizontal passageway in the left crankcase half (J22), oil runs through a third ring dowel (K23) to the right crankcase half where it travels through another passageway before emptying into the cam compartment (B23, B24).

Oil collecting in the cam compartment is picked up by one of two scavenge lobes on the oil pump (B25).

Bottom End (Figures 3-6, 3-7, 3-8)

Oil travels down the center passage of the cam support plate (A26) and sprays out through pin holes on each side of the casting to lubricate both the primary and secondary cam chains. Oil also passes through a hole in the crankshaft bushing where the flow enters a drilling in the crankshaft (L27).

Oil runs down the center of the crankshaft and then up a cross drilling into the right side of the flywheel. The flow exits a drilling in the crank pin bore, enters the crank pin and then sprays out through three holes to lubricate the lower rod bearing set.

The oil splash and mist created by the action of the flywheel lubricates the crankshaft bearing and the camshaft needle bearings in the right crankcase half. This same action serves to lubricate the sprocket shaft bearing in the left crankcase half (M28).

Since the oil mist also lubricates the cylinder walls, three holes on each side of the piston (in the area of the third ring land) evacuate excess oil scraped from the walls on the piston downstroke.

The piston jets (N29), which receive a supply of oil from the intake lifter bores, spray the underside of the piston for cooling of the piston crown and skirt area. A check valve in each jet opens only when the oil pressure reaches 12-15 psi, at which point the engine is operating above idle speed. At idle speeds (9-12 psi), the valve remains closed to prevent over oiling and to ensure proper system operating pressure.

Oil spray from each piston jet also enters a hole at the bottom of each pin boss (O30) for lubrication of the piston pin. Another hole at the top of the connecting rod (D31) allows a portion of the oil to reach the upper rod bushing.

Surplus oil falls back to the bottom of the flywheel compartment where it collects in the sump area (P32). Oil in the sump is drawn to the cam compartment through an internal channel (P33, C34) that connects with the second scavenge lobe of the oil pump (B35).

Oil Return (Figures 3-6, 3-8)

The “dual kidney” designation given to the oil pump refers to its two scavenging functions, whereby it simultaneously draws oil from both the cam and flywheel compartments.

Oil sucked up by the scavenge lobes passes through the scavenge gerotors of the oil pump and is directed through a return channel in the cam support plate (A36). See OIL PUMP OPERATION.

Exiting a hole on the inboard side of the cam support plate, the oil enters a hole in the crankcase flange (B37).

The oil flows through a passageway in the crankcase and exits the upper fitting at the rear right side of the crankcase (A38). Passing through a flexible hose connection, the flow of oil runs through a passageway at the front of the transmission housing (Q39) before emptying into the oil pan at the front of the baffle (R40).

The oil flows to the rear of the oil pan along each side of the baffle. Spring tension holds the unit tight against the bottom of the pan to prevent oil from entering or escaping around the perimeter of the baffle. At the back of the oil pan, the oil enters the open side of the baffle where it is redirected forward. The baffle plates slow the circulation of the oil through the pan to enhance cooling.

Oil pickup occurs in the front compartment of the baffle where a passageway in the casting (S41) directs the flow upward. Passing through a second passageway in the transmission housing (Q42), the flow of oil enters the flexible hose connection (A1) to repeat the circuit.

Also note that a third flexible hose clamped to a fitting behind the rear lifter cover connects the cam compartment with the oil filler spout. This crankcase breather connection provides the pressure balance necessary for oil circulation.

Oil Pump Operation

The oil pump consists of a housing containing two gerotor gear sets, one feed and the other scavenge. Driven by the crankshaft, the feed gerotor set distributes oil to the engine, while the scavenge gerotor set draws oil from the cam and flywheel compartments and returns it to the oil pan.

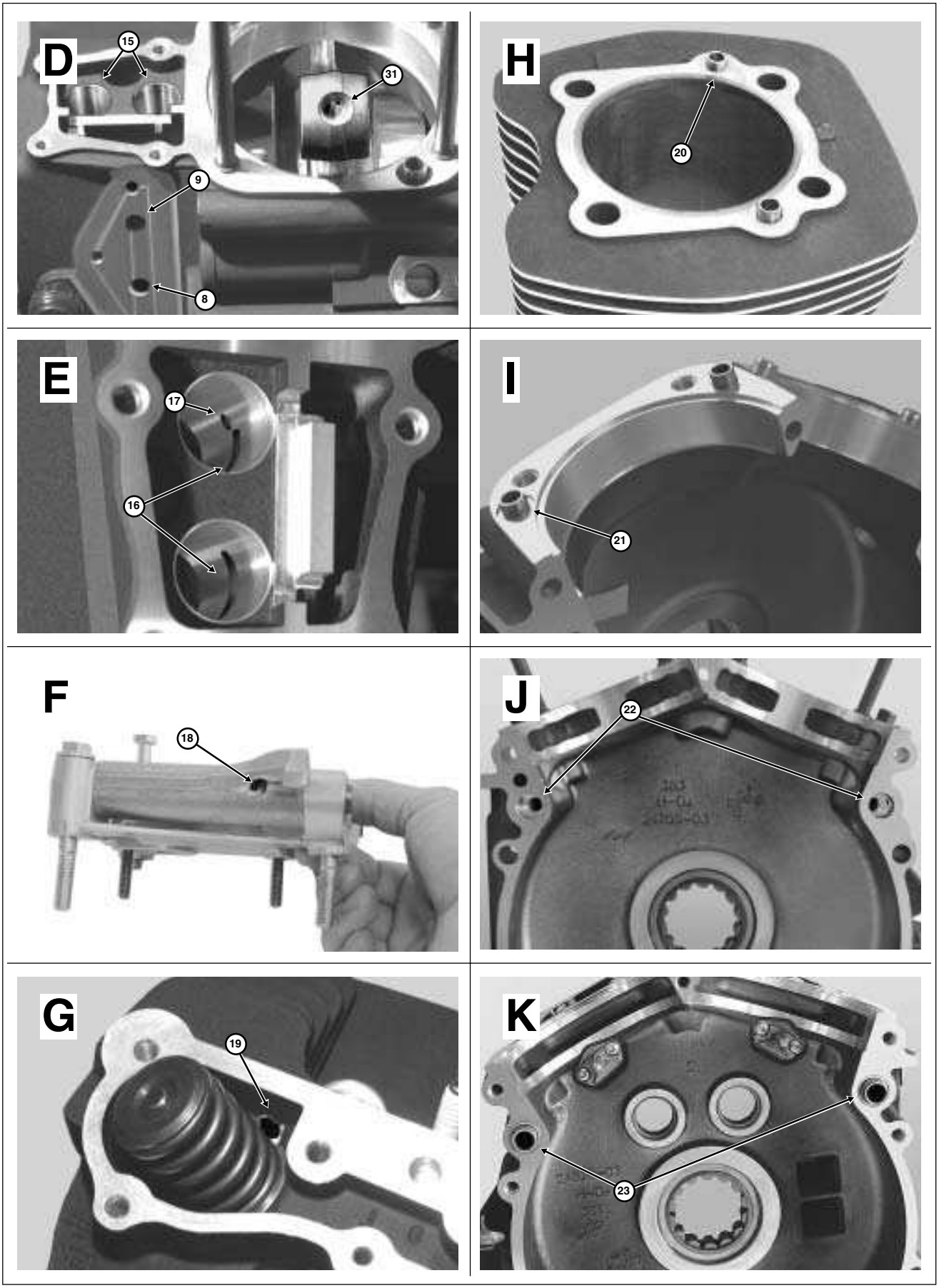

Figure 3-7. Engine Oil Flow - Top End

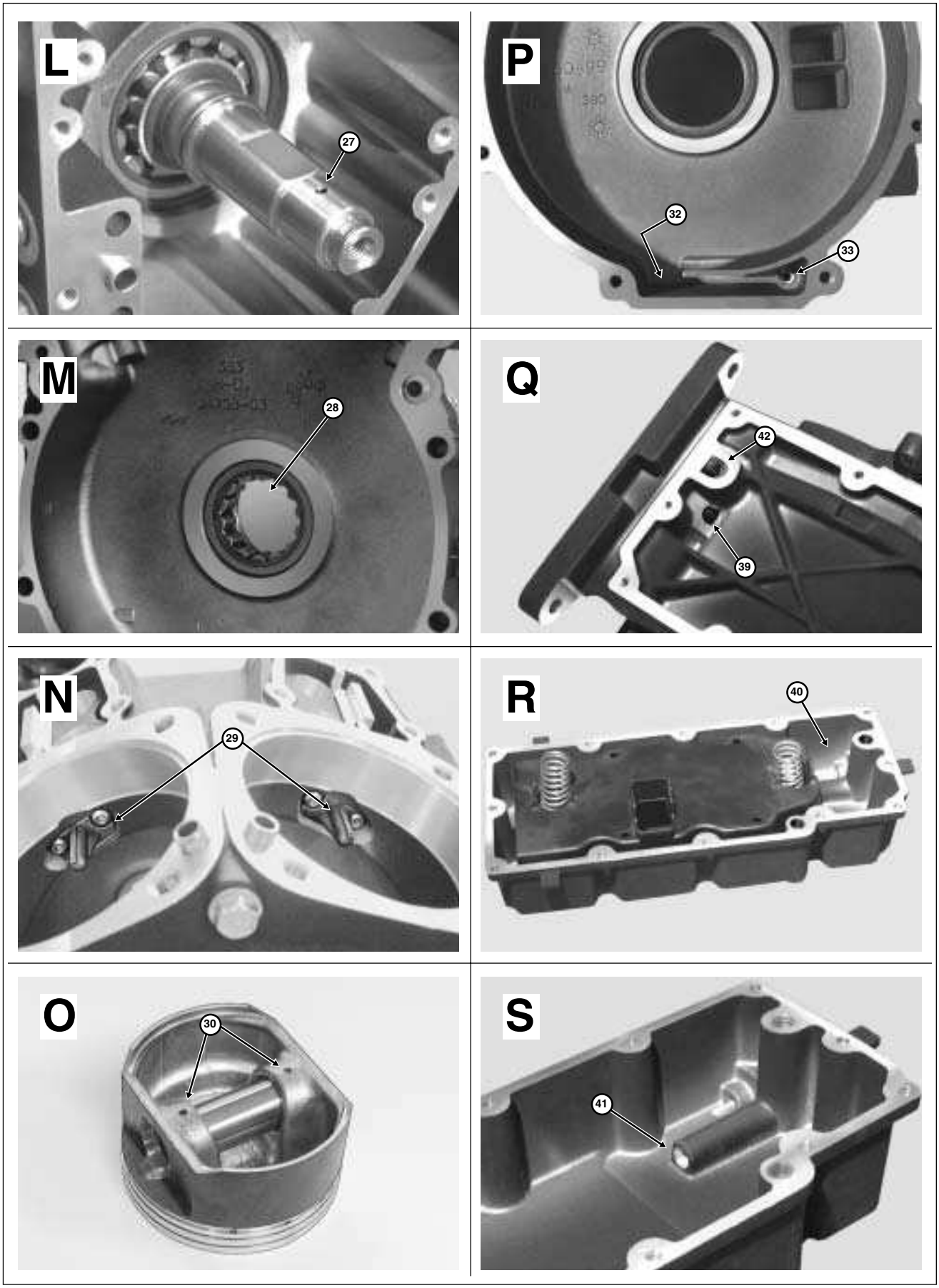

Figure 3-8. Engine Oil Flow - Bottom End

Each gerotor gear set has two parts, an inner and outer gerotor. The inner and outer gerotors have fixed centers that are slightly offset to one another. Also, the inner gerotor has one less tooth.

As the crankshaft rotates, the cavity between the inner and outer gerotors on the inlet side of the pump increases in volume. This creates a vacuum causing oil to be drawn in. The cavity continues to increase until the volume is equivalent to that of the missing tooth on the inner gerotor. Also note that the inlet and outlet sides of the pump are sealed by the tips and lobes of the inner and outer gerotors. See A of Figure 3-9.

Continued rotation moves the pocket of oil to the outlet side of the pump. In this area, the cavity decreases in volume as the gerotor teeth mesh causing the oil to be squeezed out the discharge port. As the cavity on the outlet side is emptied, a second seal formed by the tips and lobes of the inner and outer gerotors prevents oil on the outlet side (high pressure) from being transferred to the inlet side (low pressure). See B of Figure 3-9.

In operation, the gerotors provide a continuous flow of oil. See C of Figure 3-9.

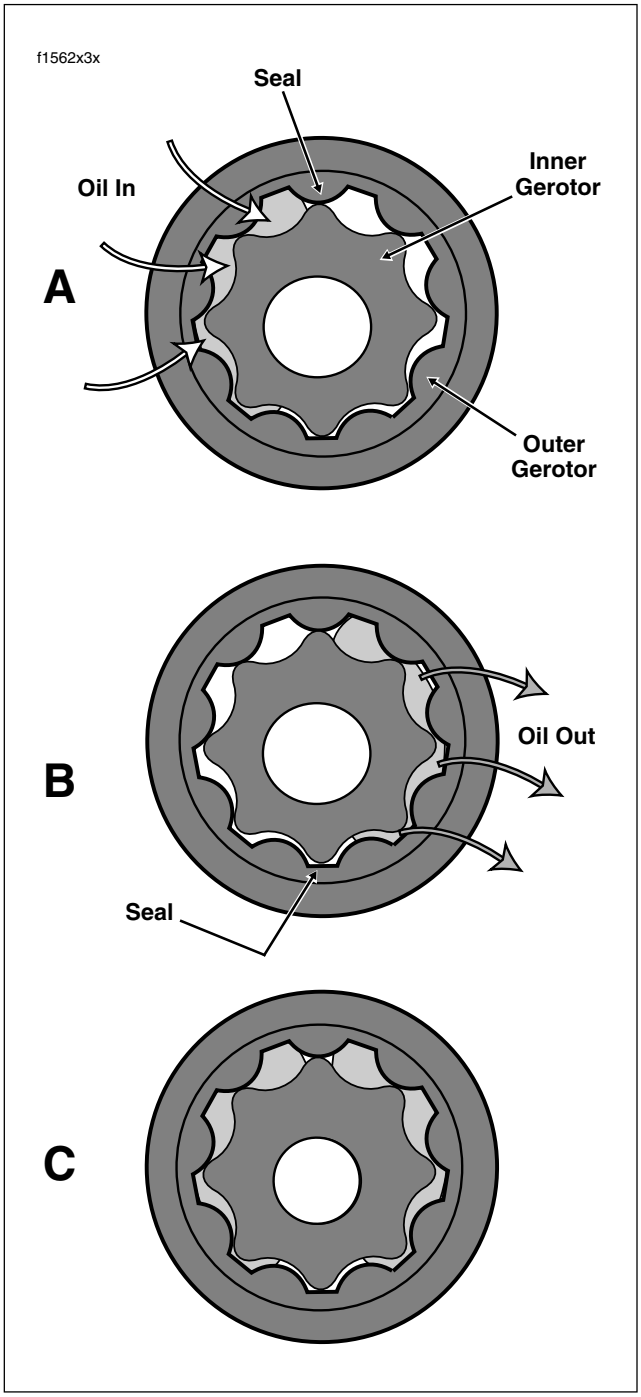

Figure 3-9. Gerotor Operation

Breather Operation

NOTE

The crankcase breather system relieves crankcase pressure produced by the downstroke of the pistons and allows crankcase vapors vacated from each cylinder to be directed into the air filter element. Through effective recirculation of crankcase vapors, the system serves to eliminate the pollutants normally discharged from the crankcase.

As each piston pushes downward on its power and intake stroke, displaced air in the flywheel compartment is vented through the crankshaft bearing into the cam compartment and then up the push rod covers into the rocker housing.

Air rushes under the rocker arm support plate, which is elevated slightly, and passes through an opening at the bottom of the plate to enter the breather baffle compartment.

In the baffle compartment, the flow of air passes upward through the oil filter gauze, where the oil is removed from the air. Two pin holes in the rocker arm support plate act as drain holes to rid the baffle compartment of the oil separated from the air.

Passing through the oil filter gauze, the flow of air passes through the umbrella valve into the breather compartment. The flaps of the umbrella valve only allow air to be vented one way, rising to allow the passage of air, but then falling back into place to seal the vent holes as the flow of air stops.

In the breather compartment, the flow of air reverses direction passing downward through holes aligned in the breather baffle, rocker arm support plate and rocker housing. Exiting the rocker housing, the air enters a passageway cast into the top of the cylinder head. Proper orientation of the rocker housing gasket is critical for effective sealing of this passageway.

Flowing through the cylinder head passageway, the air passes through a drilling in the air cleaner backplate bolt and then through a breather tube into the air filter element.

NOTE

Air cleaner mounting without installation of the breather tubes allows crankcase vapors to be vented into the atmosphere in violation of legal emissions standards.

HOW TO USE THIS SECTION 3.4

GENERAL

Three basic levels of service are presented in this section: top end overhaul, bottom end overhaul and subassembly service and repair. The manner in which these instructions are used depends upon the level of disassembly required.

Top End Overhaul

If servicing only cylinder head components, pistons, cylinders and/or upper rod bushings, see Section 3.5 STRIPPING MOTORCYCLE FOR SERVICE, and then proceed to Section 3.9 TOP END OVERHAUL, DISASSEMBLY. During top end disassembly, the engine may be left in the chassis for service.

NOTE

If the engine is to be removed from the chassis, see Section 3.7 REMOVING ENGINE FROM CHASSIS in lieu of Section 3.5 STRIPPING MOTORCYCLE FOR SERVICE.

In the top end disassembly instructions, references are made to Section 3.11 SUBASSEMBLY SERVICE AND REPAIR for service of all top end subassemblies.

To rebuild the engine after a top end overhaul is complete, perform the steps under Section 3.9 TOP END OVERHAUL, ASSEMBLY, immediately following the disassembly instructions. Then, refer to Section 3.6 ASSEMBLING MOTORCYCLE AFTER STRIPPING to complete the project.

NOTE

For clarity, all artwork in this section shows the engine removed from the chassis for service.

Bottom End Overhaul

Bottom end service may require either partial or complete disassembly of the engine. Servicing components in the cam compartment requires only partial disassembly, while servicing those in the flywheel compartment requires complete disassembly. An easy rule to remember is that any time the crankcase halves must be split, complete disassembly needs to occur. The cam compartment can be accessed through removal of the cam cover making complete engine disassembly unnecessary.

During bottom end service that requires complete disassembly, the engine must be removed from the chassis and placed in an engine stand. To begin, see Section 3.7 REMOVING ENGINE FROM CHASSIS.

After the motorcycle has been stripped and the engine removed, follow all of the steps under Section 3.9 TOP END OVERHAUL, DISASSEMBLY. When finished, continue with disassembly of the bottom half by performing those steps listed under Section 3.10 BOTTOM END OVERHAUL, DISASSEMBLY.

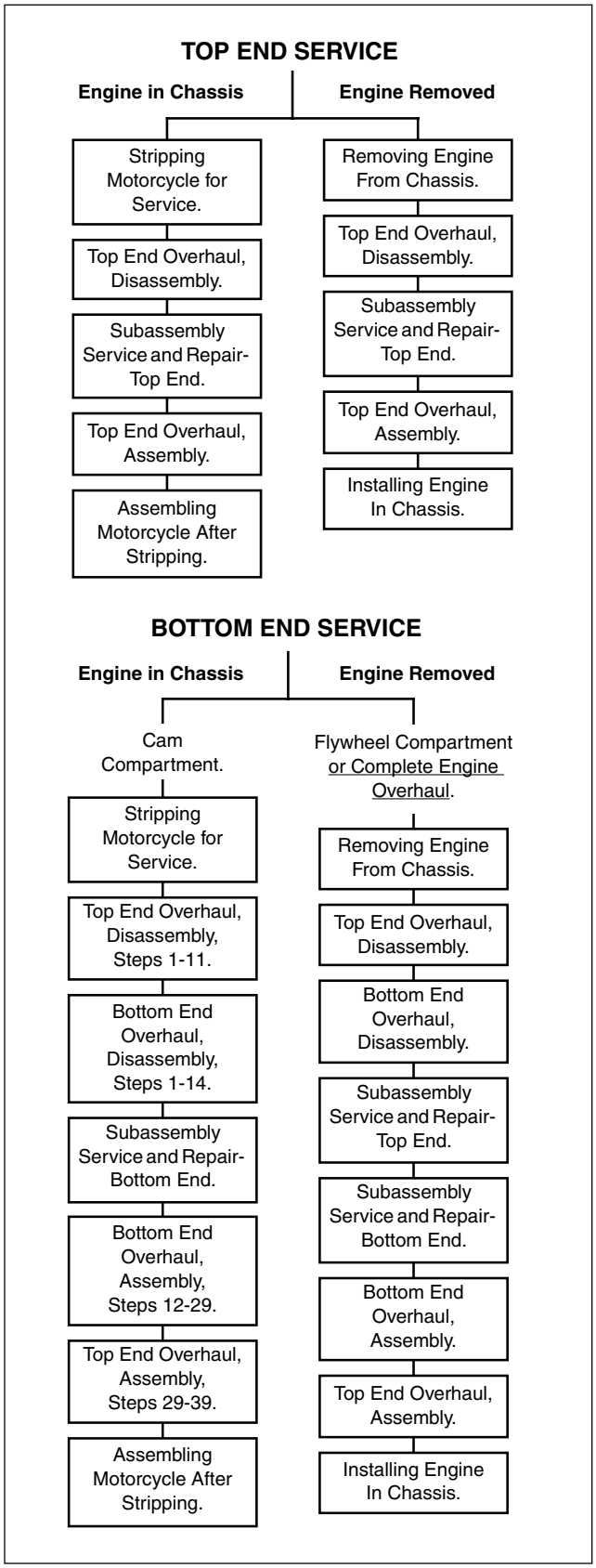

Figure 3-10. Top/Bottom End Service

As with the top end disassembly instructions, references are made to Section 3.11 SUBASSEMBLY SERVICE AND REPAIR for service of bottom end subassemblies.

Since it is standard practice to inspect and clean all oil passages when the engine is completely disassembled, a detailed explanation of the engine oil circuit is presented under Section 3.3 GENERAL INFORMATION, ENGINE OIL FLOW.

To rebuild the engine after a bottom end overhaul is complete, perform the steps under Section 3.10 BOTTOM END OVERHAUL, ASSEMBLY, and then proceed to Section 3.9 TOP END OVERHAUL, ASSEMBLY, to rebuild the upper end.

Once the engine is assembled, refer to Section 3.8 INSTALLING ENGINE IN CHASSIS to complete the project.

The flow charts on the preceding page show how the same subsections are used for various levels of service.

Subassembly Service and Repair

Finally, if the task entails servicing of only one particular subassembly, then move directly to Section 3.11 SUBASSEMBLY SERVICE AND REPAIR for all service instructions.

For example, if just installing new cams, then refer to Section 3.11 SUBASSEMBLY SERVICE AND REPAIR, CAM SUPPORT PLATE.

The steps under Section 3.9 TOP END OVERHAUL and Section 3.10 BOTTOM END OVERHAUL that need to be followed for the removal and installation of the cam support plate are given.

Furthermore, detailed instructions for disassembling, cleaning, inspecting, replacing and assembling cam support plate components are provided.

STRIPPING MOTORCYCLE FOR SERVICE 3.5

PROCEDURE

NOTE

If performing top end service (or both cam compartment and top end), follow steps 1-16. If servicing cam compartment components only, perform steps 1-7.

1. Remove the exhaust system in two sections. See Section 2.38 EXHAUST SYSTEM, REMOVAL.
2. Remove the air cleaner and backplate. See Section 4.5 AIR CLEANER, REMOVAL.
3. Drain and remove fuel tank. Proceed as follows:

   Carbureted: See Section 4.7 FUEL TANK (CARBURETED), COMPLETE REMOVAL, FLHX, FLHT, or FLHR/S.

   Fuel Injected: See Section 9.4 FUEL TANK (FUEL INJECTED), COMPLETE REMOVAL, FLHXI, FLHT/C/U/I, FLTRI, or FLHR/C/S/I.

4. Moving to left side of motorcycle, pull boots on spark plug cables to release from spark plug and ignition coil towers. Release cables from three cable clips at bottom of frame backbone.
5. Remove spark plugs.
6. Disconnect ignition coil connector [83] from left side of ignition coil.
7. Pull sides of ignition coil bracket outward to remove from bosses of front fuel tank mount.
8. Remove connections to carburetor or induction module. Proceed as follows:

Carbureted:

   a. Standing on left side of motorcycle, remove MAP sensor connector [80] at top of intake manifold.
   b. Locate the fuel enrichener knob under the left side of the fuel tank, and loosen hex nut at backside of mounting bracket. Slide cable assembly free of slot in mounting bracket.

Fuel Injected:

   a. Standing on right side of motorcycle, remove IAC connector [87] and MAP sensor connector [80].
   b. Remove front fuel injector connector [84] and rear fuel injector connector [85].
   c. Remove TP sensor connector [88] and IAT sensor connector [89].
   d. Moving to left side of motorcycle, pull back boot at back of front cylinder and remove ET sensor connector [90]. Cut cable strap to release conduit from horn bracket.
   e. Tape free ends of wire harness to top of wire harness trough on frame backbone to keep conduit and connectors out of the way.

9. Remove idle and throttle control cables as follows:

   Carbureted: Using a needle nose pliers, carefully pull idle cable barrel from upper inboard hole in throttle wheel. Pull throttle cable barrel from remaining hole. Release idle and throttle cables from guides in throttle cable bracket.

   Fuel Injected: Using a needle nose pliers, carefully pull idle cable barrel from upper hole in throttle wheel. Pull throttle cable barrel from lower hole. Using slots, release idle and throttle cables from guides in throttle cable bracket.

10. Free idle and throttle control cables from J-clamp fastened to right side of frame backbone. Move cables up and out of the way.
11. If equipped with cruise control, remove E-clip from sleeve at end of cruise cable housing. Using slot, remove cable housing from cable guide in throttle cable bracket. Push the plastic end fitting on the cruise cable to the outboard side to release from wheel pin. Move cable up and out of the way.
12. Remove intake manifold/carburetor or induction module. Proceed as follows:

   a. Remove right side allen head socket screws from front and rear cylinder head flange adapters. For best results, use the INTAKE MANIFOLD WRENCH (HD-47250), or a long 1/4 inch ball allen head socket with end driver 4 inches long.
   b. Moving to opposite side of motorcycle, just loosen left side allen head socket screws from flange adapters. Slots in flanges make removal of left side screws unnecessary.
   c. Remove intake manifold/carburetor or induction module from right side of motorcycle.

13. Standing on left side of motorcycle, remove two hex head bolts (with flat washers) to release top engine mounting bracket from cylinder heads.
14. Leaving ground wire ring terminal in place, detach socket terminal of yellow lead from spade contact at back of horn. Release wire conduit from J-clamp.
15. Moving to right side of motorcycle, turn hex head bolt to release stabilizer link from frame weldment.
16. Remove horn, top engine mounting bracket and stabilizer link as an assembly.

ASSEMBLING MOTORCYCLE AFTER STRIPPING 3.6

PROCEDURE

NOTE

If top end service was performed (or both cam compartment and top end), follow steps 1-13. If only cam compartment components were serviced, perform steps 8-12.

1. Install intake manifold/carburetor or induction module. Proceed as follows:
   a. With the counterbore facing outward, slide cylinder head flange adapters onto outlet ports of intake manifold/induction module. The flange adapters are not interchangeable. Look next to the slotted bolt hole for a stamp that indicates F(ront) and R(ear) cylinder.
   b. Place a **new** seal in each flange adapter with the beveled side in against the counterbore.
   c. Standing on right side of engine, slide intake manifold/induction module toward installed position so that open-ended slots on flange adapters begin to engage allen head socket screws loosely installed on left side.
   d. Align fixed holes in flange adapters with those in cylinder heads and start allen head socket screws. For best results, use the INTAKE MANIFOLD WRENCH (HD-47250), or a long 1/4 inch ball allen head socket with end driver 4 inches long.
   e. Use the air cleaner backplate to properly locate carburetor/induction module. Install two breather bolts to fasten backplate to front and rear cylinder heads. Install three T27 TORX screws to secure backplate to face of carburetor/induction module.
   f. Tighten allen head socket screw in fixed holes of flange adapters until snug. Moving to left side of engine, tighten screws in slotted holes to 96-144 **in-lbs** (10.9-16.3 Nm).
   g. Remove breather bolts and T27 TORX screws to remove backplate.
   h. Tighten allen head socket screws in fixed holes of flange adapters to 96-144 **in-lbs** (10.9-16.3 Nm).
2. Install horn, top engine mounting bracket and stabilizer link as an assembly. Proceed as follows:
   a. Moving to right side of motorcycle, turn hex head bolt to secure stabilizer link to frame weldment. Tighten bolt to 18-22 ft-lbs (24-30 Nm).
   b. Attach socket terminal of yellow lead to spade contact at back of horn. Capture wire conduit in J-clamp.
   c. Standing on left side of motorcycle, install two hex head bolts (with flat washers) to secure top engine mounting bracket to front and rear cylinder heads. Alternately tighten bolts to 35-40 ft-lbs (48-54 Nm).
3. If equipped with cruise control, slide groove in cruise cable end fitting over cap of wheel pin. Push on end fitting until it snaps in place. Using slot, slip cruise cable housing into cable guide in throttle cable bracket. Install **new** E-clip on sleeve at end of cruise cable housing.
4. Route idle and throttle control cables through J-clamp fastened to right side of frame backbone.
5. Install idle and throttle control cables as follows:

   Carbureted: Install sleeve on throttle cable housing into shorter cable guide in throttle cable bracket. Drawing throttle cable downward, fit barrel end into lower outboard hole in throttle wheel. Install sleeve and spring on idle cable housing into longer cable guide inserting barrel end into upper inboard hole in throttle wheel.

   Induction Module: Install sleeve on throttle cable housing into shorter cable guide at top of throttle cable bracket. Drawing throttle cable downward, fit barrel end into lower hole in throttle wheel. Install sleeve and spring on idle cable housing into longer cable guide at bottom of throttle cable bracket inserting barrel end into upper hole in throttle wheel.
6. Adjust cables as necessary to keep barrel ends from dislodging. Verify that cables are seated in channel of throttle wheel. Verify operation by turning throttle grip and observing cable action.
7. Install connections to carburetor or induction module. Standing on left side of motorcycle, proceed as follows:

Carbureted:

   a. Moving to left side of motorcycle, install MAP sensor connector [80] at top of intake manifold.
   b. Slide threaded portion of enrichener cable into slot of mounting bracket. Flat on threads must face rear of motorcycle for script on enrichener knob to be right side up. With the external tooth lockwasher and hex nut positioned on the inboard side of the mounting bracket, tighten hex nut to 20-35 **in-lbs** (2.3-4.0 Nm).

Fuel Injected:

   a. Install rear fuel injector connector [85] and front fuel injector connector [84].
   b. Install MAP sensor connector [80] and IAC connector [87].

c. Install IAT sensor connector [89] and TP sensor connector [88].

d. Moving to left side of motorcycle, install ET sensor connector [90] at back of front cylinder. Pull boot over sensor to keep out dirt and debris. Install **new** cable strap to secure connector conduit to horn bracket.

8. Install spark plugs in front and rear cylinder heads. Install the plugs finger tight and then tighten to 12-18 ft-lbs (16-24 Nm).

9. Install ignition coil and spark plug cables as follows:

   a. With the coil towers facing rear of vehicle, hold ignition coil and bracket at bottom of frame backbone. Pull sides of bracket outward and install on bosses of front fuel tank mount. See Figure 3-11.

   b. Connect ignition coil connector [83] to left side of ignition coil.

   c. Install spark plug cable to front cylinder onto left side coil tower. Verify that spark plug cable is captured in double-sided cable clip at bottom left side of frame backbone. Install **new** cable clip on T-stud if damaged or missing.

   d. Install spark plug cable to rear cylinder onto right side coil tower. Verify that spark plug cable is captured in two single-sided cable clips at bottom left side of frame backbone. Install **new** cable clips on T-studs if damaged or missing.

10. Install the fuel tank. Proceed as follows:

    Carbureted: See Section 4.7 FUEL TANK (CARBURETED), INSTALLATION (AFTER COMPLETE REMOVAL), FLHX, FLHT, or FLHR/S.

    Fuel Injected: See Section 9.4 FUEL TANK (FUEL INJECTED), INSTALLATION (AFTER COMPLETE REMOVAL), FLHXI, FLHT/C/U/I, FLTRI, or FLHR/C/S/I.

11. Install the backplate and air cleaner. See Section 4.5 AIR CLEANER, INSTALLATION.

12. Install the exhaust system. See Section 2.38 EXHAUST SYSTEM, INSTALLATION.

13. Adjust idle and throttle control cables as follows:

    Non-Cruise: See Section 2.21 THROTTLE CABLES (NON-CRUISE), ADJUSTMENT.

    Cruise Equipped: See Section 8.31 CRUISE CONTROL (FLHRC, FLHTCU, FLTR), CABLE ADJUSTMENT.

REMOVING ENGINE FROM CHASSIS 3.7

PROCEDURE

1. Remove the exhaust system in two sections. See Section 2.38 EXHAUST SYSTEM, REMOVAL.
2. Remove the air cleaner and backplate. See Section 4.5 AIR CLEANER, REMOVAL.
3. Drain and remove fuel tank. Proceed as follows:

   Carbureted: See Section 4.7 FUEL TANK (CARBURETED), COMPLETE REMOVAL, FLHX, FLHT, or FLHR/S.

   Fuel Injected: See Section 9.4 FUEL TANK (FUEL INJECTED), COMPLETE REMOVAL, FLHXI, FLHT/C/U/I, FLTRI, or FLHR/C/S/I.

4. Remove the primary chaincase. See Section 6.5 PRIMARY CHAINCASE, REMOVAL.
5. Remove connections to carburetor or induction module. Proceed as follows:

Carbureted:

a. Moving to left side of motorcycle, remove MAP sensor connector [80] at top of intake manifold.

b. Locate the fuel enrichener knob under the left side of the fuel tank, and loosen hex nut at backside of mounting bracket. Slide cable assembly free of slot in mounting bracket.

Fuel Injected:

a. Standing on right side of motorcycle, remove IAC connector [87] and MAP sensor connector [80].

b. Remove front fuel injector connector [84] and rear fuel injector connector [85].

c. Remove TP sensor connector [88] and IAT sensor connector [89].

d. Moving to left side of motorcycle, pull back boot at back of front cylinder and remove ET sensor connector [90]. Cut cable strap to release conduit from horn bracket.

e. Tape free ends of wire harness to top of wire harness trough on frame backbone to keep conduit and connectors out of the way.

6. Remove idle and throttle control cables as follows:

   Carbureted: Using a needle nose pliers, carefully pull idle cable barrel from upper inboard hole in throttle wheel. Pull throttle cable barrel from remaining hole. Release idle and throttle cables from guides in throttle cable bracket.

Figure 3-11. Remove Ignition Coil Bracket

   Fuel Injected: Using a needle nose pliers, carefully pull idle cable barrel from upper hole in throttle wheel. Pull throttle cable barrel from lower hole. Using slots, release idle and throttle cables from guides in throttle cable bracket.

7. Free idle and throttle control cables from J-clamp fastened to right side of frame backbone. Move cables up and out of the way.
8. If equipped with cruise control, remove E-clip from sleeve at end of cruise cable housing. Using slot, remove cable housing from cable guide in throttle cable bracket. Push the plastic end fitting on the cruise cable to the outboard side to release from wheel pin. Move cable up and out of the way.
9. Moving to left side of motorcycle, pull boots on spark plug cables to release from spark plug and ignition coil towers. Release cables from three cable clips at bottom of frame backbone.
10. Remove spark plugs.
11. Disconnect ignition coil connector [83] from left side of ignition coil.
12. Pull sides of ignition coil bracket outward to remove from bosses of front fuel tank mount. See Figure 3-11.
13. Moving to right side of motorcycle, remove two allen head socket screws to release oil hose cover.
14. Using a side cutters, cut and remove clamps on engine side of oil hoses. Pull hoses from crankcase fittings.
15. Cut and remove clamp on breather hose behind rear lifter cover. Pull hose from crankcase fitting and tuck behind transmisson to engine flange to keep out of the way.

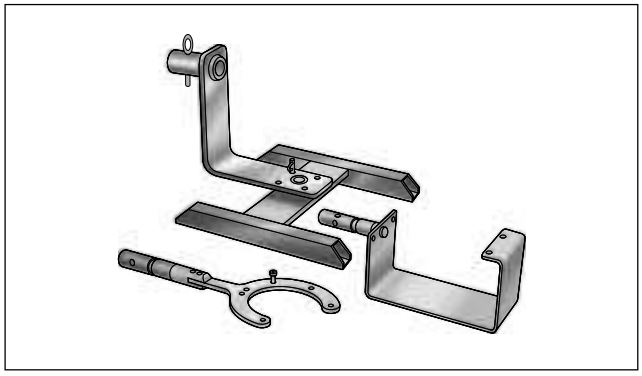

Figure 3-12. Engine/Transmission Bench Stand (Part No. HD-42310)

16. Remove the voltage regulator. See Section 8.9 VOLTAGE REGULATOR, REMOVAL.
17. Draw cables and socket of stator connector [46], 3-place Lyall, to rear of front engine stabilizer link and then up to area in front of primary chaincase.
18. Remove CKP sensor and oil pressure switch/sender as follows:
    a. Locate CKP sensor connector [79], 2-place Deutsch, next to oil filter mount. Depress button on socket terminal side and pull apart pin and socket halves.
    b. Remove allen head socket screw to free crank position sensor mount from crankcase. Pull sensor from bore. Remove O-ring from groove on sensor body. Discard O-ring.
    c. Locate the oil pressure switch/sender at the front right side of the crankcase. On FLHR/C/S models, pull elbow from post of oil pressure switch. On FLHX, FLHT/C/U and FLTR models, pull external latch outward and use rocking motion to remove Delphi connector from oil pressure sender.
    d. On FLHR/C/S models, use a 15/16 inch Open End Crow Foot (Snap-On FC30B) to remove oil pressure switch from crankcase. On FLHX, FLHT/C/U and FLTR models, use 1-1/16 inch Open End Crow Foot (Snap-On FC34A) to remove oil pressure sender.
19. Coil main harness conduit and allow to hang below lower frame tube at front of motorcycle. If harness is not moved out of the way, it may be damaged during engine removal.
20. Place jack under oil pan at rear of motorcycle. Using a block of wood to distribute pressure across the length of the casting, raise the jack until firm contact is made with the bottom of the oil pan.
21. Standing on left side of motorcycle, remove two hex head bolts (with flat washers) to release top engine mounting bracket from cylinder heads.
22. Remove elbow terminals from spade contacts at back of horn. Release wire harness conduit from J-clamp.
23. Moving to right side of motorcycle, turn hex head bolt to release stabilizer link from frame weldment.
24. Remove horn, top engine mounting bracket and stabilizer link as an assembly.
25. Remove four bolts (with flat washers) to free rear of crankcase from transmission housing. Loosen and remove bolts in a crosswise pattern.
26. Remove two bolts (with flat washers) to free front of crankcase from front engine mounting bracket.
27. Wrap rear master cylinder reservoir with foam padding or bubble pack.
28. Cover lower frame tubes (both left and right side) with foam padding or bubble pack. Split loom conduit or a half shell of PVC tubing will also produce good results. Protection is necessary to prevent nicks or paint damage to left frame tube and chafing, cutting or kinking of the brake line, wire cables and conduit at the top of the right frame tube.
29. Cover rocker covers of front and rear cylinders with foam padding or bubble pack.

⚠CAUTION

The engine weighs approximately 165 pounds (74.8 kg). Use a suitable lifting device, if necessary. Exercise caution to avoid personal injury.

30. Move engine forward far enough to clear two ring dowels in lower flange of transmission housing. Raise engine and remove from right side of motorcycle. Exercise caution to avoid contact with rear brake master cylinder reservoir and brake line, wire cables and conduit at top of lower frame tube.
31. Using the TWIN CAM 88 CRADLE (HD-42310-2), install engine in BENCH STAND (HD-42310) or ROLLING STAND (HD-43646A). See Figure 3-12.
32. Remove intake manifold/carburetor or induction module. Proceed as follows:

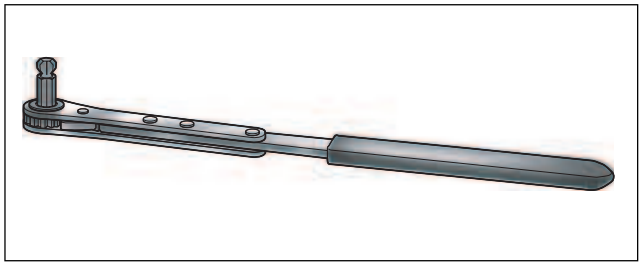

Figure 3-13. Intake Manifold Wrench (Part No. HD-47250)

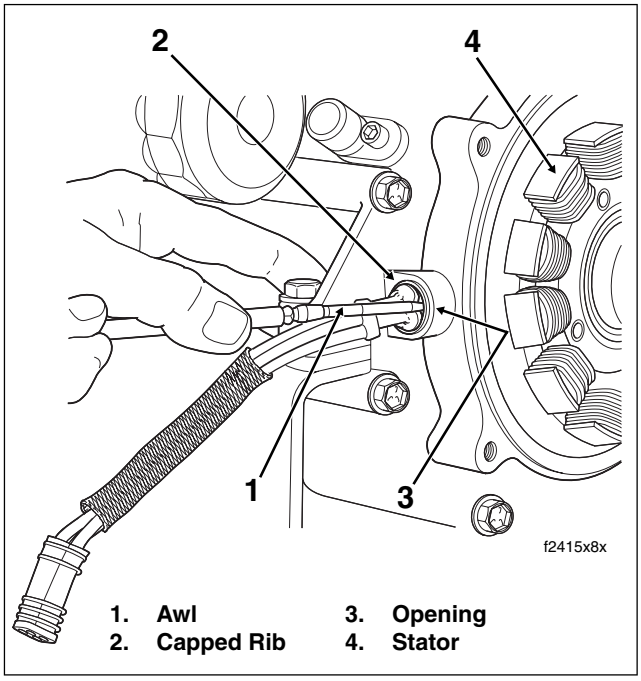

Figure 3-14. Remove Grommet From Crankcase

a. Remove right side allen head socket screws from front and rear cylinder head flange adapters. For best results, use the INTAKE MANIFOLD WRENCH (HD-47250), or a long 1/4 inch ball allen head socket with end driver 4 inches long. See Figure 3-13.

b. Moving to opposite side of motorcycle, just loosen left side allen head socket screws from flange adapters. Slots in flanges make removal of left side screws unnecessary.

c. Remove intake manifold/carburetor or induction module from right side of motorcycle.

33. Remove the rotor as follows:

⚠CAUTION

The high-output rotor contains powerful magnets. Use the ROTOR REMOVER/INSTALLER and SHAFT PROTECTOR SLEEVE (HD-41771) to prevent parts damage and possible hand injury during removal and installation.

a. Verify that threads of engine sprocket shaft are clean, especially of old Loctite material. Thread the Shaft Protector Sleeve onto the shaft.

b. Turn thumbscrews of Rotor Remover/Installer into threaded holes in rotor face.

c. Rotate handle of forcing screw in a clockwise direction to remove rotor from shaft.

34. Remove stator as follows:

a. Remove four T27 TORX screws to free stator from crankcase. Discard screws.

b. Using point of awl, carefully lift capped rib on grommet away from crankcase and then insert into bore between grommet and casting. See Figure 3-14. Tilt awl slightly squirting isopropyl alcohol or glass cleaner into opening. Repeat this step at one or two other locations around grommet.

c. While pushing on capped rib from outside of crankcase, draw grommet through bore by pulling on cable stop with needle nose pliers. Rock grommet back and forth to facilitate removal, if necessary. Exercise caution to avoid damaging ribs on grommet if stator is to be reused.

d. Draw stator cables and socket through crankcase bore.

35. Remove the oil filter as follows:

a. Obtain the OIL FILTER WRENCH (HD-42311). The tool allows easy removal of the oil filter without risk of damage to the CKP sensor or cable.

b. Place the jaws of the wrench over the oil filter with the tool oriented vertically.

c. Using a 3/8 inch drive with a 4 inch extension, turn wrench in a counterclockwise direction until loose. Do not use with air tools.

NOTE

Use OIL FILTER WRENCH (HD-44067) if HD-42311 is not available.

36. Remove oil filter mount as follows:

a. Carefully bend corners on lockplate away from heads of top and bottom bolts in oil filter mount. Remove top and bottom bolts, lockplate and flat washers. Discard lockplate.

b. Remove middle bolt with flat washer to free filter mount from crankcase.

c. Remove two O-rings from inboard side of filter mount. Discard O-rings.

NOTES

Remove and clean the oil pan under any of the following conditions:

- *Metal debris is found in the engine or crankcase.*
- *Oil contamination is suspected.*
- *A complete engine overhaul is being performed as a result of a major engine failure.*
- *The engine is being replaced with a new one.*

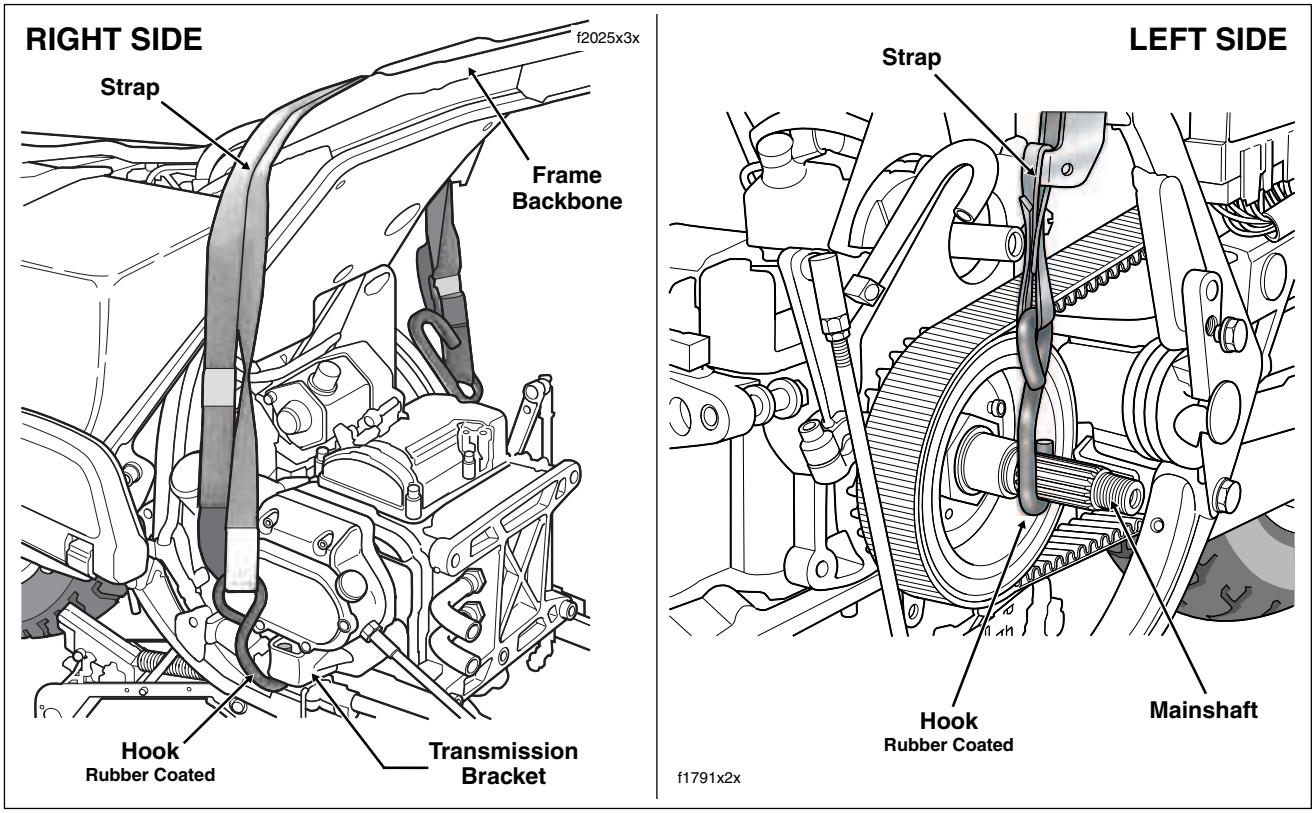

Figure 3-15. Secure Transmission Using Transmission Exhaust Bracket and Mainshaft

37. To remove the oil pan, proceed as follows:

    a. Use a tie down strap to hold the transmission. Lay strap over frame backbone placing one rubber coated hook through the transmission exhaust bracket on the right side of the motorcycle and the other around the mainshaft on the left. Using buckle, tighten strap until taut. See Figure 3-15.

    b. Lower and remove jack under oil pan.

    c. Locate oil drain plug at front of the oil pan. See Figure 3-16. Remove the plug and allow oil to drain completely.

    d. Locate transmission drain plug on right side of the oil pan. See Figure 3-16. Remove the plug and drain the transmission lubricant into a suitable container.

    e. Alternately loosen and then remove the twelve allen head socket screws to release the oil pan from the transmission housing. Follow the pattern shown in Figure 3-16.

    f. Remove gasket from oil pan and discard.

PROCEDURE

NOTE

If oil pan was drained and removed, start at step 1. If oil pan was neither drained nor removed, move to step 13.

1. Coat gasket surface of oil pan with a thin coat of HYLOMAR® gasket sealer.
2. Place gasket on oil pan and allow sealer to dry until tacky.
3. Position oil pan under transmission housing and start the twelve allen head socket screws. Tighten each screw about two turns after initial thread engagement.
4. Inspect the oil pan gasket to verify that it is properly positioned.
5. Alternately tighten oil pan screws to 84-132 **in-lbs** (9.5-14.9 Nm) following the pattern shown in Figure 3-16.
6. Remove any foreign material from magnet of oil drain plug. Also check the O-ring for tears, cuts or general deterioration. Replace as necessary.
7. Install the engine oil drain plug in front of the oil pan. Tighten plug to 14-21 ft-lbs (19-28 Nm).
8. Remove the transmission filler plug from the clutch release cover on the right side of the transmission case. Check the O-ring for tears, cuts or general deterioration. Replace as necessary.
9. Remove any foreign material from magnet of transmission drain plug. Also check the O-ring for tears, cuts or general deterioration. Replace as necessary.
10. Install the transmission lubricant drain plug in right side of the oil pan and tighten to 14-21 ft-lbs (19-28 Nm).

⚠WARNING

When draining or adding lubricant, do not allow dirt, debris or other contaminants to enter the transmission case. Exercise caution so that lubricant does not contact rear wheel, tire and brake components. Such contact can adversely affect traction and may lead to loss of vehicle control, which could result in death or serious injury.

11. Fill the transmission with 20-24 oz. (590-710 ml) of transmission lubricant or until the lubricant level on the dipstick of the filler plug is at the F(ULL) mark with the motorcycle in a level, upright position and the filler plug resting on the threads.

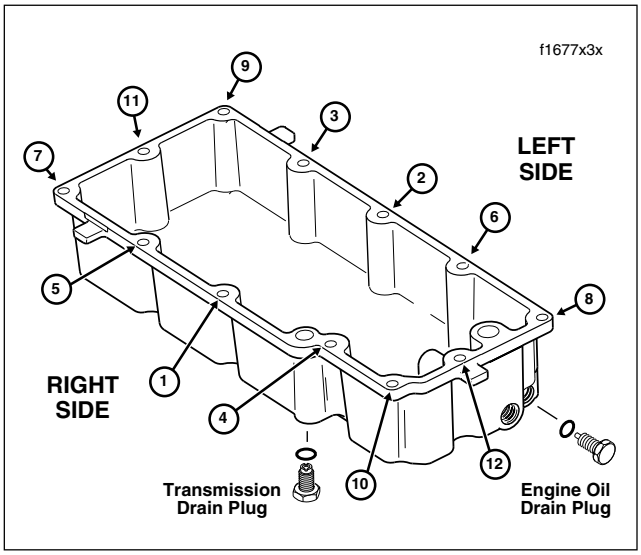

Figure 3-16. Oil Pan Torque Sequence

Use only Harley-Davidson FORMULA+ TRANSMISSION AND PRIMARY CHAINCASE LUBRICANT, Part No. 99851-05 (quart).

12. Install the transmission filler plug/dipstick in the clutch release cover. Tighten the plug to 25-75 **in-lbs** (2.8-8.5 Nm).
13. Place jack under oil pan at rear of motorcycle. Using a block of wood to distribute pressure across the length of the casting, raise the jack until firm contact is made with the bottom of the oil pan.
14. Remove strap from frame backbone disengaging hooks from mainshaft and transmission exhaust bracket.
15. Install spark plugs in front and rear cylinder heads. Install the plugs finger tight and then tighten to 12-18 ft-lbs (16-24 Nm).
16. Install oil filter mount as follows:
    a. Install two **new** O-rings on inboard side of filter mount.
    b. Place flat washers in recessed bolt holes at top and bottom of filter mount flange.
    c. Align holes in lockplate with holes in flat washers.
    d. Slide two hex head bolts through lockplate, flat washers and filter mount flange. Apply Loctite Medium Strength Threadlocker 243 (blue) to threads of installed bolts.

CAUTION

To avoid cross threading tapped holes, exercise care when starting hex head bolts in crankcase.

e. Align holes in filter mount flange with holes in crankcase and tighten bolts until snug.

f. Install flat washer on remaining bolt, apply Loctite Medium Strength Threadlocker 243 (blue) to threads, and install in middle hole of filter mount flange.

g. Starting at the top, alternately tighten three hex head bolts to 12-16 ft-lbs (16-22 Nm). Re-tighten middle bolt when done.

h. To prevent rotation, carefully bend outside corners of lockplate against heads of top and bottom bolts.

17. Clean oil filter mount flange of any old gasket material. Lubricate gasket of **new** oil filter with clean engine oil and install on filter mount. Hand tighten oil filter 1/2-3/4 turn after gasket first contacts filter mounting surface. Do **NOT** use OIL FILTER WRENCH for oil filter installation.

NOTE

Use of the Premium 5 micron synthetic media oil filter is highly recommended, Part No. 63798-99A (Chrome) or 63731-99A (Black).

18. Install stator as follows:

a. From inside crankcase, feed socket and stator cables through hole in crankcase.

b. Thoroughly lubricate grommet with isopropyl alcohol or glass cleaner. To avoid leakage, ribs of grommet must be free of dirt and oily residue.

c. Carefully grasp cable stop behind grommet with a needle nose pliers. Push grommet into crankcase bore while carefully pulling on outside cable. Installation is complete when cable stop contacts casting and capped rib of grommet exits crankcase bore.

d. If necessary, carefully run awl around edge of capped rib so that it rests flat against seating surface on crankcase.

e. Feed socket and cables forward under front engine stabilizer link.

CAUTION

Do not reuse T27 TORX screws. The threads of the screws contain a locking compound in pellet form. When the screw is started, the pellet breaks releasing the compound.

f. Install four **new** T27 TORX screws to fasten stator to crankcase. Alternately tighten screws to 55-75 **in-lbs** (6.2-8.5 Nm).

19. Install rotor as follows:

⚠CAUTION

The high-output rotor contains powerful magnets. Use the ROTOR REMOVER/INSTALLER and SHAFT PROTECTOR SLEEVE (HD-41771) to prevent parts damage and possible hand injury during removal and installation.

a. Install the Shaft Protector Sleeve and Rotor Remover/Installer, if removed.

NOTE

The Shaft Protector Sleeve not only protects the threads from the splines of the rotor, but acts as a guide to ensure that the rotor is properly centered.

b. Center ball on forcing screw in recess at end of engine sprocket shaft. Rotate the handle of the tool in a counterclockwise direction to ease rotor into position over stator.

c. Loosen thumbscrews and remove Rotor Remover/Installer. Remove Shaft Protector Sleeve.

d. Install the shaft extension on the engine sprocket shaft.

20. Install intake manifold/carburetor or induction module. Proceed as follows:

a. With the counterbore facing outward, slide cylinder head flange adapters onto outlet ports of intake manifold/induction module. The flange adapters are not interchangeable. Look next to the slotted bolt hole for a stamp that indicates F(ront) and R(ear) cylinder.

b. Place a **new** seal in each flange adapter with the beveled side in against the counterbore.

c. Standing on right side of engine, slide intake manifold/induction module toward installed position so that open-ended slots on flange adapters begin to engage allen head socket screws loosely installed on left side.

d. Align fixed holes in flange adapters with those in cylinder heads and start allen head socket screws. For best results, use the INTAKE MANIFOLD WRENCH (HD-47250), or a long 1/4 inch ball allen head socket with end driver 4 inches long.

e. Use the air cleaner backplate to properly locate carburetor/induction module. Install two breather bolts to fasten backplate to front and rear cylinder heads. Install three T27 TORX screws to secure backplate to face of carburetor/induction module.

f. Tighten allen head socket screw in fixed holes of flange adapters until snug. Moving to left side of engine, tighten screws in slotted holes to 96-144 **in-lbs** (10.9-16.3 Nm).

g. Remove breather bolts and T27 TORX screws to remove backplate.

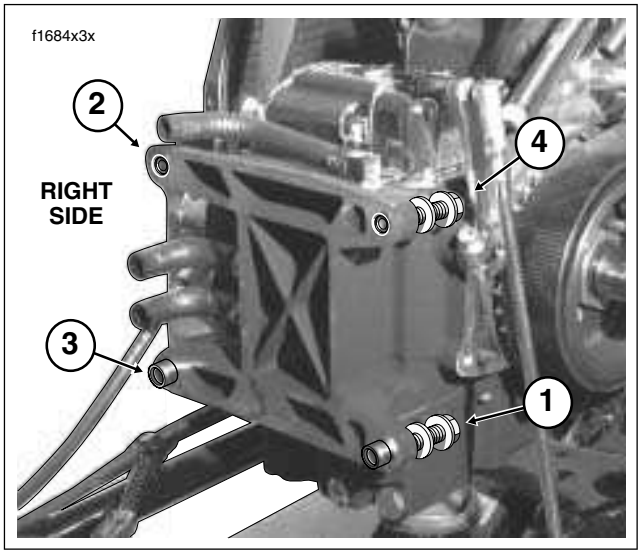

Figure 3-17. Transmission Housing to Crankcase Torque Sequence

h. Tighten allen head socket screws in fixed holes of flange adapters to 96-144 **in-lbs** (10.9-16.3 Nm).

21. Cover rocker covers of front and rear cylinders with foam padding or bubble pack.

22. Cover lower frame tubes (both left and right side) with foam padding or bubble pack. Split loom conduit or a half shell of PVC tubing will also produce good results. Protection is necessary to prevent nicks or paint damage to left frame tube and chafing, cutting or kinking of the brake line, wire cables and conduit at the top of the right frame tube.

23. Wrap rear master cylinder reservoir with foam padding or bubble pack.

24. Remove engine from BENCH STAND (HD-42310) or ROLLING STAND (HD-43646A) and set on floor on right side of chassis.

⚠CAUTION

The engine weighs approximately 165 pounds (74.8 kg). Use a suitable lifting device, if necessary. Exercise caution to avoid personal injury.

25. Raise engine and install in chassis from right side of motorcycle setting front of crankcase onto front engine mounting bracket. Engine must be set forward far enough to clear two ring dowels in lower flange of transmission housing. Exercise caution to avoid contact with rear brake master cylinder reservoir and brake line, wire cables and conduit at top of lower right frame tube.

26. Move engine rearward to fully engage two ring dowels in lower flange of transmission housing.

27. Secure the engine as follows:

    a. Hand tighten four bolts (with flat washers) to secure transmission housing to rear of crankcase.

    b. Hand tighten two bolts (with flat washers) to secure front of crankcase to front engine mounting bracket.

    c. Tighten the four transmission housing to crankcase bolts to 15 ft-lbs (20.3 Nm) in the sequence shown in Figure 3-17.

NOTE

For best results, use Open End Crowfoot (Snap-On FC018) on upper left and upper right transmission housing to crankcase bolts.

    d. Following the same sequence, final tighten the four transmission housing to crankcase bolts to 30-35 ft-lbs (40.7-47.5 Nm).

    e. Tighten the two crankcase to front engine mounting bracket bolts to 33-38 ft-lbs (44.8-51.5 Nm).

28. Install horn, top engine mounting bracket and stabilizer link as an assembly. Proceed as follows:

    a. Moving to right side of motorcycle, turn hex head bolt to secure stabilizer link to frame weldment. Tighten bolt to 18-22 ft-lbs (24-30 Nm).

    b. Install elbow terminals onto spade contacts at back of horn. Capture wire harness conduit in J-clamp.

    c. Standing on left side of motorcycle, install two hex head bolts (with flat washers) to secure top engine mounting bracket to front and rear cylinder heads. Alternately tighten bolts to 35-40 ft-lbs (48-54 Nm).

29. Lower and remove jack under oil pan.

30. Uncoil main harness conduit and allow to hang below lower frame tube at front of motorcycle.

31. Install oil pressure switch/sender and CKP sensor as follows:

    a. Start oil pressure switch/sender into crankcase bore at the front right side of the crankcase. On FLHR/C/S models, use a 15/16 inch Open End Crow Foot (Snap-On FC30B) to tighten oil pressure switch to 96-120 **in-lbs** (11-14 Nm). On FLHX, FLHT/C/U and FLTR models, use 1-1/16 inch Open End Crow Foot (Snap-On FC34A) to tighten oil pressure sender to same torque.

    b. On FLHR/C/S models, install elbow on post of oil pressure switch. On FLHX, FLHT/C/U and FLTR models, install Delphi connector to oil pressure sender .

    c. Install **new** O-ring in groove on crank position sensor body. Apply a very thin film of clean H-D 20W50 engine oil to O-ring before installation.

    d. Push sensor into bore aligning hole in sensor mount with hole in spot face. Install allen head socket screw (1/4 x 1 inch) and tighten to 90-120 **in-lbs** (10.2-13.6 Nm).

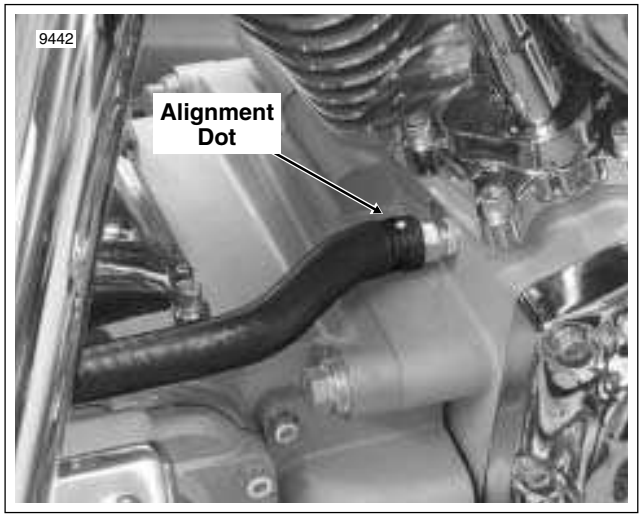

Figure 3-18. Install Breather Hose (Hose Clamp Not Shown for Illustration Purposes)

e. Mate pin and socket halves of CKP sensor connector [79], 2-place Deutsch.

32. Install voltage regulator. See Section 8.9 VOLTAGE REGULATOR, INSTALLATION.

33. Slide **new** clamp onto free end of breather hose behind rear lifter cover. Install hose onto crankcase fitting. Crimp clamp using HOSE CLAMP PLIERS (HD-97087-65B).

NOTE

*If installing **new** breather hose or if hose was completely removed, be sure that end with white alignment dot is connected to crankcase fitting and that dot is topside after installation of hose. See Figure 3-18. Improper orientation can result in chaffing of the transmission top cover.*

34. Slide **new** clamps onto free ends of oil hoses. Install hoses onto crankcase fittings. Crimp clamps.

35. Install two allen head socket screws to secure oil hose cover to transmission and engine housings. Longer screw goes to engine housing. Alternately tighten screws to 84-108 **in-lbs** (10-12 Nm).

36. Install ignition coil and spark plug cables as follows:

    a. With the coil towers facing rear of motorcycle, hold ignition coil and bracket at bottom of frame backbone. Pull sides of bracket outward and install on bosses of front fuel tank mount. See Figure 3-11.

    b. Connect ignition coil connector [83] to left side of ignition coil.

    c. Install spark plug cable to front cylinder onto left side coil tower. Verify that spark plug cable is captured in double-sided cable clip at bottom left side of frame backbone. Install **new** cable clip on T-stud if damaged or missing.

    d. Install spark plug cable to rear cylinder onto right side coil tower. Verify that spark plug cable is captured in two single-sided cable clips at bottom left side of frame backbone. Install **new** cable clips on T-studs if damaged or missing.

37. If equipped with cruise control, slide groove in cruise cable end fitting over cap of wheel pin. Push on end fitting until it snaps in place. Using slot, slip cruise cable housing into cable guide in throttle cable bracket. Install **new** E-clip on sleeve at end of cruise cable housing.

38. Route idle and throttle control cables through J-clamp fastened to right side of frame backbone.

39. Install idle and throttle control cables as follows:

    Carbureted: Install sleeve on throttle cable housing into shorter cable guide in throttle cable bracket. Drawing throttle cable downward, fit barrel end into lower outboard hole in throttle wheel. Install sleeve and spring on idle cable housing into longer cable guide inserting barrel end into upper inboard hole in throttle wheel.

    Induction Module: Install sleeve on throttle cable housing into shorter cable guide at top of throttle cable bracket. Drawing throttle cable downward, fit barrel end into lower hole in throttle wheel. Install sleeve and spring on idle cable housing into longer cable guide at bottom of throttle cable bracket inserting barrel end into upper hole in throttle wheel.

40. Tighten cables as necessary to keep barrel ends from dislodging. Verify that cables are seated in channel of throttle wheel. Verify operation by turning throttle grip and observing cable action.

41. Install connections to carburetor or induction module. Standing on left side of motorcycle, proceed as follows:

Carbureted:

a. Moving to left side of motorcycle, install MAP sensor connector [80] at top of intake manifold.

b. Slide threaded portion of enrichener cable into slot of mounting bracket. Flat on threads must face rear of motorcycle for script on enrichener knob to be right side up. With the external tooth lockwasher and hex nut positioned on the inboard side of the mounting bracket, tighten hex nut to 20-35 **in-lbs** (2.3-4.0 Nm).

Fuel Injected:

a. Install rear fuel injector connector [85] and front fuel injector connector [84].

b. Install MAP sensor connector [80] and IAC connector [87].

c. Install IAT sensor connector [89] and TP sensor connector [88].

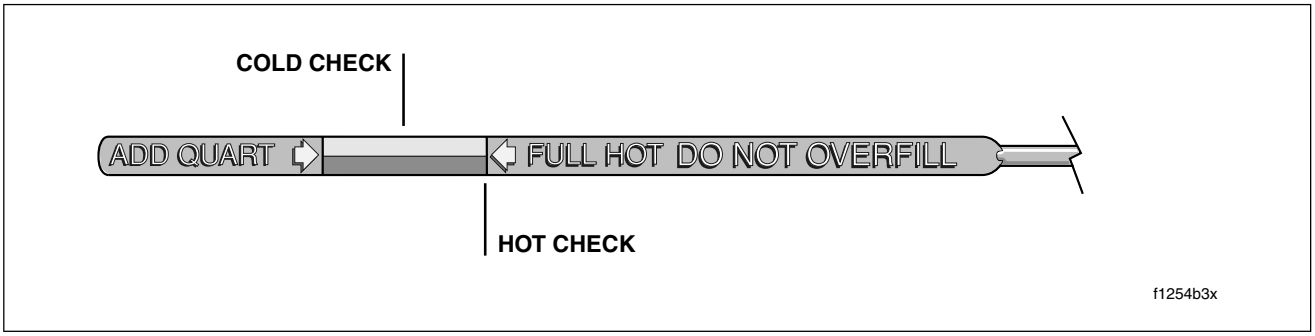

Figure 3-19. Engine Oil Dipstick

d. Moving to left side of motorcycle, install ET sensor connector [90] at back of front cylinder. Pull boot over sensor to keep out dirt and debris. Install **new** cable strap to secure connector conduit to horn bracket.

42. Install the primary chaincase. See Section 6.5 PRIMARY CHAINCASE, INSTALLATION.
43. Install the fuel tank. Proceed as follows:

    Carbureted: See Section 4.7 FUEL TANK (CARBURETED), INSTALLATION (AFTER COMPLETE REMOVAL), FLHX, FLHT, or FLHR/S.

    Fuel Injected: See Section 9.4 FUEL TANK (FUEL INJECTED), INSTALLATION (AFTER COMPLETE REMOVAL), FLHXI, FLHT/C/U/I, FLTRI, or FLHR/C/S/I.

44. Adjust idle and throttle control cables as follows:

    Non-Cruise: See Section 2.21 THROTTLE CABLES (NON-CRUISE), ADJUSTMENT.

    Cruise Equipped: See Section 8.31 CRUISE CONTROL (FLHRC, FLHTCU, FLTR), CABLE ADJUSTMENT.

45. Install the backplate and air cleaner. See Section 4.5 AIR CLEANER, INSTALLATION.
46. Install the exhaust system. See Section 2.38 EXHAUST SYSTEM, INSTALLATION.

NOTE

*If oil pan was **not** drained, move to step 48.*

47. With motorcycle resting on jiffy stand, add 3-1/2 quarts (3.3 liters) engine oil as specified in Table 3-2. Use the proper grade of oil for the lowest temperature expected before the next oil change.

Table 3-2. Recommended Engine Oils

Harley-Davidson Type	Viscosity	Harley-Davidson Rating	Lowest Ambient Temperature	Cold Weather Starts Below 50˚F (10˚C)
HD Multi-grade	SAE 10W40	HD 360	Below 40˚F (4˚C)	Excellent
HD Multi-grade	SAE 20W50	HD 360	Above 40˚F (4˚C)	Good
HD Regular Heavy	SAE 50	HD 360	Above 60˚F (16˚C)	Poor
HD Extra Heavy	SAE 60	HD 360	Above 80˚F (27˚C)	Poor

CAUTION

Oil level cannot be accurately measured on a cold engine. For preride inspection, with motorcycle leaning on jiffy stand on level ground, oil should register on dipstick between arrows when engine is cold. Do NOT add oil to bring the level to the FULL mark on a COLD engine.

48. Perform engine oil level **COLD CHECK** as follows:

    a. With the motorcycle resting on the jiffy stand on level ground, wipe off the dipstick and insert it back into the oil pan with the plug pushed completely into the fill spout.

    b. Remove the dipstick and note the level of the oil. Oil level should register between the two arrows on the dipstick. See Figure 3-19. If oil level is at or below the lower arrow, add only enough oil to bring the level between the two arrows on the dipstick.

49. Perform engine oil level **HOT CHECK** as follows:

    a. Ride motorcycle until engine is at normal operating temperature.

    b. With the motorcycle resting on the jiffy stand on level ground, allow engine to idle for 1-2 minutes. Turn engine off.

    c. Wipe off the dipstick and insert it back into the oil pan with the plug pushed completely into the fill spout.

    d. Remove the dipstick and note the level of the oil. Add only enough oil to bring the level to the FULL mark on the dipstick. See Figure 3-19. Do not overfill.

50. Start engine and carefully check for oil leaks around drain plug and oil filter.

NOTES

DISASSEMBLY

1. Use low pressure spray to thoroughly clean exterior surfaces of engine prior to disassembly. Dirt caked on cooling fins and other areas can fall into crankcase bore or stick to subassemblies as parts are removed. Abrasive particles can damage machined surfaces or plug oil passageways.

NOTE

It is assumed that each step performed on one cylinder is automatically repeated on the other.

2. Alternately loosen the six rocker cover bolts following the pattern shown in A of Figure 3-22. Remove the rocker cover bolts.

NOTE

If the engine is left in the chassis for service, use the ROCKER COVER WRENCH (HD-47258) and ROCKER HOUSING WRENCH (HD-47248) to remove the rocker cover and rocker housing bolts, respectively. These tools are especially useful when removing the bolts on the left side of the engine (particularly the rear) where there is close proximity to the frame. With both an external and internal hex, the bolts also can be removed with either a 7/16 inch socket or open end/box wrench (open spaces), or a short 3/16 inch allen wrench (tight spaces). See Figure 3-20.

3. Remove the rocker cover and gasket. Discard the gasket.
4. Insert the blade of a small screwdriver into cast loop of spring cap retainer (at top of upper push rod cover), and while pushing down on spring cap, rotate bottom of screwdriver toward outboard side to remove. See Figure 3-21. Repeat step on second push rod cover.
5. Collapse upper and lower push rod covers.

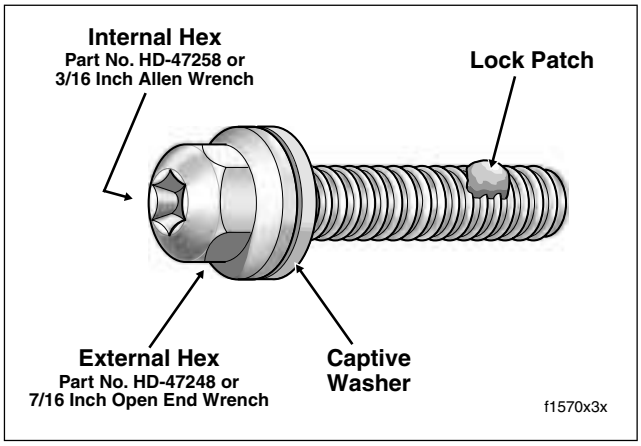

Figure 3-20. Rocker Cover Bolt (1-1/4 Inch)

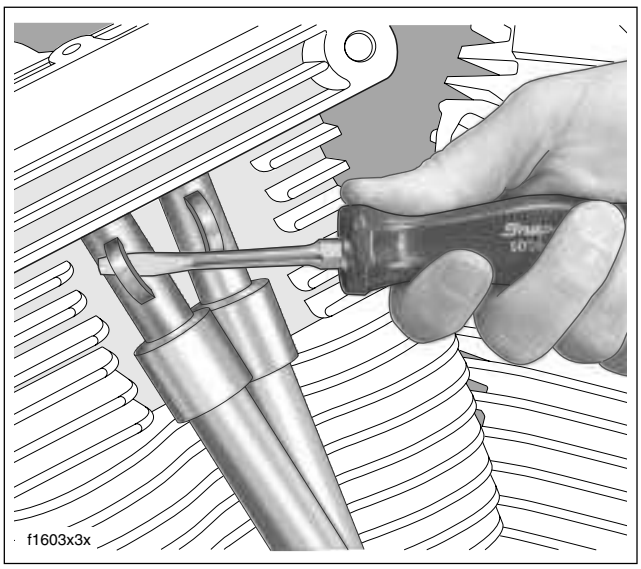

Figure 3-21. Remove Spring Cap Retainer

6. To remove the rocker arm support plate, **both** lifters of the cylinder being serviced must be on the base circle (or lowest position) of the cam.

CAUTION

Removing the rocker arms with the valve train loaded can result in bent push rods, damaged bushings or warped support plate.

To find the base circle, it is first necessary to rotate the engine. Based on the level of disassembly required, three methods of engine rotation are presented below.

a. With primary cover installed - With vehicle on center stand, place the transmission in 5th gear and rotate rear wheel in a clockwise direction (as viewed from right side) until the base circle is found. See step 6(d) to find the base circle.

b. With primary cover removed - Remove primary cover. Place the transmission in neutral. Fit a 1-1/2 inch socket on the compensating sprocket shaft nut. Rotate nut in a counterclockwise direction until the base circle is found. See step 6(d) to find the base circle.

CAUTION

Do not attempt to rotate engine by removing cam cover and placing socket on crank or primary cam sprocket flange bolt. Head of flange bolt can break off possibly resulting in damage to flywheel or camshaft.

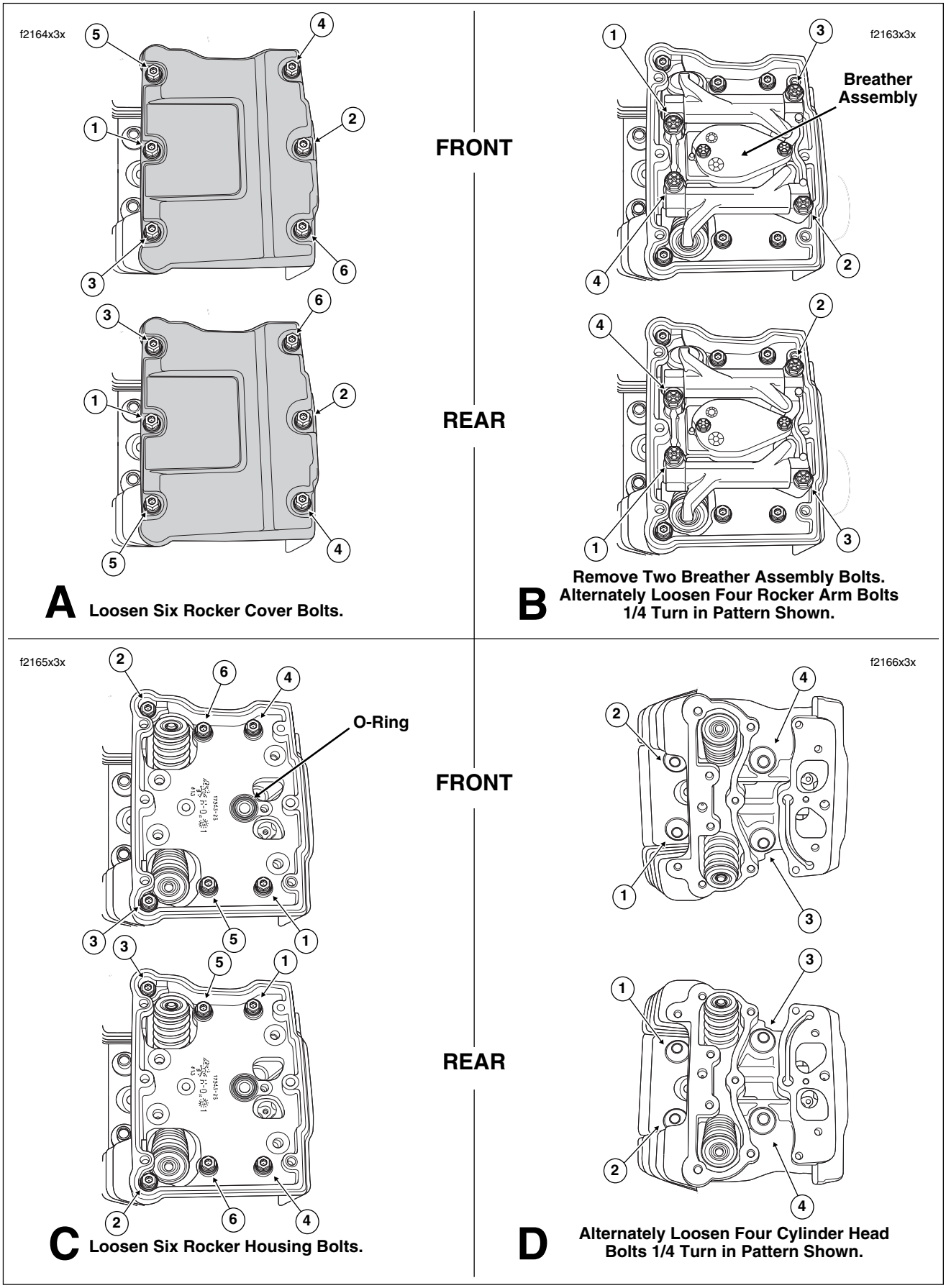

Figure 3-22. Top End Disassembly

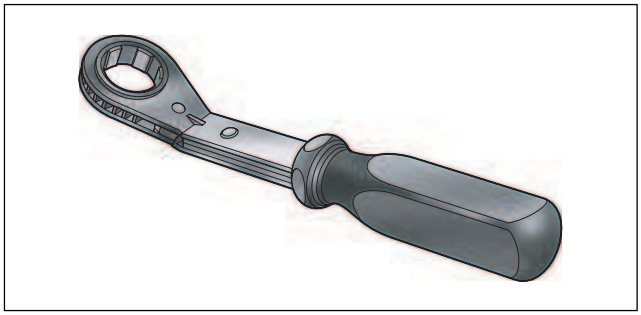

Figure 3-23. Engine Rotation Wrench (Part No. HD-47257)

c. With engine mounted in engine stand - Obtain the ENGINE ROTATION WRENCH (HD-47257). See Figure 3-23. Install tool on sprocket shaft and rotate in a counterclockwise direction until the base circle is found. See step 6(d) to find the base circle.

d. Finding the base circle: Using one of the methods above, rotate engine until piston is at Top Dead Center (TDC) of compression stroke. To accomplish this, first raise lower push rod cover to access intake lifter (inside hole of lifter cover). Place index finger on top of the intake lifter. While rotating engine, feel lifter rise (valve open) and fall (valve closed). Now place finger tightly over spark plug hole and rotate engine again. In the compression stroke, air will be forced out against your finger until the piston reaches the TDC position. Stop engine rotation when the flow of air through the spark plug hole stops. Direct the beam of a small flashlight into spark plug hole to verify piston is at TDC. Both intake and exhaust valves are now closed and the push rods are in the unloaded position (and should turn freely).

7. Remove two bolts to release breather assembly from the rocker arm support plate. See B of Figure 3-22. See Section 3.11 SUBASSEMBLY SERVICE AND REPAIR, BREATHER ASSEMBLY.

8. Alternately loosen each of the four rocker arm support plate bolts just 1/4 turn following the pattern shown in B of Figure 3-22. Continue turning the bolts in these increments until loose.

9. When the rocker arm support plate bolts are free of the cylinder head, lift the support plate assembly from the rocker housing. See Section 3.11 SUBASSEMBLY SERVICE AND REPAIR, ROCKER ARM ASSEMBLY.

NOTE

Always service each cylinder separately. After the first cylinder is serviced the engine must be rotated to find the base circle on the second cam. Service on the remaining cylinder can then proceed.

10. Remove the intake and exhaust push rods. Tag the push rods as they are removed, so that they can be installed in their original locations. Also take note of their orientation to be able to discern top from bottom at time of installation.

11. Remove push rod covers from cylinder head and lifter cover bores. Remove three O-rings from push rod covers and discard. If O-ring is missing from upper push rod cover, be sure to dislodge it from the cylinder head bore.

12. Using a crosswise pattern, remove the four allen head socket screws to release the lifter cover. Remove the lifter cover and gasket. Discard the gasket.

13. Remove the anti-rotation pin. Remove the hydraulic lifters. Tag lifters as they are removed, so that they can be installed in their original locations. Also take note of their orientation (by observing location of the oil hole) to be able to discern front from rear at time of installation.

14. Place the lifters in clean plastic bags to keep out dust, dirt and debris. See Section 3.11 SUBASSEMBLY SERVICE AND REPAIR, PUSH RODS/LIFTERS/COVERS.

15. Remove O-ring from groove around breather baffle hole in rocker housing. Discard the O-ring.

16. Alternately loosen the six rocker housing bolts following the pattern shown in C of Figure 3-22. Remove the rocker housing bolts.

NOTE

If the engine is left in the chassis for service, use the ROCKER HOUSING WRENCH (HD-47248) for best results.

17. Remove the rocker housing and gasket. Discard the gasket.

CAUTION

To prevent distortion of the cylinder head, cylinder and cylinder studs, gradually loosen the cylinder head bolts in the specified pattern.

18. Alternately loosen each of the four cylinder head bolts just 1/4 turn following the pattern shown in D of Figure 3-22. Continue turning the bolts in these increments until loose. Remove the cylinder head bolts.

NOTE

Save the cylinder head gasket if not damaged. The gasket is needed to install the CYLINDER TORQUE PLATES (HD-42324A) when measuring, boring or honing of the cylinder is required.

19. Remove cylinder head and head gasket. See Section 3.11 SUBASSEMBLY SERVICE AND REPAIR, CYLINDER HEAD.

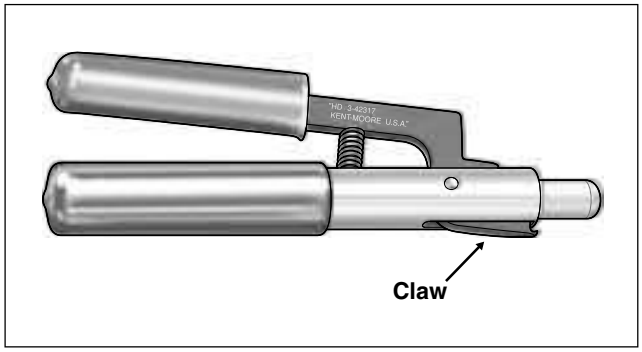

Figure 3-24. Piston Pin Circlip Remover/Installer (Part No. HD-42317A)

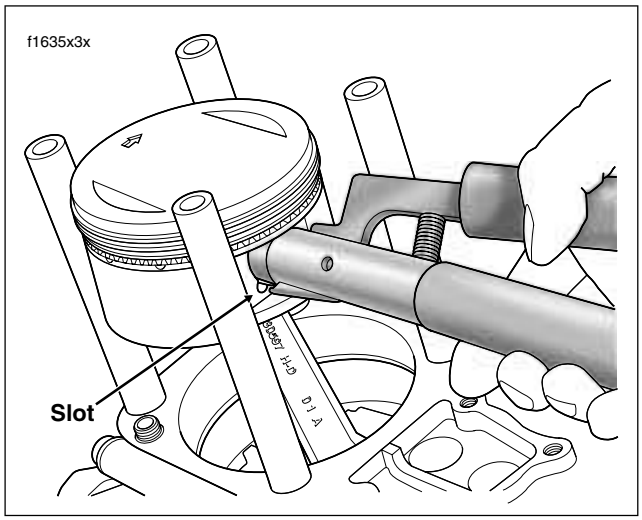

Figure 3-25. Remove Piston Pin Circlip

20. Raise the cylinder just enough to place clean shop towels under the piston. This will prevent any dirt or debris, such as broken ring pieces, from falling into the crankcase bore.

CAUTION

Exercise caution to avoid bending the cylinder studs. Even a slight bend or nick can cause a stress riser leading to stud failure.

21. Carefully remove the cylinder to avoid bending the cylinder studs. As the piston becomes free of the cylinder, hold it upright to prevent it from striking the studs or dragging across the stud thread area. Mark the cylinder “F(ront)” or “R(ear)” to identify location.

22. Slide plastic tubing, rubber hose or conduit over each cylinder stud. Material approximately 6 inches (152 mm) long with an I.D. of 1/2 inch (12.70 mm) will protect cylinder studs and piston from damage.

23. Remove O-ring seal from the bottom of the cylinder liner. Discard O-ring seal. See Section 3.11 SUBASSEMBLY SERVICE AND REPAIR, CYLINDER.

24. Remove O-ring from ring dowel on “downside” of cylinder deck. Discard the O-ring.

⚠CAUTION

Always wear proper eye protection when removing circlips. Slippage may propel the ring with enough force to cause eye injury.

25. Verify that clean shop towels are properly positioned over the crankcase bore to prevent the piston pin circlip from falling into the crankcase.

26. Remove the piston pin circlip as follows:

    a. Insert the PISTON PIN CIRCLIP REMOVER/ INSTALLER (HD-42317A) into the piston pin bore until claw on tool is positioned in slot of piston (directly under circlip). See Figure 3-25.

    b. Squeeze the handles of the tool together and pull from bore. In the event that the circlip should fly out, hold a shop towel over the bore during removal. Remove circlip from claw and discard.

NOTE

It is not necessary to remove both piston pin circlips during piston removal. Leave the second circlip in the pin bore.

27. Remove the piston pin. If piston pin is difficult to remove, use PISTON PIN REMOVER (HD-42320A). See Figure 3-26. Proceed as follows:

    a. Remove acorn nut and spacer from rod end of tool.

    b. Slide rod end through piston pin. Install spacer and acorn nut to end of rod.

    c. Position rubber-coated tips of tool on flat each side of pin bore.

    d. Turn handle in a clockwise direction until piston pin is pulled free of bore. See Figure 3-27.

28. Remove the piston. Be sure to hold the rod shank upright to prevent it from striking the crankcase. Place a piece of foam-type water pipe insulation around each rod (about 3 inches long with a 2-1/4 inch O.D. and a 1 inch I.D.) to prevent damage if contact should occur.

29. Turn the piston over and mark the pin boss with the letters “F(ront)” or “R(ear)” to identify location. See Section 3.11 SUBASSEMBLY SERVICE AND REPAIR, PISTON and UPPER CONNECTING ROD.

30. If performing a top end overhaul only, see Section 3.11 SUBASSEMBLY SERVICE AND REPAIR, TOP END, before proceeding to Section 3.9 TOP END OVERHAUL, ASSEMBLY, which follows. If performing a complete engine overhaul, see Section 3.10 BOTTOM END OVERHAUL, DISASSEMBLY.

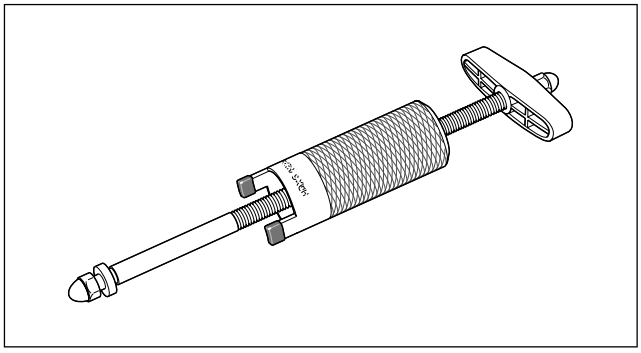

Figure 3-26. Piston Pin Remover (Part No. HD-42320A)

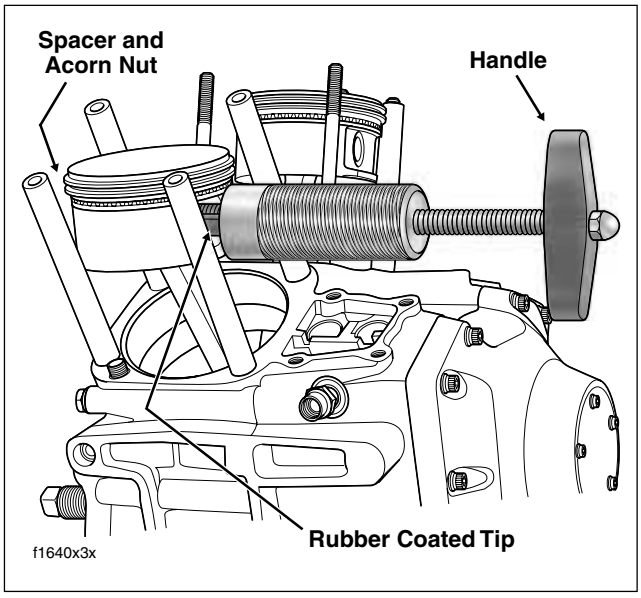

Figure 3-27. Remove Piston Pin

ASSEMBLY

NOTE

It is assumed that each step performed on one cylinder is automatically repeated on the other.

1. Slide plastic tubing, rubber hose or conduit over each cylinder stud, if removed. Material approximately 6 inches (152 mm) long with an I.D. of 1/2 inch (12.70 mm) will protect cylinder studs and piston from damage.

2. Apply clean H-D 20W50 engine oil to piston pin, piston bosses and upper connecting rod bushing.

3. Remove water pipe insulation from rod shank.

4. Place piston over rod end so that the arrow stamped at the top of the piston points toward the front of the engine.

5. Insert piston pin through pin bore and upper connecting rod bushing. Push pin until it contacts circlip installed in opposite pin boss.

CAUTION

Do not reuse piston pin circlips. The circlips may weaken during removal causing them to break or dislodge during engine operation, a condition that will result in engine damage.

6. Place clean shop towels over the cylinder and lifter bores to prevent the piston pin circlip from falling into the crankcase. Verify that the circlip groove is clean and free of dirt and grime.

7. Install **new** piston pin circlip with the PISTON PIN CIRCLIP REMOVER/INSTALLER (HD-42317A). Proceed as follows:

   a. Slide circlip down nose of tool until it contacts claw. Lightly squeeze handles of tool to capture circlip in claw.

   b. Releasing pressure on handles, rotate circlip so that the end gap is centered at top of tool and then recapture in claw.

   c. Tilt the circlip forward until the end gap contacts nose of tool. See upper frame of Figure 3-28.

   d. Insert the tool into the piston pin bore until claw is aligned with slot in piston.

   e. Firmly push the tool into the piston pin bore until it bottoms. Release handles and remove tool.

   f. Inspect the circlip to verify that it is fully seated in the groove.

CAUTION

O-rings that are missing, distorted, pinched or otherwise damaged will result in either oil leakage or low oil pressure. Use of the wrong O-ring will have the same results. Since many O-rings are similar in size and appearance, always use new O-rings keeping them packaged until use to avoid confusion.

8. Install **new** O-ring over “downside” cylinder deck ring dowel (that is, rear dowel on rear cylinder, front dowel on front cylinder). Apply a very thin film of clean H-D 20W50 engine oil to O-ring before installation. Verify that O-ring is properly seated in groove.

9. Install **new** O-ring seal at the bottom of the cylinder liner. Apply a very thin film of clean H-D 20W50 engine oil to O-ring before installation.

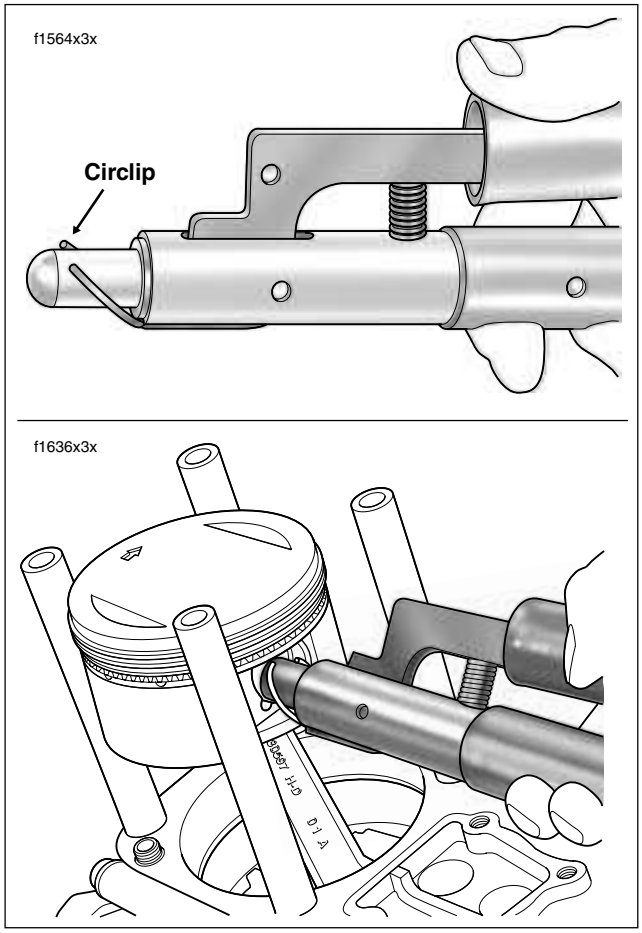

Figure 3-28. Install Piston Pin Circlip

NOTE

Excessive lubrication of cylinder sleeve O-ring seal will result in oil weepage between cylinder and crankcase as engine is run, a condition that may be incorrectly diagnosed as an oil leak.

10. Verify that the piston ring end gaps are properly staggered. If necessary, see Section 3.11 SUBASSEMBLY SERVICE AND REPAIR, PISTON.

11. Apply clean H-D 20W50 engine oil to piston, piston rings and cylinder bore.

12. Remove plastic tubing or rubber hose from cylinder studs. Rotate engine until piston is at top dead center. If necessary, see step 31 for methods of engine rotation.

13. Install the PISTON SUPPORT PLATE (HD-42322). Proceed as follows:

    a. Slide both adjustable knobs on tool down slots away from forked end. Tighten knobs when contact is made with flats at end of slots.

    b. With the forked end of the tool pointing towards the center of the engine and the adjustable knobs facing downward, capture shank of connecting rod in fork. Lay tool on cylinder deck so that adjustable knobs contact wall of cylinder bore.

    c. Rotate engine until piston skirt is centered and firmly seated on top of support plate. See Figure 3-30.

14. Install cylinder as follows:

    a. Obtain the PISTON RING COMPRESSOR (HD-96333-51E).

    b. Fit tabs on pliers into slots of ring compressor band (HD-96333-103). The arrow stamped on the band indicates the side that faces up, so disregard the word “bottom.” Place band around piston. Press the lever on the right side of the pliers to open the jaws for band expansion.

    c. Orient tool so that the top of the band is positioned between the top compression ring and the piston crown. Tightly squeeze handles of tool to compress piston rings. The racheting action of the tool allows release of the handles after the rings are compressed.

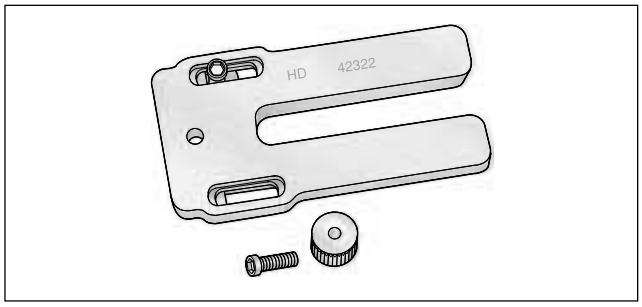

Figure 3-29. Piston Support Plate (Part No. HD-42322)

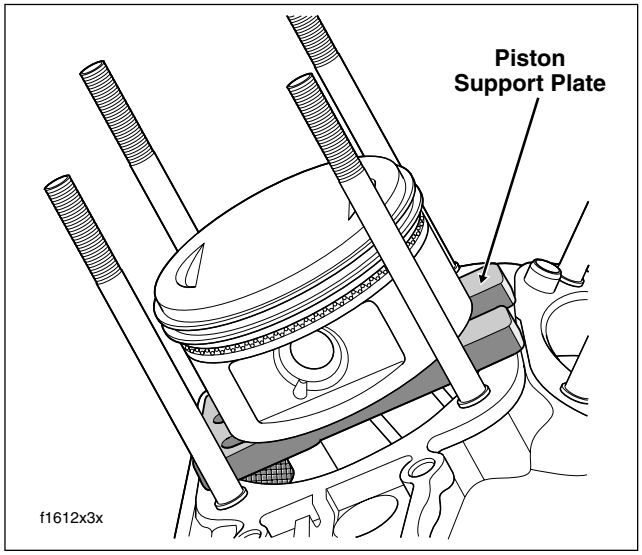

Figure 3-30. Install Piston Support Plate

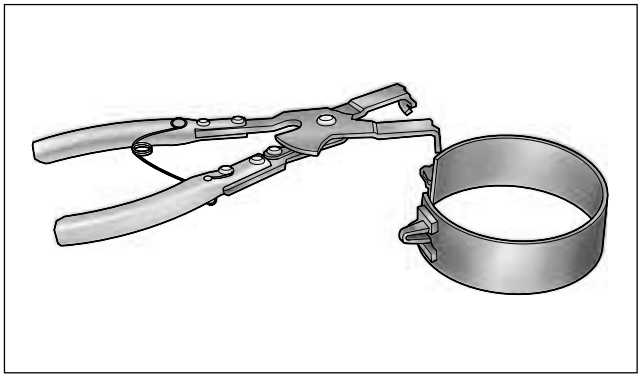

Figure 3-31. Piston Ring Compressor (Part No. HD-96333-51E)

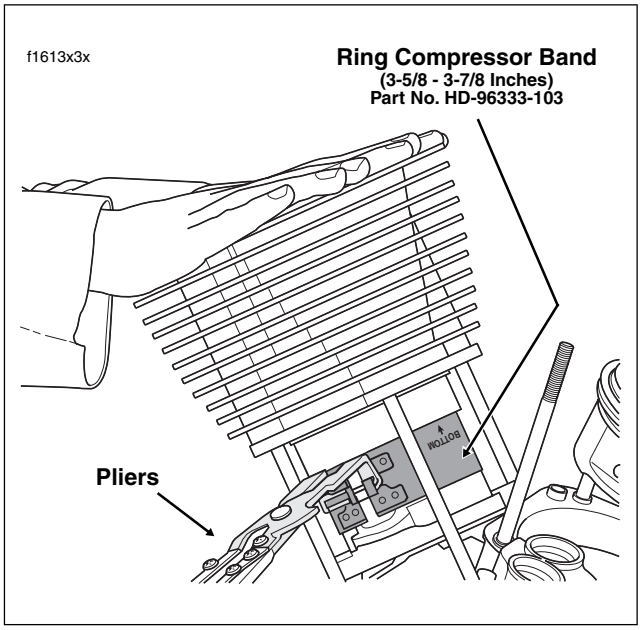

Figure 3-32. Install Cylinder

d. Note that the cylinders should have been marked with the letters “F(ront)” or “R(ear)” to identify location. With the indent in the cooling fins facing the right side of the engine, gently slide cylinder over the cylinder studs and the piston crown resting it on the top of the ring compressor band.

e. Place the palms of both hands at the top of the cylinder. Push down on the cylinder with a sharp, quick motion to pass the piston ring area. See Figure 3-32.

f. Rotate the engine slightly to raise piston off support plate. Remove pliers from band and then remove band from around shank of connecting rod. Remove piston support plate.

g. Remove shop towels from around the crankcase bore exercising caution to keep out any dirt or debris.

h. Carefully set the cylinder over the two ring dowels in the cylinder deck. Push down on the cylinder until it is fully seated in the crankcase bore.

NOTE

To hold the first cylinder in position while installing the second, install threaded cylinders (HD-95952-1) from CONNECTING ROD CLAMPING TOOL (HD-95952-33B) onto cylinder studs with the knurled side down. This will prevent the piston rings from raising the cylinder as the engine is rotated to bring the other piston into position for installation of the second cylinder. See Figure 3-33.

15. With the part number topside, place the head gasket over the two ring dowels in the upper flange of the cylinder.

16. Note that the word “Front” or “Rear” is cast into the top of the cylinder head to ensure proper installation. With the indent in the cooling fins facing the right side of the engine (for accommodation of the push rods and covers), carefully set the cylinder head over the two cylinder ring dowels. To avoid damage to machined surfaces or ring dowels, lower the cylinder head at an angle that closely approximates the angle of the crankcase.

CAUTION

Thoroughly clean and lubricate the threads of the cylinder head bolts before installation. Friction caused by dirt and grime will result in a false torque indication.

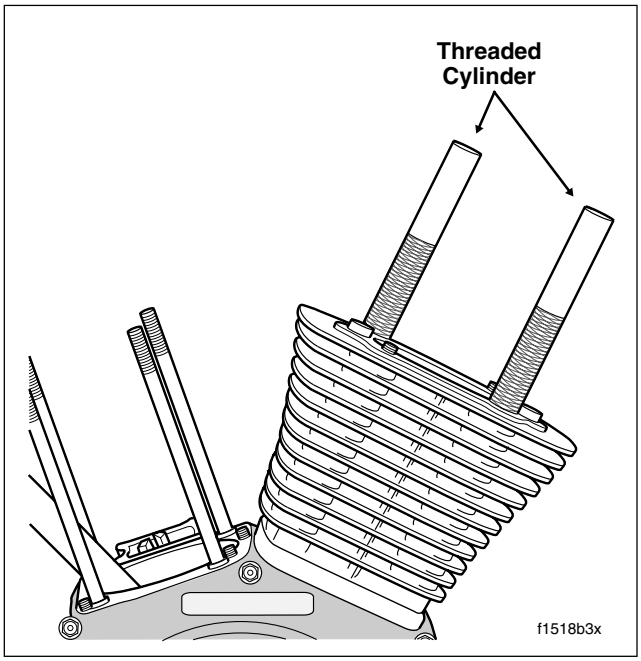

Figure 3-33. Install Threaded Cylinders to Studs (Part No. HD-95952-1)

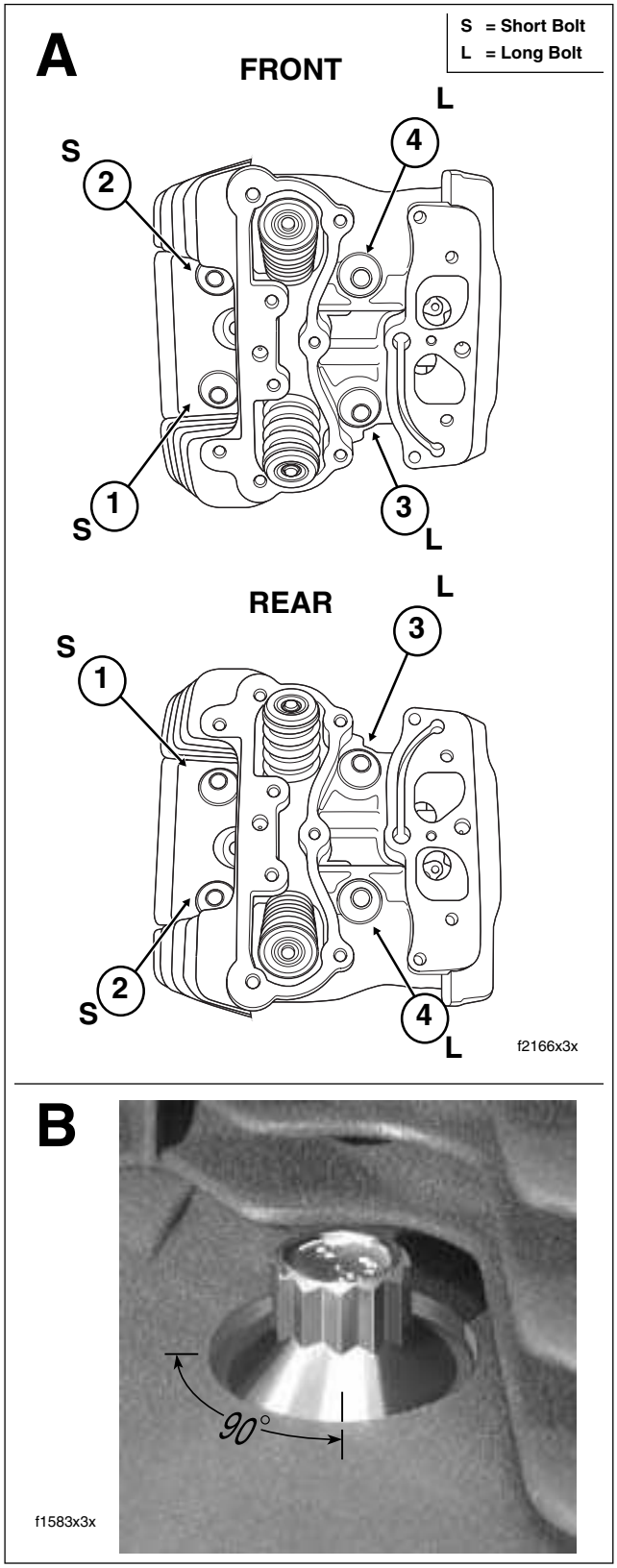

Figure 3-34. Cylinder Head Torque Sequence and Bolt Size

17. Lightly oil threads and shoulders of cylinder head bolts with clean H-D 20W50 engine oil.
18. Start the cylinder head bolts onto the cylinder studs, two short bolts on the left side of the engine, two long bolts on the right.
19. Tighten the four cylinder head bolts as follows:

CAUTION

Improperly tightened cylinder head bolts may result in gasket leaks, stud failure and distortion of the cylinder and/or cylinder head.

a. Alternately turn each cylinder head bolt until finger tight.

b. Tighten the cylinder head bolts to 120-144 **in-lbs** (13.6-16.3 Nm) in the sequence shown in A of Figure 3-34.

c. Following the same sequence, tighten each bolt to 15-17 ft-lbs (20.3-23.1 Nm).

d. Using a grease pencil, mark a straight line on the cylinder head bolt continuing the line over onto the cylinder head. Using the marks as a guide, turn each bolt 1/4 turn or 90 degrees. See B of Figure 3-34. Be sure to tighten the cylinder head bolts in the sequence shown in A of Figure 3-34.

NOTE

For best results, obtain Snap-on® Torque Angle Gauge TA360.

20. Install a **new** rocker housing gasket on the cylinder head flange.

CAUTION

Even though all bolt holes (rocker housing, rocker arm support plate and breather assembly) may appear to be in alignment, the rocker housing gasket may be installed upside down. An upside down gasket will result in an open breather channel causing an oil leak when the vehicle is started, possibly resulting in engine and/or property damage.

21. Verify that the rocker housing gasket is installed correctly by noting that the breather channel is concealed. See Figure 3-35.
22. With the indent facing forward, place the rocker housing into position aligning the holes in the housing with those in the gasket.
23. Apply a small dab of Loctite Medium Strength Threadlocker 243 (blue) to threads of six rocker housing bolts. Start the rocker housing bolts, two long bolts on the left side of the engine, four intermediate bolts in the interior. Alternately tighten the bolts to 120-168 **in-lbs** (13.6-18.9 Nm) in the pattern shown in Figure 3-36.

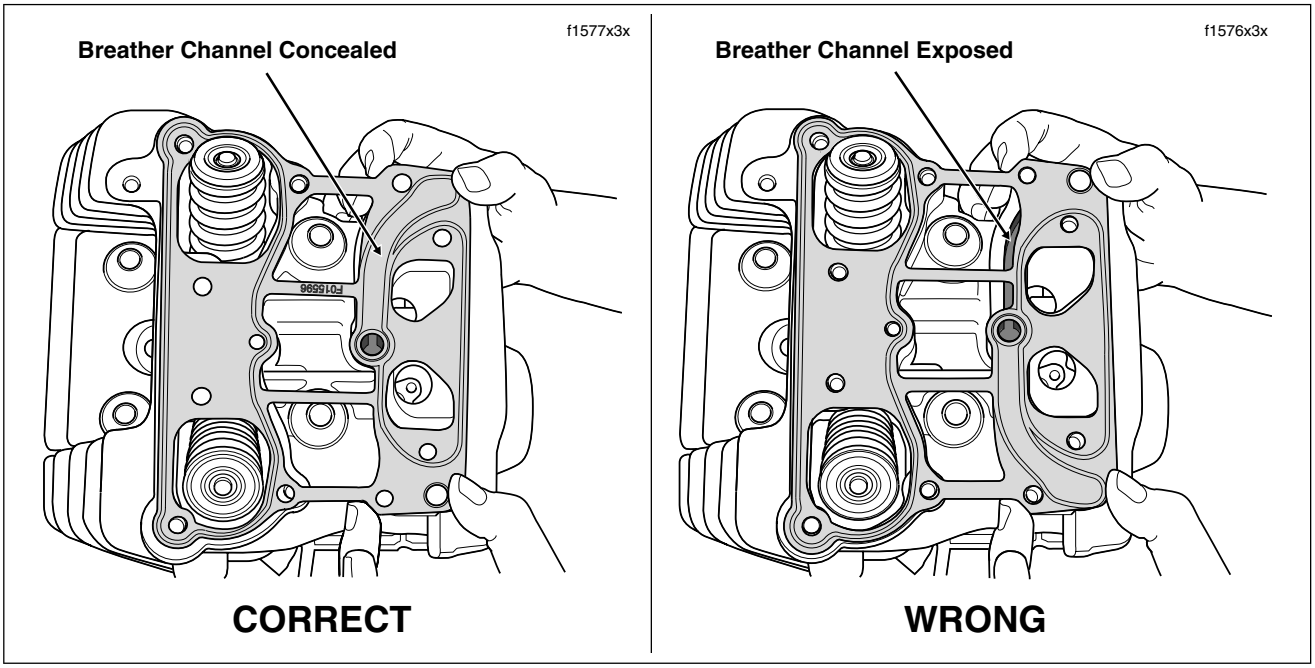

Figure 3-35. Install Rocker Housing Gasket (Rear Cylinder Shown)

NOTE

If the engine was left in the chassis for service, use the ROCKER HOUSING WRENCH (HD-47248) to start the rocker housing bolts. With both an external and internal hex, the bolts also can be installed with either a 7/16 inch socket or open end/box wrench (open spaces), or a short 3/16 inch allen wrench (tight spaces). For best results, final tighten the bolts on the left side of the engine (where there is close proximity to the frame) to 120-168 ***in-lbs*** *using a torque wrench with a 1/4 inch drive.*

CAUTION

O-rings that are missing, distorted, pinched or otherwise damaged will result in either oil leakage or low oil pressure. Use of the wrong O-ring will have the same results. Since many O-rings are similar in size and appearance, always use new O-rings keeping them packaged until use to avoid confusion.

24. Install **new** O-ring in groove around breather baffle hole in rocker housing. Apply a thin film of clean H-D 20W50 engine oil to O-ring before installation. See Figure 3-36.

25. Install the hydraulic lifters in the crankcase bores with the flats facing forward and rearward. To preserve existing wear patterns, orientation of the oil hole (inboard or outboard) should have been noted during disassembly. To avoid damage, do not drop lifters onto cam lobes.

26. Place anti-rotation pin on the machined flat between the blocks cast into the crankcase. See Figure 3-37.

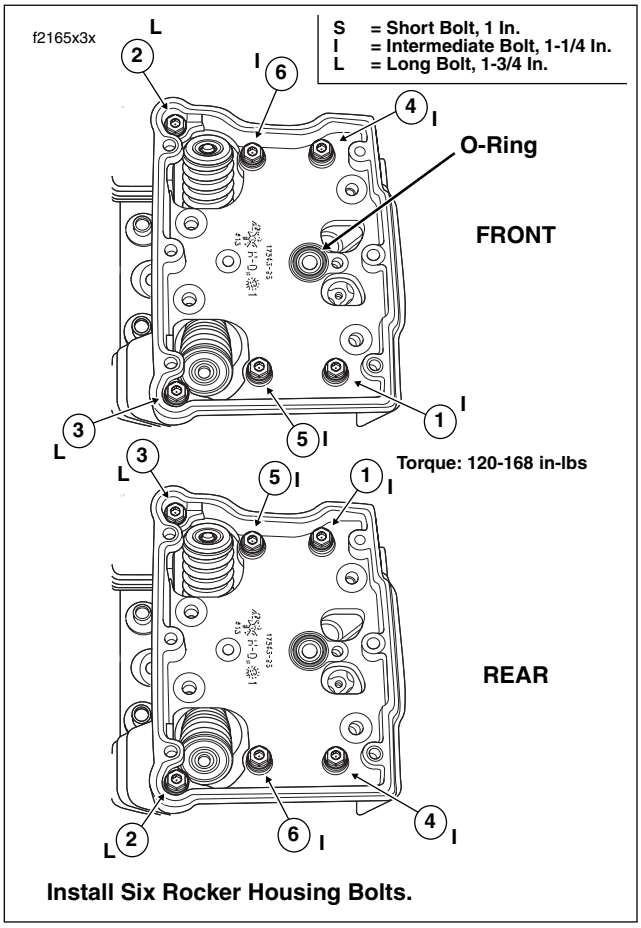

Figure 3-36. Rocker Housing Torque Sequence and Bolt Size

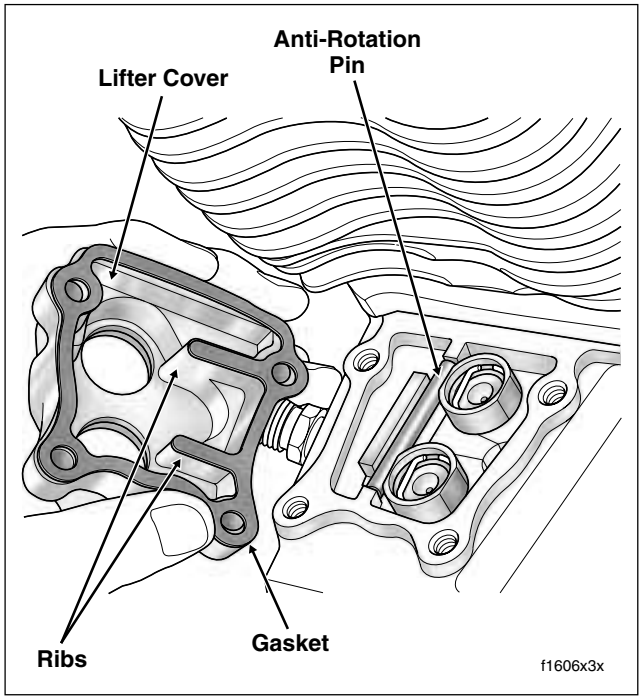

Figure 3-37. Install Lifters and Lock Position With Anti-Rotation Pin

27. Install a **new** lifter cover gasket aligning the holes in the gasket with those in the cover.

CAUTION

Movement or loss of the anti-rotation pin can result in lifter rotation causing catastrophic engine damage.

28. Install the lifter cover and start the four allen head socket screws (1/4 x 1 inch). During installation, verify that the anti-rotation pin is held in place by the ribs cast into the inboard side of the lifter cover. See Figure 3-37. Tighten the lifter cover screws to 90-120 **in-lbs** (10.2-13.6 Nm) in a crosswise pattern.

29. Hand compress the push rod cover assembly and fit the O-ring end of the lower push rod cover into the lifter cover bore. Expanding the assembly, fit the O-ring end of the upper push rod cover into the cylinder head bore.

Table 3-3. Push Rod/Cover Locations

Cylinder	Cover and Push Rod*	Lifter Cover Bore	Cylinder Head/ Rocker Housing Bore
Front	Intake	Inside	Rear
	Exhaust	Outside	Front
Rear	Intake	Inside	Front
	Exhaust	Outside	Rear

*** Push Rods Are Color Coded - Intake (Silver), Exhaust (Black)**

Do **not** install the spring cap retainers at this time. To ensure proper installation, take note of Table 3-3.

30. Install the push rods in their original positions. Be sure to remove any tags that may have been used for marking location and orientation. To ensure proper installation, take note of Table 3-3. For example, if reassembling the rear cylinder, slide the intake push rod (silver) through the front hole in the rocker housing engaging the lifter socket in the inside hole of the lifter cover. Slide the exhaust push rod (black) through the rear hole in the rocker housing engaging the lifter socket in the outside hole of the lifter cover.

31. To install the rocker arm support plate, **both** lifters of the cylinder being serviced must be on the base circle (or lowest position) of the cam.

CAUTION

Installing the rocker arms and rotating the engine with the valve train loaded can result in bent push rods and/ or valve damage.

To find the base circle, it is first necessary to rotate the engine. Based on the level of disassembly, three methods of engine rotation are presented below.

a. With primary cover installed - With vehicle on center stand, place the transmission in 5th gear and rotate rear wheel in a clockwise direction (as viewed from right side) until the base circle is found. See step 31(d) to find the base circle.

b. With primary cover removed - Remove primary cover. Place the transmission in neutral. Fit a 1-1/2 inch socket on the compensating sprocket shaft nut. Rotate nut in a counterclockwise direction until the base circle is found. See step 31(d) to find the base circle.

CAUTION

Do not attempt to rotate engine by removing cam cover and placing socket on crank or primary cam sprocket flange bolt. Head of flange bolt can break off possibly resulting in damage to flywheel or camshaft.

c. With engine mounted in engine stand - Obtain the ENGINE ROTATION WRENCH (HD-47257). See Figure 3-23. Install tool on sprocket shaft and rotate in a counterclockwise direction until the base circle is found. See step 31(d) to find the base circle.

d. Finding the base circle: Using one of the methods above, rotate engine until piston is at Top Dead Center (TDC) of compression stroke. To accomplish

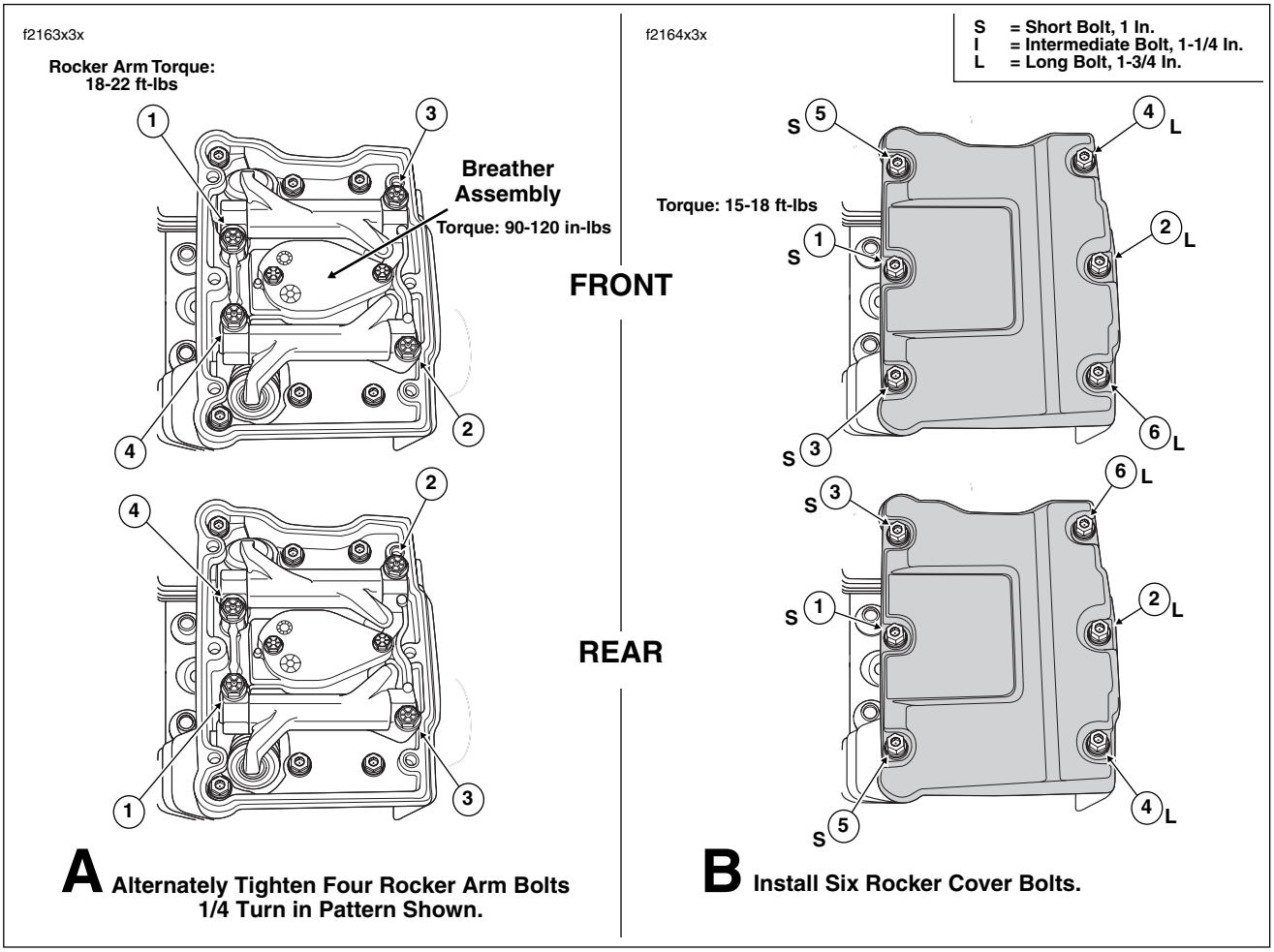

Figure 3-38. Rocker Arm/Rocker Cover Torque Sequence and Bolt Size

this, first raise lower push rod cover to access intake lifter (inside hole of lifter cover). Place index finger on top of the intake lifter. While rotating engine, feel lifter rise (valve open) and fall (valve closed). Now place finger tightly over spark plug hole and rotate engine again. In the compression stroke, air will be forced out against your finger until the piston reaches the TDC position. Stop engine rotation when the flow of air through the spark plug hole stops. Direct the beam of a small flashlight into spark plug hole to verify piston is at TDC. Both intake and exhaust valves are now closed and the push rods are in the unloaded position.

32. Place the rocker arm support plate assembly into the rocker housing. Start the four rocker arm support plate bolts into the cylinder head.

33. Place breather assembly at top of rocker arm support plate. Apply a small dab of Loctite Medium Strength Threadlocker 243 (blue) to threads of two breather assembly bolts. Start bolts into cylinder head.

34. Alternately tighten each of the four rocker arm support plate bolts just 1/4 turn following the pattern shown in A of Figure 3-38. Continue turning the bolts in these increments until snug. Following the same numerical sequence, tighten the bolts to 18-22 ft-lbs (24.4-29.8 Nm).

35. Alternately tighten the two breather assembly bolts to 90-120 **in-lbs** (10.2-13.6 Nm).

NOTE

If the engine was left in the chassis for service, final tighten the rocker arm support plate bolt on the rear left side of the rear cylinder using a 3/8 inch drive torque wrench with a 1/2 inch flank drive "dog bone" torque adapter (Snap-On FRDH161). Since any extension can act as a torque multiplier, the torque wrench must be perpendicular to the torque adapter when the bolt is tightened. The 90 degree orientation between the tools cancels the multiplier effect and prevents the bolt from being over-tightened. If the adapter is kept inline with the torque wrench, the multiplier effect is in force and distortion of the rocker housing will occur.

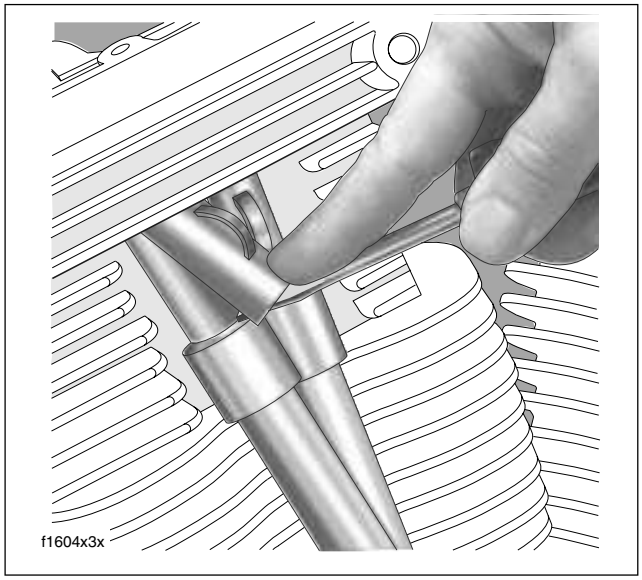

Figure 3-39. Install Spring Cap Retainer

36. Lift up lower push rod covers and verify that both push rods spin freely.

NOTE

Always service each cylinder separately. After the first cylinder is serviced the engine must be rotated to find the base circle on the second cam. Service on the remaining cylinder can then proceed.

37. Complete installation of the push rod covers as follows:
    a. Verify that the O-ring ends of the upper and lower push rod covers fit snugly into the cylinder head and lifter cover bores.
    b. Lodge the upper edge of spring cap retainer into the cylinder head bore leaving the bottom edge free.
    c. Insert blade of small screwdriver between bottom edge of spring cap retainer and top of spring cap.
    d. While simultaneously depressing spring cap with tip of screwdriver, use forefinger to slide bottom edge of spring cap retainer down shaft towards tip of screwdriver blade. As spring cap reaches its full length of travel, spring cap retainer should be in approximate position against upper push rod cover. See Figure 3-39.

NOTE

For best results, be sure that screwdriver, spring cap and spring cap retainer are free of grease and oil.

    e. Verify that spring cap retainer is seated tightly against upper push rod cover.

38. Install a **new** rocker cover gasket on the rocker housing flange. Place the rocker cover into position aligning the holes in the cover with those in the gasket.

39. Apply a small dab of Loctite Medium Strength Threadlocker 243 (blue) to threads of six rocker cover bolts. Start the rocker cover bolts, three short bolts on the left side of the engine, three long bolts on the right. Tighten the bolts to 15-18 ft-lbs (20.3-24.4 Nm) in the pattern shown in B of Figure 3-38.

NOTE

If the engine was left in the chassis for service, final tighten the three rocker cover bolts on the left side of the rear cylinder using a 3/8 inch drive torque wrench with a 7/16 inch flank drive "dog bone" torque adapter (Snap-On FRDH141). Since any extension can act as a torque multiplier, the torque wrench must be perpendicular to the torque adapter when the bolts are tightened. The 90 degree orientation between the tools cancels the multiplier effect and prevents the bolts from being over-tightened. If the adapter is kept inline with the torque wrench, the multiplier effect is in force and distortion of the rocker cover will occur.

40. If engine was left in the chassis for service, see Section 3.6 ASSEMBLING MOTORCYCLE AFTER STRIPPING. If engine was removed for service, see Section 3.8 INSTALLING ENGINE IN CHASSIS.

DISASSEMBLY

1. See Section 3.9 TOP END OVERHAUL, DISASSEMBLY. If only servicing cam compartment components, see steps 1-11. If performing a complete engine overhaul, reference steps 1-29.

NOTE

The cam support plate and lifter cover use the same short allen head socket screw (1/4 x 1 inch). Only the cam cover uses the longer screw (1/4 x 1-1/4 inches). For ease of assembly, do not mix short and long screws. Store long screws inside cam cover to avoid confusion. The short screws are interchangeable.

2. Remove the ten allen head socket screws to release the cam cover. Remove and discard the cam cover gasket.
3. Using a colored marker, mark the crank sprocket and one of the links of the primary cam chain. Maintaining the original direction of rotation during assembly may prolong service life.
4. Remove the flange bolt and flat washer from the crank sprocket. See Figure 3-40.
5. Remove the flange bolt and flat washer from the primary cam sprocket.

NOTE

If too much loctite, or perhaps the wrong loctite, was used to install the primary cam sprocket flange bolt, it may be very difficult to remove. In these cases, break down loctite using heat from a small propane torch. Apply flame evenly around bolt head in a circular motion, but not for so long as to turn bolt blue. Do not direct heat at chain tensioner assembly and other components or damage will result. Other methods of removal, such as use of a large breaker bar, also may result in damage to chain drive and other components.

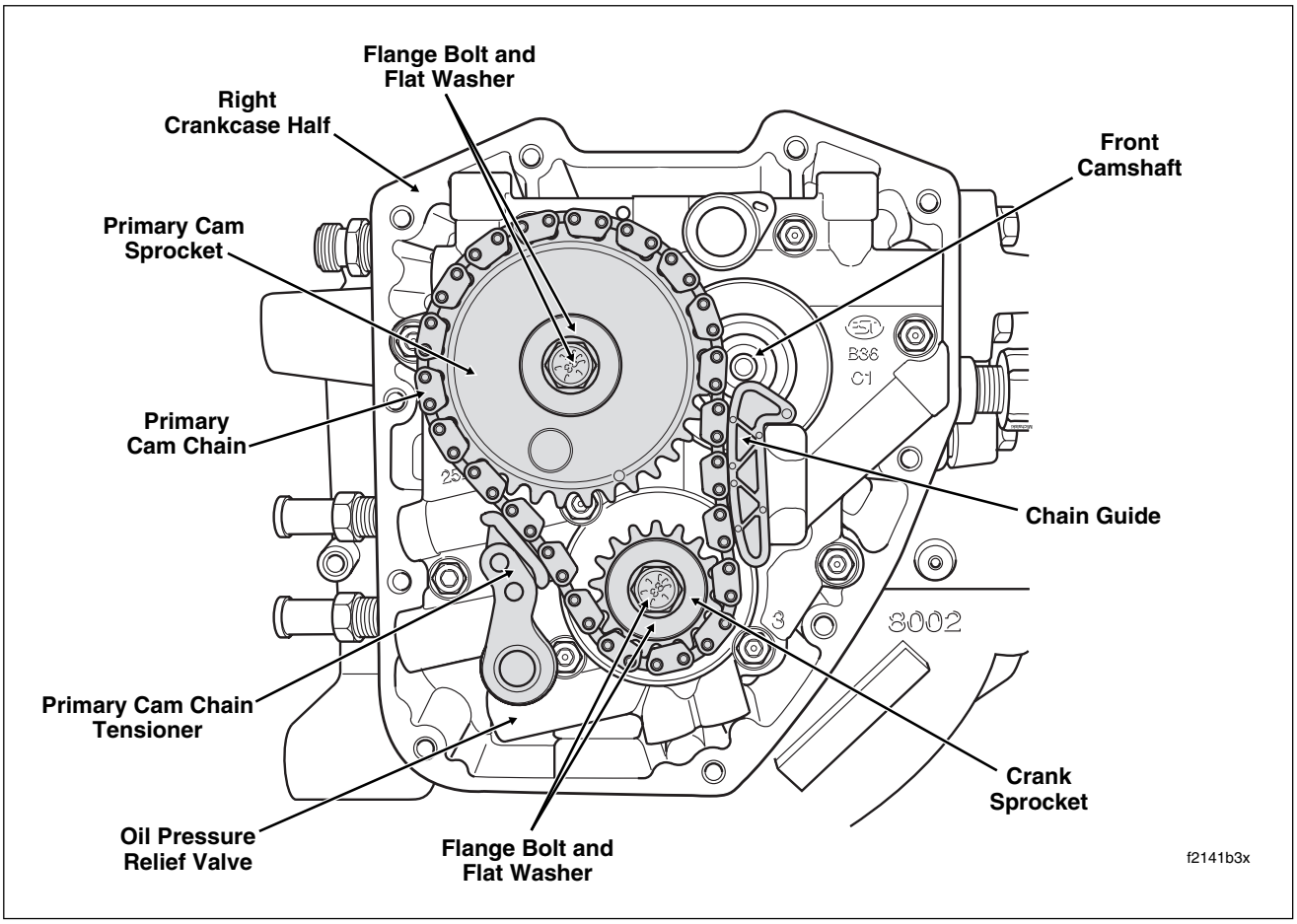

Figure 3-40. Cam Support Plate Assembly

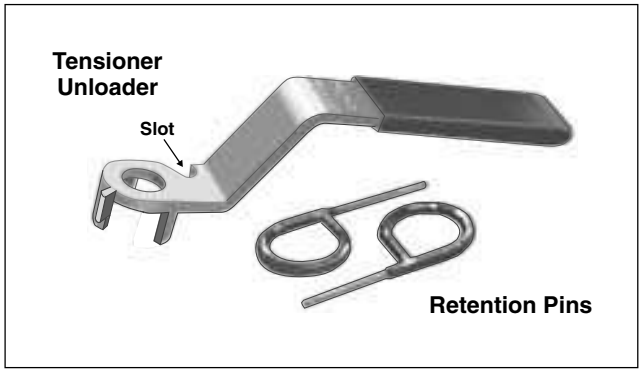

Figure 3-41. Cam Chain Tensioner Unloader with Retention Pins (Part No. HD-42313)

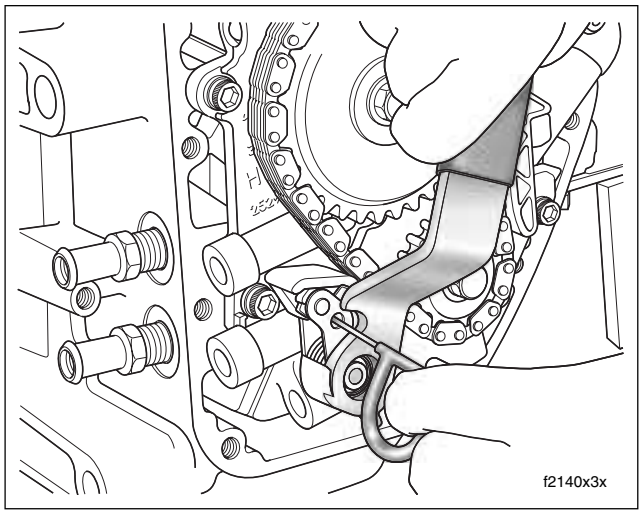

Figure 3-42. Retract Primary Cam Chain Tensioner

⚠WARNING

Use extreme caution when operating propane torch. Read the manufacturers instructions carefully before use. Do not direct open flame or heat toward any fuel system component. Extreme heat can cause fuel ignition and explosion. Inadequate safety precautions could result in death or serious injury.

6. Using the CAM CHAIN TENSIONER UNLOADER (HD-42313), retract the primary cam chain tensioner as follows:
   a. With the handle pointing toward the front of the cam support plate, place cup of tool over spring coil. Correctly positioned, the slot in the tool should be adjacent to the hole in the tensioner. See Figure 3-42.
   b. Rotate the handle of the tool in a counterclockwise direction until the hole in the tensioner is aligned with the hole in the boss of the cam support plate.
   c. Insert a retention pin through the hole in the tensioner and into the hole in the cam support plate.
7. Insert small pry bar (seal remover) between inboard side of primary cam sprocket and cam support plate. Working around its circumference, carefully ease primary cam sprocket off splines of rear camshaft until loose.
8. Ease off crank sprocket with a slightly smaller pry bar (seal remover). Remove the primary cam sprocket, primary cam chain and crank sprocket.
9. Remove the primary cam sprocket spacer from the rear camshaft.
10. Squeeze tabs to remove chain guide from between blocks cast into cam support plate.
11. Release the cam support plate from the oil pump flange. Alternately loosen and then remove the four allen head socket screws following the pattern shown in B of Figure 3-50.
12. Release the cam support plate from the crankcase flange. Alternately loosen and then remove the six allen head socket screws following the pattern shown in A of Figure 3-50.
13. Two ring dowels in crankcase flange locate cam support plate (lower rear, upper front). See Figure 3-43. Insert small pry bar (seal remover) between inboard side of cam support plate and crankcase flange in area adjacent to ring dowels. Alternately work each side free and then carefully ease cam support plate from end of crankshaft. See Section 3.11 SUBASSEMBLY SERVICE AND REPAIR, CAM SUPPORT PLATE.

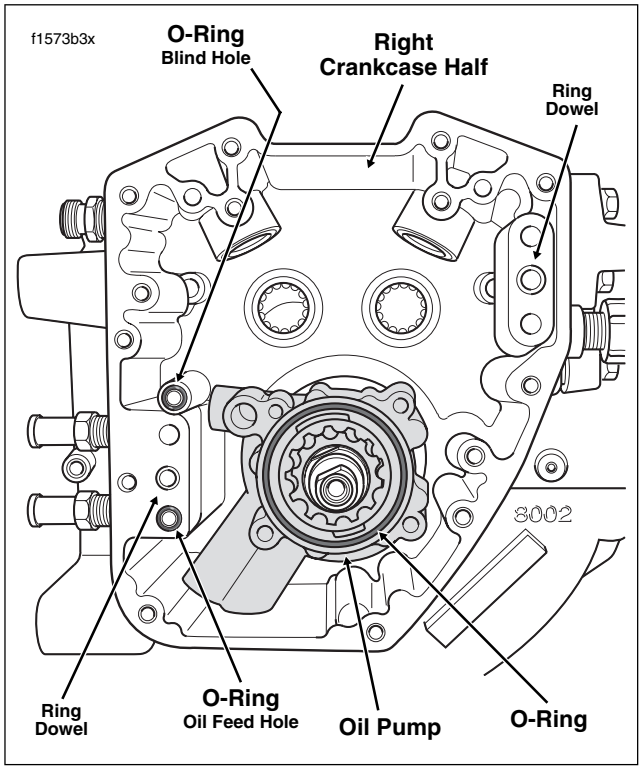

Figure 3-43. Oil Pump Assembly

⚠CAUTION

Do not pull the retention pin from the primary cam chain tensioner after removal of the cam support plate. With 35-40 pounds of spring pressure behind the tensioner, allowing it to accelerate through its full length of travel will result in spring stretching and/or cracking of the tensioner shoe. Furthermore, if the tensioner should contact fingers or other parts of the hand, minor or moderate injury may occur.

14. Remove O-ring from groove around oil feed hole in crankcase flange (directly below rear ring dowel). Remove O-ring from groove around blind hole in boss (directly above oil return hole in crankcase flange). Discard O-rings. See Figure 3-43.
15. Pull oil pump from crankshaft. Remove O-ring from outboard side of oil pump housing. Remove O-ring from scavenge port stub. Discard O-rings. See Section 3.11 SUBASSEMBLY SERVICE AND REPAIR, OIL PUMP.

⚠WARNING

Be sure that stator mount flange (sprocket shaft side) is NOT facing up when the case halves are separated or the flywheel assembly will drop to the floor. Dropping the flywheel assembly may result in parts damage and minor or moderate injury.

16. Rotate crankcase in the engine stand so that the cam cover flange is facing upward. Remove the nine crankcase bolts in the left case half. Follow the sequence shown in Figure 3-46.

⚠CAUTION

Never move or lift the crankcase by grasping the cylinder studs. The crankcase is too heavy to be carried in this manner and may be dropped. Dropping the crankcase may result in parts damage and minor or moderate injury.

17. Using pry points, loosen case halves. Lift right crankcase half off end of crankshaft.
18. Remove O-rings from two ring dowels in split line face of right case half. Discard the O-rings.
19. See Section 3.11 SUBASSEMBLY SERVICE AND REPAIR, CRANKCASE.

ASSEMBLY

1. If removed, install left crankcase half in engine stand so that the split line face is vertical.
2. To prevent damage to the sprocket shaft bearing, slide CRANKSHAFT GUIDE (HD-42326A) over end of sprocket shaft. Install flywheel assembly into left case half. Remove tool.

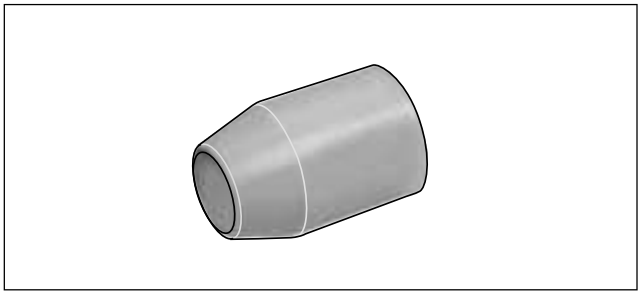

Figure 3-44. Crankshaft Guide (Part No. HD-42326A)

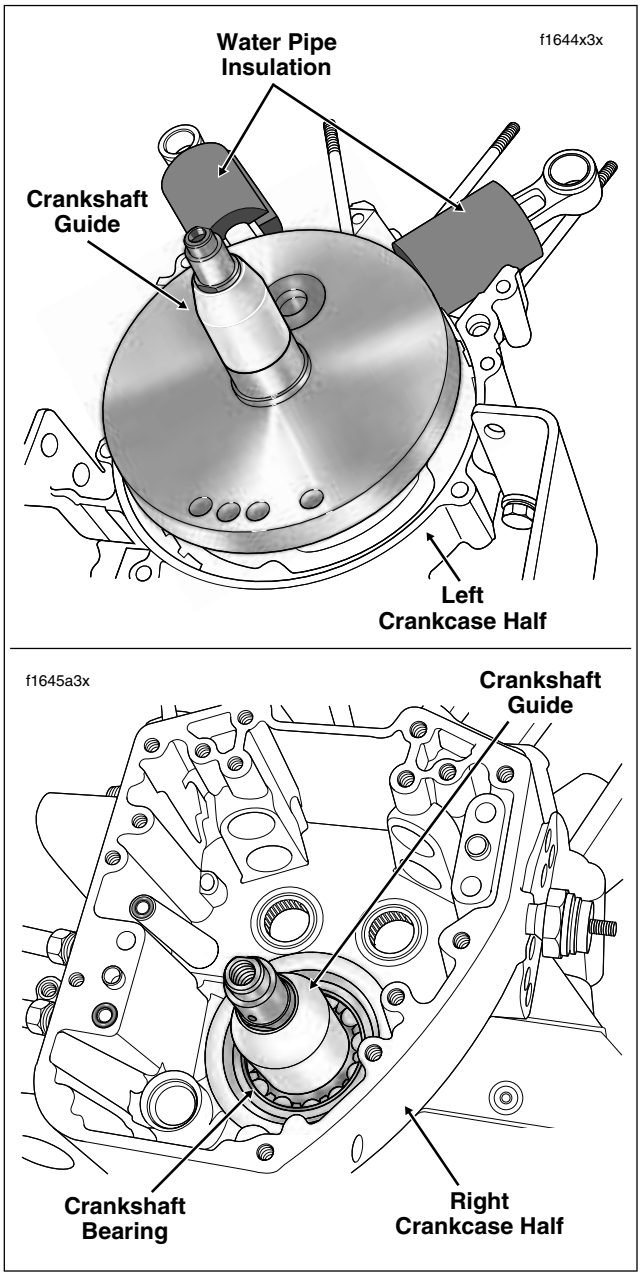

Figure 3-45. Install Crankshaft Guide to Protect Crankshaft Bearing

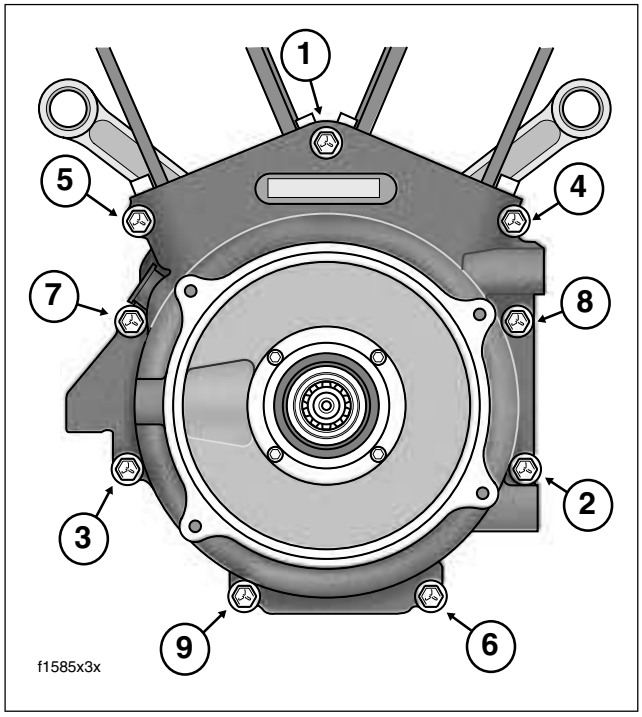

Figure 3-46. Crankcase Torque Sequence (Left Side View)

CAUTION

O-rings that are missing, distorted, pinched or otherwise damaged will result in either oil leakage or low oil pressure. Use of the wrong O-ring will have the same results. Since many O-rings are similar in size and appearance, always use new O-rings keeping them packaged until use to avoid confusion.

3. Install **new** O-rings over two ring dowels in split line face of right case half.
4. Apply a small bead of sealant approximately 0.056 inch (1.4 mm) wide to the split line face. For best results, use High-Performance Sealant (gray), Part No. HD-99650-02.
5. To prevent damage to the crankshaft bearing, place CRANKSHAFT GUIDE (HD-42326A) over end of crankshaft. Mate case halves sliding bearing in right crankcase half over end of crankshaft. Remove tool. See Figure 3-45.
6. Start the nine crankcase bolts and tighten as follows:
   a. Alternately turn each crankcase bolt until finger tight.
   b. Tighten the crankcase bolts to 10 ft-lbs (13.6 Nm) in the sequence shown in Figure 3-46.
   c. Following the same sequence, tighten each bolt to 15-19 ft-lbs (20.3-25.8 Nm).
7. Rotate crankcase in the engine stand so that the stator mount flange (sprocket shaft side) is facing upward. Install service thrust washer on sprocket shaft with the ink stamp facing out (and the chamfer inboard). If using OE part without markings, orient as required to preserve existing wear pattern.
8. To install **new** oil seal into bearing bore, obtain pilot, Nice bearing, large flat washer and handle from SPROCKET SHAFT TIMKEN BEARING CONE INSTALLER (HD-97225-55B) and proceed as follows:
   a. Verify that seal lip garter spring is in place on both sides of seal.
   b. Thread pilot onto sprocket shaft until contact is made with shoulder.
   c. With the lettering facing outside, slide oil seal over pilot until it contacts bearing bore.
   d. Slide SPROCKET SHAFT OIL SEAL INSTALLER (HD-39361A) over pilot until it contacts oil seal. See Figure 3-47.

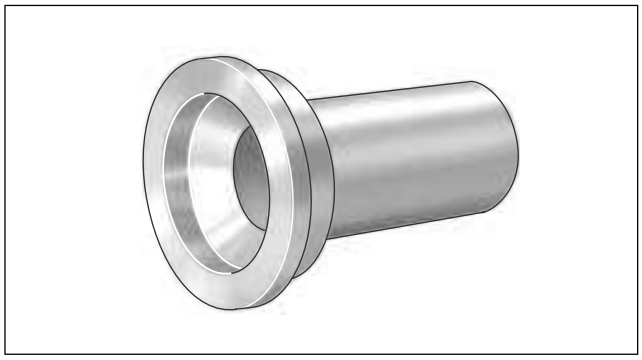

Figure 3-47. Sprocket Shaft Oil Seal Installer (Part No. HD-39361A)

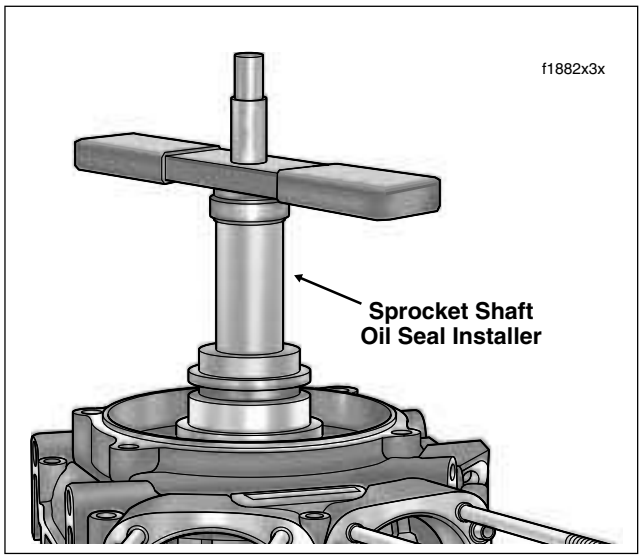

Figure 3-48. Install Oil Seal In Bore

e. Slide Nice bearing and large flat washer over pilot until contact is made with seal installer.

f. Thread handle onto pilot shaft.

g. Rotate handle in a clockwise direction until oil seal installer makes firm contact with crankcase stator mount. See Figure 3-48.

h. Remove handle, flat washer, Nice bearing, seal installer and pilot from sprocket shaft.

9. Slide sprocket shaft spacer over end of sprocket shaft. Push spacer into oil seal until seated against bearing race.

10. Rotate crankcase in the engine stand so that the cam cover flange is facing upward.

11. Install oil pump as follows:

CAUTION

O-rings that are missing, distorted, pinched or otherwise damaged will result in either oil leakage or low oil pressure. Use of the wrong O-ring will have the same results. Since many O-rings are similar in size and appearance, always use new O-rings keeping them packaged until use to avoid confusion.

a. Install **new** O-ring on scavenge port stub of oil pump housing. Apply a very thin film of clean H-D 20W50 engine oil to O-ring before installation.

b. Slide oil pump housing onto crankshaft fitting O-ring on scavenge port stub into crankcase bore at back of cam compartment. Firmly push on scavenge port stub with thumb to be sure that it is snug in bore. Inspect O-ring on stub to verify that it is not pinched or distorted.

c. Separate the gerotor gears into two sets, one wide (scavenge) and the other narrow (feed).

NOTE

Lubricate parts with clean H-D 20W50 engine oil during assembly.

d. Fit the smaller of the **wide** gerotor gears into the larger. Slide the wide gerotor set down the crankshaft until it bottoms in the oil pump housing.

e. Slide the first of two separator plates down the crankshaft until it contacts the wide gerotor set. Install wave washer and second separator plate.

f. Fit the smaller of the **narrow** gerotor gears into the larger. Slide the narrow gerotor set down the crankshaft until it contacts the separator plate.

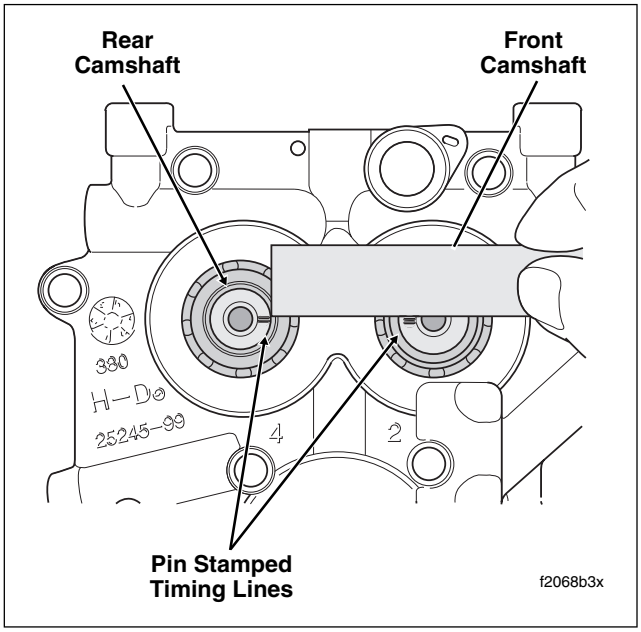

Figure 3-49. Verify Alignment of Timing Lines on Front and Rear Camshafts

CAUTION

O-rings that are missing, distorted, pinched or otherwise damaged will result in either oil leakage or low oil pressure. Use of the wrong O-ring will have the same results. Since many O-rings are similar in size and appearance, always use new O-rings keeping them packaged until use to avoid confusion.

g. Install **new** O-ring in groove on outboard side of oil pump housing. See Figure 3-43. Apply a very thin film of clean H-D 20W50 engine oil to O-ring before installation.

12. Install **new** O-ring in groove around oil feed hole in crankcase flange (directly below rear ring dowel). Install **new** O-ring around blind hole in boss (directly above oil return hole in crankcase flange). Apply a thin film of H-D 20W50 engine oil to O-rings before installation.

13. If not retracted, place cup of CAM CHAIN TENSIONER UNLOADER (HD-42313) over spring coil of secondary cam chain tensioner positioning finger on tool between tensioner and shoe. Rotate tool in a counterclockwise direction inserting retention pin through hole in boss on **primary cam chain side** of cam support plate. Pin engages hooks on tensioner to hold it in the retracted position. For best results, place cam support plate in a vise using brass jaw inserts to prevent casting damage.

14. Lubricate cam needle bearings with clean H-D 20W50 engine oil.

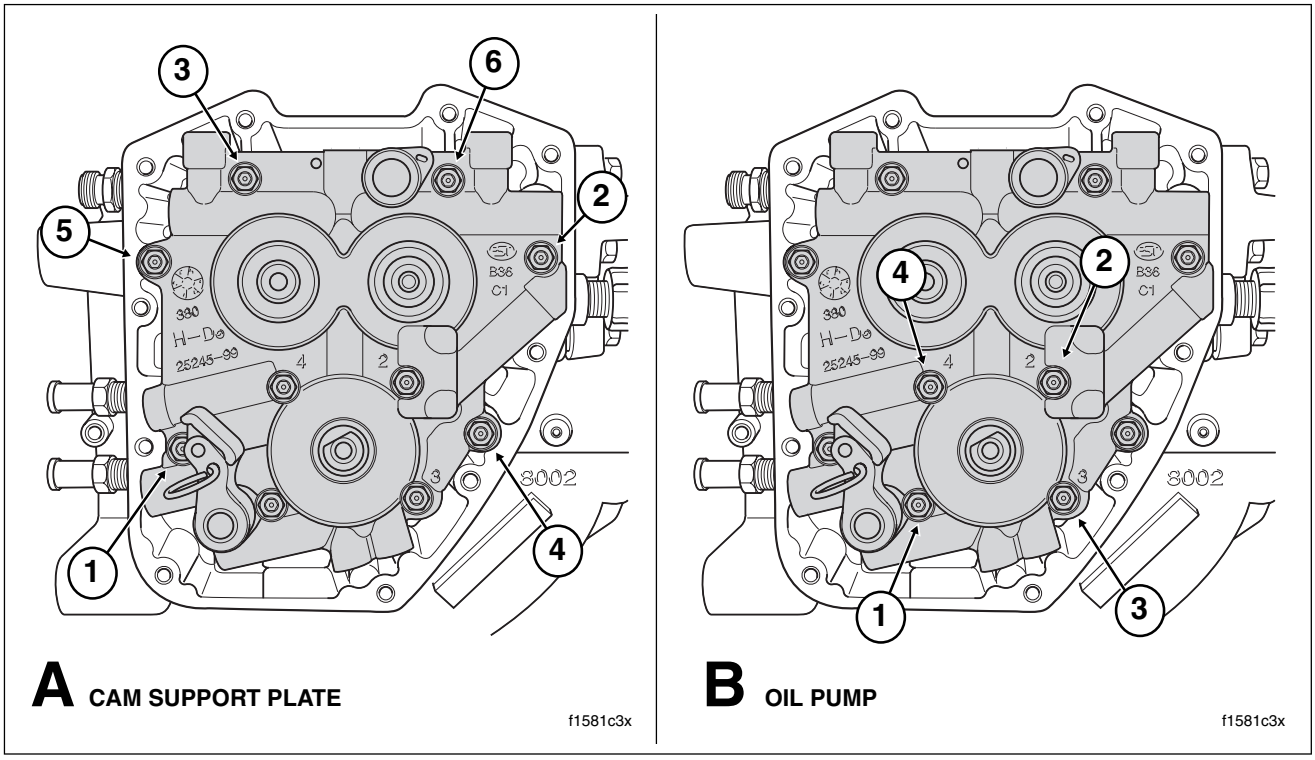

Figure 3-50. Cam Support Plate/Oil Pump Torque Sequence

15. Using a straightedge, verify that the pin stamped timing lines on the ends of the front and rear camshafts are in alignment (although they may be somewhat difficult to see). See Figure 3-49. If necessary, rotate camshafts in order to make this observation.
16. Aligning bushing in cam support plate with end of crankshaft, slide cam support plate over crankshaft onto two ring dowels in crankcase flange. Use a rubber mallet to fully seat cam support plate on ring dowels.
17. Install the six allen head socket screws (1/4 x 1 inch) to secure the cam support plate to the crankcase flange. Tighten screws to 90-120 **in-lbs** (10.2-13.6 Nm) in the pattern shown in A of Figure 3-50.
18. Secure the cam support plate to the oil pump flange as follows:
    a. Start two allen head socket screws (1/4 x 1 inch) into holes 3 and 4. See B of Figure 3-50.
    b. Obtain two ALIGNMENT TOOLS used to install lifter guides on Evolution engines (HD-33443). Loosely install alignment tools in holes 1 and 2.
    c. While rotating the engine, alternately snug and then tighten the alignment tools to 40-45 **in-lbs** (4.5-5.1 Nm).

NOTE

For methods of engine rotation, see Section 3.9 TOP END OVERHAUL, DISASSEMBLY, step 6.

    d. Alternately snug and then tighten the screws in holes 3 and 4 to 40-45 **in-lbs** (4.5-5.1 Nm).
    e. Remove the alignment tool from hole 1. Install the allen head socket screw and tighten to 40-45 **in-lbs** (4.5-5.1 Nm).
    f. Repeat step 18(e) to replace alignment tool in hole 2 with allen head socket screw.
    g. Final tighten all four screws to 90-120 **in-lbs** (10.2-13.6 Nm). Use the pattern shown in B of Figure 3-50. Numbers cast adjacent to the bolt holes also indicate the oil pump torque sequence.

NOTE

If only realigning the oil pump, first loosen all screws following the pattern shown in B of Figure 3-50. Remove screws from holes 1 and 2 and then follow the alignment procedure starting at step 18(b).

19. Pull retention pin from hole in cam support plate to release secondary cam chain tensioner.
20. Squeeze tabs and install chain guide between blocks cast into cam support plate.
21. Install primary cam sprocket spacer onto rear camshaft.
22. If using the original cam support plate, camshafts, primary cam sprocket, crank sprocket and flywheel assembly, then move to step 23. However, if any of these parts have been replaced, then proceed as follows:

a. Install primary cam sprocket onto splines of rear camshaft. Install long flange bolt with thicker flat washer to secure sprocket to end of camshaft.

b. Install crank sprocket onto crankshaft. Install short flange bolt with smaller diameter flat washer (that is, washer from bulk inventory) to secure sprocket to end of crankshaft.

NOTE

Use of smaller diameter flat washer with crank sprocket flange bolt allows room on sprocket face for placement of straightedge under step 22(e).

c. To prevent rotation, position the CRANKSHAFT/CAMSHAFT SPROCKET LOCKING TOOL (HD-42314) between the crank and primary cam sprockets. See Figure 3-52. The handle of the tool is stamped “Crank” and “Cam” to ensure proper orientation. Tighten the crank and primary cam sprocket flange bolts to 15 ft-lbs (20.3 Nm). Remove the sprocket locking tool.

d. Push on rear camshaft to remove end play.

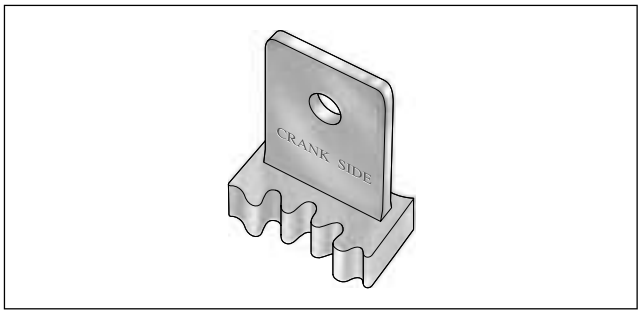

Figure 3-51. Crankshaft/Camshaft Sprocket Locking Tool (Part No. HD-42314)

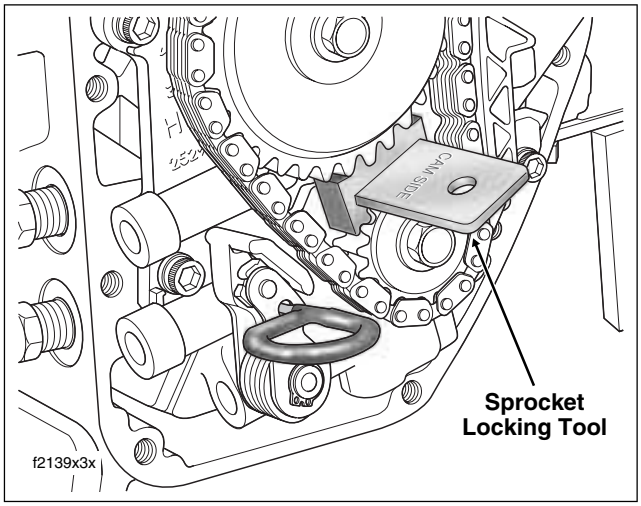

Figure 3-52. Lock Crank and Primary Cam Sprockets Before Tightening Flange Bolts

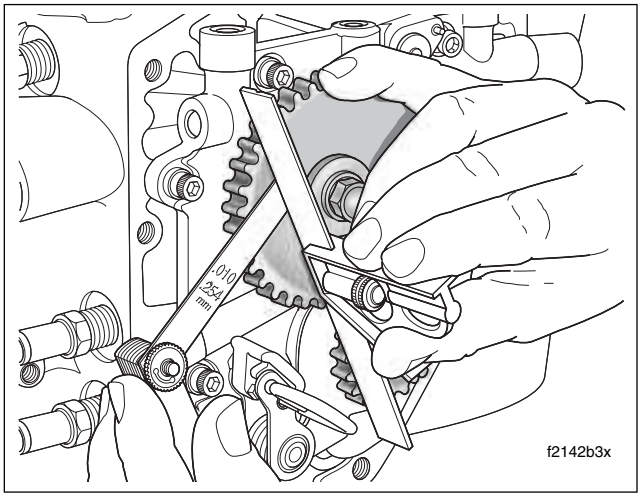

Figure 3-53. Check Alignment of Crank and Primary Cam Sprocket Faces

e. Place a straightedge across the crank and primary cam sprocket faces. Try to insert a 0.010 inch feeler gauge between the straightedge and each sprocket face. See Figure 3-53. If the feeler gauge does not fit at either location, then proceed to step 22(f).

On the other hand, if the crank sprocket is “proud” (that is, rises above the face of the primary cam sprocket) more than 0.010 inch, remove the flange bolt and primary cam sprocket, and noting the part number stamped on the existing spacer, replace it with the next larger size. See spacer sizes listed in Table 3-4. Replace the spacer with the next smaller size only if the primary cam sprocket is “proud” (rises above the face of the crank sprocket) more than 0.010 inch. Return to step 21 to repeat the check with the new spacer installed.

Table 3-4. Primary Cam Sprocket Spacers

Spacer Size	H-D Part Number
0.287	25722-00
0.297	25723-00
0.307	25721-00
0.317	25719-00
0.327	25717-00
0.337	25725-00

f. Remove both crank and primary cam sprockets. Discard smaller diameter flat washer obtained from bulk inventory.

23. Install the primary cam chain and sprocket assembly as follows:

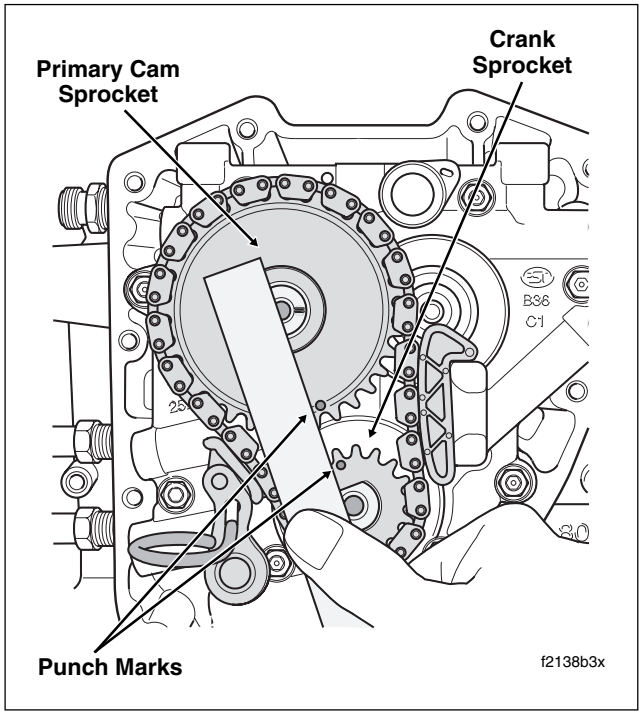

Figure 3-54. Verify Alignment of Crank and Primary Cam Sprocket Punch Marks

a. Place the primary cam sprocket in the cam chain. Hold the sprocket allowing the chain to hang loose. Rotate the sprocket so that the punch mark on the sprocket root faces straight downward.

NOTE

To maintain the original direction of rotation, verify that the colored mark placed on the chain link and crank sprocket is facing away from the cam support plate during installation.

b. Place the crank sprocket in the opposite end of the chain with the punch mark on the sprocket tooth facing straight upward.

c. Maintaining the position of the sprockets on the chain with the punch marks in alignment, start the primary cam sprocket onto the splines of the rear camshaft. Apply a thin film of clean H-D 20W50 engine oil to the splines before installation.

d. Maintaining the position of the crank sprocket on the chain, rotate the primary cam sprocket in a clockwise direction until the flat on the crank sprocket is aligned with the flat on the crankshaft. Install the crank sprocket.

24. Rotate the primary cam sprocket in a clockwise direction until the punch mark on the root is aligned with the punch mark on the crank sprocket tooth. Lay a straightedge across the centerline of the crank and primary cam sprocket flange bolt holes to verify that the punch marks are in alignment. See Figure 3-54.

NOTE

If the punch marks are not in alignment, then the sprockets must be removed and reinstalled. The vehicle will not run properly if the sprockets are misaligned by even one tooth.

NOTE

Both crank and primary cam sprocket flange bolts are specially hardened, while the flat washers are of a special diameter and thickness. Therefore, use only genuine Harley-Davidson parts when replacement is necessary. The crank and primary cam sprocket flange bolts and flat washers are ***NOT*** *interchangeable.*

25. Install crank sprocket and primary cam sprocket flange bolts and flat washers as follows:

NOTE

Exercise caution to avoid mixing oil on washer with threadlocker on bolt or sealing integrity may be compromised.

a. Apply a thin film of clean H-D 20W50 engine oil to both sides of flat washers.

b. Install thinner flat washer on short flange bolt.

c. Install thicker flat washer on long flange bolt.

d. Apply Loctite Primer 7649 (P/N 98968-99) to threads of flange bolts.

e. Apply one drop of Loctite High Strength Threadlocker 262 (red) to threads of flange bolts.

f. Install short flange bolt with thinner flat washer to secure crank sprocket to end of crankshaft.

g. Install long flange bolt with thicker flat washer to secure primary cam sprocket to end of camshaft.

h. Position CRANKSHAFT/CAMSHAFT SPROCKET LOCKING TOOL (HD-42314) between the crank and primary cam sprockets to prevent rotation. See Figure 3-52. The handle of the tool is stamped “Crank” and “Cam” to ensure proper orientation.

i. Alternately tighten the crank and primary cam sprocket flange bolts to 15 ft-lbs (20.3 Nm).

j. Loosen each flange bolt one full turn.

k. Tighten the crank sprocket flange bolt to 24 ft-lbs (32.5 Nm).

l. Tighten the primary cam sprocket flange bolt to 34 ft-lbs (46.1 Nm).

m. Remove the sprocket locking tool.

⚠CAUTION

Ease the primary cam chain tensioner into the unloaded position using the proper tool. Do not pull the retention pin to unload the tensioner or the pin may be damaged. Furthermore, if the tensioner should contact fingers or other parts of the hand, minor or moderate injury may occur.

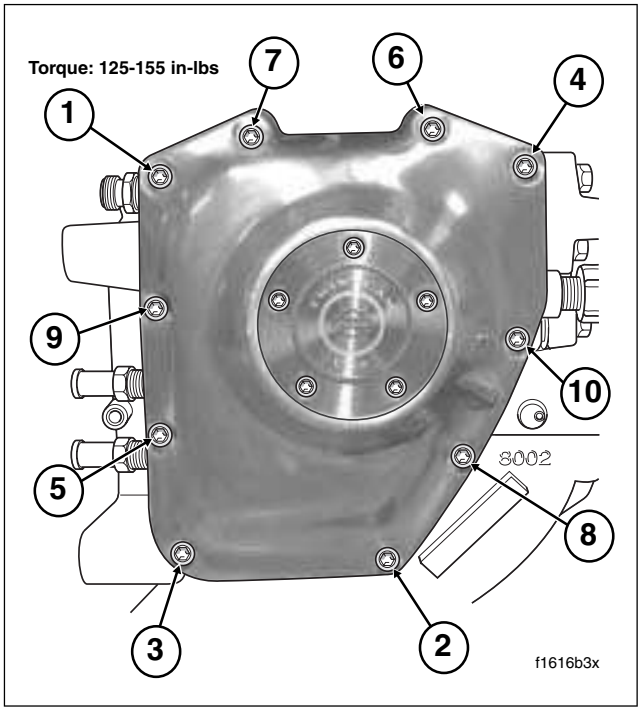

Figure 3-55. Cam Cover Torque Sequence

26. Hold the retracted primary cam chain tensioner with the CAM CHAIN TENSIONER UNLOADER (HD-42313), pull retention pin from hole in cam support plate and ease the assembly into the unloaded position.

27. Apply clean H-D 20W50 engine oil to crank and primary cam sprockets.

CAUTION

Before cam cover installation, verify cleanliness of blind holes in the crankcase flange. Tightening screws with dirt, water or oil in the holes can cause the casting to crack or break. Damage to the casting requires replacement of the right crankcase half.

28. Align holes in **new** cam cover gasket with those in the crankcase flange.

29. Install the cam cover using ten allen head socket screws (1/4 x 1-1/4 inches). Alternately tighten screws to 125-155 **in-lbs** (14.1-17.5 Nm) following the pattern shown in Figure 3-55.

30. If performing a complete engine overhaul, see Section 3.9 TOP END OVERHAUL, ASSEMBLY, steps 1-39. If only cam compartment components were serviced, just see steps 29-39.

Legend:

1. Bolt
2. Bolt
3. Rocker Cover
4. Rocker Cover Gasket
5. Breather Bolt
6. Breather Cover
7. Breather Cover Gasket
8. Umbrella Valve
9. Breather Baffle
10. Filter Element
11. Breather Baffle Gasket
12. Rocker Arm Bolt
13. Rocker Arm Support Plate
14. Rocker Arm Bushing
15. Rocker Arm
16. Rocker Arm Shaft
17. Rocker Arm
18. Breather Baffle O-Ring
19. Rocker Housing Bolt
20. Rocker Housing Bolt
21. Rocker Housing
22. Rocker Housing Gasket
23. O-Ring
24. Upper Push Rod Cover
25. Spring Cap Retainer
26. Spring Cap
27. Spring
28. Flat Washer
29. O-Ring
30. Lower Push Rod Cover
31. O-Ring
32. Lifter Cover Screw
33. Lifter Cover
34. Anti-Rotation Pin
35. Lifter Cover Gasket
36. Hydraulic Lifter
37. Push Rod

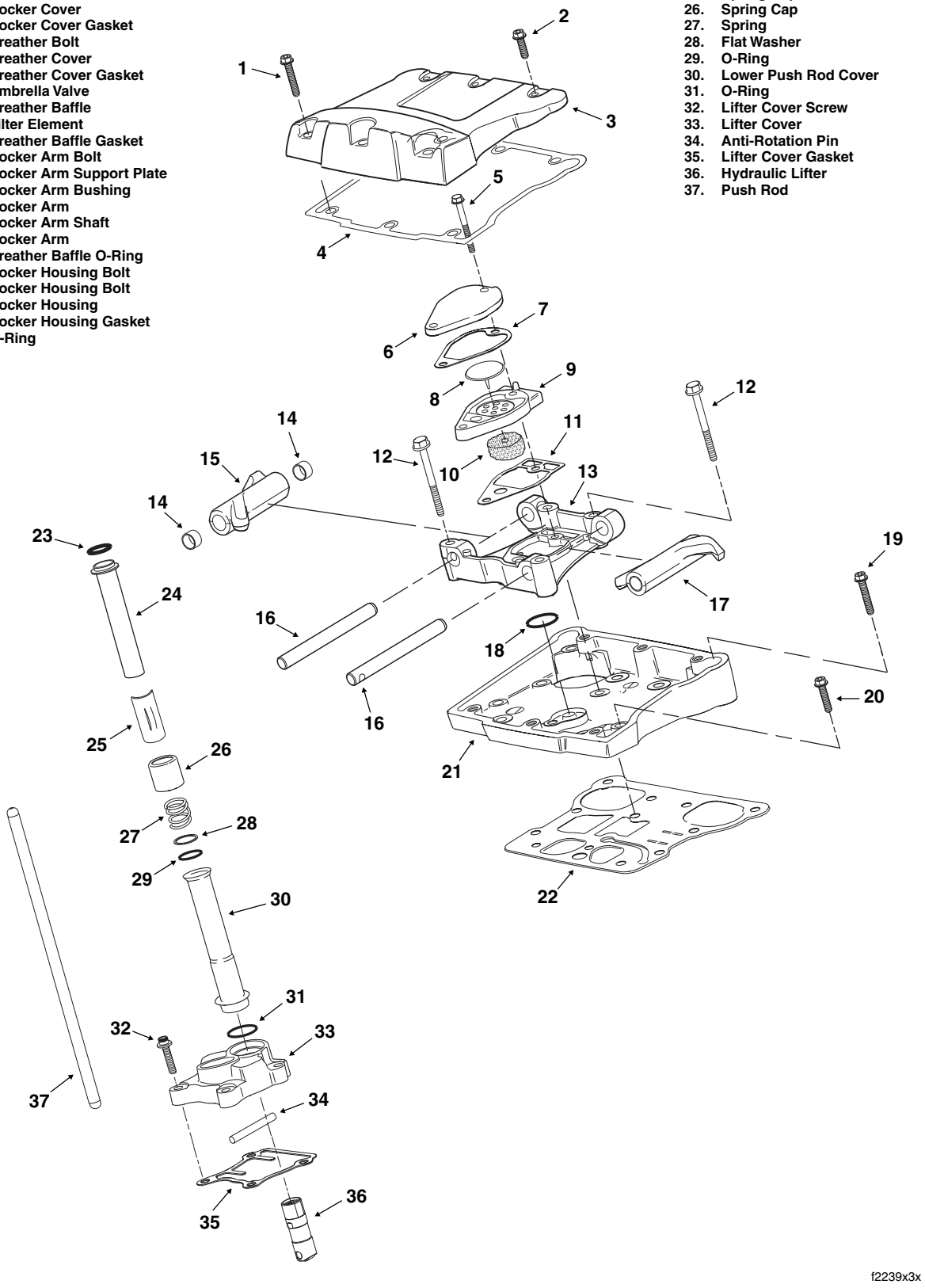

Figure 3-56. Rocker Arm/Breather/Lifter Assemblies (Exploded View)

TOP END

BREATHER ASSEMBLY

Removal

1. See Section 3.9 TOP END OVERHAUL, DISASSEMBLY, steps 1-7.

Disassembly

1. Remove two bolts and lift breather assembly from rocker arm support plate. See Figure 3-57.
2. Remove the breather cover and gasket. Remove the breather baffle and gasket. Discard gaskets.
3. Pull filter element from bore on inboard side of breather baffle. Pull stem of umbrella valve from hole at top of breather baffle. Discard both filter element and umbrella valve.

Cleaning and Inspection

1. Clean all parts in a non-volatile cleaning solution or solvent.
2. Thoroughly dry all parts with low pressure compressed air.
3. Set a straightedge diagonally across the length of the breather cover intersecting the opposite corners of the gasket surface. Slide a feeler gauge beneath the straightedge to check the breather cover for warpage. Repeat the step checking the opposite diagonal. Discard the breather cover if any low spot exceeds 0.005 inch (0.13 mm).
4. Repeat step 3 to inspect the gasket surface of the breather baffle for flatness. Discard the breather baffle if any low spot exceeds 0.005 inch (0.13 mm).

Assembly

1. Insert stem of **new** umbrella valve through center hole at top of breather baffle. Carefully pull rubber bead on stem through hole in baffle. Use denatured alcohol or glass cleaner to lubricate stem, if necessary. Verify that rubber bead is pulled completely through hole and resides on bottom side of baffle.
2. Press **new** filter element into bore at bottom of baffle. Hole in filter element accommodates umbrella valve stem.

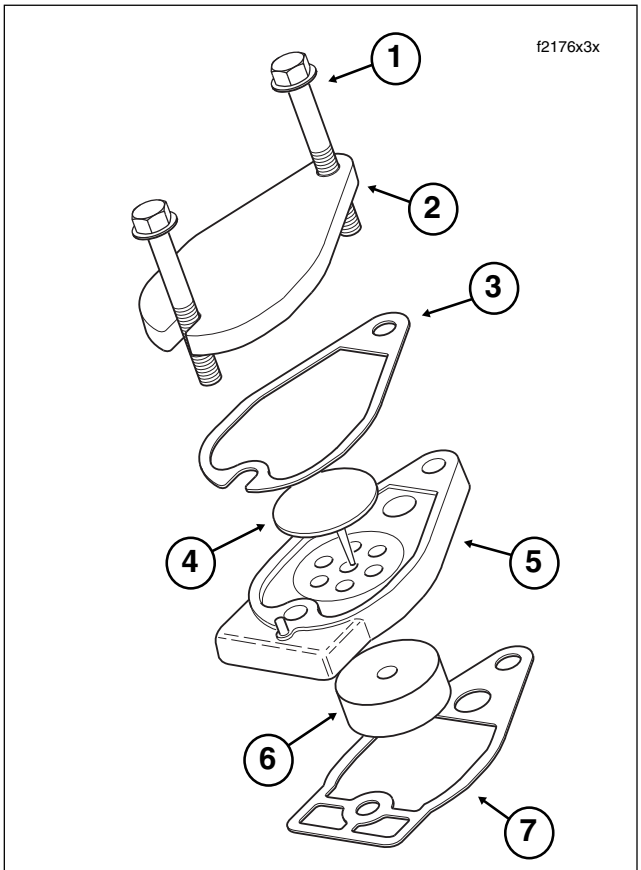

1. **Bolt**
2. **Breather Cover**
3. **Cover Gasket**
4. **Umbrella Valve**
5. **Breather Baffle**
6. **Filter Element**
7. **Breather Baffle Gasket**

Figure 3-57. Breather Assembly

3. Place breather baffle gasket on a clean flat surface. Aligning holes, place breather baffle, cover gasket and breather cover on top. Slide two screws through stackup to keep assembly together until time of installation.

Installation

1. See Section 3.9 TOP END OVERHAUL, ASSEMBLY, steps 33-39.

ROCKER ARM ASSEMBLY

Removal

1. See Section 3.9 TOP END OVERHAUL, DISASSEMBLY, steps 1-9.

Disassembly

1. Remove the four bolts from the rocker arm support plate. If necessary, slightly wiggle the two bolts on the push rod side (right) to disengage them from the notches in the rocker arm shafts.
2. Using a hammer and brass drift, tap left side of rocker arm shafts so that the notched ends exit the rocker arm support plate first. Mark the shafts so that they are installed in their original locations at time of assembly.
3. Remove the rocker arms from the rocker arm support plate. Mark the rocker arms to indicate location.

Cleaning and Inspection

1. Clean all parts in a non-volatile cleaning solution or solvent. Thoroughly dry with low pressure compressed air.
2. Check rocker arms for uneven wear or pitting where contact is made with the valve stem tips. Check for concave wear where rocker arms contact the push rod ends. Replace rocker arm if excessive wear is found at either location.
3. Verify that oil holes in rocker arms and rocker arm support plate are clean and open.
4. Inspect rocker arm shafts for scratches, burrs, scoring or excessive wear. Replace as necessary.

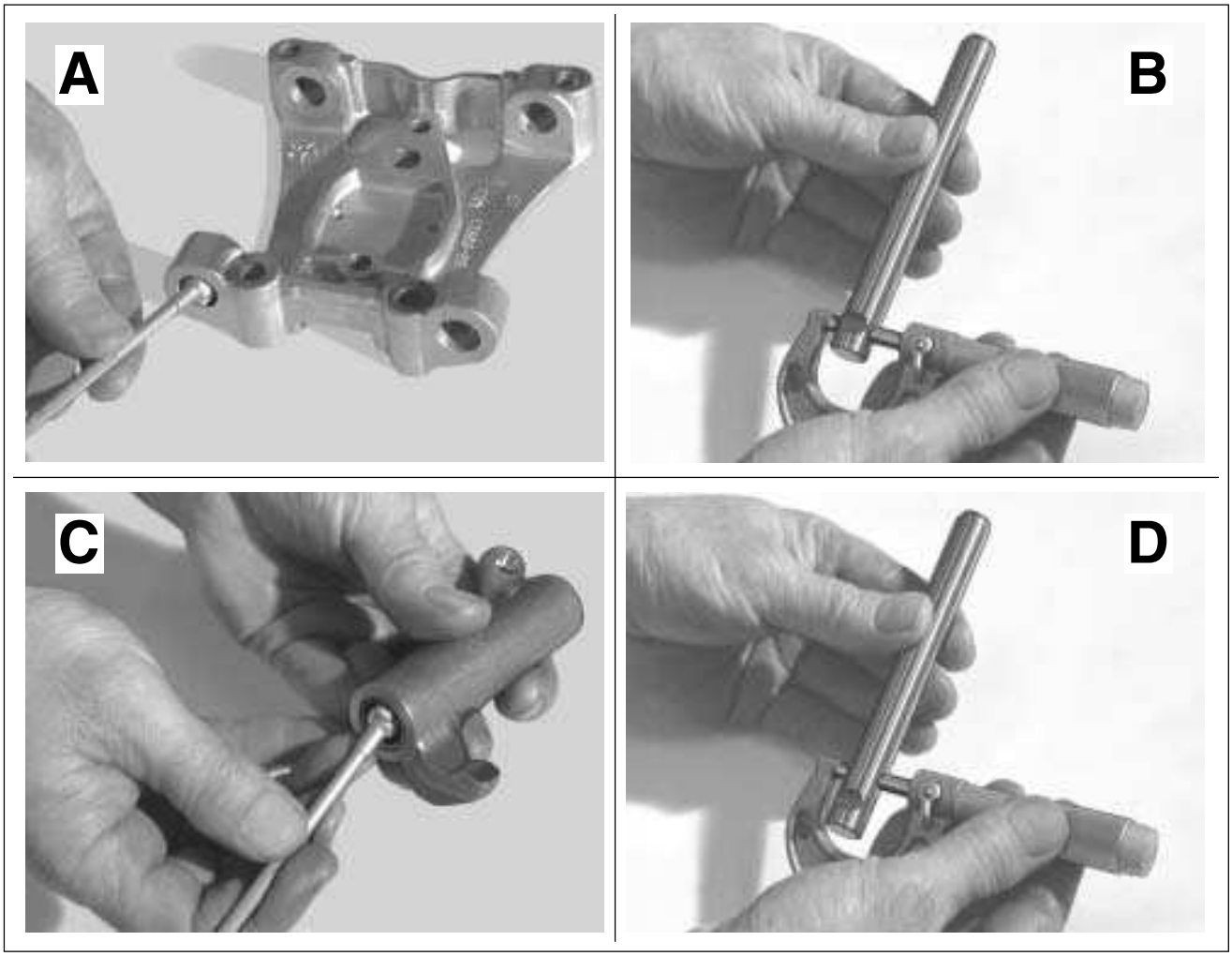

Figure 3-58. Measure Rocker Arm Assembly for Wear

5. Measure the inside diameter of the rocker arm support plate bore. See A of Figure 3-58. Measure the outside diameter of the rocker arm shaft where it fits in the bore. See B of Figure 3-58. Repeat the measurement on opposite side of support plate and shaft. Replace the shaft or support plate if any measurement equals or exceeds 0.0035 inch (0.089 mm).
6. Measure the inside diameter of the rocker arm bushing. See C of Figure 3-58. Measure the outside diameter of the rocker arm shaft where it rides in the bushing. See D of Figure 3-58. Repeat the measurement on opposite side of rocker arm and shaft. Replace the shaft or bushings if any measurement equals or exceeds 0.0035 inch (0.089 mm).
7. To replace rocker arm bushings, proceed as follows:

NOTE

Remove, install and ream one bushing at a time.

   a. Obtain a 9/16”-18 (14.29 mm) tap. Turn tap into bushing until tight. Place rocker arm under ram of arbor press with tap at bottom. Slide a discarded rocker arm shaft through open end of rocker arm until contact is made with tap. Using shaft as driver (and untapped bushing as pilot), press against shaft until both tap and bushing are free. See upper frame of Figure 3-59.
   b. Using a suitable driver, press **new** bushing into side of rocker arm until flush with casting. See center frame of Figure 3-59. Be sure to orient bushing so that split line faces top of rocker arm.

CAUTION

Never back reamer out of rocker arm or new bushing will be damaged.

   c. Lock rocker arm in a vise using brass jaw inserts or shop towels to prevent casting damage. Insert tapered end of ROCKER ARM BUSHING REAMER (HD-94804-57) into old bushing in rocker arm. Note that old bushing on drive side of reamer serves as pilot. See lower frame of Figure 3-59. Rotate reamer until new bushing on far side is reamed, and then continuing in the same direction, draw drive side of reamer from new bushing.
   d. Repeat steps 7(a) thru 7(c) to remove, install and ream second bushing.

Assembly

1. Place the rocker arms into position on the rocker arm support plate.
2. Push the un-notched ends of the rocker arm shafts into the right side of the support plate and then into the rocker arms. As they approach their fully installed positions, rotate the shafts so that the notches are aligned with the bolt holes in the support plate.

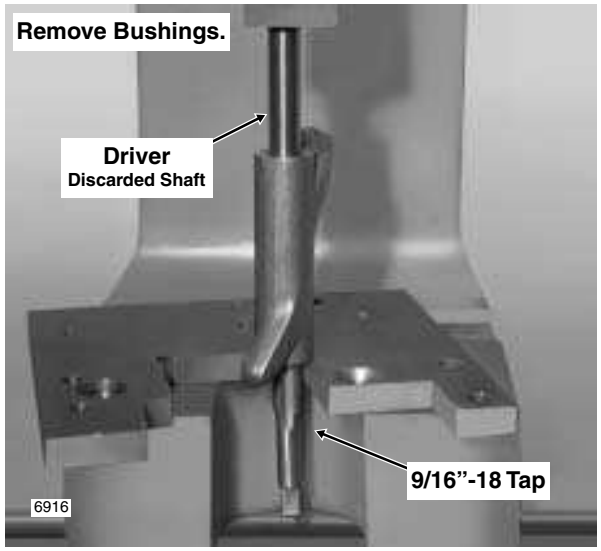

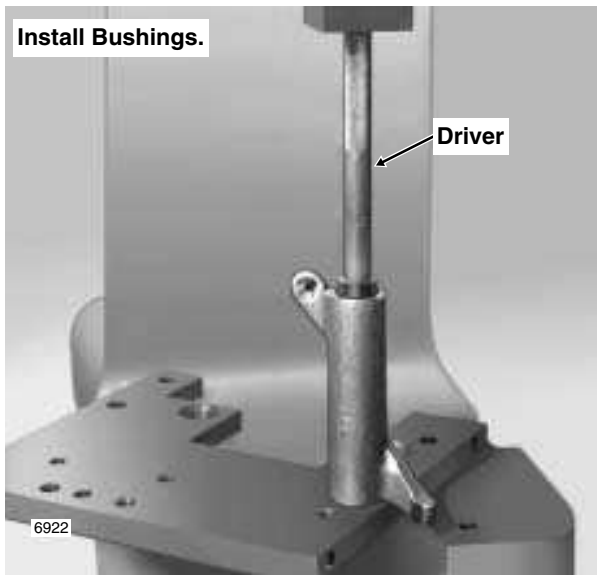

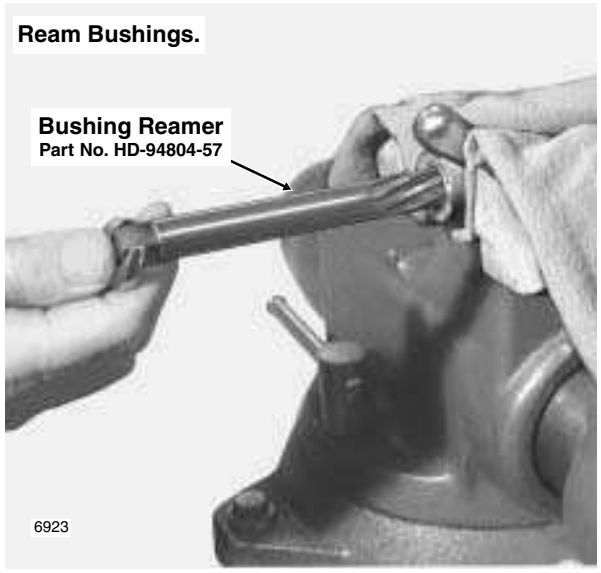

Figure 3-59. Replace Rocker Arm Bushings

3. To check for proper end play, insert a feeler gauge between the rocker arm and support plate. See Figure 3-60. Repeat measurement on other rocker arm. Replace the rocker arm, rocker arm support plate, or both if end play exceeds 0.025 inch (0.635 mm).
4. Install the four bolts in the rocker arm support plate. For proper assembly, remember that the two bolts on the push rod side (right) must engage the notches in the rocker arm shafts.

Figure 3-60. Check End Play

Installation

1. See Section 3.9 TOP END OVERHAUL, ASSEMBLY, steps 31-39.

PUSH RODS/LIFTERS/COVERS

Removal

1. See Section 3.9 TOP END OVERHAUL, DISASSEMBLY, steps 1-14.

Disassembly

1. With the exception of the lifter covers, all parts should have been disassembled and marked during the removal procedure. Disassemble the lifter covers as follows:

   a. Separate upper and lower push rod covers.

   b. Remove O-ring from seat at bottom of lower push rod cover. Discard O-ring.

   c. Remove O-ring from seat at top of upper push rod cover. Slide O-ring, flat washer, spring and spring cap from body of upper push rod cover. Discard O-rings.

Cleaning and Inspection

1. Scrape old gasket material from the lifter cover flange. Old gasket material left on mating surfaces will cause leaks.

2. With the exception of the hydraulic lifters, clean all parts in a non-volatile cleaning solution or solvent. Verify that the O-ring seats and contact surfaces of the push rod covers are completely clean.

3. Thoroughly dry all parts with low pressure compressed air. Verify that all oil holes are clean and open.

4. Verify that the hydraulic lifter rollers turn freely and are free of flat spots, scuff marks and pitting. If flat spots exist, examine the cam lobe on which the lifter operates.

5. Inspect the lifter socket for signs of wear. Verify that the plunger of the hydraulic lifter is fully extended up against the C-clip. Use index finger to pump plunger to verify lifter operation.

6. Examine the push rods. Replace any push rods that are bent, dented, broken or discolored. Replace the rod if the ball ends show signs of excessive wear or damage.

7. Cover all parts with a clean plastic sheet to protect them from dust and dirt.

Assembly

1. With the exception of the lifter covers, all parts will be assembled during the installation procedure. Assemble the lifter covers as follows:

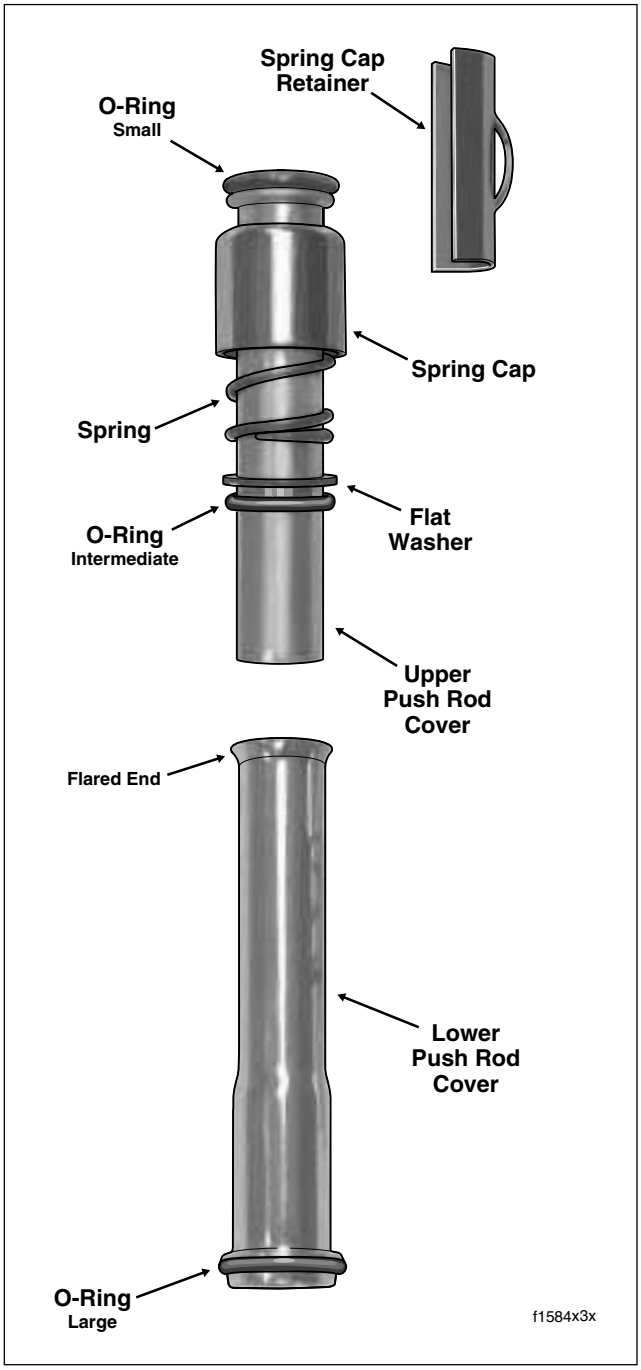

Figure 3-61. Push Rod Cover Assembly

CAUTION

O-rings that are missing, distorted, pinched or otherwise damaged will result in either oil leakage or low oil pressure. Use of the wrong O-ring will have the same results. Since many O-rings are similar in size and appearance, always use new O-rings keeping them packaged until use to avoid confusion.

a. Obtain three **new** o-rings- small, intermediate and large.

b. Install small O-ring on seat at the top of the upper push rod cover.

NOTE

Apply a very thin film of clean H-D 20W50 engine oil to O-rings before installation.

c. Slide the spring cap, spring, flat washer and intermediate size O-ring onto the body of the upper push rod cover. Move parts up body until spring cap contacts upper O-ring seat.

d. Fit the straight end of the upper push rod cover into the flared end of the lower push rod cover.

e. Install large O-ring on seat at bottom of lower push rod cover.

Installation

1. See Section 3.9 TOP END OVERHAUL, ASSEMBLY, steps 25-39.

NOTES

Legend:

1. Tapered Keepers
2. Spring Retainer
3. Valve Spring
4. Spring Seat/Valve Stem Seal
5. Lock Ring
6. Valve Guide
7. Cylinder Head Bolt
8. Cylinder Head Bolt
9. Cylinder Head
10. Valve Seat
11. Valve
12. Cylinder Head Gasket
13. Cylinder
14. Ring Dowel
15. O-Ring Seal
16. Cylinder Stud
17. Piston
18. Piston Pin
19. Circlip
20. Top Compression Ring
21. Second Compression Ring
22. Oil Rail
23. Oil Rail Spacer

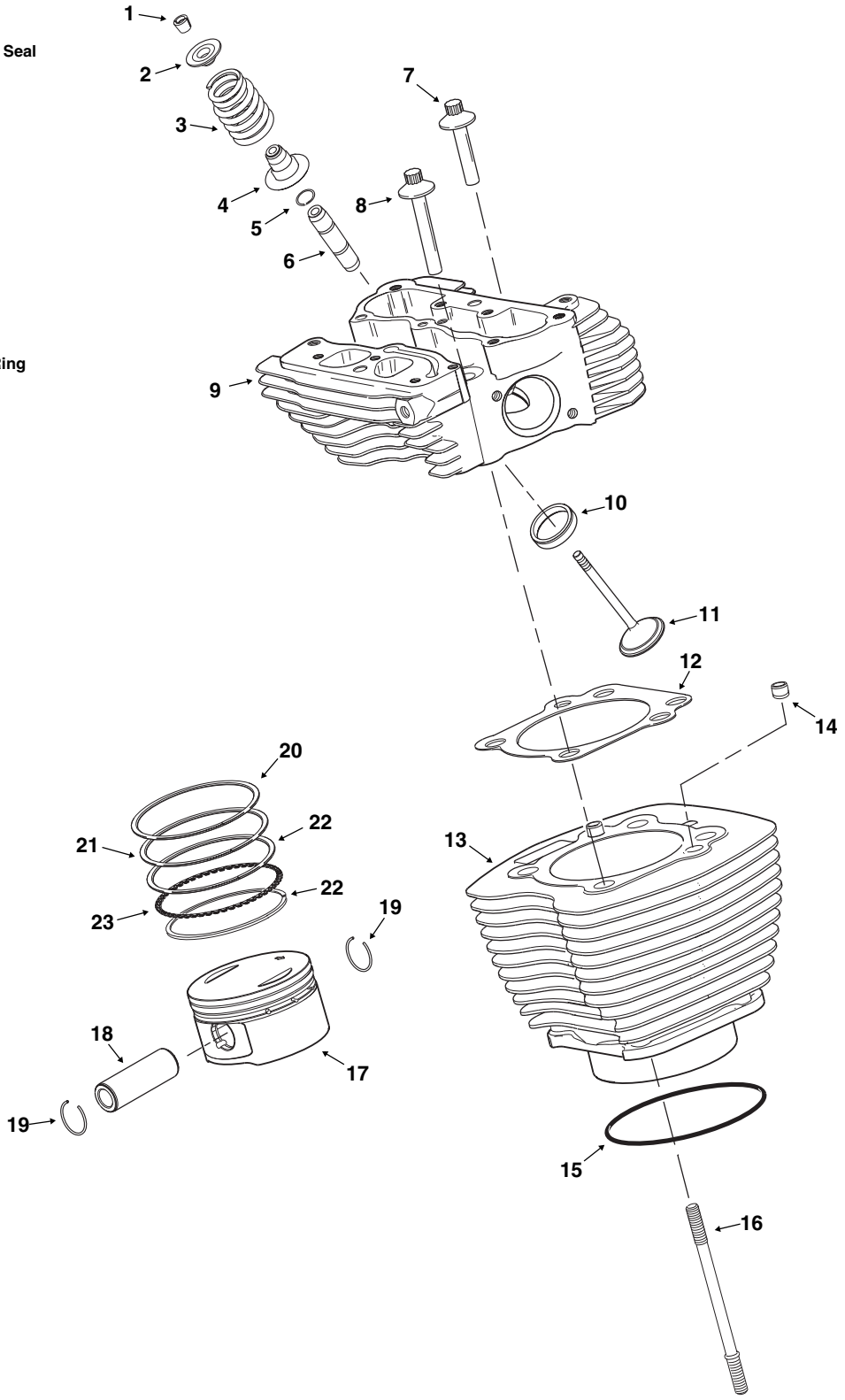

f2412x3x

Figure 3-62. Cylinder Head/Cylinder/Piston Assemblies (Exploded View)

CYLINDER HEAD

Removal

1. See Section 3.9 TOP END OVERHAUL, DISASSEMBLY, steps 1-11 and 15-19.

Disassembly

1. Before proceeding with the disassembly procedure, determine if cylinder head reconditioning is necessary. Proceed as follows:
   a. Raise valve ports of cylinder head to strong light source. If light is visible around edges of seats, then move to step 2 to recondition cylinder head.
   b. Fill ports at top of cylinder head with solvent. Wait ten full seconds and then check for leakage into combustion chamber. If solvent leakage into combustion chamber is evident, then move to step 2 to recondition cylinder head.

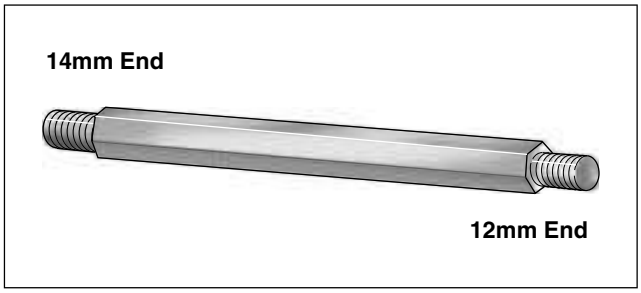

Figure 3-63. Cylinder Head Holding Fixture (Part No. HD-39786)

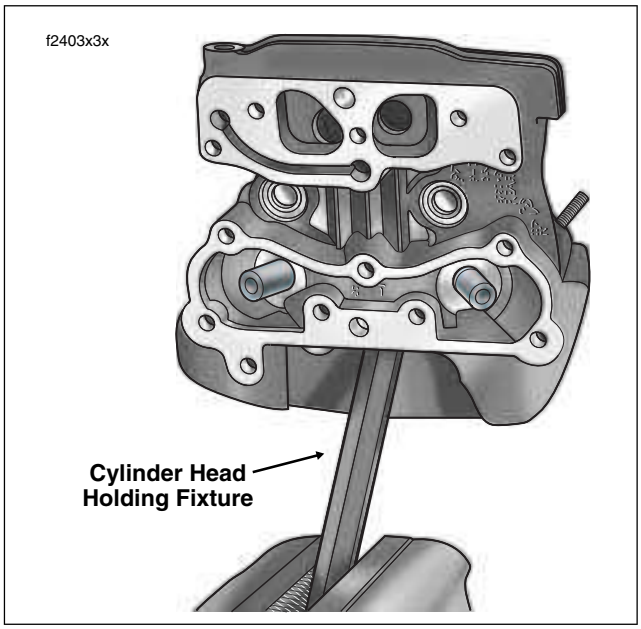

Figure 3-64. Install Cylinder Head Holding Fixture in Vise

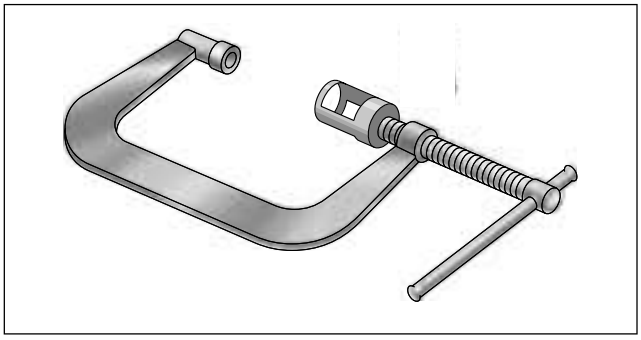

Figure 3-65. Valve Spring Compressor (Part No. HD-34736B)

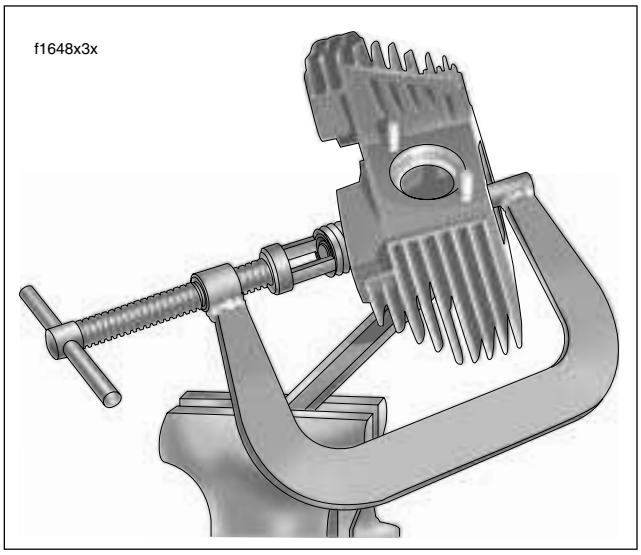

Figure 3-66. Compress Valve Springs

2. Obtain the CYLINDER HEAD HOLDING FIXTURE (HD-39786) and proceed as follows:
   a. Note that both ends of the fixture are threaded, one end at 14mm and the other at 12mm. Thread the 12mm end of the tool into the spark plug hole of the cylinder head.
   b. Clamp tool in vise at a 45 degree angle (or one that offers a comfortable working position). See Figure 3-64.
3. Obtain the VALVE SPRING COMPRESSOR (HD-34736B) and proceed as follows:
   a. Place tool over cylinder head so that the blunt end is centered on the valve head and adapter at end of forcing screw is seated on the valve spring retainer. See Figure 3-66.
   b. Rotate forcing screw to compress valve spring.
   c. If spring retainer has not broken free of tapered keepers, give head of tool a sharp tap with a soft mallet. Using magnetic rod or small screwdriver, remove the keepers from the valve stem groove.

d. Rotate forcing screw to release the valve spring compression.

4. Remove the spring retainer and valve spring.

5. Slide the valve from the valve guide.

6. Twist and remove the valve stem seal/spring seat from the top of the valve guide. Discard the valve stem seal/spring seat.

7. Mark the bottom of the valve “F(ront)” or “R(ear)” to indicate the cylinder head from which it was removed. Also, separate and tag the tapered keepers, valve spring and spring retainer so that they are installed on the same valve at time of assembly.

8. Repeat steps 3-7 to remove the other valve components.

9. Release the cylinder head holding fixture from the vise and then remove the tool from the spark plug hole.

Cleaning and Inspection

Cleaning

1. Remove old gasket material from cylinder head. Gasket material left on sealing surfaces will cause leaks.

2. Remove all carbon deposits from combustion chamber and machined surfaces of cylinder head. Exercise caution to avoid removing any metal material. For best results, use an air tool with a **worn** wire brush. Scraping may result in scratches or nicks.

3. To soften stubborn deposits, soak the cylinder head in a chemical solution, such as GUNK HYDRO-SEAL or other carbon and gum dissolving agent. Repeat step 2 as necessary.

CAUTION

Do not use glass or sand to bead blast surfaces exposed to the engine oil. Bead blasting materials become lodged in the pores of the casting where they cannot be removed through ordinary cleaning methods. Only after the engine is put into use will heat expansion cause this material to be released, and the resulting oil contamination will accelerate wear and lead to engine failure. If bead blasting must be employed, use wallnut shells or other soft non-damaging abrasive that can be digested in the engine oil.

CAUTION

Be aware that bead blasting materials may also enter threaded holes adversely affecting fastener engagement and torque indication. Carefully cover all threaded holes if bead blasting is employed.

4. Thoroughly clean the cylinder head, spring retainers, tapered keepers, valves and valve springs in a non-volatile cleaning solution or solvent. Follow up with a thorough wash in hot soapy water. Blow dry with compressed air.

Inspection

Cylinder Head

1. Check for scratches and nicks on all gasket sealing surfaces.

2. With the combustion chamber side facing upward, set a straightedge diagonally across the length of the cylinder head intersecting the upper and lower corners of the gasket surface. Slide a feeler gauge beneath the straightedge to check the head for warpage. Checking the opposite diagonal, repeat the procedure to verify that the gasket surface is flat (especially if a head gasket was blown). Discard the head if any low spot is 0.006 inch (0.15 mm) or greater.

NOTE

For good results, use one of the CYLINDER TORQUE PLATES (HD-42324A) in lieu of the straightedge. Lay the upper plate flat on the machined surface of the head. As a preliminary check, see if the plate rocks from side to side. A head on which the plate rocks is immediately suspect. Insert a feeler gauge between the plate and head at various locations to see if warpage exceeds above specification.

3. Verify that oil passageways are open and clean.

Valve Guides

1. Inspect external surfaces for cracks (particularly the combustion chamber side). Replace the guide if any cracks are found.

2. To verify cleanliness of valve guides, lightly hone bore using the VALVE GUIDE HONE (B-45525) and then scrub with the VALVE GUIDE CLEANING BRUSH (HD-34751) to remove any dust or debris. Polish the valve stem with fine emery cloth or steel wool to remove carbon buildup, and then check valve stem to guide clearance as follows:

   Carefully measure the inside diameter of the valve guide using an inside ball micrometer. Measure the outside diameter of the valve stem with an outside micrometer. The valve stem and/or guide are excessively worn if the clearance exceeds the limits shown in Table 3-5. Repeat measurements with a new valve to determine if the guide must be replaced.

Table 3-5. Service Wear Limits

Valve	Valve Stem to Guide Clearance
Intake	0.0038 inch (0.0965 mm)
Exhaust	0.0038 inch (0.0965 mm)

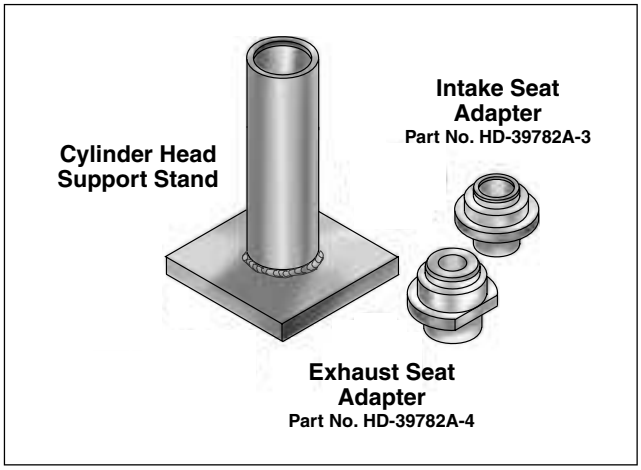

Figure 3-67. Cylinder Head Support Stand (Part No. HD-39782A)

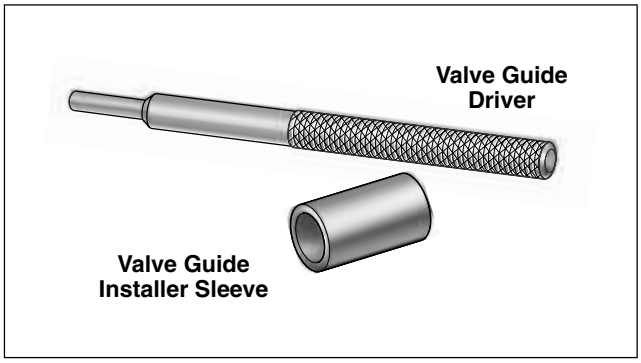

Figure 3-68. Valve Guide Driver (Part No. B-45524-1) and Valve Guide Installer Sleeve (Part No. B-45524-2A)

Valves

1. Replace the valve if there is evidence of burning or cracking.
2. Inspect the end of the valve stem for pitting or uneven wear. Replace the valve if either of these conditions are found.
3. Inspect for burrs around the valve stem keeper groove. Remove burrs with a fine tooth file if found.
4. To determine if the valve stem is excessively worn, see INSPECTION, VALVE GUIDES, step 2.

Valve Springs

1. Inspect springs for broken or discolored coils. Replace springs if either of these conditions are found.
2. Set the intake and exhaust valve springs on a level surface and use a straightedge to check for proper squareness and height.
3. Check free length of springs using a dial vernier caliper or load test with the VALVE SPRING TESTER (HD-96796-47). Replace springs if free length or compression force do not meet specifications. See Section 3.1 SPECIFICATIONS.

Tapered Keepers

1. Inspect parts for damage or rust pits. Replace as necessary.
2. Inspect inboard side of tapered keepers for excessive wear. Upraised center must be pronounced and fit snugly in valve stem groove. Place keepers into groove and verify that they grip tightly without sliding.

Valve Seats

1. Inspect seats for cracking, chipping or burning. Replace seats if any evidence of these conditions are found.
2. Check seats for recession by measuring valve stem protrusion. See VALVE AND SEAT REFACING in this section, steps 5-6.

VALVE GUIDE REPLACEMENT

Removal

NOTE

If valve guide replacement is necessary, always install new guide before refacing valve seat.

1. Obtain the CYLINDER HEAD SUPPORT STAND (HD-39782A) and proceed as follows:
   a. Insert sleeve of intake or exhaust seat adapter into tube at top of support stand. See Figure 3-67.
   b. Position cylinder head so that valve seat is centered on seat adapter. Support stand ensures that valve guide and seat are perpendicular. If perpendicularity is not achieved, the cylinder head valve guide bore will be damaged during the press procedure.

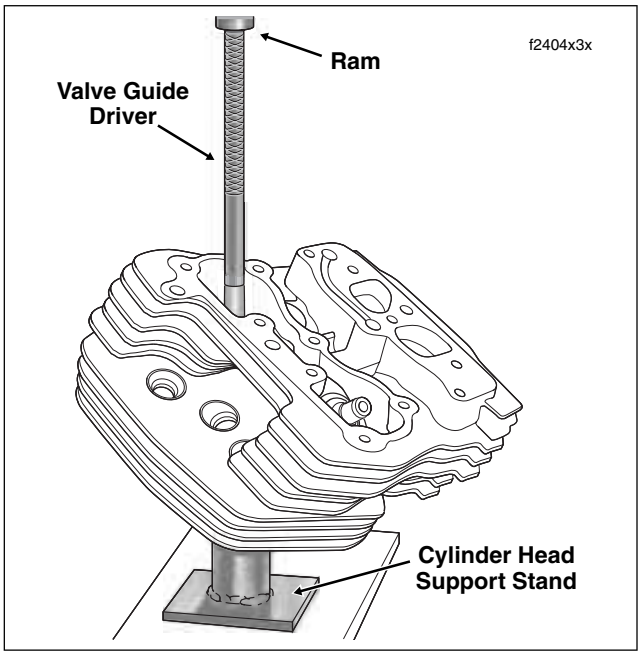

Figure 3-69. Remove Valve Guide

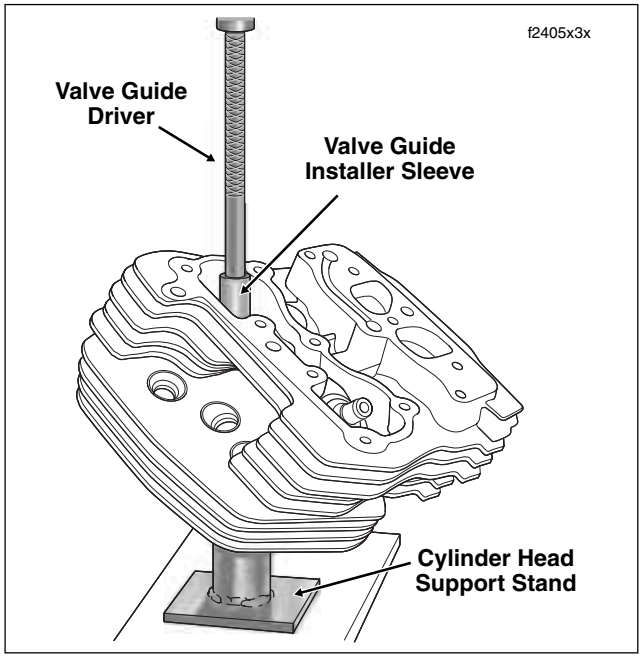

Figure 3-70. Install Valve Guide

CAUTION

Do not press out the valve guide from the bottom of the cylinder head. Carbon buildup on the combustion chamber side of the guide can deeply gouge the cylinder head bore diminishing the likelihood of achieving the proper interference fit and possibly requiring replacement of the cylinder head casting.

2. Remove lock ring from valve guide groove. Discard lock ring.

NOTE

Lock ring is present on both OEM intake and exhaust valve guides.

3. At the top of the cylinder head, insert VALVE GUIDE DRIVER (B-45524-1) into valve guide bore until stopped by shoulder.
4. Center valve guide driver under ram of arbor press. Apply pressure until valve guide drops free of cylinder head. Discard the valve guide. See Figure 3-69.

Installation

1. Measure the outside diameter of a **new** standard valve guide, and then measure the cylinder head valve guide bore. The valve guide should be 0.0020-0.0033 inch (0.051-0.084 mm) larger than the bore.

   If clearance is not within specification, then select one of the following oversize guides - 0.001 inch (0.025 mm), 0.002 inch (0.05 mm) or 0.003 inch (0.08 mm).

NOTE

Since some material is typically removed when the guide is pressed out, it is normal to go to the next larger size for the proper interference fit.

2. Measure cylinder head bore and outside diameter of selected oversize guide to verify correct interference fit.
3. Obtain the CYLINDER HEAD SUPPORT STAND (HD-39782A), VALVE GUIDE DRIVER (B-45524-1) and VALVE GUIDE INSTALLER SLEEVE (B-45524-2A). Proceed as follows:
   a. Insert sleeve of intake or exhaust seat adapter into tube at top of support stand. Position cylinder head so that valve seat is centered on seat adapter. Support stand ensures that valve guide and seat are perpendicular. If perpendicularity is not achieved, cylinder head valve guide bore will be damaged during the press procedure.
   b. Apply Vaseline to lightly lubricate external surfaces of valve guide. Spread lubricant so that thin film covers entire surface area.
   c. At top of cylinder head, start valve guide into bore.
   d. Place installer sleeve over valve guide, and then insert tapered end of valve guide driver into sleeve.
   e. Center valve guide driver under ram of arbor press and apply pressure only until valve guide is started in bore and then back off ram slightly to allow guide to center itself. See Figure 3-70.

CAUTION

Always back off ram to allow the valve guide to find center. Pressing guide into cylinder head in one stroke can bend driver, break guide, distort cylinder head casting and/or damage cylinder head valve guide bore.

   f. Verify that support stand and driver are square. Center driver under ram and press valve guide further into bore, but then back off ram again to allow valve guide to find center.
   g. Repeat step 3(f) and then apply pressure to driver until installer sleeve contacts machined area of cylinder head.
   h. Install **new** lock ring into valve guide groove. Verify that lock ring is square and fully seated in the groove.
4. Obtain the CYLINDER HEAD HOLDING FIXTURE (HD-39786) and proceed as follows:
   a. Thread the 12mm end of the tool into the spark plug hole of the cylinder head.
   b. Clamp tool in vise at a 45 degree angle (or one that offers a comfortable working position).

NOTE

Valve guides must be reamed to within 0.0005 - 0.0001 inch (0.013 - 0.0025 mm) of finished size.

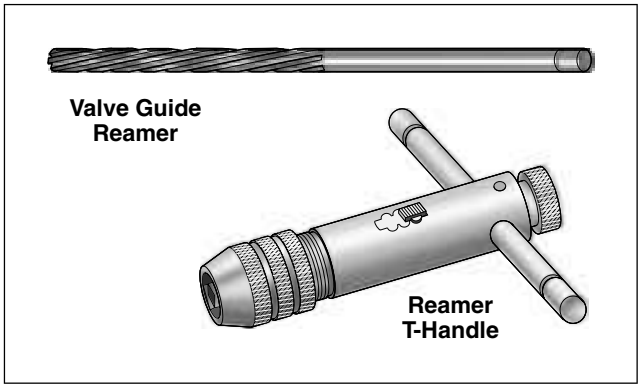

Figure 3-71. Valve Guide Reamer (Part No. B-45523) and Reamer T-Handle (Part No. HD-39847)

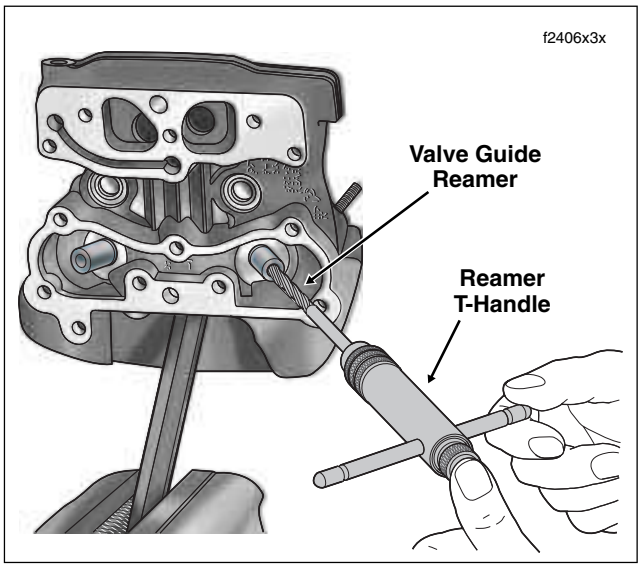

Figure 3-72. Ream Valve Guide Bore

5. Obtain the VALVE GUIDE REAMER (B-45523), REAMER T-HANDLE (HD-39847) and REAMER LUBRICANT (HD-39964). Proceed as follows:
   a. Install T-handle on reamer.
   b. Apply a liberal amount of reamer lubricant to valve guide bore and bit of reamer. Start bit of reamer into bore at top of cylinder head.
   c. Placing thumb on drive socket of reamer T-handle, apply slight pressure on reamer while rotating in a clockwise direction. See Figure 3-72. Squirt additional lubricant onto reamer and into guide as necessary.

CAUTION

For best results, do not push on reamer or apply pressure to the reamer handle. While excessive pressure results in a rough cut, bore will be tapered if pressure is not centrally applied.

   d. Continue rotating reamer T-handle until entire bit has passed through valve guide bore and shank of reamer rotates freely.

CAUTION

Never back reamer out of valve guide or bore will be damaged.

   e. Remove T-handle from reamer, and carefully pulling on bit, draw shaft of reamer out combustion chamber side of valve guide.

CAUTION

Abrasive particles can damage machined surfaces and plug oil passageways possibly resulting in engine failure.

6. Direct compressed air into the valve guide bore to remove any metal shavings or debris.
7. Clean valve guide bore with the VALVE GUIDE CLEANING BRUSH (HD-34751).
8. Obtain the VALVE GUIDE HONE (B-45525) and REAMER LUBRICANT (HD-39964). Proceed as follows:

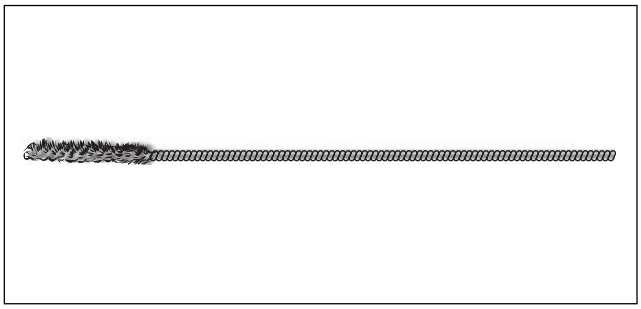

Figure 3-73. Valve Guide Hone (Part No. B-45525)

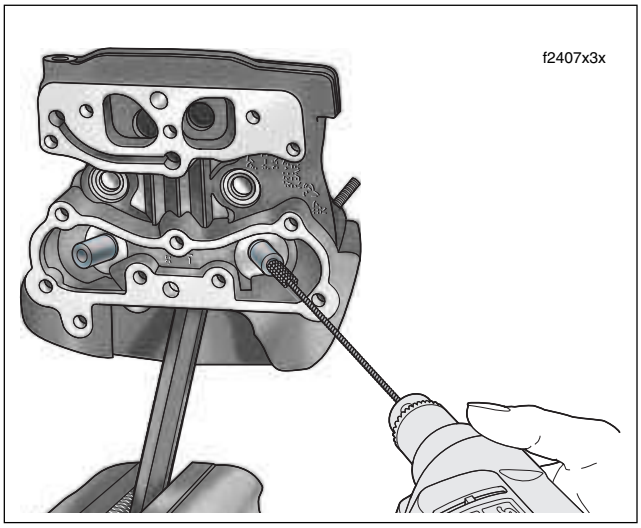

Figure 3-74. Hone Valve Guide Bore

a. Install hone in a high speed electric drill.

b. Apply reamer lubricant to finishing stones of hone and valve guide bore.

c. Start finishing stones of hone into bore.

d. Activating the drill, move the entire length of the finishing stone arrangement forward and backward through the bore for 10 to 12 complete strokes. See Figure 3-74. Work for a crosshatch pattern of approximately 60˚.

CAUTION

Abrasive particles can damage machined surfaces and plug oil passageways possibly resulting in engine failure.

9. Direct compressed air into the valve guide bore to remove any debris and then clean with the VALVE GUIDE CLEANING BRUSH (HD-34751). See Figure 3-76.

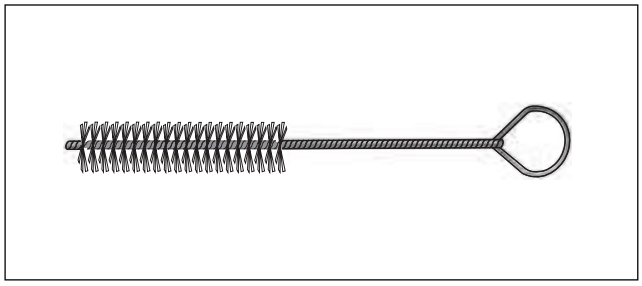

Figure 3-75. Valve Guide Brush (Part No. HD-34751)

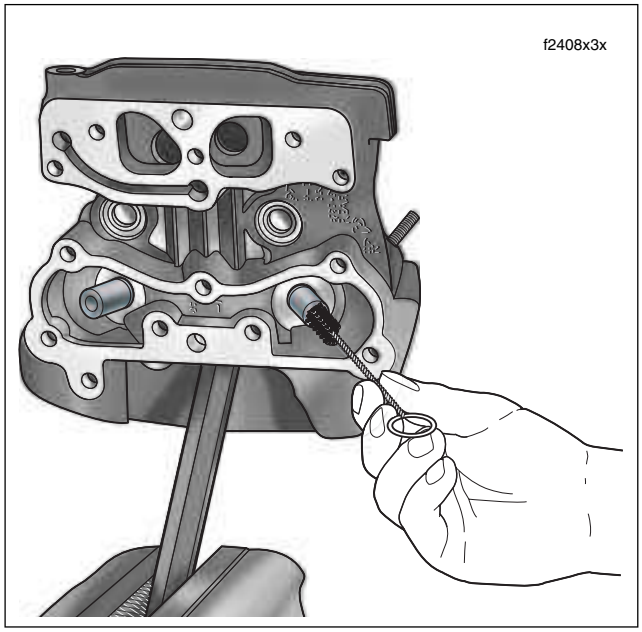

Figure 3-76. Scrub Valve Guide Bore

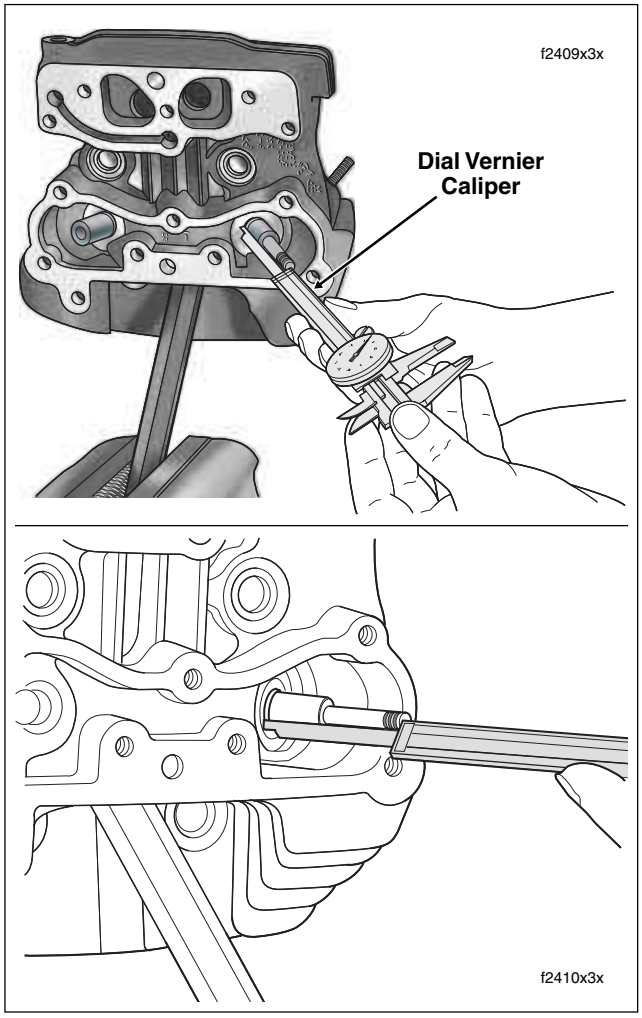

Figure 3-77. Measure Valve Stem Protrusion

NOTE

Always verify valve stem to valve guide clearance after honing, since a worn reamer may cut the bore undersize.

10. Measure the inside diameter of the valve guide with an inside ball micrometer. Measure the outside diameter of the valve stem with an outside micrometer. The valve stem may be excessively worn or the valve guide bore undercut if the clearance is not within the limits (low end preferable) shown in Table 3-6.

Table 3-6. New Parts Limits

Valve	Valve Stem to Guide Clearance
Intake	0.001 - 0.003 inch (0.0254-0.0762 mm)
Exhaust	0.001 - 0.003 inch (0.0254-0.0762 mm)

11. Using cleaning solvent, thoroughly clean cylinder head and valve guide bore. Scrub valve guide bore with the VALVE GUIDE CLEANING BRUSH (HD-34751). For best results, use a thin engine oil and clean valve guide

bore with the type of swabs or patches found in gun cleaning kits. Continue to wipe bore until clean cloth shows no evidence of dirt or debris. Follow up with a thorough wash in hot soapy water. Blow dry with compressed air.

VALVE AND SEAT REFACING

NOTE

Verify correct valve stem to valve guide clearance before refacing. See Table 3-6. If new guides must be installed, complete that task before refacing valves and seats.

1. Hold the valve firmly against a wire wheel in a bench grinder. Remove all carbon deposits from the valve head, face and stem, but exercise caution to avoid removing any metal. Carbon left on the stem may affect alignment in the valve refacer. Polish the valve stem with steel wool or crocus cloth to remove any marks that might be left by the wire wheel.
2. Install valve (both intake and exhaust) in a valve refacer set to a 45 degree angle. The valve refacer is required equipment, since accuracy in matching the angle of the valve face with the angle of the valve seat is critical.

   Do not remove any more metal than is necessary to clean up and true the valve face. Removing metal reduces the service life of the valve. The amount of grinding needed to retrue the valve is a clear indication of its condition. Discard the valve if it cannot be quickly refaced while maintaining a good margin. Valves that do not clean up quickly are either warped, excessively worn or too deeply pitted to be used.

   Obtain a **new** valve if grinding leaves the margin less than 0.0313 inch (0.795 mm). A valve in this condition does not seat normally, burns easily and may crack or cause pre-ignition.
3. Obtain the CYLINDER HEAD HOLDING FIXTURE (HD-39786) and proceed as follows:
   a. Thread the 12mm end of the tool into the spark plug hole of the cylinder head.
   b. Clamp tool in vise at a 45 degree angle (or one that offers a comfortable working position).
4. Obtain the NEWAY VALVE SEAT CUTTER SET (HD-35758A) and cut valve seat angle to 46°.

NOTE

Do not remove any more metal than is necessary to clean up the seat (that is, to provide a uniform finish and remove pitting).

5. From the bottom of the cylinder head, insert the valve stem into the valve guide. Push on bottom of valve until it contacts the valve seat.
6. Placing finger at bottom of valve to keep valve seated, use a dial vernier caliper to check the distance from the top of the valve stem to the machined area on the cylinder head. See Figure 3-77.

   Seat wear and valve refacing causes the valve stem protrusion to change. If protrusion exceeds 2.069 inches (52.55 mm), then replace the valve seat or cylinder head.

CAUTION

Do not shorten the valve by grinding on the end of the stem. Grinding replaces the hardened case with mild steel which results in accelerated wear.

7. Remove valve from cylinder head. Apply magic marker or similar product to valve seat and allow to thoroughly dry.
8. Insert the valve stem into the valve guide. Push on bottom of valve until it contacts the valve seat.
9. Obtain the VALVE LAPPING TOOL (HD-96550-36A) and proceed as follows:
   a. Attach suction cup at end of tool to valve head.

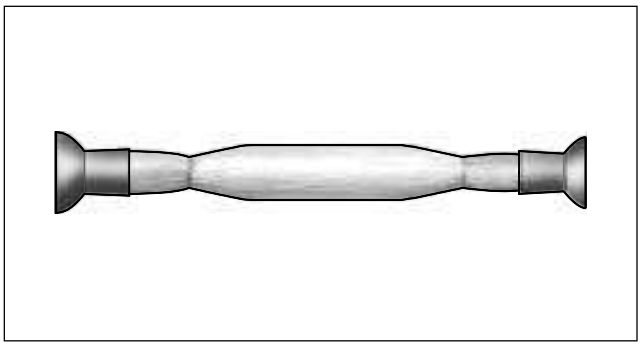

Figure 3-78. Valve Lapping Tool (Part No. HD-96550-36A)

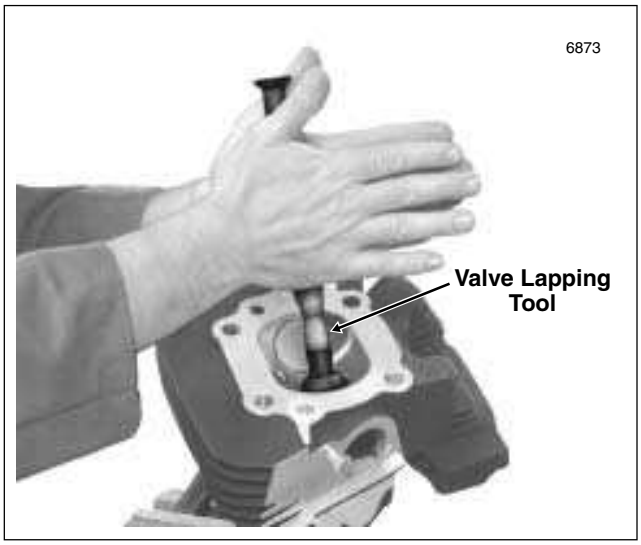

Figure 3-79. Oscillate Tool to Create Contact Area

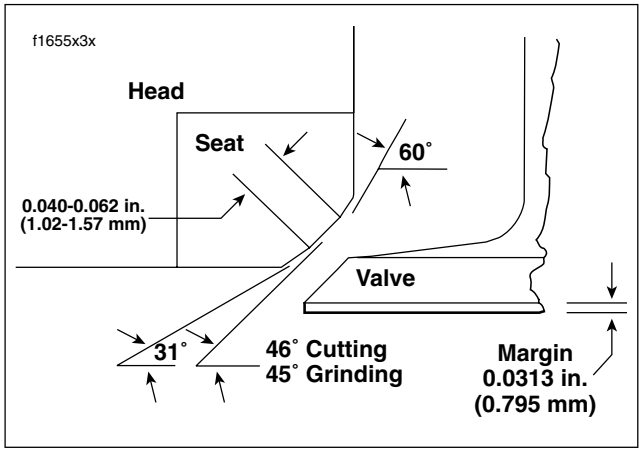

Figure 3-80. Valve Seat Angles

b. Holding shank of tool between the palms of both hands, oscillate the tool back and forth a few times. See Figure 3-79.

10. Remove the valve from the cylinder head and carefully inspect the mating surfaces under a good light.

    Inspection of the valve seat should show an unbroken contact area of uniform width. If the seat is not concentric with the valve guide, then the cutter will remove more material in one spot than another. Carbon deposits may have caused the guide to be pressed in crooked, the guide may be cracked, or the cutter blade or cutter pilot have not have been properly cleaned.

NOTE

If the results are not acceptable, then recut the valve seat or replace the valve guide.

11. Inspect the contact pattern on the valve seat to be sure area is 0.040-0.062 inch (1.02-1.57 mm) wide and contacts the valve two-thirds of the way towards the outer edge of the valve face. See Figure 3-80. If necessary, modify the seat pattern as follows:
    a. Use the 31° angle cutter to lower the valve seat surface and reduce its width.
    b. Use the 60° angle cutter to raise the valve seat surface and reduce its width.
    c. Use the 46° angle cutter to widen the valve seat surface.
12. Using a magic marker, mark three equally spaced vertical lines across the valve face and then insert the valve back into the cylinder head.
13. Attach suction cup of VALVE LAPPING TOOL (HD-96550-36A) to valve head, and holding shank of tool between the palms of both hands, oscillate the tool back and forth a few times.
14. Remove the valve and perform a final inspection of the contact pattern. If necessary, return to step 11.
15. Remove the valve from the cylinder head. Use contact cleaner to thoroughly clean magic marker and/or dye from valve face and seat, if present.
16. Release the cylinder head holding fixture from the vise and then remove the tool from the spark plug hole.
17. To confirm quality of valve and seat refacing work, proceed as follows:
    a. Insert valve in guide, and holding valve to seat, raise port to strong light source. If light is visible around edge of seat, then valves and seats must be reconditioned.
    b. Holding valve to seat, fill port at top of cylinder head with solvent. Wait ten full seconds and then check for leakage into combustion chamber. If solvent leakage into combustion chamber is evident, then valves and seats must be reconditioned.
18. Clean valves, cylinder head and valve seats in solvent. Follow up with a thorough wash in hot soapy water. Blow dry with compressed air.

Assembly

1. Obtain the CYLINDER HEAD HOLDING FIXTURE (HD-39786) and proceed as follows:
    a. Thread the 12mm end of the tool into the spark plug hole of the cylinder head.
    b. Clamp tool in vise at a 45 degree angle (or one that offers a comfortable working position).

NOTE

At the time of disassembly, all parts should have been marked or tagged so that they are installed on the same valve (and in the same head).

2. Run the VALVE GUIDE CLEANING BRUSH (HD-34751) through the valve guide bore to verify cleanliness.
3. Using TORCO MPZ or another suitable product, apply a liberal amount of engine assembly lube to valve stem.
4. From the bottom of the cylinder head, insert the valve stem into the valve guide.
5. To distribute the assembly lube evenly around the valve stem and guide, hand spin the valve as it is installed. Work the valve back and forth in the bore to verify that it slides smoothly and seats properly.
6. Remove the valve and apply a second coat of assembly lube to the valve stem. Install the valve in the valve guide.

CAUTION

Failure to install plastic capsule will cause the valve stem seal to catch the edge of the valve stem keeper groove. The resulting damage will lead to leakage around the valve stem, excessive oil consumption and valve sticking.

7. Push on bottom of valve until it contacts the valve seat. Placing finger at bottom of valve to keep valve seated, slide plastic capsule over valve stem tip and keeper groove. See Figure 3-81.
8. Apply a very thin film of clean H-D 20W50 engine oil to capsule.
9. Obtain **new** valve stem seal and spring seat. Assemble parts as shown in Figure 3-82.
10. Slide valve stem seal/spring seat over capsule and down valve stem until contact is made with top of valve guide and machined area of cylinder head casting. Remove capsule from valve stem tip.

CAUTION

Removing the valve after seal installation will cause the valve stem seal to catch the edge of the valve stem keeper groove. The resulting damage will lead to leakage around the valve stem, excessive oil consumption and valve sticking.

11. Apply a liberal amount of assembly lube to valve stem tip and keeper groove.
12. With the smaller diameter coils topside, install the valve spring over the valve guide. Place the spring retainer on top of the valve spring.
13. Obtain the VALVE SPRING COMPRESSOR (HD-34736B) and proceed as follows:
    a. Place tool over cylinder head so that the blunt end is centered on the valve head and adapter at end of forcing screw is seated on the spring retainer.

CAUTION

Over-compressing the valve spring can damage the valve stem seal resulting in leakage around the valve stem, excessive oil consumption and valve sticking.

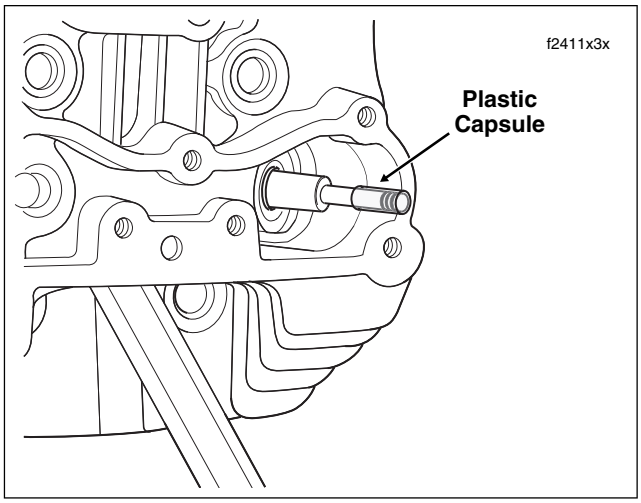

Figure 3-81. Lubricate Plastic Capsule

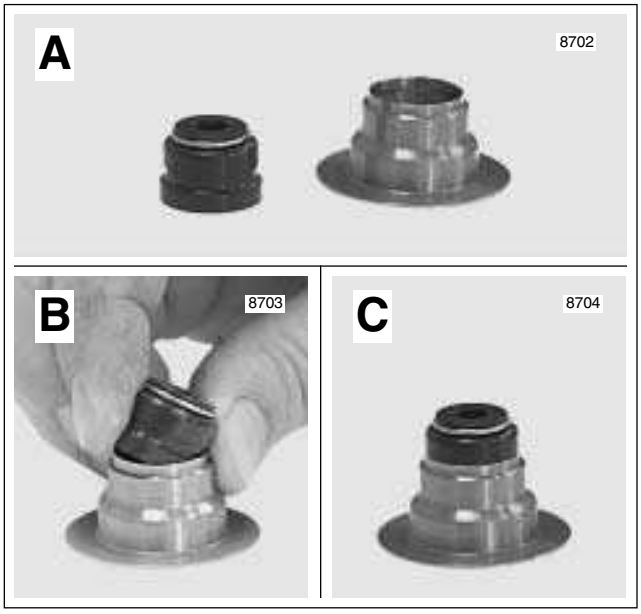

Figure 3-82. Valve Stem Seal/Spring Seat Assembly

    b. Rotate forcing screw to compress valve spring.
    c. With the tapered side down, fit the keepers into the valve stem groove. For best results, apply a dab of grease to the inboard side of the keepers before installation and use a magnetic rod for easy placement.
    d. Arranging tapered keepers so that the gaps are evenly spaced, turn forcing screw to release valve spring compression.
14. Tap the end of the valve stem once or twice with a soft mallet to ensure that tapered keepers are tightly seated in the valve stem groove.
15. Repeat steps 1-14 to install the other valve components.
16. Release the cylinder head holding fixture from the vise and then remove the tool from the spark plug hole.
17. Cover the cylinder head to protect it from dust and dirt until time of installation.

Installation

See Section 3.9 TOP END OVERHAUL, ASSEMBLY, steps 15-24 and 29-39.

CYLINDER

Removal

1. See Section 3.9 TOP END OVERHAUL, DISASSEMBLY, steps 1-11 and 15-24.

Cleaning and Inspection

CLEANING

1. Scrape old gasket material from the machined surface at the top of the cylinder. Old gasket material left on the mating surface will cause leaks.
2. Clean cylinder in a non-volatile cleaning solution or solvent. Thoroughly dry with low pressure compressed air. Verify that oil passageways are clean and open.
3. Inspect the cylinder bore for defects or damage in the ring travel area. Replace cylinders that are severely scored, scuffed, scratched, burnt or gouged.
4. Using Magnaflux Dye Penetrant, inspect the cylinder for cracks. If no cracks are found, thoroughly wash cylinder to remove traces of dye.
5. Use a file to carefully remove any nicks or burrs from the machined surfaces of the cylinder.
6. Using a feeler gauge and the CYLINDER TORQUE PLATES (HD-42324A), check the machined surfaces for flatness. Proceed as follows:
   a. Lay gasket side of the upper plate (without vise grip) flat against the head gasket surface.
   b. As a preliminary check, see if the plate rocks from side to side. A cylinder on which the plate rocks is immediately suspect.
   c. Insert a feeler gauge between the plate and cylinder at various locations.
   d. The head gasket surface must be flat within 0.006 inch (0.15 mm).
   e. Now turn the cylinder upside down and lay the seal side of the lower plate (with vise grip) flat against the O-ring seal surface. Repeat steps 6(b) and 6(c).
   f. The O-ring seal surface must be flat within 0.004 inch (0.102 mm).
   g. Replace the cylinder (and piston) if either surface is not within specification.

INSPECTION

CAUTION

Failure to use the cylinder torque plates can produce measurements that vary by as much as 0.001 inch (0.025 mm), possibly resulting in the use of parts that are not suitable for service.

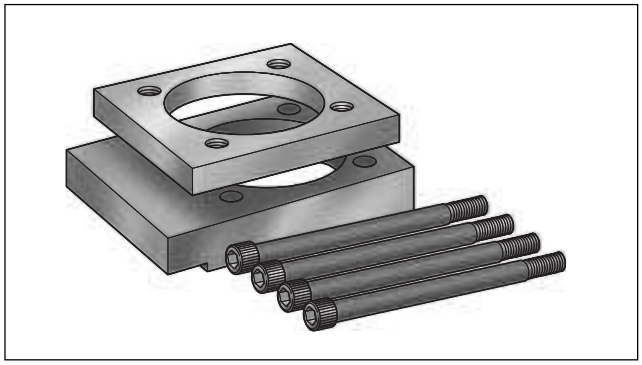

Figure 3-83. Cylinder Torque Plates (Part No. HD-42324A)

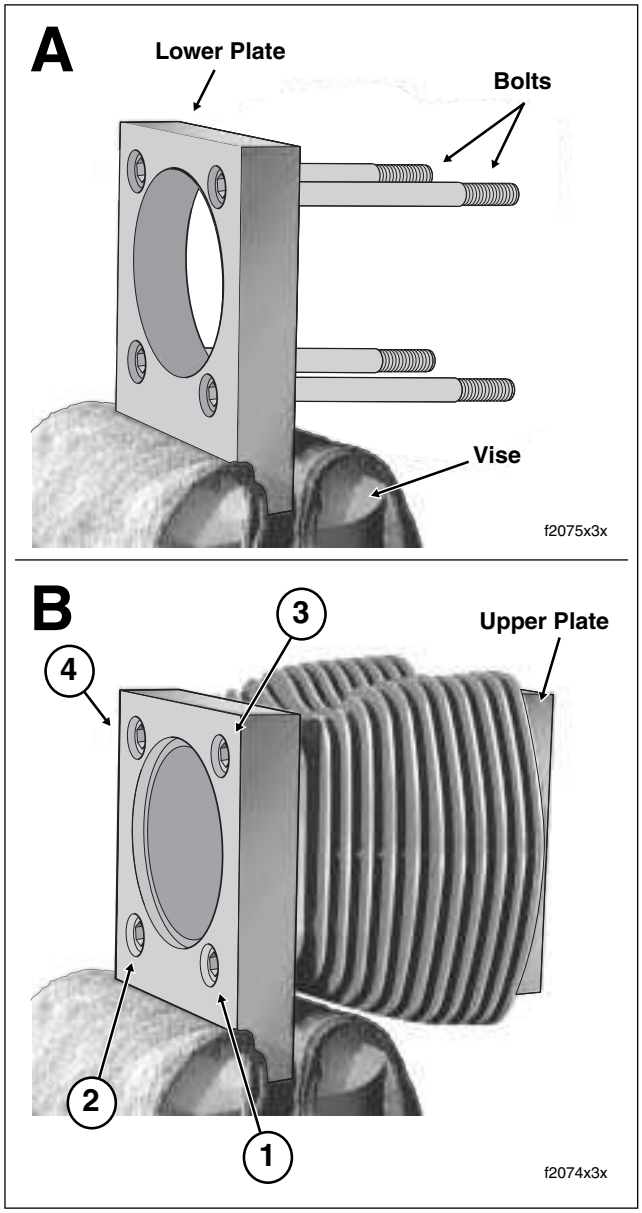

Figure 3-84. Install Cylinder to Torque Plates

1. To simulate an assembled cylinder for accurately measuring cylinder taper and out-of-round conditions, as well as for boring, honing or deglazing, obtain the CYLINDER TORQUE PLATES (HD-42324A). Install the torque plates as follows:

   a. Remove O-ring seal from cylinder sleeve, if installed.

   b. Place used head gasket over two ring dowels at top of cylinder.

   c. Install brass jaws or shop towels around teeth of vise to prevent damage to tool. Clamp stepped side of lower plate in vise with the simulated split line (machined strip) facing away.

   d. Lightly oil threads and shoulders of four bolts with clean H-D 20W50 engine oil. Slide bolts all the way through holes of lower plate. See A of Figure 3-84.

   e. Slide cylinder down bolts with the indent in the cooling fins facing upward.

   f. With the head gasket in place, align holes in upper plate with ends of bolts. Blind holes in upper plate accommodate ring dowels in cylinder. Alternately tighten four bolts into upper plate until finger tight.

   g. Tighten the bolts to 120-144 **in-lbs** (13.6-16.3 Nm) in the sequence shown in B of Figure 3-84.

   h. Following the same sequence, tighten each bolt to 15-17 ft-lbs (20.3-23.1 Nm).

   i. Using a grease pencil, mark a straight line on one of the bolts continuing the line over onto the lower plate. Repeat step for remaining three bolts. Using the marks as a guide, turn each bolt 1/4 turn or 90 degrees. Be sure to tighten the bolts in the sequence shown in B of Figure 3-84.

NOTE

For best results, obtain Snap-on® Torque Angle Gauge TA360.

   j. For purposes of inspection, remove the assembly from the vise and place on bench top.

2. See Figure 3-85. Using an inside micrometer or dial bore gauge, check cylinder bore for out-of round and taper. Proceed as follows:

   a. At the top of the piston ring travel zone (starting about 0.50 inch or 12.70 mm from the top of the cylinder), measure the cylinder diameter at two locations- parallel and perpendicular to the crankshaft. Write the readings down.

   b. Repeat the two measurements at the center of the piston ring travel zone.

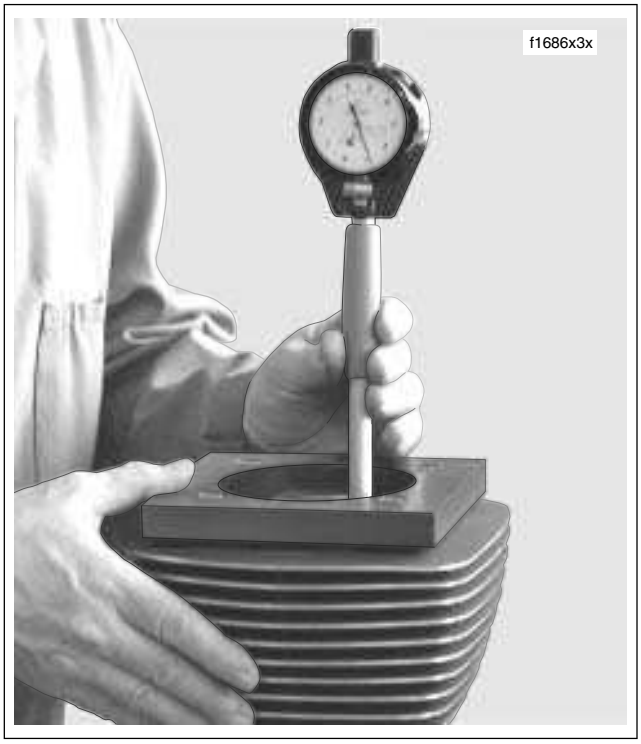

Figure 3-85. Measure for Out-of-Round and Taper

   c. Repeat the measurements again at the bottom of the bore at a point below the piston ring travel zone.

   d. Rebore the cylinder if the parallel and perpendicular measurements at either the top, middle or bottom of the bore vary by more than 0.002 inch (0.051 mm), which indicates an out-of-round condition.

   Rebore the cylinder if the top, middle and bottom bore diameters either parallel or perpendicular to the crankshaft vary by more than 0.002 inch (0.051 mm), which indicates excessive taper.

CAUTION

Maximum cylinder wear occurs at the very top of top ring travel. Minimum wear occurs below ring travel. Failure to measure the cylinder at these points may result in a faulty decision regarding the suitability of the cylinder for continued use.

3. If cylinders are not scuffed or scored, and are not worn beyond the service limits described under step 2(d), see DEGLAZING CYLINDER on the next page.

   On the other hand, if cylinders are worn beyond the service limits, then they must be rebored and/or honed to accept the next standard oversize piston. See BORING AND HONING CYLINDER on the next page.

DEGLAZING CYLINDER

NOTE

Deglazing removes wear patterns, minor scuff marks and scratches without enlarging the bore diameter.

1. Lightly swab the cylinder bore with a cloth dipped in clean engine oil.
2. Obtain a 240 grit flexible ball-type deglazing tool with a bristle tip or finishing stone arrangement able to produce a 60˚ cross hatch pattern.
3. Install the deglazing tool in a slow-speed drill. The speed at which the tool rotates determines the speed at which it must be stroked up and down the bore to produce the desired cross hatch pattern.
4. Starting at the bottom of the cylinder, move the deglazing tool up and down the entire length of the cylinder bore for 10 to 12 complete strokes.
5. Stop to examine the cylinder bore and/or take measurements. A precise 60˚ cross hatch pattern in the piston travel area is the most important.

CAUTION

The angular cross hatch pattern ensures an even flow of oil onto the cylinder walls and promotes longer cylinder, piston and ring life. An Improper crosshatch pattern will result in insufficient oil retention and possible piston seizure and/or high oil consumption.

CAUTION

Failure to remove all abrasive particles may result in premature cylinder, piston and ring wear and possible engine failure.

6. Thoroughly wash the cylinder bore with liquid dishwashing soap and warm water to remove all abrasive particles and residual grit. Continue cleaning until a clean cloth shows no evidence or dirt or debris.
7. Hot rinse the cylinder and dry with moisture free compressed air. Immediately apply a thin film of clean engine oil to prevent rusting.
8. With the cylinder at room temperature, check the piston clearance in the cylinder in which the piston will run. See PISTON, INSPECTION, step 5.

BORING AND HONING CYLINDER

1. Bore the cylinder to 0.003 inch (0.08 mm) under the desired finished size. See Table 3-7.

CAUTION

An improper crosshatch pattern or too fine a hone will result in insufficient oil retention and possible piston seizure and/or high oil consumption.

2. Hone the cylinder to its finished size using a 280 grit rigid hone.
3. Stop frequently to examine the cylinder bore and/or take measurements. Remember, a precise 60˚ cross hatch pattern in the piston travel area is important.
4. Thoroughly wash the cylinder bore with liquid dishwashing soap and warm water to remove all abrasive particles and residual grit. Continue cleaning until a clean cloth shows no evidence or dirt or debris.

Table 3-7. Oversize Pistons

Piston	Cylinder Bore Finished Size
Standard	3.7500 - 3.7505 in. (95.250 - 95.263 mm)
0.005 In. (0.13 mm) **Oversize**	3.7550 - 3.7555 in. (95.377 - 95.390 mm)
0.010 In. (0.25 mm) **Oversize**	3.7600 - 3.7605 in. (95.504 - 95.517 mm)
Example: A 0.005 in. (0.13 mm) oversize piston will have the proper running clearance with a cylinder bore size of 3.7550 - 3.7555 in. (95.377 - 95.390 mm).	

5. Hot rinse the cylinder and dry with moisture free compressed air. Immediately apply a thin film of clean engine oil to prevent rusting.
6. With the cylinder at room temperature, check the piston clearance in the cylinder in which the piston will run. See PISTON, INSPECTION, step 5.

Installation

1. See Section 3.9 TOP END OVERHAUL, ASSEMBLY, steps 8-24 and 29-39.

PISTON

Removal

1. See Section 3.9 TOP END OVERHAUL, DISASSEMBLY, steps 1-11 and 15-29.

Disassembly

Piston Rings, Removal

WARNING

Always wear proper eye protection when removing the compression rings. Slippage may propel the ring with enough force to cause eye injury.

1. Carefully remove first and second compression rings using the proper piston ring expander (Snap-On PRS8).
2. Using your fingers, remove the top and bottom oil rails from the third ring groove. Remove the expander spring.
3. Discard the piston rings.

Cleaning and Inspection

Cleaning

CAUTION

Do not sand blast or glass bead blast pistons. Bead blasting rounds off ring lands and will result in oil contamination leading to accelerated wear.

1. To remove all carbon and combustion deposits, soak the pistons in a special detergent that will not corrode aluminum. Maintain the temperature of the cleaning solution well below 212° F. (100° C.).
2. Thoroughly rinse the pistons and dry with moisture free compressed air.
3. Clean the oil drain holes leading from the oil control ring groove to the underside of the piston crown. Run a small bristle brush through the passageways to ensure their cleanliness, but be careful not to damage or enlarge the holes. Do not use a wire brush.
4. Verify that all other oil holes are clean and open.

CAUTION

Exercise care to avoid scratching the sides of the piston ring grooves.

5. Thoroughly clean the three piston ring grooves of all carbon deposits. A broken compression ring properly ground to a sharp chisel-like edge may be used for this purpose.
6. Using Magnaflux Dye Penetrant, inspect the piston for surface cracks. Pay special attention to the area around the pin bores, ring lands and oil drain holes beneath the piston crown. If no cracks are found, thoroughly wash piston to remove traces of dye.

Inspection

1. Lightly oil a good piston pin and insert it into the piston pin bore to feel for the proper interference fit. The pin should slide in and out without binding, but also without pivoting or rocking. Replace piston and/or pin if clearance exceeds 0.0008 in. (0.020 mm).
2. Carefully inspect the pistons for damage or excessive wear. Discard pistons with cracked, broken or bent ring lands. Check the piston skirt for cracks, gouges, deep scratches or heavy scoring. Check the piston heads for evidence of burning, etching or melting. Look for marks or imprints caused by contact with valves. Pistons with superficial wear marks, minor scratching or mild scoring may continue to be used.
3. Run your index finger around the edge of the piston crown to feel for dings, nicks or burrs. Lightly file the edge of the crown to remove any defects.

CAUTION

Worn ring grooves result in high oil consumption and blow-by of exhaust gases. Blow-by of exhaust gases contaminates the engine oil supply with acids and leaves sludge in the crankcase. It also reduces engine efficiency by weakening the combustion seal necessary for efficient transfer of energy to the piston.

4. Measure the piston ring side clearance as follows:
   a. Insert the edge of a new ring into the piston ring groove. Insert a feeler gauge between the upper surface of the ring and the ring land. See Figure 3-86.

Figure 3-86. Measure Piston Ring Side Clearance

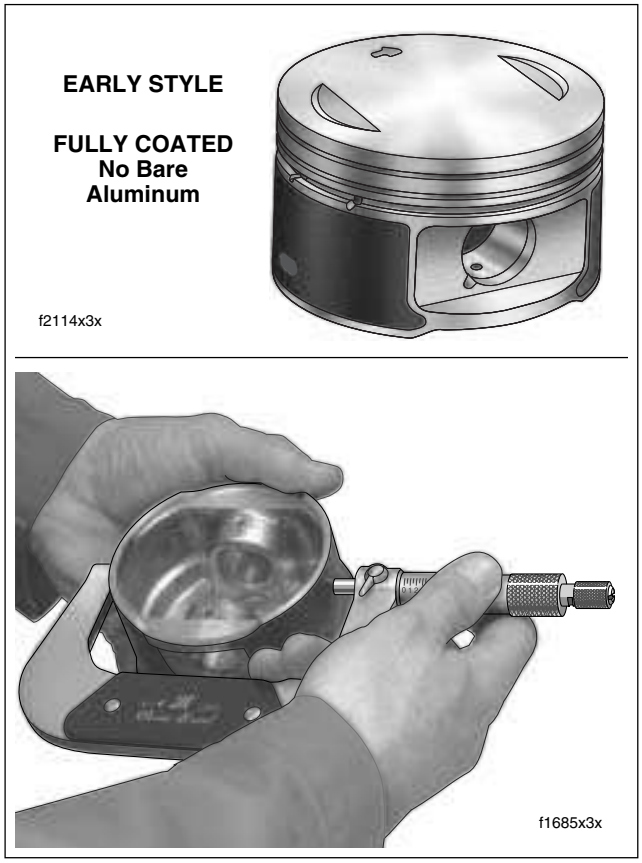

Figure 3-87. Measure Early Style Piston for Running Clearance

b. Since the grooves wear unevenly, repeat this check at several locations around the piston groove circumference.

c. Discard the piston if the side clearance of either compression ring exceeds 0.0045 in. (0.11 mm). Discard the piston if the oil control ring side clearance exceeds 0.010 in. (0.25 mm).

5. Measure the running clearance on fully coated early style pistons as follows:

NOTE

Check the piston clearance in the cylinder in which the piston will run. The torque plates must be installed on the cylinder and it must be deglazed and suitable for continued service.

a. Holding outside micrometer, measure piston skirt diameter across the thrust faces (perpendicular to pin bore). Start below the bottom ring land and move micrometer towards bottom of skirt. Micrometer will be loose, then tight (about 1/2 inch from bottom), and then loose again. See lower frame of Figure 3-87.

b. Measure the piston skirt at the tightest spot and then transfer that measurement to the dial bore gauge.

NOTE

On late style pistons, the measurement is taken on the bare aluminum to avoid measuring errors. An oval-shaped opening is present on each side of the piston for proper placement of the micrometer. See upper frame of Figure 3-88. Since the oval openings are too small for a standard flat anvil micrometer, which would result in measuring errors, use a 3-4 inch blade or ball anvil style micrometer, or a 4-5 inch micrometer with spherical ball anvil adapters. See lower frame of Figure 3-88.

c. Using a grease pencil, mark the top, middle and bottom of the piston ring travel zone in the cylinder bore. Measure at markings in cylinder parallel and perpendicular to crankshaft.

CAUTION

Do not check piston running clearance immediately after honing or deglazing cylinder. Since heat will cause measurements to vary by as much as 0.0002 inch (0.005 mm), both piston and cylinder must be at room temperatures.

d. Replace piston and/or cylinder if running clearance exceeds 0.003 in. (0.076 mm).

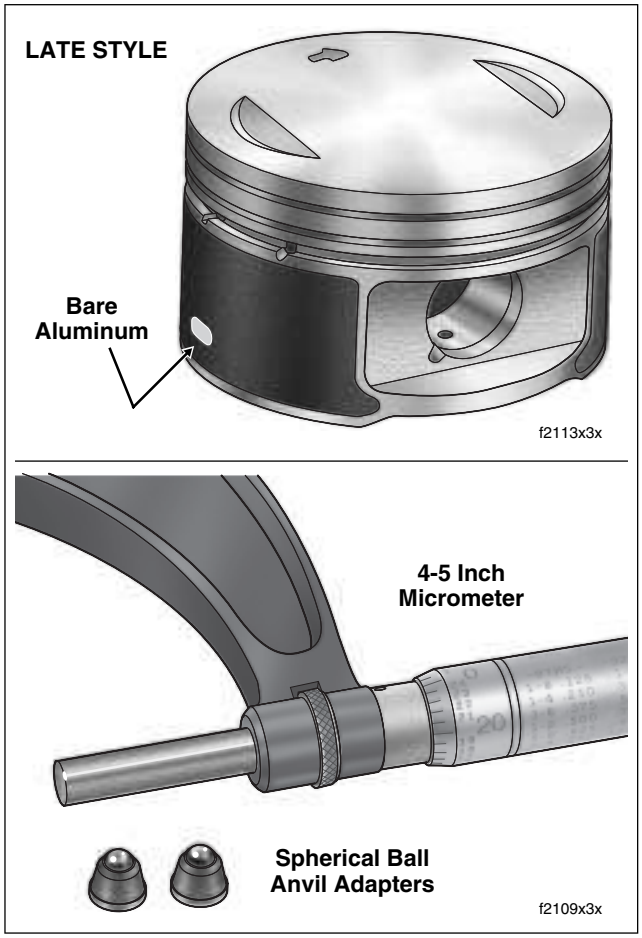

Figure 3-88. Measure Late Style Piston for Running Clearance

Figure 3-89. Measure Ring End Gap

Assembly

Piston Rings, Installation

NOTE

*Always use **new** piston rings. Piston rings take a definite set and must not be reused if the engine has been operated. Always deglaze (or hone) the cylinder before installing new rings. Ring sets are available to fit oversize pistons.*

1. Before placing each ring on the piston, perform the following check.

CAUTION

Insufficient ring end gap may cause the ends to abut at engine operating temperatures, resulting in ring breakage, cylinder scuffing and/or piston seizure.

CAUTION

Excessive ring end gap results in high oil consumption and blow-by of exhaust gases. While blow-by contaminates the oil supply and leaves sludge in the crankcase, it also reduces engine efficiency by weakening the combustion seal necessary for efficient transfer of energy to the piston.

2. Insert the new ring into the cylinder, square it in the bore using the top of the piston and measure the ring end gap with a feeler gauge. See Figure 3-89. Do not use the ring if the end gap does not fall within the following specifications.

Table 3-8. Ring End Gap

Ring Type	Ring End Gap
Top compression ring	0.010 in. (0.25 mm) - 0.020 in. (0.51 mm)
2nd compression ring	0.014 in. (0.36 mm) - 0.024 in. (0.61 mm)
Oil control ring rails	0.010 in. (0.25 mm) - 0.050 in. (1.27 mm)

NOTE

Ring end gap dimensions also apply to oversize rings. Replace ring if end gap exceeds specification. If end gap is under specification, filing is permissible.

3. Use compressed air to remove any dirt or dust that may have settled in the oil drain holes and piston ring grooves.

4. Install piston rings as follows:

   a. Apply clean H-D 20W50 engine oil to three piston ring grooves.

   b. Install expander spring into third ring groove. Spiral bottom oil rail into space below expander spring positioning the gap 90 degrees from the gap in the expander spring. Spiral top oil rail into space above expander spring positioning gap 180 degrees from the gap in the bottom oil rail.

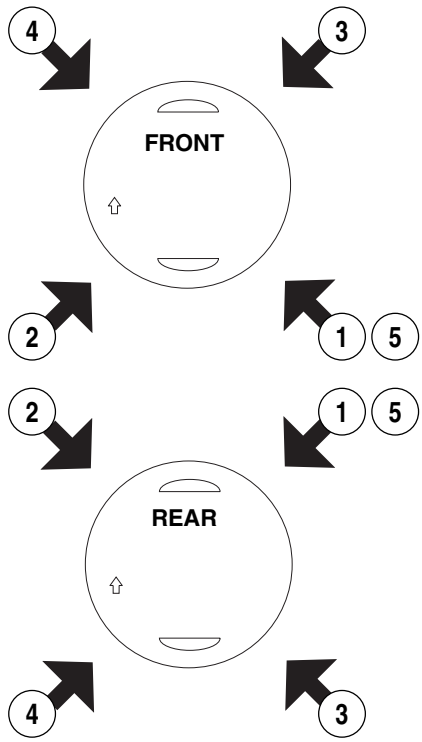

1. **Expander spring**
2. **Bottom oil rail**
3. **Top oil rail**
4. **Second compression ring**
5. **Top compression ring**

f2066x3x

Figure 3-90. Piston Ring Gap Alignment

CAUTION

Use the proper piston ring spreader to prevent excessive ring twist and expansion. Over expansion may cause the ring to crack opposite the ring gap. Damaged or distorted rings result in blow-by of exhaust gases, increased oil consumption and lower service life on valves and other components.

CAUTION

Installing the second compression ring upside down will cause oil to be scraped up into the combustion chamber resulting in excessive oil consumption and low service life on valves and other components.

c. Using the proper piston ring expander (Snap-On PRS8), carefully install the second compression ring making sure that the dot (punch mark) near the ring gap faces the piston crown. Rotate the ring so the gap is 90 degrees from the gap in the top oil rail.

d. Carefully install the top compression ring using the proper piston ring expander (Snap-On PRS8). Rotate the ring so the gap is 180 degrees from the gap in the second compression ring.

e. Rotate the three piston rings using the palms of both hands. The rings must rotate freely without sticking.

f. Verify that the ring gaps are still properly staggered. See Figure 3-90.

Installation

1. See Section 3.9 TOP END OVERHAUL, ASSEMBLY, steps 1-24 and 29-39.

NOTES

UPPER CONNECTING ROD

Removal

1. See Section 3.9 TOP END OVERHAUL, DISASSEMBLY, steps 1-11 and 15-29.

Disassembly/Assembly

NOTE

Service of connecting rods is limited to replacement of the upper bushing. Damage to connecting rods or lower bushing service requires replacement of the flywheel assembly.

Upper Connecting Rod Bushing

Removal

NOTE

Replace the upper rod bushing if the piston pin to rod bushing clearance exceeds 0.002 inch (0.051 mm).

CAUTION

Place clean shop towels in and around the crankcase bore to prevent chips and shavings from falling into the crankcase.

1. Obtain the CONNECTING ROD CLAMPING TOOL (HD-95952-33B) and proceed as follows:
   a. Slide clamp over connecting rod so that slots engage cylinder head studs. See Figure 3-92. Exercise caution to avoid scratching or bending studs.
   b. With the knurled side up, install threaded cylinders (HD-95952-1) onto studs to secure position of clamp.
   c. Alternately turn each clamp thumbscrew a few turns to gradually fix position of connecting rod. Turning only one thumbscrew will move rod off-center, while tightening second thumbscrew can cause rod to flex or bend.
2. Obtain the CONNECTING ROD BUSHING REMOVER/INSTALLER (HD-95970-32D) and proceed as follows:
   a. Sparingly apply graphite lubricant to threads of rod to prolong service life and ensure smooth operation.
   b. Slide receiver cup (HD-95984-99) onto threaded rod with the closed side facing hex nut.
   c. Insert threaded rod through upper rod bushing.
   d. Slide remover side of driver (HD-95986-99) down threaded rod. The driver is stamped to ensure proper orientation.
   e. Slide Nice bearing and flat washer down threaded rod until it contacts driver.

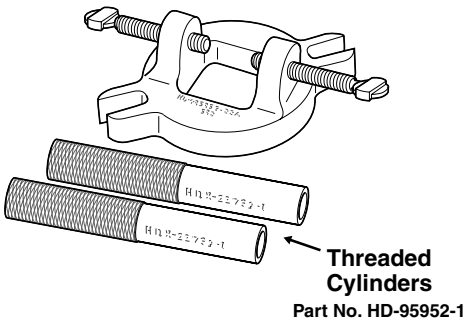

Figure 3-91. Connecting Rod Clamping Tool (Part No. HD-95952-33B)

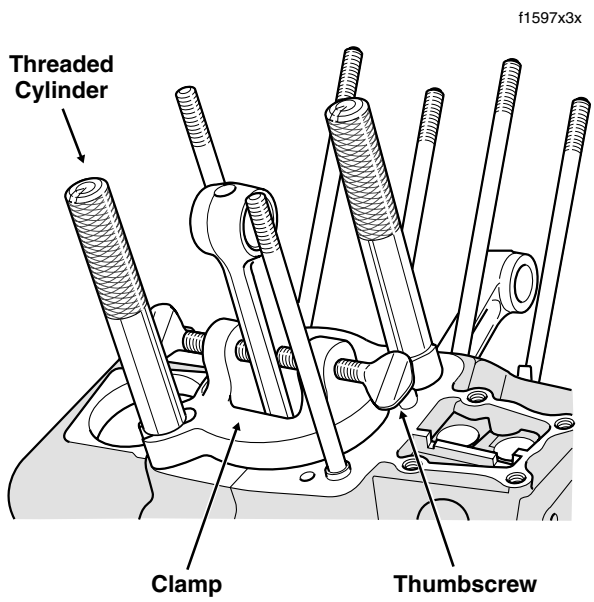

Figure 3-92. Install Connecting Rod Clamping Tool

   f. Thread the hex cylinder onto rod until assembly is snug. See upper frame of Figure 3-94.
   g. Holding nut at end of threaded rod with a 5/8 inch box wrench, turn hex cylinder with a 5/8 inch socket until bushing is free.
   h. Unthread hex cylinder from rod. Remove flat washer, Nice bearing and driver. Remove threaded rod from bushing bore.
   i. Remove bushing from receiver cup and discard.

Installation

1. Obtain the CONNECTING ROD BUSHING REMOVER/INSTALLER (HD-95970-32D) and proceed as follows:

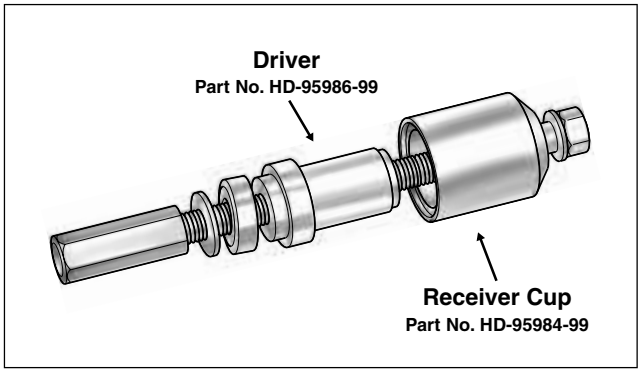

Figure 3-93. Connecting Rod Bushing Remover/Installer (Part No. HD-95970-32D)

a. Slide receiver cup (HD-95984-99) onto threaded rod with the closed side facing hex nut.

b. Insert threaded rod through upper rod bushing bore.

c. Slide **new** bushing down threaded rod. Start bushing into bore. Verify that center of slot in bushing is aligned with oil hole at top of rod. Also, be sure that bushing is square in bore and not cocked. See center frame of Figure 3-94.

d. Slide installer side of driver (HD-95986-99) down threaded rod until shoulder contacts bushing. The driver is stamped to ensure proper orientation.

e. Slide Nice bearing and flat washer down threaded rod until it contacts driver.

f. Thread the hex cylinder onto rod until assembly is snug.

g. Holding nut at end of threaded rod with a 5/8 inch box wrench, turn hex cylinder with a 5/8 inch socket until collar on driver bottoms against connecting rod. See lower frame of Figure 3-94.

h. Unthread hex cylinder from rod and remove flat washer, Nice bearing and driver. Remove threaded rod from bushing bore, but exercise caution to avoid scratching or gouging bushing.

Reaming Upper Rod Bushing

1. Obtain the CONNECTING ROD BUSHING REAMER (HD-42318) and REAMER HANDLE/DRIVE SOCKET (HD-43645). Proceed as follows:

   a. Carefully insert bit of reamer into upper connecting rod bushing. Do not apply lubricant to reamer or bushing. Ream the bushing dry or cut will not be accurate.

   b. Install handle/drive socket on reamer lug. See Figure 3-96.

   c. Placing thumb on drive socket, apply slight pressure on reamer while rotating handle/drive socket in a clockwise direction.

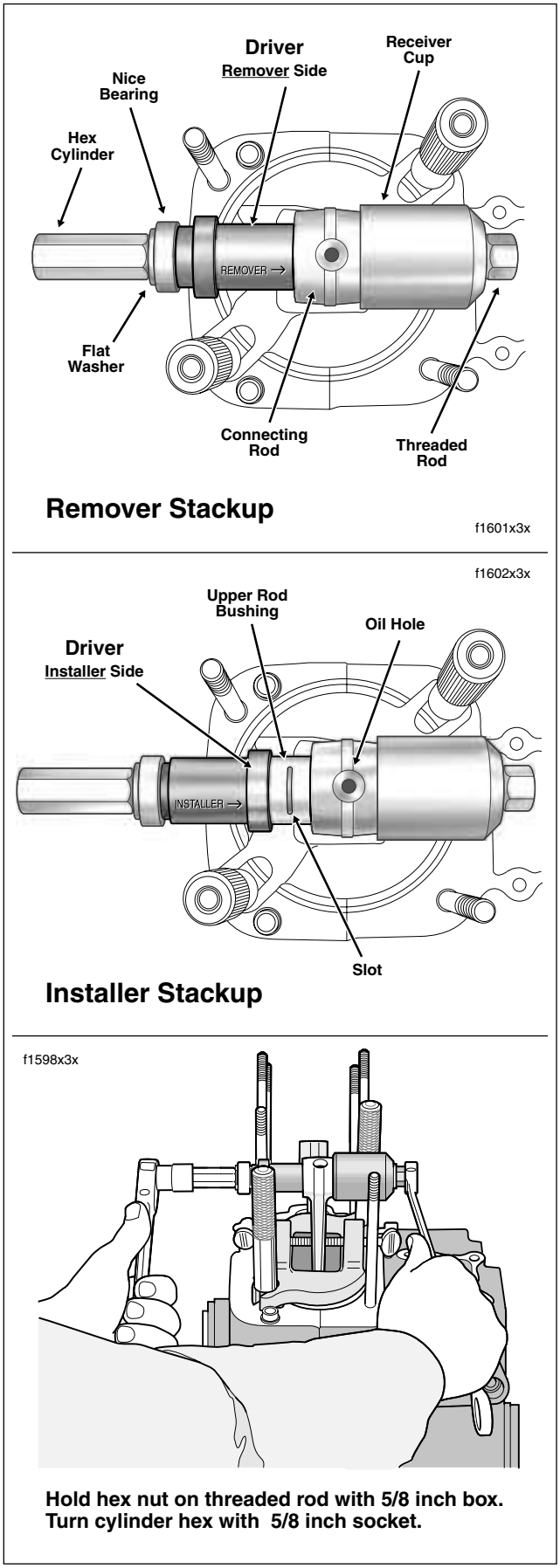

Figure 3-94. Remove/Install Connecting Rod Bushing

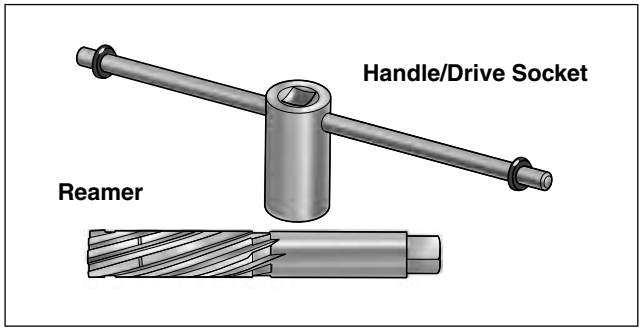

Figure 3-95. Connecting Rod Bushing Reamer (Part No. HD-42318) and Handle/Drive Socket (Part No. HD-43645)

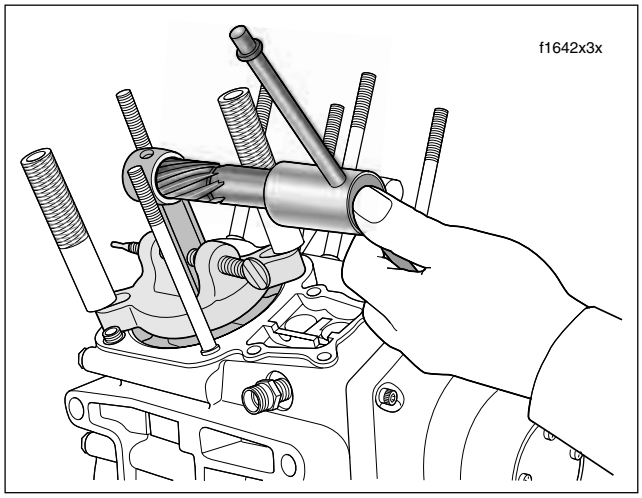

Figure 3-96. Ream Connecting Rod Bushing

CAUTION

For best results, do not push on reamer or apply pressure to the reamer handle. While excessive pressure results in a rough cut, bushing bore will be tapered if pressure is not centrally applied.

d. Continue rotating handle/drive socket until entire bit has passed through bushing and shank of reamer rotates freely in the bore.

CAUTION

Never back reamer out of connecting rod or bushing will be damaged.

e. Remove handle/drive socket, and carefully pulling on bit, draw shaft of reamer out of connecting rod bushing.

CAUTION

Abrasive particles can damage machined surfaces and plug oil passageways possibly resulting in engine failure.

2. Using contact cleaner or cleaning solvent, thoroughly wipe upper connecting rod and bushing of any metal shavings or debris.

Honing Upper Rod Bushing

1. Obtain the CONNECTING ROD BUSHING HONE (HD-42569) and REAMER LUBRICANT (HD-39964). Proceed as follows:
   a. Install hone in a high speed electric drill.
   b. Apply reamer lubricant to finishing stones of hone and inside of upper connecting rod bushing.
   c. Start finishing stones of hone into bushing.
   d. Activating the drill, move the entire length of the finishing stone arrangement forward and backward through the bushing bore for 10 to 12 complete strokes. See Figure 3-98. Work for a crosshatch pattern of approximately 60˚.

CAUTION

Abrasive particles can damage machined surfaces and plug oil passageways possibly resulting in engine failure.

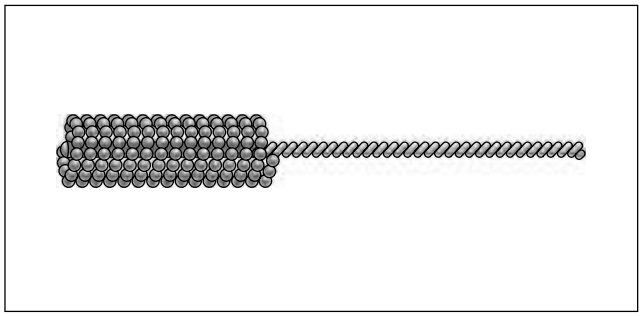

Figure 3-97. Connecting Rod Bushing Hone (Part No. HD-42569)

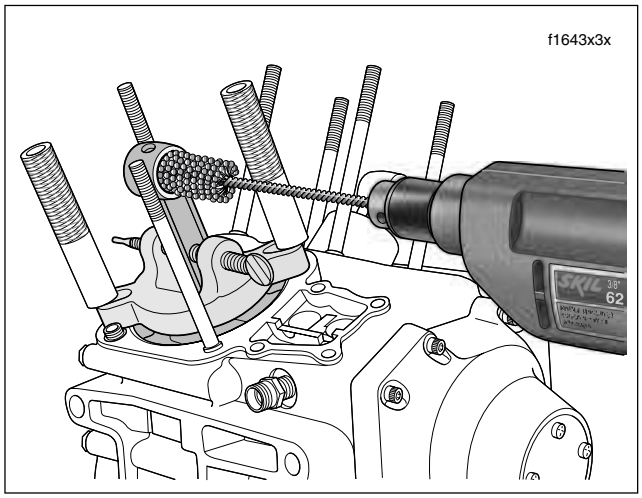

Figure 3-98. Hone Connecting Rod Bushing

2. Using contact cleaner or cleaning solvent, thoroughly wipe upper connecting rod and bushing of any metal shavings or debris. Continue wiping until a clean cloth shows no evidence of dirt or debris.
3. Lightly oil a good piston pin and insert it into the upper connecting rod bushing bore to feel for the proper interference fit. The pin should slide in and out of the bushing without binding, but also without pivoting or rocking.
4. Remove shop towels exercising caution that shavings, chips and other debris do not fall into crankcase.

Installation

See Section 3.9 TOP END OVERHAUL, ASSEMBLY, steps 1-24 and 29-39.

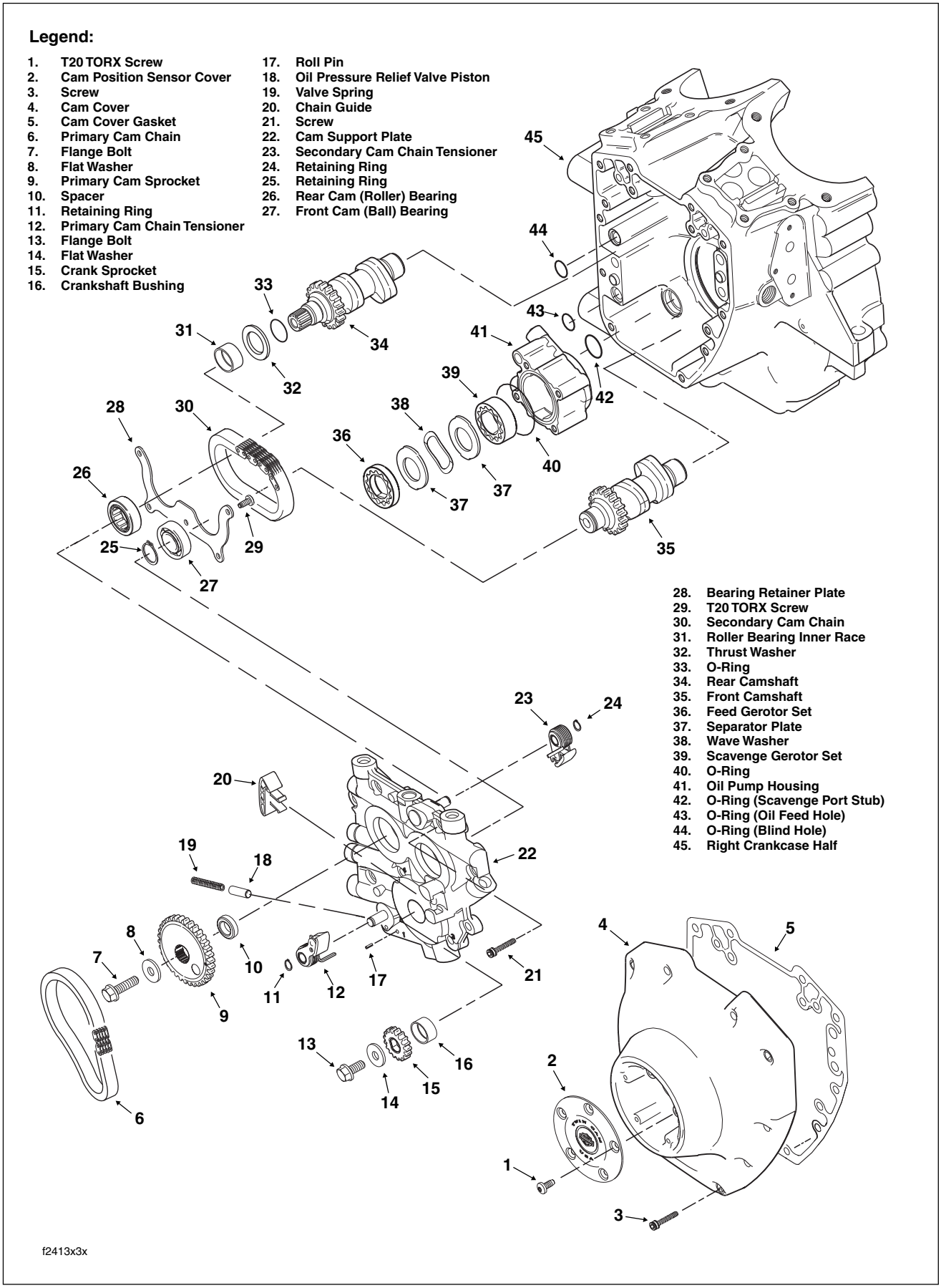

Figure 3-99. Cam Support Plate/Oil Pump Assemblies (Exploded View)

BOTTOM END

CAM SUPPORT PLATE

Removal

1. See Section 3.9 TOP END OVERHAUL, DISASSEMBLY, steps 1-11.

NOTE

When removing the cam support plate, it is not necessary to disturb the lifter assemblies if a method is devised to prevent the hydraulic lifters from dropping into the cam compartment. One such method is provided in the following step. Leaving the lifter assemblies intact simplifies the procedure, since the lifter cover, gasket, anti-rotation pin and hydraulic lifters can be left in place.

2. Fashion lifter holding tool as follows:
   a. Obtain a large binder clip (available at any office supply store). Squeeze wireforms to remove from binder clip. See upper frame of Figure 3-100.
   b. Compress wireform slightly and insert free ends into outer and inner lifter cover bores so that legs engage walls of both hydraulic lifter sockets. See lower frame of Figure 3-100.
3. See Section 3.10 BOTTOM END OVERHAUL, DISASSEMBLY, steps 1-14.

Disassembly/Assembly

⚠CAUTION

Do not pull the retention pins from the primary or secondary cam chain tensioners with the chains and sprockets removed. With 35-40 pounds of spring pressure behind the tensioner, allowing it to accelerate through its full length of travel will cause spring stretching and/or cracking of the tensioner shoe, damage which requires replacement of the assembly. Furthermore, if the tensioner should contact fingers or other parts of the hand, minor or moderate injury may occur.

NOTE

If the retention pins interfere with cleaning or service procedures, hold the retracted cam chain tensioner with the CAM CHAIN TENSIONER UNLOADER (HD-42313), pull the retention pin and ease the assembly into the unloaded position.

Crankshaft Bushing

Removal

1. Obtain the CRANKSHAFT BUSHING REMOVER/INSTALLER (HD-42315).
2. Center support tube under ram of arbor press.
3. Center crankshaft bushing in cam support plate over support tube. Be sure that the primary cam chain side of the cam support plate is facing upward.

CAUTION

If the crankshaft bushing is pressed out the primary cam chain side, the bore will be damaged by the knurled edge of the bushing. Damage to the bore requires replacement of the cam support plate.

4. Insert remover side of driver into crankshaft bore so that shoulder on tool is seated on edge of bushing. See upper frame of Figure 3-102.
5. Press on driver until collar of tool contacts cam support plate. Remove bushing from support tube and discard.

Installation

1. Obtain the CRANKSHAFT BUSHING REMOVER/INSTALLER (HD-42315).
2. Center support tube under ram of arbor press.

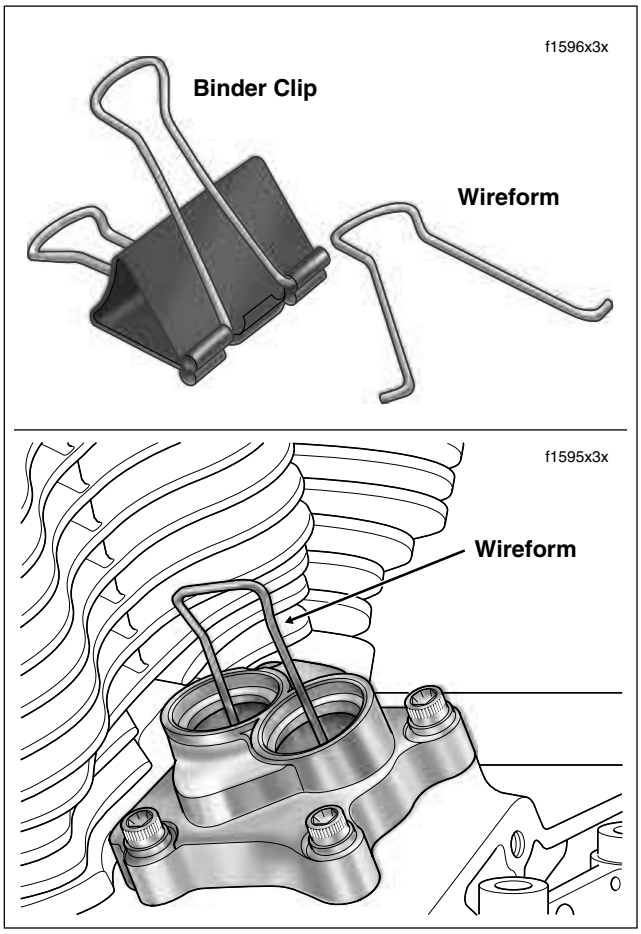

Figure 3-100. Fashion Tool to Hold Hydraulic Lifters

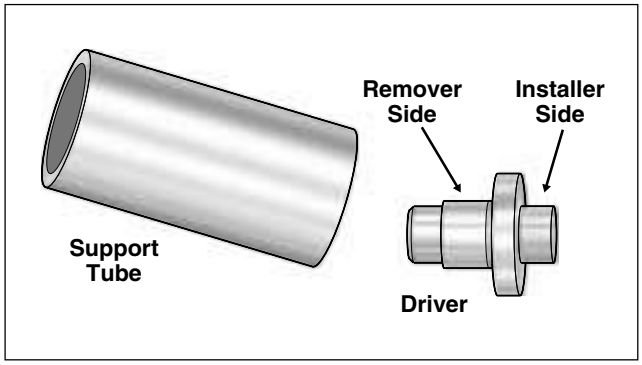

Figure 3-101. Crankshaft Bushing Remover/Installer (Part No. HD-42315)

3. Turn cam support plate over so that secondary cam chain side is facing upward.
4. Start **new** bushing into bore with the knurled edge top-side. Be sure that hole in bushing is aligned with oil hole in bushing bore.

CAUTION

If the crankshaft bushing is pressed in from the primary cam chain side, or from the secondary cam chain side with the knurled edge of the bushing down, the bushing bore will be damaged. Damage to the bore requires replacement of the cam support plate.

5. Center crankshaft bushing bore over support tube.
6. Insert installer side of driver into bushing. See lower frame of Figure 3-102.
7. Press on driver until collar of tool makes firm contact with cam support plate.
8. Ream the crankshaft bushing following the directions below.

Reaming Crankshaft Bushing

NOTE

*A **new** crankshaft bushing must be reamed for proper size and alignment. If crankcase halves are not split, ream the bushing using a spare right case half to avoid further engine disassembly.*

1. Slide cam support plate onto two ring dowels in crankcase flange.
2. Install six allen head socket screws (1/4 x 1 inch) to secure cam support plate to crankcase flange. Alternately tighten screws until snug.
3. Obtain the CRANKSHAFT BUSHING REAMER (HD-42316) and REAMER HANDLE/DRIVE SOCKET (HD-43645). Proceed as follows:

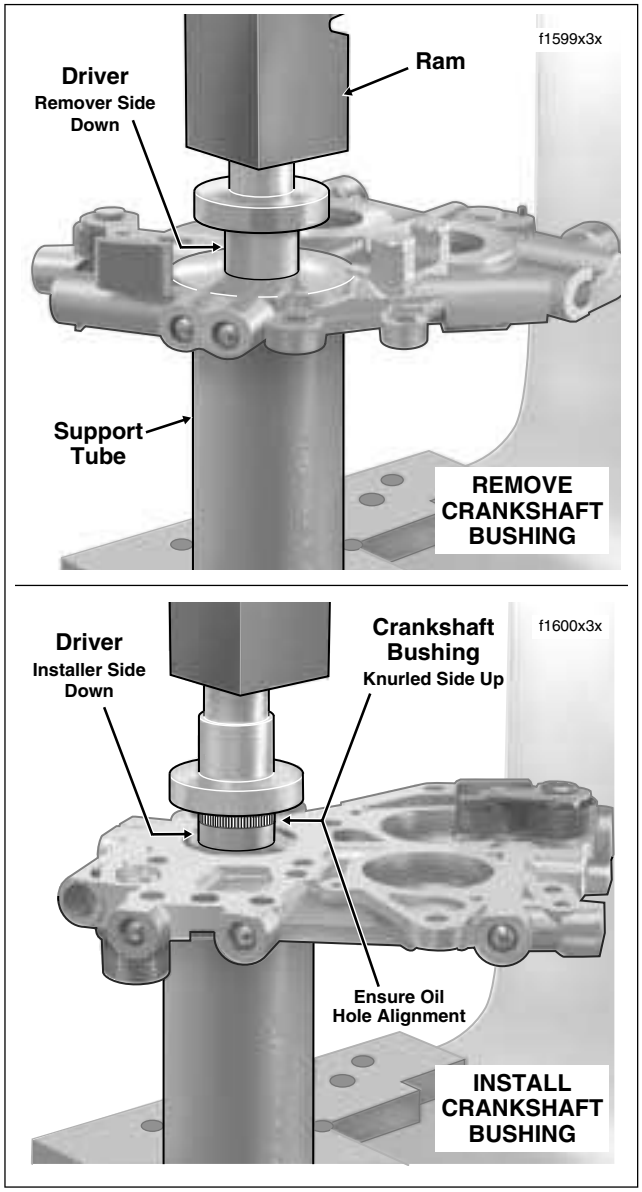

Figure 3-102. Remove/Install Crankshaft Bushing in Cam Support Plate

a. From flywheel compartment side, carefully insert tapered end of reamer pilot into crankshaft bearing until it stops. See left frame of Figure 3-104.
b. Slide reamer through pilot starting bit into crankshaft bushing in cam support plate. Do not apply lubricant to reamer or bushing. Ream the bushing dry or cut will not be accurate.
c. Install handle/drive socket on reamer lug. See right frame of Figure 3-104.
d. Placing thumb on drive socket, apply slight pressure on reamer while rotating handle/drive socket in a clockwise direction.

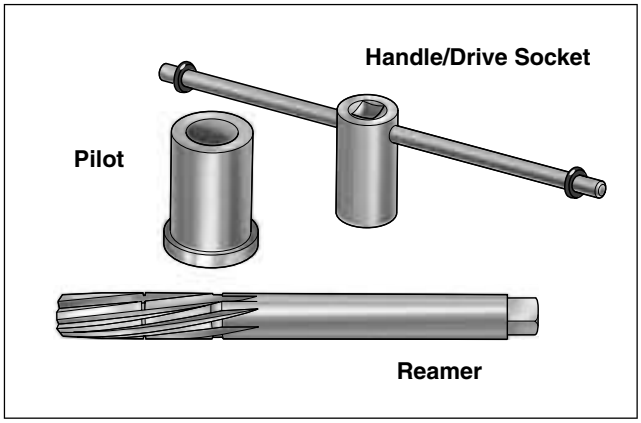

Figure 3-103. Crankshaft Bushing Reamer (Part No. HD-42316) and Handle/Drive Socket (Part No. HD-43645)

CAUTION

For best results, do not push on reamer or apply pressure to the reamer handle. While excessive pressure results in a rough cut, bushing bore will be tapered if pressure is not centrally applied.

e. Continue rotating handle/drive socket until entire bit has passed through bushing and shank of reamer rotates freely in the bore.

CAUTION

Never back reamer out flywheel side of crankcase or crankshaft bushing will be damaged.

f. Remove handle/drive socket, and carefully pulling on bit, draw shaft of reamer out of bushing on cam side of crankcase.

g. Remove pilot from crankshaft bearing. Tap on pilot using a soft rubber mallet, if necessary.

4. Remove the allen head socket screws to release the cam support plate from the crankcase flange.

CAUTION

Abrasive particles can damage machined surfaces and plug oil passages possibly resulting in engine failure.

5. Thoroughly flush right crankcase half and cam support plate in cleaning solvent to remove any metal shavings or debris. Blow dry with compressed air.

Camshafts/Camshaft Bearings

Removal

1. Place cup of CAM CHAIN TENSIONER UNLOADER (HD-42313) over spring coil of secondary cam chain tensioner positioning finger on tool between tensioner and shoe. See Figure 3-105. Rotate tool in a counterclockwise direction inserting retention pin through hole in boss on **primary cam chain side** of cam support plate. Pin engages hooks on tensioner to hold it in the retracted position. For best results, place cam support plate in a vise using brass jaw inserts to prevent casting damage.

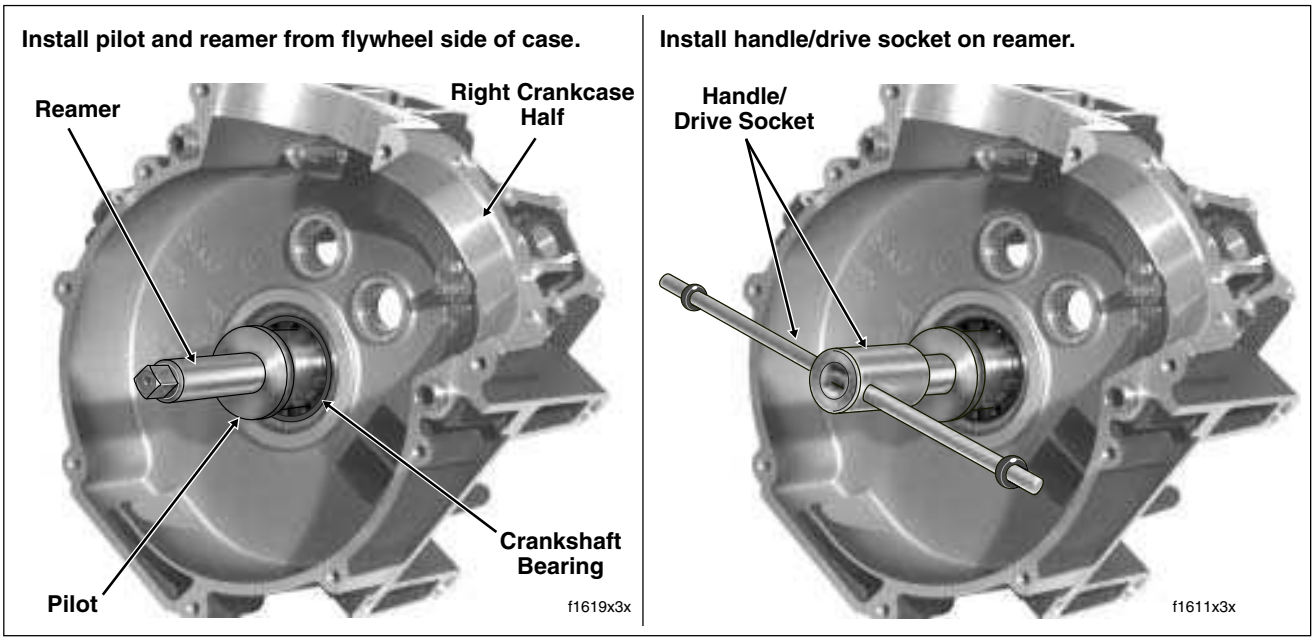

Figure 3-104. Ream Crankshaft Bushing

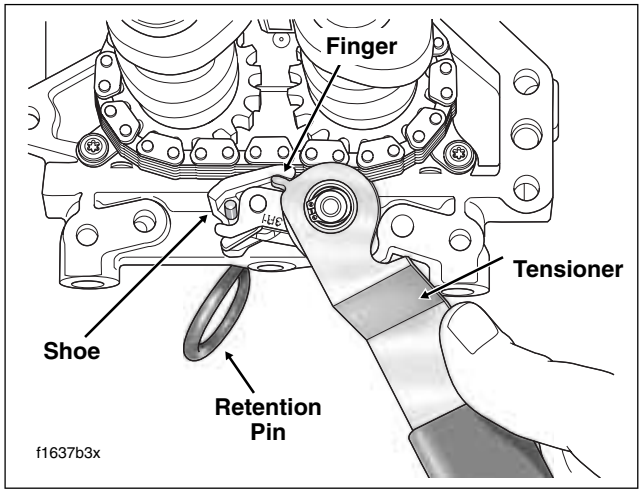

Figure 3-105. Retract Secondary Cam Chain Tensioner

WARNING

Always wear proper eye protection when removing retaining rings. Use the correct retaining ring pliers. Verify that the tips of the pliers are not damaged or excessively worn. Slippage may propel the ring with enough force to cause eye injury.

2. Remove retaining ring from groove at end of front camshaft. Discard retaining ring.
3. Remove four T20 TORX screws to free bearing retainer plate from inboard side of cam support plate.
4. Using a colored marker, mark one of the links of the secondary cam chain. Maintaining the original direction of rotation during assembly may prolong service life of chain.
5. With the primary cam chain side facing upward, place cam support plate on parallel blocks under ram of arbor press.
6. Obtain the CAMSHAFT/CAMSHAFT BEARING REMOVER/INSTALLER (HD-43644). See Figure 3-106.

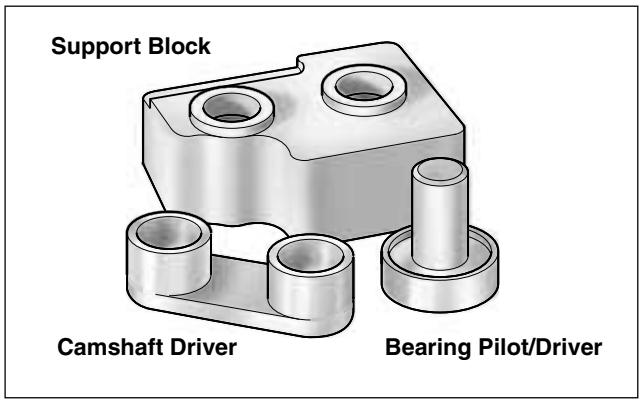

Figure 3-106. Camshaft/Camshaft Bearing Remover/Installer (Part No. HD-43644)

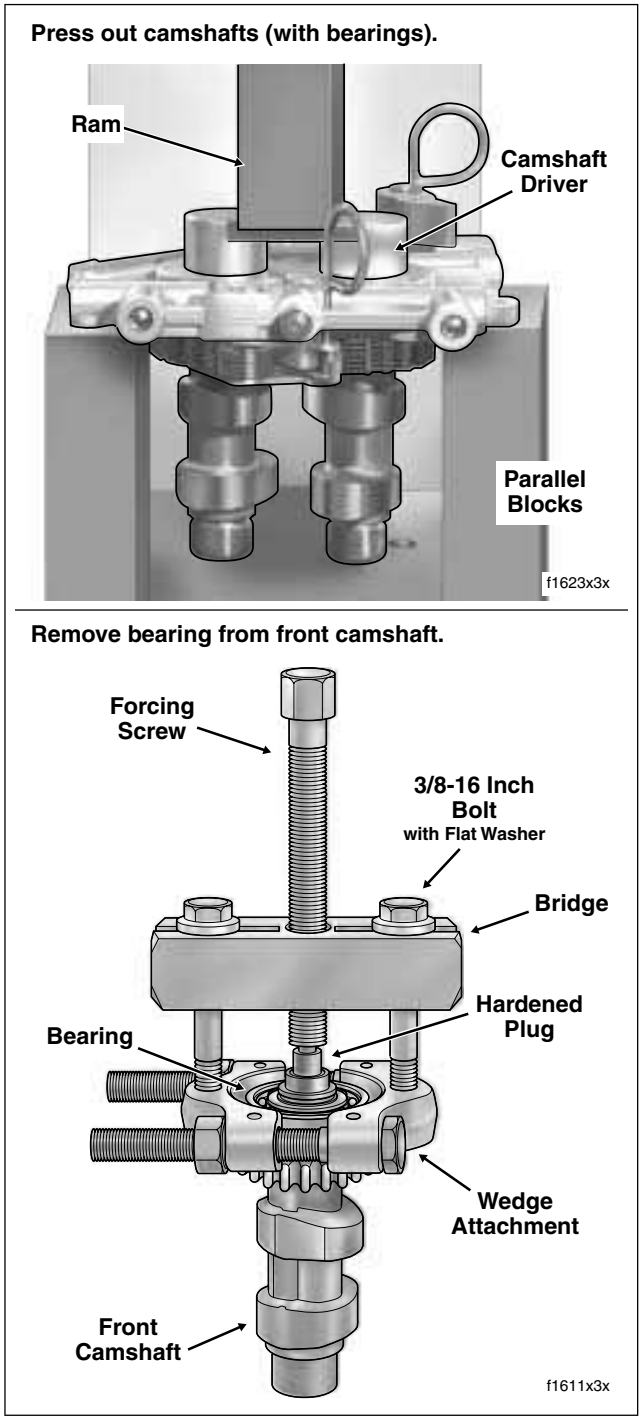

Figure 3-107. Remove Camshafts/Front Cam Bearing

CAUTION

Since the bearing fit to the camshafts is tighter than its fit in the support plate, any attempt to remove the camshafts without the bearings will result in damage to the cam support plate and bearing retainer plate, if installed.

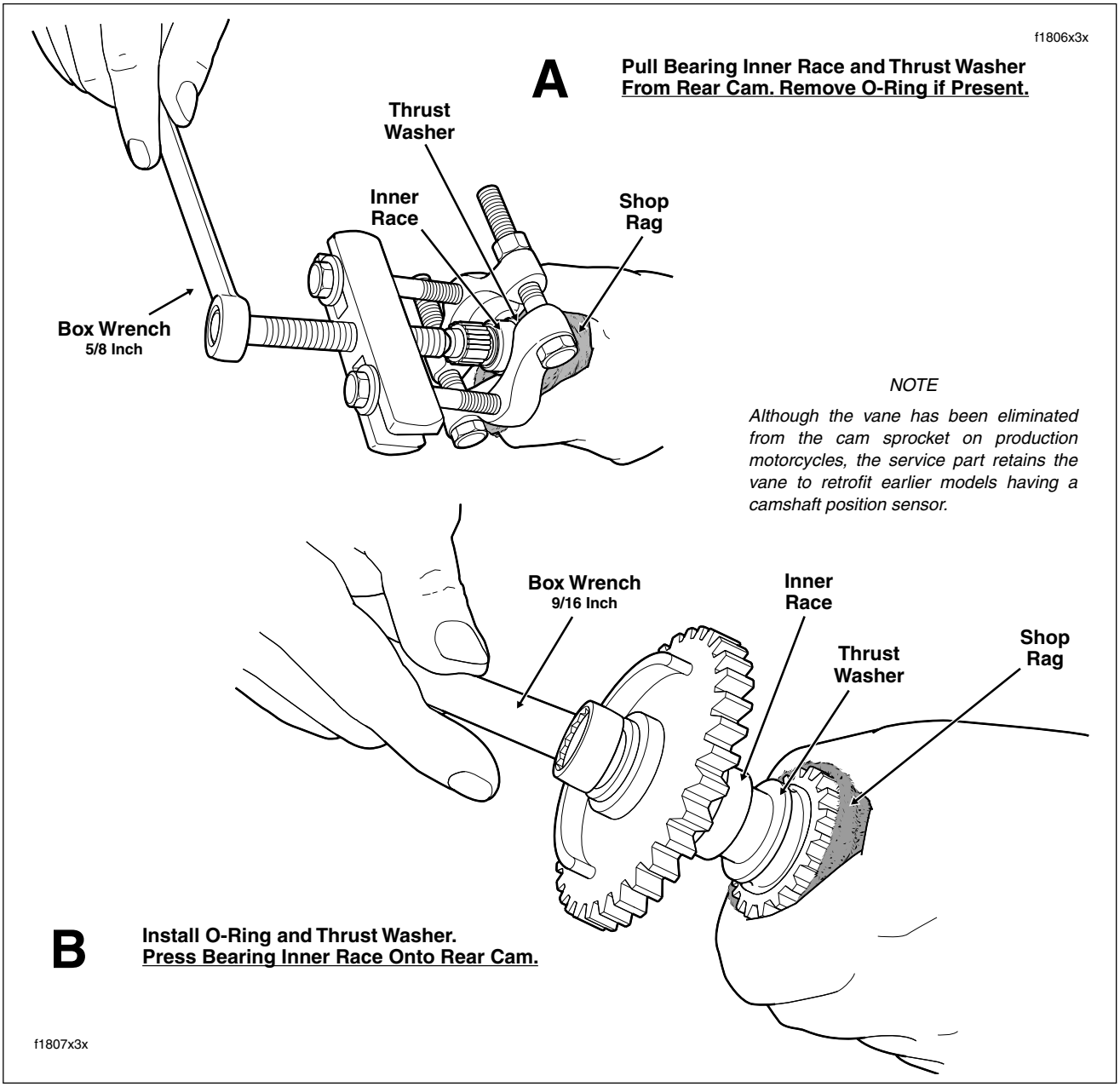

Figure 3-108. Remove/Install Bearing Inner Race (With O-Ring and Thrust Washer) Onto Rear Camshaft

CAUTION

Cam bearings may be a loose fit in the cam support plate. To avoid possible damage, be aware that camshaft and bearing assemblies may drop out at start of press procedure.

7. Fit cups of camshaft driver over ends of front and rear camshafts, so that contact is made with the bearing inner races. Centering driver under ram at a point midway between the camshafts, simultaneously press both camshafts (with attached bearings) from the cam support plate. See upper frame of Figure 3-107.
8. Remove secondary cam chain from cam sprockets.
9. If reusing front camshaft, remove bearing as follows:
   a. Position WEDGE ATTACHMENT (HD-95637-46B) on inboard side of front camshaft bearing and turn hex nuts an equal number of turns to draw halves of wedge together.

b. Obtain two 3/8-16 inch bolts 3-1/2 inches long (with flat washers). Install flat washers on bolts. Obtain bridge, forcing screw and hardened plug from MAINSHAFT BEARING INNER RACE PULLER/ INSTALLER (HD-34902B).

c. Slide one bolt into channel on each side of bridge so that flat washer is between bridge and bolt head. Thread bolts into wedge attachment an equal number of turns.

d. Sparingly apply graphite lubricant to threads of forcing screw to prolong service life and ensure smooth operation. Start forcing screw into center hole of bridge.

CAUTION

Failure to use hardened plug may result in damage to forcing screw and/or camshaft.

e. Place cupped side of hardened plug against end of camshaft. Thread forcing screw into bridge until the steel ball at the end of the screw makes firm contact with hardened plug.

f. Verify that the tool assembly is square so that the bearing is not cocked during removal. See lower frame of Figure 3-107. Turn forcing screw until bearing is pulled free of camshaft. Discard bearing.

10. If reusing rear camshaft, remove roller bearing assembly as follows:

a. Slide roller bearing from end of rear camshaft. Since bearing is a loose fit on cam, no pressing tools are required.

b. Install tools as you would to remove the bearing from the front camshaft, but position cup of wedge inboard of the thrust washer.

c. Wrap a shop rag around camshaft to get a firm grip and also to protect hand from sharp edges of sprocket.

d. Using a 5/8 inch box wrench, turn forcing screw until bearing inner race and thrust washer are pulled free of camshaft. See A of Figure 3-108. A light interference fit allows the parts to be removed with little effort. Discard inner race and thrust washer.

e. If present, remove O-ring from grinding relief groove in camshaft. Groove is on the splined end between the machined area and the secondary cam sprocket. Discard O-ring.

NOTE

Since the O-ring is not used in production, it will only be found if the cams were serviced at the dealer level.

Installation

1. Obtain new rear cam roller bearing kit (Part No. 8983). See Figure 3-109.

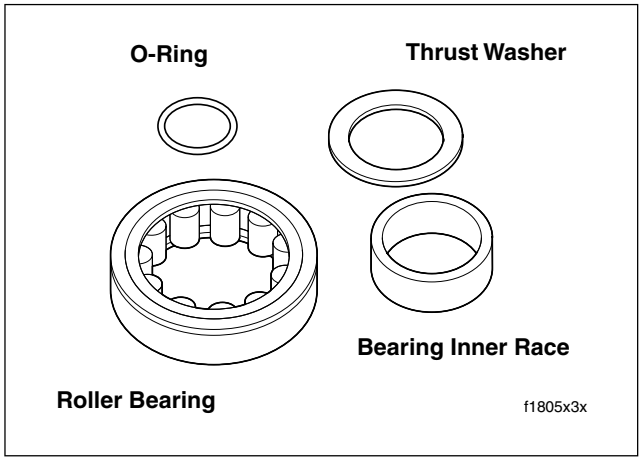

Figure 3-109. Rear Cam Roller Bearing Kit (P/N 8983)

2. Install O-ring, thrust washer and bearing inner race onto rear camshaft as follows:

a. To properly locate thrust washer, first install O-ring in grinding relief groove. Groove is on the splined end between the machined area and the secondary cam sprocket. Exercise caution to avoid stretching or breaking the O-ring. Since the O-ring is not sold separately, damage will require purchase of a new roller bearing kit.

CAUTION

The thrust washer will be offset to one side if the O-ring is not installed in the grinding relief groove. Damage to the bearing cage can occur if the thrust washer is not properly centered.

b. Slide thrust washer down rear camshaft until centered over O-ring in grinding relief groove.

c. Slide bearing inner race down rear camshaft until contact is made with shoulder of machined area.

d. Install primary cam sprocket spacer and sprocket on camshaft and secure using thicker flat washer and long flange bolt.

NOTE

If not enough of the splined shaft is exposed to install the sprocket, leave out the spacer and proceed to step 2(e). Once the bearing inner race has been started onto the machined area, remove the flange bolt, washer and sprocket, and then reassemble using the spacer. Repeat step 2(e) to fully install bearing inner race.

e. Wrap a shop rag around camshaft to get a firm grip and also to protect hand from sharp edges of sprocket. Using a 9/16 inch box wrench, turn flange bolt in a clockwise direction. Bearing inner race is fully installed when it makes firm contact with the thrust washer. See B of Figure 3-108.

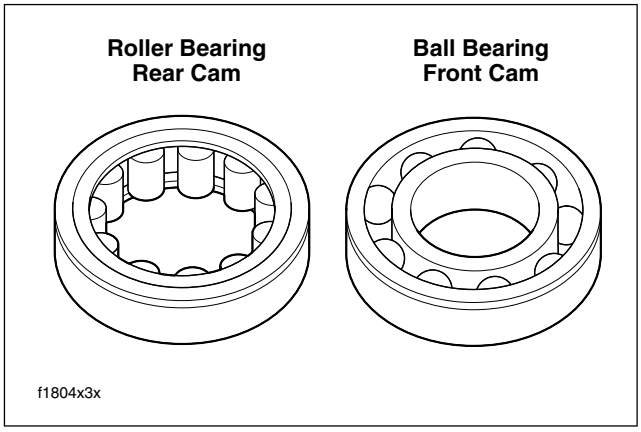

Figure 3-110. Cam Bearings

f. Verify that the thrust washer is locked in place and cannot be rotated. If necessary, install shaft in vise using brass jaw inserts, and further tighten flange bolt until the desired result is achieved.

g. Remove flange bolt, flat washer, sprocket and spacer.

CAUTION

Always install new bearings. Only use genuine Harley-Davidson bearings. Reusing old bearings or using bearings from a supplier other than Harley-Davidson will result in engine damage.

3. Obtain the CAMSHAFT/CAMSHAFT BEARING REMOVER/INSTALLER (HD-43644).

4. With the secondary cam chain side facing upward, place cam support plate on support block, so that outer races of bearings are properly supported. Note that one corner of the support block is contoured to accommodate the chain guide blocks cast into the front of the support plate.

5. Center **new** bearing over bearing bore with the lettered side up. Slide pilot shaft of bearing driver through bearing into hole of support block.

NOTE

Be aware that the front and rear cam bearings are not interchangeable. The rear bearing is the roller type, while the front is the ball bearing kind. See Figure 3-110.

6. Center bearing driver under ram of arbor press. Press on driver until bearing makes firm contact with counterbore in cam support plate. See upper frame of Figure 3-112. Repeat steps to install second bearing.

NOTE

Bearings may be a press to loose fit. If deemed necessary, clean bearing OD and apply Loctite Low Strength Threadlocker 243 (Blue) before installation, but exercise caution to avoid getting compound on rollers or bearing ID.

7. Apply a small dab of Loctite Medium Strength Threadlocker 243 (blue) to threads of four bearing retainer plate screws. Using a T20 TORX drive head, secure bearing retainer plate to cam support plate. Tighten screws to 20-30 **in-lbs** (2.3-3.4 Nm) in a crosswise pattern. Verify that hole in retainer plate is properly aligned with secondary cam chain oiler.

8. Place cam support plate back on support block, if removed. Block properly supports inner races of bearings as camshafts are installed.

9. Align pin stamped timing lines on teeth of secondary cam sprockets (outboard faces). See Figure 3-111. Using a colored marker, carefully mark the timing line locations on the inboard side of the sprocket teeth. These marks are needed to observe proper orientation of the camshafts when they are pressed into the bearings.

10. Place the secondary cam chain around the sprockets of both the front and rear camshafts. To maintain the original direction of rotation, be sure that the colored mark placed on the chain link during disassembly is facing opposite the cam support plate during installation.

11. Orient the camshafts so that they are positioned on opposite ends of the chain, and then verify that the colored marks placed on the inboard side of the sprocket teeth are still in alignment.

12. Maintaining the position of the camshafts on the chain with the colored marks in alignment, place the sprocket ends of the camshafts into the bearings.

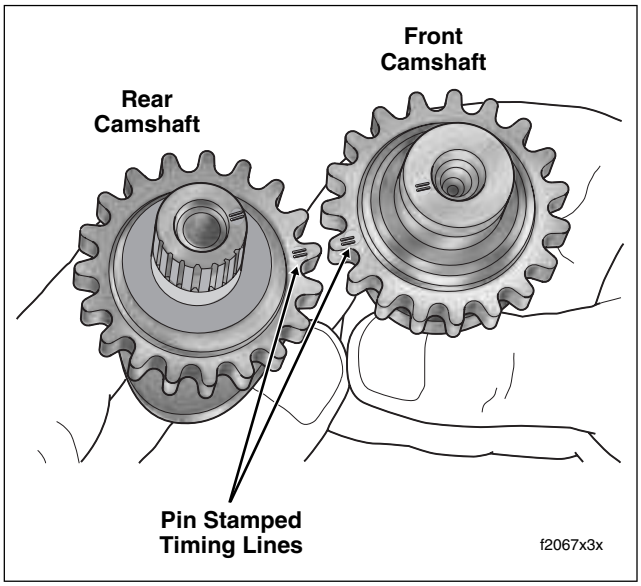

Figure 3-111. Align Timing Lines on Teeth of Camshaft Sprockets

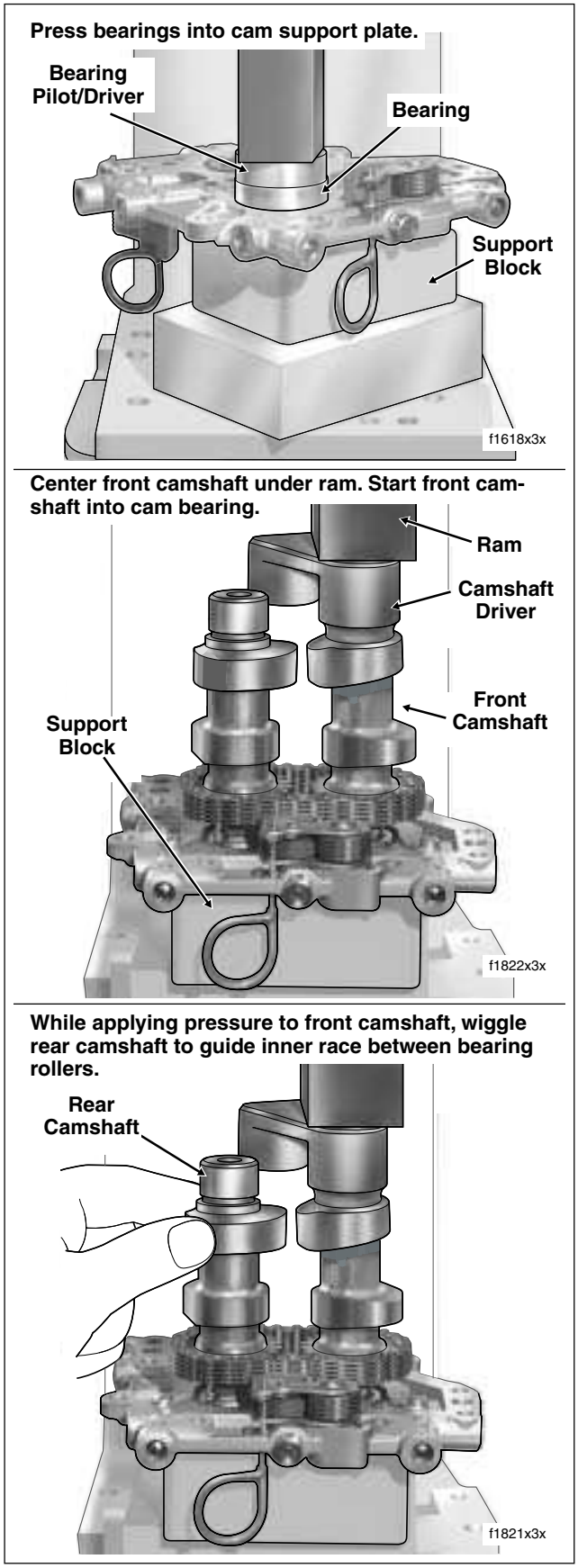

Figure 3-112. Install Cam Bearings/Camshafts

NOTE

Do not mix camshafts during the press procedure. The rear camshaft, which can be identified by the splined shaft, must go into the roller bearing at the rear of the cam support plate.

13. Place cup of camshaft driver over end of front camshaft **only**.

CAUTION

Verify that splined end of rear camshaft has been started into support block. Damage to the camshaft and/or support block can occur if end of camshaft catches top of block during the press procedure.

NOTE

To reduce the likelihood of such contact occuring, use 7/8 inch drill bit to enlarge rear cam bore in support block. For best results, radius top inside edge of bore after drilling.

CAUTION

Be sure that the tensioner shoe is clear of the secondary cam chain during the press procedure. Contact can result in damage that requires replacement of the tensioner assembly.

14. Center end of front camshaft under ram and slowly apply pressure to driver just to **start** front camshaft into bearing ID. See center frame of Figure 3-112.

CAUTION

If rear camshaft is not properly aligned, edge of installed inner race can catch on bearing rollers. Bearing damage can result if contact occurs during the press procedure.

15. Slowly apply pressure to driver on front camshaft, while wiggling rear camshaft as necessary to guide inner race between bearing rollers. See lower frame of Figure 3-112.

16. When inner race on rear cam is started into roller bearing, apply pressure to driver until front camshaft is fully seated. If necessary, keep finger pressure at top of rear camshaft to ensure that assembly remains square and inner race moves to installed position in roller bearing.

17. Since the pin stamped timing lines on the secondary sprockets cannot be observed once the camshafts are pressed into the bearings, note that the outboard ends of the shafts have a second set of timing lines (although they may be somewhat difficult to see). Using a straightedge, verify that these timing lines are in alignment. See Figure 3-113. If they are not, then the camshafts must be removed and reinstalled (with a new bearing set).

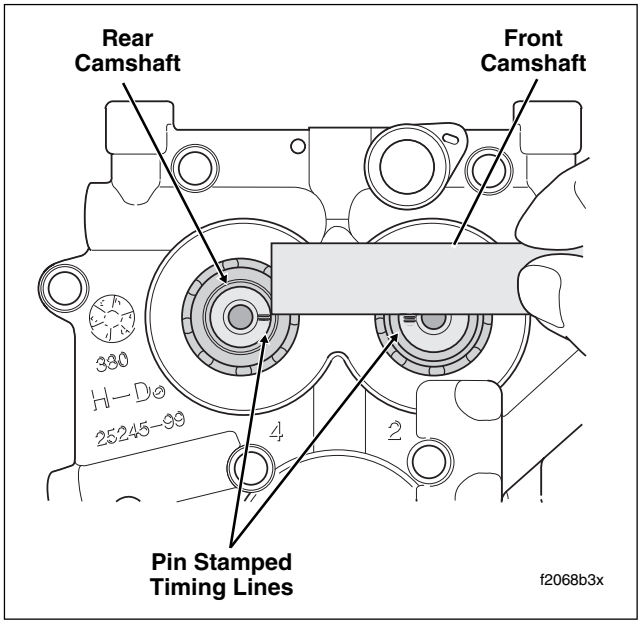

Figure 3-113. Verify Alignment of Timing Lines on Ends of Camshafts

⚠WARNING

Always wear proper eye protection when installing retaining rings. Use the correct retaining ring pliers. Verify that the tips of the pliers are not damaged or excessively worn. Slippage may propel the ring with enough force to cause eye injury.

18. With the sharp edge out, install **new** retaining ring in groove at end of front camshaft.

Cam Chain Tensioners

Removal

⚠CAUTION

Do not pull the retention pins from the primary or secondary cam chain tensioners with the chains and sprockets removed. With 35-40 pounds of spring pressure behind the tensioner, allowing it to accelerate through its full length of travel will cause spring stretching and/or cracking of the tensioner shoe, damage which requires replacement of the assembly. Furthermore, if the tensioner should contact fingers or other parts of the hand, minor or moderate injury may occur.

1. If retracted, hold the cam chain tensioner with the CAM CHAIN TENSIONER UNLOADER (HD-42313), pull the retention pin and ease the assembly into the unloaded position.

⚠WARNING

Always wear proper eye protection when removing retaining rings. Use the correct retaining ring pliers. Verify that the tips of the pliers are not damaged or excessively worn. Slippage may propel the ring with enough force to cause eye injury.

2. Remove retaining ring from groove in tensioner post. Discard retaining ring.
3. Slide cam chain tensioner assembly from post disengaging spring pin from hole in cam support plate.

Installation

1. Slide cam chain tensioner assembly onto post inserting spring pin into hole in cam support plate.

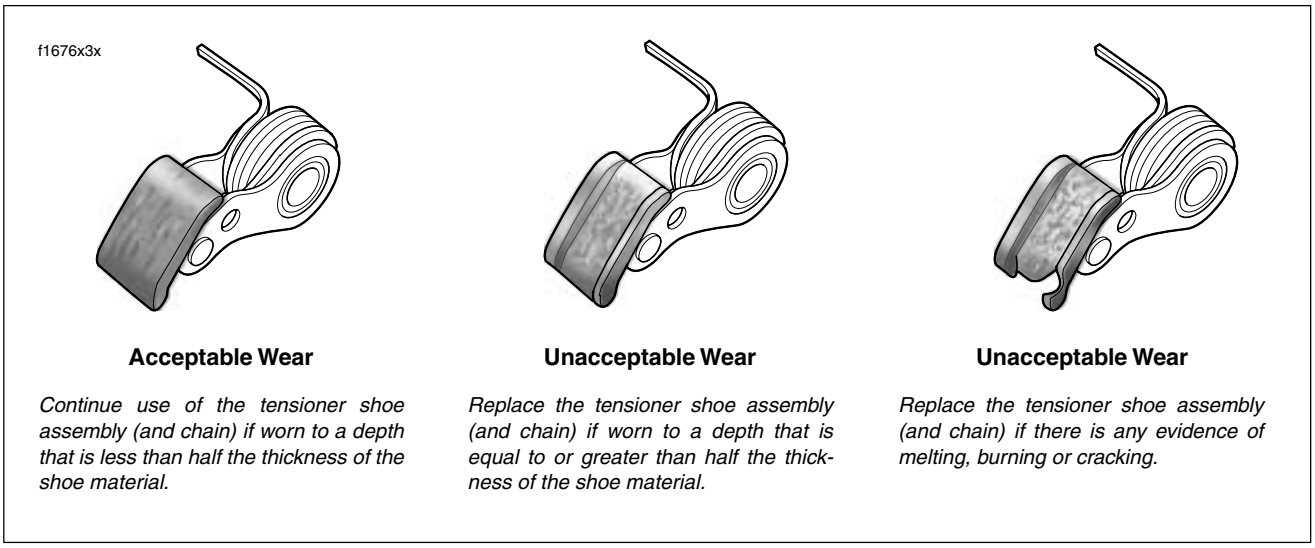

Figure 3-114. Cam Chain Tensioner Shoe Wear

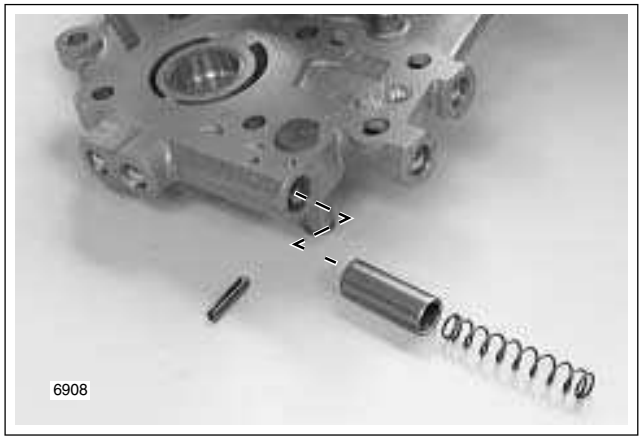

Figure 3-115. Oil Pressure Relief Valve Assembly

WARNING

Always wear proper eye protection when installing retaining rings. Use the correct retaining ring pliers. Verify that the tips of the pliers are not damaged or excessively worn. Slippage may propel the ring with enough force to cause eye injury.

2. With the sharp edge out, install **new** retaining ring in groove of post. Verify that the ring is fully seated in the groove.
3. If retracted prior to disassembly, place cup of CAM CHAIN TENSIONER UNLOADER (HD-42313) over spring coil of cam chain tensioner assembly. Retract the tensioner inserting a retention pin through hole in boss on the **primary cam chain side** of cam support plate.

Oil Pressure Relief Valve

Removal

1. Before removal, see INSPECTION on this page.
2. Remove primary cam chain tensioner assembly. See CAM CHAIN TENSIONERS, REMOVAL.
3. Secure the cam support plate in a vise with access to the roll pin. Be sure to install a pair of brass jaw inserts in the vise to avoid damage to the casting.
4. Using a 1/8 inch punch with a small hammer, carefully tap roll pin from pin hole in cam support plate. Discard roll pin.
5. Remove spring and piston from bypass port.

Installation

1. Secure the cam support plate in a vise. Install a pair of brass jaw inserts to avoid damage to the casting.
2. Lubricate piston with clean H-D 20W50 engine oil. Slide piston into bypass port with the open side facing outward.
3. Slide spring into bypass port until seated in open side of piston.
4. Start **new** roll pin into hole in cam support plate. Compress spring using the blade of a small screwdriver.
5. Holding spring compressed, tap roll pin into cam support plate until it approaches pin hole on opposite side.
6. Remove screwdriver to release spring. Verify that spring is straight and square in bore.
7. Using a 1/8 inch punch with a small hammer, carefully tap roll pin until flush with casting.
8. Install primary cam chain tensioner assembly. See CAM CHAIN TENSIONERS, INSTALLATION, in this section.

Inspection

1. Inspect oil pressure relief valve as follows:

NOTE

If diagnosing low oil pressure, start with step 1(a). If diagnosing high oil pressure, then begin with step 1(b).

   a. Measure distance from edge of cam support plate to inboard side of piston. Insert straight stiff wire into unplugged hole outboard of roll pin until it bottoms, and then mark and measure wire. With piston fully seated in the bore, depth should be approximately 2.25 inches (57.15 mm). If it is not, continue with step 1(b).
   b. Remove oil pressure relief valve. See OIL PRESSURE RELIEF VALVE, REMOVAL, on this page.
   c. Inspect spring for stretching, kinking or distortion.
   d. Inspect piston and bore for burrs, scoring or other damage. Look for steel particles or aluminum chips. Replace cam support plate and piston if any of these conditions are found.
   e. Install piston in bore and measure running clearance. If running clearance exceeds 0.003 inch (0.076 mm), install new piston and remeasure. Replace cam support plate if running clearance still exceeds specification.

Cam Needle Bearings

Removal

1. Obtain the CAMSHAFT NEEDLE BEARING REMOVER/INSTALLER (HD-42325A).
2. Remove four button fasteners from threaded holes in support plate, if installed. See Figure 3-116.
3. Sparingly apply graphite lubricant to threads of collet to prolong service life and ensure smooth operation.
4. Slide collet through support plate so that threaded end exits stamped side of plate.

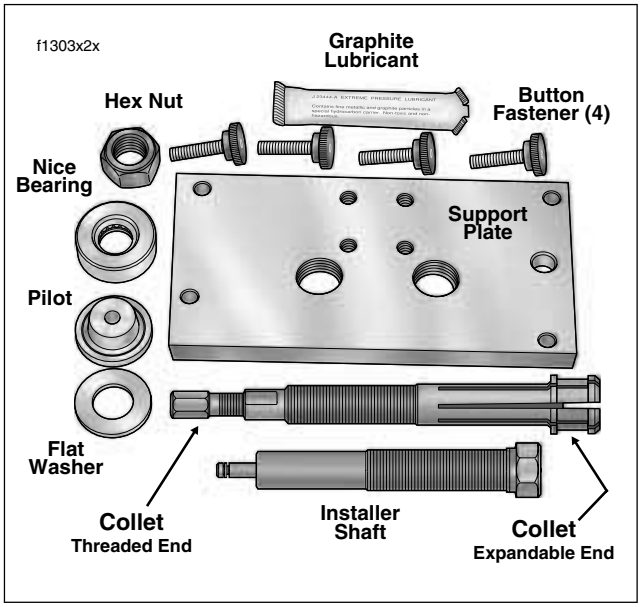

Figure 3-116. Camshaft Needle Bearing Remover/Installer (HD-42325A)

5. Aligning two large holes in support plate with needle bearing bores, hang right side of plate on ring dowel in crankcase flange.
6. Align four holes at corners of support plate with threaded holes in crankcase flange. Install button fasteners in these holes to secure support plate to crankcase. See upper frame of Figure 3-117.
7. Center expandable end of collet in bearing bore and slide Nice bearing and flat washer on threaded end. Start hex nut on threaded end.
8. Push expandable end of collet through bearing bore into flywheel compartment. Feel for inside edge of needle bearing using end of collet and then back off slightly.
9. Holding collet to prevent lateral movement, finger tighten hex nut until Nice bearing contacts support plate.
10. Using a 7/16 inch open end wrench, hold flat on collet to prevent rotation. Using a second 7/16 inch open end wrench, expand collet by turning hex at end of shaft in a clockwise direction. See center frame of Figure 3-117. Expandable end of collet makes contact with needle bearing ID.
11. Using a 15/16 inch open end wrench, turn hex nut in a clockwise direction until bearing is free. If necessary, hold flat on collet to prevent rotation. See lower frame of Figure 3-117.
12. Remove four button fasteners and pull support plate from crankcase.
13. Holding flat on collet, turn hex at end of shaft in a counterclockwise direction to close collet. Remove and discard needle bearing.

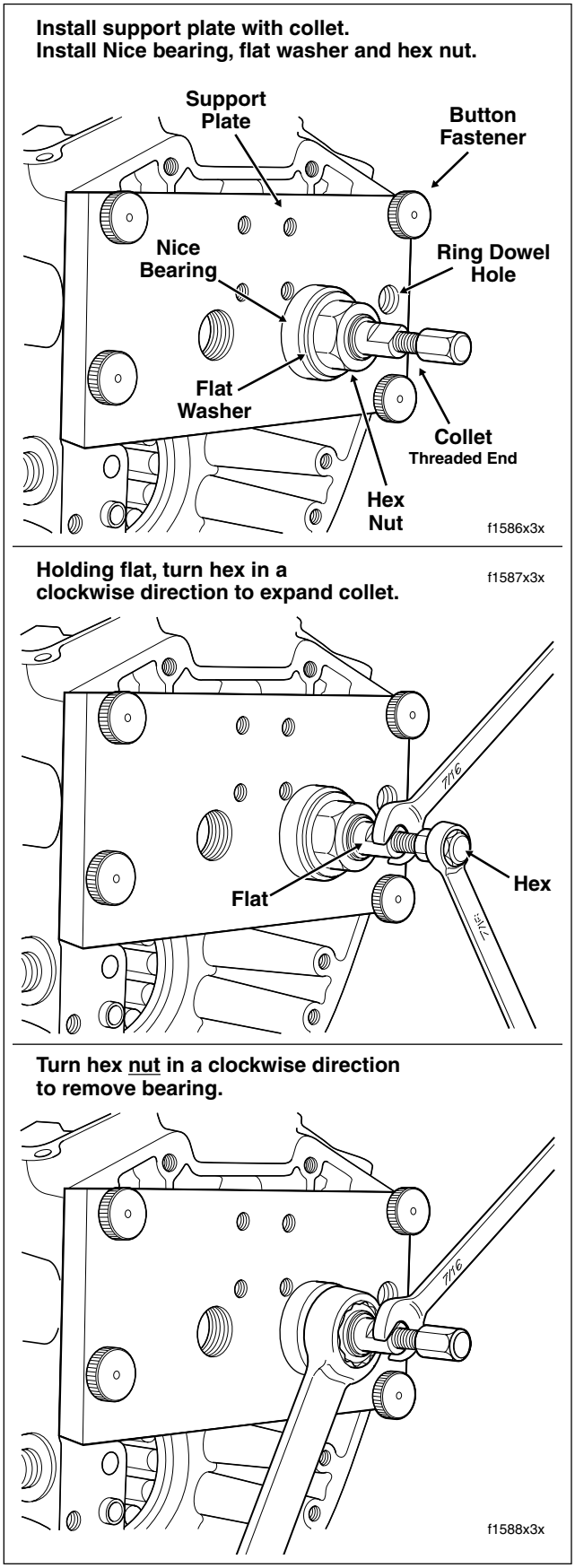

Figure 3-117. Remove Cam Needle Bearing

14. Remove hex nut, flat washer and Nice bearing from threaded end of collet. Pull collet from support plate.
15. Return to step 1 to remove second needle bearing.

Installation

1. Obtain the CAMSHAFT NEEDLE BEARING REMOVER/INSTALLER (HD-42325A).
2. Sparingly apply graphite lubricant to threads of installer shaft to prolong service life and ensure smooth operation.
3. Thread installer shaft into stamped side of support plate until threads begin to emerge from opposite side.
4. Install pilot at end of installer shaft.
5. Place **new** needle bearing on pilot with lettered side facing shoulder.
6. Aligning two large holes in support plate with needle bearing bores, hang right side of plate on ring dowel in crankcase flange.
7. Align four holes at corners of support plate with threaded holes in crankcase flange. Install button fasteners in these holes to secure support plate to crankcase. See upper frame of Figure 3-118.
8. Using 15/16 inch open end wrench, turn hex at end of installer shaft in a clockwise direction until resistance is felt. See lower frame of Figure 3-118.
9. Turn end of installer shaft in a counterclockwise direction until pilot is free of needle bearing bore.
10. Remove four button fasteners and pull support plate and installer shaft from crankcase.
11. Remove pilot from installer shaft. Unthread installer shaft from support plate.
12. Return to step 1 to install second needle bearing.
13. Thread four button fasteners into threaded holes in support plate to prevent loss.

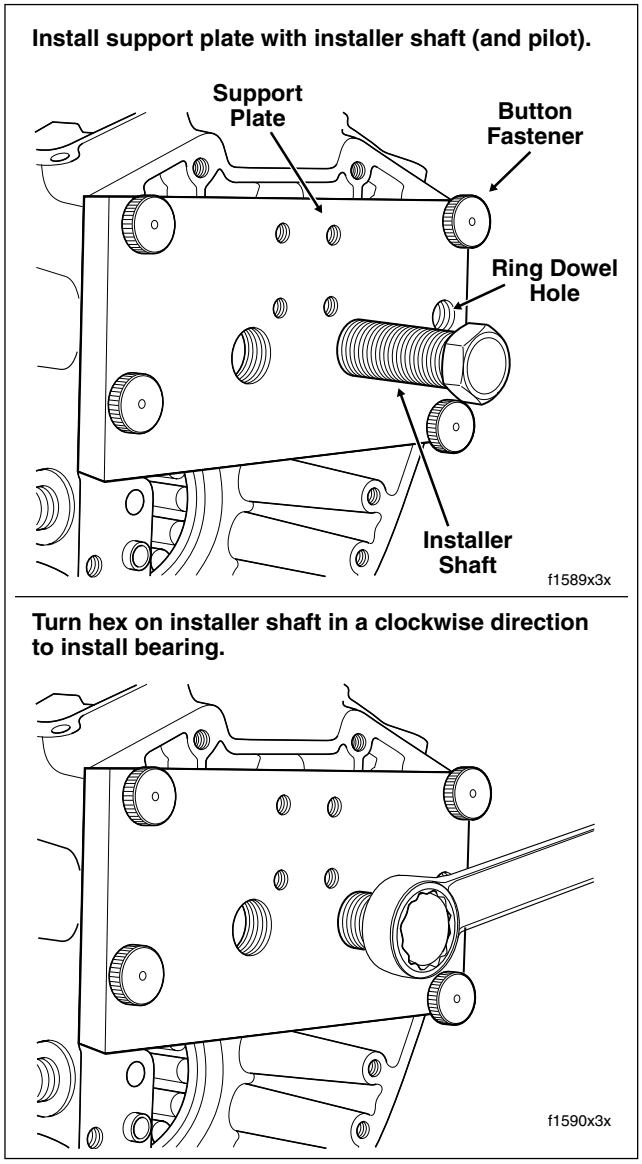

Figure 3-118. Install Cam Needle Bearing

Installation

1. See Section 3.10 BOTTOM END OVERHAUL, ASSEMBLY, steps 12-29.
2. Remove wireforms to release hydraulic lifters.
3. See Section 3.9 TOP END OVERHAUL, ASSEMBLY, steps 29-39.

OIL PUMP

Removal

1. See Section 3.9 TOP END OVERHAUL, DISASSEMBLY, steps 1-11.

NOTE

When removing the cam support plate, it is not necessary to disturb the lifter assemblies if a method is devised to prevent the hydraulic lifters from dropping into the cam compartment. One such method is provided in the following step. Leaving the lifter assemblies intact simplifies the procedure, since the lifter cover, gasket, anti-rotation pin and hydraulic lifters can be left in place.

2. Fashion lifter holding tool as follows:
   a. Obtain a large binder clip (available at any office supply store). Squeeze wireforms to remove from binder clip. See upper frame of Figure 3-100.
   b. Compress wireform slightly and insert free ends into outer and inner lifter cover bores so that legs engage walls of both hydraulic lifter sockets. See lower frame of Figure 3-100.
3. See Section 3.10 BOTTOM END OVERHAUL, DISASSEMBLY, steps 1-15.

Cleaning and Inspection

1. Clean all parts in a non-volatile cleaning solution or solvent.

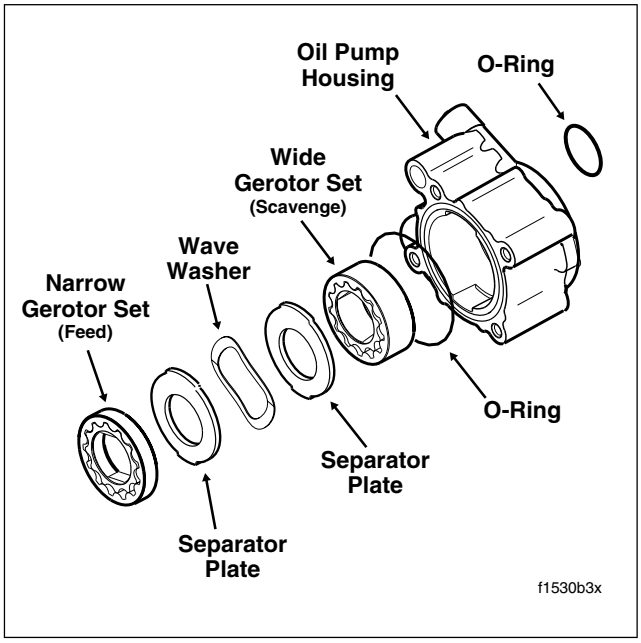

Figure 3-119. Oil Pump Assembly

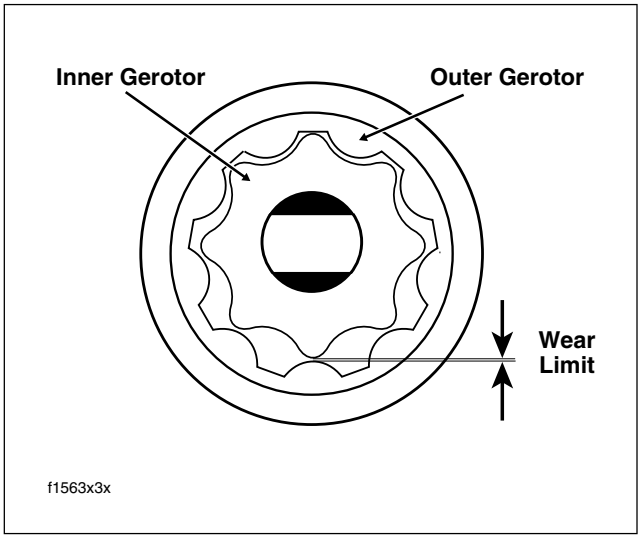

Figure 3-120. Measure Gerotor Sets for Wear

2. Thoroughly dry all parts with low pressure compressed air. Verify that all oil passages are clean and open.
3. Look for scoring, gouging or cracking caused by foreign material that may have passed through the oil pump.
4. Look for grooves or scratches on the cam support plate, which serves as the outboard side of the oil pump.
5. Check for excessive wear or damage on lobes of outer gerotors and between lobes on inner gerotor.
6. Mesh pieces of one gerotor set together as shown in Figure 3-120. Use a feeler gauge to determine clearance between tips of lobes on inner and outer gerotors. The maximum allowable clearance is 0.004 inch (0.10 mm). Replace gerotor set if clearance exceeds specification. Inspect second gerotor set in the same manner.
7. Measure thickness of inner gerotor of one set with a micrometer. Measure the outer gerotor of the same set. Replace the gerotor set if the difference exceeds 0.001 inch (0.025 mm). Inspect second gerotor set in the same manner.
8. Assemble the oil pump. Verify that feed gerotors stand proud of the oil pump surface 0.0215-0.0305 inch (0.546-0.775 mm). If measurement is less than 0.0215 inch (0.546 mm), remove feed gerotor set and reassemble using **new** wave washer. Repeat measurement and replace oil pump body if still not within specification.

Installation

1. See Section 3.10 BOTTOM END OVERHAUL, ASSEMBLY, steps 11-29.
2. Remove wireforms to release hydraulic lifters.
3. See Section 3.9 TOP END OVERHAUL, ASSEMBLY, steps 29-39.

Legend:

f2070x3x

1. Crankshaft Bearing
2. Ring Dowel
3. Cam Needle Bearing
4. Oil Inlet Fitting
5. Oil Outlet Fitting
6. Crankcase Breather Fitting
7. Right Crankcase Half
8. O-Ring
9. Piston Jet
10. T20 TORX Screw
11. Lock Ring
12. Sprocket Shaft Bearing
13. O-Ring
14. Ring Dowel
15. Plug
16. O-Ring
17. Oil Filter Mount
18. Oil Filter Adapter
19. Flat Washer
20. Bolt
21. Lockplate
22. Oil Filter
23. Crankcase Bolt
24. Ring Dowel
25. O-Ring
26. Left Crankcase Half
27. Thrust Washer
28. Oil Seal
29. Sprocket Shaft Spacer

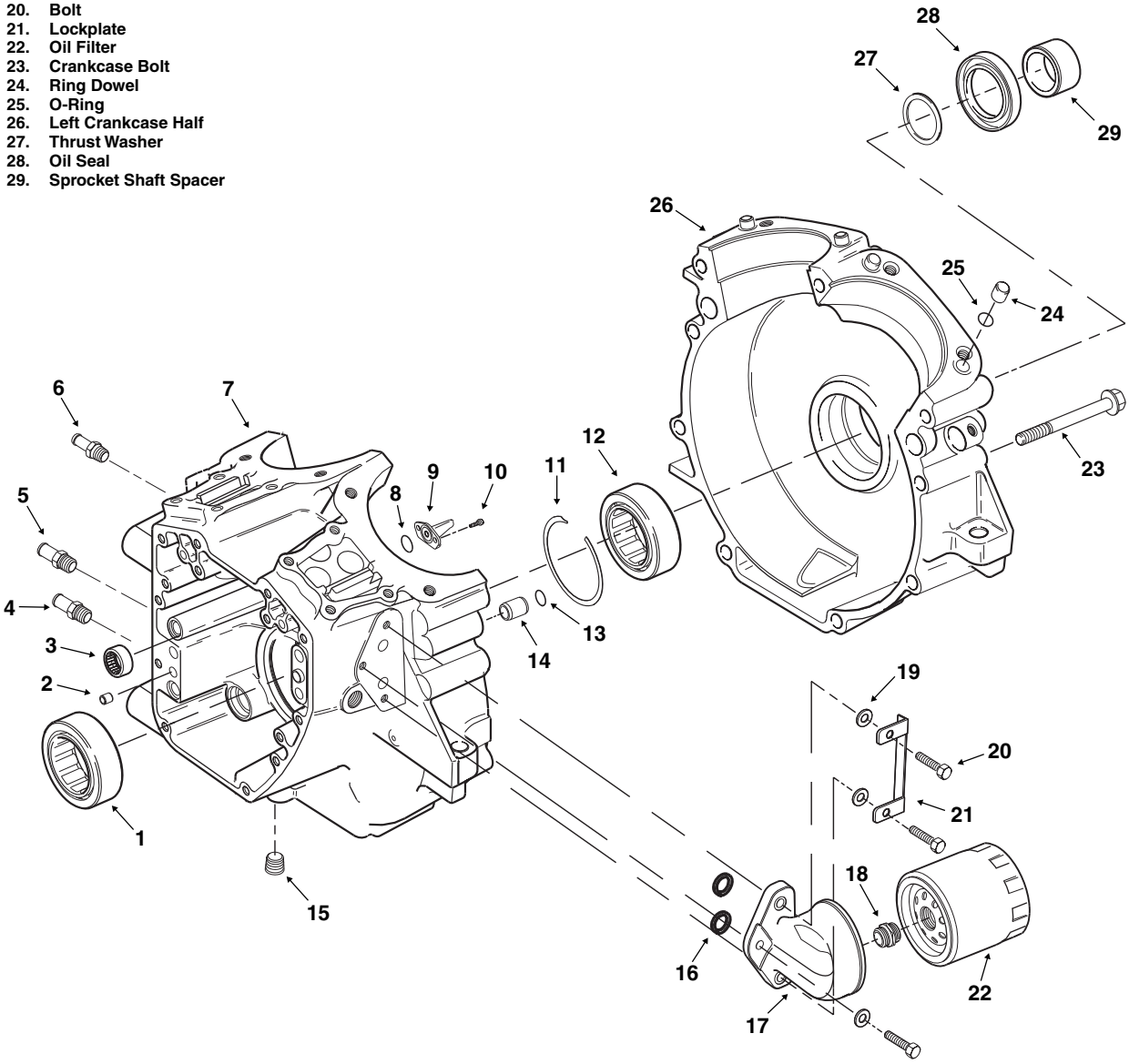

Figure 3-121. Crankcase Assembly (Exploded View)

CRANKCASE

Removal

1. See Section 3.9 TOP END OVERHAUL, DISASSEMBLY, steps 1-29.
2. See Section 3.10 BOTTOM END OVERHAUL, DISASSEMBLY, steps 1-18.

Disassembly/Assembly

RIGHT CRANKCASE HALF

Crankshaft Bearing

Removal

⚠CAUTION

Never move or lift the crankcase by grasping the cylinder studs. The crankcase is too heavy to be carried in this manner and may be dropped. Dropping the crankcase may result in parts damage and minor or moderate injury.

1. See Figure 3-122. Obtain CRANKSHAFT/SPROCKET SHAFT BEARING REMOVER/INSTALLER PILOT/DRIVER (B-45655) and CRANKSHAFT/SPROCKET SHAFT BEARING REMOVER/INSTALLER SUPPORT TUBE (HD-42720-5).
2. Place support tube on hydraulic press table with the “A” end up. The ends of the support tube are stamped “A” and “B” to ensure proper orientation.
3. With the outboard side of the right crankcase half facing upward, position crankshaft bearing bore over support tube.

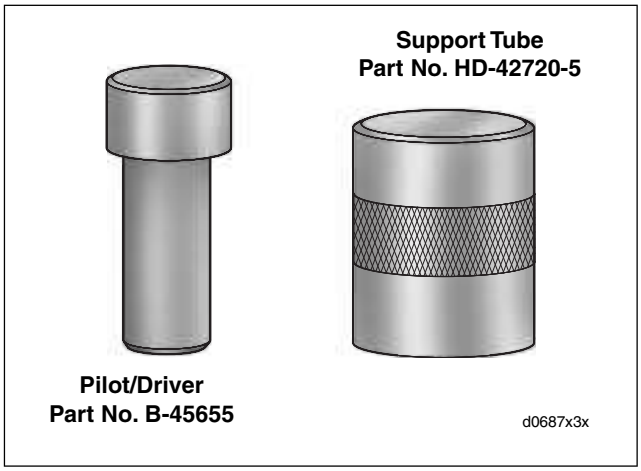

Figure 3-122. Crankshaft/Sprocket Shaft Bearing Pilot/Driver and Support Tube

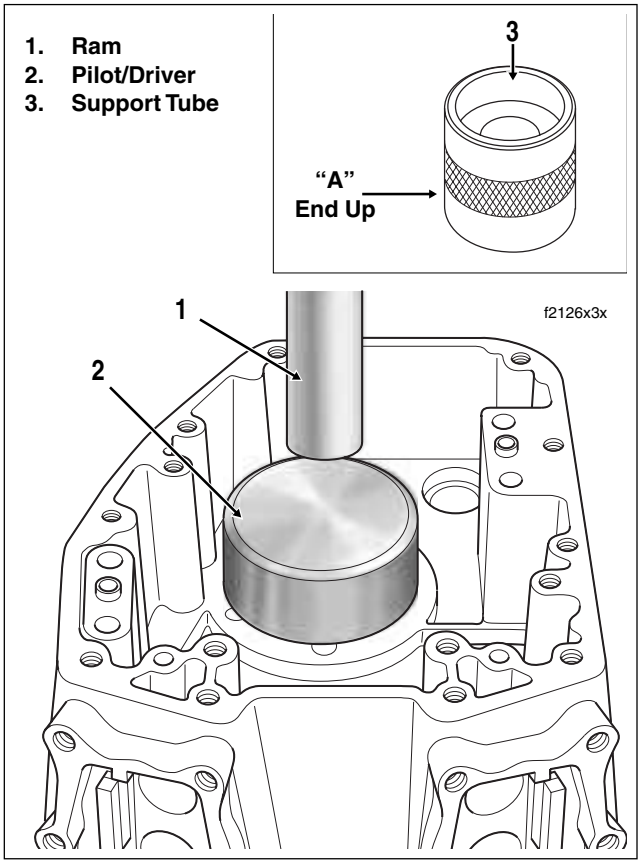

Figure 3-123. Remove Crankshaft Bearing

4. Slide pilot/driver through bearing into support tube.
5. Center pilot/driver under ram of press. Apply pressure to pilot/driver until bearing is free. See Figure 3-123.
6. Remove right crankcase half, pilot/driver and bearing from support tube. Discard bearing.

Installation

1. See Figure 3-122. Obtain CRANKSHAFT/SPROCKET SHAFT BEARING REMOVER/INSTALLER PILOT/DRIVER (B-45655) and CRANKSHAFT/SPROCKET SHAFT BEARING REMOVER/INSTALLER SUPPORT TUBE (HD-42720-5).
2. Turn support tube over so that the “B” end is up. The ends of the support tube are stamped “A” and “B” to ensure proper orientation.
3. With the outboard side of the right crankcase half facing upward, position crankshaft bearing bore over support tube.
4. Obtain **new** crankshaft bearing and apply a thin film of clean engine oil to O.D.

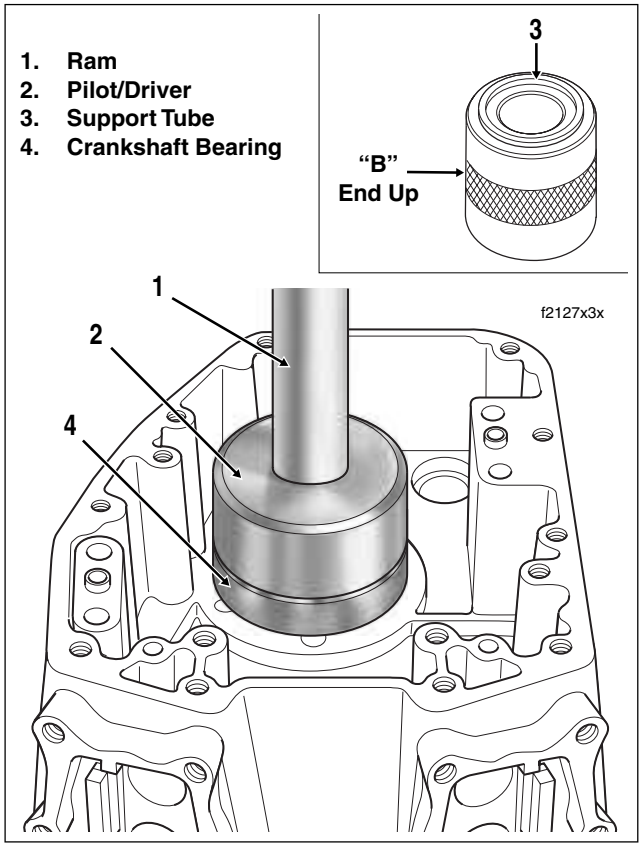

Figure 3-124. Install Crankshaft Bearing

5. Start crankshaft bearing into bore with the lettered side up. Lubricate leading edge of bearing before placement.
6. Slide pilot/driver through bearing into support tube.
7. Center pilot/driver under ram of press. Apply pressure to pilot/driver until resistance is felt and bearing bottoms in support tube. See Figure 3-124.
8. Remove pilot/driver and right crankcase half from support tube.

Piston Jets

Removal

1. Remove two T20 TORX screws to free piston jet from crankcase.
2. Remove O-ring from groove in mounting flange of jet. Discard O-ring.

Installation

CAUTION

O-rings that are missing, distorted, pinched or otherwise damaged will result in either oil leakage or low oil pressure. Use of the wrong O-ring will have the same results. Since many O-rings are similar in size and appearance, always use new O-rings keeping them packaged until use to avoid confusion.

1. Install **new** O-ring in groove of jet mounting flange. Apply a very thin film of clean H-D 20W50 engine oil to O-ring before installation.
2. Apply Loctite Low Strength Threadlocker 222 (purple) to threads of two T20 TORX screws.
3. With the jet pointed upward, install TORX screws to secure piston jet to crankcase. Tighten screws to 25-35 **in-lbs** (2.8-4.0 Nm).

LEFT CRANKCASE HALF

Sprocket Shaft Bearing

Removal

⚠CAUTION

Never move or lift the crankcase by grasping the cylinder studs. The crankcase is too heavy to be carried in this manner and may be dropped. Dropping the crankcase may result in parts damage and minor or moderate injury.

⚠WARNING

Do NOT rotate left crankcase half in the engine stand so the stator mount flange (sprocket shaft side) is facing up or the flywheel assembly will drop to the floor. Dropping the flywheel assembly may result in parts damage and minor or moderate injury.

1. Holding flywheel assembly so that it does not drop out of left crankcase half, rotate cradle so that engine is upright and crankshaft and sprocket shaft are horizontal.
2. Carefully slide flywheel assembly out of left crankcase half.
3. Remove left crankcase half from engine stand and move to bench area. Remove thrust washer from outboard side of crankcase by pulling it past the oil seal. Set thrust washer aside for inspection or reuse.
4. Using a suitable drift, tap oil seal from bearing bore. Discard oil seal.

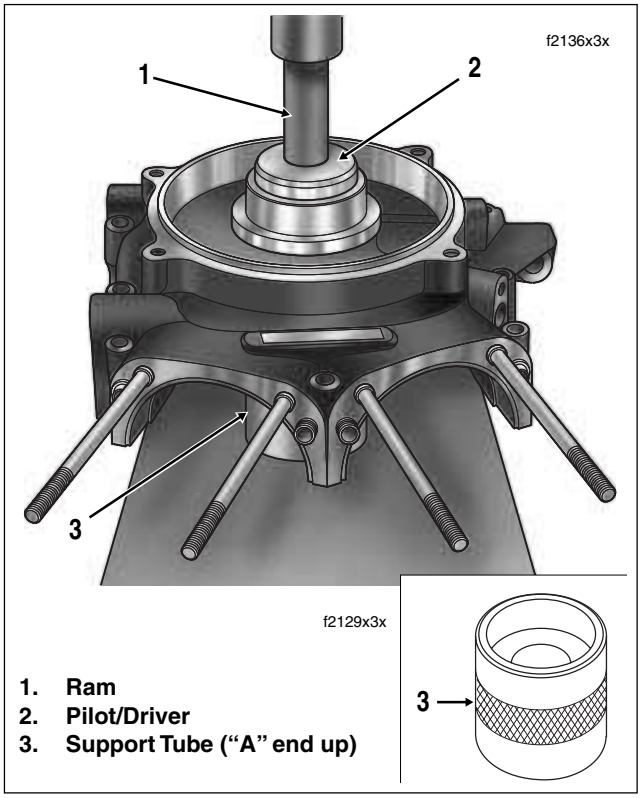

Figure 3-125. Remove Sprocket Shaft Bearing

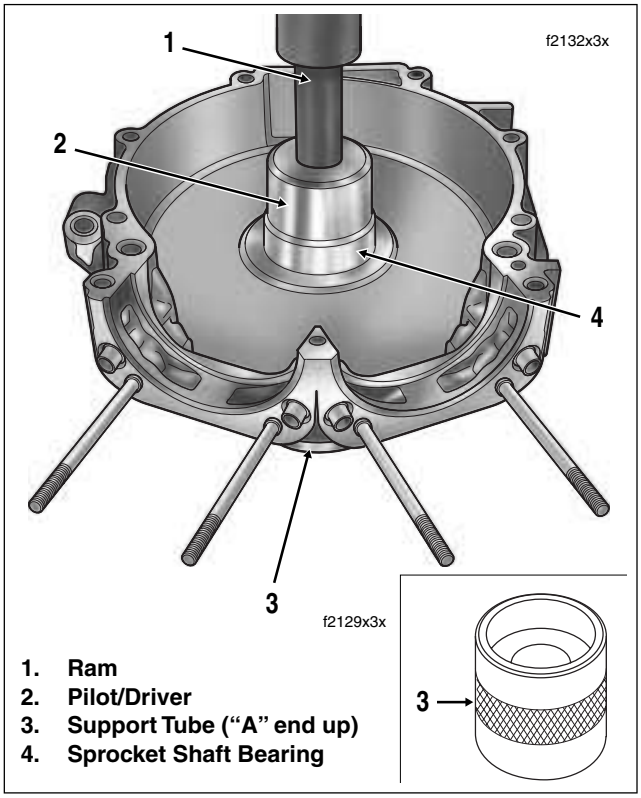

Figure 3-126. Install Sprocket Shaft Bearing

5. See Figure 3-122. Obtain CRANKSHAFT/SPROCKET SHAFT BEARING REMOVER/INSTALLER SUPPORT TUBE (HD-42720-5) and CRANKSHAFT/SPROCKET SHAFT BEARING REMOVER/INSTALLER PILOT/DRIVER (B-45655).
6. Place left crankcase half on work bench with inboard side of facing upward.
7. Using the tip of a flat blade screwdriver, carefully lift end of lock ring out of groove in bearing bore. Working the screwdriver around the edge, lift the lock ring up and out of the groove. Be careful not to damage the lip of the groove during removal.
8. Place support tube on hydraulic press table with the “A” end up. The ends of the support tube are stamped “A” and “B” to ensure proper orientation.
9. With the outboard side of the left crankcase half facing upward, position sprocket shaft bearing bore over support tube. See Figure 3-125.
10. Slide pilot/driver through bearing into support tube.
11. Center pilot/driver under ram of press. Apply pressure to pilot/driver until bearing is free.
12. Remove left crankcase half, pilot/driver and bearing from support tube. Discard bearing.

Installation

⚠CAUTION

Never move or lift the crankcase by grasping the cylinder studs. The crankcase is too heavy to be carried in this manner and may be dropped. Dropping the crankcase may result in parts damage and minor or moderate injury.

1. See Figure 3-122. Obtain CRANKSHAFT/SPROCKET SHAFT BEARING REMOVER/INSTALLER SUPPORT TUBE (HD-42720-5) and CRANKSHAFT/SPROCKET SHAFT BEARING REMOVER/INSTALLER PILOT/DRIVER (B-45655).
2. Place support tube on hydraulic press table with the “A” end up. The ends of the support tube are stamped “A” and “B” to ensure proper orientation.
3. With inboard side of the left crankcase half facing upward, position sprocket shaft bearing bore over support tube.
4. See Figure 3-126. Obtain **new** sprocket shaft bearing and apply a thin film of clean engine oil to O.D.
5. Start sprocket shaft bearing into bearing bore with the lettered side down. Lubricate leading edge of bearing before placement.

6. Slide pilot/driver through bearing into support tube.
7. Center pilot/driver under ram of press. Apply pressure to pilot/driver until bearing lightly bottoms in the bore.
8. Remove left crankcase half and pilot/driver from support tube.
9. Place left crankcase half on work bench with inboard side of facing upward.
10. Obtain **new** lock ring and work into groove in bearing bore. Be careful not to damage the lip of the groove during installation. Verify that lock ring is fully seated in the groove.

NOTE

If lock ring will not fit into groove, bearing bore may not have been properly cleaned and/or bearing may not be fully seated in the bore.

Sprocket Shaft Bearing Inner Race

Removal

1. If reusing flywheel, remove bearing inner race and thrust washer as follows:
   a. Obtain FLYWHEEL SUPPORT FIXTURE (HD-44358). See Figure 3-127. Install brass jaws or shop towels around teeth of vise to prevent damage to tool. Clamp tool in vise with the round hole topside.
   b. Insert crankshaft end through hole resting flywheel assembly on fixture. Slide knurled locating pin down slot in tool to engage crank pin hole. Hand tighten locating pin.
   c. Slide hold-down clamp down slot to engage inboard side of right flywheel half, and then hand tighten knurled nut at bottom to secure. Repeat step to secure hold-down clamp on opposite side of flywheel.

NOTE

For proper clamping force, hold-down clamp must not be tilted. Rotate hex on outboard stud until clamp is level.

   d. Position WEDGE ATTACHMENT (HD-95637-46B) on inboard side of thrust washer and turn hex nuts an equal number of turns to draw halves of wedge together.

CAUTION

Install wedge attachment only so far as necessary to ensure positive contact with thrust washer. Installing tool with more contact than absolutely necessary will result in damage to flywheel.

   e. Obtain two 3/8-16 inch bolts 6-1/2 inches long (with flat washers). Install flat washers on bolts. Obtain bridge, forcing screw and hardened plug from MAINSHAFT BEARING INNER RACE PULLER/INSTALLER (HD-34902B).

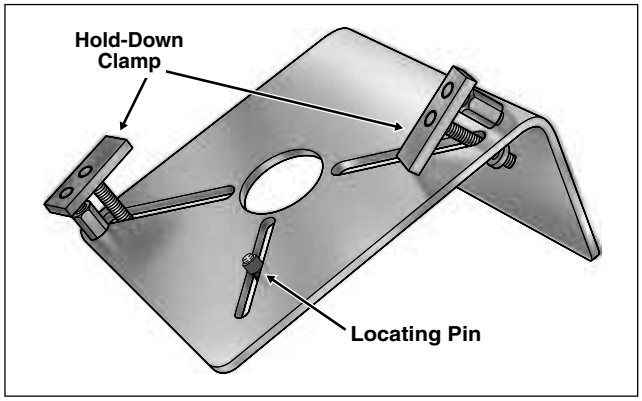

Figure 3-127. Flywheel Fixture (Part No. HD-44358)

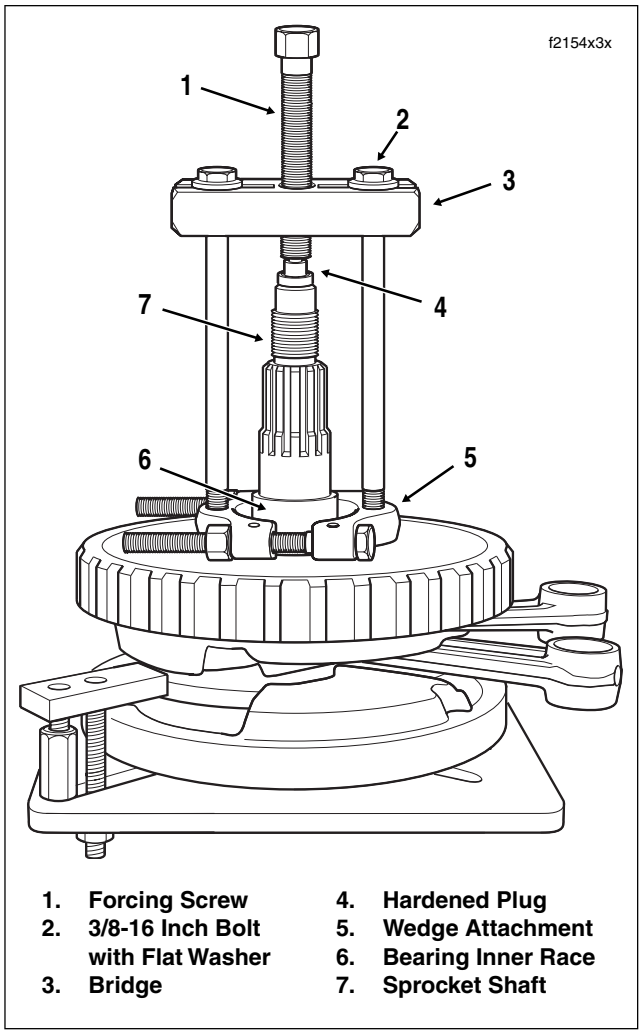

Figure 3-128. Remove Inner Race From Sprocket Shaft

   f. Slide one bolt into channel on each side of bridge so that flat washer is between bridge and bolt head. Thread bolts into wedge attachment an equal number of turns.

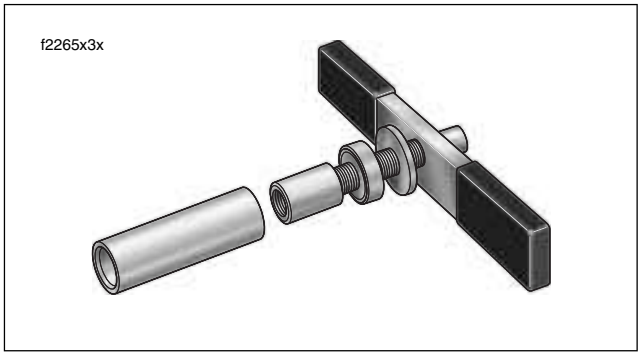

Figure 3-129. Sprocket Shaft Timken Bearing Cone Installer (Part No. HD-97225-55B)

g. Sparingly apply graphite lubricant to threads of forcing screw to prolong service life and ensure smooth operation. Start forcing screw into center hole of bridge.

CAUTION

Failure to use hardened plug may result in damage to forcing screw and/or sprocket shaft.

h. Place cupped side of hardened plug against end of sprocket shaft. Thread forcing screw into bridge until the steel ball at the end of the screw makes firm contact with hardened plug.

i. Using the Robinair Heat Gun (HD-25070), uniformly heat the bearing inner race for about 30 seconds using a circular motion.

NOTE

To faciliate removal without heat, apply a light penetrating oil to shaft and leading edge of bearing inner race.

⚠WARNING

Never use both heat and penetrating oil. Use only one or the other. Excessive heat can cause the penetrating oil to ignite resulting in flames or fire. Inadequate safety precautions can result in death or serious injury.

j. Turn forcing screw until thrust washer and bearing inner race move approximately 1/8 inch (3.2 mm).

k. Turn hex nuts an equal number of turns to separate halves of WEDGE ATTACHMENT.

l. After bottoming thrust washer on shaft, reposition WEDGE ATTACHMENT (HD-95637-46B) on inboard side of bearing inner race. Turn hex nuts an equal number of turns to draw halves of wedge together.

1. Install Thrust Washer and Bearing Inner Race On Sprocket Shaft. Assemble Tool.

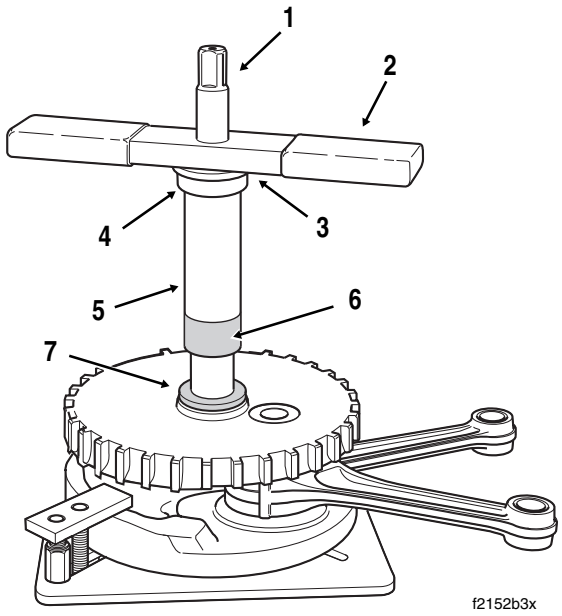

2. Press Bearing Inner Race Onto Sprocket Shaft.

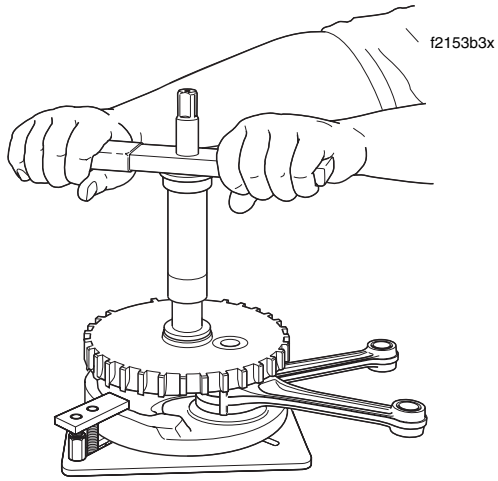

1. **Pilot Shaft**
2. **Handle**
3. **Flat Washer**
4. **Nice Bearing**
5. **Sleeve**
6. **Inner Race**
7. **Thrust Washer**

Figure 3-130. Press Inner Race Onto Sprocket Shaft

CAUTION

Install wedge attachment only so far as necessary to ensure positive contact with bearing inner race. Installing tool with more contact than absolutely necessary will result in damage to flywheel.

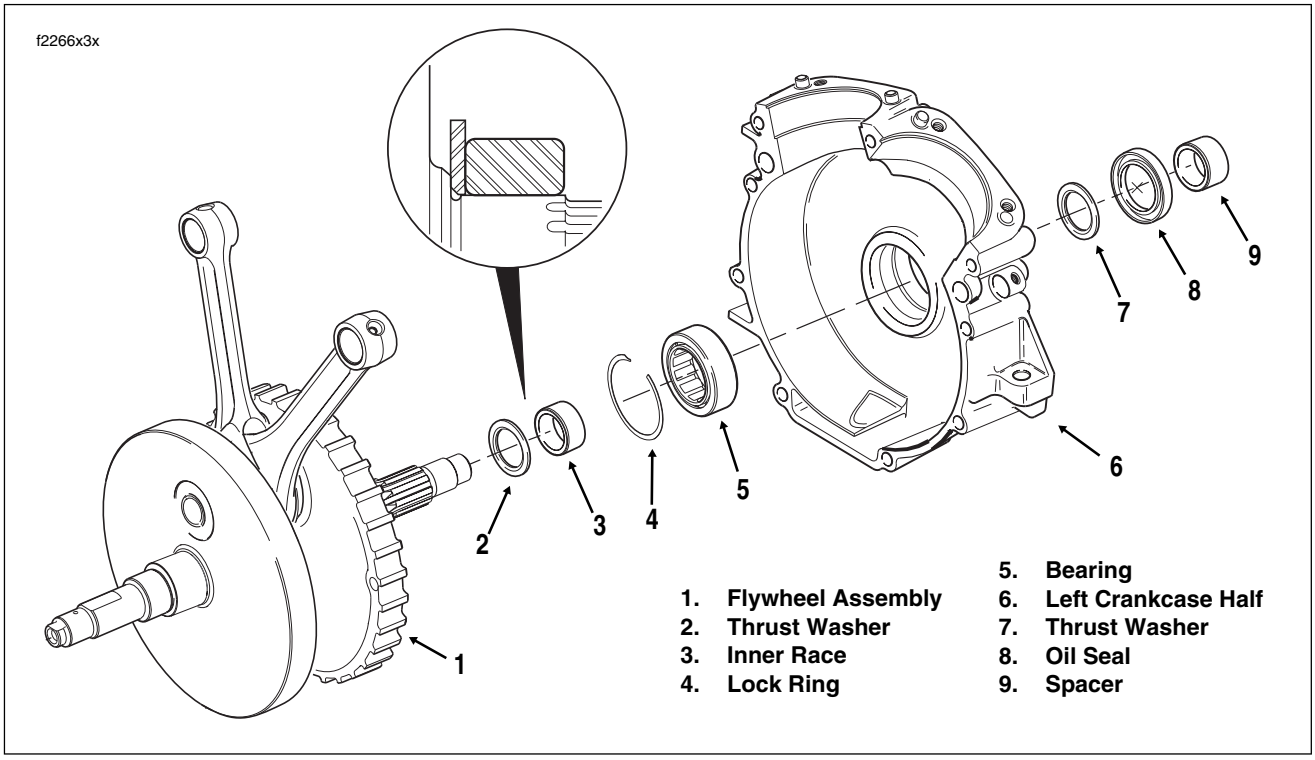

Figure 3-131. Sprocket Shaft Bearing Assembly

m. Verify that the tool assembly is square, so that the bearing inner race is not cocked during removal. See Figure 3-128.

n. Using the Robinair Heat Gun (HD-25070), uniformly heat the bearing inner race for about 30 seconds using a circular motion.

NOTE

To faciliate removal without heat, apply a light penetrating oil to shaft and leading edge of bearing inner race.

o. Turn forcing screw until bearing inner race is pulled free of sprocket shaft.

p. Remove thrust washer from sprocket shaft.

2. Discard thrust washer and bearing inner race.

Installation

1. Place **new** thrust washer over sprocket shaft with the ink stamp facing outside (and the chamfer on the ID inboard).
2. Place **new** bearing inner race on bench top. Using the Robinair Heat Gun (HD-25070), uniformly heat bearing inner race for about 60 seconds using a circular motion.
3. Wearing suitable gloves to protect hands from burns, place heated bearing inner race over sprocket shaft.

NOTE

To faciliate installation without heat, apply a light penetrating oil to shaft and leading edge of bearing inner race.

⚠WARNING

Never use both heat and penetrating oil. Use only one or the other. Excessive heat can cause the penetrating oil to ignite resulting in flames or fire. Inadequate safety precautions can result in death or serious injury.

4. Obtain the SPROCKET SHAFT TIMKEN BEARING CONE INSTALLER (HD-97225-55B). See Figure 3-129. Assemble tool as described below.

a. Thread pilot onto sprocket shaft until contact is made with shoulder.

b. Sparingly apply graphite lubricant to threads of pilot shaft to prolong service life and ensure smooth operation.

c. Slide sleeve over pilot until it contacts bearing inner race.

d. Slide Nice bearing and large flat washer over pilot until contact is made with sleeve.

e. Thread handle onto pilot shaft. See upper frame of Figure 3-130.

5. Rotate handle of tool in a clockwise direction until bearing inner race bottoms against thrust washer. See lower frame of Figure 3-130.
6. Remove handle, flat washer, Nice bearing, sleeve and pilot from sprocket shaft.

Cylinder Studs

Removal

1. Thread a 3/8”-16 nut onto cylinder stud.
2. Thread a second nut onto stud until it contacts the first.
3. Placing wrench on first nut installed, remove stud from cylinder deck.

Installation

1. Hand start stud in cylinder deck with the collar side down.
2. Install steel ball bearing into unused cylinder head bolt. Position head bolt on end of stud.
3. Using an air gun, tighten stud until collar almost contacts cylinder deck.
4. Leaving cylinder head bolt installed, hand tighten stud to 10-20 ft-lbs (14-27 Nm).

Pipe Plug and Oil Fittings

Removal

1. Turn hex on oil fittings in a counterclockwise direction until free.
2. Turn pipe plug in a counterclockwise direction until free.

Installation

1. Apply Loctite Pipe Sealant with Teflon 565 to threads.
2. Turn hex on oil fittings in a clockwise direction until snug. Tighten fittings to 120-168 **in-lbs** (13.6-18.9 Nm).
3. Install pipe plug. Tighten pipe plug to 120-168 **in-lbs** (13.6-18.9 Nm).

Cleaning and Inspection

1. Scrape old gasket material from the crankcase flanges. Old gasket material left on mating surfaces will cause leaks.
2. Clean all parts in a non-volatile cleaning solution or solvent.
3. Thoroughly dry all parts with low pressure compressed air.
4. Verify that all oil holes and passageways are clean and open.
5. Check ring dowels for looseness, wear or damage. Replace as necessary.
6. Use a file to carefully remove any nicks or burrs from machined surfaces.
7. Clean out tapped holes and clean up damaged threads.
8. Check the top of the crankcase for flatness with a straightedge and feeler gauge. Replace if warped.

Installation

1. See Section 3.10 BOTTOM END OVERHAUL, ASSEMBLY, steps 1-29.
2. See Section 3.9 TOP END OVERHAUL, ASSEMBLY, steps 1-39.

FLYWHEEL/CONNECTING ROD ASSEMBLY

Removal

1. See Section 3.9 TOP END OVERHAUL, DISASSEMBLY, steps 1-29.
2. See Section 3.10 BOTTOM END OVERHAUL, DISASSEMBLY, steps 1-18.
3. See Section 3.11 SUBASSEMBLY SERVICE AND REPAIR, CRANKCASE, LEFT CRANKCASE HALF, SPROCKET SHAFT BEARING, REMOVAL.

Inspection

1. Replace the flywheel/connecting rod assembly if any of the following conditions are noted:

CAUTION

Do not attempt to straighten connecting rods. Straightening rods will damage both the upper bushing and lower bearing.

- Connecting rods are bent or twisted.
- Connecting rods do not fall under their own weight or are in a bind.

NOTE

Bluing on connecting rods is from induction hardening and is considered a normal condition.

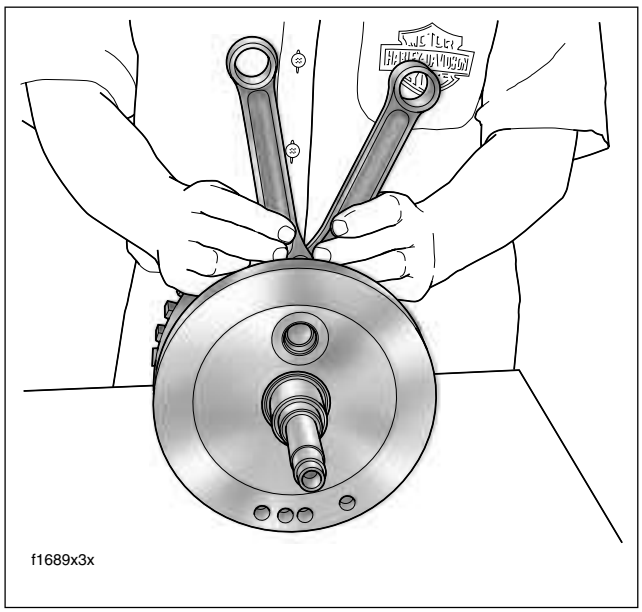

Figure 3-132. Check Connecting Rod Bearing Clearance

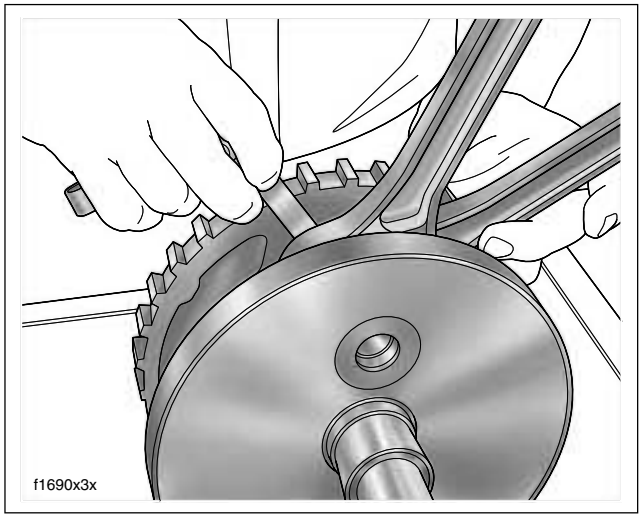

Figure 3-133. Check Connecting Rod Side Play

- The crankshaft/sprocket shaft bearing inner races are brinelled, burnt, scored, blued or damaged.

2. Orient the assembly as shown in Figure 3-132. Holding the shank of each rod just above the bearing bore, pull up and down on the connecting rods. Any discernable up and down movement indicates excessive lower bearing clearance. Replace the flywheel/connecting rod assembly.
3. Insert a feeler gauge between the thrust washer and the outboard side of the connecting rod. See Figure 3-133. Replace the assembly if rod side play exceeds 0.020 inch (0.51 mm).

NOTE

If the flywheel, connecting rods or right side bearing inner race need to be replaced, then replace the entire flywheel assembly.

Installation

1. See Section 3.11 SUBASSEMBLY SERVICE AND REPAIR, CRANKCASE, LEFT CRANKCASE HALF, SPROCKET SHAFT BEARING, INSTALLATION.
2. See Section 3.10 BOTTOM END OVERHAUL, ASSEMBLY, steps 1-29.
3. See Section 3.9 TOP END OVERHAUL, ASSEMBLY, steps 1-39.

Table Of Contents

FUEL SYSTEM 4

SUBJECT	PAGE NO.
4.1 Specifications	4-1
4.2 Fuel System Troubleshooting	4-2
4.3 Enrichener	4-5
4.4 Carburetor	4-9
4.5 Air Cleaner	4-16
4.6 Vacuum Operated Fuel Valve	4-18
4.7 Fuel Tank	4-21
4.8 Evaporative Emissions Control System	4-27

SPECIFICATIONS 4.1

CVH CARBURETOR JET SIZES

Model	Main Fuel Jet No.	Slow Fuel Jet No.
49 state	190	45
HDI	195	45
California	185	45

FUEL TANK CAPACITY

Capacity	English	Metric
Total	5.0 Gallons	18.9 liters
Reserve	0.9 Gallons	3.4 liters

TORQUE VALUES

Item	ft/in-lbs	Nm
Enrichener cable mounting bracket hex nut	20-35 **in-lbs**	2.3-4.0 Nm
Cylinder head breather bolts	120-144 **in-lbs**	13.6-16.3 Nm
Air cleaner cover bracket screws	40-60 **in-lbs**	4.5-6.8 Nm
Air cleaner cover screw	36-60 **in-lbs**	4.1-6.8 Nm
Fuel valve hex jam nut	15-20 ft-lbs	20-27 Nm
Fuel tank adapter	22-26 ft-lbs	30-35 Nm
Fuel tank rear mounting bolt	15-20 ft-lbs	20-27 Nm
Fuel tank front mounting bolts	15-20 ft-lbs	20-27 Nm
Battery hold-down clamp screw	15-20 ft-lbs	20-27 Nm
Console mounting bolt acorn nut	50-90 **in-lbs**	5.7-10.2 Nm

FUEL SYSTEM TROUBLESHOOTING (CARBURETED) 4.2

CARBURETOR TROUBLESHOOTING	
OVERFLOW	
Check for:	**Remedy:**
1. Restricted fuel tank vent system.	1. Correct restricted hose. Replace vapor valve.
2. Loose float bowl screws.	2. Tighten screws.
3. Damaged float bowl O-ring.	3. Replace O-ring.
4. Improper fuel level in float bowl.	4. Adjust float tab for correct fuel level.
5. Damaged or leaking float assembly.	5. Replace float assembly.
6. Particle contamination in fuel inlet fitting cavity.	6. Clean and clear cavity and fuel supply tract.
7. Worn or dirty inlet valve or seat.	7. Clean or replace valve and clean seat.
POOR IDLING	
Check for:	**Remedy:**
1. Idle speed improperly adjusted.	1. Adjust operating idle speed.
2. Inlet system air leak (faster idling).	2. Correct as required.
3. Loose low speed jet.	3. Tighten jet.
4. Contaminated or plugged low speed system.	4. Clean contaminants and clear passages.
5. Enrichener valve not seated or leaking.	5. Adjust, clean or replace.
6. Leaking accelerator pump.	6. Repair.
POOR FUEL ECONOMY	
Check for:	**Remedy:**
1. High speed riding style.	1. Modify riding habits.
2. Excessive use of enrichener system.	2. Limit system use.
3. Fuel level too high.	3. Adjust float level.
4. Restricted fuel tank vent system.	4. Correct restricted hose. Replace vapor valve.
5. Dirty air cleaner element.	5. Clean or replace as required.
6. Excessive accelerator pump output.	6. Check and clean accelerator pump bypass orifice.
7. Plugged or restricted bowl vent.	7. Clean and clear passages.
8. Vacuum piston assembly malfunction.	8. See Vacuum Piston Troubleshooting.
9. Loose jets.	9. Tighten jets.
10. Worn or damaged needle or needle jet.	10. Replace needle or needle jet.
11. Plugged air jets or passages.	11. Clean and clear passages.
12. Enrichener valve not seated or leaking.	12. Adjust, clean or replace.
13. Idle speed improperly adjusted.	13. Adjust operating idle speed.
POOR ACCELERATION	
Check for:	**Remedy:**
1. Throttle cables misadjusted.	1. Adjust throttle cables.
2. Inlet system air leak.	2. Correct as required.
3. Restricted fuel tank vent system.	3. Correct restricted hose. Replace vapor valve.
4. Restricted fuel supply passages.	4. Correct and clear restriction.
5. Plugged bowl vent or overflow.	5. Clean and clear passages.
6. Enrichener valve not seated or leaking.	6. Adjust, clean or replace.
7. Worn or damaged needle or needle jet.	7. Replace assembly.
8. Vacuum piston malfunction.	8. See Vacuum Piston Troubleshooting.
9. Plugged jets or passages.	9. Clean and clear as required.
10. Fuel level (float chamber) too low.	10. Adjust float level.
11. Accelerator pump leaking or no output.	11. Repair as necessary.

HARD STARTING	
Check for:	**Remedy:**
1. Enrichener system plugged, not properly functioning or improperly operated.	1. Clean, adjust, or replace; or read Owner's Manual.
2. Inlet system air leak.	2. Correct as required.
3. Restricted fuel supply.	3. Check fuel supply and/or passages. Verify that vacuum operated fuel valve is functional.
4. Fuel overflow.	4. See Overflow Troubleshooting.
5. Plugged slow jet or passages.	5. Clean and clear jet or passages.

POOR PERFORMANCE ON ROAD	
Check for:	**Remedy:**
1. Inlet system air leak.	1. Correct as required.
2. Restricted fuel tank vent system.	2. Correct restricted hose. Replace vapor valve.
3. Dirty or damaged air cleaner element.	3. Clean or replace.
4. Accelerator pump inoperative.	4. Repair as required.
5. Plugged bowl vent or overflow.	5. Clean and clear passages.
6. Vacuum piston assembly malfunction.	6. See Vacuum Piston Troubleshooting.
7. Loose or plugged fuel and air jets or passages.	7. Clean, clear and correct as required.
8. Worn or damaged needle or needle jet.	8. Replace assembly.
9. Restricted fuel supply tract.	9. Correct and clear restriction.
10. Enrichener valve not seated or leaking.	10. Adjust, clean or replace.
11. Idle speed improperly adjusted.	11. Adjust operating idle speed.

POOR HIGH SPEED PERFORMANCE	
Check for:	**Remedy:**
1. Inlet system air leak.	1. Clean or replace.
2. Restricted fuel tank vent system.	2. Correct restricted hose. Replace vapor valve.
3. Dirty or damaged air cleaner element.	3. Clean or replace.
4. Accelerator pump inoperative.	4. Repair as required.
5. Plugged bowl, vent or overflow.	5. Clean and clear passages.
6. Vacuum piston assembly malfunction.	6. See Vacuum Piston Troubleshooting.
7. Restricted fuel supply tract.	7. Correct and clean restriction.
8. Loose or plugged main jets or passages.	8. Tighten, clean, clear as required.
9. Improper fuel level.	9. Adjust float level.
10. Worn or damaged needle or needle jet.	10. Replace assembly.
11. Enrichener valve not seated or leaking.	11. Adjust, clean or replace.

VACUUM PISTON ASSEMBLY TROUBLESHOOTING	
PISTON DOES NOT RAISE PROPERLY	
Check for:	**Remedy:**
1. Diaphragm cap loose, damaged or leaking.	1. Tighten or replace cap.
2. Diaphragm pinched at lip groove.	2. Reposition diaphragm lip.
3. Piston atmosphere vent blocked.	3. Clear vent.
4. Piston vacuum passage plugged.	4. Clean and clear passage.
5. Torn diaphragm.	5. Replace piston diaphragm assembly.
6. Piston binding.	6. Clean piston slides and body or replace piston.
7. Spring binding.	7. Correct or replace spring.
8. Enrichener valve open, not seated or leaking.	8. Adjust, clean or replace.
PISTON DOES NOT CLOSE PROPERLY	
Check for:	**Remedy:**
1. Piston diaphragm ring dirty or damaged.	1. Clean or replace piston.
2. Piston binding.	2. Clean piston slides and body or replace piston.
3. Spring damaged.	3. Replace spring.

ENRICHENER (CARBURETED) 4.3

GENERAL

The carburetor is a constant velocity, gravity fed type with a float operated inlet valve, a variable venturi, a throttle stop screw for idle speed adjustment and a fuel enrichment system for starting. See Figure 4-1.

The fuel enrichment circuit will cause engine idle speed to increase to approximately 2000 rpm with enrichener knob pulled out fully and engine running at normal operating temperature. With enrichener knob pulled out partially and engine running at normal operating temperature, engine idle speed will also increase above normal idle speed. The increase in idle speed is intended to alert the rider that engine is warmed up, and that enrichener knob should be pushed in all the way. Continued use of enrichener after engine is warmed up may cause fouled spark plugs.

Idle and transfer ports provide a balanced fuel mixture during the transition period from stop to mid-range. A vacuum piston controls venturi opening.

The carburetor is specifically designed to control exhaust emissions. All jets are fixed. The idle mixture has been preset at the factory.

The idle mixture screw is recessed in the carburetor casting. The opening is sealed with a plug because it is intended that the idle mixture be non-adjustable.

NOTE

Adjusting mixture setting by procedures other than specified in this section may be in violation of Federal or State regulations.

This system partially compensates for changes in the mixture that are normally caused by changes in altitude. Because atmospheric pressure decreases as altitude increases, the pressure difference in the upper and lower chambers is reduced, which provides less fuel to the engine.

The carburetor is equipped with an accelerator pump. The accelerator pump system uses sudden throttle openings (rapid accelerations) to quickly inject fuel into carburetor venturi to provide extra fuel for smooth acceleration.

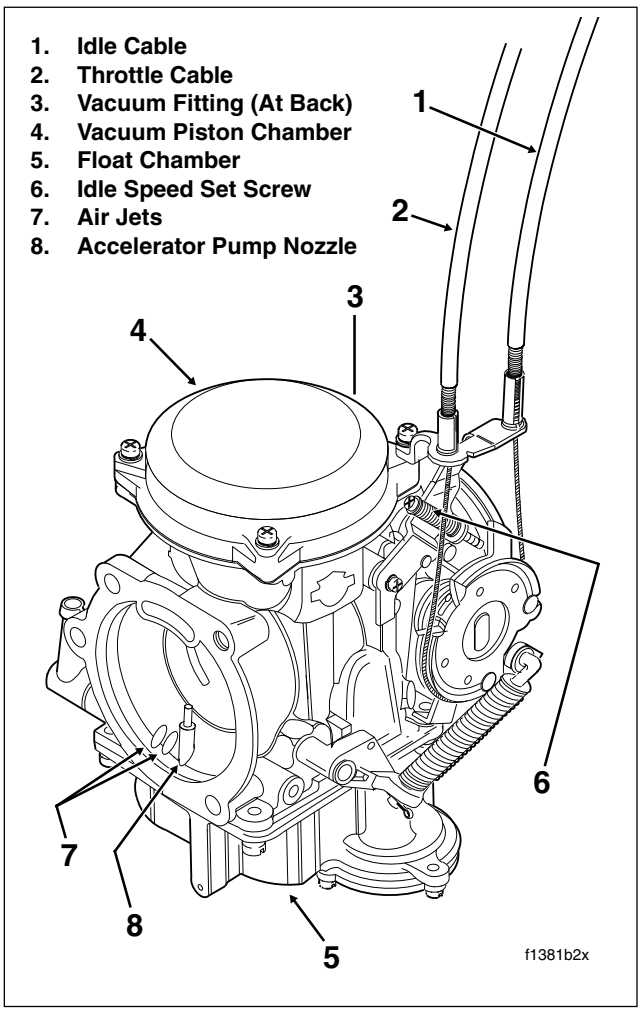

Figure 4-1. CVH Carburetor

OPERATION

Enrichener

The enrichener knob, located under the left side of the fuel tank, controls opening and closing of the enrichener circuit in the carburetor. The enrichener knob can be adjusted to any position, from full-in to full-out.

CAUTION

Never accelerate the engine above 2500 RPM immediately after a cold start. Allow the engine to run slowly for 15-30 seconds. This will allow the engine to warm up and let oil reach all surfaces needing lubrication. Extended idling with enrichener in the full out position for a period longer than 30 seconds is not recommended.

NOTE

- *H-D CV carburetors have an enrichener circuit that will cause the engine to idle at approximately 2000 rpm with the engine at normal operating temperature and the enrichener knob pulled fully out.*

- *The increase in idle speed is intended to alert the rider that the engine is warmed up to normal operating temperature and the enrichener knob should be pushed all the way in.*
- *Continuing to use the enrichener when the engine is at full operating temperature WILL CAUSE FOULED SPARK PLUGS.*

CAUTION

Pay close attention to the vehicle's warm-up time. Either excessive or insufficient use of the enrichener may cause poor performance, erratic idle, poor fuel economy and spark plug fouling.

NOTE

The following starting and operating instructions for all carbureted motorcycles should be viewed as recommendations only. They may be modified for individual vehicles.

Cool Engine

Outside Temperature Cooler than 60˚ F

Turn the fuel valve to the ON position. BE SURE THAT THE THROTTLE IS CLOSED. Pull the enrichener knob to the “full out” position. Turn the Ignition/Light Key Switch knob to the IGNITION position. Turn the Engine Stop Switch to the RUN position. Press the Engine Start Switch to operate the electric starter.

1. After initial 15-30 second warm-up, ride for 3 minutes or 2 miles (3.2 km) with enrichener knob in full out position. See Figure 4-2.
2. Push the enrichener knob in to the 1/2 way position. Ride an additional 2 minutes or 2 miles (3.2 km).
3. Push the enrichener knob fully in.

NOTE

If outside temperature is cooler than 20˚ F it may be necessary to pump the throttle control grip 2 or 3 times.

Outside Temperature Warmer than 60˚ F

Turn the fuel valve to the ON position. BE SURE THAT THE THROTTLE IS CLOSED. Pull the enrichener knob to the “full out” position. Turn the Ignition/Light Key Switch knob to the IGNITION position. Turn the Engine Stop Switch to the RUN position. Press the Engine Start Switch to operate the electric starter.

1. After the initial 15-30 second warm-up, ride for 1 minute or 1/2 mile (0.8 km) with enrichener knob in full out position. See Figure 4-2.

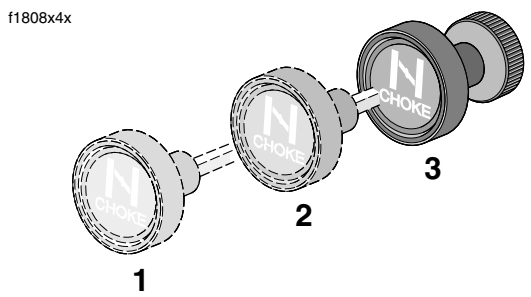

1. **Full-Out (Cold Engine Starts)**
2. **1/2-Way Position**
3. **Full-In (Normal Running Position)**

Figure 4-2. Set the Enrichener Knob

2. Push the enrichener knob in to the 1/2 way position. Ride an additional 1 minute or 1/2 mile (0.8 km).
3. Push the enrichener knob fully in.

Warm Climate Or Hot Engine

Turn the fuel valve to the ON position. Turn the Ignition/Light Key Switch knob to the IGNITION position. Turn the Engine Stop Switch to the RUN position. Open throttle 1/8 - 1/4 turn. Press the Engine Start Switch to operate the electric starter. DO NOT USE ENRICHENER.

NOTE

If the engine does not start after a few turns or if one cylinder fires weakly but engine does not start, it is usually because of an over-rich (flooded) condition. This is especially true of a hot engine. If the engine is flooded, push enrichener knob in all the way, turn ignition on and operate starter with throttle wide open. DO NOT "pump" the throttle while turning over the engine.

ADJUSTMENTS

Slow Idle

NOTE

Make certain enrichener knob is pushed all the way in before adjusting engine idle. The CV carburetor enrichener-circuit will cause the engine idle speed to increase to between 1500 and 2000 rpm with the enrichener knob pulled out fully and the engine at normal operating temperature. (With the enrichener knob pulled out partially and normal engine operating temperature, the engine idle speed will increase above normal idle speed (950-1050 rpm) to approximately 2000 rpm

maximum with the enrichener knob pulled out fully). The increase in idle speed is intended to alert the rider that the engine is warmed-up and the enrichener knob should be pushed all the way in. Continued use of the enrichener, after engine is at normal operating temperature, may cause fouled spark plugs.

With the engine at normal operating temperature and the enrichener all the way in (enrichener valve closed) adjust the throttle stop screw so the engine idles at 1000 rpm.

NOTE

Use a test tachometer, connected to negative ignition coil terminal to measure engine rpm on models without tachometers.

Enrichener Control

The fuel enrichener knob should open, remain open and then close without binding. The knurled plastic nut next to the enrichener knob controls the ease at which the cable slides within the conduit. If adjustment is needed, see Section 1.12 ENRICHENER CONTROL.

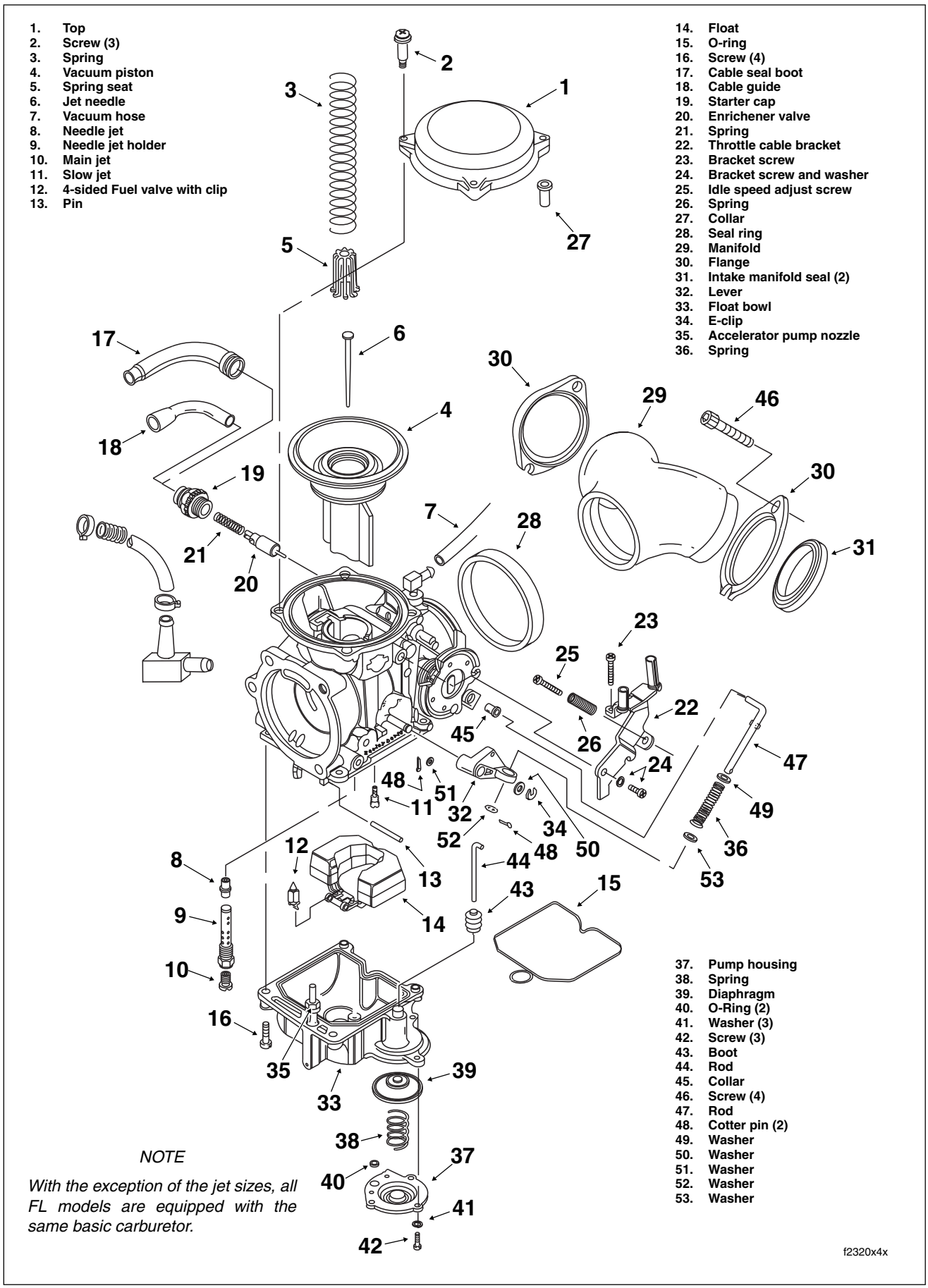

Figure 4-3. Carburetor

CARBURETOR 4.4

REMOVAL

⚠WARNING

Gasoline is extremely flammable and highly explosive. When servicing the fuel system, do not smoke or allow open flame or sparks in the vicinity. Inadequate safety precautions could result in death or serious injury.

1. Remove maxi-fuse. See Section 8.3 SYSTEM FUSES, MAXI-FUSE, REMOVAL.
2. Remove air cleaner assembly. See Section 4.5 AIR CLEANER, REMOVAL.
3. Locate the fuel enrichener knob under the left side of the fuel tank, and loosen hex nut at backside of mounting bracket. Slide cable assembly free of slot in mounting bracket.
4. Rotate handle on fuel valve to the horizontal position to shut the gasoline supply to the carburetor OFF.

⚠WARNING

Some gasoline will drain from the fuel inlet hose when disconnected from the carburetor. Thoroughly wipe up any spilled fuel immediately. Dispose of rags in a suitable manner. Gasoline is extremely flammable and highly explosive. Inadequate safety precautions could result in death or serious injury.

5. Using a side cutters, cut clamp and remove fuel inlet hose from fitting at side of carburetor.

NOTE

On California models, pull purge tube from fitting on same side of carburetor.

6. Gently work carburetor free of seal ring on intake manifold.

⚠WARNING

As the carburetor is removed, be sure to keep assembly upright as the float bowl contains gasoline. Tilting the carburetor or turning it upside down will cause the gasoline to drain onto surrounding area. Gasoline is extremely flammable and highly explosive. Inadequate safety precautions could result in death or serious injury.

7. If cruise control equipped, remove E-clip from groove at end of cruise cable housing. Remove cruise cable housing from cable guide in throttle cable bracket. Push plastic end fitting on cruise cable to outboard side to release from wheel pin.

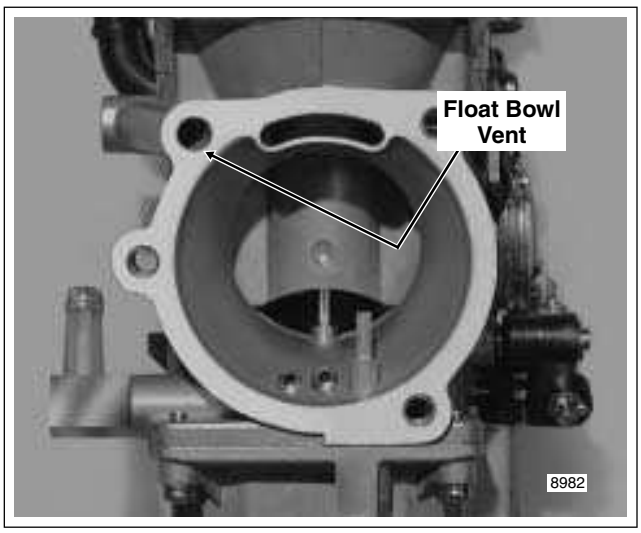

Figure 4-4. Drain Carburetor Float Bowl

8. Using a needle nose pliers, carefully pull idle cable barrel from upper inboard hole in throttle wheel. Pull throttle cable barrel from remaining hole. Release idle and throttle cables from guides in throttle cable bracket.
9. Pull vacuum hose elbow from fitting on inboard side of carburetor.
10. Carefully remove carburetor while drawing enrichener cable to right side of motorcycle.
11. Keeping carburetor upright, move assembly to bench area. Tilting carburetor, carefully pour gasoline in float bowl into a suitable container. Gasoline will exit float bowl vent shown in Figure 4-4.

INSTALLATION

1. Place carburetor into approximate position on right side of motorcycle while feeding enrichener cable over to left side.
2. Push vacuum hose elbow onto fitting on inboard side of carburetor.
3. Install sleeve on throttle cable housing into shorter cable guide in throttle cable bracket. Drawing throttle cable downward, fit barrel end into lower outboard hole in throttle wheel. Install sleeve and spring on idle cable housing into longer cable guide inserting barrel end into upper inboard hole in throttle wheel.

Figure 4-5. Remove Enrichener Cable

4. Verify that cables are fully seated in channel of throttle wheel, and using cable adjusters at handlebar, tighten cables as necessary to keep barrel ends from dislodging. Verify operation by turning throttle grip and observing cable action.
5. If cruise control equipped, slide plastic end fitting over cap of wheel pin. Push on end fitting until it snaps in place. Slip cruise cable housing into cable guide in throttle cable bracket. Install **new** E-clip into groove at end of cruise cable housing.

NOTE

*The fit between the carburetor and seal ring is tight. Prior to assembly, lubricate mating surfaces with liquid dishwashing soap or tire mounting lube. Always install **new** seal ring if dried out, cracked or otherwise damaged.*

6. Lubricate inside diameter of seal ring. Also apply a light film of lubricant to carburetor housing where casting comes into contact with seal ring. Gently work carburetor into seal ring.
7. Slide **new** clamp onto free end of fuel inlet hose. Install hose onto brass fitting at side of carburetor. Making sure clamp is positioned inboard of lip on fitting, crimp clamp using HOSE CLAMP PLIERS (HD-97087-65B).

NOTE

On California models, push purge tube onto fitting on same side of carburetor.

8. Moving to left side of motorcycle, slide threaded portion of enrichener cable into slot of mounting bracket. Flat on threads must face rear of motorcycle for script on enrichener knob to be right side up. With the external tooth lockwasher and hex nut positioned on the inboard side of the mounting bracket, tighten hex nut to 20-35 **in-lbs** (2.3-4.0 Nm).
9. Adjust throttle cables. See Section 2.21 THROTTLE CABLES (NON-CRUISE), ADJUSTMENT.
10. Install air cleaner assembly. See Section 4.5 AIR CLEANER, INSTALLATION.
11. Install maxi-fuse. See Section 8.3 SYSTEM FUSES, MAXI-FUSE, INSTALLATION.
12. Rotate handle of fuel valve clockwise to the vertical position and carefully inspect for leaks. Return the valve to the OFF position when finished.
13. Adust the engine idle speed. See Section 4.3 ENRICHENER (CARBURETED), ADJUSTMENTS.

DISASSEMBLY

Vacuum Piston Chamber

1. Placing a 14mm open end wrench on hex, loosen plastic fitting at enrichener bore of carburetor housing. See Figure 4-5. Rotate enrichener cable in a counterclockwise direction to unthread fitting and remove valve assembly.
2. Remove gold Phillips screw (with lockwasher) at side of carburetor to release throttle cable bracket. Remove gold Phillips screw (with top collar) to free throttle cable bracket from carburetor top. Set bracket aside.
3. Remove three remaining top screws to release carburetor top from body.
4. Remove vacuum piston spring. Carefully raise diaphragm to remove vacuum piston assembly. Remove spring seat and jet needle from vacuum piston bore. See Figure 4-6.

Float Chamber

1. Turn carburetor upside down and remove four Phillips screws at bottom to remove float bowl from carburetor body.

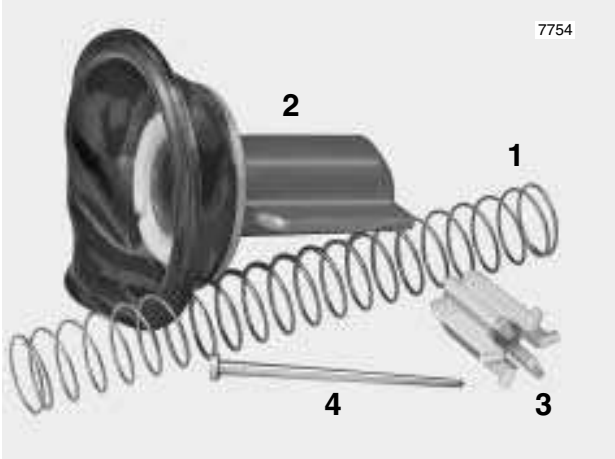

1. **Spring**
2. **Vacuum Piston**
3. **Spring Seat**
4. **Jet Needle**

Figure 4-6. Vacuum Piston Chamber Components

NOTE

Since accelerator pump rod is now loose, remove from hole in lever at side of carburetor body.

CAUTION

Tapping the float pin out from the squared pedestal side will result in damage that requires carburetor replacement

2. Using a small center punch and hammer, carefully tap float pin from holes in pedestals. The rounded pedestal has an interference fit to ensure that the float pin is securely held, so always tap out the pin in the direction of the cast-in arrow (that is, from the interference side). See Figure 4-7.
3. Remove float and fuel valve. Carefully slide wireform clip on fuel valve from tab on float. Remove wireform clip from groove in fuel valve. See A of Figure 4-8.
4. Using slot at top, turn main jet with flat tip screwdriver to unthread from needle jet holder. If necessary, hold hex on needle jet holder with a 5/16 inch wrench to prevent rotation. See Figure 4-10.
5. Using a 5/16 inch wrench, turn hex on needle jet holder to unthread from main jet bore.
6. Turn carburetor right side up to drop out needle jet, which is loose in main jet bore. See B of Figure 4-8.
7. Insert thin bladed flat tip screwdriver into slow jet bore. See Figure 4-10. Using slot at top of slow jet, unthread to remove. See C of Figure 4-8.
8. Disassemble accelerator pump from float bowl. See Figure 4-9. Proceed as follows:

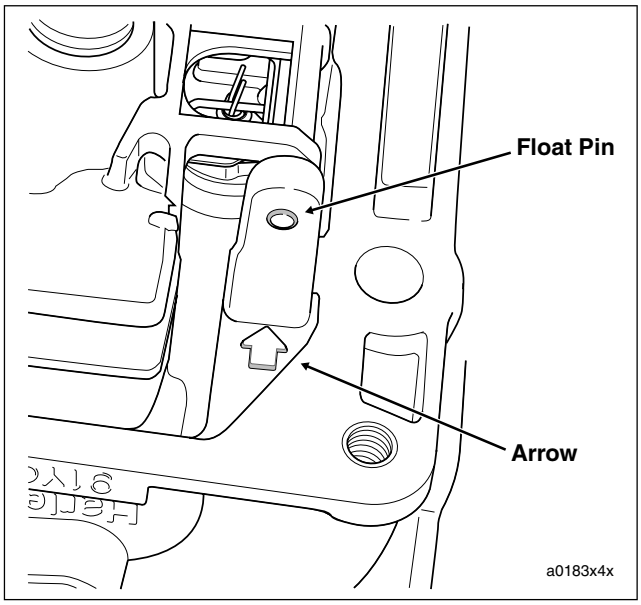

Figure 4-7. Remove Float Pin in Direction of Arrow

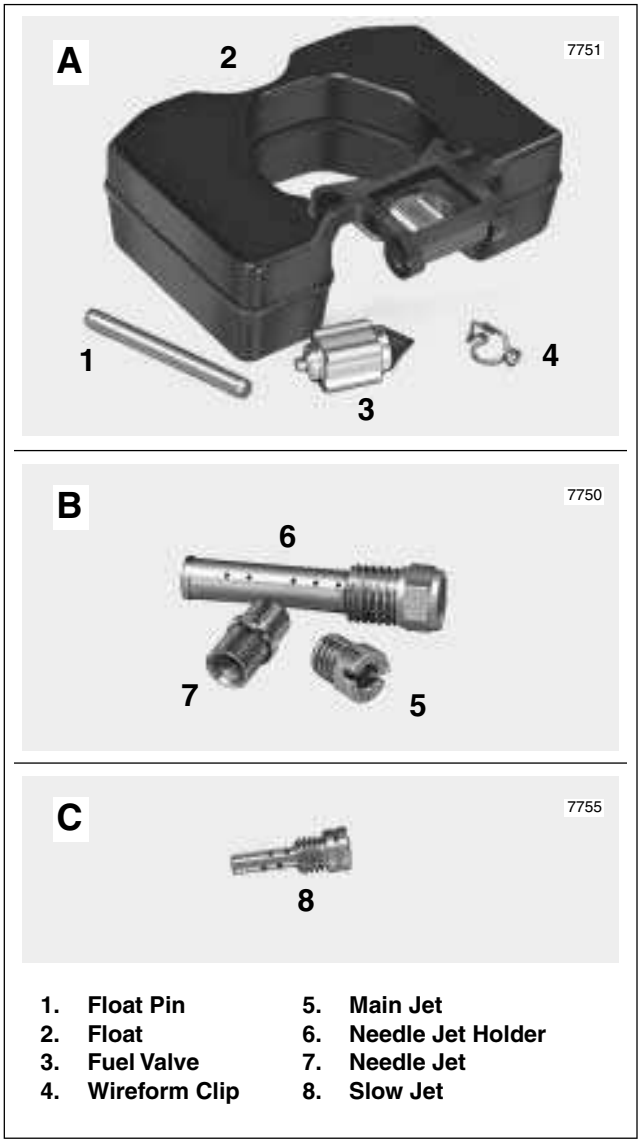

1.	Float Pin	5.	Main Jet
2.	Float	6.	Needle Jet Holder
3.	Fuel Valve	7.	Needle Jet
4.	Wireform Clip	8.	Slow Jet

Figure 4-8. Float Chamber Components

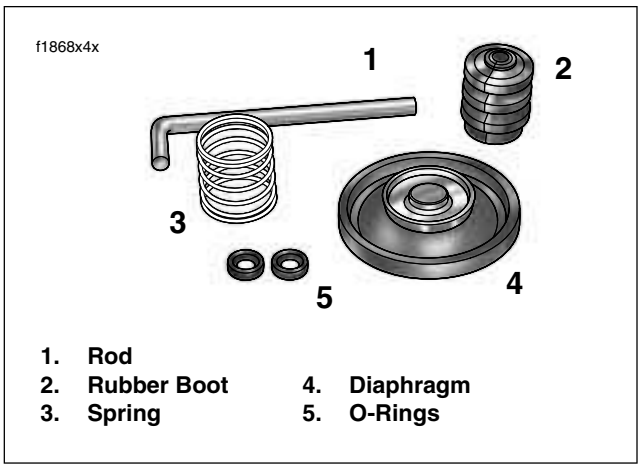

1.	Rod		
2.	Rubber Boot	4.	Diaphragm
3.	Spring	5.	O-Rings

Figure 4-9. Accelerator Pump Components

a. Remove rubber boot from post at top of accelerator pump upper housing.

b. Turn float bowl upside down. Alternately loosen and then remove three Phillips screws (with lockwashers) to release accelerator pump lower housing.

c. Remove spring and diaphragm from accelerator pump upper housing. Remove two O-rings from lower housing.

CLEANING AND INSPECTION

Carburetor Housing

1. Clean all internal air/fuel passages in carburetor housing with carburetor cleaner. Blow out passages using low pressure compressed air. Proceed as follows:

⚠WARNING

Compressed air can pierce the skin and flying debris from compressed air could cause serious eye injury. Wear safety glasses when working with compressed air. Never use your hand to check for air leaks or to determine air flow rates. (00061a)

Slow Speed Circuit

a. Spray carburetor cleaner into air inlet hole of slow speed circuit. See A of Figure 4-11. While spraying, verify that solution exits slow jet bore at bottom of carburetor housing. See B of Figure 4-11. Placing gloved finger over slow jet bore, verify that solution exits four pin holes just inboard of the throttle plate, as well as the single pin hole outboard of the throttle plate.

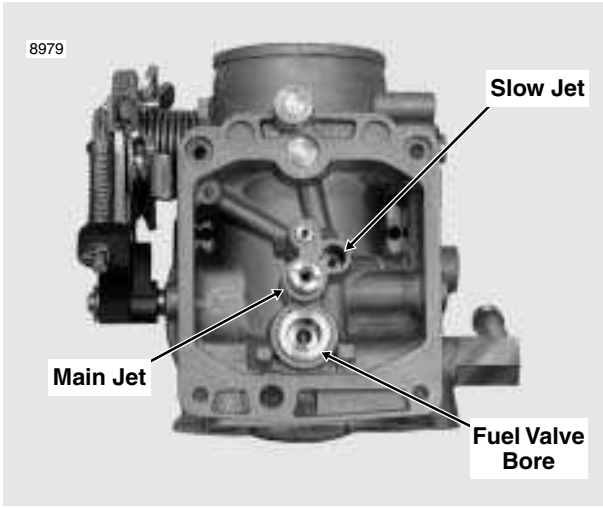

Figure 4-10. Carburetor Housing

b. Using a tapered, rubber-tipped nozzle on the air hose (to prevent both loss of air pressure and to avoid scratching or nicking the bore), apply low pressure compressed air into air inlet hole to blow carburetor cleaner out of slow jet bore. Placing gloved finger over slow jet bore, blow carburetor cleaner out of pin holes inboard and outboard of throttle plate.

Main Circuit

a. Plugging main jet hole in carburetor throat, spray carburetor cleaner into air inlet hole of main circuit. See A of Figure 4-11. While spraying, verify that solution exits main jet bore at bottom of carburetor housing. See B of Figure 4-11.

b. Using a tapered, rubber-tipped nozzle on the air hose (to prevent both loss of air pressure and to avoid scratching or nicking the bore), apply low pressure compressed air into air inlet hole to blow carburetor cleaner out of hole in carburetor throat. Placing gloved finger over hole in carburetor throat, blow carburetor cleaner out of main jet bore at bottom of carburetor housing.

Float Bowl Vent

a. Spray carburetor cleaner into air inlet hole of float bowl vent. See A of Figure 4-11. While spraying, verify that solution exits two vent holes in float bowl chamber at bottom of carburetor housing. See B of Figure 4-11.

b. Using a tapered, rubber-tipped nozzle on the air hose (to prevent both loss of air pressure and to avoid scratching or nicking the bore), apply low pressure compressed air into air inlet hole of float bowl vent to blow carburetor cleaner out of holes in float bowl chamber.

Vacuum Piston Chamber Components

1. Thorougly clean all loose parts (except diaphragm) with carburetor cleaner. See Figure 4-6. Blow dry using low pressure compressed air.

⚠WARNING

Compressed air can pierce the skin and flying debris from compressed air could cause serious eye injury. Wear safety glasses when working with compressed air. Never use your hand to check for air leaks or to determine air flow rates. (00061a)

2. Inspect parts as follows:

a. Hold vacuum piston up to strong light source. Examine diaphragm for pin holes, cuts, tears or pinching. Replace if any damage is found.

b. Examine passage at bottom of vacuum piston bore. Verify that passage is clean and open.

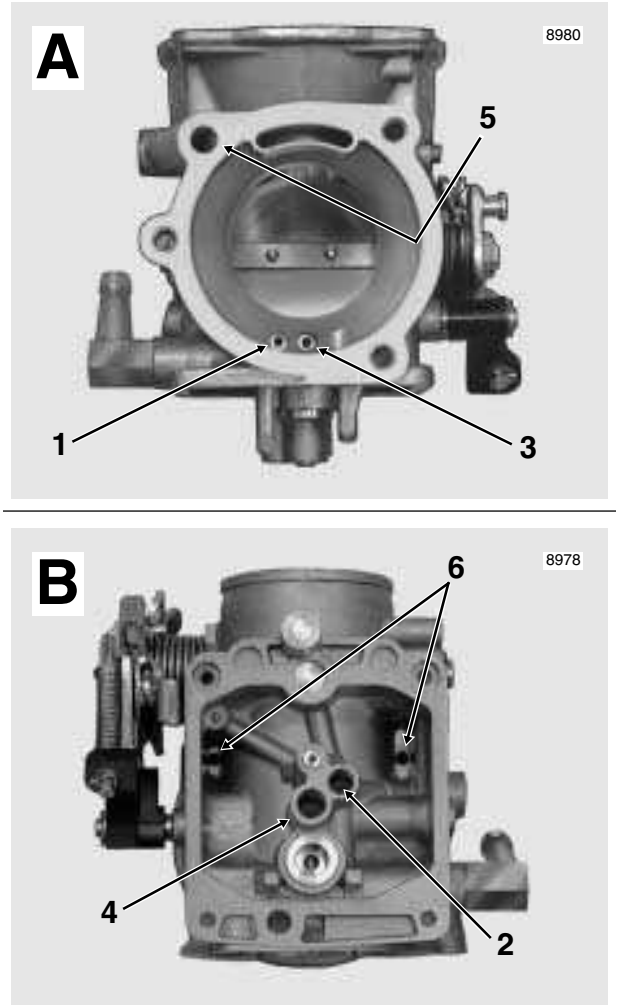

1. **Slow Speed Circuit Air Inlet**
2. **Slow Jet Bore**
3. **Main Circuit Air Inlet**
4. **Main Jet Bore**
5. **Float Bowl Vent Air Inlet**
6. **Vent Holes**

Figure 4-11. Clean Air/Fuel Passages

c. Examine vacuum piston spring for stretching, kinking, distortion or other damage. Inspect spring seat for cracks. Replace parts if necessary.

d. Examine slides at sides of vacuum piston to verify that surfaces are clean and smooth. Clean or buff out any rough surfaces.

e. Examine tip of jet needle for grooves or scratches. Needle should be completely straight, while surface condition at taper should be smooth and even. Replace needle if necessary.

Float Chamber Components

1. Thorougly clean all loose parts with carburetor cleaner. See Figure 4-8. Blow dry using low pressure compressed air.

⚠WARNING

Compressed air can pierce the skin and flying debris from compressed air could cause serious eye injury. Wear safety glasses when working with compressed air. Never use your hand to check for air leaks or to determine air flow rates. (00061a)

2. Inspect parts as follows:

   a. Inspect O-ring in groove of float bowl for cuts, tears or signs of deterioration. Replace O-ring if distorted or if sealing surface is damaged.

   b. Inspect float pin for damage or distortion. Replace float pin if corroded, nicked or bent.

   c. Clean float and inspect for cracks or other damage. Submerge float in a glass of water. Replace float if not water tight.

   d. Depress pin on fuel valve to verify that it returns to the full-out position. Thoroughly clean valve with carburetor cleaner if pin is dirty or sticks. Inspect rubber cone on valve for dirt, cracks, hardening or wear. Inspect wireform clip for distortion. Replace fuel valve assembly if any of these conditions are found.

   e. Inspect fuel valve seat in carburetor housing for dirt, damage or corrosion. Replace carburetor if seat damage or corrosion is present.

   f. Verify cleanliness of main jet, needle jet holder and needle jet. Verify that orifices in needle jet holder are clean and open. Replace parts if damaged.

   g. Verify cleanliness of slow jet. Be sure that all orifices are clean and open. Replace jet if damaged.

Accelerator Pump

   h. Inspect the accelerator pump diaphragm for holes, cuts, tears or cracks. Replace diaphragm if deformed or damaged.

   i. Examine spring for stretching, kinking or distortion. Replace if any damage is found.

   j. Inspect the accelerator pump rod for straightness. Replace the rod if bent.

   k. Inspect rubber boot and two O-rings for cuts, tears or signs of deterioration. Replace if necessary.

ASSEMBLY

Vacuum Piston Chamber

1. Install vacuum piston into carburetor body. Slides on piston are offset, so piston will fit into slide track groove only one way. If vacuum piston does not fit, rotate assembly 180°.
2. Insert jet needle into vacuum piston bore, so that it enters center hole at bottom. In the installed position, head of needle contacts boss at bottom of vacuum piston bore, while length of shaft resides in main jet bore.
3. With the legged side down, slide spring seat over top of needle in vacuum piston bore. Slide spring over spring seat.
4. Verify that lip on edge of diaphragm is seated in groove of carburetor flange.

NOTE

Diaphragm expands when in contact with fuel. If diaphragm is difficult to seat in groove because of this condition, allow diaphragm to dry before attempting to install.

5. Fit free end of spring over boss on inboard side of carburetor top, and keeping spring straight, align holes in top with those in flange.
6. Holding top to flange, check for proper diaphragm seal by pushing up on vacuum piston (from intake side) and releasing. If diaphragm is sealed correctly, very slight resistance should be felt when pushing up, and piston should be slow to extend. If piston movement is restricted, spring is cocked. Lift up on top and then lower carefully keeping spring coils straight.
7. Install three black top screws in holes furthest from throttle wheel. Alternately tighten screws until snug.
8. Slide gold top collar into remaining hole in carburetor top. With end of idle screw resting against idle cam stop, align holes in throttle cable bracket with those in carburetor body and top cover. To prevent bending bracket or cam stop, first install gold Phillips screw (with lockwasher) at side of carburetor. At carburetor top, install remaining Phillips screw.
9. Carefully insert enrichener valve into carburetor bore. Start threaded end of plastic fitting into bore, and then rotate cable in a clockwise direction to install. Exercising caution to avoid damaging the plastic construction, tighten fitting using a 14mm open end wrench. See Figure 4-5.

Float Chamber

1. Place needle jet into main jet bore. See Figure 4-10. Be sure end with chamfered edge and larger ID goes in first.
2. Insert needle jet holder into main jet bore, and using a 5/16 inch wrench, turn hex until snug.
3. Thread main jet into needle jet holder. Using slot at top of main jet, tighten with flat tip screwdriver until snug.

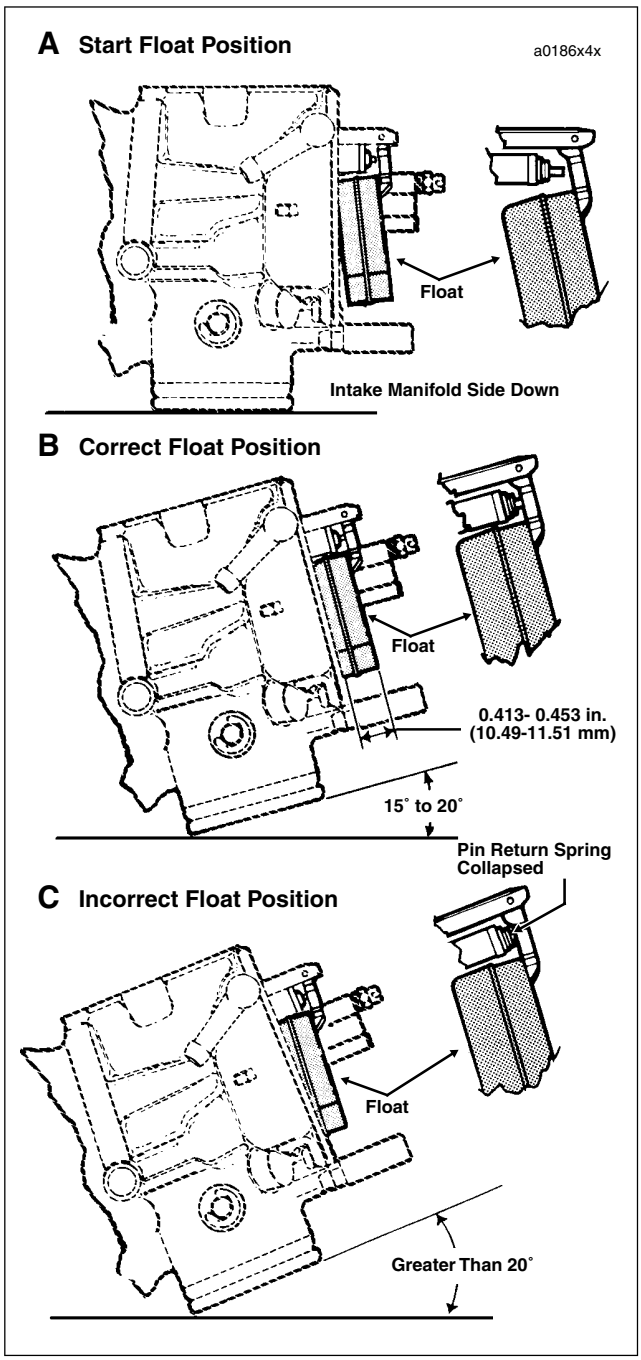

Figure 4-12. Float Check and Adjustment

4. Insert slow jet into slow jet bore. See Figure 4-10. Insert thin bladed flat tip screwdriver into bore, and using slot at top of slow jet, tighten until snug.
5. Install wireform clip into groove on pin side of fuel valve, if removed. Using wireform clip, carefully hang fuel valve onto tab of float, so that tip of rubber cone hangs flush with top of float (the top being the side opposite the pivot arm).

6. Place float into cavity of carburetor inserting fuel valve into bore between pedestals. See Figure 4-10.

CAUTION

Tapping the float pin in from the rounded pedestal side will result in damage that requires carburetor replacement.

7. Insert float pin through squared pedestal and pivot arm of float into rounded pedestal. Since the rounded pedestal has an interference fit to ensure that the float pin is securely held, always install pin from the loose side (in the direction opposite the cast-in arrow). Using a small center punch and hammer, carefully tap float pin until ends are flush with outboard sides of pedestals.

8. Perform float level check as follows:

   a. Place carburetor on a clean flat surface with the intake manifold side down. See A of Figure 4-12.

   b. Tilt the carburetor 15° to 20° in a counter-clockwise direction until float comes to rest. See B of Figure 4-12.

NOTE

The measurements will be incorrect if the carburetor is tilted less than 15° or more than 20°.

   c. Using a dial vernier caliper or dial caliper depth gauge, measure the distance from the face of the carburetor flange to the outboard edge of the float. Be careful not to push on float while measuring.

   d. If the measurement is between 0.413 inch and 0.453 inch (10.49 -11.51 mm), then the float level is within specification. Proceed to step 9.

   e. If the float level is not within specification, remove the float, and referencing the table below, carefully bend the tab slightly to adjust the float level. For example, to increase the float measurement, bend the tab toward the carburetor body. This will have the affect of decreasing the amount of gas in the float bowl after assembly.

Table 4-1. Float Level Tab

Float Measurement	Bend Tab	Amount of Gas in Float Bowl
To Increase	Toward Carburetor Body	Decreased
To Decrease	Away From Carburetor Body	Increased

   f. Install float and check float level again. Repeat procedure as necessary until float level is within specification.

9. Install new O-ring into groove of float bowl, if removed. Be sure to thoroughly clean groove before O-ring installation.

10. Assemble accelerator pump as follows:

   a. With the flat side toward the casting, install two O-rings into counterbores of accelerator pump lower housing.

   b. Install diaphragm into accelerator pump upper housing. Verify that lip on edge of diaphragm is fully seated in groove.

   c. Place spring onto spring seat at center of installed diaphragm.

   d. Keeping spring straight, mate upper and lower housings of accelerator pump. Install three Phillips screws (with lockwashers).

   e. Install rubber boot onto post at top of accelerator pump upper housing.

   f. Hook accelerator pump rod into hole on inboard side of lever at side of carburetor body.

11. Install float bowl at bottom of carburetor body engaging free end of accelerator pump rod in hole of rubber boot.

12. Install four Phillips screws to secure float bowl at bottom of carburetor body. Tighten screws until snug.

AIR CLEANER 4.5

REMOVAL

1. Remove large allen head socket screw in center of air cleaner cover. Remove air cleaner cover with rubber seal. See Figure 4-13.
2. Remove three T27 TORX screws to release cover bracket from filter element.
3. Remove filter element pulling two breather tubes from holes on inboard side.
4. Remove gasket from sleeve on inboard side of filter element. Discard gasket.
5. Remove breather tubes from fittings on two cylinder head breather bolts.
6. Remove two cylinder head breather bolts from backplate using a 7/16 inch deepwell socket.
7. Remove backplate from cylinder heads. On carbureted California models, pull clean air inlet tube (to charcoal canister) from hole on inboard side of backplate.
8. Remove two O-rings from grooves around breather bolt holes on inboard side of backplate. Discard O-rings.
9. Remove gasket from inboard side of backplate. Discard gasket.

CLEANING AND INSPECTION

1. Thoroughly clean air cleaner cover, breather tubes and backplate with warm, soapy water.
2. Clean the filter element as follows:

⚠WARNING

Do not use gasoline or solvents to clean filter element. Flammable cleaning agents can cause an intake system fire, which could result in death or serious injury. (00101a)

a. Wash the filter element in warm, soapy water. To remove soot and carbon, soak element for 30 minutes in warm water with mild detergent.

⚠WARNING

Compressed air can pierce the skin and flying debris from compressed air could cause serious eye injury. Wear safety glasses when working with compressed air. Never use your hand to check for air leaks or to determine air flow rates. (00061a)

b. Dry the filter element using low pressure compressed air (32 psi/221 kPa maximum). Rotate the element while moving air nozzle up and down the element interior. Do not rap the element on a hard surface.

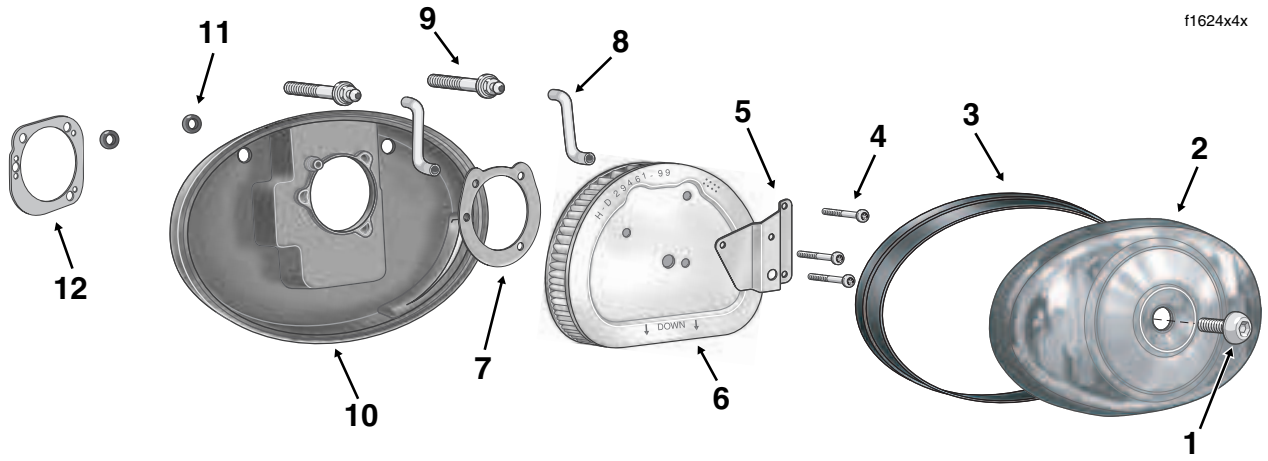

1. Cover Screw	4. T27 Torx Screw (3)	7. Gasket	10. Backplate
2. Air Cleaner Cover	5. Cover Bracket	8. Breather Tube (2)	11. O-Ring (2)
3. Rubber Seal	6. Filter Element	9. Breather Bolt (2)	12. Gasket

Figure 4-13. Air Cleaner Assembly

c. Hold the filter element up to a strong light source. The element can be considered sufficiently clean if light is uniformly visible through the media.

NOTE

Replace the filter element if damaged or if filter media cannot be adequately cleaned.

3. Inspect the breather tubes and rubber seal for cuts, tears, holes or signs of deterioration. Replace as necessary. Direct compressed air through the breather tubes to be sure that they are not plugged.

INSTALLATION

1. Install **new** O-rings in grooves around breather bolt holes on inboard side of backplate.
2. Aligning flat edge of gasket with molded tab, install **new** gasket on inboard side of backplate. On California models, install gasket by aligning small holes with plastic pins.
3. On California models, push clean air inlet tube (to charcoal canister) into hole on inboard side of backplate.
4. Align holes in backplate with those in cylinder heads and install cylinder head breather bolts. Using a 7/16 inch deepwell socket, alternately tighten bolts to 120-144 **in-lbs** (13.6-16.3 Nm).
5. Slide **new** gasket over sleeve on inboard side of filter element. Be sure holes in gasket are aligned with those in filter.
6. Insert breather tubes about 1/4 inch (6.4 mm) into holes on inboard side of filter element.
7. Install breather tubes onto fittings of two cylinder head breather bolts.

NOTE

Air cleaner mounting without installation of the breather tubes allows crankcase vapors to be vented into the atmosphere in violation of legal emissions standards.

8. Place filter element onto backplate with the flat side down, so that hole on inboard side of element fits over molded boss in backplate.
9. Align holes in cover bracket with those in filter element and start three T27 TORX screws. Stamp on cover bracket points to downside. Alternately tighten screws to 40-60 **in-lbs** (4.5-6.8 Nm).
10. Verify that rubber seal is properly seated around perimeter of air cleaner cover.
11. Fit air cleaner cover into backplate. Apply a small dab of Loctite Medium Strength Threadlocker 243 (blue) to threads of large allen head socket screw. Install screw in center of air cleaner cover and tighten to 36-60 **in-lbs** (4.1-6.8 Nm).

VACUUM OPERATED FUEL VALVE (CARBURETED) 4.6

GENERAL

A fuel valve is located under the fuel tank on the left side of the motorcycle. The gasoline supply to the carburetor is dependent upon the position of the valve handle as well as the internal workings of the vacuum-operated valve.

To access the main fuel supply, turn the valve handle **down** to the fully vertical position, so that the indicator points up to ON. To access the reserve supply, turn the handle **up** to the fully vertical position, so that the indicator points down to RES(ERVE). Move the handle to the horizontal position to shut the gasoline supply to the carburetor OFF. Always turn the valve to the OFF position to refuel, or whenever the engine is not running.

Gasoline will not flow through the fuel valve until the following conditions are met:

1. The valve handle must be turned to the ON or RES(ERVE) position.
2. A vacuum of approximately 0.5-1.0 inches of Mercury (Hg) must be applied to the vacuum fitting at the back of the fuel valve.

In service, the vacuum fitting is connected to the intake manifold. The partial vacuum applied at the fitting creates a difference in pressure between the front side of the diaphragm (which is vented to the atmosphere via the bottom fitting on the fuel valve) and the rear. This pressure differential causes the diaphragm to move against an internal spring, thereby opening an orifice that enables the flow of gasoline to the carburetor. When the vacuum at the vacuum fitting is removed, the internal spring pressure closes the orifice, which effectively halts the supply of fuel to the carburetor.

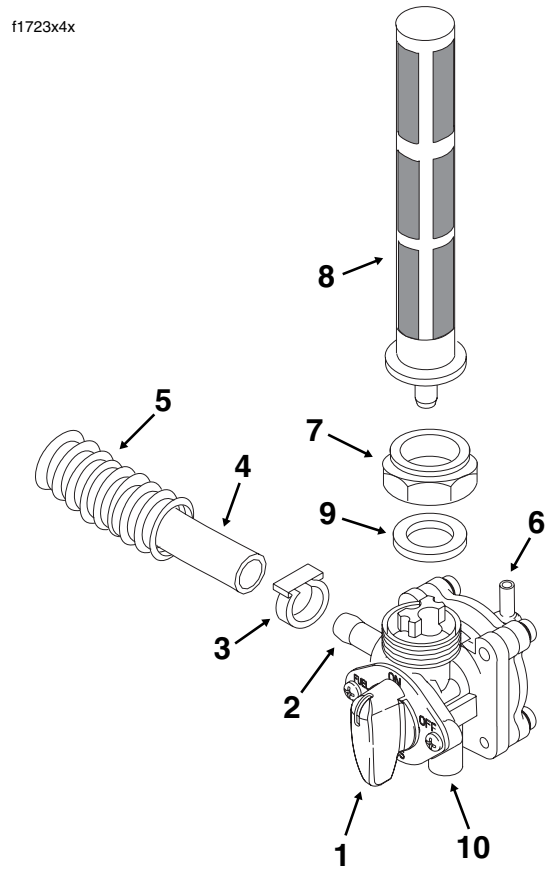

1. Valve Handle
2. Fuel Outlet Fitting
3. Hose Clamp
4. Carburetor Fuel Inlet Hose
5. Convoluted Tubing
6. Vacuum Fitting
7. Jam Nut
8. Filter Strainer
9. Gasket
10. Atmospheric Pressure Port

Figure 4-14. Vacuum Operated Fuel Valve

TROUBLESHOOTING

If the fuel valve is not functioning properly, refer to the troubleshooting chart on the next page.

REMOVAL

DRAINING FUEL TANK

WARNING

When servicing the fuel system, do not smoke or allow open flame or sparks in the vicinity. Gasoline is extremely flammable and highly explosive, which could result in death or serious injury. (00330a)

1. Turn the handle of the fuel valve to OFF.

WARNING

A small amount of gasoline may drain from the carburetor fuel inlet hose when disconnected from the fuel valve fitting. Thoroughly wipe up any spilled fuel immediately and dispose of rags in a suitable manner. Gasoline is extremely flammable and highly explosive. Inadequate safety precautions could result in death or serious injury.

2. Using a side cutters, cut clamp and remove hose from fuel outlet fitting at the front of the fuel valve. See Figure 4-14. Drain free end of hose into a suitable container.
3. Remove elbow of intake manifold vacuum tube from fitting on inboard side of the fuel valve.
4. Attach a length of fuel hose to the fuel outlet fitting. The hose must be long enough to reach a suitable gasoline container.
5. Turn the handle of the fuel valve to RES(ERVE).
6. Using the correct hose adapter, connect the Mity-Vac® Hand Pump (HD-23738A) to the vacuum fitting.

CAUTION

To avoid damage to the diaphragm of the fuel valve, do not apply a vacuum greater than 25 inches of Mercury (Hg) to the vacuum fitting.

7. Gently apply a vacuum of 1-10 inches of Mercury (Hg) to the vacuum fitting to get a good flow of gasoline through the valve.
8. When the fuel tank is completely drained, remove the Mity-Vac® Hand Pump from the vacuum fitting.
9. Holding fuel tank adapter, turn the hex jam nut in a clockwise direction to remove the fuel valve assembly.
10. Remove the fuel filter strainer from the valve head.
11. Remove the hex jam nut from the fuel valve.
12. Remove the gasket from the valve head. Discard the gasket.

CLEANING AND INSPECTION

1. Clean or replace the fuel filter strainer.
2. Flush the tank. See Section 4.7 FUEL TANK (CARBURETED), CLEANING AND INSPECTION.

INSTALLATION

1. Install a **new** gasket on the valve head.
2. Install the fuel filter strainer fitting the internal tube into the larger hole in the valve head.
3. Clean threads and sealing surface of fuel tank adapter and inspect for damage. Replace if necessary. See FUEL TANK ADAPTER on the next page.
4. With the hex side down, turn the jam nut two full turns in a counterclockwise direction to thread onto fuel tank adapter.
5. Insert fuel filter strainer into fuel tank. Holding the hex jam nut to prevent rotation, turn the fuel valve two full turns in a clockwise direction to thread onto hex jam nut.

⚠WARNING

Do not thread fuel valve onto hex jam nut more than two turns or nut may "bottom" on valve, a condition which may result in a gasoline leak. Any gasoline leak is a potential fire hazard that could result in death or serious injury.

Table 4-2. Troubleshooting Vacuum Operated Fuel Valve

Problem	Cause	Solution
1. Vacuum valve not opening.	1.1 Hose not connected to vacuum fitting.	1.1.1 Connect hose to vacuum fitting.
	1.2 Leaking diaphragm.	1.2.1 Replace fuel valve assembly.
	1.3 Hose connected to atmospheric pressure port.	1.3.1 Connect hose to vacuum fitting.
	1.4 Vacuum hose assembly pinched or cracked.	1.4.1 Replace vacuum hose assembly.
2. Vacuum valve does not close.	2.1 Damaged sealing surface on valve side of diaphragm.	2.2.1 Replace fuel valve assembly.
	2.2 Plugged vacuum fitting.	2.2.2 Clean as necessary.
	2.3 Broken or missing internal spring.	2.3.1 Replace fuel valve assembly.
3. Valve leaks gasoline at atmospheric pressure port.	3.1 Leaking diaphragm.	3.1.1 Replace fuel valve assembly.
	3.2 Loose diaphragm housing screws.	3.2.1 Tighten screws.

6. Holding the fuel valve to prevent rotation, turn the hex jam nut in a counterclockwise direction until snug. Tighten the hex jam nut to 15-20 ft-lbs (20.3-27.1 Nm).

CAUTION

Do not allow dirt or fluids to get into the vacuum tube that connects the fuel valve to the intake manifold. Contaminants can block the vacuum signal which could cause the fuel valve to malfunction.

7. Connect elbow of intake manifold vacuum tube to fitting on inboard side of the fuel valve.
8. Slide **new** clamp onto free end of carburetor fuel inlet hose. Install hose onto fuel outlet fitting at front of fuel valve. Crimp clamp using HOSE CLAMP PLIERS (HD-97087-65B).
9. Turn the handle of the fuel valve to OFF and fill the fuel tank. Carefully inspect for leaks at fitting.
10. Turn the valve handle to ON and start engine. No priming or special procedures are required to start fuel flow. Carefully inspect for leaks at fitting.
11. Stop engine and return the valve to the OFF position.

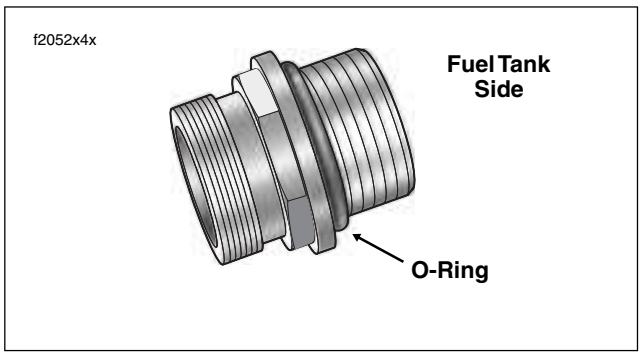

Figure 4-15. Fuel Tank Adapter

FUEL TANK ADAPTER

If leakage or damage is observed at the fuel tank adapter, replace O-ring and/or adapter as follows:

1. Remove fuel valve assembly. See REMOVAL in this section.
2. Slide a 7/8 inch socket over hex on adapter, and looking down at top of fuel tank, rotate in a clockwise direction to remove. See Figure 4-15.
3. Remove O-ring from adapter. Discard O-ring.
4. Apply a very thin film of clean H-D 20W50 engine oil to **new** O-ring. Install O-ring into groove of adapter.
5. Hand thread adapter into fuel tank bore. Looking down at top of fuel tank, rotate adapter in a counterclockwise direction until snug.
6. Slide a 7/8 inch socket over hex and tighten to 22-26 ft-lbs (30-35 Nm).
7. Install fuel valve assembly. See INSTALLATION in this section.

FUEL TANK (CARBURETED) 4.7

COMPLETE REMOVAL

NOTE

For fuel injected models, see Section 9.4 FUEL TANK (FUEL INJECTED) for removal and installation instructions.

FLHX, FLHT

1. Remove seat. See Section 2.25 SEAT, REMOVAL.

WARNING

To prevent accidental vehicle start-up, which could cause death or serious injury, disconnect negative (-) battery cable before proceeding. (00048a)

2. Unthread bolt and remove battery negative cable (black) from battery negative (-) terminal.

WARNING

When servicing the fuel system, do not smoke or allow open flame or sparks in the vicinity. Gasoline is extremely flammable and highly explosive, which could result in death or serious injury. (00330a)

3. Drain the fuel tank. See Section 4.6 VACUUM OPERATED FUEL VALVE (CARBURETED), DRAINING FUEL TANK, steps 1-8.
4. Disconnect fuel tank harness connector [13], 4-place Multilock, in front of battery. See Figure 4-16.
5. Remove two fuel tank front mounting bolts (with flat washers) from left and right side of frame. Remove bolt (with flat washer) to free rear of fuel tank from frame backbone. On FLHX models, removal of rear bolt also releases console bracket.
6. Open fuel door on console. Remove two Allen head screws inboard of rubber bumpers. These screws secure console to clip nuts on the canopy bracket. If present, also remove Allen head screw to detach flange at rear of console from clip nut on fuel tank weldment (absent on FLHX models).
7. Lay a clean shop cloth on forward part of rear fender. Remove filler cap from neck of fuel tank. Remove console and lay upside down on shop cloth. Reinstall filler cap.
8. Gently pry fuel vapor vent tube from fitting on filler neck of fuel tank. Exercise caution to avoid pulling fitting from filler neck.
9. Remove two fuel tank front mounting bolts (with flat washers) from left and right side of frame. Remove bolt (with flat washer) to free rear of fuel tank from frame backbone.

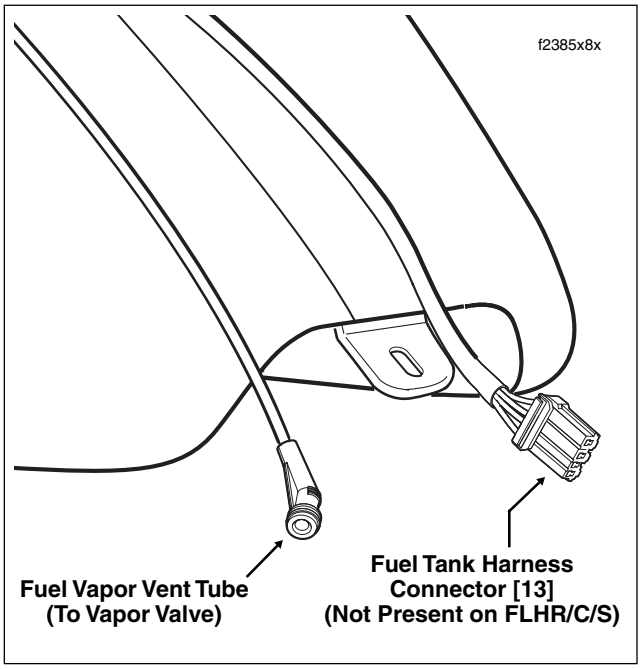

Figure 4-16. Fuel Level Sender Connector (FLHX, FLHT)

WARNING

A small amount of gasoline may drain from the cross-over hose when disconnected from the fuel tank. Thoroughly wipe up any spilled fuel immediately and dispose of rags in a suitable manner. Gasoline is extremely flammable and highly explosive. Inadequate safety precautions could result in death or serious injury.

10. Using a side cutters, cut clamp from one end of cross-over hose beneath fuel tank. Drain free end of hose into a suitable container.
11. Remove fuel tank from motorcycle.

FLHR/S

1. Remove seat. See Section 2.25 SEAT, REMOVAL.

WARNING

To prevent accidental vehicle start-up, which could cause death or serious injury, disconnect negative (-) battery cable before proceeding. (00048a)

2. Unthread bolt and remove battery negative cable (black) from battery negative (-) terminal.

⚠WARNING

When servicing the fuel system, do not smoke or allow open flame or sparks in the vicinity. Gasoline is extremely flammable and highly explosive, which could result in death or serious injury. (00330a)

3. Drain the fuel tank. See Section 4.6 VACUUM OPERATED FUEL VALVE (CARBURETED), DRAINING FUEL TANK, steps 1-8.

4. Remove two fuel tank front mounting bolts (with flat washers) from left and right side of frame. Remove bolt (with flat washer) to free rear of fuel tank from frame backbone. On FLHRS models, removal of rear bolt also releases instrument console bracket.

5. Remove acorn nut from instrument console. If present, also remove Phillips screw and large flat washer (absent on FLHRS models).

6. Raise instrument console and bend back flexible clamp on canopy to release main harness conduit. Remove fuel level sender connector [141], 4-place Packard, at top of canopy.

CAUTION

When removing instrument console, exercise caution to avoid damaging speedometer unit. Wrap console in a clean, dry shop towel to prevent damage.

7. Secure instrument console to top of rear fender using bungee cords.

8. Remove console mounting bolt from slot at top of canopy.

9. Gently pry fuel vapor vent tube from fitting.

10. At bottom left side of fuel tank, gently pull on convoluted tubing to draw fuel gauge connector [117], 4-place Multilock, out of tunnel. Depress button on socket terminal side and pull apart pin and socket halves.

⚠WARNING

A small amount of gasoline may drain from the crossover hose when disconnected from the fuel tank. Thoroughly wipe up any spilled fuel immediately and dis-pose of rags in a suitable manner. Gasoline is extremely flammable and highly explosive. Inadequate safety precautions could result in death or serious injury.

11. Using a side cutters, cut clamp from one end of crossover hose beneath fuel tank. Drain free end of hose into a suitable container.

12. Remove fuel tank from motorcycle.

CLEANING AND INSPECTION

1. Inspect the fuel tank for leaks and other damage. Replace damaged tanks that cannot be successfully repaired.

2. If sludge, rust or varnish deposits are evident, clean fuel tank as follows:

⚠WARNING

Even with the fuel tank completely drained, a small amount of gasoline may leak from the bore when the fuel valve is loosened or removed. Thoroughly wipe up any spilled fuel immediately and dispose of rags in a suitable manner. Gasoline is extremely flammable and highly explosive. Inadequate safety precautions could result in death or serious injury.

a. Remove the fuel valve assembly and plug fuel tank opening. See Section 4.6 VACUUM OPERATED FUEL VALVE (CARBURETED), REMOVAL.

b. Remove canopy as follows:

FLHX, FLHT, FLTR: See Section 8.30 FUEL LEVEL SENDER (CARBURETED), FLHX, FLHT CANOPY, REMOVAL, steps 10-12.

FLHR: See Section 8.30 FUEL LEVEL SENDER (CARBURETED), FLHR/S CANOPY, REMOVAL, steps 10-12.

⚠WARNING

An open flame or spark may cause a fuel tank explosion if all traces of fuel are not purged from the tank. Use extreme caution when servicing fuel tanks. Inadequate safety precautions could result in death or serious injury.

c. Fill the tank with commercial cleaning solvent or a soap and water solution. Shake the tank to agitate the cleaning agent.

⚠WARNING

Use only lead pellets to loosen deposits. Metal balls, such as ball bearings, can cause a spark and explosion, which could result in death or serious injury. (00261a)

d. If necessary, non-ferrous metallic balls or pellets may be added to the tank to help loosen deposits.

e. Thoroughly flush the fuel tank after cleaning. Allow tank to air dry.

f. Install fuel valve assembly. See Section 4.6 VACUUM OPERATED FUEL VALVE (CARBURETED), INSTALLATION.

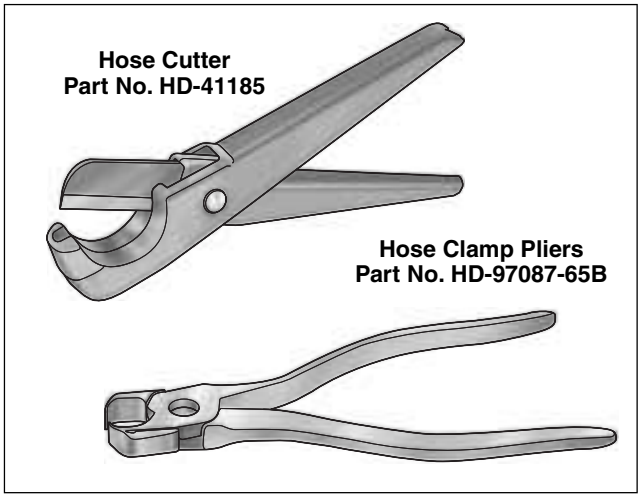

Figure 4-17. Hose Cutter/Hose Clamp Pliers

g. Install canopy as follows:

FLHX, FLHT, FLTR: See Section 8.30 FUEL LEVEL SENDER (CARBURETED), FLHX, FLHT CANOPY, INSTALLATION, steps 1-3.

FLHR: See Section 8.30 FUEL LEVEL SENDER (CARBURETED), FLHR/S CANOPY, INSTALLATION, steps 1-3.

3. Inspect crossover hose for cuts, cracks, nicks or other damage. Be sure aging has not caused the hose to become hard and brittle. If replacing from bulk storage, use SAE R9 or equivalent fuel hose only. Remove old hose and cut new hose to same length using HOSE CUTTER (HD-41185). See Figure 4-17.

INSTALLATION (AFTER COMPLETE REMOVAL)

FLHX, FLHT

1. Work fuel tank into position aligning front flange holes with those in left and right side of frame.
2. Start fuel tank front mounting bolts (with flat washers).
3. Route free end of crossover hose under frame backbone and in front of ignition coil to other side of fuel tank. Install convoluted tubing, if removed, and **new** clamp onto hose. Install hose onto fitting at bottom of fuel tank and crimp clamp using HOSE CLAMP PLIERS (HD-97087-65B). See Figure 4-17.
4. Slide **new** clamp onto free end of carburetor fuel inlet hose. Install hose onto fuel outlet fitting at side of fuel valve. Crimp clamp.
5. Install the intake manifold vacuum hose onto the vacuum fitting at the back of the fuel valve.
6. Connect fuel vapor vent tube to fitting on filler neck of fuel tank.
7. Remove filler cap. Exercising caution to avoid pinching harness, overflow hose and vent tube, position console on canopy as shown in Figure 4-18. Reinstall filler cap.
8. Install bolt (with flat washer) to secure rear of fuel tank to frame backbone. On FLHX models, capture console bracket during installation. Tighten bolt to 15-20 ft-lbs (20-27 Nm).
9. Tighten fuel tank front mounting bolts to 15-20 ft-lbs (20-27 Nm).
10. Open fuel door on console. Install two Allen head screws to secure front of console to clip nuts on canopy bracket. Alternately tighten screws to 25-30 in-lbs (2.8-3.4 Nm). If present, also install Allen head screw to fasten rear flange of console to clip nut on fuel tank weldment (absent on FLHX models). Tighten screw to 25-30 in-lbs (2.8-3.4 Nm).
11. Connect fuel tank harness connector [13], 4-place Multilock, in front of battery. See Figure 4-16.
12. Insert bolt through battery negative cable (black) into threaded hole of battery negative (-) terminal. Tighten bolt to 60-96 **in-lbs** (6.8-10.9 Nm).
13. Install seat. See Section 2.25 SEAT, INSTALLATION.
14. Turn the handle of the fuel valve to OFF and fill the fuel tank. Carefully inspect for leaks. Turn the valve handle to ON and start engine. Repeat inspection.
15. Stop engine and return the valve to the OFF position.

FLHR/S

1. Work fuel tank into position aligning front flange holes with those in left and right side of frame.
2. Start fuel tank front mounting bolts (with flat washers).
3. Route free end of crossover hose under frame backbone and in front of ignition coil to other side of fuel tank. Install convoluted tubing, if removed, and **new** clamp onto hose. Install hose onto fitting at bottom of fuel tank and crimp clamp using HOSE CLAMP PLIERS (HD-97087-65B). See Figure 4-17.
4. Slide **new** clamp onto free end of carburetor fuel inlet hose. Install hose onto fuel outlet fitting at side of fuel valve. Crimp clamp.
5. Install the intake manifold vacuum hose onto the vacuum fitting at the back of the fuel valve.
6. Connect fuel vapor vent tube to fitting at top of canopy.

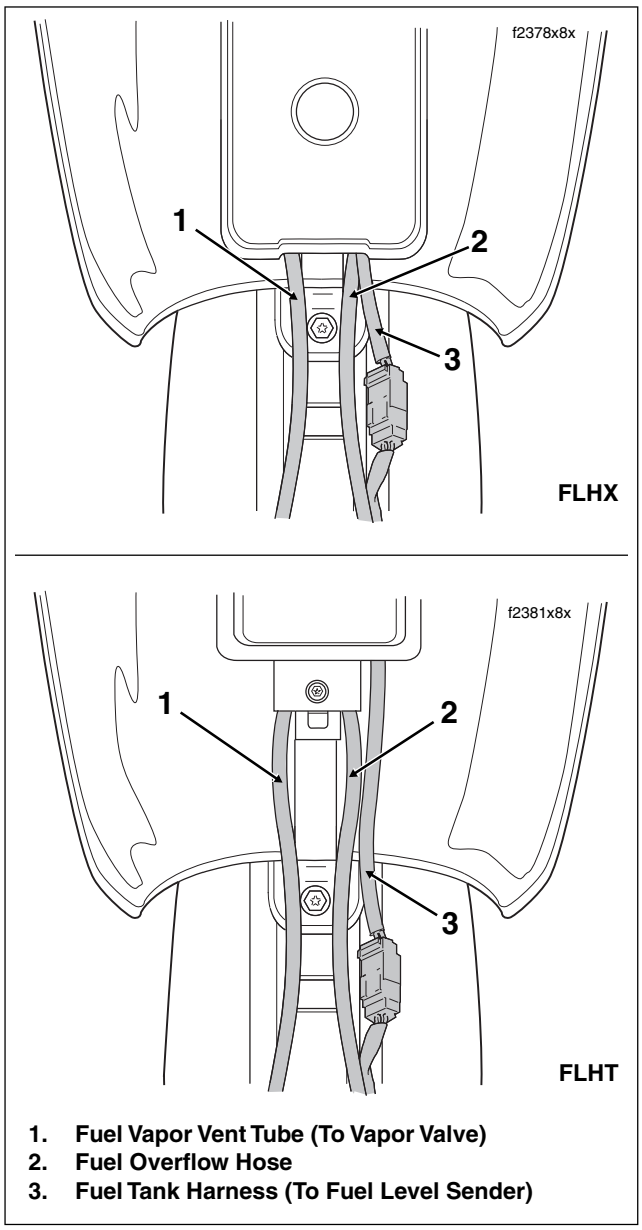

Figure 4-18. Console Cable/Hose Routing (FLHX, FLHT)

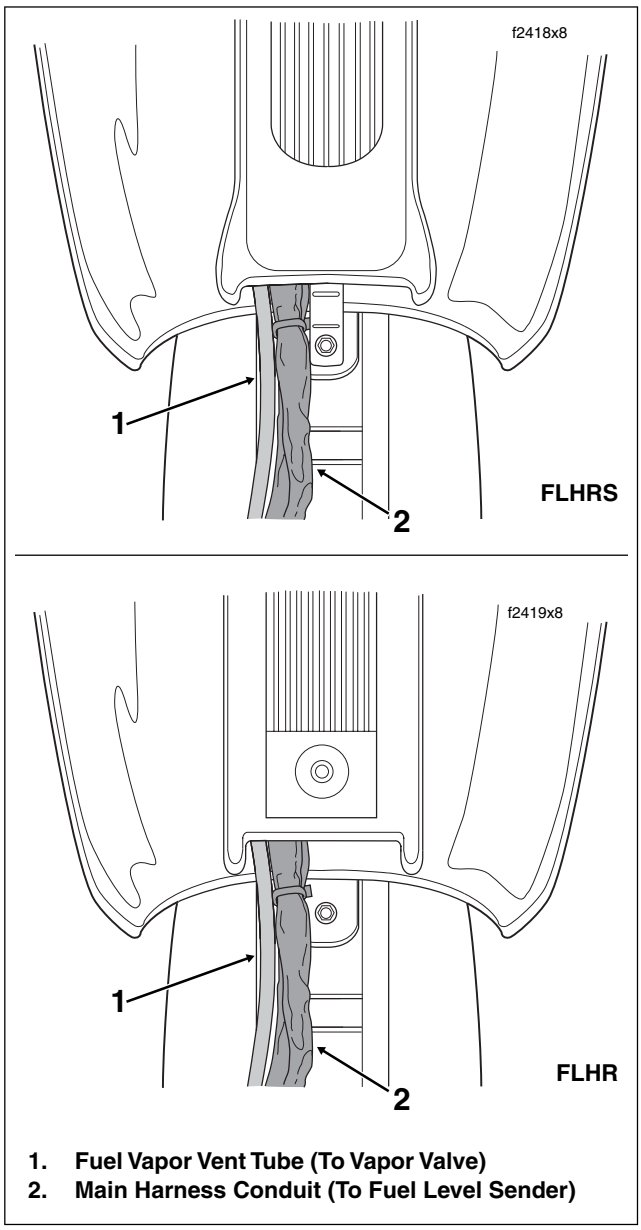

Figure 4-19. Console Cable/Hose Routing (FLHR/S)

7. Slide head of console mounting bolt into slot at top of canopy.

8. Moving instrument console toward installed position, install fuel level sender connector [141], 4-place Packard, at top of canopy. Bend flexible clamp to capture main harness conduit.

9. Exercising caution to avoid pinching harness and vent tube, align hole in instrument console with console mounting bolt and place into position on fuel tank. See Figure 4-19.

10. Install bolt (with flat washer) to secure rear of fuel tank to frame backbone. On FLHRS models, capture instrument console bracket during installation. Tighten bolt to 15-20 ft-lbs (20-27 Nm).

11. Tighten fuel tank front mounting bolts to 15-20 ft-lbs (20-27 Nm).

12. Install acorn nut at top of instrument console and tighten to 50-90 **in-lbs** (5.7-10.2 Nm). If present, also install Phillips screw and large flat washer (absent on FLHRS models). Tighten screw to 36-60 **in-lbs** (4.1-6.8 Nm).

13. Connect fuel gauge to main harness. Route pin housing and convoluted tubing forward and then inboard between front of crossover hose fitting and bottom of fuel tank. Mate pin and socket halves of fuel gauge connector [117], 4-place Multilock. Feed connector into tunnel of fuel tank. See Figure 4-20.
14. Insert bolt through battery negative cable (black) into threaded hole of battery negative (-) terminal. Tighten bolt to 60-96 **in-lbs** (6.8-10.9 Nm).
15. Install seat. See Section 2.25 SEAT, INSTALLATION.
16. Turn the handle of the fuel valve to OFF and fill the fuel tank. Carefully inspect for leaks. Turn the valve handle to ON and start engine. Repeat inspection.
17. Stop engine and return the valve to the OFF position.

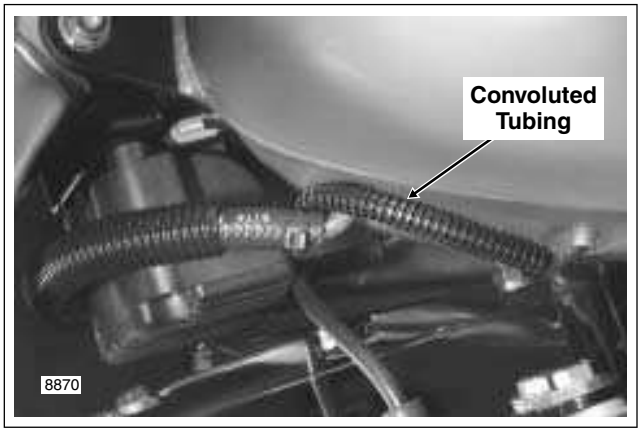

Figure 4-20. Fuel Gauge (FLHR/S)

PARTIAL REMOVAL

NOTE

For fuel injected models, see Section 9.4 FUEL TANK (FUEL INJECTED) for removal and installation instructions.

FLHX, FLHT

1. Remove seat. See Section 2.25 SEAT, REMOVAL.

⚠WARNING

To prevent accidental vehicle start-up, which could cause death or serious injury, disconnect negative (-) battery cable before proceeding. (00048a)

2. Unthread bolt and remove battery negative cable (black) from battery negative (-) terminal.
3. Disconnect fuel tank harness connector [13], 4-place Multilock, in front of battery. See Figure 4-16.
4. Remove two fuel tank front mounting bolts (with flat washers) from left and right side of frame. Remove bolt (with flat washer) to free rear of fuel tank from frame backbone. On FLHX models, removal of rear bolt also releases console bracket.
5. Open fuel door on console. Remove two Allen head screws inboard of rubber bumpers. These screws secure console to clip nuts on the canopy bracket. If present, also remove Allen head screw to detach flange at rear of console from clip nut on fuel tank weldment (absent on FLHX models).
6. Lay a clean shop cloth on forward part of rear fender. Remove filler cap from neck of fuel tank. Remove console and lay upside down on shop cloth. Reinstall filler cap.
7. Gently pry fuel vapor vent tube from fitting on filler neck of fuel tank. Exercise caution to avoid pulling fitting from filler neck.
8. Raise the fuel tank approximately 2 inches. Move the fuel tank crossover hose to the rear of the ignition coil, so that the tank can be raised an additional 2-3 inches. Move fuel tank straight back and rest on frame backbone.
9. Obtain three 1 x 2 inch wooden blocks. Raise the front of the fuel tank off the frame backbone by placing one block in the recess centered at the bottom of the tank. At the rear of the tank, place two blocks in the recess, one block on top of the other.

FLHR/S

1. Remove seat. See Section 2.25 SEAT, REMOVAL.

⚠WARNING

To prevent accidental vehicle start-up, which could cause death or serious injury, disconnect negative (-) battery cable before proceeding. (00048a)

2. Unthread bolt and remove battery negative cable (black) from battery negative (-) terminal.
3. Remove two fuel tank front mounting bolts (with flat washers) from left and right side of frame. Remove bolt (with flat washer) to free rear of fuel tank from frame backbone. On FLHRS models, removal of rear bolt also releases instrument console bracket.
4. Remove acorn nut from instrument console. If present, also remove Phillips screw and large flat washer (absent on FLHRS models).
5. Raise instrument console and bend back flexible clamp on canopy to release main harness conduit. Remove fuel level sender connector [141], 4-place Packard, at top of canopy.

CAUTION

When removing instrument console, exercise caution to avoid damaging speedometer unit. Wrap console in a clean, dry shop towel to prevent damage.

6. Secure instrument console to top of rear fender using bungee cords.
7. Remove console mounting bolt from slot at top of canopy.
8. Gently pry fuel vapor vent tube from fitting.
9. At bottom left side of fuel tank, gently pull on convoluted tubing to draw fuel gauge connector [117], 4-place Multilock, out of tunnel. Depress button on socket terminal side and pull apart pin and socket halves.
10. Raise the fuel tank approximately 2 inches. Move the fuel tank crossover hose to the rear of the ignition coil, so that the tank can be raised an additional 2-3 inches. Move fuel tank straight back and rest on frame backbone.
11. Obtain three 1 x 2 inch wooden blocks. Raise the front of the fuel tank off the frame backbone by placing one block in the recess centered at the bottom of the tank. At the rear of the tank, place two blocks in the recess, one block on top of the other.

INSTALLATION (AFTER PARTIAL REMOVAL)

FLHX, FLHT

1. Remove wooden blocks and move fuel tank toward its installed position. Half way down, move fuel tank crossover hose in front of ignition coil. Work fuel tank into position aligning front flange holes with those in left and right side of frame.
2. Start fuel tank front mounting bolts (with flat washers).
3. Connect fuel vapor vent tube to fitting on filler neck of fuel tank.
4. Remove filler cap. Exercising caution to avoid pinching harness, overflow hose and vent tube, position console on canopy as shown in Figure 4-18. Reinstall filler cap.
5. Install bolt (with flat washer) to secure rear of fuel tank to frame backbone. On FLHX models, capture console bracket during installation. Tighten bolt to 15-20 ft-lbs (20-27 Nm).
6. Tighten fuel tank front mounting bolts to 15-20 ft-lbs (20-27 Nm).
7. Open fuel door on console. Install two Allen head screws to secure front of console to clip nuts on canopy bracket. Alternately tighten screws to 25-30 in-lbs (2.8-3.4 Nm). If present, also install Allen head screw to fasten rear flange of console to clip nut on fuel tank weldment (absent on FLHX models). Tighten screw to 25-30 in-lbs (2.8-3.4 Nm).
8. Connect fuel tank harness connector [13], 4-place Multilock, in front of battery. See Figure 4-16.
9. Insert bolt through battery negative cable (black) into threaded hole of battery negative (-) terminal. Tighten bolt to 60-96 **in-lbs** (6.8-10.9 Nm).
10. Install seat. See Section 2.25 SEAT, INSTALLATION.

FLHR/S

1. Remove wooden blocks and move fuel tank toward its installed position. Half way down, move fuel tank crossover hose in front of ignition coil. Work fuel tank into position aligning front flange holes with those in left and right side of frame.
2. Start fuel tank front mounting bolts (with flat washers).
3. Connect fuel vapor vent tube to fitting at top of canopy.
4. Slide head of console mounting bolt into slot at top of canopy.
5. Moving instrument console toward installed position, install fuel level sender connector [141], 4-place Packard, at top of canopy. Bend flexible clamp to capture main harness conduit.
6. Exercising caution to avoid pinching harness and vent tube, align hole in instrument console with console mounting bolt and place into position on fuel tank. See Figure 4-19.
7. Install bolt (with flat washer) to secure rear of fuel tank to frame backbone. On FLHRS models, capture instrument console bracket during installation. Tighten bolt to 15-20 ft-lbs (20-27 Nm).
8. Tighten fuel tank front mounting bolts to 15-20 ft-lbs (20-27 Nm).
9. Install acorn nut at top of instrument console and tighten to 50-90 **in-lbs** (5.7-10.2 Nm). If present, also install Phillips screw and large flat washer (absent on FLHRS models). Tighten screw to 36-60 **in-lbs** (4.1-6.8 Nm).
10. Connect fuel gauge to main harness. Route pin housing and convoluted tubing forward and then inboard between front of crossover hose fitting and bottom of fuel tank. Mate pin and socket halves of fuel gauge connector [117], 4-place Multilock. Feed connector into tunnel of fuel tank. See Figure 4-20.
11. Insert bolt through battery negative cable (black) into threaded hole of battery negative (-) terminal. Tighten bolt to 60-96 **in-lbs** (6.8-10.9 Nm).
12. Install seat. See Section 2.25 SEAT, INSTALLATION.

EVAPORATIVE EMISSIONS CONTROL SYSTEM 4.8

CALIFORNIA MODELS ONLY

GENERAL

Harley-Davidson motorcycles sold in the state of California are equipped with an evaporative (EVAP) emissions control system. In conformance with California Air Resource Board (CARB) regulations, the EVAP system prevents both fuel and crankcase vapors from escaping into the atmosphere. See Figure 4-21.

The EVAP system functions as follows:

- The fuel vapor vent tube connected to a fitting on the filler neck (top of canopy on FLHR/C/S models) allows fuel vapors in the fuel tank to be vented through the vapor valve to the charcoal canister. If the motorcycle is tipped, the vapor valve also prevents the loss of gasoline through the vent tube.
- When the engine is running, negative pressure (vacuum) draws the fuel vapors stored in the charcoal canister through the purge tube to the carburetor (or induction module) where they are burned as part of the normal combustion process.
- On carbureted models, fuel vapors emanating from the carburetor throat are drawn to the charcoal canister through the clean air inlet tube connected to the inboard side of the air cleaner backplate. Crankcase vapors passing from the breather tubes into the air filter element follow the fuel vapors to the charcoal canister. These vapors, after passing through the charcoal canister, also travel through the purge tube to the carburetor where they are burned.
- When the engine is not running, the gravity-operated baffle plate at the air cleaner air inlet port closes to prevent fuel and crankcase vapors from escaping into the atmosphere.

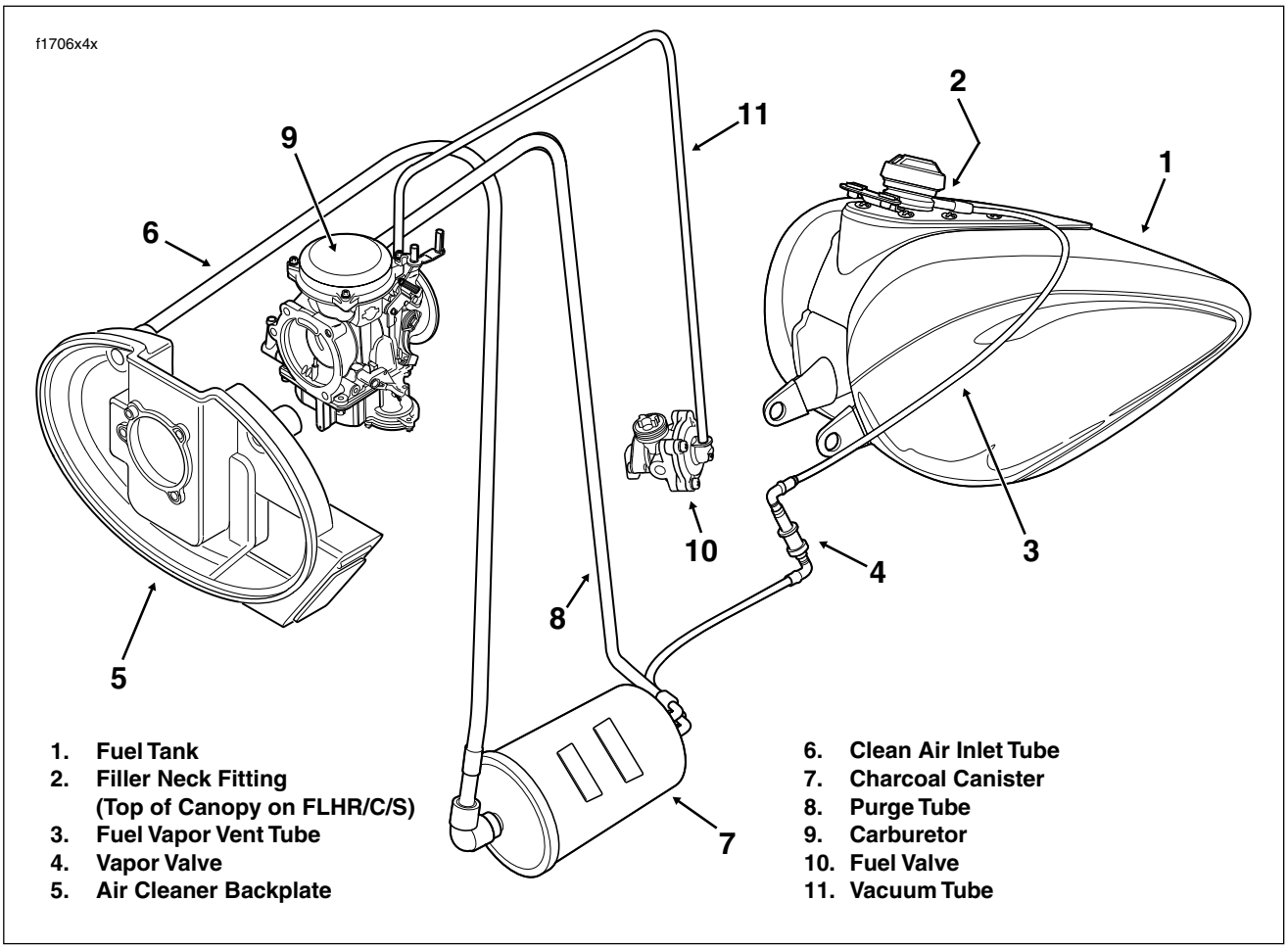

Figure 4-21. California Evaporative Emissions Control System (Carbureted Models)

⚠WARNING

Verify that the evaporative emissions tubes/hoses do not contact hot exhaust or engine parts. Tubes/hoses contain flammable vapors that can be ignited if damaged, possibly causing fire or explosion which could result in death or serious injury.

TROUBLESHOOTING

The EVAP system has been designed to operate with a minimum of maintenance. Check that all tubes/hoses are correctly routed and properly connected. Also, verify that the tubes/hoses are not pinched or kinked.

VAPOR VALVE

NOTE

On 49 State models, the charcoal canister is absent and the bottom tube of the vapor valve is vented to the atmosphere.

REMOVAL

1. Remove seat. See Section 2.25 SEAT, REMOVAL.
2. Remove left side saddlebag. See Section 2.26 SADDLEBAG, REMOVAL.
3. Gently pull side cover from frame downtubes (no tools required).
4. Locate vapor valve attached to mounting bracket on left side of frame crossmember (in front of battery box). See Figure 4-22.
5. Cut cable strap to release vapor valve from mounting bracket.
6. Remove 135˚ elbow from fitting at top of vapor valve.
7. On California models, raise vapor valve slightly and pull vent tube from fitting at bottom of vapor valve.

NOTE

On 49 State models, just pull out vapor valve with bottom vent tube attached. Remove vent tube from bottom fitting of vapor valve.

INSTALLATION

1. Hold vapor valve in its approximate position on right side of mounting bracket (oriented with longer fitting at the top). On California models, install vent tube onto bottom fitting of vapor valve.

NOTE

On 49 State models, attach vent tube to bottom fitting on vapor valve. Insert vapor valve through opening above fuse block bracket (upper weldment between downtubes), and hold in its approximate position on right side of mounting bracket.

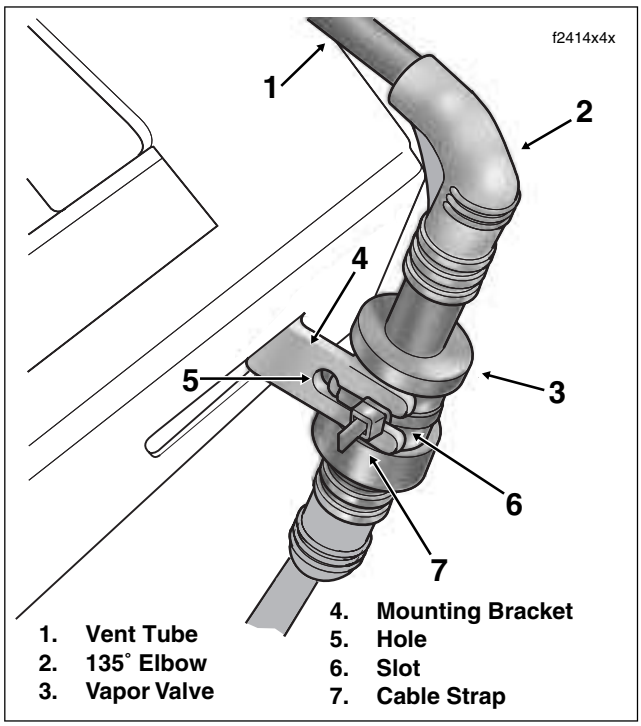

Figure 4-22. Vapor Valve Mounting Bracket (Left Side View)

2. From left side of mounting bracket, insert end of small cable strap (P/N 10065) through hole and then around body of vapor valve. Mate ends of cable strap and pull tight engaging strap in slot. Cut any excess cable strap material. See Figure 4-22.
3. Install free end of 135˚ elbow onto fitting at top of vapor valve.
4. Verify that vapor valve is completely vertical. Momentarily push on top of vapor valve to verify that it returns to the completely vertical position.

⚠WARNING

Verify that the vent tubes do not contact hot exhaust or engine parts. Tubes contain flammable vapors that can be ignited if damaged, possibly causing fire or explosion, which could result in death or serious injury.

5. Recheck bottom vent tube routing to be sure that hose fittings are not pinched or kinked, and that there is no contact with the drive belt. For California models, see Figure 4-24.

   On 49 State models, verify that vent tube at bottom of vapor valve is routed through opening above fuse block bracket (upper weldment between downtubes) to outboard side. Orient vent tube so that it runs downward along the back of the forward frame downtube, where the free end is then tucked into opening at front of lower weldment (containing side cover grommet).

6. Align barbed studs in side cover with grommets in frame downtubes and push firmly into place (no tools required).
7. Install left side saddlebag. See Section 2.26 SADDLEBAG, INSTALLATION.
8. Install seat. See Section 2.25 SEAT, INSTALLATION.

CHARCOAL CANISTER

REMOVAL

1. Remove rear fender. See Section 2.34 REAR FENDER, REMOVAL.

WARNING

Disconnect negative (-) battery cable first. If positive (+) cable should contact ground with negative (-) cable connected, the resulting sparks can cause a battery explosion, which could result in death or serious injury. (00049a)

2. Unthread bolt and remove battery negative cable (black) from battery negative (-) terminal.
3. Unthread bolt and remove battery positive cable (red) from battery positive (+) terminal.
4. Loosen T40 TORX bolt and move lip of hold-down clamp off edge of battery. Remove battery from battery box.
5. Reaching into battery box, pry plastic retaining pin out of hole on left side. See inset of Figure 4-23.
6. Reaching in between battery box and right side frame member, pull clean air inlet tube (to air cleaner backplate on carbureted models) from fitting on right side of charcoal canister. On fuel injected models, pull 90° elbow connector from fitting.
7. Moving to rear left side of motorcycle, center a flashlight on drive belt and direct the beam forward. Note the two tube connections on the left side of the canister. See Figure 4-23. Reaching in between battery box and frame member, pull tubes from canister.
8. With the handle of a rubber mallet, rap canister toward left side of motorcycle until tongue at top of canister is free of grooves in bottom of battery box. From right side of motorcycle, pull canister out of opening between battery box and frame member.

INSTALLATION

1. With tongued side up, slide canister into cavity using opening between battery box and right side frame member. Start tongue into grooves on left side of battery box. Push the canister toward the right side of the motorcycle until fully engaged. Snap plastic retaining pin into hole at bottom of battery box (left side) to lock position of canister. See inset of Figure 4-23.

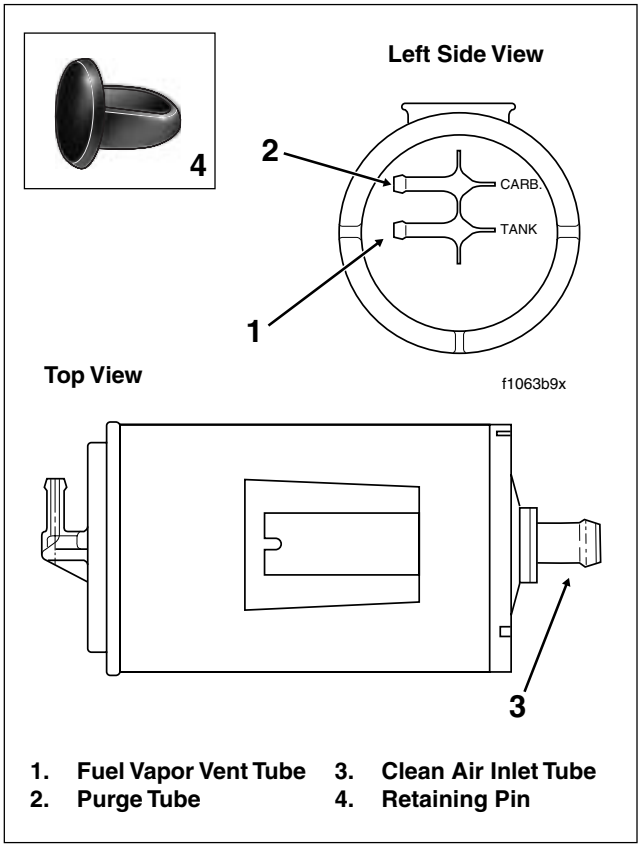

Figure 4-23. Charcoal Canister

2. Attach tubes to fittings on left side of canister. Install the purge tube to the carburetor (or induction module) onto the top fitting stamped “CARB.” Install the fuel vapor vent tube from the fuel tank (via the vapor valve) to the bottom fitting stamped “TANK.”
3. Moving to rear right side of motorcycle, attach clean air inlet tube (to air cleaner backplate on carbureted models) to fitting on right side of canister. On fuel injected models, install 90° elbow connector with the free end pointing down.

NOTE

The clean air inlet tube is absent on fuel injected models.

4. Place battery in battery box, terminal side forward.

WARNING

Connect positive (+) battery cable first. If positive (+) cable should contact ground with negative (-) cable connected, the resulting sparks can cause a battery explosion, which could result in death or serious injury. (00068a)

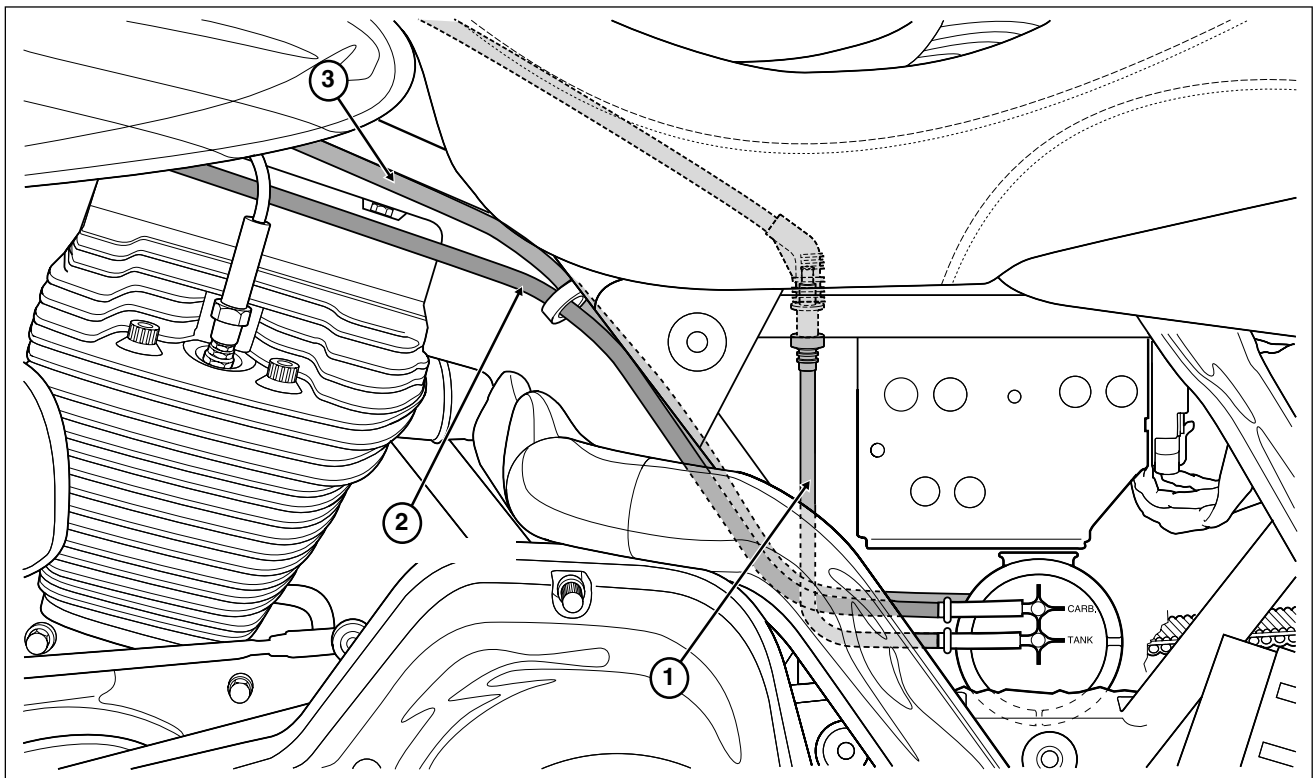

1. **Fuel Vapor Vent Tube (From Filler Neck of Fuel Tank Via Vapor Valve)**
2. **Purge Tube (To Carburetor or Induction Module)**
3. **Clean Air Inlet Tube (From Air Cleaner Backplate on Carbureted Models Only)**

f1884x4x

Figure 4-24. Charcoal Canister Tube/Hose Routing (Left Side View)

5. Insert bolt through battery positive cable (red) into threaded hole of battery positive (+) terminal. Tighten bolt to 60-96 **in-lbs** (6.8-10.9 Nm).
6. Insert bolt through battery negative cable (black) into threaded hole of battery negative (-) terminal. Tighten bolt to 60-96 **in-lbs** (6.8-10.9 Nm).
7. Rotate hold-down clamp so that the lip (with rubber pad) rests on the edge of the battery. Tighten the T40 TORX bolt to 15-20 ft-lbs (20-27 Nm).
8. Install rear fender. See Section 2.34 REAR FENDER, INSTALLATION.

Charcoal Canister Hose Routing

⚠WARNING

Verify that the vent tubes do not contact hot exhaust or engine parts. Tubes contain flammable vapors that can be ignited if damaged, possibly causing fire or explosion, which could result in death or serious injury.

Purge Tube:

From top fitting on left side of charcoal canister (stamped “CARB”), purge tube is routed forward where it runs under frame crossmember, and then angles upward between crossmember and inner primary housing. Captured in clip anchored in hole at front of crossmember (rear and inboard of cruise hole), purge tube goes over crossover pipe, runs along left side of rear cylinder rocker cover and into tunnel of fuel tank. It then crosses to right side of motorcycle just to the rear of the top engine mounting bracket, where it connects to a fitting on the carburetor (or induction module). See Figure 4-24.

Fuel Vapor Vent Tube:

From bottom fitting on left side of charcoal canister (stamped “TANK”), vent tube is routed forward and then upward in front of battery box to bottom fitting on vapor valve mounted to rear of upper frame crossmember.

Another section connected to top fitting of vapor valve follows the inboard side of the main harness bundle, where it is captured in anchored cable strap on left side of frame backbone before passing under console pod/instrument console to fitting on filler neck of fuel tank (top of canopy on FLHR/C/S models).

HOME

Clean Air Inlet Tube:

From 90˚ elbow connector on right side of charcoal canister, clean air inlet tube runs forward under frame crossmember and then upward (inboard of starter connections) following angle of crossmember, where it is routed over crossover pipe and rear cylinder rocker cover into tunnel of fuel tank on right side of frame backbone. Tube turns right just to the rear of the top engine mounting bracket, where it connects to fitting on inboard side of air cleaner backplate.

NOTE

The clean air inlet tube is absent on fuel injected models, so the fitting on the right side of the canister terminates in a 90˚ elbow connector (the free end pointing down).

NOTES

Table Of Contents

ELECTRIC STARTER 5

SUBJECT **PAGE NO.**

5.1 Specifications 5-1
5.2 Starter System 5-2
5.3 Starter Relay 5-4
5.4 Starter 5-6
5.5 Starter Solenoid 5-13
5.6 Starter Jackshaft 5-14

NOTE

See the 2006 ELECTRICAL DIAGNOSTIC MANUAL (Part No. 99497-06) for all SYSTEM DIAGNOSIS and ELECTRICAL TROUBLESHOOTING information.

SPECIFICATIONS 5.1

STARTER

Item	Specification
Free (no load) speed	3000 rpm (min.) @ 11.5 V
Free (no load) current	90 amp (max.) @ 11.5V
Stall torque	8.0 ft-lbs (10.8 Nm) @ 2.4 V

SERVICE WEAR LIMITS

Item	IN.	MM
Brush length minimum	0.433	11
Commutator diameter minimum	1.141	29

TORQUE VALUES

Item	ft/in-lbs	Nm
Thru-bolts	39-65 **in-lbs**	4.4-7.3 Nm
End cover mounting bracket	50-60 **in-lbs**	5.6-6.8 Nm
End cover center screw	90-110 **in-lbs**	10.2-12.4 Nm
Battery cable terminal bolts	60-96 **in-lbs**	6.8-10.9 Nm
Starter front and rear mounting screws	14-18 ft-lbs	19-24 Nm
Oil filler spout allen head socket screws	84-132 **in-lbs**	9.5-14.9 Nm
Starter jackshaft bolt	60-80 **in-lbs**	6.8-9.0 Nm
Solenoid terminal nut	70-90 **in-lbs**	7.9-10.2 Nm

STARTER SYSTEM 5.2

GENERAL

The starter is made up of an armature, field winding assembly, solenoid, drive assembly, idler gear, and drive housing.

The starter motor torque is increased through gear reduction. The gear reduction consists of the drive pinion on the armature, an idler gear, and a clutch gear in the drive housing. The idler gear is supported by rollers and the clutch gear is part of the overrunning clutch/drive assembly.

The overrunning clutch is the part which engages and drives the clutch ring gear. It also prevents the starter from overrunning. The field windings are connected in series with the armature through brushes and commutator segments.

The starter relay is a non-repairable part and must be replaced if it malfunctions.

Operation (Figure 5-1)

When the starter switch is pushed, the starter relay is activated and battery current flows into the pull-in winding and the hold-in winding, to ground.

The magnetic forces of the pull-in and hold-in windings in the solenoid, pull the plunger and cause it to shift to the left, so that the pinion gear is engaged with the clutch ring gear. At the same time, the main solenoid contacts are closed and battery current flows directly through the field windings to the armature and to ground. Simultaneously, the pull-in winding is opened.

The current continues flowing through the hold-in winding, keeping the main solenoid contacts closed. At this point the starter begins to crank the engine.

After the engine has started, the pinion gear turns freely on the pinion shaft through the action of the overrunning clutch which prevents the armature overrunning by the rotation of the clutch ring gear.

When the starter switch is released, the current of the hold-in winding is fed through the main solenoid contacts and the direction of the current in the pull-in winding is reversed. The solenoid plunger is returned to its original position by the return spring, disengaging the pinion gear from the clutch ring gear.

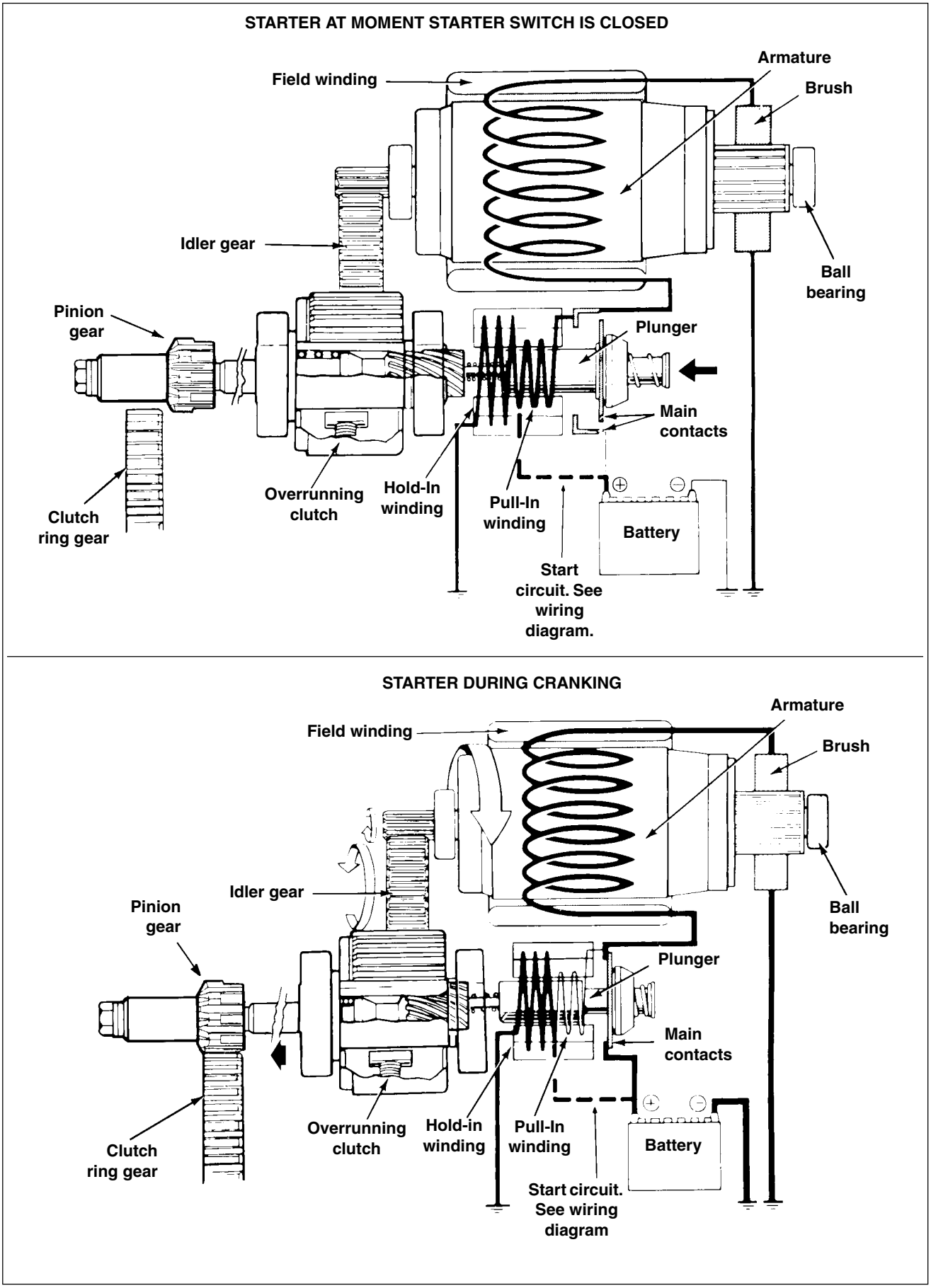

Figure 5-1. Starter Operation

STARTER RELAY 5.3

REMOVAL

FLHR/C/S

1. Remove left side saddlebag. See Section 2.26 SADDLEBAG, REMOVAL.
2. Gently pull side cover from frame downtubes (no tools required).
3. Depress latches on maxi-fuse holder and then slide cover rearward to disengage tongue from groove in fuse block cover.
4. Pull fuse block from tabs on mounting panel. Tabs on panel fit into slots on each side of fuse block cover.

NOTE

The fuse block cover also serves as the spare fuse holder. One spare 10 amp and 15 amp fuse are provided.

5. Remove the fuse block cover. Raise lipped side slightly to disengage slots from tabs on fuse block.
6. Pull relay from slots in fuse block. See upper frame of Figure 5-2.

FLHX, FLHT/C/U, FLTR

1. Remove seat. See Section 2.25 SEAT, REMOVAL.
2. Locate the starter relay installed in cavity of frame cross-member at rear of battery box. See lower frame of Figure 5-2.
3. Place a finger on the rubber molding to hold it in position, and using a needle nose pliers, carefully pull on tab to release starter relay.

NOTE

Since the position of the relays may be reversed, check the wire tag or color for positive identification. Starter relay can always be positively identified by heavy gauge GREEN wire.

4. Remove harness connector from bottom of relay.

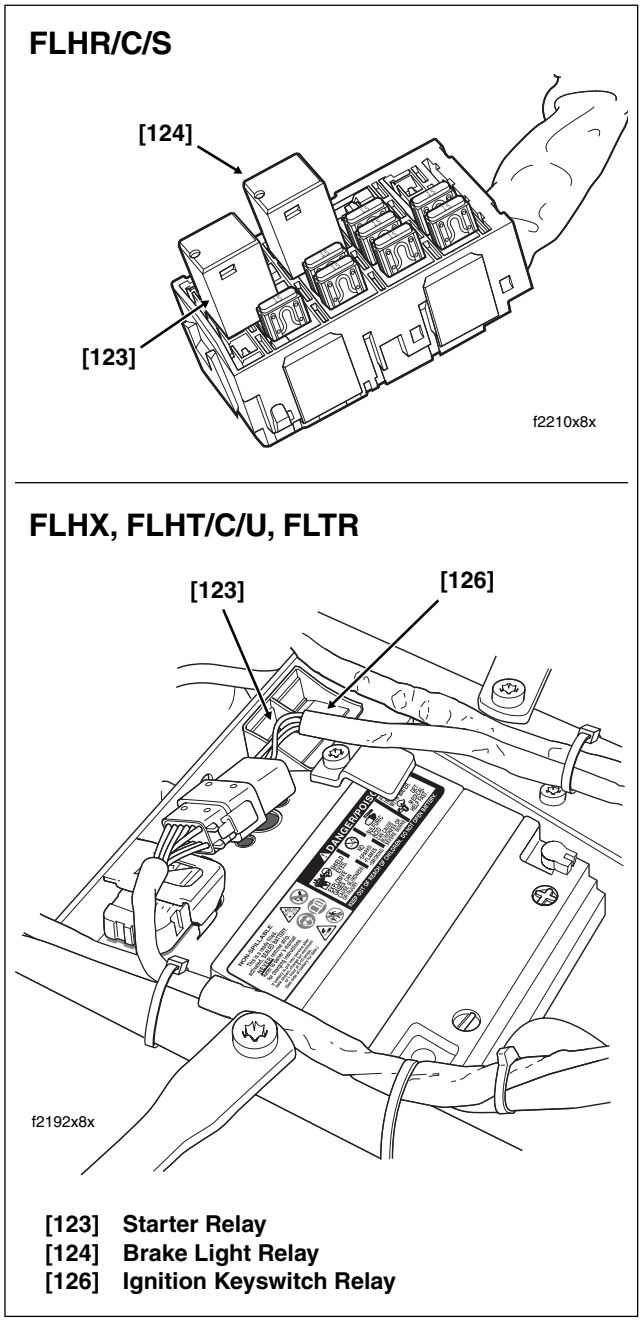

[123] Starter Relay
[124] Brake Light Relay
[126] Ignition Keyswitch Relay

Figure 5-2. Locate Starter Relay

INSTALLATION

FLHR/C/S

1. Install **new** relay in fuse block.
2. Slide cover over fuse block until slots fully engage tabs on block.
3. Slide fuse block into position on mounting panel. Tabs on panel fit into slots on each side of fuse block cover.
4. Slide maxi-fuse cover forward to engage tongue in groove of fuse block cover and then insert maxi-fuse holder into cover until latches engage.
5. Align barbed studs in side cover with grommets in frame downtubes and push firmly into place (no tools required).

6. Install left side saddlebag. See Section 2.26 SADDLE-BAG, INSTALLATION.

FLHX, FLHT/C/U, FLTR

1. Install harness connector at bottom of **new** relay.
2. Place a finger on the molding to hold it in position and push on relay until seated in cavity of frame cross-member.
3. Install seat. See Section 2.25 SEAT, INSTALLATION.

REMOVAL

1. Remove seat. See Section 2.25 SEAT, REMOVAL.

WARNING

To prevent accidental vehicle start-up, which could cause death or serious injury, disconnect negative (-) battery cable before proceeding. (00048a)

2. Unthread bolt and remove battery negative cable (black) from battery negative (-) terminal.
3. Remove the primary chaincase cover. See Section 6.5 PRIMARY CHAINCASE, REMOVAL, steps 3-8.
4. Bend tab on lockplate away from head of jackshaft bolt.
5. Holding pinion gear to prevent rotation, remove the jackshaft bolt with lockplate and thrust washer.
6. From right side of motorcycle, remove starter front mounting screw with lockwasher. Remove rear mounting screw with lockwasher (and battery negative cable ring terminal). Remove Keps nut from stud of bracket tab and remove exhaust support bracket.
7. Pull back rubber boot and remove flange nut from starter post. Remove main power and battery positive cable ring terminals from starter post. See Figure 5-3.
8. Depress external latch and pull solenoid connector from top of starter housing.
9. Locate oil filler plug/dipstick on right side of motorcycle at top of transmission case. To remove the oil filler plug, pull steadily while moving plug back and forth.
10. Remove the starter from the right side of the motorcycle, carefully sliding it through the space between the exhaust pipe and side cover.

NOTE

If necessary, remove allen screw and decorative chrome cover to facilitate starter removal.

11. Remove the coupling from the starter motor output shaft, if necessary.
12. Before disassembly, perform tests on the assembled starter. See DISASSEMBLY, TESTING AND REPAIR in this section.

INSTALLATION

1. Inspect the retaining ring within the output shaft coupling for damage or distortion. Replace as necessary. With the counterbore on the outboard side, install the coupling on the starter motor output shaft, if removed.

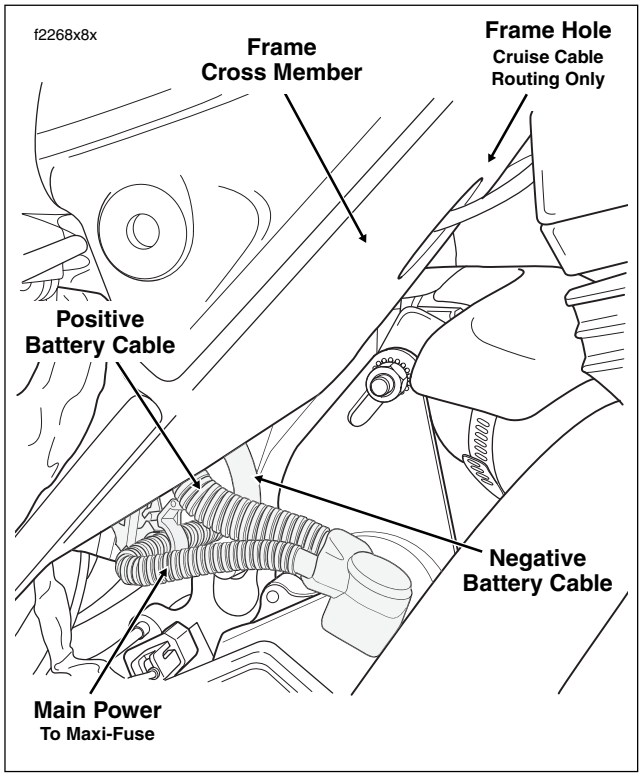

Figure 5-3. Battery Cable Routing (Right Side View)

2. From right side of motorcycle, tilt starter and work into its installed position. Starter output shaft coupling must remain on shaft and mate to starter jackshaft. See Section 5.6 STARTER JACKSHAFT, if necessary.
3. Install oil filler plug/dipstick at top of transmission case on right side of motorcycle.
4. Install slot of exhaust support bracket onto stud of bracket tab aligning other holes with those in starter flange. Start Keps nut on stud.
5. Engaging hole in exhaust support bracket, install starter front mounting screw with lockwasher. Install rear mounting screw with lockwasher (and battery negative cable ring terminal) in the same manner.
6. Alternately tighten starter front and rear mounting screws to 14-18 ft-lbs (19-24 Nm). Tighten Keps nut on stud of bracket tab.
7. Install battery positive and main power cable ring terminals onto starter post. Install flange nut and tighten to 70-90 **in-lbs** (7.9-10.2 Nm). Pull down rubber boot over terminal connections on starter post. See Figure 5-3.
8. Snap solenoid connector to terminal at top of starter housing.

NOTE

If removed, install allen screw to fasten decorative chrome cover to starter.

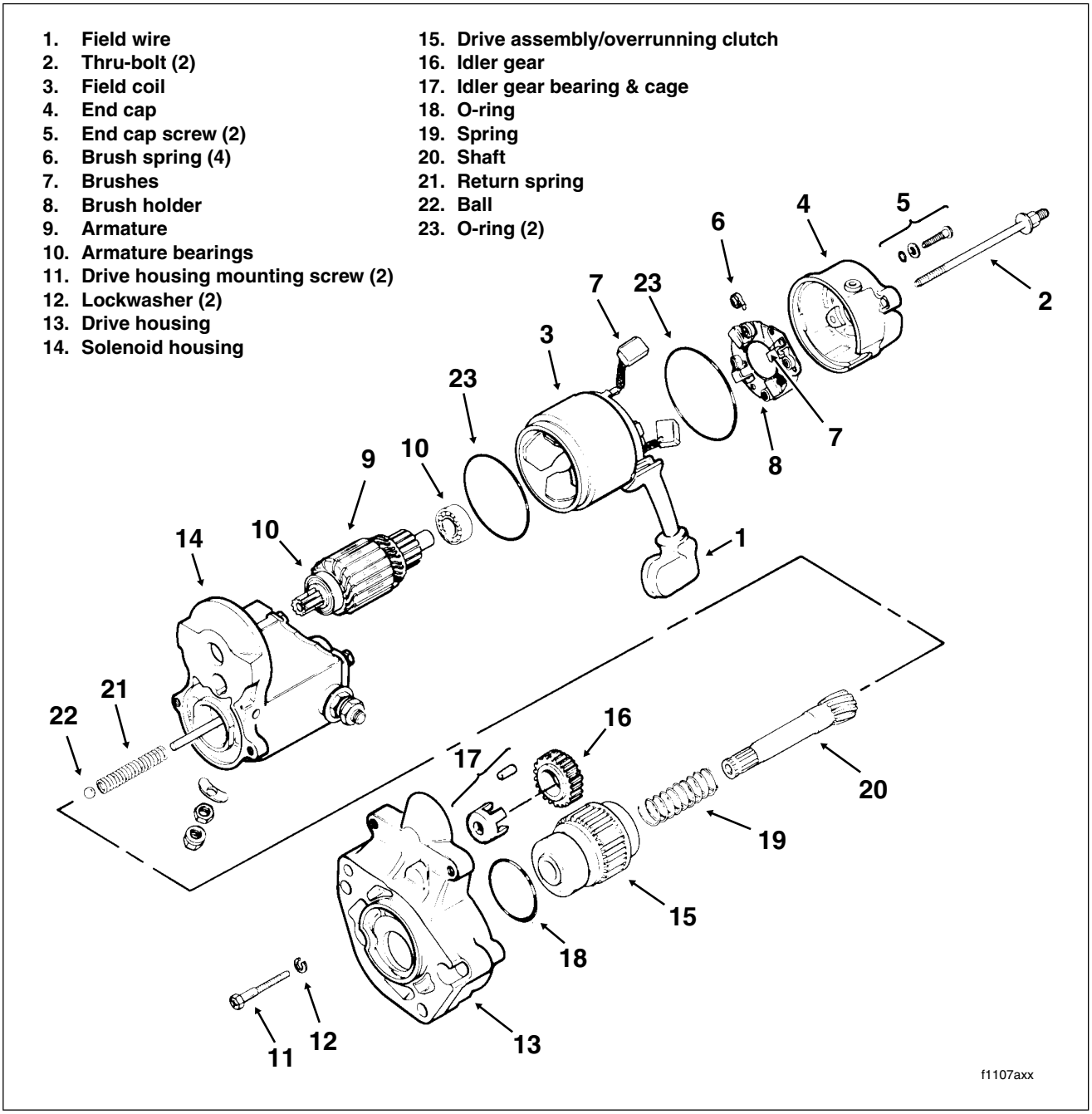

Figure 5-4. Starter

9. Slide lockplate and **new** thrust washer onto jackshaft bolt, if removed. Insert bolt into jackshaft bore.
10. Insert key on lockplate through slot in thrust washer and into keyway on jackshaft. Thread the jackshaft bolt into the starter shaft making sure that the lockplate key remains in the keyway.
11. Holding pinion gear to prevent rotation, tighten jackshaft bolt to 60-80 **in-lbs** (6.8-9.0 Nm). Bend tab on lockplate against flat of bolt head to secure.
12. Install the primary chaincase cover. See Section 6.5 PRIMARY CHAINCASE, INSTALLATION, steps 20-31.
13. Insert bolt through battery negative cable (black) into threaded hole of battery negative (-) terminal. Tighten bolt to 60-96 **in-lbs** (6.8-10.9 Nm).
14. Install seat. See Section 2.25 SEAT, INSTALLATION.

DISASSEMBLY, TESTING AND REPAIR

1. See Figures 5-4 and 5-5. Disconnect field wire (1).

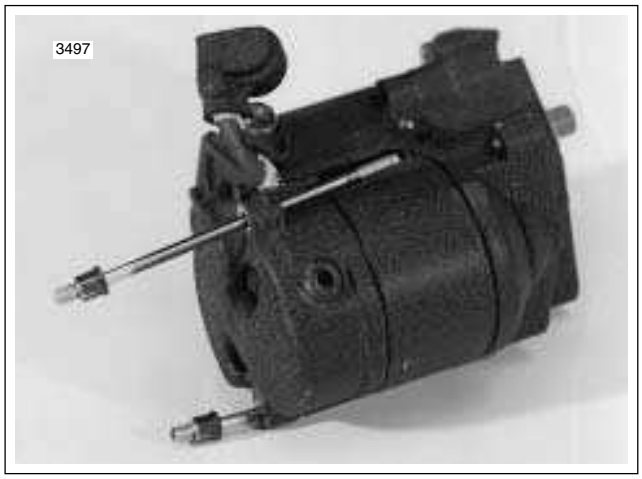

Figure 5-5. Remove Thru-Bolts

2. See Figures 5-4 and 5-6. Remove thru-bolts (2). Remove field coil (3) and end cap (4).

Figure 5-6. Remove Field Coil and Cap

3. See Figures 5-7 and 5-8. Remove the end cap screws and cap.

Figure 5-7. Remove End Cap Screws and O-Rings

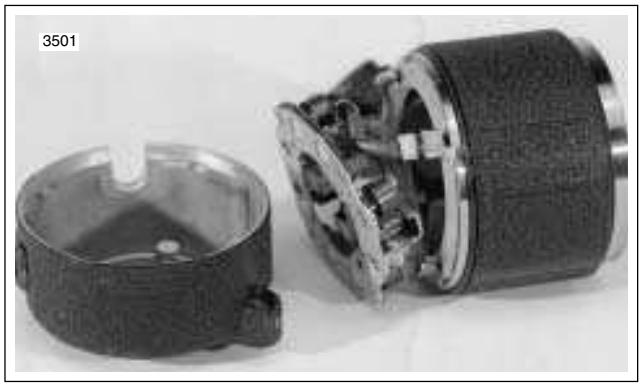

Figure 5-8. Remove End Cap

4. See Figures 5-4 and 5-9. Disengage brush springs (6) and pull field coil brushes (7) out of brush holders (8).

Figure 5-9. Remove Brush Holder

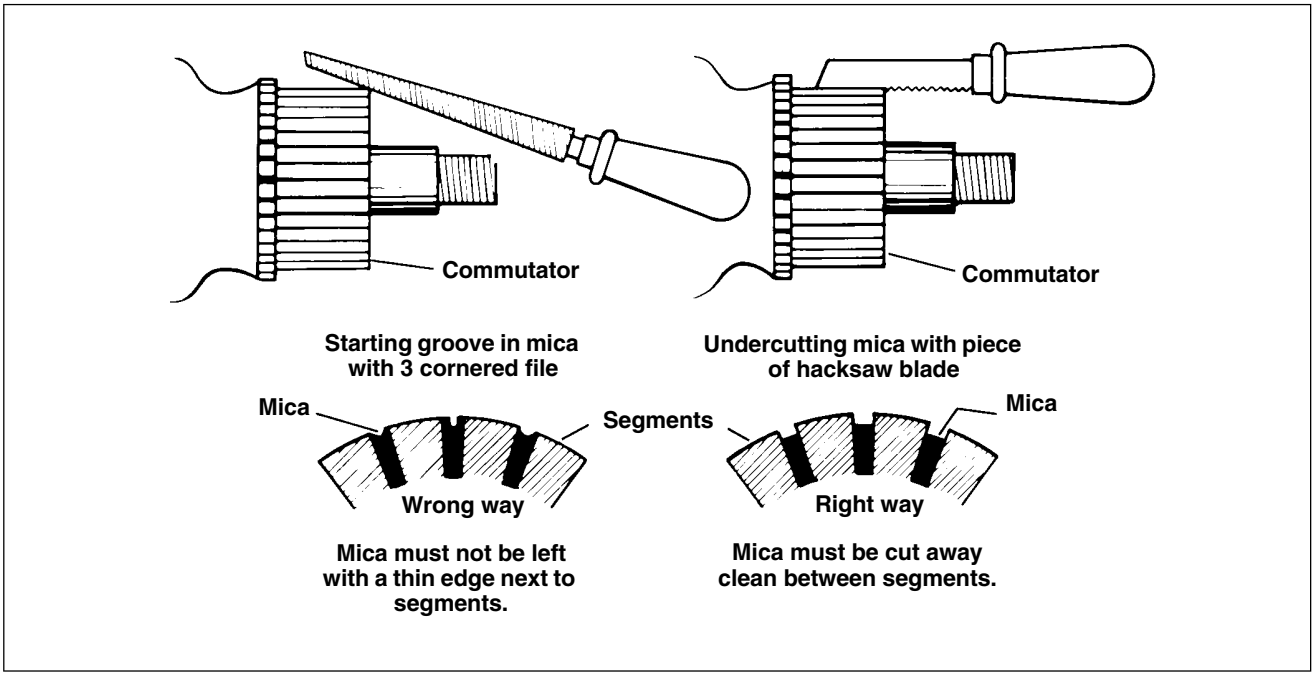

Figure 5-10. Undercutting the Mica Separators

5. Check the brush length. Brushes less than 0.433 inch (11 mm) long should be replaced.

NOTE

- *Replace brushes in sets of four only.*
- *Field coil and brush holder brushes are attached to field coil and brush holder. To replace brushes, replace field coil and brush holder.*

6. See Figure 5-4. Remove armature (9).

7. Place armature in lathe or truing stand and check runout of commutator. Commutators with more than 0.015 in. (0.38 mm) of runout should be replaced or machined on a lathe. Commutators should be replaced when diameter is less than 1.141 in. (29.98 mm).

8. Check depth of mica on commutator. If undercut is less than 0.008 in. (0.20 mm), use an undercutting machine to undercut the mica to 1/32 in. (0.79 mm) deep. The slots should then be cleaned to remove any dirt or copper dust.

9. See Figure 5-10. If an undercutting machine is not available, undercutting can be done satisfactorily using a thin hacksaw blade. After undercutting, lightly sand the armature with crocus cloth to remove any burrs.

CAUTION

Do not use sandpaper or emery cloth on commutator. The abrasive grit may remain on commutator segments and could cause excessive brush wear.

10. See Figure 5-11. Check for SHORTED ARMATURE with a growler. Place armature on growler. Hold a thin steel strip (hacksaw blade) against armature core and slowly turn armature. A shorted armature will cause the steel strip to vibrate and be attracted to the core. Shorted armatures should be replaced.

Figure 5-11. Shorted Armature Test Using Growler

11. See Figure 5-12. Check for a GROUNDED ARMATURE with an ohmmeter or continuity tester. Touch one probe to any commutator segment, and the other probe to the armature core. There should be no continuity (infinite ohms). If there is any continuity the armature is grounded and should be replaced.

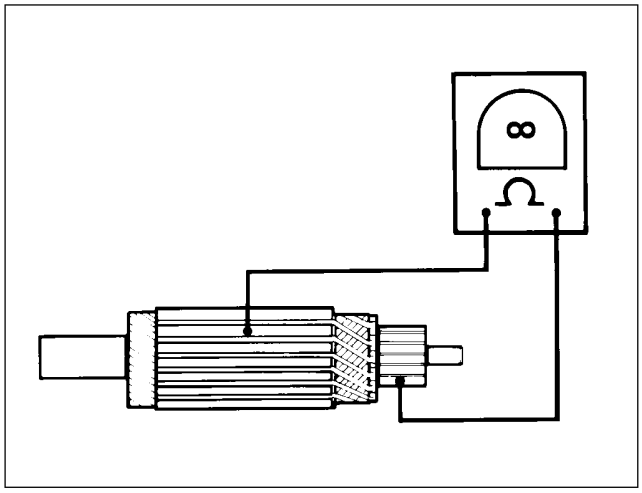

Figure 5-12. Grounded Armature Test

12. See Figure 5-13. Check for OPEN ARMATURE with an ohmmeter or continuity tester. Check for continuity between all commutator segments. There should be continuity (0 ohms) at all test points. No continuity at any test point indicates armature is open and should be replaced.

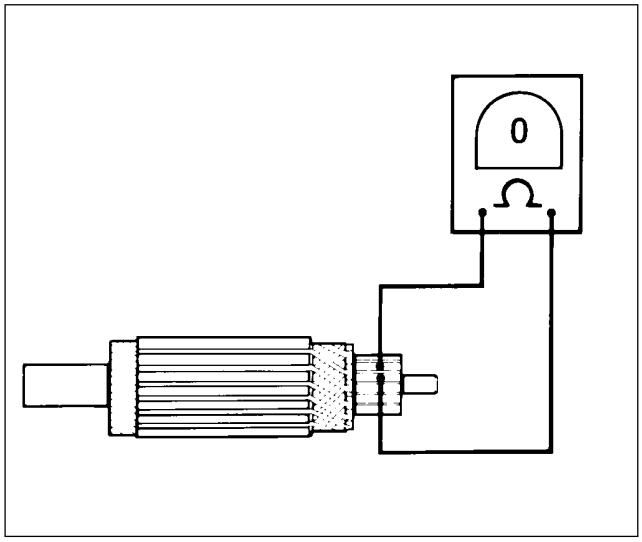

Figure 5-13. Armature Open Test

13. See Figure 5-14. Check for GROUNDED FIELD WINDING with an ohmmeter or continuity tester. Touch one probe to the frame, and the other probe to each of the brushes attached to the field winding. There should be no continuity (infinite ohms). If there is any continuity at either brush, the field winding(s) are grounded and the field frame should be replaced.

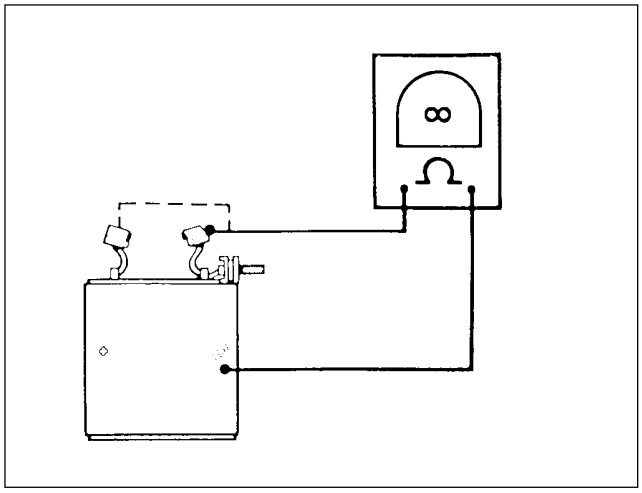

Figure 5-14. Grounded Field Test

14. See Figure 5-15. Check for OPEN FIELD WINDING with an ohmmeter or continuity tester. Touch one probe to the field wire, and the other probe to each of the brushes attached to the field coils. There should be continuity. If there is no continuity at either brush, the field winding(s) are open and the field frame should be replaced.

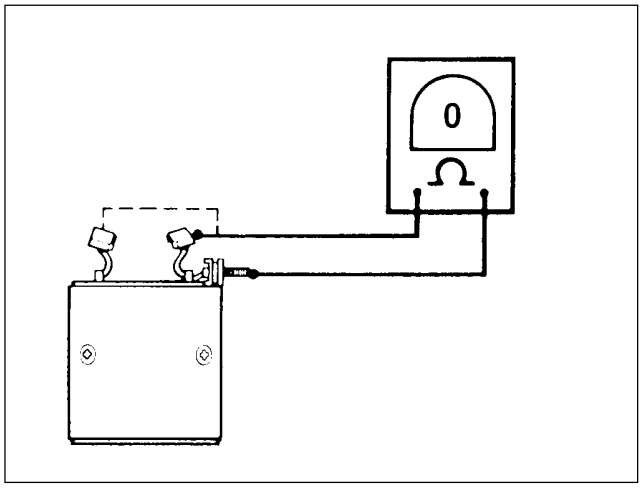

Figure 5-15. Open Field Test

15. See Figure 5-16. Test BRUSH HOLDER INSULATION with an ohmmeter or continuity tester. Touch one probe to holder plate and the other probe to each of the positive (insulated) brush holders. There should be no continuity (infinite ohms). If there is continuity at either brush holder, the brush holder assembly should be replaced. Touch one probe to the non-insulated brush holders and the other probe to the holder plate. If you measure any resistance, the brush holder must be replaced.

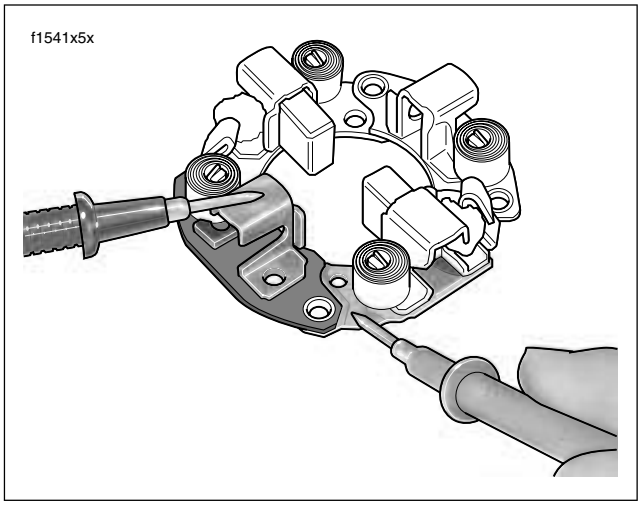

Figure 5-16. Brush Holder Insulation Test

16. Check armature bearings (10) and replace if necessary. See Figure 5-4.

NOTE

Spring (21) and ball (22) are loose in shaft gear end. See Figure 5-4.

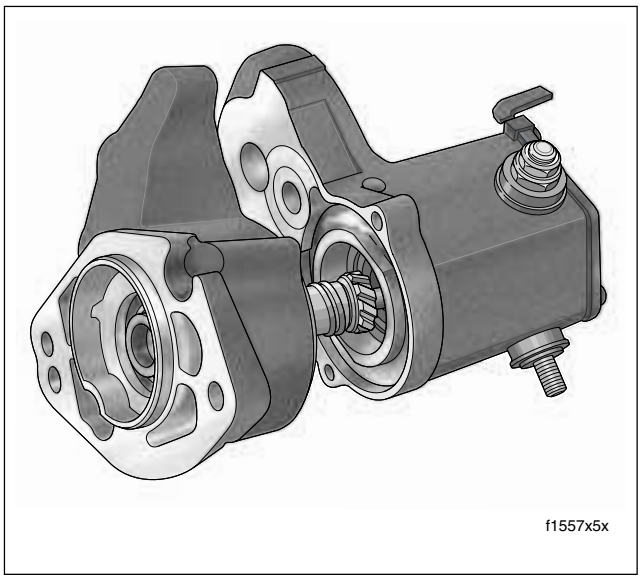

Figure 5-17. Remove Drive Housing

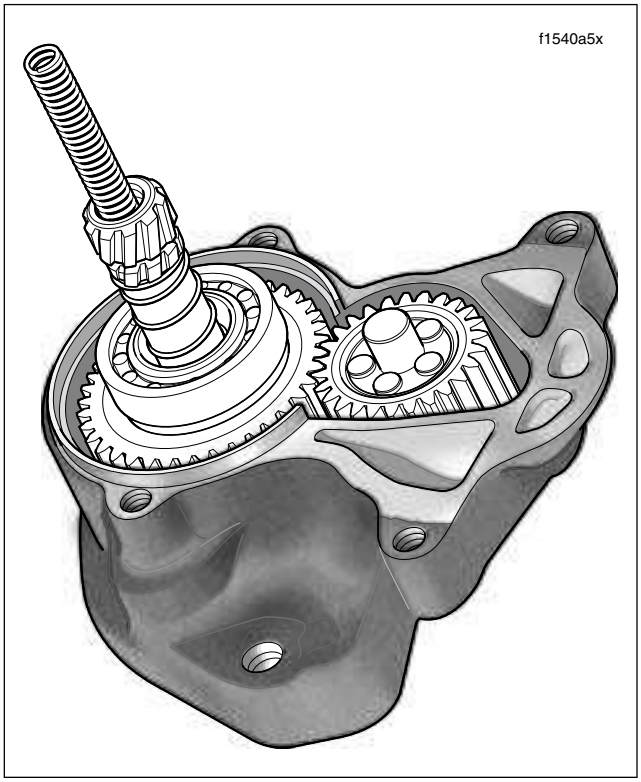

Figure 5-18. Drive Housing Assembly

Figure 5-19. Clutch Assembly

17. See Figures 5-4, 5-17 and 5-18. Remove the two drive housing mounting screws (11) and washers (12). Remove drive housing (13) from solenoid housing (14).

18. See Figures 5-4 and 5-19. Remove drive (15), idler gear (16) and idler gear bearing (17) from drive housing (13). O-ring (18) is in groove in drive housing.

19. Remove spring (19) and shaft (20).

ASSEMBLY

1. See Figure 5-4. Replace O-rings (18, 23).

CAUTION

Do not use solvents to clean drive assembly/over-running clutch (15). It is lubricated and sealed. If you use a solvent to clean it, the lubricant will be washed out and the clutch will fail.

2. Clean, inspect and lubricate drive assembly components. Lubricate parts with high temperature grease such as LUBRIPLATE 110.
3. When installing drive assembly components, open end of idler bearing cage (17) faces toward solenoid.
4. When installing drive housing (13) to solenoid housing (14) use new O-ring (18). Be sure to install return spring (21) and ball (22).
5. Lubricate armature bearings (10) with high temperature grease such as LUBRIPLATE 110. Install armature (9) and field coil (3) to solenoid housing (14).
6. Replace brush springs (6), if necessary. Install brushes (7) and brush holder (8).
7. Install end cap (4) with screws (5).
8. Install thru-bolts (2).
9. Connect field wire (1) to solenoid terminal. Tighten solenoid terminal nut to 70-90 **in-lbs** (7.9-10.2 Nm).

STARTER SOLENOID 5.5

GENERAL

The starter solenoid is a switch designed to open and close the starting circuit electromagnetically. The switch consists of contacts and a winding around a hollow cylinder containing a movable plunger. When the winding is energized by the battery, the magnetism produced pulls the plunger into the coil. The plunger moves against two main switch contacts, closing the circuit.

DISASSEMBLY

1. See Figure 5-20. Remove screws and washers. Clip comes off with screw.
2. Remove cover and gasket. Discard gasket.
3. Plunger can now be removed from solenoid housing.

ASSEMBLY

1. Replace wire connection hardware as necessary.
2. Apply a light coat of Lubriplate® 110 to plunger shaft. Install plunger in solenoid housing.
3. Install **new** gasket. Place cover in position and install screws, washers and clip.

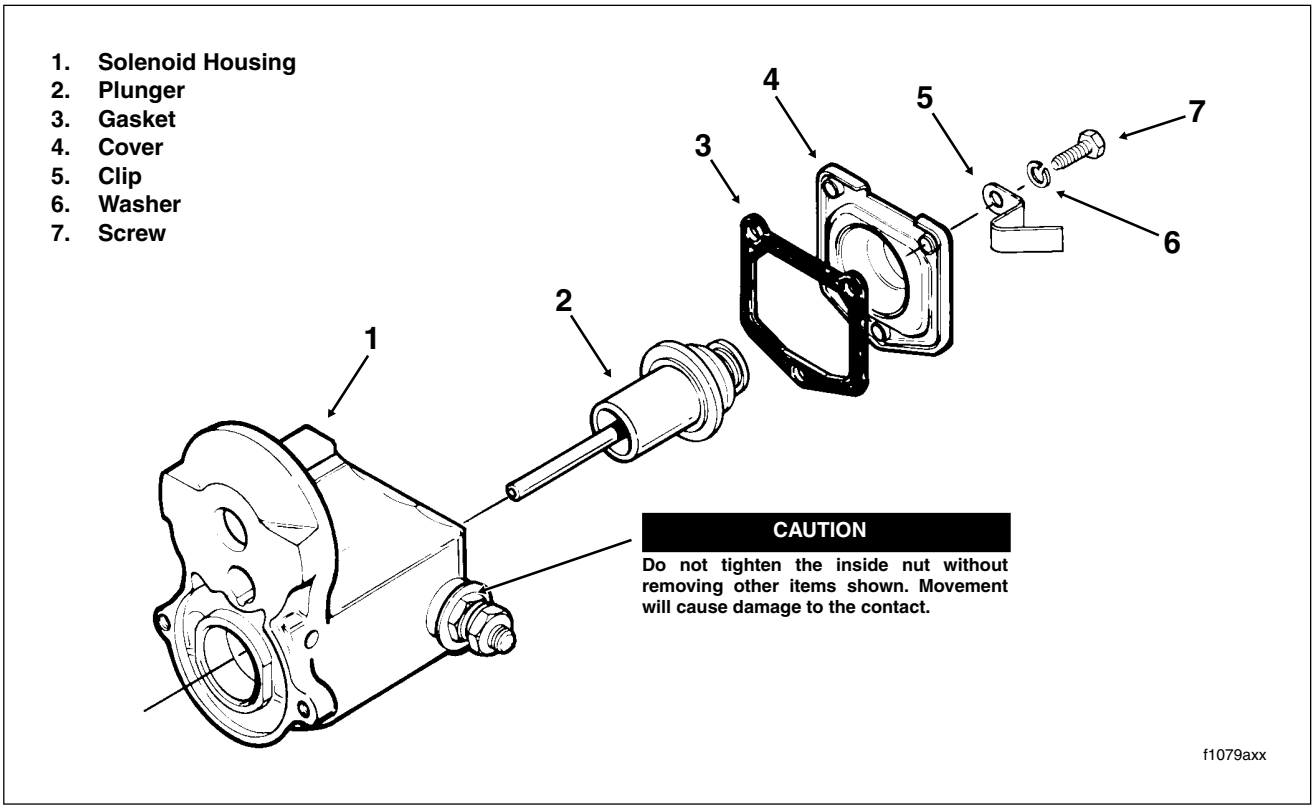

Figure 5-20. Starter Solenoid

STARTER JACKSHAFT 5.6

REMOVAL/DISASSEMBLY

1. Remove seat. See Section 2.25 SEAT, REMOVAL.

WARNING

To prevent accidental vehicle start-up, which could cause death or serious injury, disconnect negative (-) battery cable before proceeding. (00048a)

2. Unthread bolt and remove battery negative cable (black) from battery negative (-) terminal.
3. See Figure 5-21. Remove the primary chaincase cover. Remove the clutch assembly, primary chain and compensating sprocket components as a single assembly. See Section 6.5 PRIMARY CHAINCASE, REMOVAL, steps 3-15.

NOTE

If only the jackshaft bolt, thrust washer, lockplate, pinion gear and/or spring require servicing, then the primary chain and clutch assembly may be left in place.

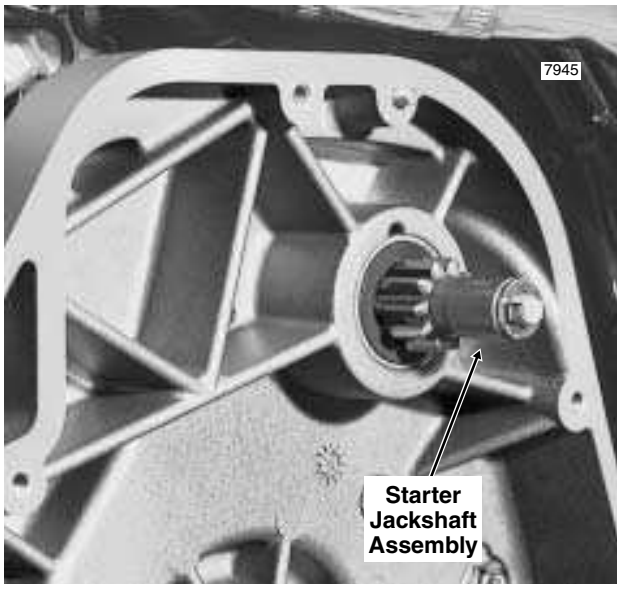

Figure 5-21. Primary Chaincase

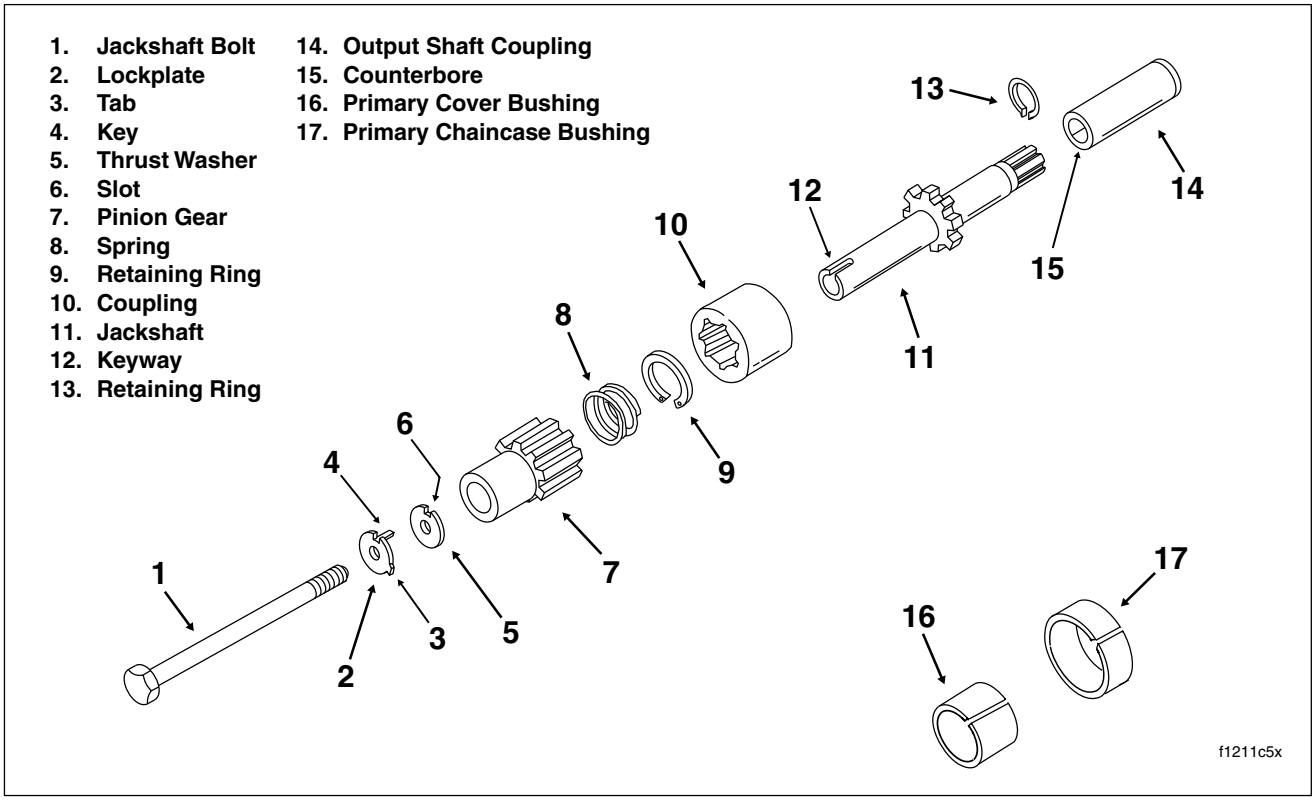

Figure 5-22. Starter Jackshaft Assembly

4. Bend tab on lockplate away from head of jackshaft bolt. See Figure 5-22.
5. Holding pinion gear to prevent rotation, remove the jackshaft bolt with lockplate and thrust washer.
6. Carefully pull jackshaft assembly from the primary chaincase bore.
7. Remove the pinion gear from the jackshaft.
8. Remove the coupling from the jackshaft. Remove the spring from the coupling.

CAUTION

Do not force the output shaft coupling through the oil seal in the primary chaincase or the resulting damage will require seal replacement.

9. From right side of motorcycle, remove starter front mounting screw with lockwasher. Remove rear mounting screw with lockwasher (and battery negative cable ring terminal). Remove Keps nut from stud of bracket tab and remove exhaust support bracket.
10. Pull back rubber boot and remove flange nut from starter post. Remove main power and battery positive cable ring terminals from starter post.
11. Depress external latch and pull solenoid connector from top of starter housing.
12. Locate oil filler plug/dipstick at top of transmission case. To remove the oil filler plug, pull steadily while moving plug back and forth.
13. Remove the starter from the right side of the motorcycle, carefully sliding it through the space between the exhaust pipe and side cover.

NOTE

If necessary, remove allen screw and decorative chrome cover to facilitate starter removal.

14. Remove the coupling from the starter motor output shaft.

ASSEMBLY/INSTALLATION

NOTE

To replace the jackshaft bushings and/or seals in the primary chaincase or primary chaincase cover, see Section 6.5 PRIMARY CHAINCASE, DISASSEMBLY.

1. Inspect the retaining ring within the output shaft coupling for damage or distortion. Replace as necessary. With the counterbore on the outboard side, install the coupling on the starter motor output shaft, if removed.
2. From right side of motorcycle, tilt starter and work into its installed position. Starter output shaft coupling must remain on shaft and mate to starter jackshaft.
3. Install oil filler plug/dipstick at top of transmission case.
4. Install slot of exhaust support bracket onto stud of bracket tab aligning other holes with those in starter flange. Start Keps nut on stud.
5. Engaging hole in exhaust support bracket, install starter front mounting screw with lockwasher. Install rear mounting screw with lockwasher (and battery negative cable ring terminal) in the same manner.
6. Alternately tighten starter front and rear mounting screws to 14-18 ft-lbs (19-24 Nm). Tighten Keps nut on stud of bracket tab.
7. Install battery positive and main power cable ring terminals onto starter post. Install flange nut and tighten to 70-90 **in-lbs** (7.9-10.2 Nm). Pull down rubber boot over terminal connections on starter post.
8. Snap solenoid connector to terminal at top of starter housing.

NOTE

If removed, install allen screw to fasten decorative chrome cover to starter.

9. Inspect the retaining ring within the coupling for damage or distortion. Replace as necessary.
10. Insert narrow end of jackshaft into shallow side of coupling until gear face contacts installed retaining ring. (Look at position of retaining ring within coupling to determine shallow side.)
11. Slide spring over narrow end of jackshaft until it contacts retaining ring.
12. Slide pinion gear over narrow end of jackshaft until it contacts spring.
13. Slide lockplate and **new** thrust washer onto jackshaft bolt, if removed. Insert bolt into jackshaft bore.
14. Gently insert jackshaft assembly into primary chaincase so that splined end of shaft engages coupling on starter output shaft.
15. Insert key on lockplate through slot in thrust washer and into keyway on jackshaft. Thread the jackshaft bolt into the starter shaft making sure that the lockplate key remains in the keyway.
16. Holding pinion gear to prevent rotation, tighten jackshaft bolt to 60-80 **in-lbs** (6.8-9.0 Nm). Bend tab on lockplate against flat of bolt head to secure.
17. Install the clutch, primary chain, and compensating sprocket components. Install the primary chaincase cover. See Section 6.5 PRIMARY CHAINCASE, INSTALLATION, steps 9-31.
18. Insert bolt through battery negative cable (black) into threaded hole of battery negative (-) terminal. Tighten bolt to 60-96 **in-lbs** (6.8-10.9 Nm).
19. Install seat. See Section 2.25 SEAT, INSTALLATION.

NOTES

Table Of Contents

SUBJECT **PAGE NO.**

6.1 Specifications 6-1
6.2 Primary Chain And Sprockets 6-3
6.3 Clutch 6-5
6.4 Secondary Drive Belt And Sprockets 6-10
6.5 Primary Chaincase 6-15

DRIVE 6

SPECIFICATIONS 6.1

OVERALL GEAR RATIOS

Overall gear ratios indicate the number of engine revolutions required to drive the rear wheel one revolution.

Gear	All Models
1	10.11
2	6.96
3	4.95
4	3.86
5	3.15

CHAINS AND BELTS

Primary Chain Adjustments

Free Play	Inches	Millimeters
COLD Engine	5/8-7/8 inch	15.9-22.2 mm
HOT Engine	3/8-5/8 inch	9.5-15.9 mm

Primary Chaincase Lubricant

Amount	Ounces	Milliliters
	32	946
Part Number	Quart	
	99851-05	

Rear Belt Adjustment

Deflection	Inches	Millimeters
On Jiffy Stand Without Rider or Luggage 10 psi (69 kPa) in Rear Shocks	1/4 - 5/16 at 10 lbs force	6.4 - 7.9 at 4.5 kg force
Motorcycle Upright With Rear Wheel in the Air	3/16 - 1/4 at 10 lbs force	4.8 - 6.4 at 4.5 kg force

SPROCKETS

Number of Teeth	
Sprocket	All Models
Engine	25
Clutch	36
Transmission	32
Rear wheel	70

CLUTCH

Clutch	Description
Type	Wet-multiple disc
Clutch lever free play	1/16-1/8 in.
	1.6-3.2 mm
Clutch screw adjustment	loosen 1/2-1 turn after lightly seating

TORQUE VALUES

Item	ft/in-lbs	Nm
Primary chain tensioner shoe nut	21-29 ft-lbs	29-39 Nm
Tensioner shoe adjuster plate screws	12-14 ft-lbs	16-19 Nm
Primary chain inspection cover screws	84-108 **in-lbs**	10-12 Nm
Clutch adjuster screw locknut	72-120 **in-lbs**	8-14 Nm
Clutch inspection cover screws	84-108 **in-lbs**	10-12 Nm
Clutch diaphragm spring retainer to clutch hub bolts	90-110 **in-lbs**	10-12 Nm
Rear axle cone nut	95-105 ft-lbs	129-142 Nm
Rear swingarm pivot shaft locknut	40-45 ft-lbs	54-61 Nm
Rear swingarm bracket bolts	34-42 ft-lbs	46-57 Nm

Continued ...

TORQUE VALUES (CONT.'D)

Item		ft/in-lbs	Nm
Transmission mainshaft sprocket nut		60 ft-lbs, then 35° to 45°	81 Nm, then 35° to 45°
Mainshaft sprocket nut lockplate socket head screws		84-108 **in-lbs**	9-12 Nm
Rear wheel sprocket bolts		55-65 ft-lbs	75-88 Nm
Primary chaincase to crankcase/transmission		15-19 ft-lbs	20.3-25.8 Nm
Starter front and rear mounting screws		14-18 ft-lbs	19-24 Nm
Starter jackshaft bolt		60-80 **in-lbs**	6.8-9.0 Nm
Engine compensating sprocket nut		75 ft-lbs, then 45° to 50°	101.7 Nm, then 45° to 50°
Clutch hub mainshaft nut		70-80 ft-lbs	95-108 Nm
Primary chaincase cover allen head socket screws		84-108 **in-lbs**	9-12 Nm
Primary chaincase drain plug		36-60 **in-lbs**	4.1-6.8 Nm
Passenger footboard socket screws		15-18 ft-lbs	20-24 Nm
Heel-toe shift lever socket screws	5/16"	18-22 ft-lbs	24-30 Nm
Inner shift arm to shift lever shaft socket screw	1/4"	90-110 **in-lbs**	10.2-12.4 Nm

PRIMARY CHAIN ADJUSTMENT

See Section 1.7 PRIMARY CHAIN/LUBRICANT, PRIMARY CHAIN ADJUSTMENT.

ADJUSTER SHOE REPLACEMENT

If the nylon adjuster shoe is worn or damaged, replace as follows:

1. Remove the primary chaincase cover. See Section 6.5 PRIMARY CHAINCASE, REMOVAL, steps 1-8.
2. Loosen top center nut from captured bolt of chain tensioner assembly. See Figure 6-1.
3. Lower the chain tensioner assembly until the adjuster shoe just contacts the inner primary housing.

WARNING

Always wear proper eye protection when removing retaining rings. Use the correct retaining ring pliers. Verify that the tips of the pliers are not damaged or excessively worn. Slippage may propel the ring with enough force to cause eye injury.

4. Remove retaining ring from nub and pull adjuster shoe from chain tensioner. Discard adjuster shoe and retaining ring.
5. Slide **new** adjuster shoe onto chain tensioner. Be sure that the narrow end of the shoe is at the front, the wider end at the rear.

WARNING

Always wear proper eye protection when installing retaining rings. Use the correct retaining ring pliers. Verify that the tips of the pliers are not damaged or excessively worn. Slippage may propel the ring with enough force to cause eye injury.

6. Install **new** retaining ring onto nub of chain tensioner to lock position of adjuster shoe. Verify that retaining ring is fully seated in the groove.
7. Raise the chain tensioner assembly and then snug the top center nut.
8. Check the primary chain tension. Push on the upper strand to verify that it has free up and down movement midway between the engine compensating sprocket (front) and the clutch sprocket (rear).
9. Measure the free play to be sure that it falls within the range specified for a hot or cold engine:

Table 6-1. Primary Chain Adjustment

(Free Play)	Inches	Millimeters
COLD ENGINE	5/8-7/8 inch	15.9-22.2 mm
HOT ENGINE	3/8-5/8 inch	9.5-15.9 mm

10. If the chain is too tight or too loose, then adjust as follows:
    a. Loosen the top center nut a maximum of two turns and raise or lower the chain tensioner assembly as necessary to obtain the specified free play. See Figure 6-1.

NOTE

As chains stretch and wear, they run tighter at one spot than another. Always adjust the free play at the tightest spot in the chain. Replace the primary chain if it is worn to the point where it cannot be properly adjusted.

CAUTION

Always keep the primary chain properly adjusted. Allowing the chain to run too tight or too loose will result in excessive chain and sprocket wear.

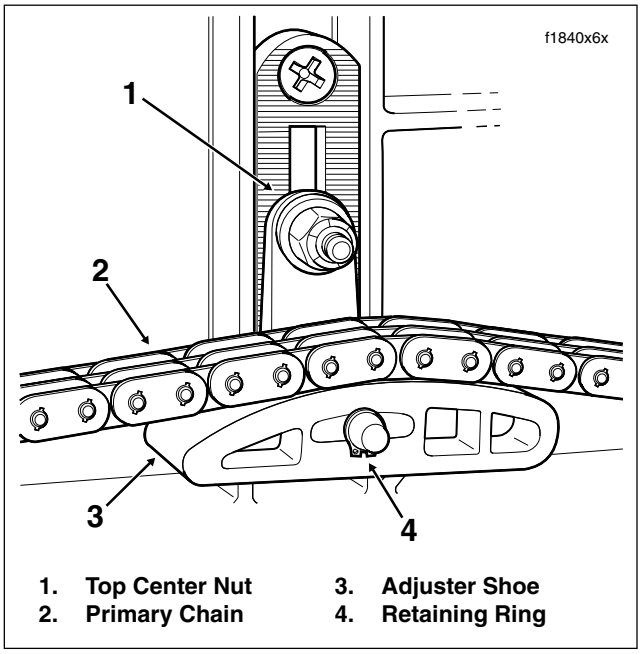

Figure 6-1. Primary Chain Tensioner Assembly

b. Tighten the top center nut of the chain tensioner assembly to 21-29 ft-lbs (29-39 Nm).

11. Install the primary chaincase cover. See Section 6.5 PRIMARY CHAINCASE, INSTALLATION, steps 20-31.

DISASSEMBLY

See Section 6.5 PRIMARY CHAINCASE, REMOVAL, steps 1-15.

CLEANING AND INSPECTION

1. Periodically inspect the primary chain for cracked, broken or badly worn links. Replace as necessary.
2. Inspect engine compensating sprocket components for damage or wear. Replace parts as necessary.
3. Inspect clutch sprocket for damage or wear. If broken or damaged teeth are found, the clutch shell and sprocket assembly must be replaced.

ASSEMBLY

See Section 6.5 PRIMARY CHAINCASE, INSTALLATION, steps 9-31.

CLUTCH 6.3

ADJUSTMENT

See Section 1.8 CLUTCH ADJUSTMENT.

REMOVAL/INSTALLATION

To remove the clutch without disassembly, see Section 6.5 PRIMARY CHAINCASE, REMOVAL, steps 1-15.

For installation instructions, see Section 6.5 PRIMARY CHAINCASE, INSTALLATION, steps 9-31.

NOTE

If only the clutch pack is to be disassembled, see PARTIAL DISASSEMBLY below, a procedure that can be performed on the motorcycle without removing the clutch shell or hub.

For complete disassembly of the clutch, which includes clutch pack disassembly and bearing replacement, see COMPLETE DISASSEMBLY.

PARTIAL DISASSEMBLY

CLUTCH PACK ONLY

1. Remove the primary chaincase cover. See Section 6.5 PRIMARY CHAINCASE, REMOVAL, steps 1-8.

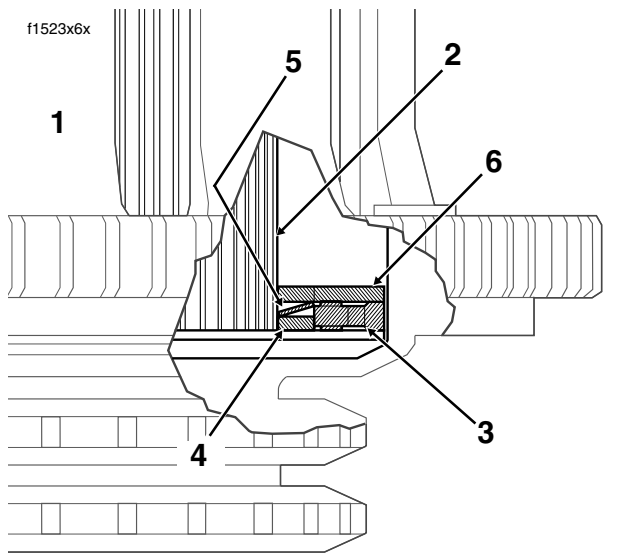

1.	Clutch Shell	4.	Damper Spring Seat
2.	Clutch Hub	5.	Damper Spring
3.	Narrow Friction Plate	6.	Steel Plate

Figure 6-2. Clutch Pack Stack-Up (Cut-Away View)

2. Remove six bolts to release diaphragm spring retainer from clutch hub. See Figure 6-3.
3. Remove diaphragm spring retainer, diaphragm spring and pressure plate from clutch hub.
4. Remove friction plates, steel plates, damper spring and damper spring seat from clutch hub.
5. See CLEANING AND INSPECTION in this section.

ASSEMBLY

CLUTCH PACK ONLY

1. Submerge and soak all friction and steel plates in PRIMARY CHAINCASE LUBRICANT for at least five minutes.
2. Install the narrow friction plate on the clutch hub engaging tabs on plate with slots in clutch shell.
3. Install damper spring seat on clutch hub so that it seats inboard of narrow friction plate.
4. Install damper spring on clutch hub with the concave side up (facing opposite damper spring seat). See Figure 6-2.
5. Install a steel plate and then a friction plate on the clutch hub. Install seven remaining sets in the same manner, alternating between steel plates and friction plates.
6. Install pressure plate on clutch hub aligning holes in plate with threaded bosses on hub.
7. Seat diaphragm spring in recess of pressure plate with the concave side down.
8. Align holes in diaphragm spring retainer with threaded bosses on clutch hub. Tabs on spring retainer contact flats on inboard side of bosses.
9. Install six bolts to secure diaphragm spring retainer to clutch hub. Alternately tighten bolts to 90-110 **in-lbs** (10.2-12.4 Nm).
10. Install the primary chaincase cover. See Section 6.5 PRIMARY CHAINCASE, INSTALLATION, steps 20-31.

CLEANING AND INSPECTION

1. Wash all parts in cleaning solvent, except for friction plates and bearing, if removed. Blow dry with compressed air.
2. Check **friction plates** as follows:

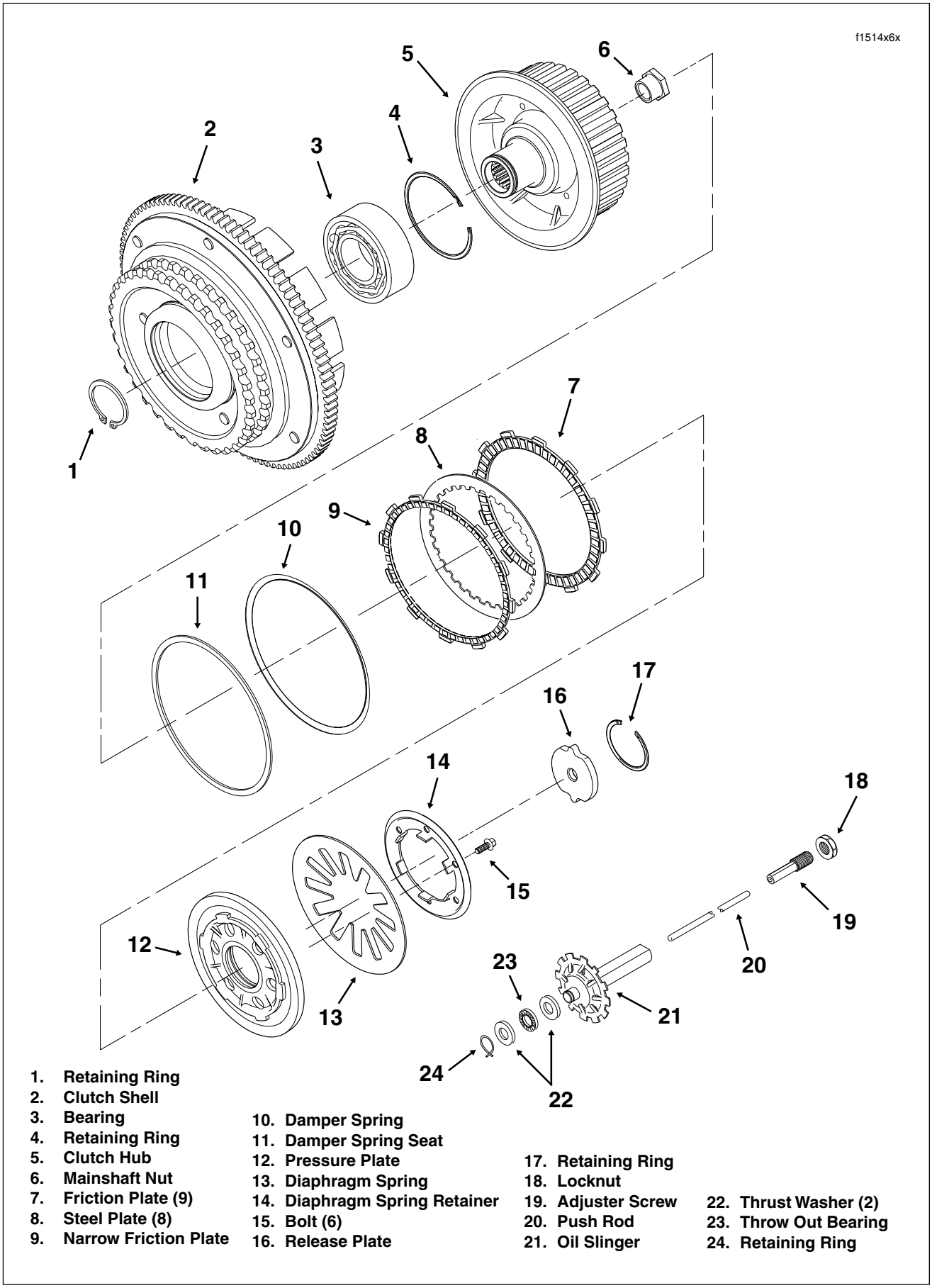

1. Retaining Ring
2. Clutch Shell
3. Bearing
4. Retaining Ring
5. Clutch Hub
6. Mainshaft Nut
7. Friction Plate (9)
8. Steel Plate (8)
9. Narrow Friction Plate
10. Damper Spring
11. Damper Spring Seat
12. Pressure Plate
13. Diaphragm Spring
14. Diaphragm Spring Retainer
15. Bolt (6)
16. Release Plate
17. Retaining Ring
18. Locknut
19. Adjuster Screw
20. Push Rod
21. Oil Slinger
22. Thrust Washer (2)
23. Throw Out Bearing
24. Retaining Ring

Figure 6-3. Clutch Assembly

- Wipe all lubricant from the friction plates. Measure the thickness of each plate with a dial caliper or micrometer. If the thickness of any plate is less than 0.143 inch (3.62 mm), discard the friction plates and replace with an entirely new set.
- Look for worn or damaged fiber surface material (both sides).

NOTE

Replace all nine friction plates with an entirely new set if any individual plate shows evidence of wear or damage.

3. Check **steel plates** as follows:
   - Discard any plate that is grooved or bluish in color. Blue plates are likely warped or distorted.
   - Check each plate for distortion. Lay the plate on a precision flat surface. Insert a feeler gauge between the plate and the flat surface in several places. Replace any steel plate that is warped more than 0.006 inch (0.15 mm).
4. See Figure 6-3. Holding the clutch hub, rotate the clutch shell to check bearing for smoothness. Replace the bearing if it runs rough or binds.
5. Check the primary chain sprocket and the starter ring gear on the clutch shell. Replace the clutch shell if either sprocket or ring gear are badly worn or damaged.
6. Check the slots that mate with the clutch plates on both the clutch shell and hub. Replace shell or hub if slots are worn or damaged.
7. Check the diaphragm spring and diaphragm spring retainer for cracks or bent tabs. Obtain a new diaphragm spring or diaphragm spring retainer if either condition exists.

COMPLETE DISASSEMBLY

CLUTCH PACK AND BEARING

1. Remove clutch assembly from the motorcycle. See Section 6.5 PRIMARY CHAINCASE, REMOVAL, steps 1-15.
2. Remove six bolts to release diaphragm spring retainer from clutch hub. See Figure 6-3.
3. Remove diaphragm spring retainer, diaphragm spring and pressure plate from clutch hub.
4. Remove friction plates, steel plates, damper spring and damper spring seat from clutch hub.

CAUTION

To avoid possible bearing damage, do not disassemble the clutch shell and hub assembly unless the bearing, hub or shell require replacement. Replace the bearing if disassembled.

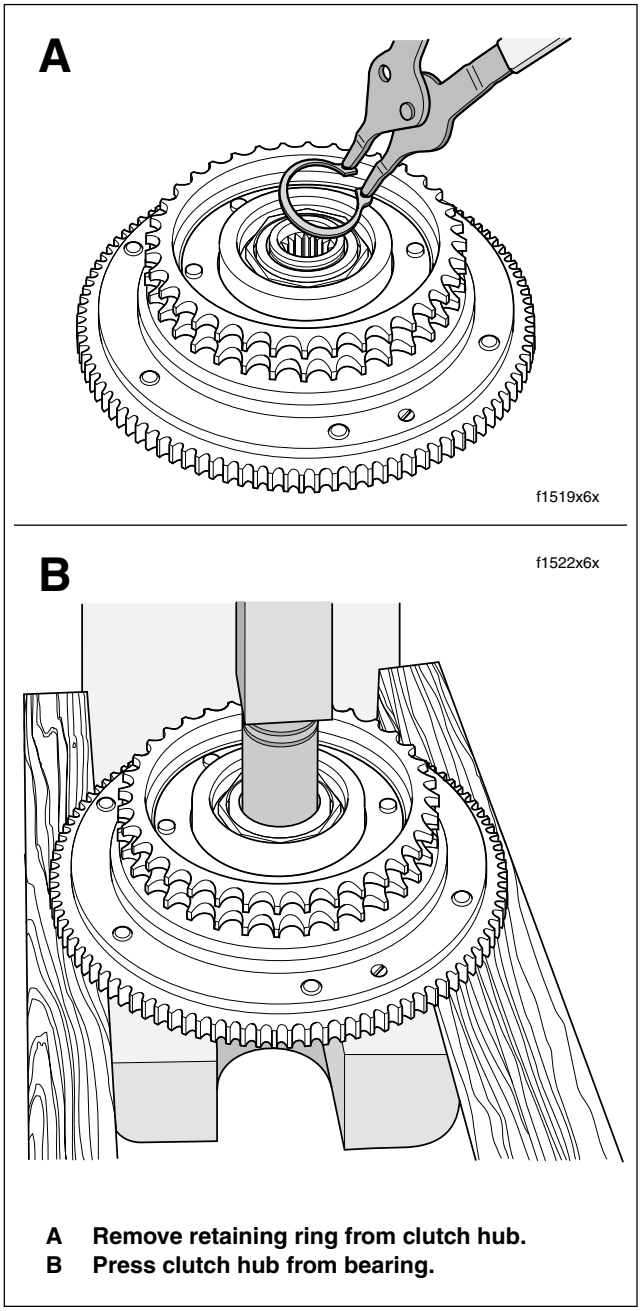

A Remove retaining ring from clutch hub.
B Press clutch hub from bearing.

Figure 6-4. Remove Clutch Hub from Clutch Shell

WARNING

Always wear proper eye protection when removing retaining rings. Use the correct retaining ring pliers. Verify that the tips of the pliers are not damaged or excessively worn. Slippage may propel the ring with enough force to cause eye injury.

5. With the sprocket side up, remove retaining ring from clutch hub groove. See upper frame of Figure 6-4.

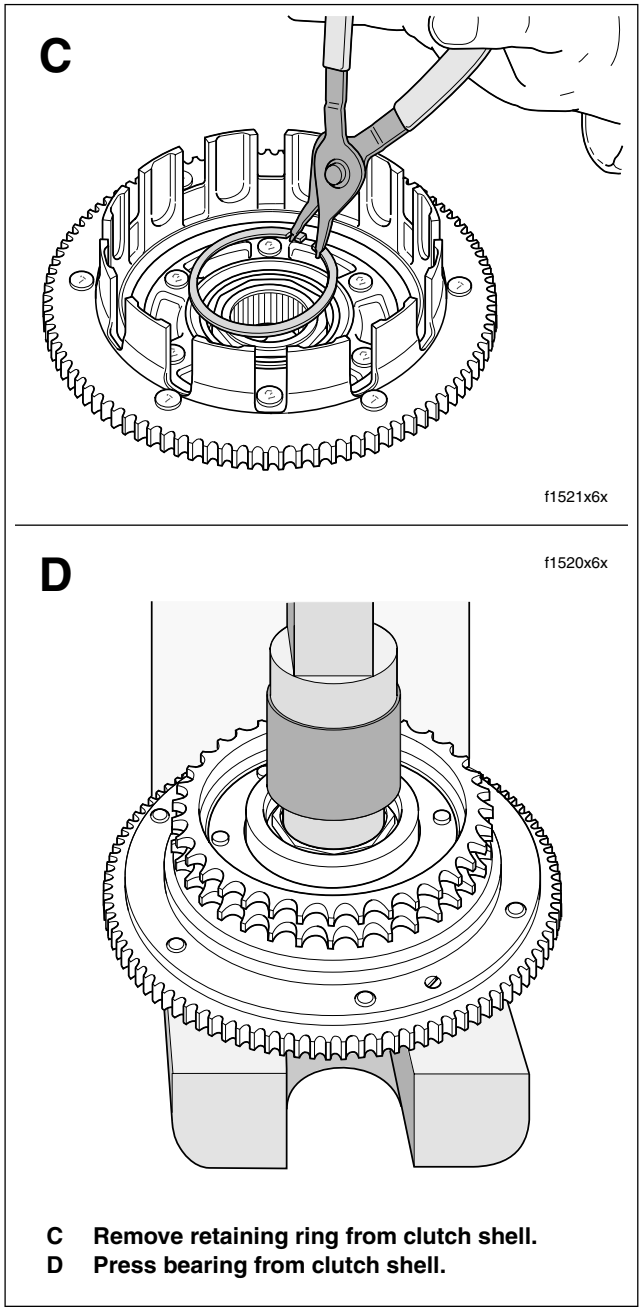

Figure 6-5. Remove Bearing from Clutch Shell

6. Supporting clutch shell in same orientation, use arbor press and a suitable press plug to press hub from bearing in clutch shell. See lower frame of Figure 6-4.
7. Turn clutch shell over so that the sprocket side is down. Remove retaining ring from groove in clutch shell bore. See upper frame of Figure 6-5.
8. Turn clutch shell over so that sprocket side is up. Using arbor press and a suitable press plug, press on inner race to remove bearing from clutch shell bore. See lower frame of Figure 6-5.
9. See CLEANING AND INSPECTION in this section.

ASSEMBLY

CLUTCH PACK AND BEARING

1. Orient clutch shell in arbor press with sprocket side down. Be sure to support clutch shell bore on sprocket side. Using a suitable press plug, press against outer race until bearing contacts shoulder in clutch shell bore.

⚠WARNING

Always wear proper eye protection when installing retaining rings. Use the correct retaining ring pliers. Verify that the tips of the pliers are not damaged or excessively worn. Slippage may propel the ring with enough force to cause eye injury.

NOTE

Note that one side of the retaining ring is beveled. Always install the ring with the beveled side opposite the bearing.

2. Install retaining ring in groove of clutch shell bore, so that the flat side of the ring is in towards the bearing, the beveled side out.
3. Center hub in bearing. Be sure that bearing inner race is supported with sleeve on sprocket side. Press hub into bearing until hub shoulder contacts bearing inner race.
4. Turn assembly over so that the sprocket side is up. Install retaining ring in groove of clutch hub.
5. Place clutch assembly on bench oriented with the sprocket side down.
6. Submerge and soak all friction and steel plates in PRIMARY CHAINCASE LUBRICANT for at least five minutes.

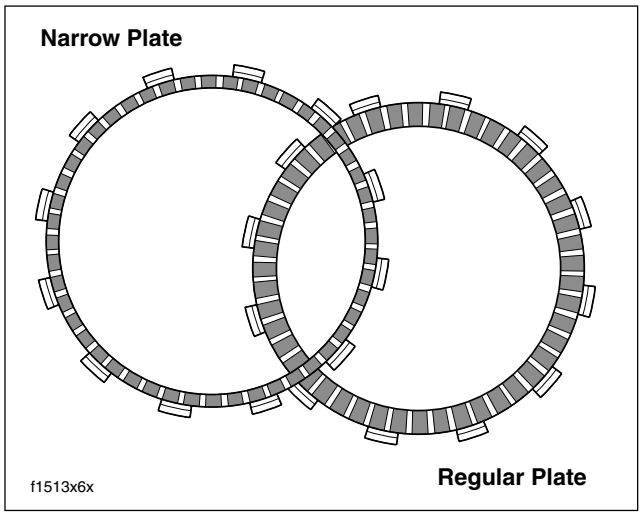

Figure 6-6. Friction Plates

7. Install the narrow friction plate on the clutch hub engaging tabs on plate with slots in clutch shell. See Figure 6-6.

8. Install damper spring seat on clutch hub so that it seats inboard of narrow friction plate.

9. Install damper spring on clutch hub with the concave side up (facing opposite damper spring seat). See Figure 6-2.

10. Install a steel plate and then a friction plate on the clutch hub. Install seven remaining sets in the same manner, alternating between steel plates and friction plates.

11. Install pressure plate on clutch hub aligning holes in plate with threaded bosses on hub.

12. Seat diaphragm spring in recess of pressure plate with the concave side down.

13. Align holes in diaphragm spring retainer with threaded bosses on clutch hub. Tabs on spring retainer contact flats on inboard side of bosses.

14. Install six bolts to secure diaphragm spring retainer to clutch hub. Alternately tighten bolts to 90-110 **in-lbs** (10.2-12.4 Nm).

15. Install clutch assembly on motorcycle. See Section 6.5 PRIMARY CHAINCASE, INSTALLATION, steps 9-31.

SECONDARY DRIVE BELT AND SPROCKETS 6.4

ADJUSTMENT

See Section 1.10 DRIVE BELT.

CLEANING AND INSPECTION

1. Use a spray solution of soap and water to clean belt. Avoid immersion. Wipe the belt down or blow dry. Although the belt's urethane compound is resistant to most solvents, these should only be used on a limited basis, and then must always be followed by a soap and water wash.
2. Inspect the edges of the belt for cuts or unusual wear patterns. While some beveling of the outside edge is common, and by itself is not usually harmful, it is an indication of sprocket misalignment.
3. Inspect the outside ribbed surface of the belt for signs of stone puncture. Since it is not always easy to observe this type of damage, look closely.
4. On the inside of the belt, inspect the roots of the belt teeth to see if the tensile cords are exposed. See upper frame of Figure 6-7. The tensile cords are covered by a layer of nylon facing and another layer of polyethylene. Once these layers are worn through, the tensile cords become visible. Visible tensile cords are an indication that the transmission sprocket tooth tip diameter is severely worn. Furthermore, belt failure is imminent, since the tooth tips will continue to scratch away at the tensile cords until the belt is completely worn through.

NOTE

During initial operation, the thin coating of polyethylene will wear off as it is burnished into the belt fabric. This is a normal condition and not an indication of belt wear.

5. Look for signs of cracking at the base of the belt teeth where contact may be made with the “corners” of worn transmission sprocket teeth. See upper frame of Figure 6-7. Replace the belt if cracking is evident.

NOTE

If the belt is replaced for reasons other than stone damage, the transmission and/or rear wheel sprockets also should be replaced. Use of worn or damaged sprockets will severely affect belt service life.

6. For common types of belt wear and damage, see lower frame of Figure 6-7.

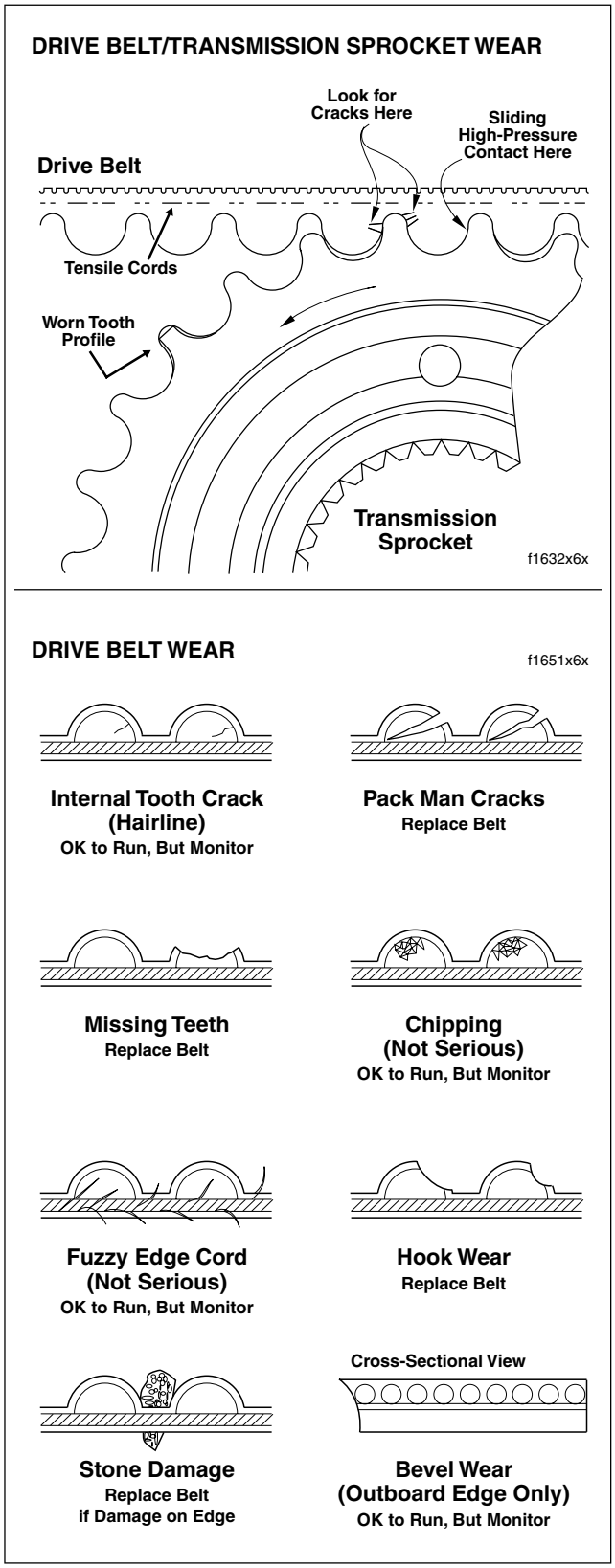

Figure 6-7. Drive Belt/Transmission Sprocket Wear

REPLACEMENT

REMOVAL

1. Remove rear wheel and rear swingarm. See Section 2.20 REAR SWINGARM, REMOVAL.
2. Remove the primary chaincase assembly. See Section 6.5 PRIMARY CHAINCASE, REMOVAL.
3. Remove the old belt from the transmission sprocket.

INSTALLATION

CAUTION

Handle the drive belt with care. Never bend belt forward into a loop smaller than five inches (127 mm) diameter. Never bend belt into a reverse loop smaller than ten inches (254 mm) diameter. Over bending will weaken belt and result in premature failure. Always install belt in the same direction of rotation as when it was removed. For other handling tips, see Figure 6-8.

1. Install the **new** belt on the transmission sprocket.

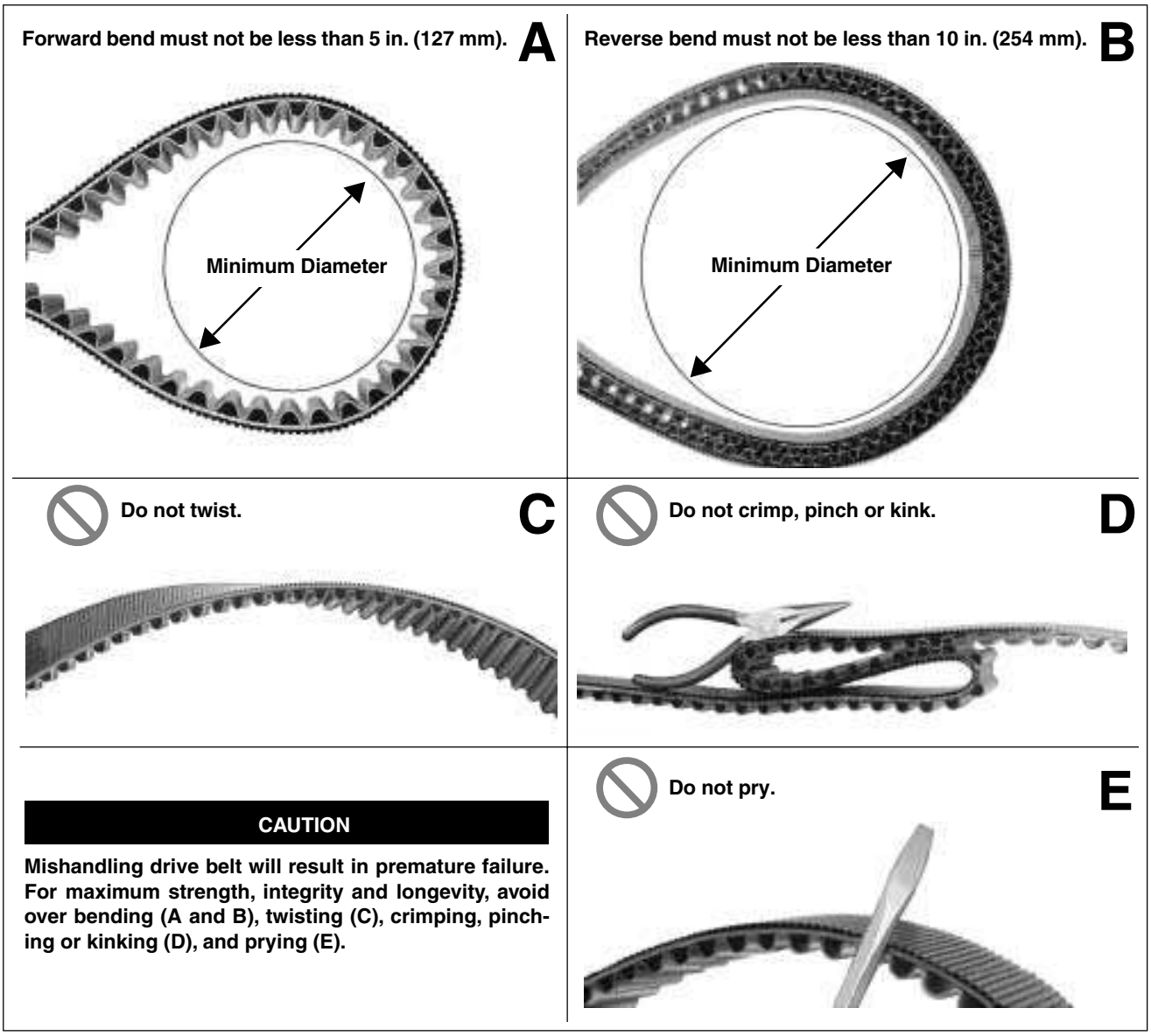

Figure 6-8. Proper Drive Belt Handling

2. Install the primary chaincase assembly. See Section 6.5 PRIMARY CHAINCASE, INSTALLATION.
3. Install rear swingarm and rear wheel. Adjust belt deflection. See Section 2.20 REAR SWINGARM, INSTALLATION.

TRANSMISSION SPROCKET

REMOVAL

1. Remove rear wheel. See Section 2.4 REAR WHEEL, REMOVAL.
2. Remove the primary chaincase assembly. See Section 6.5 PRIMARY CHAINCASE, REMOVAL.
3. See Figure 6-9. Remove the two socket screws and lockplate to free the sprocket nut.

NOTE

The transmission sprocket nut has left handed threads. Turn the nut clockwise to remove from the main drive gear.

4. Remove the sprocket nut. Use an air impact wrench for best results.

CLEANING AND INSPECTION

1. Using a non-volatile cleaning solvent, thoroughly clean the transmission sprocket of all grease and dirt.

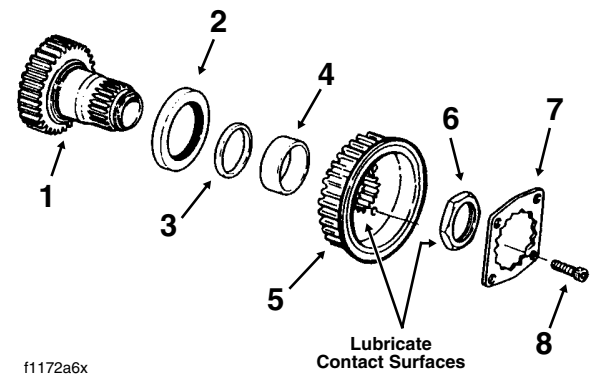

1.	Main Drive Gear	5.	Transmission Sprocket
2.	Large Oil Seal	6.	Sprocket Nut
3.	Quad Seal	7.	Lockplate
4.	Spacer	8.	Socket Screw (2)

Figure 6-9. Install Transmission Sprocket Components

2. Carefully inspect the sprocket for cracks or other damage.
3. Inspect the sprocket for heavy pitting, which indicates a high degree of abrasive wear.
4. Look for “sharp” corners at the top of each sprocket tooth, particularly where the flank joins the top radius. A smooth transition should exist between the flank and radius. While worn teeth will appear to have an edge across the face width of the tooth, heavily worn teeth will have a flat across the top. If the flat is 1/8 inch (3 mm) wide or more, replace the transmission sprocket and drive belt. See upper frame of Figure 6-7.

INSTALLATION

1. Install the transmission sprocket (with belt) on the main drive gear.
2. Install the sprocket nut. The following procedure is based on whether a new or used nut is being installed.

CAUTION

Exercise caution to avoid getting oil on the threads of the sprocket nut or the integrity of the lock patch may be compromised.

New sprocket nut: smear a small quantity of clean engine oil on the inside face of the sprocket nut and the outside face of the sprocket. Limit the application to where the surfaces of the two parts contact each other. Install the sprocket nut until finger tight.

NOTE

The transmission sprocket nut has left handed threads. Turn the nut counterclockwise to install on the main drive gear.

Used sprocket nut: apply Loctite High Strength Threadlocker 262 (red) to the threads of the sprocket nut. Also smear a small quantity of Loctite or clean engine oil on the inside face of the sprocket nut and the outside face of the sprocket. Limit the application to where the surfaces of the two parts contact each other. See Figure 6-9. Install the sprocket nut until finger tight.

3. Obtain FINAL DRIVE SPROCKET LOCKING TOOL (HD-41184) to lock transmission sprocket. See Figure 6-10. Proceed as follows:
   a. Insert handle of tool below pivot shaft inboard of bottom frame tube and attach to sprocket. See upper frame of Figure 6-11.
   b. Snug thumbscrew to lock position of tool on sprocket. See lower frame of Figure 6-11.

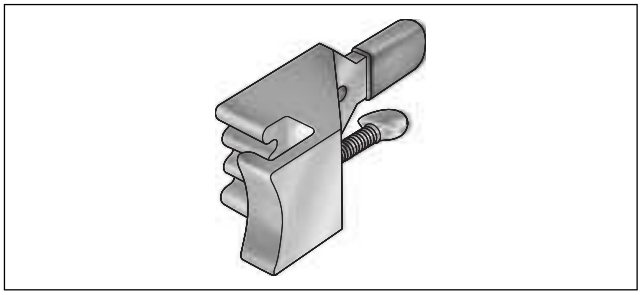

Figure 6-10. Final Drive Sprocket Locking Tool (Part No. HD-41184)

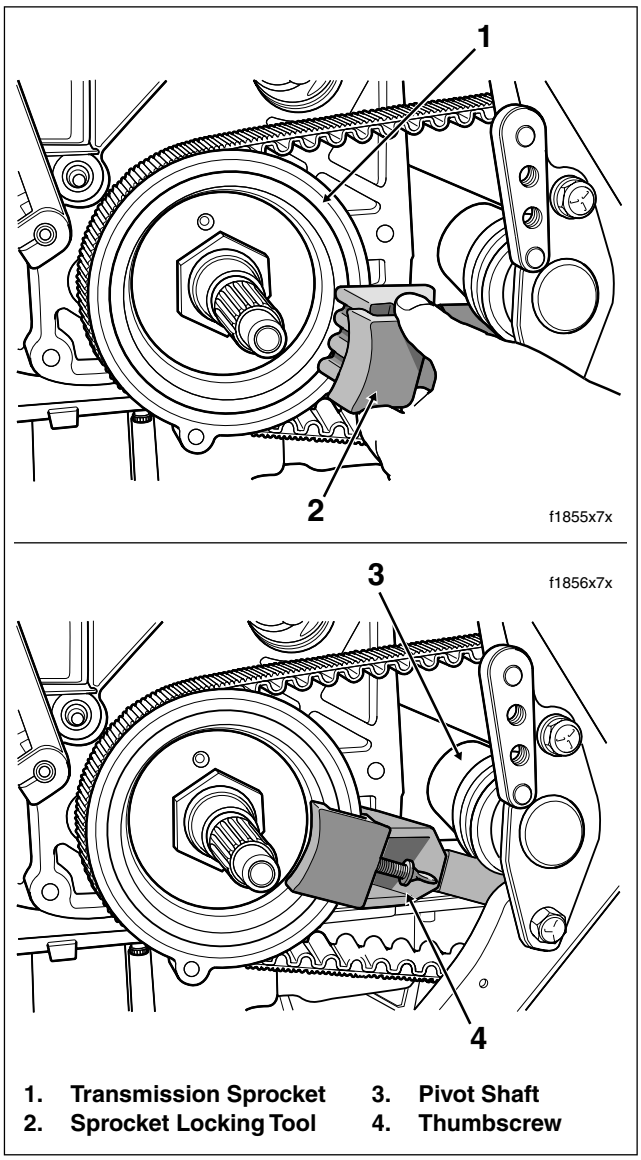

Figure 6-11. Install Final Drive Sprocket Locking Tool

4. Obtain MAINSHAFT LOCKNUT WRENCH/PILOT (HD-94660-37B). See Figure 6-12. Proceed as follows:
   a. Install pilot on threaded end of mainshaft. See upper frame of Figure 6-13.
   b. Slide sleeve of locknut wrench over pilot and onto sprocket nut.
   c. Tighten sprocket nut to 60 ft-lbs (81 Nm). See lower frame of Figure 6-13. As the nut is tightened the handle of the sprocket locking tool rises to contact the pivot shaft, thereby preventing sprocket/mainshaft rotation.
5. Scribe a straight line on the transmission sprocket nut continuing the line over onto the transmission sprocket as shown in Figure 6-14. Tighten the transmission sprocket nut an additional 35° to 40°.
6. Install lockplate over nut so that two diagonally opposite holes align with two tapped holes in sprocket. To find the best fit, lockplate can be rotated to a number of positions and can be placed with either side facing sprocket.
7. If holes in lockplate do not align with those in sprocket, tighten sprocket nut as necessary (up to the 45° maximum) until sprocket and lockplate holes are in alignment. See Figure 6-14.

CAUTION

Maximum allowable tightening of sprocket nut is 45° of counterclockwise rotation after a torque of 60 ft-lbs (81 Nm). Do not loosen sprocket nut to align holes or nut will be under tightened.

8. Insert two socket head screws through lockplate into sprocket holes. Tighten screws to 84-108 **in-lbs** (9.5-12.2 Nm).

NOTE

*The socket head screws have a thread locking compound that allows them to be reused up to three times. The fourth time the screws are removed, replace with **new** screws (H-D Part No. 3594).*

9. Install primary chaincase assembly. See Section 6.5 PRIMARY CHAINCASE, INSTALLATION.
10. Install rear wheel and adjust belt deflection. See Section 2.4 REAR WHEEL, INSTALLATION.

REAR WHEEL SPROCKET

REMOVAL

1. Remove rear wheel. See Section 2.4 REAR WHEEL, REMOVAL.
2. Remove five bolts with flat washers securing sprocket to hub.

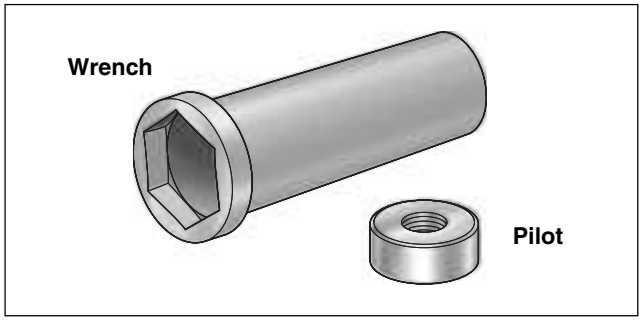

Figure 6-12. Mainshaft Locknut Wrench/Pilot (Part No. HD-94660-37B)

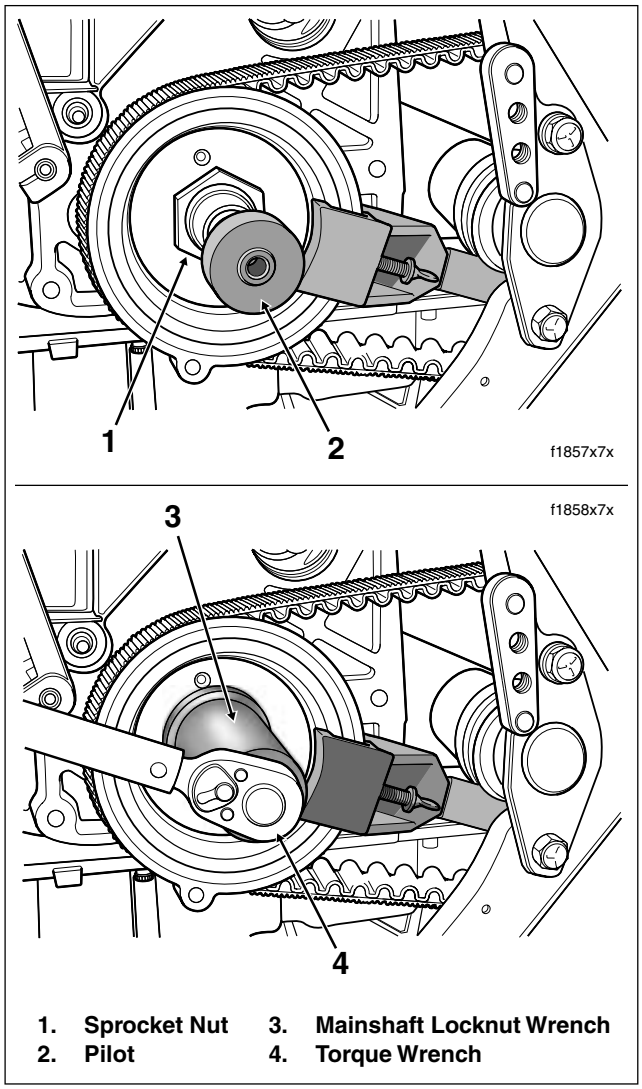

1. Sprocket Nut
2. Pilot
3. Mainshaft Locknut Wrench
4. Torque Wrench

Figure 6-13. Install Mainshaft Locknut Pilot/Wrench and Torque Sprocket Nut

CLEANING AND INSPECTION

1. Using a non-volatile cleaning solvent, thoroughly clean the rear wheel sprocket of all grease and dirt.

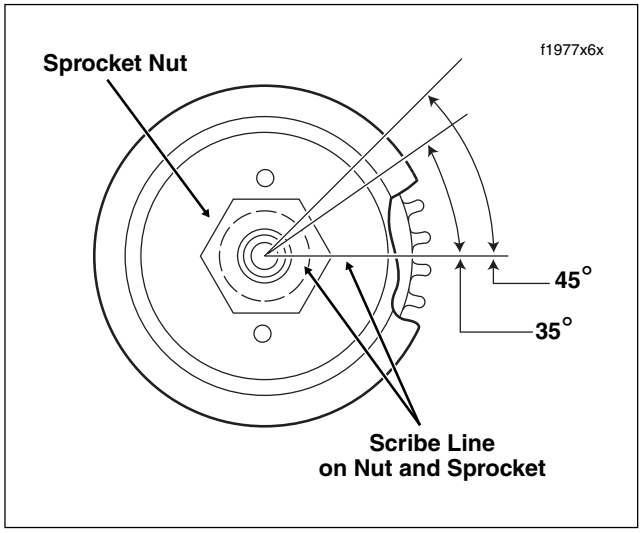

Figure 6-14. Tighten/Secure Sprocket Nut

2. Carefully inspect the sprocket for cracks or other damage.
3. Inspect each sprocket tooth for large chrome chips having sharp edges. Look for gouges caused by contact with a hard object. If large enough, both of these conditions will leave a corresponding pattern in the belt face and are cause for rear sprocket replacement.
4. Without obvious damage, rear wheel sprocket replacement may be a subjective decision based on general appearance. Using medium pressure, drag a scribe or the sharp point of a knife blade across the root of a groove. Even though the plating is lightest in the root area, a knife point should not penetrate the chrome. If the blade slides across the chrome plating without digging in, then the chrome is still good. On the other hand, if you can feel the scribe digging in and it leaves a visible mark, then the chrome plating has worn off and the bare aluminum is being cut. Loss of chrome is cause for rear sprocket replacement.

INSTALLATION

1. Apply two drops of Loctite High Strength Threadlocker 271 (red) to threads of each of five sprocket bolts. Secure sprocket to hub using bolts with flat washers (and locknuts on laced wheels). Tighten bolts to 55-65 ft-lbs (75-88 Nm).
2. Install rear wheel and adjust belt deflection. See Section 2.4 REAR WHEEL, INSTALLATION.

PRIMARY CHAINCASE 6.5

GENERAL

The primary chaincase is a sealed housing containing the primary chain, clutch, engine compensating sprocket, chain tensioner assembly, alternator and starter drive mechanism.

LUBRICATION

See Section 1.7 PRIMARY CHAIN/LUBRICANT, PRIMARY CHAIN LUBRICANT.

REMOVAL

1. Remove seat. See Section 2.25 SEAT, REMOVAL.

WARNING

To protect against shock and accidental start-up of vehicle, disconnect the negative battery cable before proceeding. Inadequate safety precautions could result in death or serious injury.

2. Unthread bolt and remove battery negative cable (black) from battery negative (-) terminal.
3. Standing on left side of motorcycle, remove magnetic drain plug at bottom of primary chaincase cover. Drain lubricant into suitable container.

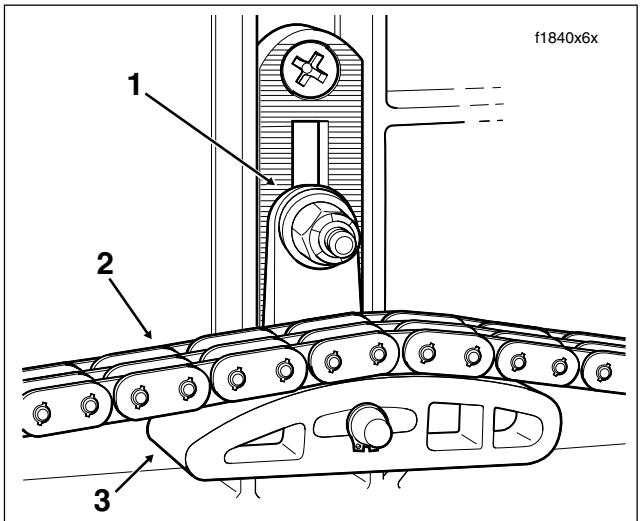

1. Top Center Nut
2. Primary Chain
3. Adjuster Shoe

Figure 6-15. Primary Chain Tensioner Assembly

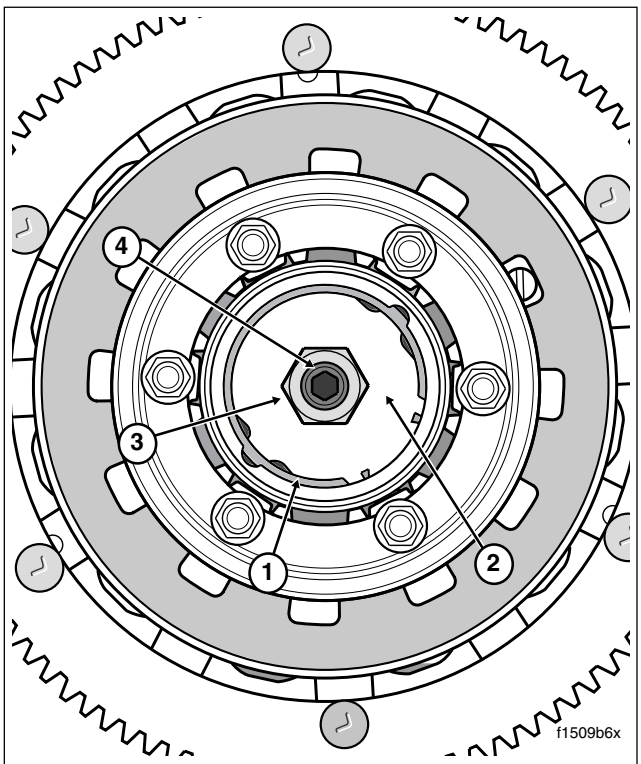

1. Retaining Ring
2. Release Plate
3. Locknut
4. Adjuster Screw

Figure 6-16. Clutch Hub Release Plate Assembly

NOTE

If drain plug has accumulated a lot of debris, inspect the condition of chaincase components.

4. Remove socket screw with lockwasher to remove passenger footboard from rear swingarm bracket.
5. Remove socket screw (with lockwasher and flat washer) to release front footboard forward bracket from frame weldment. For best results, approach from opposite side using a 3/8 inch ball allen with extension. To free front footboard rear bracket from frame weldment and jiffy stand bracket, remove lower hex bolt (with lockwasher) and upper hex bolt (with lockwasher and locknut).
6. Remove locknut, lockwasher and flat washer to free shift rod from inner shift arm.
7. Remove socket head screws and pull both heel and toe shift levers from shift lever shaft. Remove rubber spacer. If preferable, remove socket head screw to release inner shift arm instead, and then pull shift lever shaft and heel-toe shift lever assembly from primary chaincase bore. When pulling any lever from splined shaft, always mark splines on both shaft and lever to assist in assembly.

8. Remove ten allen head socket screws (with captive washers) from primary chaincase cover. Remove primary chaincase cover from motorcycle.

9. Loosen top center nut from captured bolt of chain tensioner assembly. See Figure 6-15. Lower the chain tensioner assembly as required, so that the adjuster shoe rests flat on casting of primary chaincase.

WARNING

Always wear proper eye protection when removing retaining rings. Use the correct retaining ring pliers. Verify that the tips of the pliers are not damaged or excessively worn. Slippage may propel the ring with enough force to cause eye injury.

10. Remove retaining ring and pull release plate (with locknut and adjuster screw) from clutch hub. See Figure 6-16.

11. See Figure 6-17. Obtain the PRIMARY DRIVE LOCKING TOOL (HD-41214) and proceed as follows:

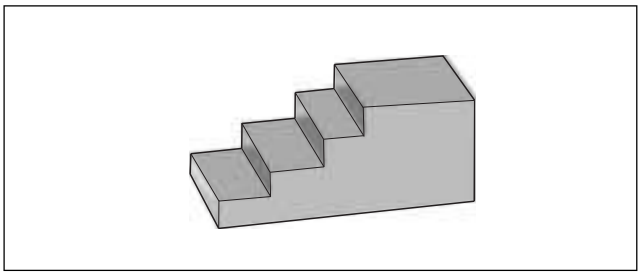

Figure 6-17. Primary Drive Locking Tool (Part No. HD-41214)

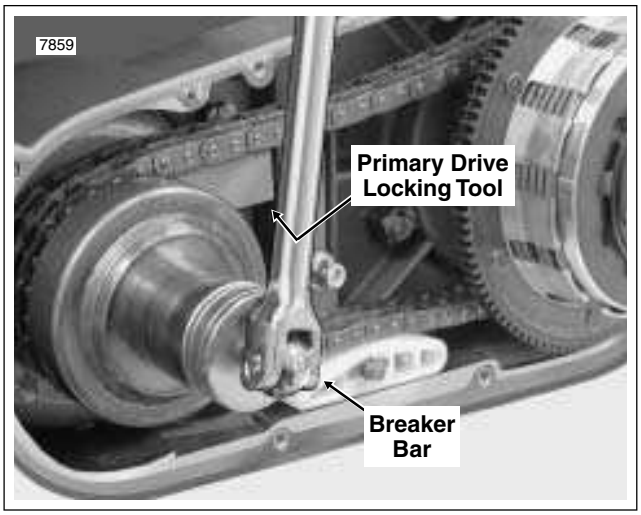

Figure 6-18. Place Primary Drive Locking Tool and Loosen Engine Compensating Sprocket Nut

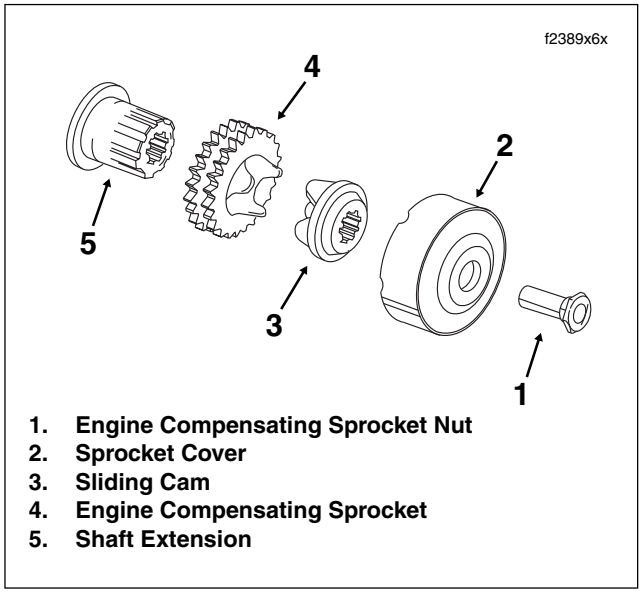

Figure 6-19. Engine Compensating Sprocket Assembly

CAUTION

Do not place the tool on the lower strand of the primary chain. Rotation of either the engine compensating sprocket nut or clutch hub mainshaft nut causes tool to exert enough force to break or shatter the nylon adjuster shoe.

With the flat side against the upper strand of the primary chain, insert stepped side of tool into teeth of engine compensating sprocket. Using a breaker bar and 1-1/2 inch socket, turn the sprocket nut in a counterclockwise direction. Once the stepped area of the tool is drawn into

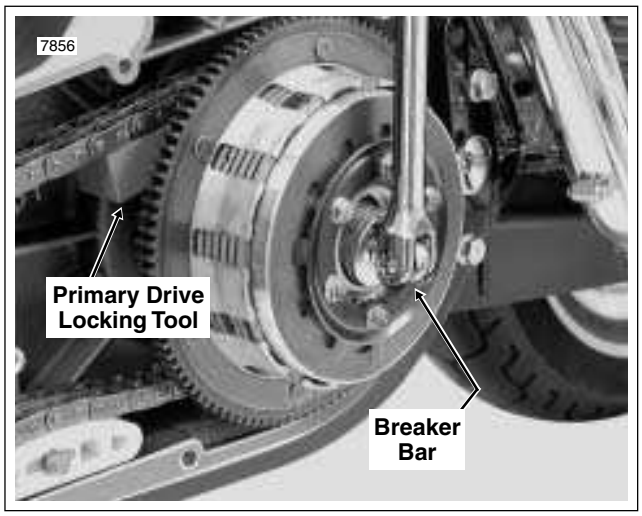

Figure 6-20. Place Primary Drive Locking Tool and Loosen Clutch Hub Mainshaft Nut

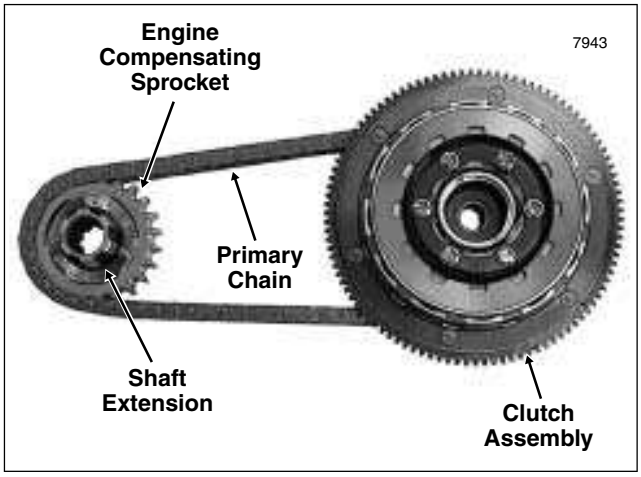

Figure 6-21. Remove Clutch Assembly, Primary Chain, Engine Compensating Sprocket and Shaft Extension

the sprocket, rotation of the primary drive is stopped. Continue turning compensating sprocket nut until loose. See Figure 6-18.

NOTE

If too much loctite, or perhaps the wrong loctite, was used to install the engine compensating sprocket nut, it may be very difficult to remove. In these cases, break down loctite using heat from a small propane torch. Apply heat evenly around nut head in a circular motion, but not for so long as to turn nut blue. Do not direct heat at chain tensioner assembly and other components or damage will result. If unable to loosen sprocket nut with breaker bar after applying heat, use air impact wrench as the last alternative.

⚠WARNING

Use extreme caution when operating propane torch. Read the manufacturers instructions carefully before use. Do not direct open flame or heat toward any fuel system component. Extreme heat can cause fuel ignition and explosion. Inadequate safety precautions could result in death or serious injury.

12. Reverse the position of the primary drive locking tool. With the flat side against the upper strand of the primary chain, insert stepped side of tool into teeth of clutch sprocket. Using a breaker bar and 1-3/16 inch socket, turn the clutch hub mainshaft nut in a clockwise direction until loose. See Figure 6-20.

NOTE

Clutch hub mainshaft nut has left handed threads.

13. Remove the primary drive locking tool. Remove the clutch hub mainshaft nut and engine compensating sprocket nut.

14. Remove sprocket cover and sliding cam. See Figure 6-19.

15. Remove clutch, primary chain, compensating sprocket and shaft extension as a single assembly. See Figure 6-21.

16. Bend tab on lockplate away from head of jackshaft bolt. Holding pinion gear to prevent rotation, remove the jackshaft bolt with lockplate and thrust washer. Carefully pull jackshaft assembly from primary chaincase bore.

17. From right side of motorcycle, remove starter front mounting screw with lockwasher. Remove rear mounting screw with lockwasher, but do not disconnect chassis ground cable ring terminal.

18. Returning to left side of motorcycle, remove two bolts (with captive washers) from outside edge of primary chaincase.

19. Remove five inside bolts (with captive washers) to free primary chaincase from crankcase and transmission housings. Remove primary chaincase from motorcycle.

20. Remove O-ring from crankcase lip and discard.

INSPECTION AND REPAIR

1. Inspect the primary chaincase for cracks or other damage. Replace as necessary.

2. Check the mainshaft bearing. Bearing must rotate freely without drag. Replace the bearing if necessary. Replace the lip seal. See MAINSHAFT BEARING AND LIP SEAL on this page.

NOTE

Also check the bearing inner race on the mainshaft. Replace the race if scored or excessively worn. See MAINSHAFT BEARING INNER RACE in this section.

3. Check the starter jackshaft bushing in the primary chaincase. Check the jackshaft bushing in the primary chaincase cover. Replace the bushings if they are damaged or excessively worn (i.e., through the teflon and copper coatings into the steel backing). Replace the lip seal. See STARTER JACKSHAFT LIP SEAL AND BUSHING - PRIMARY CHAINCASE in this section.

4. Check the shifter bushings in the primary chaincase. Replace the bushings if necessary. See SHIFTER BUSHINGS in this section.

DISASSEMBLY

MAINSHAFT BEARING AND LIP SEAL

REMOVAL

⚠WARNING

Always wear proper eye protection when removing retaining rings. Use the correct retaining ring pliers. Verify that the tips of the pliers are not damaged or excessively worn. Slippage may propel the ring with enough force to cause eye injury.

1. Remove retaining ring from groove on clutch side of primary chaincase. Turn the chaincase over to transmission side.
2. Pull lip seal from bearing bore on transmission side of primary chaincase. Use a seal remover or rolling head pry bar for best results. Remove retaining ring from groove on same side of chaincase.

CAUTION

Failure to provide proper support will cause the casting to crack or break around the outside diameter of the boss. Any damage to the casting requires replacement of the primary chaincase.

3. Place primary chaincase in arbor press with the transmission side up. Be sure to properly support boss on clutch side to avoid damage to casting.
4. Center bearing under ram, and using a suitable driver, carefully press out bearing applying pressure to the outer race.

INSTALLATION

1. Inspect the bearing bore to verify that it is clean and smooth.

⚠WARNING

Always wear proper eye protection when installing retaining rings. Use the correct retaining ring pliers. Verify that the tips of the pliers are not damaged or excessively worn. Slippage may propel the ring with enough force to cause eye injury.

2. Install retaining ring in groove on transmission side of primary chaincase. Verify that the retaining ring is fully seated in the groove.
3. Apply a thin film of clean H-D 20W50 engine oil to bearing bore and O.D. of **new** bearing.

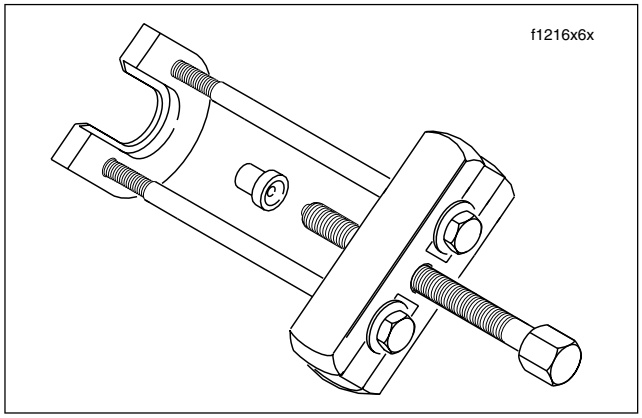

Figure 6-22. Mainshaft Bearing Inner Race Remover (Part No. HD-34902B)

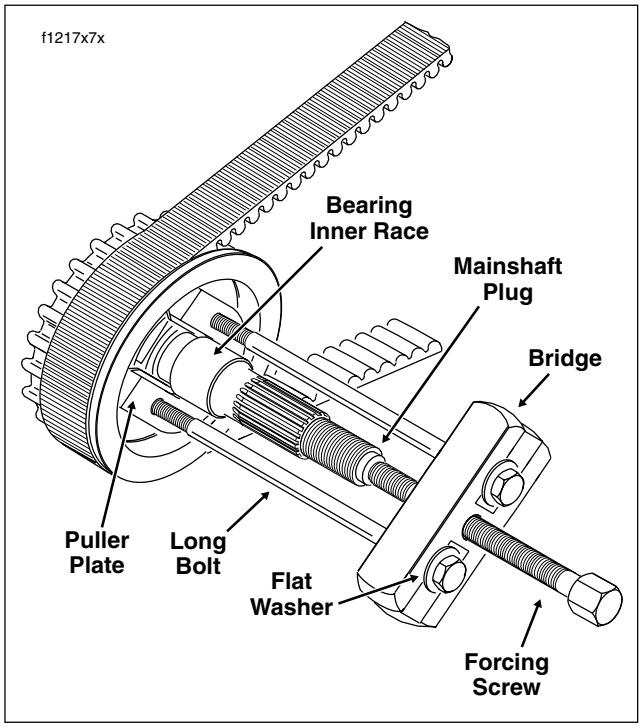

Figure 6-23. Pull Mainshaft Bearing Inner Race

CAUTION

Failure to provide proper support will cause the casting to crack or break around the outside diameter of the boss. Any damage to the casting requires replacement of the primary chaincase.

4. Place primary chaincase in arbor press with the clutch side up. Be sure to properly support boss on transmission side to avoid damage to casting.
5. Place bearing over bore with the lettered side up. Center bearing under ram, and using a suitable driver, apply pressure to the outer race until bearing makes contact with the installed retaining ring.

6. Install second retaining ring to lock position of bearing in bore on clutch side of chaincase. Verify that retaining ring is fully seated in the groove.
7. Turn chaincase over, so that the transmission side is up.
8. Lubricate O.D. of **new** lip seal with clean H-D 20W50 engine oil. With the lip garter spring side (also stamped “OIL SIDE”) facing the bearing, press lip seal into bore until outer edge is flush with machined surface of the casting. To avoid seal damage, be sure to use a suitable driver that presses squarely on the outer edge of the seal carrier.
9. Verify that lip seal is square in the bore and completely seated around its circumference.
10. Lubricate the bearing and lip seal with multi-purpose grease or clean H-D 20W50 engine oil.

MAINSHAFT BEARING INNER RACE

NOTE

The bearing inner race must be properly positioned on the mainshaft to align with the bearing outer race in the primary chaincase. To remove and install the bearing inner race, use the combination MAINSHAFT BEARING INNER RACE REMOVER/INSTALLER, Part No. HD-34902B. See Figure 6-22 and Figure 6-24.

REMOVAL

1. Install small flat washers on two long bolts of puller tool. Slide one bolt into channel on each side of bridge so that washer is between bridge and bolt head. Thread bolts into stamped side of U-shaped puller plate an equal number of turns.
2. Sparingly apply graphite lubricant to threads of forcing screw to ensure smooth operation. Thread forcing screw into center hole of bridge.
3. Position U-shaped puller plate between bearing inner race and sprocket nut. See Figure 6-23.
4. Install mainshaft plug into end of transmission mainshaft. Thread the forcing screw into the bridge until the steel ball at the end of the screw seats in the cavity of the mainshaft plug. Verify that the tool assembly is square so that the bearing is not cocked during removal.
5. Continue turning the forcing screw until the bearing inner race is pulled free of the mainshaft.

INSTALLATION

1. Chamfered edge first, slide the bearing inner race onto the transmission mainshaft.
2. Thread extension shaft onto end of mainshaft. See upper frame of Figure 6-25.

NOTE

Extension shaft has left handed threads, so turn counter-clockwise to install.

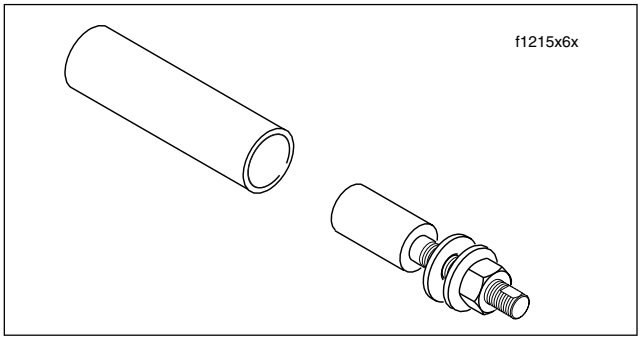

Figure 6-24. Mainshaft Bearing Inner Race Installer (Part No. HD-34902B)

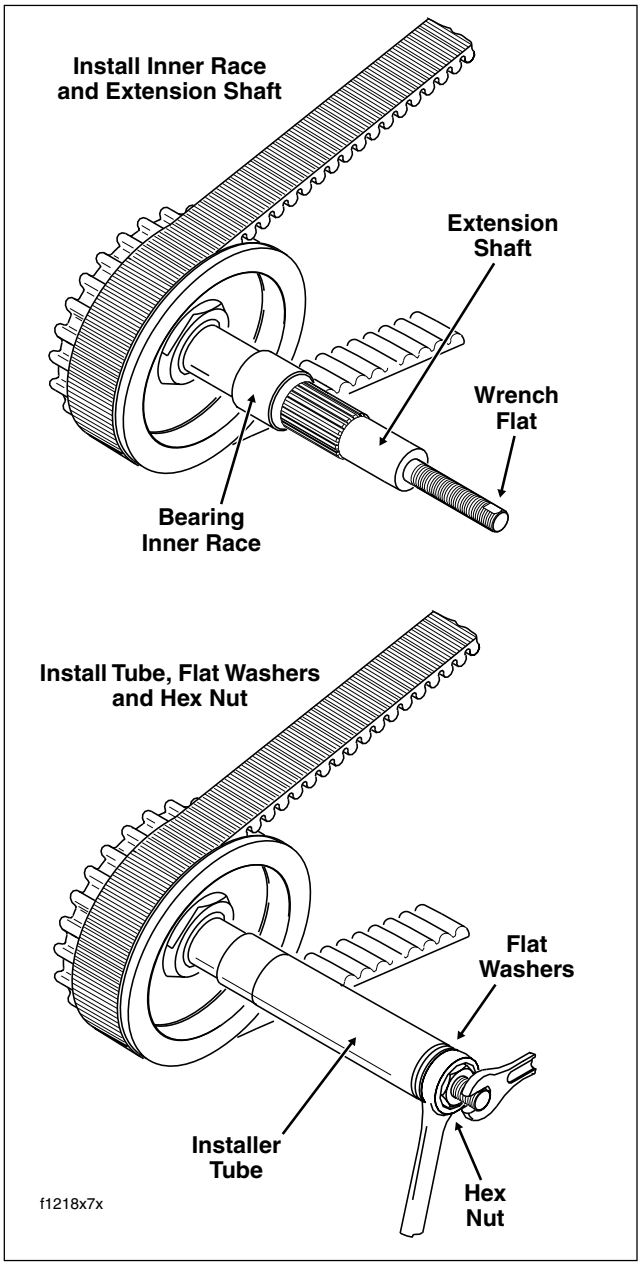

Figure 6-25. Press Bearing Inner Race onto Mainshaft

3. Slide installer tube over extension shaft until it contacts bearing inner race. Sparingly apply graphite lubricant to threads of extension shaft to ensure smooth operation.
4. Place both large flat washers over threaded portion of extension shaft until they contact installer tube. Install large hex nut onto extension shaft. See lower frame of Figure 6-25.
5. With a wrench on flats at threaded end of extension shaft, hold shaft stationary while turning hex nut in a clockwise direction. In this manner, press race onto shaft so inside edge is 0.100 in. (2.54 mm) from main drive gear.
6. Lubricate the race with multi-purpose grease or clean engine oil.

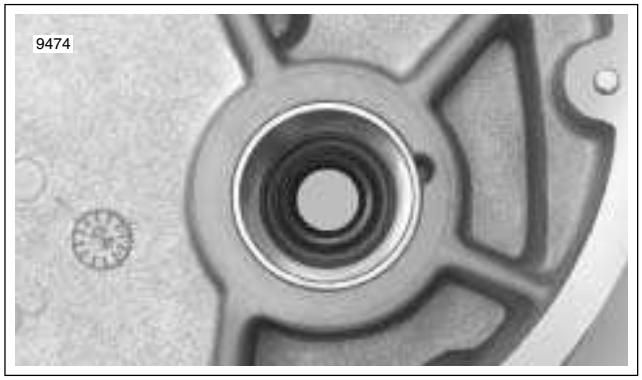

Figure 6-26. Install Jackshaft Lip Seal with Open Side of Seal Carrier on the Clutch Side

STARTER JACKSHAFT LIP SEAL AND BUSHING - PRIMARY CHAINCASE

REMOVAL

1. Remove lip seal and bushing from jackshaft bore of primary chaincase. Approach from the transmission side using a suitable seal or bushing driver.
2. Inspect the jackshaft bore to verify that it is clean and smooth.

INSTALLATION

1. Place primary chaincase in arbor press with the clutch side up. Support forward part of case so that it lies flat on transmission mounting flanges.
2. Lightly apply clean engine oil to O.D. of **new** lip seal.
3. With the open side of the seal carrier facing up, place lip seal in the jackshaft bore. See Figure 6-26.
4. Using a suitable seal or bushing driver, press squarely on the outer edge of the seal carrier until it makes solid contact with the shoulder on the transmission side.
5. Verify that seal is square in the bore and completely seated around its circumference.
6. Press **new** bushing into bore. Bushing must be flush with boss or at a depth not exceeding 0.010 in. (0.25 mm).
7. Lubricate the bushing and lip seal with clean engine oil.

STARTER JACKSHAFT BUSHING - PRIMARY CHAINCASE COVER

REMOVAL

1. Remove bushing from jackshaft bore of primary chaincase cover. For best results, use a suitable bushing/bearing puller.
2. Inspect the bushing bore to verify that it is clean and smooth.

INSTALLATION

1. Remove five T27 TORX screws (with captive washers) to free clutch inspection cover from primary chaincase cover.
2. Place primary chaincase cover in arbor press. Support forward part of case so that it lies flat around the clutch inspection cover bore.
3. Press **new** bushing into bore using a suitable bushing driver. Bushing must be flush with boss or at a depth not exceeding 0.010 in. (0.25 mm).
4. Lubricate the bushing with clean engine oil.

SHIFTER BUSHINGS

REMOVAL

1. Using an arbor press, press bushings from bore. Inspect the bushing bore to verify that it is clean and smooth.

INSTALLATION

1. Place primary chaincase in arbor press.
2. Press **new** bushing into each end of bore. Installed bushings must be flush to 0.010 inch (0.76 mm) **above outer edge** of bore.
3. Assemble primary chaincase. See Section 6.5 PRIMARY CHAINCASE, INSTALLATION, on the next page.

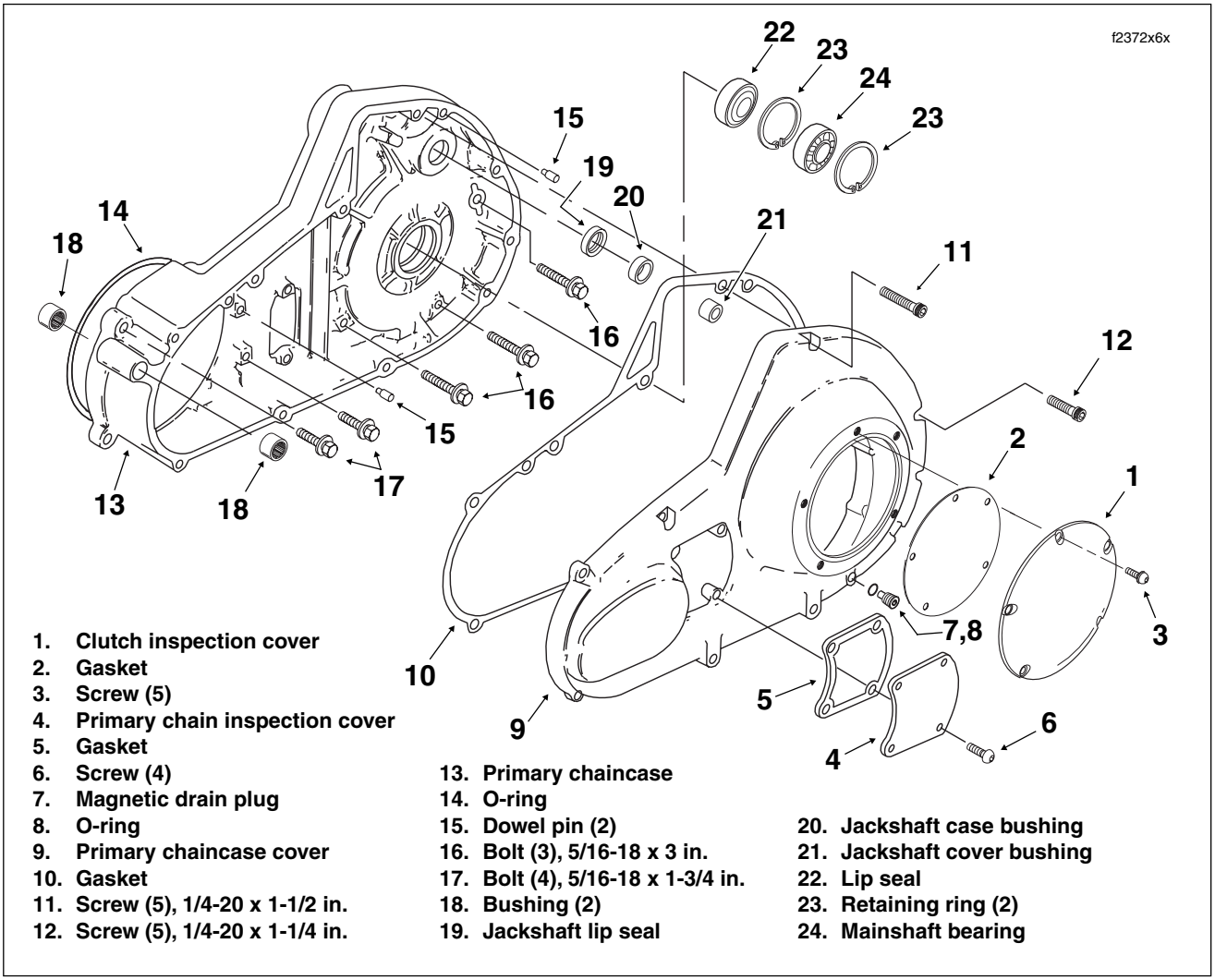

Figure 6-27. Primary Chaincase Assembly

INSTALLATION

1. Install **new** O-ring on lip of crankcase.

CAUTION

Avoid the use of sealant where the primary chaincase mates with the crankcase/transmission interface. Use of sealant can interfere with the mating of these parts.

NOTE

If the use of sealant is absolutely necessary to eliminate oil wicking past the primary chaincase bolts, use only a light film around the bolt holes on the mating surfaces. With one exception, remember that all bolts go into blind holes. The only open hole is located at the bottom of the transmission case. See right frame of Figure 6-28.

2. Verify that the mating surfaces of the primary chaincase and crankcase/transmission interface are clean.

CAUTION

The presence of sealant, residual loctite, dirt, water or oil in the blind holes of the crankcase or transmission can cause the castings to crack or break.

3. Verify cleanliness of all blind holes in both the crankcase and transmission.

CAUTION

The mainshaft splines may damage the sealing surface of the lip seal if the protector sleeve is not used.

4. Place the seal protector sleeve (from the MAIN DRIVE GEAR SEAL INSTALLER, HD-41405) over the mainshaft splines. Lightly lubricate the sleeve with clean engine oil.

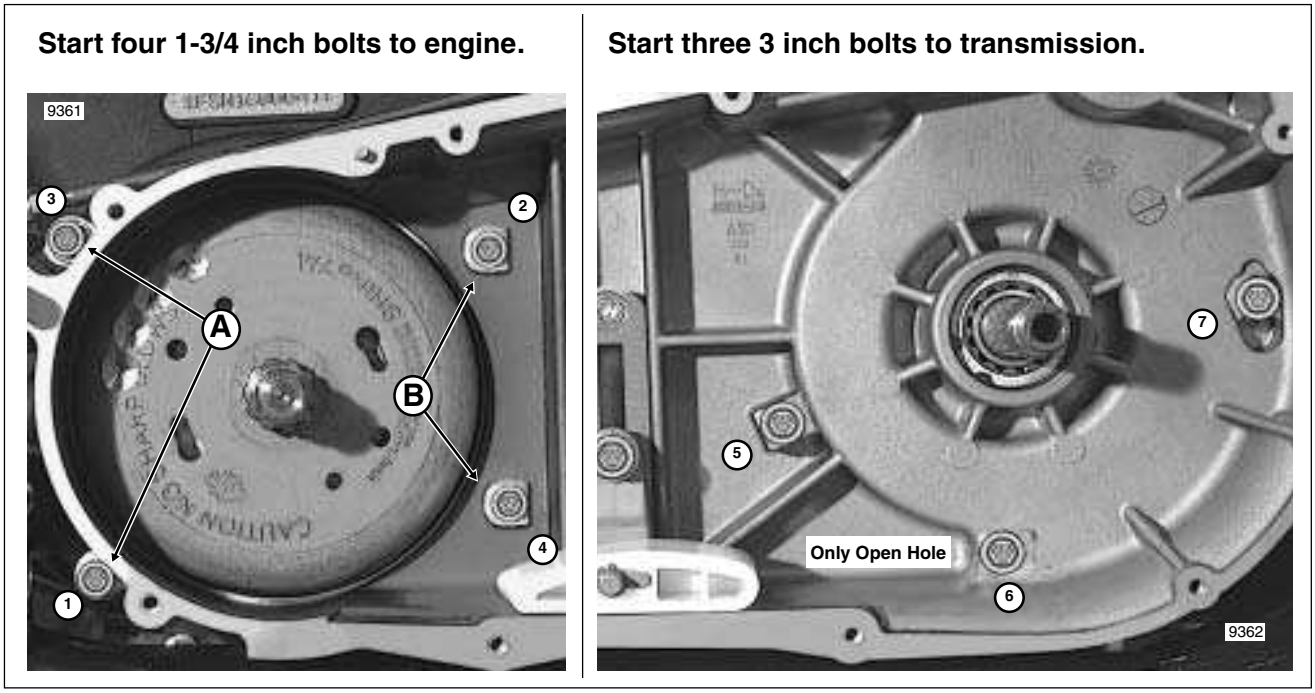

Figure 6-28. Primary Chaincase Screw Size and Torque Sequence

5. Place the primary chaincase into position against the crankcase and transmission housings. Remove the seal protector sleeve from the mainshaft.
6. Install primary chaincase bolts as follows:

NOTE

Wherever the primary chaincase bolts are to be resused, clean threads and apply two drops of Loctite Medium Strength Threadlocker 243 (blue) before installation.

   a. See A in left frame of Figure 6-28. Start two bolts (1-3/4 inches with captive washers) to fasten outside edge of primary chaincase to front of crankcase.
   b. See B in left frame of Figure 6-28. From within the primary chaincase, start two bolts (1-3/4 inches with captive washers) to fasten primary chaincase to rear of crankcase.
   c. See right frame of Figure 6-28. From within the primary chaincase, start three bolts (3 inches with captive washers) to fasten primary chaincase to front and rear of transmission.
   d. Tighten the seven bolts to 15-19 ft-lbs (20.3-25.8 Nm) in the numerical sequence shown in Figure 6-28.

7. On right side of motorcycle, install the front starter mounting screw with lockwasher. Install rear mounting screw and lockwasher (with chassis ground cable ring terminal). Alternately tighten front and rear starter mounting screws to 14-18 ft-lbs (19-24 Nm).
8. Returning to left side of motorcycle, gently insert jackshaft assembly into primary chaincase so that splined end of shaft engages coupling on starter output shaft. Insert key on lockplate through slot in thrust washer and into keyway on jackshaft. Thread the jackshaft bolt into the starter shaft making sure that the lockplate key remains in the keyway. Holding pinion gear to prevent rotation, tighten jackshaft bolt to 60-80 **in-lbs** (6.8-9.0 Nm). Bend tab on lockplate against flat of bolt head to secure.
9. Install the clutch, primary chain, compensating sprocket and shaft extension as a single assembly. See Figure 6-21. Start clutch assembly on the mainshaft, while placing the shaft extension on the engine sprocket shaft. The clutch hub and shaft extension are splined, so a slight rotation of the chain drive will aid in lining up the splines.
10. Place sliding cam over shaft extension. Slide sprocket cover over sliding cam. See Figure 6-19.
11. Install the engine compensating sprocket nut. The following procedure is based on whether a new or used nut is being installed.

CAUTION

Exercise caution to avoid getting oil on the threads of the sprocket nut or the integrity of the lock patch (new nut) or Loctite (used nut) may be compromised.

New sprocket nut: smear a small quantity of clean engine oil on the inside face of the sprocket nut and the outside face of the sprocket cover. Limit the application to where the surfaces of the two parts contact each other. Install nut and hand tighten in a clockwise direction.

Used sprocket nut: apply two drops of Loctite High Strength Threadlocker 262 (red) to the threads of the engine compensating sprocket nut. Also smear a small quantity of clean engine oil on the inside face of the sprocket nut and the outside face of the sprocket cover. Limit the application to where the surfaces of the two parts contact each other. Install nut and hand tighten in a clockwise direction.

12. Apply two drops of Loctite High Strength Threadlocker 262 (red) to the threads of the clutch hub mainshaft nut. Install nut and hand tighten in a **counterclockwise** direction.

NOTE

Clutch hub mainshaft nut has left handed threads.

13. See Figure 6-29. Obtain the PRIMARY DRIVE LOCKING TOOL (HD-41214) and proceed as follows:

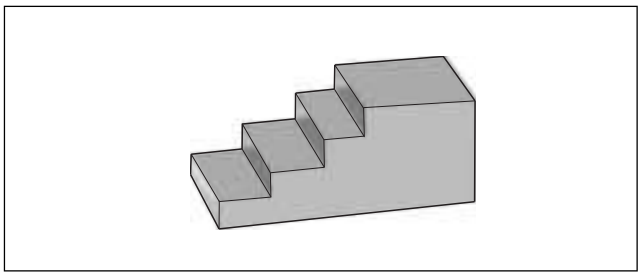

Figure 6-29. Primary Drive Locking Tool (Part No. HD-41214)

CAUTION

Do not place the tool on the lower strand of the primary chain. Rotation of either the engine compensating sprocket nut or clutch hub mainshaft nut causes tool to exert enough force to break or shatter the nylon adjuster shoe.

a. With the flat side against the upper strand of the primary chain, insert stepped side of tool into teeth of clutch sprocket. Verify that adjuster shoe of chain tensioner assembly rests flat on casting of primary chaincase, and then using torque wrench and 1-1/2 inch socket, tighten engine compensating sprocket nut to 75 ft-lbs (101.7 Nm). See Figure 6-30.

NOTE

Once the stepped area of the tool is drawn into the sprocket, rotation of the primary drive is stopped.

b. Mark a straight line on the engine compensating sprocket nut continuing the line over onto the sprocket cover. Tighten the engine compensating sprocket nut an additional 45° to 50°.

14. Reverse the position of the primary drive locking tool. With the flat side against the upper strand of the primary chain, insert stepped side of tool into teeth of engine compensating sprocket. Using torque wrench and 1-3/16 inch socket, tighten clutch hub mainshaft nut to 70-80 ft-lbs (95-108 Nm). See Figure 6-31.

15. Remove the primary drive locking tool.

16. Install release plate (with locknut and adjuster screw) into clutch hub bore. The word “OUT” is stamped on the release plate to indicate the outboard side.

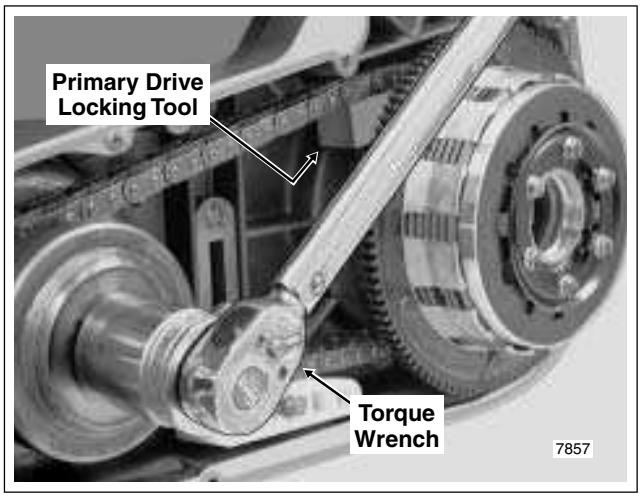

Figure 6-30. Place Primary Drive Locking Tool and Torque Engine Compensating Sprocket Nut

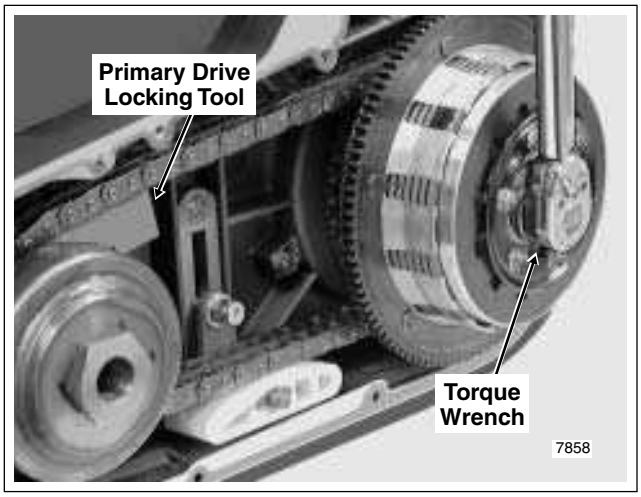

Figure 6-31. Place Primary Drive Locking Tool and Torque Clutch Hub Mainshaft Nut

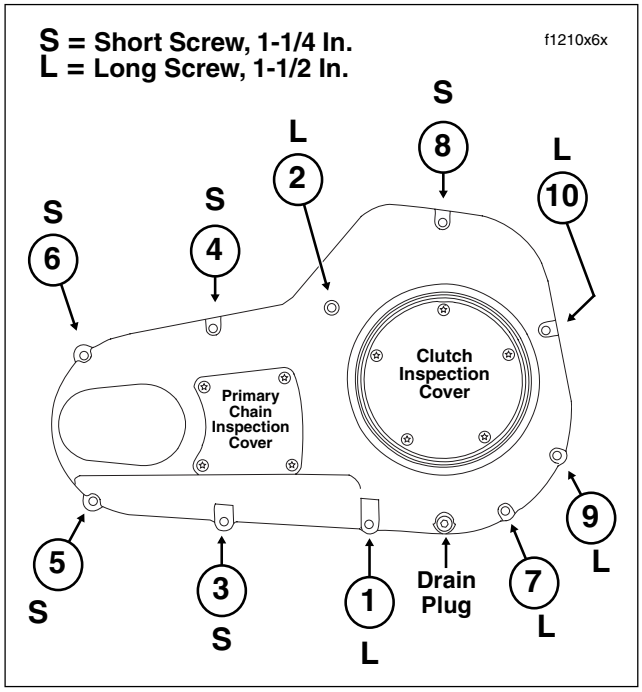

Figure 6-32. Primary Chaincase Cover Torque Sequence and Screw Size

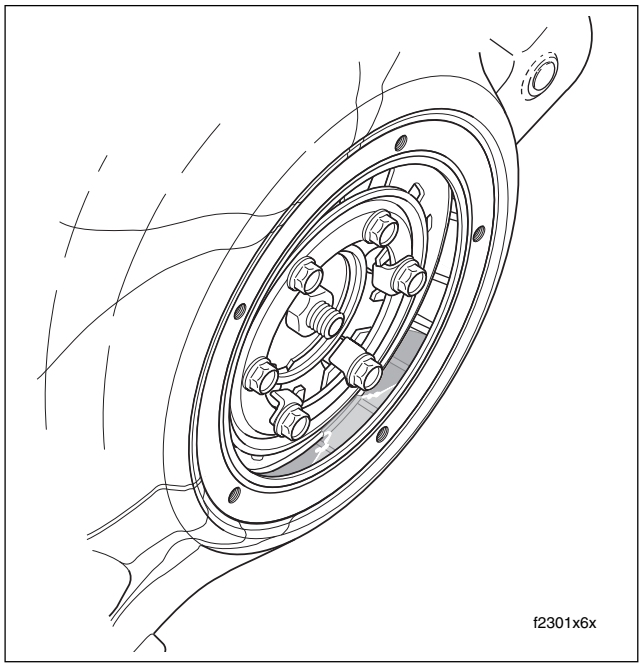

Figure 6-33. Add Primary Chaincase Lubricant

⚠WARNING

Always wear proper eye protection when installing retaining rings. Use the correct retaining ring pliers. Verify that the tips of the pliers are not damaged or excessively worn. Slippage may propel the ring with enough force to cause eye injury.

17. Install retaining ring in clutch hub bore to lock release plate in position. Verify that the retaining ring is completely seated in the groove.
18. Adjust clutch. See Section 1.8 CLUTCH ADJUSTMENT, steps 3-8.
19. Adjust primary chain tension. See Section 1.7 PRIMARY CHAIN/LUBRICANT, PRIMARY CHAIN ADJUSTMENT, steps 4-6.
20. Remove old gasket from flange of primary chaincase and discard. Thoroughly clean gasket surface. Hang **new** gasket on dowels.
21. Start ten allen head socket screws (five long, five short) with flat washers to install primary chaincase cover. Tighten screws to 84-108 **in-lbs** (10-12 Nm) in the numerical sequence shown in Figure 6-32.
22. Clean magnetic drain plug and inspect O-ring for cuts, tears or signs of deterioration. Replace O-ring as necessary. Install drain plug back into primary chaincase cover and tighten to 36-60 **in-lbs** (4.1-6.8 Nm).
23. Remove five T27 TORX screws (with captive washers) to free clutch inspection cover from primary chaincase cover, if installed.

CAUTION

Do not overfill the primary chaincase with lubricant. Overfilling may cause rough clutch engagement, incomplete disengagement, clutch drag and/or difficulty in finding neutral at engine idle.

⚠WARNING

Be sure that lubricant does not contact rear wheel, tire and brake components. Such contact can adversely affect traction and may lead to loss of vehicle control, which could result in death or serious injury.

24. Pour 32 ounces (946 ml) of Harley-Davidson FORMULA+ TRANSMISSION AND PRIMARY CHAINCASE LUBRICANT through the clutch inspection cover opening, Part No. 99851-05 (quart). See Figure 6-33.
25. To avoid punching holes in the clutch inspection cover gasket or enlarging existing holes, install clutch inspection cover and **new** gasket as follows:
    a. Align the triangular shaped hole in the gasket with the top hole in the clutch inspection cover. Be sure the rubber molding and the words “towards clutch” face the motorcycle.
    b. Insert screw (with captive washer) through clutch inspection cover and carefully thread it all the way through triangular shaped hole in gasket. Do not push screw through hole.
    c. Hang the clutch inspection cover on the primary chaincase cover flange by starting the top cover screw.

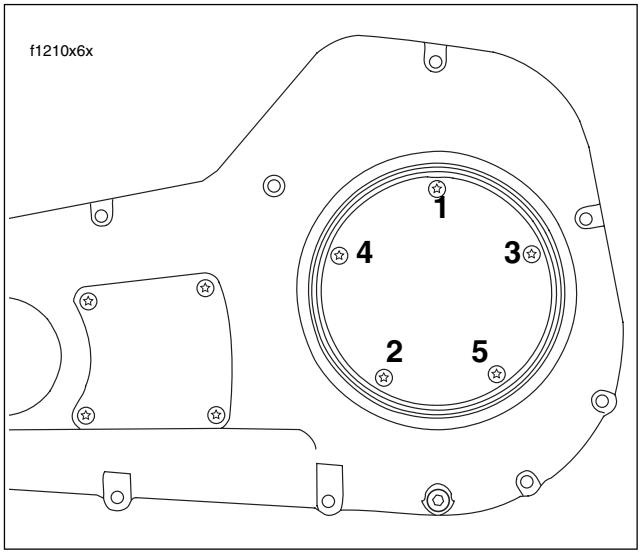

Figure 6-34. Clutch Inspection Cover Torque Sequence

d. Start the remaining four screws (with captive washers).

e. Using a T27 TORX drive head, alternately tighten screws to 84-108 **in-lbs** (10-12 Nm) in the pattern shown in Figure 6-34.

26. If installing heel-toe shift levers onto shift lever shaft, perform steps 26(a) thru 26(d). If just installing inner shift arm onto shift lever shaft, perform steps 26(d) thru 26(f).

    a. Set the heel-toe shift levers down, so that the Harley-Davidson script on the rubber peg is topside. Now look at the socket head screw hole. If the hole is countersunk at the bottom, then it is the inboard shift lever (toe). If the hole is countersunk at the top, it is the outboard shift lever (heel).

    b. Install heel-toe shift levers onto splines of shift lever shaft taking note to align marks placed on splines during disassembly.

    c. Install socket head screws to fasten heel-toe shift levers to shift lever shaft. Tighten 5/16 inch screws to 18-22 ft-lbs (24-30 Nm).

    d. Install rubber spacer onto shift lever shaft. Install shift lever shaft into primary chaincase bore.

    e. Install inner shift arm onto splines of shift lever shaft taking note to align marks placed on splines during disassembly.

    f. Install socket head screw to fasten inner shift arm to shift lever shaft. Tighten 1/4 inch screw to 90-110 **in-lbs** (10.2-12.4 Nm)

27. Install flat washer, lockwasher and locknut to fasten shift rod to inner shift arm.

28. Install socket screw with lockwasher to fasten passenger footboard to rear swingarm bracket. Tighten screw to 15-18 ft-lbs (20-24 Nm). Repeat step on opposite side of motorcycle.

29. Install left side footboard and bracket assembly as follows:

    a. Insert socket screw (with lockwasher and flat washer) through frame weldment into front footboard forward bracket. For best results, approach from opposite side of motorcycle using a 3/8 inch ball allen with extension.

    b. At front footboard rear bracket, slide upper hex bolt through frame weldment, jiffy stand bracket and footboard bracket thru hole. Install lockwasher and locknut. Slide lower hex bolt through frame weldment and jiffy stand bracket into threaded hole of footboard bracket.

    c. Tighten front bracket socket screw to 30-35 ft-lbs (41-48 Nm).

    d. Alternately tighten rear bracket hex bolts to 15-20 ft-lbs (20-27 Nm).

30. Insert bolt through battery negative cable (black) into threaded hole of battery negative (-) terminal. Tighten bolt to 60-96 **in-lbs** (6.8-10.9 Nm).

31. Install seat. See Section 2.25 SEAT, INSTALLATION.

NOTES

Table Of Contents

SUBJECT **PAGE NO.**

7.1 Specifications 7-1
7.2 Transmission Power Flow 7-3
7.3 Shift Linkage 7-5
7.4 Shifter Cam Assembly/Shifter Forks 7-6
7.5 Clutch Release Cover 7-12
7.6 Mainshaft/Countershaft 7-15
7.7 Main Drive Gear/Bearing 7-23
7.8 Transmission Case/Oil Pan 7-31

TRANSMISSION 7

SPECIFICATIONS 7.1

TRANSMISSION DATA

TRANSMISSION	DATA
Type	5-speed forward - constant mesh
FORMULA+ TRANSMISSION AND PRIMARY CHAINCASE LUBRICANT	Part No. 99851-05 (qt)
Capacity (dry)	24 oz.
	710 ml
Capacity (wet)	Approximately 20-24 oz.
	590-710 ml

GEAR	Internal Gear Ratios (Domestic, HDI and Swiss)
First	3.21
Second	2.21
Third	1.57
Fourth	1.23
Fifth	1.00

ENGINE OIL	DATA
Capacity (dry)	4 quarts
	3.8 liters
Capacity (wet)	Approximately 3-1/2 quarts
	3.3 liters

CAUTION

A bent jiffy stand, modified suspension or uneven parking area can cause dipstick to indicate a false low oil condition.

NOTE

Since a sidecar equipped motorcycle is fixed in an upright position, the actual full engine oil level is about 1/2 inch (12.7 mm) above the FULL mark on the dipstick.

SERVICE WEAR LIMITS

SHIFTER FORKS	IN.	MM
Shifter fork to cam groove end play	0.0017-0.0019	0.043-0.048
Shifter fork to gear groove end play	0.0010-0.0110	0.025-0.279

SHIFTER DOG GEARS	MINIMUM CLEARANCE	MAXIMUM CLEARANCE
2nd-5th	0.035 in.	0.139 in.
	0.89 mm	3.53 mm
2nd-3rd	0.035 in.	0.164 in.
	0.89 mm	4.17 mm
1st-4th	0.035 in.	0.152 in.
	0.89 mm	3.86 mm
1st-3rd	0.035 in.	0.157 in.
	0.89 mm	3.99 mm

MAINSHAFT TOLERANCE	IN.	MM
Mainshaft runout	0.000-0.003	0.000-0.08
Mainshaft end play	none	none
1st gear clearance	0.0000-0.0080	0.000-0.203
2nd gear clearance	0.0000-0.0800	0.000-2.032
3rd gear end play	0.0050-0.0420	0.127-1.067
3rd gear clearance	0.0003-0.0019	0.008-0.048
4th gear end play	0.0050-0.0310	0.127-0.787
4th gear clearance	0.0003-0.0019	0.008-0.048

MAIN DRIVE GEAR (5TH)	IN.	MM
Bearing fit in transmission case (loose)	0.0003-0.0017	0.008-0.043
Fit on mainshaft	0.0001-0.0009	0.0025-0.023
End play	none	none
Fit in side door (tight)	0.0014-0.0001	0.036-0.0025

SERVICE WEAR LIMITS (CONT.'D)

COUNTERSHAFT TOLERANCE	IN.	MM
Countershaft runout	0.000-0.003	0.00-0.08
Countershaft end play	none	none
1st gear clearance	0.0003-0.0019	0.008-0.048
1st gear end play	0.0050-0.0039	0.127-0.099
2nd gear clearance	0.0003-0.0019	0.008-0.048
2nd gear end play	0.0050-0.0440	0.127-1.118
3rd gear clearance	0.0000-0.0080	0.000-0.203
4th gear clearance	0.0000-0.0080	0.000-0.203
4th gear end play	0.0050-0.0390	0.127-0.991
5th gear clearance	0.0000-0.0080	0.000-0.203
5th gear end play	0.0050-0.0040	0.127-0.102

TORQUE VALUES

Item		ft/in-lbs	Nm
Shifter linkage rod locknuts		80-120 **in-lbs**	9.0-13.6 Nm
Detent arm pivot screw to right support block		84-108 **in-lbs**	9.5-12.2 Nm
Shifter cam support block screws		84-108 **in-lbs**	9-12 Nm
Transmission top cover socket head screws		84-132 **in-lbs**	9.5-14.9 Nm
Neutral switch		120-180 **in-lbs**	13.6-20.3 Nm
Clutch release cover socket head screws		84-132 **in-lbs**	9.5-14.9 Nm
Clutch cable fitting		36-60 **in-lbs**	4-7 Nm
Transmission lubricant drain plug		14-21 ft-lbs	19-28 Nm
Transmission filler plug/dipstick		25-75 **in-lbs**	2.8-8.5 Nm
Transmission side door 5/16 inch screws 1/4 inch screws		 13-18 ft-lbs 84-132 **in-lbs**	 17.6-24.4 Nm 9.5-14.9 Nm
Mainshaft/countershaft locknuts		45-55 ft-lbs	61-75 Nm
Transmission mainshaft sprocket nut		60 ft-lbs, then 35° to 45°	81 Nm, then 35° to 45°
Transmission sprocket nut lockplate screws		84-108 **in-lbs**	9-12 Nm
Oil pan screws		84-132 **in-lbs**	9.5-14.9 Nm
Transmission-to-engine mounting bolts		15 ft-lbs, then 30-35 ft-lbs	20.3 Nm, then 40.7-47.5 Nm
Oil hose cover		84-108 **in-lbs**	10-12 Nm
Rear swingarm bracket bolts		34-42 ft-lbs	46-57 Nm
Rear swingarm pivot shaft locknut		40-45 ft-lbs	54-61 Nm
Shifter lever to shifter shaft socket head screw		18-22 ft-lbs	24-30 Nm
Engine oil drain plug		14-21 ft-lbs	19-28 Nm
Oil filler spout allen head socket screws		84-132 **in-lbs**	9.5-14.9 Nm
Shift arm to transmission shift shaft socket screw	5/16"	18-22 ft-lbs	24-30 Nm
Inner shift arm to shift lever shaft socket screw	1/4"	90-110 **in-lbs**	10.2-12.4 Nm

TRANSMISSION POWER FLOW 7.2

GENERAL

See Figure 7-1. The 5-speed transmission consists of two parallel shafts supporting five gears each. The longer, or mainshaft, also supports the clutch and serves as the input shaft. The shorter shaft is called the countershaft.

Each gear on the mainshaft is in constant mesh with a corresponding gear on the countershaft. Each of these five pairs of gears makes up a different speed in the transmission.

The transmission gears are divided into two types, gears that are splined and rotate with the shaft, and freewheeling gears that ride on bearings and spin freely on the shaft. A splined gear always meshes with a freewheeling gear. Also, three of the splined gears are able to slide sideways on the shaft. These sliding gears are used to change transmission speeds. The projections (or dogs) on the sides of the sliding gears, engage dogs on adjacent freewheeling gears, transmitting power through the transmission.

Gear shifting is accomplished by three forks which fit into grooves machined into the hubs of the three sliding gears. The position of the shifter forks is controlled by a drum-shaped shifter cam located on the top of the transmission.

Neutral

Power is introduced to the transmission through the clutch. In neutral, with the clutch engaged, the mainshaft 1st and 2nd gears are rotating, but no power is transferred to the countershaft since countershaft 1st and 2nd are freewheeling gears.

1st Gear

When the transmission is shifted into first gear, countershaft 3rd, which rotates with the countershaft, engages countershaft 1st, which has been spinning freely on the countershaft driven by mainshaft 1st.

Now countershaft 3rd is no longer freewheeling, but locked to the countershaft causing the countershaft and countershaft 5th to turn. Countershaft 5th transmits the power to the main drive gear and the sprocket.

2nd Gear

Second gear is engaged when countershaft 3rd is shifted out of countershaft 1st and engages countershaft 2nd. This locks countershaft 2nd to the countershaft to complete the power flow as shown.

3rd Gear

Two shifter forks are used to make the shift from second to third. One fork moves countershaft 3rd out of countershaft 2nd to its neutral position, while another fork engages mainshaft 2nd with mainshaft 3rd. This locks mainshaft 3rd to the mainshaft to complete the power flow as shown.

4th Gear

The shift into fourth is made when mainshaft 2nd is disengaged from mainshaft 3rd and mainshaft 1st engages mainshaft 4th, locking it to the mainshaft.

5th Gear

The shift from fourth to fifth gear occurs when mainshaft 1st is shifted out of mainshaft 4th, and mainshaft 2nd is shifted directly into the main drive gear. Mainshaft 2nd lock the main drive gear to the mainshaft resulting in a direct one-to-one drive ratio from the clutch to the sprocket.

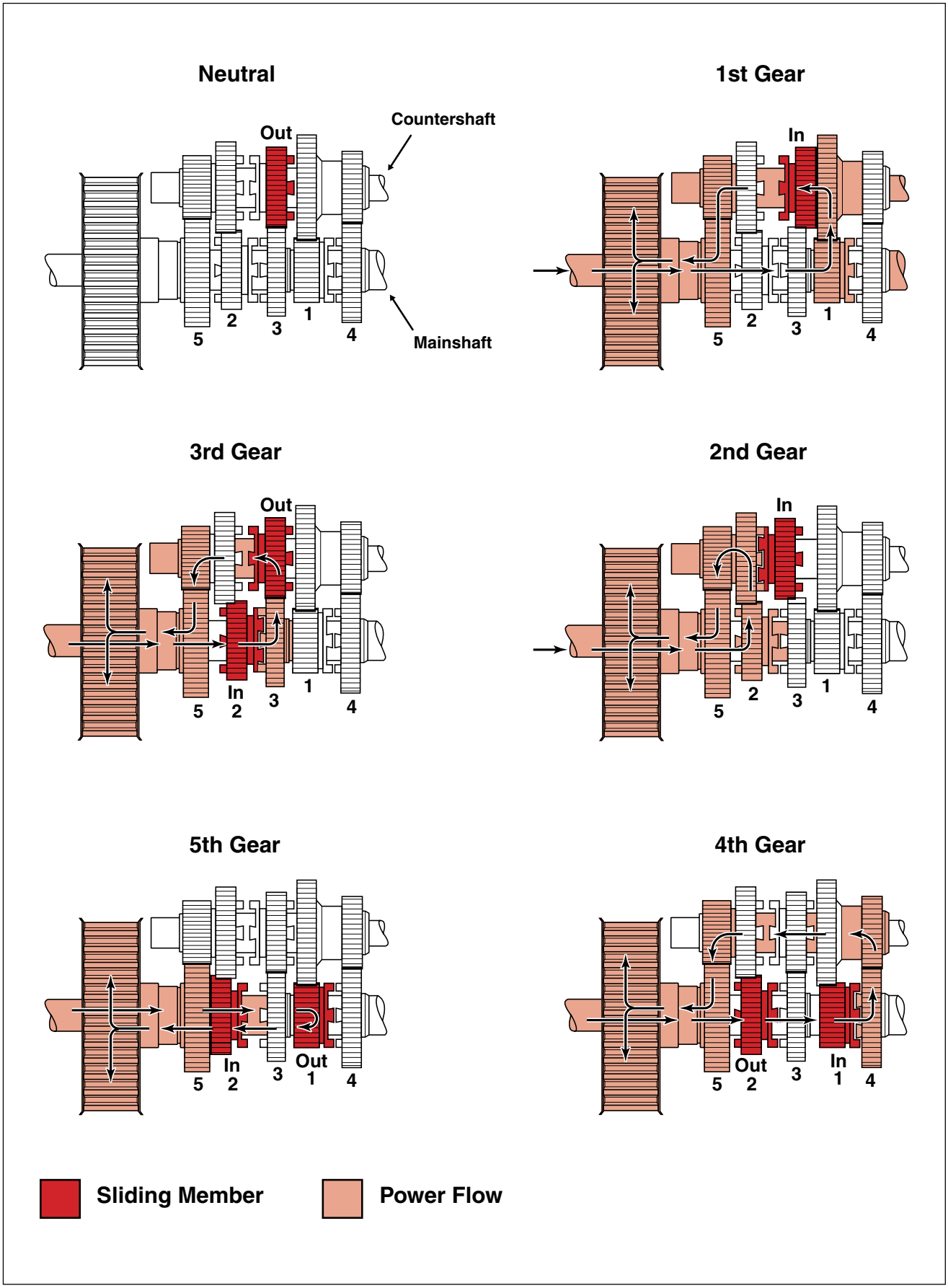

Figure 7-1. Transmission Power Flow Schematic

SHIFT LINKAGE 7.3

ADJUSTMENT

If operating problems exist, check the shift linkage for wear, interference or adjustment. If adjustment is necessary, see SHIFT ROD below. If problems persist, see the checks under Section 1.21 TROUBLESHOOTING, TRANSMISSION, along with the repair procedures in this section.

SHIFT ROD

The shift rod is set at the factory and should not need adjustment under normal circumstances. However, if full engagement or full lever travel is not achieved, adjust the rod as follows:

CAUTION

To ensure proper gear engagement and avoid possible damage to transmission, the shift levers should not contact the footboard when shifting. A minimum clearance of 3/8 inch (9.5 mm) between shift levers and footboard must be maintained to accommodate engine movement when running.

1. Remove locknut, lockwasher and flat washer to free front end of shift rod from inner shift arm. See Figure 7-2.

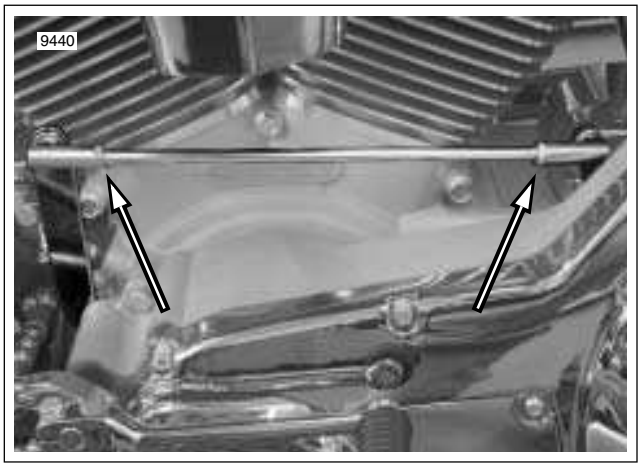

Figure 7-2. Loosen Locknuts and Adjust Rod

2. Loosen locknuts and adjust rod as necessary.
3. Install flat washer, lockwasher and locknut to fasten front end of shift rod to inner shift arm.
4. Tighten locknuts to 80-120 **in-lbs** (9.0-13.6 Nm).

SHIFTER CAM ASSEMBLY/SHIFTER FORKS 7.4

DISASSEMBLY

1. Remove maxi-fuse. See Section 8.3 SYSTEM FUSES, MAXI-FUSE, REMOVAL.
2. Remove the exhaust system in two sections. See Section 2.38 EXHAUST SYSTEM, REMOVAL.
3. Remove the magnetic drain plug at the bottom right side of the oil pan and drain the transmission lubricant into a suitable container. Remove the fill plug/dipstick.
4. Using fingers and flat tip screwdriver, remove two elbow connectors from neutral switch studs. Using 7/8 inch box end wrench, remove neutral switch and O-ring from transmission top cover. Remove preformed vent hose from the top cover fitting, if necessary.
5. Remove the five socket head screws from the transmission top cover. Remove the top cover from the transmission case. Remove and discard the cover gasket.

CAUTION

Pulling shifter cam assembly from dowels allows left support block to rotate freely, which can cause screws and washers to drop into transmission case if left loosely installed.

6. See Figure 7-3. Remove the four hex head screws (with flat washers) to free the right and left shifter cam support blocks. Raise shifter pawl and lift shifter cam assembly from dowels on deck of transmission case.
7. See CLEANING AND INSPECTION, steps 2 and 3, on the next page. If necessary, disassemble shifter cam assembly as follows:

⚠WARNING

Always wear proper eye protection when removing retaining rings. Use the correct retaining ring pliers. Verify that the tips of the pliers are not damaged or excessively worn. Slippage may propel the ring with enough force to cause eye injury.

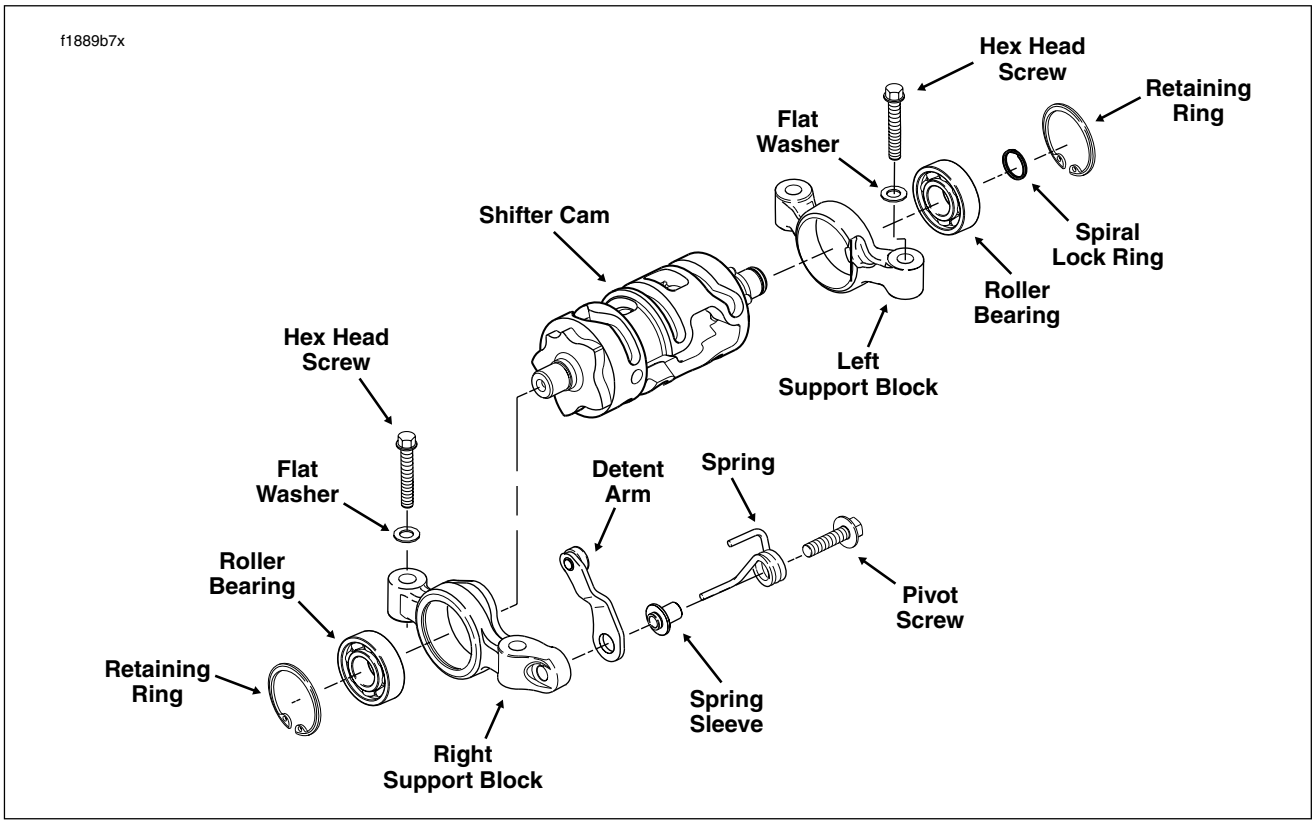

Figure 7-3. Shifter Cam Assembly

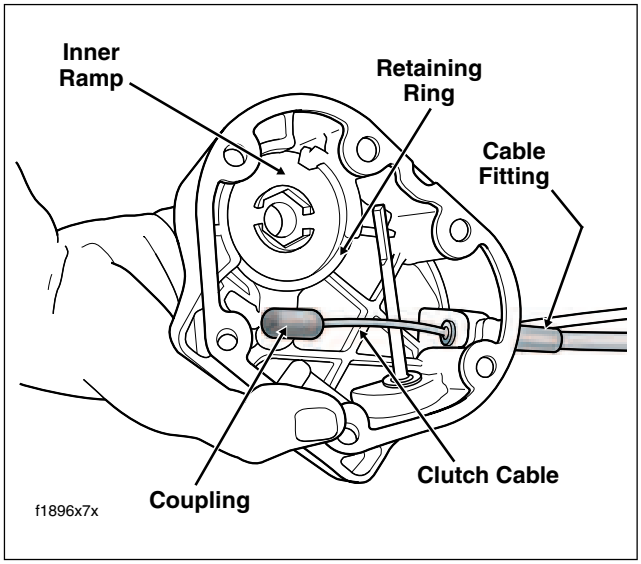

Figure 7-4. Clutch Release Cover Assembly

a. Retract detent arm and slide right support block off end of shifter cam. Remove pivot screw to release detent arm, spring sleeve and spring. Remove and discard retaining ring. Press against inner race of roller bearing to remove from support block. Discard roller bearing.

b. Moving to opposite side, remove spiral lock ring from groove at left end of shifter cam. Using a small knife, push on end of spiral lock ring working tip of blade under edge of ring. Raise end of ring until free of ring groove. Work around circumference of ring to alternately pull spirals from ring groove. Discard ring.

c. Slide left support block off end of shifter cam. Remove and discard retaining ring. Press against inner race of roller bearing to remove from support block. Discard roller bearing.

8. Slide rubber boot off clutch cable adjuster. Holding cable adjuster with 1/2 inch wrench, loosen jam nut using 9/16 inch wrench. Back jam nut away from cable adjuster. Move adjuster toward jam nut to introduce a large amount of free play at hand lever.

9. Remove six socket head screws to free clutch release cover from transmission side door. Remove and discard gasket.

10. Remove retaining ring and lift inner ramp out of clutch release cover. Turn the inner ramp over so that ball sockets are facing outboard. Remove hook of ramp from button on coupling. Remove coupling from clutch cable end. See Figure 7-4.

11. Unscrew the cable fitting from the clutch release cover. Remove clutch cable and fitting.

12. Remove the fork shaft from the hole on the right side of the transmission case. See Figure 7-5. Remove the shifter forks from the mainshaft and countershaft gear grooves.

13. To replace the transmission gears or side door bearings, see Section 7.6 MAINSHAFT/COUNTERSHAFT. To replace the main drive gear, see Section 7.7 MAIN DRIVE GEAR/BEARING.

CLEANING AND INSPECTION

⚠WARNING

Compressed air can pierce the skin and cause injury. Never use your hand to check for leaks or to determine air flow rates. Wear safety glasses to shield your eyes from flying dirt and debris. Failure to comply could result in death or serious injury.

1. Clean all parts with solvent (except left and right support blocks if roller bearings installed). Blow dry with low pressure compressed air.

2. Inspect roller bearings. Verify that bearings rotate freely without sticking.

3. Inspect the shifter cam for cracks or wear. Inspect the ends for grooves or pitting. Install **new** roller bearings whenever the shifter cam is replaced.

4. Check the shifter fork shaft. Replace if bent or damaged.

5. Using a small carpenter's square, verify that the shifter fork shafts are square. If a fork does not rest directly on the square, then it is bent and must be replaced. See Figure 7-6.

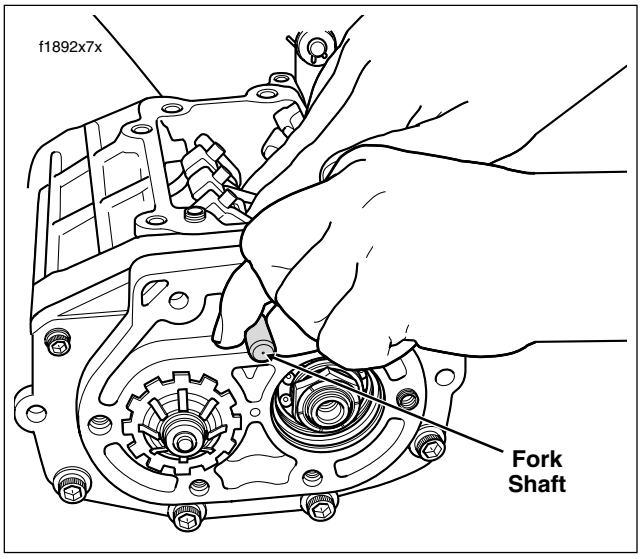

Figure 7-5. Remove Fork Shaft/Shifter Forks (Right Side View)

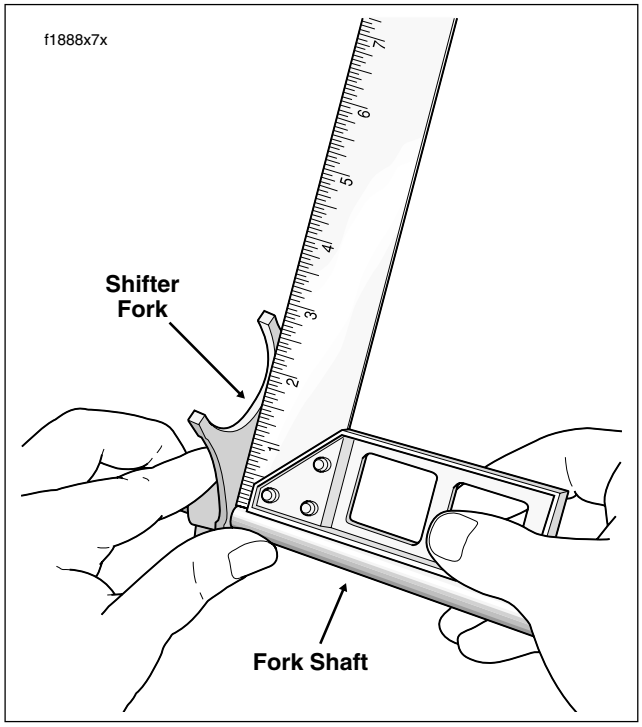

Figure 7-6. Check Shifter Forks for Squareness

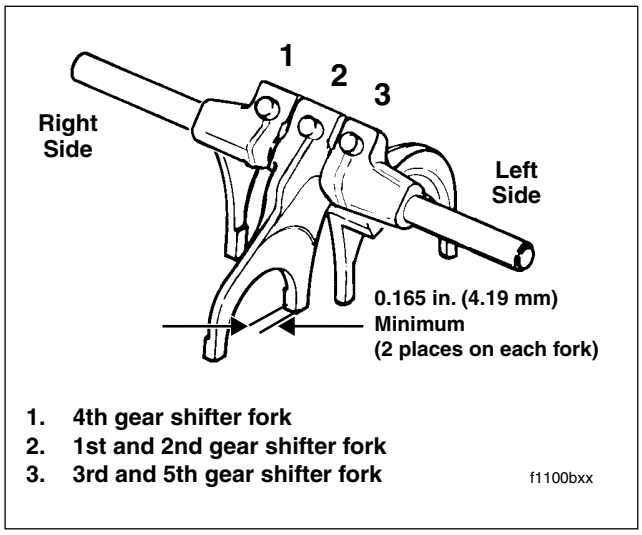

Figure 7-7. Shifter Fork Identification

6. Inspect the shifter forks for wear. With a micrometer or dial caliper, measure the width of the forks where they contact the gear fork grooves. Replace any fork that measures less than 0.165 inch (4.19 mm). See Figure 7-7.

7. Inspect the neutral switch. Depress plunger and observe the action. Plunger should spring back without binding. Switch is non-repairable and must be replaced if defective. See ASSEMBLY, step 11.

ASSEMBLY

1. See upper frame of Figure 7-8. Find the shifter fork with the centered pin. Holding the fork so that the pin is positioned at the rear of the transmission case, install the fork in the countershaft gear fork groove. See Figure 7-9.

2. Slide the two outer forks into the mainshaft gear fork grooves so that the pins are positioned on the inside (offset outboard). After installation, the pins of all three forks should be in alignment.

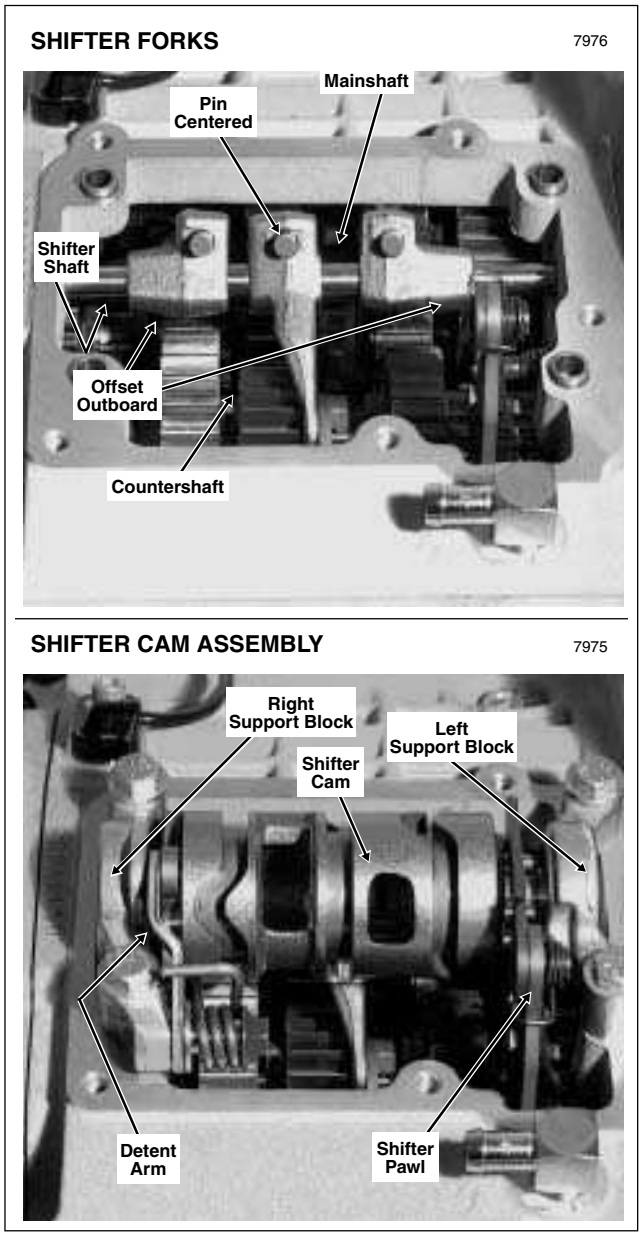

Figure 7-8. Install Shifter Forks/Shifter Cam

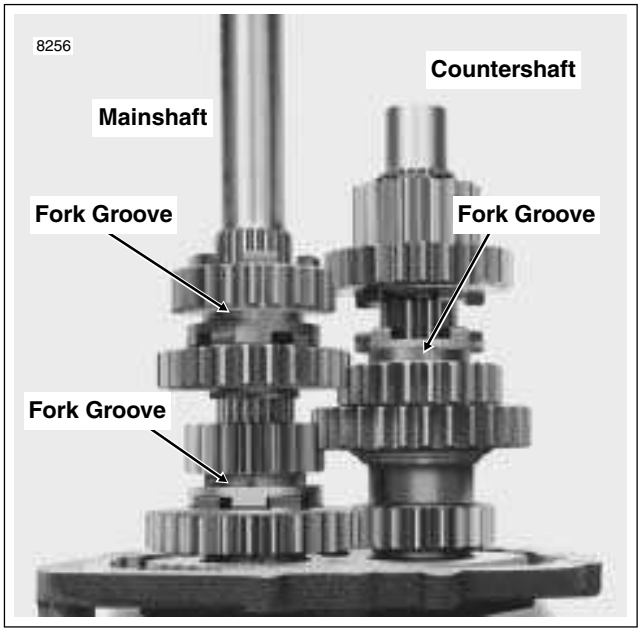

Figure 7-9. Shifter Fork Groove Locations

3. Insert the fork shaft into the hole on the right side of the transmission case. Slide the shaft through the shifter forks and into the drilling on the left side of the case. See Figure 7-5.

4. Check the sliding movement of the forks and gears. All parts should move freely without binding.

⚠WARNING

Always wear proper eye protection when installing retaining rings. Use the correct retaining ring pliers. Verify that the tips of the pliers are not damaged or excessively worn. Slippage may propel the ring with enough force to cause eye injury.

5. If disassembled, assemble shifter cam assembly as follows:

   a. Place left support block under ram of arbor press. Center **new** roller bearing over bore with the lettered side up. Using a suitable driver, press against outer race until bearing makes firm contact with the counterbore. Install **new** retaining ring with the flat side in against the bearing (beveled side out). See upper frame of Figure 7-10.

   b. Place left support block onto end of shifter cam. Start bottom end of **new** spiral lock ring into ring groove. Alternately work around circumference of ring feeding each spiral into the ring groove a section at a time. When complete, verify that spiral lock ring is fully seated in the groove.

   c. Place right support block under ram of arbor press. Center **new** roller bearing over bore with the lettered side up. Using a suitable driver, press against outer race until bearing makes firm contact with the counterbore. Install **new** retaining ring with the flat side in against the bearing (beveled side out). See lower frame of Figure 7-10.

   d. Hold spring so that ends are pointing to the right. Insert long end of spring sleeve into right side of spring. Insert pivot screw into left side of spring sleeve. With roller facing screw head, slide detent arm onto short end of spring sleeve positioning arm between spring ends. Start pivot screw into threaded hole in right support block positioning support block between spring ends. Tighten pivot screw to 84-108 **in-lbs** (9.5-12.2 Nm). Retract detent arm and slide right support block onto end of shifter cam. See Figure 7-11.

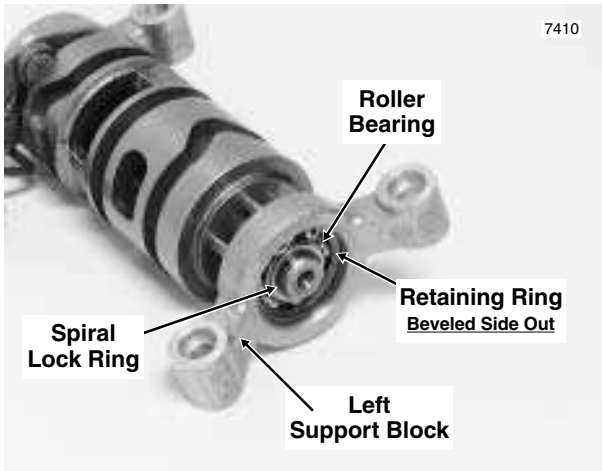

Left Side

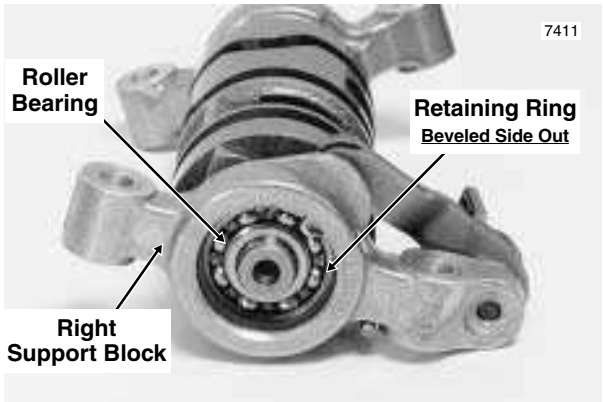

Right Side

Figure 7-10. Shifter Cam Assembly

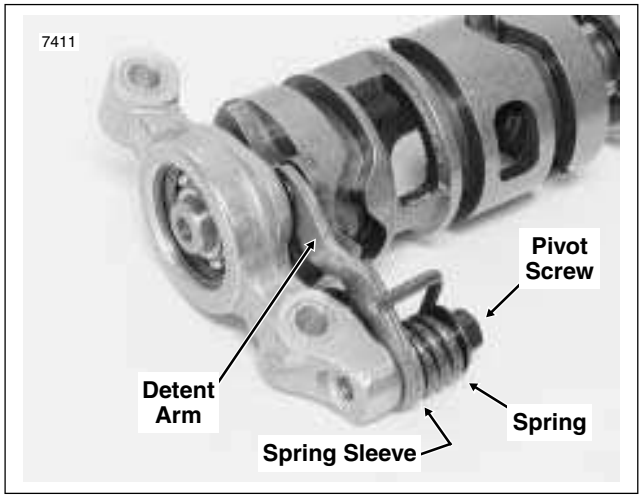

Figure 7-11. Shifter Cam Assembly

6. To ensure proper location, verify that four locating dowels are in place on the deck of the transmission case.

7. Raise the shifter cam pawl and place the shifter cam assembly over the locating dowels. See Figure 7-12. While aligning the holes in the support blocks with the dowels on the deck of the transmission case, slide the shifter forks as necessary so that the fork pins engage the channels in the shifter cam. See lower frame of Figure 7-8.

8. Hand start the hex head screws (with flat washers) to fasten the right and left support blocks to the transmission case. Alternately tighten the four support block screws to 84-108 **in-lbs** (9-12 Nm) in a crosswise pattern.

NOTE

Check the gear engagement and clearance in every gear to make sure assembly and alignment is correct.

9. Obtain a **new** top cover gasket and align the holes with those in the transmission case. Align the holes in the top cover with those in the gasket. Install the five socket head screws and tighten to 84-132 **in-lbs** (9.5-14.9 Nm). The long screw is installed in the center hole on the left side of the top cover.

10. Install preformed vent hose to top cover fitting, if removed.

NOTE

Whenever the transmission top cover is removed, be sure to install neutral switch after top cover installation to ensure proper switch engagement.

11. Install the neutral switch in the transmission top cover as follows:

    a. Roll the motorcycle back and forth to verify that the transmission is in NEUTRAL.

    b. Lubricate O-ring with clean transmission lubricant.

    c. Using 7/8 inch box end wrench, install neutral switch with O-ring in the transmission top cover. Tighten to 120-180 **in-lbs** (13.6-20.3 Nm).

    d. Install the two elbow connectors on neutral switch studs.

NOTE

The neutral switch is not polarity sensitive, so the elbow connectors can be attached to either stud.

12. See Figure 7-4. Install clutch cable fitting into clutch release cover. Do not tighten at this time.

NOTE

Replace cable fitting O-ring if damaged or deformed.

13. Hold clutch cable coupling with button facing outboard. Place cable end in recess of coupling. With ball sockets facing outboard, place hook of inner ramp on button of coupling. Holding inner ramp and coupling together, turn the assembly over. Place inner ramp (ball socket side down) over balls in outer ramp sockets. Install the retaining ring so that the opening is above and to the right of the outer ramp tang slot in the clutch release cover.

14. Verify that the two locating dowels are in place on the transmission side door. Hang a **new** gasket on the dowels.

15. Holding clutch release cover in position against transmission side door, install six socket head screws. Alternately tighten screws to 84-132 **in-lbs** (9.5-14.9 Nm) in the sequence shown in Figure 7-13.

16. Tighten clutch cable fitting to 36-60 **in-lbs** (4-7 Nm).

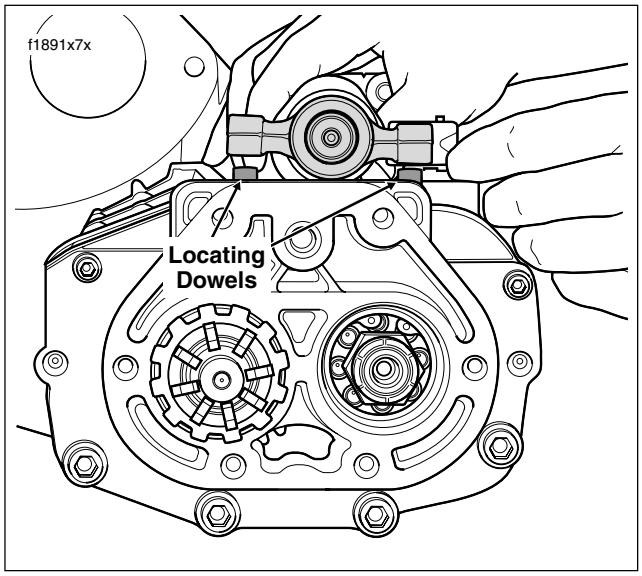

Figure 7-12. Place Support Blocks on Locating Dowels

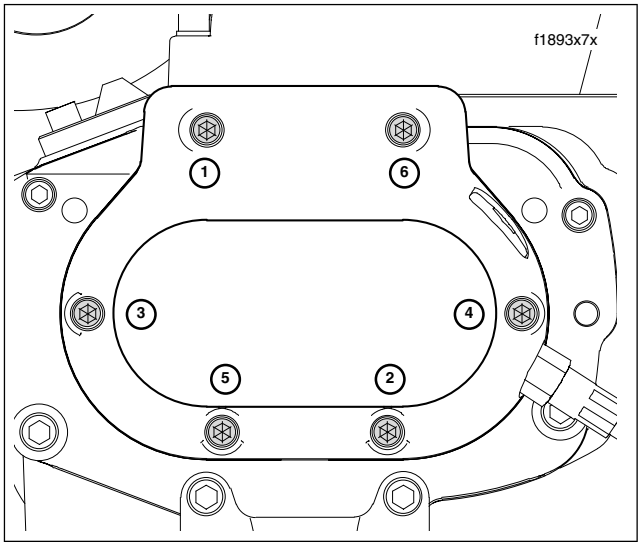

Figure 7-13. Clutch Release Cover Torque Sequence

17. Check the O-ring on the transmission lubricant drain plug for tears, cuts or general deterioration. Replace as necessary.

CAUTION

Do not overtighten filler or drain plugs. Overtightening plugs may cause leaks.

18. Install the transmission lubricant drain plug and tighten to 14-21 ft-lbs (19-28 Nm).

19. Fill the transmission with 20-24 oz. (590-710 ml) of transmission lubricant or until the lubricant level on the dipstick of the filler plug is at the F(ULL) mark with the motorcycle in a level, upright position and the filler plug resting on the threads.

    Use only Harley-Davidson FORMULA+ TRANSMISSION AND PRIMARY CHAINCASE LUBRICANT, Part No. 99851-05 (quart).

20. Install the transmission filler plug/dipstick in the clutch release cover. Tighten the plug to 25-75 **in-lbs** (2.8-8.5 Nm).

21. Adjust the clutch cable. See Section 6.3 CLUTCH, ADJUSTMENT.

22. Install the exhaust system. See Section 2.38 EXHAUST SYSTEM, INSTALLATION.

23. Install maxi-fuse. See Section 8.3 SYSTEM FUSES, MAXI-FUSE, INSTALLATION.

CLUTCH RELEASE COVER 7.5

REMOVAL/DISASSEMBLY

1. Remove maxi-fuse. See Section 8.3 SYSTEM FUSES, MAXI-FUSE, REMOVAL.
2. Remove the exhaust system in two sections. See Section 2.38 EXHAUST SYSTEM, REMOVAL.
3. Remove the magnetic drain plug at the bottom right side of the oil pan and drain the transmission lubricant into a suitable container. Remove the filler plug/dipstick.
4. Remove six socket head screws to free clutch release cover from transmission side door. Depress clutch lever to break the cover seal, and then remove and discard gasket.
5. Slide rubber boot off clutch cable adjuster. Holding cable adjuster with 1/2 inch wrench, loosen jam nut using 9/16 inch wrench. Back jam nut away from cable adjuster. Move adjuster toward jam nut to introduce a large amount of free play at hand lever.

⚠WARNING

Always wear proper eye protection when removing retaining rings. Use the correct retaining ring pliers. Verify that the tips of the pliers are not damaged or excessively worn. Slippage may propel the ring with enough force to cause eye injury.

6. Remove retaining ring securing ball and ramp mechanism to clutch release cover.
7. See Figure 7-14. Lift inner ramp out of clutch release cover. Turn the inner ramp over so that ball sockets are facing outboard. Remove hook of ramp from button on coupling. Remove coupling from clutch cable end.
8. Remove balls from outer ramp sockets. Remove outer ramp from clutch release cover.
9. Unscrew the cable fitting from the clutch release cover. Remove clutch cable and fitting.

CLEANING AND INSPECTION

1. Wash the ball and ramp components in cleaning solvent.
2. Inspect the three balls and the ball socket surfaces on both the inner and outer ramps for wear, pitting, surface breakdown and other damage.
3. Check fit of the inner ramp hub in the outer ramp. Replace both parts if excessive wear is noted.
4. Inspect the inner/outer ramp retaining ring for damage or distortion.

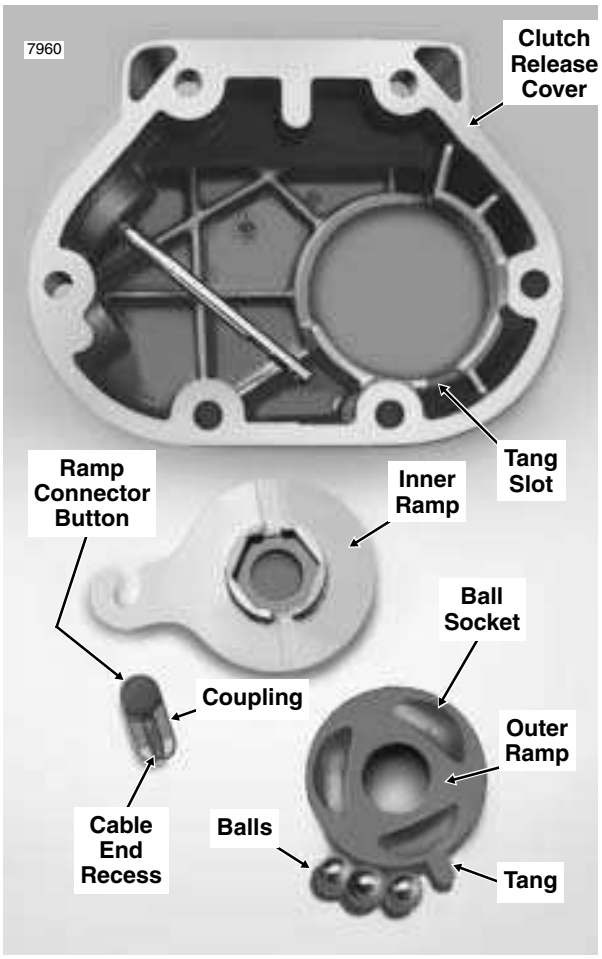

Figure 7-14. Clutch Release Cover Assembly

5. See Figure 7-14. Check the recess in the clutch release cover casting where the inner and outer ramps are retained. There should be no wear/lips worn into the bore that would catch the ramps and cock them, causing improper clutch adjustment.
6. Check clutch cable for damage and frayed or worn ends. Check cable fitting O-ring for cuts, tears or signs of deterioration.

ASSEMBLY/INSTALLATION

1. Install clutch cable fitting into clutch release cover. Do not tighten cable fitting at this time.

NOTE

Replace cable fitting O-ring if damaged or deformed.

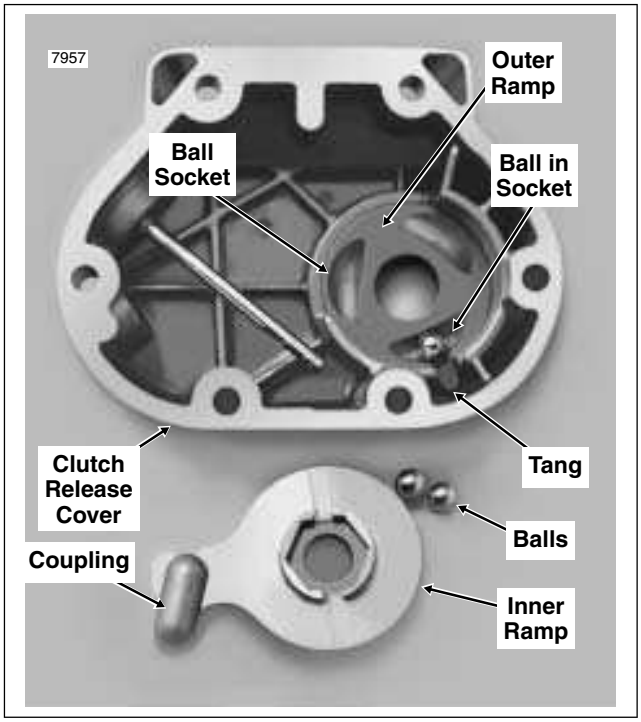

Figure 7-15. Install Outer Ramp and Balls

2. See Figure 7-15. Place outer ramp in clutch release cover recess with tang in cover slot.

3. Apply a multi-purpose grease to the balls and outer ramp sockets. Place a ball in each of three outer ramp sockets.

4. Hold coupling with button facing outboard. Place cable end in recess of coupling. With ball sockets facing outboard, place hook of inner ramp on button of couplng. Holding inner ramp and coupling together, turn the assembly over.

5. Place inner ramp (ball socket side down) over balls in outer ramp sockets.

⚠WARNING

Always wear proper eye protection when installing retaining rings. Use the correct retaining ring pliers. Verify that the tips of the pliers are not damaged or excessively worn. Slippage may propel the ring with enough force to cause eye injury.

6. Install the retaining ring so that the opening is above and to the right of the outer ramp tang slot in the clutch release cover.

7. Verify that the two locating dowels are in place on the transmission side door. Hang a **new** gasket on the dowels.

8. Holding clutch release cover in position, install six socket head screws. Tighten screws to 84-132 **in-lbs** (9.5-14.9 Nm) in the sequence shown in Figure 7-13.

9. Tighten clutch cable fitting to 36-60 **in-lbs** (4-7 Nm).

10. Check the O-ring on the transmission lubricant drain plug for tears, cuts or general deterioration. Replace as necessary. Install the transmission lubricant drain plug and tighten to 14-21 ft-lbs (19-28 Nm).

CAUTION

Do not overtighten filler or drain plugs. Overtightening plugs may cause leaks.

11. Remove the filler plug from the clutch release cover, if installed. See Figure 7-16. Check the O-ring for tears, cuts or general deterioration. Replace as necessary. See Figure 7-17.

12. Fill the transmission with 20-24 oz. (590-710 ml) of transmission lubricant or until the lubricant level on the dipstick of the filler plug is at the F(ULL) mark with the motorcycle in a level, upright position and the filler plug resting on the threads.

    Use only Harley-Davidson FORMULA+ TRANSMISSION AND PRIMARY CHAINCASE LUBRICANT, Part No. 99851-05 (quart).

13. Install the transmission filler plug/dipstick in the clutch release cover. Tighten the plug to 25-75 **in-lbs** (2.8-8.5 Nm).

14. Adjust the clutch cable. See Section 6.3 CLUTCH, ADJUSTMENT.

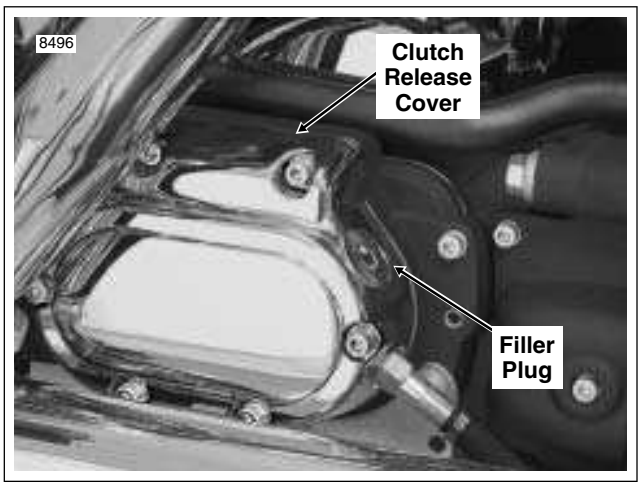

Figure 7-16. Transmission Case (Right Side)

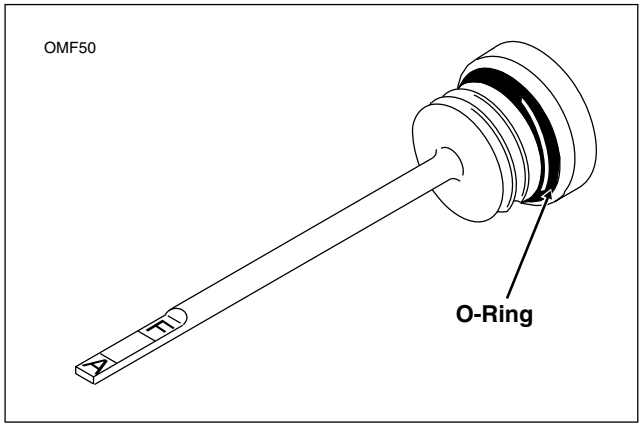

Figure 7-17. Transmission Lubricant Filler Plug/Dipstick

15. Install the exhaust system. See Section 2.38 EXHAUST SYSTEM, INSTALLATION.
16. Install maxi-fuse. See Section 8.3 SYSTEM FUSES, MAXI-FUSE, INSTALLATION.

NOTE

Check the eight digit number stamped on the transmission case just above the side door. If the third digit is "9," then the transmission was built for Japan only. If the digit is "0," then it was built for all countries except Japan. If servicing a Japanese transmission, follow the steps under REMOVAL below and then see Appendix D.1 JAPANESE MAINSHAFT/COUNTERSHAFT for disassembly and assembly instructions.

REMOVAL

1. Remove the exhaust system in two sections. See Section 2.38 EXHAUST SYSTEM, REMOVAL.
2. Remove the shifter cam and shifter fork assemblies. See Section 7.4 SHIFTER CAM ASSEMBLY/SHIFTER FORKS, DISASSEMBLY.
3. Remove the primary chaincase cover. Remove clutch assembly, primary chain, and compensating sprocket components. Remove the starter jackshaft assembly and primary chaincase. See Section 6.5 PRIMARY CHAINCASE, REMOVAL.
4. Remove oil filler spout and starter. See Section 5.4 STARTER, REMOVAL, steps 6-12.
5. Remove the bearing inner race from the transmission mainshaft. See Section 6.5 PRIMARY CHAINCASE, MAINSHAFT BEARING INNER RACE, REMOVAL.
6. Remove the oil slinger assembly (with two-piece push rod and clutch release bearing components).
7. Lock the transmission. This can be accomplished by manually engaging the shifter dogs of any two gears (mainshaft or countershaft) with the shifter dogs of an adjacent gear and then turning the mainshaft counterclockwise.
8. Remove the locknut from both the mainshaft and countershaft. Use an air impact wrench for best results. See Figure 7-18. Remove the spacer from each shaft.
9. Remove the six socket head screws (bottom four with flat washers) to free both the side door and transmission exhaust bracket from the transmission case. Pull the side door, mainshaft and countershaft from the transmission case as a single assembly. Remove and discard the door gasket. See Figure 7-19.

NOTE

DO NOT USE A HAMMER TO REMOVE THE SIDE DOOR. If the side door sticks or binds on the locating dowels, gently pry open using the indents at each side of the door. See Figure 7-19.

10. To remove the main drive gear, refer to Section 7.7 MAIN DRIVE GEAR/BEARING, REMOVAL.

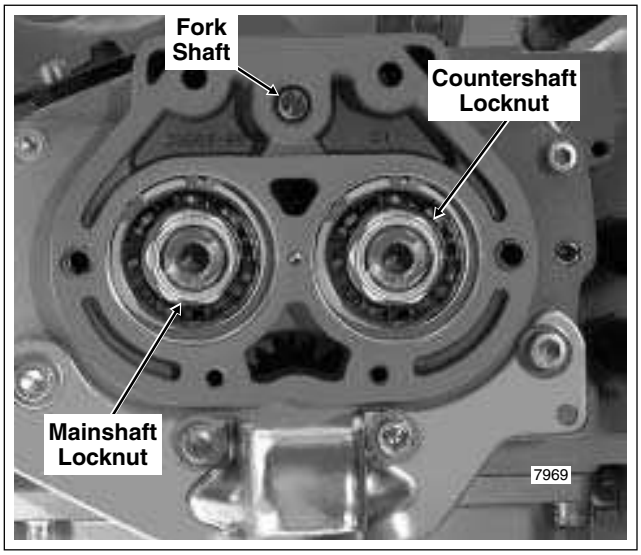

Figure 7-18. Remove Mainshaft/Countershaft Locknuts

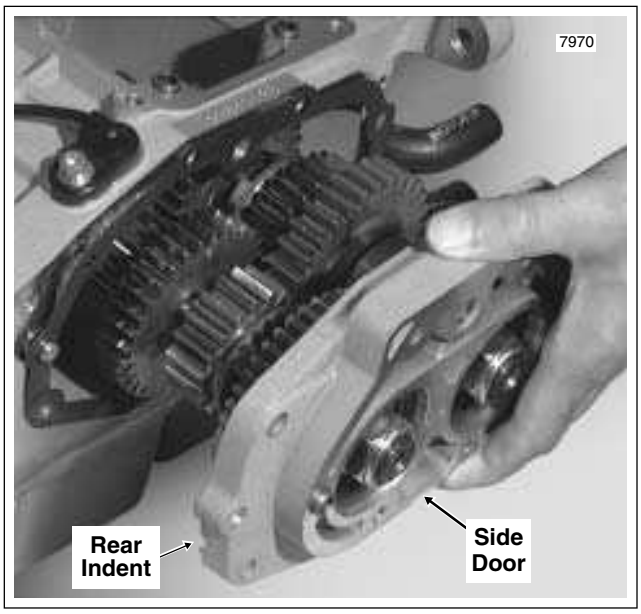

Figure 7-19. Remove Transmission Side Door

DISASSEMBLY

⚠WARNING

Always wear proper eye protection when removing retaining rings. Use the correct retaining ring pliers. Verify that the tips of the pliers are not damaged or excessively worn. Slippage may propel the ring with enough force to cause eye injury.

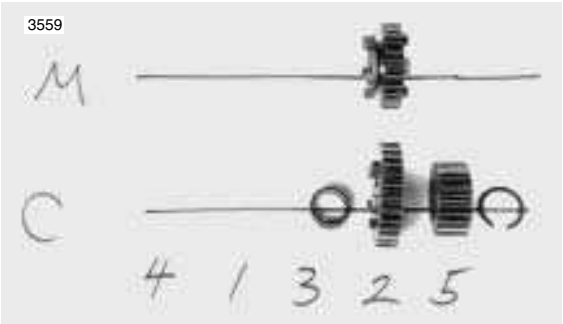

Figure 7-20. Note Gear Location During Disassembly

NOTE

Use the TRANSMISSION SHAFT RETAINING RING PLIERS, Part No. J-5586, to remove all mainshaft and countershaft retaining rings. Note each gear and its location as it is removed. See Figure 7-20.

1. Position the assembly on a bench with the side door down, mainshaft on the left hand side.
2. See A in Figure 7-21. Working from the end of the countershaft toward the side door, remove the retaining ring from the countershaft.
3. Remove the countershaft 5th gear.
4. Remove the countershaft 2nd gear and thrust washer.
5. See B in Figure 7-21. Gently pull apart the split cage bearing and remove.
6. Remove the retaining ring and the countershaft 3rd gear.
7. See C in Figure 7-21. Moving to the mainshaft, remove the mainshaft 2nd gear.
8. See D in Figure 7-21. Remove the upper retaining ring and thrust washer.

NOTE

For best results, move the lower retaining ring toward the side door. The mainshaft 3rd gear will move down the shaft for easy access to the upper retaining ring.

9. Remove the mainshaft 3rd gear.
10. Remove the thrust washer and lower retaining ring.
11. See E in Figure 7-21. Gently pull apart the split cage bearing and remove.
12. Leave both the mainshaft and countershaft 1st gears and the mainshaft and countershaft 4th gears on their respective shafts.

CAUTION

Supporting the gears is necessary to provide support for the side door bearing inner races. Failure to support the gears will result in bearing damage.

13. Support the countershaft 1st gear and press out the countershaft.
14. Remove the mainshaft 1st gear.
15. Support the mainshaft 4th gear and press out the mainshaft.
16. Remove the spacer from the mainshaft. Remove the mainshaft 4th gear, thrust washer and retaining ring. Remove the split cage bearing from the mainshaft race.
17. Remove the spacer from the countershaft. Remove the countershaft 4th gear and the countershaft 1st gear. Remove the thrust washer and retaining ring. Gently pull apart the split cage bearing and remove.

CLEANING AND INSPECTION

1. Clean all parts in cleaning solvent and blow dry with compressed air.
2. Check gear teeth for damage. Replace the gears if they are pitted, scored, rounded, cracked or chipped.
3. Inspect the engaging dogs on the gears. Replace the gears if the dogs are rounded, battered or chipped.
4. Inspect the side door bearings. Bearings must rotate freely without drag. Replace the bearings if pitted or grooved. Proceed as follows:
   a. Remove the retaining rings and press the bearings out of the side door.

CAUTION

To avoid side door damage, use a flat plate for support when pressing in new bearings.

   b. When installing new bearings, always press on the bearing OD marked with the number stamp. The number stamp must face toward the outside surface of the side door. Use a flat plate to support the inboard side of the side door at the bearing bores.

NOTE

Note that one side of the retaining rings are beveled. Always install the ring with the beveled side opposite the bearing. Side doors using the beveled retaining rings are marked with a “drill-point” hole between the bearing bores. See Figure 7-23.

   c. Install **new** retaining rings with the flat side in towards the bearing, the beveled side out.

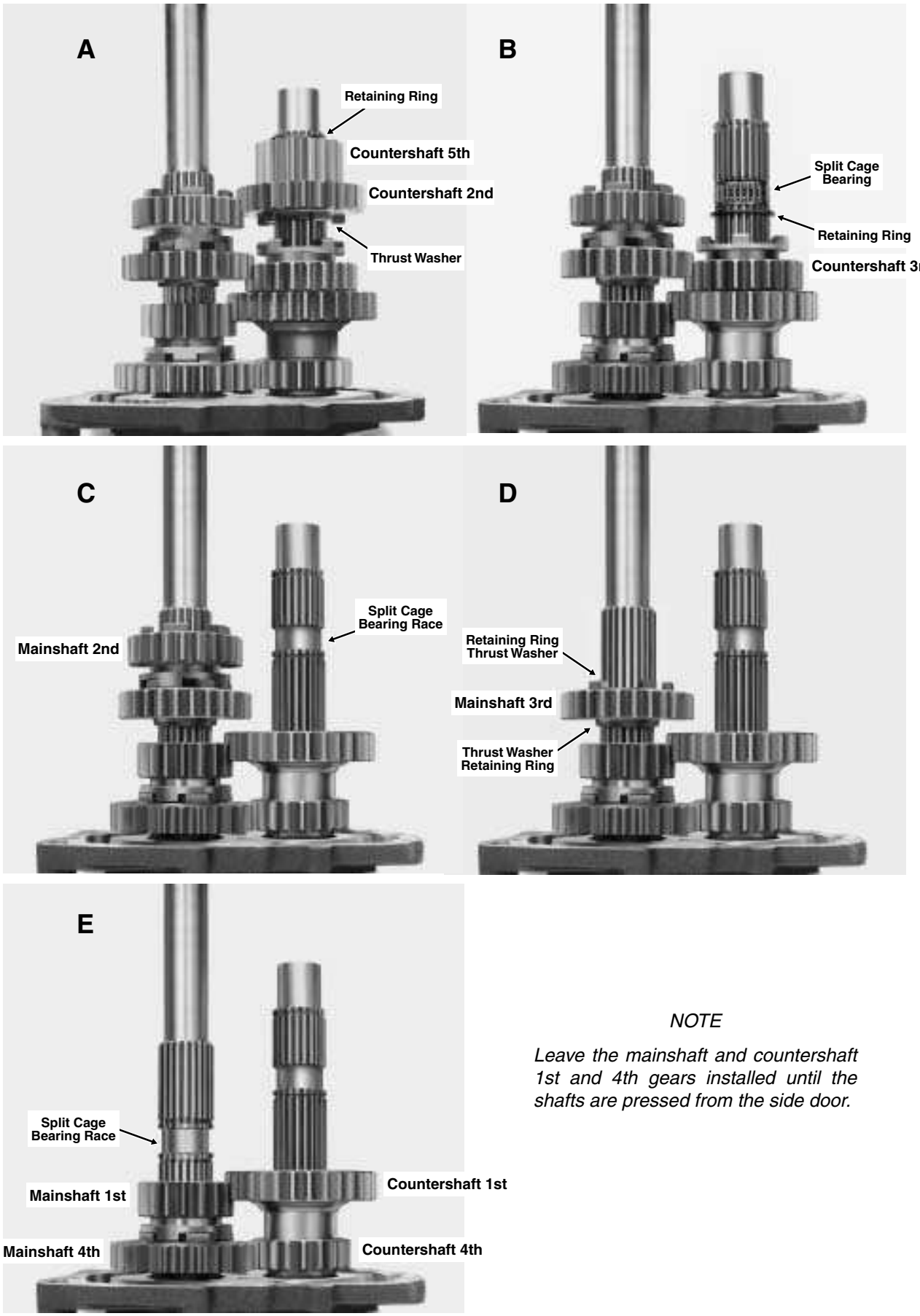

NOTE

Leave the mainshaft and countershaft 1st and 4th gears installed until the shafts are pressed from the side door.

Figure 7-21. Mainshaft/Countershaft Disassembly

ASSEMBLY

⚠WARNING

Always wear proper eye protection when installing retaining rings. Use the correct retaining ring pliers. Verify that the tips of the pliers are not damaged or excessively worn. Slippage may propel the ring with enough force to cause eye injury.

⚠WARNING

Always use new retaining rings when assembling the mainshaft and countershaft. Reusing retaining rings can cause the transmission to become "locked" during vehicle operation, a situation which could result in death or serious injury.

NOTE

Use the TRANSMISSION SHAFT RETAINING RING PLIERS, Part No. J-5586, to install all mainshaft and countershaft retaining rings.

1. Install a **new** retaining ring in the groove closest to the side door end of the mainshaft. Slide the thrust washer onto the side door end of the mainshaft until it contacts the retaining ring. Lightly coat split cage bearing with oil and install in the mainshaft race next to the thrust washer.
2. See Figure 7-22. Install mainshaft 4th gear over the split cage bearing with the shifter dogs up. From the opposite end of the shaft, slide on the mainshaft 1st gear with the shifter fork groove facing the side door end of the shaft.
3. Install a **new** retaining ring in the groove closest to the side door end of the countershaft. Slide the thrust washer onto the side door end of the countershaft until it contacts the retaining ring. Lightly coat split caged bearing with oil and install in the countershaft race next to the thrust washer.
4. See Figure 7-22. Install countershaft 1st gear over the split caged bearing with the taper facing down (flat side up). From the same end of the shaft, slide on the countershaft 4th gear so that the sleeve contacts the taper of the countershaft 1st gear.

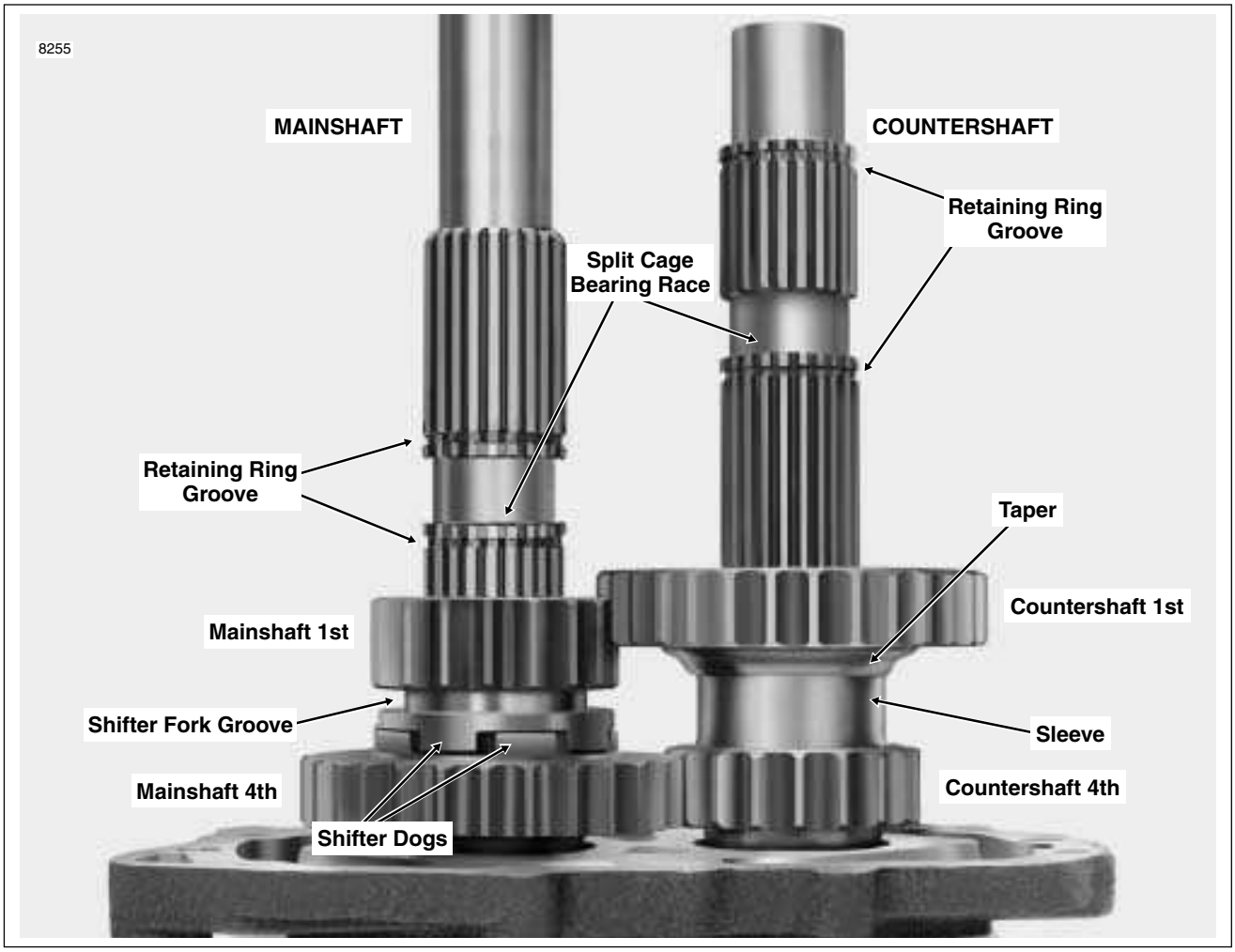

Figure 7-22. Install Mainshaft and Countershaft 1st and 4th Gears

5. See Figure 7-25. Slide the spacers onto the shafts with the tapered side facing the side door end. Note that the mainshaft spacer has a shoulder while the countershaft spacer does not.

CAUTION

Failure to support the inner races while pressing shafts through the side door bearings will result in bearing damage.

6. Place the side door in an arbor press. Support the inner bearing races with a suitable socket. Starting with the mainshaft, press the shafts into the bearings. With the shafts properly pressed into the side door, the spacers will have no end play. Be sure to install the mainshaft to the left of the fork shaft hole (when viewing the side door from the top).
7. Install a spacer and locknut on the threaded end of each shaft and tighten the nuts until finger tight. See Figure 7-23. Final tightening is performed under INSTALLATION, steps 5 and 6.

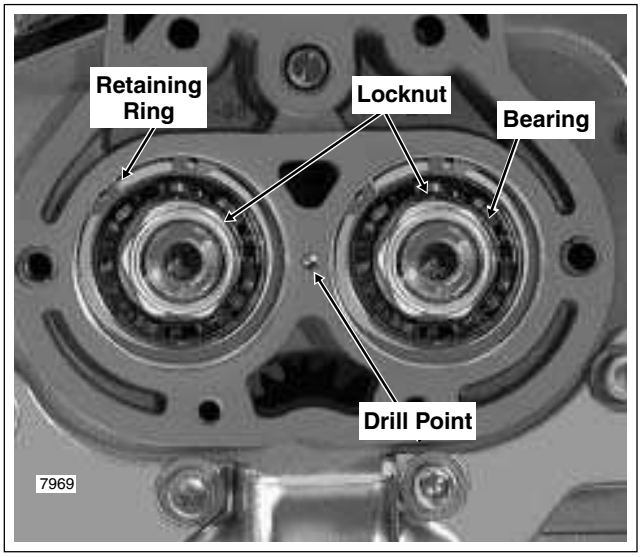

Figure 7-23. Side Door Bearings

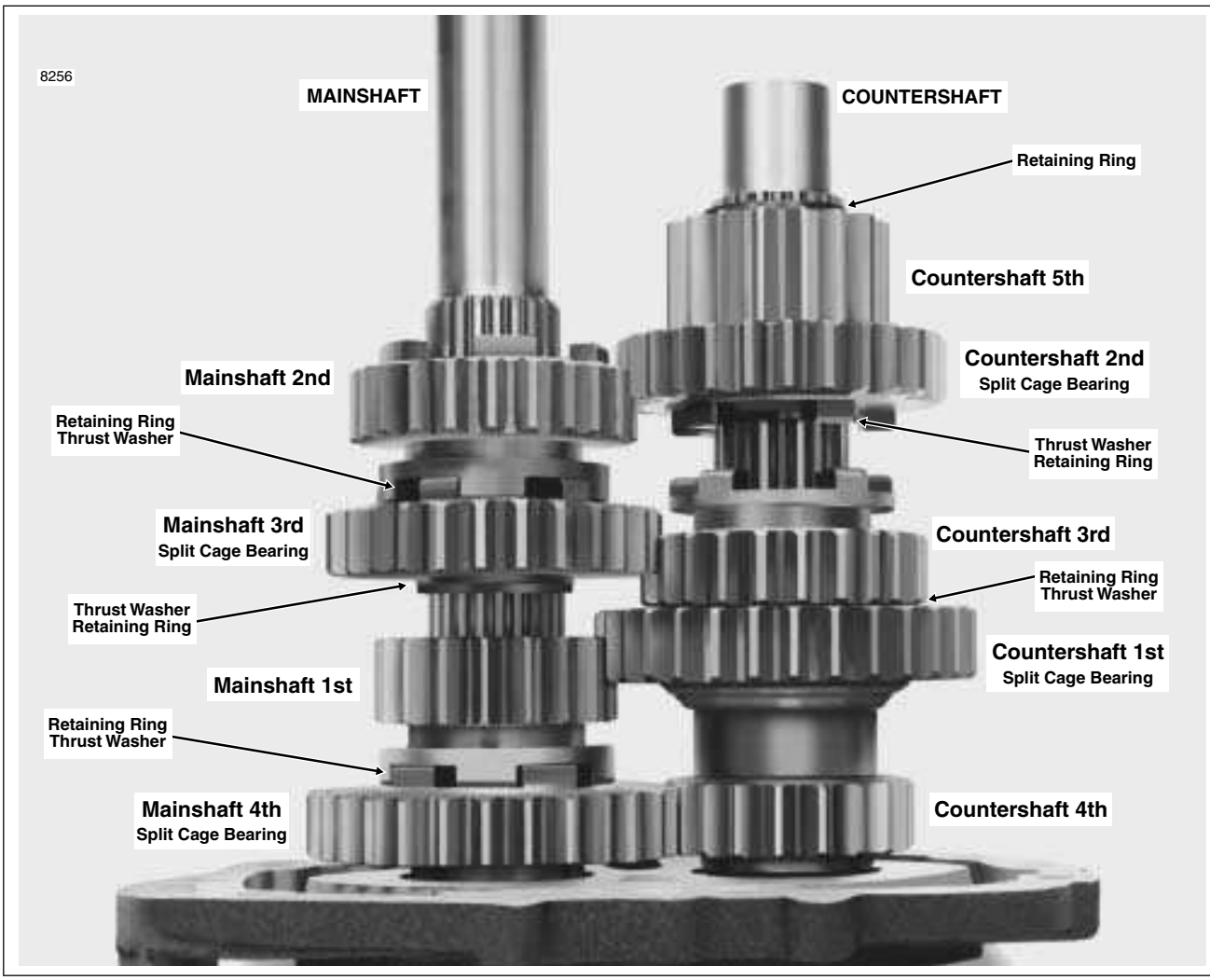

Figure 7-24. Completed Side Door Assembly

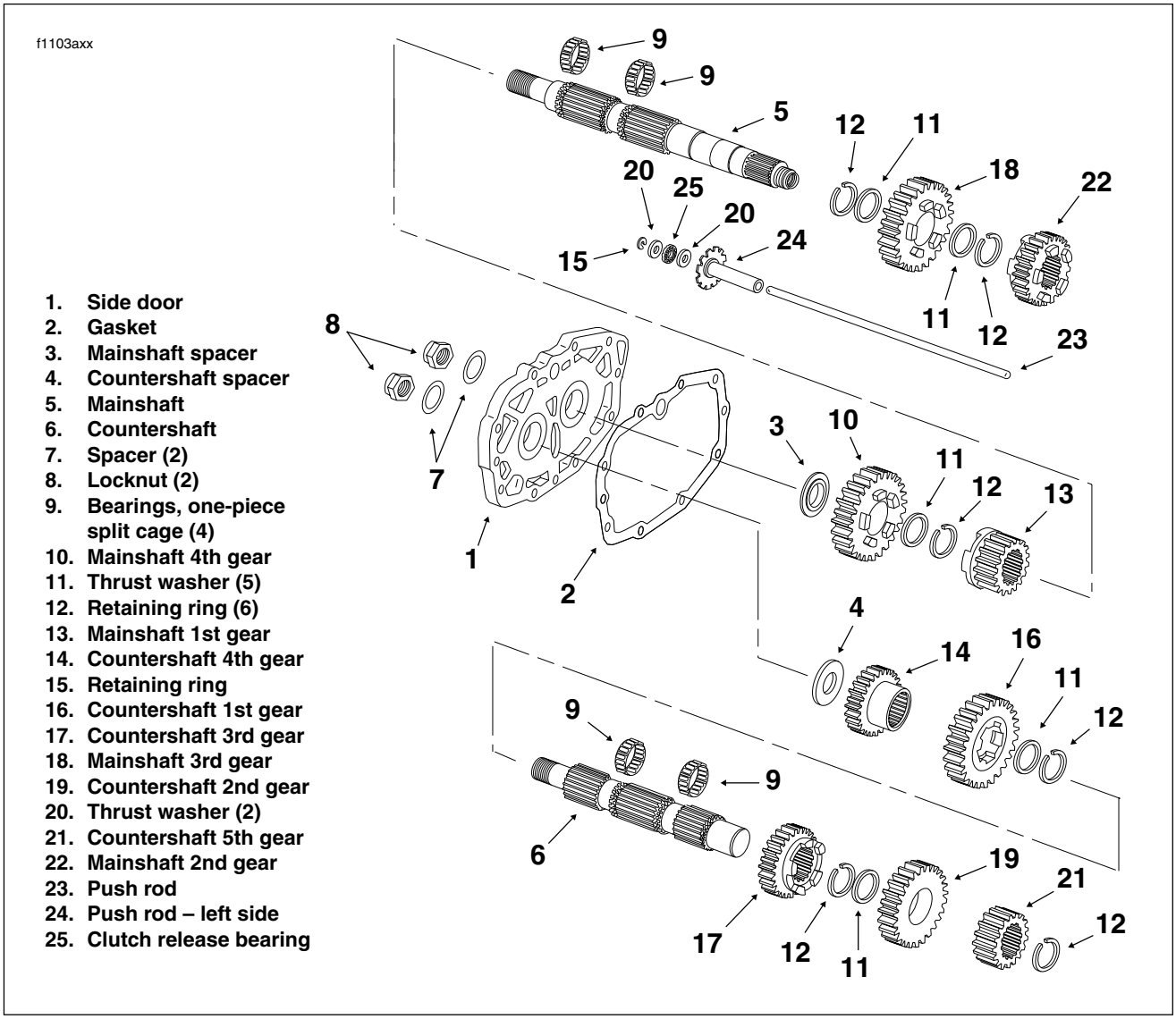

Figure 7-25. Side Door, Mainshaft and Countershaft Assembly (Exploded View)

8. See Figure 7-24. Install countershaft 3rd gear with the shifter fork groove facing opposite the side door.

9. Install a **new** retaining ring in the groove just above the mainshaft 1st gear. Slide a thrust washer down the mainshaft until it contacts the retaining ring. Lightly coat split caged bearing with oil and install in the mainshaft race next to the thrust washer. Place mainshaft 3rd gear over the bearing. Install a second thrust washer and a **new** retaining ring above the gear

10. Install a **new** retaining ring in the groove above the countershaft 3rd gear. Slide a thrust washer down the countershaft until it contacts the retaining ring. Lightly coat split caged bearing with oil and install in the countershaft race next to the thrust washer. Install the countershaft 2nd gear over the bearing with the shifter dogs facing the side door end of the shaft.

11. Slide the countershaft 5th gear down the countershaft until it contacts the countershaft 2nd gear. Install a **new** retaining ring in the groove above the countershaft 5th gear.

12. Install the mainshaft 2nd gear on the shaft with the shifter fork groove towards the side door.

    The final assembly appears as shown in Figure 7-24.

NOTE

Install the main drive gear, if removed. See Section 7.7 MAIN DRIVE GEAR/BEARING, INSTALLATION.

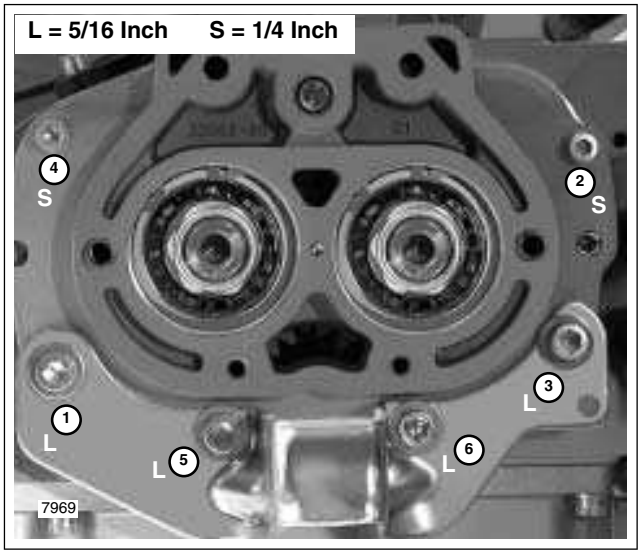

Figure 7-26. Side Door Screw Size and Torque Sequence

INSTALLATION

1. Verify that the two locating dowels are in place on the right side of the transmission case. Hang a **new** gasket on the dowels.
2. Squirt a liberal amount of clean transmission lubricant into the main drive gear to prelube needle bearings. Install the assembled side door in the transmission case. See Figure 7-19.
3. Install the four 5/16 inch screws (with flat washers) to fasten transmission exhaust bracket and bottom of side door to the transmission case. Install the two 1/4 inch screws to fasten the top of the side door to the transmission case. Alternately tighten six screws until snug.
4. Resetting the torque wrench as necessary, tighten the four 5/16 inch screws to 13-18 ft-lbs (17.6-24.4 Nm) and the two 1/4 inch screws to 84-132 **in-lbs** (9.5-14.9 Nm) in the sequence shown in Figure 7-26.
5. Lock the transmission. This can be accomplished by manually engaging the shifter dogs of any two gears (mainshaft or countershaft) with the shifter dogs of an adjacent gear and then turning the mainshaft locknut counterclockwise.
6. With the transmission locked, tighten the mainshaft and countershaft locknuts to 45-55 ft-lbs (61-75 Nm). See Figure 7-23.
7. Install the oil slinger assembly (with two-piece push rod and clutch release bearing components).
8. Install shifter cam and fork assemblies. See Section 7.4 SHIFTER CAM ASSEMBLY/SHIFTER FORKS, ASSEMBLY.
9. Install the bearing inner race on the transmission mainshaft. See Section 6.5 PRIMARY CHAINCASE, MAINSHAFT BEARING INNER RACE, INSTALLATION.
10. Install the starter and oil filler spout. See Section 5.4 STARTER, INSTALLATION, steps 1-8.
11. Install the primary chaincase and starter jackshaft assembly. Install the clutch assembly, primary chain, and compensating sprocket components. Install the primary chaincase cover. See Section 6.5 PRIMARY CHAINCASE, INSTALLATION.
12. Install the exhaust system. See Section 2.38 EXHAUST SYSTEM, INSTALLATION.

NOTES

MAIN DRIVE GEAR/BEARING 7.7

PRELIMINARY INSTRUCTIONS

NOTE

Leave the transmission case in the frame unless the case itself requires replacement. For illustration purposes, some photographs may show the case removed.

1. Remove the exhaust system in two sections. See Section 2.38 EXHAUST SYSTEM, REMOVAL.
2. Remove the shifter cam and shifter fork assemblies. See Section 7.4 SHIFTER CAM ASSEMBLY/SHIFTER FORKS, DISASSEMBLY.
3. Remove the primary chaincase cover. Remove the clutch assembly, primary chain, and compensating sprocket components. Remove the starter jackshaft assembly and primary chaincase. See Section 6.5 PRIMARY CHAINCASE, REMOVAL.
4. Remove the starter. See Section 5.4 STARTER, REMOVAL, steps 6-11.
5. Moving to rear wheel, remove E-clip and loosen hex nut on right side of axle. Moving to left side, turn adjuster cam in a counterclockwise direction until belt tension is relieved. Remove the belt from the transmission sprocket.
6. Remove the bearing inner race from the transmission mainshaft. See Section 6.5 PRIMARY CHAINCASE, MAINSHAFT BEARING INNER RACE, REMOVAL.

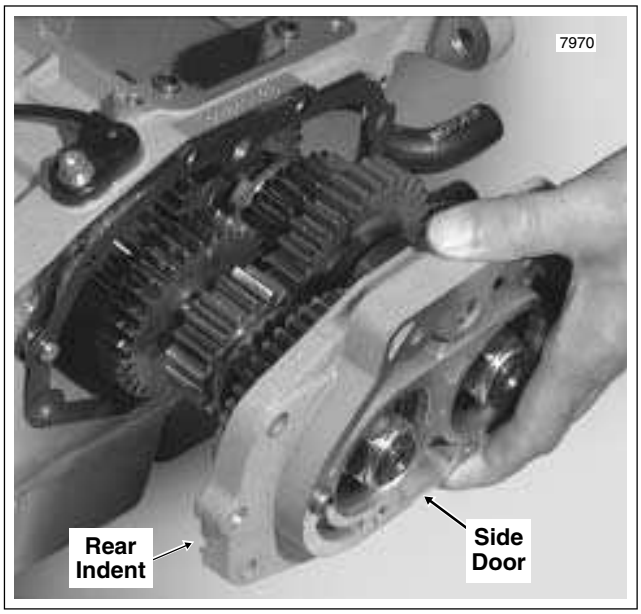

Figure 7-27. Remove Transmission Side Door

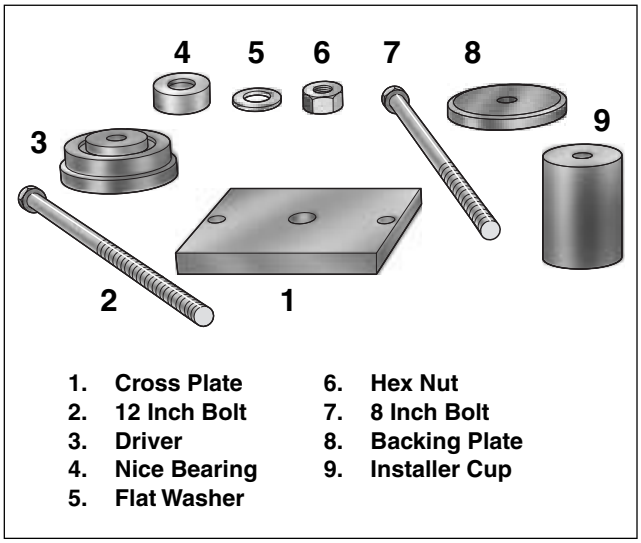

Figure 7-28. Main Drive Gear/Bearing Remover/Installer (Part No. HD-35316B)

7. See Figure 7-27. Remove the six socket head screws (bottom four with flat washers) to free both the side door and transmission exhaust bracket from the transmission case. Pull the side door, mainshaft and countershaft from the transmission case as a single assembly. Remove and discard the door gasket.

NOTE

DO NOT USE A HAMMER TO REMOVE THE SIDE DOOR. If the side door sticks or binds on the locating dowels, gently pry open using the indents at each side of the door. See Figure 7-27. Exercise caution to avoid damaging paint.

8. Remove the two socket screws and lockplate to free the sprocket nut. Remove the sprocket nut. Use an air impact wrench for best results.

NOTE

The transmission sprocket nut has left handed threads. Turn the nut clockwise to remove from the main drive gear.

9. Remove the transmission sprocket.

REMOVAL

1. Obtain the MAIN DRIVE GEAR/BEARING REMOVER/INSTALLER (HD-35316B). See Figure 7-28.
2. Obtain two screws with flat washers not provided with tool. One screw must be 1/4-20 x 1 inch, and the other must be 5/16-18 x 1-1/2 inch.

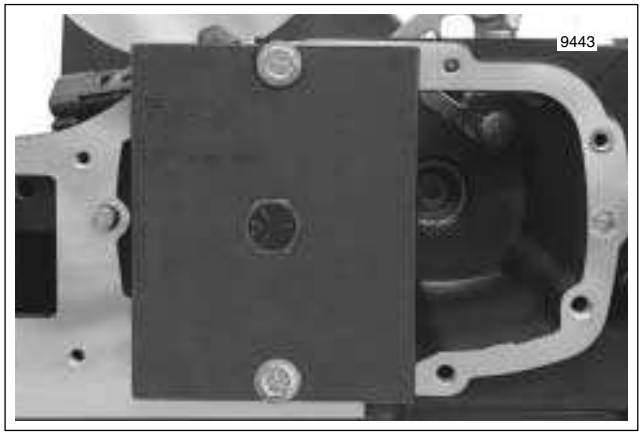

Figure 7-29. Main Drive Gear Removal (Right Side)

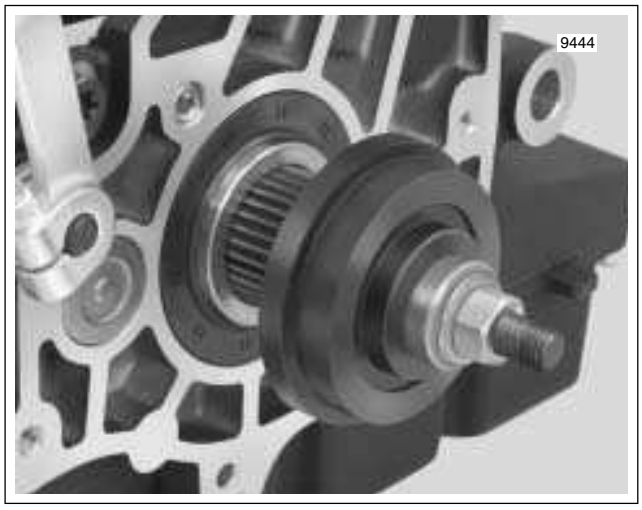

Figure 7-30. Main Drive Gear Removal (Left Side)

3. With the stamp “this side out” facing outboard and the script right side up, fasten cross plate to right side of transmission case using second most rearward set of holes in the side door flange. Install the 1/4-20 x 1 inch screw (with flat washer) in the top flange hole, the 5/16-18 x 1-1/2 inch screw (with flat washer) in the bottom flange hole. Alternately tighten screws until snug.
4. Slide 12 inch bolt through center hole in cross plate until threaded end exits left side of transmission case. See Figure 7-29.
5. On left side of transmission case, slide driver over end of bolt with the side stamped “S” facing the transmission case.
6. Sparingly apply graphite lubricant to threads of bolt to ensure smooth operation and prolong service life.
7. Install Nice bearing, flat washer and hex nut on bolt. See Figure 7-30.
8. Holding head of bolt on right side of transmission case, turn hex nut on left side in a clockwise direction until main drive gear is free.
9. Remove tool. Remove main drive gear from inside transmission case.
10. On left side of transmission case, pull spacer from bore of large oil seal.
11. Remove quad seal from either bevel on spacer or shoulder on main drive gear. Discard quad seal.

NOTE

Always replace the main drive gear bearing when the main drive gear is removed. The bearing will be damaged during the removal procedure.

⚠WARNING

Always wear proper eye protection when removing retaining rings. Use the correct retaining ring pliers. Verify that the tips of the pliers are not damaged or excessively worn. Slippage may propel the ring with enough force to cause eye injury.

12. Remove retaining ring from groove in bearing bore.
13. From inside transmission case, use a block of wood and rubber mallet to gently tap bearing (and large oil seal) towards the outside. Discard bearing and large oil seal.

CLEANING AND INSPECTION

1. Clean all parts in solvent except the transmission case and needle bearings. Blow dry with compressed air.

CAUTION

Do not clean the transmission case and needle bearings. Normal cleaning methods will wash dirt and other contaminants into the bearing case and behind the needle bearings leading to bearing failure.

2. Inspect the main drive gear for pitting and wear. Replace if necessary.
3. Inspect the needle bearings inside the main drive gear. Replace the needle bearings if the mainshaft race is pitted or grooved.
4. Replace the sprocket if teeth are cracked or worn. See Section 6.4 SECONDARY DRIVE BELT AND SPROCKETS, TRANSMISSION SPROCKET, for more information.

Needle Bearing Replacement

NOTE

If the main drive gear needle bearings and/or small oil seal need to be replaced, proceed as follows.

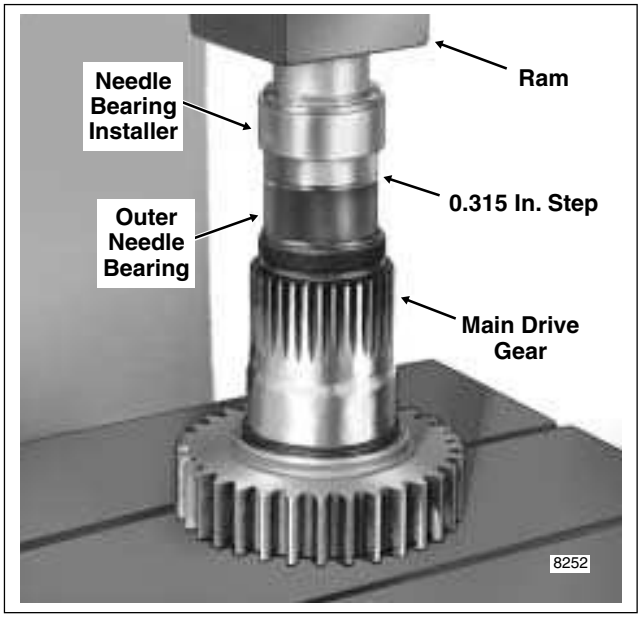

Figure 7-31. Press Clutch Side Needle Bearing into Main Drive Gear

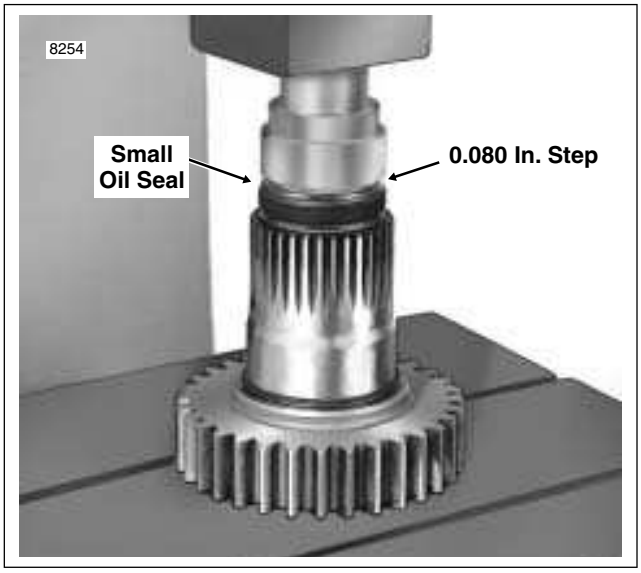

Figure 7-32. Press Small Oil Seal into Main Drive Gear

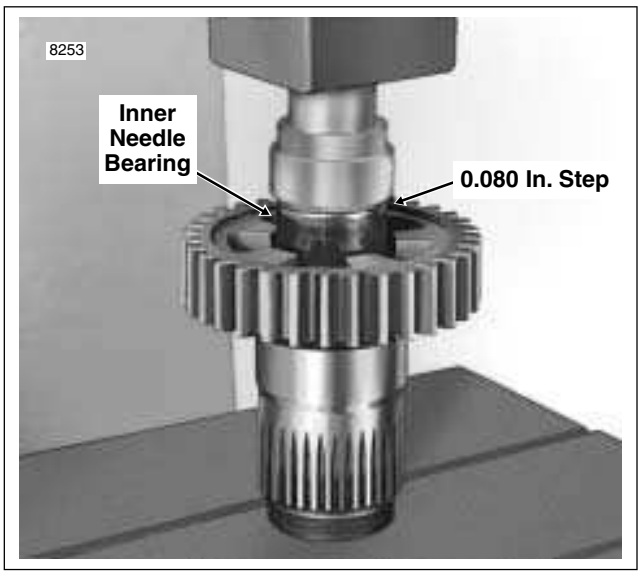

Figure 7-33. Press Transmission Side Needle Bearing into Main Drive Gear

1. Pull small oil seal from splined end of main drive gear. Use a seal remover or rolling head pry bar for best results.
2. Remove needle bearings using a bushing/bearing puller or a suitable straight-thru press tool.
3. Obtain the MAIN DRIVE GEAR NEEDLE BEARING AND SMALL OIL SEAL INSTALLER (HD-37842A).
4. With the splined side up, center main drive gear under ram of arbor press.
5. Start **new** outer (clutch side) needle bearing into splined end.
6. Insert the 0.315 inch step end of tool into needle bearing.
7. Apply pressure until shoulder on tool makes light contact with the gear. See Figure 7-31. Remove tool.
8. Lightly apply Loctite RETAINING COMPOUND No. 609 to OD of **new** small oil seal.
9. With the lip garter spring side down, start oil seal into splined end.
10. Turn the tool over and insert the 0.080 inch step end into oil seal.
11. Apply pressure until shoulder on tool makes light contact with the gear. See Figure 7-32. Remove tool.

NOTE

An alternative method is provided which allows the small oil seal to be pressed into place after installation of the main drive gear. For more information, see FINAL INSTRUCTIONS, step 14.

12. Turn the main drive gear over so that the gear side is up.
13. Start **new** inner (transmission side) needle bearing into gear end.
14. Insert the 0.080 inch step end of tool into needle bearing.
15. Apply pressure until shoulder on tool makes light contact with the gear. See Figure 7-33. Remove tool.

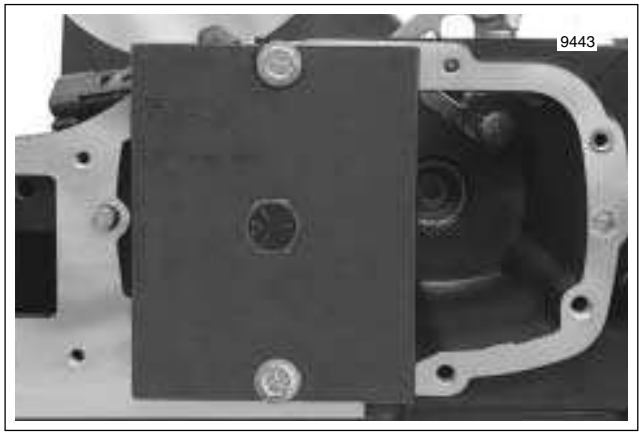

Figure 7-34. Main Drive Gear Bearing Installation (Right Side)

Figure 7-36. Main Drive Gear Installation (Right Side)

Figure 7-35. Main Drive Gear Bearing Installation (Left Side)

Figure 7-37. Main Drive Gear Installation (Left Side)

INSTALLATION

NOTE

A light interference fit should allow the main drive gear bearing to be hand pressed into the transmission case. Move to step 7 if the bearing installs easily by hand. If the bearing is difficult to install, start at step 1 below.

1. If removed, fasten cross plate to right side of transmission case using second most rearward set of holes in the side door flange (with the stamp “this side out” facing outboard and the script right side up). Alternately tighten screws until snug.
2. Slide 12 inch bolt through center hole in cross plate until threaded end exits left side of transmission case. See Figure 7-34.
3. On left side of transmission case, slide **new** bearing over end of bolt with the lettered side out.
4. With the side stamped “S” facing the transmission case, slide driver over end of bolt until it contacts bearing.
5. Install Nice bearing, flat washer and hex nut on bolt. See Figure 7-35.
6. Holding head of bolt on right side of transmission case, turn hex nut on left side in a clockwise direction until bearing bottoms in the bore. Remove tool.

⚠WARNING

Always wear proper eye protection when installing retaining rings. Use the correct retaining ring pliers. Verify that the tips of the pliers are not damaged or excessively worn. Slippage may propel the ring with enough force to cause eye injury.

Figure 7-38. Install Retaining Ring With Gap Facing Rear

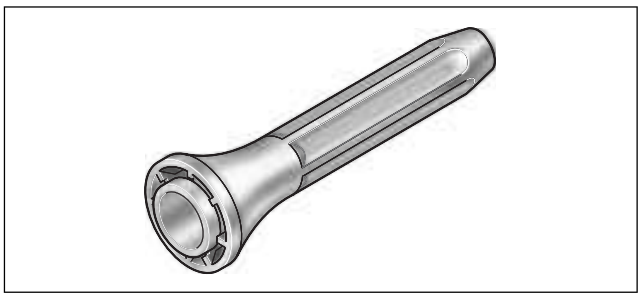

Figure 7-39. Main Drive Gear Large Oil Seal Installer (Part No. HD-41496)

7. With the beveled side out and the ring gap facing the rear, install **new** retaining ring in groove of bearing bore. Verify that the ring is fully seated in the groove. See Figure 7-38.
8. From inside transmission case, carefully position main drive gear in bearing bore.
9. Install backing plate onto 8 inch bolt. From inside transmission case, slide 8 inch bolt through main drive gear until threaded end exits left side of transmission case. Pull on end of bolt until backing plate is positioned flat against inboard side of main drive gear. See Figure 7-36.
10. On left side of transmission case, slide installer cup over end of bolt with the open side over the main drive gear.
11. Sparingly apply graphite lubricant to threads of bolt.
12. Install Nice bearing, flat washer and hex nut on bolt. See Figure 7-37.
13. Holding head of bolt inside transmission case, turn hex nut on left side in a clockwise direction until shoulder on main drive gear makes contact with bearing. Remove tool.
14. Obtain the MAIN DRIVE GEAR LARGE OIL SEAL INSTALLER (HD-41496). See Figure 7-39. Proceed as follows:
    a. With the lip garter spring side out (toward the transmission case), place a **new** large oil seal on lip of tool.
    b. Lightly apply Loctite RETAINING COMPOUND No. 609 to OD of oil seal.
    c. Slide tool over the main drive gear so that it is positioned squarely over the bearing bore.
    d. Hand press the oil seal into the bore. If necessary, use a rubber mallet to lightly tap the tool.
15. Carefully slide **new** quad seal down main drive gear until it contacts shoulder.
16. Apply a small amount of clean transmission lubricant to OD of spacer. With the bevel on the ID toward the transmission case, slide spacer down main drive gear until it contacts shoulder (quad seal seats in bevel of spacer).

FINAL INSTRUCTIONS

1. Verify that the two locating dowels are in place on the right side of the transmission case. Hang a **new** gasket on the dowels.
2. Squirt a liberal amount of clean transmission lubricant into the main drive gear to prelube needle bearings. Install the assembled side door in the transmission case. See Figure 7-27.
3. Install the four 5/16 inch screws (with flat washers) to fasten transmission exhaust bracket and bottom of side door to the transmission case. Install the two 1/4 inch screws to fasten the top of the side door to the transmission case. Alternately tighten six screws until snug.

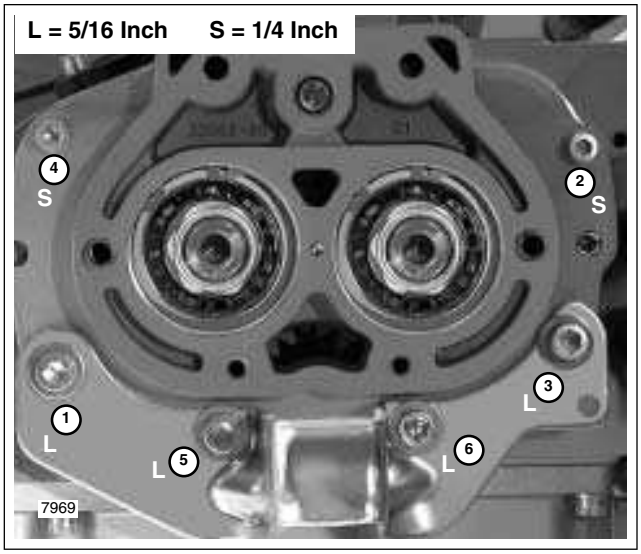

Figure 7-40. Side Door Screw Size and Torque Sequence

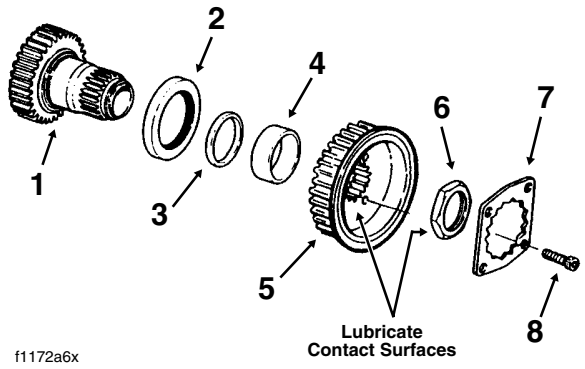

1.	Main Drive Gear	5.	Transmission Sprocket
2.	Large Oil Seal	6.	Sprocket Nut
3.	Quad Seal	7.	Lockplate
4.	Spacer	8.	Socket Screw (2)

Figure 7-41. Install Transmission Sprocket Components

4. Resetting the torque wrench as necessary, tighten the four 5/16 inch screws to 13-16 ft-lbs (18-22 Nm) and the two 1/4 inch screws to 84-108 **in-lbs** (9-12 Nm) in the sequence shown in Figure 7-40.
5. Install the transmission sprocket. Install the belt on the sprocket as the sprocket is installed on the main drive gear.
6. Install the sprocket nut. The following procedure is based on whether a new or used nut is being used.

CAUTION

Exercise caution to avoid getting oil on the threads of the sprocket nut or the integrity of the lock patch may be compromised.

New sprocket nut: smear a small quantity of clean engine oil on the inside face of the sprocket nut and the outside face of the sprocket. Limit the application to where the surfaces of the two parts contact each other. See Figure 7-41. Install the sprocket nut until finger tight.

NOTE

The transmission sprocket nut has left handed threads. Turn the nut counterclockwise to install on the main drive gear.

Used sprocket nut: apply Loctite High Strength Threadlocker 262 (red) to the threads of the sprocket nut. Also smear a small quantity of Loctite or clean engine oil on the inside face of the sprocket nut and the outside face of the sprocket. Limit the application to where the surfaces of the two parts contact each other. See Figure 7-41. Install the sprocket nut until finger tight.

7. Obtain FINAL DRIVE SPROCKET LOCKING TOOL (HD-41184) to lock transmission sprocket. See Figure 7-42. Proceed as follows:

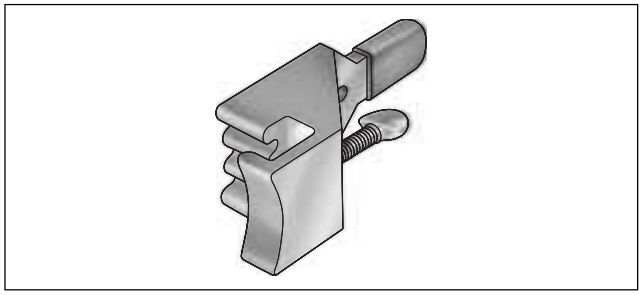

Figure 7-42. Final Drive Sprocket Locking Tool (Part No. HD-41184)

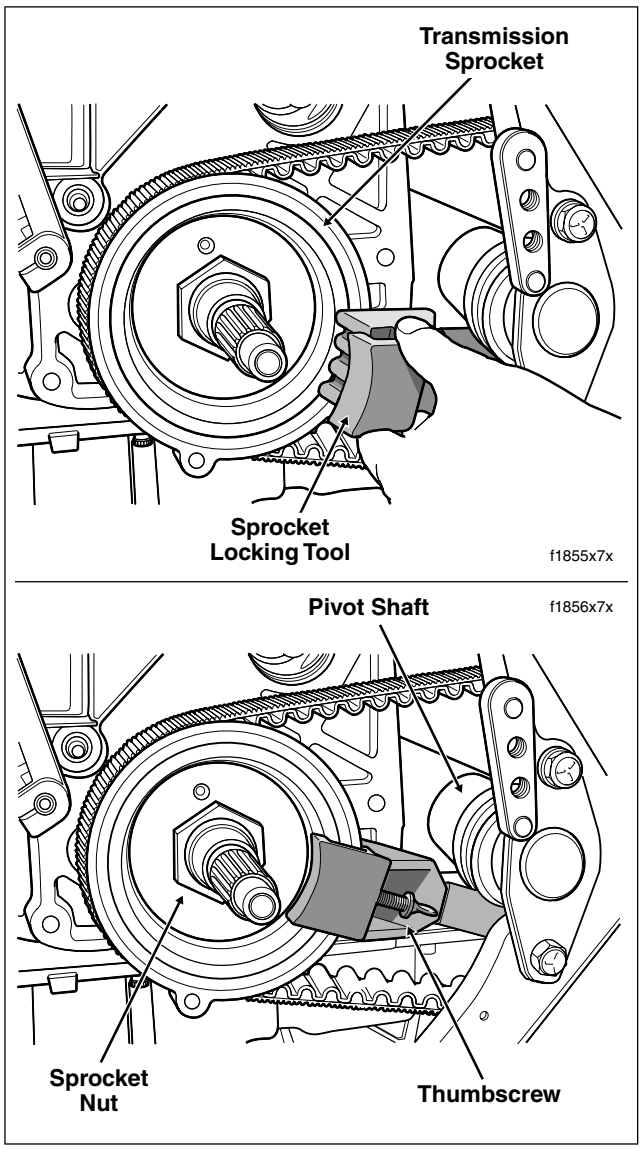

Figure 7-43. Install Final Drive Sprocket Locking Tool

a. Insert handle of tool below pivot shaft inboard of bottom frame tube and attach to sprocket. See upper frame of Figure 7-43.

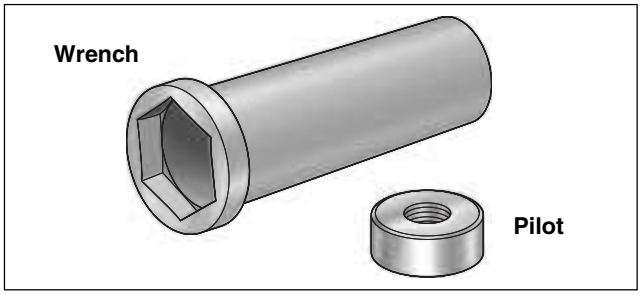

Figure 7-44. Mainshaft Locknut Wrench/Pilot (Part No. HD-94660-37B)

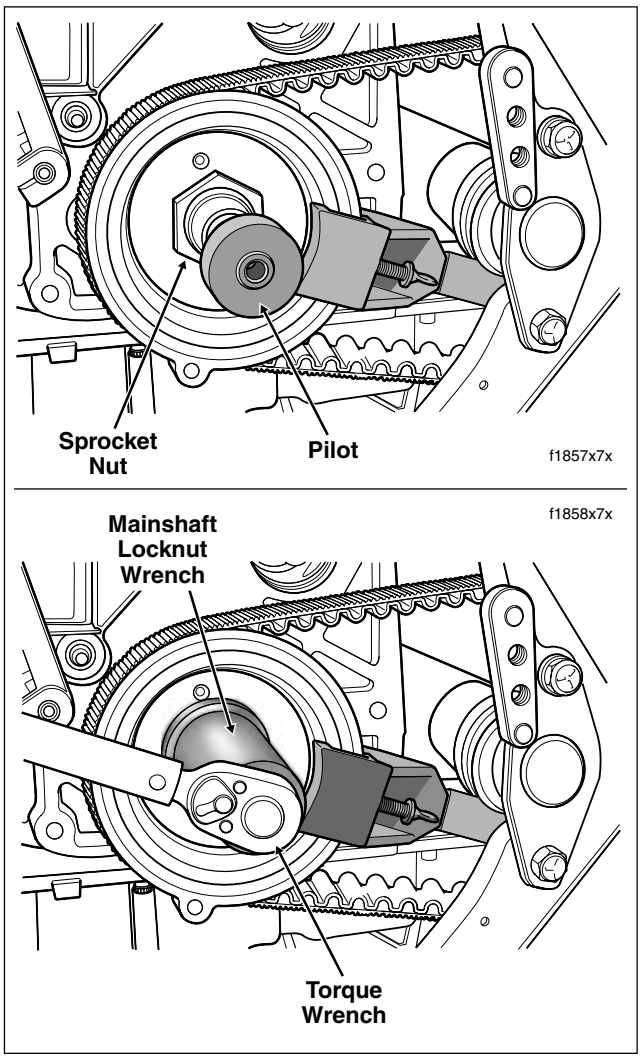

Figure 7-45. Install Mainshaft Locknut Pilot/Wrench and Torque Sprocket Nut

b. Snug thumbscrew to lock position of tool on sprocket. See lower frame of Figure 7-43.

8. Obtain MAINSHAFT LOCKNUT WRENCH/PILOT (HD-94660-37B). See Figure 7-44. Proceed as follows:

   a. Install pilot on threaded end of mainshaft. See upper frame of Figure 7-45.

   b. Slide sleeve of locknut wrench over pilot and onto sprocket nut.

   c. Tighten sprocket nut to 60 ft-lbs (81 Nm). See lower frame of Figure 7-45. As the nut is tightened the handle of the sprocket locking tool rises to contact the pivot shaft, thereby preventing sprocket/mainshaft rotation.

9. Scribe a straight line on the transmission sprocket nut continuing the line over onto the transmission sprocket as shown in Figure 7-46. Tighten the transmission sprocket nut an additional 35° to 40°.

10. Install lockplate over nut so that two diagonally opposite holes align with two tapped holes in sprocket. To find the best fit, lockplate can be rotated to a number of positions and can be placed with either side facing sprocket.

11. If holes in lockplate do not align with those in sprocket, tighten sprocket nut as necessary (up to the 45° maximum) until sprocket and lockplate holes are in alignment. See Figure 7-46.

CAUTION

Maximum allowable tightening of sprocket nut is 45° of counterclockwise rotation after a torque of 60 ft-lbs (81 Nm). Do not loosen sprocket nut to align holes or nut will be under tightened.

12. Insert two socket head screws through lockplate into sprocket holes. Tighten screws to 84-108 **in-lbs** (9.5-12.2 Nm).

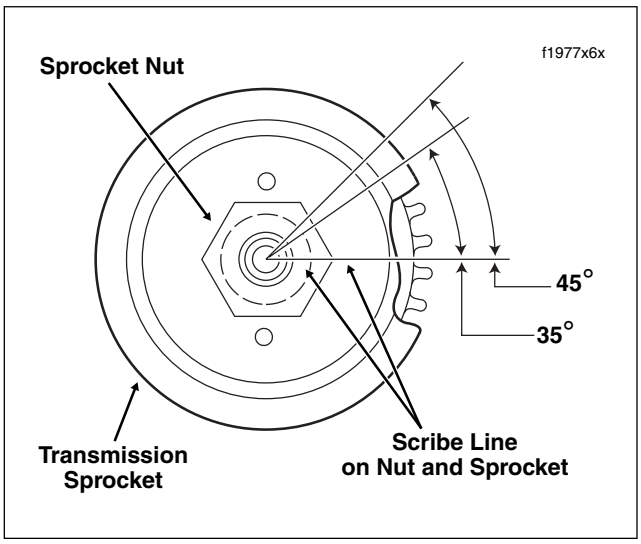

Figure 7-46. Tighten/Secure Sprocket Nut

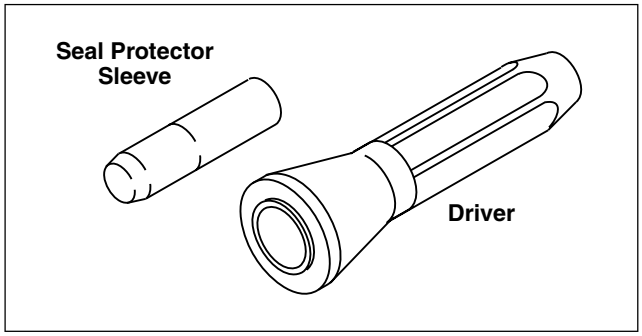

Figure 7-47. Main Drive Gear Small Oil Seal Installer (Part No. HD-41405)

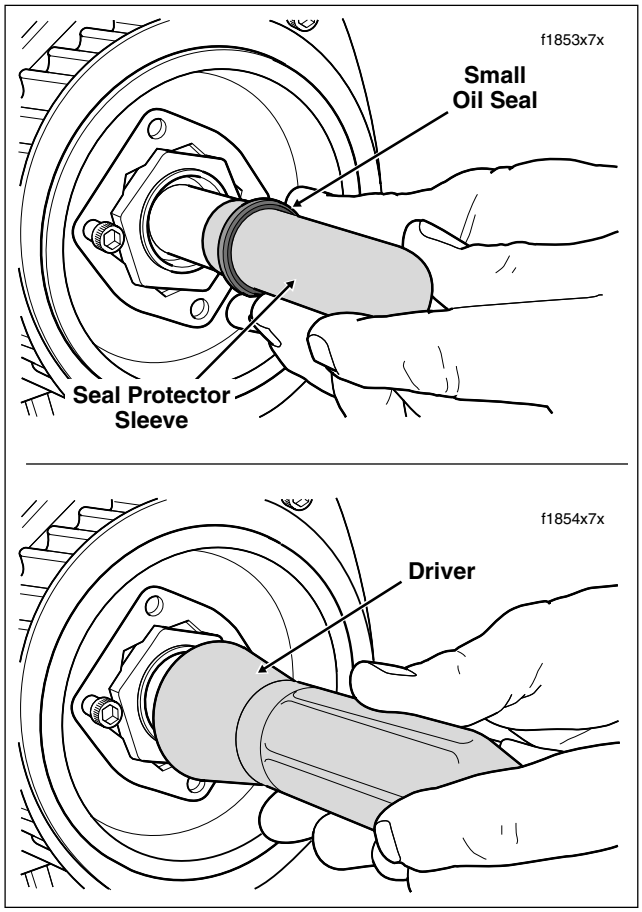

Figure 7-48. Install Small Oil Seal Using Seal Protector Sleeve and Driver

NOTE

The socket head screws have a thread locking compound that allows them to be reused up to three times. The fourth time the screws are removed, replace with ***new*** *screws (H-D Part No. 3594).*

13. Complete installation of rear wheel and adjust the belt tension. See Section 2.4 REAR WHEEL, INSTALLATION.
14. If the main drive gear small oil seal was not installed with the needle bearings (or if a faulty seal is discovered with the main drive gear installed in the transmission case), an alternative method is provided. Proceed as follows:

NOTE

If a serviceable small oil seal is already installed, proceed to step 15.

   a. Obtain the MAIN DRIVE GEAR SMALL OIL SEAL INSTALLER (HD-41405). See Figure 7-47.
   b. Verify that the lip garter spring is in place on the lip of the oil seal.
   c. Place the seal protector sleeve over the end of the mainshaft.
   d. Lightly lubricate the protector sleeve and ID of oil seal with clean transmission lubricant.
   e. Squarely seat the oil seal on the seal protector sleeve with the lip garter spring facing the transmission case. See upper frame of Figure 7-48.
   f. Lightly apply Loctite RETAINING COMPOUND No. 609 to OD of oil seal.
   g. Using the driver, hand press oil seal into the main drive gear. See lower frame of Figure 7-48. A rubber mallet may be used to lightly tap the driver, if necessary.

15. Install the bearing inner race on the transmission mainshaft. See Section 6.5 PRIMARY CHAINCASE, MAINSHAFT BEARING INNER RACE, INSTALLATION.
16. Install shifter cam and fork assemblies. See Section 7.4 SHIFTER CAM ASSEMBLY/SHIFTER FORKS, ASSEMBLY.
17. Install the starter. See Section 5.4 STARTER, INSTALLATION, steps 1-8.
18. Install the primary chaincase and starter jackshaft assembly. Install the clutch assembly, primary chain, and compensating sprocket components. Install the primary chaincase cover. See Section 6.5 PRIMARY CHAINCASE, INSTALLATION.
19. Install the exhaust system. See Section 2.38 EXHAUST SYSTEM, INSTALLATION.

Countershaft Needle Bearing Replacement

1. Find a suitable bearing driver 1-1/4 inch (31.75 mm) in diameter.
2. From the outside of the transmission case place the needle bearing open end first next to the bearing bore. Hold the driver squarely against the closed end of the bearing and tap the bearing into place. The bearing is properly positioned when it is driven inward flush with the outside surface of the case or to a maximum depth of 0.030 inch (0.76 mm).
3. Lubricate the bearing with transmission lubricant.

TRANSMISSION CASE/OIL PAN 7.8

GENERAL

The transmission case and oil pan can be removed as an assembly if the transmission case must be replaced.

If necessary, the oil pan can be removed without removing the transmission case. Once the rear wheel is removed, the oil pan can be slid out from the rear.

REMOVAL

Transmission Case and Oil Pan

1. See Figure 7-49. Remove both the engine oil and transmission lubricant drain plugs from the oil pan. Drain the fluids into suitable containers.
2. Remove the mainshaft and countershaft assemblies. See Section 7.6 MAINSHAFT/COUNTERSHAFT, REMOVAL.

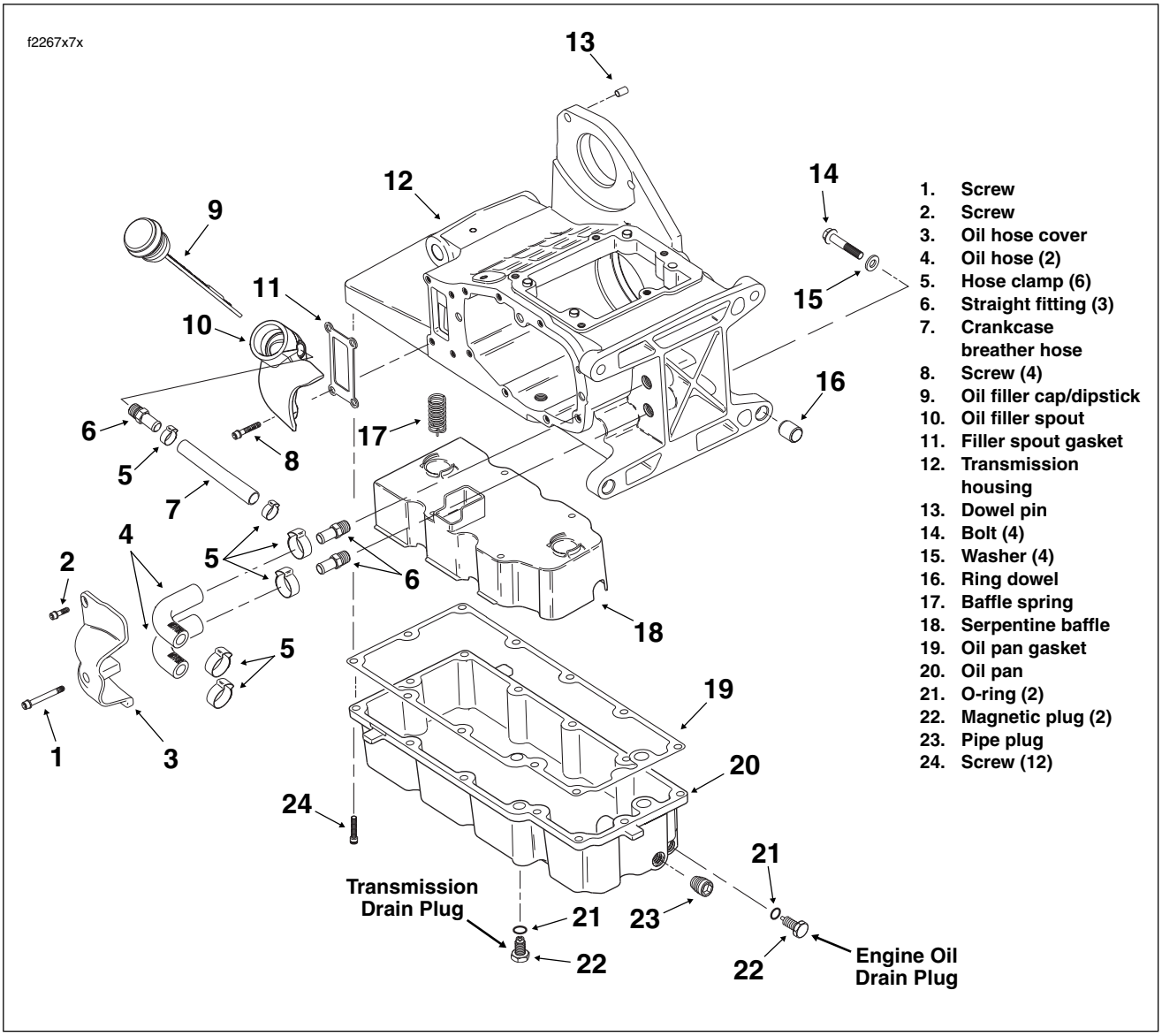

Figure 7-49. Transmission Case and Oil Pan

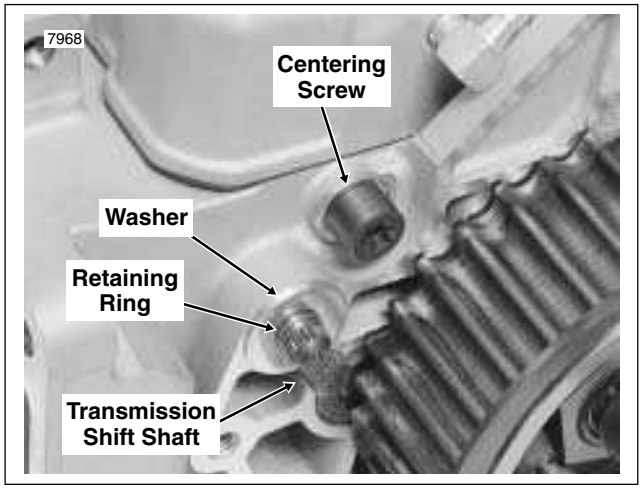

Figure 7-50. Shifter Pawl Centering Screw

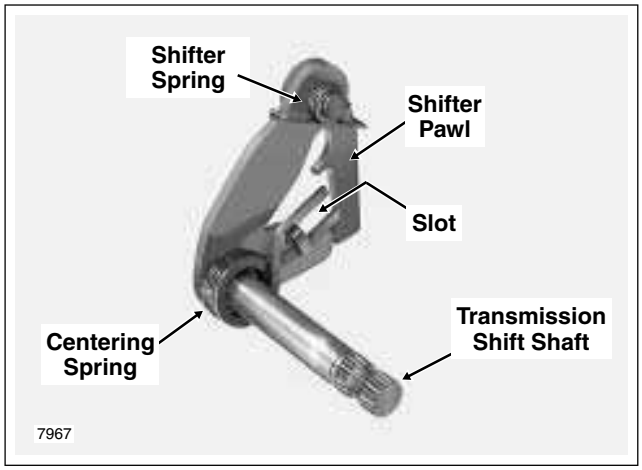

Figure 7-51. Shifter Pawl Assembly

3. Remove rear wheel and rear swingarm. See Section 2.20 REAR SWINGARM, REMOVAL.

NOTE

The main drive gear and bearing may be removed with the transmission case in the frame. See Section 7.7 MAIN DRIVE GEAR/BEARING, REMOVAL.

4. Remove the socket head screw from the shift arm. Remove the shift arm from the transmission shift shaft. Mark splines on transmission shift shaft and shift arm as they are removed to assist in assembly. See Figure 7-50.

5. Using a T50 TORX drive head, turn the centering screw out until it clears the centering spring slot of the shifter pawl assembly. Remove the retaining ring and flat washer from the transmission shift shaft. See Figure 7-51. Push on end of transmission shift shaft to free shifter pawl assembly from transmission case.

6. Remove two allen head socket screws to release oil hose cover. See Figure 7-49.

7. Using a side cutters, cut and remove clamps on transmission side of oil supply and return hoses. Pull hoses from fittings on transmission housing.

8. Cut and remove clamp on transmission side of crankcase breather hose. Pull hose from fitting on oil filler spout.

9. Remove four bolts (with flat washers) to free front of transmission from rear of crankcase. Loosen and remove bolts in a crosswise pattern. Move transmission rearward until two ring dowels in lower flange are free of crankcase.

NOTE

If the main drive gear was not removed from the transmission case, then it may be removed at this time. See Section 7.7 MAIN DRIVE GEAR/BEARING, REMOVAL.

10. Remove the transmission case from the right side of the motorcycle.

NOTE

If removal is difficult, remove the twelve socket head screws to separate the oil pan from the transmission case. For best results, use a long 3/16 inch ball hex socket driver. Holes in the lower frame crossmember allow access to bolts which would not otherwise be accessible.

Oil Pan Only

NOTE

Perform the following procedure if only the oil pan must be removed.

1. See Figure 7-52. Remove both the engine oil and transmission lubricant drain plugs from the oil pan. Drain the fluids into suitable containers.

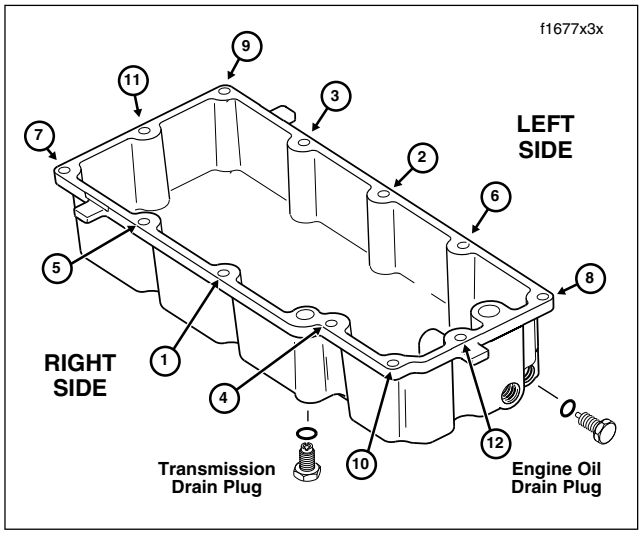

Figure 7-52. Oil Pan Torque Sequence

2. Install lifting strap around frame backbone, and using overhead jack, support motorcycle from the top.
3. Remove rear wheel. See Section 2.4 REAR WHEEL, REMOVAL.
4. With a long 3/16 inch ball hex socket driver (Snap-On stock number FABL6 or equal), remove the twelve socket head screws from the bottom of the oil pan.

NOTE

Holes in the frame crossmember allow access to bolts which would not otherwise be accessible.

CAUTION

Remove the engine oil dipstick before attempting to slide the oil pan rearward. Contact with the oil pan will result in damage to the dipstick.

5. Slide oil pan rearward and remove from underside of transmission.

CLEANING AND INSPECTION

1. Clean all parts in solvent except the transmission case and needle bearings. Blow dry with compressed air.

CAUTION

The transmission case and needle bearings must not be cleaned. Normal cleaning methods will wash dirt or other contaminants into the bearing case (behind the needles) and lead to bearing failure.

2. Inspect the shifter pawl and centering spring for wear. Replace assembly if pawl ends are damaged. Replace centering spring if elongated.
3. Inspect the shifter spring. Replace the spring if it fails to hold the pawl on the cam pins.
4. Thoroughly clean the oil pan with solvent, if removed.
5. Inspect the hoses for nicks, cuts or general deterioration. Replace as necessary. Used compressed air to verify that hoses and fittings are unobstructed.

INSTALLATION

Oil Pan Only

NOTE

The following procedure describes installation of the oil pan with the transmission case mounted in the motorcycle frame. Follow the applicable steps to install the oil pan with the transmission case removed from the motorcycle frame.

1. Apply a thin coat of HYLOMAR® gasket sealer to gasket surface of oil pan.
2. Place gasket on oil pan and allow sealer to dry until tacky.
3. It is normal for the baffle springs to hold the oil pan away from transmission housing. Use a long screwdriver to compress the springs as the pan enters the housing. Exercise caution to avoid cocking or distorting the springs.
4. Position oil pan under transmission and install the twelve oil pan screws, but only tighten about two turns after initial thread engagement.

CAUTION

Inspect the oil pan gasket to ensure that gasket is properly positioned. If gasket was moved out of position, remove screws and repeat step 3 to ensure that gasket is properly positioned.

5. Tighten the oil pan screws to 84-132 **in-lbs** (9.5-14.9 Nm) following the numerical sequence shown in Figure 7-52.
6. Install rear wheel. See Section 2.4 REAR WHEEL, INSTALLATION.
7. Remove lifting strap to release frame backbone from overhead jack.

Transmission Case and Oil Pan

NOTE

If the main drive gear was assembled prior to mounting of the transmission, place belt on transmission sprocket as transmission is placed in position.

1. From right side of motorcycle, place the transmission case (with oil pan) in the frame. Move transmission forward until two ring dowels in lower flange fully engage holes in crankcase. Support the engine and transmission, so that they do not sag at their mating surfaces.
2. Install the transmission-to-engine mounting bolts as follows:
   a. Using a crosswise pattern, **hand tighten** four bolts (with flat washers) to secure transmission housing to rear of crankcase.
   b. Alternately tighten the four bolts to 15 ft-lbs (20.3 Nm) in the same crosswise pattern.

NOTE

For best results, use Open End Crowfoot (Snap-On FC018) on upper left and upper right transmission housing to crankcase bolts.

   c. Repeating the pattern again, final tighten the four bolts to 30-35 ft-lbs (40.7-47.5 Nm).

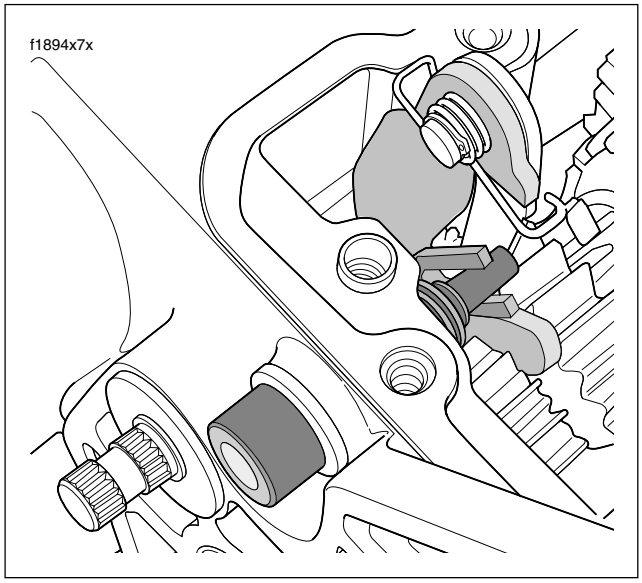

Figure 7-53. Shifter Pawl Assembly

3. Slide **new** clamps onto free ends of oil supply and return hoses. See Figure 7-49. Install hoses onto transmission fittings. Crimp clamps using the Hose Clamp Pliers (HD-41137).

4. Slide **new** clamp onto free end of crankcase breather hose. Install hose onto fitting of oil filler spout. Crimp clamp using HOSE CLAMP PLIERS (HD-97087-65B).

5. Install two allen head socket screws (with captive washers) to secure oil hose cover to transmission and engine housings. Longer screw goes to engine housing. Alternately tighten screws to 84-108 **in-lbs** (10-12 Nm).

6. Slide splined end of shift shaft through sleeved bore until it protrudes from left side of transmission case. Install flat washer and retaining ring on splined end of shift shaft. Hold the shifter pawl assembly inside the transmission case so that the centering spring slot is aligned with the centering screw. Using a T50 TORX drive head, tighten centering screw until snug. See Figure 7-53.

7. Install the shift arm onto the splined end of the transmission shift shaft taking note to align marks placed on splines during disassembly. Install socket head screw and tighten to 18-22 ft-lbs (24-30 Nm). Make sure screw registers in slot of shift arm.

8. Install the mainshaft and countershaft assemblies. See Section 7.6 MAINSHAFT/COUNTERSHAFT, INSTALLATION.

9. Install belt on transmission sprocket.

10. Install the primary chaincase and starter jackshaft assembly. Install clutch assembly, primary chain, and compensating sprocket components. Install the primary chaincase cover. See Section 6.5 PRIMARY CHAINCASE, INSTALLATION.

11. Install rear swingarm and rear wheel. Adjust belt tension. See Section 2.20 REAR SWINGARM, INSTALLATION.

12. Install engine oil drain plug and tighten to 14-21 ft-lbs (19-28 Nm).

13. Add engine oil. See Section 3.3 GENERAL INFORMATION, CHANGING ENGINE OIL AND FILTER, steps 9-12.

Table Of Contents

SUBJECT	PAGE NO.
8.1 Specifications	8-1
8.2 Bulb Chart	8-3
8.3 System Fuses	8-5
8.4 ICM (Carbureted)	8-7
8.5 Sensors (Carbureted)	8-8
8.6 Ignition Coil	8-9
8.7 Spark Plugs/Spark Plug Cables	8-10
8.8 Alternator/Stator	8-12
8.9 Voltage Regulator	8-15
8.10 Battery	8-17
8.11 Headlamp (FLHR/C/S, FLHX, FLHT/C/U)	8-23
8.12 Headlamp (FLTR)	8-26
8.13 Auxiliary Lamps	8-29
8.14 Tail Lamp Assembly	8-34
8.15 Fender Tip Lamps	8-38
8.16 Turn Signal Lamps	8-43
8.17 License Plate Lamps/Bracket (FLHX)	8-52
8.18 TSM/TSSM	8-54
8.19 Ignition/Light Key Switch And Fork Lock	8-55
8.20 Fairing Cap Switches (FLHTC/U)	8-60
8.21 Instrument Nacelle Switches (FLTR)	8-62
8.22 Handlebar Switches	8-66
8.23 Stoplight Switches	8-83
8.24 Neutral Switch	8-84
8.25 Oil Pressure Switch/Sender	8-85
8.26 Horn	8-86
8.27 Cigarette Lighter (FLHX, FLHT/C/U, FLTR)	8-87
8.28 Gauges/Instruments (FLHX, FLHT/C/U, FLTR)	8-88
8.29 Gauges/Instruments (FLHR/C/S)	8-92
8.30 Fuel Level Sender (Carbureted)	8-96
8.31 Cruise Control (FLHRC, FLHTCU, FLTR)	8-101
8.32 Advanced Audio System (FLHX, FLHTC/U, FLTR)	8-109
8.33 Wire Trough	8-116
8.34 Main Harness	8-119
8.35 Interconnect Harness	8-133
8.36 Radio Antenna Cable	8-141
8.37 Audio Harness (FLHTCU)	8-145
8.38 CB Antenna Cable (FLHTCU)	8-149

ELECTRICAL 8

NOTE

See the 2006 ELECTRICAL DIAGNOSTIC MANUAL (Part No. 99497-06) for all SYSTEM DIAGNOSIS and ELECTRICAL TROUBLESHOOTING information.

SPECIFICATIONS 8.1

IGNITION TIMING

ALL FL Models	
RANGE	TDC - 50˚ BTDC
START	TDC

ALTERNATOR SYSTEM

Output Voltage @ 3600 rpm 14.3-14.7

50 Amp: All Models

BATTERY

Voltage 12V

Amperes – 28 AH @ 20 Hour Rate

FUSES

Circuit	Rating (Amperes)	Color
System Fuses		
Maxi-Fuse	40	Orange
Headlamp	15	Blue
Ignition	15	Blue
Lighting	15	Blue
Instruments	15	Blue
Brakes/Cruise	15	Blue
Radio Memory	15	Blue
Radio Power	10	Red
Accessory	15	Blue
Battery	15	Blue
P & A	15	Blue
EFI Fuses		
Fuel Pump	15	Blue
ECM Power	15	Blue

System Fuse Block (Under Left Side Cover)

FLHR/C/S

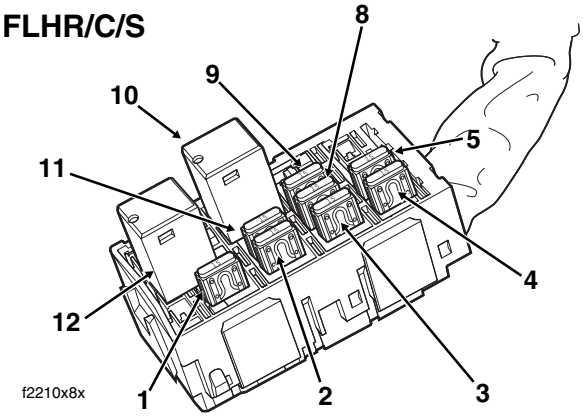

FLHX, FLHT/C/U, FLTR

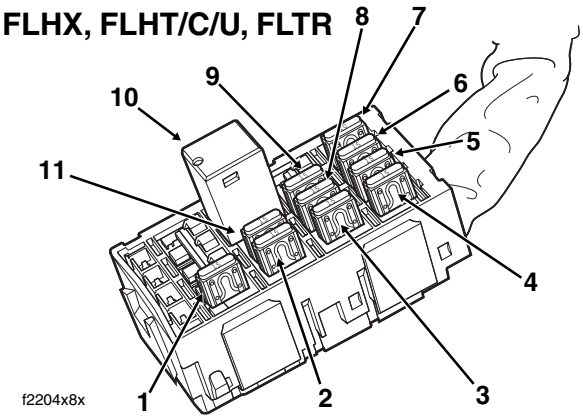

1. Headlamp
2. Ignition
3. Lighting
4. Instruments
5. Brakes/Cruise
6. Radio Memory
7. Radio Power
8. Accessory
9. Battery
10. Brake Light Relay
11. P&A
12. Starter Relay

EFI Fuse Block (Under Right Side Cover)

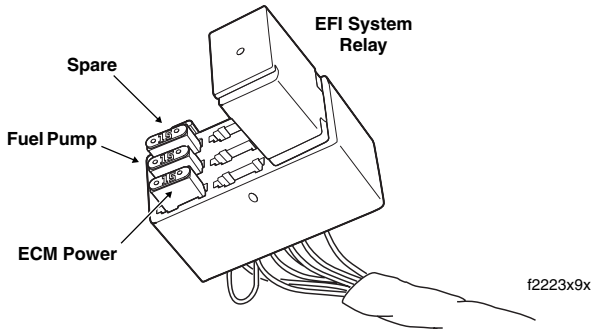

Figure 8-1. Fuse Locations

SPARK PLUG

Part No.	No.	Size	Gap
32317-86A	6R12	12 mm	0.038-0.043 in. 0.97-1.09 mm

NOTE

Be sure spark plugs are gapped to specification before installation.

TORQUE VALUES

Item	ft/in-lbs	Nm
Ignition module socket head screws	50-60 **in-lbs**	5.7-6.8 Nm
MAP sensor TORX screw	25-35 **in-lbs**	2.8-4.0 Nm
Ignition coil bracket socket screws	84-144 **in-lbs**	9.5-16.3 Nm
Spark plug	12-18 ft-lbs	16-24 Nm
Stator to crankcase TORX screws	55-75 **in-lbs**	6.2-8.5 Nm
Battery cable bolt	60-96 **in-lbs**	6.8-10.9 Nm
Voltage regulator locknuts	70-100 **in-lbs**	7.9-11.3 Nm
Battery hold-down clamp TORX screw	15-20 ft-lbs	20-27 Nm
Headlamp door screw	9-18 **in-lbs**	1.0-2.0 Nm
Auxiliary lamp bracket to fork bracket TORX bolts	15-20 ft-lbs	20-27 Nm
Auxiliary lamp bracket to fork bracket stud acorn nuts	72-108 **in-lbs**	8.1-12.2 Nm
Tail lamp lense screws	20-24 **in-lbs**	2.3-2.7 Nm
Tail lamp circuit board/ chrome base screw	40-48 **in-lbs**	4.5-5.4 Nm
Rear fender tip lamp nuts	20-25 **in-lbs**	2.3-2.8 Nm
Front fender tip lamp nuts	20-25 **in-lbs**	2.3 - 2.8 Nm
Front fender trim strip tee bolt nuts	10-15 **in-lbs**	1.1-1.7 Nm
Ignition switch to upper fork bracket	36-60 **in-lbs**	4.1-6.8 Nm
Fairing cap TORX screws	25-30 **in-lbs**	2.8-3.4 Nm
Ignition switch nut	125-150 **in-lbs**	14.1-16.9 Nm
Fork lock to upper fork bracket (FLHR/C/S)	36-60 **in-lbs**	4.1-6.8 Nm
Ignition switch screws (FLHR/C/S)	20-30 **in-lbs**	2.3-3.4 Nm

Continued ...

Item	ft/in-lbs	Nm
Instrument bezel TORX screws	25-35 **in-lbs**	2.8-4.0 Nm
Handlebar clamp to master cylinder housing screws	60-80 **in-lbs**	6.8-9.0 Nm
Lower and upper handle-bar switch housing TORX screws	35-45 **in-lbs**	4-5 Nm
Handlebar clamp to clutch lever bracket TORX screws	60-80 **in-lbs**	6.8-9.0 Nm
Neutral switch	120-180 **in-lbs**	13.6-20.3 Nm
Horn stud flange nut (10mm)	80-100 **in-lbs**	9.0-11.3 Nm
Horn bracket acorn nut to rubber mount stud	80-100 **in-lbs**	9.0-11.3 Nm
2 inch diameter gauge nuts	10-20 **in-lbs**	1.1-2.3 Nm
Tachometer bracket socket screws	10-20 **in-lbs**	1.1-2.3 Nm
Speedometer speed sensor screw	84-108 **in-lbs**	9-12 Nm
Speedometer bracket socket screws	10-20 **in-lbs**	1.1-2.3 Nm
Console mounting bolt acorn nut (FLHR/C/S)	50-90 **in-lbs**	5.7-10.2 Nm
Console pod Phillips screws	6-11 **in-lbs**	0.7-1.2 Nm
Fuel tank canopy TORX screws	18-24 **in-lbs**	2.0-2.7 Nm
Cruise module locknuts	60-96 **in-lbs**	6.8-10.9 Nm
Radio to support bracket socket screws	35-45 **in-lbs**	4.0-5.1 Nm
Upper fairing speaker lower TORX screw	22-28 **in-lbs**	2.5-3.2 Nm
Upper fairing speaker upper TORX screws	35-50 **in-lbs**	4.0-5.7 Nm
Throttle cable J-clamp screw to wellnut (FLHR/C/S)	9-18 **in-lbs**	1.0-2.0 Nm
Ground post flange nuts	50-90 **in-lbs**	5.7-10.2 Nm
VSS screw	84-132 **in-lbs**	9.5-14.9 Nm
Rear stoplight switch	12-15 ft-lbs	16.3-20.3 Nm
Rear fender lights harness stud plate flange nut	60-96 **in-lbs**	6.8-10.9 Nm

BULB CHART 8.2

Lamp Description, All Lamps 12V	Number of Bulbs	Current Draw (Amperage)	Wattage	Harley-Davidson Part No.
HEADLAMP				
FLHR/C/S, FLHX, FLHT/C/U,	1	4.58/5	55/60	68329-03
FLTR	2	4.58/5	55/60	68329-03
POSITION LAMP (HDI)	1	0.32	3.9	53438-92
AUXILIARY LAMPS				
(DOM)	2	2.10	26.9	68453-05
(HDI)	2	2.70	35.0	68851-98
TAIL AND STOP LAMP	1			
Tail Lamp		0.59	6	68167-88
Stop Lamp		2.10	24	68167-88
Tail Lamp (HDI)		0.59	6	68167-88
Stop Lamp(HDI)		2.10	24	68167-88
License Plate (HDI)	1	0.37	5.2	53436-97
TURN SIGNAL LAMP				
Front/Running	2	2.25/.59	27/7	68168-89
Front (HDI)	2	1.75	21	68163-84
Rear	2	2.25	27	68572-64B
Rear (HDI)	2	1.75	21	68163-84
TOUR-PAK				
Side Marker Lamps **				
Tail/Brake Lamps (Ultra)	2	0.59	7	68168-89A
FENDER TIP LAMPS *	2	0.3	3.7	53439-79
LICENSE PLATE LAMPS (FLHX)	2	0.35	-	52441-95
INSTRUMENT PANEL LAMPS FLHX, FLHT/C/U, FLTR				
High Beam	1	0.15	2.1	68024-94
Oil Pressure	1	0.15	2.1	68024-94
Neutral	1	0.15	2.1	68024-94
Turn Signal	2	0.15	2.1	68024-94
GAUGE LAMPS FLHX, FLHT/C/U, FLTR				
Speedometer **				
Tachometer **				
Voltmeter	1	0.24	3.4	67445-00
Oil Pressure Gauge	1	0.24	3.4	67445-00
Air Temperature Gauge	1	0.24	3.4	67445-00
Fuel Gauge	1	0.24	3.4	67445-00
Engine **				
INSTRUMENT PANEL/ GAUGE LAMPS				
FLHR/C/S				
High Beam **				
Oil Pressure **				
Neutral **				
Turn Signal **				
Fuel Gauge **				
Speedometer **				
Odometer **				
Engine **				

* Not Applicable to HDI

** LED Illuminated. LEDs are not repairable. Assembly must be replaced if LED fails.

NOTES

SYSTEM FUSES 8.3

MAXI-FUSE

REMOVAL

1. Remove left side saddlebag. See Section 2.26 SADDLEBAG, REMOVAL.
2. Gently pull side cover from frame downtubes (no tools required).
3. Depress latches on maxi-fuse holder and then slide cover rearward to disengage tongue from groove in fuse block cover. See Figure 8-2.
4. Pull maxi-fuse from maxi-fuse holder. See Figure 8-3.

INSTALLATION

1. Insert maxi-fuse into maxi-fuse holder. See Figure 8-3.
2. Slide cover forward to engage tongue in groove of fuse block cover and then insert maxi-fuse holder into cover until latches engage. See Figure 8-2.
3. Align barbed studs in side cover with grommets in frame downtubes and push firmly into place (no tools required).
4. Install left side saddlebag. See Section 2.26 SADDLEBAG, INSTALLATION.

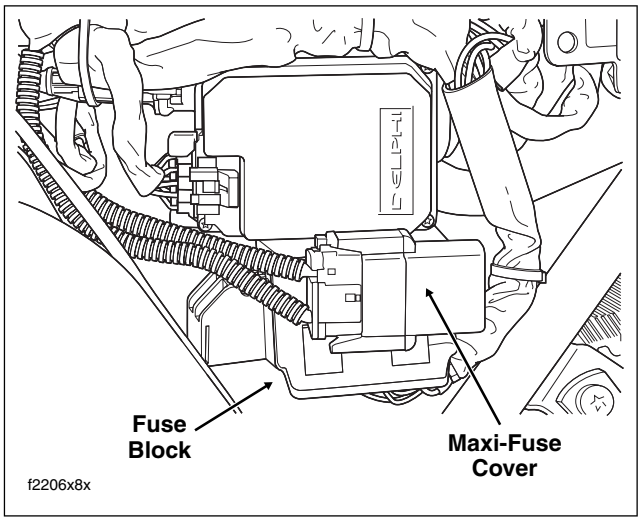

Figure 8-2. Remove Left Side Cover

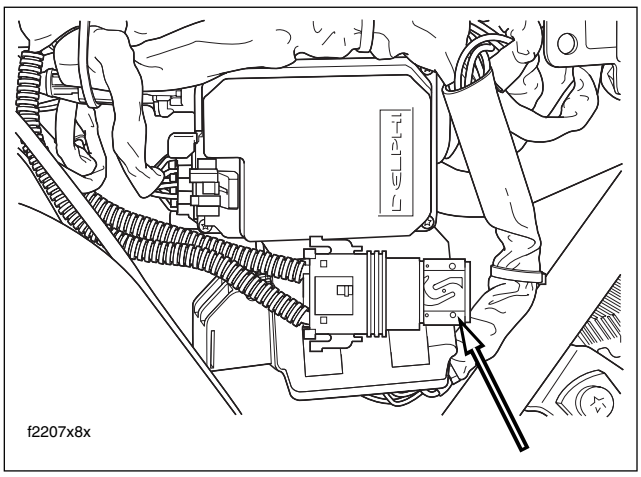

Figure 8-3. Remove Maxi-Fuse

MAXI-FUSE HOLDER

REMOVAL

1. Remove maxi-fuse. See MAXI-FUSE, REMOVAL, in this section.
2. Remove socket terminals from maxi-fuse holder. See Section B.4 PACKARD ELECTRICAL CONNECTORS, 800 METRI-PACK SERIES.

INSTALLATION

3. Install socket terminals into maxi-fuse holder. See Section B.4 PACKARD ELECTRICAL CONNECTORS, 800 METRI-PACK SERIES.
4. Install maxi-fuse. See MAXI-FUSE, INSTALLATION, in this section.

SYSTEM FUSES/RELAYS

REMOVAL

1. Remove maxi-fuse. See MAXI-FUSE, REMOVAL, in this section.
2. Pull fuse block from tabs on mounting bracket. Tabs on bracket fit into slots on each side of fuse block cover.

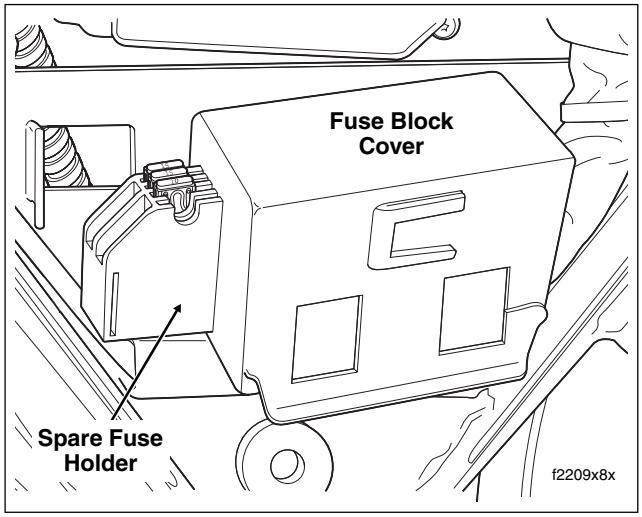

Figure 8-4. Fuse Block Cover

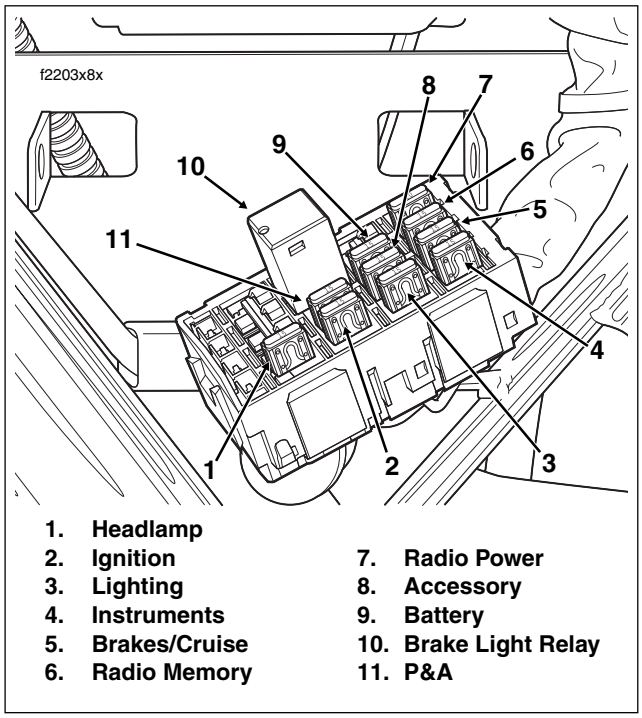

Figure 8-5. Fuse Block (FLHX, FLHTC/U, FLTR)

NOTE

The fuse block cover also serves as the spare fuse holder. One spare 10 amp and 15 amp fuse are provided.

3. Remove the fuse block cover. Raise lipped side slightly to disengage slots from tabs on fuse block. See Figure 8-4.
4. Remove system fuse/relay from fuse block. Replace fuse if the element is burned or broken. Automotive type ATO fuses are used. See Figure 8-5.

NOTE

For FLHR/C/S configuration, see upper frame of Figure 8-1 in Section 8.1 SPECIFICATIONS.

INSTALLATION

1. Install system fuse/relay in fuse block. See Figure 8-5.

NOTE

For FLHR/C/S configuration, see upper frame of Figure 8-1 in Section 8.1 SPECIFICATIONS.

2. Slide cover over fuse block until slots fully engage tabs on block. See Figure 8-4.
3. Slide fuse block into position on mounting bracket. Tabs on bracket fit into slots on each side of fuse block cover.
4. Install maxi-fuse. See MAXI-FUSE, INSTALLATION, in this section.

FUSE BLOCK

REMOVAL

1. Remove system fuses and relay(s). See SYSTEM FUSES/RELAYS, REMOVAL, in this section.
2. Remove socket terminals from fuse block. See Section B.4 PACKARD ELECTRICAL CONNECTORS, 280 METRI-PACK SERIES.

INSTALLATION

1. Install socket terminals into fuse block. See Section B.4 PACKARD ELECTRICAL CONNECTORS, 280 METRI-PACK SERIES.
2. Install system fuses and relay(s). See SYSTEM FUSES/RELAYS, INSTALLATION, in this section.

EFI FUSES

See Section 9.2 ELECTRICAL BRACKET ASSEMBLY, EFI SYSTEM RELAY/EFI FUSES.

ICM (CARBURETED) 8.4

REMOVAL

1. Remove right side saddlebag. See Section 2.26 SADDLEBAG, REMOVAL.
2. Gently pull side cover from frame downtubes (no tools required).
3. Disconnect ICM connector [10], 12-place Deutsch. See Figure 8-6.
4. Remove two socket screws to detach ICM from electrical bracket.

INSTALLATION

1. Align holes in ICM with those in electrical bracket. Install two socket screws and tighten to 50-60 **in-lbs** (5.7-6.8 Nm).
2. Connect ICM connector [10], 12-place Deutsch. See Figure 8-6.
3. Align barbed studs in side cover with grommets in frame downtubes and push firmly into place (no tools required).

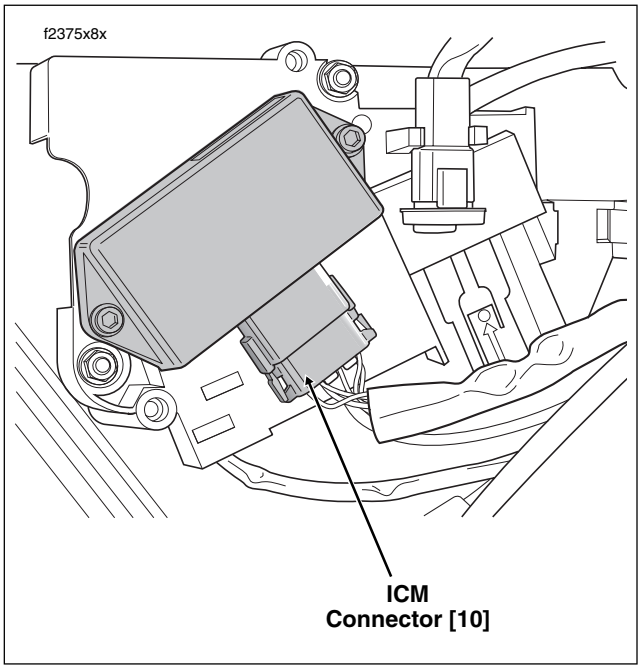

Figure 8-6. Electrical Bracket (Under Right Side Cover)

4. Install right side saddlebag. See Section 2.26 SADDLEBAG, INSTALLATION.

MAP SENSOR

Removal

1. Partially remove fuel tank. See Section 4.7 FUEL TANK (CARBURETED), PARTIAL REMOVAL, FLHX, FLHT, or FLHR/S.
2. Disconnect MAP sensor connector [80], 3-place Packard, at top of intake manifold.
3. Remove T20 TORX screw to release retaining clip from intake manifold. See Figure 8-7.
4. Carefully pull pressure port (enveloped in rubber seal) from hole in intake manifold.
5. If reusing sensor, inspect condition of rubber seal. Replace the seal if it is cut, torn or shows signs of deterioration.

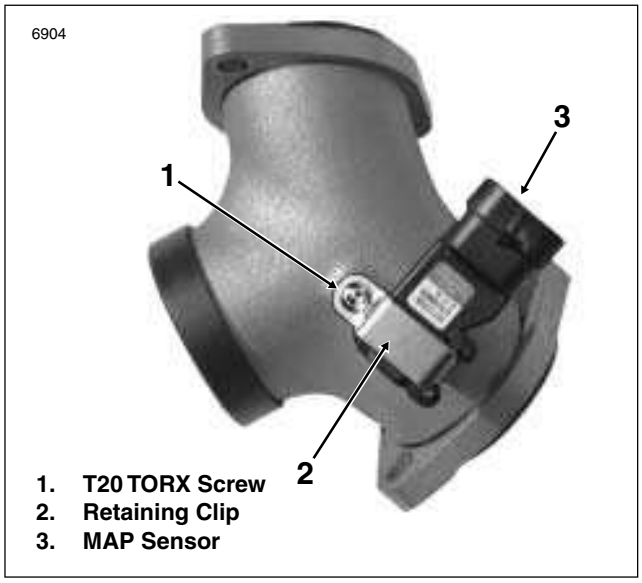

Figure 8-7. Intake Manifold

Installation

1. Install rubber seal on pressure port, if removed.
2. With port side down, slide end of retaining clip in slot at side of sensor. Aligning hole in retaining clip with threaded hole in intake manifold, carefully press pressure port into bore.
3. Install T20 TORX screw and tighten to 25-35 **in-lbs** (2.8-4.0 Nm). See Figure 8-7.
4. Connect MAP sensor connector [80], 3-place Packard.
5. Install fuel tank. See Section 4.7 FUEL TANK (CARBURETED), INSTALLATION (AFTER PARTIAL REMOVAL), INSTALLATION (AFTER PARTIAL REMOVAL), or FLHR/S.

CKP SENSOR

See Section 9.3 SENSORS, CKP SENSOR.

IGNITION COIL 8.6

REMOVAL

1. Partially remove fuel tank. For carbureted models, see Section 4.7 FUEL TANK (CARBURETED), PARTIAL REMOVAL, FLHX, FLHT or FLHR/S. For fuel injected models, see Section 9.4 FUEL TANK (FUEL INJECTED), PARTIAL REMOVAL, FLHXI, FLHT/C/U/I, FLTRI or FLHR/C/S/I.
2. Unplug spark plug cables from ignition coil towers.
3. Remove ignition coil connector [83] from left side of ignition coil. See Figure 8-8.
4. Pull sides of ignition coil bracket outward to remove from bosses of front fuel tank mount.
5. Remove two socket screws to free ignition coil from bracket.

INSTALLATION

1. Align holes in **new** ignition coil with holes in bracket. Properly positioned, connector pin housing should be positioned at cut in bracket. Install two socket screws and tighten to 84-144 **in-lbs** (9.5-16.3 Nm). See Figure 8-9.
2. With the coil towers facing rear of motorcycle, hold ignition coil and bracket at bottom of frame backbone. Pull sides of bracket outward and install on bosses of front fuel tank mount. See Figure 8-8.
3. Install ignition coil connector [83] onto left side of ignition coil.
4. Install spark plug cable to front cylinder onto left side coil tower. Verify that spark plug cable is captured in double-sided cable clip at bottom left side of frame backbone. Install **new** cable clip on T-stud if damaged or missing. See Figure 8-11.
5. Install spark plug cable to rear cylinder onto right side coil tower. Verify that spark plug cable is captured in two single-sided cable clips at bottom left side of frame backbone. Install **new** cable clips on T-studs if damaged or missing. See Figure 8-11.
6. Install fuel tank. For carbureted models, see Section 4.7 FUEL TANK (CARBURETED), INSTALLATION (AFTER PARTIAL REMOVAL), INSTALLATION (AFTER PARTIAL REMOVAL) or FLHR/S. For fuel injected models, see Section 9.4 FUEL TANK (FUEL INJECTED), INSTALLATION (AFTER PARTIAL REMOVAL), FLHXI, FLHT/C/U/I, FLTRI or FLHR/C/S/I.

Figure 8-8. Remove Ignition Coil Bracket From Vehicle

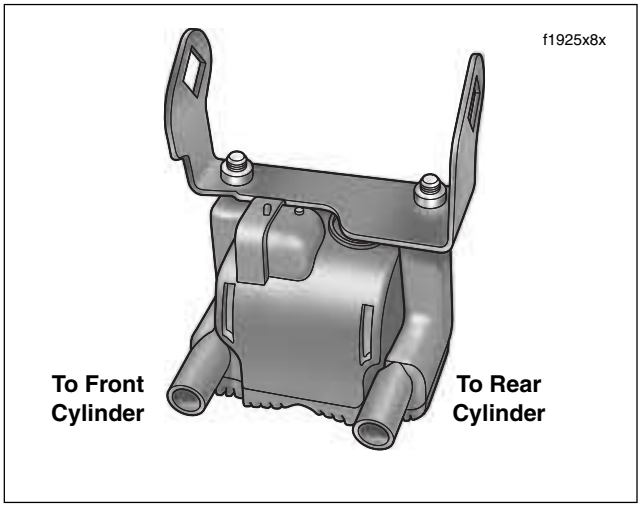

Figure 8-9. Install Bracket to Ignition Coil

SPARK PLUGS/SPARK PLUG CABLES 8.7

SPARK PLUGS

NOTE

The number 6R12 plug is supplied as original equipment and is the only plug that should be used. The resistor plug reduces radio interference created by the ignition system and will not adversely affect performance or fuel economy.

REMOVAL

1. Remove spark plug cables. See SPARK PLUG CABLES on the next page.
2. Remove spark plug using a 5/8 inch spark plug socket.

INSPECTION

See Figure 8-10. Examine plugs as soon as they have been removed. The deposits on the plug base are an indication of the plug efficiency and are a guide to the general condition of rings, valves, carburetor and ignition system.

a. A wet black and shiny deposit on plug base, electrodes and ceramic insulator tip indicate an oil fouled plug. The condition may be caused by worn rings and pistons, loose valves or seals, weak battery or faulty ignition.

b. A dry fluffy or sooty black deposit indicates a too rich carburetor air-fuel mixture or long periods of engine idling. Excessive use of the enrichener may also cause this condition.

c. An overheated plug can be identified by a light brown, glassy deposit. This condition may be accompanied by cracks in the insulator or by erosion of the electrodes. This condition is caused by too lean an air-fuel mixture, a hot running engine, valves not seating or improper ignition timing. The glassy deposit on the spark plug is a conductor when hot and may cause high speed misfiring. A plug with eroded electrodes, heavy deposits or a cracked insulator should be replaced.

d. A plug with white, yellow or light tan to rusty brown powdery deposit indicates balanced combustion. The deposits may be cleaned off at regular intervals if desired.

CLEANING

1. Degrease firing end of spark plug using ELECTRICAL CONTACT CLEANER. Dry spark plug with compressed air.
2. Use a thin file to flatten spark plug electrodes. A spark plug with sharp edges on its electrodes requires 25%-40% less firing voltage than one with rounded edges.
3. Adjust spark plug gap. See ADJUSTMENT on this page.

Figure 8-10. Types of Plug Base Deposits

ADJUSTMENT

Use only a wire-type gauge. Bend the outside electrode so only a slight drag on the gauge is felt when passing it between electrodes. Never make adjustments by bending the center electrode. Set gap on all plugs at 0.038-0.043 in. (0.97-1.09 mm).

INSTALLATION

1. Before installing spark plugs, check condition of threads in cylinder head and on plug. If necessary soften deposits with penetrating oil and clean out with a thread chaser.
2. Apply a very light coating of ANTISEIZE LUBRICANT to spark plug threads.
3. Install spark plug finger tight and then tighten to 12-18 ft-lbs (16-24 Nm).

NOTE

If a torque wrench is not available, finger tighten spark plug and then using a spark plug wrench, tighten plug an additional 1/4 turn.

4. Connect spark plug cables to spark plug terminals. Make sure boots/caps are secured properly.
5. Check engine idle speed, and adjust if necessary.

SPARK PLUG CABLES

NOTE

Resistor-type high-tension cables have a carbon-impregnated fabric core (instead of solid wire) for radio noise suppression and improved reliability of electronic components. Use the exact replacement cable for best results.

REMOVAL

WARNING

Never disconnect a spark plug cable with the engine running. Doing so will result in an electric shock from the ignition system that could result in death or serious injury.

CAUTION

When disconnecting a spark plug cable from the spark plug terminal, always grasp and pull on the rubber boot at the end of the cable assembly (as close to the spark plug terminal as possible). Pulling on the cable portion will damage the carbon core.

1. Disconnect spark plug cables from ignition coil and spark plug terminals.

INSPECTION

1. Check cables for cracks or loose terminals.
2. Check spark plug cable resistance with an ohmmeter. Resistance must be as follows:

Table 8-1. Spark Plug Cable Resistance

Position	Cable Length	Resistance (Ohms)
Front /Rear	20 Inches (508 mm)	5,000 - 11,666

3. Replace cables that are worn or damaged, or that do not meet resistance specifications.
4. Check cable boots/caps for cracks or tears. Also check for loose fit on ignition coil and spark plugs. Replace boots/caps if defects are noted.

INSTALLATION

1. Connect spark plug cables to spark plug terminals.
2. Install spark plug cable to front cylinder onto left side coil tower. Verify that spark plug cable is captured in double-sided cable clip at bottom left side of frame backbone. Install **new** cable clip on T-stud if damaged or missing. See Figure 8-11.
3. Install spark plug cable to rear cylinder onto right side coil tower. Verify that spark plug cable is captured in two single-sided cable clips at bottom left side of frame backbone. Install **new** cable clips on T-studs if damaged or missing. See Figure 8-11.

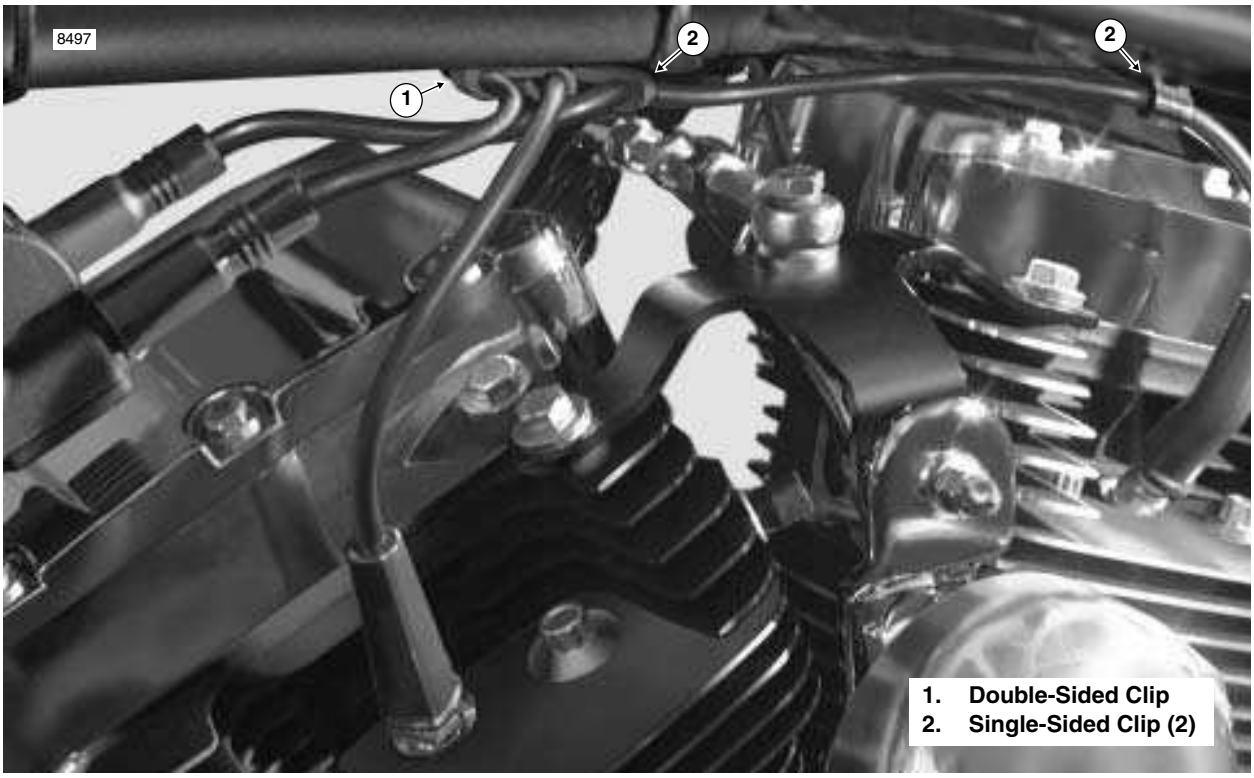

Figure 8-11. Spark Plug Cable Clips (Left Side View)

REMOVAL

1. Remove seat. See Section 2.25 SEAT, REMOVAL.

WARNING

To protect against shock and accidental start-up of vehicle, disconnect the negative battery cable before proceeding. Inadequate safety precautions could result in death or serious injury.

2. Unthread bolt and remove battery negative cable (black) from battery negative (-) terminal.

3. Remove the primary chaincase cover. Remove the clutch, primary chain, compensating sprocket and shaft extension as a single assembly. See Section 6.5 PRIMARY CHAINCASE, REMOVAL, steps 3-15.

CAUTION

The high-output rotor contains powerful magnets. Use the ROTOR REMOVER/INSTALLER and SHAFT PROTECTOR SLEEVE (HD-41771) to prevent parts damage and possible hand injury during removal and installation.

4. Remove the rotor as follows:

   a. Verify that threads of engine sprocket shaft are clean, especially of old Loctite material. See A of Figure 8-12.

   b. Thread the Shaft Protector Sleeve onto the shaft. See B of Figure 8-12.

   c. Turn thumbscrews of Rotor Remover/Installer into threaded holes in rotor face. See C of Figure 8-12.

   d. Rotate handle of forcing screw in a clockwise direction to remove rotor from shaft.

5. Locate CKP sensor connector [79], 2-place Deutsch, fixed to bracket at bottom of voltage regulator. Push connector toward right side of motorcycle to disengage attachment clip from T-stud on bracket. See Figure 8-15.

6. Loosen locknuts on studs of lower frame crossmember. Lift voltage regulator and release conduit from P-clip under left side leg of voltage regulator.

7. Pull away locking latch and remove socket of stator connector [46], 3-place Lyall, at bottom left side of voltage regulator.

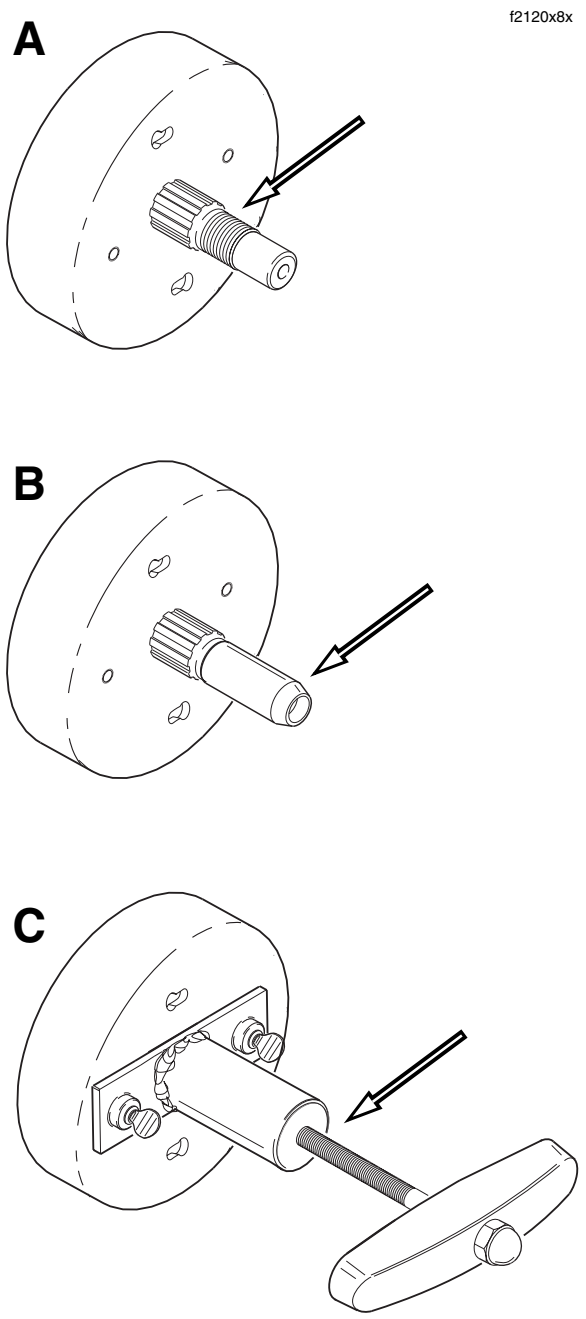

A Clean Sprocket Shaft Threads.
B Install Shaft Protector Sleeve.
C Install Rotor Remover/Installer.
Rotate Handle in a Clockwise Direction.

Figure 8-12. Remove Rotor from Engine Sprocket Shaft

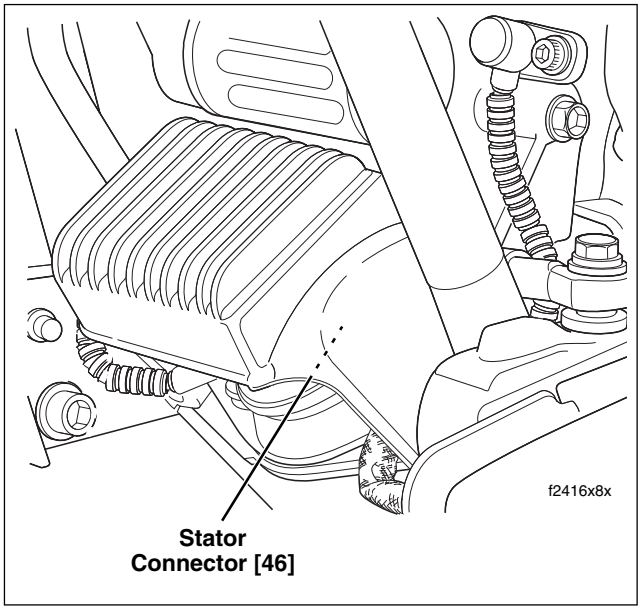

Figure 8-13. Voltage Regulator (Left Side View)

NOTE

The rubber molded stator connector is not serviceable. Damage to terminals or molding requires stator and/or voltage regulator replacement.

8. Draw stator conduit and socket to rear of front engine stabilizer link and then up to area in front of primary chaincase.
9. Remove four T27 TORX screws to free stator from crankcase. Discard screws.
10. Using point of awl, carefully lift capped rib on grommet away from crankcase and then insert into bore between grommet and casting. See Figure 8-14. Tilt awl slightly squirting isopropyl alcohol or glass cleaner into opening. Repeat this step at one or two other locations around grommet.
11. While pushing on capped rib from outside of crankcase, draw grommet through bore by pulling on cable stop with needle nose pliers. Rock grommet back and forth to facilitate removal, if necessary. Exercise caution to avoid damaging ribs on grommet if stator is to be reused.
12. Draw conduit and socket through crankcase bore.

CLEANING AND INSPECTION

1. Check inside of rotor and remove any metal fragments captured by magnets.
2. Clean the rotor using a petroleum solvent. Clean the stator and grommet by wiping it with a clean cloth.

INSTALLATION

1. From inside crankcase, feed socket and conduit through hole in crankcase.
2. Thorougly lubricate grommet with isopropyl alcohol or glass cleaner. Ribs of grommet must be clean and free of dirt and oily residue.
3. Carefully grasp cable stop behind grommet with a needle nose pliers. Push grommet into crankcase bore while carefully pulling on outside cable. Installation is complete when cable stop contacts casting and capped rib of grommet exits crankcase bore.
4. If necessary, carefully run awl around edge of capped rib so that it rests flat against seating surface on crankcase.

CAUTION

Do not reuse T27 TORX screws. The threads of the screws contain a locking compound in pellet form. When the screw is started, the pellet breaks releasing the compound.

5. Install four **new** T27 TORX screws to fasten stator to crankcase. Alternately tighten screws to 55-75 **in-lbs** (6.2-8.5 Nm).

⚠CAUTION

The high-output rotor contains powerful magnets. Use the ROTOR REMOVER/INSTALLER and SHAFT PROTECTOR SLEEVE (HD-41771) to prevent parts damage and possible hand injury during removal and installation.

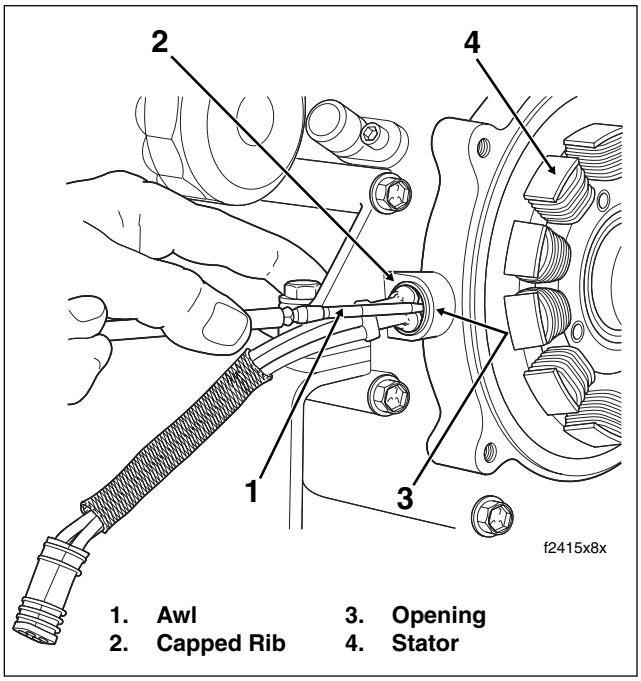

Figure 8-14. Remove Grommet From Crankcase

6. Install the rotor as follows:
   a. Install the Shaft Protector Sleeve and Rotor Remover/Installer, if removed. See Figure 8-12.

NOTE

The Shaft Protector Sleeve not only protects the threads from the splines of the rotor, but acts as a guide to ensure that the rotor is properly centered.

   b. Center ball on forcing screw in recess at end of engine sprocket shaft. Rotate the handle of the tool in a counterclockwise direction to ease rotor into position over stator.
   c. Loosen thumbscrews and remove Rotor Remover/Installer. Remove Shaft Protector Sleeve.
   d. Install the shaft extension on the engine sprocket shaft.
7. Feed socket and conduit under front engine stabilizer link and then forward along outboard side of voltage regulator leg. See Figure 8-13.
8. Capture conduit in P-clip under left side leg of voltage regulator. Remove slack to ensure that conduit does not contact front engine stabilizer link.
9. Install socket of stator connector [46], 3-place Lyall, at bottom left side of voltage regulator. Push against locking latch until socket is fully engaged.
10. Alternately tighten locknuts on studs of lower frame crossmember to 70-100 **in-lbs** (7.9-11.3 Nm).
11. Locate CKP sensor connector [79], 2-place Deutsch. Place large end of slot on attachment clip over T-stud on bracket at bottom of voltage regulator. Push connector toward left side of motorcycle to engage small end of slot.
12. Install the clutch, primary chain, compensating sprocket and shaft extension as a single assembly. Install the primary chaincase cover. See Section 6.5 PRIMARY CHAINCASE, INSTALLATION, steps 9-31.
13. Insert bolt through battery negative cable (black) into threaded hole of battery negative (-) terminal. Tighten bolt to 60-96 **in-lbs** (6.8-10.9 Nm).
14. Install seat. See Section 2.25 SEAT, INSTALLATION.

VOLTAGE REGULATOR 8.9

REMOVAL

1. Remove maxi-fuse. See Section 8.3 SYSTEM FUSES, MAXI-FUSE, REMOVAL.
2. Locate CKP sensor connector [79], 2-place Deutsch, fixed to bracket at bottom of voltage regulator. Push connector toward right side of motorcycle to disengage attachment clip from T-stud on bracket. See Figure 8-15.
3. Remove locknuts from studs on lower frame crossmember. Lift voltage regulator off studs.
4. Release conduit and convoluted tubing from P-clips under left and right side legs of voltage regulator. Allow voltage regulator to hang upside down at front of lower frame crossmember. See Figure 8-16.
5. Pull away locking latch and remove socket of voltage regulator connector [77], 2-place Lyall, at bottom right side of voltage regulator.
6. Pull away locking latch and remove socket of stator connector [46], 3-place Lyall, at bottom left side of voltage regulator.

NOTE

The rubber molded voltage regulator and stator connectors are not serviceable. Damage to terminals, molding or locking latches requires voltage regulator and/or stator replacement.

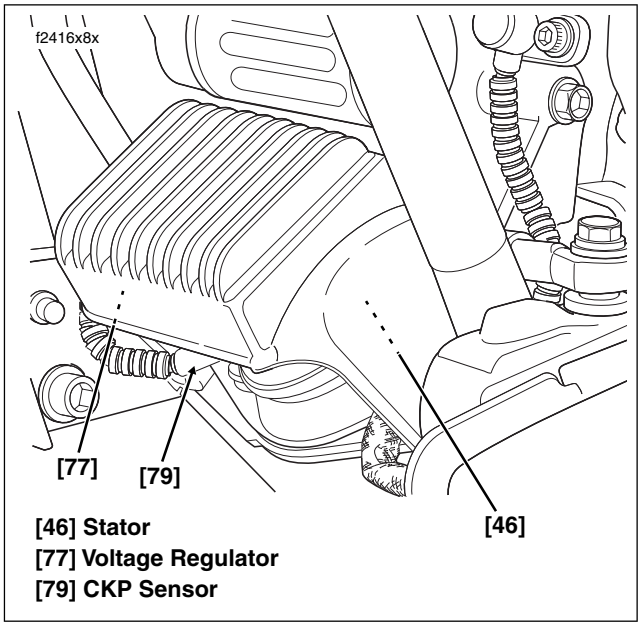

Figure 8-15. Voltage Regulator (Left Side View)

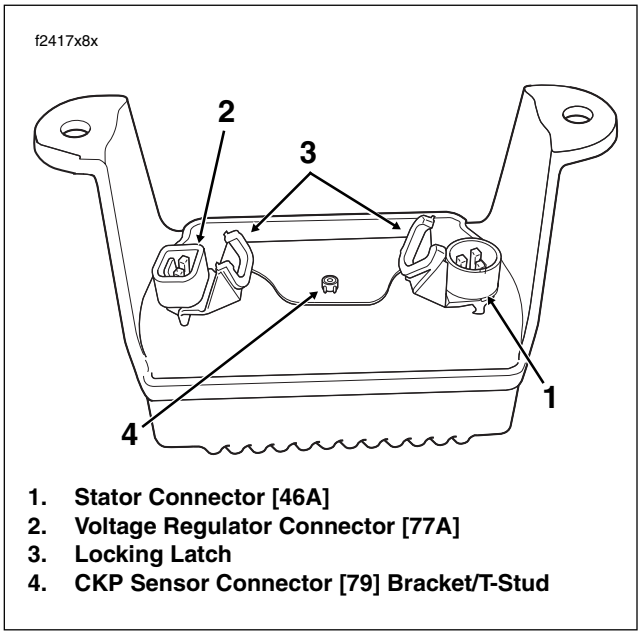

Figure 8-16. Voltage Regulator (Bottom View)

7. Remove voltage regulator from motorcycle.

INSTALLATION

1. Position voltage regulator upside down at front of lower frame crossmember. See Figure 8-16.
2. Install socket of stator connector [46], 3-place Lyall, at bottom left side of voltage regulator. Push against locking latch until socket is fully engaged.
3. Install socket of voltage regulator connector [77], 2-place Lyall, at bottom right side of voltage regulator. Push against locking latch until socket is fully engaged.
4. Turning voltage regulator right side up, start onto studs on lower frame crossmember.
5. Capture stator connector conduit in left side P-clip. Capture voltage regulator connector conduit and CKP sensor connector convoluted tubing in right side P-clip. See Figure 8-15. Remove slack to ensure that stator conduit and CKP sensor tubing does not contact front engine stabilizer link.
6. Install locknuts on studs and alternately tighten to 70-100 **in-lbs** (7.9-11.3 Nm).

7. Locate CKP sensor connector [79], 2-place Deutsch. Place large end of slot on attachment clip over T-stud on bracket at bottom of voltage regulator. Push connector toward left side of motorcycle to engage small end of slot.
8. Install maxi-fuse. See Section 8.3 SYSTEM FUSES, MAXI-FUSE, INSTALLATION.
9. Load test charging system.

BATTERY 8.10

GENERAL

All batteries are permanently sealed, maintenance-free, valve-regulated, lead/calcium and sulfuric acid batteries. The batteries are shipped pre-charged and ready to be put into service. Do not attempt to open these batteries for any reason.

⚠WARNING

All batteries contain electrolyte. Electrolyte is a sulfuric acid solution that is highly corrosive and can cause severe chemical burns. Avoid contact with skin, eyes, and clothing. Avoid spillage. Always wear protective face shield, rubberized gloves and protective clothing when working with batteries. A warning label is attached to the top of the battery. See Figure 8-17. Never remove warning label from battery. Failure to read and understand all precautions contained in warning label before performing any service on batteries could result in death or serious injury. See Figure 8-18.

Table 8-2. Antidote

External -	**Flush with water**
Internal -	**Drink large quantities of milk or water, followed by milk of magnesia, vegetable oil or beaten eggs. Call doctor immediately.**
Eyes -	**Flush with water, get immediate medical attention.**

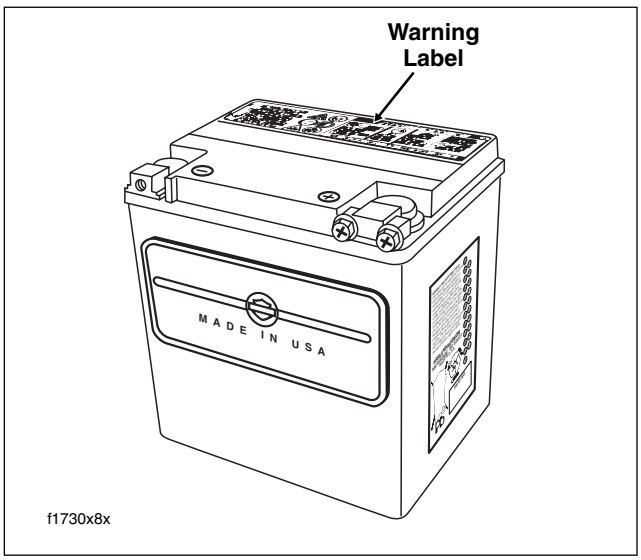

Figure 8-17. Maintenance-Free Battery

BATTERY TESTS

Three different procedures may be performed to provide a good indicator of battery condition: a voltmeter test, a conductance test, or a load test.

A battery may be tested, whether fully charged or not, via the voltmeter or conductance tests. In order to perform a load test, however, the battery must be fully charged.

VOLTMETER TEST

See Table 8-3. Check the voltage of the battery to verify that it is in a 100% fully charged condition. If the open circuit (disconnected) voltage reading is below 12.6V, charge the battery and then recheck the voltage after the battery has set for

Figure 8-18. Battery Warning Label

one to two hours. If the voltage reading is 12.7V or above, perform the LOAD TEST described on this page.

Table 8-3. Voltmeter Test

Voltage (OCV)	State of Charge
12.7	100%
12.6	75%
12.3	50%
12.0	25%
11.8	0%

CONDUCTANCE TEST

Test battery using the ADVANCED BATTERY CONDUCTANCE AND ELECTRICAL SYSTEM ANALYZER (HD-48053). See Figure 8-19. Proceed as follows:

1. Connect the analyzer leads to the battery.
2. Follow the instructions in the analyzer instruction manual to perform a battery test.

The test results will include a decision on the battery condition, the measured state of charge and the measured CCA.

See Figure 8-20. The analyzer printer will provide you with a printout including one of five possible test results:

- GOOD BATTERY–return the battery to service.
- GOOD-RECHARGE–fully charge the battery and return to service.
- CHARGE & RETEST–Fully charge the battery and retest.
- REPLACE BATTERY–replace the battery and retest.
- BAD CELL-REPLACE–replace the battery and retest.

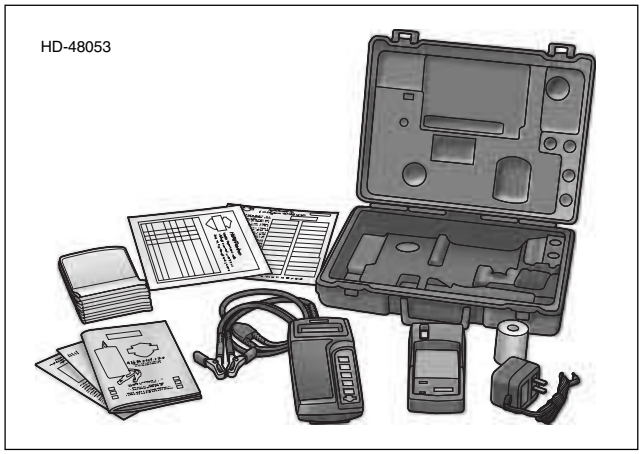

Figure 8-19. Advanced Battery Conductance and Electrical System Analyzer (Part No. HD-48053)

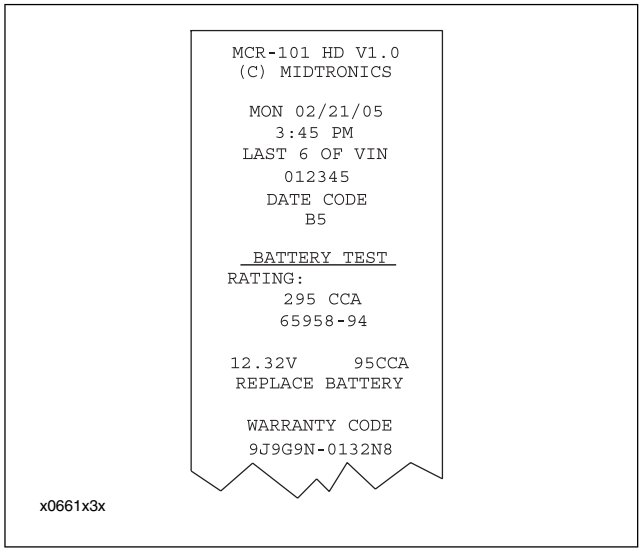

Figure 8-20. Battery Test Results–Printout

NOTE

A REPLACE BATTERY test result may also mean a poor connection between the battery cables and the motorcycle. After disconnecting the battery cables from the battery, retest the battery using the out-of-vehicle test before replacing.

LOAD TEST

The load test measures battery performance under full current load. To load test the battery, proceed as follows:

1. Remove the battery from the motorcycle. See DISCONNECTION AND REMOVAL in this section.

CAUTION

Load testing a discharged battery can result in permanent battery damage.

2. Always fully charge the battery before testing or test readings will be incorrect. See CHARGING BATTERY, in this section. Load testing a discharged battery can also result in permanent battery damage.
3. After charging, allow battery to stand for at least one hour before testing.

⚠WARNING

Always turn the battery load tester OFF before connecting the tester cables to the battery terminals. Connecting tester cables with the load tester ON could cause a spark resulting in a battery explosion. A battery explosion may rupture the battery case causing a discharge or spray of sulfuric acid which could result in death or serious injury.

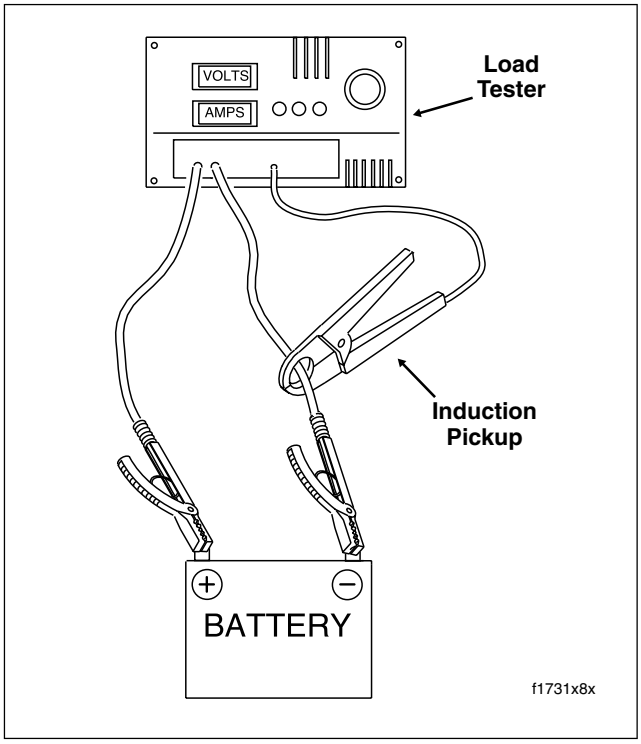

Figure 8-21. Load Test Battery

4. Connect tester leads to battery posts and place induction pickup over negative (black) cable. See Figure 8-21.

CAUTION

To avoid load tester and/or battery damage, do not leave the load tester switch turned ON for more than 20 seconds.

5. Referencing Table 8-4, load battery at 50% of CCA rating using the load tester. Voltage reading after 15 seconds should be 9.6V or more at 70°F. (21°C).

Table 8-4. Battery Load Test

COLD CRANKING AMPERAGE (CCA)	100%	50%
TOURING	300	150

⚠WARNING

Always turn the battery load tester OFF before disconnecting the tester cables from the battery terminals. Disconnecting tester cables with the load tester ON could cause a spark resulting in a battery explosion. A battery explosion may rupture the battery case causing a discharge or spray of sulfuric acid which could result in death or serious injury.

6. Install the battery on the motorcycle. See INSTALLATION AND CONNECTION in this section.

DISCONNECTION AND REMOVAL

1. Remove seat. See Section 2.25 SEAT, REMOVAL.

⚠WARNING

Always disconnect the negative battery cable first. If the positive cable should contact ground with the negative cable installed, the resulting sparks may cause a battery explosion which could result in death or serious injury.

2. Unthread bolt and remove battery negative cable (black) from battery negative (-) terminal.
3. Unthread bolt and remove battery positive cable (red) from battery positive (+) terminal.
4. Loosen T40 TORX screw to move lip of hold-down clamp off edge of battery. Remove battery from battery box.

CLEANING AND INSPECTION

1. Battery top must be clean and dry. Dirt and electrolyte on top of the battery can cause battery to self-discharge. Clean battery top with a solution of baking soda (sodium bicarbonate) and water (5 teaspoons baking soda per quart or liter of water). When the solution stops bubbling, rinse off the battery with clean water.
2. Clean cable connectors and battery terminals using a wire brush or sandpaper. Remove any oxidation.
3. Inspect the battery screws, clamps and cables for breakage, loose connections and corrosion. Clean clamps.
4. Check the battery posts for melting or damage caused by overtightening.
5. Inspect the battery for discoloration, raised top or a warped or distorted case, which might indicate that the battery has been frozen, overheated or overcharged.
6. Inspect the battery case for cracks or leaks.

BATTERY CHARGING

SAFETY PRECAUTIONS

Never charge a battery without first reviewing the instructions for the charger being used. In addition to the manufacturer's instructions, follow these general safety precautions:

- **Always wear proper eye, face and hand protection.**
- **Always charge batteries in a well-ventilated area.**
- **Turn the charger "OFF" before connecting the leads to the battery to avoid dangerous sparks.**

Table 8-5. Battery Charging Rates/Estimated Times

Battery Amp-Hour	State of Charge		3 Amp Charger	6 Amp Charger	10 Amp Charger	20 Amp Charger
	Voltage Reading	% of Charge				
TOURING 28	12.7 V	100%	-	-	-	-
	12.6 V	75%	2.5 hours	1.25 hours	45 minutes	25 minutes
	12.3 V	50%	5 hours	2.5 hours	1.5 hours	50 minutes
	12.0 V	25%	7.5 hours	3.75 hours	2.25 hours	70 minutes
	11.8 V	0%	10 hours	5 hours	3 hours	1.5 hours

The figures listed above assume that the battery is charging at room temperature. If warmer than room temperature, use a slightly shorter charging time. If colder, use a slightly longer charging time.

The use of constant current chargers to charge sealed maintenance-free batteries is not recommended. Any overcharge will cause dry-out and premature battery failure. If a constant current charger is the only type available, do **not** exceed the charge times listed above and do **not** continue charging the battery if it gets hot. When charging, never exceed 15 volts for more than 30 minutes.

- **Never try to charge a visibly damaged or frozen battery.**
- **Connect the charger leads to the battery; red positive (+) lead to the positive (+) terminal and black negative (–) lead to the negative (–) terminal. If the battery is still in the motorcycle, connect the negative lead to the chassis ground. Be sure that the ignition and all electrical accessories are turned off.**
- **Make sure that the charger leads to the battery are not broken, frayed or loose.**
- **If the battery becomes hot, or if violent gassing or spewing of electrolyte occurs, reduce the charging rate or turn off the charger temporarily.**
- **Always turn the charger "OFF" before removing charger leads from the battery to avoid dangerous sparks.**

CHARGING BATTERY

Charge the battery if any of the following conditions exist:

- Motorcycle lights appear dim.
- Electric starter sounds weak.
- Battery has not been used for an extended period of time.

⚠WARNING

Always charge the battery in a well ventilated area. Explosive hydrogen gas escapes from the battery during charging. Keep open flames, electrical sparks and smoking materials away from the battery at all times. Failure to do so could result in death or serious injury.

CAUTION

If the battery releases an excessive amount of gas during charging, decrease the charging rate. If the battery gets hotter than 110˚F. (43˚C) during charging, discontinue charging and allow the battery to cool. Overheating may result in plate distortion, internal shorting, dryout or other damage.

1. Perform a voltmeter test to determine the state of charge. See VOLTMETER TEST in this section. If battery needs to be charged, proceed to step 2.

CAUTION

Always remove the battery from the motorcycle before charging. Accidental electrolyte leakage will damage motorcycle parts.

2. Remove the battery from the motorcycle. See DISCONNECTION AND REMOVAL in this section. Place the battery on a level surface.

⚠WARNING

Always unplug or turn OFF the battery charger before connecting the charger clamps to the battery. Connecting clamps with the charger ON could cause a spark resulting in a battery explosion. A battery explosion may rupture the battery case causing a discharge or spray of sulfuric acid which could result in death or serious injury.

CAUTION

Do not reverse the charger connections described in the following steps or the charging system of the motorcycle could be damaged.

3. Connect the red battery charger lead to the positive (+) terminal of the battery.
4. Connect the black battery charger lead to the negative (–) terminal of the battery.

NOTE

If the battery is still in the motorcycle, connect the negative lead to the chassis ground. Be sure that the ignition and all electrical accessories are turned off.

5. Step away from the battery and turn on the charger. See the charging instructions in Table 8-5.

WARNING

Always unplug or turn OFF the battery charger before disconnecting the charger clamps from the battery. Disconnecting clamps with the charger ON could cause a spark resulting in a battery explosion. A battery explosion may rupture the battery case causing a discharge or spray of sulfuric acid which could result in death or serious injury.

6. After the battery is fully charged, disconnect the black battery charger lead to the negative (–) terminal of the battery.
7. Disconnect the red battery charger lead to the positive (+) terminal of the battery.
8. Mark the charging date on the battery.
9. Perform CONDUCTANCE TEST or LOAD TEST to determine the condition of the battery.

NOTE

If charging battery because voltmeter test reading was below 12.6V, recheck the voltage after the battery has set for one to two hours. If the voltage reading is 12.7V or above, perform the LOAD TEST.

BATTERY CABLE ROUTING

WARNING

Hole on left side of frame crossmember is used for cruise cable routing only. Use of the hole for battery cable routing can result in contact with hot exhaust pipe causing melting or burning of the cable insulation, damage that can lead to driveability problems or fire hazard, conditions which could result in death or serious injury.

Route all battery cables through opening between tray of battery box and bottom of frame cross member. Cables should be positioned as shown in Figure 8-22.

INSTALLATION AND CONNECTION

1. Place the fully charged battery into the battery box, terminal side forward.

CAUTION

Connect the cables to the correct battery terminals or damage to the motorcycle electrical system will occur.

WARNING

Always connect the positive battery cable first. If the positive cable should contact ground with the negative cable installed, the resulting sparks may cause a battery explosion which could result in death or serious injury.

CAUTION

Overtightening bolts can damage battery terminals.

1. Insert bolt through battery positive cable (red) into threaded hole of battery positive (+) terminal. Tighten bolt to 60-96 **in-lbs** (6.8-10.9 Nm).

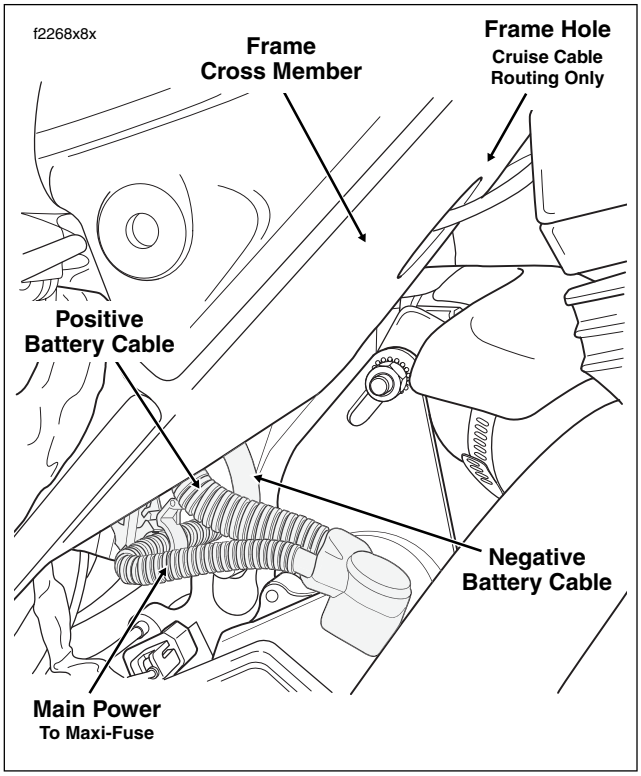

Figure 8-22. Battery Cable Routing (Right Side View)

2. Insert bolt through battery negative cable (black) into threaded hole of battery negative (-) terminal. Tighten bolt to 60-96 **in-lbs** (6.8-10.9 Nm).
3. Apply a light coat of petroleum jelly or ELECTRICAL CONTACT LUBRICANT, Part No. 99861-02 (1 oz tube), to both battery terminals.
4. Rotate the hold-down clamp so that the lip (with rubber pad) rests on the edge of the battery. Tighten T40 TORX screw to 15-20 ft-lbs (20-27 Nm).
5. Install seat. See Section 2.25 SEAT, INSTALLATION.

STORAGE

⚠WARNING

Store the battery out of the reach of children. Inadequate safety precautions could result in death or serious injury.

CAUTION

The electrolyte in a discharged battery will freeze if exposed to freezing temperatures. Freezing may crack the battery case and buckle battery plates.

If the motorcycle will not be operated for several months, such as during the winter season, remove the battery from the motorcycle and fully charge. See CHARGING BATTERY in this section.

Self-discharge is a normal condition and occurs continuously at a rate that depends on the ambient temperature and the battery's state of charge. Batteries discharge at a faster rate at higher ambient temperatures. To reduce the self-discharge rate, store battery in a cool (not freezing), dry place. See Figure 8-23.

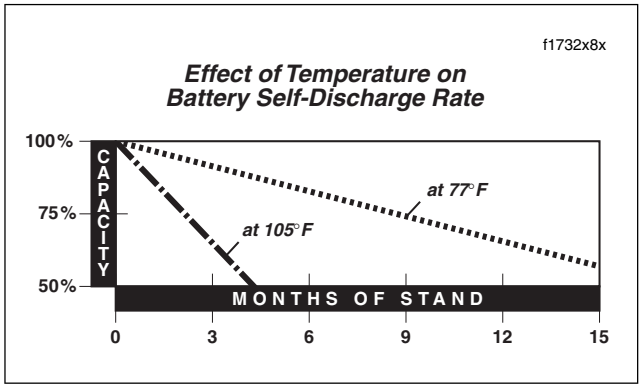

Figure 8-23. Battery Self-Discharge Rate

Charge the battery every month if stored at temperatures below 60˚ F. (16˚ C). Charge the battery more frequently if stored in a warm area above 60˚ F. (16˚ C).

NOTE

The GLOBAL BATTERY CHARGER (Part No. 99863-01) may be used to maintain battery charge for extended periods of time without risk of overcharging or boiling.

When returning a battery to service after storage, refer to the instructions under CHARGING BATTERY in this section.

HEADLAMP ASSEMBLY

REMOVAL

1. Remove Phillips screw at bottom of headlamp door (chrome ring). Remove headlamp door.
2. Proceed as follows:

   FLHX, FLHT/C/U: Remove three Phillips screws from retaining ring and carefully pull headlamp assembly from outer fairing. See Figure 8-24.

   FLHR/C/S: Remove seven Phillips screws from headlamp housing and carefully pull headlamp assembly from headlamp nacelle.

3. Remove headlamp connector [38] at back of headlamp bulb. Remove headlamp assembly from motorcycle.

INSTALLATION

1. Install headlamp connector [38] at back of headlamp bulb.
2. Proceed as follows:

   FLHX, FLHT/C/U: Align holes in retaining ring of headlamp assembly with those in outer fairing (headlamp door bracket at bottom). Install three Phillips screws and alternately tighten to 23-28 **in-lbs** (2.6-3.2 Nm). See Figure 8-24.

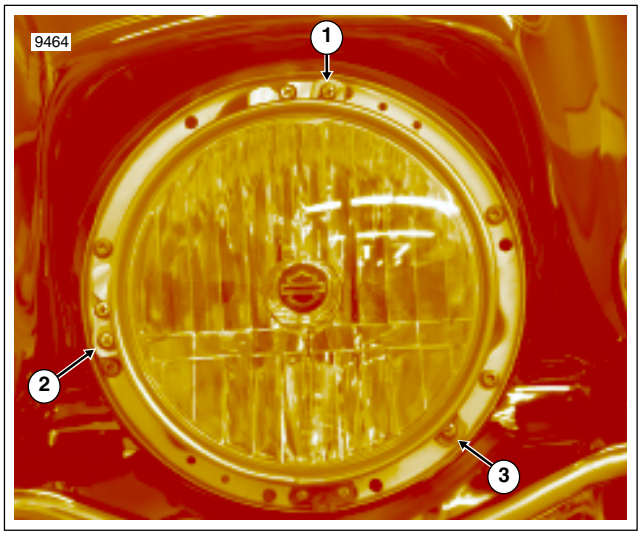

Figure 8-24. Remove Retaining Ring Screws (FLHX, FLHT/C/U Model Shown)

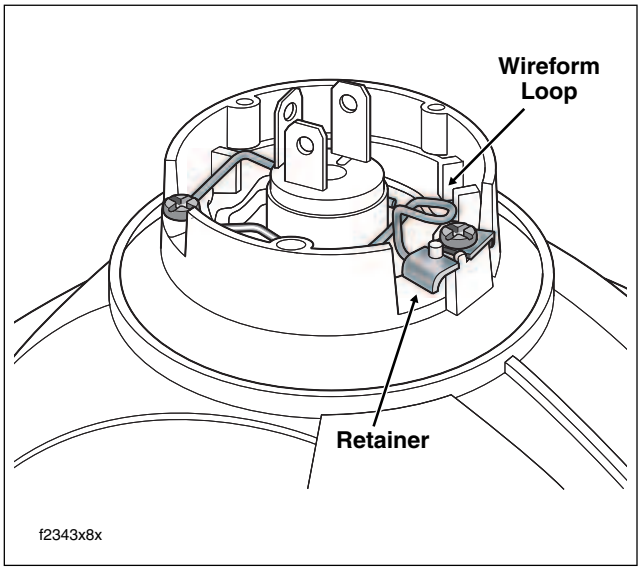

Figure 8-25. Headlamp Bulb Assembly

   FLHR/C/S: Align holes in headlamp housing with wellnuts in headlamp nacelle (headlamp door bracket at bottom). Install seven Phillips screws and alternately tighten to 9-18 **in-lbs** (1.0-2.0 Nm).

3. Fit the square-shaped portion of the headlamp door spring into slot at top of headlamp housing and then snap the headlamp door (chrome ring) into place. Install Phillips screw at bottom of headlamp door and tighten to 9-18 **in-lbs** (1.0-2.0 Nm).

HEADLAMP BULB REPLACEMENT

The headlamp is a replaceable bulb (and not a sealed beam). Made of quartz glass filled with Halogen gas, the bulb is very delicate and must be handled with care.

NOTE

When replacement is required, use only the specified bulb available from your Harley-Davidson dealer. Improper wattage or bulb may cause charging system problems.

1. Remove headlamp. See HEADLAMP ASSEMBLY, REMOVAL.
2. Remove rubber boot at back of lense.
3. Press down on wireform loop and push pin end out from under lip of retainer to release. See Figure 8-25. Use hinge to swing wireform out of the way.

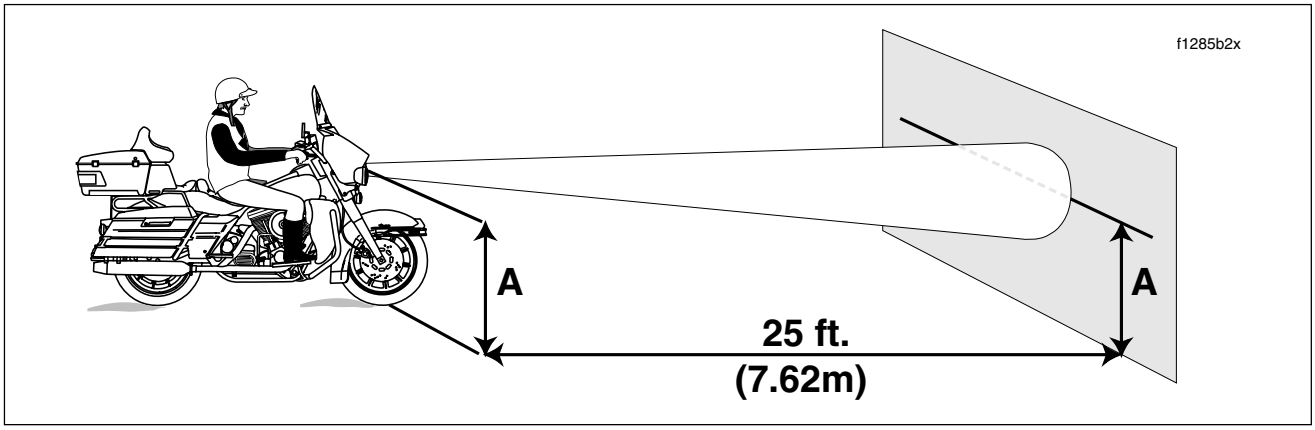

Figure 8-26. Check Headlamp Alignment

NOTE

If it is difficult to free pin end of wireform from under lip of retainer, loosen retainer screw 1/2-1 turn and then repeat step 3.

WARNING

The bulb contains Halogen gas under pressure. Wear adequate eye protection and handle the bulb carefully. Inadequate safety precautions could result in death or serious injury.

4. Remove and discard bulb.

CAUTION

Never touch the quartz bulb with your fingers. Fingerprints will etch the glass and cause premature bulb failure. Always wrap the bulb in paper or a clean dry cloth during handling.

5. Install **new** bulb in lense. Rotate bulb as necessary so that wider ear on backplate points toward the top of the headlamp assembly.

NOTE

The top of the headlamp assembly can be determined by the orientation of the decorative logo on the opposite side, or the location of the headlamp door bracket, which is always at the bottom of the assembly.

6. Use hinge to rotate wireform over socket at back of bulb. Press down on loop and push pin end under lip of retainer to secure. See Figure 8-25.

NOTE

If retainer screw was loosened to release wireform, use finger to hold retainer in place and then slowly tighten screw until snug. Turning headlamp assembly over, verify that reflector cone is still centered under decorative logo. If it is not, loosen retainer screw and repeat step until the proper results are achieved.

7. Install rubber boot at back of lense.
8. Install headlamp. See HEADLAMP ASSEMBLY, INSTALLATION.

HEADLAMP ADJUSTMENT

Check headlamp beam for proper height and lateral alignment.

WARNING

DO NOT modify the ignition/light key switch wiring to disable the automatic-on headlamp feature. High visibility is an important safety consideration for motorcycle riders. Ensure that the headlamp is on at all times. Failure to do so could result in death or serious injury.

1. Verify correct front and rear tire inflation pressure.
2. Place the motorcycle on a level floor or pavement in an area with minimum light.
3. See Figure 8-26. Point the front of the motorcycle toward a screen or wall which is 25 feet (7.62 m) from where patch of front tire contacts floor (i.e. - directly below front axle).
4. Draw a horizontal line on screen or wall that is exactly the same height above the floor as the headlamp center.
5. Have a person whose weight is roughly the same as that of the principal rider sit on the motorcycle seat. The weight of the rider will compress the vehicle suspension slightly.
6. Stand the motorcycle upright with both tires resting on the floor and with the front wheel held in straight alignment (directly forward).

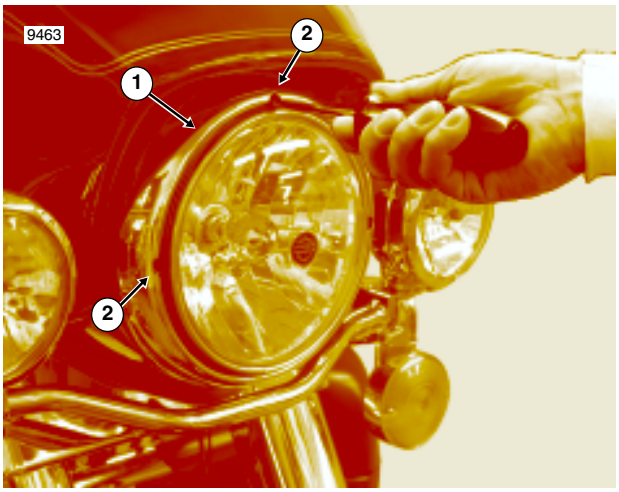

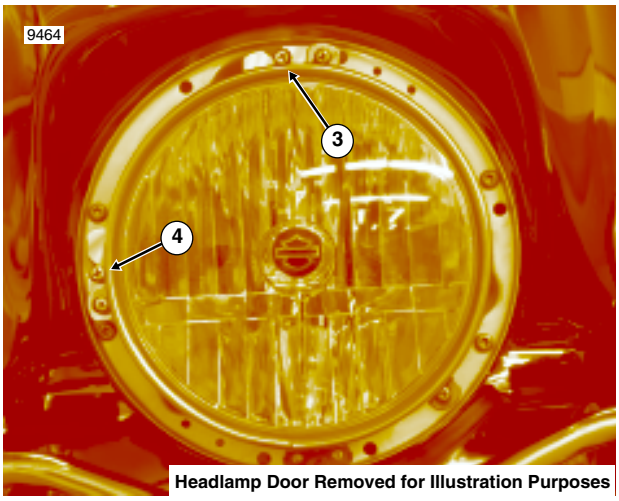

Headlamp Door Removed for Illustration Purposes

1. **Headlamp Door**
2. **Adjuster Slot (2)**
3. **Vertical Adjuster Screw**
4. **Horizontal Adjuster Screw**

Figure 8-27. Adjust Headlamp Alignment (FLHX, FLHT/C/U Model Shown)

7. Turn the Ignition/Light Key Switch to IGNITION. Set the Light Switch on the left handlebar to Hi(gh) beam.

8. Check the light beam for proper height alignment. The center of the main beam of light should be even with the horizontal line on the screen or wall.

9. Check the light beam for proper lateral alignment. The main beam of light should be directed straight ahead (i.e., equal area of light to right and left of center).

NOTE

The headlamp adjustment can be performed without removing the headlamp door (chrome ring).

10. If the headlamp alignment requires adjustment, use adjuster slots in headlamp door to insert Phillips screwdriver between headlamp housing and rubber gasket. See upper frame of Figure 8-27.

    Turn the vertical adjuster screw as necessary to adjust the headlamp vertically. Turn the horizontal adjuster screw to adjust the headlamp horizontally. See lower frame of Figure 8-27.

HEADLAMP ASSEMBLY

REMOVAL

1. Remove the outer fairing. See Section 2.31 UPPER FAIRING/WINDSHIELD (FLTR), OUTER FAIRING, REMOVAL.
2. Move outer fairing assembly to bench area.
3. Squeeze two external tabs to disconnect headlamp harness connectors from bulb contacts.

CAUTION

Wrap electrical tape around blade of screwdriver to prevent damage to tabs of transparent lense cover.

4. From inboard side of outer fairing, release top of transparent lense cover from slots in fairing by gently depressing two tabs with blade of screwdriver. Depress two bottom tabs and remove lense cover from fairing.

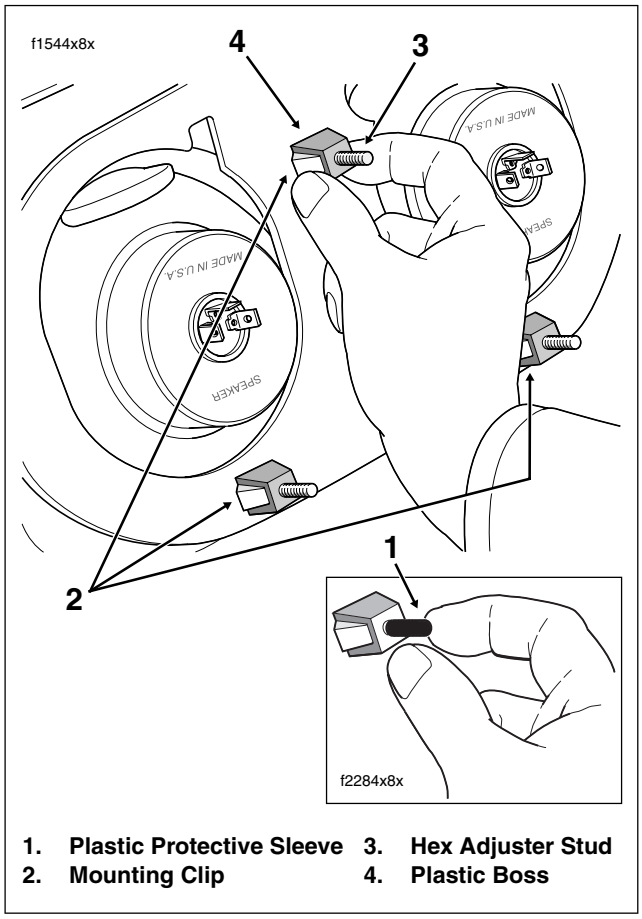

1. Plastic Protective Sleeve
2. Mounting Clip
3. Hex Adjuster Stud
4. Plastic Boss

Figure 8-28. Depress Mounting Clips

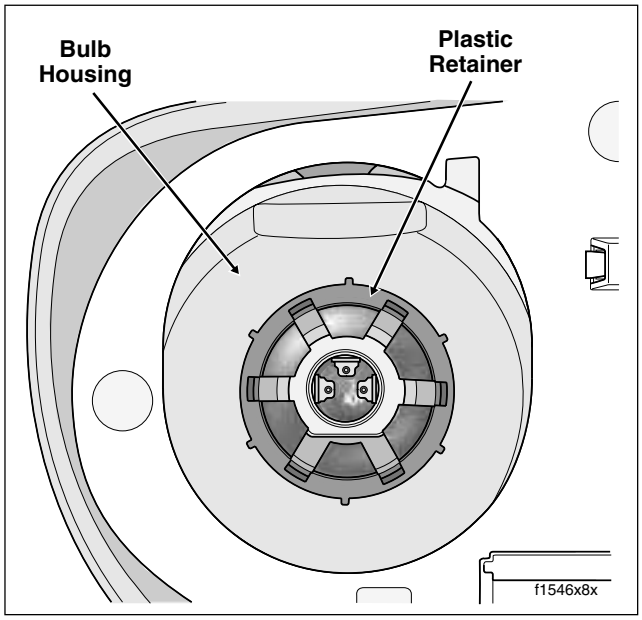

Figure 8-29. Remove Retainer to Release Bulb

5. Remove plastic protective sleeve from top center hex adjuster stud. See inset of Figure 8-28.
6. Depress mounting clips on all three hex adjuster studs and pull headlamp assembly out front of outer fairing. See Figure 8-28.

INSTALLATION

1. At front of outer fairing, align ends of hex adjuster studs with holes in plastic bosses. Push headlamp assembly into position until mounting clips engage outer fairing.

CAUTION

To avoid cutting or chafing wires, be sure to install plastic protective sleeve on top center stud of headlamp assembly. See inset of Figure 8-28.

2. Carefully snap bottom tabs of transparent lense cover into bottom slots of outer fairing. Carefully snap upper tabs of lense cover into upper slots of fairing.
3. Install headlamp harness connectors onto bulb contacts.
4. Install the outer fairing. See Section 2.31 UPPER FAIRING/WINDSHIELD (FLTR), OUTER FAIRING, INSTALLATION.

HEADLAMP BULB REPLACEMENT

The headlamp is a replaceable bulb (and not a sealed beam). Made of quartz glass filled with Halogen gas, the bulb is very delicate and must be handled with care.

NOTE

When replacement is required, use only the specified bulb available from your Harley-Davidson dealer. Improper wattage or bulb may cause charging system problems.

REMOVAL

1. Remove the outer fairing. See Section 2.31 UPPER FAIRING/WINDSHIELD (FLTR), OUTER FAIRING, REMOVAL.
2. Move outer fairing assembly to bench area.
3. Squeeze two external tabs to disconnect headlamp harness connector from bulb contacts.
4. Remove rubber boot at back of bulb housing.
5. Rotate plastic retainer in a counter-clockwise direction to remove from bulb housing flange. See Figure 8-29.

WARNING

The bulb contains Halogen gas under pressure. Wear adequate eye protection and handle the bulb carefully. Inadequate safety precautions could result in death or serious injury.

6. Remove and discard bulb.

INSTALLATION

CAUTION

Never touch the quartz bulb with your fingers. Fingerprints will etch the glass and cause premature bulb failure. Always wrap the bulb in paper or a clean dry cloth during handling.

1. Install **new** bulb in bulb housing. Orient bulb so that wider ear on backplate is topside and then push bottom of backplate so that tabs on outboard side fit snugly in slot of bulb housing. See Figure 8-30.
2. Place plastic retainer over bulb housing flange and rotate in a clockwise direction until tight. See Figure 8-29.

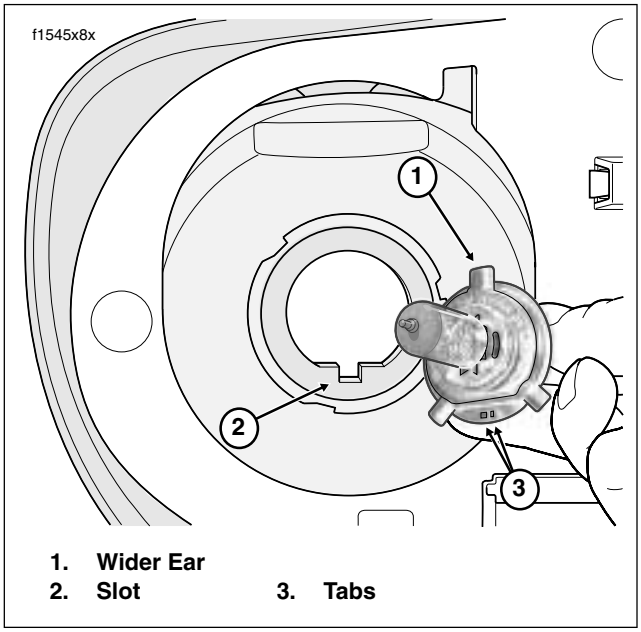

Figure 8-30. Install New Bulb in Bulb Housing

3. Install rubber boot over retainer until flush with base of bulb socket.
4. Connect headlamp harness connector to bulb contacts.
5. Install the outer fairing. See Section 2.31 UPPER FAIRING/WINDSHIELD (FLTR), OUTER FAIRING, INSTALLATION.

HEADLAMP ADJUSTMENT

Check headlamp beam for proper height and lateral alignment. Proceed as follows:

WARNING

DO NOT modify the ignition/light key switch wiring to disable the automatic-on headlamp feature. High visibility is an important safety consideration for motorcycle riders. Ensure that the headlamp is on at all times. Failure to do so could result in death or serious injury.

1. Verify correct front and rear tire inflation pressure.
2. Place the motorcycle on a level floor or pavement in an area with minimum light.
3. See Figure 8-26. Point the front of the motorcycle toward a screen or wall which is 25 feet (7.62 m) from where patch of front tire contacts floor (i.e. - directly below front axle).
4. Draw a horizontal line on screen or wall that is exactly the same height above the floor as the headlamp center.

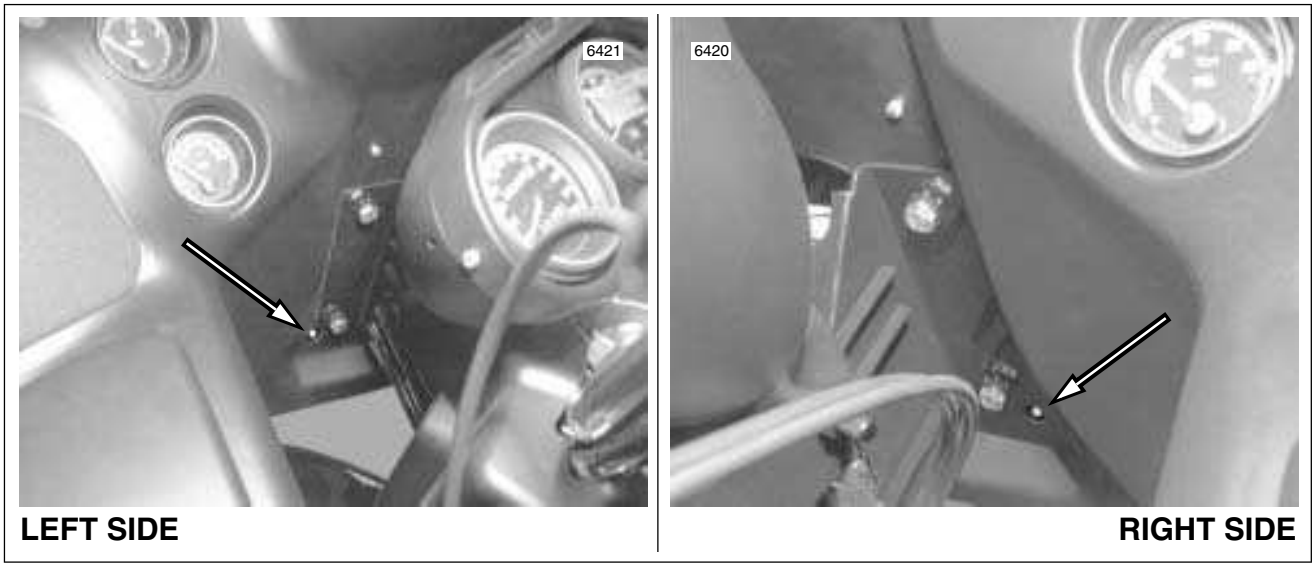

Figure 8-31. Roatate Hex Adjusters to Adjust Headlamp (FLTR)

5. Have a person whose weight is roughly the same as that of the principal rider sit on the motorcycle seat. The weight of the rider will compress the vehicle suspension slightly.
6. Stand the motorcycle upright with both tires resting on the floor and with the front wheel held in straight alignment (directly forward).
7. Turn the Ignition/Light Key Switch to IGNITION. Set the Light Switch on the left handlebar to Hi(gh) beam.
8. Check the light beam for proper height alignment. The center of the main beam of light should be even with the horizontal line on the screen or wall.
9. Check the light beam for proper lateral alignment. The main beam of light should be directed straight ahead (i.e., equal area of light to right and left of center).
10. Locate the hex adjusters near the bottom edge of the inner fairing. See Figure 8-31. Turning the adjusters causes the double headlamp housing to pivot around its upper mount.
11. Using a deepwell 4.5 mm with 1/4 inch drive socket (Snap-On STMM4.5) and flexible driver (Snap-On TM62B), adjust the headlamp horizontally by turning either the left or right side adjuster. Turn both adjusters equally to adjust the headlamp vertically.

NOTE

If the socket does not easily fit the adjuster, see if a deepwell 3/16 inch with 1/4 inch drive socket (Snap-On STM6) produces better results.

Adjuster rotation moves the headlamp beam as follows:

Table 8-6. FLTR Hex Adjuster Rotation

Hex Adjuster	Rotation	Beam Movement
Left Only	CW	To the Right
Right Only	CCW	
Left Only	CCW	To the Left
Right Only	CW	
Left and Right Equally	CW	Upward
Left and Right Equally	CCW	Downward

CW= Clockwise CCW= Counter-Clockwise

AUXILIARY LAMP BULB

REMOVAL

1. Loosen auxiliary lamp door screw as required to pull lamp door from lip of lamp housing. See Figure 8-32.
2. Disconnect auxiliary lamp connector [199L/R], 2-place Packard. See Figure 8-33.
3. Remove nesting ring at back of lense.

⚠WARNING

The bulb contains Halogen gas under pressure. Wear adequate eye protection and handle the bulb carefully. Inadequate safety precautions could result in death or serious injury.

4. Rotate bulb/pin housing 1/4 turn in a counterclockwise direction and remove from lense. Discard bulb/pin housing. See Figure 8-34.

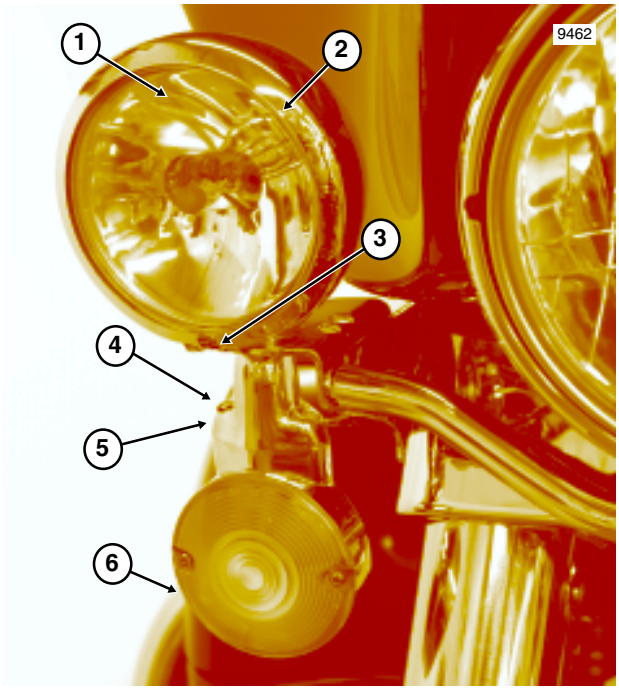

1.	Auxiliary Lamp	4.	Allen Head Screw (2)
2.	Door	5.	Mounting Bracket
3.	Door Screw	6.	Turn Signal Lamp

Figure 8-32. Auxiliary and Front Turn Signal Lamp

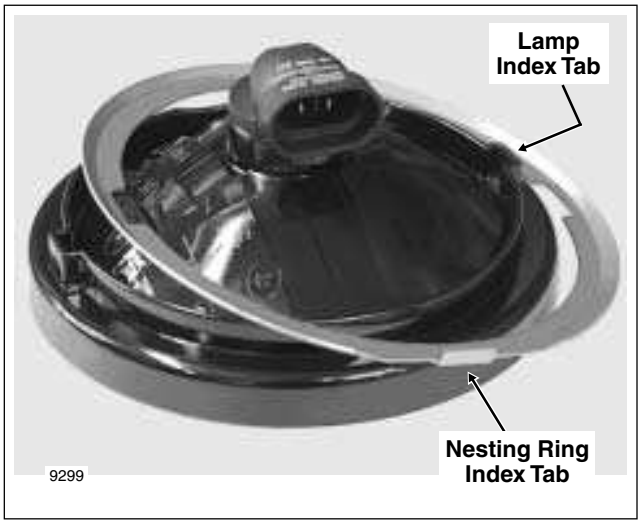

Figure 8-33. Auxiliary Lamp Assembly

Figure 8-34. Auxiliary Lamp Bulb/Pin Housing

CAUTION

Never touch the quartz bulb with your fingers. Fingerprints will etch the glass and cause premature bulb failure. Always wrap the bulb in paper or a clean dry cloth during handling.

5. Install **new** bulb/pin housing in lense and rotate 1/4 turn in a clockwise direction. See Figure 8-34.

INSTALLATION

1. Place nesting ring at back of lense with the concave side up. See Figure 8-33.
2. Connect auxiliary lamp connector [199L/R], 2-place Packard. See Figure 8-33.

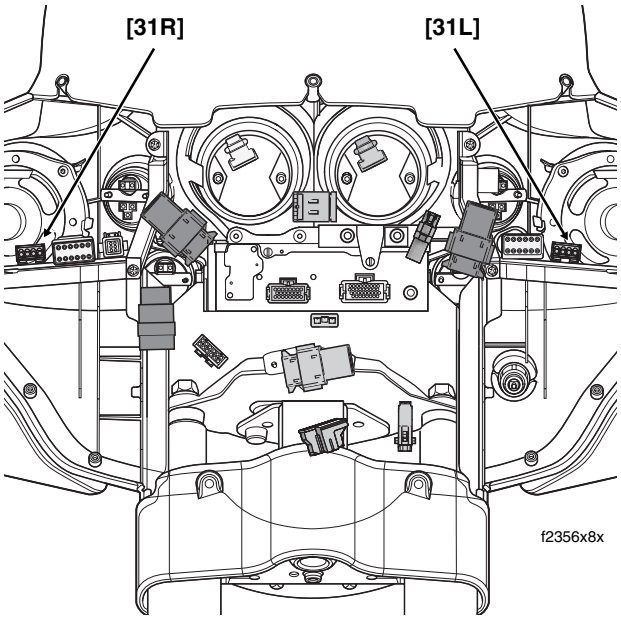

[31L] Left Front Turn Signal/Auxiliary Lamp
[31R] Right Front Turn Signal/Auxiliary Lamp

Figure 8-35. Inner Fairing (FLHT/C/U)

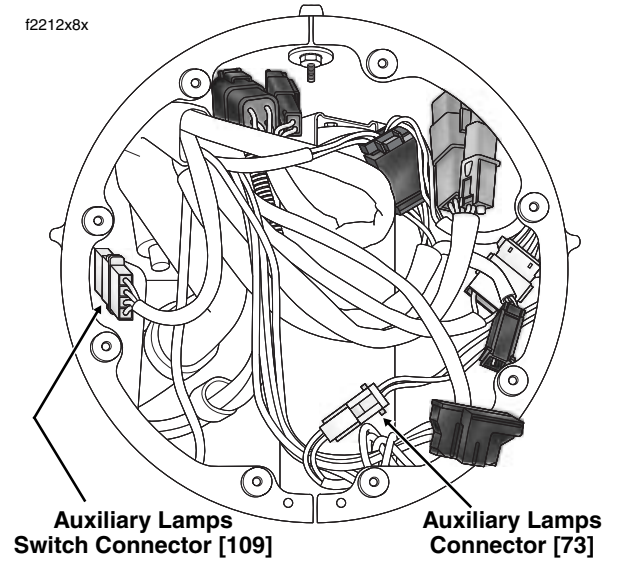

Figure 8-36. Headlamp Nacelle (FLHRC)

3. Place nesting ring over edge of lamp housing. Rotate nesting ring until index tab engages slot at bottom of lamp housing.

4. Holding nesting ring in place, rotate lense so that index tabs at back engage slots in nesting ring.

5. Install lamp door over lip of lamp housing. Rotate lamp door so that screw is centered at bottom, and then tighten door screw until snug.

AUXILIARY LAMP HOUSING

REMOVAL

NOTE

If replacing only the lamp housing, begin at step 1. Start at step 2 if replacing the entire lamp assembly

1. Disassemble auxiliary lamp if not replacing the entire assembly, if necessary. See AUXILIARY LAMP BULB, REMOVAL, in this section, steps 1-3. See Figure 8-37.

2. Proceed as follows: **FLHT/C/U:** Remove outer fairing. See Section 2.30 UPPER FAIRING/WINDSHIELD (FLHX, FLHT/C/U), OUTER FAIRING/WINDSHIELD, REMOVAL. Locate the left or right front turn signal/auxiliary lamp connector [31L/R], 4-place Multilock, on T-stud at top of left or right fairing support brace (outboard side). See Figure 8-35.

   FLHR/C: Remove headlamp assembly. See Section 8.11 HEADLAMP (FLHR/C/S, FLHX, FLHT/C/U), HEADLAMP ASSEMBLY, REMOVAL. Locate auxiliary lamps connector [73], white 2-place Multilock. See Figure 8-36.

3. Disconnect front turn signal/auxiliary lamp connector.

4. Remove appropriate terminal(s) from socket housing.

Table 8-7. Auxiliary Lamps

FLHT/C/U [31L/R], 4-Place			
Left Side [31L]		Right Side [31R]	
Wire Color	Chamber	Wire Color	Chamber
Gray/Black	4	Gray/Black	4
NOTE: Terminals 1, 2 and 3 are reserved for the turn signal lamp.			
FLHR/C [73], 2-Place			
Left Side		Right Side	
Wire Color	Chamber	Wire Color	Chamber
Gray/Black	1	Gray/Black	2

NOTE

For instructions on removing terminals, see APPENDIX B.2 MULTILOCK ELECTRICAL CONNECTORS, REMOVING SOCKET/PIN TERMINALS.

5. Remove two allen head screws to release turn signal lamp from mounting bracket. See Figure 8-32.

Figure 8-37. Auxiliary Lamp Housing

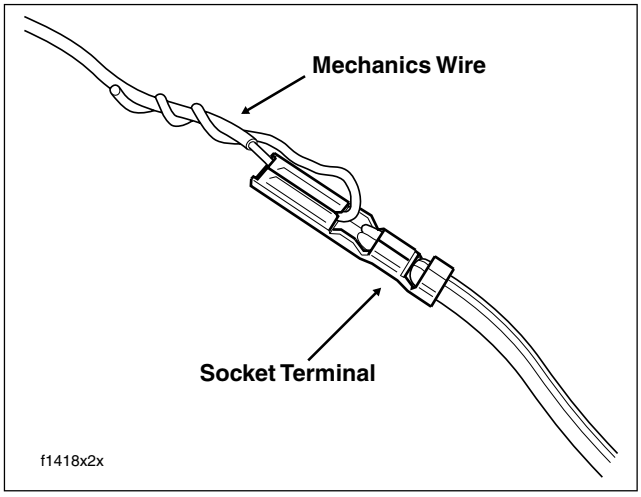

Figure 8-38. Fix Mechanics Wire to Socket Terminals

6. Obtain length of strong flexible wire for use as mechanics wire. Feed wire through opening in socket terminal and then loop back twisting end until tightly coiled around longer strand as shown in Figure 8-38.

NOTE

Be sure that mechanics wire is of sufficient strength to pull terminal through conduit without breaking. Wire length must also be long enough so that free end is not lost in conduit when pulled.

7. Carefully pull wire to draw socket terminal through conduit.
8. Unravel mechanics wire to release socket terminal.
9. Insert flare nut socket (Snap-on® FRX181) at bottom of turn signal mounting bracket and remove locknut from stud. Remove the turn signal mounting bracket and clamp block.
10. Remove auxiliary lamp (with Belleville washer and swivel block) from the auxiliary lamp bracket.

INSTALLATION

1. Lay old auxiliary lamp next to **new** auxiliary lamp and cut wire to length.
2. Strip 3/16 inch (4.8 mm) of insulation off wire and crimp on **new** socket terminal.

NOTE

For instructions on crimping terminals, see APPENDIX B.2 MULTILOCK ELECTRICAL CONNECTORS, CRIMPING INSTRUCTIONS.

3. If removed, slide swivel block and Belleville washer down wire onto auxiliary lamp stud. Be sure that rounded side of swivel block and concave side of Belleville washer face auxiliary lamp.
4. Feed wire through slot at top of auxiliary lamp bracket and insert threaded stud into forward slot. Slide clamp block (rounded side up), turn signal mounting bracket and locknut up wire onto auxiliary lamp stud at bottom of bracket.
5. Using flare nut socket (Snap-on® FRX181), tighten locknut to 18 ft-lbs (24.4 Nm).
6. Reattach mechanics wire to socket terminal and carefully pull end of mechanics wire to draw socket terminal back through conduit.
7. Carefully remove mechanics wire to avoid damage to terminal.
8. Install terminal into socket housing. Refer to Table 8-7.

NOTE

For instructions on installing terminals, see APPENDIX B.2 MULTILOCK ELECTRICAL CONNECTORS, INSTALLING SOCKET/PIN TERMINALS.

9. Connect front turn signal/auxiliary lamp connector.
10. Turn Ignition/Light Key Switch to IGNITION and test for proper operation and alignment. Adjust if necessary.
11. Start two allen head screws to secure turn signal lamp to mounting bracket. See Figure 8-32. Verify that conduit fits in slot at back of bracket and is not pinched. Alternately tighten screws to 36-60 **in-lbs** (4.1-6.8 Nm).
12. Proceed as follows:

    FLHT/C/U: Install connector on T-stud at top of left or right fairing support brace (outboard side). Verify that conduit is routed inboard using relief in upper outboard corner of chrome skirt. Install outer fairing. See Section 2.30 UPPER FAIRING/WINDSHIELD (FLHX, FLHT/C/U), OUTER FAIRING/WINDSHIELD, INSTALLATION.

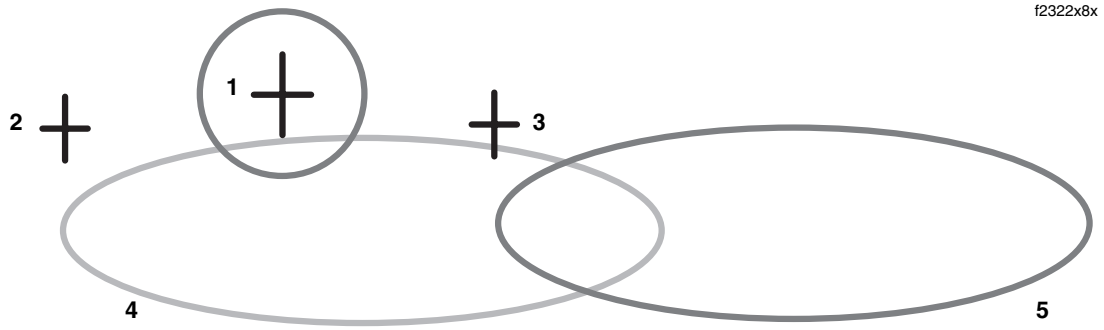

1. **Adjust headlamp high beam for proper height and lateral alignment.**
2. **Locate left side auxiliary lamp relative to high beam centerlines.**
3. **Locate right side auxiliary lamp relative to high beam centerlines.**
4. **Adjust high intensity beam below and right of left side auxiliary lamp centerlines.**
5. **Adjust high intensity beam below and right of right side auxiliary lamp centerlines.**

Figure 8-39. Properly Aim Auxiliary Lamps

FLHR/C: Install headlamp assembly. See Section 8.11 HEADLAMP (FLHR/C/S, FLHX, FLHT/C/U), HEADLAMP ASSEMBLY, INSTALLATION.

13. Assemble auxiliary lamp, if necessary. See AUXILIARY LAMP BULB, INSTALLATION, in this section.

AUXILIARY LAMP BRACKET

REMOVAL

1. Remove auxiliary lamp bracket from motorcycle. Proceed as follows:

   FLHR/C: Remove acorn nuts from fork bracket studs.

   All Others: Loosen T40 TORX screws in upper and lower fork brackets.

2. Remove auxiliary lamp bracket from motorcycle.

INSTALLATION

1. Install auxiliary lamp bracket on motorcycle. Proceed as follows:

   FLHR/C: Slide slots of auxiliary lamp bracket onto upper and lower fork bracket studs. Install acorn nuts on studs. Alternately tighten acorn nuts to 72-108 **in-lbs** (8.1-12.2 Nm) using a crosswise pattern.

   All Others: Slide slots of auxiliary lamp bracket onto T40 TORX screws in upper and lower fork brackets. Alternately tighten screws to 15-20 ft-lbs (20-27 Nm) using a crosswise pattern.

ADJUSTMENT

Headlamp High Beam

1. Adjust the headlamp high beam for proper height and lateral alignment. See Section 8.11 HEADLAMP (FLHR/C/S, FLHX, FLHT/C/U), HEADLAMP ADJUSTMENT, steps 1-10.
2. With a rider seated on the motorcycle and the front wheel pointed straight ahead, turn on the headlamp high beam.
3. Mark the center of the headlamp high beam by making a vertical line through the horizontal line already drawn on the wall. Properly adjusted, the beam should project an equal area of light to the left and right of the vertical centerline. See item 1 in Figure 8-39.

Auxiliary Lamps

4. Turn the headlamp off and move to the front of the motorcycle.
5. Measure the distance from the headlamp horizontal centerline down to the horizontal centerline of the left side auxiliary lamp. Now measure the distance from the headlamp vertical centerline out to the vertical centerline of the same lamp.
6. Repeat measurements performed in step 5 on right side auxiliary lamp.
7. From the headlamp high beam centerlines, perform the measurements taken in steps 5-6 to locate the left and right side auxiliary lamp centerlines on the wall. See items 2 and 3 in Figure 8-39.

8. Turn on the headlamp high beam again, and with a rider seated on the motorcycle, verify that it is still aligned with the horizontal and vertical centerlines.
9. Turn on the headlamp low beam and then cover both the headlamp and the right side auxiliary lamp. Adjust the left side auxiliary lamp as necessary so that the entire high intensity zone is both below and to the right of the left side auxiliary lamp centerlines. See item 4 in Figure 8-39.
10. Leaving the headlamp covered, remove cover from right side auxiliary lamp and place over left side auxiliary lamp. Adjust the right side auxiliary lamp as necessary so that the entire high intensity zone is both below and to the right of the right side auxiliary lamp centerlines. See item 5 in Figure 8-39.
11. Verify that auxiliary lamps are properly tightened. Proceed as follows:
    a. Remove two screws to release turn signal lamp from mounting bracket. See Figure 8-32.
    b. Insert flare nut socket (Snap-on® FRX181) at bottom of turn signal mounting bracket and tighten locknut to 18 ft-lbs (24.4 Nm).
    c. Start two screws to secure turn signal lamp to mounting bracket. Verify that conduit fits in slot at back of bracket and is not pinched. Alternately tighten screws to 36-60 **in-lbs** (4.1-6.8 Nm).

TAIL LAMP ASSEMBLY 8.14

TAIL LAMP/TAIL LAMP BULB

REMOVAL

1. Remove two Phillips screws from lense to release tail lamp assembly from chrome base. See left side of Figure 8-40.
2. Disconnect tail lamp connector [93], 4-place Multilock. See right side of Figure 8-40.
3. Rotate bulb socket 1/4 turn in a counterclockwise direction and remove from tail lamp assembly. Gently pull bulb from socket.

INSTALLATION

1. Gently push **new** bulb into socket. Insert socket into tail lamp assembly and rotate 1/4 turn in a clockwise direction.
2. Connect tail lamp connector [93], 4-place Multilock. See right side of Figure 8-40.
3. Place tail lamp into position against chrome base.

CAUTION

Over tightening screws can crack the lense or result in scratching of the fender paint.

4. Install two Phillips screws and alternately tighten to 20-24 **in-lbs** (2.3-2.7 Nm).
5. Turn the Ignition/Light Key Switch to IGNITION and test lamp for proper operation.

CIRCUIT BOARD/CHROME BASE

REMOVAL

1. Remove two Phillips screws to release tail lamp assembly from chrome base. See left side of Figure 8-40.
2. Disconnect tail lamp connector [93], 4-place Multilock. See right side of Figure 8-40.

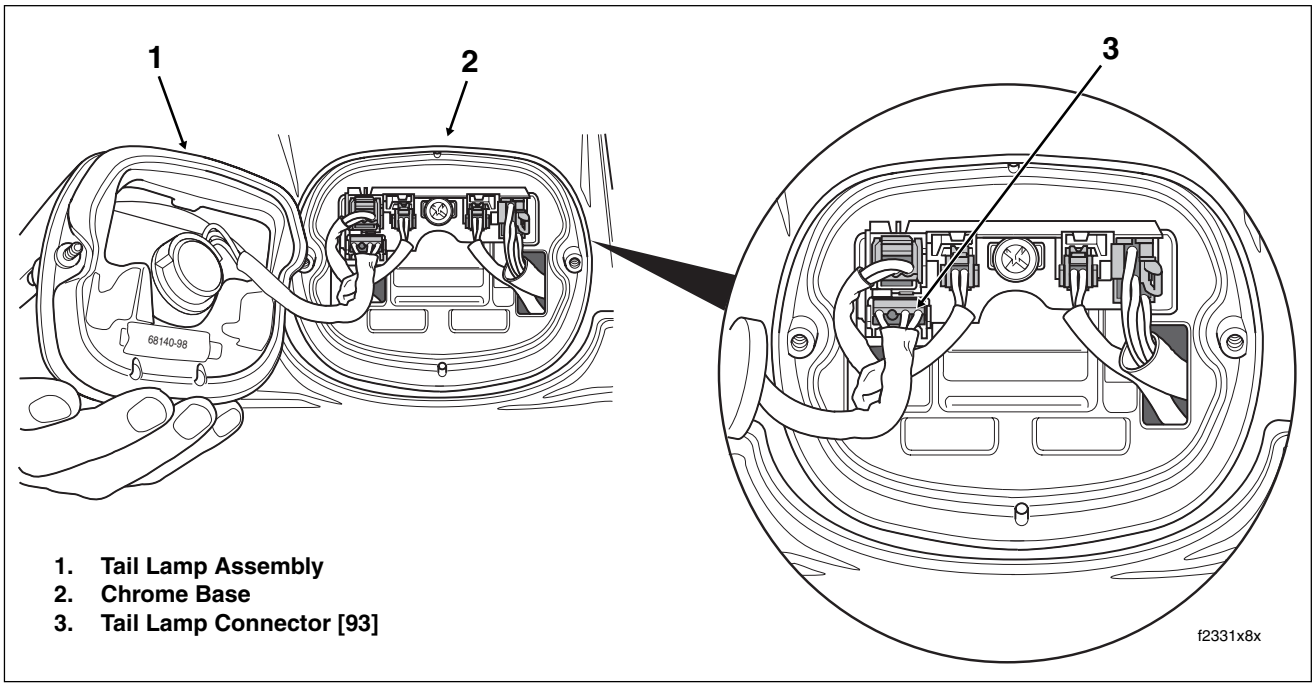

Figure 8-40. Remove Tail Lamp and Depress Button to Release Socket Housing

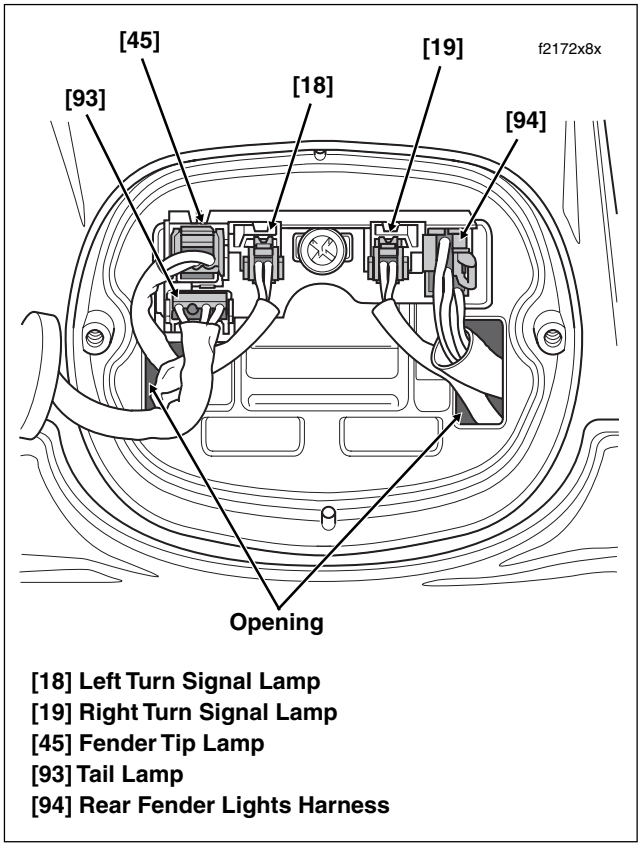

Figure 8-41. Rear Fender Lights Assembly

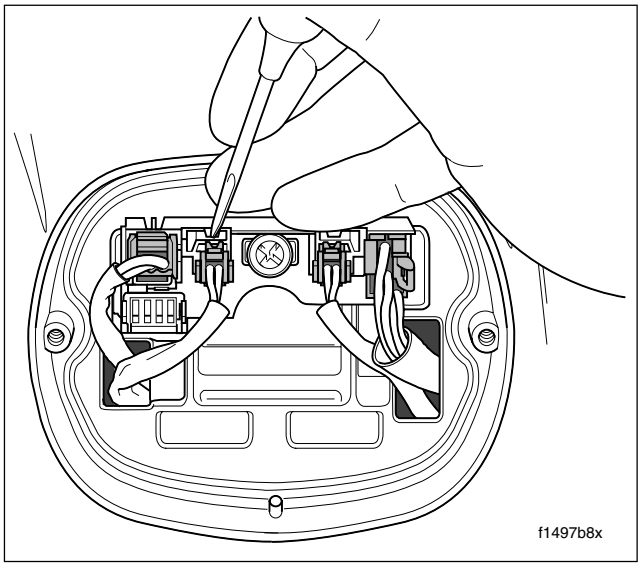

Figure 8-42. Use Pick Tool to Release Left Turn Signal Lamp Socket

3. Disconnect remaining connectors. See Figure 8-41. To release socket housings of left and right turn signal lamps, use a pick or small screwdriver to depress button as shown in Figure 8-42.

NOTE

The rear fender tip lamp is present on FLHR and FLHT/C/U models only. As the lamp is absent on FLHX models, the circuit board location is used for power to the license plate lamps, a feature unique to that model. On FLHRC/S and FLTR models, the location is unused.

4. Remove Phillips screw (with captive washer) at center of chrome base. Use both thumbs to push chrome base upward until it becomes free of fender and then pull out of fender hole.
5. Feed socket housings through openings to inboard side of chrome base. See Figure 8-41. For best results, free the smaller socket housings first.
6. Remove pin housing/circuit board from chrome base. For best results, push index pins on pin housing from holes in chrome base.

INSTALLATION

1. Feed socket housings through openings to outboard side of chrome base. See Figure 8-41. For best results, feed the larger socket housings first.
2. Fit bottom of chrome base into fender hole and then push down to align center hole with clip nut on fender flange.
3. Place pin housing over circuit board, if removed. See Figure 8-43.
4. Insert index pins at back of pin housing into holes in chrome base.

CAUTION

Over tightening screw can crack the chrome base or result in scratching of the fender paint.

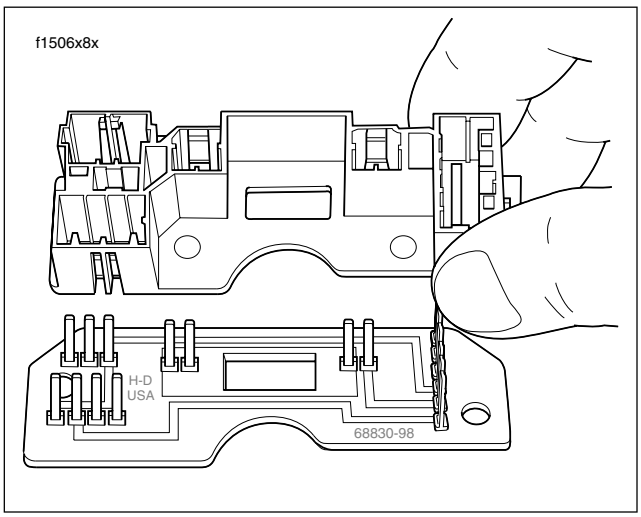

Figure 8-43. Place Pin Housing Over Circuit Board

5. Install Phillips screw (with captive washer) to secure pin housing/circuit board and chrome base to clip nut on fender flange. Tighten screw to 40-48 **in-lbs** (4.5-5.4 Nm).
6. Install socket housings into pin housing/circuit board. Install rear fender tip lamp and both left and right turn signal lamp sockets so that the release buttons are at the top. Install the rear fender lights harness socket with the button on the outboard side and the tail lamp socket with the button at the bottom.
7. To avoid stressing wires, verify that tail lamp conduit is positioned on the outboard side of the rear fender tip lamp and left turn signal lamp conduit as shown in Figure 8-40.
8. Place tail lamp into position against chrome base.

CAUTION

Over tightening screws can crack the lense or result in scratching of the fender paint.

9. Install two Phillips screws and alternately tighten to 20-24 **in-lbs** (2.3-2.7 Nm).
10. Turn the Ignition/Light Key Switch to IGNITION and test lamp for proper operation.

REAR FENDER LIGHTS HARNESS

REMOVAL

1. Remove rear fender. See Section 2.34 REAR FENDER.
2. Remove two Phillips screws to release tail lamp assembly from chrome base. See Figure 8-40.
3. Disconnect tail lamp connector [93], 4-place Multilock. Set tail lamp assembly aside.
4. Disconnect rear fender lights connector [94], 6-place Multilock. Feed socket housing through opening to inboard side of fender. See Figure 8-41.
5. Release left and right rear turn signal lamp conduit from respective cable clip anchored on T-stud. On FLHX models, also release license plate lamps conduit from left side cable clip. On FLHR and FLHT/C/U models, release rear fender tip lamp conduit from both left side cable clip and stamped fender clip.
6. Release rear fender lights harness from channel in stud plate. Loosen two flange nuts, if necessary.
7. Draw socket housing of rear fender lights connector [7], 8-place Multilock, through hole to inboard side of fender.
8. Remove wire harness and adhesive conduit from fender well.

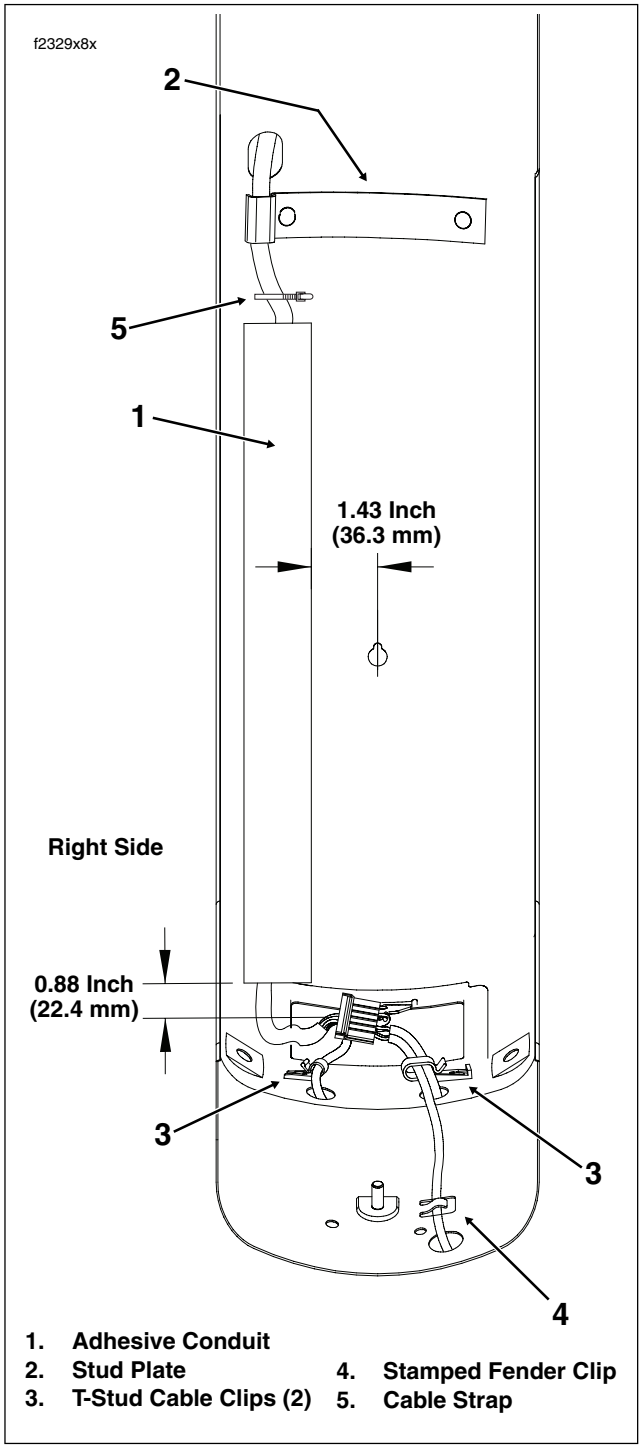

Figure 8-44. Rear Fender Well

INSTALLATION

1. Proceed as follows:
   a. Thoroughly clean fender well with soap and water. Do not use solvents or harsh chemicals or damage to painted surfaces may occur.

b. Remove remnants of old conduit, as well as all residual adhesive. For good results, use 3M GENERAL PURPOSE ADHESIVE REMOVER (Part No. 051135).

c. Using a soapy Scotch Brite® pad, thoroughly clean fender well in area of adhesive conduit. See Figure 8-44.

d. Rinse with clear water and thoroughly dry with a clean white cloth. Repeat step until clean cloth shows no evidence of dirt.

e. Swab area with isopropyl alcohol and allow to dry.

f. Obtain **new** harness with adhesive conduit. Remove paper backing to expose adhesive and lightly press into place in the right side fender well.

   Adhesive conduit should be approximately 0.88 inches (22.4 mm) from the chrome base hole and 1.43 inches (36.3 mm) from the fender seat screw centerline. See Figure 8-44.

g. Using a wallpaper seam roller (available at most home improvement stores), work roller over adhesive conduit to purge air from between fender and adhesive. Be aware that most other installation methods will produce unsatisfactory results.

h. Allow the adhesive 72 hours to fully cure. Installation of the fender may proceed, but exercise caution to avoid pulling or repositioning adhesive conduit.

2. Feed socket housing of rear fender lights connector [7], 8-place Multilock, through hole to outboard side of fender.

3. Capture rear fender lights harness in channel of stud plate. If loosened, tighten two flange nuts to 60-96 **in-lbs** (6.8-10.9 Nm).

4. Feed socket housing of rear fender lights connector [94] through opening to outboard side of fender. Connect socket housing to pin housing/circuit board. See Figure 8-41.

5. Capture left and right rear turn signal lamp conduit in respective cable clip anchored on T-stud. On FLHX models, also capture license plate lamps conduit in left side cable clip. On FLHR and FLHT/C/U models, capture rear fender tip lamp conduit in both left side cable clip and stamped fender clip.

6. Connect tail lamp connector [93], 4-place Multilock.

7. To avoid stressing wires, verify that tail lamp conduit is positioned on the outboard side of the rear fender tip lamp and left turn signal lamp conduit as shown in Figure 8-40. Place tail lamp into position against chrome base.

CAUTION

Over tightening screws can crack the lense or result in scratching of the fender paint.

8. Install two Phillips screws and alternately tighten to 20-24 **in-lbs** (2.3-2.7 Nm).

9. Install rear fender. See Section 2.34 REAR FENDER.

FRONT FENDER TIP LAMP

REMOVAL

1. Insert blade of small screwdriver into slot at top of fender tip lamp lense. Rotate end of screwdriver to unsnap lense from lamp bracket.
2. Holding Keps nuts at inboard side of rear fender, remove two Phillips screws to release fender tip lamp bracket.
3. Disconnect front fender tip lamp connector [143], 2-place Multilock. See Figure 8-47.

INSTALLATION

1. Connect front fender tip lamp connector [143], 2-place Multilock. See Figure 8-47.
2. With wires routed along bottom left side, place fender tip lamp bracket into position aligning holes in bracket with those in fender.

CAUTION

Over tightening screws can crack the bracket or result in scratching of the fender paint.

3. Slide Phillips screws through bracket and fender holes and install Keps nuts. Holding nuts at inboard side of fender, tighten screws to 20-24 **in-lbs** (2.3 - 2.7 Nm).
4. Insert tab at bottom of lense into slot of fender tip lamp bracket. Apply thumb pressure at top of lense until it snaps into place.
5. Turn the Ignition/Light Key Switch to IGNITION and test lamp for proper operation.

FRONT FENDER TIP LAMP JUMPER HARNESS

REMOVAL

1. Proceed as follows:

   FLHT/C/U: Reaching in below the fairing cap on the left side of the steering head, disconnect the front fender tip lamp jumper harness connector [32], 2-place Multilock. See Figure 8-45. Remove outer fairing only if necessary. See Section 2.30 UPPER FAIRING/WINDSHIELD (FLHX, FLHT/C/U), OUTER FAIRING/WINDSHIELD, REMOVAL.

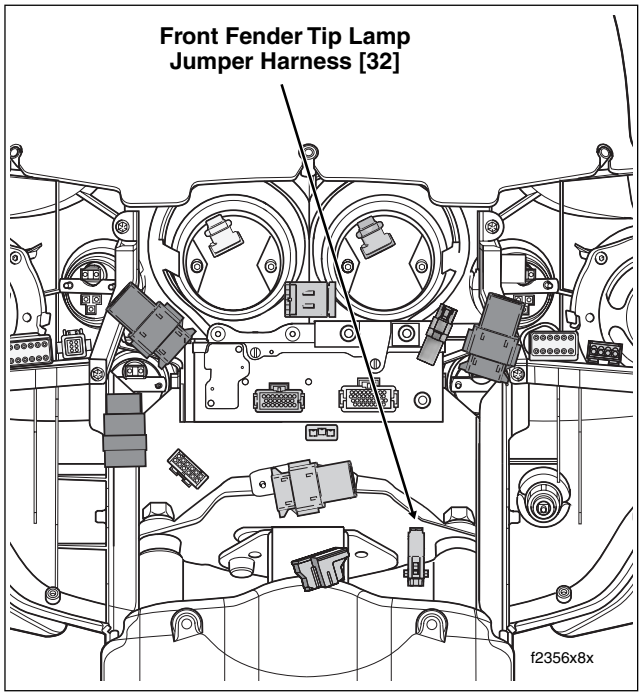

Figure 8-45. Inner Fairing (FLHT/C/U)

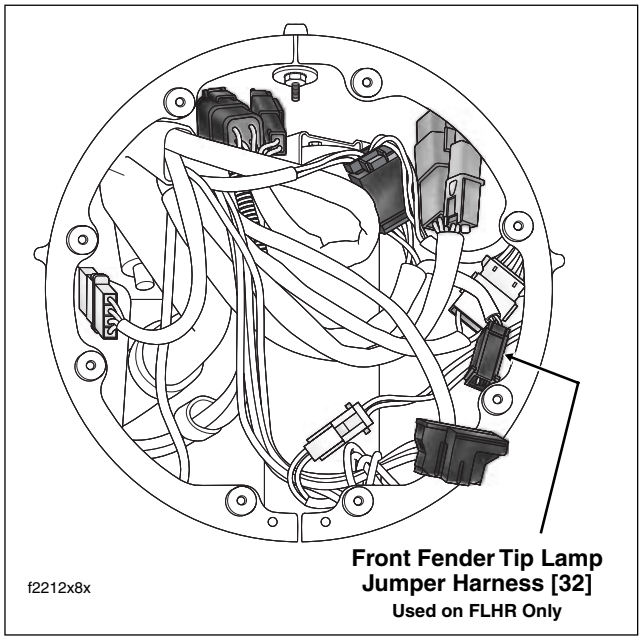

Figure 8-46. Headlamp Nacelle (FLHRC)

FLHR: Remove headlamp assembly. See Section 8.11 HEADLAMP (FLHR/C/S, FLHX, FLHT/C/U), HEADLAMP ASSEMBLY, REMOVAL. Disconnect the front fender tip lamp jumper harness connector [32], 2-place Multilock. See Figure 8-46.

2. Draw socket housing down to fender area.

3. Carefully cut cable strap to release front fender tip lamp wires from brake caliper hose.

4. Remove terminals from socket housing.

NOTE

For instructions on removing terminals, see APPENDIX B.2 MULTILOCK ELECTRICAL CONNECTORS, REMOVING SOCKET/PIN TERMINALS.

5. Place the motorcycle on a hydraulic center stand with the front wheel raised off the ground.

6. Remove the front wheel. See Section 2.3 FRONT WHEEL, REMOVAL.

7. From inboard side of front fender, remove two nuts to release trim strip from left side of fender. See Figure 8-48.

8. Pull wires and socket terminals through grommet to inboard side of fender. See Figure 8-49. Reaching under left side of fender, draw wires forward out from beneath fender bracket.

9. Feed wires through oblong hole to outboard side of fender.

10. Insert blade of small screwdriver into slot at top of fender tip lamp lense. Rotate end of screwdriver to unsnap lense from lamp bracket.

11. Holding Keps nuts at inboard side of front fender, remove two Phillips screws to release fender tip lamp bracket.

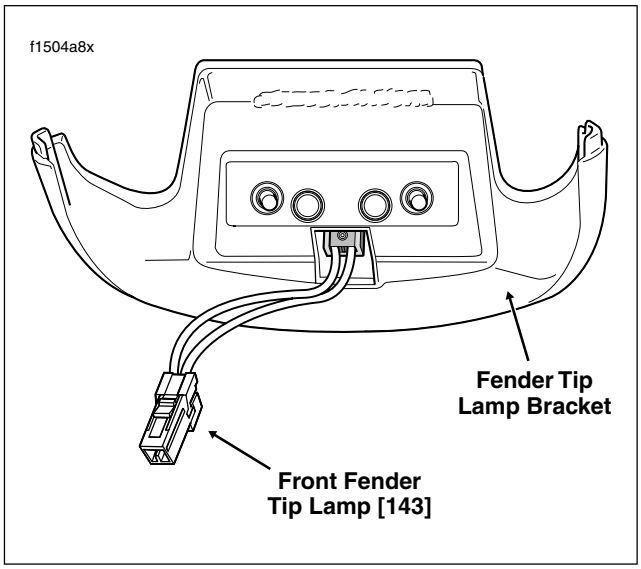

Figure 8-47. Fender Tip Lamp Assembly

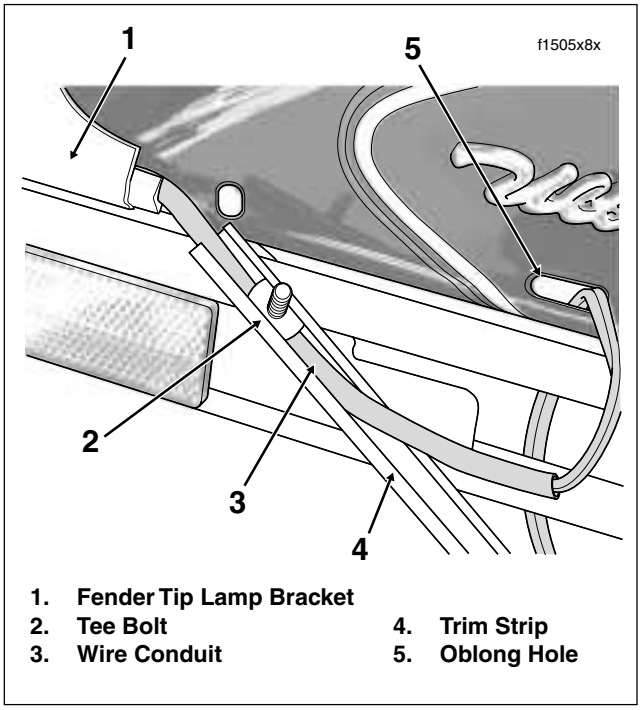

Figure 8-48. Install Conduit in Trim Strip

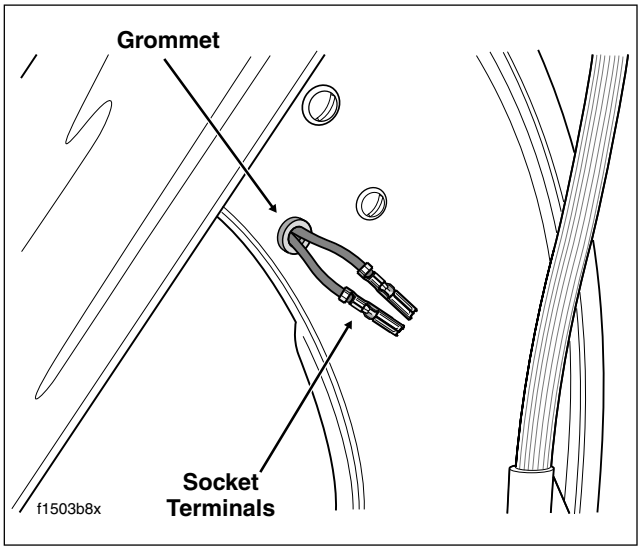

Figure 8-49. Pull Fender Tip Lamp Wires and Terminals Through Fender Grommet

12. Disconnect front fender tip lamp connector [143], 2-place Multilock, to release fender tip lamp assembly from jumper harness. See Figure 8-47.

INSTALLATION

1. Connect front fender tip lamp connector [143], 2-place Multilock, to attach fender tip lamp assembly to jumper harness. See Figure 8-47.

2. Pull jumper harness conduit as close to fender tip lamp connector [143] as possible, for the conduit is not easily routed beneath the fender bracket.

3. With conduit routed along bottom left side, place fender tip lamp bracket into position aligning holes in bracket with those in fender.

CAUTION

Over tightening screws can crack the bracket or result in scratching of the fender paint.

4. Slide Phillips screws through bracket and fender holes and install Keps nuts. Holding nuts at inboard side of fender, tighten screws to 20-25 **in-lbs** (2.3-2.8 Nm).

5. Insert tab at bottom of lense into slot of fender tip lamp bracket. Apply thumb pressure at top of lense until it snaps into place.

6. Route wire conduit inside trim strip and slide front tee bolt over conduit. See Figure 8-48. Verify that second tee bolt is in position at rear of trim strip.

7. Feed socket terminals and wires through oblong hole to inboard side of fender.

NOTE

Use the rearmost oblong hole as the front may be used for installation of certain P&A accessories.

8. While removing slack from wires on outboard side of fender, align tee bolts with fender holes. Wtih trim strip positioned against left side of fender, reach under fender and install nuts on tee bolts. Alternately tighten nuts to 10-15 **in-lbs** (1.1-1.7 Nm).

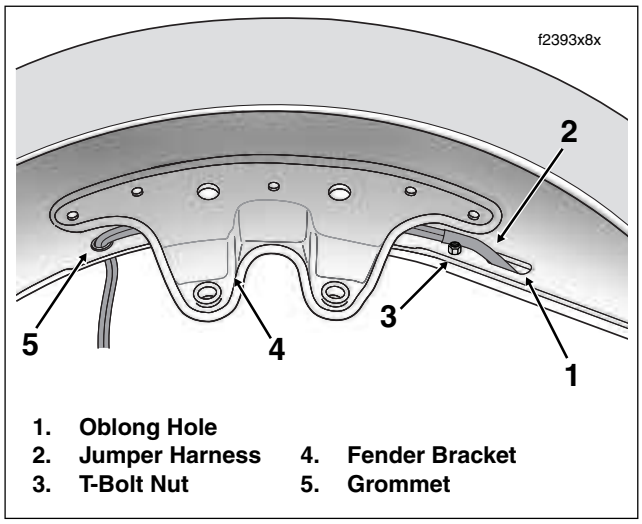

Figure 8-50. Left Side Front Fender Well

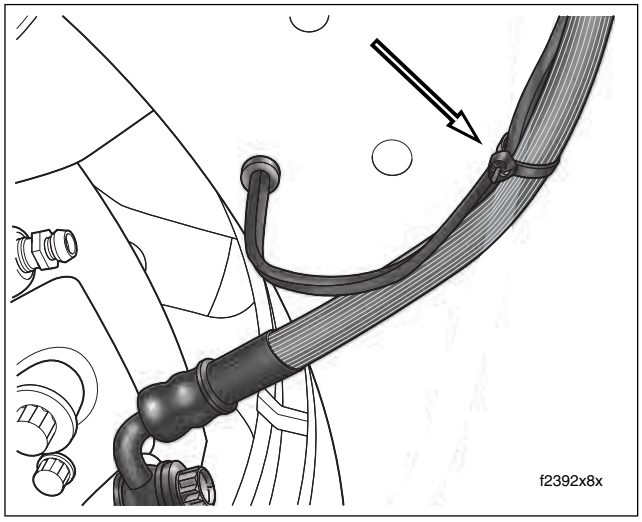

Figure 8-51. Install Cable Strap to Brake Hose

9. Reaching under left side of fender, route wires of the jumper harness rearward between tee bolt nut and fender bracket and then beneath fender bracket to grommet. See Figure 8-50.

10. Feed socket terminals and wires through grommet to outboard side of fender. See Figure 8-49.

⚠WARNING

If any portion of the jumper harness is above the height of the fender bracket, contact with the tire can cause chafing or other damage. Damage to the wiring can lead to loss of lighting while riding, which could result in death or serious injury.

11. Remove slack from wires on inboard side of fender. Verify that no portion of the jumper harness is above the height of the fender bracket.

12. Install terminals into socket housing.

NOTE

For instructions on installing terminals, see APPENDIX B.2 MULTILOCK ELECTRICAL CONNECTORS, INSTALLING SOCKET/PIN TERMINALS.

13. Route socket housing upward behind chrome skirt (FLHT/C/U) or through bottom of headlamp nacelle (FLHR) to area beneath upper fork bracket. Connect front fender tip lamp jumper harness connector [32].

NOTE

To connect jumper harness connector with the outer fairing installed (FLHT/C/U models), reach in below the fairing cap on the left side of the steering head.

14. Install the front wheel. See Section 2.3 FRONT WHEEL, INSTALLATION.

15. Install **new** cable strap to secure front fender tip lamp wires to brake caliper hose. Cut any excess cable strap material. See Figure 8-51.

16. Proceed as follows:

    FLHT/C/U: Install outer fairing, if removed. See Section 2.30 UPPER FAIRING/WINDSHIELD (FLHX, FLHT/C/U), OUTER FAIRING/WINDSHIELD, INSTALLATION.

    FLHR: Install headlamp assembly. See Section 8.11 HEADLAMP (FLHR/C/S, FLHX, FLHT/C/U), HEADLAMP ASSEMBLY, INSTALLATION.

17. Turn Ignition/Light Key Switch to IGNITION and test lamp for proper operation.

REAR FENDER TIP LAMP

REMOVAL

1. Remove two Phillips screws to release tail lamp assembly from chrome base.
2. Disconnect tail lamp connector [93], 4-place Multilock. Set tail lamp assembly aside. See Figure 8-52.
3. Disconnect rear fender tip lamp connector [45], 3-place Multilock.

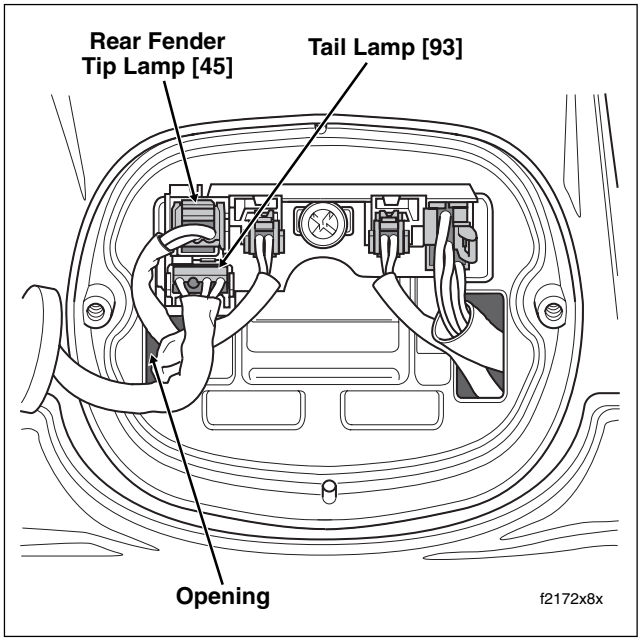

Figure 8-52. Depress Button to Release Socket From Pin Housing

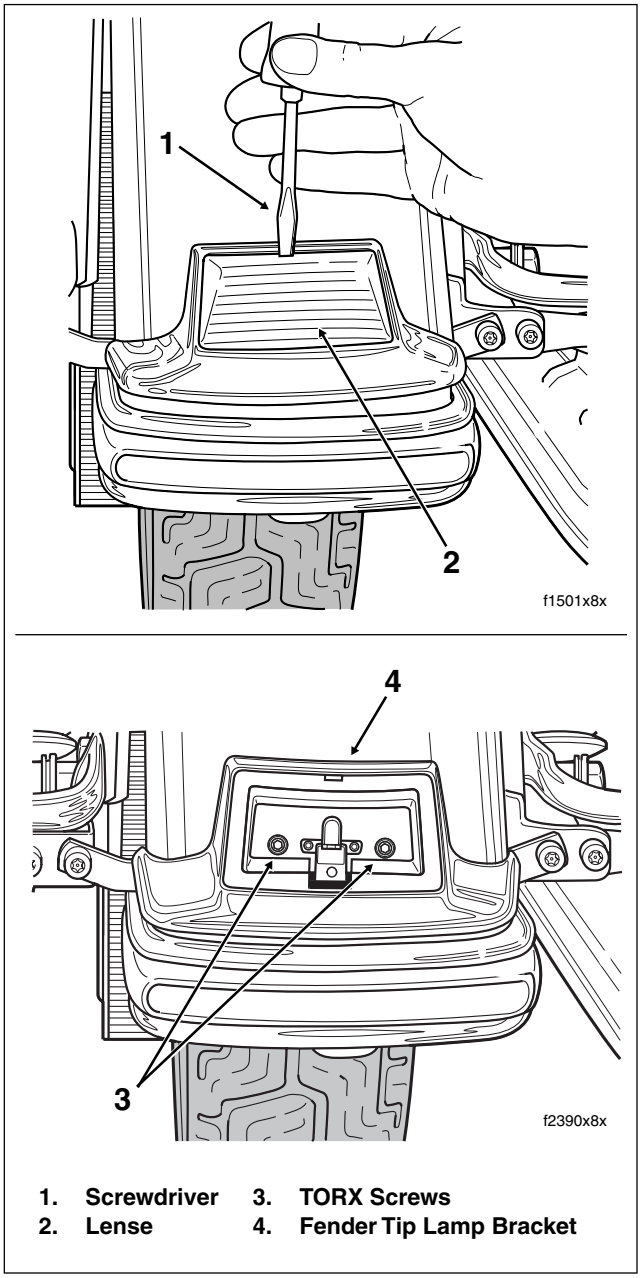

1. Screwdriver
2. Lense
3. TORX Screws
4. Fender Tip Lamp Bracket

Figure 8-53. Remove Rear Fender Tip Lamp Lense and Bracket

4. Feed socket housing through opening in chrome base to inboard side of rear fender.
5. Reaching under left side of rear fender, release conduit from cable clip anchored on T-stud. Release conduit from stamped fender clip.
6. Insert blade of small screwdriver into slot at top of fender tip lamp lense. Rotate end of screwdriver to unsnap lense from lamp bracket. See upper frame of Figure 8-53.

7. Holding nuts at inboard side of rear fender, remove two TORX screws to release fender tip lamp bracket. See lower frame of Figure 8-53.
8. Draw conduit and socket housing out through bottom fender hole. See Figure 8-54.
9. Remove terminals from socket housing.

NOTE

For instructions on removing terminals, see APPENDIX B.2 MULTILOCK ELECTRICAL CONNECTORS, REMOVING SOCKET/PIN TERMINALS.

INSTALLATION

1. Place **new** fender tip lamp assembly next to discarded unit and cut wires to proper length.
2. Crimp **new** socket terminals onto fender tip lamp wires.

NOTE

For instructions on crimping terminals, see APPENDIX B.2 MULTILOCK ELECTRICAL CONNECTORS, CRIMPING INSTRUCTIONS.

3. Install terminals into socket housing.

Table 8-8. Rear Fender Tip Lamps [45]

Wire Color	Chamber Number
Black	1
Not Used	2
Black	3

NOTE

For instructions on installing terminals, see APPENDIX B.2 MULTILOCK ELECTRICAL CONNECTORS, INSTALLING SOCKET/PIN TERMINALS.

4. Feed socket housing and conduit through bottom fender hole. See Figure 8-54.
5. Place fender tip lamp bracket into position aligning holes in bracket with those in fender. Slide TORX screws through bracket and fender holes and install nuts. See lower frame of Figure 8-53.
6. Insert tab at bottom of lense into slot of fender tip lamp bracket. Apply thumb pressure at top of lense until it snaps into place.
7. Reaching under left side of rear fender, capture conduit in cable clip anchored on T-stud. Capture conduit in stamped fender clip next to fender hole.
8. Feed socket housing through opening on left side of chrome base to outboard side of rear fender. Oriented with the release button at the top, insert socket housing into pin housing/circuit board.

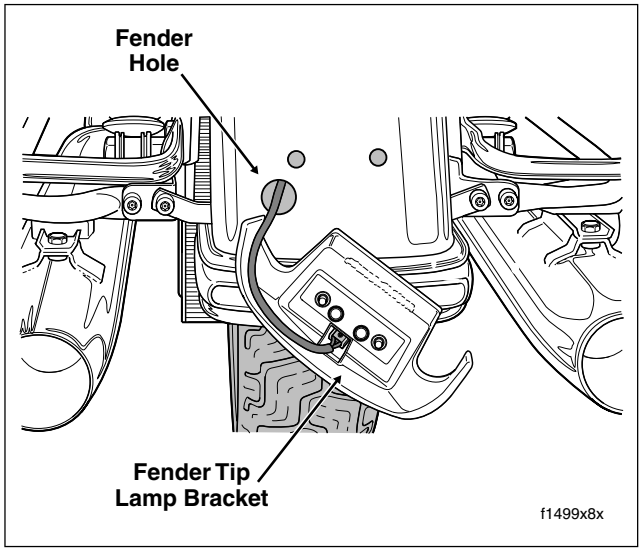

Figure 8-54. Feed Fender Tip Lamp Socket and Conduit Through Fender Hole

9. To install tail lamp assembly, orient 4-place Multilock socket so that the release button is at the bottom and insert into pin housing until it “clicks.” To avoid stressing wires, verify that tail lamp conduit is positioned on the outboard side of the rear fender tip lamp and left turn signal lamp conduit as shown in Figure 8-52.
10. Place tail lamp into position against chrome base.

CAUTION

Over tightening screws can crack the lense or result in scratching of the fender paint.

11. Install two Phillips screws and alternately tighten to 20-24 **in-lbs** (2.3-2.7 Nm).
12. Turn the Ignition/Light Key Switch to IGNITION and test lamp for proper operation.

TURN SIGNAL LAMPS 8.16

BULB REPLACEMENT

REMOVAL

1. Proceed as follows:

   FLHR/C, FLHT/C/U: Remove two Phillips screws to release lense from lamp. See Figure 8-55.

   FLHRS, FLHX, FLTR: Insert blade of small screwdriver into slot at bottom of lense. Gently rotate end of screwdriver to unsnap lense from lamp.
2. Push in bulb and rotate in a counterclockwise direction to remove.
3. Inspect condition of electrical contacts in socket. If necessary, clean with a small wire brush and electrical contact cleaner.

INSTALLATION

1. Liberally apply dielectric grease to contacts in socket and at bottom of **new** bulb. For correct bulb type, see Section 8.2 BULB CHART.

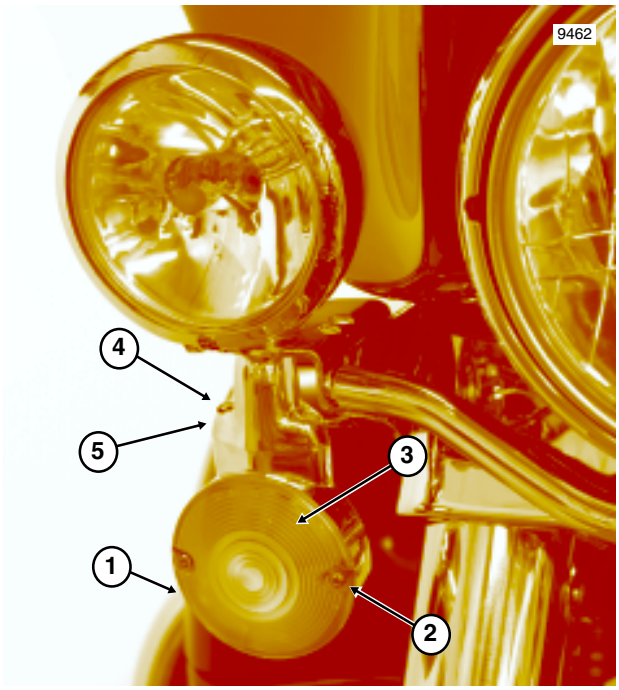

1. **Turn Signal Lamp**
2. **Phillips Screw (2)**
3. **Lense**
4. **Allen Head Screw (2)**
5. **Mounting Bracket**

Figure 8-55. Front Turn Signal Lamp (FLHR/C, FLHT/C/U)

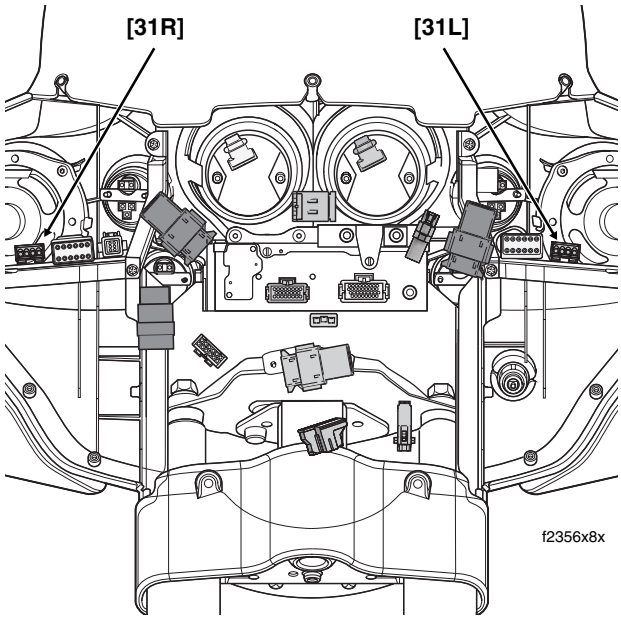

[31L] Left Front Turn Signal/Auxiliary Lamp
[31R] Right Front Turn Signal/Auxiliary Lamp

Figure 8-56. Inner Fairing (FLHT/C/U)

2. Push in **new** bulb and rotate in a clockwise direction to install.
3. Proceed as follows:

   FLHR/C, FLHT/C/U: Seat lense in lamp and install two Phillips screws.

   FLHRS, FLHX, FLTR: Seat lense in lamp and gently apply thumb pressure until it snaps into place. Rotate lense to position slot at bottom of lamp.

FRONT TURN SIGNAL LAMP

FLHR/C, FLHT/C/U

REMOVAL

1. Proceed as follows:

   FLHT/C/U: Remove outer fairing. See Section 2.30 UPPER FAIRING/WINDSHIELD (FLHX, FLHT/C/U), OUTER FAIRING/WINDSHIELD, REMOVAL. Disconnect the left or right front turn signal/auxiliary lamp connector [31L/R], 4-place Multilock, on T-stud at top of left or right fairing support brace (outboard side). See Figure 8-56.

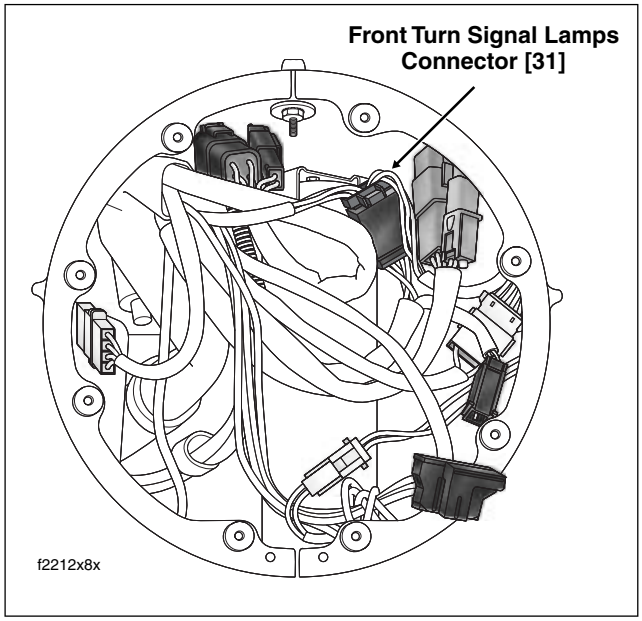

Figure 8-57. Headlamp Nacelle (FLHRC)

FLHR/C: Remove headlamp assembly. See Section 8.11 HEADLAMP (FLHR/C/S, FLHX, FLHT/C/U), HEADLAMP ASSEMBLY, REMOVAL. Disconnect the front turn signal lamps connector [31], 6-place Multilock, anchored in hole of fork stem nut lockplate (left side). See Figure 8-57.

2. Remove appropriate terminal(s) from socket housing as follows:

Table 8-9. Front Turn Signal Lamps [31]

FLHT/C/U, 4-Place			
Left Side [31L]		Right Side [31R]	
Wire Color	Chamber	Wire Color	Chamber
Blue	1	Blue	1
Violet	2	Brown	2
Black	3	Black	3
NOTE: Terminal 4 is reserved for the auxiliary lamp.			
FLHR/C/S, 6-Place			
Left Side		Right Side	
Wire Color	Chamber	Wire Color	Chamber
Blue (DOM)	4	Black	1
Violet	5	Brown	2
Black	6	Blue (DOM)	3

NOTE

For instructions on removing terminals, see APPENDIX B.2 MULTILOCK ELECTRICAL CONNECTORS, REMOVING SOCKET/PIN TERMINALS.

3. Remove two allen head screws to release turn signal lamp from mounting bracket. See Figure 8-55.
4. Obtain three equal lengths of strong flexible wire for use as mechanics wire. Feed wire through opening in socket terminal and then loop back twisting end until tightly coiled around longer strand as shown in Figure 8-58. Repeat step with remaining socket terminals.

NOTE

Be sure that mechanics wire is of sufficient strength to pull terminals through conduit without breaking. Wire lengths must also be long enough so that free ends are not lost in conduit when pulled.

5. Carefully pull wires to draw socket terminals through both sections of conduit. For best results, pull one wire at a time.
6. Unravel mechanics wire to release socket terminals.

INSTALLATION

1. Lay old turn signal lamp next to **new** turn signal lamp and cut wires to length.
2. Strip 3/16 inch (4.8 mm) of insulation off **new** lamp wires and crimp on **new** socket terminals.

NOTE

For instructions on crimping terminals, see APPENDIX B.2 MULTILOCK ELECTRICAL CONNECTORS, CRIMPING INSTRUCTIONS.

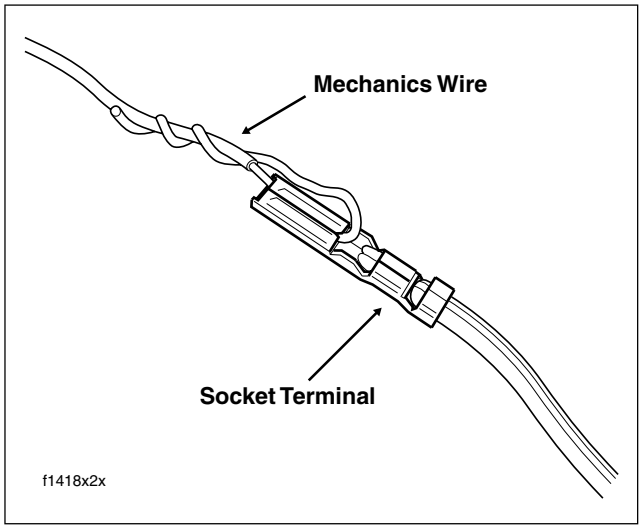

Figure 8-58. Fix Mechanics Wire to Socket Terminals

3. Reattach mechanics wire to socket terminals and carefully pull ends of mechanics wire to draw socket terminals back through conduit.
4. Carefully remove mechanics wire to avoid damage to terminals.
5. Install terminals into socket housing. For correct terminal locations refer to Table 8-9.

NOTE

For instructions on installing terminals, see APPENDIX B.2 MULTILOCK ELECTRICAL CONNECTORS, INSTALLING SOCKET/PIN TERMINALS.

6. Start two allen head screws to secure turn signal lamp to mounting bracket. See Figure 8-55. Verify that conduit fits in slot at back of bracket and is not pinched. Alternately tighten screws to 36-60 **in-lbs** (4.1-6.8 Nm).
7. Connect front turn signal/auxiliary lamp connector.
8. Proceed as follows:

   FLHT/C/U: Install connector on T-stud at top of left or right fairing support brace (outboard side). Verify that conduit is routed inboard using relief in upper outboard corner of chrome skirt. See Figure 8-56. Install outer fairing. See Section 2.30 UPPER FAIRING/WINDSHIELD (FLHX, FLHT/C/U), OUTER FAIRING/WINDSHIELD, INSTALLATION.

   FLHR/C: Install anchor on connector into hole of fork stem nut lockplate (left side). See Figure 8-57. Install headlamp assembly. See Section 8.11 HEADLAMP (FLHR/C/S, FLHX, FLHT/C/U), HEADLAMP ASSEMBLY, INSTALLATION.
9. Turn Ignition/Light Key Switch to IGNITION and test for proper operation.

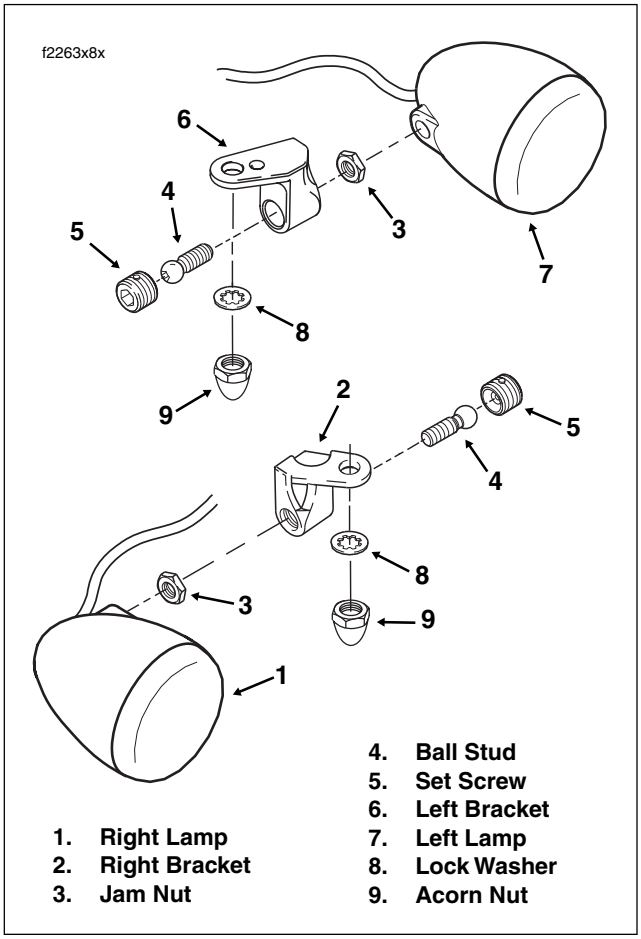

Figure 8-59. Front Turn Signal Lamp Brackets (FLHRS)

FLHRS

REMOVAL

1. Remove handlebar clamp shroud/wind deflector. See Section 2.32 WINDSHIELD/HEADLAMP NACELLE (FLHR/C/S), NACELLE REMOVAL (FLHRS), steps 1-7.
2. Inside headlamp nacelle, locate the front turn signal lamps connector [31], 6-place Multilock, anchored in hole of fork stem nut lockplate (left side). See Figure 8-57.
3. Disconnect front turn signal lamps connector.
4. Remove appropriate terminals from socket housing. Refer to Table 8-9.

NOTE

For instructions on removing terminals, see APPENDIX B.2 MULTILOCK ELECTRICAL CONNECTORS, REMOVING SOCKET/PIN TERMINALS.

5. Carefully cut cable strap to release turn signal lamp conduit from lower handlebar clamp. Draw free end of conduit out of headlamp nacelle.
6. Remove two cable clips anchored in holes at bottom of handlebar. Free turn signal lamp conduit from cable clips.
7. Remove acorn nut, lock washer and turn signal lamp bracket from stem of mirror. Remove turn signal lamp assembly from motorcycle.
8. If complete disassembly is required, proceed as follows:

   Bracket Assembly

   a. Using a 1/4 inch allen head socket, remove set screw from turn signal lamp bracket. See Figure 8-59.
   b. Using a 3/16 inch ball allen, remove ball stud from turn signal lamp housing.
   c. Remove jam nut from ball stud. Remove ball stud from turn signal lamp bracket.

   Socket/Isolator Assembly

   d. Push grommet at end of conduit into lamp housing. Lightly lubricate grommet with glass cleaner, if necessary.

e. Insert blade of small screwdriver into slot at bottom of lense. Gently rotate end of screwdriver to unsnap lense from lamp.

f. Push in bulb and rotate in a counterclockwise direction to remove.

g. Inserting blade of small screwdriver between outer edge of rubber isolator and inside of lamp housing, gently pry up socket assembly until free.

h. Pull socket assembly to draw conduit and terminals into lamp and then out through lense opening.

i. Remove rubber isolator from lamp if still installed.

INSTALLATION

NOTE

If turn signal lamp is already assembled, begin procedure at step 2.

1. Assemble front turn signal lamp as follows:

Socket/Isolator Assembly

a. Seat socket assembly in rubber isolator aligning tab on socket with slot in isolator.

b. Feed terminals and conduit into lamp through lense opening and then out through unthreaded hole.

c. Exercising caution to avoid pulling on wires, carefully pull grommet out through hole in lamp. For best results, grasp edge of grommet with needle nose pliers. Lightly lubricate grommet with glass cleaner, if necessary.

d. Install socket assembly aligning tab on socket with slot inside lamp.

e. Using thumbs of both hands, apply even pressure around outer edge of socket assembly until fully seated.

f. Liberally apply dielectric grease to contacts in socket and at bottom of bulb. Push in bulb and rotate in a clockwise direction to install.

g. Install lense in lamp and gently apply thumb pressure until it snaps into place. Rotate lense to position slot at bottom of lamp.

Bracket Assembly

h. Install ball stud into turn signal lamp bracket with the ball end on the same side as the mirror stem hole.

i. Thread jam nut onto ball stud until it contacts shoulder.

j. Using a 3/16 inch ball allen, turn ball stud into turn signal lamp housing until contact is made with jam nut.

k. Using a 1/4 inch allen head socket, start set screw into turn signal lamp bracket.

2. If removed, install stem of mirror into hole in clutch lever bracket (left side) or master cylinder reservoir bracket (right side).

Figure 8-60. Front Left Turn Signal Lamps (FLHRS)

Figure 8-61. Front Right Turn Signal Lamps (FLHRS)

3. Slide turn signal lamp bracket onto stem of mirror and install lock washer and acorn nut.

NOTE

Index pin at bottom of clutch lever bracket engages blind hole at top of left turn signal lamp bracket to ensure proper orientation. On the right side, location of the front brake lever pivot pin relief prevents improper installation. See Figure 8-60 and Figure 8-61.

4. Following bottom of handlebar, feed free end of turn signal lamp conduit into top of headlamp nacelle staying outboard of lower handlebar clamp.

5. Reaching inside headlamp nacelle, install terminals into socket housing. For correct terminal locations refer to Table 8-9.

NOTE

For instructions on installing terminals, see APPENDIX B.2 MULTILOCK ELECTRICAL CONNECTORS, INSTALLING SOCKET/PIN TERMINALS.

6. Connect front turn signal lamps connector. Install anchor on connector into hole of fork stem nut lockplate (left side).
7. Install two cable clips into holes at bottom of handlebar after capturing handlebar switch and turn signal lamp conduit.
8. Install **new** cable strap to secure handlebar switch and turn signal lamp conduit to lower handlebar clamp. Cut any excess cable strap material.
9. Install handlebar clamp shroud/wind deflector. See Section 2.32 WINDSHIELD/HEADLAMP NACELLE (FLHR/C/S), NACELLE INSTALLATION (FLHRS), steps 5-13.
10. Adjust mirror as necessary and tighten acorn nut to 60-96 **in-lbs** (6.8-10.8 Nm).
11. Turn Ignition/Light Key Switch to IGNITION and test for proper operation.
12. Adjust front turn signal lamp if necessary. See ADJUSTMENT which follows.

ADJUSTMENT

1. Using a 1/4 inch allen head socket, loosen set screw in turn signal lamp bracket. See Figure 8-59.
2. Point turn signal lamp straight forward and snug set screw.
3. Carefully turn the front forks to the left and right fork stops to verify that the turn signal lamp does not contact fuel tank or any other components. Loosen set screw and readjust lamp as required.
4. Tighten set screw to 50-60 **in-lbs** (5.7-6.8 Nm).

FLHX

REMOVAL

1. Remove outer fairing. See Section 2.30 UPPER FAIRING/WINDSHIELD (FLHX, FLHT/C/U), OUTER FAIRING/WINDSHIELD, REMOVAL.
2. Disconnect the left or right front turn signal lamp connector [31L/R], 4-place Multilock. Connector is attached to T-stud at top of left or right fairing support brace (outboard side). See Figure 8-56.
3. Remove two T40 TORX screws to release turn signal lamp mounting bracket from upper and lower fork brackets. See Figure 8-62.
4. To remove socket/isolator assembly, proceed as follows:
   a. Remove terminals from socket housing.

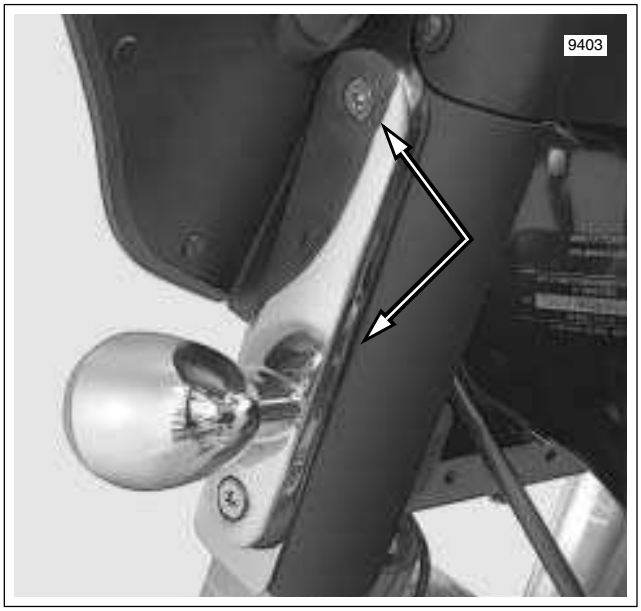

Figure 8-62. Front Turn Signal Lamp (FLHX)

Figure 8-63. Route Conduit Thru Mounting Bracket and Chrome Skirt Reliefs (FLHX)

NOTE

For instructions on removing terminals, see APPENDIX B.2 MULTILOCK ELECTRICAL CONNECTORS, REMOVING SOCKET/PIN TERMINALS.

   b. Pull mounting bracket from conduit.
   c. Remove socket/isolator assembly from lamp. See FLHRS, REMOVAL, in this section, steps 8(e) thru 8(i).

INSTALLATION

NOTE

If turn signal lamp is already assembled, begin procedure at step 2.

1. To install socket/isolator assembly, proceed as follows:

   a. Seat socket assembly in rubber isolator aligning tab on socket with slot in isolator.

   b. Feed terminals and conduit into lamp through lense opening and then out through unthreaded hole.

   c. Complete installation of socket assembly. See FLHRS, INSTALLATION, in this section, steps 1(d) thru 1(g).

   d. Feed terminals and conduit through triangular shaped hole in mounting bracket.

   e. Align thru hole in mounting bracket with threaded hole in lamp and start hex screw. Tighten hex screw to 15-20 ft-lbs (20-27 Nm).

NOTE

For instructions on installing terminals, see APPENDIX B.2 MULTILOCK ELECTRICAL CONNECTORS, INSTALLING SOCKET/PIN TERMINALS.

   f. Install terminals into socket housing as follows:

Table 8-10. Front Turn Signal Lamp [31L/R]

FLHX, 4-Place			
Left Side [31L]		Right Side [31R]	
Wire Color	Chamber	Wire Color	Chamber
Blue	1	Blue	1
Violet	2	Brown	2
Black	3	Black	3
Empty	4	Empty	4

2. Start two T40 TORX screws to fasten turn signal lamp mounting bracket to upper and lower fork brackets.

3. To avoid pinching wires, verify that conduit is routed forward through relief at front of mounting bracket, and then inboard using relief in upper outboard corner of chrome skirt. See Figure 8-63.

4. Alternately tighten T40 TORX screws to 15-20 ft-lbs (20-27 Nm).

5. Connect front turn signal lamp connector. Install connector on T-stud at top of left or right fairing support brace (outboard side). See Figure 8-56.

6. Install outer fairing. See Section 2.30 UPPER FAIRING/WINDSHIELD (FLHX, FLHT/C/U), OUTER FAIRING/WINDSHIELD, INSTALLATION.

FLTR

REMOVAL

1. Remove outer fairing and front turn signal lamp. See Section 2.31 UPPER FAIRING/WINDSHIELD (FLTR), OUTER FAIRING, REMOVAL. See Figure 8-64.

2. To remove socket/isolator assembly, proceed as follows:

   a. Remove terminals from socket housing.

NOTE

For instructions on removing terminals, see APPENDIX B.2 MULTILOCK ELECTRICAL CONNECTORS, REMOVING SOCKET/PIN TERMINALS.

   b. Pull lamp from mounting bracket.

   c. Remove socket/isolator assembly from lamp. See FLHRS, REMOVAL, in this section, steps 8(e) thru 8(i).

INSTALLATION

NOTE

If turn signal lamp is already assembled, begin procedure at step 2.

1. Assemble front turn signal lamp as follows:

   a. Seat socket assembly in rubber isolator aligning tab on socket with slot in isolator.

   b. Feed terminals and conduit into lamp through lense opening and then out through unthreaded hole.

   c. Complete installation of socket/isolator assembly. See FLHRS, INSTALLATION, in this section, steps 1(d) thru 1(g).

   d. Install lamp onto mounting bracket. See Figure 8-64.

Figure 8-64. Front Turn Signal Lamp (FLTR)

NOTE

For instructions on installing terminals, see APPENDIX B.2 MULTILOCK ELECTRICAL CONNECTORS, INSTALLING SOCKET/PIN TERMINALS.

e. Install terminals into socket housing. For correct terminal locations refer to Table 8-10.

2. Install outer fairing and front turn signal lamp. See Section 2.31 UPPER FAIRING/WINDSHIELD (FLTR), OUTER FAIRING, INSTALLATION.
3. Turn Ignition/Light Key Switch to IGNITION and test for proper operation.

REAR TURN SIGNAL LAMP

FLHR/C, FLHT/C/U

REMOVAL

1. Remove saddlebag on same side of motorcycle. See Section 2.26 SADDLEBAG, REMOVAL.
2. Remove two Phillips screws to release tail lamp assembly from chrome base.
3. Disconnect tail lamp connector [93], 4-place Multilock. Set tail lamp assembly aside. See Figure 8-65.
4. Disconnect turn signal lamp assembly, 2-place Multilock. For best results, use a pick or small screwdriver to depress release button as shown in Figure 8-66.
5. Feed socket housing through opening in chrome base to inboard side of rear fender.
6. Reaching under rear fender, release conduit from cable clip anchored on T-stud.
7. Draw conduit and socket housing out through fender hole just below chrome base. See Figure 8-66.
8. Draw socket housing through channel on inboard side of rear turn signal lamp bracket, so that length of conduit hangs below turn signal lamp.
9. Inserting a long shank ball end socket (Snap-on® FABL5) through channel in bracket, remove two socket head screws to release turn signal lamp assembly.
10. Remove terminals from socket housing.

NOTE

For instructions on removing terminals, see APPENDIX B.2 MULTILOCK ELECTRICAL CONNECTORS, REMOVING SOCKET/PIN TERMINALS.

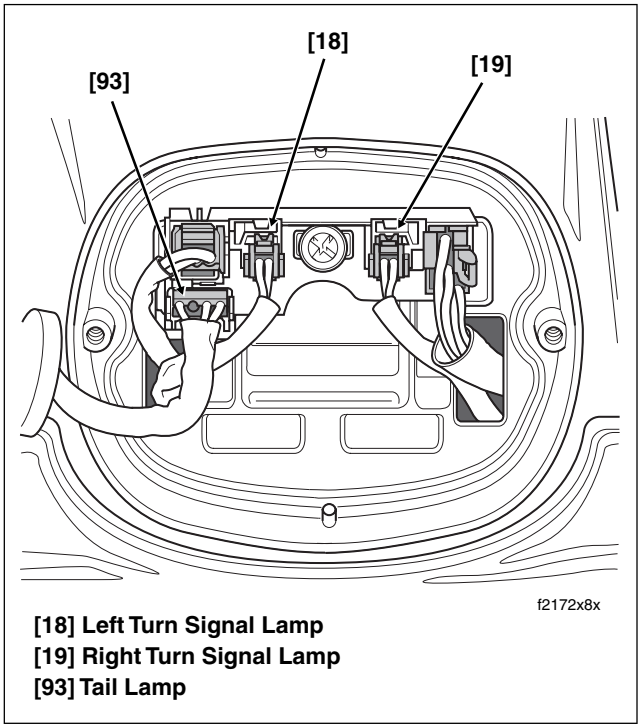

Figure 8-65. Release Tail Lamp Socket

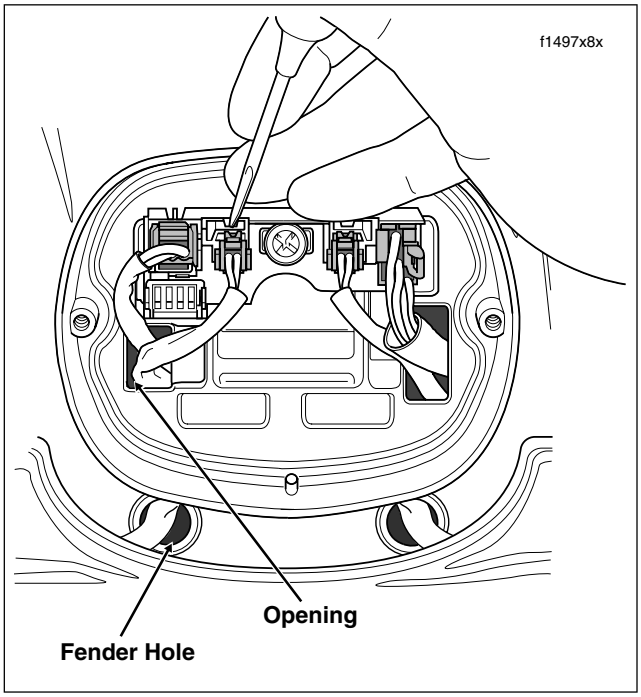

Figure 8-66. Use Pick Tool to Release Left Turn Signal Lamp Socket

INSTALLATION

1. Place **new** turn signal lamp assembly next to discarded unit and cut wires to proper length.
2. Crimp **new** socket terminals onto turn signal lamp wires.

NOTE

For instructions on crimping terminals, see APPENDIX B.2 MULTILOCK ELECTRICAL CONNECTORS, CRIMPING INSTRUCTIONS.

3. Install terminals into socket housing.

Table 8-11. Rear Turn Signal Lamps [18/19]

Wire Color	Chamber Number
Violet/Brown	1
Black	2

NOTE

For instructions on installing terminals, see APPENDIX B.2 MULTILOCK ELECTRICAL CONNECTORS, INSTALLING SOCKET/PIN TERMINALS.

4. Align holes in turn signal lamp assembly with those in rear turn signal lamp bracket and start two socket head screws. For best results, insert a long shank ball end socket (Snap-on® FABL5) through channel on inboard side of bracket. Alternately tighten screws to 30-50 **in-lbs** (3.4-5.6 Nm).
5. Route socket housing through channel in bracket, and then feed through fender hole just below chrome base. See Figure 8-66.
6. Reaching under rear fender, capture conduit in cable clip anchored on T-stud.
7. Feed socket housing through opening in chrome base to outboard side of rear fender.
8. Orient socket housing so that the release button is at the top and insert into pin housing/circuit board.
9. To install tail lamp assembly, orient 4-place Multilock socket so that the release button is at the bottom and insert into pin housing until it “clicks.” To avoid stressing wires, verify that tail lamp conduit is positioned on the outboard side of the rear fender tip lamp and left turn signal lamp conduit as shown Figure 8-65.
10. Place tail lamp into position against chrome base.

CAUTION

Over tightening screws can crack the lense or result in scratching of the fender paint.

11. Install two Phillips screws and alternately tighten to 20-24 **in-lbs** (2.3-2.7 Nm).
12. Turn the Ignition/Light Key Switch to IGNITION and test lamp for proper operation.
13. Install saddlebag. See Section 2.26 SADDLEBAG, INSTALLATION.

FLHRS, FLHX, FLTR

NOTE

This procedure entails replacement of the rear turn signal lamp socket/isolator assembly. To remove and install the turn signal lamps bracket, see REAR TURN SIGNAL LAMPS BRACKET in this section.

REMOVAL

1. Remove chrome base and circuit board assembly. See Section 8.14 TAIL LAMP ASSEMBLY, CIRCUIT BOARD/ CHROME BASE, REMOVAL.
2. Remove terminals from socket housing of rear turn signal lamp connector.

NOTE

For instructions on removing terminals, see APPENDIX B.2 MULTILOCK ELECTRICAL CONNECTORS, REMOVING SOCKET/PIN TERMINALS.

3. Reaching inside rear fender, release conduit from cable clip anchored on T-stud.
4. Draw conduit and terminals through hole to outboard side of fender.
5. Remove socket/isolator assembly as follows:
   a. Insert blade of small screwdriver into slot at bottom of lense. Gently rotate end of screwdriver to unsnap lense from lamp.
   b. Push grommet at end of conduit into lamp housing. Lightly lubricate grommet with glass cleaner, if necessary.
   c. Push in bulb and rotate in a counterclockwise direction to remove.
   d. Inserting blade of small screwdriver between outer edge of rubber isolator and inside of lamp housing, gently pry up socket assembly until free.
   e. Pull socket assembly to draw conduit and terminals into lamp and then out through lense opening.
   f. Remove rubber isolator from lamp if still installed.

INSTALLATION

1. Place **new** socket/isolator assembly next to discarded unit and cut wires to proper length. Crimp **new** socket terminals onto wires.

NOTE

For instructions on crimping terminals, see APPENDIX B.2 MULTILOCK ELECTRICAL CONNECTORS, CRIMPING INSTRUCTIONS.

2. Install socket/isolator assembly as follows:
   a. Seat socket assembly in rubber isolator aligning tab on socket with slot in isolator.

b. Feed terminals and conduit into lamp through lense opening and then out through unthreaded hole.

c. Exercising caution to avoid pulling on wires, carefully pull grommet out through hole in lamp. For best results, grasp edge of grommet with needle nose pliers. Lightly lubricate grommet with glass cleaner, if necessary.

d. Install socket assembly aligning tab on socket with slot inside lamp.

e. Using thumbs of both hands, apply even pressure around outer edge of socket assembly until fully seated.

f. Liberally apply dielectric grease to contacts in socket and at bottom of bulb. Push in bulb and rotate in a clockwise direction to install.

g. Install lense in lamp and gently apply thumb pressure until it snaps into place. Rotate lense to position slot at bottom of lamp.

3. Feed socket terminals through hole to inboard side of fender.

4. Install terminals into socket housing. See Table 8-11.

NOTE

For instructions on installing terminals, see APPENDIX B.2 MULTILOCK ELECTRICAL CONNECTORS, INSTALLING SOCKET/PIN TERMINALS.

5. Reaching inside rear fender, capture conduit in cable clip anchored on T-stud.

6. Install chrome base and circuit board assembly. See Section 8.14 TAIL LAMP ASSEMBLY, CIRCUIT BOARD/ CHROME BASE, INSTALLATION.

REAR TURN SIGNAL LAMPS BRACKET

FLHR/C, FLHT/C/U

REMOVAL

1. Remove chrome base and circuit board assembly. See Section 8.14 TAIL LAMP ASSEMBLY, CIRCUIT BOARD/ CHROME BASE, REMOVAL.

2. Remove rear turn signal lamps from bracket. See REAR TURN SIGNAL LAMP, REMOVAL, in this section, steps 6-9.

3. Remove two flange bolts to free rear turn signal lamps bracket from rear fender.

INSTALLATION

1. Apply one drop of LOCTITE THREADLOCKER 271 (Red) to two flange bolts.

2. Install flange bolts to fasten rear turn signal lamps bracket to rear fender. Alternately tighten bolts to 84-144 **in-lbs** (9.5-16.3 Nm).

3. Install rear turn signal lamps to bracket. See REAR TURN SIGNAL LAMP, INSTALLATION, in this section, steps 4-6.

4. Install chrome base and circuit board assembly. See Section 8.14 TAIL LAMP ASSEMBLY, CIRCUIT BOARD/ CHROME BASE, INSTALLATION.

FLHRS, FLHX, FLTR

REMOVAL

NOTE

To remove the rear turn signal lamps bracket on FLHX models, see Section 8.17 LICENSE PLATE LAMPS/BRACKET (FLHX), LICENSE PLATE BRACKET, REMOVAL.

1. Remove circuit board and chrome base. See Section 8.14 TAIL LAMP ASSEMBLY, CIRCUIT BOARD/ CHROME BASE, REMOVAL.

2. Reaching inside rear fender, release left and right rear turn signal lamp conduit from respective cable clips anchored on T-studs.

3. Remove two flange bolts to release rear turn signal lamps bracket.

4. Pull rear turn signal lamps bracket away from motorcycle drawing socket housings out through fender holes.

INSTALLATION

NOTE

To install the rear turn signal lamps bracket on FLHX models, see Section 8.17 LICENSE PLATE LAMPS/BRACKET (FLHX), LICENSE PLATE BRACKET, INSTALLATION.

1. Feed socket housings of left and right rear turn signal lamps through respective holes to inboard side of fender.

2. Apply one drop of LOCTITE THREADLOCKER 271 (Red) to two flange bolts.

3. Install flange bolts to fasten rear turn signal lamp bracket to fender. Alternately tighten bolts to 84-144 **in-lbs** (9.5-16.3 Nm).

4. Install chrome base and circuit board assembly. See Section 8.14 TAIL LAMP ASSEMBLY, CIRCUIT BOARD/ CHROME BASE, INSTALLATION.

LICENSE PLATE LAMPS/BRACKET (FLHX) 8.17

BULB REPLACEMENT

REMOVAL

1. Using a 7/32 inch allen head wrench, remove two screws to release lense of license plate lamp from rear turn signal lamps bracket.
2. See Figure 8-67. Exercising caution to avoid stressing wires, carefully pull down lamp assembly only as far as necessary to access bulbs. Remove bulbs from sockets.

INSTALLATION

1. Liberally apply dielectric grease to contacts in sockets and at bottom of **new** bulbs. Install bulbs in sockets. For correct bulb type, see Section 8.2 BULB CHART.
2. Using a 7/32 inch allen head wrench, install two screws to fasten lense of license plate lamp to rear turn signal lamps bracket.

LICENSE PLATE LAMPS

REMOVAL

1. Using a 7/32 inch allen head wrench, remove two screws to release lense of license plate lamp from rear turn signal lamps bracket.
2. See Figure 8-67. Exercising caution to avoid stressing wires, carefully pull down lamp assembly only as far as necessary to access bulbs.
3. Remove circuit board and chrome base. See Section 8.14 TAIL LAMP ASSEMBLY, CIRCUIT BOARD/ CHROME BASE, REMOVAL.
4. Remove terminals from socket housing of license plate lamps connector [45].

NOTE

For instructions on removing terminals, see APPENDIX B.2 MULTILOCK ELECTRICAL CONNECTORS, REMOVING SOCKET/PIN TERMINALS.

5. Reaching inside rear fender, release conduit from left side cable clip anchored on T-stud.
6. Draw conduit and socket terminals through hole to outboard side of fender, and then down through slot in center of turn signal lamps bracket. See Figure 8-68.

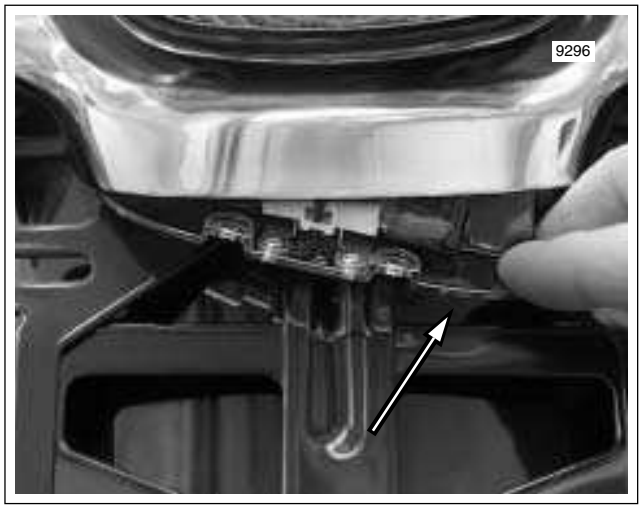

Figure 8-67. Release Lamp Assembly

Figure 8-68. Draw Wires Through Fender Hole

INSTALLATION

1. Place **new** lamp assembly next to discarded unit and cut wires to proper length.
2. Crimp **new** socket terminals onto license plate lamp wires.

NOTE

For instructions on crimping terminals, see APPENDIX B.2 MULTILOCK ELECTRICAL CONNECTORS, CRIMPING INSTRUCTIONS.

3. Feed socket terminals and conduit up through slot in center of turn signal lamps bracket, and then through hole to inboard side of fender. See Figure 8-68.

4. Install terminals into socket housing.

Table 8-12. License Plate Lamps [45]

Wire Color	Chamber Number
Black	1
Not Used	2
Black	3

NOTE

For instructions on installing terminals, see APPENDIX B.2 MULTILOCK ELECTRICAL CONNECTORS, INSTALLING SOCKET/PIN TERMINALS.

5. Using a 7/32 inch allen head wrench, install two screws to fasten lense to rear turn signal lamps bracket.
6. Reaching inside rear fender, capture conduit in cable clip anchored on T-stud.
7. Install chrome base and circuit board assembly. See Section 8.14 TAIL LAMP ASSEMBLY, CIRCUIT BOARD/ CHROME BASE, INSTALLATION.

LICENSE PLATE BRACKET

REMOVAL

1. Remove circuit board and chrome base. See Section 8.14 TAIL LAMP ASSEMBLY, CIRCUIT BOARD/ CHROME BASE, REMOVAL.
2. Remove terminals from socket housing of license plate lamps connector [45].

NOTE

For instructions on removing terminals, see APPENDIX B.2 MULTILOCK ELECTRICAL CONNECTORS, REMOVING SOCKET/PIN TERMINALS.

3. Reaching inside rear fender, release license plate lamps conduit from left side cable clip anchored on T-stud.
4. Draw socket terminals through hole to outboard side of fender. See Figure 8-68.
5. Reaching inside rear fender, release left and right rear turn signal lamp conduit from respective cable clips anchored on T-studs.
6. Remove two flange bolts to release rear turn signal lamps bracket.
7. Pull rear turn signal lamps bracket away from motorcycle drawing socket housings out through fender holes.
8. Remove two allen head socket screws to release license plate bracket from rear turn signal lamps bracket. See Figure 8-69.

INSTALLATION

1. Install two allen head socket screws to fasten license plate bracket to rear turn signal lamps bracket. See Figure 8-69.
2. Feed socket housings of left and right rear turn signal lamps through respective holes to inboard side of fender.
3. Apply one drop of LOCTITE THREADLOCKER 271 (Red) to two flange bolts.
4. Install flange bolts to fasten rear turn signal lamps bracket to fender. Alternately tighten bolts to 84-144 **in-lbs** (9.5-16.3 Nm).
5. Feed socket terminals of license plate lamp connector [45] through left side hole to inboard side of fender. See Figure 8-68.
6. Install terminals into socket housing. Refer to Table 8-12.

NOTE

For instructions on installing terminals, see APPENDIX B.2 MULTILOCK ELECTRICAL CONNECTORS, INSTALLING SOCKET/PIN TERMINALS.

7. Reaching inside rear fender, capture conduit of rear turn signal lamps connectors in respective cable clips anchored on T-studs. Also capture license plate lamps conduit in left side cable clip.
8. Install chrome base and circuit board assembly. See Section 8.14 TAIL LAMP ASSEMBLY, CIRCUIT BOARD/ CHROME BASE, INSTALLATION.

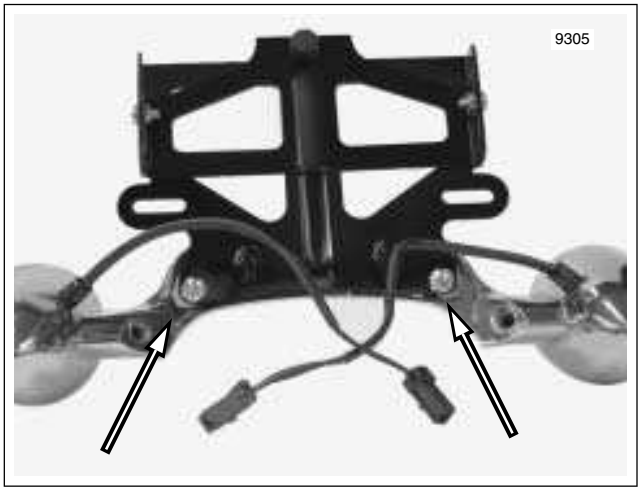

Figure 8-69. Remove License Plate Bracket

TSM/TSSM 8.18

REMOVAL

NOTE

If equipped with the optional "Harley-Davidson Factory Security System," verify that the security status lamp in speedometer face is not flashing before proceeding (security system disarmed).

1. Remove seat. See Section 2.25 SEAT, REMOVAL.
2. Depress tab at front of spring clip and lift to release legs from holes in frame crossmember at rear of battery box. See Figure 8-70.
3. Remove module from cavity and disconnect TSM/TSSM connector [30], 12-place Deutsch.

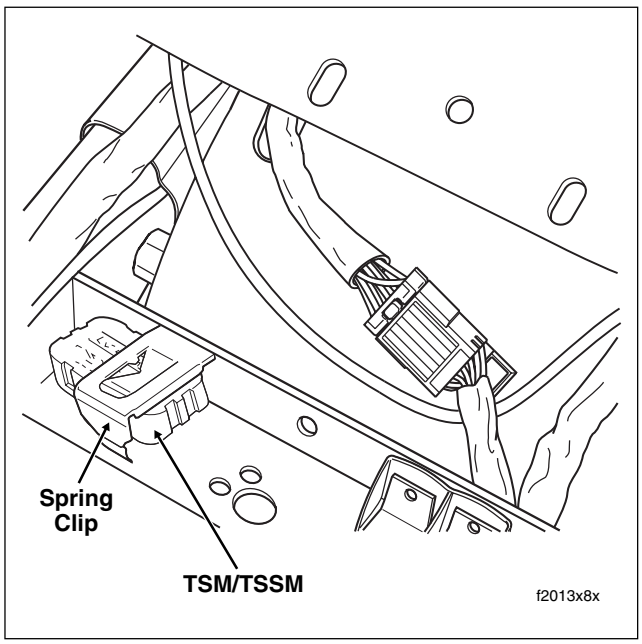

Figure 8-70. TSM/TSSM

INSTALLATION

1. Connect TSM/TSSM connector [30], 12-place Deutsch, to **new** module. Install module in cavity of frame crossmember at rear of battery box.
2. Insert legs of spring clip into holes in frame crossmember and push down until tab at front snaps in place.
3. Install seat. See Section 2.25 SEAT, INSTALLATION.
4. Test all turn signal functions. Test all security system functions, if so equipped.

IGNITION/LIGHT KEY SWITCH AND FORK LOCK 8.19

FLHX, FLHT/C/U, FLTR

REMOVAL

1. Remove maxi-fuse. See Section 8.3 SYSTEM FUSES, MAXI-FUSE, REMOVAL.

2. Remove the ignition switch knob as follows:

   a. Insert the ignition switch key and turn to the UNLOCK position. Leave the key installed in the ignition switch knob.

   b. Turn the front forks to the left fork stop and rotate the knob to FORK LOCK.

   c. Depressing the release button at bottom (left side) with a small screwdriver, push key down and turn 60 degrees in a counterclockwise direction. See Figure 8-71.

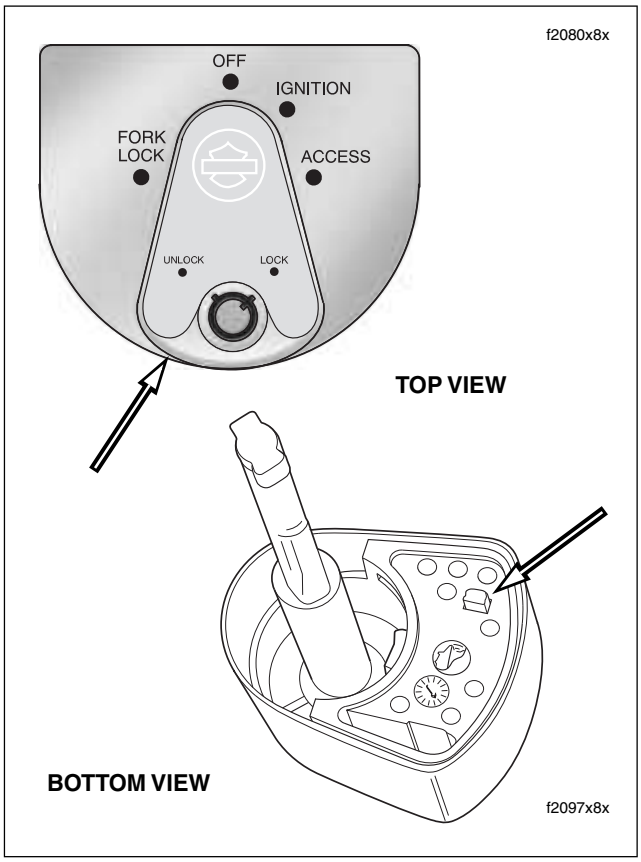

Figure 8-71. Ignition Switch Knob Release Button

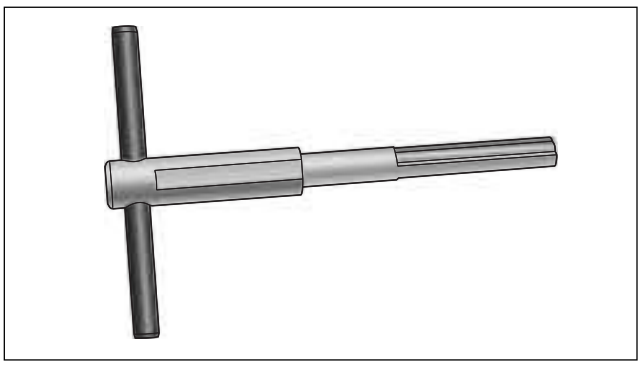

Figure 8-72. Ignition Switch Alignment Tool (Part No. HD-45962)

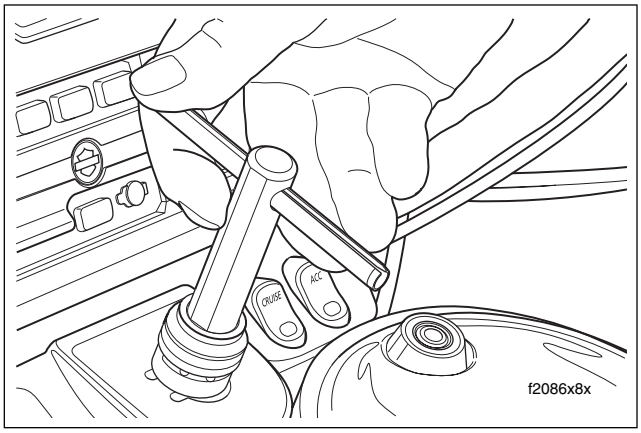

Figure 8-73. Bottom Alignment Tool in Threaded Post and Rotate to Desired Position

   d. Lift and remove knob. Be aware that spring will drop out of bore at underside of knob when removed.

NOTE

After removal of the knob, the IGNITION SWITCH ALIGNMENT TOOL (HD-45962) may be used to move the switch to other positions as required. Insert tool until bottom of handle contacts top of threaded post, and then rotate handle in a clockwise direction to the selected position. See Figure 8-73.

3. Turn the front forks to the right fork stop, and using a 7/8 inch open end/box wrench on flats, remove nut from threaded post of ignition switch housing.

4. Pull collar and spacer from threaded post.

5. Remove the switch position plate by pulling tabs from slots in fairing cap (FLHX, FLHT/C/U) or instrument nacelle (FLTR).

6. Proceed as follows:

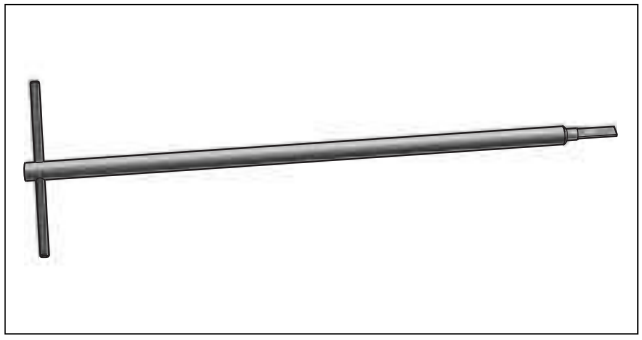

Figure 8-74. Ignition Switch Connector Remover (Part No. HD-45961)

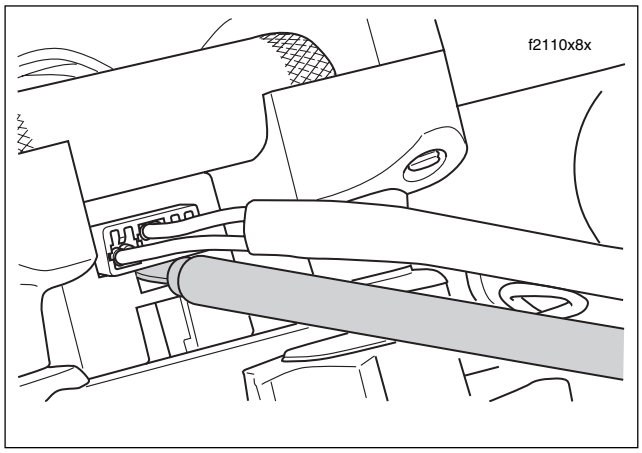

Figure 8-75. Pull Main Harness Conduit and Tool to Release Socket Housing

FLHX, FLHT/C/U:

a. Remove outer fairing. See Section 2.30 UPPER FAIRING/WINDSHIELD (FLHX, FLHT/C/U), OUTER FAIRING/WINDSHIELD, REMOVAL, step 2.

b. Using a long shank ball end socket (Snap-on® FABL6E), remove four socket head screws to release radio (storage box on FLHT) from left and right radio support brackets. Use oblong holes in fairing brackets to access screws. Lift radio slightly.

c. Carefully cut anchored cable strap to release main harness conduit from bottom right corner of radio.

d. Remove fairing cap. See Section 2.30 UPPER FAIRING/WINDSHIELD (FLHX, FLHT/C/U), FAIRING CAP, REMOVAL, steps 2-4.

FLTR:

a. Remove instrument nacelle. See Section 2.31 UPPER FAIRING/WINDSHIELD (FLTR), INSTRUMENT NACELLE, REMOVAL, steps 2-9.

7. Disconnect ignition switch connector [33], 3-place Packard, at front of ignition switch housing. Proceed as follows:

a. Obtain the IGNITION SWITCH CONNECTOR REMOVER (HD-45961). See Figure 8-74.

b. Gently insert end of tool into slot in ignition switch housing until it stops.

c. Grasping main harness conduit and tool, pull both at the same time to release socket housing from ignition switch housing. See Figure 8-75.

8. Proceed as follows:

Domestic: Remove two socket head screws (with flat washers) at base of ignition switch housing.

International: Remove two break-away screws (with flat washers) as follows.

a. Use a center punch to make a pilot hole at the top of each break-away screw.

⚠WARNING

Always wear proper eye protection when drilling. Flying debris may result in eye injury.

b. Install a 1/8 inch left handed bit in drill and set the drill to Reverse. Positioning the bit in the pilot hole, spin out the break-away screws.

NOTE

If the above method fails, use a 3/16 inch bit with long shank to carefully drill off heads of break-away screws. Use a pliers to unthread the shafts from the upper fork bracket.

9. Remove ignition switch housing from bore of upper fork bracket. See Figure 8-76.

INSTALLATION

1. Slide base of ignition switch housing into bore of upper fork bracket.

2. Proceed as follows:

Domestic: Install two socket head screws (with flat washers) at base of ignition switch housing. Alternately tighten screws to 36-60 **in-lbs** (4.1-6.8 Nm).

International: Install two **new** break-away screws (with flat washers) as follows.

CAUTION

Verify that the threads in the upper fork bracket are clean and in good condition. Dirty and/or damaged threads may cause the heads of the break-away screws to snap off before the switch housing is properly tightened.

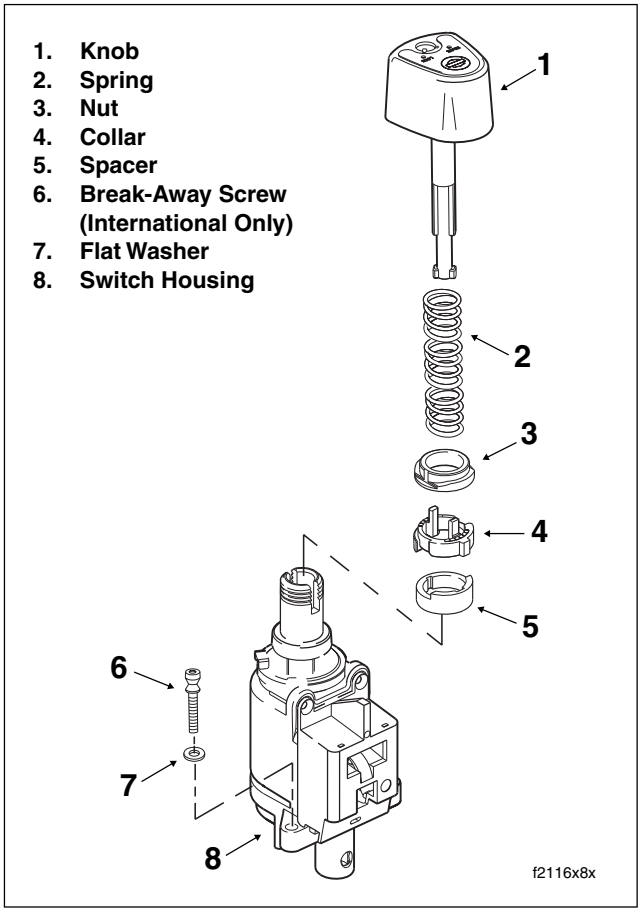

Figure 8-76. Ignition Switch Assembly (International)

CAUTION

Exercise care to avoid losing heads of break-away screws in motorcycle. Vibration may cause captured heads to scratch finished surfaces, chafe wires or cause other damage.

a. Rotate break-away screws in a clockwise direction until heads snap off.

3. Install ignition switch connector [33], 3-place Packard, at front of ignition switch housing.

4. Install anchor of **new** cable strap in hole at bottom right side of radio. Tighten cable strap capturing main harness conduit (to ignition switch). Cut any excess cable strap material.

5. Proceed as follows:

FLHX, FLHT/C/U:

a. Install fairing cap. See Section 2.30 UPPER FAIRING/WINDSHIELD (FLHX, FLHT/C/U), FAIRING CAP, INSTALLATION, steps 1-4.

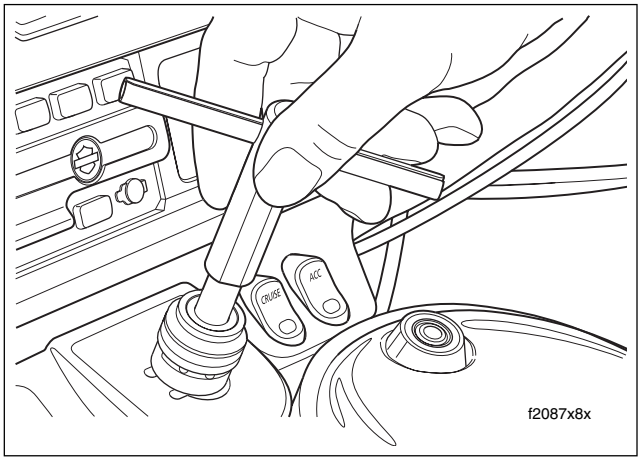

Figure 8-77. Rotate Alignment Tool Without Bottoming

b. Using oblong holes in fairing brackets and a long shank ball end socket (Snap-on® FABL6E), install four socket head screws to fasten radio (storage box on FLHT) to left and right radio support brackets. Alternately tighten screws to 35-45 **in-lbs** (4.0-5.1 Nm).

c. Install outer fairing. See Section 2.30 UPPER FAIRING/WINDSHIELD (FLHX, FLHT/C/U), OUTER FAIRING/WINDSHIELD, INSTALLATION, step 1.

FLTR:

a. Install instrument nacelle. See Section 2.31 UPPER FAIRING/WINDSHIELD (FLTR), INSTRUMENT NACELLE, INSTALLATION, steps 1-10.

6. Install switch position plate fitting tabs in slots of fairing cap (FLHX, FLHT/C/U) or instrument nacelle (FLTR). Plate snaps in place when properly installed. Exercise care to avoid breaking tabs. Replace plate if tabs are broken.

7. Install spacer over threaded post of ignition switch housing until it contacts switch position plate. Orient spacer so that the widest side is forward and the inside tabs fit in slots of post. See Figure 8-76.

8. Slide collar over threaded post until it contacts spacer. Orient collar so that the outside tab is forward and the inside tabs fit in slots of post.

9. Thread nut onto post with the lipped side down and the smaller OD topside. Turn the front forks to the right fork stop, and using a 7/8 inch Open End Crow Foot on flats, tighten nut to 125-150 **in-lbs** (14.1-16.9 Nm).

10. Install spring into bore at underside of knob.

11. With the knob pointing toward the FORK LOCK position, insert shaft into threaded post. Holding the knob down, turn key clockwise to UNLOCK. An audible “click” should be heard when knob and switch are properly engaged. Release knob and then rotate through all four switch positions to verify proper operation.

If knob will not install properly, move to step 12.

12. Proceed as follows:
    a. Verify that button at bottom of knob is depressed and key is turned 60 degrees beyond the UNLOCK position. See Figure 8-71.
    b. Repeat step 11.
    c. If knob does not install properly, move to step 13.
13. Knob was removed in ACCESS or switch may have been moved out of the FORK LOCK position. Proceed as follows:
    a. Insert alignment tool until bottom of handle contacts top of threaded post, and holding front forks at the left fork stop, rotate handle of tool in a counter-clockwise direction until fork locks. See Figure 8-73.
    b. Remove tool and repeat step 11.
    c. If knob does not install properly, move to step 14.
14. Detent and switch position lugs are misaligned. This can occur when the alignment tool (or ignition switch knob) is rotated before it is properly bottomed in the ignition switch housing. Proceed as follows:
    a. Reinstall knob inserting shaft into threaded post and gently rotate knob until it drops into the partially installed position. Take note of the position of the knob, that is, whether it is pointing toward the rear, or to ACCESS, IGNITION or OFF.
    b. Remove knob and insert alignment tool so that the bottom of the handle is approximately 1/2-3/4 inch (12.7-19.1 mm) from the top of the threaded post, and then hold. See Figure 8-77.
    c. Rotate alignment tool in a counter-clockwise direction the number of positions needed to get to FORK LOCK. For example, if the knob dropped into the partially installed position at IGNITION in step 14(a), rotate the alignment tool two positions in a counterclockwise direction. Or if the knob was pointing toward the rear when it dropped, rotate the alignment tool four positions in a counterclockwise direction or one position in a clockwise direction. Repeat step 11.
15. Install maxi-fuse. See Section 8.3 SYSTEM FUSES, MAXI-FUSE, INSTALLATION.

FLHR/C/S

IGNITION/LIGHT KEY SWITCH

Removal

1. Remove seat. See Section 2.25 SEAT, REMOVAL.

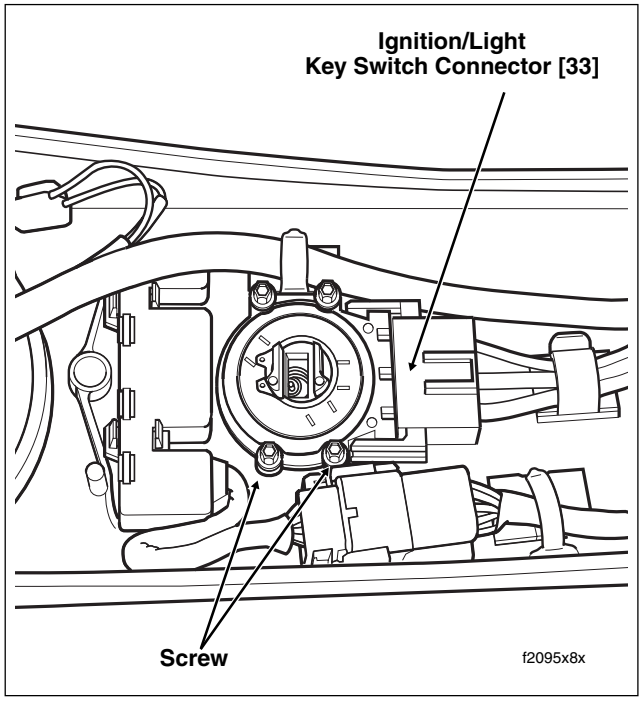

Figure 8-78. Instrument Console (FLHR/C)

WARNING

To protect against shock and accidental start-up of vehicle, disconnect the negative battery cable before proceeding. Inadequate safety precautions could result in death or serious injury.

2. Unthread bolt and remove battery negative cable (black) from battery negative (-) terminal.
3. Remove acorn nut from instrument console. If present, also remove Phillips screw and large flat washer (absent on FLHRS models).
4. On FLHRS models only, remove bolt (with flat washer) to free rear of fuel tank from frame backbone. Removal of rear bolt also releases instrument console bracket.
5. Raise instrument console and bend back flexible clamp on canopy to release main harness conduit. Remove fuel level sender/fuel pump connector [141], 4-place Packard, at top of canopy.
6. Lay a clean shop towel on forward part of rear fender. Lift the instrument console from fuel tank and lay upside down on shop towel.
7. Pull external latches outward to disconnect ignition/light key switch connector [33], 3-place Packard. See Figure 8-78.
8. Remove four screws to release switch from console.

Installation

1. Align holes in **new** switch with those in console. See Figure 8-78.
2. Start four screws and alternately tighten to 20-30 **in-lbs** (2.3-3.4 Nm) in a crosswise pattern.
3. Connect ignition/light key switch connector [33], 3-place Packard.
4. Slide head of console mounting bolt into slot at top of canopy.
5. Moving instrument console toward installed position, install fuel level sender/fuel pump connector [141], 4-place Packard, at top of canopy. Bend flexible clamp to capture main harness conduit.
6. Align hole in instrument console with console mounting bolt and place into position on fuel tank.
7. Install acorn nut at top of instrument console and tighten to 50-90 **in-lbs** (5.7-10.2 Nm). If present, also install Phillips screw and large flat washer (absent on FLHRS models). Tighten screw to 36-60 **in-lbs** (4.1-6.8 Nm).
8. On FLHRS models only, install bolt (with flat washer) to secure rear of fuel tank and instrument console bracket to frame backbone. Tighten bolt to 15-20 ft-lbs (20-27 Nm).
9. Insert bolt through battery negative cable (black) into threaded hole of battery negative (-) terminal. Tighten bolt to 60-96 **in-lbs** (6.8-10.9 Nm).
10. Install seat. See Section 2.25 SEAT, INSTALLATION.

FORK LOCK

Removal

1. Remove the handlebar clamp shroud. See Section 2.32 WINDSHIELD/HEADLAMP NACELLE (FLHR/C/S), NACELLE REMOVAL (FLHR/C), steps 1-11, or NACELLE REMOVAL (FLHRS), steps 1-7.
2. Start acorn nuts on both the left and right side fork studs to keep halves of headlamp nacelle on motorcycle.
3. Remove two allen head socket screws (with flat washers) and pull fork lock assembly from upper fork bracket bore. See Figure 8-79.

NOTE

On HDI models, use a center punch to make a pilot hole at the top of each break-away screw. Install a 1/8 inch left handed bit in drill and set the drill to reverse. Positioning the bit in the pilot hole, spin out the break-away screws.

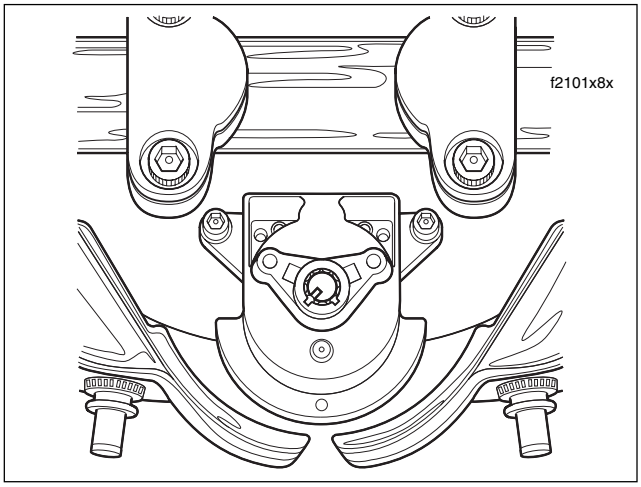

Figure 8-79. Fork Lock (FLHR/C/S)

Installation

1. Install **new** fork lock assembly into bore of upper fork bracket. See Figure 8-79.
2. Install two allen head socket screws (with flat washers) and alternately tighten to 36-60 **in-lbs** (4.1-6.8 Nm).

NOTE

*On HDI models, install **new** break-away screws and turn in a clockwise direction until heads snap off. Verify that threads in upper fork bracket are clean and in good condition or heads may break off before fork lock assembly is properly tightened. Avoid losing heads of screws in motorcycle as vibration may cause captured heads to scratch finished surfaces, chafe wires or cause other damage.*

3. Install the handlebar clamp shroud. See Section 2.32 WINDSHIELD/HEADLAMP NACELLE (FLHR/C/S), NACELLE INSTALLATION (FLHR/C), steps 3-15, or NACELLE INSTALLATION (FLHRS), steps 5-13.

FAIRING CAP SWITCHES (FLHTC/U) 8.20

REMOVAL

1. Partially disassemble ignition switch. See Section 8.19 IGNITION/LIGHT KEY SWITCH AND FORK LOCK, FLHX, FLHT/C/U, FLTR, REMOVAL, steps 1-5.
2. Remove two T27 TORX screws (with flat washers) to release fairing cap from left and right sides of inner fairing.
3. With the front forks turned to the left fork stop, reach behind right side of fairing cap and disconnect the fairing cap switch connector [105], 12-place Multilock (black).
4. Remove the fairing cap from the motorcycle. See Figure 8-80.
5. Bend back the flexible clamp to release switch wires from the inboard side of the fairing cap. Carefully cut cable straps to free wires from bundles.
6. Remove two T25 TORX screws to release switch bracket from fairing cap.
7. Gently pry two latches on bracket outward to release tabs on switch. Remove switch from bracket. See Figure 8-81.
8. If replacing Cruise or Speaker Switch, cut Black/Green wire lead halfway between Cruise and Speaker Switch terminals.
9. Follow the wires of the faulty switch to the socket housing, or reference Figure 8-82 and Table 8-13 for the applicable chamber numbers. For wire location purposes, numbers are stamped into the secondary locks of both the pin and socket housings.
10. Remove the appropriate terminals from the socket housing.

NOTE

For instructions on properly removing wire terminals, see APPENDIX B.2 MULTILOCK ELECTRICAL CONNECTORS, REMOVING SOCKET/PIN TERMINALS.

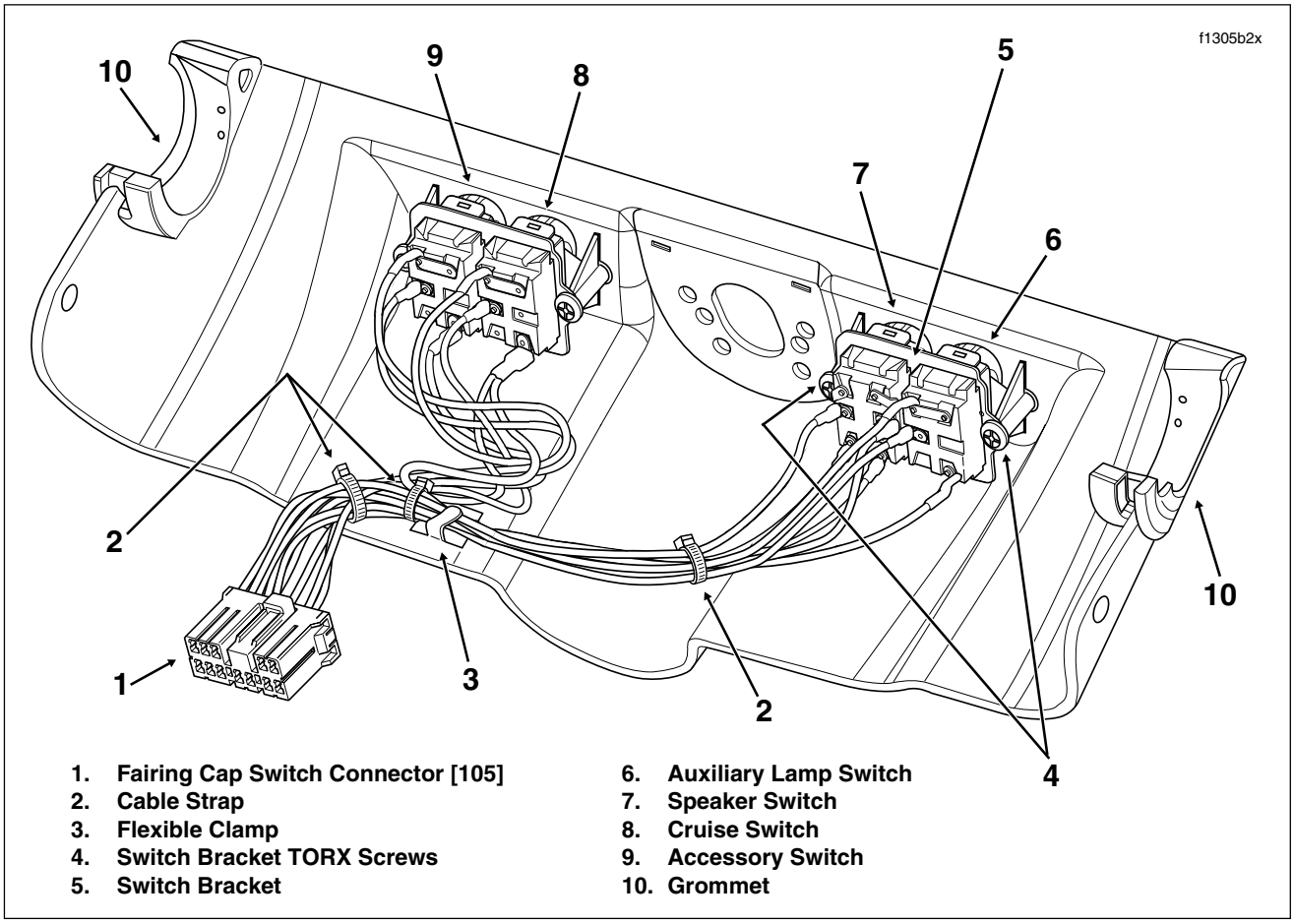

Figure 8-80. Fairing Cap (Inboard Side) - Ultra Model Shown

INSTALLATION

1. Feeding wires through bracket, place **new** switch into position. Engage tabs on switch in slots of latches and then gently bend tabs upward to lock position of switch in bracket.
2. Install terminals into socket housing.

NOTE

For instructions on properly installing wire terminals, see APPENDIX B.2 MULTILOCK ELECTRICAL CONNECTORS, INSTALLING SOCKET/PIN TERMINALS.

3. If Cruise or Speaker Switch was replaced, butt splice Black/Green wire lead between Cruise and Speaker Switch terminals.

NOTE

For detailed butt splicing information, see APPENDIX B.6 SEALED BUTT SPLICE CONNECTORS.

4. Install two T25 TORX screws to secure switch bracket to fairing cap.
5. Install **new** cable straps to capture wire bundles and then secure switch wires to the fairing cap using the flexible clamp. Route the wires as shown in Figure 8-80.
6. Verify that the rubber grommets are installed on each side of the fairing cap. Barbs on cap fit into holes in grommets.

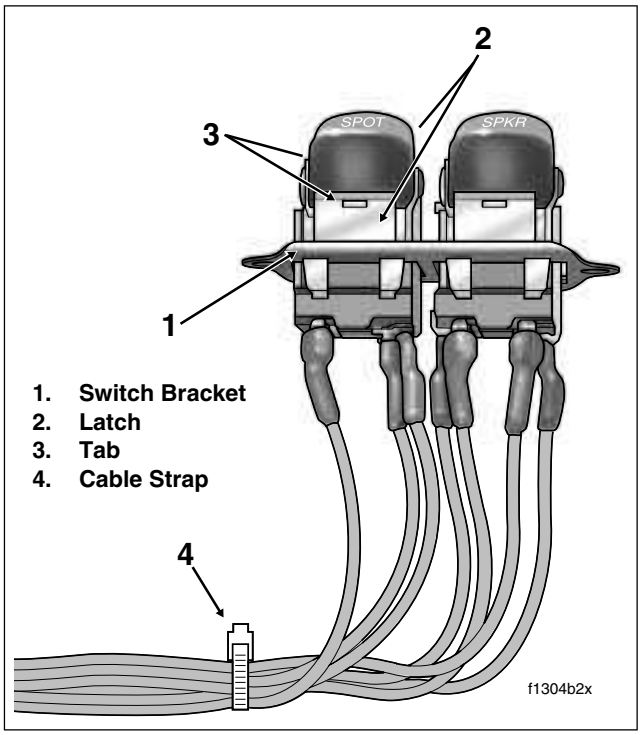

Figure 8-81. Bend Latches Outward to Release Tabs

Table 8-13. Fairing Cap Switches [105]

Switch	Wire Color	Chamber Number	
Accessory	Orange/Red	1	
	Orange	2	
	Black	3	
Cruise Ultra Only	Orange/Violet	4	
	Red/Green	5	
	Black/Green (Double Lugged)	12	To Speaker Switch
Auxiliary Lamp	Yellow	6	
	Gray/Black	7	
	Black	8	
Speaker Ultra Only	Orange/Blue	9	
	Violet/Orange	10	
	Brown/Orange	11	
	Black/Green	To Cruise Switch	

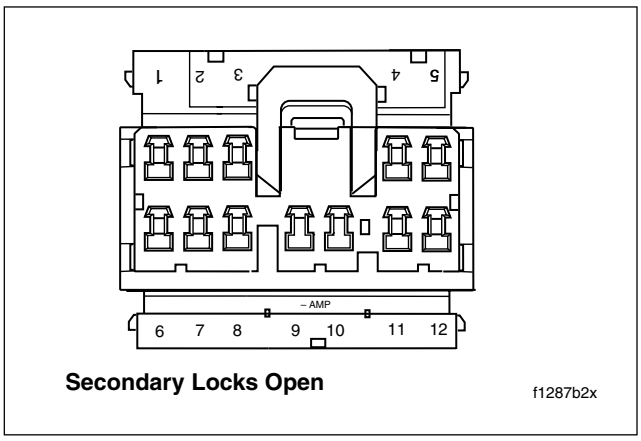

Figure 8-82. Numbers Stamped on Secondary Locks (Socket Housing Shown)

7. Connect the fairing cap switch connector [105], 12-place Multilock (black), on the right side of fairing cap.
8. With the front forks turned to the left fork stop, install fairing cap over ignition switch housing. Verify that grommets in fairing cap fully capture handlebar along with throttle and clutch cables.
9. Start two T27 TORX screws (with flat washers) to fasten fairing cap to left and right sides of inner fairing. Alternately tighten screws to 25-30 **in-lbs** (2.8-3.4 Nm).
10. Assemble ignition switch. See Section 8.19 IGNITION/ LIGHT KEY SWITCH AND FORK LOCK, FLHX, FLHT/ C/U, FLTR, INSTALLATION, steps 6-15.

INSTRUMENT NACELLE SWITCHES (FLTR) 8.21

REMOVAL

1. Partially disassemble ignition switch. See Section 8.19 IGNITION/LIGHT KEY SWITCH AND FORK LOCK, FLHX, FLHT/C/U, FLTR, REMOVAL, steps 1-5.
2. Remove T25 TORX screw on left and right side of instrument bezel.
3. Use thumbs to push tab at rear of bezel from slot in front of ignition switch. Gently raise free side of bezel until tabs at front of instrument nacelle become disengaged from slot at front of bezel (concealed behind decorative adhesive strip).
4. Raising bezel slightly, remove anchor on ambient temperature sensor from hole in bottom inboard ear of speedometer bracket.
5. See Figure 8-83. Disconnect instruments and indicator lamps from interconnect harness as follows:
   - Speedometer connector [39], 12-place Packard.
   - Tachometer connector [108], 12-place Packard.
   - Indicator lamps connector [21], 10-place Multilock.
6. Remove bezel from motorcycle.
7. Follow instructions based on location of defective switch.

LEFT SIDE SWITCH

a. See Figure 8-83. Disconnect left side switch from instrument nacelle switch harness as follows:

- Speaker Switch connector [105], 4-place Multilock.

b. Pull clutch cable clip from hole on left side of instrument nacelle.

c. Remove two T40 TORX bolts (with flat washers) to release left side of instrument nacelle from upper and lower fork brackets.

d. Unthread rubber boot from odometer reset switch, and while carefully removing left side instrument nacelle from motorcycle, pull odometer reset switch from hole. Move left side of nacelle to bench area leaving right side on motorcycle. See Figure 8-86.

e. Gently bend back molded retainer to release switch bracket assembly from instrument nacelle.

f. Carefully pry two latches on bracket outward to release tabs on switch. Remove switch from bracket. See Figure 8-84.

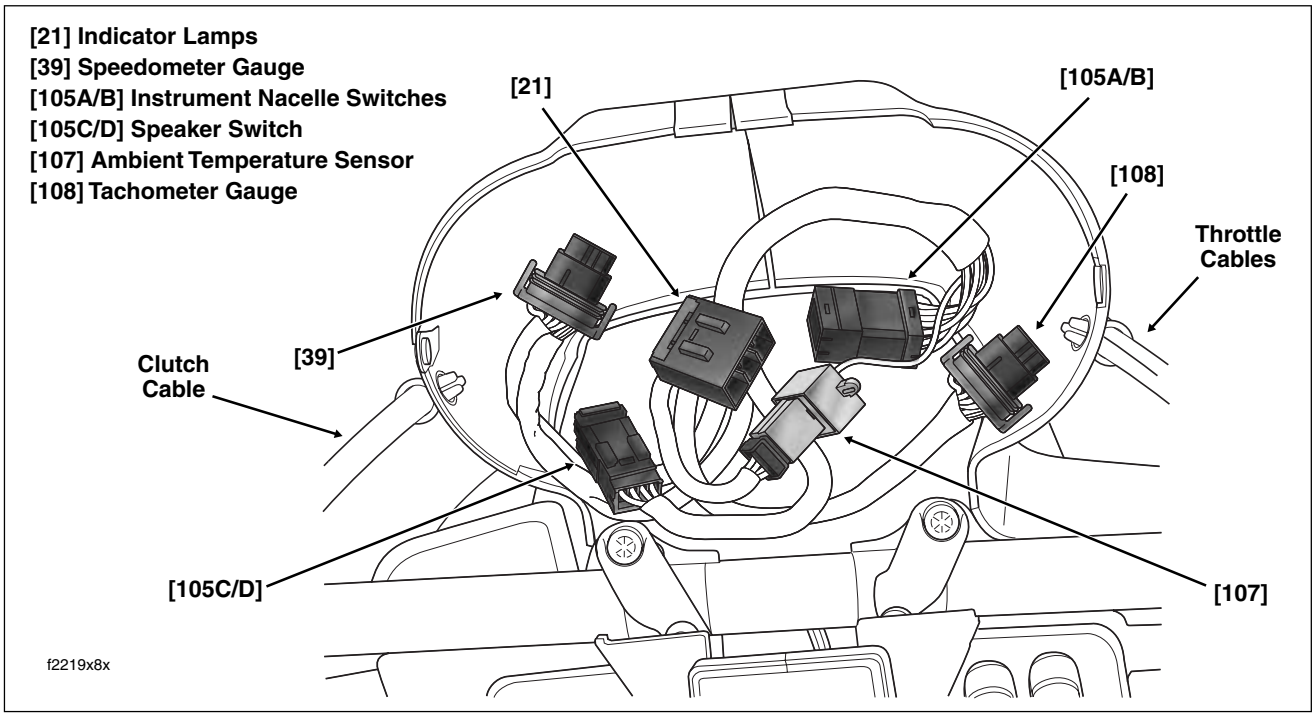

Figure 8-83. Instrument Nacelle (Bezel Removed)

RIGHT SIDE SWITCHES

a. See Figure 8-83. Disconnect left side switch from instrument nacelle switch harness as follows:

- Speaker Switch connector [105], 4-place Multilock.

b. See Figure 8-83. Disconnect instrument nacelle switches from interconnect harness as follows:

- Instrument nacelle switch connector [105], 12-place Multilock.

c. Pull throttle cable clip from hole on right side of instrument nacelle.

d. Remove two T40 TORX bolts (with flat washers) to release right side of instrument nacelle from upper and lower fork brackets. Move right side of nacelle to bench area leaving left side on motorcycle. See Figure 8-86.

e. Gently bend back molded retainer to release switch bracket assembly from instrument nacelle.

f. Carefully pry two latches on bracket outward to release tabs on switch. Remove switch from bracket. See Figure 8-84.

g. Remove the appropriate terminals from the socket and/or pin housings. Follow the wires of the faulty switch or reference Table 8-14 for the applicable chamber numbers. For wire location purposes, numbers are stamped into the secondary locks. See Figure 8-85.

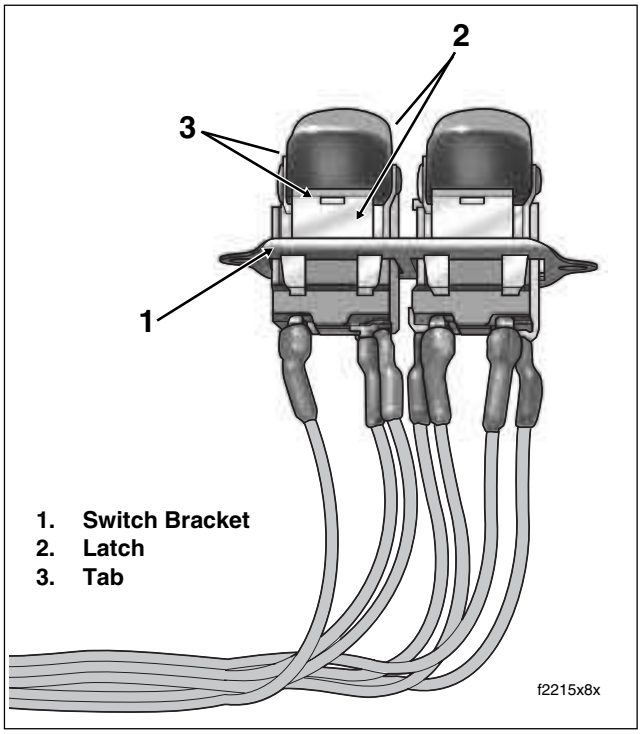

Figure 8-84. Bend Latches Outward to Release Tabs

Table 8-14. Right Side Instrument Nacelle Switches

Switch	Wire Color	Chamber Number	
		12-Place Multilock Socket	4-Place Multilock Pin
Accessory	Orange/Red	1	
	Orange	2	
	Black	3	
Cruise	Orange/Violet	4	
	Red/Green	5	
	Black/Green (Double Lugged)	12	4

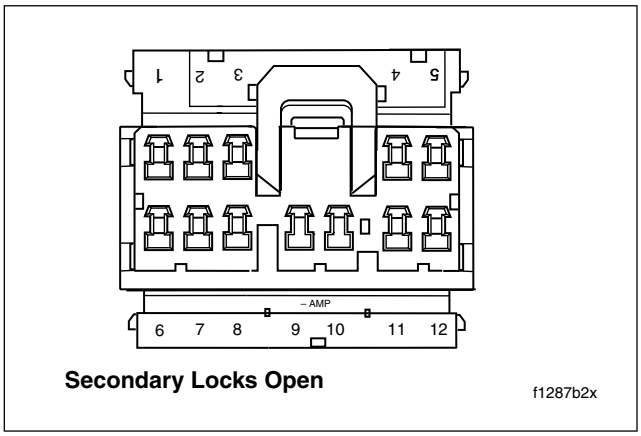

Figure 8-85. Numbers Stamped on Secondary Locks (Socket Housing Shown)

NOTE

For instructions on properly removing wire terminals, see APPENDIX B.2 MULTILOCK ELECTRICAL CONNECTORS, REMOVING SOCKET/PIN TERMINALS.

h. Carefully pull wires to draw terminals through conduit to backside of switch. For best results, pull one wire at a time.

INSTALLATION

1. Follow instructions based on location of defective switch.

LEFT SIDE SWITCH

a. Place **new** switch into position in bracket. Engaging tabs on switch in slots of latches, gently bend tabs upward to lock position of switch in bracket.

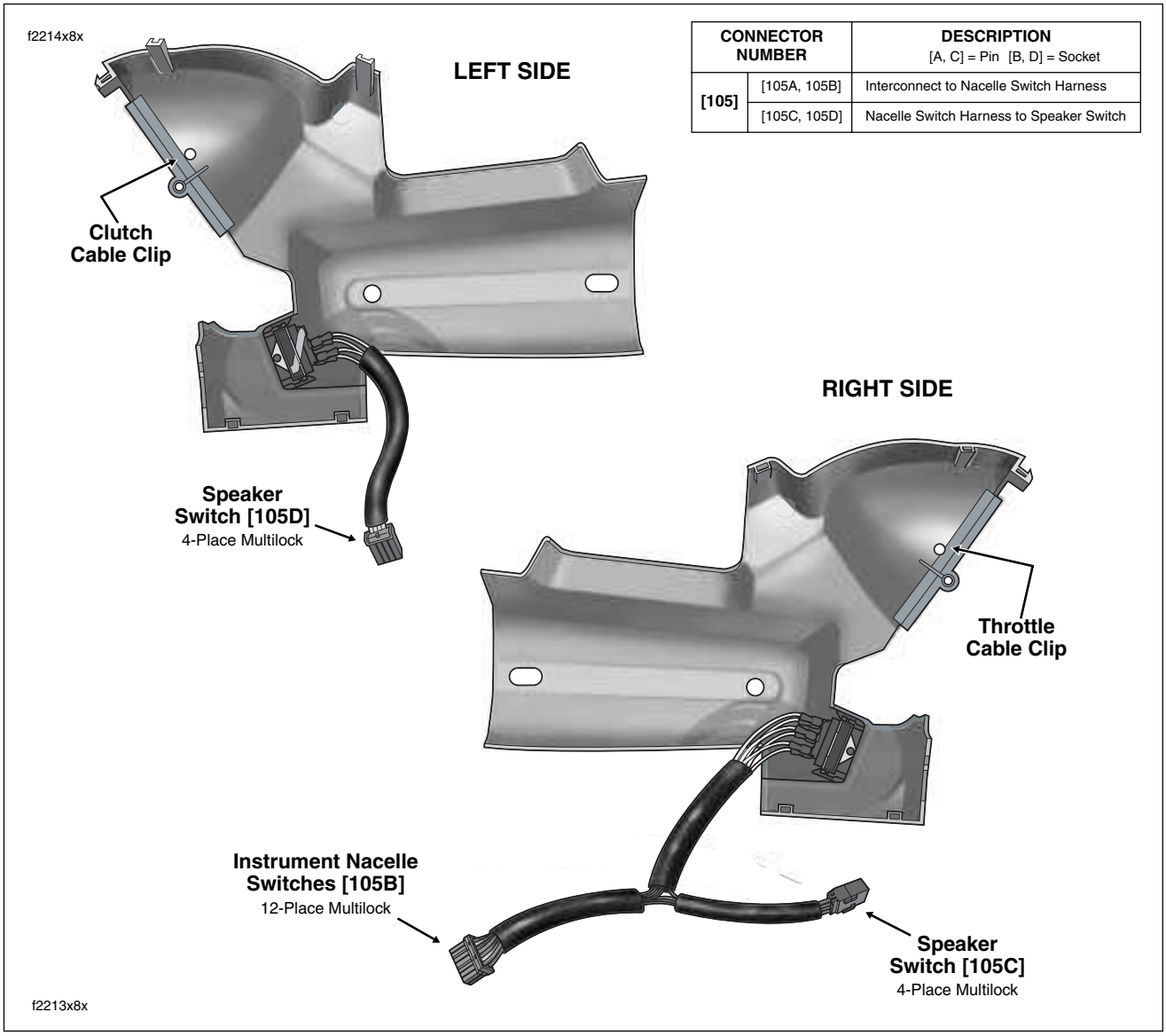

CONNECTOR NUMBER		DESCRIPTION [A, C] = Pin [B, D] = Socket
[105]	[105A, 105B]	Interconnect to Nacelle Switch Harness
	[105C, 105D]	Nacelle Switch Harness to Speaker Switch

Figure 8-86. Instrument Nacelle Halves

b. Snap switch bracket into molded retainer in instrument nacelle.

c. While carefully placing left side of instrument nacelle on motorcycle, slide odometer reset switch through hole and install rubber boot.

d. See Figure 8-83. Connect left side switch to instrument nacelle switch harness as follows:

- Speaker Switch connector [105], 4-place Multilock.

e. Install two T40 TORX bolts (with flat washers) to fasten left side instrument nacelle to upper and lower fork brackets. Alternately tighten bolts to 15-20 ft-lbs (20-27 Nm).

f. Capture clutch cable in cable clip. Insert cable clip into hole in left side of instrument nacelle.

g. Move to RIGHT SIDE SWITCHES, step 2.

RIGHT SIDE SWITCHES

a. Place **new** switch into position in bracket. Engaging tabs on switch in slots of latches, gently bend tabs upward to lock position of switch in bracket. See Figure 8-84.

b. Push terminals through two lengths of conduit to wire end of socket or pin housing. For best results, push one wire through conduit at a time.

c. Install terminals into socket or pin housing. See Table 8-14 and Figure 8-85.

NOTE

For instructions on properly installing wire terminals, see APPENDIX B.2 MULTILOCK ELECTRICAL CONNECTORS, INSTALLING SOCKET/PIN TERMINALS.

d. Snap switch bracket into molded retainer in instrument nacelle.

e. Install right side of instrument nacelle on motorcycle.

f. See Figure 8-83. Connect left side switch to instrument nacelle switch harness as follows:

- Speaker Switch connector [105], 4-place Multilock.

g. See Figure 8-83. Connect instrument nacelle switches to interconnect harness as follows:

- Instrument nacelle switch connector [105], 12-place Multilock.

h. Install two T40 TORX bolts (with flat washers) to fasten right side instrument nacelle to upper and lower fork brackets. Alternately tighten bolts to 15-20 ft-lbs (20-27 Nm).

i. Capture throttle cables in cable clip. Insert cable clip into hole in right side of instrument nacelle.

2. See Figure 8-83. Looking into the instrument nacelle, connect instruments and indicator lamps to interconnect harness as follows:

- Speedometer connector [39], 12-place Packard.
- Tachometer connector [108], 12-place Packard.
- Indicator lamps connector [21], 10-place Multilock.

3. Install anchor on ambient temperature sensor into hole in bottom inboard ear of speedometer bracket.

4. Verify that left and right sides of instrument nacelle are properly mated. Pins on left side of nacelle must fully engage holes on right.

5. Insert tab at rear of bezel into slot of instrument nacelle (just in front of ignition switch). Holding left and right sides of nacelle together, place bezel over instrument nacelle flange. When properly mated, tabs at front of instrument nacelle engage lip in slot at front of bezel (behind decorative adhesive strip).

NOTE

*If tabs do not properly engage slot at front of bezel, then a loose fit will result. Remove decorative adhesive strip by gently prying up outer edges, and using a flat bladed screwdriver, carefully raise tabs so that they engage lip in slot. If damaged, install **new** decorative adhesive strip.*

6. Install T25 TORX screw on each side of bezel. Alternately tighten screws to 25-35 **in-lbs** (2.8-4.0 Nm).

7. Assemble ignition switch. See Section 8.19 IGNITION/ LIGHT KEY SWITCH AND FORK LOCK, FLHX, FLHT/ C/U, FLTR, INSTALLATION, steps 6-15.

HANDLEBAR SWITCHES 8.22

GENERAL

The basic switch configuration is the “Road King.” The Road King switches have no specialized functions. Other switches, referred to as the Road King Classic, Classic and Ultra, have additional functions, such as cruise control, sound system controls, etc., which cause them to differ from the Road King switches. To accommodate these added functions, special lower switch housings are provided.

NOTE

Regardless of model or option, all motorcycles use the same upper switch housings. The motorcycles and their switch configurations are as follows:

Table 8-15. Handlebar Switches

Road King					
FLHR	FLHRI		FLHRS		FLHRSI
Road King Classic					
FLHRCI					
Classic					
FLHX	FLHXI	FLHT	FLHTI	FLHTC	FLHTCI
Ultra					
FLTRI			FLHTCUI		
NOTE: See Figures 8-95 thru 8-98 for illustrations.					

NOTE

To replace or repair individual switches in either the right or left handlebar switch assemblies, see SWITCH REPAIR/ REPLACEMENT in this section.

REMOVAL

NOTE

While there are four different switch configurations for Touring models (Road King, Road King Classic, Classic and Ultra), the removal procedures are the same. To simplify these instructions, only the Road King switch configuration is represented in the photographs and illustrations which follow.

RIGHT HANDLEBAR CONTROLS

CAUTION

Do not remove the switch housing assembly without first placing the 5/32 inch (4.0 mm) cardboard insert between the brake lever and lever bracket. Removal without the insert may result in damage to the rubber boot and plunger of the Front Stoplight Switch.

NOTE

Use the eyelet of an ordinary cable strap if the cardboard insert is not available.

1. Place the cardboard insert between the brake lever and lever bracket. See Figure 8-87.
2. Remove the two T27 TORX screws with flat washers securing the handlebar clamp to the master cylinder housing. Remove the brake lever/master cylinder assembly and clamp from the handlebar.
3. Using a T25 TORX drive head, remove the upper and lower switch housing screws.
4. Remove the friction shoe from the end of the tension adjuster screw (non cruise equipped models only).

NOTE

The friction shoe is a loose fit and may fall out or become dislodged if the lower switch housing is turned upside down or shaken.

5. Remove the brass ferrules from the notches on the inboard side of the throttle control grip. Remove the ferrules from the cable end fittings.
6. Remove the throttle control grip from the end of the handlebar.
7. Pull the crimped inserts at the end of the throttle and idle control cable housings from the lower switch housing. For best results, use a rocking motion while pulling. Place a drop of light oil on the retaining rings, if necessary. Remove the cables from the switch housing.
8. Cut two cable straps to release wire harness conduit from handlebar.

Figure 8-87. Install Cardboard Insert

LEFT HANDLEBAR CONTROLS

1. Remove the two T27 TORX screws with flat washers securing the handlebar clamp to the clutch lever bracket. Remove the clutch hand lever assembly and clamp from the handlebar.
2. Using a T25 TORX drive head, remove the upper and lower switch housing screws.
3. Cut two cable straps to release wire harness conduit from handlebar.
4. Remove hand grip from handlebar, if damaged. See Section 2.23 HANDLEBARS, LEFT HAND GRIP, REMOVAL.

INSTALLATION

NOTE

While there are four different switch configurations for Touring models (Road King, Road King Classic, Classic and Ultra), the installation procedures are the same. To simplify these instructions, only the Road King switch configuration is represented in the photographs and illustrations which follow.

RIGHT HANDLEBAR CONTROLS

1. With the concave side facing upward, install the friction shoe so that the pin hole is over the point of the adjuster screw (non cruise equipped models only).

NOTE

The friction shoe is a loose fit and may fall out or become dislodged if the switch housing is turned upside down or shaken.

2. Push the throttle and idle control cables into the lower switch housing until they snap in place. Proceed as follows:

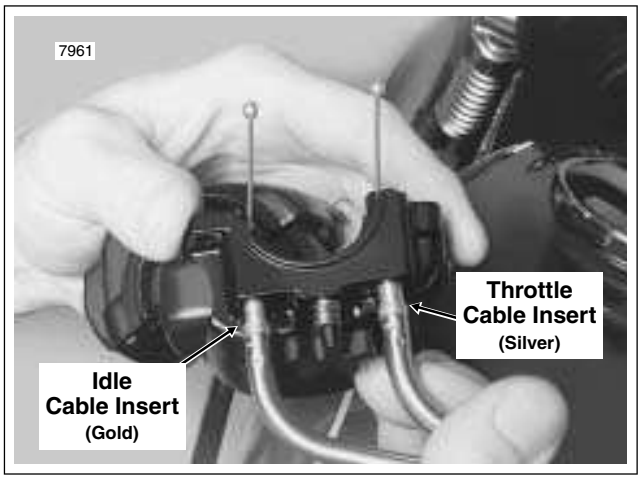

Figure 8-88. Install Throttle/Idle Control Cables in Lower Switch Housing

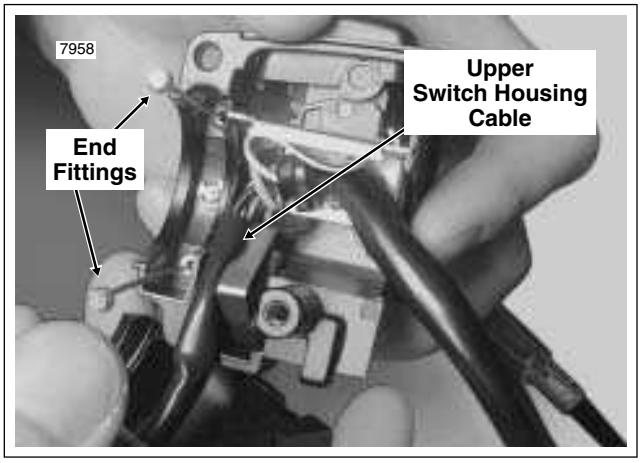

Figure 8-89. Route Cable to Upper Switch Housing

Note the different diameter inserts crimped into the end of the throttle and idle control cable housings. See Figure 8-88.

Push the larger diameter insert (silver) on the throttle cable housing into the larger hole in front of the tension adjuster screw.

Push the smaller diameter insert (gold) on the idle cable housing into the smaller hole at the rear of the tension adjuster screw.

NOTE

To aid assembly, place a drop of light oil on the retaining rings of the crimped inserts. Always replace the retaining rings if damaged or distorted.

3. Route the cable to the upper switch housing as shown in Figure 8-89.
4. Slide the throttle control grip over the end of the right handlebar until it bottoms against the closed end. Rotate the grip so that the ferrule notches are at the top. To prevent binding, pull the grip back about 1/8 inch (3.2 mm).
5. Position the lower switch housing beneath the throttle control grip. Install the brass ferrules onto the cables so that the end fittings seat in the ferrule recess. Seat the ferrules in their respective notches on the throttle control grip. Verify that the cables are captured in the grooves molded into the grip. See Figure 8-90.
6. Position the upper switch housing over the handlebar and lower switch housing.
7. Verify that the wire harness conduit runs in the depression at the bottom of the handlebar. Be sure that the upper switch housing harness will not be pinched under the handlebar when the switch housing screws are tightened.
8. Start the upper and lower switch housing screws, but do not tighten.

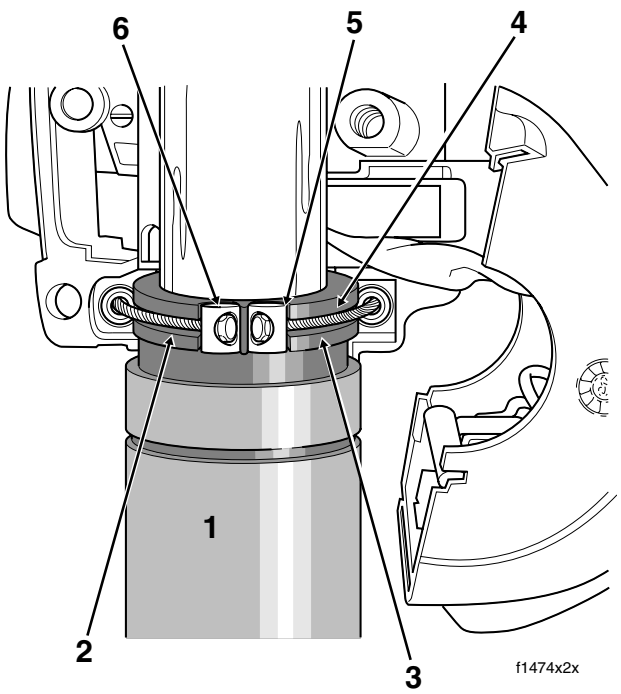

1. Throttle Grip
2. Idle Cable
3. Throttle Cable
4. Groove
5. Notch
6. Ferrule

Figure 8-90. Install Throttle/Idle Cables

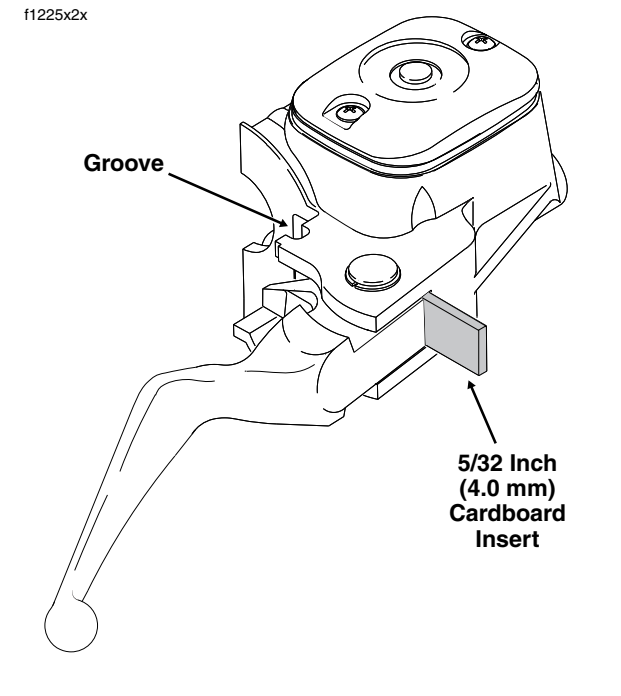

Figure 8-91. Leave Cardboard Insert in Place

CAUTION

See Figure 8-91. Do not remove the 5/32 inch (4.0 mm) cardboard insert (or cable strap eyelet) wedged between the brake lever and lever bracket. Removal will result in damage to the rubber boot and plunger of the Front Stoplight Switch during installation of the master cylinder assembly.

9. Position the brake lever/master cylinder assembly inboard of the switch housing assembly engaging the tab on the lower switch housing in the groove at the top of the brake lever bracket. See Figure 8-92.
10. Align the holes in the handlebar clamp with those in the master cylinder housing and start the two T27 TORX screws (with flat washers). Position for rider comfort. Beginning with the top screw, tighten the screws to 60-80 **in-lbs** (6.8-9.0 Nm).
11. Using a T25 TORX drive head, tighten the lower and upper switch housing screws to 35-45 **in-lbs** (4-5 Nm).

NOTE

Always tighten the lower switch housing screw first so that any gap between the upper and lower housings is at the front of the switch.

12. Remove the cardboard insert between the brake lever and lever bracket.

    The completed assembly appears as shown in Figure 8-95.
13. Secure wire harness conduit to handlebar using two **new** cable straps. Position first cable strap approximately 4-5 inches (102-127 mm) from handlebar clamp. Cut any excess cable strap material.
14. Test the switches for proper operation.

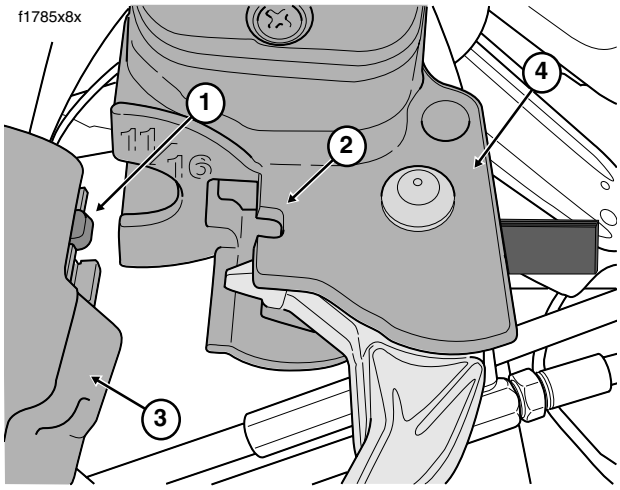

1. Tab
2. Groove
3. Switch Housing Assembly
4. Brake Lever Bracket

Figure 8-92. Fit Brake Lever/Master Cylinder to Right Handlebar Switch Housings

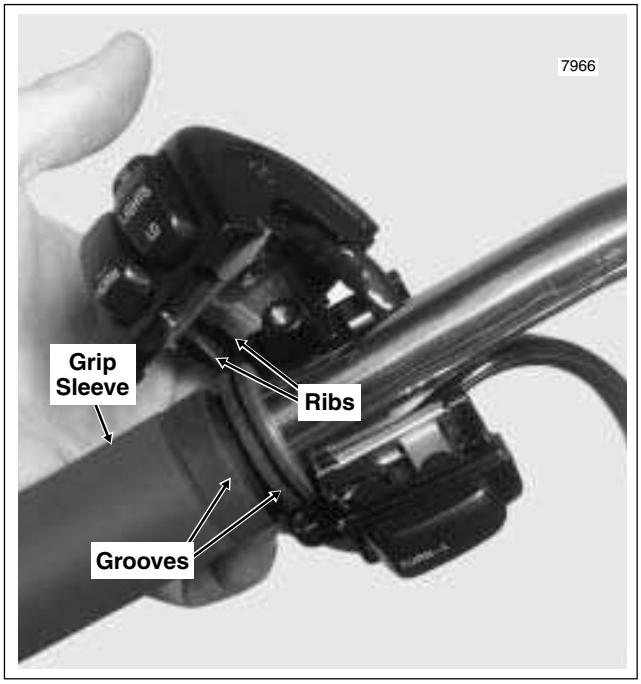

Figure 8-93. Install Left Handlebar Switch Housings

LEFT HANDLEBAR CONTROLS

1. Install **new** hand grip, if removed,. See Section 2.23 HANDLEBARS, LEFT HAND GRIP, INSTALLATION.

2. Install upper and lower switch housings on handlebar. Be sure that ribs on outboard side of switch housings fit in grooves molded into grip. See Figure 8-93.

3. Verify that the wire harness conduit runs in the groove at the bottom of the handlebar. Be sure that the upper switch housing harness will not be pinched under the handlebar when the switch housing screws are tightened.

4. Start the upper and lower switch housing screws, but do not tighten.

5. Position the clutch hand lever assembly inboard of the switch housing assembly engaging the tab on the lower switch housing in the groove at the bottom of the clutch lever bracket. See Figure 8-94.

6. Align the holes in the handlebar clamp with those in the clutch lever bracket and start the two T27 TORX screws (with flat washers). Position for rider comfort. Beginning with the top screw, tighten the screws to 60-80 **in-lbs** (6.8-9.0 Nm).

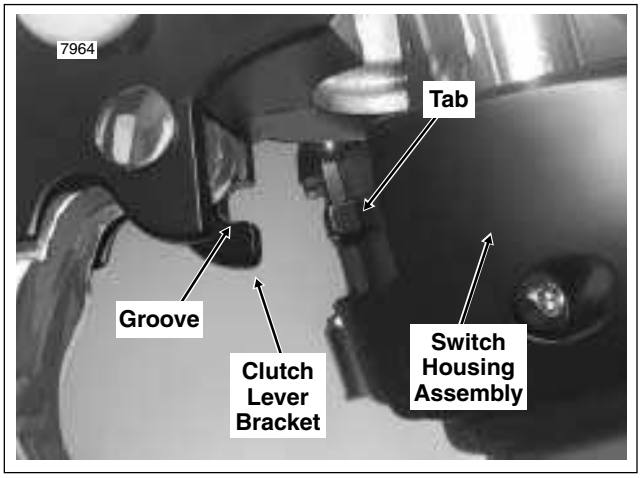

Figure 8-94. Fit Clutch Lever Bracket to Left Handlebar Switch Housings

7. Using a T25 TORX drive head, tighten the lower and upper switch housing screws to 35-45 **in-lbs** (4-5 Nm).

NOTE

Always tighten the lower switch housing screw first so that any gap between the upper and lower housings is at the front of the switch.

The completed assembly appears as shown in Figure 8-95.

8. Secure wire harness conduit to handlebar using two **new** cable straps. Position first cable strap approximately 4-5 inches (102-127 mm) from handlebar clamp. Cut any excess cable strap material.

9. Test the switches for proper operation.

Right Handlebar Switch Housings

Upper Switch Housing:

- Engine Start Switch
- Engine Stop Switch: Off/Run

Lower Switch Housing:

- Turn-Right Signal Switch
- Front Stoplight Switch

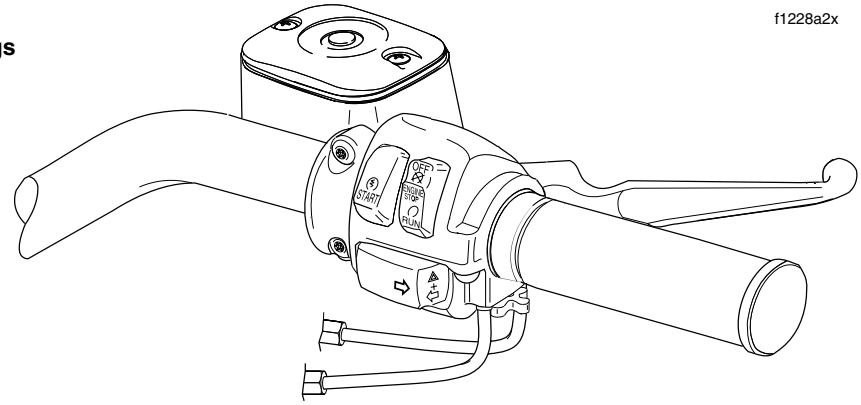

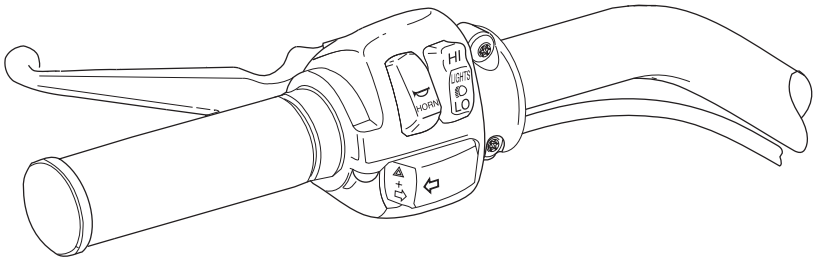

Left Handlebar Switch Housings

Upper Switch Housing:

- Horn Switch
- Light Switch: Hi(gh) and Lo(w) Beam

Lower Switch Housing:

- Turn-Left Signal Switch

Figure 8-95. Road King Handlebar Switch Assemblies

Right Handlebar Switch Housings

Upper Switch Housing:

- Engine Start Switch
- Engine Stop Switch: Off/Run

Lower Switch Housing:

- Turn-Right Signal Switch
- Front Stoplight Switch
- Cruise Control Switch: Set/Res(ume)

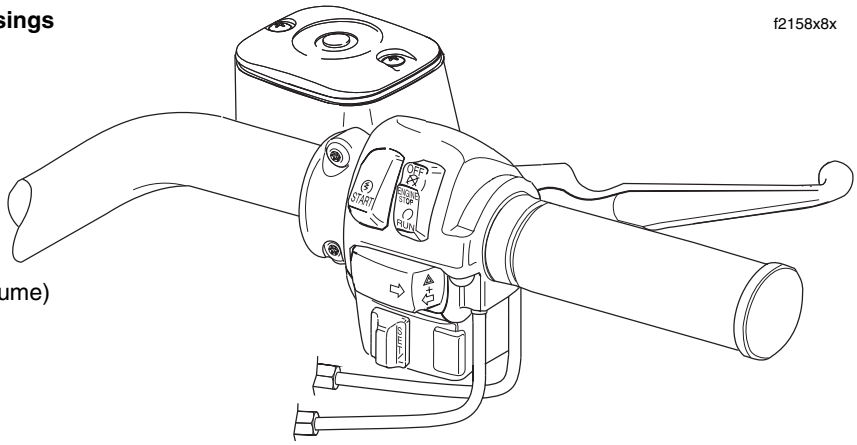

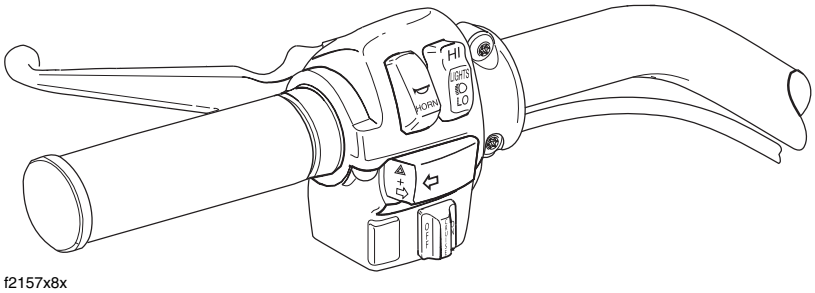

Left Handlebar Switch Housings

Upper Switch Housing:

- Horn Switch
- Light Switch: Hi(gh) and Lo(w) Beam

Lower Switch Housing:

- Turn-Left Signal Switch
- Cruise Control Switch: On/Off

Figure 8-96. Road King Classic Handlebar Switch Assemblies

Right Handlebar Switch Housings

Upper Switch Housing:

- Engine Start Switch
- Engine Stop Switch: Off/Run

Lower Switch Housing:

- Turn-Right Signal Switch
- Front Stoplight Switch
- Mode Select Switch: UP/DN

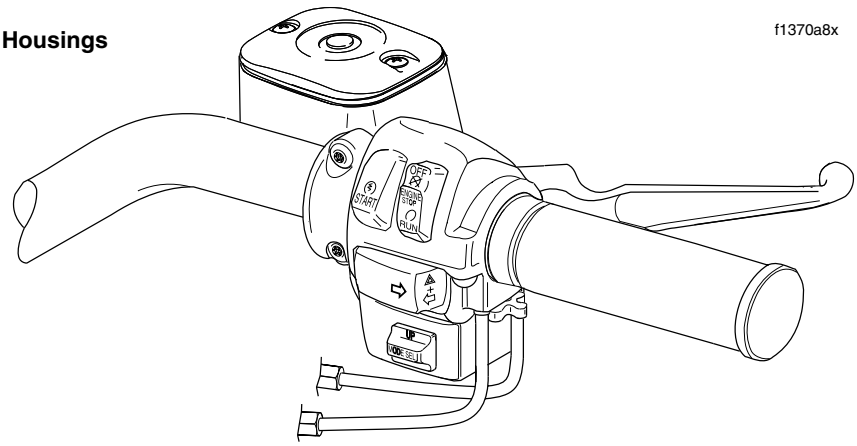

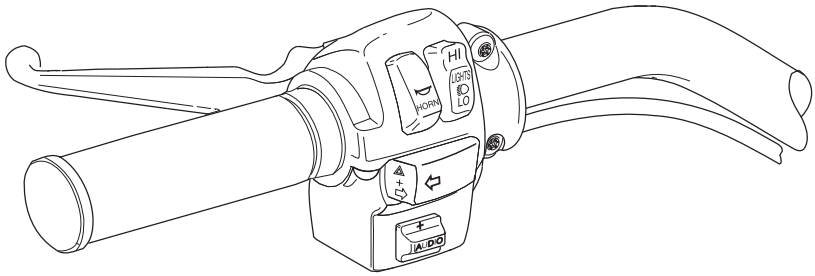

f1369a8x

Left Handlebar Switch Housings

Upper Switch Housing:

- Horn Switch
- Light Switch: Hi(gh) and Lo(w) Beam

Lower Switch Housing:

- Turn-Left Signal Switch
- Audio Control Switch: +/-

Figure 8-97. Classic Handlebar Switch Assemblies

Right Handlebar Switch Housings

Upper Switch Housing:

- Engine Start Switch
- Engine Stop Switch: Off/Run

Lower Switch Housing:

- Turn-Right Signal Switch
- Front Stoplight Switch
- Mode Select Switch: UP/DN
- Cruise Control Switch: Set/Res(ume)

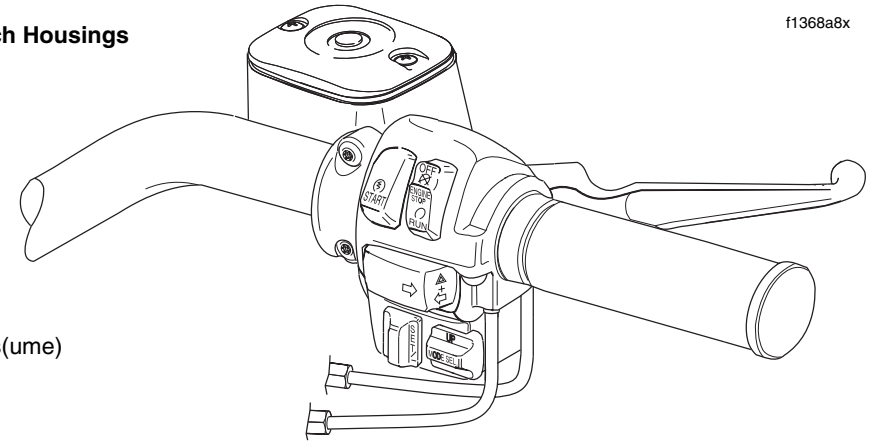

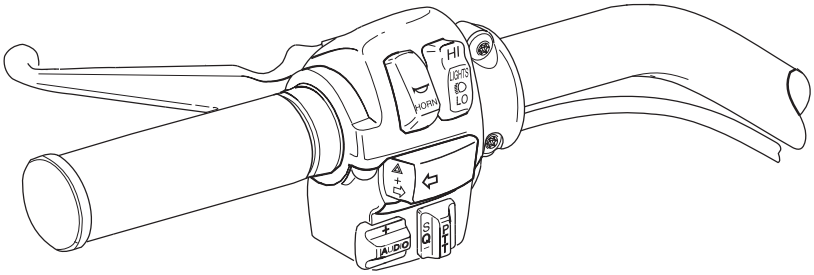

f1367a8x

Left Handlebar Switch Housings

Upper Switch Housing:

- Horn Switch
- Light Switch: Hi(gh) and Lo(w) Beam

Lower Switch Housing:

- Turn-Left Signal Switch
- Audio Control Switch: +/-
- Squelch Control and Driver P(ush) T(o) T(ransmit) Switch: SQ-/PTT/SQ+

Figure 8-98. Ultra Handlebar Switch Assemblies

SWITCH REPAIR/REPLACEMENT

RIGHT SIDE HANDLEBAR SWITCHES

DISASSEMBLY

CAUTION

Do not remove the switch housing assembly without first placing the 5/32 inch (4.0 mm) cardboard insert between the brake lever and lever bracket. Removal without the insert may result in damage to the rubber boot and plunger of the Front Stoplight Switch.

NOTE

Use the eyelet of an ordinary cable strap if the cardboard insert is not available.

1. Place the cardboard insert between the brake lever and lever bracket.
2. Using a T25 TORX drive head, remove the upper and lower switch housing screws.
3. If replacing lower housing switches, proceed to step 4. If replacing upper housing switches, proceed to step 8.
4. Using a T27 TORX drive head, loosen the upper screw securing the handlebar clamp to the master cylinder housing. Remove the lower clamp screw with flat washer.
5. Remove the brass ferrules from the notches on the inboard side of the throttle control grip. Remove the ferrules from the cable end fittings.
6. Remove the friction shoe from the end of the tension adjuster screw (non cruise equipped models only).

NOTE

The friction shoe is a loose fit and may fall out or become dislodged if the lower switch housing is turned upside down or shaken.

7. Remove the throttle control grip from the end of the handlebar.
8. See SPECIFIC REPAIR PROCEDURES, UPPER SWITCH HOUSINGS for upper switch housing switches, LOWER SWITCH HOUSINGS for lower switch housing switches.

LEFT SIDE HANDLEBAR SWITCHES

DISASSEMBLY

1. Using a T25 TORX drive head, remove the upper and lower switch housing screws.
2. If replacing lower housing switches, proceed to step 3. If replacing upper housing switches, proceed to step 4.
3. Using a T27 TORX drive head, loosen the upper screw securing the handlebar clamp to the clutch lever bracket. Remove the lower clamp screw with flat washer.
4. See SPECIFIC REPAIR PROCEDURES, UPPER SWITCH HOUSINGS for upper switch housing switches, LOWER SWITCH HOUSINGS for lower switch housing switches.

SPECIFIC REPAIR PROCEDURES

NOTE

Regardless of model or option, all motorcycles use the same upper switch housings.

UPPER SWITCH HOUSINGS

NOTE

Replace the Engine Stop and Engine Start Switches as a single assembly even if only one switch is determined to be faulty.

RIGHT SIDE HANDLEBAR (ALL MODELS)

- **Engine Stop Switch: OFF/RUN**
- **Engine Start Switch**

[Continued from RIGHT SIDE HANDLEBAR SWITCHES, DISASSEMBLY, on this page.]

1. From inside the switch housing, remove the Phillips screw to release the bracket. Remove the bracket and switch assembly from the housing. See Figure 8-99.
2. Move cable conduit from beneath wing of bracket. Cut wires 1/4 inch (6.4 mm) from old switches. Discard old switch and bracket assembly.
3. Slide conduit forward over severed ends of switch wires and cut off 1/2 inch (12.7 mm) of conduit material. Push conduit back to access switch wires.
4. Separate **new** Engine Stop Switch and Start Switch wires into two bundles.

NOTE

Replacement Stop Switch and Start Switch wires are cut to length (2-1/2 inches and 2 inches, respectively) and partially stripped.

5. See GENERAL REPAIR PROCEDURES in this section.
6. Loop switch wires so that spliced lengths are positioned as shown in Figure 8-100. Route wires downstream of splices beneath wing on Engine Stop Switch side of bracket as seen in Figure 8-99.
7. Install a **new** 7 inch cable strap beneath wing on Engine Start Switch side of bracket and capture wire splices.

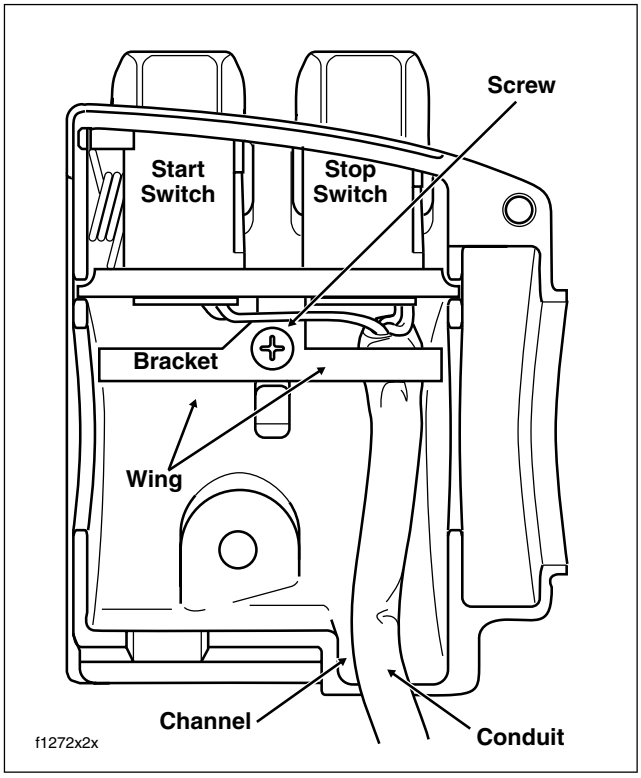

Figure 8-99. Upper Right Handlebar Switch Housing (Without Splices)

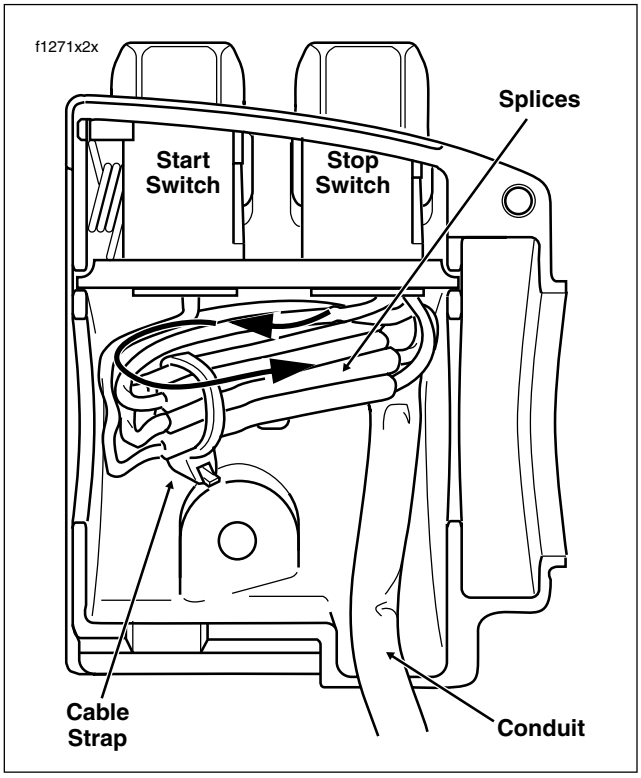

Figure 8-100. Upper Right Handlebar Switch Housing (With Splices)

8. Place switch assembly into upper housing aligning hole in bracket with threaded hole in boss. Be sure that bracket is fully seated. The step at the edge of the boss captures the bottom edge of the bracket, while tabs on each side of the bracket fit in slots cast into the housing.
9. Install Phillips screw to secure bracket inside housing. Verify that wing on Engine Stop Switch side of bracket captures edge of conduit as shown in Figure 8-99.
10. Securely tighten cable strap to draw splices to bracket. Remove any excess cable strap material.
11. See RIGHT SIDE HANDLEBAR SWITCHES, ASSEMBLY, in this section.

NOTE

Replace the Horn and High/Low Beam Switches as a single assembly even if only one switch is determined to be faulty.

LEFT SIDE HANDLEBAR (ALL MODELS)

- **Hi(gh) and Lo(w) Beam Switch**
- **Horn Switch**

[Continued from LEFT SIDE HANDLEBAR SWITCHES, DISASSEMBLY, in this section.]

1. See Figure 8-101. From inside the switch housing, remove Phillips screw to release the bracket. Remove the bracket and switch assembly from the housing.
2. Move cable conduit from beneath wing of bracket. Cut wires 1/4 inch (6.4 mm) from old switches. Discard old switch and bracket assembly.
3. Slide conduit forward over severed ends of switch wires and cut off 1/2 inch (12.7 mm) of conduit material. Push conduit back to access switch wires.
4. Separate new Horn and High/Low Beam Switch wires into two bundles.

NOTE

Replacement High/Low Beam Switch and Horn Switch wires are cut to length (2-1/2 inches and 2 inches, respectively) and partially stripped.

5. See GENERAL REPAIR PROCEDURES in this section.
6. Loop switch wires so that spliced lengths are positioned as shown in Figure 8-102. Route wires downstream of splices beneath wing on High/Low Beam Switch side of bracket as seen in Figure 8-101.
7. Install a **new** 7 inch cable strap beneath wing on Horn Switch side of bracket and capture wire splices.
8. Place switch assembly into upper housing aligning hole in bracket with threaded hole in boss. Be sure that bracket is fully seated. The step at the edge of the boss captures the bottom edge of the bracket, while tabs on each side of the bracket fit in slots cast into the housing.

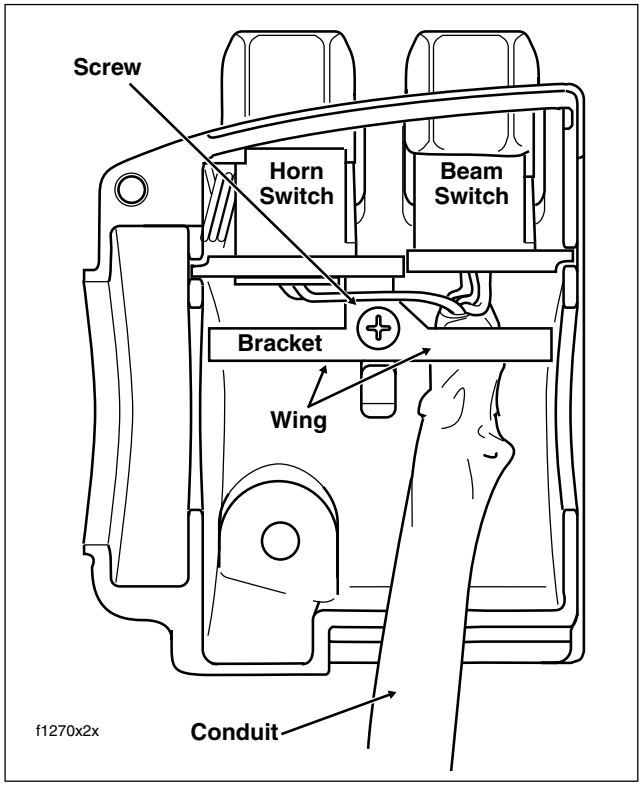

Figure 8-101. Upper Left Handlebar Switch Housing (Without Splices)

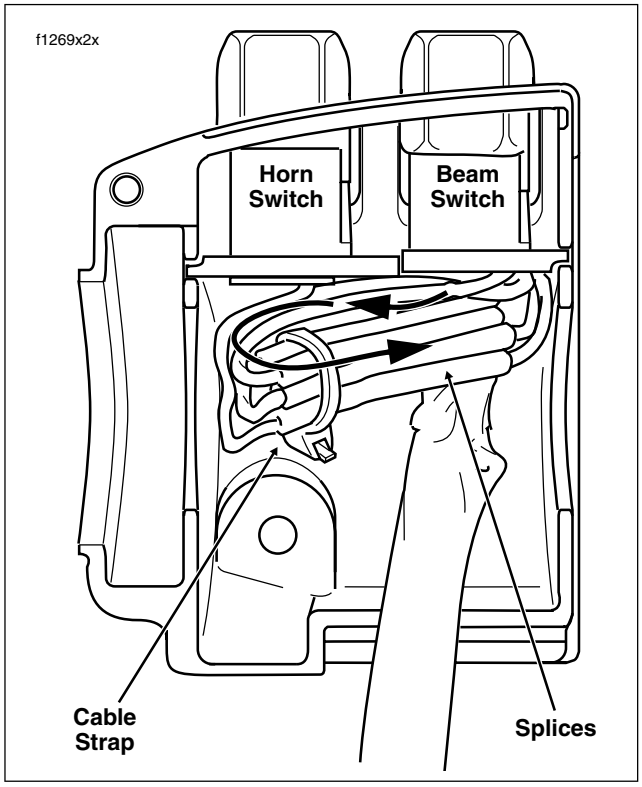

Figure 8-102. Upper Left Handlebar Switch Housing (With Splices)

9. Install Phillips screw to secure bracket inside housing. Verify that wing on High/Low Beam Switch side of bracket captures edge of conduit as shown in Figure 8-101.
10. Securely tighten cable strap to draw splices to bracket. Remove any excess cable strap material. See Figure 8-102.
11. See LEFT SIDE HANDLEBAR SWITCHES, ASSEMBLY, in this section.

LOWER SWITCH HOUSINGS

RIGHT SIDE HANDLEBAR

PRELIMINARY INSTRUCTIONS

[Continued from RIGHT SIDE HANDLEBAR SWITCHES, DISASSEMBLY, in this section.]

1. From inside the switch housing, carefully cut cable strap to free conduit from the turn signal switch bracket, if present.
2. Remove the Phillips screw to release the turn signal switch bracket. Remove the bracket and switch assembly from the housing.

NOTE

On Classic and Ultra models, pull the conduit back to introduce some slack in the wires or the tight fit of the bundle will prevent removal of the turn signal switch bracket.

- **Turn-Right Signal Switch (All Models)**

1. Cut wires 1-1/2 inches (38.1 mm) from old switch. Discard old switch assembly.

NOTE

Replacement Turn-Right Signal Switch wires are cut to length (1-1/2 inches) and partially stripped.

2. See GENERAL REPAIR PROCEDURES in this section.
3. See RIGHT SIDE HANDLEBAR, FINAL INSTRUCTIONS in this section.

- **Front Stoplight Switch (All Models)**

1. Carefully remove the wedge between the switch and switch housing, if present. To remove the switch from the housing, depress the plunger and slowly rotate switch upward while rocking slightly.
2. Cut wires 1 inch (25.4 mm) from old switch. Discard old switch.

NOTE

Replacement Stoplight Switch wires are cut to length (2-1/2 inches) and partially stripped.

3. See GENERAL REPAIR PROCEDURES in this section.

4. Carefully depress plunger against inside wall of switch housing. With thumb over plunger bore, move switch into the installed position in the switch housing cavity. When plunger is positioned against thumb, slowly rotate switch downward while rocking slightly. Release the plunger only after switch is properly positioned in the cavity.
5. Verify that the plunger is square in the bore and that the boot is not compressed, collapsed or torn. If necessary, gently work the plunger in and out until boot is fully extended.
6. Push down on switch so that it bottoms against housing and wires run in groove at base of cavity. With the concave side facing outward, insert wedge between switch and outboard side of switch housing. See Figure 8-103.
7. Push wedge down until it also bottoms against housing. Verify that the plunger is still square in the bore and then place a drop of RTV Silicone Sealant on upper corner of wedge.
8. See RIGHT SIDE HANDLEBAR, FINAL INSTRUCTIONS on the next page.

- **Mode Select Switch (Classic and Ultra Models)**

1. Pull keycap from switch shaft.
2. Remove two lower bracket screws. Pull bracket and switch from switch housing. See Figure 8-104.

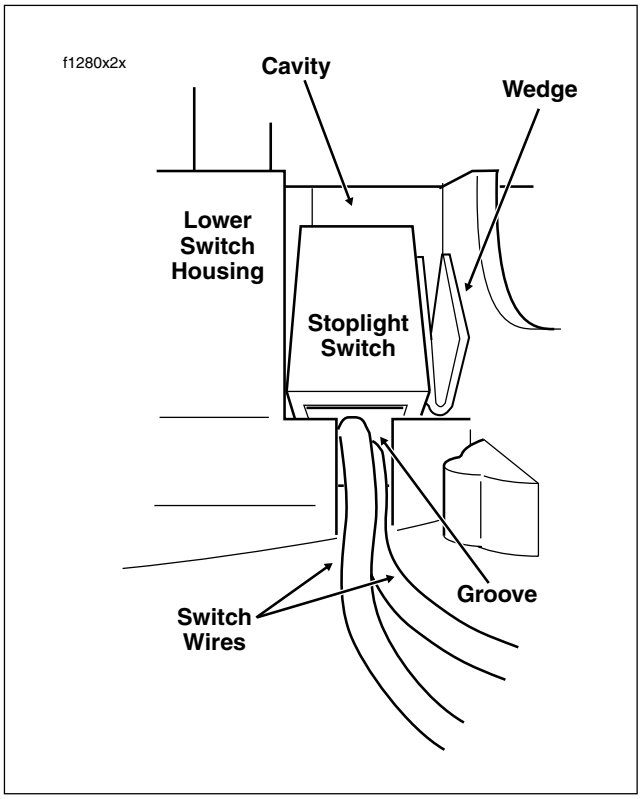

Figure 8-103. Install Stoplight Switch

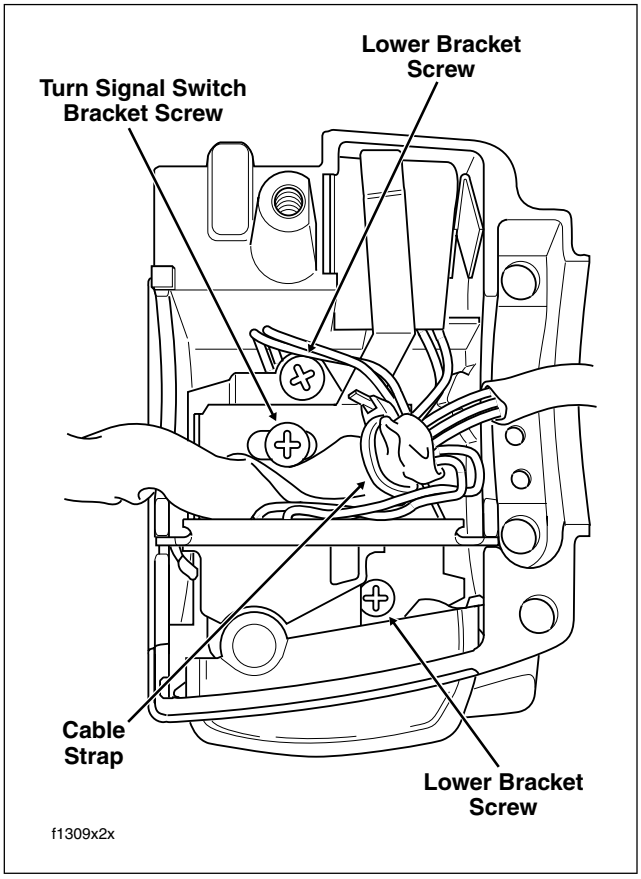

Figure 8-104. Lower Right Handlebar Switch Housing (Without Splices) - Classic/Ultra Models

3. Cut wires 1-1/4 inches (31.8 mm) from old switch. Discard switch assembly.

NOTE

Replacement Mode Select Switch wires are cut to length (2-1/4 inches) and partially stripped.

4. See GENERAL REPAIR PROCEDURES in this section.
5. Fit new switch into cavity so that it sits on edge in a vertical position (gray/white wire topside). Properly installed, the switch is captured by blocks cast into the lower housing. Verify that the switch shaft is aligned for proper keycap operation.
6. Place the lower bracket into the housing (with the weld nut side down), but keep the splices above the bracket. Verify that the slots in the upper step of the bracket engage two tabs on switch body.
7. Install shorter screw to secure front side of lower bracket to threaded boss. Install longer rear screw. To engage threaded hole in casting, use thru hole in lower step of bracket on Classic models, thru hole in upper step on Ultra.
8. Install keycap on switch shaft.
9. See RIGHT SIDE HANDLEBAR, FINAL INSTRUCTIONS on the next page.

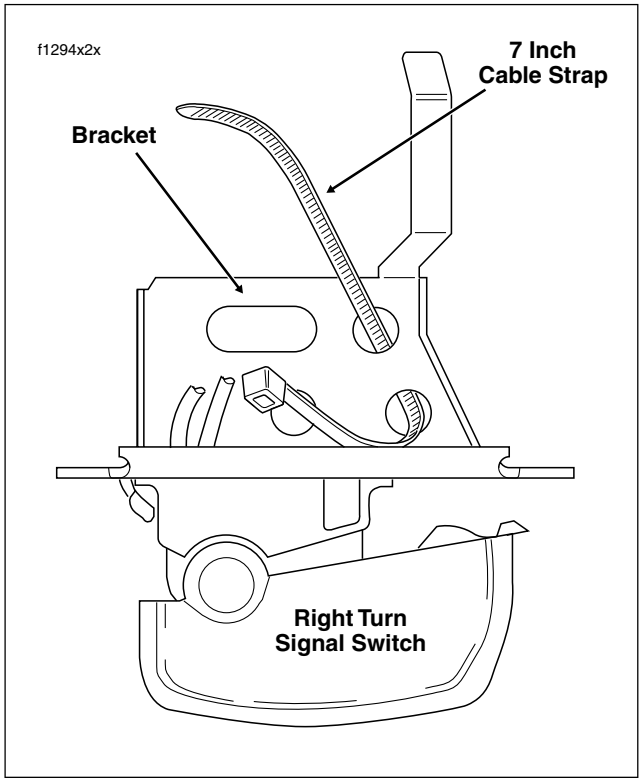

Figure 8-105. Insert Cable Strap in Switch Bracket

- **Cruise Set/Resume Switch (Road King Classic and Ultra Models)**

1. Pull keycap from switch shaft.
2. Remove two lower bracket screws. Pull bracket and switch from switch housing.
3. Cut wires 1-1/2 inches (38.1 mm) from old switch. Discard switch assembly.

NOTE

Replacement Cruise Set/Resume Switch wires are cut to length (2 inches) and partially stripped.

4. See GENERAL REPAIR PROCEDURES in this section.
5. Fit new switch into cavity so that it sits in a horizontal position (blue/black wire towards master cylinder). Properly installed, the switch is captured by blocks cast into the lower housing.
6. Keeping splices above the bracket, install the lower bracket (weld nut side down), so that the lower step is positioned over the switch. Slots in the upper step engage two tabs on the Cruise On Lamp upper housing (Road King Classic), or the body of the Mode Select Switch (Ultra models).

NOTE

The Mode Select Switch is vertically oriented with the gray/white wire topside.

7. Install shorter screw to secure front side of lower bracket to threaded boss. Install longer rear screw. Use thru hole in upper step of bracket to engage threaded hole in casting.
8. Note lettering for proper orientation and gently push keycap onto switch shaft.
9. See RIGHT SIDE HANDLEBAR, FINAL INSTRUCTIONS on this page.

RIGHT SIDE HANDLEBAR

FINAL INSTRUCTIONS

1. Insert tapered end of **new** 7 inch cable strap into round hole in turn signal switch bracket and then feed back through using the adjacent hole. Reserve the oblong hole for the bracket screw. See Figure 8-105.

NOTE

Be sure that all splices are positioned above the turn signal switch bracket.

2. Place the turn signal switch assembly into the housing aligning the oblong hole in the bracket with the lower bracket weld nut (threaded boss on Road King Standard models). Be sure that bracket is fully seated. Tabs on each side of bracket are captured in slots cast into switch housing.
3. Start Phillips screw to secure bracket inside housing.

CAUTION

If routed incorrectly, wires may be pinched by casting or handlebar resulting in switch failure.

4. Loop switch wires so that spliced lengths are positioned as shown in Figure 8-106.
5. Capturing conduit about 1/4 inch (6.4 mm) from end, securely tighten cable strap to draw conduit to bracket. Remove any excess cable strap material.
6. Install second 7 inch cable strap capturing conduit and wire splices. Securely tighten cable strap to draw splices to conduit. Remove any excess cable strap material.
7. Tighten Phillips screw to secure bracket inside housing.
8. Route wire bundle to upper switch housing by gently pressing conduit into channel next to angular arm of bracket. Secure bundle to arm using third cable strap.

   Cut any excess cable strap material. If necessary, bend angular arm of bracket downward to firmly secure Front Stoplight Switch in installed position.
9. See RIGHT SIDE HANDLEBAR SWITCHES, ASSEMBLY, in this section.

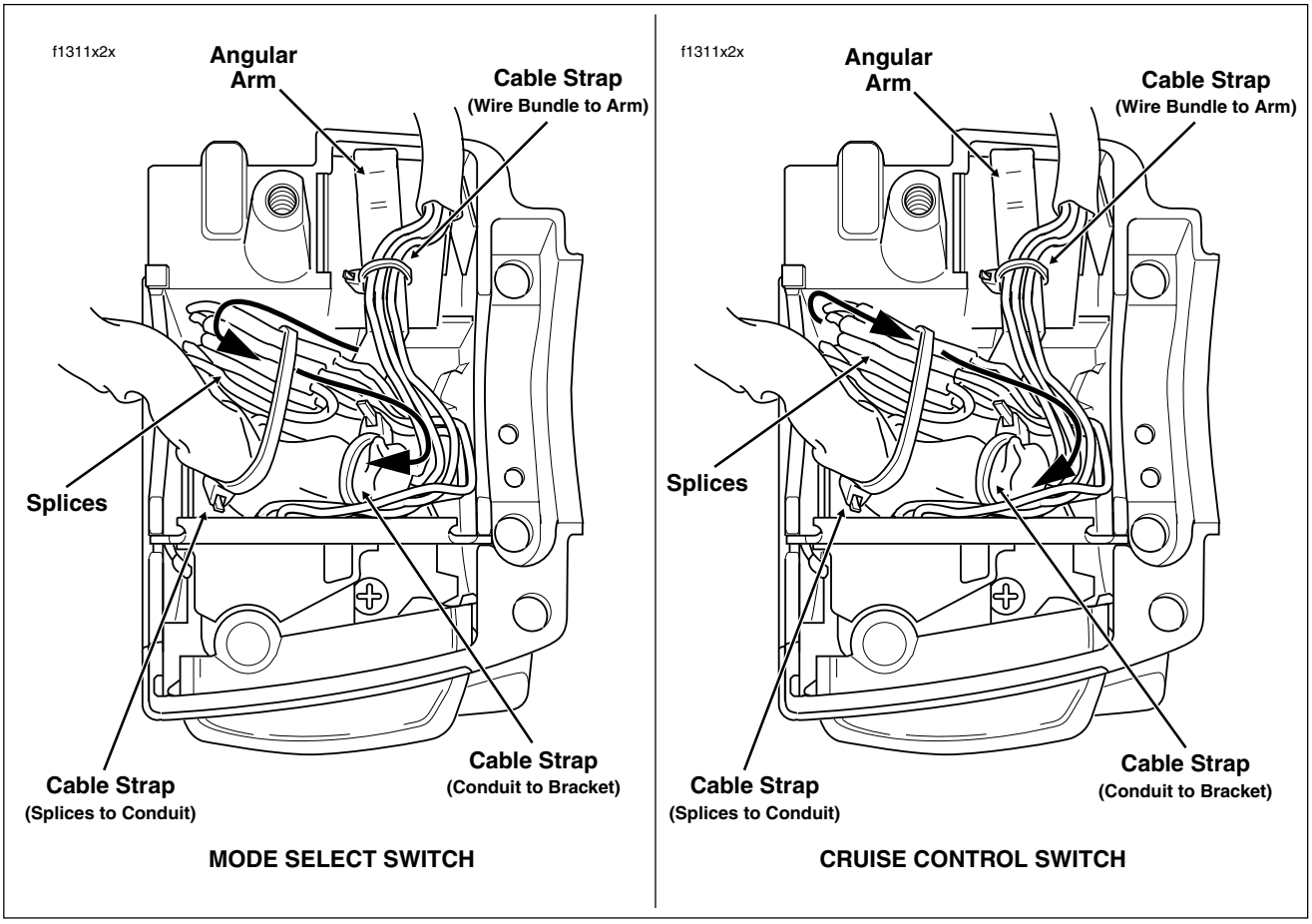

Figure 8-106. Lower Right Handlebar Switch Housing (With Splices) - Classic/Ultra Models

LEFT SIDE HANDLEBAR

PRELIMINARY INSTRUCTIONS

[Continued from LEFT SIDE HANDLEBAR SWITCHES, DISASSEMBLY, in this section.]

1. From inside the switch housing, carefully cut cable strap to free conduit from the turn signal switch bracket, if present.
2. Remove the Phillips screw to release the turn signal switch bracket. Remove the bracket and switch assembly from the housing.

NOTE

On Classic and Ultra models, pull the conduit back to introduce some slack in the wires or the tight fit of the bundle will prevent removal of the switch bracket.

- **Turn-L(eft) Signal Switch (All Models)**

1. Cut wires 1-1/2 inches (38.1 mm) from old switch. Discard old switch assembly.

NOTE

Replacement Turn-Left Signal Switch wires are cut to length (1-1/2 inches) and partially stripped.

2. See GENERAL REPAIR PROCEDURES in this section.
3. See LEFT SIDE HANDLEBAR, FINAL INSTRUCTIONS on the next page.

- **Audio Control Switch (Classic and Ultra Models)**

1. Pull keycap from switch shaft.
2. Remove two lower bracket screws. See Figure 8-109. Pull bracket and switch from switch housing.
3. Cut wires 1-1/4 inches (31.8 mm) from old switch. Discard switch assembly.

NOTE

Replacement Audio Control Switch wires are cut to length (2-1/4 inches) and partially stripped.

4. See GENERAL REPAIR PROCEDURES in this section.

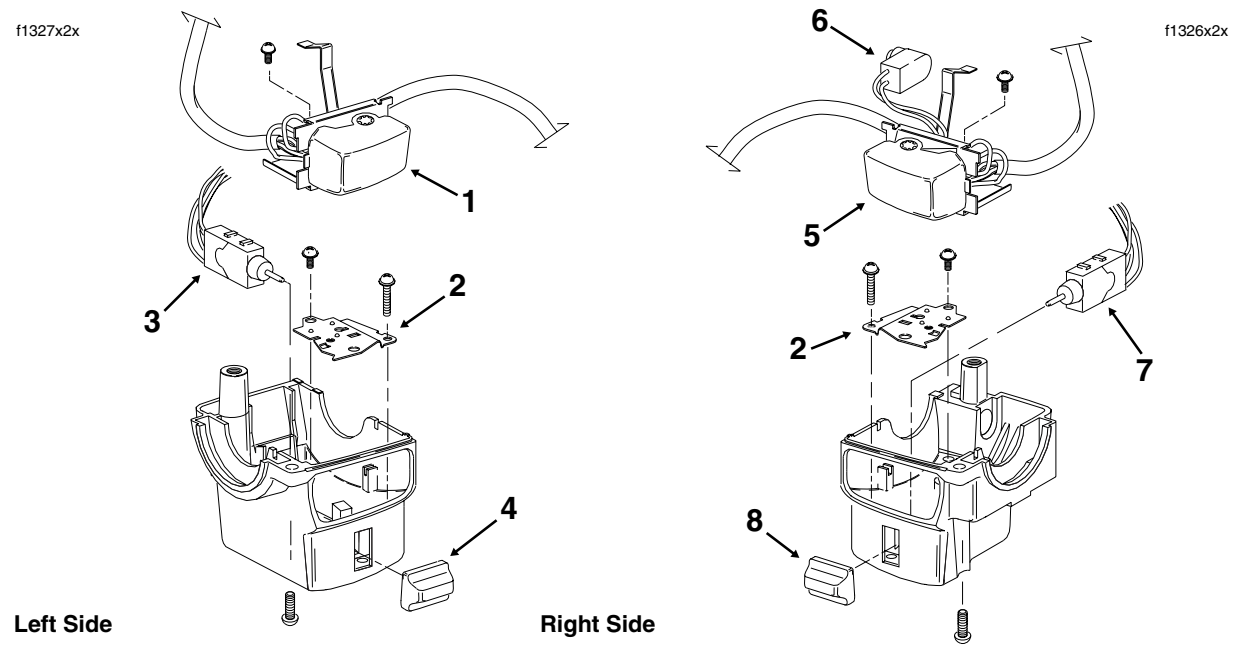

Left Side

1. Left Turn Signal Switch and Bracket
2. Lower Bracket
3. Audio Control Switch
4. Audio Switch Keycap

Right Side

5. Right Turn Signal Switch and Bracket
6. Stoplight Switch
7. Mode Select Switch
8. Mode Select Keycap

Figure 8-107. Lower Handlebar Switch Assemblies (Classic)

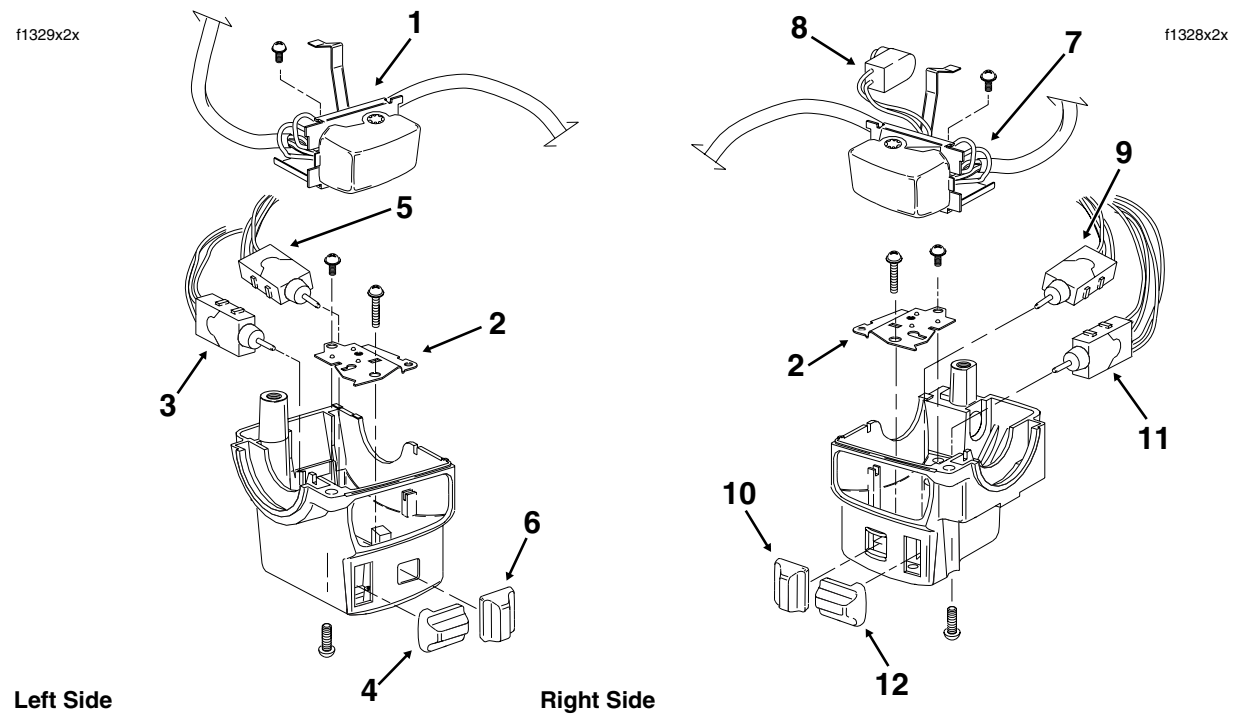

Left Side

1. Left Turn Signal Switch and Bracket
2. Lower Bracket
3. Audio Control Switch
4. Audio Switch Keycap
5. PTT Switch
6. PTT Switch Keycap

Right Side

7. Right Turn Signal Switch and Bracket
8. Stoplight Switch
9. Cruise Control Switch
10. Cruise Switch Keycap
11. Mode Select Switch
12. Mode Select Keycap

Figure 8-108. Lower Handlebar Switch Assemblies (Ultra)

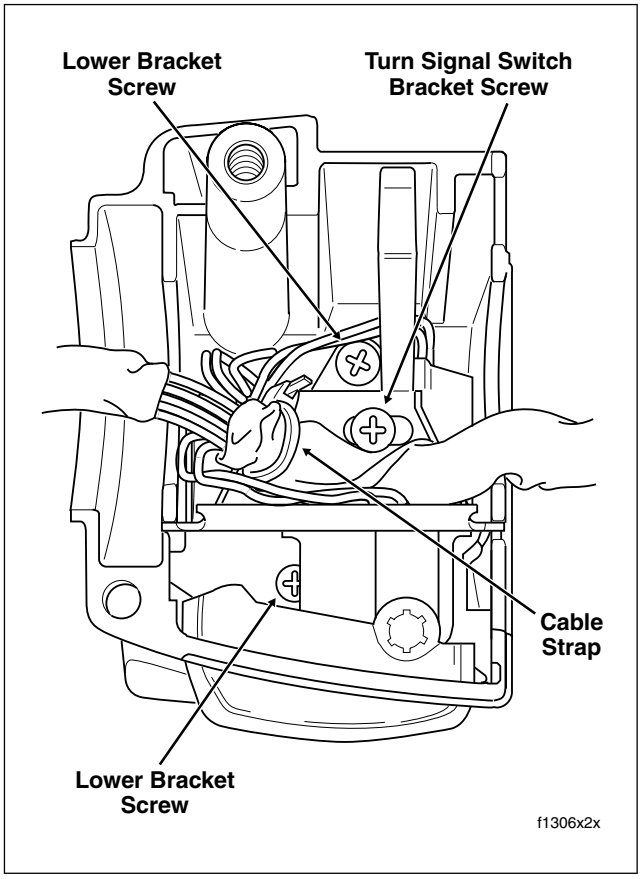

Figure 8-109. Lower Left Handlebar Switch Housing (Without Splices) - Classic/Ultra Models

5. Fit new switch into cavity so that it sits on edge in a vertical position (gray/green wire topside). Properly installed, the switch is captured by blocks cast into the lower housing. Verify that the switch shaft is aligned for proper keycap operation.
6. Place the lower bracket into the housing (with the weld nut side down), but keep the splices above the bracket. Verify that the slots in the upper step of the bracket engage two tabs on switch body.
7. Install shorter screw to secure front side of lower bracket to threaded boss. Install longer rear screw. To engage threaded hole in casting, use thru hole in lower step of bracket on Classic models, thru hole in upper step on Ultra.
8. Note lettering for proper orientation and gently push keycap onto switch shaft.
9. See LEFT SIDE HANDLEBAR, FINAL INSTRUCTIONS on the next page.

- **CB Push-To-Transmit Switch (Ultra Models)**

1. Pull keycap from switch shaft.
2. Remove two lower bracket screws. See Figure 8-109. Pull bracket and switch from switch housing.
3. Cut wires 1-1/2 inches (38.1 mm) from old switch. Discard switch assembly.

NOTE

Replacement Push-to-Transmit Switch wires are cut to length (2 inches) and partially stripped.

4. See GENERAL REPAIR PROCEDURES in this section.
5. Fit new switch into cavity so that it sits in a horizontal position (brown/black wire towards clutch lever bracket). Properly installed, the switch is captured by blocks cast into the lower housing.
6. Keeping splices above the bracket, install the lower bracket (weld nut side down) so that the lower step is positioned over the Push-to-Transmit Switch (horizontally oriented). Slots in the upper step engage two tabs on body of Audio Control Switch (vertically oriented with gray wire topside).
7. Install shorter screw to secure front side of lower bracket to threaded boss. Install longer rear screw. To engage threaded hole in casting, use thru hole in upper step of bracket.
8. Note lettering for proper orientation and gently push keycap onto switch shaft.
9. See LEFT SIDE HANDLEBAR, FINAL INSTRUCTIONS on this page.

- **Cruise On/Off Switch (Road King Classic Models)**

1. Pull keycap from switch shaft.
2. Remove two lower bracket screws. Pull bracket and switch from switch housing.
3. Cut wires 1-1/2 inches (38.1 mm) from old switch. Discard switch assembly.

NOTE

Cut replacement Cruise On/Off Switch wires to 2 inches and strip 1/2 inch of insulation.

4. See GENERAL REPAIR PROCEDURES in this section.
5. Fit new switch into cavity so that it sits in a horizontal position (orange/white wire towards clutch lever bracket). Properly installed, the switch is captured by blocks cast into the lower housing.
6. Keeping splices above the bracket, install the lower bracket (weld nut side down), so that the lower step is positioned over the switch. Slots in the upper step engage two tabs on the Cruise On Lamp upper housing.
7. Install shorter screw to secure front side of lower bracket to threaded boss. Install longer rear screw. Use thru hole in upper step of bracket to engage threaded hole in casting.

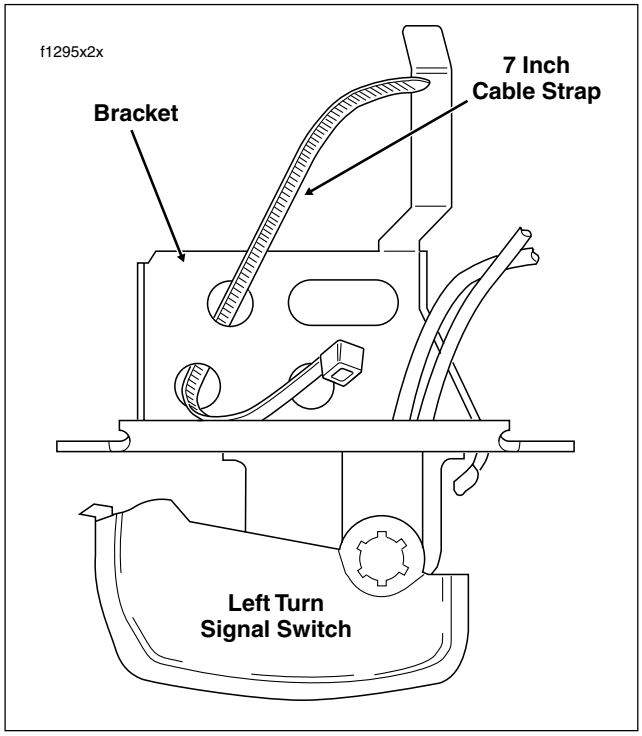

Figure 8-110. Insert Cable Strap in Switch Bracket

8. Note lettering for proper orientation and gently push keycap onto switch shaft.
9. See LEFT SIDE HANDLEBAR, FINAL INSTRUCTIONS below.

LEFT SIDE HANDLEBAR

FINAL INSTRUCTIONS

1. Insert tapered end of **new** 7 inch cable strap into round hole in turn signal switch bracket and then feed back through using the adjacent hole. Reserve the oblong hole for the bracket screw. See Figure 8-110.

NOTE

Be sure that all splices are positioned above the turn signal switch bracket.

2. Place the turn signal switch assembly into the housing aligning the oblong hole in the bracket with the lower bracket weld nut (threaded boss on Road King Standard models). Be sure that bracket is fully seated. Tabs on each side of bracket are captured in slots cast into switch housing.
3. Start Phillips screw to secure bracket inside housing.

CAUTION

If routed incorrectly, wires may be pinched by casting or handlebar resulting in switch failure.

4. Loop switch wires so that spliced lengths are positioned as shown in Figure 8-111.
5. Capturing conduit about 1/4 inch (6.4 mm) from end, securely tighten cable strap to draw conduit to bracket. Remove any excess cable strap material.
6. Tighten Phillips screw to secure bracket inside housing.
7. Route wire bundle to upper switch housing below and then forward of the main wire harness positioning conduit in channel next to angular arm of bracket. See Figure 8-111. Secure bundle to arm using **new** cable strap. Cut any excess cable strap material.
8. See LEFT SIDE HANDLEBAR SWITCHES, ASSEMBLY, which follows.

GENERAL REPAIR PROCEDURES

1. To better access wires and avoid damaging conduit with radiant heating device, push conduit back and secure with extra 7 inch cable strap in kit.

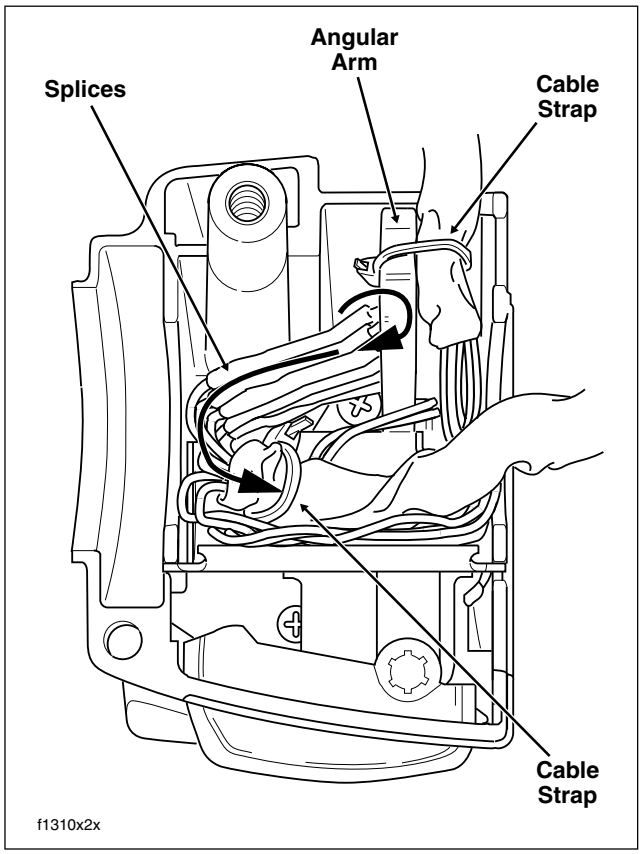

Figure 8-111. Lower Left Handlebar Switch Housing (With Splices) - Classic/Ultra Models

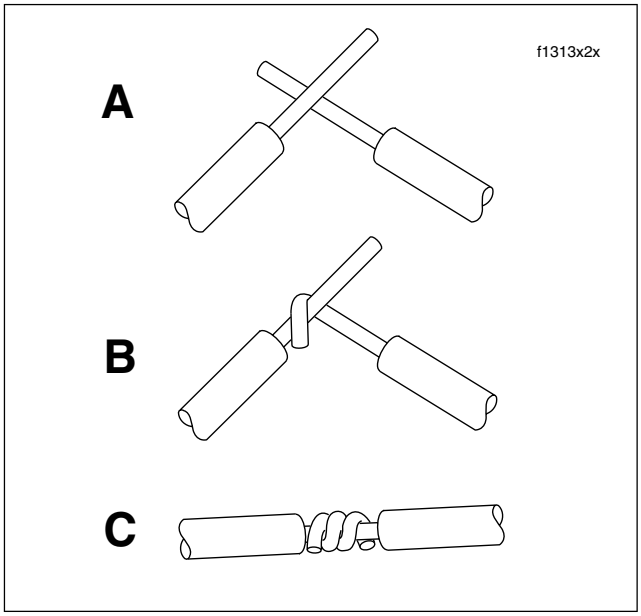

Figure 8-112. Splice Switch Wires

2. Strip 1/2 inch of insulation off switch wires. Twist stripped ends of switch wires until all strands are tightly coiled.
3. Cut dual wall heat-shrink tubing supplied in kit into one inch (25.4 mm) segments. Slide tubing over each wire of new switch assembly.

NOTE

If absent from kit, obtain heat shrink tubing (Part No. 72266-94) and two 7 inch cable straps (Part No. 10181).

4. Matching wire colors, mate old and new switch wires and splice as follows:
   a. Hold the wires so that the stripped ends cross as shown in A of Figure 8-112. Note that the wire on the left is on top and two-thirds of its stripped length lies beyond the point where they intersect. Looking at the other wire, only 1/3 of its stripped length lies beyond the intersection point.
   b. Holding the wires together at their juncture, start the splice by tightly twisting the top one-third length of the right hand wire over the left as shown in B of Figure 8-112.
   c. Tightly coil the remaining two-thirds of the left hand wire around the right with the results shown in C of Figure 8-112.
   d. Solder the spliced connections.

NOTE

For best results, do one wire at a time.

5. Center the heat-shrink tubing over the soldered splices.

⚠WARNING

Use extreme caution when operating the UltraTorch UT-100 or any other radiant heating device. Read the manufacturers instructions carefully before use. Always keep hands away from tool tip area and heat shrink attachment. Avoid directing the heat toward any fuel system component. Extreme heat can cause fuel ignition/explosion. Avoid directing heat toward any electrical system component other than the connectors on which heat shrink work is being performed. Be sure to turn the "ON/OFF" switch to the "OFF" position after use. Inadequate safety precautions could result in death or serious injury.

6. See Figure 8-113. Using the UltraTorch UT-100, Robinair Heat Gun with heatshrink attachment or other suitable radiant heating device, uniformly heat the heat-shrink tubing to insulate and seal the soldered connections. Apply heat just until the meltable sealant exudes out both ends of the tubing and it assumes a smooth cylindrical appearance.

CAUTION

Electrically connected solder outside the tubing may cause a short to ground resulting in switch failure.

7. Inspect the melted sealant for solder beads. Excess solder or heat may force some solder out with the melted sealant. Use a small needle nose pliers to remove any solder found. Briefly heat the connection to reseal the tubing if solder beads were removed. Use less solder or

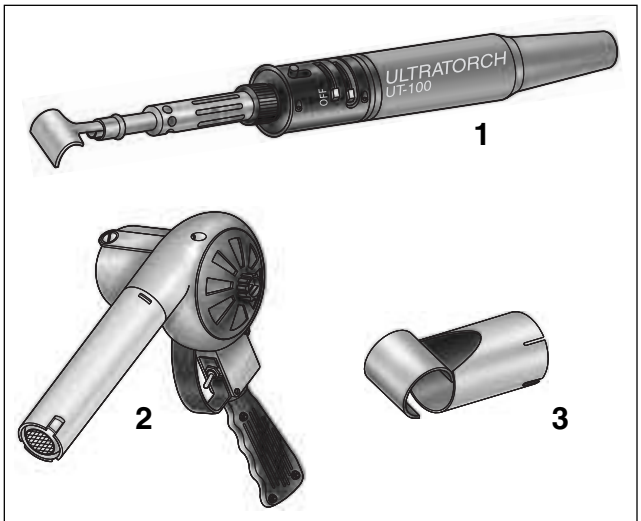

1. **Ultra Torch UT-100 (HD-39969)**
2. **Robinair Heat Gun (HD-25070)**
3. **Robinair Heat Gun Shrink Tool Attachment (HD-41183)**

Figure 8-113. Radiant Heating Devices

reduce heating time or intensity when doing subsequent splices.

8. Cut cable strap compressing conduit and move to its original position.

RIGHT SIDE HANDLEBAR SWITCHES

ASSEMBLY

1. If replacing lower housing switches, proceed to step 2. If replacing upper housing switches, proceed to step 9.
2. With the concave side facing upward, install the friction shoe so that the pin hole is over the point of the adjuster screw (non cruise equipped models only).

NOTE

The friction shoe is a loose fit and may fall out or become dislodged if the lower switch housing is turned upside down or shaken.

3. Slide the throttle control grip over the end of the right handlebar until it bottoms against the closed end. Rotate the grip so that the ferrule notches are at the top. To prevent binding, pull the grip back about 1/8 inch (3.2 mm).
4. Position the lower switch housing beneath the throttle control grip. Install the brass ferrules onto the cables so that the end fittings seat in the ferrule recess. Seat the ferrules in their respective notches on the throttle control grip. Verify that the cables are captured in the grooves molded into the grip.
5. Position the upper switch housing over the handlebar and lower switch housing. Verify that the wire harness conduit runs in the depression at the bottom of the handlebar.
6. Start the upper and lower switch housing screws, but do not tighten.
7. Position the brake lever/master cylinder assembly inboard of the switch housing assembly engaging the tab on the lower switch housing in the groove at the top of the brake lever bracket.
8. Align the holes in the handlebar clamp with those in the master cylinder housing and start the lower screw (with flat washer). Position for rider comfort. Beginning with the top screw, tighten the screws to 60-80 **in-lbs** (6.8-9.0 Nm) using a T27 TORX drive head.
9. Using a T25 TORX drive head, tighten the lower and upper switch housing screws to 35-45 **in-lbs** (4-5 Nm).

NOTE

Always tighten the lower switch housing screw first so that any gap between the upper and lower housings is at the front of the switch assembly.

10. Remove the cardboard insert between the brake lever and lever bracket.
11. Test the switches for proper operation.

LEFT SIDE HANDLEBAR SWITCHES

ASSEMBLY

1. If replacing lower housing switches, proceed to step 2. If replacing upper housing switches, proceed to step 6.
2. Install upper and lower switch housings on handlebar. Be sure that ribs on outboard side of switch housings fit in grooves molded into grip. Verify that the wire harness conduit runs in the depression at the bottom of the handlebar.
3. Start the upper and lower switch housing screws, but do not tighten.
4. Position the clutch hand lever assembly inboard of the switch housing assembly engaging the tab on the lower switch housing in the groove at the bottom of the clutch lever bracket.
5. Align the holes in the handlebar clamp with those in the clutch lever bracket and start the lower screw (with flat washer). Position for rider comfort. Beginning with the top screw, tighten the screws to 60-80 **in-lbs** (6.8-9.0 Nm) using a T27 TORX drive head.
6. Using a T25 TORX drive head, tighten the lower and upper switch housing screws to 35-45 **in-lbs** (4-5 Nm).

NOTE

Always tighten the lower switch housing screw first so that any gap between the upper and lower housings is at the front of the switch assembly.

7. Test the switches for proper operation.

STOPLIGHT SWITCHES 8.23

FRONT STOPLIGHT SWITCH

REMOVAL/INSTALLATION

See Section 8.22 HANDLEBAR SWITCHES, SWITCH REPAIR/REPLACEMENT.

REAR STOPLIGHT SWITCH

REMOVAL

CAUTION

DOT 4 brake fluid will damage painted and molded-in color surfaces it comes in contact with. Always use caution and protect surfaces from spills whenever brake work is performed. Failure to comply can result in cosmetic damage. (00239a)

IMPORTANT NOTE

Immediately wipe up any brake fluid spillage with a clean, dry, soft cloth. Follow up by thoroughly wiping affected area with a clean, damp, soft cloth (small spills) or washing with a large quantity of soapy water (large spills).

1. Remove bleeder valve cap on rear brake caliper. Install end of a length of clear plastic tubing over caliper bleeder valve, while placing free end in a suitable container. Open bleeder valve about 1/2-turn. Pump brake pedal to drain brake fluid. Close bleeder valve.
2. Using a 11/16 inch open end/box wrench on flats, remove rear stoplight switch from rear brake line. See Figure 8-114.

INSTALLATION

1. Apply Loctite Pipe Sealant with Teflon 565 to threads of rear stoplight switch.
2. Install rear stoplight switch into rear brake line. See Figure 8-114.

Figure 8-114. Rear Stoplight Switch

3. Using a 11/16 inch open end/box wrench on flats, tighten rear stoplight switch to 12-15 ft-lbs (16.3-20.3 Nm).
4. Fill and bleed rear brake system. See Section 2.14 BLEEDING HYDRAULIC BRAKES.
5. Verify proper operation of tail lamp/rear brake light.

NEUTRAL SWITCH 8.24

REMOVAL

CAUTION

Cover transmission top cover with masking tape to prevent damage to chrome.

1. Using fingers and flat tip screwdriver, remove two elbow connectors from neutral switch posts.
2. Using a 7/8 inch open end/box wrench on flats, remove neutral switch and O-ring from transmission top cover.

NOTE

If neutral switch connector is damaged, replace using Part No.'s 72405-98BK or 72405-98TN with a heat-sealed butt splice connector. For detailed butt splicing information, see APPENDIX B.6 SEALED BUTT SPLICE CONNECTORS.

INSTALLATION

NOTE

If transmission top cover has been removed, be sure to install neutral switch after top cover installation to ensure proper switch engagement.

1. Roll the motorcycle back and forth to verify that the transmission is in NEUTRAL.
2. Lubricate O-ring with clean transmission oil.

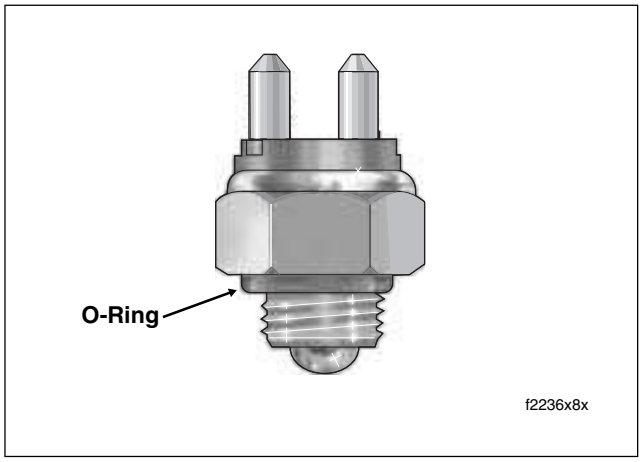

Figure 8-115. Neutral Switch Assembly

3. Using a 7/8 inch open end/box wrench on flats, install neutral switch with O-ring in the transmission top cover. Tighten to 120-180 **in-lbs** (13.6-20.3 Nm).
4. Using fingers and a flat tip screwdriver, install the two elbow connectors on neutral switch posts.

NOTE

The neutral switch is not polarity sensitive, so the elbow connectors can be attached to either stud.

5. Test neutral switch for proper operation as follows:
   a. Turn the Ignition/Light Key Switch to the IGNITION position.
   b. Verify that neutral indicator lamp illuminates.
6. Remove masking tape from transmission top cover.

OIL PRESSURE SWITCH/SENDER 8.25

REMOVAL

1. Locate the oil pressure switch/sender at the front right side of the crankcase.
2. Proceed as follows:

   FLHR/C/S: Pull elbow connector [120] from post terminal of oil pressure switch. Use a 15/16 inch Open End Crow Foot (Snap-On FC30B) to remove switch from crankcase.

   FLHX, FLHT/C/U, FLTR: Pull external latch outward and use rocking motion to remove 4-place Delphi connector [139] from oil pressure sender. Use 1-1/16 inch Open End Crow Foot (Snap-On FC34A) to remove sender from crankcase.

INSTALLATION

NOTE

If reusing oil pressure switch/sender, apply Loctite Pipe Sealant with Teflon 565 to threads.

1. Start oil pressure switch/sender into crankcase bore.
2. Proceed as follows:

   FLHR/C/S: Use a 15/16 inch Open End Crow Foot (Snap-On FC30B) to tighten oil pressure switch to 96-120 **in-lbs** (11-14 Nm). Install elbow connector [120] on post terminal.

   FLHX, FLHT/C/U, FLTR: Use 1-1/16 inch Open End Crow Foot (Snap-On FC34A) to tighten oil pressure sender to 96-120 **in-lbs** (11-14 Nm). Install 4-place Delphi connector.
3. Test oil pressure switch/sender for proper operation.

HORN 8.26

TROUBLESHOOTING

1. If the horn does not sound or fails to function satisfactorily, check for the following conditions.
   - Discharged battery
   - Loose, frayed or damaged wiring leading to horn terminal
2. If battery has a satisfactory charge and wiring appears to be in good condition, check for the following:
   - Poor ground to frame through mounting hardware or ground wire (see Steps 3-6 below)
   - Inoperative horn switch (see Steps 3-6 below)
3. Disconnect the YELLOW/BLACK wire at the horn. Connect a voltmeter as follows:
   - Positive (+) lead to wire terminal
   - Negative (–) lead to ground
4. Turn ignition switch ON. Depress horn switch. If battery voltage is present, horn or horn grounding is faulty. If battery voltage is not present, either horn switch or wiring to horn is faulty.
5. Connect an ohmmeter across the horn terminals. The resistance measured must be 45-66 ohms. Replace horn if measured resistance is outside range given.
6. If the horn is faulty, then it must be replaced as an assembly. The horn is not repairable. If the horn switch is faulty, replace the switch. See Section 8.22 HANDLEBAR SWITCHES, SWITCH REPAIR/REPLACEMENT.

REMOVAL

1. Remove acorn nut and flat washer to free horn assembly from rubber mount stud.
2. Remove elbow terminals from spade contacts and release main harness conduit from J-clamp.
3. Remove flange nut (10mm) from circular recess at back of horn bracket. Remove horn from chrome horn cover.

INSTALLATION

1. Fit horn into chrome cover so that stud at back slides through hole in horn bracket. Apply two drops of LOCTITE THREADLOCKER 222 (Purple) to threads of horn stud.

CAUTION

Overtightening the flange nut can cause permanent horn damage resulting in reduced volume and tone quality.

2. Install flange nut (10mm) on horn stud and tighten to 80-100 **in-lbs** (9.0-11.3 Nm).
3. Install elbow terminals onto spade contacts.

NOTE

The horn is not polarity sensitive. Elbow terminals may be attached to either spade contact.

4. Capture main harness conduit in J-clamp and install horn bracket onto rubber mount stud. Install flat washer and acorn nut. Tighten acorn nut to 80-100 **in-lbs** (9.0-11.3 Nm).

CIGARETTE LIGHTER (FLHX, FLHT/C/U, FLTR) 8.27

GENERAL

FLHX, FLHT/C/U and FLTR models are equipped with a cigarette lighter. The lighter is located on the left side of the inner fairing.

TROUBLESHOOTING

1. Ignition/light key switch must be ON or in ACCESSORY position for lighter operation.
2. If lighter does not work, substitute a known good lighter element.
3. If lighter is still inoperative, check for 12 vdc at center socket contact and ground at outer shell contact.
4. Refer to applicable Wiring Diagram at rear of manual if 12 vdc or ground are not present. Use voltage checks to isolate problem.

REMOVAL

1. Remove the outer fairing. On FLHX, FLHT/C/U models, see Section 2.30 UPPER FAIRING/WINDSHIELD (FLHX, FLHT/C/U), OUTER FAIRING/WINDSHIELD, REMOVAL. On FLTR models, see Section 2.31 UPPER FAIRING/WINDSHIELD (FLTR), OUTER FAIRING, REMOVAL.
2. Disconnect the socket terminals from the spade contacts on the cigarette lighter.
3. Remove lighter from socket. Holding socket, unscrew outer shell. Remove socket and outer shell from the fairing.

INSTALLATION

1. From rider side of inner fairing, slide socket of **new** cigarette lighter through bore in fairing. Thread outer shell onto socket until tight. Install cigarette lighter in socket.
2. Connect the socket terminals onto the spade contacts of the cigarette lighter. Connect the orange wire terminal to the center socket spade contact, the black wire terminal to the outer shell contact.
3. Install the outer fairing. On FLHX, FLHT/C/U models, see Section 2.30 UPPER FAIRING/WINDSHIELD (FLHX, FLHT/C/U), OUTER FAIRING/WINDSHIELD, INSTALLATION. On FLTR models, see Section 2.31 UPPER FAIRING/WINDSHIELD (FLTR), OUTER FAIRING, INSTALLATION.

GAUGE/LAMP- 2 INCH DIAMETER

Fuel Level, Ambient Air Temperature, Voltmeter, Oil Pressure

REMOVAL

1. Remove outer fairing. Proceed as follows:

   FLHX, FLHT/C/U: See Section 2.30 UPPER FAIRING/WINDSHIELD (FLHX, FLHT/C/U), OUTER FAIRING/WINDSHIELD, REMOVAL.

   FLTR: See Section 2.31 UPPER FAIRING/WINDSHIELD (FLTR), OUTER FAIRING, REMOVAL.

2. Pull 2-place and 3-place socket housings to release interconnect harness from lamp and gauge, respectively.

NOTE

*To replace lamp, pull pin housing from gauge and then pull lamp from slot of pin housing. Install **new** lamp in slot and insert pin housing back into gauge. See Figure 8-116.*

3. Remove hex nuts from studs. Remove mounting bracket.

4. Remove gauge from inner fairing.

INSTALLATION

1. Install gauge in inner fairing.

2. Slide mounting bracket over studs. Verify that tabs on top and bottom of bracket engage slots in inner fairing. See Figure 8-116.

3. Loosely install hex nuts on studs. Verify that gauge is properly aligned and then tighten nuts to 10-20 **in-lbs** (1.1-2.3 Nm).

4. Install 3-place and 2-place socket housings to connect interconnect harness to gauge and lamp, respectively.

5. Install outer fairing. Proceed as follows:

   FLHX, FLHT/C/U: See Section 2.30 UPPER FAIRING/WINDSHIELD (FLHX, FLHT/C/U), OUTER FAIRING/WINDSHIELD, INSTALLATION.

   FLTR: Section 2.31 UPPER FAIRING/WINDSHIELD (FLTR), OUTER FAIRING, INSTALLATION.

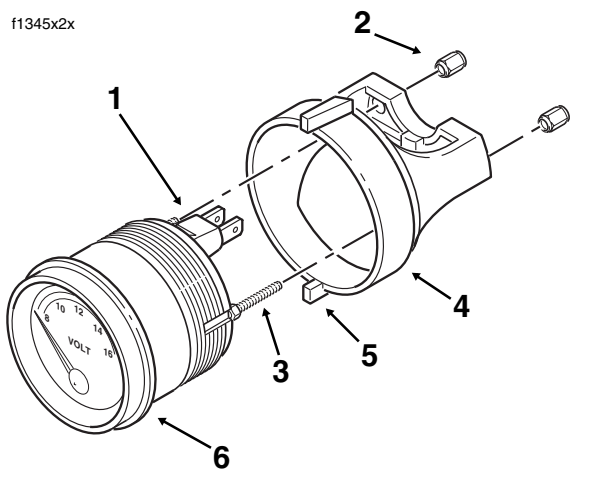

1.	Pin Housing	4.	Mounting Bracket
2.	Hex Nut	5.	Tab
3.	Stud	6.	Gauge

Figure 8-116. Voltmeter Gauge Assembly

GAUGES- 4 INCH DIAMETER

TACHOMETER

REMOVAL

1. Proceed as follows:

   FLHX, FLHT/C/U: Remove the outer fairing. See Section 2.30 UPPER FAIRING/WINDSHIELD (FLHX, FLHT/C/U), OUTER FAIRING/WINDSHIELD, REMOVAL.

   FLTR: Remove instrument bezel. See Section 2.31 UPPER FAIRING/WINDSHIELD (FLTR), BEZEL, REMOVAL, steps 1-3.

2. Remove tachometer connector [108], 12-place Packard, at back of tachometer.

3. Remove two allen head socket screws to free tachometer bracket from back of tachometer gauge. On FLHX, FLHT/C/U models, leave anchors on interconnect harness installed in outboard ears of tachometer bracket.

4. Push tachometer gauge toward rear of motorcycle to remove from inner fairing (FLHX, FLHT/C/U) or bezel bore (FLTR).

INSTALLATION

1. Insert tachometer gauge into inner fairing (FLHX, FLHT/C/U) or bezel bore (FLTR).
2. Align holes in tachometer bracket with those at back of tachometer gauge and start two allen head socket screws.
3. Rotate tachometer gauge until tabs at top and bottom of bracket engage slots in inner fairing (FLHX, FLHT/C/U) or bezel (FLTR).

NOTE

On FLHX, FLHT/C/U models, both the speedometer and tachometer brackets are oriented with the ears on the outboard side. On FLTR models, the brackets are oriented with the ears inboard.

4. Verify that gauge is properly aligned and tighten two allen head socket screws to 10-20 **in-lbs** (1.1-2.3 Nm).
5. Install tachometer connector [108], 12-place Packard, at back of tachometer.
6. Proceed as follows:

   FLHX, FLHT/C/U: Verify that anchors on interconnect harness are installed in lower outboard ears of both the speedometer and tachometer brackets. Install outer fairing. See Section 2.30 UPPER FAIRING/WINDSHIELD (FLHX, FLHT/C/U), OUTER FAIRING/WINDSHIELD, INSTALLATION.

   FLTR: Install instrument bezel. See Section 2.31 UPPER FAIRING/WINDSHIELD (FLTR), BEZEL, INSTALLATION, steps 2-5

VSS

REMOVAL

1. Remove maxi-fuse. See Section 8.3 SYSTEM FUSES, MAXI-FUSE, REMOVAL.
2. Remove right side saddlebag. See Section 2.26 SADDLEBAG, REMOVAL.
3. Gently pull side cover from frame downtubes (no tools required).
4. Remove two flange nuts to release electrical bracket from studs on side of battery box.
5. Disconnect VSS connector [65], 3-place Deutsch, on the inboard side of the electrical bracket. See Figure 8-117.
6. Remove terminals from pin housing.

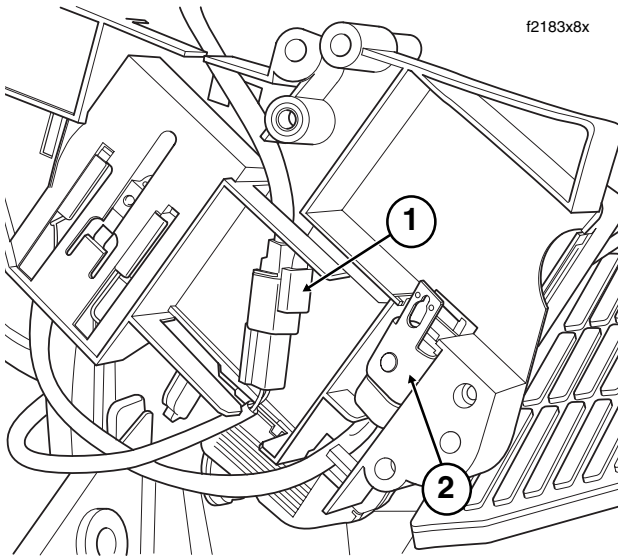

1. **VSS [65]**
2. **P&A Security Siren [142]**

Figure 8-117. Electrical Bracket (Inboard Side)

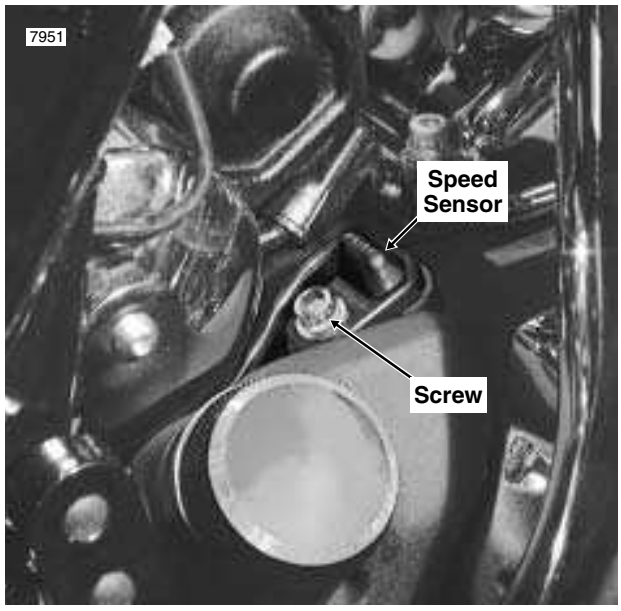

Figure 8-118. VSS Location

NOTE

For instructions on properly removing wire terminals, see APPENDIX B.1 DEUTSCH ELECTRICAL CONNECTORS, REMOVING/INSTALLING PINS.

7. Carefully cut anchored cable strap inboard of rear passenger footboard screw to release cable from frame downtube.

8. Locate VSS mounted next to the starter on the right side of the transmission case. Remove screw and pull sensor from transmission case. See Figure 8-118.
9. Draw sensor and cable forward to remove from motorcycle.

INSTALLATION

1. Inspect VSS O-ring for cuts, tears or general deterioration. Replace as necessary.
2. Insert sensor into transmission case. Install screw and tighten to 84-132 **in-lbs** (9.5-14.9 Nm).
3. Feed cable rearward under and inboard of the chrome starter cover. Running cable up the frame downtube, capture cable in **new** cable strap anchored in hole of frame downtube.

NOTE

Anchored cable strap also captures the main harness and neutral switch conduit.

4. Draw cable rearward between frame downtube and side of battery box to area of electrical bracket.
5. Referencing the following table, install terminals into pin housing.

Table 8-16. VSS Connector [65]

Wire Color	Chamber Number
Red	A
White	B
Black	C

NOTE

For instructions on properly installing wire terminals, see APPENDIX B.1 DEUTSCH ELECTRICAL CONNECTORS, REMOVING/INSTALLING PINS.

6. Connect VSS connector. Route connector and cable on inboard side of electrical bracket as shown in Figure 8-117. Be sure that cable is properly routed or wires may be pinched during installation of bracket.
7. Slide electrical bracket onto studs at side of battery box.
8. Install flange nuts on studs and tighten to 36-48 **in-lbs** (4.1-5.4 Nm).
9. Align barbed studs in side cover with grommets in frame downtubes and push firmly into place (no tools required).
10. Install right side saddlebag. See Section 2.26 SADDLEBAG, INSTALLATION.
11. Install maxi-fuse. See Section 8.3 SYSTEM FUSES, MAXI-FUSE, INSTALLATION.

SPEEDOMETER

REMOVAL

1. Proceed as follows:

   FLHX, FLHT/C/U: Remove the outer fairing. See Section 2.30 UPPER FAIRING/WINDSHIELD (FLHX, FLHT/C/U), OUTER FAIRING/WINDSHIELD, REMOVAL.

   FLTR: Remove instrument bezel. See Section 2.31 UPPER FAIRING/WINDSHIELD (FLTR), BEZEL, REMOVAL, steps 1-2. Raising bezel slightly, remove anchor on ambient temperature sensor from bottom inboard ear of speedometer bracket.
2. Remove speedometer connector [39], 12-place Packard, at back of speedometer.
3. Remove two allen head socket screws to free speedometer bracket from back of speedometer gauge. On FLHX, FLHT/C/U models, leave anchors on interconnect harness installed in outboard ears of speedometer bracket.
4. Push speedometer gauge toward rear of motorcycle to remove from inner fairing (FLHX, FLHT/C/U) or bezel bore (FLTR).

INSTALLATION

1. Insert speedometer gauge into inner fairing (FLHX, FLHT/C/U) or bezel bore (FLTR).
2. Align holes in speedometer bracket with those at back of speedometer gauge and start two allen head socket screws.
3. Rotate speedometer gauge until tabs at top and bottom of bracket engage slots in inner fairing (FLHX, FLHT/C/U) or bezel (FLTR).

NOTE

On FLHX, FLHT/C/U models, both the speedometer and tachometer brackets are oriented with the ears on the outboard side. On FLTR models, the brackets are oriented with the ears inboard.

4. Verify that gauge is properly aligned and tighten two allen head socket screws to 10-20 **in-lbs** (1.1-2.3 Nm).
5. Install speedometer connector [39], 12-place Packard, at back of speedometer.

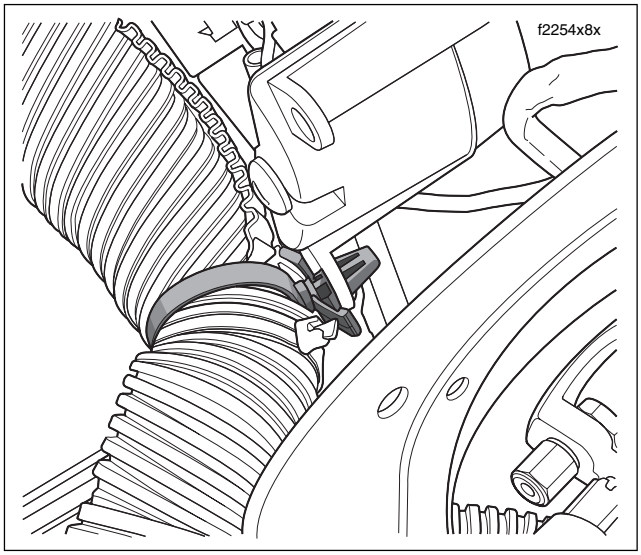

Figure 8-119. Anchor Interconnect Harness in Lower Ears of Speedometer/Tachometer Brackets

6. Proceed as follows:

   FLHX, FLHT/C/U: Verify that anchors on interconnect harness are installed in lower outboard ears of both the speedometer and tachometer brackets. See Figure 8-119. Install outer fairing. See Section 2.30 UPPER FAIRING/WINDSHIELD (FLHX, FLHT/C/U), OUTER FAIRING/WINDSHIELD, INSTALLATION.

   FLTR: Install anchor on ambient temperature sensor into bottom inboard ear of speedometer bracket. Install instrument bezel. See Section 2.31 UPPER FAIRING/WINDSHIELD (FLTR), BEZEL, INSTALLATION, steps 3-5.

INDICATOR LAMPS

REMOVAL

1. Proceed as follows:

   FLHX, FLHT/C/U: Remove the outer fairing. See Section 2.30 UPPER FAIRING/WINDSHIELD (FLHX, FLHT/C/U), OUTER FAIRING/WINDSHIELD, REMOVAL.

   FLTR: Remove instrument bezel. See Section 2.31 UPPER FAIRING/WINDSHIELD (FLTR), BEZEL, REMOVAL, steps 1-2.

2. Disconnect indicator lamps connector [21], 10-place Multilock.
3. On FLHX, FLHT/C/U models, remove tachometer gauge to access indicator lamp assembly. See GAUGES- 4 INCH DIAMETER, TACHOMETER, REMOVAL, in this section.
4. Release four paddles to free indicator bulb housing from lense assembly. See Figure 8-120. Remove lense assembly from inner fairing (FLHX, FLHT/C/U) or bezel (FLTR), if damaged.
5. To replace indicator lamp bulbs, carefully remove rubber boot from bulb housing. Remove bulb from socket in boot.

INSTALLATION

1. Install **new** bulb in socket. Install boot in bulb housing.
2. Place lense assembly in inner fairing (FLHX, FLHT/C/U) or bezel (FLTR), if removed. Note position of oil icon to be sure that lense is right side up.
3. Engage all four paddles on lense assembly with tabs on indicator bulb housing. Be sure that flange on bulb housing faces upward.
4. Connect indicator lamps connector [21], 10-place Multilock.
5. On FLHX, FLHT/C/U models, install tachometer gauge. See GAUGES- 4 INCH DIAMETER, TACHOMETER, INSTALLATION, in this section.
6. Proceed as follows:

   FLHX, FLHT/C/U: Install outer fairing. See Section 2.30 UPPER FAIRING/WINDSHIELD (FLHX, FLHT/C/U), OUTER FAIRING/WINDSHIELD, INSTALLATION.

   FLTR: Install instrument bezel. See Section 2.31 UPPER FAIRING/WINDSHIELD (FLTR), BEZEL, INSTALLATION, steps 3-5.

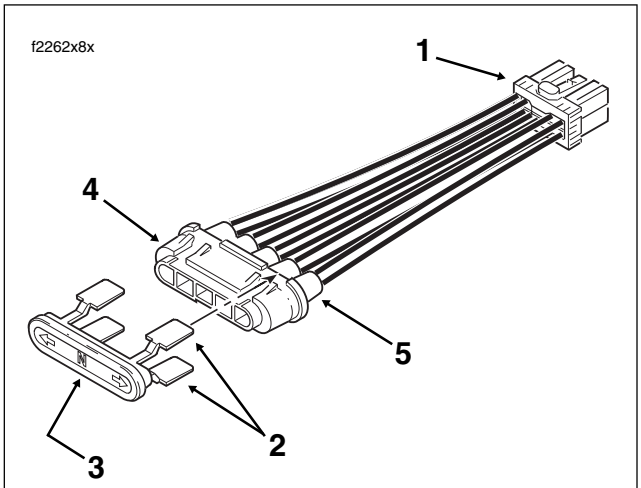

1. **Indicator Lamps Connector [21]**
2. **Paddle**
3. **Lense**
4. **Bulb Housing**
5. **Rubber Boot**

Figure 8-120. Indicator Lamp Assembly

FUEL GAUGE

REMOVAL

1. Remove maxi-fuse. See Section 8.3 SYSTEM FUSES, MAXI-FUSE, REMOVAL.
2. At bottom left side of fuel tank, gently pull on convoluted tubing to draw fuel gauge connector [117], 4-place Multilock, out of tunnel. Disconnect pin and socket halves.
3. Remove terminals from pin housing.

NOTE

For instructions on properly removing wire terminals, see APPENDIX B.2 MULTILOCK ELECTRICAL CONNECTORS, REMOVING SOCKET/PIN TERMINALS.

4. Remove convoluted tubing from wires.
5. Remove the gauge cap on the top left side of the fuel tank. Do not twist the cap during removal. Hold the cap firmly and pull upward just far enough to free the cap from the fuel tank.
6. To remove fuel gauge from motorcycle, feed wires and pin terminals up into drain tube of fuel tank while carefully raising cap.
7. If reusing gauge, inspect rubber seal for tears, cuts or general deterioration. Replace seal if necessary. Install **new** seal so that flat side contacts edge of gauge.

INSTALLATION

1. Place **new** fuel gauge assembly next to discarded unit and cut wires to proper length.
2. Crimp **new** pin terminals onto fuel gauge wires.

NOTE

For instructions on crimping wire terminals, see APPENDIX B.2 MULTILOCK ELECTRICAL CONNECTORS, CRIMPING INSTRUCTIONS.

3. While carefully lowering cap, feed wires down into drain tube until pin terminals exit hole at bottom of fuel tank. Gently pull wires (to remove slack) while installing the fuel gauge cap on the fuel tank. Do not twist the cap during installation. Hold the cap firmly and press downward until it snaps in place.
4. Install convoluted tubing on wires.

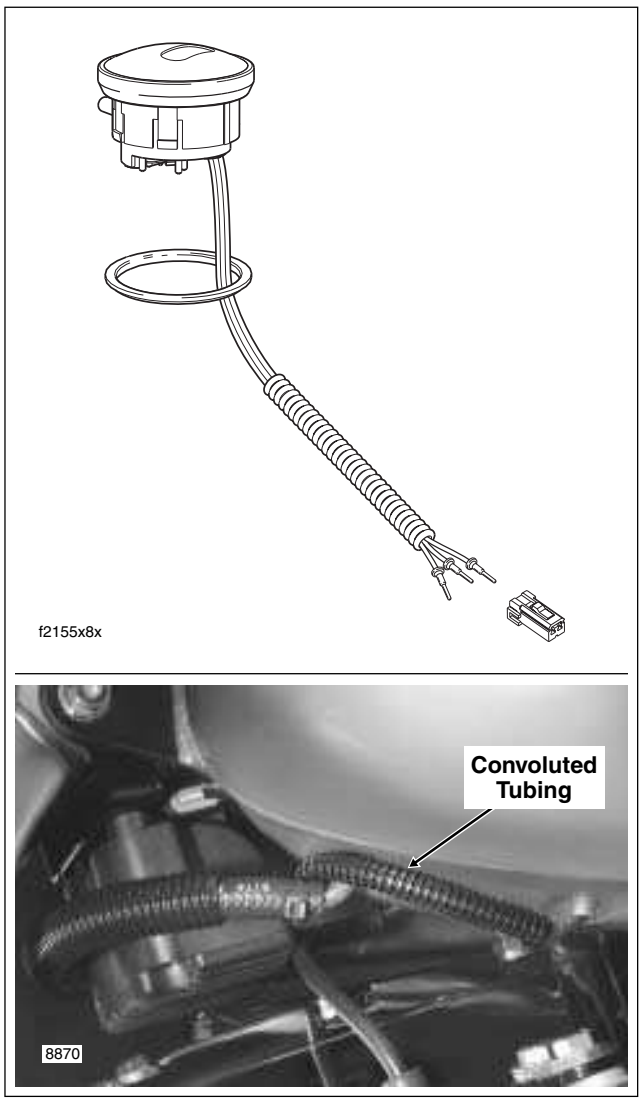

Figure 8-121. Fuel Gauge (FLHR/C/S)

5. Install terminals into pin housing of 4-place Multilock.

Table 8-17. Fuel Gauge [117]

Wire Color		Chamber Number
Fuel Injected	Carbureted	
Orange	Orange	1
Yellow/White	-	2
-	-	3
Black	Black	4

NOTE

For instructions on properly installing wire terminals, see APPENDIX B.2 MULTILOCK ELECTRICAL CONNECTORS, INSTALLING SOCKET/PIN TERMINALS.

6. Route pin housing and convoluted tubing forward and then inboard between front of crossover hose fitting and bottom of fuel tank. Connect fuel gauge connector [117], 4-place Multilock. Feed connector into tunnel of fuel tank. See lower frame of Figure 8-121.
7. Install maxi-fuse. See Section 8.3 SYSTEM FUSES, MAXI-FUSE, INSTALLATION.

VSS

See Section 8.28 GAUGES/INSTRUMENTS (FLHX, FLHT/C/U, FLTR), VSS.

SPEEDOMETER

REMOVAL

1. Remove seat. See Section 2.25 SEAT, REMOVAL.

⚠WARNING

To protect against shock and accidental start-up of vehicle, disconnect the negative battery cable before proceeding. Inadequate safety precautions could result in death or serious injury.

2. Unthread bolt and remove battery negative cable (black) from battery negative (-) terminal.
3. Remove acorn nut from instrument console. If present, also remove Phillips screw and large flat washer (absent on FLHRS models).
4. On FLHRS models only, remove bolt (with flat washer) to free rear of fuel tank from frame backbone. Removal of rear bolt also releases instrument console bracket.
5. Lay a clean shop towel on forward part of rear fender.
6. Raise instrument console and bend back flexible clamp on canopy to release main harness conduit. Disconnect fuel level sender/fuel pump connector [141], 4-place Packard, at top of canopy.
7. Lay instrument console upside down on shop towel.
8. If necessary, bend back the flexible metal clips to free the main harness conduit from the bottom of the console.

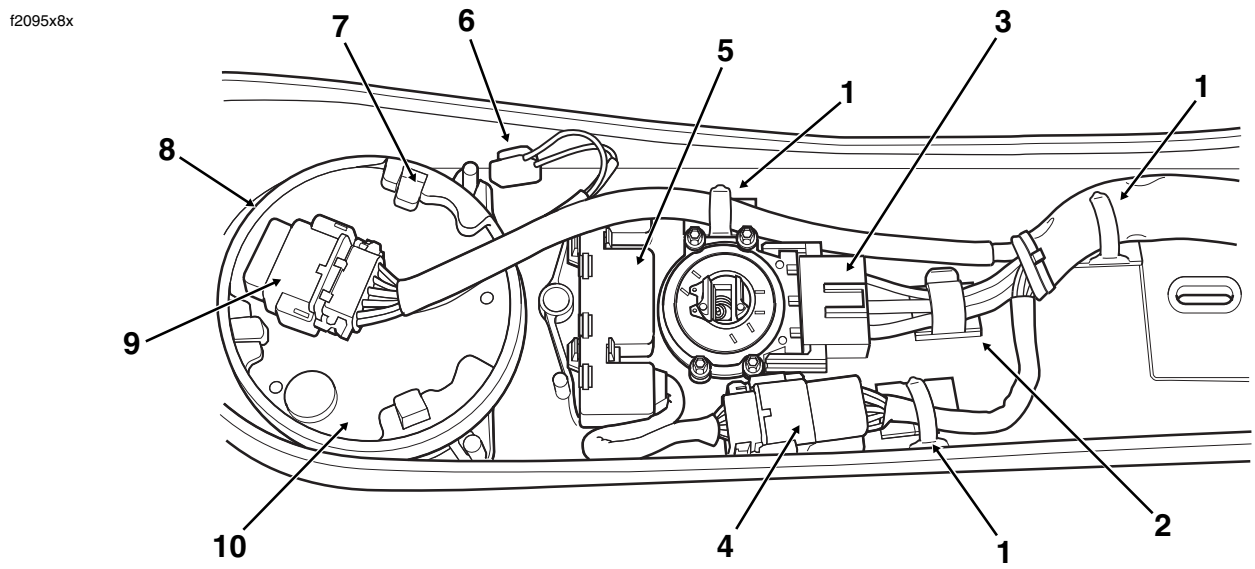

1. **Flexible Clip (3)**
2. **Plastic Clip**
3. **Ignition/Light Key Switch Connector [33]**
4. **Indicator Lights Connector [21]**
5. **Indicator Lights Assembly**
6. **Odometer Reset Switch**
7. **Latch (1 of 3)**
8. **Lock Ring**
9. **Speedometer Connector [39]**
10. **Speedometer**

Figure 8-122. Instrument Console Assembly (FLHR/C)

9. Remove speedometer connector [39], 12-place Packard, at back of speedometer.
10. See Figure 8-122. Gently pry the three latches upward to release the lock ring from the back of the speedometer.
11. Turn the console over and remove the speedometer from the top side.
12. Remove gasket from console speedometer bore.

INSTALLATION

1. Lubricate the groove in the rubber speedometer gasket with isopropyl alcohol or glass cleaner. Place the gasket into position around the console speedometer bore.
2. From the top side of the console, feed the speedometer into the gasket. Lubricate the gasket with isopropyl alcohol or glass cleaner, if necessary. The speedometer should fit snugly against the gasket without movement.
3. Turn the console over. Place the lock ring over the back of the speedometer aligning the two slots with the console bosses. Press the latches down until they lock into position.
4. Install speedometer connector [39], 12-place Packard, at back of speedometer.
5. If released, position the speedometer harness so that it runs the length of the console on the left side. Bend the flexible metal clip to capture the harness conduit. See Figure 8-122.
6. Slide head of console mounting bolt into slot at top of canopy, if removed.
7. Moving instrument console toward installed position, connect fuel level sender/fuel pump connector [141], 4-place Packard, at top of canopy. Bend flexible clamp to capture main harness conduit.
8. Align hole in instrument console with console mounting bolt and place into position on fuel tank.
9. Install acorn nut at top of instrument console and tighten to 50-90 **in-lbs** (5.7-10.2 Nm). If present, also install Phillips screw and large flat washer (absent on FLHRS models). Tighten screw to 36-60 **in-lbs** (4.1-6.8 Nm).
10. On FLHRS models only, install bolt (with flat washer) to secure rear of fuel tank and instrument console bracket to frame backbone. Tighten bolt to 15-20 ft-lbs (20-27 Nm).
11. Insert bolt through battery negative cable (black) into threaded hole of battery negative (-) terminal. Tighten bolt to 60-96 **in-lbs** (6.8-10.9 Nm).
12. Install seat. See Section 2.25 SEAT, INSTALLATION.

INDICATOR LIGHTS

NOTE

All FLHR/C/S models are equipped with Light Emitting Diodes (LED's) in lieu of indicator lamps. The indicator light assembly is not serviceable. If one LED is bad, the indicator light assembly must be replaced.

REMOVAL

1. Remove seat. See Section 2.25 SEAT, REMOVAL.

⚠WARNING

To protect against shock and accidental start-up of vehicle, disconnect the negative battery cable before proceeding. Inadequate safety precautions could result in death or serious injury.

2. Unthread bolt and remove battery negative cable (black) from battery negative (-) terminal.
3. Remove acorn nut from instrument console. If present, also remove Phillips screw and large flat washer (absent on FLHRS models).
4. On FLHRS models only, remove bolt (with flat washer) to free rear of fuel tank from frame backbone. Removal of rear bolt also releases instrument console bracket.
5. Lay a clean shop towel on forward part of rear fender.
6. Raise instrument console and bend back flexible clamp on canopy to release main harness conduit. Disconnect fuel level sender/fuel pump connector [141], 4-place Packard, at top of canopy.
7. Lay instrument console upside down on shop towel.
8. Disconnect the indicator lights connector [21], 8-place Deutsch, at back of console. Depress the external latches and use a rocking motion to separate pin and socket halves.
9. Remove indicator lights assembly from console as follows:
   a. Insert the blade of a large screwdriver under rear corner of indicator lights assembly.
   b. Using thumb and index finger, squeeze front and rear paddles on same side of assembly while rotating screwdriver. See Figure 8-123.
   c. When one side of assembly becomes free, repeat procedure on opposite side to release unit from console.

INSTALLATION

1. Install indicator lights assembly into console as follows:

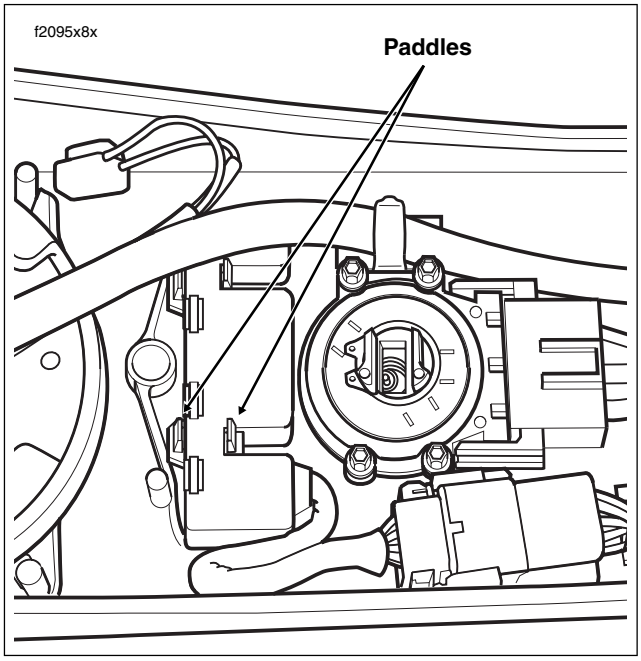

Figure 8-123. Release Paddles to Free Indicator Lights Assembly (FLHR/C)

a. Place assembly into position in console engaging four paddles in slots of indicator light assembly.

b. While pushing down on assembly with thumbs, push up on lense on outboard side of console until assembly fits snugly.

2. Connect the indicator lights connector [21], 8-place Deutsch, at back of console. Align tabs on socket housing with grooves on pin housing, and push connector halves together until the latches “click.”

3. Slide head of console mounting bolt into slot at top of canopy, if removed.

4. Moving instrument console toward installed position, connect fuel level sender/fuel pump connector [141], 4-place Packard, at top of canopy. Bend flexible clamp to capture main harness conduit.

5. Align hole in instrument console with console mounting bolt and place into position on fuel tank.

6. Install acorn nut at top of instrument console and tighten to 50-90 **in-lbs** (5.7-10.2 Nm). If present, also install Phillips screw and large flat washer (absent on FLHRS models). Tighten screw to 36-60 **in-lbs** (4.1-6.8 Nm).

7. On FLHRS models only, install bolt (with flat washer) to secure rear of fuel tank and instrument console bracket to frame backbone. Tighten bolt to 15-20 ft-lbs (20-27 Nm).

8. Insert bolt through battery negative cable (black) into threaded hole of battery negative (-) terminal. Tighten bolt to 60-96 **in-lbs** (6.8-10.9 Nm).

9. Install seat. See Section 2.25 SEAT, INSTALLATION.

IGNITION SWITCH

NOTE

See Section 8.19 IGNITION/LIGHT KEY SWITCH AND FORK LOCK, FLHR/C/S.

FUEL LEVEL SENDER (CARBURETED) 8.30

FLHX, FLHT CANOPY

NOTE

For replacement of the fuel level sender on fuel injected models, see Section 9.4 FUEL TANK (FUEL INJECTED), FUEL LEVEL SENDER.

REMOVAL

1. Remove seat. See Section 2.25 SEAT, REMOVAL.

WARNING

To protect against shock and accidental start-up of vehicle, disconnect the negative battery cable before proceeding. Inadequate safety precautions could result in death or serious injury.

2. Unthread bolt and remove battery negative cable (black) from battery negative (-) terminal.
3. Drain the fuel tank. See Section 4.6 VACUUM OPERATED FUEL VALVE (CARBURETED), DRAINING FUEL TANK, steps 1-8.
4. Open fuel door on console. Remove two Allen head screws inboard of rubber bumpers. These screws secure console to clip nuts on the canopy bracket.
5. Remove Allen head screw to detach flange at rear of console from clip nut on fuel tank weldment.
6. Lay a clean shop towel on forward part of rear fender.
7. Remove filler cap from neck of fuel tank. Remove console and lay upside down on shop towel. Reinstall filler cap.
8. Gently pry fuel vapor vent tube from fitting on filler neck of fuel tank. Exercise caution to avoid pulling fitting from filler neck.
9. Disconnect fuel level sender connector [141], 4-place Packard, at top of canopy.
10. Using a T20 TORX bit, remove ten screws around the outer edge of the canopy. Discard screws.
11. Remove canopy with attached fuel level sender from fuel tank. Tilt canopy toward the right until it is at a 45˚ angle to top of fuel tank and then carefully pull assembly from left side lobe of fuel tank.
12. Remove and discard canopy gasket. Verify that sealing devices from screws are not lodged in canopy holes. Remove and discard devices if present.
13. Replace fuel level sender. See FUEL LEVEL SENDER in this section.

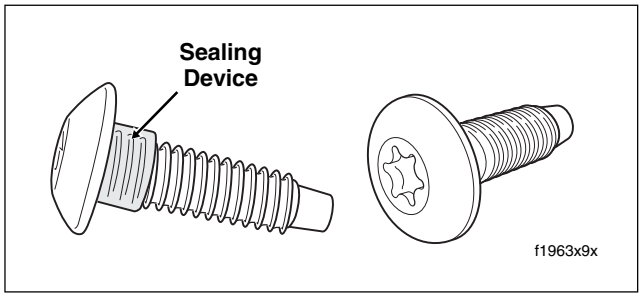

Figure 8-124. Canopy Sealing Screws

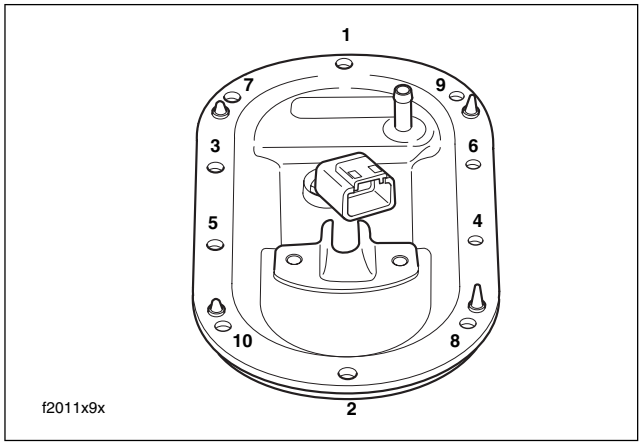

Figure 8-125. Canopy Torque Sequence (FLHR)

INSTALLATION

1. Obtain **new** canopy gasket. With the locator bump on the gasket OD toward the front, position gasket at bottom of canopy. Start four nubs on gasket into holes in canopy. Moving to top of canopy, alternately grasp each nub and pull through hole.

CAUTION

Exercise care to avoid bending float rod of fuel level sender during installation. A bent float rod will result in erroneous gauge readings.

2. Holding assembly so that canopy is at a 45˚ angle to top of fuel tank, insert assembly into left side lobe of fuel tank.

WARNING

Always use new screws when installing the canopy. Reusing old screws may compromise sealing integrity resulting in gas leaks. Gas leakage can cause fire or explosion which could result in death or serious injury.

NOTE

Check canopy screws for proper sealing devices. Screws must have a bonded seal on underside of head. Replace screws if seal is missing or damaged. See Figure 8-124.

3. While pushing down on the canopy, align holes in canopy with those in fuel tank. Hand start ten **new** T20 TORX screws in perimeter of canopy. Tighten screws to 18-24 **in-lbs** (2.0-2.7 Nm) using the pattern shown in Figure 8-125.
4. Connect fuel vapor vent tube to fitting on filler neck of fuel tank.
5. Connect fuel level sender connector [141], 4-place Packard, at top of canopy.
6. Remove filler cap. Exercising caution to avoid pinching harness, overflow hose and vent tube, position console on canopy as shown in Figure 8-126. Reinstall filler cap.
7. Install Allen head screw to fasten rear flange of console to clip nut on fuel tank weldment. Tighten screw to 25-30 **in-lbs** (2.8-3.4 Nm).
8. Open fuel door on console. Install two Allen head screws to secure front of console to clip nuts on canopy bracket. Alternately tighten screws to 25-30 **in-lbs** (2.8-3.4 Nm).
9. Insert bolt through battery negative cable (black) into threaded hole of battery negative (-) terminal. Tighten bolt to 60-96 **in-lbs** (6.8-10.9 Nm).
10. Install seat. See Section 2.25 SEAT, INSTALLATION.
11. Turn the handle of the fuel valve to OFF and fill the fuel tank. Carefully inspect for leaks. Turn the valve handle to ON and start engine. Repeat inspection.
12. Stop engine and return the valve to the OFF position.

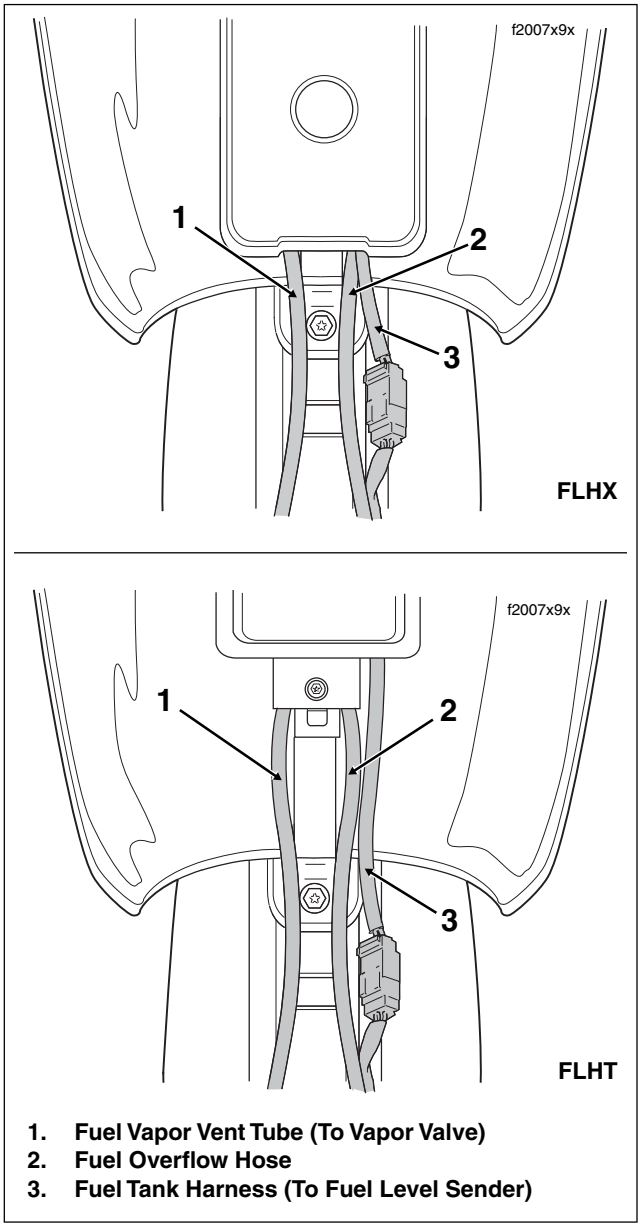

1. **Fuel Vapor Vent Tube (To Vapor Valve)**
2. **Fuel Overflow Hose**
3. **Fuel Tank Harness (To Fuel Level Sender)**

Figure 8-126. Console Cable/Hose Routing (FLHX, FLHT)

FLHR/S CANOPY

NOTE

For replacement of the fuel level sender on fuel injected models, see Section 9.4 FUEL TANK (FUEL INJECTED), FUEL LEVEL SENDER.

REMOVAL

1. Remove seat. See Section 2.25 SEAT, REMOVAL.

⚠WARNING

To protect against shock and accidental start-up of vehicle, disconnect the negative battery cable before proceeding. Inadequate safety precautions could result in death or serious injury.

2. Unthread bolt and remove battery negative cable (black) from battery negative (-) terminal.
3. Drain the fuel tank. See Section 4.6 VACUUM OPERATED FUEL VALVE (CARBURETED), DRAINING FUEL TANK, steps 1-8.
4. Remove acorn nut from instrument console. If present, also remove Phillips screw and large flat washer (absent on FLHRS models).
5. On FLHRS models only, remove bolt (with flat washer) to free rear of fuel tank from frame backbone. Removal of rear bolt also releases instrument console bracket.

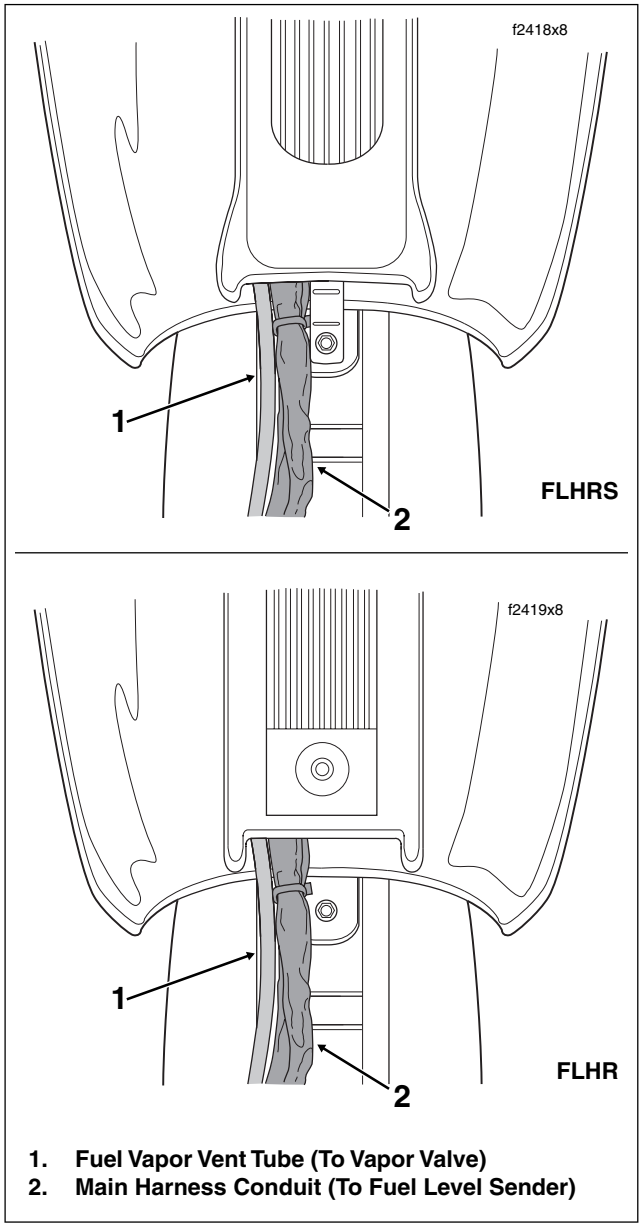

1. **Fuel Vapor Vent Tube (To Vapor Valve)**
2. **Main Harness Conduit (To Fuel Level Sender)**

Figure 8-127. Console Cable/Hose Routing (FLHR/S)

6. Raise instrument console and bend back flexible clamp on canopy to release main harness conduit. Disconnect fuel level sender connector [141], 4-place Packard, at top of canopy.

CAUTION

When removing instrument console, exercise caution to avoid damaging speedometer unit. Wrap console in a clean, dry shop towel to prevent damage.

7. Secure instrument console to top of rear fender using bungee cords.
8. Remove console mounting bolt from slot at top of canopy.
9. Gently pry fuel vapor vent tube from fitting at top of canopy.
10. Using a T20 TORX bit, remove ten screws around the outer edge of the canopy. Discard screws.
11. Remove canopy with attached fuel level sender from fuel tank. Tilt canopy toward the right until it is at a 45˚ angle to top of fuel tank and then carefully pull assembly from left side lobe of fuel tank.
12. Remove and discard canopy gasket. Verify that sealing devices from screws are not lodged in canopy holes. Remove and discard devices if present.
13. Replace fuel level sender. See FUEL LEVEL SENDER on this page.

INSTALLATION

1. Obtain **new** canopy gasket. With the locator bump on the gasket OD toward the front, position gasket at bottom of canopy. Start four nubs on gasket into holes in canopy. Moving to top of canopy, alternately grasp each nub and pull through hole.

CAUTION

Exercise care to avoid bending float rod of fuel level sender during installation. Be sure to position float rod to the right of the fuel gauge drain tube or it will be bent during installation of the canopy. A bent float rod will result in erroneous gauge readings.

2. Holding assembly so that canopy is at a 45˚ angle to top of fuel tank, insert assembly into left side lobe of fuel tank keeping the float rod positioned to the right of the fuel gauge drain tube.

⚠WARNING

Always use new screws when installing the canopy. Reusing old screws may compromise sealing integrity resulting in gas leaks. Gas leakage can cause fire or explosion which could result in death or serious injury.

NOTE

Check canopy screws for proper sealing devices. Screws must have a bonded seal on underside of head. Replace screws if seal is missing or damaged. See Figure 8-124.

3. While pushing down on the canopy, align holes in canopy with those in fuel tank. Hand start ten **new** T20 TORX screws in perimeter of canopy. Tighten screws to 18-24 **in-lbs** (2.0-2.7 Nm) using the pattern shown in Figure 8-125.
4. Connect fuel vapor vent tube to fitting at top of canopy.
5. Slide head of console mounting bolt into slot at top of canopy, if removed.

6. Moving instrument console toward installed position, connect fuel level sender connector [141], 4-place Packard, at top of canopy. Bend flexible clamp to capture main harness conduit.
7. Exercising caution to avoid pinching harness and vent tube, align hole in instrument console with console mounting bolt and place into position on fuel tank. See Figure 8-127.
8. Install acorn nut at top of instrument console and tighten to 50-90 **in-lbs** (5.7-10.2 Nm). If present, also install Phillips screw and large flat washer (absent on FLHRS models). Tighten screw to 36-60 **in-lbs** (4.1-6.8 Nm).
9. On FLHRS models only, install bolt (with flat washer) to secure rear of fuel tank and instrument console bracket to frame backbone. Tighten bolt to 15-20 ft-lbs (20-27 Nm).
10. Insert bolt through battery negative cable (black) into threaded hole of battery negative (-) terminal. Tighten bolt to 60-96 **in-lbs** (6.8-10.9 Nm).
11. Install seat. See Section 2.25 SEAT, INSTALLATION.
12. Turn the handle of the fuel valve to OFF and fill the fuel tank. Carefully inspect for leaks. Turn the valve handle to ON and start engine. Repeat inspection.
13. Stop engine and return the valve to the OFF position.

FUEL LEVEL SENDER

REMOVAL

CAUTION

Do not replace the special teflon coated fuel level sender wiring with ordinary bulk wire. Ordinary insulation materials may deteriorate when in contact with gasoline.

NOTE

Damaged fuel level sender wiring requires replacement of the fuel level sender unit.

1. See FLHX, FLHT CANOPY, REMOVAL, or FLHR/S CANOPY, REMOVAL, in this section.
2. Cut cable strap to release wiring from support arm.
3. At bottom of canopy, depress external latch and remove socket housing of 4-place Packard connector.
4. Remove socket terminal from spade contact on connector clip.

⚠CAUTION

Always wear proper eye protection when drilling. Flying debris may result in eye injury.

CAUTION

Exercise care to avoid bending support arm during removal of the fuel level sender. Support area around rivet head when drilling or tapping. A bent support arm will result in erroneous gauge readings.

5. Drill off head of fuel level sender rivet using a 1/4 inch drill bit. Exercise caution to avoid enlarging hole in support arm when drilling. Use a punch to tap rivet shaft through hole in support arm if necessary. Blow away all metal shavings and debris using compressed air.

INSTALLATION

1. Position **new** fuel level sender on inboard side of support arm fitting finger at end of support arm into bottom hole in fuel level sender flange.
2. Align top hole in fuel level sender flange with hole in support arm and install **new** rivet. Insert rivet through the support arm first, so that deformed end is on the fuel level sender side.
3. At bottom of canopy, install socket housing of 4-place Packard connector.
4. Install socket terminal onto spade contact on connector clip.
5. Insert **new** cable strap into hole in support arm. Tighten cable strap capturing fuel level sender wiring. Cut any excess cable strap material.
6. See FLHX, FLHT CANOPY, INSTALLATION, or FLHR/S CANOPY, INSTALLATION, in this section.

NOTES

CRUISE CONTROL (FLHRC, FLHTCU, FLTR) 8.31

GENERAL

The Cruise Control system provides automatic vehicle speed control. The electronics and stepper motor are contained in a control module mounted under the left side cover. The stepper motor actuates the cruise control cable through a gear train and ribbon reel.

SYSTEM OPERATION

To engage and disengage the cruise control system, proceed as follows:

1. While riding in fourth or fifth gear, turn the Cruise ON/OFF Switch to the ON position. See Figure 8-128. The switch is located on the fairing cap of FLHTCU models, the instrument nacelle of FLTR models, and the left handlebar lower switch housing on FLHRC models. The Cruise Enabled/Engaged lamp in the tachometer face (speedometer on FLHRC models) turns red to indicate that the system is activated. See Figure 8-130. A red lamp in the switch on both FLHTCU and FLTR models also indicates this condition to the rider.

2. Power (12 vdc) is supplied to the cruise control module through a 15 amp fuse located in the fuse block mounted under the left side cover.

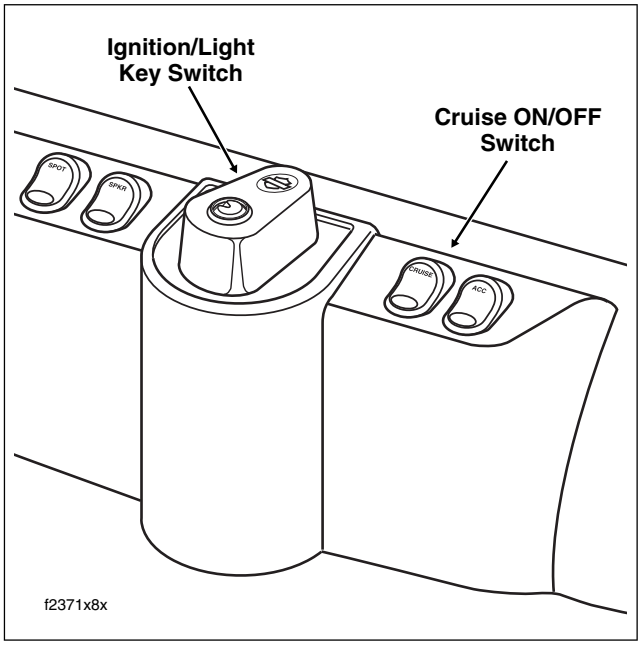

Figure 8-128. Fairing Cap (FLHTCU)

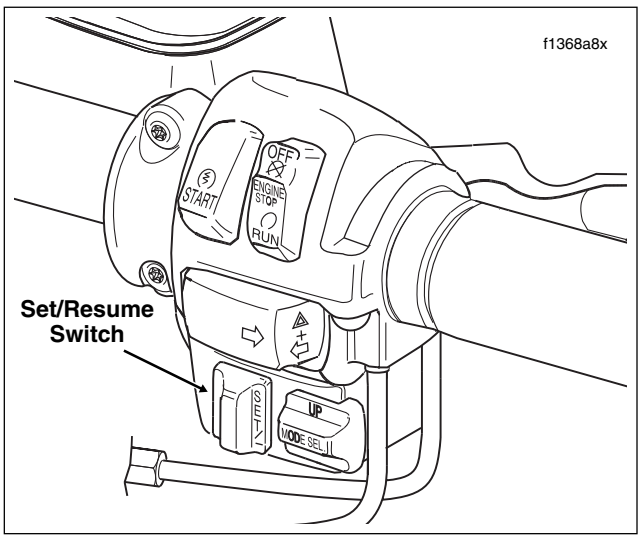

Figure 8-129. Right Handlebar Switch Assembly (FLTR, FLHTCU)

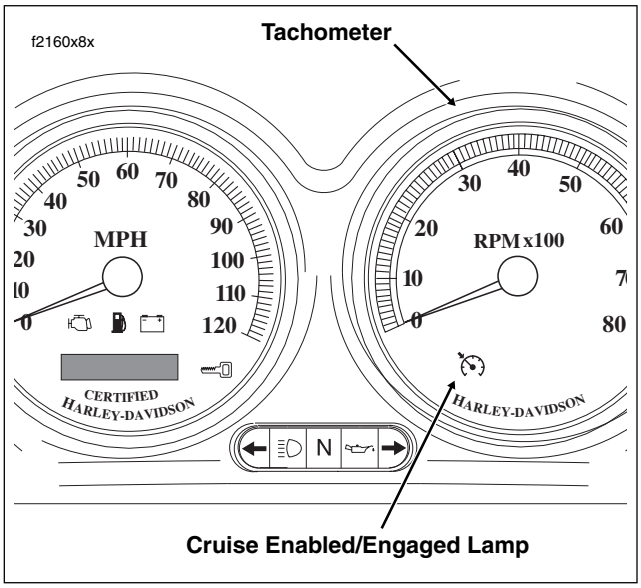

Figure 8-130. Instrument Panel (FLHTCU)

3. With the motorcycle traveling at the desired “cruise” speed (30 mph/48 km/h to 85 mph/137 km/h), momentarily push the Cruise SET/RESUME switch to SET. See Figure 8-129.

   The cruise control module reads the VSS output to establish the desired vehicle speed. The module then sends a signal to the stepper motor which drives the ribbon reel to take up slack in the cruise cable. The Cruise

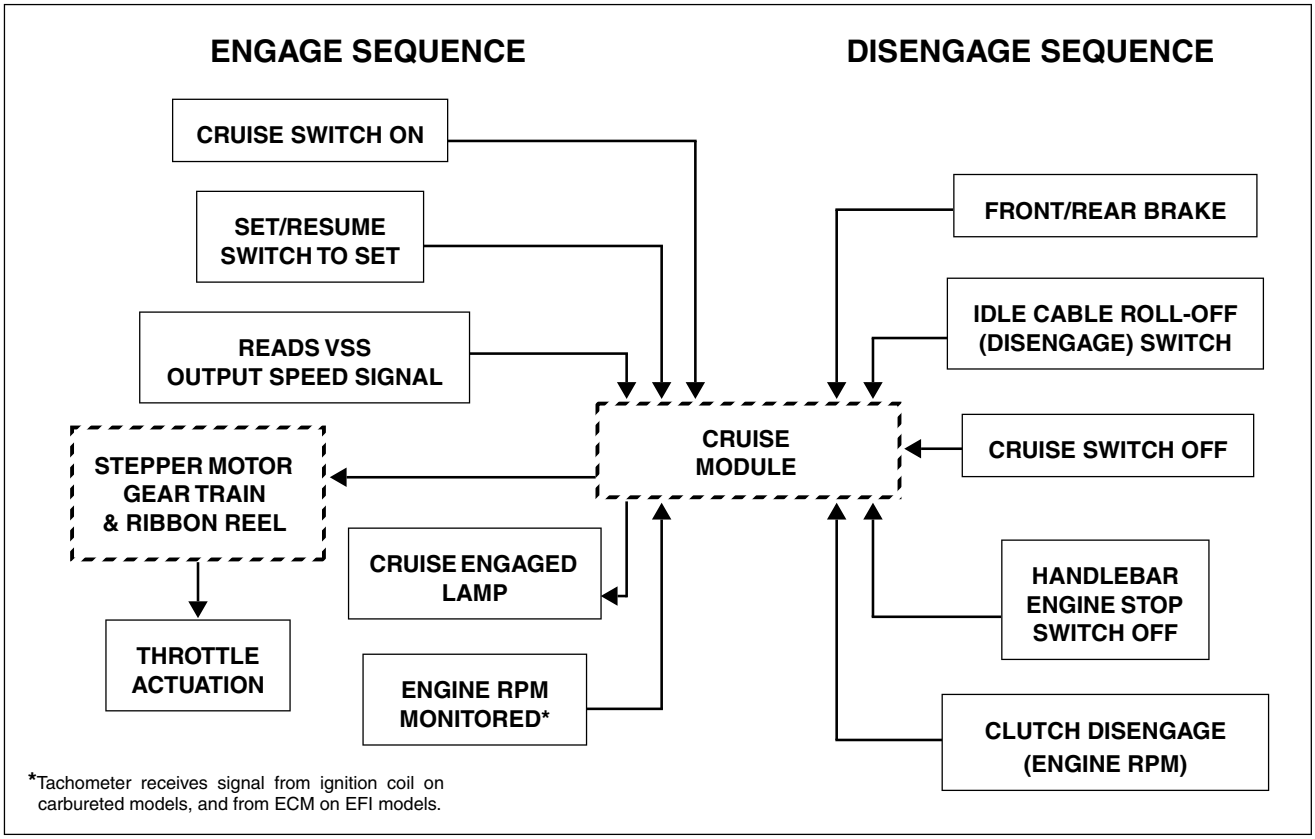

Figure 8-131. Cruise System Diagram

Enabled/Engaged lamp in the tachometer face (speedometer on FLHRC models) turns from red to green to indicate that cruising speed is locked in. See Figure 8-130.

4. The cruise control module monitors both engine RPM and the VSS output speed signal. The module signals the stepper motor to open or close the throttle to keep the speedometer output speed signal constant. The engine RPM is monitored to detect engine overspeed, a condition which automatically causes cruise disengagement.
5. The cruise control automatically disengages (stepper motor drives cruise cable to the full-out position) whenever the cruise control module receives one of the following inputs:
   a. Front or rear brake is applied.
   b. Throttle is “rolled back” or closed, thereby actuating idle cable roll-off (disengage) switch.
   c. Motorcycle clutch is disengaged (module senses too great an increase in RPM).
   d. Cruise ON/OFF Switch placed in the OFF position. The switch is located on the fairing cap of FLHTCU models, the instrument nacelle of FLTR models, and the left handlebar lower switch housing on FLHRC models. The green Cruise Enabled/Engaged lamp in the tachometer face (speedometer on FLHRC models) is extinguished to indicate that the system is deactivated. The red lamp in the fairing cap switch of FLHTCU models and the instrument nacelle switch of FLTR models is also extinguished.
   e. Handlebar mounted Engine Stop Switch placed in the OFF position. (This removes tachometer input signal which results in module disengagement.)
   f. Handlebar mounted Cruise SET/RESUME switch is pushed to SET and held in that position until vehicle speed drops below 30 mph (48 km/h).

NOTE

If the vehicle speed is above 30 mph (48 km/h) when the Cruise SET/RESUME Switch is released, then the cruise system automatically re-engages.

CABLE ADJUSTMENT

NOTE

Always adjust the cables in the sequence presented below, that is, throttle and then idle cable. The cruise cable only requires adjustment if the cruise module or cruise cable are removed or replaced, and then it must be adjusted last using the CABLE LASH INITIALIZATION routine on the next page.

THROTTLE CABLE

1. With the front wheel pointed straight ahead (and idle cable adjusted to full slack), gently turn the throttle grip counterclockwise to wide open throttle (WOT) and then hold in position. Now turn the cable adjuster counterclockwise until the throttle cam stop just touches the stop plate on the carburetor/induction module. Release the throttle grip, turn cable adjuster counterclockwise an additional 1/2-1 full turn, and then tighten the jam nut against the cable adjuster.
2. Twist throttle grip to full closed position. Check that idle stop screw is touching idle stop with handlebar in straight ahead position, and while turning handlebar from “lock-to-lock”.

NOTE

If idle stop screw is not touching idle stop, adjust (loosen) throttle cable just enough so that contact is made through full lock-to-lock handlebar movement. Also check that cruise cable has slack and is not opening throttle. Loosen cruise cable if required.

3. Rotate throttle grip to WOT and release. Throttle must return to idle position freely. If it does not, check for incorrect cable routing, damaged cables or binding in the throttle grip.

IDLE CABLE

1. Remove left side saddlebag. See Section 2.26 SADDLEBAG, REMOVAL.
2. Gently pull side cover from frame downtubes (no tools required).
3. Lift the locking latch and remove the cruise module connector [17]. With idle cable still adjusted to full slack position, connect ohmmeter to violet/yellow and orange/violet leads on connector [17A].
4. Ohmmeter must indicate infinity (switch contacts open). If ohmmeter indicates continuity, the roll-off switch may be shorted and entire cable must be replaced.
5. With handlebar in straight ahead position, adjust idle cable until approximately 0.06 inch (1.5 mm) of freeplay exists at the outside diameter (OD) of the throttle grip.
6. With light force, rotate the throttle grip toward the closed position. The ohmmeter must indicate continuity. If it does not, decrease freeplay at throttle grip by adjusting the idle cable to obtain continuity while maintaining some freeplay at the throttle grip.
7. While holding the throttle grip (with light force) in the closed position, turn handlebar from “lock-to-lock”. Ohmmeter must indicate continuity throughout handlebar movement.
8. With handlebar in straight ahead position, rotate throttle grip to WOT and release. Throttle must return to idle position freely.
9. Repeat step 8 with handlebar at full left and right positions. If throttle does not return to idle position freely, loosen idle cable slightly and repeat steps 6-9.
10. Install cruise module connector [17] and engage locking latch.
11. Align barbed studs in side cover with grommets in frame downtubes and push firmly into place (no tools required).
12. Install left side saddlebag. See Section 2.26 SADDLEBAG, INSTALLATION.

CABLE LASH INITIALIZATION

With the elimination of the mechanical cruise cable adjuster, the tolerance stack-ups are intended to result in a cable that is too long. The extra cable length is then taken up upon execution of the Cable Lash Initialization routine. During the routine, the system calculates the number of “motor steps” the cable is pulled before the throttle plates are moved (a maximum of 200 motor steps equivalent to 1.2 inches or 31 mm). This information is then stored in permanent memory.

NOTE

Perform the initialization routine whenever the cruise module, cruise cable or throttle body are removed or replaced. For best results, be sure the engine is at normal operating temperature and throttle and idle cables are correctly adjusted and operational.

To set the correct cable lash, proceed as follows:

a. Push the Cruise Switch on the right handlebar to RESUME and hold.
b. Turn the Cruise ON/OFF switch to ON.
c. Turn the Ignition/Light Key Switch to IGNITION.
d. Start the engine. The green Cruise Enabled/Engaged lamp in the tachometer face (speedometer on FLHRC models) will illuminate. Wait 3 seconds for the lamp to go off.
e. Release the Cruise Switch from the RESUME position.
f. Push the Cruise Switch to RESUME and hold. Cruise will pull in cable until change in RPM is detected. The number of motor steps required to rev the engine is stored in memory.
g. After engine revs and Cruise Enabled/Engaged lamp is extinguished, release the Cruise Switch from the RESUME position.
h. Turn the Ignition/Light Key Switch to OFF.

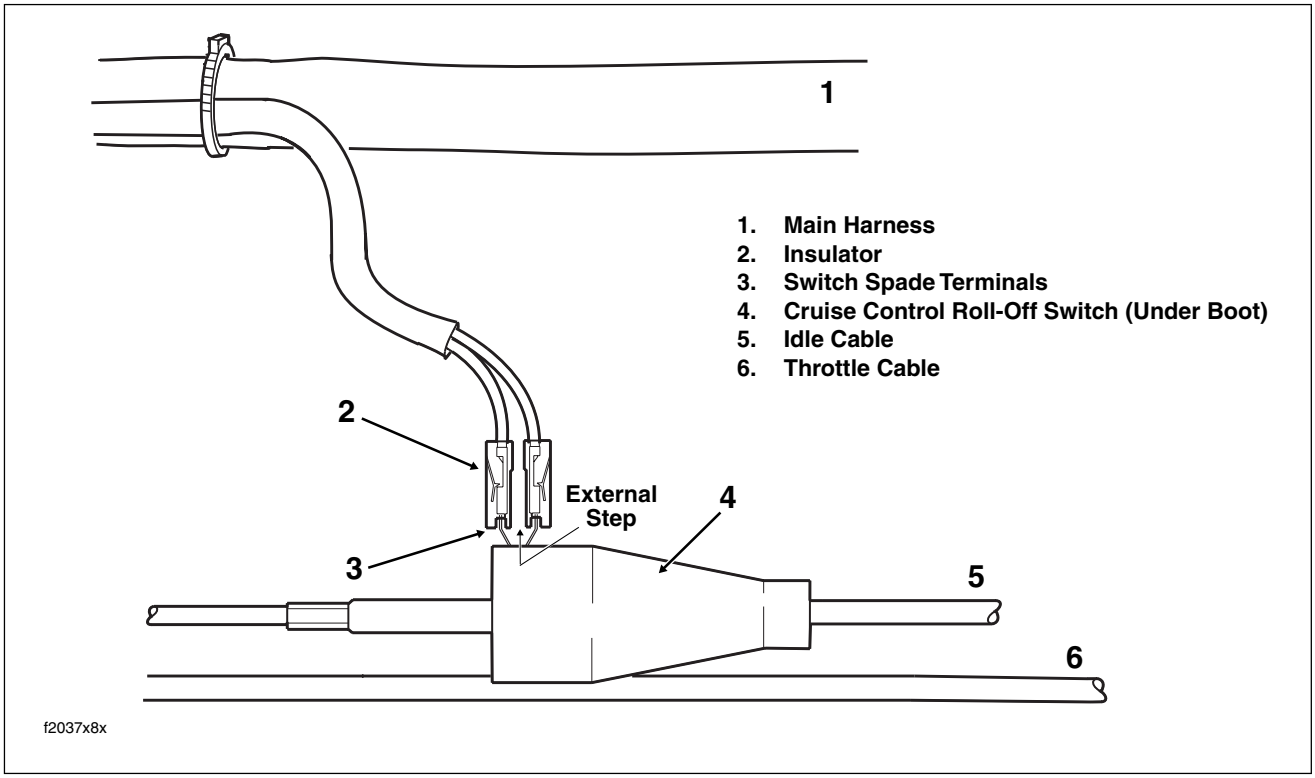

Figure 8-132. Throttle/Idle Cable Configuration (Right Side View)

THROTTLE/IDLE CABLES

NOTE

While the same throttle cable is used on all Touring models, the idle cable of "cruise" models is provided with a cruise roll-off (disengage) switch.

REMOVAL

1. See Section 2.21 THROTTLE CABLES (NON-CRUISE), REMOVAL, THROTTLE SIDE.
2. Remove the air cleaner and backplate. See Section 4.5 AIR CLEANER, REMOVAL.
3. Raise fuel tank to access cables in area of frame backbone. For carbureted models, see Section 4.7 FUEL TANK (CARBURETED), PARTIAL REMOVAL, FLHX, FLHT, or FLHR/S. For fuel injected models, see Section 9.4 FUEL TANK (FUEL INJECTED), PARTIAL REMOVAL, FLHXI, FLHT/C/U/I, FLTRI, or FLHR/C/S/I.
4. Locate the cruise control roll-off switch plumbed into the idle cable on the right side of the frame backbone (just rear of the steering head). Push rubber boot on switch forward and remove insulators from switch spade terminals. See Figure 8-132.
5. **Carbureted:** Using a needle nose pliers, carefully pull idle cable barrel from upper inboard hole in throttle wheel. Pull throttle cable barrel from remaining hole. Release idle and throttle cables from guides in throttle cable bracket.

   Induction Module: Using a needle nose pliers, carefully pull idle cable barrel from upper hole in throttle wheel. Pull throttle cable barrel from lower hole. Using slots, release idle and throttle cables from guides in throttle cable bracket.
6. Free cables from J-clamp riveted to right side of frame backbone.
7. If present, remove screw (with flat washer) to release J-clamp from wellnut in right side of steering head. Remove J-clamp from cables.

INSTALLATION

1. See Section 2.21 THROTTLE CABLES (NON-CRUISE), INSTALLATION, THROTTLE SIDE.
2. Route the throttle and idle cables as follows:

   FLHTCU: Route the cables downward following the brake line to the inner fairing. Pass the cables through the inner fairing grommet and then loop them toward the rear along the right side of the steering head.

FLHRC: Route the cables downward following the right handlebar to the handlebar clamp shroud. Pass the cables through the opening in the shroud and then loop them toward the rear along the right side of the steering head. Capture cables in J-clamp and then start screw (with flat washer) to fasten J-clamp to wellnut in right side of steering head. Tighten screw to 9-18 **in-lbs** (1.0-2.0 Nm).

3. Route the throttle and idle cables rearward along the right side of the frame backbone. After passing through J-clamp riveted to frame backbone, route cables downward to carburetor/induction module.
4. Use a pliers to straighten switch spade terminals of cruise roll-off switch if bowed or bent back. The terminals must be parallel and line up perpendicular to the idle cable.
5. Separate the cruise roll-off switch wires up to the point where they enter the wire harness conduit. Now route the leads straight down.
6. Orient the idle cable so that the switch spade terminals are at the top.
7. Slide the insulators onto the switch spade terminals (polarity is not a factor). For maximum insertion, be sure that the external step on the insulators face each other. See Figure 8-132.
8. Fit the rubber boot over the cruise control roll-off switch. An oval cut in the boot accommodates the switch spade terminal connections.
9. Position the throttle cable below the idle cable.
10. **Carbureted:** Install sleeve on throttle cable housing into shorter cable guide in throttle cable bracket. Drawing throttle cable downward, fit barrel end into lower outboard hole in throttle wheel. Install sleeve and spring on idle cable housing into longer cable guide inserting barrel end into upper inboard hole in throttle wheel.

    Induction Module: Install sleeve on throttle cable housing into cable guide at top of throttle cable bracket. Drawing throttle cable downward, fit barrel end into lower hole in throttle wheel. Install sleeve and spring on idle cable housing into cable guide at bottom of throttle cable bracket inserting barrel end into upper hole in throttle wheel.
11. Verify that cables are fully seated in channel of throttle wheel, and using cable adjusters at handlebar, tighten cables as necessary to keep barrel ends from dislodging. Verify operation by turning throttle grip and observing cable action.

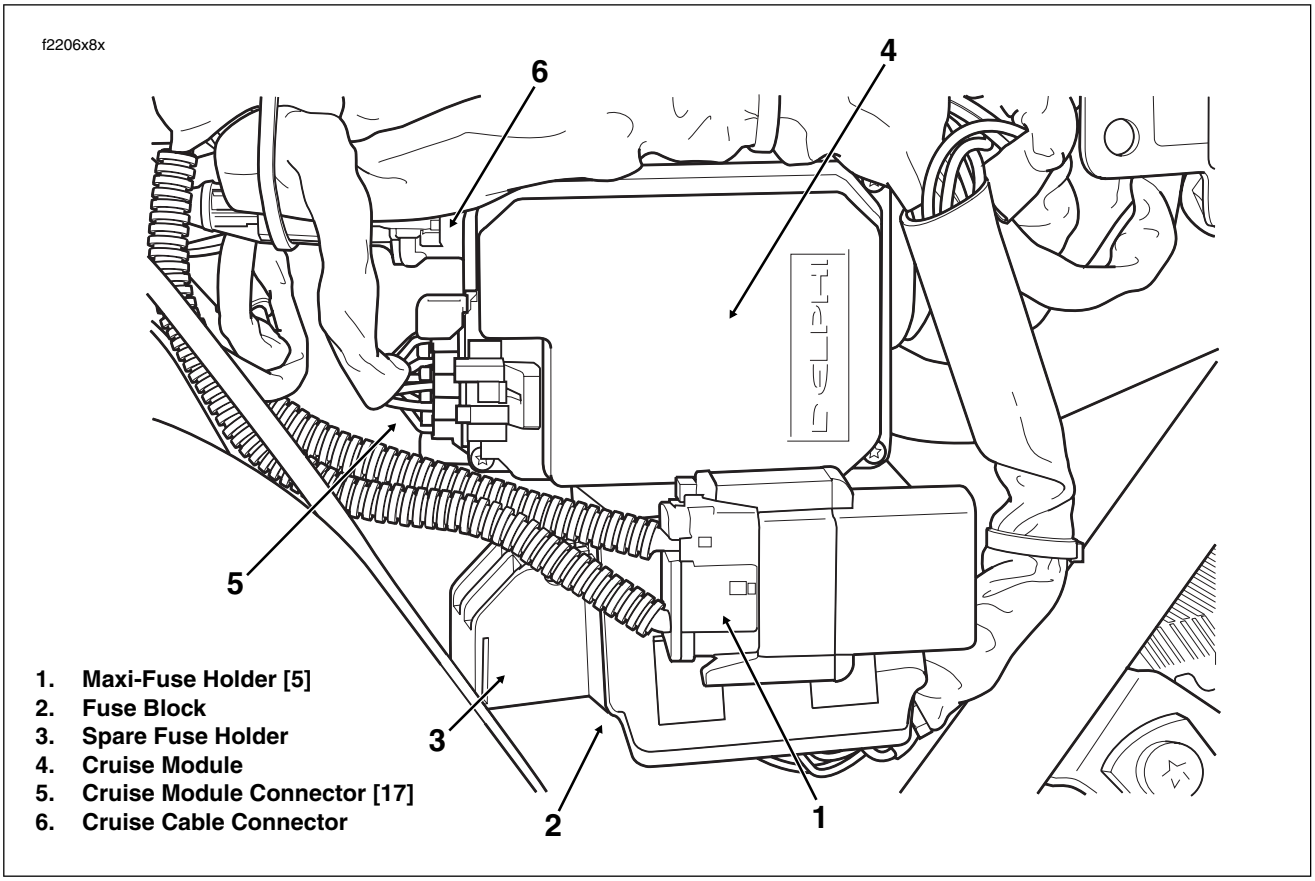

Figure 8-133. Cruise Control Module (Under Left Side Cover)

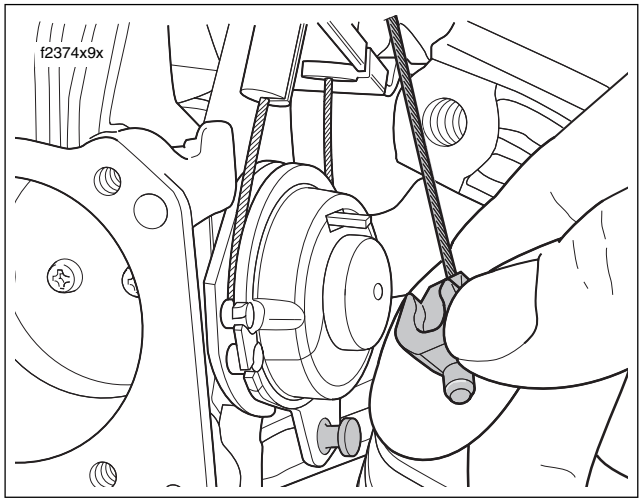

Figure 8-134. Remove End Fitting From Wheel Pin

12. Install fuel tank. For carbureted models, see Section 4.7 FUEL TANK (CARBURETED), INSTALLATION (AFTER PARTIAL REMOVAL), INSTALLATION (AFTER PARTIAL REMOVAL), or FLHR/S. For fuel injected models, see Section 9.4 FUEL TANK (FUEL INJECTED), INSTALLATION (AFTER PARTIAL REMOVAL), FLHXI, FLHT/C/U/I, FLTRI, or FLHR/C/S/I.
13. Install backplate and air cleaner assembly. See Section 4.5 AIR CLEANER, INSTALLATION.
14. Adjust the throttle and idle cables. Be sure to use the cable adjustment procedure for Ultra models. See CABLE ADJUSTMENT, in this section.

CRUISE CABLE

REMOVAL

1. Remove the air cleaner and backplate. See Section 4.5 AIR CLEANER, REMOVAL.
2. Remove E-clip from sleeve at end of cruise cable housing. Discard E-clip. Using slot, remove cruise cable housing from cable guide in throttle cable bracket.
3. Push the plastic end fitting on the cruise cable to the outboard side to release from wheel pin. See Figure 8-134.
4. Remove left side saddlebag. See Section 2.26 SADDLEBAG, REMOVAL.
5. Gently pull side cover from frame downtubes (no tools required).
6. Rotate cruise cable connector in a counterclockwise direction to detach from cruise module. See Figure 8-135.
7. Pull the cable out of the connector and remove the cable end bead from the ribbon end eyelet.
8. Pull anchored cable clip from hole in frame crossmember. See Figure 8-136.
9. Carefully pull cruise cable from beneath fuel tank drawing it out through hole in frame crossmember.

INSTALLATION

1. Draw the cruise cable forward along the left side of the frame backbone, and then route the cable toward the right side of the vehicle in front of the top engine stabilizer bracket.

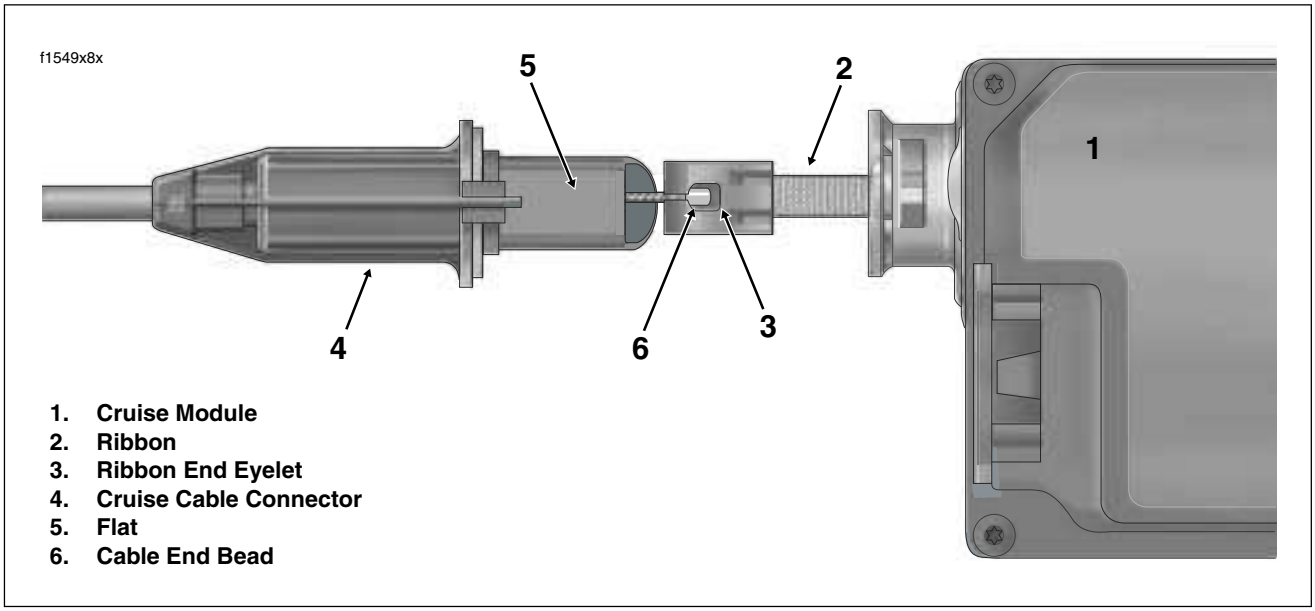

Figure 8-135. Remove Cable End Bead From Ribbon End Eyelet

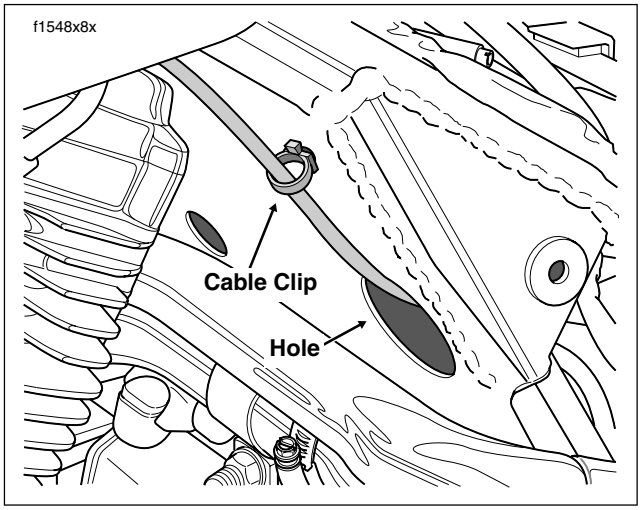

Figure 8-136. Cruise Cable Routing (Left Side)

2. Slide groove in cruise cable end fitting over cap of wheel pin. Push on end fitting until it snaps in place. See Figure 8-134.
3. Using slot, slip cruise cable housing into cable guide in throttle cable bracket. At bottom of bracket, install **new** E-clip on sleeve at end of cruise cable housing.
4. Feed cruise cable and connector through hole in frame crossmember. See Figure 8-136.

CAUTION

Be sure that the ribbon is not twisted. A twisted ribbon may adversely affect performance or even prevent cruise operation.

5. With the hole in the ribbon end eyelet and the flat on the cable connector housing facing outboard, fit cable end bead into ribbon end eyelet. See Figure 8-135.
6. Verify that bead, eyelet and ribbon are lined up correctly. If necessary, remove plastic end fitting from wheel pin and gently pull on end fitting to remove cable slack. Reinstall end fitting, if removed.
7. Insert cruise cable connector into cruise module and rotate in a clockwise direction until tabs on connector fully engage grooves or detentes in cruise module housing.
8. Capture cruise cable in cable clip and anchor in hole of frame crossmember. See Figure 8-136.
9. Adjust the throttle and idle cables. See CABLE ADJUSTMENT, in this section.
10. Install backplate and air cleaner assembly. See Section 4.5 AIR CLEANER, INSTALLATION.
11. Align barbed studs in side cover with grommets in frame downtubes and push firmly into place (no tools required).
12. Install left side saddlebag. See Section 2.26 SADDLEBAG, INSTALLATION.
13. Perform the CABLE LASH INITIALIZATION routine described in this section.

CRUISE CONTROL MODULE

REMOVAL

1. Remove the air cleaner and backplate. See Section 4.5 AIR CLEANER, REMOVAL.
2. Push the plastic end fitting on the cruise cable to the outboard side to release from wheel pin. See Figure 8-134.
3. Remove seat. See Section 2.25 SEAT, REMOVAL.

⚠WARNING

Always disconnect the negative battery cable first. If the positive cable should contact ground with the negative cable installed, the resulting sparks may cause a battery explosion which could result in death or serious injury.

4. Unthread bolt and remove battery negative cable (black) from battery negative (-) terminal.
5. Unthread bolt and remove battery positive cable (red) from battery positive (+) terminal.
6. Loosen T40 TORX screw and move lip of hold-down clamp off edge of battery. Remove battery from battery box.
7. Lift locking latch and remove cruise module connector [17], 10-place Packard. See Figure 8-133.
8. Rotate cruise cable connector in a counterclockwise direction to detach from cruise module.
9. From inside battery box, remove three flange bolts. Carefully pull cruise module away from side of battery box exercising caution to avoid losing grommets.

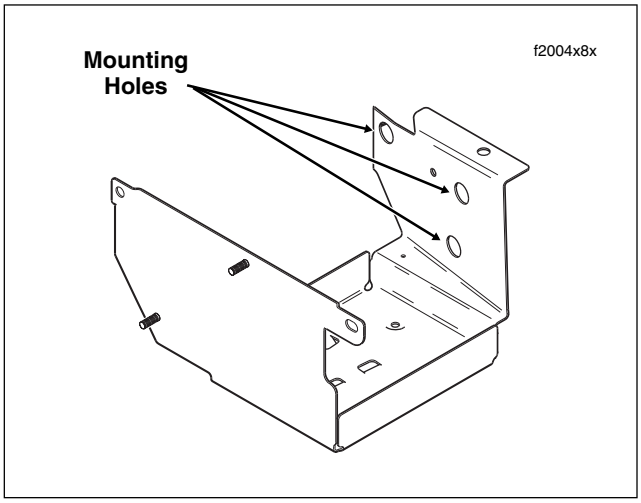

Figure 8-137. Battery Box (Right Side View)

INSTALLATION

1. Install grommets into holes on left side of battery box with the larger OD on the outboard side. See Figure 8-137.
2. Align threaded holes on inboard side of cruise module with holes in grommets and install flange bolts from inside battery box.
3. Alternately tighten flange bolts to 60-96 **in-lbs** (6.8-10.9 Nm). Install cruise module connector [17] and engage locking latch.

CAUTION

Be sure that the ribbon is not twisted. A twisted ribbon may adversely affect performance or even prevent cruise operation.

4. With the hole in the ribbon end eyelet and the flat on the cable connector housing facing outboard, fit cable end bead into ribbon end eyelet. See Figure 8-135.
5. Verify that bead, eyelet and ribbon are lined up correctly. If necessary, remove plastic end fitting from wheel pin and gently pull on end fitting to remove cable slack.
6. Insert cruise cable connector into cruise module and rotate in a clockwise direction until tabs on connector fully engage grooves or detentes in cruise module housing.
7. Install cruise module connector [17], 10-place Packard. See Figure 8-133.
8. Place battery in battery box, terminal side forward. Rotate the hold-down clamp so that the lip (with rubber pad) rests on the edge of the battery. Tighten T40 TORX screw to 15-20 ft-lbs (20-27 Nm).

⚠WARNING

Always connect the positive battery cable first. If the positive cable should contact ground with the negative cable installed, the resulting sparks may cause a battery explosion which could result in death or serious injury.

9. Insert bolt through battery positive cable (red) into threaded hole of battery positive (+) terminal. Tighten bolt to 60-96 **in-lbs** (6.8-10.9 Nm).
10. Insert bolt through battery negative cable (black) into threaded hole of battery negative (-) terminal. Tighten bolt to 60-96 **in-lbs** (6.8-10.9 Nm).
11. Install seat. See Section 2.25 SEAT, INSTALLATION.
12. Slide groove in cruise cable end fitting over cap of wheel pin. Push on end fitting until it snaps in place. See Figure 8-134.
13. Install backplate and air cleaner assembly. See Section 4.5 AIR CLEANER, INSTALLATION.
14. Perform the CABLE LASH INITIALIZATION routine described in this section.

CRUISE CONTROL SWITCHES

FAIRING CAP

See Figure 8-138. For instructions on replacement of the CRUISE ON/OFF SWITCH, see Section 8.20 FAIRING CAP SWITCHES (FLHTC/U), Section 8.21 INSTRUMENT NACELLE SWITCHES (FLTR), or Section 8.22 HANDLEBAR SWITCHES (FLHRC).

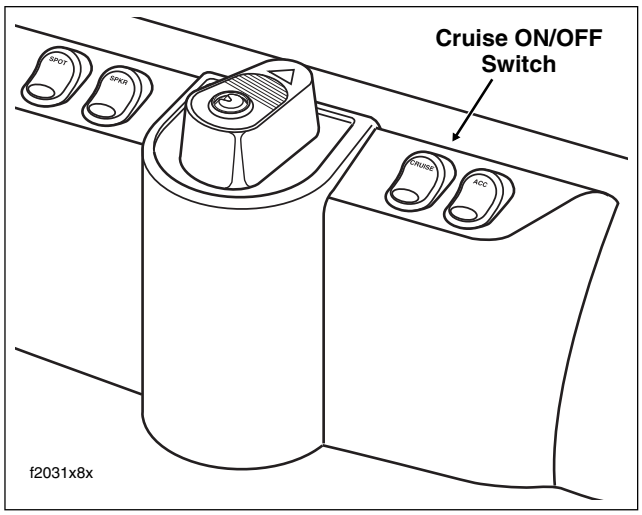

Figure 8-138. Fairing Cap (FLHTCU)

HANDLEBAR

See Figure 8-139. For instructions on replacement of the handlebar mounted CRUISE SET/RESUME switch, see Section 8.22 HANDLEBAR SWITCHES, SWITCH REPAIR/REPLACEMENT.

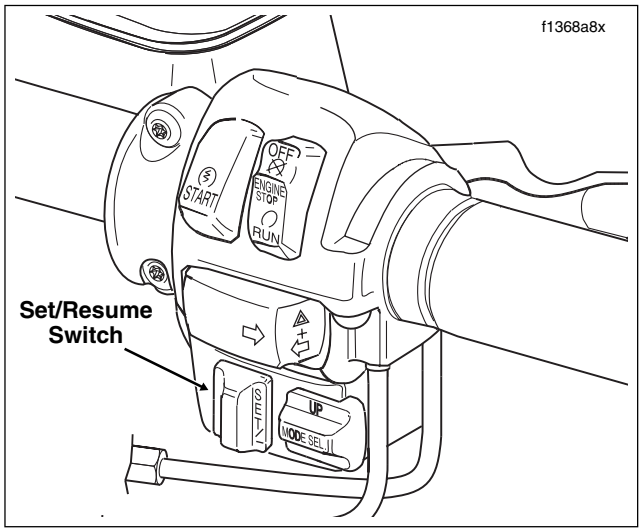

Figure 8-139. Right Handlebar Switch Assembly (FLTR, FLHTCU)

RADIO (STORAGE BOX)

REMOVAL

1. Remove maxi-fuse. See Section 8.3 SYSTEM FUSES, MAXI-FUSE, REMOVAL.
2. Remove outer fairing. Proceed as follows:

   FLHX, FLHT/C/U: See Section 2.30 UPPER FAIRING/ WINDSHIELD (FLHX, FLHT/C/U), OUTER FAIRING/ WINDSHIELD, REMOVAL.

   FLTR: See Section 2.31 UPPER FAIRING/WIND-SHIELD (FLTR), OUTER FAIRING, REMOVAL.
3. On FLHTCU models, remove the CB module. See CB MODULE, REMOVAL, steps 3-4, in this section.
4. See Figure 8-140. Disconnect the following connectors:

   FLHX, FLHTC/U, FLTR:
   - Radio connector [27], 23-place Amp.
   - Radio antenna cable connector [51].

   FLHTCU Only:
   - Radio connector [28], 35-place Amp.

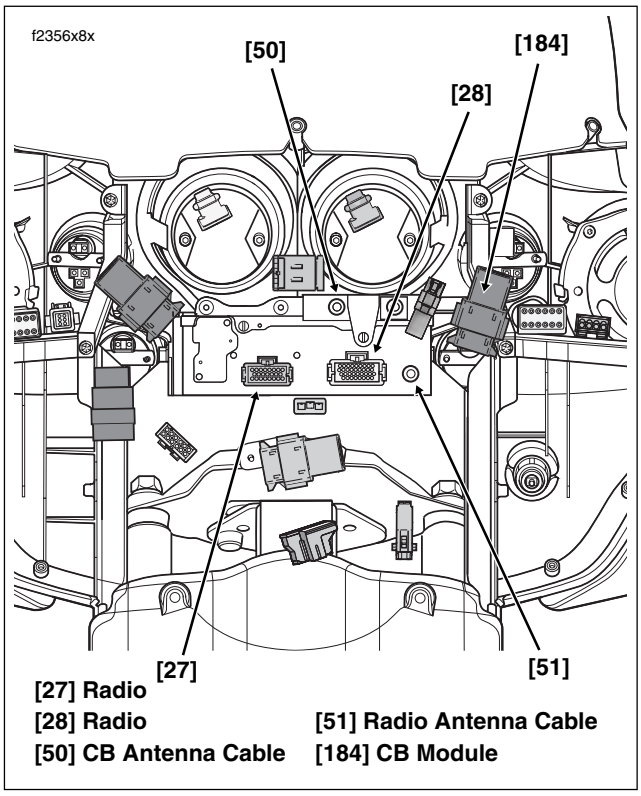

Figure 8-140. Radio Connections (FLHTC/U)

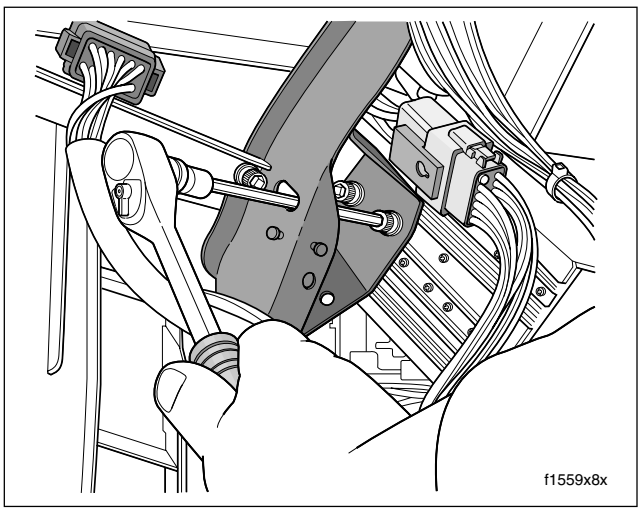

Figure 8-141. Release Radio from Fairing Brackets (FLHTC/U)

5. Using a long shank ball end socket (Snap-on® FABL6E), remove four socket head screws to release radio (storage box on FLHT) from left and right radio support brackets. Use oblong holes in fairing brackets to access screws. See Figure 8-141.
6. Pull radio (storage box on FLHT) forward to remove from opening in inner fairing.

INSTALLATION

1. Position radio (storage box on FLHT) between radio support brackets and push into opening in inner fairing.
2. Align threaded inserts in sides of radio (storage box on FLHT) with holes in left and right radio support brackets. Starting at the rear, install four socket head screws. Alternately tighten screws to 35-45 **in-lbs** (4.0-5.1 Nm). Use oblong holes in fairing brackets to access screws.
3. See Figure 8-140. Connect the following connectors:

   FLHX, FLHTC/U, FLTR:
   - Radio connector [27], 23-place Amp.
   - Radio antenna cable connector [51].

   FLHTCU Only:
   - Radio connector [28], 35-place Amp.
4. On FLHTCU models, install the CB module. See CB MODULE, INSTALLATION, steps 1-3, in this section.
5. Install outer fairing. Proceed as follows:

   FLHX, FLHT/C/U: See Section 2.30 UPPER FAIRING/ WINDSHIELD (FLHX, FLHT/C/U), OUTER FAIRING/ WINDSHIELD, INSTALLATION.

FLTR: See Section 2.31 UPPER FAIRING/WINDSHIELD (FLTR), OUTER FAIRING, INSTALLATION.

6. Install maxi-fuse. See Section 8.3 SYSTEM FUSES, MAXI-FUSE, INSTALLATION.

FRONT FAIRING SPEAKERS

REMOVAL

1. Remove outer fairing. Proceed as follows:

   FLHX, FLHTC/U: See Section 2.30 UPPER FAIRING/WINDSHIELD (FLHX, FLHT/C/U), OUTER FAIRING/WINDSHIELD, REMOVAL.

   FLTR: See Section 2.31 UPPER FAIRING/WINDSHIELD (FLTR), OUTER FAIRING, REMOVAL.

2. Carefully pull the socket terminals from the speaker spade contacts.
3. Remove three T25 TORX screws to release the speaker adapter assembly from the inner fairing.
4. Carefully pull speaker from adapter.

INSTALLATION

1. With the speaker spade contacts at the top of the adapter, the top being the side with the widest edge, snap speaker into adapter using finger pressure.
2. If speaker grille is loose, apply 3M-847 adhesive (HD Part No. 99618-60) to outer edge of adapter ring. Install grille on adhesive.
3. With the widest edge of adapter at the top, align holes in speaker adapter assembly with those in inner fairing.
4. Install two long screws to secure top of speaker adapter assembly to inner fairing. Capturing fairing support brace, install short screw in lower outboard hole (positioning flat washer between adapter and support brace). The screw hole on the lower inboard side is not used.
5. Using a T25 TORX drive head, tighten the lower speaker screw to 22-28 **in-lbs** (2.5-3.2 Nm). Tighten the two upper speaker screws to 35-50 **in-lbs** (4.0-5.7 Nm).
6. Install the socket terminals onto the speaker spade contacts. Different size spade contacts prevent improper assembly.
7. Install outer fairing. Proceed as follows:

   FLHX, FLHTC/U: See Section 2.30 UPPER FAIRING/WINDSHIELD (FLHX, FLHT/C/U), OUTER FAIRING/WINDSHIELD, INSTALLATION.

   FLTR: See Section 2.31 UPPER FAIRING/WINDSHIELD (FLTR), OUTER FAIRING, INSTALLATION.

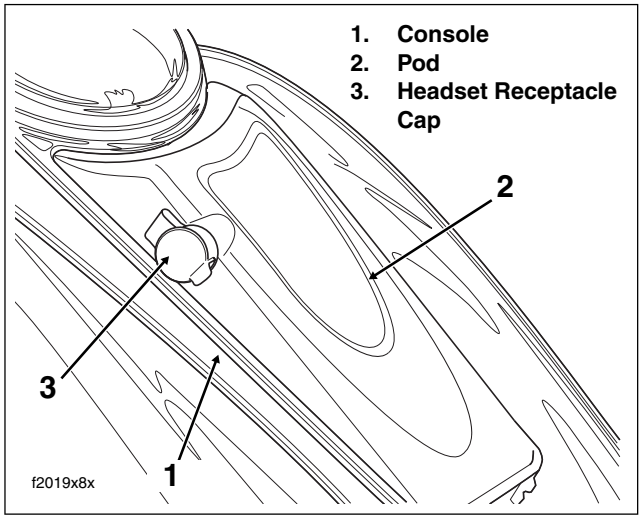

Figure 8-142. Console Pod Assembly

CONSOLE POD ASSEMBLY

NOTE

The following instructions may also be used for replacement of the chrome fuel tank console on which the pod is mounted.

REMOVAL

1. Remove seat. See Section 2.25 SEAT, REMOVAL.

⚠WARNING

To protect against shock and accidental start-up of vehicle, disconnect the negative battery cable before proceeding. Inadequate safety precautions could result in death or serious injury.

2. Unthread bolt and remove battery negative cable (black) from battery negative (-) terminal.
3. Remove left side saddlebag. See Section 2.26 SADDLEBAG, REMOVAL.
4. Gently pull side cover from frame downtubes (no tools required).
5. Carefully cut cable strap securing console pod conduit and audio harness to left frame tube at front and rear of saddlebag rail.
6. Open fuel door on console. Remove two Allen head screws inboard of rubber bumpers. These screws secure console to clip nuts on the canopy bracket.
7. Remove Allen head screw to detach flange at rear of console from clip nut on fuel tank weldment.
8. Lay a clean shop towel on forward part of the rear fender. Remove filler cap from neck of fuel tank. Remove console and lay upside down on shop towel. Reinstall filler cap.

9. Bend back flexible clamp to release pod cable conduit from bottom of console.
10. Release console pod connector [53], 12-place Deutsch, from attachment clip anchored in hole of frame crossmember (at rear of battery box). See Figure 8-143. Disconnect pin and socket halves.
11. Remove three Phillips screws to release pod from console.

INSTALLATION

1. Feed pin housing and conduit through top of console seating pod in recess. Install three Phillips screws screws to secure pod to console. Alternately tighten screws to 6-11 **in-lbs** (0.7-1.2 Nm). Capture conduit in flexible clamp at bottom of console.

⚠WARNING

Exercise caution to avoid pinching or kinking the fuel overflow hose when console is installed. A blocked hose can cause excess gasoline to remain above the filler neck insert, while fuel expansion can cause an overfilled tank to overflow through the filler cap vent. Gasoline is extremely flammable and highly explosive. Inadequate safety precautions could result in death or serious injury.

2. Remove filler cap. Place console over filler neck onto canopy. Route cables from beneath console as shown in Figure 8-144. Be sure that hoses and wires are not pinched by the console during installation. Reinstall filler cap.

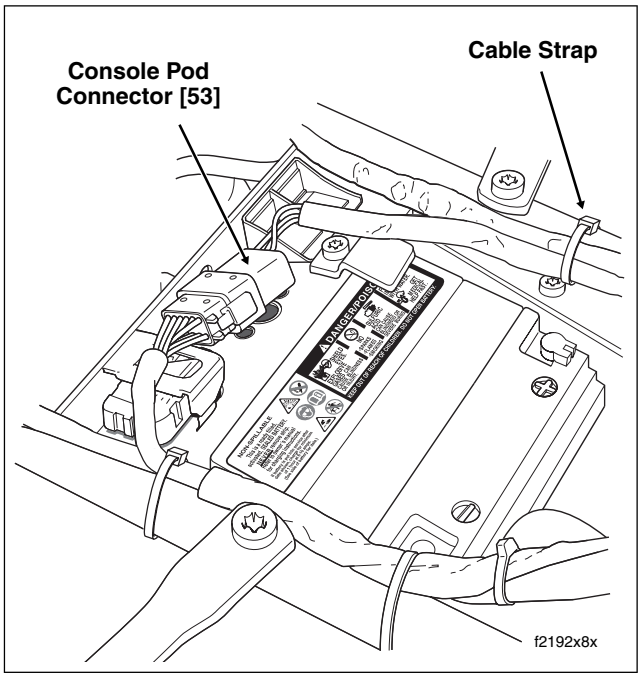

Figure 8-143. Disconnect Console Pod Connector

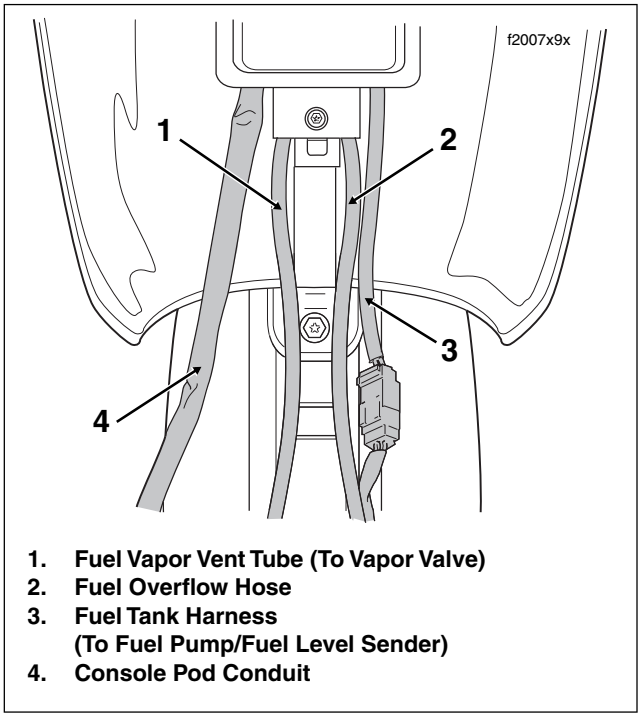

Figure 8-144. Console Pod Cable/Hose Routing (FLHTCU)

3. Install Allen head screw to fasten rear flange of console to clip nut on fuel tank weldment. Tighten screw to 25-30 **in-lbs** (2.8-3.4 Nm).
4. Open fuel door on console. Install two Allen head screws to secure front of console to clip nuts on canopy bracket. Alternately tighten screws to 25-30 **in-lbs** (2.8-3.4 Nm).
5. Install **new** cable straps to secure console pod conduit and audio harness to left frame tube at front and rear of saddlebag rail. Cut any excess cable strap material. See Figure 8-143.
6. Connect console pod connector [53], 12-place Deutsch. Install connector onto attachment clip anchored in hole of frame crossmember (at rear of battery box).
7. Insert bolt through battery negative cable (black) into threaded hole of battery negative (-) terminal. Tighten bolt to 60-96 **in-lbs** (6.8-10.9 Nm).
8. Install seat. See Section 2.25 SEAT, INSTALLATION.
9. Align barbed studs in side cover with grommets in frame downtubes and push firmly into place (no tools required).
10. Install left side saddlebag. See Section 2.26 SADDLEBAG, INSTALLATION.

FRONT HEADSET RECEPTACLE

REMOVAL

1. Remove console pod. See CONSOLE POD ASSEMBLY, REMOVAL, in this section.
2. Remove terminals 6 through 12 from pin housing of 12-place Deutsch connector.

NOTE

For instructions on properly removing wire terminals, see APPENDIX B.1 DEUTSCH ELECTRICAL CONNECTORS, REMOVING/INSTALLING PINS.

3. Raise headset receptacle cap. Place pin punch in either notch of lock ring and rotate in a counterclockwise direction until loose. See Figure 8-145.
4. Remove lock ring and cap from headset receptacle.
5. Remove headset receptacle from pod.

INSTALLATION

1. From inside pod, insert threaded end of headset receptacle through side hole.
2. Place receptacle cap over end of headset receptacle so that it seats in recess of pod.
3. Open cap, and with the notches on the outboard side, thread lock ring onto headset receptacle.
4. Place pin punch in either notch of lock ring and rotate in a clockwise direction until tight.
5. Install terminals 6 through 12 into pin housing of 12-place Deutsch connector.

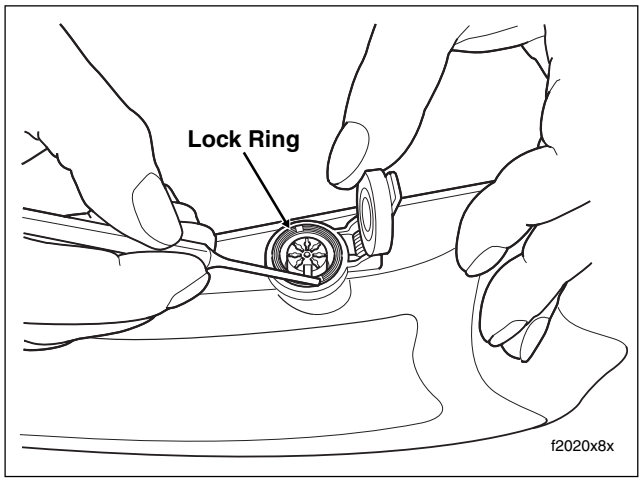

Figure 8-145. Remove Lock Ring from Receptacle Using Pin Punch

Table 8-18. Front Headset Receptacle

Wire Color	Chamber Number
Blue/Yellow	6
Yellow/Black	7
Yellow/White	8
Yellow/Red	9
Black	10
Red	11
Black (Thick Insulation)	12

NOTE

For instructions on properly installing wire terminals, see APPENDIX B.1 DEUTSCH ELECTRICAL CONNECTORS, REMOVING/INSTALLING PINS.

6. Install console pod. See CONSOLE POD ASSEMBLY, INSTALLATION, in this section.
7. Test operation of headset receptacle.

REAR HEADSET RECEPTACLE

See Section 8.37 AUDIO HARNESS (FLHTCU).

REAR PASSENGER SWITCHES

REMOVAL

NOTE

Right and left side replacement passenger switch assemblies are interchangeable.

1. Remove maxi-fuse. See Section 8.3 SYSTEM FUSES, MAXI-FUSE, REMOVAL.
2. Open Tour-Pak.
3. Remove four T10 TORX screws and pull speaker grille from speaker box.
4. Remove speaker from speaker box and carefully pull socket terminals from speaker spade contacts.
5. Remove trim ring and gently pull on wire harness to draw rear speaker/passenger controls connector, 6-place Deutsch, out of speaker box.
6. Disconnect pin and socket halves of Deutsch connector.
7. Draw socket half of Deutsch connector back into speaker box and pull out through speaker hole.

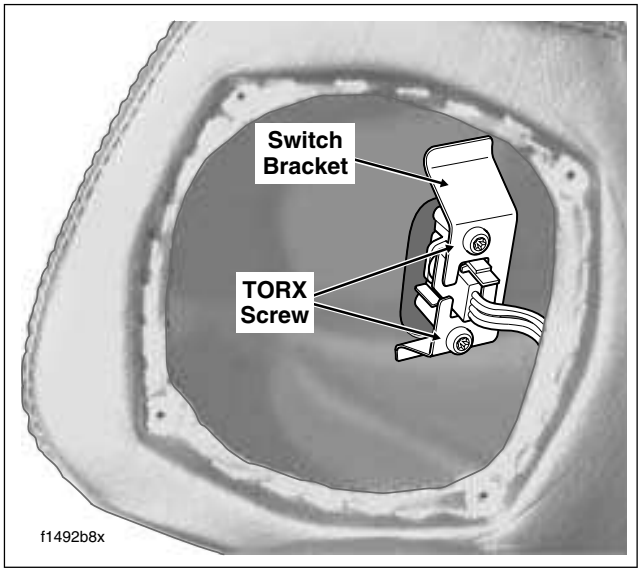

Figure 8-146. Remove Passenger Switch Assembly (Right Side Speaker Box Shown)

8. Remove two T25 TORX screws to release switch bracket from inside of speaker box. Remove bracket using slot to free switch wires. See Figure 8-146.
9. Pull switch housing assembly, wire harness conduit, speaker terminals and Deutsch socket from speaker box using switch housing hole on outboard side.
10. Carefully pull keycap from switch shaft. Remove switch from switch housing.
11. Remove terminals 1 through 4 from socket housing.

NOTE

For instructions on properly removing wire terminals, see APPENDIX B.1 DEUTSCH ELECTRICAL CONNECTORS, REMOVING/INSTALLING SOCKETS.

12. Pulling one wire at a time, remove four wires from conduit.

INSTALLATION

1. Pushing one wire at a time, feed four wires of **new** switch through conduit.
2. Install terminals 1 through 4 into socket housing.

Table 8-19. Rear Passenger Switches

Wire Color	Chamber Number
Pink/White	1
Gray/White	2
Violet/Black	3
* Orange/Black	4

* Mates to O/BK on [41A], BN/W on [42A].

NOTE

For instructions on properly installing wire terminals, see APPENDIX B.1 DEUTSCH ELECTRICAL CONNECTORS, REMOVING/INSTALLING SOCKETS.

3. With the Pink/White wire at the bottom, place switch in cavity of switch housing. Bottom of the assembly is determined by location of rib on switch housing. See Figure 8-147.
4. Note lettering for proper orientation and gently push keycap onto switch shaft. When orienting keycap, remember that bottom of assembly is determined by location of switch housing rib.
5. Feed Deutsch socket connector, speaker terminals and conduit through switch housing hole on outboard side of speaker box until switch housing backplate contacts speaker box. Pull harness out through speaker hole.

NOTE

To align bracket and switch housing holes, slot in bracket must face toward the front on right side assembly and toward the rear on left side. See Figure 8-148. Switch also must be square in cavity of switch housing or bracket will not fit.

6. Reaching into speaker box, align holes in bracket with holes in switch housing. Install two T25 TORX screws. See Figure 8-149.
7. Feed Deutsch socket through speaker hole into speaker box and pull out through harness hole on inboard side.
8. Mate pin and socket halves of Deutsch connector. Feed connector back up into speaker box pressing trim ring into hole.
9. Install socket terminals onto speaker spade contacts. On right side of vehicle, install socket terminal of the solid Green wire onto contact next to the red dot. On left side, install socket terminal of the solid Brown wire onto contact next to the red dot.
10. Align holes in speaker grille with those in speaker and slide four TORX screws through grille and speaker holes.
11. With spade contacts at bottom rear corner, position speaker/grille assembly against speaker box. Install four T10 TORX screws and alternately tighten in a crosswise pattern.
12. Close Tour-Pak.
13. Install maxi-fuse. See Section 8.3 SYSTEM FUSES, MAXI-FUSE, INSTALLATION.
14. Test switch for proper operation.

REAR SPEAKERS

REMOVAL

1. Remove maxi-fuse. See Section 8.3 SYSTEM FUSES, MAXI-FUSE, REMOVAL.

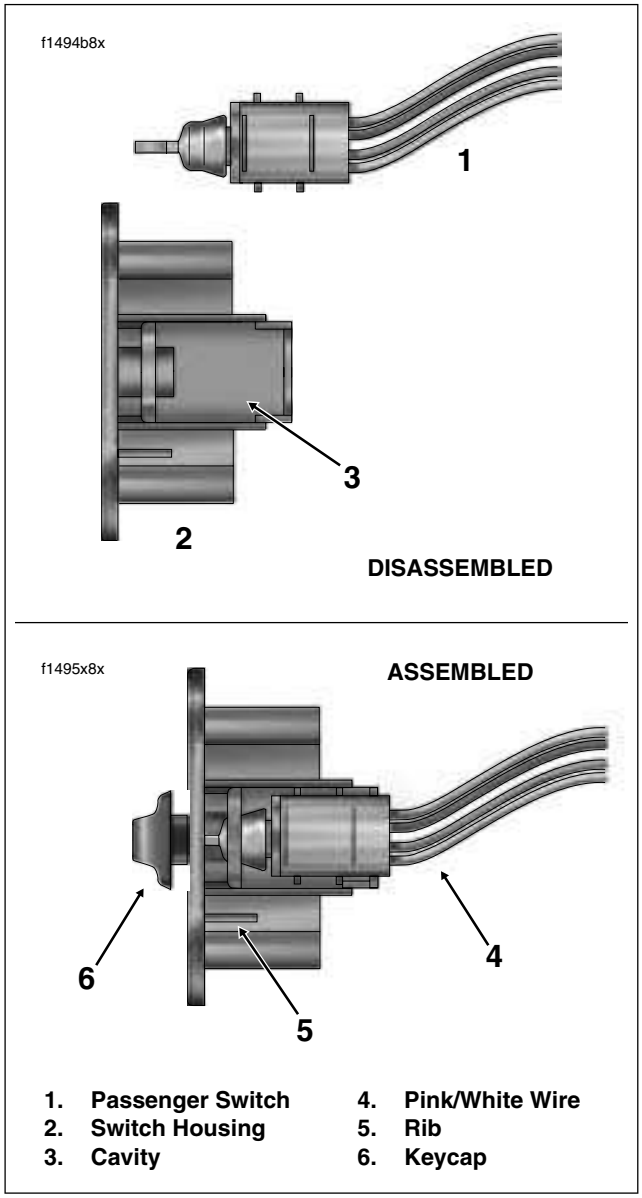

Figure 8-147. Install Switch in Housing

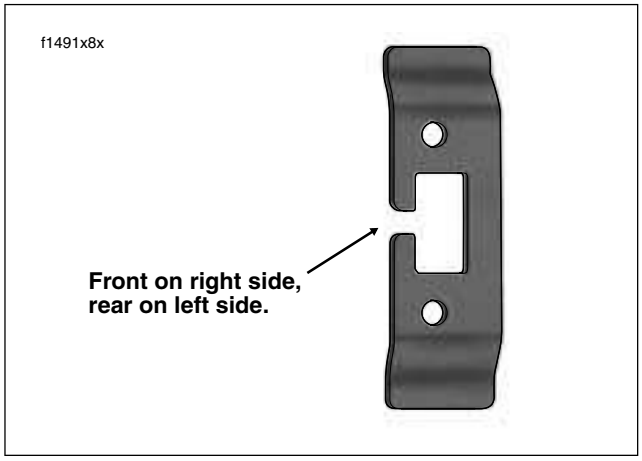

Figure 8-148. Properly Orient Slot in Switch Bracket

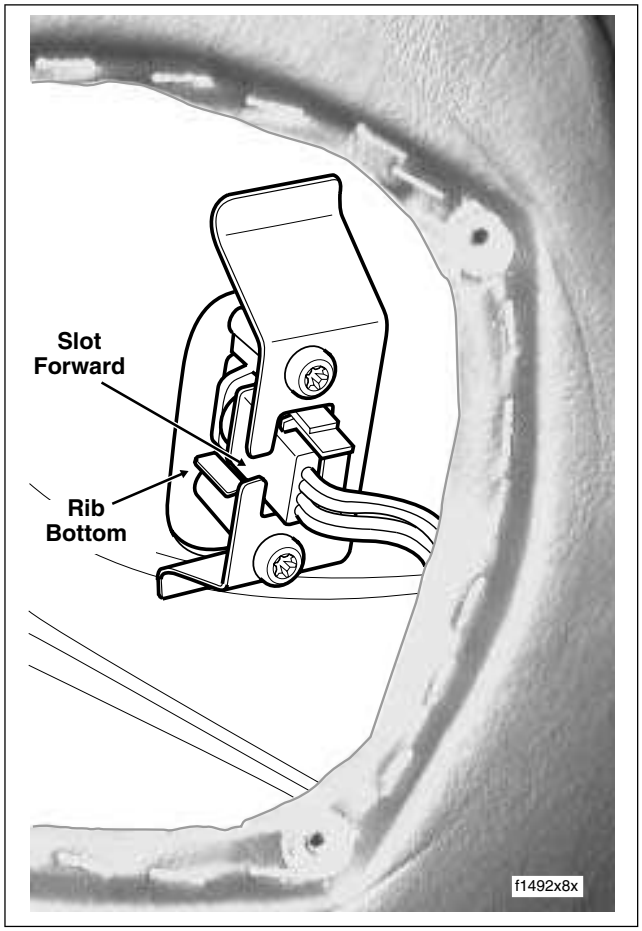

Figure 8-149. Install Passenger Switch Assembly (Right Side Speaker Box Shown)

2. Open Tour-Pak.

3. Remove four T10 TORX screws from speaker grille. Remove speaker grille from speaker box.

4. Remove speaker from speaker box. Carefully pull two socket terminals from speaker spade contacts.

INSTALLATION

1. Install two socket terminals onto speaker spade contacts. Different size spade contacts prevent improper assembly.

2. With spade contacts at bottom, install speaker in speaker box.

3. Align holes in speaker with those in speaker box. Align holes in grille with those in speaker.

4. Install four T10 TORX screws and alternately tighten in a crosswise pattern.
5. Close Tour-Pak.
6. Install maxi-fuse. See Section 8.3 SYSTEM FUSES, MAXI-FUSE, INSTALLATION.
7. Test speaker for proper operation.

CB MODULE

REMOVAL

1. Remove maxi-fuse. See Section 8.3 SYSTEM FUSES, MAXI-FUSE, REMOVAL.
2. Remove outer fairing. See Section 2.30 UPPER FAIRING/WINDSHIELD (FLHX, FLHT/C/U), OUTER FAIRING/WINDSHIELD, REMOVAL.
3. See Figure 8-140. Disconnect the following connectors:
   - CB antenna cable connector [50]. Rotate knurled nut counterclockwise until free.
   - CB module connector [184], 12-place Deutsch (black); top of radio (left side).
4. Remove screw to release flange of CB module from radio.

INSTALLATION

1. Fit metal cones on CB module into rubber grommets at top of radio. Use the position above radio connector [28], 35-place Amp, as the other location has been reserved for certain P&A accessories.
2. Install screw to fasten flange of CB module to radio. Tighten screw to 35-45 **in-lbs** (4.0-5.1 Nm).
3. See Figure 8-140. Connect the following connectors:
   - CB antenna cable connector [50]. Insert pin and rotate knurled nut clockwise until tight.
   - CB module connector [184], 12-place Deutsch (black); top of radio (left side).
4. Install outer fairing. See Section 2.30 UPPER FAIRING/WINDSHIELD (FLHX, FLHT/C/U), OUTER FAIRING/WINDSHIELD, INSTALLATION.
5. Install maxi-fuse. See Section 8.3 SYSTEM FUSES, MAXI-FUSE, INSTALLATION.

CB LOADING COIL

REMOVAL

1. Remove maxi-fuse. See Section 8.3 SYSTEM FUSES, MAXI-FUSE, REMOVAL.
2. Open Tour-Pak. Open map pocket and remove acorn nuts. Remove map pocket and molded liner from Tour-Pak.
3. Disconnect CB antenna cable connector [50] on right side of Tour-Pak. Release cable from rear adhesive clip at bottom of Tour-Pak.
4. Remove Keps nut, ring terminal and flat washer from loading coil stud.
5. Holding hex head screw, remove flange nut at bottom of Tour-Pak to release loading coil bracket. Remove hex head screw (with external tooth lockwasher) and loading coil from motorcycle.

INSTALLATION

1. Place **new** loading coil into position aligning hole in bracket with hole in rear right corner of Tour-Pak. Slide hex head screw (with external tooth lockwasher) through holes. At bottom of Tour-Pak, install flange nut on hex head screw.
2. Connect CB antenna cable connector [50]. Capture antenna cable in rear adhesive clip at bottom of Tour-Pak.
3. Install flat washer, ring terminal and Keps nut onto loading coil stud. Tighten Keps nut.
4. Install molded liner in Tour-Pak. Install map pocket and secure using acorn nuts. Close Tour-Pak.
5. Install maxi-fuse. See Section 8.3 SYSTEM FUSES, MAXI-FUSE, INSTALLATION.
6. Check SWR and adjust if necessary. Follow the SWR Adjustment procedure in Section 6 of the 2006 ELECTRICAL DIAGNOSTIC MANUAL (Part No. 99497-06). Remove SWR meter, install antenna connector and tighten antenna connector stud.

AUDIO HARNESS

For removal and installation instructions, see Section 8.37 AUDIO HARNESS (FLHTCU).

RADIO ANTENNA CABLE

For removal and installation, see Section 8.36 RADIO ANTENNA CABLE.

CB ANTENNA CABLE

For removal and installation, see Section 8.38 CB ANTENNA CABLE (FLHTCU).

WIRE TROUGH 8.33

REMOVAL

1. Remove fuel tank. For carbureted models, see Section 4.7 FUEL TANK (CARBURETED), COMPLETE REMOVAL, FLHX, FLHT or FLHR/S. For fuel injected models, see Section 9.4 FUEL TANK (FUEL INJECTED), COMPLETE REMOVAL, FLHXI, FLHT/C/U/I, FLTRI or FLHR/C/S/I.
2. Unthread bolt and remove battery positive cable (red) from battery positive (+) terminal. (Battery negative cable already removed under FUEL TANK, COMPLETE REMOVAL.)
3. Loosen T40 TORX screw and move lip of hold-down clamp off edge of battery. Remove battery from battery box.
4. Starting at the front of the wire trough, and working rearward from side to side, release catches to remove cover. For most catches, carefully insert blade of flat tip screwdriver into slot only as far as necessary to release catch. See Figure 8-150.
5. Using a paint pen, draw a line on the conduit and/or wire bundle on both sides of each cable strap. See Figure 8-151.

NOTE

If multiple branches of the harness are bound by a single cable strap, such as the breakouts leading to the induction module on fuel injected models, be sure to mark all branches with the paint pen.

6. Starting at the front of the wire trough, cut the first cable strap as close to the eyelet as possible. Be sure to cut off the tail of the cable strap and not the eyelet. The cable strap can be reused for use in step 7 if only the tail is removed, but it must be replaced with a **new** cable strap if the eyelet is cut off. See Figure 8-152.
7. Remove the tail remnant from the eyelet of the cable strap, if present. Remove the cable strap from the slots in the wire trough and install it back on the harness just outside the painted lines. Be sure to capture each wire of the harness, but not the wire trough. Repeat steps 6-7 for all remaining cable straps.

NOTE

*If multiple branches of the harness are bound by a single cable strap, such as the breakouts leading to the induction module on fuel injected models, install **new** cable strap just outside the painted lines before cutting original cable strap through wire trough. This will further ensure that stackup and breakout lengths remain the same.*

Figure 8-150. Release Catches From Cover

Figure 8-151. Mark Location of Cable Straps

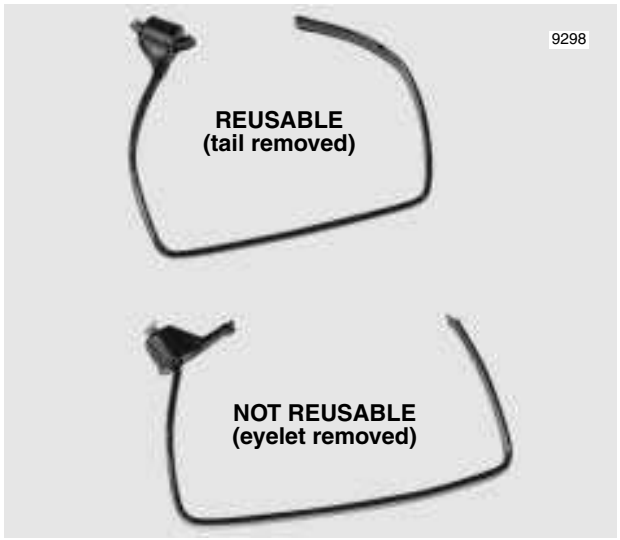

Figure 8-152. Cut Cable Straps

8. Gently pull index pins on rear legs of wire trough from holes in frame backbone. For best results, work both pins loose at the same time.
9. Slide wire trough forward to release slot at bottom from T-stud a center of frame backbone.
10. Raise wire harness and carefully remove wire trough from left side of motorcycle.

INSTALLATION

1. Thread cable straps through slots of **new** wire trough as shown in Figure 8-153. Properly installed, both ends of the cable strap will be pointing upward. Install all cable straps in this fashion.

NOTE

Depending upon model, there are a minumum of 17 cable straps (carbureted FLHR/S) and a maximum of 20 (fuel injected FLHTCU). See Figure 8-155 in conjunction with Table 8-20 below. For example, if installing the wire trough on a fuel injected FLHTCU, start cable straps in all slots except 18. If installing the wire trough on a carbureted FLHR/S, start cable straps in all slots except 2, 7, 9 and 19.

Table 8-20. Wire Trough Cable Straps

Cable Strap	Captures Conduit/Wire Bundle	Models
1	Main Harness	All
2	Audio Harness	FLHTCU
3	Ignition Coil	All
	Fuel Gauge	FLHR/C/S
4	Main Harness	All
	Audio Harness	FLHTCU
5	Main Harness	All
6	Main Harness	All
	Audio Harness	FLHTCU
7	Front Fuel Injector	Fuel Injected
8	TP Sensor, MAP Sensor, IAC and Rear Fuel Injector	Fuel Injected
	MAP Sensor	Carbureted
9	TP Sensor, MAP Sensor, IAC and Rear Fuel Injector	Fuel Injected
10	Horn	All
	ET Sensor	Fuel Injected
11-17	Main Harness	All
	Audio Harness	FLHTCU
18	Instrument Console	FLHR/C/S
19	Fuel Tank Harness	FLHX, FLHT/C/U, FLTR
20-21	Main Harness	All

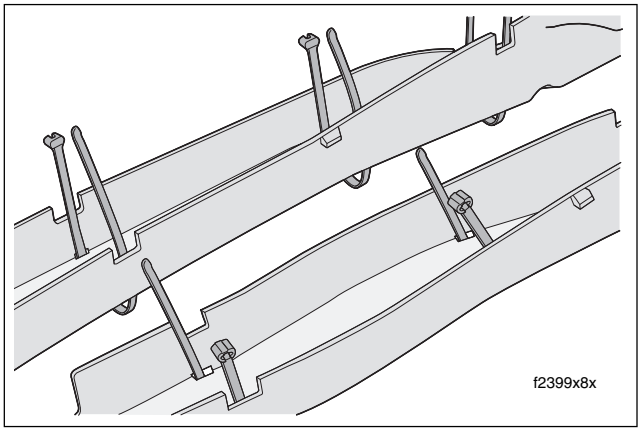

Figure 8-153. Install New Cable Straps in Wire Trough

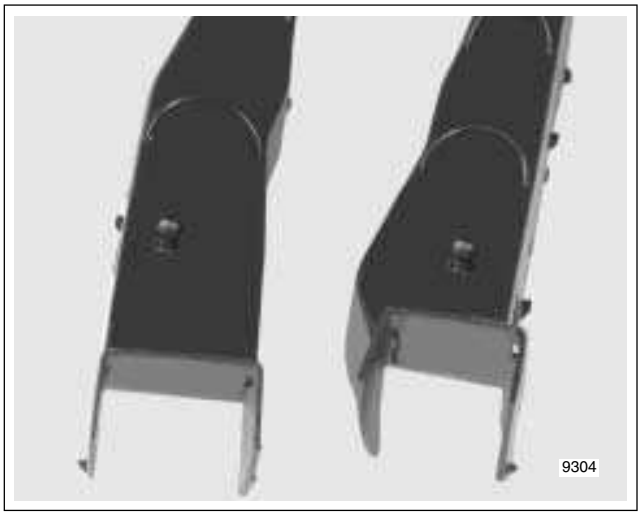

Figure 8-154. Rear Leg Index Pins

2. Raise wire harness, and from left side of motorcycle, carefully slide wire trough into position on frame backbone.
3. Slide wire trough rearward to engage slot at bottom on T-stud at center of frame backbone.
4. Gently push index pins on rear legs of wire trough into holes in frame backbone. See Figure 8-154.
5. Lay harness in wire trough so that the painted lines are adjacent to the cable straps. Start tail end of each cable strap into eyelet, but do not tighten.
6. Adjust harness as necessary, so that the painted lines are aligned with the cable straps threaded through the wire trough.
7. Tighten the cable straps and cut any excess cable strap material.
8. Carefully cut and remove all cable straps not threaded through the wire trough, that is, those installed just outside the painted lines in step 7 under REMOVAL.

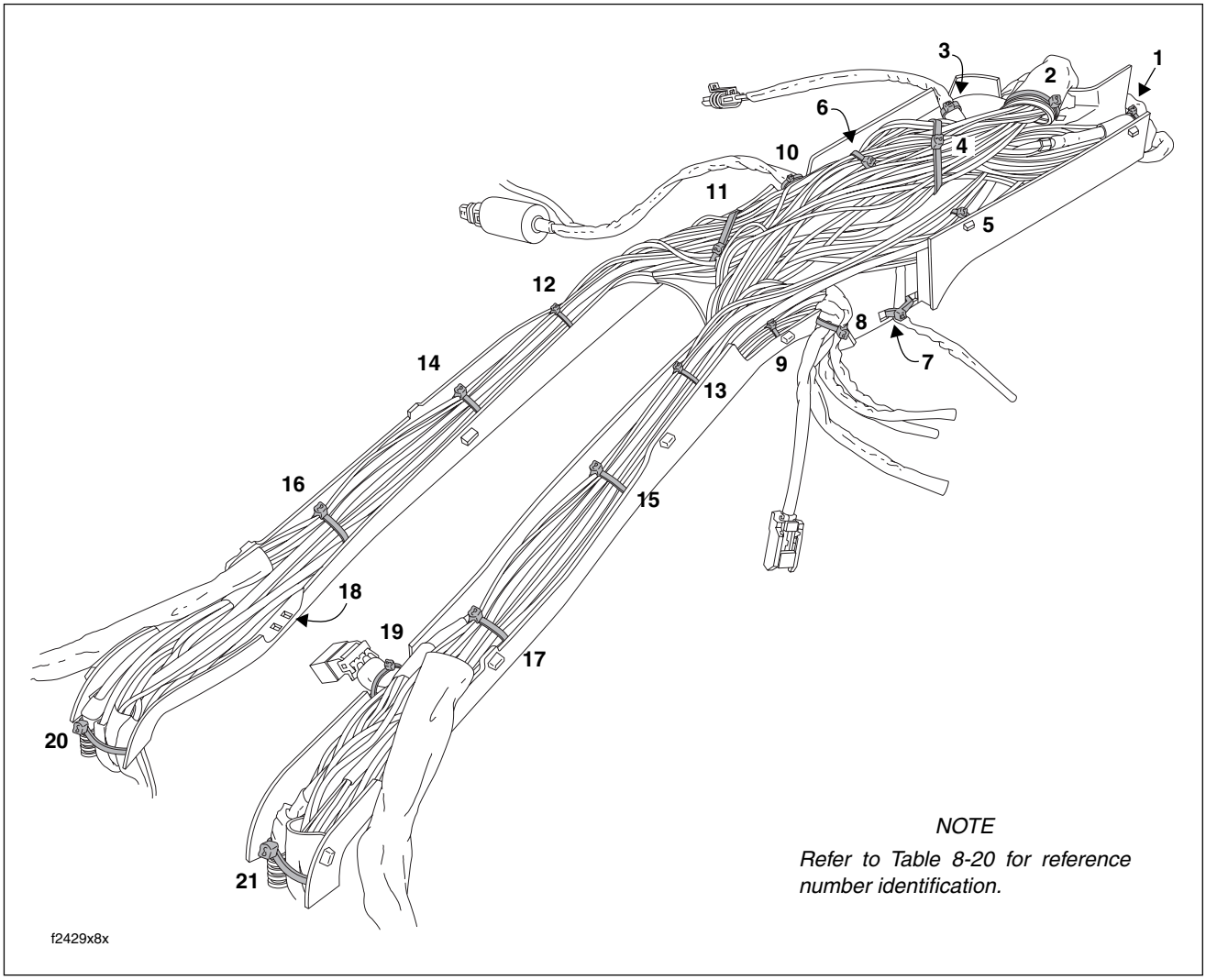

Figure 8-155. Wire Trough Cable Strap Locations (FLHTCU)

9. Place cover over wire trough. Starting at the front and working rearward from side to side, engage catches to latch cover. Verify that all latches are fully engaged.

10. Place battery in battery box, terminal side forward. Rotate the hold-down clamp so that the lip (with rubber pad) rests on the edge of the battery. Tighten T40 TORX screw to 15-20 ft-lbs (20-27 Nm).

⚠WARNING

Always connect the positive battery cable first. If the positive cable should contact ground with the negative cable installed, the resulting sparks may cause a battery explosion which could result in death or serious injury.

11. Insert bolt through battery positive cable (red) into threaded hole of battery positive (+) terminal. Tighten bolt to 60-96 **in-lbs** (6.8-10.9 Nm).

12. Insert bolt through battery negative cable (black) into threaded hole of battery negative (-) terminal. Tighten bolt to 60-96 **in-lbs** (6.8-10.9 Nm).

13. Install fuel tank. For carbureted models, see Section 4.7 FUEL TANK (CARBURETED), INSTALLATION (AFTER COMPLETE REMOVAL), FLHX, FLHT or FLHR/S. For fuel injected models, see Section 9.4 FUEL TANK (FUEL INJECTED), INSTALLATION (AFTER COMPLETE REMOVAL), FLHXI, FLHT/C/U/I, FLTRI or FLHR/C/S/I.

REMOVAL

REMOVAL- ALL MODELS (PART I)

1. Remove fuel tank. For carbureted models, see Section 4.7 FUEL TANK (CARBURETED), COMPLETE REMOVAL, FLHX, FLHT or FLHR/S. For fuel injected models, see Section 9.4 FUEL TANK (FUEL INJECTED), COMPLETE REMOVAL, FLHXI, FLHT/C/U/I, FLTRI or FLHR/C/S/I.
2. Unthread bolt and remove battery positive cable (red) from battery positive (+) terminal. (Battery negative cable already removed under FUEL TANK, COMPLETE REMOVAL.)
3. Loosen T40 TORX screw and move lip of hold-down clamp off edge of battery. Remove battery from battery box.
4. Remove left side saddlebag. See Section 2.26 SADDLEBAG, REMOVAL.
5. Gently pull left side cover from frame downtubes (no tools required).
6. Repeat steps 4-5 to remove right side saddlebag and side cover.

NOTE

Depending upon model, continue procedure at REMOVAL- FLHR/C/S (PART II), REMOVAL- FLTR (PART II), or REMOVAL- FLHX, FLHT/C/U (PART II).

REMOVAL- FLHR/C/S (PART II)

1. Remove the headlamp assembly. See Section 8.11 HEADLAMP (FLHR/C/S, FLHX, FLHT/C/U), HEADLAMP ASSEMBLY, REMOVAL.
2. See Figure 8-156. Reaching inside the headlamp nacelle, disconnect main harness as follows:
   - Front fender tip lamp jumper harness connector [32], 2-place Multilock (black); used on FLHR only.
   - Auxiliary lamps connector [73], 2-place Multilock (white); used on FLHR/C only.
   - Auxiliary lamps switch connector [109], 4-place Amp; used on FLHR/C only.
   - Accessory switch connector [67], 4-place Amp.
   - Right handlebar switch controls connector [22], 6-place Deutsch (black); T-stud on fork stem nut lockplate (left side).

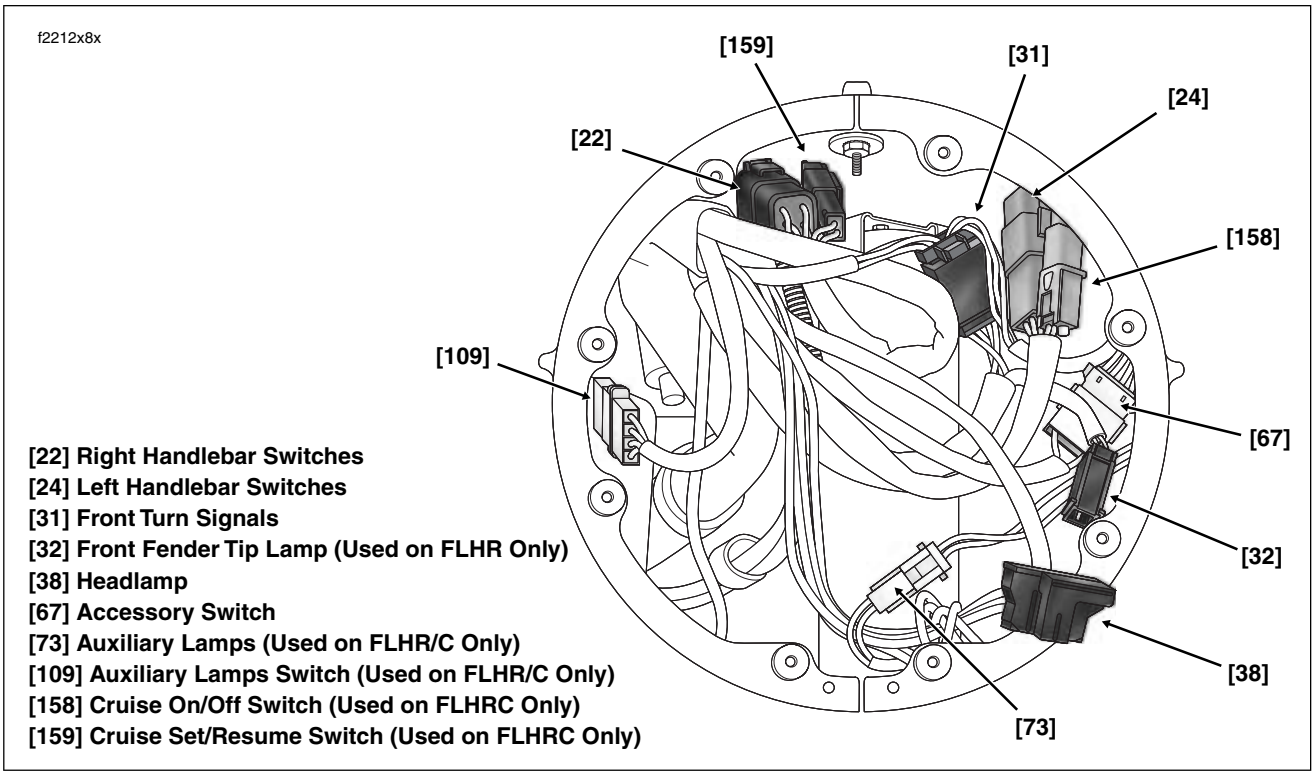

Figure 8-156. Headlamp Nacelle - Main Harness Connectors (FLHR/C/S)

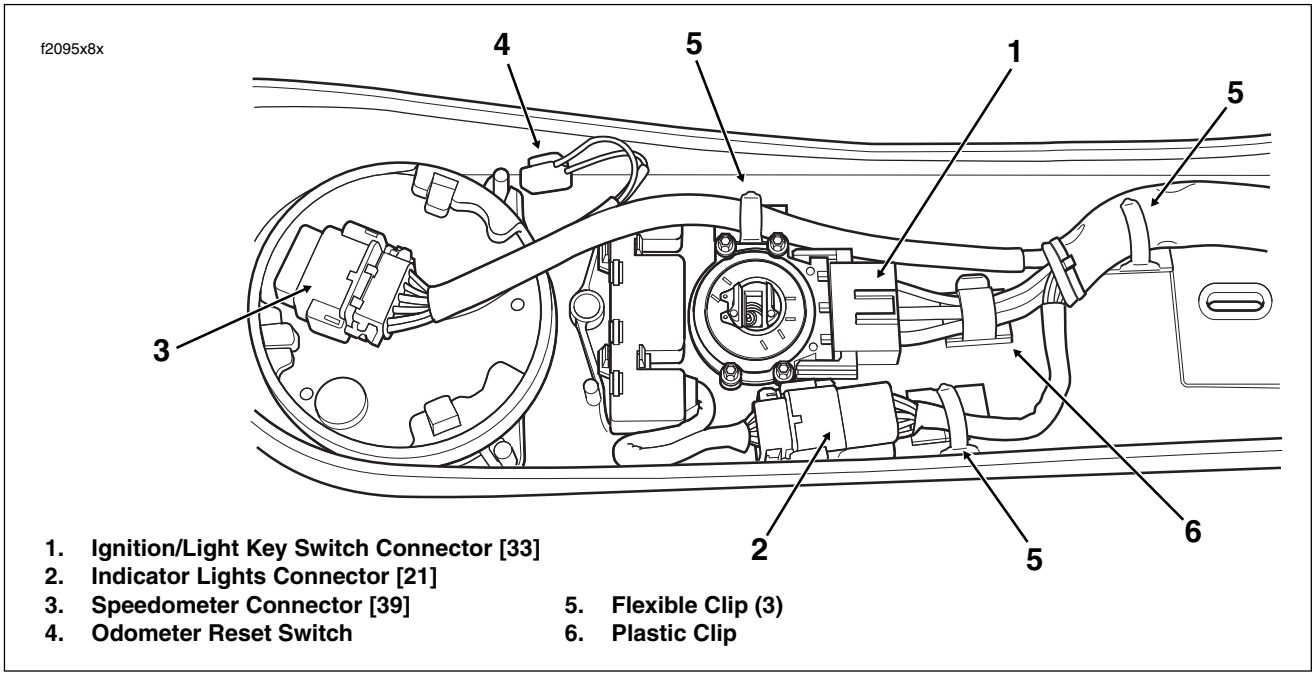

Figure 8-157. Instrument Console Assembly - Main Harness Connectors (FLHR/C)

- Cruise set/resume switch connector [159], 2-place Deutsch (black); used on FLHRC only.
- Front turn signal lamps connector [31], 6-place Multilock; anchored in hole of fork stem nut lock plate (left side).
- Left handlebar switch controls connector [24], 6-place Deutsch (gray); T-stud on fork stem nut lockplate (left side).
- Cruise on/off switch connector [158], 2-place Deutsch (gray); used on FLHRC only.

3. Carefully pull main harness rearward under right side of headlamp nacelle allowing conduit and connectors to hang over top of engine guard.
4. Remove screw and P-clamp to release main harness from right side of steering head.
5. See Figure 8-157. Moving to inboard side of instrument console, disconnect main harness as follows:
   - Ignition/Light Key Switch connector [33], 3-place Packard.
   - Indicator lights connector [21], 8-place Deutsch.
   - Speedometer connector [39], 12-place Packard.
6. Unthread rubber boot from odometer reset switch and pull switch from hole in instrument console.
7. Bend back flexible clamps on inboard side of instrument console as necessary to release main harness conduit. Set instrument console aside.

NOTE

Continue procedure at REMOVAL- ALL MODELS (PART III).

REMOVAL- FLHX, FLHT/C/U (PART II)

1. Remove the outer fairing and windshield. See Section 2.30 UPPER FAIRING/WINDSHIELD (FLHX, FLHT/C/U), OUTER FAIRING/WINDSHIELD, REMOVAL.
2. Cut cable strap to release convoluted tubing of interconnect harness and conduit of main to interconnect harness connectors [1], [2], [15] and [156] from right fairing bracket.
3. See Figure 8-158. Disconnect main harness from interconnect harness as follows:
   - Main to interconnect harness connector [1], 12-place Deutsch (black); T-stud on right radio support bracket.
   - Main to interconnect harness connector [2], 12-place Deutsch (gray); T-stud on right fairing support brace (middle).
   - Main to interconnect harness connector [15], 4-place Packard (black); anchored in hole at front of right fairing bracket.

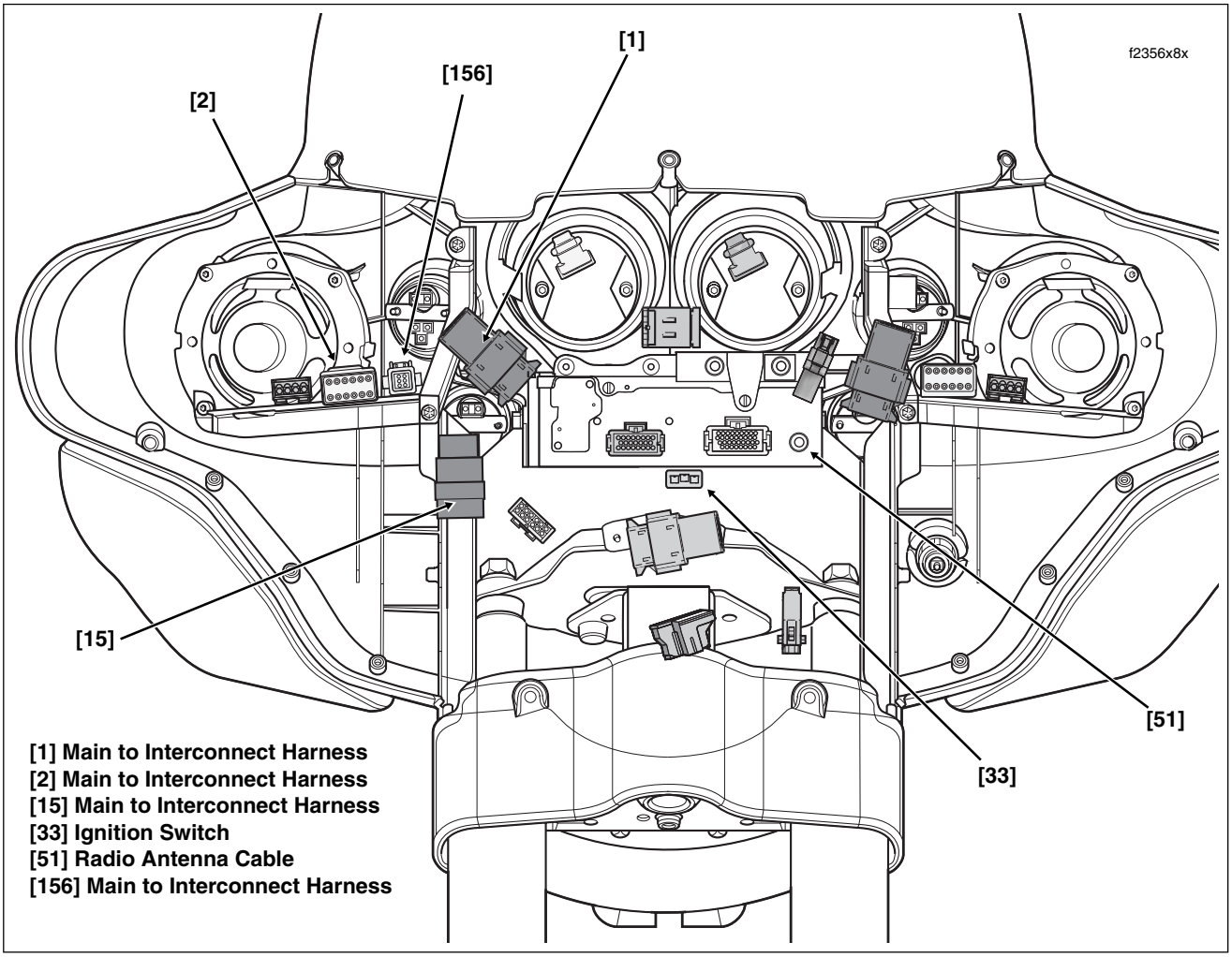

Figure 8-158. Inner Fairing - Main Harness Connectors (FLHX, FLHTC/U)

- Main to interconnect harness connector [156], 6-place Deutsch (gray); T-stud on right fairing support brace (inboard side).

4. See Figure 8-158. Disconnect radio antenna cable. Proceed as follows:
   - Radio antenna cable connector [51]; back of radio (left side).
5. See Figure 8-158. Disconnect ignition/light key switch connector [33], 3-place Packard, at front of ignition switch housing. Proceed as follows:
   a. Using a long shank ball end socket (Snap-on® FABL6E), remove four socket head screws to release radio (storage box on FLHT) from left and right radio support brackets. Use oblong holes in fairing brackets to access screws. See Figure 8-159.
   b. Carefully cut anchored cable strap to release main harness conduit from bottom right corner of radio.

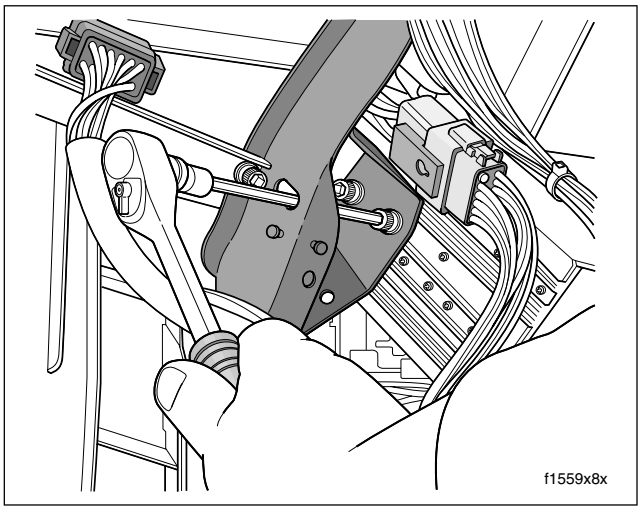

Figure 8-159. Release Radio from Fairing Brackets (FLHTC/U)

c. Obtain the IGNITION SWITCH CONNECTOR REMOVER (HD-45961).

d. Lift radio slightly and gently insert end of tool into slot in ignition switch housing until it stops.

e. Grasping main harness conduit and tool, pull both at the same time to release socket housing from ignition switch housing.

6. Remove screw, main harness ground ring terminal and P-clamp to release main harness (and audio harness on FLHTCU models) from right side of steering head.
7. Carefully pull main harness rearward under right side of fairing cap allowing conduit and connectors to hang over top of engine guard.
8. For FLHTCU models only, see Section 8.37 AUDIO HARNESS (FLHTCU), REMOVAL, steps 6 and 8.

NOTE

Continue procedure at REMOVAL- ALL MODELS (PART III).

REMOVAL- FLTR (PART II)

1. Remove the inner fairing. See Section 2.31 UPPER FAIRING/WINDSHIELD (FLTR), INNER FAIRING, REMOVAL, steps 1-20.
2. Remove screw, two main harness ground ring terminals and P-clamp to release main harness bundle from right side of steering head.

NOTE

Continue procedure at REMOVAL- ALL MODELS (PART III).

REMOVAL- ALL MODELS (PART III)

1. If cruise equipped, locate the cruise control roll-off switch plumbed into the idle cable on right side of the steering head. Push rubber boot on switch forward and remove insulators from switch spade terminals.
2. Depending upon whether the motorcycle is carbureted or fuel injected, proceed as follows:

Carbureted:

a. Remove ignition coil connector [83] and MAP sensor connector [80].

b. Remove ICM connector [10]. See Figure 8-160.

c. Gently pull on data link connector [91] to disengage from arms on electrical bracket.

d. Remove two flange nuts to release electrical bracket from studs on side of battery box.

e. On inboard side of electrical bracket, disconnect VSS connector [65]. See Figure 8-161. Release connector and conduit from electrical bracket.

f. Release security siren connector [142] and conduit from electrical bracket.

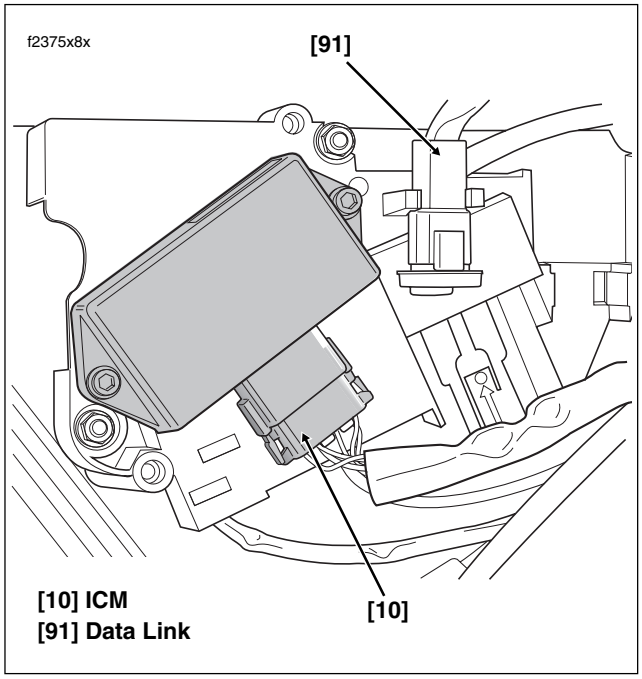

Figure 8-160. Electrical Bracket (Under Right Side Cover)

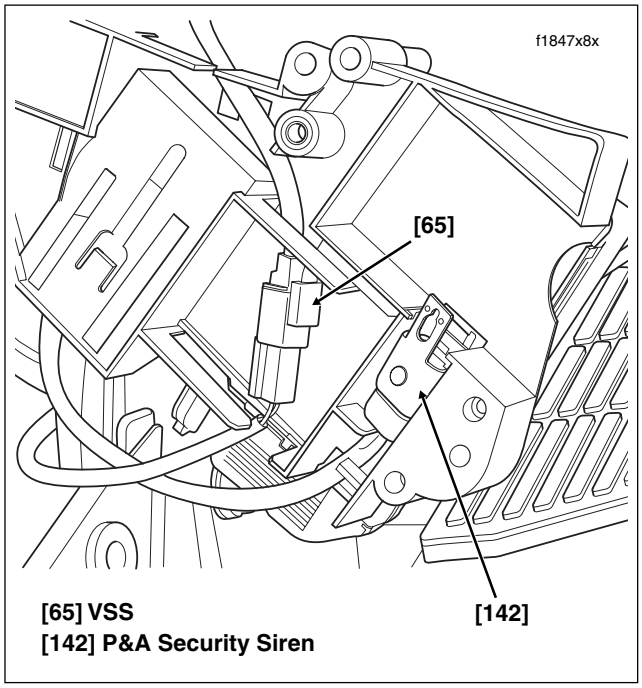

Figure 8-161. Electrical Bracket (Inboard Side)

CAUTION

Damage to wires can result in electrical problems. Be sure that rubber boot is present on threaded end of battery box TORX screw. Replace rubber boot if absent or damaged. See upper frame of Figure 8-162.

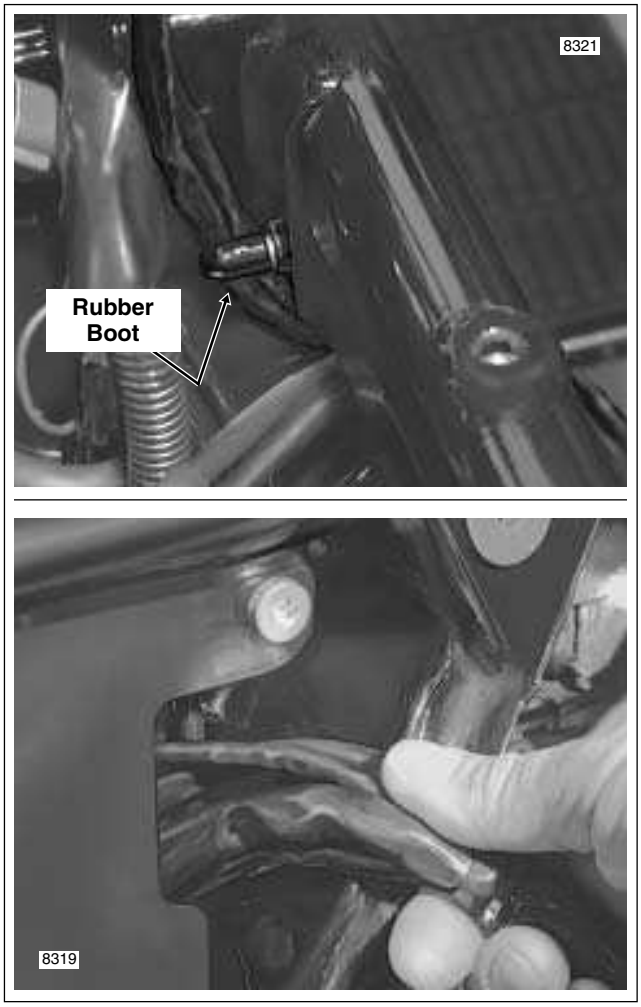

Figure 8-162. Remove Main Harness From Vehicle

g. Note that a section of the main harness conduit runs forward of the front battery box TORX screw. Pull conduit to the rear of the screw, and then feed ICM, data link, VSS, and security siren conduit and connectors through opening into battery box. See upper and lower frames of Figure 8-162.

Fuel Injected:

a. Remove air cleaner and backplate. See Section 4.5 AIR CLEANER, REMOVAL.

b. Remove front fuel injector connector [84].

c. Remove IAC connector [87] and MAP sensor connector [80]. See Figure 8-163.

d. Remove TP sensor connector [88] and IAT sensor connector [89].

e. Remove rear fuel injector connector [85].

f. Moving to left side of motorcycle, remove ignition coil connector [83] from left side of ignition coil.

g. Pull back boot and disconnect ET sensor connector [90] at back of front cylinder. Cut cable strap to release conduit from horn bracket.

h. Returning to right side of motorcycle, disconnect ECM connector [78].

i. Gently pull on data link connector [91] to disengage from arms on electrical bracket.

j. Locate painted white dot on inboard side of fuse block [119]. Pressing on dot, gently tug on conduit to release tabs on fuse block from slots in bracket.

k. Remove two flange nuts to release electrical bracket from studs on side of battery box.

l. On inboard side of electrical bracket, disconnect VSS connector [65]. See Figure 8-161. Release connector and conduit from electrical bracket.

m. Release security siren connector [142] and conduit from electrical bracket.

CAUTION

Damage to wires can result in electrical problems. Be sure that rubber boot is present on threaded end of battery box TORX screw. Replace rubber boot if absent or damaged. See upper frame of Figure 8-162.

n. Note that a section of the main harness conduit runs forward of the front battery box TORX screw. Pull conduit to the rear of the screw, and then feed

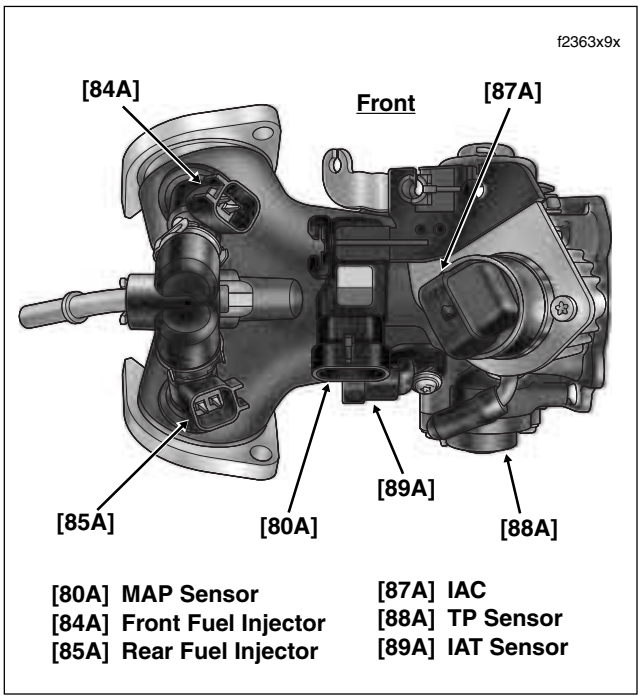

Figure 8-163. Induction Module Assembly (Top View)

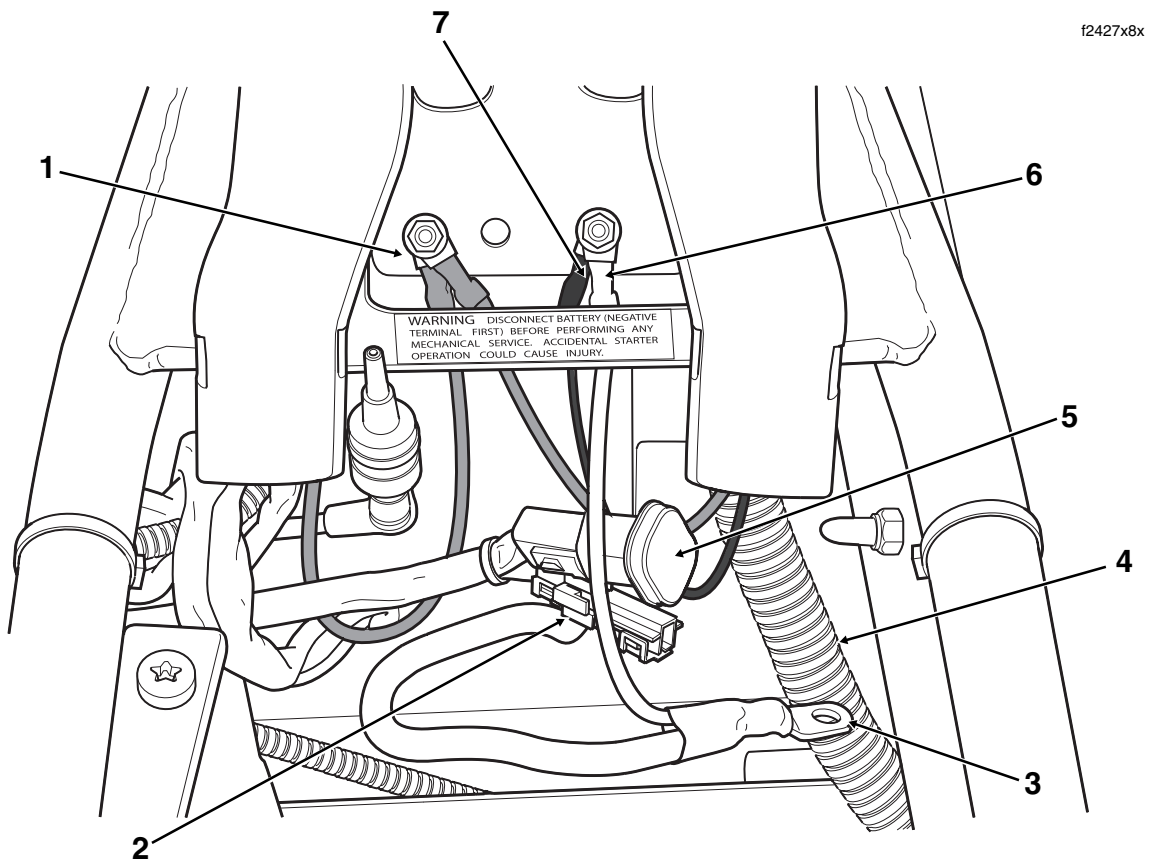

1. **Main Harness Ground Ring Terminals (2)**
2. **B+ Connector [160]**
3. **Battery Negative Cable**
4. **Battery Positive Cable**
5. **Accessory Connector [4]**
6. **Chassis Ground Cable**
7. **Main Harness Ground Ring Terminal**

Figure 8-164. Upper Frame Cross Member (Under Seat) - Main Harness Connectors (FLHX, FLHTC/U)

ECM, fuse block, data link, VSS, and security siren conduit and connectors through opening into battery box. See upper and lower frames of Figure 8-162.

3. Moving to left side of motorcycle, remove acorn nut to release horn bracket from rubber mount stud. Pull elbow terminals from spade contacts and release conduit from J-clamp.
4. Remove flange nut (10 mm) from left side ground stud on upper frame crossmember. Remove two main harness ground ring terminals (with orange tape). Repeat step to remove main harness ground ring terminal (without orange tape) and chassis ground ring terminal from right side ground stud.See Figure 8-164.
5. Depress latches on maxi-fuse holder and then slide cover rearward to disengage tongue from groove in fuse block cover.
6. Moving to right side of motorcycle, pull back boot at top of starter housing and remove flange nut and main power cable ring terminal from post. Release cable from clip anchored to T-stud at front of battery tray. Draw main power cable to left side of motorcycle.
7. Carefully cut anchored cable strap to release fuse block conduit from fuse block bracket. Pull fuse block from tabs on bracket.
8. Remove the fuse block cover. Raise lipped side slightly to disengage slots from tabs on fuse block.
9. If cruise equipped, lift the locking latch and remove cruise module connector [17]. From inside battery box, remove three flange bolts. Carefully pull cruise module away from side of battery box exercising caution to avoid losing grommets.

10. Disconnect the rear fender lights connector [7], 8-place Multilock, anchored at front of rear fender. Detach pin housing from anchor.
11. Release ignition keyswitch and starter relays by pulling anchors on rubber molding from holes in frame weldment at rear of battery box. Remove relays and molding from connectors. Push connectors down into space below frame weldment.
12. Locate the TSM/TSSM inside hole of frame weldment on opposite side. Depress tab at front of spring clip and lift to release legs from holes in weldment. Remove module and disconnect TSM/TSSM connector [30], 12-place Deutsch. Push connector down into space below frame weldment.
13. Pull rear fender lights, ignition keyswitch and starter relays, and TSM/TSSM conduit and connectors out through opening above rear of fuse block bracket and allow to hang on left side of motorcycle.
14. Depending upon model, proceed as follows:

    FLHR/C/S: Move to step 15.

    FLTR:

    a. On left side of motorcycle, remove bolt (with flat washer) to remove passenger seat strap and saddlebag front mounting bracket. Remove Phillips screw and chrome frame tube cover.

    b. Carefully cut cable strap to release radio antenna cable from shoulder of upper frame tube (just in front of air valve mounting bracket). Cut cable strap to release radio antenna cable from slotted hole in rear fender support.

    c. At bottom of radio antenna bracket, rotate knurled ring to separate pin and socket halves of radio antenna cable connector [51].

    d. Draw radio antenna cable forward to area of fuse block bracket and allow to hang with other main harness branches.

    FLHX:

    a. On left side of motorcycle, remove bolt (with flat washer) to remove passenger seat strap and saddlebag front mounting bracket. Remove Phillips screw and chrome frame tube cover.

    b. Carefully cut cable strap to release radio antenna cable from shoulder of upper frame tube (just in front of air valve mounting bracket). Cut cable strap to release radio antenna cable from slotted hole in rear fender support.

    c. At bottom of radio antenna bracket, rotate knurled ring to separate pin and socket halves of radio antenna cable connector [51].

    d. Disconnect rear facia lamp connector [12], 3-place Multilock, inboard of upper frame tube.

    e. Draw radio antenna cable and rear facia lamp conconduit forward to area of fuse block bracket and allow to hang with other main harness branches.

    FLHTC/U:

    a. Open Tour-Pak and proceed as follows:

       FLHTC: Remove rubber mat.

       FLHTCU: Open map pocket and remove acorn nuts with flat washers. Remove map pocket and molded liner from Tour-Pak.

    b. On Ultra models, depress external latch and remove bulb socket from left side wrap-around light.

    c. Rotate knurled ring in a counterclockwise direction to separate pin and socket halves of radio antenna cable connector [51]. Release cable from two adhesive clips at bottom of Tour-Pak.

    d. On FLHTCU models, disconnect Tour-Pak lights connector [12], 3-place Multilock.

    e. Pull grommet into Tour-Pak and remove from main harness conduit.

    f. Pull Tour-Pak lights and radio antenna cable connectors through hole at front of Tour-Pak. Cut cable strap to release conduit from luggage rack rail.

    g. Draw Tour-Pak lights and radio antenna cable connectors forward to area of fuse block bracket and allow to hang with other main harness branches.

    h. For FLHTCU models only, see Section 8.37 AUDIO HARNESS (FLHTCU), REMOVAL, steps 10-17.
15. Carefully cut two cable straps securing main harness to left upper frame tube.
16. Cut anchored cable strap to release accessory connector [4] and B+ connector [160] from left side of frame crossmember (in front of battery box). See Figure 8-164.
17. Cut cable strap to release vapor valve from mounting bracket. Move vapor valve out of the way to facilitate harness removal.
18. Alternately feed branches of main harness hanging on left side of motorcycle into battery box through opening above fuse block bracket. For best results, feed one length of conduit through at a time drawing the fuse block through the opening last. Pulling branches out of battery box, allow conduit and connectors to hang on left side of frame backbone.
19. Moving to front right side of motorcycle, locate CKP sensor connector [79], 2-place Deutsch, fixed to bracket at bottom of voltage regulator. Push connector toward right side of motorcycle to disengage attachment clip from T-stud on bracket. Lift connector off T-stud. Depress button on socket terminal side and pull apart pin and socket halves.
20. Disconnect voltage regulator connector [77], 2-place Lyall, at bottom right side of voltage regulator. Proceed as follows:

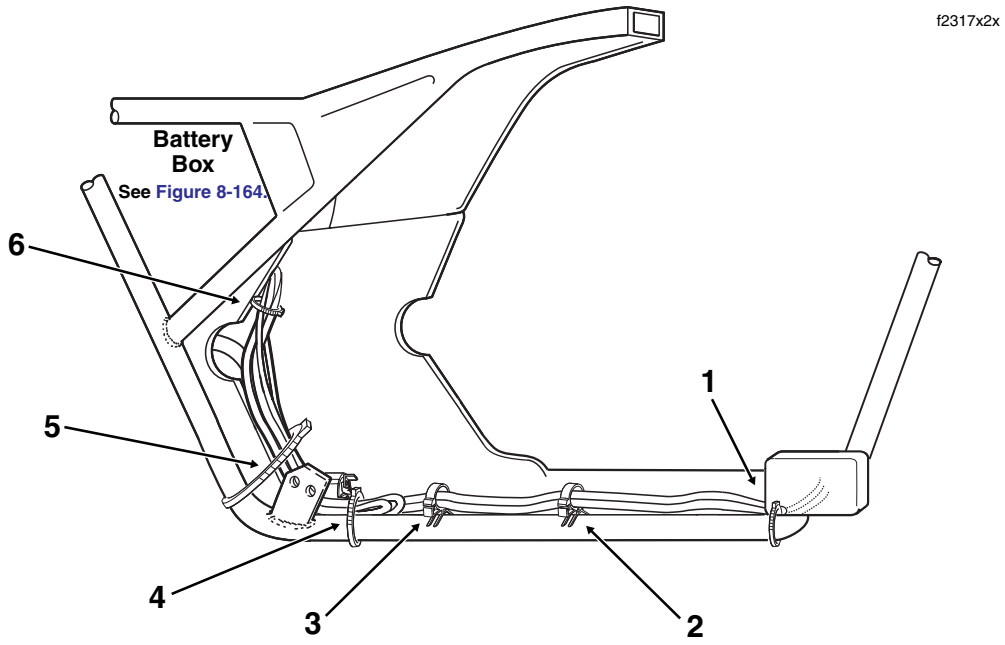

1. **Cable Strap: Captures Main Harness Conduit and Lower Frame Tube**
2. **Cable Clip: Captures Main Harness Conduit and Rear Brake Line**
3. **Cable Clip: Captures Main Harness Conduit and Rear Brake Line**
4. **Cable Strap: Captures Rear Brake Light Switch Wires, Main Harness Conduit and Lower Frame Tube**
5. **Cable Strap: Captures Main Harness Conduit and Frame Downtube**
6. **Anchored Cable Strap: Captures Main Harness Conduit, Neutral Switch Conduit and VSS Cable**

Figure 8-165. Cable Strap Locations (Right Side View)

a. Loosen locknuts on studs of lower frame crossmember.

b. Lift voltage regulator and release voltage regulator connector conduit and CKP sensor connector convoluted tubing from P-clip at front of right side leg of voltage regulator.

c. Pull away locking latch and remove socket of voltage regulator connector.

21. Locate oil pressure switch/sender at front right side of crankcase. On FLHR/C/S models, pull elbow from post of oil pressure switch. On FLHX, FLHT/C/U and FLTR models, remove Delphi connector from oil pressure sender.

22. Cut cable strap to free main harness conduit (leading to oil pressure sender and CKP sensor connectors) from inboard side of rear brake pedal weldment. See Figure 8-165.

23. Open two cable clips on lower frame tube T-studs. Free main harness conduit from cable clips.

NOTE

For best results, insert blade of small screwdriver into gap at side of clip and gently rotate end of screwdriver to pop open.

24. Remove starter solenoid connector [128] at top of starter housing.

25. Remove two elbow connectors from neutral switch posts.

26. Pull two socket terminals from spade contacts on rear brake light switch. Cut cable strap to free rear brake light switch wires from lower frame tube.

27. Cut cable strap at rear of rear brake light switch bracket to release main harness conduit from frame downtube.

28. Cut anchored cable strap in hole of frame downtube (inboard of rear swingarm bracket) to release VSS cable, main harness and neutral switch conduit.

29. Draw neutral switch wires out from under starter housing. For best results, reach in under right side of battery box.

30. Carefully pull voltage regulator, CKP sensor, oil pressure switch/sender, rear brake light switch, starter solenoid, and neutral switch conduit and connectors rearward and then feed up through opening at front of battery tray into battery box. See lower frame of Figure 8-162.

31. Slide wire trough forward/rearward to disengage slot at bottom from T-stud at center of frame backbone. Remove wire trough from motorcycle drawing conduit and connectors out of battery box.

INSTALLATION

INSTALLATION- ALL MODELS (PART I)

NOTE

Disregard references to radio antenna cable and starter relay connectors when working on FLHR/C/S models. The connectors are not part of the main harness on these motorcycles.

1. Position wire trough on motorcycle as follows: Lay wire trough on frame backbone so that front branches hang over top of right engine guard. Move left and right rear branches so that they hang over the left and right frame tubes. Slide wire trough as necessary until slot at bottom fully engages T-stud at center of frame backbone.

Left Side

2. Locate rear left side branches terminating in rear fender lights, ignition keyswitch and starter relays, TSM/TSSM, fuse block, cruise module (if equipped) and radio antenna cable connectors. Feed connectors and conduit into battery box pulling branches out through opening above fuse block bracket. Continue drawing harness out through opening until main harness ground ring terminal is adjacent to left side ground stud on frame crossmember. Allow connectors and conduit to hang on left side of motorcycle.

Right Side

3. Depending upon whether the motorcycle is carbureted or fuel injected, proceed as follows:

Carbureted:

a. Locate rear right side branches terminating in the ICM, data link, VSS, and security siren connectors.

b. Feed connectors and conduit into battery box pulling branches out through opening on right side. See lower frame of Figure 8-162. Allow connectors and conduit to hang on right side of motorcycle.

Fuel Injected:

a. Locate rear right side branches terminating in the ECM, fuse block, data link, VSS, and security siren connectors.

b. Carefully feed connectors and conduit into battery box and then pull out through opening on right side. See lower frame of Figure 8-162. Allow connectors and conduit to hang on right side of motorcycle.

c. Pull on main harness to eliminate slack and tuck conduit into space in front of the battery box TORX screw. See upper frame of Figure 8-162.

CAUTION

Damage to wires can result in electrical problems. Be sure that rubber boot is present on threaded end of battery box TORX screw. Replace rubber boot if absent or damaged. See upper frame of Figure 8-162.

4. Locate rear right side branches terminating in voltage regulator, CKP sensor, oil pressure switch/sender, rear brake light switch, starter solenoid, and neutral switch connectors. Feed connectors and conduit into battery box pulling branches down and out through opening in front of battery tray. Draw connectors and conduit downward following front of rear frame downtube, and then continue drawing harness out of battery box until two main harness ground ring terminals are adjacent to right side ground stud on frame crossmember.

5. Returning to left side of motorcycle, route horn conduit under the top engine mounting bracket to back of horn. Install elbow terminals onto horn spade contacts. Capture conduit in J-clamp. Slide horn bracket onto rubber mount stud and install acorn nut with flat washer. Tighten acorn nut to 80-100 **in-lbs** (9.0-11.3 Nm).

6. Slide two main harness ground ring terminals (with orange tape) onto left side ground stud on upper frame crossmember. Install flange nut (10 mm). Install main harness ground ring terminal (without orange tape), chassis ground ring terminal and flange nut (10 mm) onto right side ground stud. Tighten flange nuts to 50-90 **in-lbs** (5.7-10.2 Nm). See Figure 8-164.

7. Feed rear fender lights, ignition keyswitch and starter relays, and TSM/TSSM conduit and connectors through opening above rear of fuse block bracket to area in front of rear fender.

NOTE

On FLHX, FLHT/C/U and FLTR models, leave longer conduit of radio antenna cable hanging outboard of fuse block bracket.

8. Routing connector up between frame weldment and rear fender, mate pin and socket halves of rear fender lights connector [7], 8-place Multilock, and attach to anchor at front of rear fender.

9. At front of rear fender, feed ignition keyswitch and starter relay connectors up through rectangular shaped hole in frame weldment. Fit relay connectors into rubber molding and install anchors on molding into holes in frame weldment. Install relays in connectors.

10. Feed TSM/TSSM connector [30] up through hole on opposite side of frame weldment and connect to module. Install module into hole in frame weldment. Insert legs of spring clip into holes in weldment and push down until tab at front snaps in place.

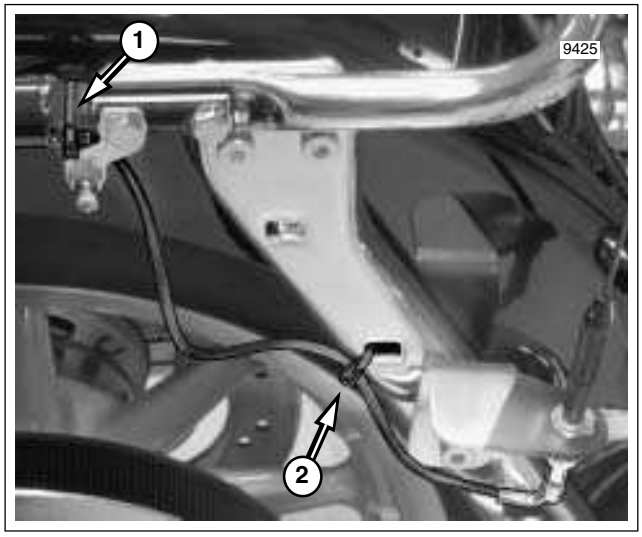

Figure 8-166. Capture Radio Antenna Cable (FLTR)

Figure 8-167. Capture Radio Antenna Cable (FLHX)

11. If cruise equipped, install grommets into holes on left side of battery box with the larger OD on the outboard side. Align threaded holes on inboard side of cruise module with holes in grommets and install flange bolts from inside battery box. Alternately tighten flange bolts to 60-96 **in-lbs** (6.8-10.9 Nm). Install cruise module connector [17] and engage locking latch.
12. Slide cover over fuse block until slots fully engage tabs on block. Slide fuse block into position on mounting bracket. Tabs on bracket fit into slots on each side of fuse block cover. Install **new** anchored cable strap in hole at rear of fuse block bracket. Tighten cable strap to capture fuse block conduit.
13. Route main power cable on maxi-fuse holder through opening above front of fuse block bracket and then forward passing under frame crossmember toward right side of motorcycle. Pull back boot at top of starter housing and install ring terminal on post. Install flange nut and tighten to 70-90 **in-lbs** (7.9-10.2 Nm). Capture cable in clip anchored to T-stud at front of battery tray.
14. Returning to left side of motorcycle, slide maxi-fuse cover forward to engage tongue in groove of fuse block cover and then insert maxi-fuse holder into cover until latches engage.
15. Install **new** anchored cable strap in lower hole on left side of frame crossmember (in front of battery box). Tighten cable strap to capture conduit of both accessory connector [4] and B+ connector [160] approximately one inch from connector housings. See Figure 8-164.
16. Hold vapor valve in position on right side of mounting bracket. From left side of bracket, insert end of small cable strap through hole in arm and then around body of vapor valve. Mate ends of cable strap and pull tight engaging strap in slot of arm. Cut any excess cable strap material.
17. Depending upon model, proceed as follows:

    FLHR/C/S: Move to step 18.

    FLHX:

    a. Feed radio antenna cable and rear facia lamp wires rearward following inboard side of upper frame tube.
    b. Mate pin and socket housings of rear facia lamp connector [12], 3-place Multilock.
    c. Install **new** cable strap to secure rear facia lamp wires and radio antenna cable to shoulder of upper frame tube (just in front of air valve mounting bracket).
    d. Using slotted hole, install **new** cable strap to secure rear facia lamp wires and radio antenna cable to rear fender support. See Figure 8-167.
    e. At bottom of radio antenna bracket, rotate knurled ring to mate pin and socket halves of radio antenna cable connector [51].
    f. Install chrome frame tube cover on frame tube. Install Phillips screw and tighten to 25-40 **in-lbs** (2.8-4.5 Nm). Install bolt (with flat washer) to fasten saddlebag front mounting bracket and passenger seat strap to chrome frame tube cover.

    FLHTC/U:

    a. Feed Tour-Pak lights and radio antenna cable connectors and conduit through hole at front of Tour-Pak. Capture cable and conduit in grommet. Install grommet in hole with the larger OD facing inside.
    b. Connect Tour-Pak lights connector [12], 3-place Multilock.
    c. Rotate knurled ring in a clockwise direction to mate pin and socket halves of radio antenna cable connector [51]. Capture cable in two adhesive clips at bottom of Tour-Pak.

d. On Ultra models, install bulb socket of left side wrap-around light.

e. Loosely install **new** cable strap to secure main harness conduit to luggage rack rail.

f. Proceed as follows:

FLHTC: Install rubber mat in Tour-Pak. Close Tour-Pak.

FLHTCU: See Section 8.37 AUDIO HARNESS (FLHTCU), INSTALLATION, steps 9-17. Install molded liner in Tour-Pak. Install map pocket and secure using acorn nuts (with flat washers). Close Tour-Pak.

FLTR:

a. Feed radio antenna cable and connector rearward following inboard side of upper frame tube. With the 3-place Multilock connector (unused) positioned about as far rearward as the rear shock air valve, install **new** cable strap to secure radio antenna cable to shoulder of upper frame tube (just in front of air valve mounting bracket). Using slotted hole, install **new** cable strap to secure radio antenna cable to rear fender support. See Figure 8-166.

b. At bottom of radio antenna bracket, rotate knurled ring to mate pin and socket halves of radio antenna cable connector [51].

c. Install chrome frame tube cover on frame tube. Install Phillips screw and tighten to 25-40 **in-lbs** (2.8-4.5 Nm). Install bolt (with flat washer) to fasten saddlebag front mounting bracket and passenger seat strap to chrome frame tube cover.

18. Returning to right side of motorcycle, feed voltage regulator, oil pressure switch/sender and CKP sensor connectors and conduit downward between rear swingarm and oil filler spout until free ends hang below lower frame tube.

19. Route neutral switch wires under starter housing to transmission top cover. For best results, reach in under right side of battery box. Install two elbow connectors onto posts of neutral switch.

20. Install starter solenoid connector [128] at top of starter housing.

21. Install **new** anchored cable strap in hole of frame downtube (inboard of rear swingarm bracket) capturing VSS cable, main harness and neutral switch conduit. See Figure 8-165.

22. Install **new** cable strap at rear of rear brake light switch bracket capturing main harness conduit and frame downtube. Cut any excess cable strap material.

23. Install two socket terminals onto spade contacts of rear brake light switch. Install **new** cable strap to secure rear brake light switch wires to lower frame tube.

24. Route branch of the main harness terminating in the voltage regulator, oil pressure sender and CKP sensor connectors forward to front of motorcycle following inboard side of lower frame tube.

25. Capture main harness conduit in two cable clips on lower frame tube T-studs. Snap cable clips closed.

NOTE

In addition to the main harness conduit, cable clips also captures rear brake line.

26. Route main harness conduit inboard of rear brake pedal weldment. Capturing main harness conduit and lower frame tube, install **new** cable strap through opening in rear brake pedal weldment. See Figure 8-165. Cut any excess cable strap material.

27. Route oil pressure switch/sender connector upward at rear of lower frame crossmember. Route voltage regulator and CKP sensor connectors upward at front of lower frame crossmember.

28. Install voltage regulator connector [77], 2-place Lyall, at bottom right side of voltage regulator. Then proceed as follows:

a. Push against locking latch until socket is fully engaged.

b. Capture voltage regulator connector conduit and CKP sensor connector convoluted tubing in P-clip at front of right side leg of voltage regulator.

c. Alternately tighten locknuts on studs of lower frame crossmember to 70-100 **in-lbs** (7.9-11.3 Nm).

29. Connect CKP sensor connector [79]. Place large end of slot on attachment clip over T-stud on bracket at bottom of voltage regulator. Push connector toward left side of motorcycle to engage small end of slot.

30. Install oil pressure switch/sender connector at front right side of crankcase. On FLHR/C/S models, install elbow connector on post terminal. On FLHX, FLHT/C/U and FLTR models, install 4-place Delphi connector.

31. Connect VSS connector [65]. Route VSS and security siren connectors and conduit on inboard side of electrical bracket as shown in Figure 8-161.

32. Slide electrical bracket onto studs at side of battery box. Be sure that conduit is properly routed on inboard side of electrical bracket or wires may be pinched during installation. Install flange nuts and tighten to 36-48 **in-lbs** (4.1-5.4 Nm).

33. Depending upon whether the motorcycle is carbureted or fuel injected, proceed as follows:

Carbureted:

a. Install ICM connector [10].

b. Verify that protective plug is installed in data link connector [91]. With the plug side down and in contact with tab, position connector between arms on electrical bracket.

Fuel Injected:

a. Engage tabs on fuse block [119] with slots in electrical bracket. Slide fuse block up into cavity. Gently tug on conduit to verify that fuse block is locked in place.

b. Install ECM connector [78].

c. Verify that protective plug is installed in data link connector [91]. With the plug side down and in contact with tab, position connector between arms on electrical bracket.

34. Depending upon whether the motorcycle is carbureted or fuel injected, proceed as follows:

Carbureted:

a. Install ignition coil connector [83] onto left side of ignition coil.

b. Install MAP sensor connector [80].

Fuel Injected:

a. Install rear fuel injector connector [85]. See Figure 8-163.

b. Install IAT sensor connector [89] and TP sensor connector [88].

c. Install MAP sensor connector [80] and IAC connector [87].

d. Install front fuel injector connector [84]. See Figure 8-163.

e. Feed ignition coil and ET sensor connectors to left side of vehicle, routing the first in front of the top engine stabilizer link, the latter to the rear.

f. Install ignition coil connector [83] onto left side of ignition coil.

g. Install ET sensor connector [90] at back of front cylinder. Pull boot over sensor to keep out dirt and debris. Install **new** cable strap to secure connector conduit to horn bracket.

h. Install backplate and air cleaner. See Section 4.5 AIR CLEANER, INSTALLATION.

35. If cruise equipped, install cruise roll-off switch as follows:

a. Separate the cruise roll-off switch wires up to the point where they enter the main harness conduit.

b. Orient the idle cable so that the switch spade terminals are at the top.

c. Slide the insulators onto the switch spade terminals (polarity is not a factor). For maximum insertion, be sure that the external step on the insulators face each other.

d. Fit the rubber boot over the cruise control roll-off switch. An oval cut in the boot accommodates the switch spade terminal connections.

36. Install two **new** cable straps to secure main harness to left upper frame tube. Cut any excess cable strap material. See Figure 8-168.

NOTE

Depending upon model, continue procedure at INSTALLATION- FLHR/C/S (PART II), INSTALLATION- FLTR (PART II), or INSTALLATION- FLHX, FLHT/C/U (PART II).

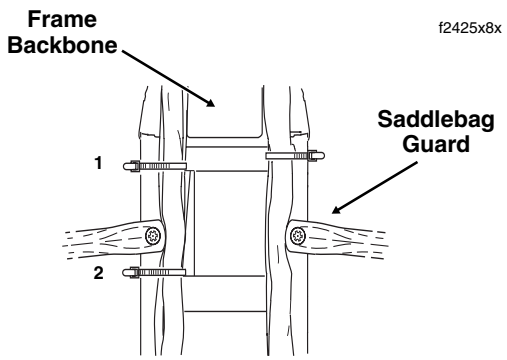

1 2 Captures main harness, audio harness (FLHTCU only), console pod conduit (FLHTCU only) and upper frame tube.

Figure 8-168. Capture Main Harness Conduit

INSTALLATION- FLHR/C/S (PART II)

1. Carefully feed main harness conduit and connectors forward under right side of instrument nacelle (keeping outboard of the front brake line).

2. Install P-clamp on main harness bundle. Install screw to fasten P-clamp to right side of steering head.

3. Moving to front of motorcycle, reach inside headlamp nacelle and install screw to fasten harness ground ring terminal and brake line P-clamp to front of upper fork bracket.

4. See Figure 8-156. Connect main harness as follows:

- Front fender tip lamp connector [32], 2-place Multilock (black); used on FLHR only.
- Auxiliary lamps connector [73], 2-place Multilock (white); used on FLHR/C only.
- Auxiliary lamps switch connector [109], 4-place Amp; used on FLHR/C only.
- Accessory switch connector [67], 4-place Amp.
- Right handlebar switch controls connector [22], 6-place Deutsch (black); T-stud on fork stem nut lock plate (left side).
- Cruise set/resume switch connector [159], 2-place Deutsch (black); used on FLHRC only.
- Front turn signal lamps connector [31], 6-place Multilock; anchored in hole of fork stem nut lock plate (left side).
- Left handlebar switch controls connector [24], 6-place Deutsch (gray); T-stud on fork stem nut lock plate (left side).
- Cruise on/off switch connector [158], 2-place Deutsch (gray); used on FLHRC only.

5. Install the headlamp assembly. See Section 8.11 HEADLAMP (FLHR/C/S, FLHX, FLHT/C/U), HEADLAMP ASSEMBLY, INSTALLATION.

6. See Figure 8-157. Moving to inboard side of instrument console, connect main harness as follows:
   - Ignition/light key switch connector [33], 3-place Packard.
   - Indicator lights connector [21], 8-place Deutsch.
   - Speedometer connector [39], 12-place Packard.
7. Slide odometer reset switch through hole in instrument console and install rubber boot.
8. Bend flexible clamps on inboard side of instrument console as necessary to capture main harness conduit.

NOTE

Continue procedure at INSTALLATION- ALL MODELS (PART III).

INSTALLATION- FLHX, FLHT/C/U (PART II)

1. Moving to right engine guard, carefully feed main harness conduit and connectors forward under right side of fairing cap to front of inner fairing.
2. See Figure 8-158. Connect ignition/light key switch connector [33], 3-place Packard, at front of ignition switch housing. Then proceed as follows:
   a. Using oblong holes in fairing brackets and a long shank ball end socket (Snap-on® FABL6E), install four socket head screws to fasten radio (storage box on FLHT) to left and right radio support brackets. Alternately tighten screws to 35-45 **in-lbs** (4.0-5.1 Nm). See Figure 8-159.
   b. Install **new** anchored cable strap in hole at bottom right corner of radio. Tighten cable strap to capture main harness conduit to ignition/light key switch. Cut any excess cable strap material.
3. See Figure 8-158. Connect radio antenna cable. Proceed as follows:
   - Radio antenna cable connector [51]; back of radio (left side).
4. See Figure 8-158. Standing at front of motorcycle, mate pin and socket halves of the following connectors and fix positions using retaining devices:
   - Main to interconnect harness connector [1], 12-place Deutsch (black); T-stud on right radio support bracket.
   - Main to interconnect harness connector [2], 12-place Deutsch (gray); T-stud on right fairing support brace (middle).
   - Main to interconnect harness connector [15], 4-place Packard (black); anchored in hole at front of right fairing bracket.
   - Main to interconnect harness connector [156], 6-place Deutsch (gray); T-stud on right fairing support brace (inboard side).
5. Using oval shaped hole in right fairing bracket, install **new** cable strap capturing convoluted tubing of interconnect harness and conduit of main to interconnect harness connectors [1], [2], [15] and [156].
6. For FLHTCU models only, see AUDIO HARNESS, INSTALLATION, steps 6-7.
7. Install P-clamp on main harness (and audio harness on FLHTCU models). Install main harness ground ring terminal onto screw and fasten P-clamp to right side of steering head.
8. Install the outer fairing and windshield. See Section 2.30 UPPER FAIRING/WINDSHIELD (FLHX, FLHT/C/U), OUTER FAIRING/WINDSHIELD, INSTALLATION.

NOTE

Continue procedure at INSTALLATION- ALL MODELS (PART III).

INSTALLATION- FLTR (PART II)

1. Install P-clamp on main harness bundle. Install two main harness ground ring terminals onto screw and fasten P-clamp to right side of steering head.
2. Install the inner fairing. See Section 2.31 UPPER FAIRING/WINDSHIELD (FLTR), INNER FAIRING, INSTALLATION, steps 3-22.

NOTE

Continue procedure at INSTALLATION- ALL MODELS (PART III).

INSTALLATION- ALL MODELS (PART III)

1. Place battery in battery box, terminal side forward. Rotate the hold-down clamp so that the lip (with rubber pad) rests on the edge of the battery. Tighten T40 TORX screw to 15-20 ft-lbs (20-27 Nm).

⚠WARNING

Always connect the positive battery cable first. If the positive cable should contact ground with the negative cable installed, the resulting sparks may cause a battery explosion which could result in death or serious injury.

2. Insert bolt through battery positive cable (red) into threaded hole of battery positive (+) terminal. Tighten bolt to 60-96 **in-lbs** (6.8-10.9 Nm).
3. Insert bolt through battery negative cable (black) into threaded hole of battery negative (-) terminal. Tighten bolt to 60-96 **in-lbs** (6.8-10.9 Nm).
4. Align barbed studs in left side cover with grommets in frame downtubes and push firmly into place (no tools required).

5. Install left side saddlebag. See Section 2.26 SADDLEBAG, INSTALLATION.

6. Repeat steps 4-5 to install right side saddlebag and side cover.

7. Install fuel tank. For carbureted models, see Section 4.7 FUEL TANK (CARBURETED), INSTALLATION (AFTER COMPLETE REMOVAL), FLHX, FLHT or FLHR/S. For fuel injected models, see Section 9.4 FUEL TANK (FUEL INJECTED), INSTALLATION (AFTER COMPLETE REMOVAL), FLHXI, FLHT/C/U/I, FLTRI or FLHR/C/S/I.

FRAME GROUND STUD REPLACEMENT

1. Remove seat. See Section 2.25 SEAT, REMOVAL.

2. Locate threaded hole between ground studs. See Figure 8-169. Thoroughly scrape away all paint from around threaded hole.

3. Moving to front of frame crossmember, thoroughly scrape away all paint on face of threaded boss.

4. Obtain five parts shown in Figure 8-170.

5. Start hex screw into threaded boss and tighten to 90-120 **in-lbs** (10.2-13.6 Nm).

6. At rear of frame crossmember, install flat washer and lockwasher onto threaded end of hex screw. Install hex nut and tighten to 90-120 **in-lbs** (10.2-13.6 Nm).

7. If replacing left side ground stud, slide two main harness ground ring terminals (with orange tape) onto hex screw. If replacing right side ground stud, install main harness ground ring terminal (without orange tape) and chassis ground ring terminal.

8. Install jam nut onto hex screw and tighten to 50-90 **in-lbs** (5.7-10.2 Nm).

9. Install seat. See Section 2.25 SEAT, INSTALLATION.

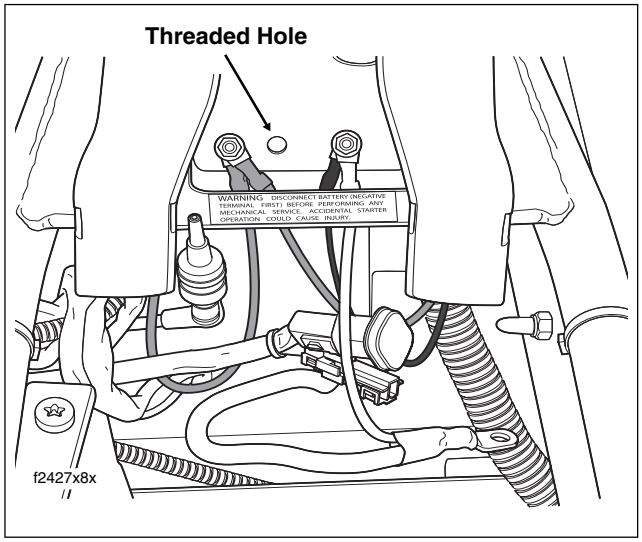

Figure 8-169. Remove Seat

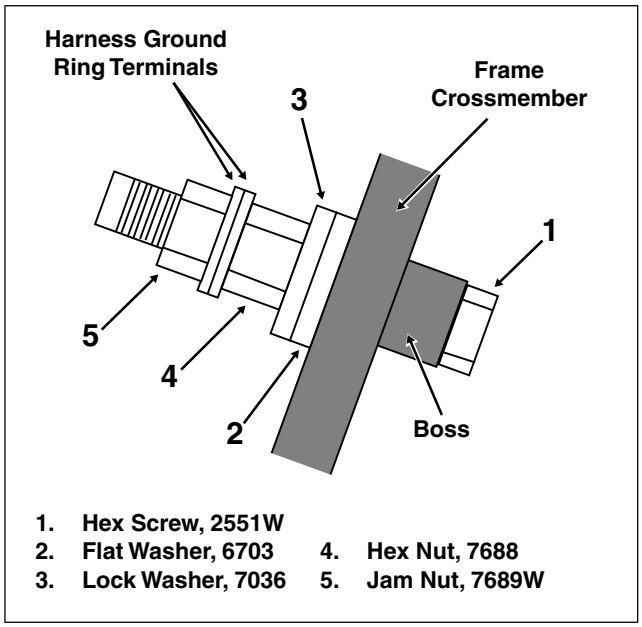

Figure 8-170. Install New Frame Ground Stud

FLHX, FLHT/C/U

REMOVAL

NOTE

When referencing inner fairing locations, the term "fairing bracket" refers to either the left or right vertical support, while the term "support brace" refers to either the left or right horizontal support. References to left and right always refers to left and right side of motorcycle.

1. Remove maxi-fuse. See Section 8.3 SYSTEM FUSES, MAXI-FUSE, REMOVAL.
2. Remove the outer fairing and windshield. See Section 2.30 UPPER FAIRING/WINDSHIELD (FLHX, FLHT/C/U), OUTER FAIRING/WINDSHIELD, REMOVAL.
3. Release anchors on convoluted tubing of interconnect harness from lower outboard ears of speedometer and tachometer brackets. See Figure 8-171. For best results, squeeze anchor with needle nose pliers before pulling from hole in ear.
4. Remove anchor on convoluted tubing of headlamp connector from hole in left fairing bracket. See Figure 8-174.
5. On opposite side of inner fairing, remove anchor on conduit of fairing cap switch connector from hole in lower wing of right side radio support bracket. See Figure 8-175.
6. Cut cable strap to release convoluted tubing of interconnect harness and conduit of main to interconnect harness connectors [1], [2], [15] and [156] from right fairing bracket. See Figure 8-176.
7. Remove connectors from their retaining devices, if present, and disconnect pin and socket halves. See Figure 8-172.
   a. Main to interconnect harness connector [2], 12-place Deutsch (gray); T-stud on right fairing support brace (middle).
   b. Main to interconnect harness connector [156], 6-place Deutsch (gray); T-stud on right fairing support brace (inboard side).
   c. Radio connector [27], 23-place Amp (black); back of radio (right side).
   d. Indicator lamps connector [21]; 10-place Multilock (black); above radio (between speedometer and tachometer gauges).

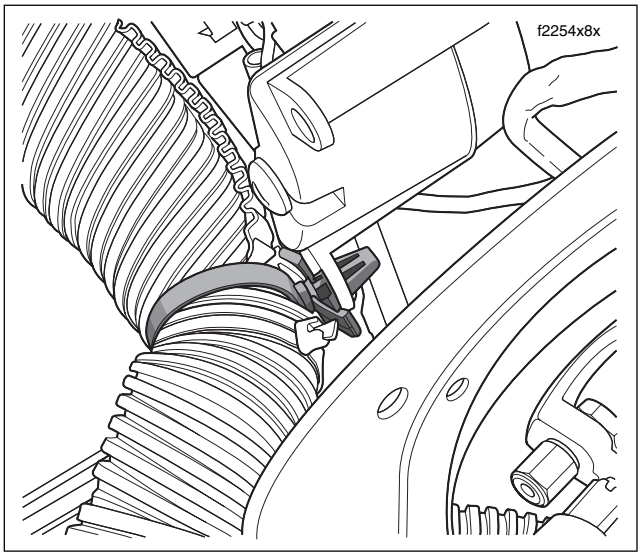

Figure 8-171. Anchor Interconnect Harness in Lower Ears of Speedometer/Tachometer Brackets

   e. Speedometer connector [39]; 12-place Packard (black); back of speedometer. Unthread rubber boot from odometer reset switch and pull switch from hole in inner fairing.
   f. Tachometer connector [108]; 12-place Packard (gray); back of tachometer.
   g. Ambient temperature sensor connector [107], if present; 3-place Multilock (black); anchored in hole on outboard side of left fairing bracket.
   h. Left handlebar switch controls connector [24], 12-place Deutsch (gray); T-stud on left fairing support brace (inboard side).
   i. Left front turn signal/auxiliary lamp connector [31L], 4-place Multilock (black); T-stud on left fairing support brace (outboard side).
   j. Right front turn signal/auxiliary lamp connector [31R], 4-place Multilocks (black); T-stud on right fairing support brace (outboard side).
   k. Main to interconnect harness connector [1], 12-place Deutsch (black); T-stud on right radio support bracket.
   l. Main to interconnect harness connector [15], 4-place Packard (black); anchored in hole at front of right fairing bracket.
   m. Fairing cap switch connector [105], 12-place Multilock (black); top of upper fork bracket (right side).

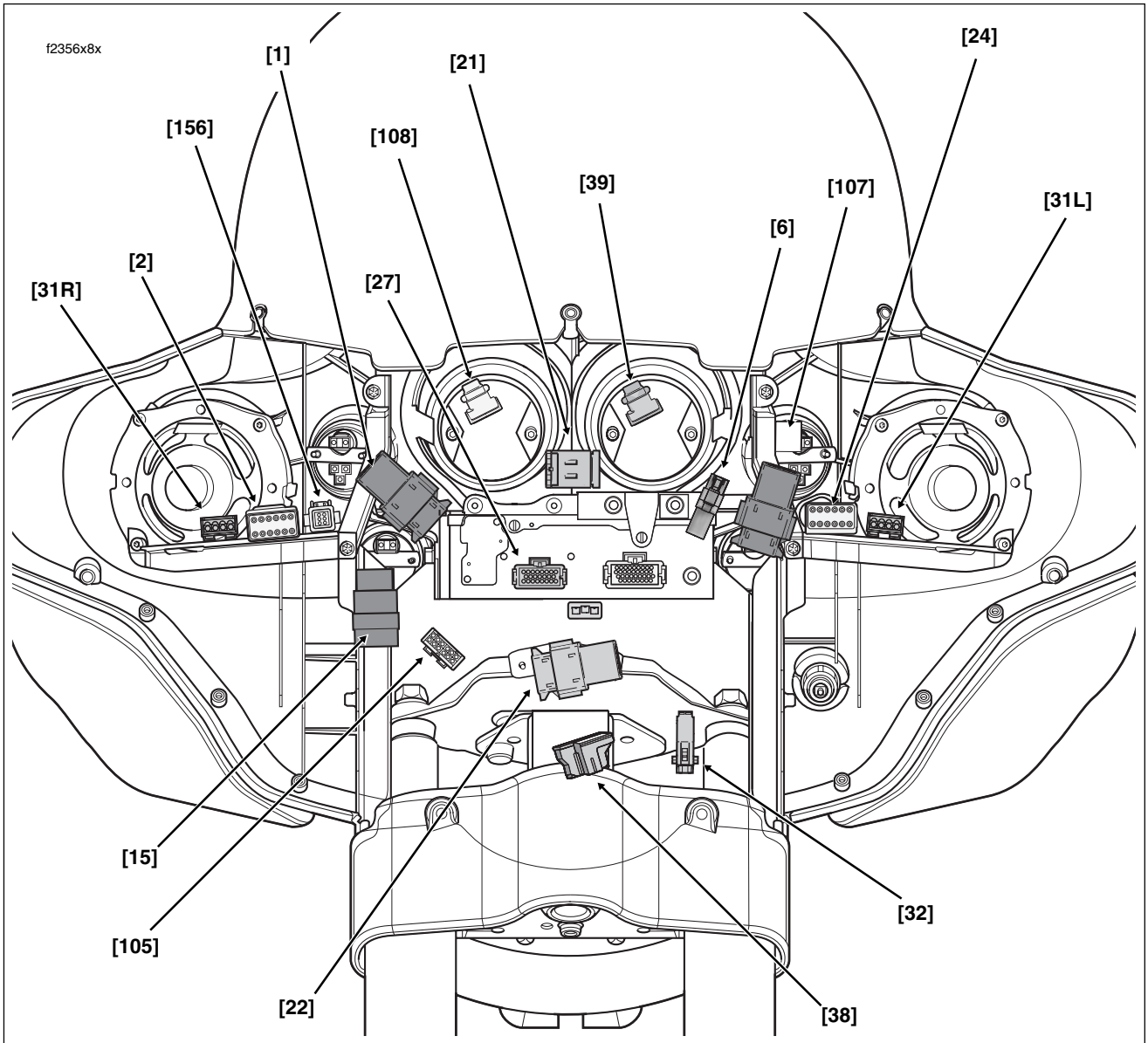

	[22] Right Handlebar Switches	[38] Headlamp
[1] Main to Interconnect Harness	[24] Left Handlebar Switches	[39] Speedometer Gauge
[2] Main to Interconnect Harness	[27] Radio	[105] Fairing Cap Switches
[6] Audio to Interconnect Harness	[31L] Left Front Turn Signal/Aux Lamp	[107] Ambient Temperature Sensor
[15] Main to Interconnect Harness	[31R] Right Front Turn Signal/Aux Lamp	[108] Tachometer Gauge
[21] Indicator Lamps	[32] Front Fender Tip Lamp	[156] Main to Interconnect Harness

Figure 8-172. Inner Fairing - Interconnect Harness Connectors (FLHX, FLHT/C/U)

n. Right handlebar switch controls connector [22], 12-place Deutsch (black); T-stud on fork stem nut lock-plate (left side).

o. Audio to interconnect harness connector [6], if present; 6-place Deutsch (black); top of radio (left side).

p. Front fender tip lamp jumper harness connector [32], 2-place Multilock (black); below upper fork bracket (left side).

8. See Figure 8-173. Remove connectors from spade contacts as follows:

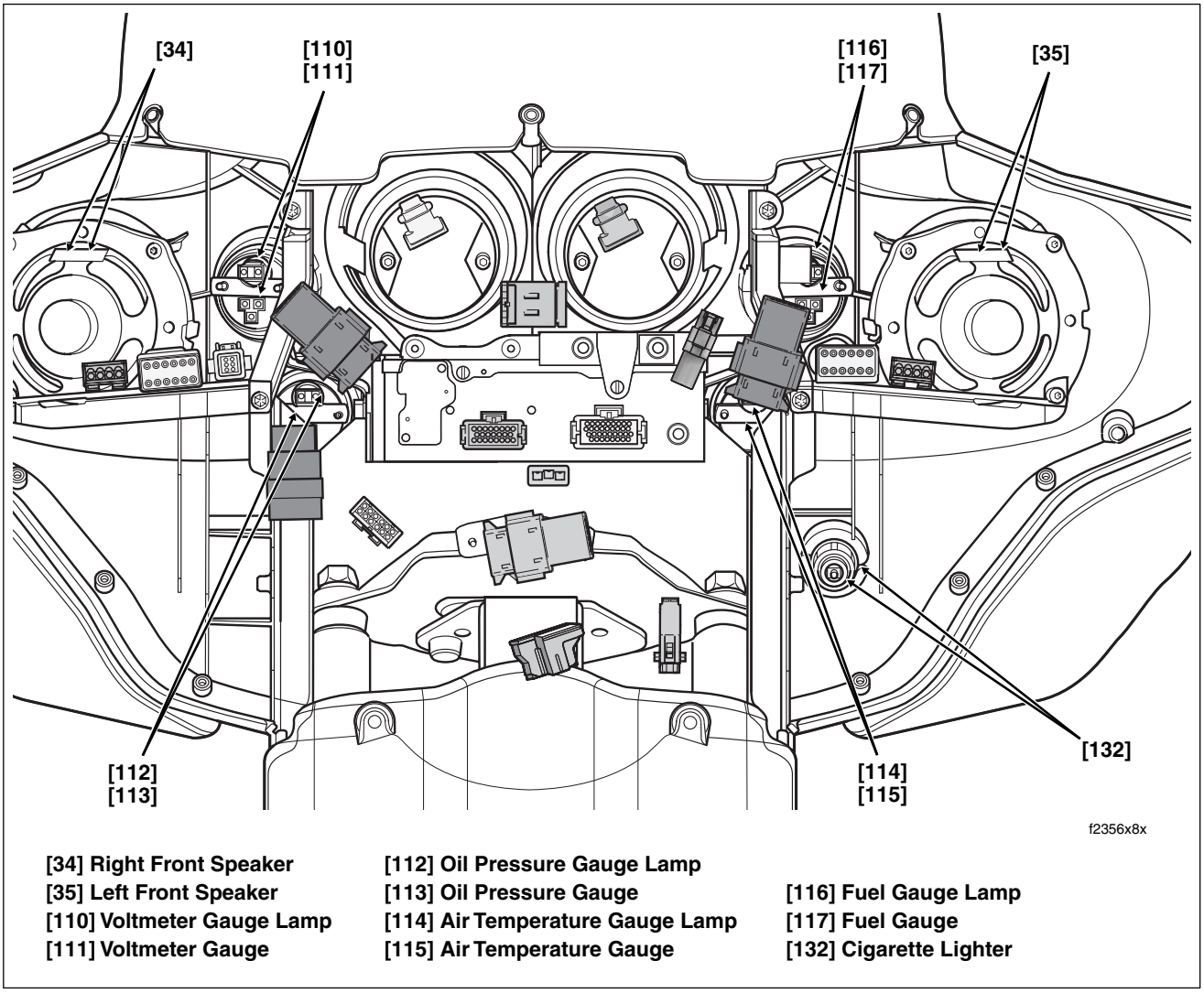

Figure 8-173. Inner Fairing - Interconnect Harness Connectors (FLHX, FLHTC/U)

Left side:

- Left front speaker [35]
- Fuel gauge [117] and lamp [116]
- Cigarette lighter [132]

9. Feed conduit (with orange tape) terminating in left side speaker, fuel gauge, cigarette lighter and front turn signal connectors to mid section of inner fairing (area between left and right fairing brackets). Also feed conduit terminating in left handlebar switch controls connector [24] to mid section.
10. Pull harness ground socket terminal from spade contact fastened to top of upper fork bracket (left side).
11. See Figure 8-173. Remove connectors from spade contacts as follows:

Right side:

- Right front speaker [34]
- Voltmeter gauge [111] and lamp [110]

12. Feed conduit (with orange tape) terminating in right side speaker and voltmeter gauge connectors to mid section of inner fairing (area between left and right fairing brackets). Also feed conduit terminating in main to interconnect harness connectors [2] and [156] to mid section.
13. If present, remove connectors from spade contacts as follows:
    - Oil pressure gauge [113] and lamp [112]
    - Air temperature gauge [115] and lamp [114]
14. Remove interconnect harness from motorcycle.

INSTALLATION

NOTE

When referencing inner fairing locations, the term "fairing bracket" refers to either the left or right vertical support, while the term "support brace" refers to either the left or right horizontal support. References to left and right always refers to left and right side of motorcycle.

1. Center interconnect harness on top of radio. To verify proper orientation, be sure that convoluted tubing (with anchor) of headlamp connector is on left side of motorcycle, while conduit (with anchor) of fairing cap switch connector is on the right.
2. Install anchors on convoluted tubing of interconnect harness into lower outboard ears of speedometer and tachometer brackets. See Figure 8-171.
3. If present, install connectors onto spade contacts as follows:
   - Oil pressure gauge [113] and lamp [112]
   - Air temperature gauge [115] and lamp [114]
4. From mid section of inner fairing (area between left and right fairing brackets), feed conduit (with orange tape) terminating in left side speaker, fuel gauge, cigarette lighter and front turn signal connectors behind left fairing bracket to area of left support brace.
5. Install connectors onto spade contacts as follows:

   Left side:
   - Left front speaker [35]
   - Fuel gauge [117] and lamp [116]
   - Cigarette lighter [132]; connect the orange/white wire socket terminal to the socket spade contact, the black wire socket terminal to the shell contact.
6. From mid section of inner fairing (area between left and right fairing brackets), also feed conduit terminating in left handlebar switch controls connector [24] behind left fairing bracket to area of left support brace.
7. Push harness ground socket terminal onto spade contact fastened to top of upper fork bracket (left side).
8. From mid section of inner fairing, feed conduit (with orange tape) terminating in right side speaker and voltmeter gauge connectors behind right fairing bracket to area of right support brace.
9. Install connectors onto spade contacts as follows:

   Right side:
   - Right front speaker [34]
   - Voltmeter gauge [111] and lamp [110]
10. From mid section of inner fairing, also feed conduit terminating in main to interconnect harness connectors [2] and [156] behind right fairing bracket to area of right support brace.
11. Mate pin and socket halves of the following connectors and fix positions using retaining devices, if present:
    a. Main to interconnect harness connector [2], 12-place Deutsch (gray); T-stud on right fairing support brace (middle).
    b. Main to interconnect harness connector [156], 6-place Deutsch (gray); T-stud on right fairing support brace (inboard side).
    c. Radio connector [27], 23-place Amp (black); back of radio (right side).
    d. Indicator lamps connector [21]; 10-place Multilock (black); above radio (between speedometer and tachometer gauges).
    e. Speedometer connector [39]; 12-place Packard (black); back of speedometer. Slide odometer reset switch through hole in inner fairing and install rubber boot.
    f. Tachometer connector [108]; 12-place Packard (gray); back of tachometer.
    g. Ambient temperature sensor connector [107], if present; 3-place Multilock (black); anchored in hole on outboard side of left fairing bracket.
    h. Left handlebar switch controls connector [24], 12-place Deutsch (gray); T-stud on left fairing support brace (inboard side).
    i. Left front turn signal/auxiliary lamp connector [31L], 4-place Multilock (black); T-stud on left fairing support brace (outboard side).
    j. Right front turn signal/auxiliary lamp connector [31R], 4-place Multilocks (black); T-stud on right fairing support brace (outboard side).
    k. Main to interconnect harness connector [1], 12-place Deutsch (black); T-stud on right radio support bracket.
    l. Main to interconnect harness connector [15], 4-place Packard (black); anchored in hole at front of right fairing bracket.
    m. Fairing cap switch connector [105], 12-place Multilock (black); top of upper fork bracket (right side).
    n. Right handlebar switch controls connector [22], 12-place Deutsch (black); T-stud on fork stem nut lockplate (left side).
    o. Audio to interconnect harness connector [6], if present; 6-place Deutsch (black); top of radio (left side).
    p. Front fender tip lamp jumper harness connector [32], 2-place Multilock (black); below upper fork bracket (left side).
12. Install anchor on convoluted tubing of headlamp connector into hole in left fairing bracket. See Figure 8-174.
13. On opposite side of inner fairing, install anchor on conduit of fairing cap switch connector into hole in lower wing of right side radio support bracket. See Figure 8-175.

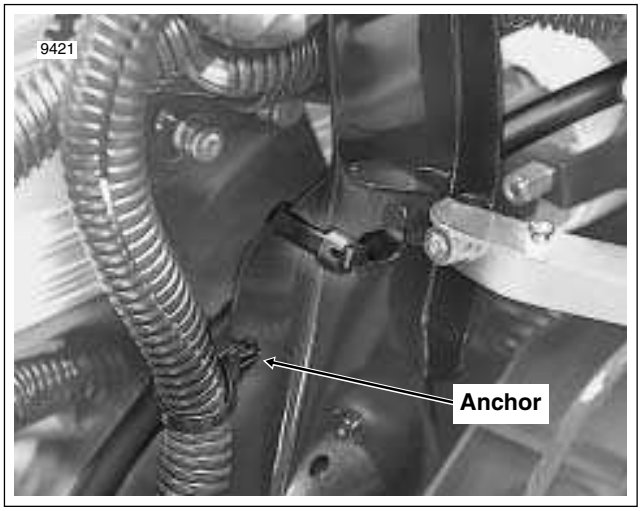

Figure 8-174. Anchor Convoluted Tubing of Headlamp Connector

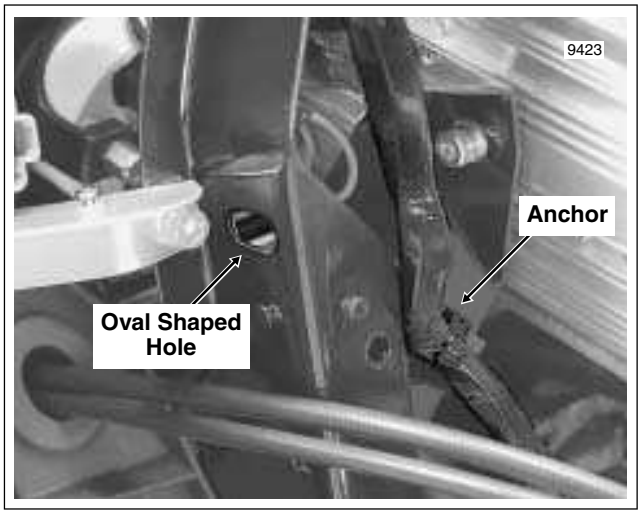

Figure 8-175. Anchor Conduit of Fairing Cap Switch Connector

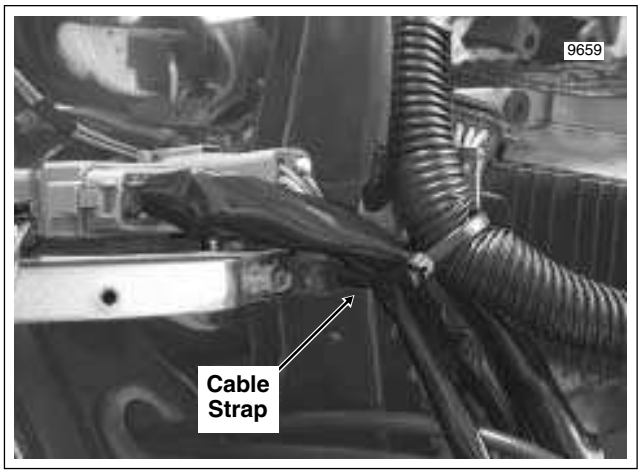

Figure 8-176. Cable Strap Convoluted Tubing and Conduit to Fairing Bracket

14. Using oval shaped hole in right fairing bracket, install **new** cable strap capturing convoluted tubing of interconnect harness and conduit of main to interconnect harness connectors [1], [2], [15] and [156]. See Figure 8-175 and Figure 8-176.
15. Install the windshield and outer fairing. See Section 2.30 UPPER FAIRING/WINDSHIELD (FLHX, FLHT/C/U), OUTER FAIRING/WINDSHIELD, INSTALLATION.
16. Install maxi-fuse. See Section 8.3 SYSTEM FUSES, MAXI-FUSE, INSTALLATION.

FLTR

REMOVAL

1. Remove maxi-fuse. See Section 8.3 SYSTEM FUSES, MAXI-FUSE, REMOVAL.
2. Place protective material on top of front fender to protect paint from scratches or other damage.
3. Remove the outer fairing and windshield. See Section 2.31 UPPER FAIRING/WINDSHIELD (FLTR), OUTER FAIRING, REMOVAL.
4. Carefully cut two cable straps to free wire bundles and conduit from convoluted tubing of interconnect harness and allow to hang naturally. See Figure 8-179.
5. See Figure 8-177. Disconnect main harness from interconnect harness as follows:
   - Main to interconnect harness connector [1], 12-place Deutsch (black); below radio (right side).
   - Main to interconnect harness connector [2], 12-place Deutsch (gray); below radio (right side).
   - Main to interconnect harness connector [15], 4-place Packard (black); below radio (right side).
   - Main to interconnect harness connector [156], 6-place Deutsch (gray); below radio (right side).
6. See Figure 8-177. Disconnect handlebar switch controls from interconnect harness. Disconnect radio and radio ground. Proceed as follows:
   - Left handlebar switch controls connector [24], 12-place Deutsch (gray); T-stud on left side of radio bracket.
   - Right handlebar switch controls connector [22], 12-place Deutsch (black); T-stud on left side of radio bracket.

NOTE

Push on each handlebar connector to disengage small end of slot on attachment clip from T-stud on radio bracket. Lift connector off T-stud.

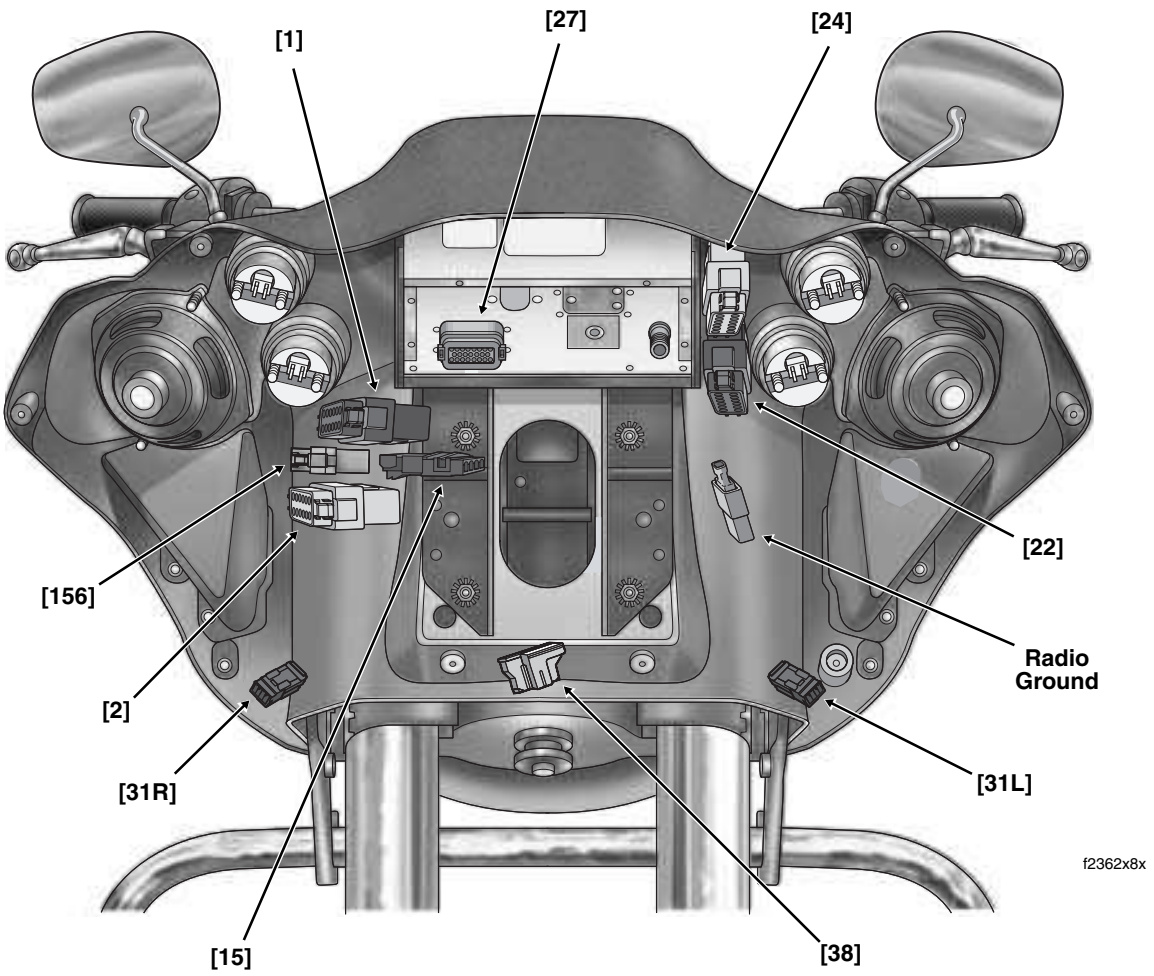

[1] Main to Interconnect Harness
[2] Main to Interconnect Harness
[15] Main to Interconnect Harness
[22] Right Handlebar Switch Controls
[24] Left Handlebar Switch Controls
[27] Radio
[31L] Left Turn Signal
[31R] Right Turn Signal
[38] Headlamp
[156] Main to Interconnect Harness

Figure 8-177. Inner Fairing - Interconnect Harness Connectors (FLTR)

- Radio connector [27], 23-place Amp (black); back of radio (right side).
- Radio ground; single spade and socket terminal; below radio (left side).

7. Remove left side of instrument nacelle. See Section 2.31 UPPER FAIRING/WINDSHIELD (FLTR), INSTRUMENT NACELLE, REMOVAL, steps 1-6.
8. See Figure 8-178. Disconnect instrument nacelle switches and ambient temperature sensor from interconnect harness as follows:
   - Instrument nacelle switch connector [105], 12-place Multilock.
   - Ambient temperature sensor connector [107], 3-place Multilock.
9. See Figure 8-178. Draw branches of interconnect harness (terminating in odometer reset switch and speedometer, tachometer, indicator lamps, instrument nacelle switch and ambient temperature sensor connectors) from instrument nacelle through tunnel of fairing bracket to front of inner fairing. Allow the interconnect harness to hang along the left side of the front fender.
10. Remove connectors from spade contacts as follows:

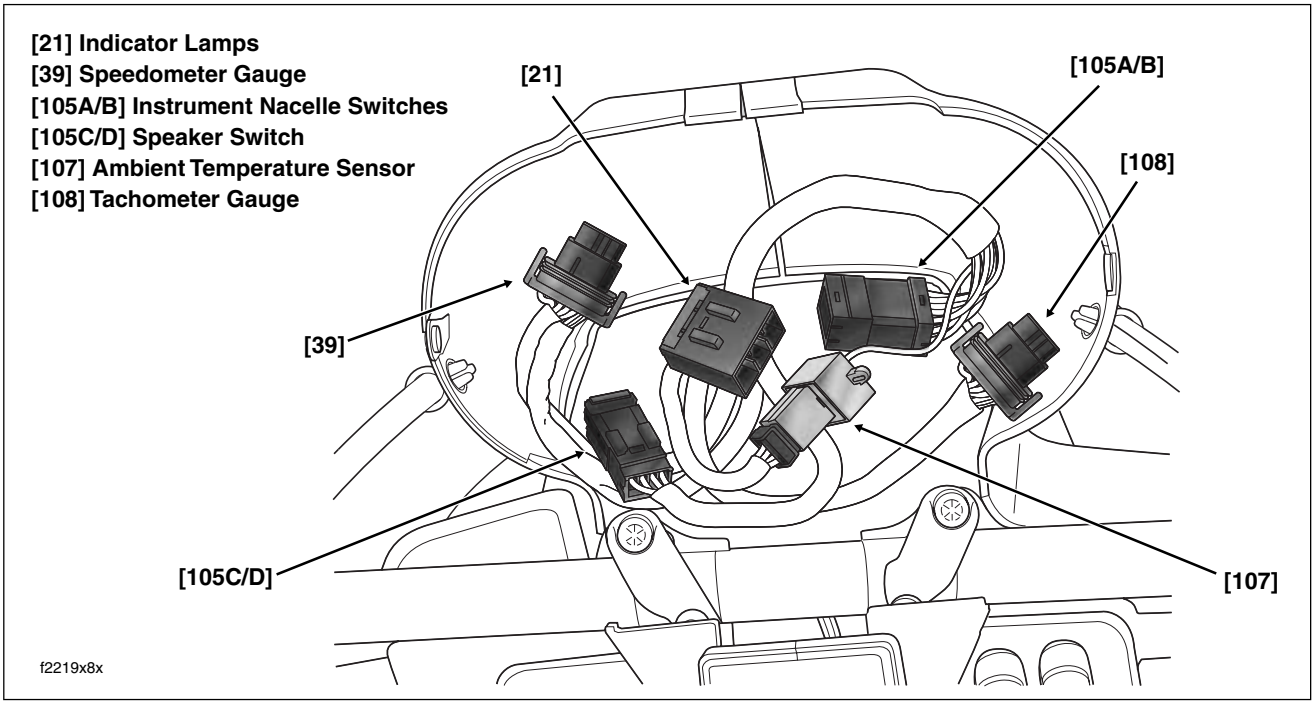

Figure 8-178. Instrument Nacelle (Bezel Removed)

Left side:

- Left speaker
- Fuel gauge and lamp (with orange tape)
- Air temperature gauge and lamp
- Cigarette lighter

Right side:

- Right speaker
- Voltmeter gauge and lamp (with orange tape)
- Oil pressure gauge and lamp

11. Free conduit of front turn signal lamp connectors [31L] and [31R], 3-place Multilocks, from flexible clips on sides of inner fairing.
12. Remove interconnect harness from motorcycle. Remove radio antenna cable connector [51] at back of radio (left side) to facilitate removal.

INSTALLATION

CAUTION

To avoid chafing wires of interconnect harness, verify that trim strips are installed on hooks of radio bracket.

1. Center convoluted tubing of interconnect harness above and inboard of hooks on radio bracket. See Figure 8-179. To verify proper orientation, be sure that long length of conduit terminating in socket terminals of cigarette lighter is on left side of motorcycle. Install radio antenna cable connector [51] at back of radio (left side), if removed.
2. Install connectors onto spade contacts as follows:

   Left side:

   - Left speaker
   - Fuel gauge and lamp (with orange tape)
   - Air temperature gauge and lamp
   - Cigarette lighter; connect the orange/white wire socket terminal to the socket spade contact, the black wire socket terminal to the shell contact.

   Right side:

   - Right speaker
   - Voltmeter gauge and lamp (with orange tape)
   - Oil pressure gauge and lamp

3. Find branch of interconnect harness terminating in odometer reset switch and speedometer, tachometer, indicator lamps, instrument nacelle switch and ambient temperature sensor connectors. Feed connectors and conduit from front of inner fairing through tunnel of fairing bracket and then out through opening at top of fairing bracket to instrument nacelle.
4. See Figure 8-178. Connect instrument nacelle switches and ambient temperature sensor to interconnect harness as follows:

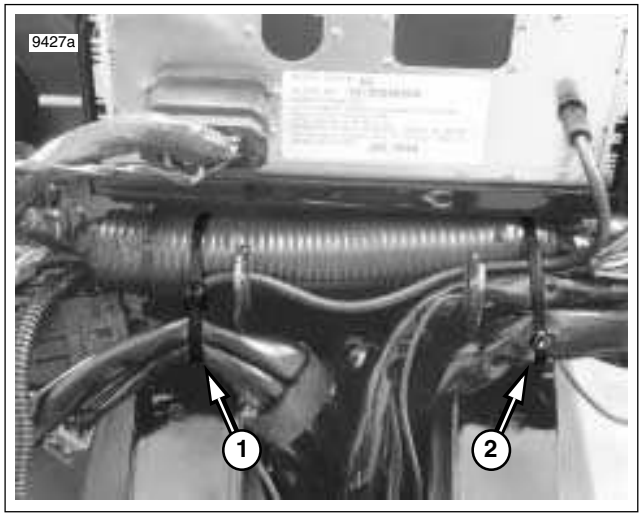

Figure 8-179. Cable Strap Convoluted Tubing and Conduit

- Instrument nacelle switch connector [105], 12-place Multilock.
- Ambient temperature sensor connector [107], 3-place Multilock.

5. See Figure 8-177. Connect handlebar switch controls to interconnect harness. Connect radio and radio ground. Proceed as follows:

   - Left handlebar switch controls connector [24], 12-place Deutsch (gray); T-stud on left side of radio bracket.
   - Right handlebar switch controls connector [22], 12-place Deutsch (black); T-stud on left side of radio bracket.

NOTE

Place large end of slot on attachment clip over T-stud on radio bracket and push on each handlebar connector to engage small end of slot.

   - Radio connector [27], 23-place Amp (black); back of radio (right side).
   - Radio ground; single spade and socket terminal; below radio (left side).

6. See Figure 8-177. Connect main harness to interconnect harness as follows:

   - Main to interconnect harness connector [1], 12-place Deutsch (black); below radio (right side).
   - Main to interconnect harness connector [2], 12-place Deutsch (gray); below radio (right side).
   - Main to interconnect harness connector [15], 4-place Packard (black); below radio (right side).
   - Main to interconnect harness connector [156], 6-place Deutsch (gray); below radio (right side).

7. Orient connectors as shown in Figure 8-177. Install two **new** cable straps outboard of radio bracket hooks to secure wire bundles and conduit to convoluted tubing of interconnect harness. Cut any excess cable strap material. See Figure 8-179.

8. Capture conduit of front turn signal lamp connectors [31L] and [31R], 3-place Multilocks, in flexible clips on sides of inner fairing.

9. Install the outer fairing and windshield. See Section 2.31 UPPER FAIRING/WINDSHIELD (FLTR), OUTER FAIRING, INSTALLATION.

10. Install left side of instrument nacelle. See Section 2.31 UPPER FAIRING/WINDSHIELD (FLTR), INSTRUMENT NACELLE, INSTALLATION, steps 3-7 and 9-10.

11. Install bezel. See BEZEL, INSTALLATION, in this section.

12. Install maxi-fuse. See Section 8.3 SYSTEM FUSES, MAXI-FUSE, INSTALLATION.

RADIO ANTENNA CABLE 8.36

FLHTC/U

REMOVAL

1. Remove fuel tank. For carbureted models, see Section 4.7 FUEL TANK (CARBURETED), COMPLETE REMOVAL, FLHX, FLHT. For fuel injected models, see Section 9.4 FUEL TANK (FUEL INJECTED), COMPLETE REMOVAL, FLHXI, FLHT/C/U/I, FLTRI.
2. Remove left side saddlebag. See Section 2.26 SADDLEBAG, REMOVAL.
3. Gently pull side cover from frame downtubes (no tools required).
4. Remove the outer fairing and windshield. See Section 2.30 UPPER FAIRING/WINDSHIELD (FLHX, FLHT/C/U), OUTER FAIRING/WINDSHIELD, REMOVAL.
5. Remove radio antenna cable connector [51] at back of radio (left side). See Figure 8-180. Carefully cut cable where it exits main harness conduit.
6. Remove screw, ground wire ring terminal and P-clamp to release main harness (and audio harness on FLHTCU) from right side of steering head.

Figure 8-180. Remove Outer Fairing (FLHX, FLHTC/U)

7. Starting at the front of the wire trough, and working rearward from side to side, release catches to remove cover. For most catches, carefully insert blade of flat tip screwdriver into slot only as far as necessary to release catch.
8. Carefully cut three cable straps securing main harness (and audio harness on FLHTCU) to left upper frame tube and luggage rack rail.
9. Open Tour-Pak and proceed as follows:

   FLHTC: Remove rubber mat.

   FLHTCU: Open map pocket and remove acorn nuts (with flat washers). Remove map pocket and molded liner from Tour-Pak.
10. On Ultra models, depress external latch and remove bulb socket from left side wrap-around light.
11. Rotate knurled ring in a counterclockwise direction to separate pin and socket halves of radio antenna cable connector [51]. Release cable from two adhesive clips at bottom of Tour-Pak.
12. Disconnect Tour-Pak lights connector [12], 3-place Multilock. See Figure 8-181.
13. Pull grommet into Tour-Pak and remove from main harness conduit.
14. Pull Tour-Pak lights and radio antenna cable connectors through hole at front of Tour-Pak. See Figure 8-182.
15. Carefully cut radio antenna cable where it exits main harness conduit.

INSTALLATION

NOTE

*Place **new** radio antenna cable on motorcycle following original path. Note that the cable follows the main harness routed to the rear left side of the motorcycle.*

1. At front of inner fairing, connect radio antenna cable connector [51] at back of radio (left side). See Figure 8-180.
2. Route free end of radio antenna cable rearward under the fairing cap to right side of the steering head.
3. Capture radio antenna cable, main harness (and audio harness on FLHTCU) in P-clamp. Install ground wire ring terminal on screw and fasten P-clamp to right side of steering head.
4. Route radio antenna cable rearward through opening at front of wire trough. Exiting wire trough through opening

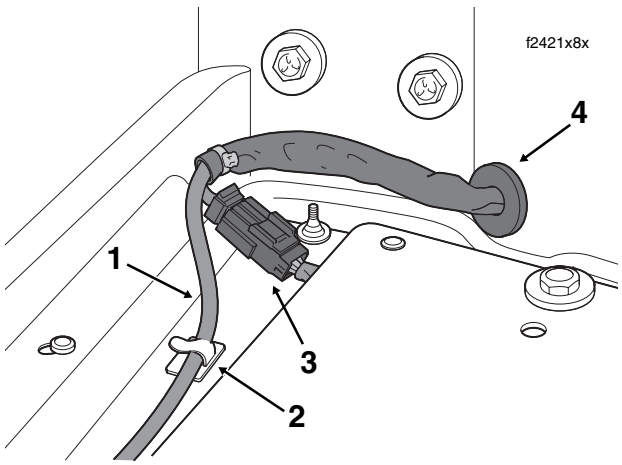

1. **Radio Antenna Cable**
2. **Adhesive Clip**
3. **Tour-Pak Lights Connector [12]**
4. **Grommet**

Figure 8-181. Disconnect Tour-Pak Lights Connector

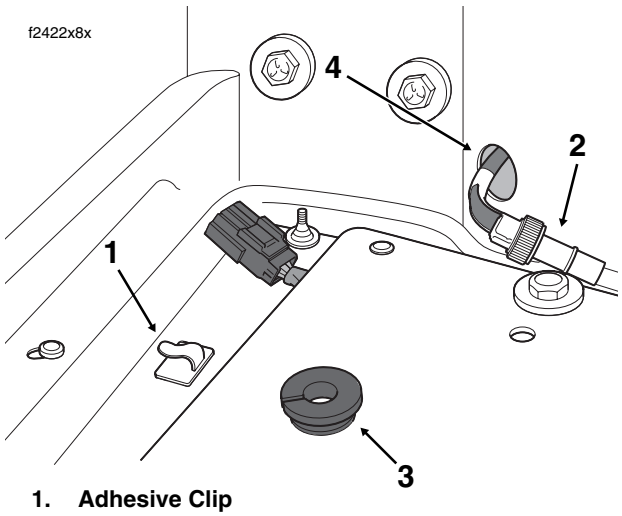

1. **Adhesive Clip**
2. **Radio Antenna Cable Connector [51D]**
3. **Grommet**
4. **Tour-Pak Hole**

Figure 8-182. Feed Main Harness Thru Tour-Pak Hole

at end of left leg, route cable rearward along bottom of upper frame tube to rear of battery box, up through opening between rear of frame weldment and front of rear fender, along inboard side of upper frame tube (and chrome frame tube cover) and then up the luggage rack rail to front of Tour-Pak.

5. Loosely install two **new** cable straps to secure radio antenna cable to left upper frame tube. See Figure 8-183. Loosely install **new** cable strap to secure radio antenna cable to luggage rack rail.
6. Feed Tour-Pak lights and radio antenna cable connectors and conduit through hole at front of Tour-Pak. Capture cable and conduit in grommet. Install grommet in hole with the larger OD facing inside.
7. Connect Tour-Pak lights connector [12], 3-place Multilock. See Figure 8-181.
8. Rotate knurled ring in a clockwise direction to mate pin and socket halves of radio antenna cable connector [51]. Capture cable in two adhesive clips at bottom of Tour-Pak.
9. On Ultra models, install bulb socket of left side wrap-around light.
10. Tighten three cable straps securing radio antenna cable to left upper frame tube and luggage rack rail. Cut any excess cable strap material.
11. Proceed as follows:

    FLHTC: Install rubber mat in Tour-Pak. Close Tour-Pak.

    FLHTCU: Install molded liner in Tour-Pak. Install map pocket and secure using acorn nuts (with flat washers). Close Tour-Pak.

12. Place cover over wire trough. Starting at the front and working rearward from side to side, engage catches to latch cover. Verify that all latches are fully engaged.
13. Install fuel tank. For carbureted models, see Section 4.7 FUEL TANK (CARBURETED), INSTALLATION (AFTER COMPLETE REMOVAL), FLHX, FLHT. For fuel injected models, see Section 9.4 FUEL TANK (FUEL INJECTED), INSTALLATION (AFTER COMPLETE REMOVAL), FLHXI, FLHT/C/U/I, FLTRI.
14. Install the outer fairing and windshield. See Section 2.31 UPPER FAIRING/WINDSHIELD (FLTR), OUTER FAIRING, INSTALLATION.
15. Align barbed studs in left side cover with grommets in frame downtubes and push firmly into place (no tools required).
16. Install left side saddlebag. See Section 2.26 SADDLEBAG, INSTALLATION.

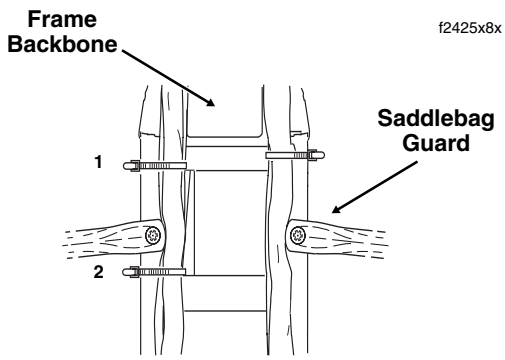

1 2 **Captures radio antenna cable, main harness, audio harness (FLHTCU only), console pod conduit (FLHTCU only) and upper frame tube.**

Figure 8-183. Capture Radio Antenna Cable

FLHX, FLTR

REMOVAL

1. Remove fuel tank. See Section 9.4 FUEL TANK (FUEL INJECTED), COMPLETE REMOVAL, FLHXI, FLHT/C/U/I, FLTRI.
2. Remove left side saddlebag. See Section 2.26 SADDLEBAG, REMOVAL.
3. Gently pull side cover from frame downtubes (no tools required).
4. Remove the outer fairing and windshield. See Section 2.31 UPPER FAIRING/WINDSHIELD (FLTR), OUTER FAIRING, REMOVAL.
5. Remove radio antenna cable connector [51] at back of radio (left side). See Figure 8-184. Carefully cut cable where it exits main harness conduit.
6. Remove screw, ground wire ring terminal and P-clamp to release main harness from right side of steering head.
7. Starting at the front of the wire trough, and working rearward from side to side, release catches to remove cover. For most catches, carefully insert blade of flat tip screwdriver into slot only as far as necessary to release catch.
8. Carefully cut two cable straps securing main harness conduit to left upper frame tube.
9. On left side of motorcycle, remove bolt (with flat washer) to remove passenger seat strap and saddlebag front mounting bracket from chrome frame tube cover.
10. Remove Phillips screw and chrome frame tube cover.
11. Carefully cut cable strap to release radio antenna cable from shoulder of upper frame tube (just in front of air valve mounting bracket). Cut cable strap to release radio antenna cable from slotted hole in rear fender support. See Figure 8-185.
12. At bottom of radio antenna bracket, rotate knurled ring to separate pin and socket halves of radio antenna cable connector [51].
13. Draw radio antenna cable forward to area of fuse block bracket. Carefully cut cable where it exits main harness conduit.

INSTALLATION

NOTE

*Place **new** radio antenna cable on motorcycle following original path. Note that the cable follows the main harness routed to the rear left side of the motorcycle.*

1. At front of inner fairing, connect radio antenna cable connector [51] at back of radio (left side). See Figure 8-184.

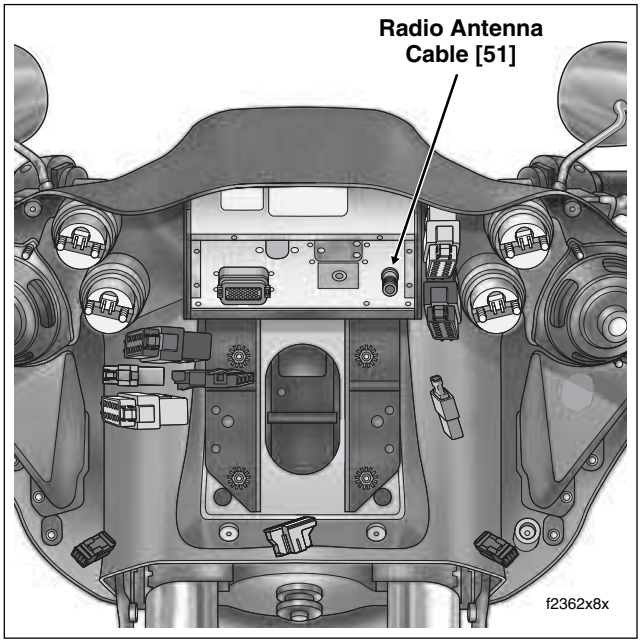

Figure 8-184. Remove Outer Fairing (FLTR)

2. Proceed as follows:

   FLHX: Route free end of radio antenna cable rearward under the fairing cap to right side of the steering head.

   FLTR: Route free end of radio antenna cable rearward through opening on the right side of the fairing bracket to right side of the steering head.

3. Capture radio antenna cable and main harness in P-clamp. Install ground wire ring terminal on screw and fasten P-clamp to right side of steering head.
4. Route radio antenna cable rearward through opening at front of wire trough. Exiting wire trough at end of left leg, route cable rearward along bottom of upper frame tube to rear of battery box, and then up through opening between rear of frame weldment and front of rear fender, continuing along inboard side of upper frame tube (and chrome frame tube cover).
5. Loosely install two **new** cable straps to secure radio antenna cable to left upper frame tube. See Figure 8-183.
6. Install **new** cable strap to secure radio antenna cable (and rear facia lamp wires on FLHX) to shoulder of upper frame tube (just in front of rear shock air valve mounting bracket). Using slotted hole, install **new** cable strap to secure radio antenna cable (and rear facia lamp wires on FLHX) to rear fender support. See Figure 8-185 or Figure 8-186.
7. At bottom of radio antenna bracket, rotate knurled ring to mate pin and socket halves of radio antenna cable connector [51].

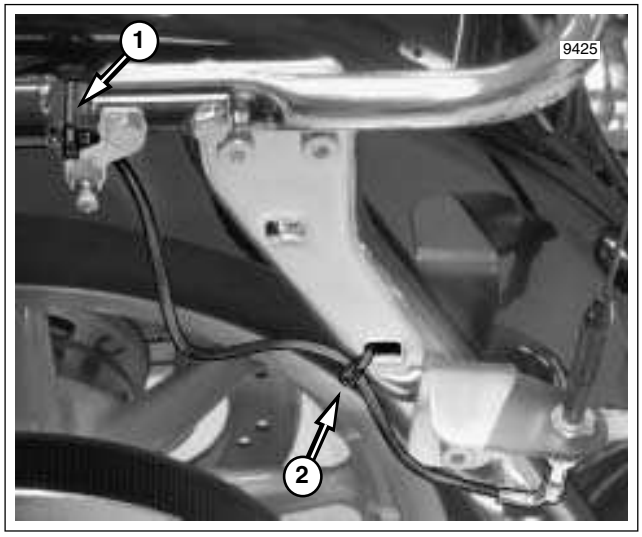

Figure 8-185. Capture Radio Antenna Cable (FLTR)

Figure 8-186. Capture Radio Antenna Cable (FLHX)

8. Tighten four cable straps securing radio antenna cable to left upper frame tube and rear fender support. Cut any excess cable strap material.

9. Install chrome frame tube cover on frame tube. Install Phillips screw and tighten to 25-40 **in-lbs** (2.8-4.5 Nm).

10. Insert bolt (with flat washer) through passenger seat strap and slotted hole of saddlebag front mounting bracket. Insert bolt into forward hole in chrome frame tube cover. Snug saddlebag front mounting bracket bolt, but do not tighten.

11. Place cover over wire trough. Starting at the front and working rearward from side to side, engage catches to latch cover. Verify that all latches are fully engaged.

12. Install fuel tank. See Section 9.4 FUEL TANK (FUEL INJECTED), INSTALLATION (AFTER COMPLETE REMOVAL), FLHXI, FLHT/C/U/I, FLTRI.

13. Install the outer fairing and windshield. See Section 2.31 UPPER FAIRING/WINDSHIELD (FLTR), OUTER FAIRING, INSTALLATION.

14. Align barbed studs in left side cover with grommets in frame downtubes and push firmly into place (no tools required).

15. Install left side saddlebag. See Section 2.26 SADDLEBAG, INSTALLATION.

16. Using an open end/box wrench, tighten saddlebag front mounting bracket bolt to 60-96 **in-lbs** (6.8-10.8 Nm).

AUDIO HARNESS (FLHTCU) 8.37

REMOVAL

1. Remove fuel tank. For carbureted models, see Section 4.7 FUEL TANK (CARBURETED), COMPLETE REMOVAL, FLHX, FLHT. For fuel injected models, see Section 9.4 FUEL TANK (FUEL INJECTED), COMPLETE REMOVAL, FLHXI, FLHT/C/U/I, FLTRI.
2. Remove right side saddlebag. See Section 2.26 SADDLEBAG, REMOVAL.
3. Gently pull side cover from frame downtubes (no tools required).
4. Repeat steps 2 and 3 on left side of motorcycle.
5. Remove the outer fairing and windshield. See Section 2.30 UPPER FAIRING/WINDSHIELD (FLHX, FLHT/C/U), OUTER FAIRING/WINDSHIELD, REMOVAL.
6. See Figure 8-187. Disconnect the following connectors:
   a. CB antenna cable connector [50], back of CB module (right side).

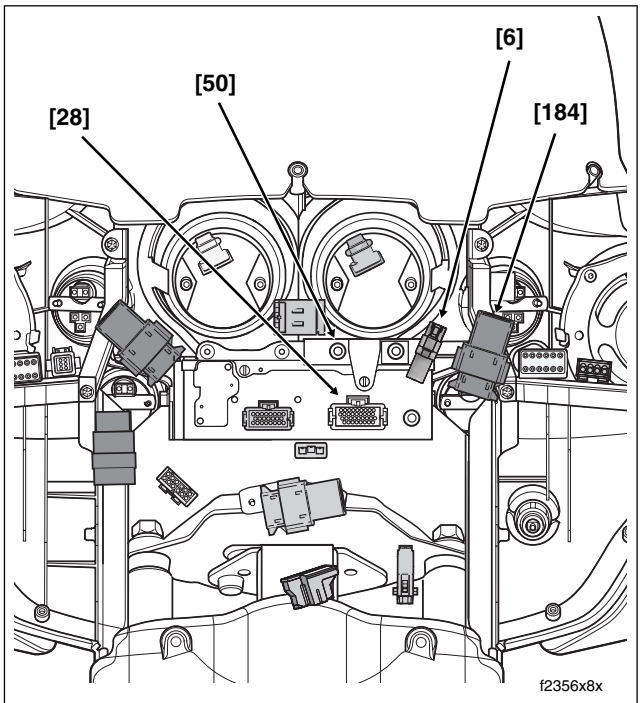

[6] Audio to Interconnect Harness
[28] Radio
[50] CB Antenna Cable
[184] CB Module

Figure 8-187. Remove Outer Fairing (FLHTCU)

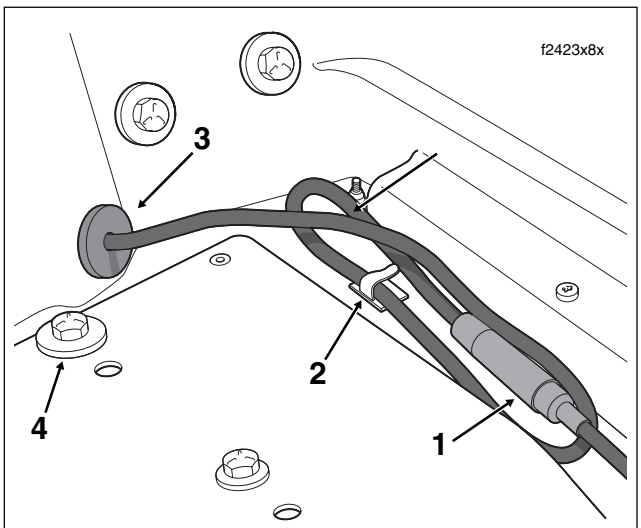

1. **CB Antenna Cable Connector [50]**
2. **Adhesive Clip**
3. **Grommet**
4. **Tour-Pak Mounting Bolt**

Figure 8-188. Disconnect CB Antenna Cable Connector

   b. Audio to interconnect harness connector [6], 6-place Deutsch (black); top of radio (left side).
   c. Radio connector [28], 35-place Amp (black); back of radio (left side).
   d. CB module connector [184], 12-place Deutsch (black); top of radio (left side).
7. Remove screw, ground wire ring terminal and P-clamp to release main harness and audio harness from right side of steering head.
8. Carefully pull front section of audio harness rearward under right side of fairing cap and allow conduit and connectors to hang over top of engine guard.
9. Open Tour-Pak. Open map pocket and remove acorn nuts. Remove map pocket and molded liner from Tour-Pak.
10. Disconnect CB antenna cable connector [50]. Release cable from front adhesive clip inside Tour-Pak. See Figure 8-188.
11. Pull right side grommet into Tour-Pak and remove from CB antenna cable. Feed CB antenna cable through hole at front of Tour-Pak.
12. Remove trim ring and gently pull on wire harness to draw rear speaker/passenger controls connector [41], 6-place Deutsch, out of right side speaker box. Depress external latch and use a rocking motion to separate pin and socket halves.

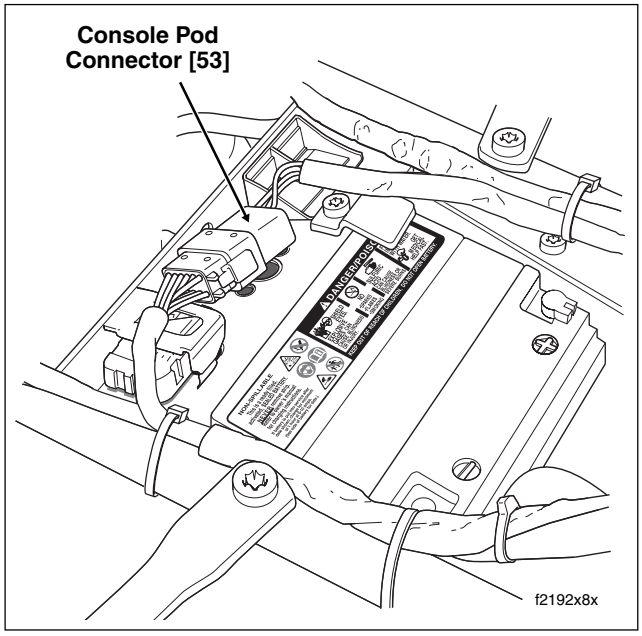

Figure 8-189. Remove Seat

13. Carefully draw rear right section of audio harness forward allowing conduit and connectors to hang beside the right side passenger footboard.
14. Moving to opposite side of motorcycle, remove trim ring and gently pull on wire harness to draw rear speaker/passenger controls connector [42], 6-place Deutsch, out of left side speaker box. Depress external latch and use a rocking motion to separate pin and socket halves.
15. Release rear headset receptacle from bracket at bottom of left side speaker box. Release spring from hole in receptacle wire jacket.
16. Carefully draw rear left section of audio harness forward to front of rear fender and then pull out from beneath upper frame tube allowing conduit and connectors to hang beside the left side passenger footboard.
17. Release console pod connector [53], 12-place Deutsch, from attachment clip anchored in hole of frame weldment at rear of battery box. See Figure 8-189. Depress external latches and use a rocking motion to separate pin and socket halves.
18. Carefully cut three cable straps securing audio harness to left and right upper frame tubes. See Figure 8-191. Cut two cable straps securing audio harness to luggage rack rails.
19. Starting at the front of the wire trough, and working rearward from side to side, release catches to remove cover. For most catches, carefully insert blade of flat tip screwdriver into slot only as far as necessary to release catch.
20. Using a paint pen, draw a line where the audio harness conduit enters the wire trough at the front and also where it exits the outboard sides of both the left and right legs at the rear.
21. Draw a line on the conduit and/or wire bundle on both sides of cable straps 1, 2, 4, 6 and 11-17

NOTE

Do not tamper with the cable straps that fix the position of the breakouts. The breakouts are those branches of the main harness that exit the wire trough on the left and right sides (cable straps 3 and 7-10 in Figure 8-190). As exact placement of the breakouts is necessary for optimal fit and routing, they should be left intact whenever possible.

22. Carefully cut and remove cables straps marked with the paint pen.
23. Gently pull on audio harness to separate from the main harness. If a few strands of the audio harness are interwoven or intermingled with wires of the main harness and cannot be separated, then proceed based on whether the audio harness is to be discarded or retained.

    Discarded

    a. Cut audio harness wires well away from those of the main harness to avoid cutting or nicking the main harness wires.

Table 8-21. Wire Trough Cable Straps

Cable Strap	Captures Conduit/Wire Bundle	Models
1	Main Harness	All
2	Audio Harness	FLHTCU
3	Ignition Coil	All
	Fuel Gauge	FLHR/C/S
4	Main Harness	All
	Audio Harness	FLHTCU
5	Main Harness	All
6	Main Harness	All
	Audio Harness	FLHTCU
7	Front Fuel Injector	Fuel Injected
8	TP Sensor, MAP Sensor, IAC and Rear Fuel Injector	Fuel Injected
	MAP Sensor	Carbureted
9	TP Sensor, MAP Sensor, IAC and Rear Fuel Injector	Fuel Injected
10	Horn	All
	ET Sensor	Fuel Injected
11-17	Main Harness	All
	Audio Harness	FLHTCU
18	Instrument Console	FLHR/C/S
19	Fuel Tank Harness	FLHX, FLHT/C/U, FLTR
20-21	Main Harness	All

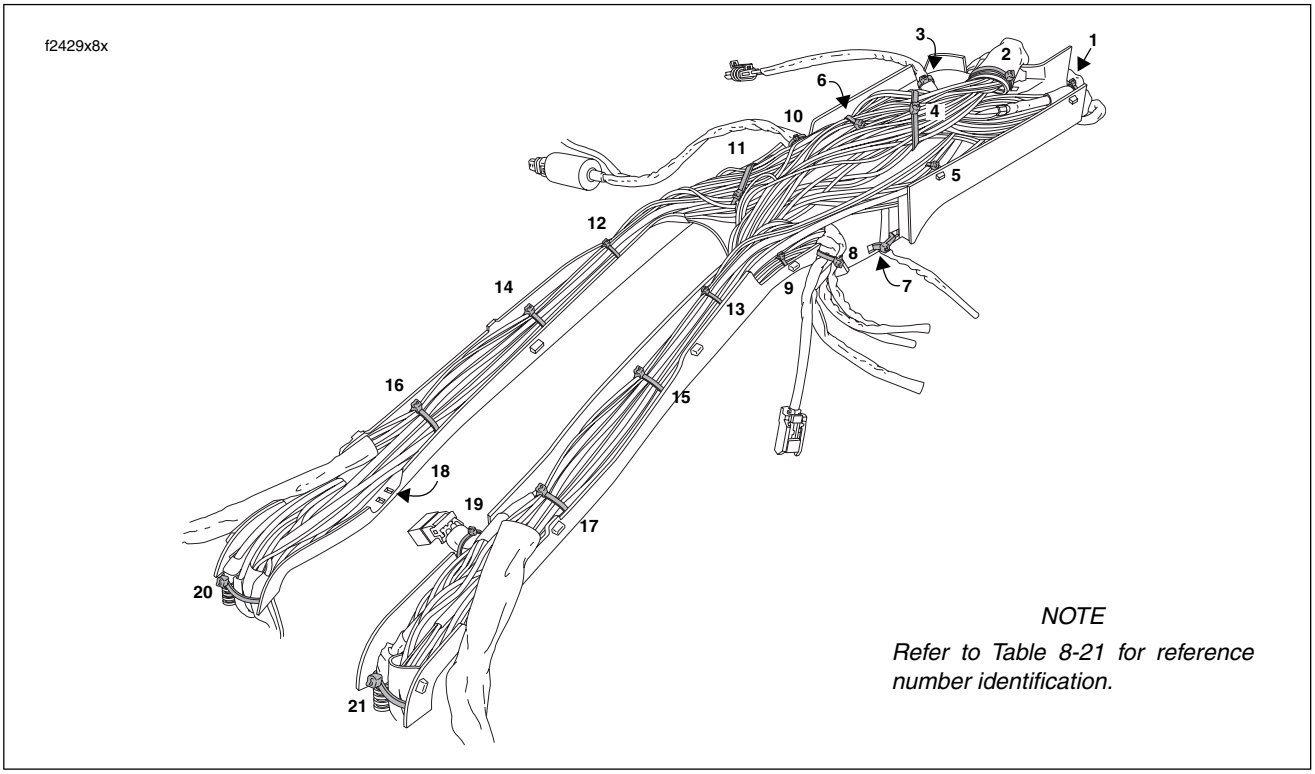

Figure 8-190. Wire Trough Cable Strap Locations (FLHTCU)

b. Remove and discard audio harness

Retained

a. Take careful note of which breakouts on the main harness interfere with removal of the audio harness.

b. Using a paint pen, draw a line on the wire bundle on the inboard side of the breakout conduit.

c. Cut cable strap to release breakout from wire trough.

d. Pull on audio harness as necessary to separate from the main harness.

e. install **new** cable strap in slots of wire trough loosely capturing breakout.

f. Move conduit on breakout so that inboard side is aligned with painted line.

g. Adjust cable strap so that it occupies the depression or indentation left by the original cable strap and then tighten. Cut any excess cable strap material.

h. Repeat steps as necessary until audio harness can be removed.

INSTALLATION

1. Lay **new** and used audio harnesses side by side. Transfer entrance and exit markings drawn on the conduit of the used harness to their approximate locations on the new harness.

2. Thread **new** cable straps through slots of wire trough where removed (cable straps 1, 2, 4, 6 and 11-17). See Figure 8-190. Properly installed, both ends of the cable strap will be pointing upward.

NOTE

If additional clearance is needed for installation of the cable staps, gently pull index pins on rear legs of wire trough from holes in frame backbone. Slide wire trough forward to release slot at bottom from T-stud on frame backbone. Reinstall wire trough after installation of the cable straps.

3. Adjust main harness as necessary, so that the painted lines are aligned with the cable straps installed in the wire trough.

4. Place audio harness on top of main harness aligning the entrance and exit markings with the openings in the wire trough. Verify that the branch containing the rear headset receptacle runs down the left leg of the wire trough, while the branch containing the CB antenna cable connector runs down the right leg.

5. Start tail end of each cable strap into eyelet, but do not tighten.

6. Route front section of audio harness forward along right side of the steering head and then under the right side of fairing cap to front of inner fairing.

7. See Figure 8-187. Standing at front of motorcycle, connect the following connectors:
   a. CB antenna cable connector [50], back of CB module (right side).
   b. Audio to interconnect harness connector [6], 6-place Deutsch (black); top of radio (left side).
   c. Radio connector [28], 35-place Amp (black); back of radio (left side).
   d. CB module connector [184], 12-place Deutsch (black); top of radio (left side).
8. On right side of motorcycle, capture audio harness and main harness in P-clamp. Install ground wire ring terminal on screw and fasten P-clamp to right side of steering head.
9. From where the audio harness exits the wire trough on outboard side of right leg, route harness rearward along inboard side of upper frame tube (and chrome frame tube cover), and then up the luggage rack rail to front of Tour-Pak.
10. Pass CB antenna cable connector through hole at front of Tour-Pak. Capture cable in grommet. Install grommet in hole with the larger OD facing inside. See Figure 8-188.
11. Connect CB antenna cable connector [50]. Capture antenna cable in front adhesive clip inside Tour-Pak.
12. Connect rear speaker/passenger controls connector [41], 6-place Deutsch. Feed connector back up into right side speaker box pressing trim ring into hole.
13. Move to opposite side of motorcycle. Connect console pod connector [53], 12-place Deutsch. Install connector onto attachment clip anchored in hole at rear of battery box. See Figure 8-189.
14. From where the audio harness exits the wire trough on outboard side of left leg, route harness rearward along bottom of upper frame tube to rear of battery box, and then up through opening between rear of frame weldment and front of rear fender, continuing along inboard side of upper frame tube (and chrome frame tube cover) to luggage rack rail.
15. Connect rear speaker/passenger controls connector [42], 6-place Deutsch. Feed connector back up into left side speaker box pressing trim ring into hole.
16. Attach spring to rear headset receptacle using hole in wire jacket. Capture headset receptacle in bracket at bottom of left side speaker box.
17. Install three **new** cable straps to secure audio harness to left and right upper frame tubes. See Figure 8-191. Install two **new** cable straps to secure audio harness to luggage rack rails. See Figure 8-192. Cut any excess cable strap material.
18. Tighten all cable straps in wire trough and cut any excess cable strap material.

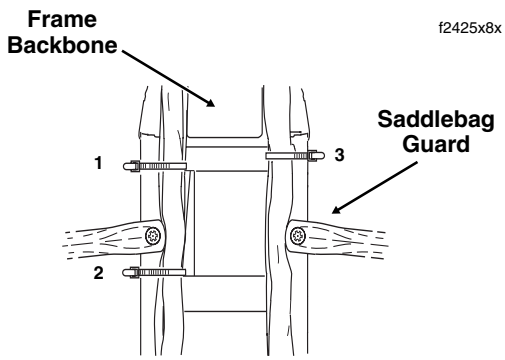

1 2	Captures main harness, audio harness, console pod conduit and upper frame tube.
3	Captures audio harness and upper frame tube.

Figure 8-191. Capture Audio Harness (FLHTCU)

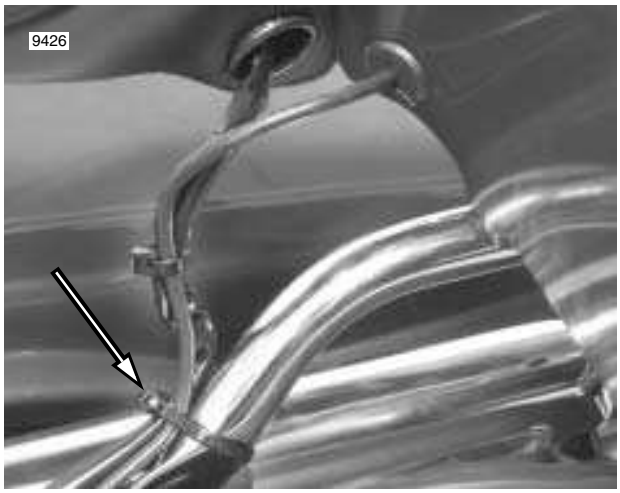

Figure 8-192. Capture Audio Harness (FLHTCU)

19. Place cover over wire trough. Starting at the front and working rearward from side to side, engage catches to latch cover. Verify that all latches are fully engaged.
20. Install fuel tank. For carbureted models, see Section 4.7 FUEL TANK (CARBURETED), INSTALLATION (AFTER COMPLETE REMOVAL), FLHX, FLHT. For fuel injected models, see Section 9.4 FUEL TANK (FUEL INJECTED), INSTALLATION (AFTER COMPLETE REMOVAL), FLHXI, FLHT/C/U/I, FLTRI.
21. Align barbed studs in right side cover with grommets in frame downtubes and push firmly into place (no tools required).
22. Install right side saddlebag. See Section 2.26 SADDLEBAG, INSTALLATION.
23. Repeat steps 21 and 22 on left side of motorcycle.
24. Install the outer fairing and windshield. See Section 2.30 UPPER FAIRING/WINDSHIELD (FLHX, FLHT/C/U), OUTER FAIRING/WINDSHIELD, INSTALLATION.

CB ANTENNA CABLE (FLHTCU) 8.38

REMOVAL

1. Remove fuel tank. For carbureted models, see Section 4.7 FUEL TANK (CARBURETED), COMPLETE REMOVAL, FLHX, FLHT. For fuel injected models, see Section 9.4 FUEL TANK (FUEL INJECTED), COMPLETE REMOVAL, FLHXI, FLHT/C/U/I, FLTRI.
2. Remove right side saddlebag. See Section 2.26 SADDLEBAG, REMOVAL.
3. Gently pull side cover from frame downtubes (no tools required).
4. Remove the outer fairing and windshield. See Section 2.30 UPPER FAIRING/WINDSHIELD (FLHX, FLHT/C/U), OUTER FAIRING/WINDSHIELD, REMOVAL.
5. Locate CB antenna cable connector [50] at back of CB module (right side). Rotate knurled ring in a counterclockwise direction to disconnect. See Figure 8-193. Carefully cut cable where it exits audio harness conduit.
6. Remove screw, ground wire ring terminal and P-clamp to release main harness and audio harness from right side of steering head.
7. Starting at the front of the wire trough, and working rearward from side to side, release catches to remove cover. For most catches, carefully insert blade of flat tip screwdriver into slot only as far as necessary to release catch.

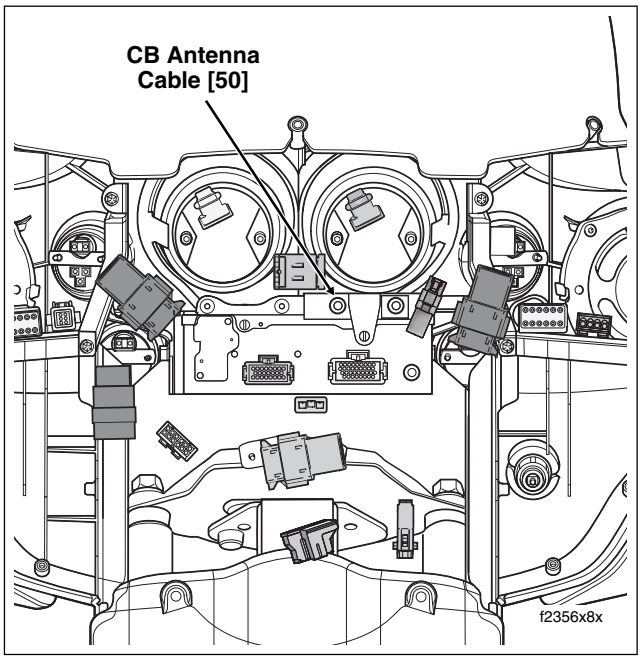

Figure 8-193. Remove Outer Fairing (FLHTCU)

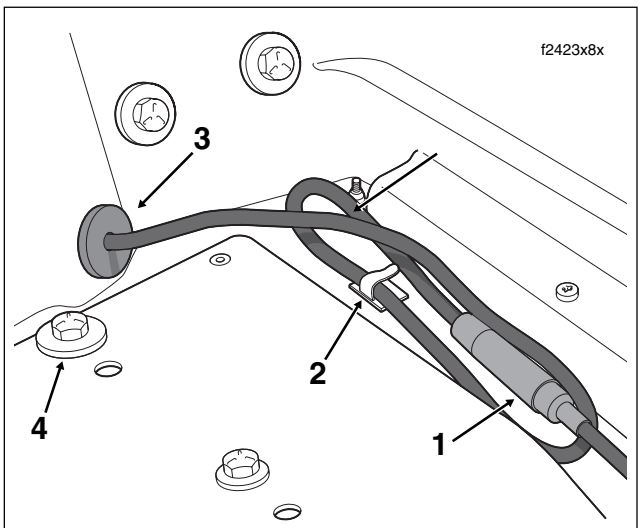

1. **CB Antenna Cable Connector [50]**
2. **Adhesive Clip**
3. **Grommet**
4. **Tour-Pak Mounting Bolt**

Figure 8-194. Disconnect CB Antenna Cable Connector

8. Carefully cut cable strap securing audio harness to right upper frame tube. See Figure 8-195. Cut two cable straps securing audio harness to luggage rack rail and speaker/passenger controls conduit. See Figure 8-196.
9. Open Tour-Pak. Open map pocket and remove acorn nuts (with flat washers). Remove map pocket and molded liner from Tour-Pak.
10. Disconnect CB antenna cable connector [50]. Release cable from front adhesive clip inside Tour-Pak. See Figure 8-194.
11. Pull right side grommet into Tour-Pak and remove from CB antenna cable. Feed CB antenna cable through hole at front of Tour-Pak.
12. Carefully cut CB antenna cable where it exits audio harness conduit.

INSTALLATION

NOTE

*Place **new** CB antenna cable on motorcycle following original path. Note that the cable follows the audio harness routed to the rear right side of the motorcycle.*

1. At front of inner fairing, rotate knurled ring to connect CB antenna cable connector [50] at back of CB module (right side). See Figure 8-193.
2. Route free end of CB antenna cable rearward under the fairing cap to right side of the steering head.
3. Capture CB antenna cable, audio harness and main harness in P-clamp. Install ground wire ring terminal on screw and fasten P-clamp to right side of steering head.
4. Route CB antenna cable rearward through opening at front of wire trough. Exiting wire trough through opening on outboard side of right leg, route cable rearward along inboard side of upper frame tube (and chrome frame tube cover), and then up the luggage rack rail to front of Tour-Pak.
5. Loosely install **new** cable strap to secure CB antenna cable to right upper frame tube. See Figure 8-195. Loosely install two **new** cable straps to secure CB antenna cable to luggage rack rail and speaker/passenger controls conduit. See Figure 8-196.
6. Feed CB antenna cable connector through hole at front of Tour-Pak. Capture cable in grommet. Install grommet in hole with the larger OD facing inside. See Figure 8-194.
7. Connect CB antenna cable connector [50]. Capture cable in front adhesive clip inside Tour-Pak.
8. Tighten three cable straps securing CB antenna cable to upper frame tube, luggage rack rail and speaker/passenger controls conduit. Cut any excess cable strap material.
9. Install molded liner in Tour-Pak. Install map pocket and secure using acorn nuts (with flat washers). Close Tour-Pak.
10. Place cover over wire trough. Starting at the front and working rearward from side to side, engage catches to latch cover. Verify that all latches are fully engaged.
11. Install fuel tank. For carbureted models, see Section 4.7 FUEL TANK (CARBURETED), INSTALLATION (AFTER COMPLETE REMOVAL), FLHX, FLHT. For fuel injected models, see Section 9.4 FUEL TANK (FUEL INJECTED), INSTALLATION (AFTER COMPLETE REMOVAL), FLHXI, FLHT/C/U/I, FLTRI.

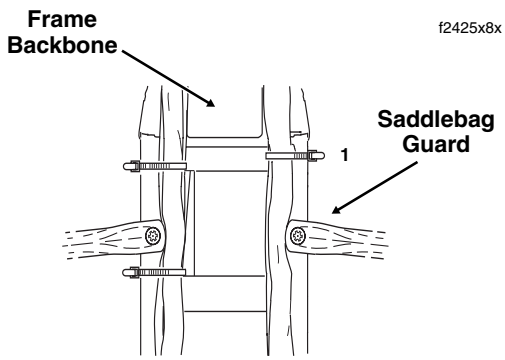

1 Captures CB antenna cable, audio harness and upper frame tube.

Figure 8-195. Capture CB Antenna Cable (FLHTCU)

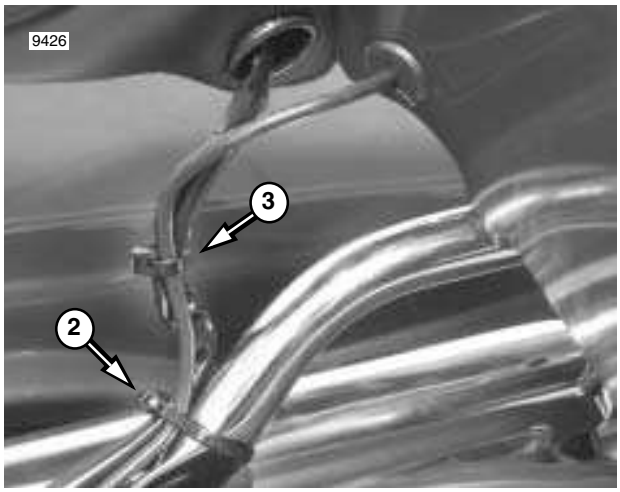

Figure 8-196. Capture CB Antenna Cable (FLHTCU)

12. Install the outer fairing and windshield. See Section 2.30 UPPER FAIRING/WINDSHIELD (FLHX, FLHT/C/U), OUTER FAIRING/WINDSHIELD, INSTALLATION.
13. Align barbed studs in right side cover with grommets in frame downtubes and push firmly into place (no tools required).
14. Install right side saddlebag. See Section 2.26 SADDLEBAG, INSTALLATION.

Table Of Contents

SUBJECT **PAGE NO.**

9.1 Specifications 9-1
9.2 Electrical Bracket Assembly 9-3
9.3 Sensors 9-6
9.4 Fuel Tank (Fuel Injected) 9-8
9.5 Induction Module Assembly 9-25

NOTE

See the 2006 ELECTRICAL DIAGNOSTIC MANUAL (Part No. 99497-06) for all SYSTEM DIAGNOSIS and ELECTRICAL TROUBLESHOOTING information.

FUEL INJECTION 9

SPECIFICATIONS 9.1

EFI FUSES

Fuel Pump	15	Blue	Blade
ECM Power	15	Blue	Blade

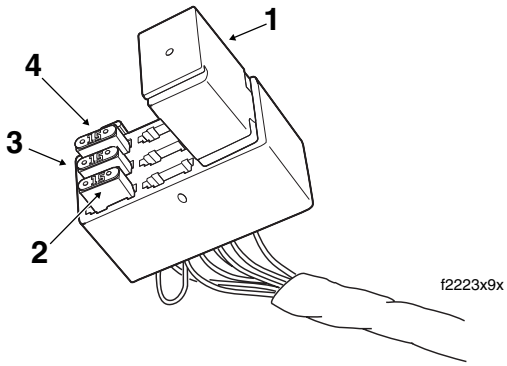

1. **EFI System Relay**
2. **ECM Power Fuse**
3. **Fuel Pump Fuse**
4. **Spare Fuse**

Figure 9-1. EFI Fuses (Under Right Side Cover)

TORQUE VALUES

Item	ft/in-lbs	Nm
Battery hold-down clamp TORX screw	15-20 ft-lbs	20-27 Nm
Battery cable bolt	60-96 **in-lbs**	6.8-10.9 Nm
ECM socket screws	50-60 **in-lbs**	5.7-6.8 Nm
Electrical bracket flange nuts	36-48 **in-lbs**	4.1-5.4 Nm
CKP sensor screw	90-120 **in-lbs**	10.2-13.6 Nm
ET sensor	120-180 **in-lbs**	13.6-20.3 Nm
Fuel tank rear mounting bolt	15-20 ft-lbs	20-27 Nm
Fuel tank front mounting bolts	15-20 ft-lbs	20-27 Nm
Fuel tank canopy TORX screws	18-24 **in-lbs**	2.0-2.7 Nm
Fuel level sender TORX screw	25-35 **in-lbs**	2.8-4.0 Nm
Fuel supply line quick-connect fitting	22-26 ft-lbs	29.8-35.3 Nm
Intake flange adapter screws	96-144 **in-lbs**	10.9-16.3 Nm
Exhaust flange adapter nuts	100-120 **in-lbs**	11.3-13.6 Nm
Fuel supply tube clamp hex screw	90-110 **in-lbs**	10.2-12.4 Nm
IAT sensor TORX screw	15-20 **in-lbs**	1.7-2.3 Nm
TP sensor TORX screws	15-20 **in-lbs**	1.7-2.3 Nm
Throttle cable/IAC bracket TORX screws	20-35 **in-lbs**	2.3-4.0 Nm
Console mounting bolt acorn nut	50-90 **in-lbs**	5.7-10.2 Nm

NOTES

ELECTRICAL BRACKET ASSEMBLY 9.2

DATA LINK CONNECTOR

SETTING ENGINE IDLE SPEED

NOTE

Engine idle speed can only be set using DIGITAL TECHNICIAN (Part No. HD-44750). Do not tamper with the throttle stop screw as it will not permanently change idle speed.

1. Turn the ignition/light key switch to OFF.
2. Remove right side saddlebag. See Section 2.26 SADDLEBAG, REMOVAL.
3. Gently pull side cover from frame downtubes (no tools required).
4. Gently pull on data link connector [91] to disengage from arms on electrical bracket. See Figure 9-2.
5. Remove rubber protective plug from data link connector.
6. See DIGITAL TECHNICIAN (Part No. HD-44750) or the TOURING MODELS ELECTRICAL DIAGNOSTIC MANUAL to use the data link connector for system diagnosis and electrical troubleshooting.
7. Install protective plug in data link connector.
8. With the plug side down and in contact with tab, position connector between arms on electrical bracket.

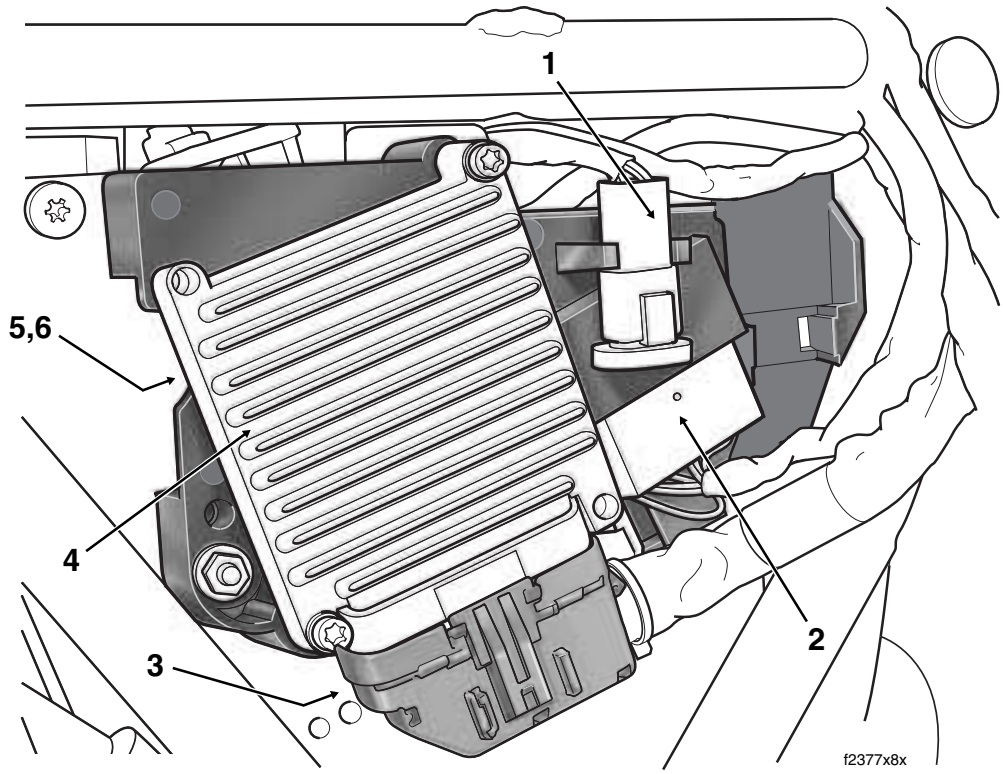

1. **Data Link Connector [91]**
2. **EFI Fuse Block (EFI System Relay, ECM Power Fuse, Fuel Pump Fuse)**
3. **ECM Connector [78]**
4. **ECM**
5. **VSS Connector [65] (Under Bracket)**
6. **P&A Security Siren Connector [142] (Under Bracket)**

Figure 9-2. Electrical Bracket Assembly

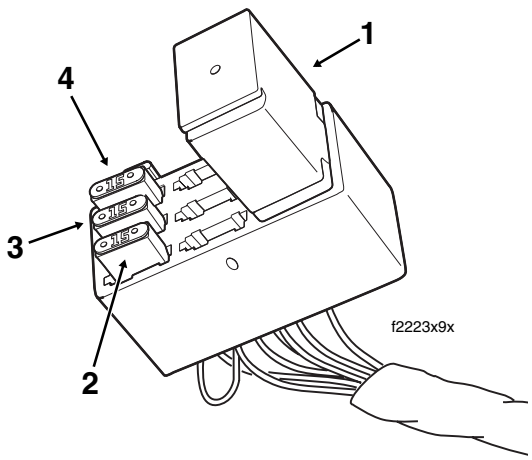

1. EFI System Relay
2. ECM Power Fuse
3. Fuel Pump Fuse
4. Spare Fuse

Figure 9-3. EFI Fuse Block

9. Align barbed studs in side cover with grommets in frame downtubes and push firmly into place (no tools required).
10. Install right side saddlebag. See Section 2.26 SADDLEBAG, INSTALLATION.

EFI SYSTEM RELAY/EFI FUSES

REMOVAL

1. Remove right side saddlebag. See Section 2.26 SADDLEBAG, REMOVAL.
2. Gently pull side cover from frame downtubes (no tools required).
3. Locate painted white dot on inboard side of fuse block. Pressing on dot, gently tug on conduit to release tabs on fuse block from slots in bracket.
4. Pull relay/fuses from slots in fuse block and inspect for damage. See Figure 9-3. Replace fuse if the element is burned or broken. Standard automotive type ATO fuses are used.

NOTE

While a single spare 15 amp fuse is stored in the EFI fuse block, one extra 10 amp fuse and one extra 15 amp fuse are also located in the system fuse block cover. See Section 8.3 SYSTEM FUSES *for more information.*

INSTALLATION

1. Install relay/fuses in slots of fuse block. See Figure 9-3.
2. Engage tabs on fuse block with slots in bracket. Slide fuse block up into cavity. Gently tug on conduit to verify that fuse block is locked in place.
3. Align barbed studs in side cover with grommets in frame downtubes and push firmly into place (no tools required).
4. Install right side saddlebag. See Section 2.26 SADDLEBAG, INSTALLATION.

ECM

REMOVAL

1. Remove right side saddlebag. See Section 2.26 SADDLEBAG, REMOVAL.
2. Gently pull side cover from frame downtubes (no tools required).
3. Depress external latch and use rocking motion to remove ECM connector [78]. See Figure 9-2.
4. Remove two socket screws to detach ECM from electrical bracket.

INSTALLATION

1. Align holes in ECM with those in electrical bracket. Install two socket screws and tighten to 50-60 **in-lbs** (5.7-6.8 Nm). See Figure 9-2.
2. Install ECM connector [78]. Push connector halves together until latch clicks.
3. Align barbed studs in side cover with grommets in frame downtubes and push firmly into place (no tools required).
4. Install right side saddlebag. See Section 2.26 SADDLEBAG, INSTALLATION.

SECURITY SIREN CONNECTOR

REMOVAL

1. Remove right side saddlebag. See Section 2.26 SADDLEBAG, REMOVAL.
2. Gently pull side cover from frame downtubes (no tools required).
3. Remove two flange nuts to release electrical bracket from studs on side of battery box. See Figure 9-4.

INSTALLATION

1. Install security siren connector [142] and VSS connector [65] on inboard side of electrical bracket as shown in Figure 9-4. Be sure that conduit and cables are properly routed or wires may be pinched during installation.
2. Slide electrical bracket onto studs at side of battery box.
3. Install flange nuts on studs and tighten to 36-48 **in-lbs** (4.1-5.4 Nm).
4. Align barbed studs in side cover with grommets in frame downtubes and push firmly into place (no tools required).
5. Install right side saddlebag. See Section 2.26 SADDLEBAG, INSTALLATION.

ELECTRICAL BRACKET

REMOVAL

1. Remove right side saddlebag. See Section 2.26 SADDLEBAG, REMOVAL.
2. Gently pull side cover from frame downtubes (no tools required).
3. Gently pull on data link connector [91] to disengage from arms on electrical bracket. See Figure 9-2.
4. Locate painted white dot on inboard side of fuse block. Pressing on dot, gently tug on conduit to release tabs on fuse block from slots in bracket.
5. Depress external latch and use rocking motion to remove ECM connector [78]. See Figure 9-2.
6. Remove two socket screws to detach ECM from electrical bracket.
7. Remove two flange nuts to release electrical bracket from studs on side of battery box. See Figure 9-4.
8. Remove security siren connector [142] and VSS connector [65] from inboard side of electrical bracket.

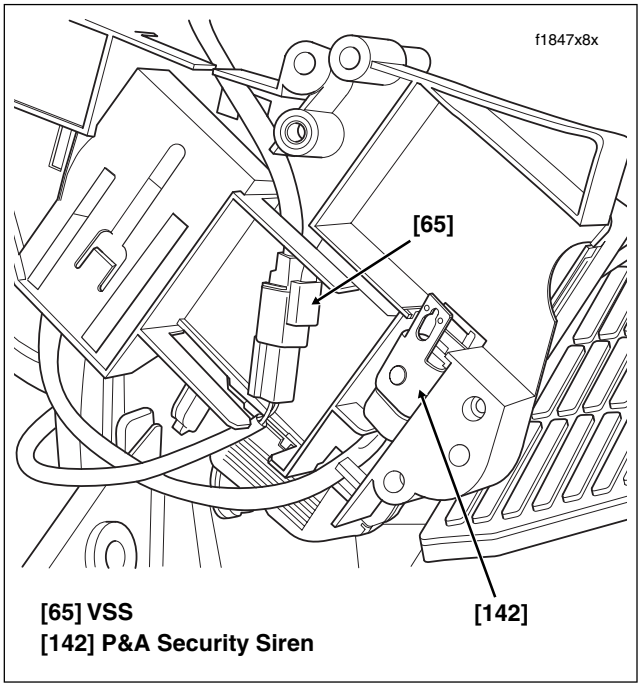

Figure 9-4. Electrical Bracket (Inboard Side)

INSTALLATION

1. Install security siren connector [142] and VSS connector [65] on inboard side of electrical bracket as shown in Figure 9-4. Be sure that conduit and cables are properly routed or wires may be pinched during installation.
2. Slide electrical bracket onto studs at side of battery box.
3. Install flange nuts on studs and tighten to 36-48 **in-lbs** (4.1-5.4 Nm).
4. Align holes in ECM with those in electrical bracket. Install two socket screws and tighten to 50-60 **in-lbs** (5.7-6.8 Nm). See Figure 9-2.
5. Install ECM connector [78]. Push connector halves together until latch clicks.
6. Engage tabs on fuse block with slots in bracket. Slide fuse block up into cavity. Gently tug on conduit to verify that fuse block is locked in place.
7. With the plug side down and in contact with tab, position data link connector [91] between arms on electrical bracket.
8. Align barbed studs in side cover with grommets in frame downtubes and push firmly into place (no tools required).
9. Install right side saddlebag. See Section 2.26 SADDLEBAG, INSTALLATION.

SENSORS 9.3

GENERAL

Six sensors inform the ECM of the environmental and engine operating factors influencing fuel and spark requirements. The sensors are as follows:

- IAT Sensor
- TP Sensor
- MAP Sensor
- BAS (Internal to TSM/TSSM)
- CKP Sensor
- ET Sensor

IAT SENSOR

See Section 9.5 INDUCTION MODULE ASSEMBLY, IAT SENSOR.

TP SENSOR

See Section 9.5 INDUCTION MODULE ASSEMBLY, TP SENSOR.

MAP SENSOR

See Section 9.5 INDUCTION MODULE ASSEMBLY, MAP SENSOR.

BAS

See Section 8.18 TSM/TSSM.

CKP SENSOR

REMOVAL

1. Remove maxi-fuse. See Section 8.3 SYSTEM FUSES, MAXI-FUSE, REMOVAL.
2. Locate CKP sensor connector [79], 2-place Deutsch, fixed to bracket at bottom of voltage regulator. See Figure 9-5.
3. Push connector toward right side of motorcycle to disengage small end of slot on attachment clip from T-stud on bracket. Lift connector off T-stud.
4. Depress button on socket terminal side and pull apart pin and socket halves.

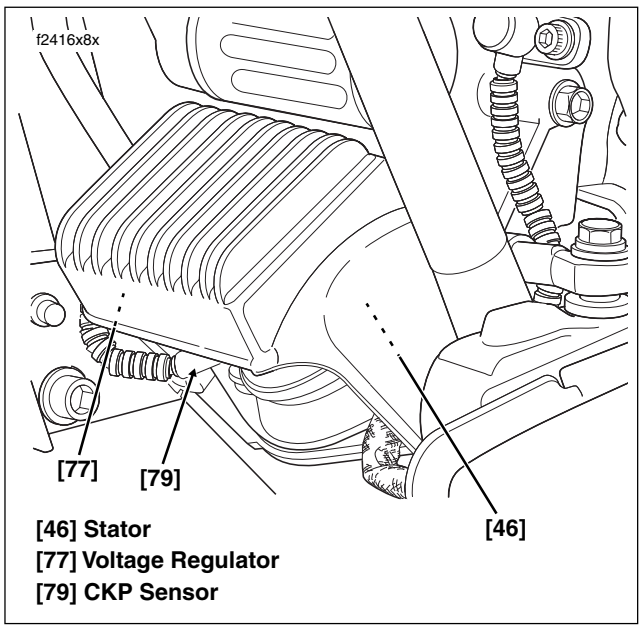

Figure 9-5. Voltage Regulator (Left Side View)

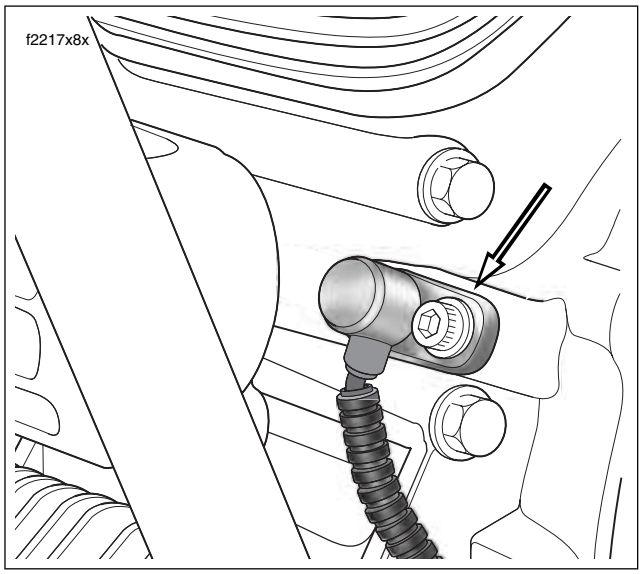

Figure 9-6. Remove Sensor Mount Socket Screw

5. Remove allen head socket screw to free CKP sensor mount from front left side of crankcase. Pull sensor from bore. See Figure 9-6.
6. Pull sensor to draw convoluted tubing and connector out from under voltage regulator.

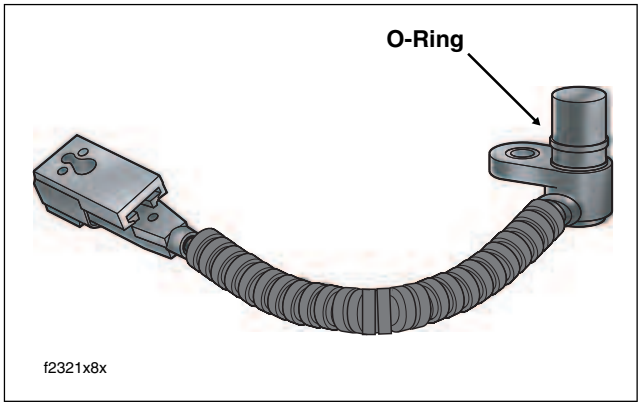

Figure 9-7. CKP Sensor

INSTALLATION

1. Install **new** O-ring on sensor body if missing, distorted, pinched or otherwise damaged. Apply a thin film of clean H-D 20W50 engine oil to O-ring before installation.
2. Push sensor into bore aligning hole in sensor mount with hole in spot face. Install allen head socket screw and tighten to 90-120 **in-lbs** (10.2-13.6 Nm). See Figure 9-6.
3. Route connector and convoluted tubing under front engine stabilizer link to underside of voltage regulator.
4. Mate pin and socket halves of CKP sensor connector [79]. See Figure 9-5.
5. Place large end of slot on attachment clip over T-stud on bracket. Push connector toward left side of motorcycle to engage small end of slot.
6. Install maxi-fuse. See Section 8.3 SYSTEM FUSES, MAXI-FUSE, INSTALLATION.

ET SENSOR

REMOVAL

1. Remove maxi-fuse. See Section 8.3 SYSTEM FUSES, MAXI-FUSE, REMOVAL.
2. On left side of motorcycle, pull back boot at back of front cylinder and remove ET sensor connector [90], 2-place Delphi.
3. Slide a 3/4 inch deepwell socket over the sensor body hex and turn counter-clockwise to loosen. See Figure 9-8. When sensor turns easily, pull out the deepwell socket and remove sensor by hand.

INSTALLATION

1. Hand start threaded end of **new** temperature sensor into cylinder head bore.
2. Slide 3/4 inch deepwell socket over sensor body hex and tighten to 120-180 **in-lbs** (13.6-20.3 Nm).
3. Install ET sensor connector [90], 2-place Delphi, at back of front cylinder.
4. Pull boot over sensor to keep out dirt and debris.
5. Install maxi-fuse. See Section 8.3 SYSTEM FUSES, MAXI-FUSE, INSTALLATION.

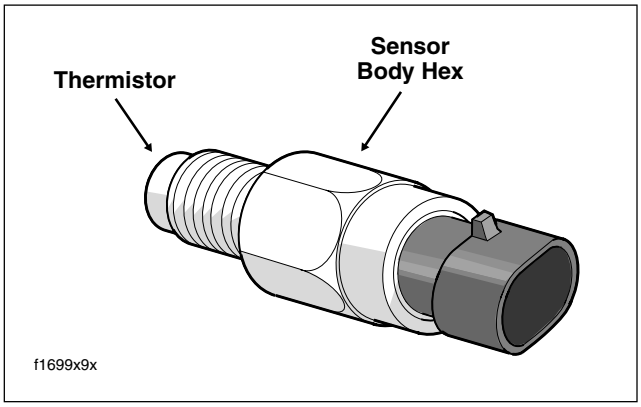

Figure 9-8. ET Sensor

FUEL TANK (FUEL INJECTED) 9.4

COMPLETE REMOVAL

FLHXI, FLHT/C/U/I, FLTRI

⚠WARNING

Gasoline is extremely flammable and highly explosive. When servicing the fuel system, do not smoke or allow open flame or sparks in the vicinity. Inadequate safety precautions could result in death or serious injury.

⚠WARNING

Gasoline will drain from the crossover hose when disconnected from the fuel tank. Thoroughly wipe up any spilled fuel immediately. Dispose of rags in a suitable manner. Gasoline is extremely flammable and highly explosive. Inadequate safety precautions could result in death or serious injury.

CAUTION

Do not kink crossover hose or crimp shut using pliers or similar tool. Damage to the rigid inner lining will occur.

1. Drain fuel tank as follows:

Obtain a short section of hose with a 5/16 inch (7.9 mm) I.D. Insert bolt in one end of hose and install hose clamp to ensure that end is securely plugged. Using a side cutters, cut clamp from one end of crossover hose beneath fuel tank. Quickly replace crossover hose on fuel tank fitting with open end of short hose while directing flow of gasoline from free end of crossover hose into suitable container.

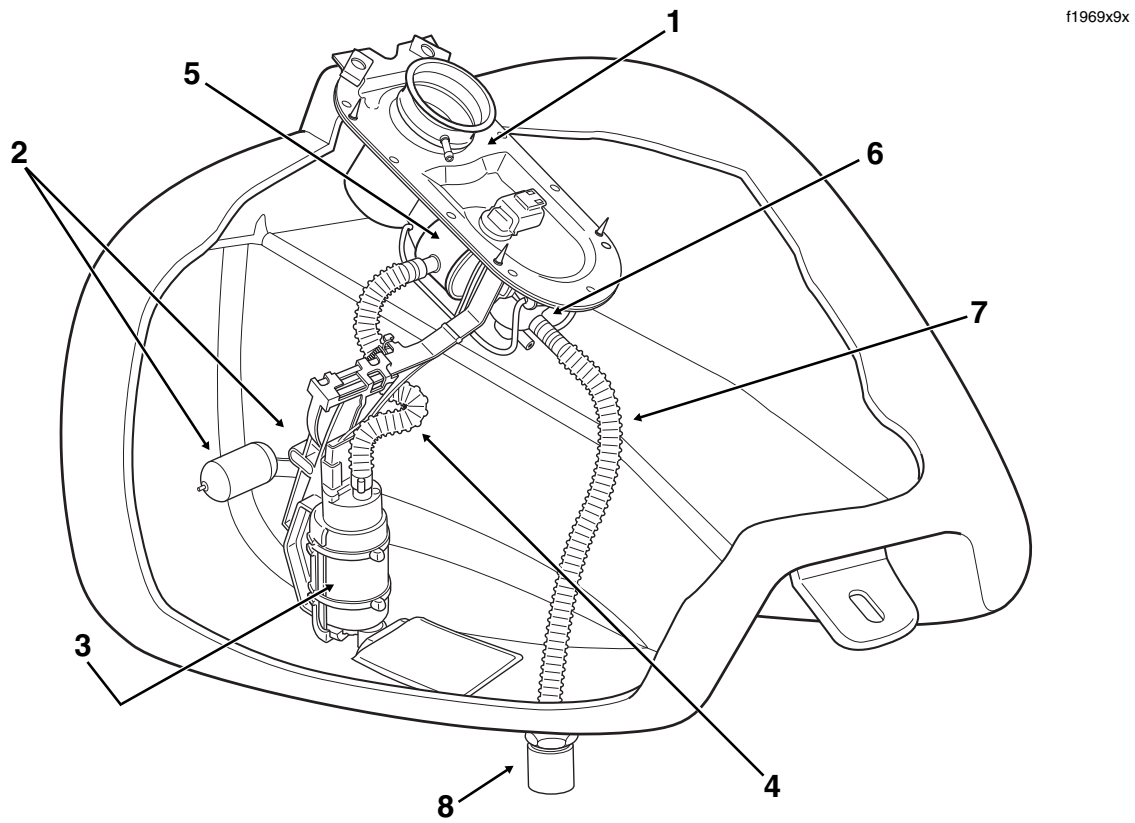

1. **Canopy**
2. **Fuel Level Sender and Float**
3. **Fuel Pump**
4. **Fuel Pump to Filter Canister Tubing**
5. **Fuel Filter Canister**
6. **Fuel Pressure Regulator**
7. **Fuel Pressure Regulator to Supply Fitting Tubing**
8. **Supply Fitting (Check Valve)**

Figure 9-9. Fuel Tank Assembly (FLHXI, FLHT/C/U/I, FLTRI)

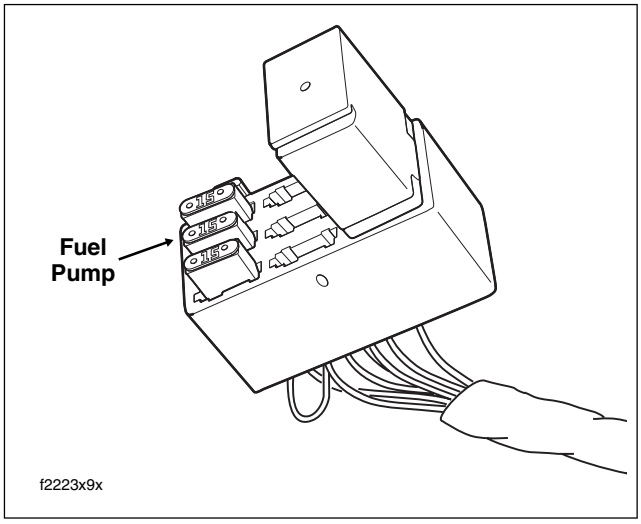

Figure 9-10. EFI Fuse Block

2. Remove seat. See Section 2.25 SEAT, REMOVAL.

⚠WARNING

The gasoline in the fuel supply line downstream of the fuel pump is under high pressure (58 psi). To avoid an uncontrolled discharge or spray of gasoline, always purge the system of high pressure gas before the fuel supply line is disconnected. Gasoline is extremely flammable and highly explosive. Inadequate safety precautions could result in death or serious injury.

3. Purge the fuel supply line of high pressure gas. Proceed as follows:
   a. Remove the 15 amp fuel pump fuse. See Figure 9-10. If necessary, see Section 9.2 ELECTRICAL BRACKET ASSEMBLY, EFI SYSTEM RELAY/EFI FUSES, REMOVAL.
   b. Start the engine and allow the motorcycle to run.
   c. When the engine stalls, operate starter for 3 seconds to remove remaining fuel from fuel lines.

⚠WARNING

To protect against shock and accidental start-up of vehicle, disconnect the negative battery cable before proceeding. Inadequate safety precautions could result in death or serious injury.

4. Unthread bolt and remove battery negative cable (black) from battery negative (-) terminal.
5. Remove two fuel tank front mounting bolts (with flat washers) from left and right side of frame. Remove bolt (with flat washer) to free rear of fuel tank from frame backbone. On FLHXI models, removal of rear bolt also releases console bracket.

NOTE

The fuel tank mounting bolts have both an internal TORX recess and an external hex, which allows them to be removed with either a T40 TORX bit or a 1/2 inch open end/box wrench. Use of the external hex allows the front mounting bolts to be removed without having to loosen or remove the fairing lowers, if installed.

6. Open fuel door on console. Remove two Allen head screws inboard of rubber bumpers. These screws secure console to clip nuts on the canopy bracket. If present, also remove Allen head screw to detach flange at rear of console from clip nut on fuel tank weldment (absent on FLHXI models).
7. Lay a clean shop towel on forward part of rear fender.
8. Remove filler cap from neck of fuel tank. Remove console and lay upside down on shop towel. Reinstall filler cap.
9. Remove fuel level sender/fuel pump connector [141], 4-place Packard, at top of canopy.
10. Gently pry fuel vapor vent tube from fitting on filler neck of fuel tank. Exercise caution to avoid pulling fitting from filler neck.

⚠WARNING

A small amount of gasoline may drain from the fuel supply line when disconnected from the fuel tank. Thoroughly wipe up any spilled fuel immediately. Dispose of rags in a suitable manner. Gasoline is extremely flammable and highly explosive. Inadequate safety precautions could result in death or serious injury.

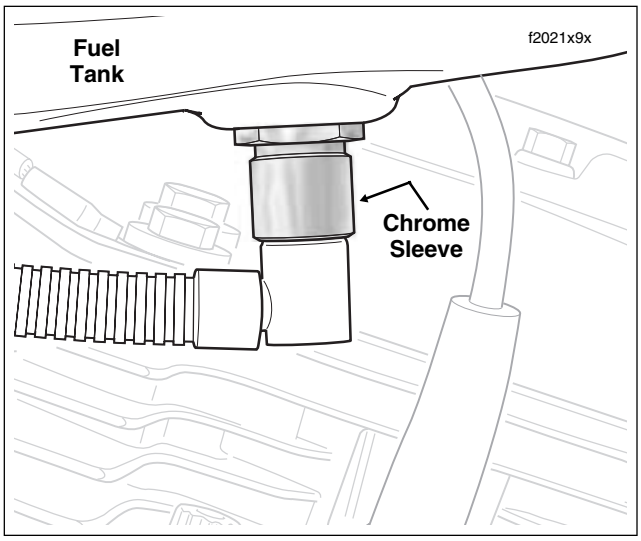

Figure 9-11. Fuel Supply Line Fitting

⚠WARNING

Exercise caution to avoid twisting the fuel supply line fitting, as any cracks in the plastic construction of the line can result in gas leaks. Gas leakage can cause fire or explosion which could result in death or serious injury.

11. Locate quick-connect fitting on left side of fuel tank. Pull up on chrome sleeve and pull down on fuel supply line fitting to disconnect. See Figure 9-11.
12. Remove fuel tank from motorcycle.

FLHR/C/S/I

1. See Section 9.4 FUEL TANK (FUEL INJECTED), COMPLETE REMOVAL, FLHXI, FLHT/C/U/I, FLTRI, steps 1-4.
2. Remove two fuel tank front mounting bolts (with flat washers) from left and right side of frame. Remove bolt (with flat washer) to free rear of fuel tank from frame backbone. On FLHRSI models, removal of rear bolt also releases instrument console bracket.
3. Remove acorn nut from instrument console. If present, also remove Phillips screw and large flat washer (absent on FLHRSI models).
4. Raise instrument console and bend back flexible clamp on canopy to release main harness conduit. Remove fuel level sender/fuel pump connector [141], 4-place Packard, at top of canopy.

CAUTION

When removing instrument console, exercise caution to avoid damaging speedometer unit. Wrap console in a clean, dry shop towel to prevent damage.

5. Secure instrument console to top of rear fender using bungee cords.
6. Remove console mounting bolt from slot at top of canopy.
7. Gently pry fuel vapor vent tube from fitting.
8. At bottom left side of fuel tank, gently pull on convoluted tubing to draw fuel gauge connector [117], 4-place Multilock, out of tunnel. Depress button on socket terminal side and pull apart pin and socket halves.

⚠WARNING

A small amount of gasoline may drain from the fuel supply line when disconnected from the fuel tank. Thoroughly wipe up any spilled fuel immediately. Dispose of rags in a suitable manner. Gasoline is extremely flammable and highly explosive. Inadequate safety precautions could result in death or serious injury.

⚠WARNING

Exercise caution to avoid twisting the fuel supply line fitting, as any cracks in the plastic construction of the line can result in gas leaks. Gas leakage can cause fire or explosion which could result in death or serious injury.

9. Locate quick-connect fitting on left side of fuel tank. Pull up on chrome sleeve and pull down on fuel supply line fitting to disconnect. See Figure 9-11.
10. Remove fuel tank from motorcycle.

INSTALLATION (AFTER COMPLETE REMOVAL)

FLHXI, FLHT/C/U/I, FLTRI

1. Work fuel tank into position aligning front flange holes with those in left and right side of frame.
2. Start fuel tank front mounting bolts (with flat washers).
3. Route free end of crossover hose under frame backbone and in front of ignition coil to other side of fuel tank. Install convoluted tubing, if removed, and **new** clamp onto hose. Install hose onto fitting at bottom of fuel tank (after removing temporary plug) and crimp clamp using HOSE CLAMP PLIERS (HD-97087-65B).

⚠WARNING

Exercise caution to avoid twisting the fuel supply line fitting, as any cracks in the plastic construction of the line can result in gas leaks. Gas leakage can cause fire or explosion which could result in death or serious injury.

4. Locate quick-connect fitting on left side of fuel tank. Pull up on chrome sleeve and insert neck of fuel supply line fitting. While pushing up on bottom of fitting, pull down on chrome sleeve until it “clicks” into the locked position.

⚠WARNING

To avoid an uncontrolled discharge or spray of gasoline, always be sure the quick-connect fitting is properly mated. A slight tug on the fuel supply line fitting will verify this condition. Gasoline is extremely flammable and highly explosive. Inadequate safety precautions could result in death or serious injury.

5. Connect fuel vapor vent tube to nipple on filler neck of fuel tank.
6. Install fuel level sender/fuel pump connector [141], 4-place Packard, at top of canopy.
7. Remove filler cap. Exercising caution to avoid pinching harnesses, overflow hose and vent tube, position console on canopy as shown in Figure 9-12. Reinstall filler cap.

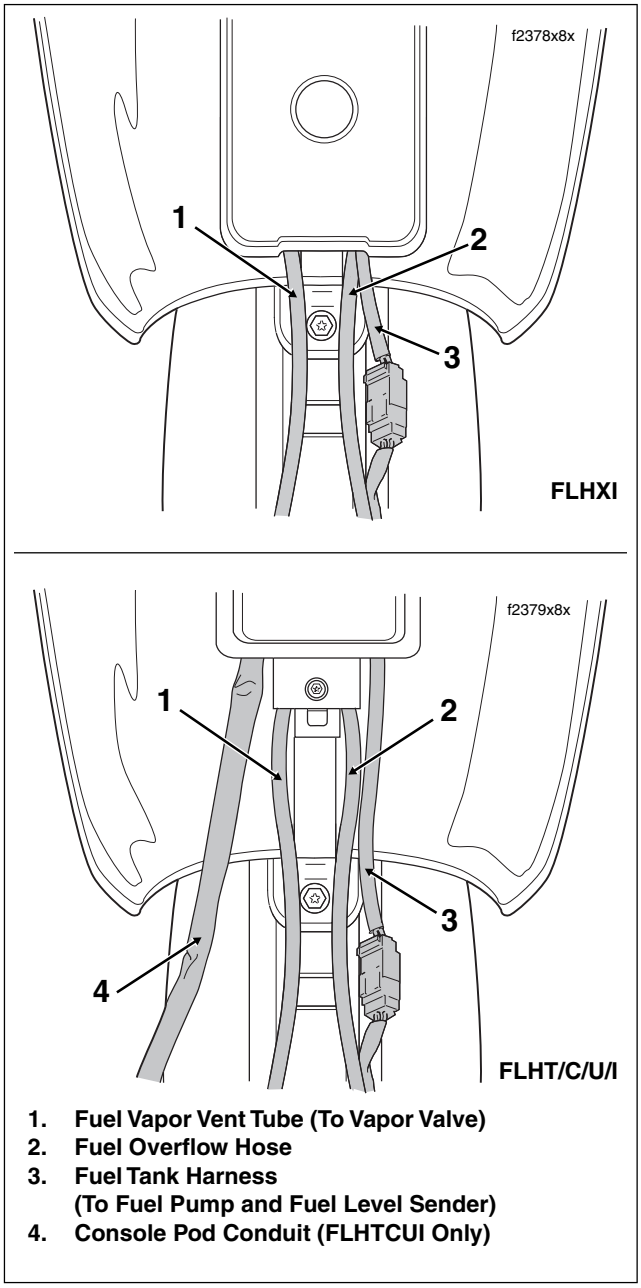

1. **Fuel Vapor Vent Tube (To Vapor Valve)**
2. **Fuel Overflow Hose**
3. **Fuel Tank Harness (To Fuel Pump and Fuel Level Sender)**
4. **Console Pod Conduit (FLHTCUI Only)**

Figure 9-12. Console Cable/Hose Routing (FLHXI, FLHT/C/U/I)

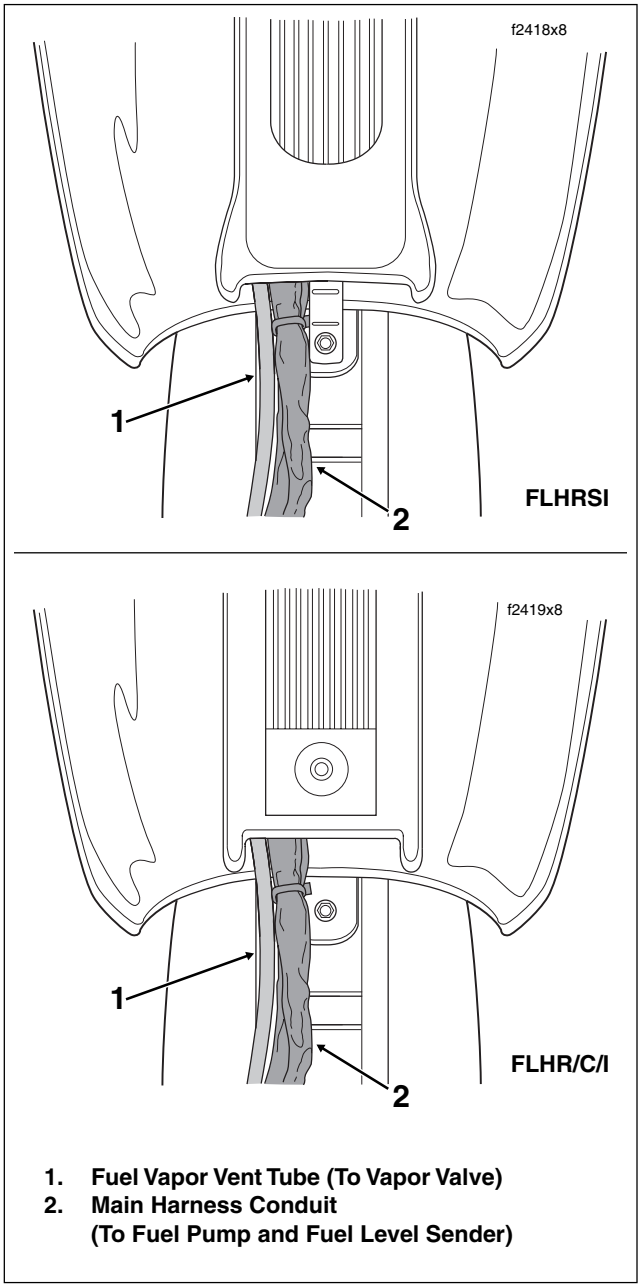

1. **Fuel Vapor Vent Tube (To Vapor Valve)**
2. **Main Harness Conduit (To Fuel Pump and Fuel Level Sender)**

Figure 9-13. Console Cable/Hose Routing (FLHR/C/S/I)

8. Install bolt (with flat washer) to secure rear of fuel tank to frame backbone. On FLHXI models, capture console bracket during installation. Tighten bolt to 15-20 ft-lbs (20-27 Nm).
9. Tighten fuel tank front mounting bolts to 15-20 ft-lbs (20-27 Nm).
10. Open fuel door on console. Install two Allen head screws to secure front of console to clip nuts on canopy bracket. Alternately tighten screws to 25-30 in-lbs (2.8-3.4 Nm). If present, also install Allen head screw to fasten rear flange of console to clip nut on fuel tank weldment (absent on FLHXI models). Tighten screw to 25-30 in-lbs (2.8-3.4 Nm).
11. Insert bolt through battery negative cable (black) into threaded hole of battery negative (-) terminal. Tighten bolt to 60-96 **in-lbs** (6.8-10.9 Nm).
12. Install the 15 amp fuel pump fuse. See Figure 9-10. If necessary, see Section 9.2 ELECTRICAL BRACKET ASSEMBLY, EFI SYSTEM RELAY/EFI FUSES, INSTALLATION.

13. Install seat. See Section 2.25 SEAT, INSTALLATION.

FLHR/C/S/I

1. Work fuel tank into position aligning front flange holes with those in left and right side of frame.
2. Start fuel tank front mounting bolts (with flat washers).
3. Route free end of crossover hose under frame backbone and in front of ignition coil to other side of fuel tank. Install convoluted tubing, if removed, and **new** clamp onto hose. Install hose onto fitting at bottom of fuel tank (after removing temporary plug) and crimp clamp using HOSE CLAMP PLIERS (HD-97087-65B).

⚠WARNING

Exercise caution to avoid twisting the fuel supply line fitting, as any cracks in the plastic construction of the line can result in gas leaks. Gas leakage can cause fire or explosion which could result in death or serious injury.

4. Locate quick-connect fitting on left side of fuel tank. Pull up on chrome sleeve and insert neck of fuel supply line fitting. While pushing up on bottom of fitting, pull down on chrome sleeve until it “clicks” into the locked position.

⚠WARNING

To avoid an uncontrolled discharge or spray of gasoline, always be sure the quick-connect fitting is properly mated. A slight tug on the fuel supply line fitting will verify this condition. Gasoline is extremely flammable and highly explosive. Inadequate safety precautions could result in death or serious injury.

5. Connect fuel vapor vent tube to fitting at top of canopy.
6. Slide head of console mounting bolt into slot at top of canopy.
7. Moving instrument console toward installed position, install fuel level sender/fuel pump connector [141], 4-place Packard, at top of canopy. Bend flexible clamp to capture main harness conduit.
8. Exercising caution to avoid pinching harness and vent tube, align hole in instrument console with console mounting bolt and place into position on fuel tank. See Figure 9-13.
9. Install bolt (with flat washer) to secure rear of fuel tank to frame backbone. On FLHRSI models, capture instrument console bracket during installation. Tighten bolt to 15-20 ft-lbs (20-27 Nm).
10. Tighten fuel tank front mounting bolts to 15-20 ft-lbs (20-27 Nm).
11. Install acorn nut at top of instrument console and tighten to 50-90 in-lbs (5.7-10.2 Nm). If present, also install Phillips screw and large flat washer (absent on FLHRSI models). Tighten screw to 36-60 in-lbs (4.1-6.8 Nm).

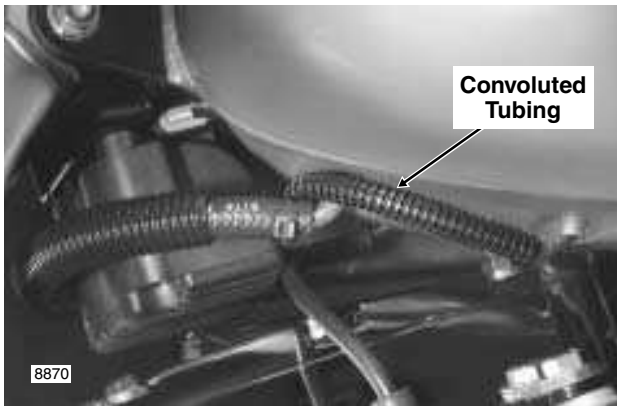

Figure 9-14. Fuel Gauge (FLHR/C/S)

12. Connect fuel gauge to main harness. Route pin housing and convoluted tubing forward and then inboard between front of crossover hose fitting and bottom of fuel tank. Mate pin and socket halves of fuel gauge connector [117], 4-place Multilock. Feed connector into tunnel of fuel tank. See Figure 9-14.
13. Insert bolt through battery negative cable (black) into threaded hole of battery negative (-) terminal. Tighten bolt to 60-96 **in-lbs** (6.8-10.9 Nm).
14. Install the 15 amp fuel pump fuse. See Figure 9-10. If necessary, see Section 9.2 ELECTRICAL BRACKET ASSEMBLY, EFI SYSTEM RELAY/EFI FUSES, INSTALLATION.
15. Install seat. See Section 2.25 SEAT, INSTALLATION.

PARTIAL REMOVAL

FLHXI, FLHT/C/U/I, FLTRI

⚠WARNING

Gasoline is extremely flammable and highly explosive. When servicing the fuel system, do not smoke or allow open flame or sparks in the vicinity. Inadequate safety precautions could result in death or serious injury.

1. Remove seat. See Section 2.25 SEAT, REMOVAL.

⚠WARNING

The gasoline in the fuel supply line downstream of the fuel pump is under high pressure (58 psi). To avoid an uncontrolled discharge or spray of gasoline, always purge the system of high pressure gas before the fuel supply line is disconnected. Inadequate safety precautions could result in death or serious injury.

2. Purge the fuel supply line of high pressure gas. Proceed as follows:
   a. Remove the 15 amp fuel pump fuse. See Figure 9-10. If necessary, see Section 9.2 ELECTRICAL BRACKET ASSEMBLY, EFI SYSTEM RELAY/EFI FUSES, REMOVAL.
   b. Start the engine and allow the motorcycle to run.
   c. When the engine stalls, operate starter for 3 seconds to remove remaining fuel from fuel lines.

⚠WARNING

To protect against shock and accidental start-up of vehicle, disconnect the negative battery cable before proceeding. Inadequate safety precautions could result in death or serious injury.

3. Unthread bolt and remove battery negative cable (black) from battery negative (-) terminal.
4. Remove two fuel tank front mounting bolts (with flat washers) from left and right side of frame. Remove bolt (with flat washer) to free rear of fuel tank from frame backbone. On FLHXI models, removal of rear bolt also releases console bracket.

NOTE

The fuel tank mounting bolts have both an internal TORX recess and an external hex, which allows them to be removed with either a T40 TORX bit or a 1/2 inch open end/box wrench. Use of the external hex allows the front mounting bolts to be removed without having to loosen or remove the fairing lowers, if installed.

5. Open fuel door on console. Remove two Allen head screws inboard of rubber bumpers. These screws secure console to clip nuts on the canopy bracket. If present, also remove Allen head screw to detach flange at rear of console from clip nut on fuel tank weldment (absent on FLHXI models).
6. Lay a clean shop towel on forward part of rear fender.
7. Remove filler cap from neck of fuel tank. Remove console and lay upside down on shop towel. Reinstall filler cap.
8. Remove fuel level sender/fuel pump connector [141], 4-place Packard, at top of canopy.
9. Gently pry fuel vapor vent tube from fitting on filler neck of fuel tank. Exercise caution to avoid pulling fitting from filler neck.

⚠WARNING

A small amount of gasoline may drain from the fuel supply line when disconnected from the fuel tank. Thoroughly wipe up any spilled fuel immediately. Dispose of rags in a suitable manner. Gasoline is extremely flammable and highly explosive. Inadequate safety precautions could result in death or serious injury.

⚠WARNING

Exercise caution to avoid twisting the fuel supply line fitting, as any cracks in the plastic construction of the line can result in gas leaks. Gas leakage can cause fire or explosion which could result in death or serious injury.

10. Locate quick-connect fitting on left side of fuel tank. Pull up on chrome sleeve and pull down on fuel supply line fitting to disconnect. See Figure 9-11.
11. Raise the fuel tank approximately 2 inches. Move the fuel tank crossover hose to the rear of the ignition coil, so that the tank can be raised an additional 2-3 inches. Move fuel tank straight back and rest on frame backbone.
12. Obtain several 1 x 2 inch wooden blocks. Raise front and rear of fuel tank off the frame backbone by placing blocks in tunnel at bottom of tank.

FLHR/C/S/I

1. See Section 9.4 FUEL TANK (FUEL INJECTED), PARTIAL REMOVAL, FLHXI, FLHT/C/U/I, FLTRI, steps 1-3.
2. Remove two fuel tank front mounting bolts (with flat washers) from left and right side of frame. Remove bolt (with flat washer) to free rear of fuel tank from frame backbone. On FLHRSI models, removal of rear bolt also releases instrument console bracket.
3. Remove acorn nut from instrument console. If present, also remove Phillips screw and large flat washer (absent on FLHRSI models).
4. Raise instrument console and bend back flexible clamp on canopy to release main harness conduit. Remove fuel level sender/fuel pump connector [141], 4-place Packard, at top of canopy.

CAUTION

When removing instrument console, exercise caution to avoid damaging speedometer unit. Wrap console in a clean, dry shop towel to prevent damage.

5. Secure instrument console to top of rear fender using bungee cords.
6. Remove console mounting bolt from slot at top of canopy.
7. Gently pry fuel vapor vent tube from fitting at top of canopy.
8. At bottom left side of fuel tank, gently pull on convoluted tubing to draw fuel gauge connector [117], 4-place Multilock, out of tunnel. Depress button on socket terminal side and pull apart pin and socket halves. See Figure 9-14.

⚠WARNING

A small amount of gasoline may drain from the fuel supply line when disconnected from the fuel tank. Thoroughly wipe up any spilled fuel immediately. Dispose of rags in a suitable manner. Gasoline is extremely flammable and highly explosive. Inadequate safety precautions could result in death or serious injury.

⚠WARNING

Exercise caution to avoid twisting the fuel supply line fitting, as any cracks in the plastic construction of the line can result in gas leaks. Gas leakage can cause fire or explosion which could result in death or serious injury.

9. Locate quick-connect fitting on left side of fuel tank. Pull up on chrome sleeve and pull down on fuel supply line fitting to disconnect. See Figure 9-11.
10. Raise the fuel tank approximately 2 inches. Move the fuel tank crossover hose to the rear of the ignition coil, so that the tank can be raised an additional 2-3 inches. Move fuel tank straight back and rest on frame backbone.
11. Obtain several 1 x 2 inch wooden blocks. Raise front and rear of fuel tank off the frame backbone by placing blocks in tunnel at bottom of tank.

INSTALLATION (AFTER PARTIAL REMOVAL)

FLHXI, FLHT/C/U/I, FLTRI

1. Remove wooden blocks and move fuel tank toward its installed position. While positioning fuel tank, move crossover hose in front of ignition coil. Work fuel tank into position aligning front flange holes with those in left and right side of frame.
2. Start fuel tank front mounting bolts (with flat washers).

⚠WARNING

Exercise caution to avoid twisting the fuel supply line fitting, as any cracks in the plastic construction of the line can result in gas leaks. Gas leakage can cause fire or explosion which could result in death or serious injury.

3. Locate quick-connect fitting on left side of fuel tank. Pull up on chrome sleeve and insert neck of fuel supply line fitting. While pushing up on bottom of fitting, pull down on chrome sleeve until it “clicks” into the locked position.

⚠WARNING

To avoid an uncontrolled discharge or spray of gasoline, always be sure the quick-connect fitting is properly mated. A slight tug on the fuel supply line fitting will verify this condition. Gasoline is extremely flammable and highly explosive. Inadequate safety precautions could result in death or serious injury.

4. Connect fuel vapor vent tube to fitting on filler neck of fuel tank.
5. Install fuel level sender/fuel pump connector [141], 4-place Packard, at top of canopy.
6. Remove filler cap. Exercising caution to avoid pinching harnesses, overflow hose and vent tube, position console on canopy as shown in Figure 9-12. Reinstall filler cap.
7. Install bolt (with flat washer) to secure rear of fuel tank to frame backbone. On FLHXI models, capture console bracket during installation. Tighten bolt to 15-20 ft-lbs (20-27 Nm).
8. Tighten fuel tank front mounting bolts to 15-20 ft-lbs (20-27 Nm).
9. Open fuel door on console. Install two Allen head screws to secure front of console to clip nuts on canopy bracket. Alternately tighten screws to 25-30 in-lbs (2.8-3.4 Nm). If present, also install Allen head screw to fasten rear flange of console to clip nut on fuel tank weldment (absent on FLHXI models). Tighten screw to 25-30 in-lbs (2.8-3.4 Nm).
10. Insert bolt through battery negative cable (black) into threaded hole of battery negative (-) terminal. Tighten bolt to 60-96 **in-lbs** (6.8-10.9 Nm).
11. Install the 15 amp fuel pump fuse. See Figure 9-10. If necessary, see Section 9.2 ELECTRICAL BRACKET ASSEMBLY, EFI SYSTEM RELAY/EFI FUSES, INSTALLATION.
12. Install seat. See Section 2.25 SEAT, INSTALLATION.

FLHR/C/S/I

1. Remove wooden blocks and move fuel tank toward its installed position. While positioning fuel tank, move crossover hose in front of ignition coil. Work fuel tank into position aligning front flange holes with those in left and right side of frame.
2. Start fuel tank front mounting bolts (with flat washers).

⚠WARNING

Exercise caution to avoid twisting the fuel supply line fitting, as any cracks in the plastic construction of the line can result in gas leaks. Gas leakage can cause fire or explosion which could result in death or serious injury.

3. Locate quick-connect fitting on left side of fuel tank. Pull up on chrome sleeve and insert neck of fuel supply line fitting. While pushing up on bottom of fitting, pull down on chrome sleeve until it “clicks” into the locked position.

WARNING

To avoid an uncontrolled discharge or spray of gasoline, always be sure the quick-connect fitting is properly mated. A slight tug on the fuel supply line fitting will verify this condition. Gasoline is extremely flammable and highly explosive. Inadequate safety precautions could result in death or serious injury.

4. Connect fuel vapor vent tube to fitting at top of canopy.
5. Slide head of console mounting bolt into slot at top of canopy.
6. Moving instrument console toward installed position, install fuel level sender/fuel pump connector [141], 4-place Packard, at top of canopy. Bend flexible clamp to capture main harness conduit.
7. Exercising caution to avoid pinching harness and vent tube, align hole in instrument console with console mounting bolt and place into position on fuel tank. See Figure 9-13.
8. Install bolt (with flat washer) to secure rear of fuel tank to frame backbone. On FLHRSI models, capture instrument console bracket during installation. Tighten bolt to 15-20 ft-lbs (20-27 Nm).
9. Tighten fuel tank front mounting bolts to 15-20 ft-lbs (20-27 Nm).
10. Install acorn nut at top of instrument console and tighten to 50-90 in-lbs (5.7-10.2 Nm). If present, also install Phillips screw and large flat washer (absent on FLHRSI models). Tighten screw to 36-60 in-lbs (4.1-6.8 Nm).
11. Connect fuel gauge to main harness. Route pin housing and convoluted tubing forward and then inboard between front of crossover hose fitting and bottom of fuel tank. Mate pin and socket halves of fuel gauge connector [117], 4-place Multilock. Feed connector into tunnel of fuel tank. See Figure 9-14.
12. Insert bolt through battery negative cable (black) into threaded hole of battery negative (-) terminal. Tighten bolt to 60-96 **in-lbs** (6.8-10.9 Nm).
13. Install the 15 amp fuel pump fuse. See Figure 9-10. If necessary, see Section 9.2 ELECTRICAL BRACKET ASSEMBLY, EFI SYSTEM RELAY/EFI FUSES, INSTALLATION.
14. Install seat. See Section 2.25 SEAT, INSTALLATION.

CONSOLE POD/CANOPY

FLHXI, FLHT/C/U/I, FLTRI

REMOVAL

WARNING

Gasoline will drain from the crossover hose when disconnected from the fuel tank. Thoroughly wipe up any spilled fuel immediately. Dispose of rags in a suitable manner. Gasoline is extremely flammable and highly explosive. Inadequate safety precautions could result in death or serious injury.

CAUTION

Do not kink crossover hose or crimp shut using pliers or similar tool. Damage to the rigid inner lining will occur.

1. Drain fuel tank as follows:

   Obtain a short section of hose with a 5/16 inch (7.9 mm) I.D. Insert bolt in one end of hose and install hose clamp to ensure that end is securely plugged. Cut clamp from one end of crossover hose beneath fuel tank. Quickly replace crossover hose on fuel tank fitting with open end of short hose while directing flow of gasoline from free end of crossover hose into suitable container.
2. Remove seat. See Section 2.25 SEAT, REMOVAL.

WARNING

The gasoline in the fuel supply line downstream of the fuel pump is under high pressure (58 psi). To avoid an uncontrolled discharge or spray of gasoline, always purge the system of high pressure gas before the fuel supply line is disconnected. Inadequate safety precautions could result in death or serious injury.

3. Purge the fuel supply line of high pressure gas. Proceed as follows:
   a. Remove the 15 amp fuel pump fuse. See Figure 9-10. If necessary, see Section 9.2 ELECTRICAL BRACKET ASSEMBLY, EFI SYSTEM RELAY/EFI FUSES, REMOVAL.
   b. Start the engine and allow the motorcycle to run.
   c. When the engine stalls, operate starter for 3 seconds to remove remaining fuel from fuel lines.

WARNING

To protect against shock and accidental start-up of vehicle, disconnect the negative battery cable before proceeding. Inadequate safety precautions could result in death or serious injury.

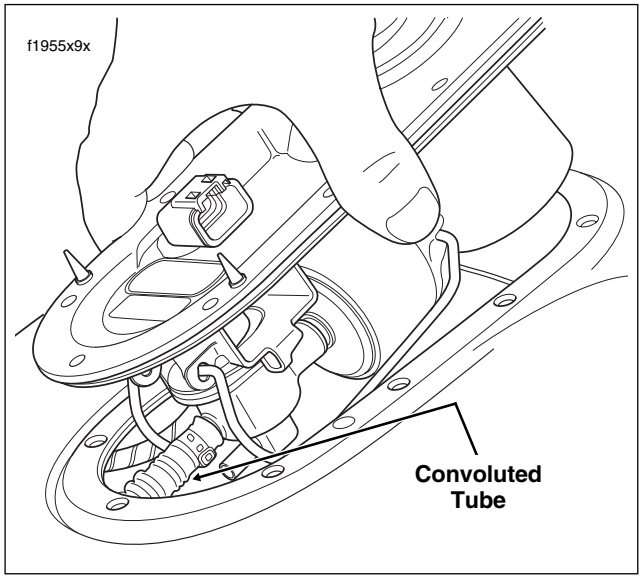

Figure 9-15. Raise Canopy and Remove Tube (FLHXI, FLHT/C/U/I, FLTRI)

4. Unthread bolt and remove battery negative cable (black) from battery negative (-) terminal.
5. Open fuel door on console. Remove two Allen head screws inboard of rubber bumpers. These screws secure console to clip nuts on the canopy bracket. If present, also remove Allen head screw to detach flange at rear of console from clip nut on fuel tank weldment (absent on FLHXI models).
6. On FLHXI models only, remove bolt (with flat washer) to free rear of fuel tank from frame backbone. Removal of rear bolt also releases console bracket.
7. Lay a clean shop towel on forward part of rear fender.
8. Remove filler cap from neck of fuel tank. Remove console and lay upside down on shop towel. Reinstall filler cap.
9. Remove fuel level sender/fuel pump connector [141], 4-place Packard, at top of canopy.
10. Gently pry fuel vapor vent tube from fitting on filler neck of fuel tank. Exercise caution to avoid pulling fitting from filler neck.
11. Using a T20 TORX bit, remove ten screws around the outer edge of the canopy. Discard screws.
12. Raise canopy slightly to access top fitting (inlet port) at back of fuel pressure regulator. Using a side cutters, cut hose clamp and remove convoluted tube. Exercise caution to avoid cutting or damaging tube or dropping pieces of cut clamp into fuel tank. See Figure 9-15.
13. Remove canopy from fuel tank (with attached fuel pressure regulator, fuel filter canister, fuel pump and fuel level sender).

    A spring-loaded hinge on the fuel pump bracket facilitates removal of the assembly. For best results, press down on top of fuel pump with index finger or end of screwdriver, and after raising canopy slightly, rotate on hinge in a counterclockwise direction. When canopy is at a 45˚ angle to top of fuel tank, carefully pull assembly from left side lobe of fuel tank. See Figure 9-17.
14. Remove and discard canopy gasket. Verify that sealing devices from screws are not lodged in canopy holes. Remove and discard devices if present.

INSTALLATION

1. Obtain **new** canopy gasket. With the locator bump on the gasket OD toward the front, position gasket at bottom of canopy. Start four nubs on gasket into holes in canopy. Moving to top of canopy, alternately grasp each nub and pull through hole.

CAUTION

Exercise care to avoid bending float rod of fuel level sender during installation. Be sure to position float rod to the right of the fuel gauge drain tube or it will be bent during installation of the canopy. A bent float rod will result in erroneous gauge readings.

2. While holding fuel pump stationary, raise canopy slightly and rotate on hinge 90˚ in a counterclockwise direction.
3. Holding assembly so that canopy is at a 45˚ angle to top of fuel tank, insert assembly into left side lobe of fuel tank. The spring-loaded hinge on the fuel pump bracket automatically returns assembly to its installed position inside fuel tank.

CAUTION

Carefully inspect end of convoluted tube for cuts, tears, holes or other damage. Replace tube if any damage is found. Even the smallest hole can cause a reduction in fuel pressure.

4. Raise canopy slightly and slide **new** hose clamp onto free end of convoluted tube. Install tube onto top fitting (inlet port) at back of fuel pressure regulator. Crimp clamp. See Figure 9-15.

⚠WARNING

Always use new screws when installing the canopy. Reusing old screws may compromise sealing integrity resulting in gas leaks. Gas leakage can cause fire or explosion which could result in death or serious injury.

NOTE

Check canopy screws for proper sealing devices. Screws must have a bonded seal on underside of head. Replace screws if seal is missing or damaged. See Figure 9-16.

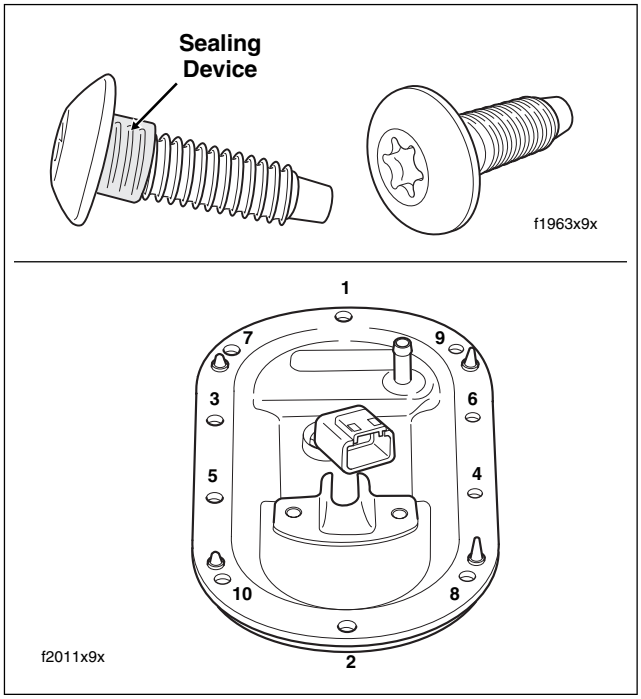

Figure 9-16. Canopy Sealing Screws and Torque Sequence

5. While pushing down on the canopy, align holes in canopy with those in fuel tank. Hand start ten **new** T20 TORX screws in perimeter of canopy. Tighten screws to 18-24 **in-lbs** (2.0-2.7 Nm) using the pattern shown in Figure 9-16.

6. Connect fuel vapor vent tube to fitting on filler neck of fuel tank.

7. Install fuel level sender/fuel pump connector [141], 4-place Packard, at top of canopy.

8. Remove filler cap. Exercising caution to avoid pinching harnesses, overflow hose and vent tube, position console on canopy as shown in Figure 9-12. Reinstall filler cap.

9. Open fuel door on console. Install two Allen head screws to secure front of console to clip nuts on canopy bracket. Alternately tighten screws to 25-30 in-lbs (2.8-3.4 Nm). If present, also install Allen head screw to fasten rear flange of console to clip nut on fuel tank weldment (absent on FLHXI models). Tighten screw to 25-30 in-lbs (2.8-3.4 Nm).

10. On FLHXI models only, install bolt (with flat washer) to secure rear of fuel tank and console bracket to frame backbone. Tighten bolt to 15-20 ft-lbs (20-27 Nm).

11. Slide **new** clamp onto free end of crossover hose. Install hose onto fitting at bottom of fuel tank. Crimp clamp using HOSE CLAMP PLIERS (HD-97087-65B).

12. Insert bolt through battery negative cable (black) into threaded hole of battery negative (-) terminal. Tighten bolt to 60-96 **in-lbs** (6.8-10.9 Nm).

13. Install the 15 amp fuel pump fuse. See Figure 9-10. If necessary, see Section 9.2 ELECTRICAL BRACKET ASSEMBLY, EFI SYSTEM RELAY/EFI FUSES, INSTALLATION.

14. Install seat. See Section 2.25 SEAT, INSTALLATION.

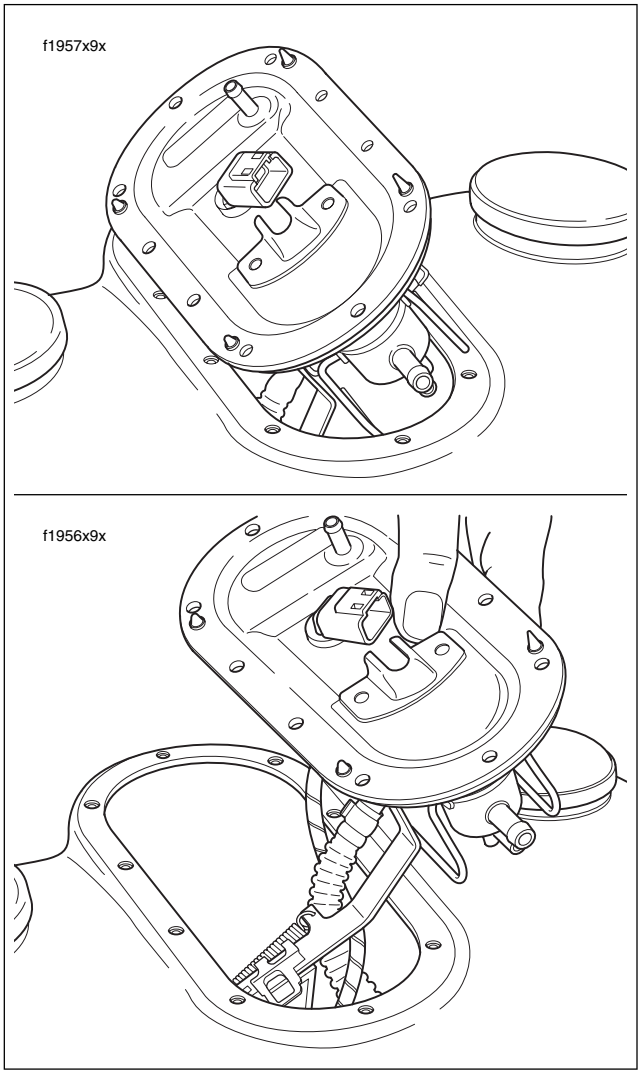

Figure 9-17. Remove Canopy From Motorcycle (FLHR/C/S/I)

INSTRUMENT CONSOLE/CANOPY

FLHR/C/S/I

REMOVAL

WARNING

Gasoline will drain from the crossover hose when disconnected from the fuel tank. Thoroughly wipe up any spilled fuel immediately. Dispose of rags in a suitable manner. Gasoline is extremely flammable and highly explosive. Inadequate safety precautions could result in death or serious injury.

CAUTION

Do not kink crossover hose or crimp shut using pliers or similar tool. Damage to the rigid inner lining will occur.

1. Drain fuel tank as follows:

   Obtain a short section of hose with a 5/16 inch (7.9 mm) I.D. Insert bolt in one end of hose and install hose clamp to ensure that end is securely plugged. Cut clamp from one end of crossover hose beneath fuel tank. Quickly replace crossover hose on fuel tank fitting with open end of short hose while directing flow of gasoline from free end of crossover hose into suitable container.
2. Remove seat. See Section 2.25 SEAT, REMOVAL.

WARNING

The gasoline in the fuel supply line downstream of the fuel pump is under high pressure (58 psi). To avoid an uncontrolled discharge or spray of gasoline, always purge the system of high pressure gas before the fuel supply line is disconnected. Inadequate safety precautions could result in death or serious injury.

3. Purge the fuel supply line of high pressure gas. Proceed as follows:
   a. Remove the 15 amp fuel pump fuse. See Figure 9-10. If necessary, see Section 9.2 ELECTRICAL BRACKET ASSEMBLY, EFI SYSTEM RELAY/EFI FUSES, REMOVAL.
   b. Start the engine and allow the motorcycle to run.
   c. When the engine stalls, operate starter for 3 seconds to remove remaining fuel from fuel lines.

WARNING

To protect against shock and accidental start-up of vehicle, disconnect the negative battery cable before proceeding. Inadequate safety precautions could result in death or serious injury.

4. Unthread bolt and remove battery negative cable (black) from battery negative (-) terminal.
5. Remove acorn nut from instrument console. If present, also remove Phillips screw and large flat washer (absent on FLHRSI models).
6. On FLHRSI models only, remove bolt (with flat washer) to free rear of fuel tank from frame backbone. Removal of rear bolt also releases instrument console bracket.
7. Raise instrument console and bend back flexible clamp on canopy to release main harness conduit. Remove fuel level sender/fuel pump connector [141], 4-place Packard, at top of canopy.

CAUTION

When removing instrument console, exercise caution to avoid damaging speedometer unit. Wrap console in a clean, dry shop towel to prevent damage.

8. Secure instrument console to top of rear fender using bungee cords.
9. Remove console mounting bolt from slot at top of canopy.
10. Gently pry fuel vapor vent tube from fitting at top of canopy.
11. Using a T20 TORX bit, remove ten screws around the outer edge of the canopy. Discard screws.
12. Raise canopy slightly to access top fitting (inlet port) at back of fuel pressure regulator. Using a side cutters, cut hose clamp and remove convoluted tube. Exercise caution to avoid cutting or damaging tube or dropping pieces of cut clamp into fuel tank. See Figure 9-15.
13. Remove canopy from fuel tank (with attached fuel pressure regulator, fuel filter canister, fuel pump and fuel level sender).

    A spring-loaded hinge on the fuel pump bracket facilitates removal of the assembly. For best results, press down on top of fuel pump with index finger or end of screwdriver, and after raising canopy slightly, rotate on hinge in a counterclockwise direction. When canopy is at a 45˚ angle to top of fuel tank, carefully pull assembly from left side lobe of fuel tank. See Figure 9-17.
14. Remove and discard canopy gasket. Verify that sealing devices from screws are not lodged in canopy holes. Remove and discard devices if present.

INSTALLATION

1. Obtain **new** canopy gasket. With the locator bump on the gasket OD toward the front, position gasket at bottom of canopy. Start four nubs on gasket into holes in canopy. Moving to top of canopy, alternately grasp each nub and pull through hole.

CAUTION

Exercise care to avoid bending float rod of fuel level sender during installation. Be sure to position float rod to the right of the fuel gauge drain tube or it will be bent during installation of the canopy. A bent float rod will result in erroneous gauge readings.

2. While holding fuel pump stationary, raise canopy slightly and rotate on hinge 90˚ in a counterclockwise direction.
3. Holding assembly so that canopy is at a 45˚ angle to top of fuel tank, insert assembly into left side lobe of fuel tank keeping the float rod positioned to the right of the fuel gauge drain tube. The spring-loaded hinge on the fuel pump bracket automatically returns assembly to its installed position inside fuel tank.

CAUTION

Carefully inspect end of convoluted tube for cuts, tears, holes or other damage. Replace tube if any damage is found. Even the smallest hole can cause a reduction in fuel pressure.

4. Raise canopy slightly and slide **new** hose clamp onto free end of convoluted tube. Install tube onto top fitting (inlet port) at back of fuel pressure regulator. Crimp clamp. See Figure 9-15.

⚠WARNING

Always use new screws when installing the canopy. Reusing old screws may compromise sealing integrity resulting in gas leaks. Gas leakage can cause fire or explosion which could result in death or serious injury.

NOTE

Check canopy screws for proper sealing devices. Screws must have a bonded seal on underside of head. Replace screws if seal is missing or damaged. See Figure 9-16.

5. While pushing down on the canopy, align holes in canopy with those in fuel tank. Hand start ten **new** T20 TORX screws in perimeter of canopy. Tighten screws to 18-24 **in-lbs** (2.0-2.7 Nm) using the pattern shown in Figure 9-16.
6. Connect fuel vapor vent tube to fitting at top of canopy.
7. Slide head of console mounting bolt into slot at top of canopy.
8. Moving instrument console toward installed position, install fuel level sender/fuel pump connector [141], 4-place Packard, at top of canopy. Bend flexible clamp to capture main harness conduit.
9. Exercising caution to avoid pinching harness and vent tube, align hole in instrument console with console mounting bolt and place into position on fuel tank. See Figure 9-13.
10. Install acorn nut at top of instrument console and tighten to 50-90 **in-lbs** (5.7-10.2 Nm). If present, also install Phillips screw and large flat washer (absent on FLHRSI models). Tighten screw to 36-60 **in-lbs** (4.1-6.8 Nm).
11. On FLHRSI models only, install bolt (with flat washer) to secure rear of fuel tank and instrument console bracket to frame backbone. Tighten bolt to 15-20 ft-lbs (20-27 Nm).
12. Slide **new** clamp onto free end of crossover hose. Install hose onto fitting at bottom of fuel tank. Crimp clamp using HOSE CLAMP PLIERS (HD-97087-65B).
13. Insert bolt through battery negative cable (black) into threaded hole of battery negative (-) terminal. Tighten bolt to 60-96 **in-lbs** (6.8-10.9 Nm).
14. Install the 15 amp fuel pump fuse. See Figure 9-10. If necessary, see Section 9.2 ELECTRICAL BRACKET ASSEMBLY, EFI SYSTEM RELAY/EFI FUSES, INSTALLATION.
15. Install seat. See Section 2.25 SEAT, INSTALLATION.

FUEL FILTER CANISTER

See Section 1.2 MAINTENANCE SCHEDULE for the required service interval, and then proceed as follows:

REMOVAL

1. See CONSOLE POD/CANOPY, FLHXI, FLHT/C/U/I, FLTRI, REMOVAL, or INSTRUMENT CONSOLE/CANOPY, FLHR/C/S/I, REMOVAL.
2. Release fuel filter canister as follows:
   a. Pull wireform to release from slots on fuel filter canister bracket. See A of Figure 9-18.
   b. Use hinge to swing wireform out of the way. Move canister bracket forward to disengage tab from slot on canopy weldment. See B of Figure 9-18.
   c. Pull fitting on canister from fuel pressure regulator assembly. See C of Figure 9-18.
3. Using a side cutters, cut hose clamp and remove convoluted tube from inlet port at side of fuel filter canister. Exercise caution to avoid cutting or damaging tube. Discard fuel filter canister.

INSTALLATION

CAUTION

Do not replace tubes inside of fuel tank with ordinary bulk hose. All internal lines must be replaced with the special original equipment convoluted nylon tubes. Bulk hose will degrade when immersed in gasoline (particularly stale gasoline), resulting in contamination of the fuel supply. Use of contaminated fuel will cause starting and driveability problems and possible vehicle damage.

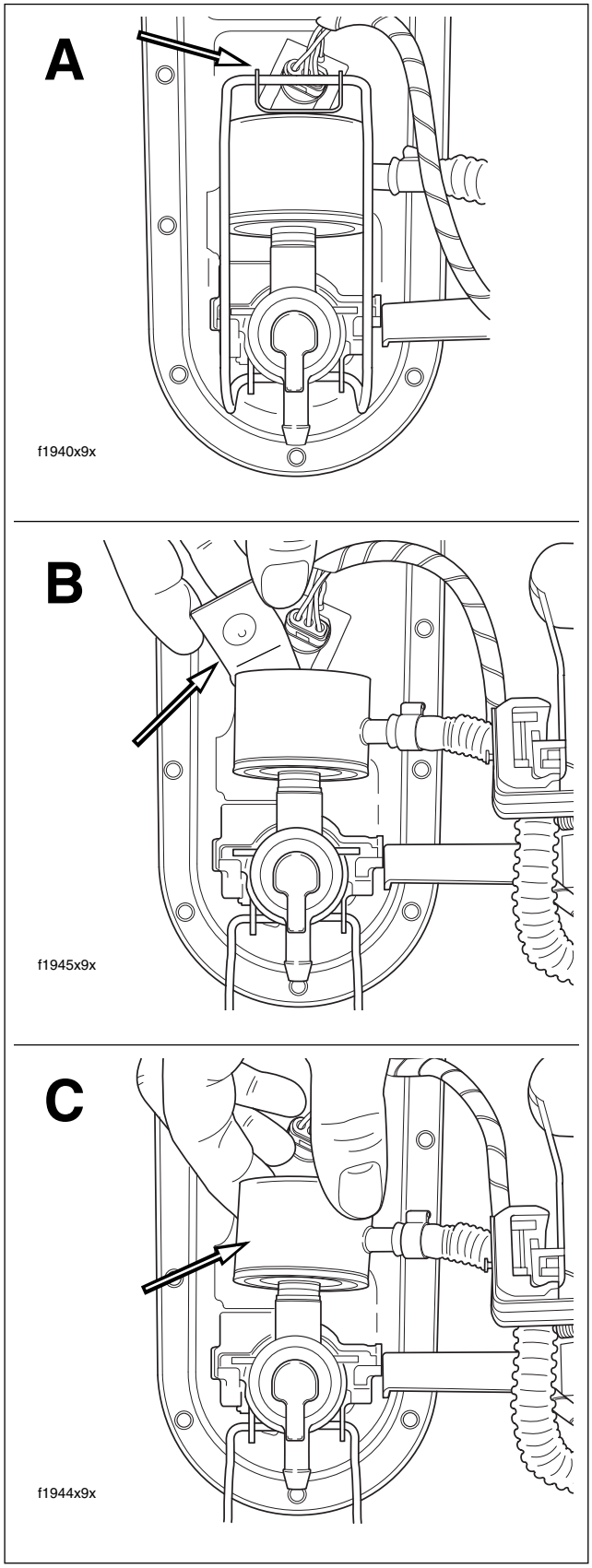

Figure 9-18. Remove Fuel Filter Canister (FLHR/C/S/I)

1. If present, remove and discard plastic caps from fittings of **new** fuel filter canister.
2. Slide **new** hose clamp onto free end of convoluted tube (from fuel pump). Install tube onto inlet port at side of fuel filter canister. If necessary, use a little isopropyl alcohol or glass cleaner to aid installation. Crimp clamp.
3. Install fuel filter canister as follows:
   a. Install **new** O-ring onto fitting of fuel filter canister. Insert fitting into fuel pressure regulator assembly, so that inlet port is on fuel pump side. See C of Figure 9-18.
   b. Slide tab on canister bracket into slot of canopy weldment until bump on bracket engages depression at side of canister. See B of Figure 9-18.
   c. Use hinge to rotate wireform over canister bracket. Press on wireform until it fully engages slots on canister bracket. See A of Figure 9-18.
   d. Verify that socket terminal is firmly installed on spade contact on canister bracket, if present.

CAUTION

Carefully inspect end of convoluted tube for cuts, tears, holes or other damage. Replace tube if any damage is found. Even the smallest hole can cause a reduction in fuel pressure.

4. See CONSOLE POD/CANOPY, FLHXI, FLHT/C/U/I, FLTRI, INSTALLATION, or INSTRUMENT CONSOLE/CANOPY, FLHR/C/S/I, INSTALLATION.

FUEL PRESSURE REGULATOR

REMOVAL

1. See CONSOLE POD/CANOPY, FLHXI, FLHT/C/U/I, FLTRI, REMOVAL, or INSTRUMENT CONSOLE/CANOPY, FLHR/C/S/I, REMOVAL.
2. See FUEL FILTER CANISTER, REMOVAL, step 2.
3. Slide fuel pressure regulator assembly forward to free arms from catches on canopy weldment. See Figure 9-19.
4. Remove fuel pressure regulator from housing. To overcome the resistance of two O-rings, insert blade of small screwdriver into gap between regulator and housing and gently pry regulator out. See Figure 9-20.
5. Inspect O-rings for cuts, tears or general deterioration. Replace the O-rings if they have taken a definite set.

INSTALLATION

1. Apply a thin coat of clean engine oil to **new** O-rings. Install O-rings in grooves of fuel pressure regulator. See Figure 9-20.

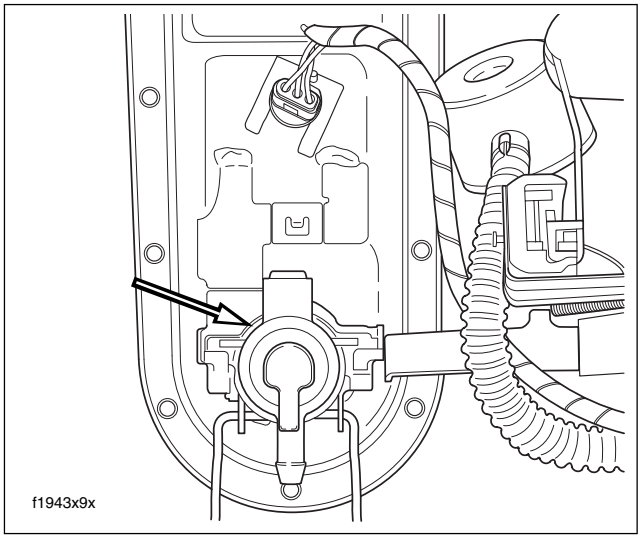

Figure 9-19. Remove Fuel Pressure Regulator (FLHR/C/S/I)

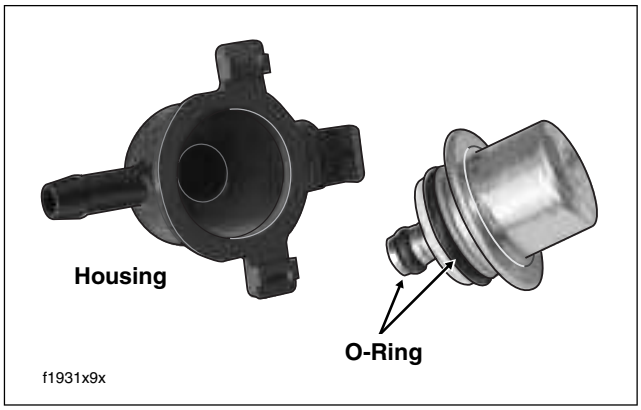

Figure 9-20. Fuel Pressure Regulator Assembly

2. Install fuel pressure regulator into housing.
3. Fit fuel pressure regulator assembly into canopy weldment engaging arms in catches. See Figure 9-19.
4. See FUEL FILTER CANISTER, INSTALLATION, step 3.
5. See CONSOLE POD/CANOPY, FLHXI, FLHT/C/U/I, FLTRI, INSTALLATION, or INSTRUMENT CONSOLE/CANOPY, FLHR/C/S/I, INSTALLATION.

FUEL PUMP

REMOVAL

1. See CONSOLE POD/CANOPY, FLHXI, FLHT/C/U/I, FLTRI, REMOVAL, or INSTRUMENT CONSOLE/CANOPY, FLHR/C/S/I, REMOVAL.
2. Depress external latch and remove electrical connector at top of fuel pump.
3. Using a side cutters, cut hose clamp and pull convoluted tube from fuel pump outlet port. Exercise caution to avoid cutting or damaging tube (and cracking or breaking outlet port).
4. Remove T15 TORX screw and pull fuel level sender from post on fuel pump bracket.
5. Release end of return spring from hook on fuel pump bracket.
6. Remove fuel pump as follows:

NOTE

Two methods are presented based upon whether the fuel pump is being discarded or retained. If the fuel pump is faulty, follow step 6(a). Note that the hinge is damaged during removal so replacement of the fuel pump and bracket assembly is required. On the other hand, if the fuel pump and bracket assembly are still serviceable, follow step 6(b) to remove without damaging.

   a. Insert flat tip screwdriver at location shown in Figure 9-21. Carefully crack plastic webbing at top of hinge and remove from support arm. Discard fuel pump and bracket assembly.
   b. Using the tip of a needle nose pliers, depress pin and slide hinge off end of support arm. See Figure 9-21.

7. Inspect the condition of the fuel pump wiring. If the wiring needs to be replaced, see FUEL PUMP/FUEL LEVEL SENDER WIRING on the next page.

INSTALLATION

1. If removed, install hinge at top of fuel pump bracket, so that support arm slot is on the fuel level sender mount side.

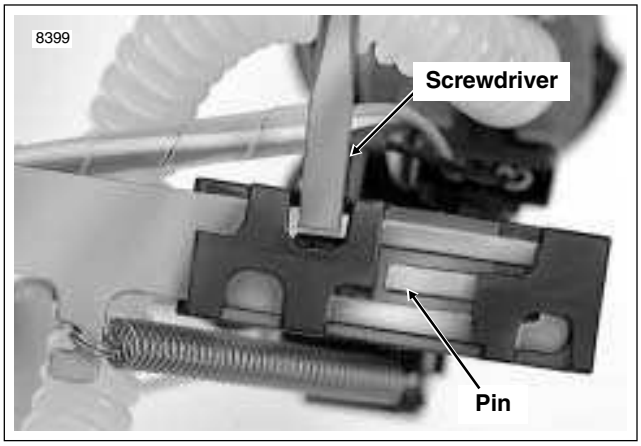

Figure 9-21. Either Crack Webbing or Depress Pin to Remove Hinge From Support Arm

2. Slide end of support arm into slot at top of hinge. Pull on hinge to verify that it is locked by pin on support arm. Install free end of return spring onto hook on fuel pump bracket.

CAUTION

Carefully inspect end of convoluted tube for cuts, tears, holes or other damage. Replace tube if any damage is found. Even the smallest hole can cause a reduction in fuel pressure.

3. Slide **new** hose clamp onto free end of convoluted tube (to fuel filter canister inlet). Install tube onto outlet port of fuel pump. Crimp clamp, but exercise caution to avoid cracking or breaking outlet port.
4. Install electrical connector at top of fuel pump. Gently tug on connector to verify that external latch is locked and connector will not come free of terminals.
5. Align two holes in fuel level sender with threaded hole and post on fuel pump bracket. Install T15 TORX screw in upper hole and tighten to 25-35 **in-lbs** (2.8-4.0 Nm).
6. See CONSOLE POD/CANOPY, FLHXI, FLHT/C/U/I, FLTRI, INSTALLATION, or INSTRUMENT CONSOLE/CANOPY, FLHR/C/S/I, INSTALLATION.

FUEL PUMP/FUEL LEVEL SENDER WIRING

CAUTION

Do not replace the special teflon coated fuel pump/fuel level sender wiring with ordinary bulk wire. Ordinary insulation materials may deteriorate when in contact with gasoline.

NOTE

Damaged wiring, terminals and/or connectors requires replacement of the fuel level sender unit. See FUEL LEVEL SENDER on this page.

FUEL LEVEL SENDER

REMOVAL

1. See CONSOLE POD/CANOPY, FLHXI, FLHT/C/U/I, FLTRI, REMOVAL, or INSTRUMENT CONSOLE/CANOPY, FLHR/C/S/I, REMOVAL.
2. Cut cable strap to release fuel pump/fuel level sender wiring from support arm.
3. At bottom of canopy, depress external latch and remove socket housing of 4-place Packard connector.
4. Remove socket terminal from spade contact on either connector clip or fuel filter canister bracket.
5. Depress external latch and remove electrical connector at top of fuel pump.
6. Remove T15 TORX screw and pull fuel level sender from post on fuel pump bracket.

INSTALLATION

1. Align two holes in fuel level sender with threaded hole and post on fuel pump bracket. Install T15 TORX screw in upper hole and tighten to 25-35 **in-lbs** (2.8-4.0 Nm).
2. Install electrical connector at top of fuel pump. Gently tug on connector to verify that external latch is locked and connector will not come free of terminals.
3. At bottom of canopy, install socket housing of 4-place Packard connector.
4. Install socket terminal onto spade contact on either connector clip or fuel filter canister bracket.
5. Install **new** cable strap to attach fuel pump/fuel level sender wiring to support arm. Cut any excess cable strap material.
6. See CONSOLE POD/CANOPY, FLHXI, FLHT/C/U/I, FLTRI, INSTALLATION, or INSTRUMENT CONSOLE/CANOPY, FLHR/C/S/I, INSTALLATION.

FUEL SUPPLY CHECK VALVE/TUBE

NOTE

The in-tank check valve is housed in the quick-connect fitting. The check valve prevents the fuel tank from draining when the external supply line is disconnected.

REMOVAL

1. See CONSOLE POD/CANOPY, FLHXI, FLHT/C/U/I, FLTRI, REMOVAL, steps 1-12, or INSTRUMENT CONSOLE/CANOPY, FLHR/C/S/I, REMOVAL, steps 1-12.

⚠WARNING

A small amount of gasoline may drain from the fuel supply line when disconnected from the fuel tank. Thoroughly wipe up any spilled fuel immediately. Dispose of rags in a suitable manner. Gasoline is extremely flammable and highly explosive. Inadequate safety precautions could result in death or serious injury.

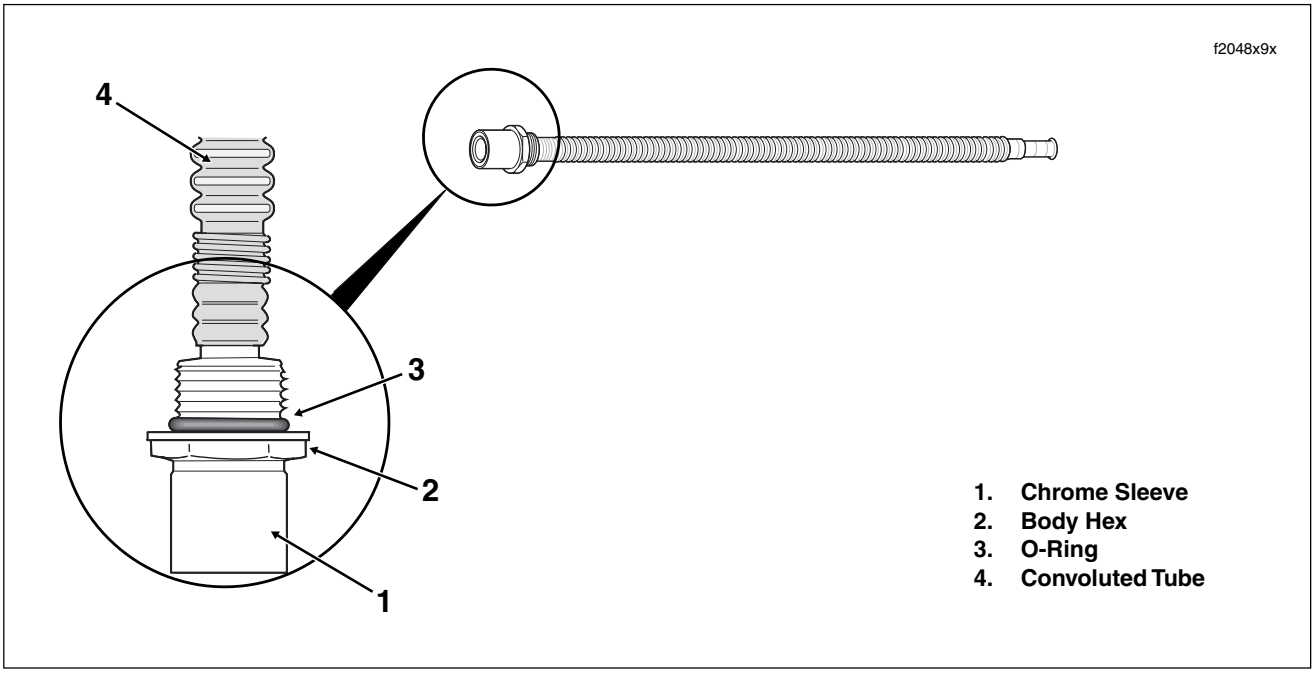

Figure 9-22. Fuel Supply Check Valve/Tube (Quick-Connect Fitting)

WARNING

Exercise caution to avoid twisting the fuel supply line fitting, as any cracks in the plastic construction of the line can result in gas leaks. Gas leakage can cause fire or explosion which could result in death or serious injury.

2. Locate quick-connect fitting on left side of fuel tank. Pull up on chrome sleeve and pull down on fuel supply line fitting to disconnect. See Figure 9-11.

WARNING

A small amount of gasoline may drain from the fuel tank when the quick-connect fitting is removed. Thoroughly wipe up any spilled fuel immediately. Dispose of rags in a suitable manner. Inadequate safety precautions could result in death or serious injury.

3. Slide a 7/8 inch deepwell socket over chrome sleeve engaging hex on quick-connect fitting. See Figure 9-22. Looking down at top of fuel tank, rotate fitting in a clockwise direction until it turns easily. Remove the fitting by hand drawing convoluted tube out through hole at bottom of fuel tank.

INSTALLATION

CAUTION

Carefully inspect convoluted tube for cuts, tears, holes or other damage. Replace tube (with attached quick-connect fitting) if any damage is found. Even the smallest hole can cause a reduction in fuel pressure.

1. Apply a very thin film of clean H-D 20W50 engine oil to **new** O-ring. Slide O-ring down convoluted tube and into groove of **new** quick-connect fitting. See Figure 9-22.
2. Feeding convoluted tube through hole at bottom of fuel tank, hand thread quick-connect fitting into bore. Looking down at top of fuel tank, rotate fitting in a counterclockwise direction until snug.
3. Slide a 7/8 inch deepwell socket over chrome sleeve engaging hex on quick-connect fitting. Tighten fitting to 22-26 ft-lbs (29.8-35.3 Nm).

WARNING

Exercise caution to avoid twisting the fuel supply line fitting, as any cracks in the plastic construction of the line can result in gas leaks. Gas leakage can cause fire or explosion which could result in death or serious injury.

4. Pull up on chrome sleeve of quick-connect fitting and insert neck of fuel supply line fitting. While pushing up on bottom of fitting, pull down on chrome sleeve until it “clicks” into the locked position.

WARNING

To avoid an uncontrolled discharge or spray of gasoline, always be sure the quick-connect fitting is properly mated. A slight tug on the fuel supply line fitting will verify this condition. Gasoline is extremely flammable and highly explosive. Inadequate safety precautions could result in death or serious injury.

5. See CONSOLE POD/CANOPY, FLHXI, FLHT/C/U/I, FLTRI, INSTALLATION, steps 4-14, or INSTRUMENT CONSOLE/CANOPY, FLHR/C/S/I, INSTALLATION, steps 4-15.

NOTES

INDUCTION MODULE ASSEMBLY 9.5

INDUCTION MODULE

REMOVAL

1. Partially remove fuel tank. See Section 9.4 FUEL TANK (FUEL INJECTED), PARTIAL REMOVAL, either FLHXI, FLHT/C/U/I, FLTRI or FLHR/C/S/I.
2. Remove air cleaner and backplate. See Section 4.5 AIR CLEANER, REMOVAL.
3. Pull purge tube from fitting at top of induction module (California models only). See Figure 9-23.
4. Using a needle nose pliers, carefully pull idle cable barrel from upper hole in throttle wheel. Pull throttle cable barrel from lower hole. Using slots, release idle and throttle cables from guides in throttle cable bracket.
5. On cruise control equipped models, remove E-clip from sleeve at end of cruise cable housing. Using slot, remove cable housing from cable guide in throttle cable bracket. Push the plastic end fitting on the cruise cable to the outboard side to release from wheel pin. See Figure 9-24.
6. Remove IAC connector [87] and MAP sensor connector [80].
7. Remove front fuel injector connector [84] and rear fuel injector connector [85].
8. Remove TP sensor connector [88] and IAT sensor connector [89].
9. Remove right side allen head socket screws from front and rear cylinder head flange adapters. For best results, use the INTAKE MANIFOLD WRENCH (HD-47250), or a long 1/4 inch ball allen head socket with end driver 4 inches long.

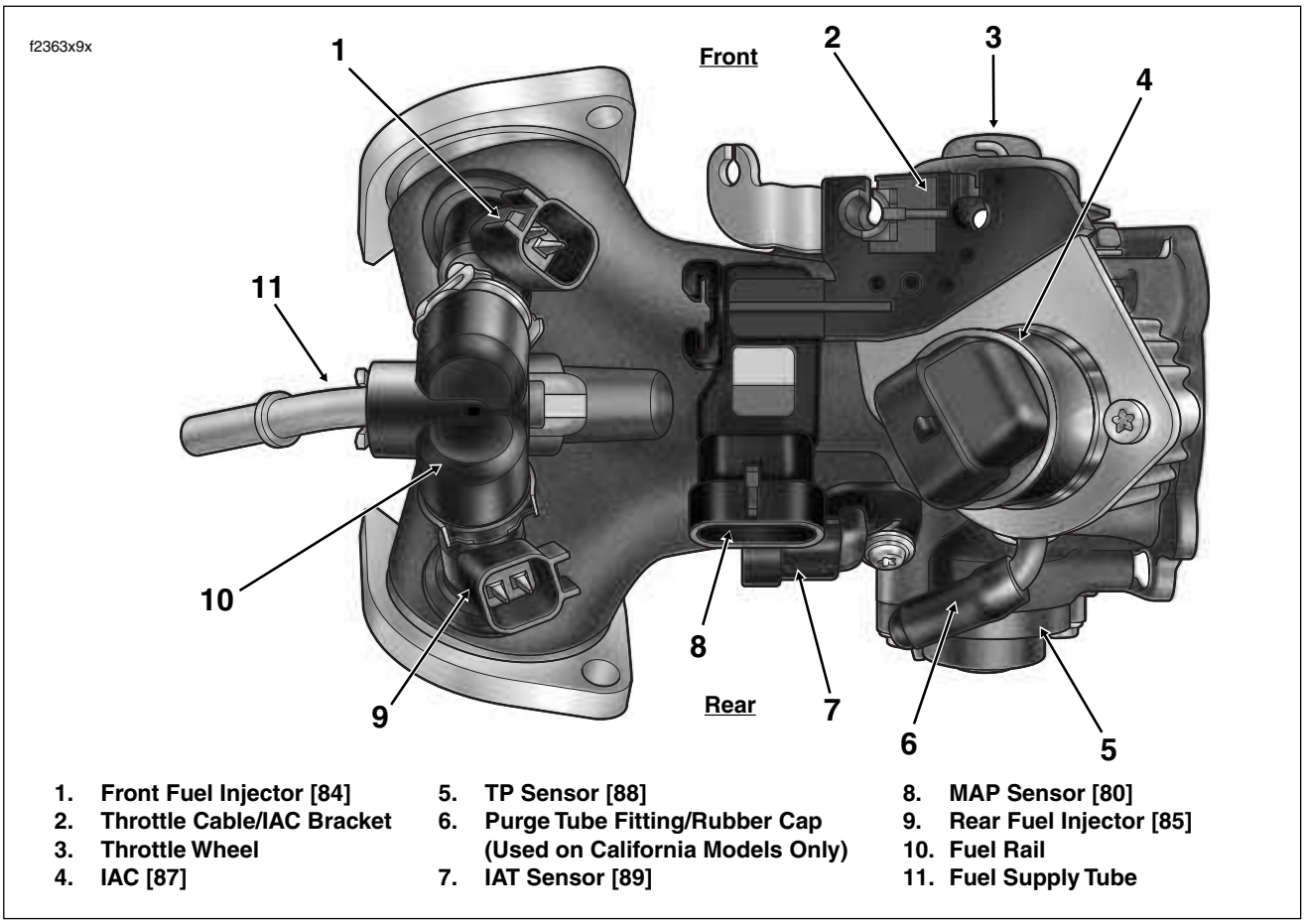

Figure 9-23. Induction Module Assembly

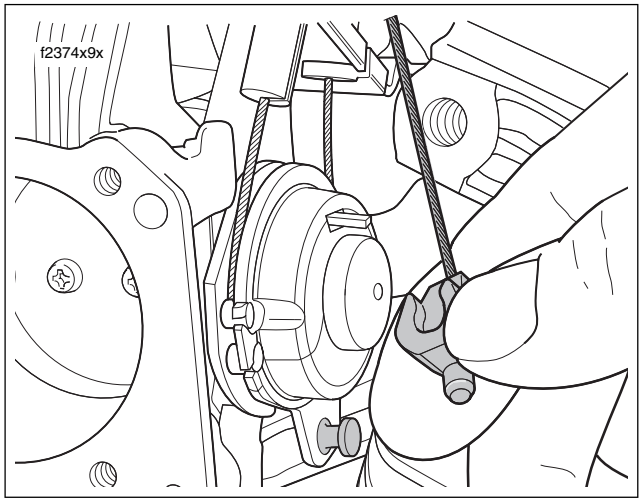

Figure 9-24. Remove End Fitting From Wheel Pin

10. Moving to opposite side of motorcycle, just loosen left side allen head socket screws from flange adapters. Slots in flanges make removal of left side screws unnecessary. To better access bolts, loosen acorn nut and swing horn assembly out of the way.
11. Slide induction module out from right side of motorcycle. Use caution around horn bracket to prevent damage to fuel supply line.

⚠WARNING

A small amount of gasoline will drain from the fuel supply line when disconnected from the fuel supply tube. Thoroughly wipe up any spilled fuel immediately. Dispose of rags in a suitable manner. Gasoline is extremely flammable and highly explosive. Inadequate safety precautions could result in death or serious injury.

12. Depress button on fuel supply line and remove from fuel supply tube. See Figure 9-25.
13. Remove seals from flange adapters. Discard seals. Remove flange adapters from outlet ports of induction module.

INSTALLATION

1. Slide fuel supply line onto fuel supply tube of induction module. A slight tug will verify that the line is locked in place.
2. Orientate the induction module as shown in Figure 9-23. With the counterbore facing outward, slide cylinder head flange adapters onto outlet ports of induction module. The flange adapters are not interchangeable. Look next to the slotted bolt hole for a stamp that indicates F(ront) and R(ear) cylinder.
3. Place a **new** seal in each flange adapter with the beveled side in against the counterbore.
4. Standing on right side of engine, slide induction module toward installed position so that open-ended slots on flange adapters begin to engage allen head socket screws loosely installed on left side. Use caution around horn bracket to prevent damage to fuel supply line.
5. Install sleeve on throttle cable housing into cable guide at top of throttle cable bracket. Drawing throttle cable downward, fit barrel end into lower hole in throttle wheel. Install sleeve and spring on idle cable housing into cable guide at bottom of throttle cable bracket inserting barrel end into upper hole in throttle wheel.
6. On cruise control equipped models, slide groove in cruise cable end fitting over cap of wheel pin. Push on end fitting until it snaps in place. Using slot, slip cruise cable housing into cable guide in throttle cable bracket. At bottom of bracket, install **new** E-clip on sleeve at end of cruise cable housing.
7. Align fixed holes in flange adapters with those in cylinder heads and start allen head socket screws. For best results, use the INTAKE MANIFOLD WRENCH (HD-47250), or a long 1/4 inch ball allen head socket with end driver 4 inches long.
8. Use the air cleaner backplate to properly locate induction module. Install two breather bolts to fasten backplate to front and rear cylinder heads. Install three T27 TORX screws to secure backplate to face of induction module. See Figure 9-26.
9. Tighten allen head socket screw in fixed holes of flange adapters until snug. Moving to left side of engine, tighten screws in slotted holes to 96-144 **in-lbs** (10.9-16.3 Nm). If moved, swing horn assembly back into position and tighten acorn nut.

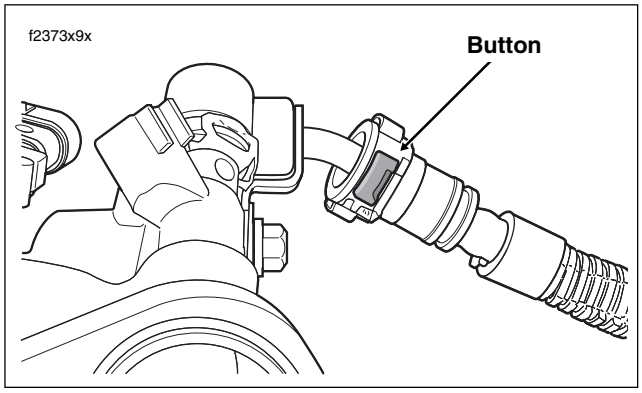

Figure 9-25. Remove Fuel Supply Line From Supply Tube

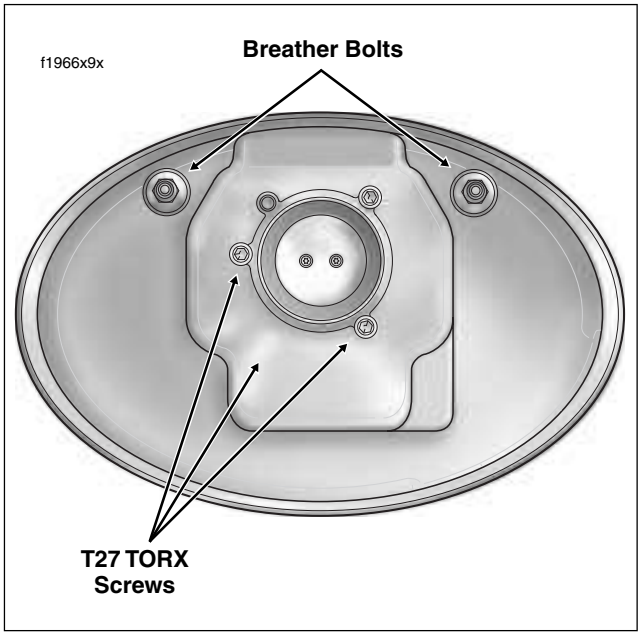

Figure 9-26. Install Backplate to Align Induction Module

10. Remove breather bolts and T27 TORX screws to remove backplate.
11. Tighten allen head socket screws in fixed holes of flange adapters to 96-144 **in-lbs** (10.9-16.3 Nm).
12. Install rear fuel injector connector [85] and front fuel injector connector [84].
13. Install MAP sensor connector [80] and IAC connector [87].
14. Install IAT sensor connector [89] and TP sensor connector [88].
15. Connect purge tube to fitting at top of induction module (California models only).

    On non-California models, inspect rubber cap for tears, cracks or signs of deterioration. Replace cap if damaged or missing. Figure 9-23. Operation without cap can result in engine damage.
16. Install fuel tank. See Section 9.4 FUEL TANK (FUEL INJECTED), INSTALLATION (AFTER PARTIAL REMOVAL), FLHXI, FLHT/C/U/I, FLTRI or FLHR/C/S/I.
17. Turn the Ignition/Light Key Switch to ON and then back to OFF to reset IAC to park position.
18. Install backplate and air cleaner. See Section 4.5 AIR CLEANER, INSTALLATION.
19. Check throttle and idle cable adjustment. Check cruise cable adjustment.

FUEL SUPPLY TUBE/FUEL RAIL/ FUEL INJECTORS

REMOVAL

1. Remove induction module. See INDUCTION MODULE, REMOVAL.
2. Remove hex screw (with pilot sleeve) to release fuel supply tube clamp. See Figure 9-27.
3. Pull fuel supply tube from fuel rail. Remove sealing washer and O-ring from fuel supply tube. Remove second O-ring from fuel rail bore. Discard sealing washer and O-rings. See Figure 9-28.
4. Pull fuel injectors with attached fuel rail from induction module. To overcome the resistance of the bottom O-ring on both fuel injectors, gently rock assembly back and forth while pulling.
5. Remove spring clips from fuel injectors. Pull fuel injectors from fuel rail. To overcome the resistance of the top O-ring, gently rock each fuel injector while pulling.

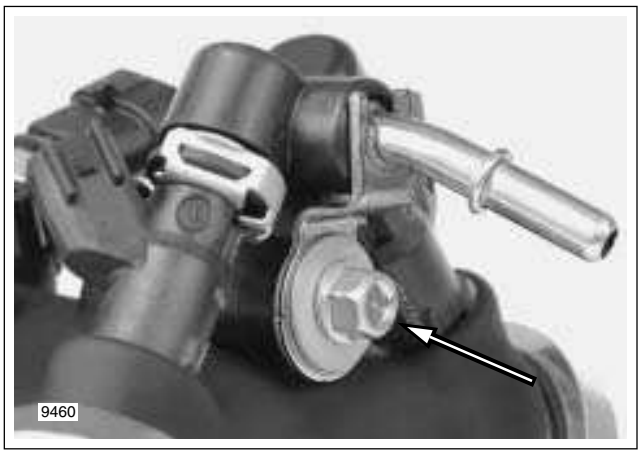

Figure 9-27. Fuel Supply Tube Clamp Hex Screw

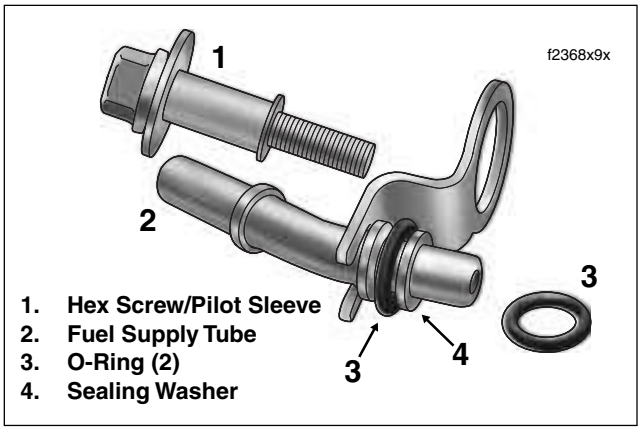

Figure 9-28. Fuel Supply Tube Assembly

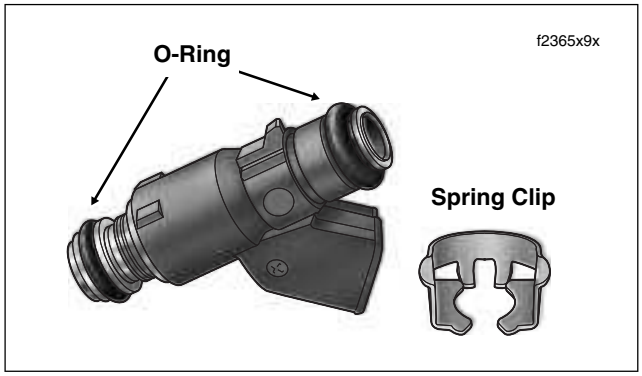

Figure 9-29. Fuel Injector Assembly

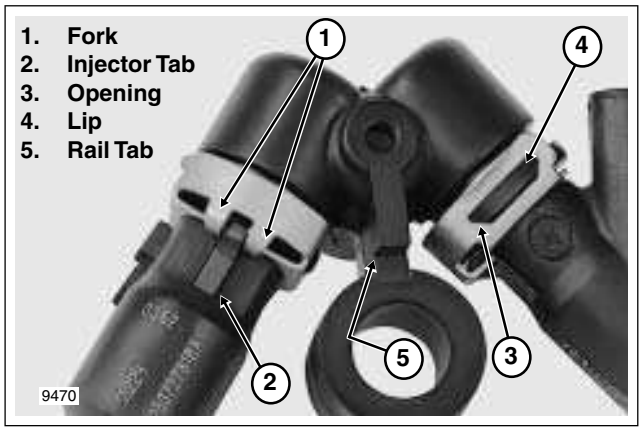

Figure 9-30. Install Spring Clips

6. Remove O-rings from fuel injectors. Discard O-rings. See Figure 9-29.

INSTALLATION

1. Apply a thin coat of clean engine oil to **new** O-rings. Install O-rings on fuel injectors, the thicker O-ring with the smaller ID going on the fuel rail (high pressure) side. See Figure 9-29.
2. Push electrical connector side of fuel injectors into fuel rail.
3. With the concave side toward the fuel rail, install spring clip into slot on fuel injector. In the installed position, openings in sides of clip engage lip on fuel rail, while fork at back of clip captures tab on fuel injector. See Figure 9-30.
4. Rotate fuel injectors, so that the electrical connectors are on the outboard side. Push fuel injectors into induction module bores until tab on fuel rail engages machined slot at top of induction module.
5. Slide **new** O-ring down shorter neck of the fuel supply tube until it contacts the collar. Slide **new** sealing washer down tube until it contacts O-ring. Install second O-ring in fuel rail bore. See Figure 9-28.
6. Push fuel supply tube into fuel rail bore until clamp is seated on round step of fuel rail. Install hex screw (with pilot sleeve) and tighten to 90-110 **in-lbs** (10.2-12.4 Nm). See Figure 9-27.
7. Install induction module. See INDUCTION MODULE, INSTALLATION.

IAT SENSOR

REMOVAL

1. Remove maxi-fuse. See Section 8.3 SYSTEM FUSES, MAXI-FUSE, REMOVAL.
2. Remove air cleaner and backplate. See Section 4.5 AIR CLEANER, REMOVAL.
3. Remove IAT sensor connector [89].
4. Remove T20 TORX screw (with captive washer) to release IAT sensor from induction module. Discard screw. See Figure 9-23.

INSTALLATION

1. Inspect O-ring in groove of IAT sensor for cuts, tears or signs of deterioration. Install **new** O-ring if necessary. See Figure 9-31.
2. Insert sensor into induction module with electrical connector facing toward the left side of the motorcycle. See Figure 9-23.
3. Install **new** T20 TORX screw (with captive washer) to fasten IAT sensor to induction module. Tighten screw to 15-20 **in-lbs** (1.7-2.3 Nm).
4. Install IAT sensor connector [89].

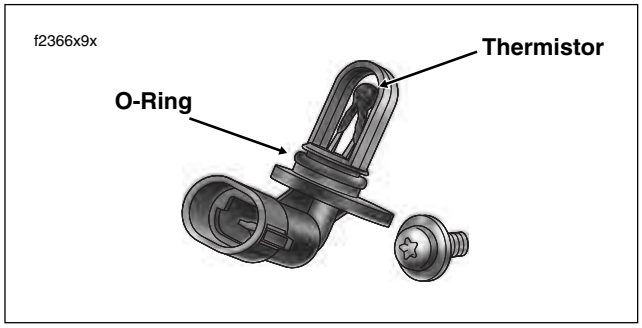

Figure 9-31. IAT Sensor

5. Install backplate and air cleaner. See Section 4.5 AIR CLEANER, INSTALLATION.
6. Install maxi-fuse. See Section 8.3 SYSTEM FUSES, MAXI-FUSE, INSTALLATION.

TP SENSOR

REMOVAL

1. Remove maxi-fuse. See Section 8.3 SYSTEM FUSES, MAXI-FUSE, REMOVAL.
2. Remove air cleaner and backplate. See Section 4.5 AIR CLEANER, REMOVAL.
3. Remove TP sensor connector [88].
4. Remove two T20 TORX screws (with captive washers) to release TP sensor from induction module. Discard screws. See Figure 9-23.

INSTALLATION

1. Inspect O-ring in groove of TP sensor for cuts, tears or signs of deterioration. Install **new** O-ring if necessary. See Figure 9-32.
2. Fit pocket of TP sensor over throttle shaft engaging index pin with hole on machined flange of induction module.
3. Install two **new** T20 TORX screws (with captive washers) to fasten TP sensor to induction module. Alternately tighten screws to 15-20 **in-lbs** (1.7-2.3 Nm). See Figure 9-23.
4. Using the throttle lever mechanism, open and close the throttle plates to check for proper operation. Be sure that the mechanism operates smoothly without binding or sticking.

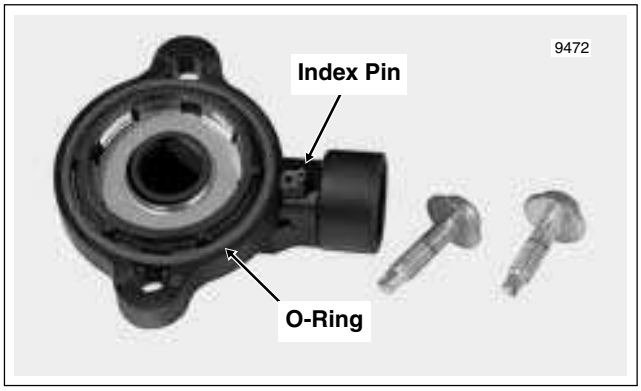

Figure 9-32. TP Sensor

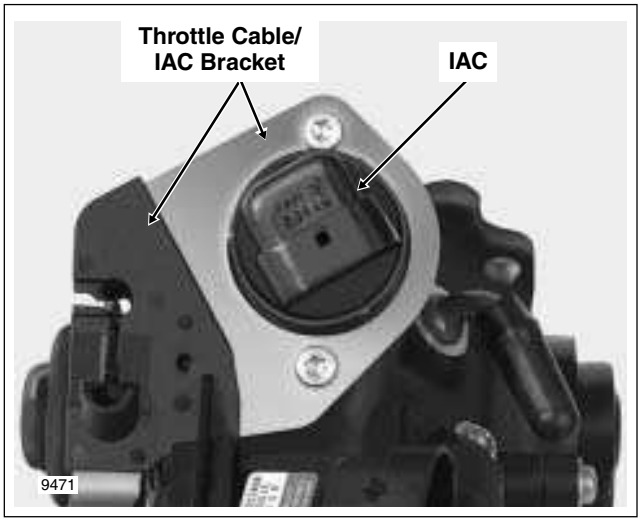

Figure 9-33. Remove Screws to Release Bracket

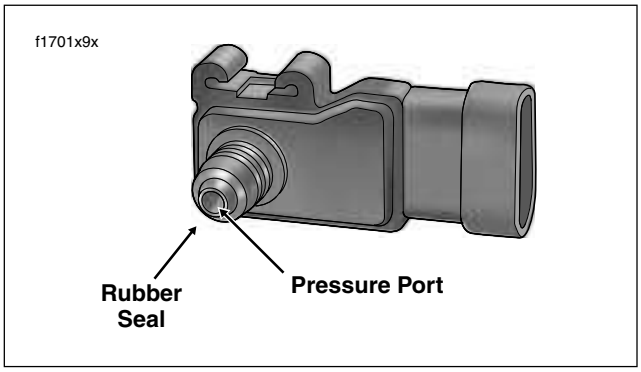

Figure 9-34. MAP Sensor

5. Install TP sensor connector [88].
6. Install backplate and air cleaner. See Section 4.5 AIR CLEANER, INSTALLATION.
7. Install maxi-fuse. See Section 8.3 SYSTEM FUSES, MAXI-FUSE, INSTALLATION.

MAP SENSOR

REMOVAL

1. Remove induction module. See INDUCTION MODULE, REMOVAL.
2. Remove two T20 TORX screws to release throttle cable/ IAC bracket from induction module. Discard screws. See Figure 9-33.
3. Pull pressure port on MAP sensor from hole in induction module. See Figure 9-34.

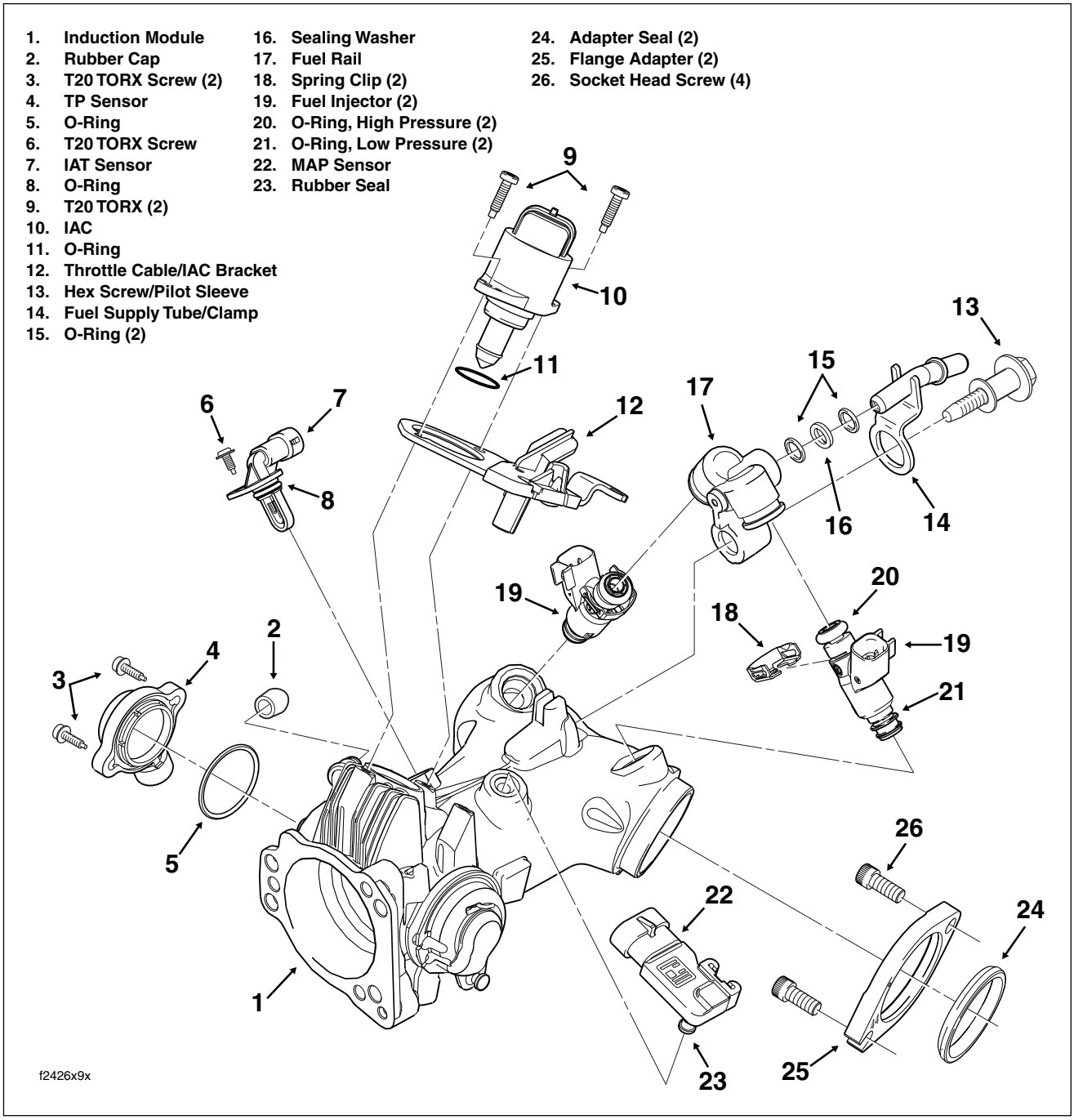

Figure 9-35. Induction Module Assembly

INSTALLATION

1. Inspect rubber seal on pressure port for cuts, tears or signs of deterioration. Install **new** rubber seal if necessary. See Figure 9-34.
2. With the electrical connector facing toward the rear of the induction module (side opposite throttle wheel), insert pressure port on MAP sensor into hole in induction module.
3. Insert index pin at bottom of throttle cable/IAC bracket into hole in boss at top of induction module. See Figure 9-36.
4. Align holes in throttle cable/IAC bracket with thru holes in flange of IAC. See Figure 9-33.
5. Install two **new** T20 TORX screws and alternately tighten to 20-35 **in-lbs** (2.3-4.0 Nm). See Figure 9-33.

6. Install induction module. See INDUCTION MODULE, INSTALLATION.

IAC

REMOVAL

1. Remove induction module. See INDUCTION MODULE, REMOVAL.
2. Remove two T20 TORX screws to release throttle cable/IAC bracket from induction module. Discard screws. See Figure 9-33.
3. Pull IAC from bore of induction module. Remove O-ring from counterbore. Discard O-ring. See Figure 9-37.

INSTALLATION

1. Apply a thin coat of clean engine oil to **new** O-ring. Install O-ring in counterbore of induction module.
2. With the electrical connector facing the rear left side of the induction module, install IAC into bore.
3. Insert index pin at bottom of throttle cable/IAC bracket into hole in boss at top of induction module. See Figure 9-36.
4. Align holes in throttle cable/IAC bracket with thru holes in flange of IAC.
5. Install two **new** T20 TORX screws and alternately tighten to 20-35 **in-lbs** (2.3-4.0 Nm). See Figure 9-33.
6. Install induction module. See INDUCTION MODULE, INSTALLATION.

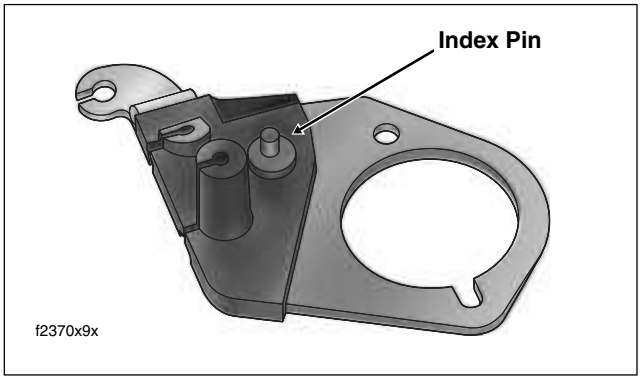

Figure 9-36. Throttle Cable/IAC Bracket

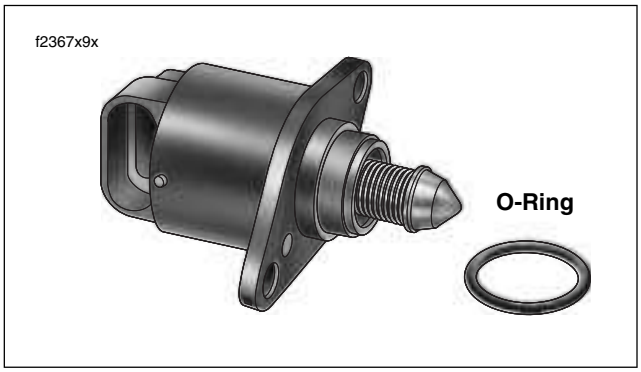

Figure 9-37. IAC

DEUTSCH ELECTRICAL CONNECTORS B.1

GENERAL

Attachment clips are attached to the pin housings of some connectors. The clips are then attached to T-studs on the motorcycle frame. T-studs give positive location to electrical connectors and wire harnesses. Consistent location reduces electrical problems and improves serviceability.

To become familiar with the Deutsch connector, read the parts description below while referencing the 12-place connector illustrated in Figure B-3.

Socket housing: alignment tabs and/or external latch, secondary locking wedge, internal seal, wire seal, seal pin.

NOTE

Seal pins or plugs are installed in the wire seals of unused chambers. If removed, seal pins must be replaced to maintain the integrity of the environmental seal.

Pin housing: alignment grooves and/or external latch cover, secondary locking wedge, wire seal, seal pin.

REMOVING/DISASSEMBLING

1. Push the connector to disengage small end of slot on attachment clip fromT-stud. Lift connector off T-stud.
2. Depress the external latch(es) on the socket housing side and use a rocking motion to separate the pin and socket halves. Two-, three-, four- and six-place Deutsch connectors have one external latch, while eight- and twelve-place connectors have two, both of which must be pressed simultaneously to separate the connector halves.

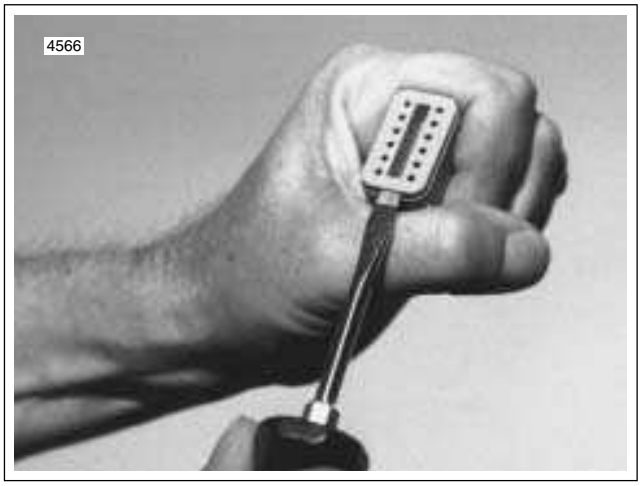

Figure B-1. Remove Secondary Locking Wedge

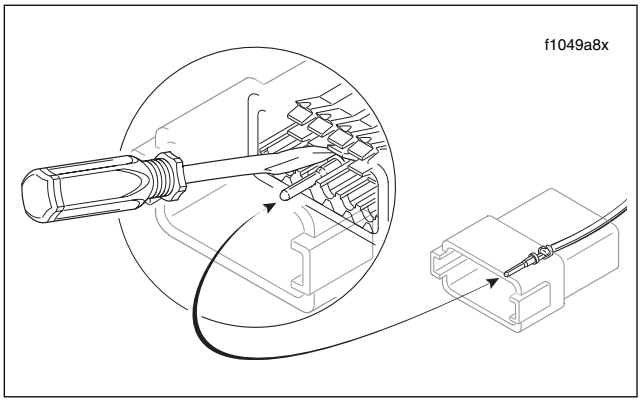

Figure B-2. Depress Terminal Latches/Back Out Pins

NOTE

With few exceptions, the socket housing can always be found on the accessory side, while the pin side of the connector is plumbed to the wiring harness.

REMOVING/INSTALLING SOCKETS

1. See Figure B-1. Remove the secondary locking wedge. Insert the blade of a small screwdriver between the socket housing and locking wedge inline with the groove (inline with the pin holes if the groove is absent). Turn the screwdriver 90 degrees to pop the wedge up.
2. Gently depress terminal latches inside socket housing and back out sockets through holes in rear wire seal. See Figure B-2.

NOTE

If new terminals must be installed, see CRIMPING INSTRUCTIONS in this section.

3. Fit rear wire seal into back of socket housing, if removed. Grasp socket approximately 1 inch (25.4 mm) behind the contact barrel. Gently push sockets through holes in wire seal into their respective chambers. Feed socket into chamber until it “clicks” in place. Verify that socket will not back out of chamber; a slight tug on the wire will confirm that it
4. Install internal seal on lip of socket housing, if removed. Insert tapered end of secondary locking wedge into socket housing and press down until it snaps in place. The wedge fits into the center groove within the socket housing and holds the terminal latches tightly closed.

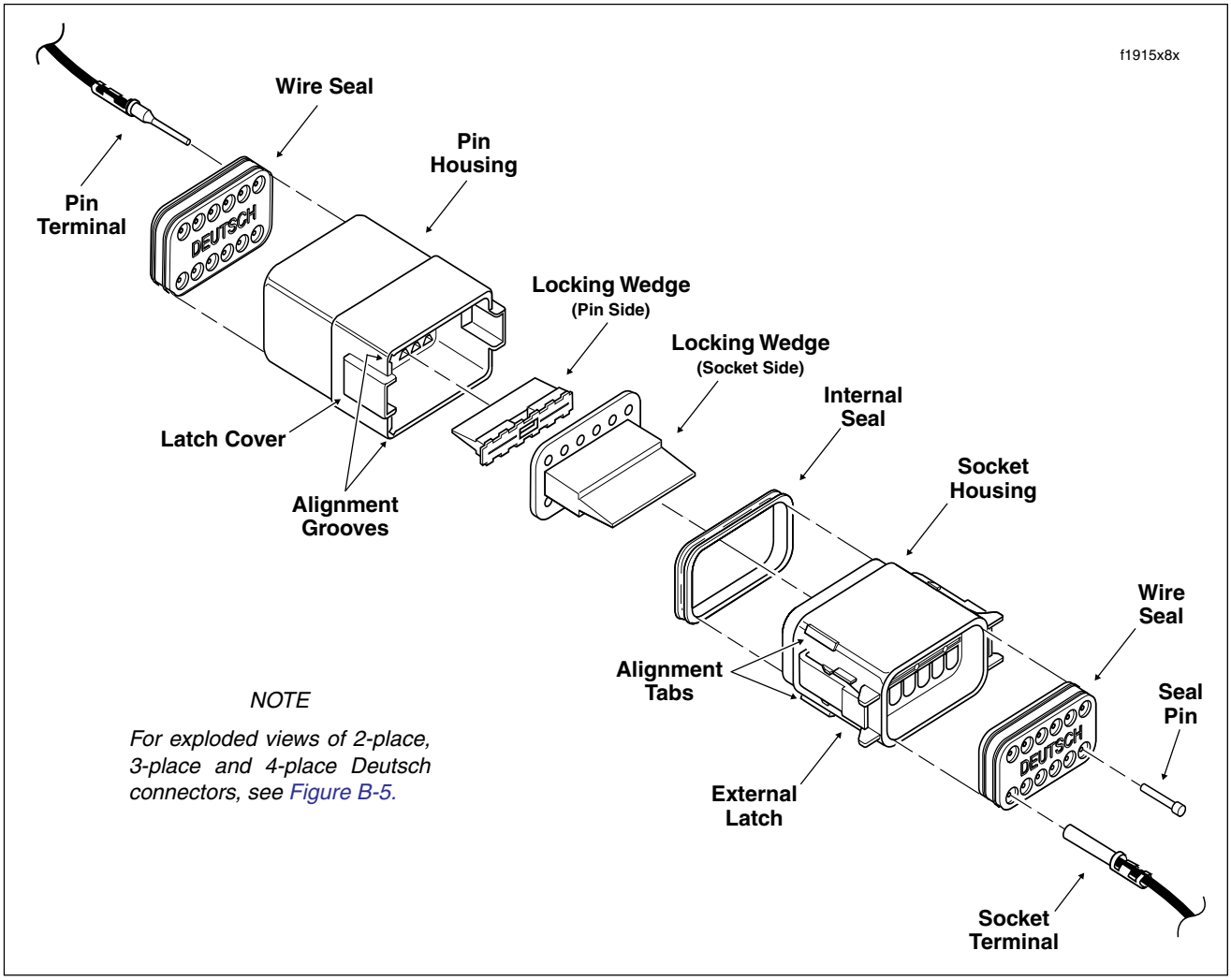

Figure B-3. 12-Place Deutsch Connector (Exploded View)

NOTE

While rectangular wedges do not require a special orientation, the conical secondary locking wedge of the 3-place connector must be installed with the arrow pointing toward the external latch. See Figure B-4.

NOTE

If the secondary locking wedge does not slide into the installed position easily, verify that all terminals are fully installed in the socket housing. The lock indicates when terminals are not properly installed by not entering its fully installed position.

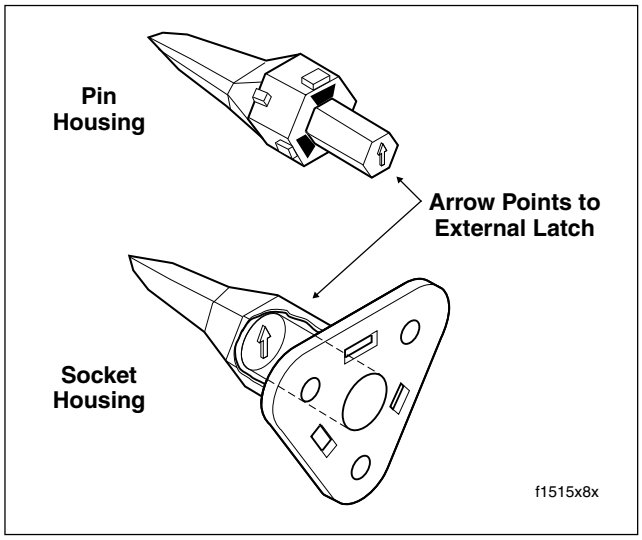

Figure B-4. 3-Place Locking Wedge Orientation

REMOVING/INSTALLING PINS

1. Remove the secondary locking wedge. Use the hooked end of a stiff piece of mechanics wire, a needle nose pliers or a suitable pick tool (HD-41475-100). See Figure B-6.

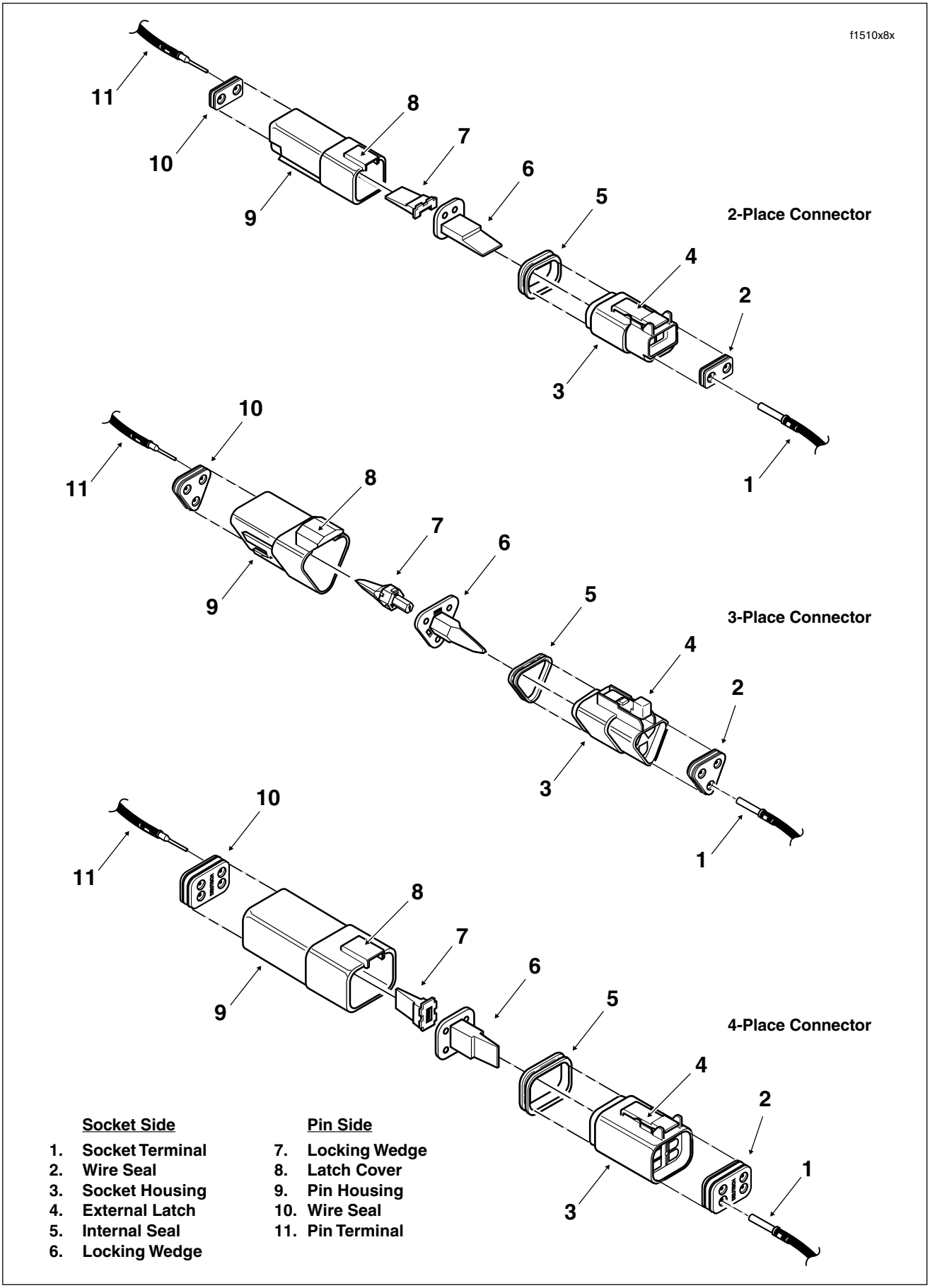

Figure B-5. 2-Place, 3-Place and 4-Place Deutsch Connectors

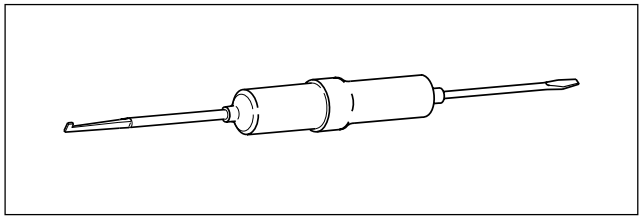

Figure B-6. Deutsch Connector Pick Tool (Part No. HD-41475-100)

2. Gently depress terminal latches inside pin housing and back out pins th

NOTE

If new terminals must be installed, see CRIMPING INSTRUCTIONS on this page.

3. Fit wire seal into back of pin housing. Grasp crimped pin approximately 1 inch (25.4 mm) behind the contact barrel. Gently push pins through holes in wire seal into their respective numbered locations. Feed pin into chamber until it "clicks" in place. Verify that pin will not back out of chamber; a slight tug on the wire will confirm that it is properly locked in place.
4. Insert tapered end of secondary locking wedge into pin housing and press down until it snaps in place. The wedge fits in the center groove within the pin housing and holds the terminal latches tightly closed.

NOTE

While rectangular wedges do not require a special orientation, the conical secondary locking wedge of the 3-place connector must be installed with the arrow pointing toward the external latch. See Figure B-4.

NOTE

If the secondary locking wedge does not slide into the installed position easily, verify that all terminals are fully installed in the pin housing. The lock indicates when terminals are not properly installed by not entering its fully installed position.

ASSEMBLING/INSTALLING

1. Insert socket housing into pin housing until it snaps in place. Two-, three-, four- and six-place Deutsch connectors have one external latch on the socket half of the connector. To fit the halves of the connector together, the latch on the socket side must be aligned with the latch cover on the pin side.

   For those connectors with two external latches (8-place and 12-place), a different system is used to prevent improper assembly. Align the tabs on the socket housing with the grooves on the pin housing. Push the connector halves together until the latches "click." If latches do not click (latch), press on one side of the connector until that latch engages, then press on the opposite side to engage the other latch.

NOTES

- *Deutsch connectors are colored coded for location purposes. Those connectors associated with **left** side accessories, such as the front and rear **left** turn signals, are **gray**. All other connectors, including those associated with right side accessories, are black.*
- *If it should become necessary to replace a plug or receptacle, please note that the 8-place and 12-place gray and black connectors are not interchangeable. Since location of the alignment tabs differ between the black and gray connectors, plugs or receptacles must be replaced by those of the same color. If replacing both the socket and pin halves, then the black may be substituted for the gray, and vice versa. The socket and pin halves of all other connectors are interchangeable, that is, the black may be mated with the gray, since the alignment tabs are absent and the orientation of the external latch is the same.*

2. Fit the attachment clip to the pin housing, if removed. Place large end of slot on attachment clip over T-stud on frame. Push assembly forward to engage small end of slot.

CRIMPING INSTRUCTIONS

Use the Deutsch Terminal Crimp Tool (HD-39965) to install standard size terminals with crimp tails, as described under STANDARD TERMINALS below. To install the mini-Deutsch terminals with crimp tails, see MINI TERMINALS, which follows. To install those terminals without crimp tails, both standard and mini-Deutsch, use the Deutsch Solid Barrel Contact Crimp Tool (HD-42879) as described under SOLID BARREL CONTACTS.

NOTE

A Deutsch Connector Service Kit (HD-41475) contains a selection of wire seals, internal seals, seal plugs, secondary locking wedges, attachment clips and socket/pin terminals. Also included is a compartmented storage box, carrying case and pick tool (HD-41475-100) used for the removal of all types of locking wedges.

STANDARD TERMINALS

1. Obtain the DEUTSCH TERMINAL CRIMP TOOL (HD-39965).
2. Squeeze the handles to cycle the crimp tool to the fully open position. See Figure B-7.

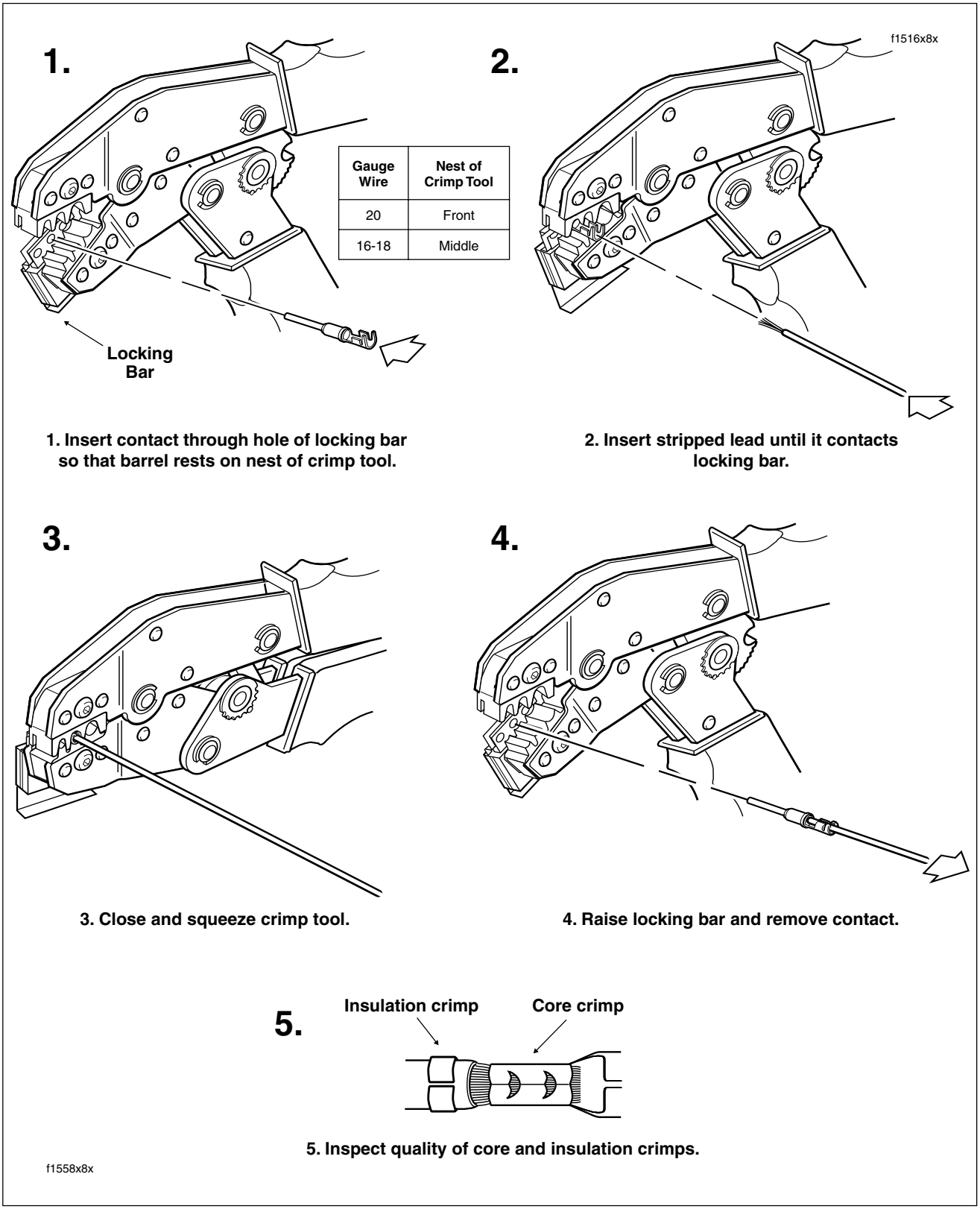

Gauge Wire	Nest of Crimp Tool
20	Front
16-18	Middle

1. Insert contact through hole of locking bar so that barrel rests on nest of crimp tool.

2. Insert stripped lead until it contacts locking bar.

3. Close and squeeze crimp tool.

4. Raise locking bar and remove contact.

5. Inspect quality of core and insulation crimps.

Figure B-7. Deutsch Crimping Procedure

3. Raise the locking bar by pushing up on bottom flange. With the crimp tails facing upward, insert contact (socket/pin) through hole of locking bar, so that the rounded side of the contact barrel rests on the nest (concave split level area) of the crimp tool. Use the middle hole in the locking bar for 16-18 gauge wire, the front hole for 20 gauge wire.
4. Release locking bar to lock position of contact. If the crimp tails are slightly out of vertical alignment, the crimp tool automatically rotates the contact so that the tails face straight upward. When correctly positioned, the locking bar fits snugly in the space between the contact band and the core crimp tails.
5. Strip lead removing 5/32 inch (4.0 mm) of insulation. Insert wires between crimp tails until ends make contact with locking bar. Verify that wire is positioned so that short pair of crimp tails squeeze bare wire strands, while long pair folds over insulation material.
6. Squeeze handle of crimp tool until tightly closed. Tool automatically opens when the crimping sequence is complete. Raise up locking bar and remove contact.
7. Inspect the quality of the core and insulation crimps. Distortion should be minimal.

MINI TERMINALS

1. Obtain the PACKARD TERMINAL CRIMP TOOL (HD-38125-7).
2. Strip wire lead removing 5/32 inch (4.0 mm) of insulation.
3. Compress handles until ratchet automatically opens.

NOTE

Always perform core crimp before insulation crimp.

4. Position the core crimp on nest E of the crimping tool. Be sure the core crimp tails are facing the forming jaws.
5. Gently apply pressure to handles of tool until crimpers just secure the core crimp tails.
6. Insert stripped wire between crimp tails. Verify that wire is positioned so that short pair of crimp tails squeeze bare wire strands, while long pair is positioned over the insulation material.
7. Squeeze handle of crimp tool until tightly closed. Tool automatically opens when the crimping sequence is complete.
8. Position the insulation crimp on nest C of the crimping tool. Be sure the insulation crimp tails are facing the forming jaws.
9. Squeeze handle of crimp tool until tightly closed. Tool automatically opens when the crimping sequence is complete.
10. Inspect the quality of the core and insulation crimps. Distortion should be minimal.

SOLID BARREL CONTACTS

For Size 20, 16 and 12 Contacts
Wire Range 26-12 AWG

1. Obtain the DEUTSCH SOLID BARREL CONTACT CRIMP TOOL (HD-42879).
2. Squeeze the handles to cycle the crimp tool to the fully open position.
3. Remove locking pin from selector knob. See Figure B-8.
4. Raise selector knob and rotate until selected wire size stamped on wheel is aligned with “SEL. NO.” arrow. See upper frame of Figure B-9.
5. Loosen knurled locknut and turn adjusting screw clockwise (in) until it stops.
6. Turn tool over and drop contact into indentor cover hole with the wire end out.
7. Turn adjusting screw counterclockwise (out) until contact is flush with bottom of depression in indentor cover. Tighten knurled locknut.
8. Slowly squeeze handles of crimp tool until contact is centered between indentor points. See middle frame of Figure B-9.
9. Strip wire lead removing 1/4 inch (6.4 mm) of insulation.
10. Insert bare wire strands into contact barrel. See lower frame of Figure B-9.
11. Squeeze handle of crimp tool until tightly closed. Tool automatically opens when the crimping sequence is complete.
12. Remove crimped contact from indentor.
13. Inspect the quality of the crimp. Verify that all wire strands are in crimp barrel.

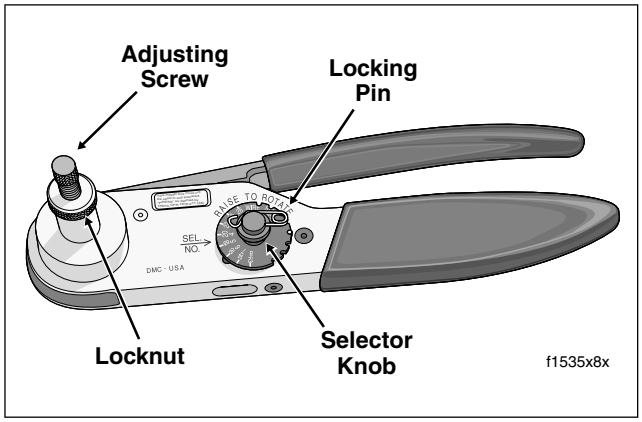

Figure B-8. Deutsch Solid Barrel Contact Crimp Tool (Part No. HD-42879)

Rotate selector knob to align wire size on wheel with arrow stamped in tool.

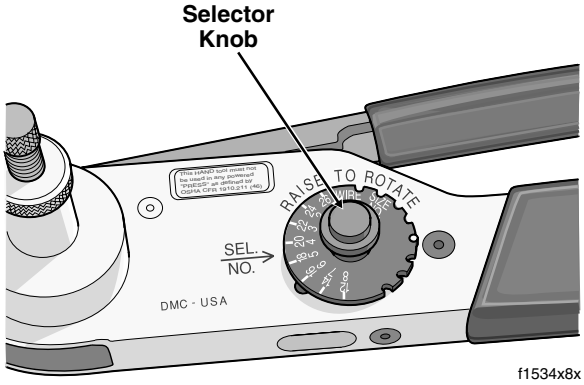

Turn adjusting screw as described in text. When contact is flush with bottom of depression in indentor cover, squeeze handles to center contact between indentor points.

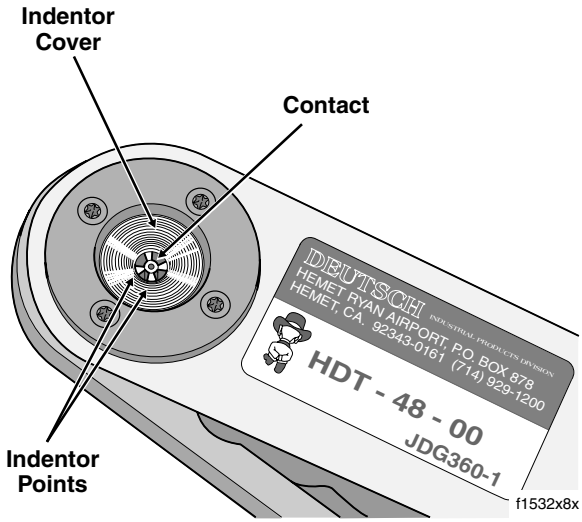

Insert bare wire strands into contact barrel. Squeeze handle of crimp tool until tightly closed.

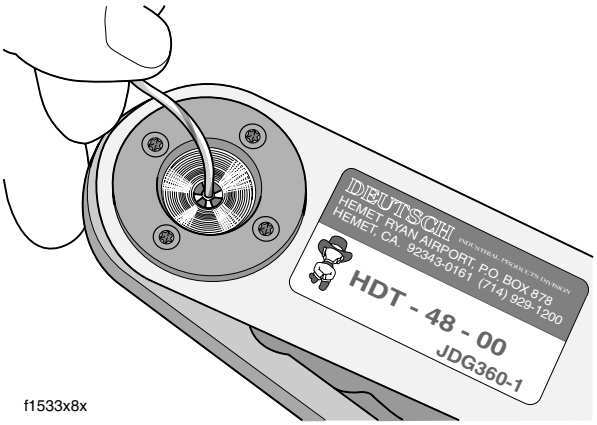

Figure B-9. Deutsch Solid Barrel Contact Crimping Procedure

NOTE

Tool must be readjusted when changing contact size/type.

14. Install pin to lock position of selector knob.

REMOVING SOCKET/PIN TERMINALS

1. Remove connector from the retaining device, either attachment or rosebud clip.
2. Depress the button on the socket terminal side of the connector (plug) and pull apart the pin and socket halves. See Figure B-10.
3. Bend back the latch slightly and free one side of secondary lock, then repeat the step to release the other side. Rotate the secondary lock outward on hinge to access terminals in chambers of connector housing.
4. Looking in the terminal side of the connector (opposite the secondary lock), take note of the cavity next to each terminal.
5. See Figure B-11. With the flat edge against the terminal, insert the pick (Snap-On TT600-3) into the cavity until it stops. Pivot the end of the pick away from the terminal and gently tug on wire to pull terminal from chamber. Do not tug on the wire until the tang is released or the terminal will be difficult to remove. A “click” is heard if the tang is engaged but then inadvertently released. Repeat the step without releasing the tang.

NOTE

An Electrical Terminal Crimp Tool (Part No. HD-41609) is used to install Multilock pin and socket terminals on wires. If new terminals must be installed, see CRIMPING INSTRUCTIONS in this section.

INSTALLING SOCKET/PIN TERMINALS

NOTE

For wire location purposes, numbers are stamped into the secondary locks of both the socket and pin housings. See Figure B-13.

1. From the secondary lock side of the connector, insert the terminal into its respective numbered chamber until it snaps in place. For proper fit, the slot in the terminal must face the tang in the chamber.

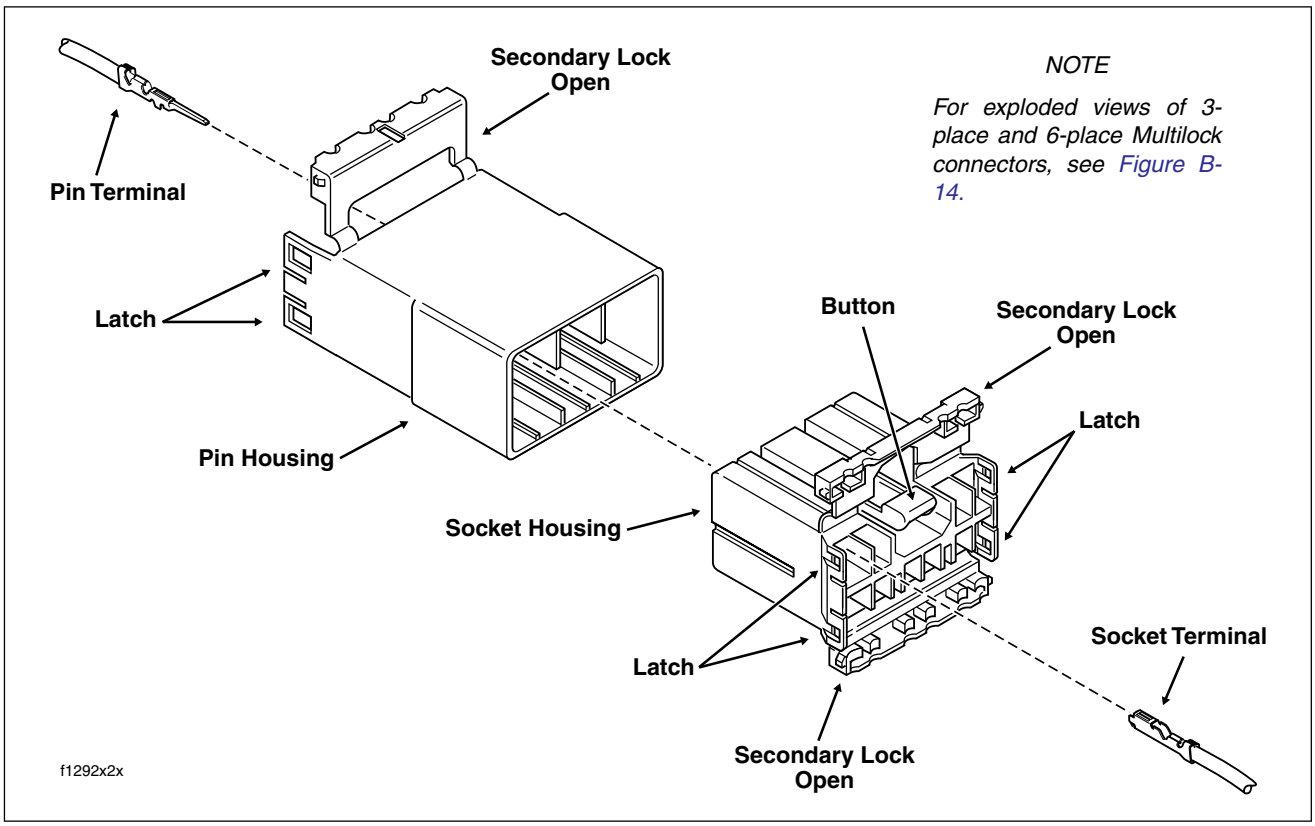

NOTE

For exploded views of 3-place and 6-place Multilock connectors, see Figure B-14.

Figure B-10. 10-Place Multilock Connector (Exploded View)

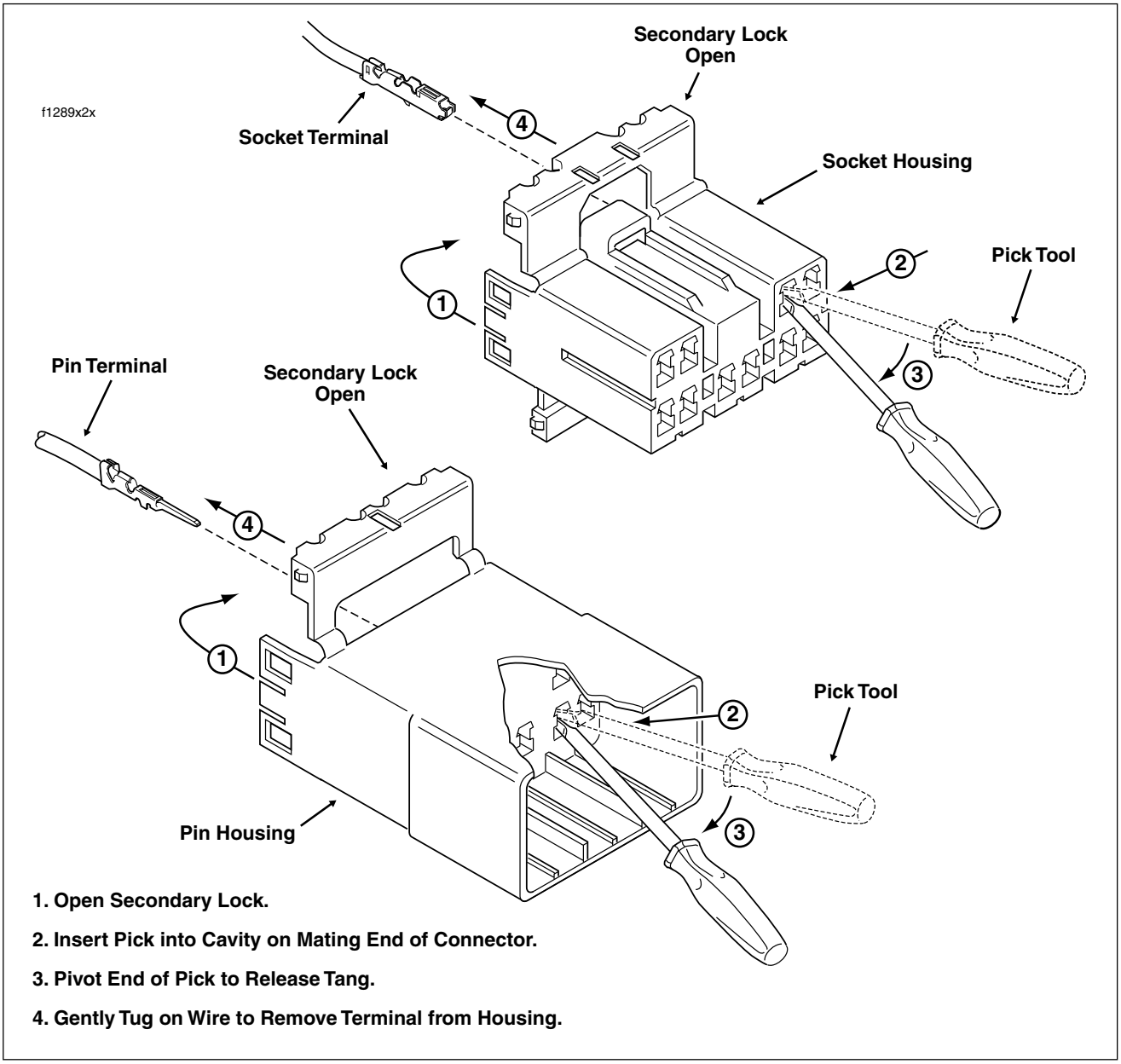

Figure B-11. Release Tang and Back Out Terminals

NOTE

The tang in the chamber engages the slot to lock the terminal in position. On the pin side of the connector, tangs are positioned at the bottom of each chamber, so the slot in the pin terminal (on the side opposite the crimp tails) must face downward. On the socket side, tangs are at the top of each chamber, so the socket terminal slot (on the same side as the crimp tails) must face upward. Up and down can be determined by the position of the release button (used to separate the pin and socket halves), the button always being the top of the connector. See Figure B-12.

2. Gently tug on wire end to verify that the terminal is locked in place and will not back out of chamber.

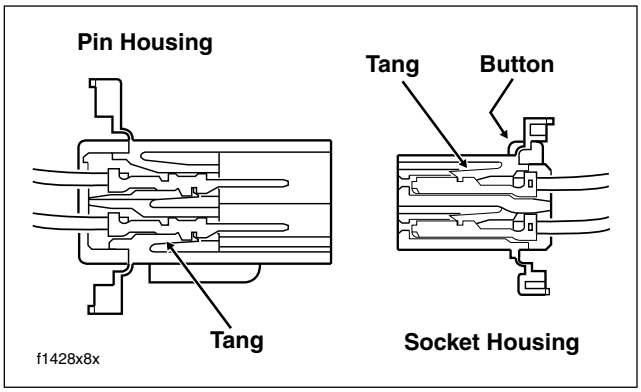

Figure B-12. Tang Location (Cross Sectional View)

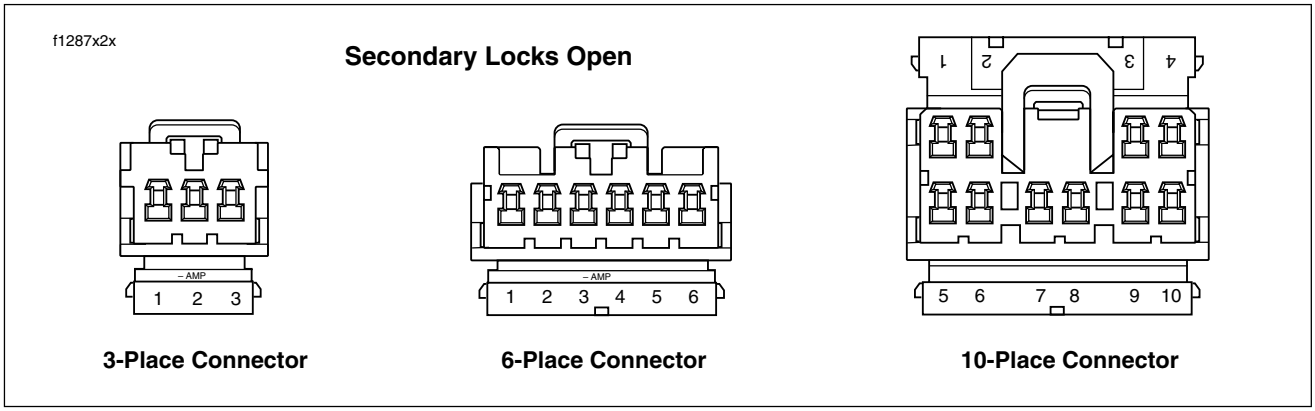

Figure B-13. Numbers Stamped on Secondary Locks for Wire Color Locations (Socket Housings Shown)

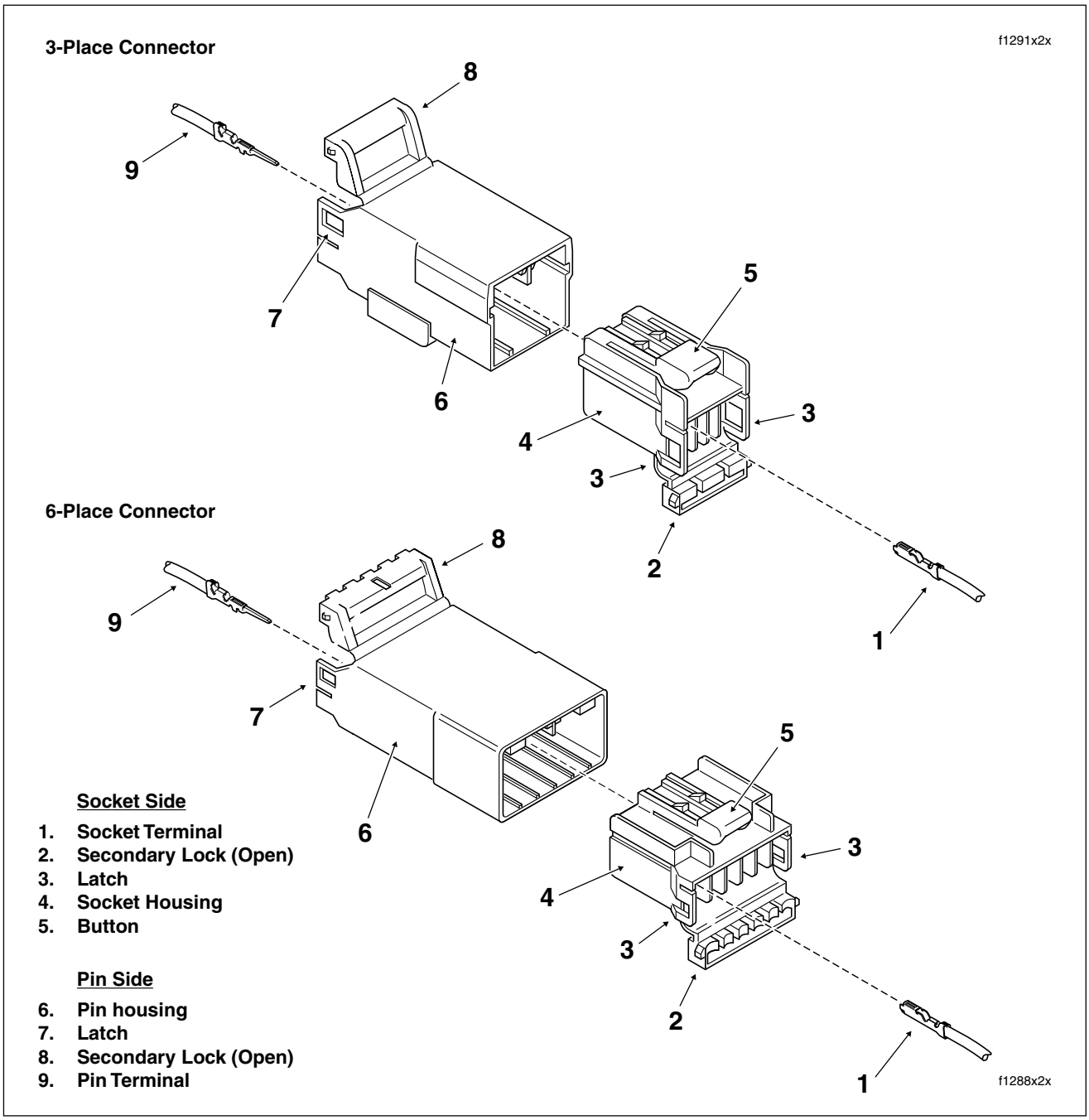

Figure B-14. 3-Place and 6-Place Multilock Connectors

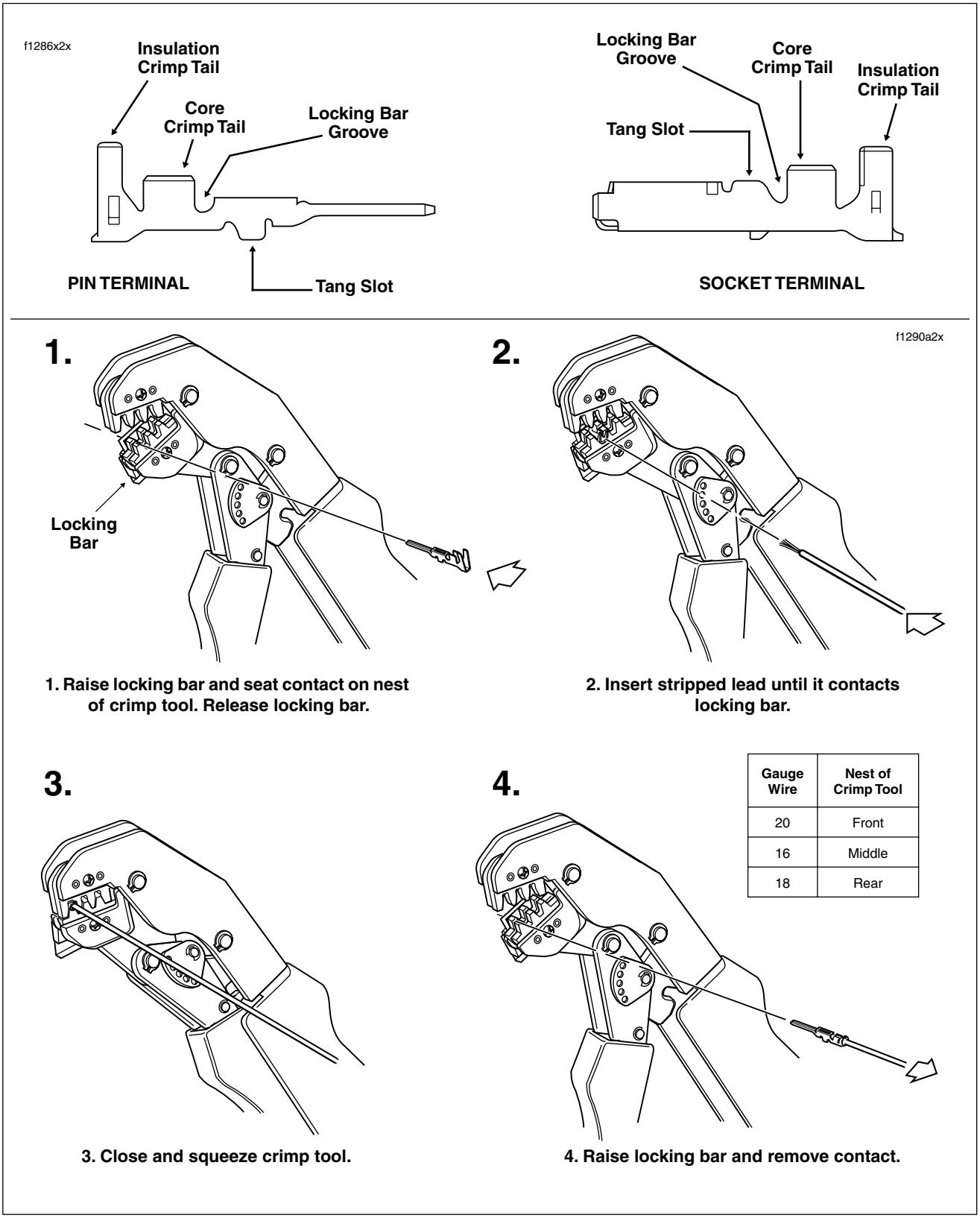

1. Raise locking bar and seat contact on nest of crimp tool. Release locking bar.

2. Insert stripped lead until it contacts locking bar.

Gauge Wire	Nest of Crimp Tool
20	Front
16	Middle
18	Rear

3. Close and squeeze crimp tool.

4. Raise locking bar and remove contact.

Figure B-15. Multilock Crimping Procedure

3. Rotate the hinged secondary lock inward until tabs fully engage latches on both sides of connector.
4. Insert the socket housing (plug) into the pin housing (receptacle) unt
5. Install connector on retaining device, either attachment or rosebud clip.

CRIMPING INSTRUCTIONS

1. Squeeze the handles to cycle the crimp tool (Part No. HD-41609) to the fully open position.
2. Raise locking bar by pushing up on bottom flange. With the crimp tails facing upward, insert contact (socket/pin) through locking bar, so that the closed side of the contact rests on the nest (concave split level area) of the crimp tool). Use the front nest for 20 gauge wire, the middle for 16 gauge and the rear for 18 gauge. See Figure B-15.
3. Release locking bar to lock position of contact. When correctly positioned, the locking bar fits snugly in the space at the front of the core crimp tails.
4. Strip lead removing 5/32 inch (4.0 mm) of insulation. Insert wires between crimp tails until ends make contact with locking bar. Verify that wire is positioned so that short pair of crimp tails squeeze bare wire strands, while long pair folds over insulation material.
5. Squeeze handle of crimp tool until tightly closed. Tool automatically opens when the crimping sequence is complete. Raise up locking bar and remove contact.
6. Inspect the quality of the core and insulation crimps. Distortion should be minimal.

DELPHI ELECTRICAL CONNECTORS B.3

GENERAL

Use these instructions to service the following connectors:

- Ignition Coil [83B]
- Front Fuel Injector [84B]
- Rear Fuel Injector [85B]
- IAC [87B]
- TP Sensor [88B]
- IAT Sensor [89B]
- ET Sensor [90B]
- Oil Pressure Sender [139B]
- Security Siren [142B]

REMOVING SOCKET TERMINALS

NOTE

Although the parts of the different Delphi connectors vary in appearance, the instructions which follow will work for all. The only exception is the oil pressure sender connector [139B], the terminals of which are removed like the Packard push-to-seat connectors. Therefore, see Section B.4 PACKARD ELECTRICAL CONNECTORS, 150 METRI-PACK SERIES, to remove/install terminals in this connector.

1. Bend back the external latch(es) slightly and separate pin and socket halves of connector.
2. If present, free one side of wire lock from ear on wire end of socket housing, then release the other side. Release wires from channels in wire lock and remove from socket housing. See Figure B-16.
3. Use a fingernail to pry colored terminal lock loose and then remove from mating end of socket housing. See Figure B-17.
4. Using a thin flat blade, like the unsharpened edge on an X-Acto knife, gently pry tang outward away from terminal, and then tug on wire to back terminal out wire end of chamber. Do not pull on wire until tang is released or terminal will be difficult to remove. See Figure B-18.

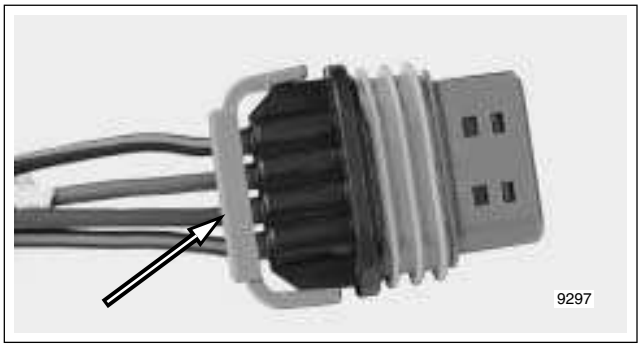

Figure B-16. Remove Wire Lock

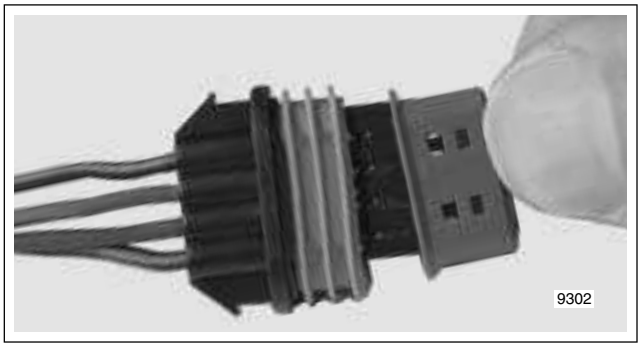

Figure B-17. Remove Terminal Lock

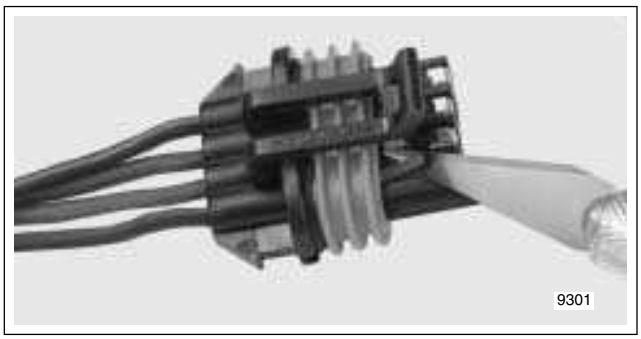

Figure B-18. Gently Pry Away Tang

INSTALLING SOCKET TERMINALS

NOTE

For wire location purposes, alpha or numeric characters are stamped into the wire end of each socket housing.

1. Gently push tang on socket housing inward toward chamber. With the open side of the terminal facing the tang, push terminal into chamber at wire end of socket housing.
2. Gently tug on wire to verify that terminal is locked and will not back out of chamber. If necessary, use fingernail to push tang into engagement with terminal.
3. Install colored terminal lock onto mating end of socket housing. See Figure B-17.

4. If present, seat wires in separate channels of wire lock and then push channels inside chambers at wire end of socket housing. Fully installed, slot on each side of wire lock engages ear on socket housing. See Figure B-16.
5. Push pin and socket halves of connector together until external latch(es) engage.

150 METRI-PACK SERIES

General

Use these instructions to service the following connectors:

- Cruise Control Module [17B]
- MAP Sensor [80B]
- Fuel Level Sender/Fuel Pump [141B]

Disassembly

1. Bend back the external latch slightly and separate the pin and socket halves of the connector.
2. Note that there are two types of connectors in this series, pull-to-seat terminal and push-to-seat terminal connectors. Remove wire lock from wire end of socket housing on push-to-seat type connectors. For best results, free one side of wire lock first and then release the other side. See A of Figure B-20.
3. Look into the mating end of the connector to find the locking tang. The tangs are always positioned in the middle of the chamber and are on the same side as the external latch.
4. Gently insert the point of a one inch safety pin into the chamber about 1/8 inch (3.2 mm) staying between the terminal and the chamber wall, and then pivot the end of the pin toward the terminal body. See B in Figure B-19 or Figure B-20. On push-to-seat type connectors, take note that there is a small opening for insertion of the pin.
5. If a click is heard, remove the pin and repeat the procedure. The click is the sound of the tang returning to the locked position as it slips from the point of the pin. Pick at the tang in this manner until the clicking stops and the pin seems to slide in at a slightly greater depth than it had previously. This is an indication that the tang has been depressed.

NOTE

On those terminals that have been extracted on multiple occasions, no clicking sound may be heard when the pin is pivoted to depress the tang, but proceed as if the clicking is audible.

6. Remove the pin. On pull-to-seat connectors, push on the lead to extract the terminal from the mating end of the connector. See C in Figure B-19. On push-to-seat connectors, pull on the lead to draw the terminal out the wire end. See C in Figure B-20.
7. If necessary, crimp new terminals on wires. See Crimping Instructions at the end of this section.

Assembly

NOTE

For wire location purposes, alpha characters are stamped into the socket housings.

1. Using a thin flat blade, like that on an X-Acto knife, carefully bend the tang outward away from the terminal body. See D in Figure B-19 or Figure B-20.
2. Gently pull or push on the lead to install the terminal back into the chamber. A click is heard when the terminal is properly seated.
3. Gently pull or push on the lead to verify that the terminal is locked in place.
4. On push-to-seat type connectors, seat wires in separate channels of wire lock and then push channels inside chambers at wire end of socket housing. Fully installed, slot on each side of wire lock engages ear on socket housing. See A of Figure B-20.
5. Connect the pin and socket halves of the connector.

280 METRI-PACK SERIES

General

Use these instructions to service the following:

- System Fuse Block [64B]

System Fuse Block

Disassembly

1. Remove system fuses and relay(s) from fuse block. See Section 8.3 SYSTEM FUSES, SYSTEM FUSES/RELAYS, REMOVAL.
2. Remove secondary locks as follows:
   a. Insert end of small flat blade screwdriver under lip of locking wedge and gently pry up secondary lock.

NOTE

For best results, start with locking wedge on outboard side of secondary lock. See Figure B-21.

3. Remove socket terminals as follows:
   a. Looking into chamber at top of fuse block, note the tang next to each socket terminal.

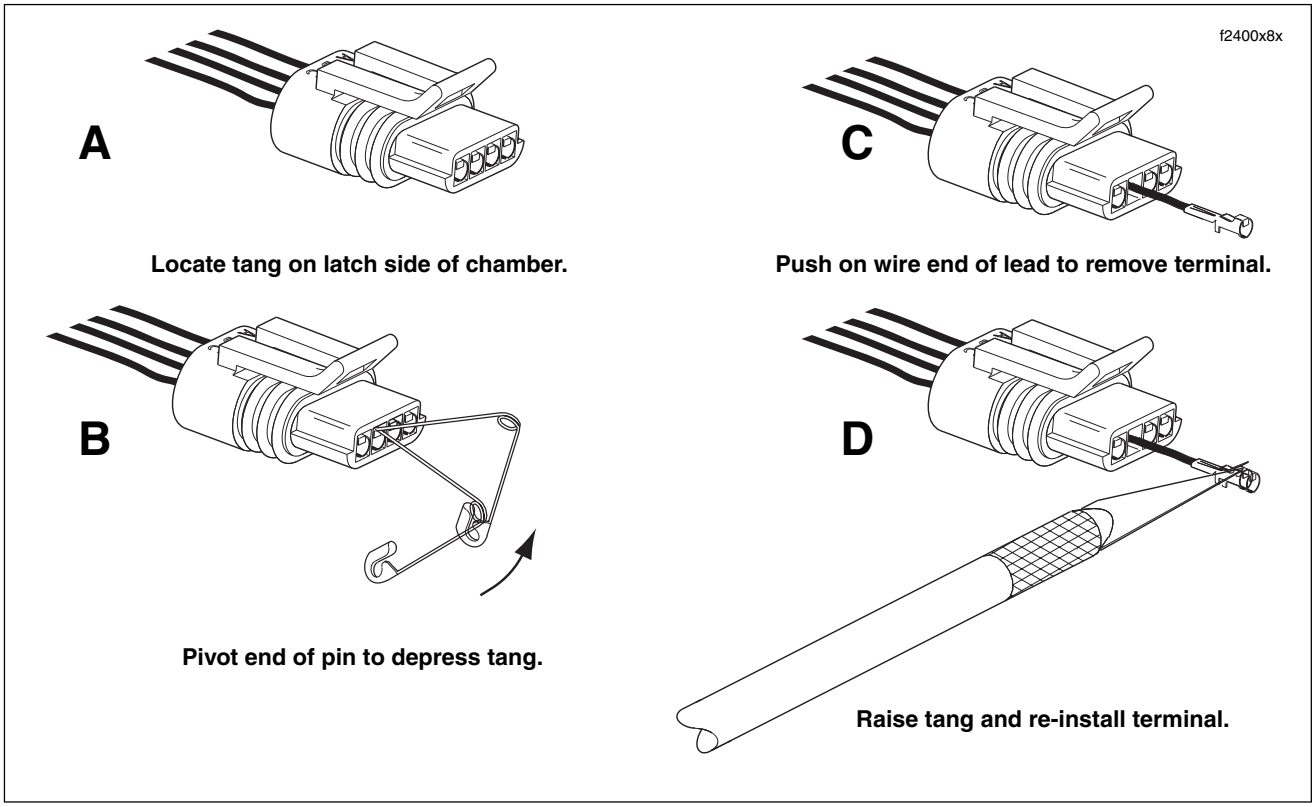

Figure B-19. Depress Tang and Extract Terminal From Mating End of Pull-to-Seat Connector

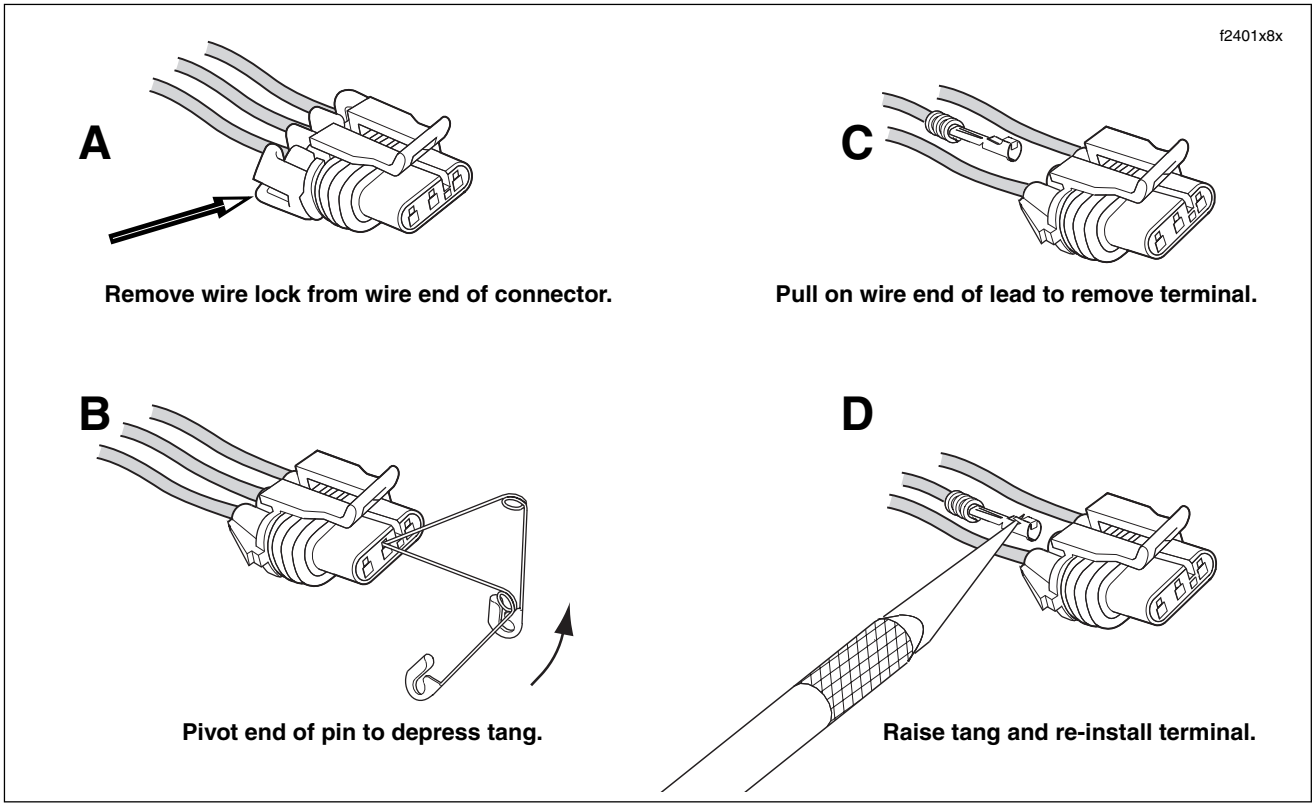

Figure B-20. Depress Tang and Extract Terminal From Wire End of Push-to-Seat Connector

b. Using a thin flat blade, like that on an X-Acto knife, gently push tang away from terminal, and then tug on wire to back terminal out wire end of chamber.

4. If necessary, crimp new terminals on wires. See Crimping Instructions at the end of this section.

Assembly

1. Install socket terminals as follows:

NOTE

See Section B.8 WIRING DIAGRAMS, MAIN HARNESS, for wire colors and locations.

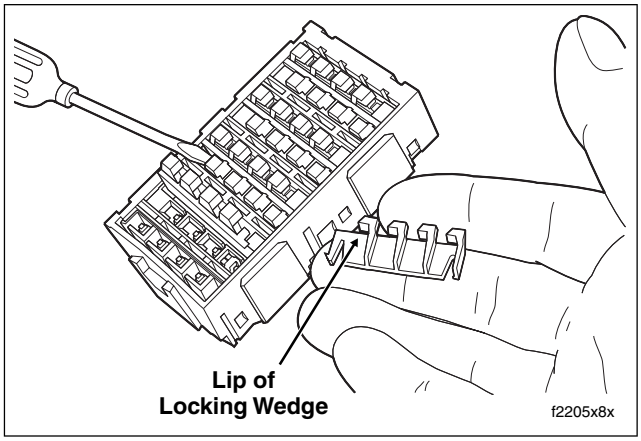

Figure B-21. Remove Secondary Locks From Fuse Block

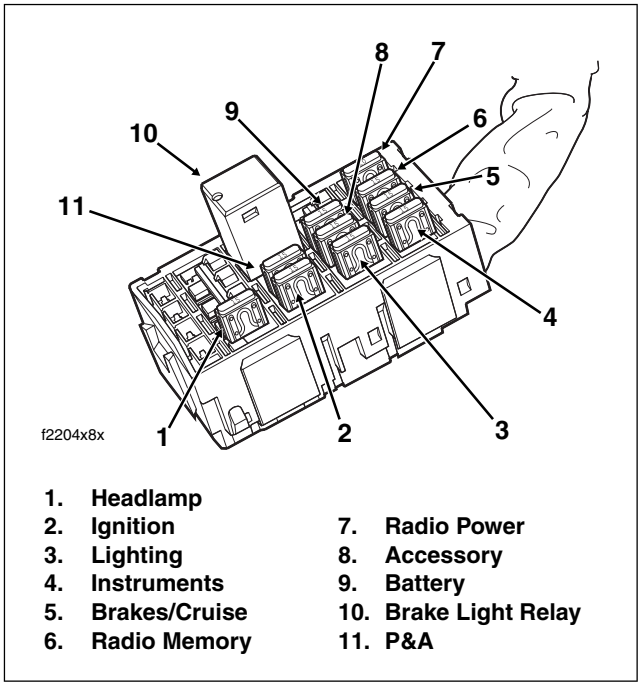

Figure B-22. Fuse Block (FLHX, FLHTC/U, FLTR)

a. With the open side of the socket terminal facing the tang, push lead into chamber at the wire end of the fuse block. A click is heard when the terminal is properly engaged.

b. Gently tug on the wire to verify that the terminal is locked in place and will not back out of the chamber.

2. Install secondary locks as follows:

a. With the locking wedges positioned above the tangs in each chamber, slide flat side of secondary lock into slot (between rows), and push down until it bottoms. See Figure B-21.

3. Install system fuses and relay(s) in fuse block. See Section 8.3 SYSTEM FUSES, SYSTEM FUSES/RELAYS, INSTALLATION.

480 METRI-PACK SERIES

General

Use these instructions to service the following connector:

- B+ [160]

Disassembly

1. Remove seat. See Section 2.25 SEAT, REMOVAL.

⚠WARNING

Disconnect negative (-) battery cable first. If positive (+) cable should contact ground with negative (-) cable connected, the resulting sparks can cause a battery explosion, which could result in death or serious injury. (00049a)

2. Unthread bolt and remove battery negative cable (black) from battery negative (-) terminal.

3. Unthread bolt and remove battery positive cable (red) from battery positive (+) terminal.

4. Using a T40 TORX drive head, loosen bolt to move lip of hold-down clamp off edge of battery. Remove battery from battery box.

5. Cut anchored cable strap to release accessory connector and B+ connector from left side of frame crossmember (in front of battery box). See Figure B-23.

6. Using small flat blade screwdriver, depress button on pin housing (red wire) side of the connector and pull apart the pin and socket halves. See A of Figure B-24.

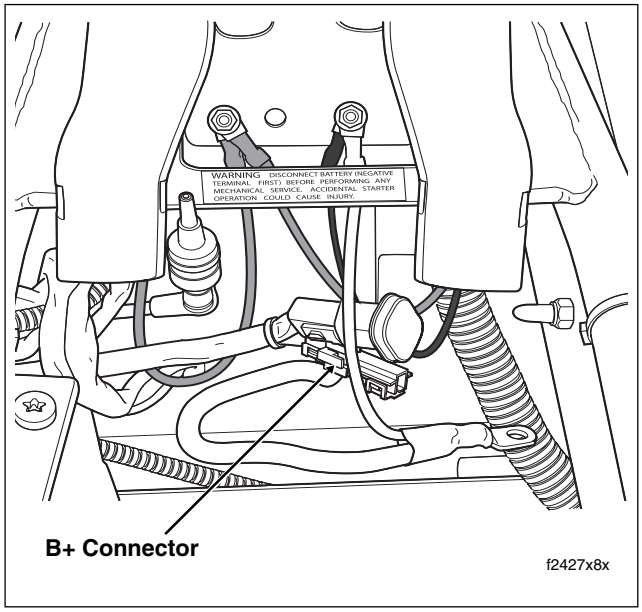

Figure B-23. Remove Seat

7. Bend back the latch slightly and free one side of secondary lock, then repeat the step to release the other side. Rotate the secondary lock outward on hinge to access terminal in chamber of connector housing. See B of Figure B-24.

8. On the mating end of the connector, note the tang in the square shaped opening centered next to the terminal. Gently insert the point of a stick pin or large safety pin into the opening between the tang and the chamber wall until it stops. Pivot the end of the pin toward the terminal body to depress the tang. Remove the pin and then pull terminal out wire end of connector housing. See C of Figure B-24.

9. If necessary, crimp new terminals on wires. See Crimping Instructions at the end of this section.

Assembly

1. Carefully bend the tang outward away from the terminal body.

2. With the tang on the same side as the square shaped opening in the mating end of the connector housing, feed terminal into wire end of connector housing until it “clicks” in place.

3. Verify that terminal will not back out of the chamber. A slight tug on the cable will confirm that it is locked.

4. Rotate the hinged secondary lock inward until latches fully engage tabs on both sides of connector housing.

5. Mate pin and socket halves of connector.

6. Install **new** anchored cable strap in lower hole on left side of frame crossmember (in front of battery box). Tighten cable strap to capture conduit of both accessory connector and B+ connector approximately one inch from connector housings. See Figure B-23.

7. Place battery in battery box, terminal side forward.

⚠WARNING

Connect positive (+) battery cable first. If positive (+) cable should contact ground with negative (-) cable connected, the resulting sparks can cause a battery explosion, which could result in death or serious injury. (00068a)

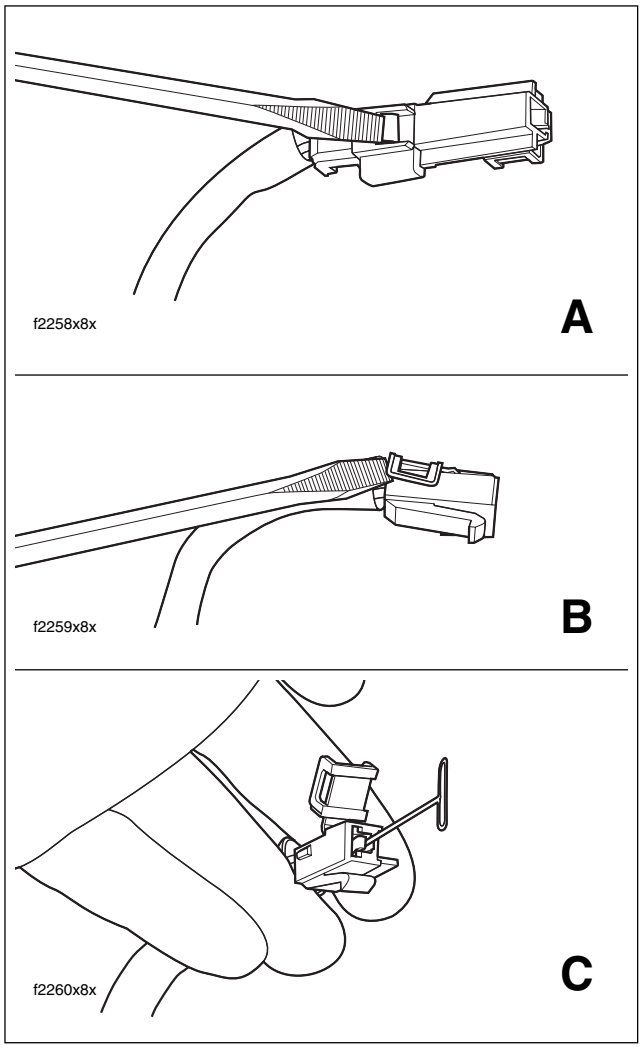

Figure B-24. Remove Socket Terminal

8. Insert bolt through battery positive cable (red) into threaded hole of battery positive (+) terminal. Tighten bolt to 60-96 **in-lbs** (6.8-10.9 Nm).
9. Insert bolt through battery negative cable (black) into threaded hole of battery negative (-) terminal. Tighten bolt to 60-96 **in-lbs** (6.8-10.9 Nm).
10. Rotate hold-down clamp so that the lip (with rubber pad) rests on the edge of the battery. Using a T40 TORX drive head, tighten the clamp bolt to 15-20 ft-lbs (20-27 Nm).
11. Install seat. See Section 2.25 SEAT, INSTALLATION.

630 METRI-PACK SERIES

General

Use these instructions to service the following connector:

- Main to Interconnect Harness [15]

Disassembly

1. Remove connector from barbed anchor or other retaining device, if present.
2. Bend back the external latch slightly and separate pin and socket halves of the connector.
3. Bend back the latch slightly and free one side of the secondary lock. Repeat the step to unlatch the other side.
4. Rotate the secondary lock outward on hinge to view the terminals in the chambers of the connector housing. The locking tang is on the side opposite the crimp tails and engages a rib in the chamber wall to lock the terminal in place.
5. Moving to the mating end of the connector, take note of the small opening on the chamber wall side of each terminal.
6. Insert pick (Snap-on® TT600-3) into opening until it stops. Pivot the end of the pick toward the terminal to depress the locking tang.
7. Remove the pick and gently tug on the wire to pull the terminal from the wire end of the connector. Repeat steps if the terminal is still locked in place.
8. If necessary, crimp new terminals on wires. See Crimping Instructions at the end of this section.

Assembly

NOTE

For wire location purposes, alpha characters are molded into the secondary locks of each connector housing.

1. Using a thin flat blade, like that on an X-Acto knife, carefully bend the tang outward away from the terminal body.
2. With the tang facing the chamber wall, push the lead into the chamber at the wire end of the connector. A click is heard when the terminal is properly seated.
3. Gently tug on the wire end to verify that the terminal is locked in place and will not back out of the chamber.
4. Rotate the hinged secondary lock inward until tabs fully engage latches on both sides of connector.
5. Push the pin and socket halves of the connector together until the latches “click.”
6. Install connector on barbed anchor or other retaining device, if present.

800 METRI-PACK SERIES

General

Use these instructions to service the following:

- Maxi-Fuse Holder [5]

Disassembly

1. Remove maxi-fuse. See Section 8.3 SYSTEM FUSES. MAXI-FUSE, REMOVAL.
2. Remove socket terminals as follows:
   a. Gently pull socket housing to disengage slots from tabs on socket housing. See A of Figure B-25. Free secondary lock from cables and set aside.
   b. Take note of the opening on one side of the socket terminal. Gently insert flat blade of pick (Snap-On TT600-5) or small screwdriver into opening until it stops. Pivot the pick toward the terminal body and hold in position. See B of Figure B-25.
   c. Tug on cable to pull socket from wire end of socket housing. A firm tug is necessary to overcome the resistance of the rubber seal.
   d. Repeat steps 2(b) and 2(c) to remove remaining socket terminal.
3. If necessary, crimp new terminals on wires. See Crimping Instructions at the end of this section.

Assembly

1. Install socket terminals as follows:
   a. Carefully bend tang outward away from the terminal body. See C of Figure B-25.

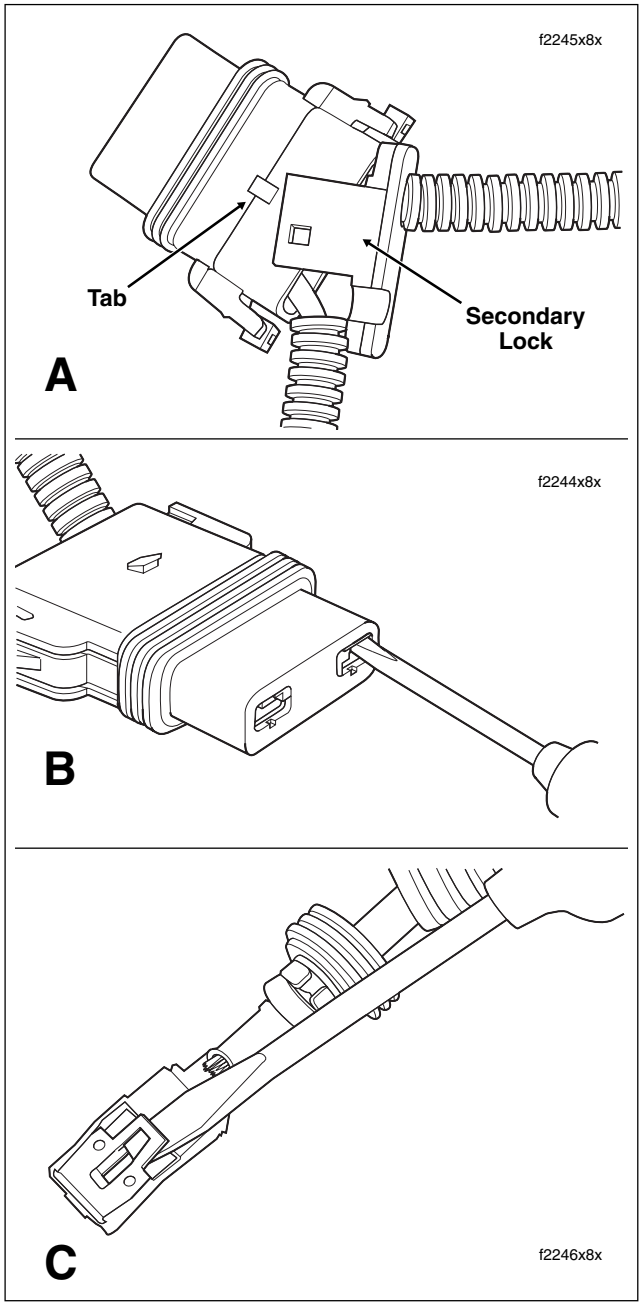

Figure B-25. Remove Socket Terminals

b. Feed socket into wire end of socket housing until it "clicks" in place. Verify that socket will not back out of chamber. A slight tug on the cable will confirm that it is locked.

c. Push rubber seal into wire end of socket housing.

d. Repeat steps 1(a) thru 1(c) to install remaining socket terminal.

e. Install secondary lock onto cables and then push onto wire end of socket housing until slots engage tabs on sides of socket housing.

2. Install maxi-fuse. See Section 8.3 SYSTEM FUSES. MAXI-FUSE, INSTALLATION.

PACKARD MICRO 64

General

Use these instructions to service the following connectors:

- Speedometer [39]
- Tachometer [108]

Disassembly

1. Bend back the external latches slightly and separate the pin and socket halves of the connector.

NOTE

To differentiate between the speedometer and tachometer connectors, note that the speedometer connector has a second length of conduit leading to the odometer reset switch.

2. Locate the head of the secondary lockpin on one side of the connector housing. See Figure B-27.

3. Insert the blade of a small screwdriver between the center ear of the lockpin and the connector housing and gently pry out lockpin. When partially removed, pull lockpin from connector housing.

4. Obtain the Packard Micro 64 Terminal Remover (HD-45928). See Figure B-26. Proceed as follows:

   a. Locate small hole between terminals on mating end of connector. See Figure B-27.

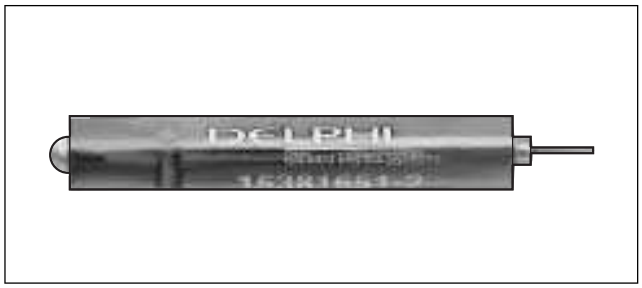

Figure B-26. Packard Micro 64 Terminal Remover (Part No. HD-45928).

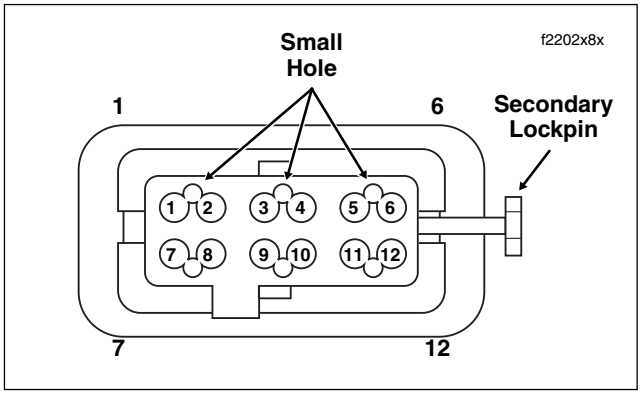

Figure B-27. Mating End of Connector

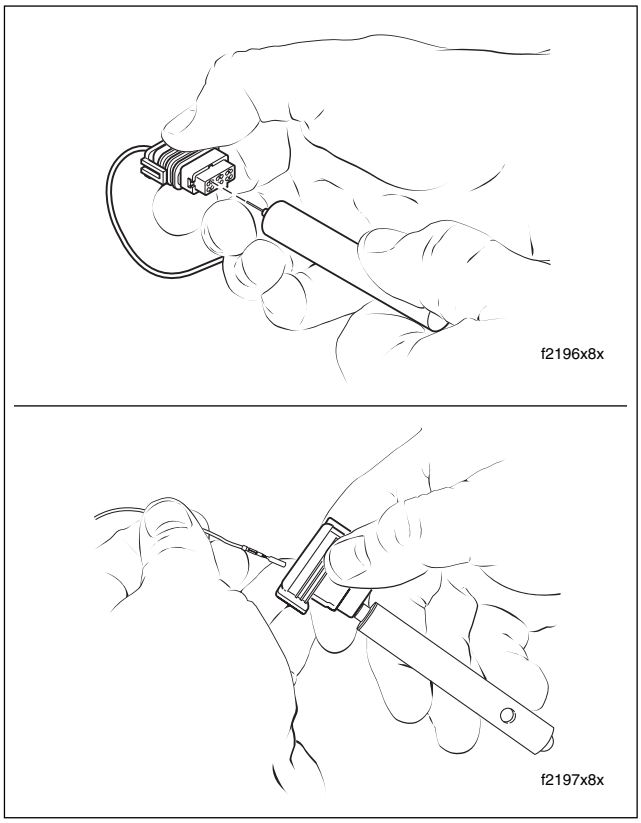

Figure B-28. Insert Tool and Remove Terminal

b. Push the adjacent terminals all the way into the connector housing and then insert tool into hole until it bottoms. See upper frame of Figure B-28.

c. Leaving the tool installed, gently tug on wires to pull either one or both terminals from wire end of connector. See lower frame of Figure B-28. Remove tool.

5. If necessary, crimp new terminals on wires. See Crimping Instructions on this page.

Assembly

1. Insert terminal into its respective numbered chamber on wire end of connector. No special orientation of the terminal is necessary.

NOTE

For wire location purposes, the corners of the socket housing are stamped with the numbers 1, 6, 7 and 12, representing terminals 1-6 on one side, and 7-12 on the other. See Figure B-27.

2. Bottom the terminal in the chamber and then gently tug on the wire to verify that it is locked in place.

NOTE

Once the terminal is removed it may not lock in place when first reinstalled. Until the lock engages, move the terminal back and forth slightly while wiggling the lead.

3. Since the terminal remover tool releases two terminals simultaneously, repeat step 2 on the adjacent terminal even if it was not pulled from the connector housing.
4. With the center ear on the head of the secondary lockpin facing the mating end of the connector, push lockpin in until head is flush with the connector housing.
5. Push the pin and socket halves of the connector together until the latches “click.”

Crimping Instructions

1. Strip lead removing 1/8 inch (3.0 mm) of insulation.
2. Obtain the Packard Micro 64 Terminal Crimper (HD-45929). See Figure B-29.
3. Squeeze the handles to cycle the tool to the fully open position.
4. Obtain **new** contact (socket terminal). Verify that contact and crimp tails are not bent or deformed.
5. Raise locking bar and barrel holder by pushing up on bottom tab with index finger. See Figure B-30.

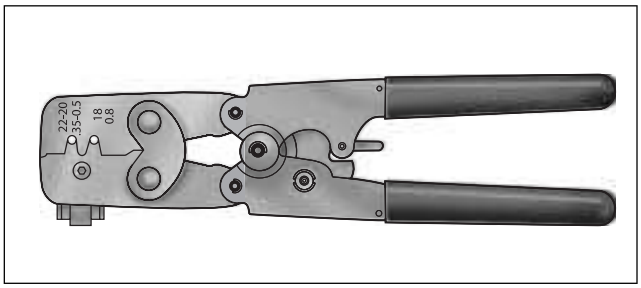

Figure B-29. Packard Micro 64 Terminal Crimper (Part No. HD-45929)

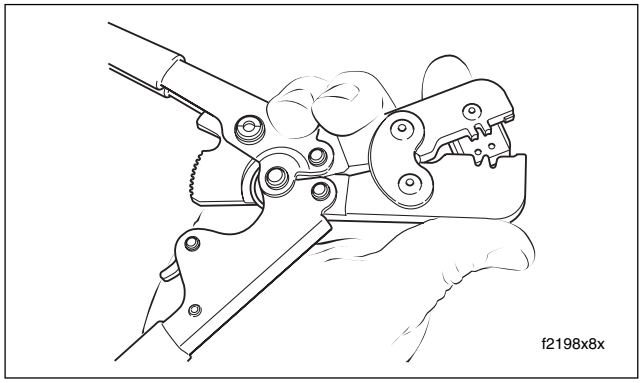

Figure B-30. Raise Locking Bar and Barrel Holder

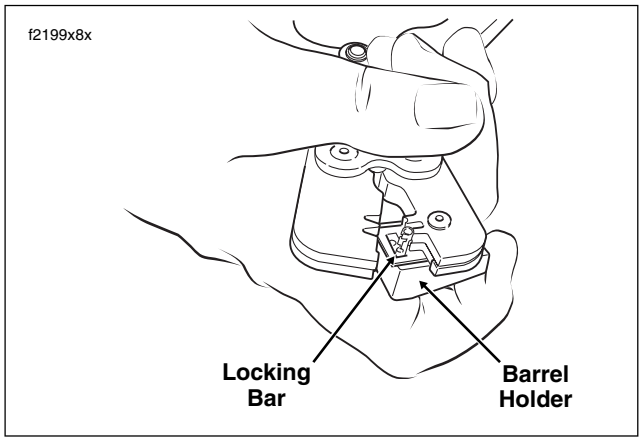

Figure B-31. Position Contact in Crimper

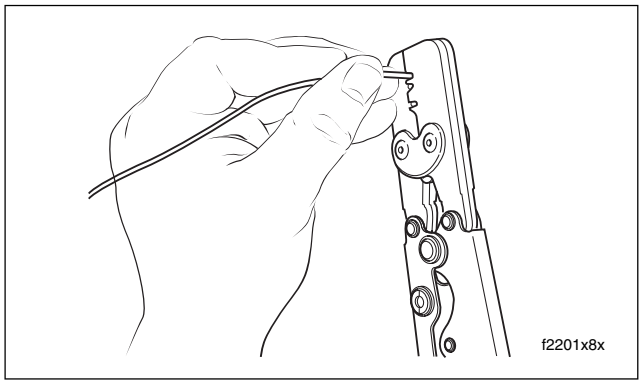

Figure B-32. Crimp Terminal Onto Wire

6. With the crimp tails facing upward, insert contact through locking bar into front hole in barrel holder (20-22 gauge wire).
7. Release locking bar to lock position of contact. When correctly positioned, the locking bar fits snugly in the space at the front of the core crimp tails and the closed side of the terminal rests on the outer nest of the crimp tool. See Figure B-31.
8. Insert wires between crimp tails until ends make contact with locking bar. Verify that wire is positioned so that wide pair of crimp tails squeeze bare wire strands, while the narrow pair folds over the insulation material.
9. Squeeze handle of crimp tool until tightly closed. Tool automatically opens when the crimping sequence is complete. See Figure B-32.
10. Raise locking bar and barrel holder to remove contact.
11. Inspect the quality of the core and insulation crimps. Distortion should be minimal.

PACKARD 100W

General

Use these instructions to service the following connector:

- ECM [78]

Disassembly

1. Gently depress latch on each side of the clear plastic secondary lock and remove. For best results, release one side at a time, See Figure B-33.

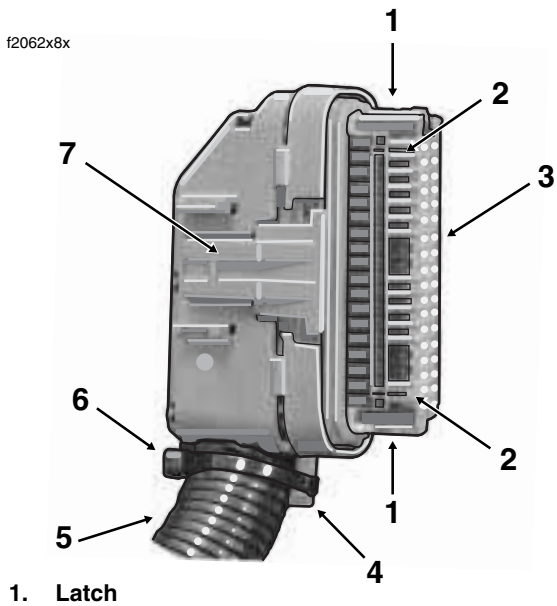

1. Latch
2. Rib
3. Secondary Lock
4. Strain Relief Collar
5. Conduit
6. Cable Strap
7. External Latch

Figure B-33. Remove Secondary Lock

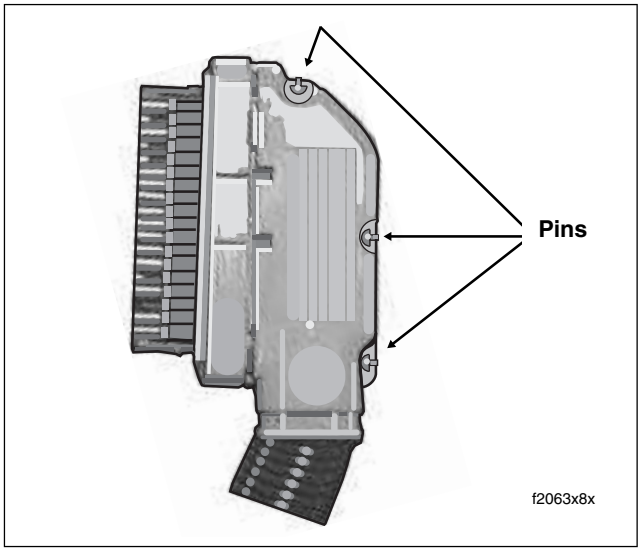

Figure B-34. Separate Halves of Socket Housing

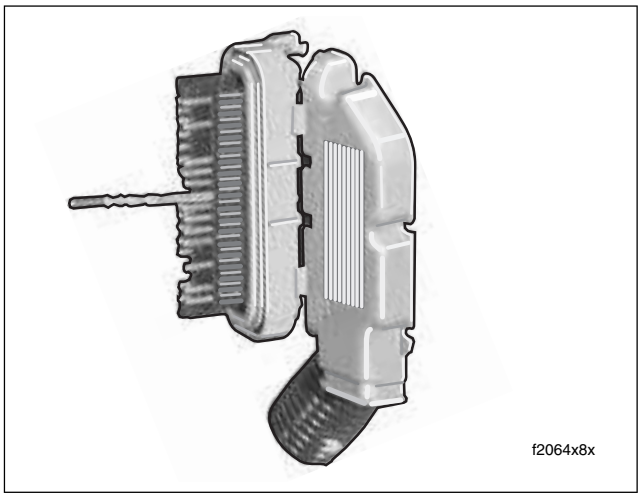

Figure B-35. Push Wire to Extract Terminal

2. Carefully cut cable strap to free strain relief collar from conduit.
3. Using a thin blade, gently pry at seam at back of socket housing to release three plastic pins from slots in housing. Separate and spread halves of socket housing. See Figure B-34.
4. Push on selected wire to free terminal from chamber. See Figure B-35.
5. If necessary, crimp new terminals on wires. See Crimping Instructions on the next page.

Assembly

1. From inside socket housing, gently pull on wire to draw terminal into chamber. See Figure B-35.
2. Exercising caution to avoid pinching wires, press halves of socket housing together until three plastic pins fully engage slots in housing. See Figure B-34.
3. Install **new** cable strap in groove of strain relief collar capturing cable conduit. See Figure B-33.
4. With the two ribs on the secondary lock on the same side as the external latch, install over terminals until latches lock in place.

Crimping Instructions

1. Strip wire lead removing 5/32 inch (4.0 mm) of insulation.
2. Compress handles until ratchet automatically opens.

NOTE

Always perform core crimp before insulation/seal crimp.

3. See Figure B-36. Determine the correct die or nest for the core crimp.
4. Position the core crimp on the appropriate nest. Be sure the core crimp tails are facing the forming jaws.

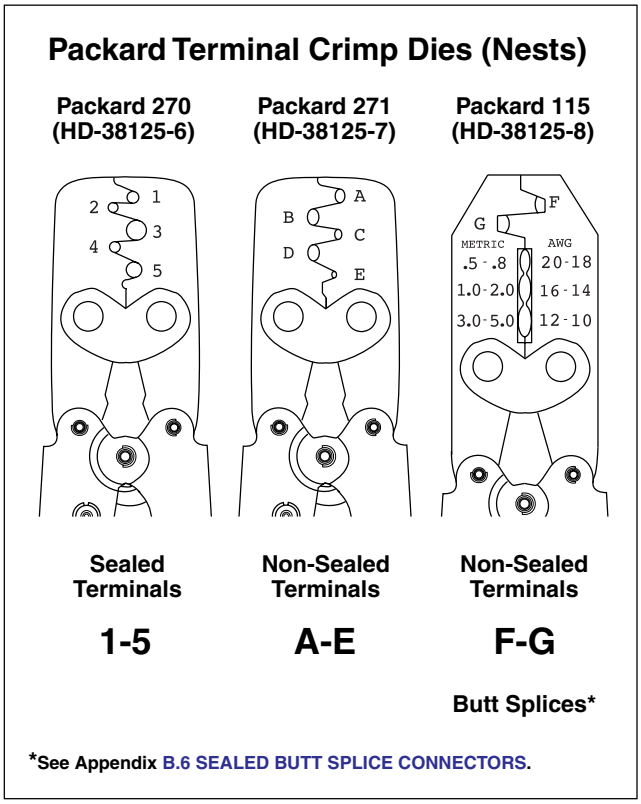

Figure B-36. Packard Terminal Crimp Tools

5. Gently apply pressure to handles of tool until crimpers just secure the core crimp tails.
6. Insert stripped wire between crimp tails. Verify that wire is positioned so that short pair of crimp tails squeeze bare wire strands, while long pair is positioned over the insulation or seal material.
7. Squeeze handle of crimp tool until tightly closed. Tool automatically opens when the crimping sequence is complete.
8. See Figure B-36. Determine the correct die or nest for the insulation/seal crimp.
9. Position the insulation/seal crimp on the appropriate nest. Be sure the insulation/seal crimp tails are facing the forming jaws.
10. Squeeze handle of crimp tool until tightly closed. Tool automatically opens when the crimping sequence is complete.
11. Inspect the quality of the core and insulation/seal crimps. Distortion should be minimal. See Figure B-37.

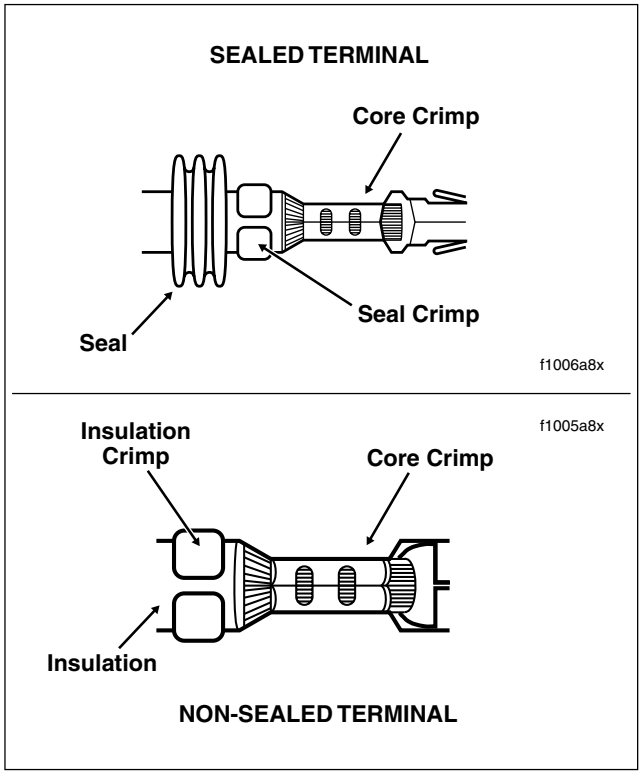

Figure B-37. Inspect Core and Insulation/Seal Crimps

AUTOFUSE ELECTRICAL CONNECTOR B.5

GENERAL

Use these instructions to service the following connector:

- Ignition Light/Key Switch [33B]

DISASSEMBLY

1. Obtain terminal pick (Snap-on® GA500A) like that shown Figure B-38.
2. Insert smallest pair of pins into chamber on mating end of socket housing to depress tangs on each side of terminal simultaneously.
3. Gently pull on wire to remove terminal from wire end of socket housing.
4. If necessary, crimp new terminals on wires.

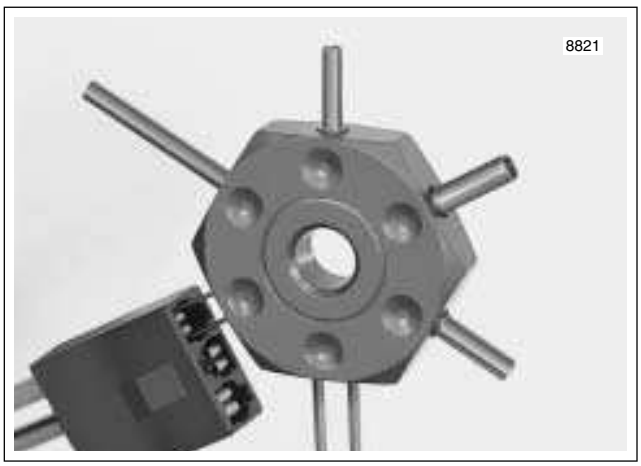

Figure B-38. Depress Tangs and Remove Terminal

ASSEMBLY

1. Using a thin flat blade, like that on an X-Acto knife, carefully bend tang on each side of terminal outward away from terminal body.
2. With the open side of the terminal facing rib on wire end of socket housing, insert terminal into chamber until it locks in place.

SEALED BUTT SPLICE CONNECTORS B.6

PROCEDURE

Butt splicing may be a necessary procedure for the replacement of some components. Proceed as follows:

1. Strip 3/8 inch (9.5 mm) of insulation off the ends of the wires.
2. Compress the handles of the Packard Crimp Tool (HD-38125-8) until the ratchet automatically opens.
3. Since the size of the connectors vary with the gauge of the wire, reference the following table to ensure properly sealed splices are used.

Gauge Wire	Connector Color	Part Number
18-20	Red	P/N 70585-93
14-16	Blue	P/N 70586-93
10-12	Yellow	P/N 70587-93

4. Determine the correct die or nest for the crimping operation. Match the color or gauge wire marked on the butt splice connector with the corresponding crimp cavity on the crimp tool. See Figure B-39.
5. Gently apply pressure to the handles until the crimper lightly secures one side of the metal insert inside the butt splice connector. The connector must be crimped in two stages, one side and then the other.
6. See Figure B-40. Feed the wire into the butt splice connector until the stripped end contacts the wire stop inside the metal insert.
7. Squeeze the handles of the crimp tool until tightly closed. The tool automatically opens when the crimping se-quence is complete.
8. Repeat steps 5-7 on the other side of the butt splice connector.

NOTE

If adjacent wires are being spliced, stagger the splices so that the butt splice connectors are spaced at different positions along the length of the wires.

9. Using the UltraTorch UT-100 (HD-39969), Robinair Heat Gun (HD-2507 41183) or other suitable radiant heating device, heat the crimped splice to encapsulate the butt splice connection. Apply heat from the center of the crimp out to each end until the meltable sealant exudes out both ends of the connector. See Figure B-40.

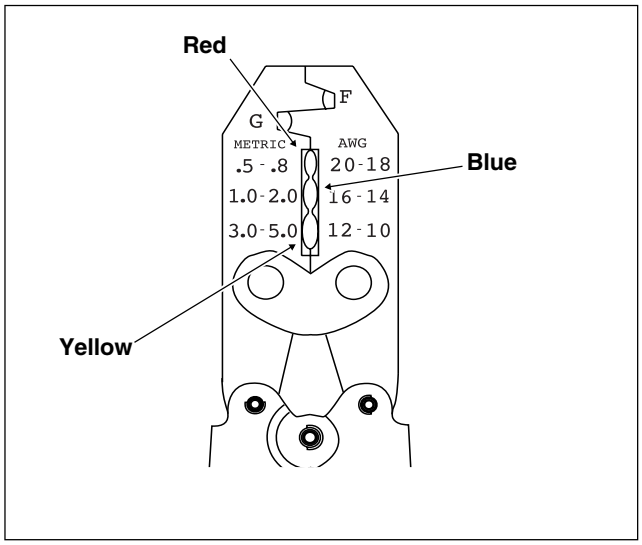

Figure B-39. Packard Crimp Tool (HD-38125-8)

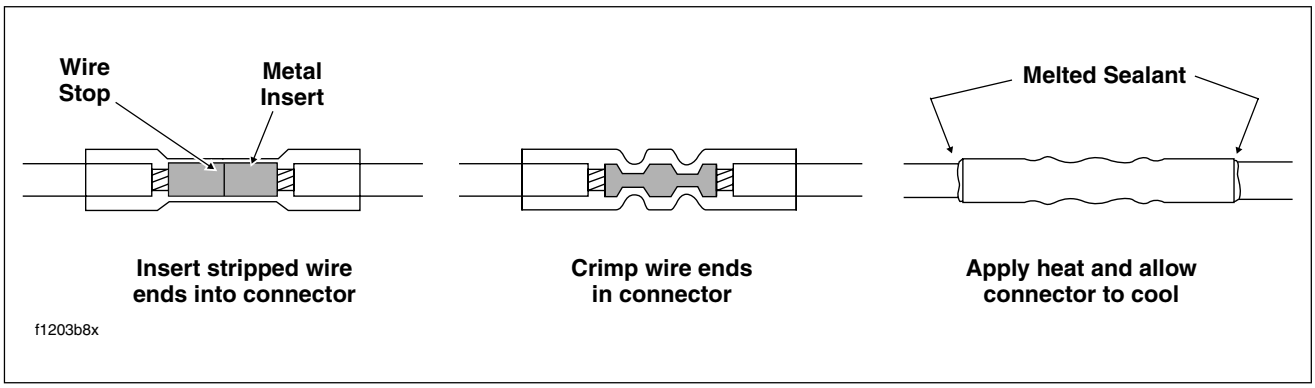

Figure B-40. Installing Sealed Butt Splice Connectors

⚠WARNING

Be sure to follow manufacturer's instructions when using the UltraTorch UT-100 or any other radiant heating device. Failure to follow manufacturer's instructions can cause a fire, which could result in death or serious injury. (00335a)

- **Avoid directing heat toward any fuel system component. Extreme heat can cause fuel ignition/explosion resulting in death or serious injury.**
- **Avoid directing heat toward any electrical system component other than the connectors on which heat shrink work is being performed.**
- **Always keep hands away from tool tip area and heat shrink attachment.**

NOTE

It is acceptable for the splice to rest against the heat shrink tool attachment.

10. Heat the center of the splice until the crimp indentations disappear and the tubing assumes a smooth cylindrical appearance.

ELECTRICAL CONNECTOR LOCATIONS B.7

FLHX, FLHT/C/U

No.	Description	Type	Location	Fig.
[1]	Main to Interconnect Harness	12 - Place Deutsch (Black)	Inner Fairing - Right Radio Support Bracket	41
[2]	Main to Interconnect Harness	12 - Place Deutsch (Gray)	Inner Fairing - Right Fairing Support Brace	41
[4]	Accessory	4 - Place Deutsch	Uppe	46
[5]	Maxi-Fuse	2 - Place Packard	Under Left Side Cover	43
[6]	Audio to Interconnect Harness	6 - Place Deutsch (Gray)	Inner Fairing - Top of Radio (Left Side)	41
[7]	Rear Fender Lights Harness	8 - Place Multilock	Top of Rear Fender (Under Seat)	49
[10]	ICM ****	12 - Place Deutsch (Black)	Under Right Side Cover	48
[12]	Tour-Pak Lights (Rear Facia Lamp on FLHX)	3 - Place Multilock	Inside Tour-Pak (Inboard of Upper Frame Tube on FLHX)	42
[13]	Fuel Tank Harness	4 - Place Multilock	Behind Fuel Tank (Under Seat)	47
[15]	Main to Interconnect Harness	4 - Place Packard	Inner Fairing - Right Fairing Bracket	41
[17]	Cruise Control Module **	10 - Place Packard	Under Left Side Cover	43
[18]	Left Rear Turn Signal	2 - Place Multilock	Circuit Board Under Tail Lamp Assembly	50
[19]	Right Rear Turn Signal	2 - Place Multilock	Circuit Board Under Tail Lamp Assembly	50
[21]	Indicator Lamps	10 - Place Multilock	Inner Fairing - Above Radio	41
[22]	Interconnect to Right Handlebar Switches	12 - Place Deutsch (Black)	Inner Fairing - Fork Stem Nut Lock Plate (Left Side)	41
[24]	Interconnect to Left Handlebar Switches	12 - Place Deutsch (Gray)	Inner Fairing - Left Fairing Support Brace	41
[27]	Radio *	23 - Place Amp	Inner Fairing - Back of Radio (Right Side)	41
[28]	Radio **	35 - Place Amp	Inner Fairing - Back of Radio (Left Side)	41
[30]	TSM/TSSM	12 - Place Deutsch	Cavity in Crossmember at Rear of Battery Box (Under Seat)	52
[31L]	Left Front Turn Signal/Auxiliary Lamp	4 - Place Multilock	Inner Fairing - Left Fairing Support Brace (Outboard Side)	41
[31R]	Right Front Turn Signal/Auxiliary Lamp	4 - Place Multilock	Inner Fairing - Right Fairing Support Brace (Outboard Side)	41
[32]	Front Fender Tip Lamp Jumper Harness (DOM)	2 - Place Multilock (Black)	Inner Fairing - Below Upper Fork Bracket (Left Side)	41
[33]	Ignition/Light Key Switch	3 - Place Packard	Inner Fairing - Under Radio (Front of Ignition Switch Housing)	41
[34]	Right Front Speaker	Spade Contacts	Back of Speaker	-
[35]	Left Front Speaker	Spade Contacts	Back of Speaker	-
[38]	Headlamp	Headlamp Connector	Inner Fairing	41
[39]	Speedometer	12 - Place Packard (Black)	Inner Fairing (Back of Speedometer)	41
[41]	Rear Right Speaker/Passenger Controls **	6 - Place Deutsch	Inside Rear Right Speaker Box	-
[42]	Rear Left Speaker/Passenger Controls **	6 - Place Deutsch	Inside Rear Left Speaker Box	-
[45]	Rear Fender Tip Lamp (DOM)	3 - Place Multilock	Circuit Board Under Tail Lamp Assembly	50
[46]	Stator	3 - Place Lyall	Bottom of Voltage Regulator (Left Side)	51
[50]	CB Antenna Cable **	-	Inner Fairing - Back of CB Module	41,42
[51]	Radio Antenna Cable *	-	Inner Fairing - Back of Radio (Left Side)	41
[53]	Console Pod **	12 - Place Deutsch	Rear of Battery Box (Under Seat)	52
[64]	Fuse Block	Packard	Under Left Side Cover	43,44
[65]	VSS	3 - Place Deutsch	Under Right Side Cover (Behind Electrical Bracket)	45
[75]	Cruise Roll-Off Switch	Spade Contacts	Right Side of Steering Head	-
[76]	Passenger Headset	7 - Place DIN	Below Rear Left Speaker Box	-
[77]	Voltage Regulator	2 - Place Lyall	Bottom of Voltage Regulator (Right Side)	51
[78]	ECM ***	36 - Place Packard	Under Right Side Cover	45
[79]	CKP Sensor	2 - Place Deutsch	Bottom of Voltage Regulator	51
[80]	MAP Sensor	3 - Place Packard	Top of Intake Manifold/Induction Module	-
[83]	Ignition Coil	4 - Place Delphi	Below Fuel Tank (Left Side)	-
[84]	Front Injector ***	2 - Place Delphi	Below Fuel Tank (Left Side)	-
[85]	Rear Injector ***	2 - Place Delphi	Below Fuel Tank (Left Side)	-
[87]	IAC ***	4 - Place Delphi	Below Fuel Tank (Right Side)	-
[88]	TP Sensor ***	3 - Place Delphi	Below Fuel Tank (Right Side)	-

FLHX, FLHT/C/U Continued ...

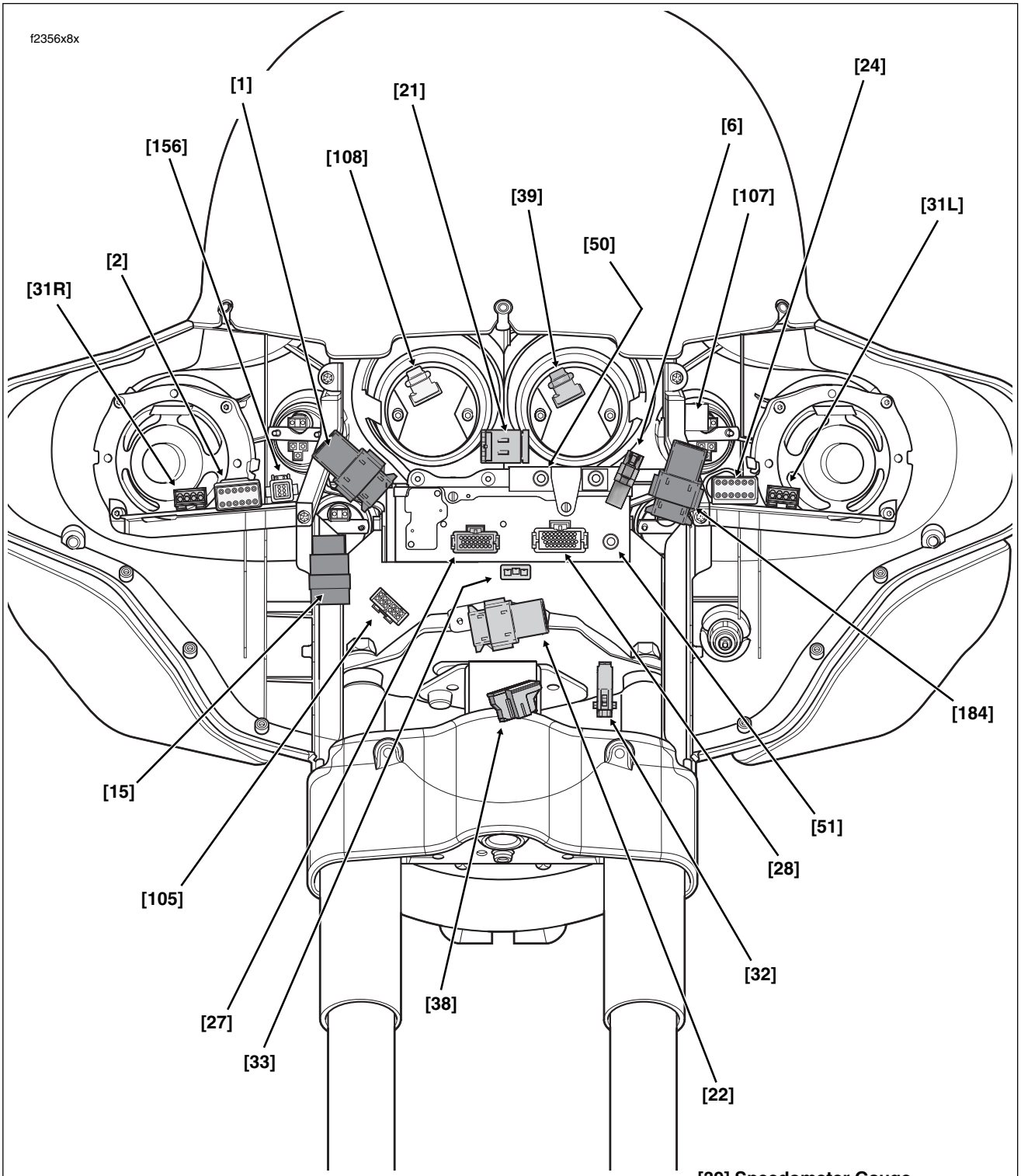

[1] Main to Interconnect Harness
[2] Main to Interconnect Harness
[6] Audio to Interconnect Harness
[15] Main to Interconnect Harness
[21] Indicator Lamps
[22] Right Handlebar Switches
[24] Left Handlebar Switches
[27] Radio
[28] Radio
[31L] Left Front Turn Signal/Aux Lamp
[31R] Right Front Turn Signal/Aux Lamp
[32] Front Fender Tip
[33] Ignition Switch
[38] Headlamp
[39] Speedometer Gauge
[50] CB Antenna Cable
[51] Radio Antenna Cable
[105] Fairing Cap Switches
[107] Ambient Temperature Sensor
[108] Tachometer Gauge
[156] Main to Interconnect Harness
[184] CB Module

Figure B-41. Inner Fairing Connectors (FLHX, FLHT/C/U)

FLHX, FLHT/C/U (Continued)

No.	Description	Type	Location	Fig.
[89]	IAT Sensor ***	2 - Place Delphi	Below Fuel Tank (Right Side)	-
[90]	ET Sensor ***	2 - Place Delphi	Back of Front Cylinder (Left Side)	-
[91]	Data Link	4 - Place Deutsch	Under Right Side Cover	45
[93]	Tail Lamp	4 - Place Multilock	Circuit Board Under Tail Lamp Assembly	50
[94]	Rear Fender Lights Harness to Circuit Board	6 - Place Multilock	Circuit Board Under Tail Lamp Assembly	50
[105]	Fairing Cap Switches	12 - Place Multilock	Inner Fairing - Above Upper Fork Bracket (Right Side)	41
[107]	Ambient Air Temperature Sensor *	3 - Place Multilock	Inner Fairing - Left Fairing Bracket (Outboard Side)	41
[108]	Tachometer	12 - Place Packard (Gray)	Inner Fairing (Back of Tachometer)	41
[110]	Voltmeter Lamp	Spade Connector	Inner Fairing	-
[111]	Voltmeter	Spade Connector	Inner Fairing	-
[112]	Oil Pressure Gauge Lamp	Spade Connector	Inner Fairing	-
[113]	Oil Pressure Gauge	Spade Connector	Inner Fairing	-
[114]	Air Temperature Gauge Lamp	Spade Connector	Inner Fairing	-
[115]	Air Temperature Gauge	Spade Connector	Inner Fairing	-
[116]	Fuel Gauge Lamp	Spade Connector	Inner Fairing	-
[117]	Fuel Gauge	Spade Connector	Inner Fairing	-
[119]	EFI Fuses ***	Fuse Terminals	Fuse Block (Under Right Side Cover)	45
[121]	Rear Brake Light Switch	Spade Terminals	Beneath Transmission (Right Side)	-
[122]	Horn	Spade Terminals	Between Cylinders (Left Side)	-
[123]	Starter Relay	Relay Connector	Rear of Battery Box (Under Seat) - Left Side	52
[124]	Brake Light Relay	Relay Connector	Fuse Block (Under Left Side Cover)	44
[126]	Ignition Keyswitch Relay	Relay Connector	Rear of Battery Box (Under Seat) - Left Side	52
[128]	Starter Solenoid	Spade Terminals	Top of Starter	-
[129]	Harness Grounds	Ring Terminals	Upper Frame Cross Member (Under Seat)	46
[131]	Neutral Switch	Post Terminals	Transmission Top Cover	-
[132]	Cigarette Lighter *	Spade Terminals	Inner Fairing	-
[135]	EFI System Relay ***	Relay Connector	Fuse Block (Under Right Side Cover)	45
[139]	Oil Pressure Sender	4 - Place Delphi	Front Right Crankcase	-
[141]	Fuel Level Sender (and Fuel Pump on EFI models)	4 - Place Packard	Top of Canopy (Under Console)	-
[142]	Security Siren (Optional)	3 - Place Delphi	Under Right Side Cover (Behind Electrical Bracket)	45
[143]	Front Fender Tip Lamp (DOM)	2 - Place Multilock (Black)	Under Front Fender Tip Lamp Bracket	-
[156]	Main to Interconnect Harness	6 - Place Deutsch	Inner Fairing - Right Fairing Support Brace	41
[160]	B+	1 - Place Packard	Upper Frame Cross Member (Under Seat)	46
[184]	CB Module	12 - Place Deutsch	Inner Fairing - Top of Radio (Left Side)	41

* Classic and Ultra ** Ultra Only *** Fuel Injected Models **** Carbureted Models

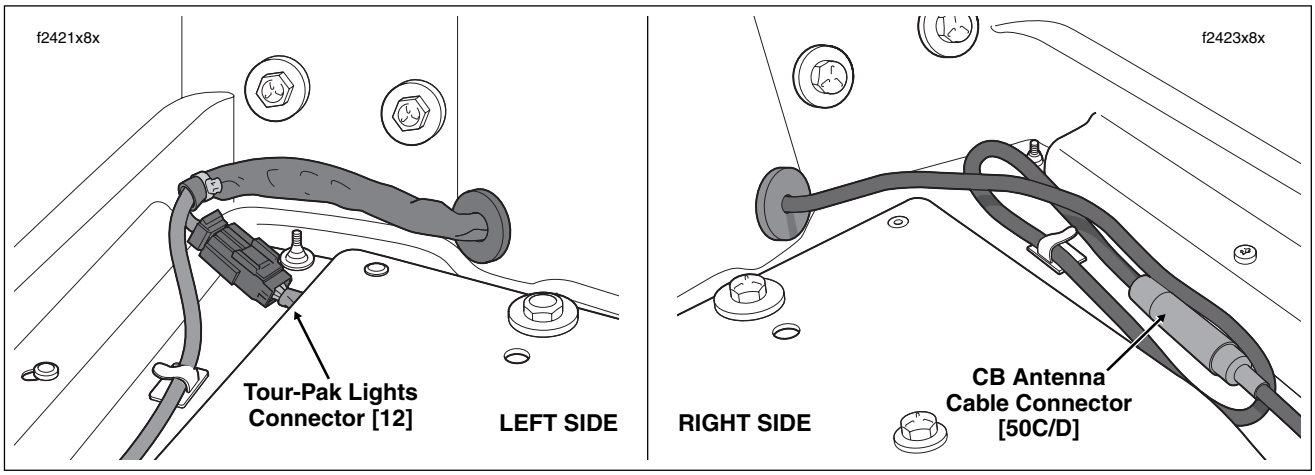

Figure B-42. Tour-Pak Connectors

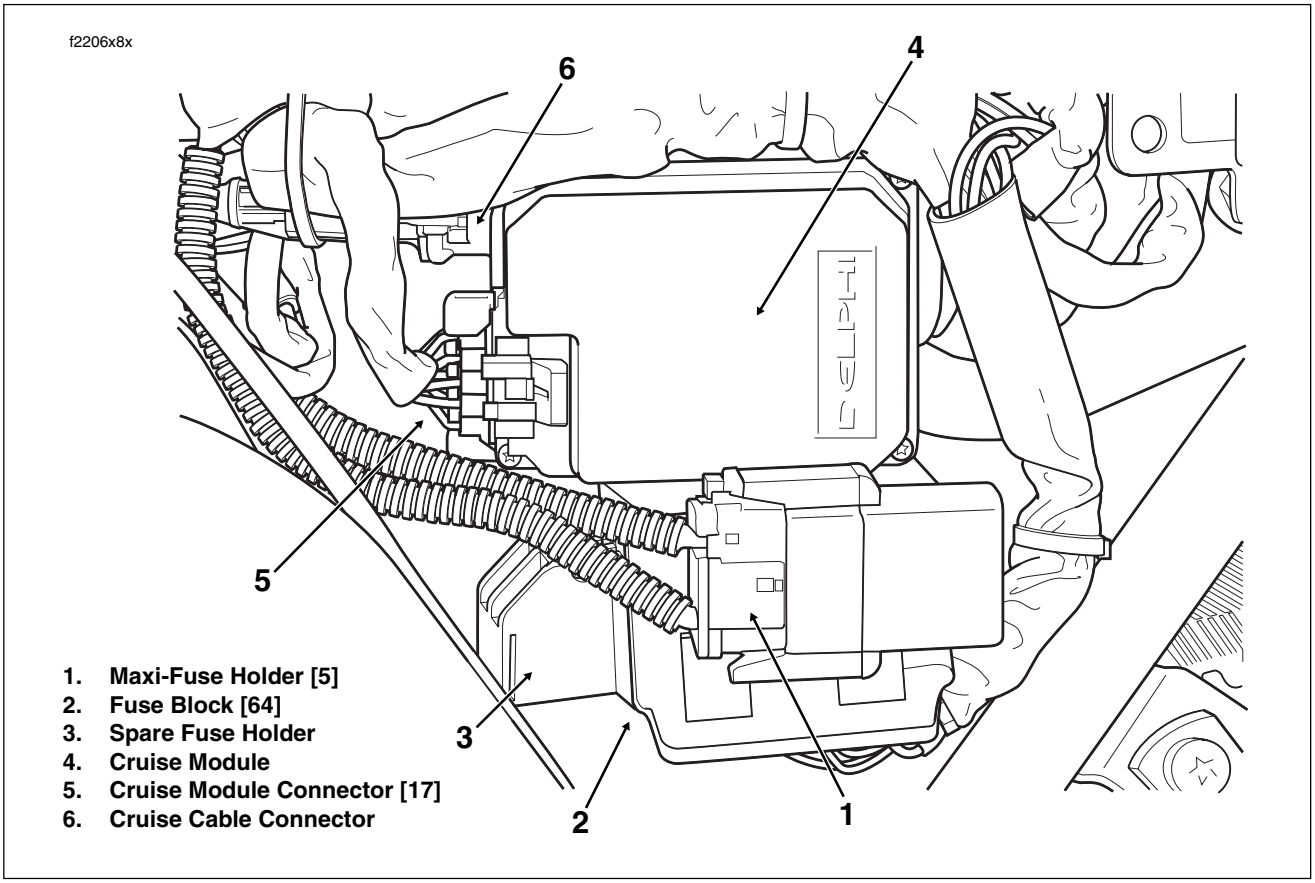

Figure B-43. Cruise Control Module (Under Left Side Cover)

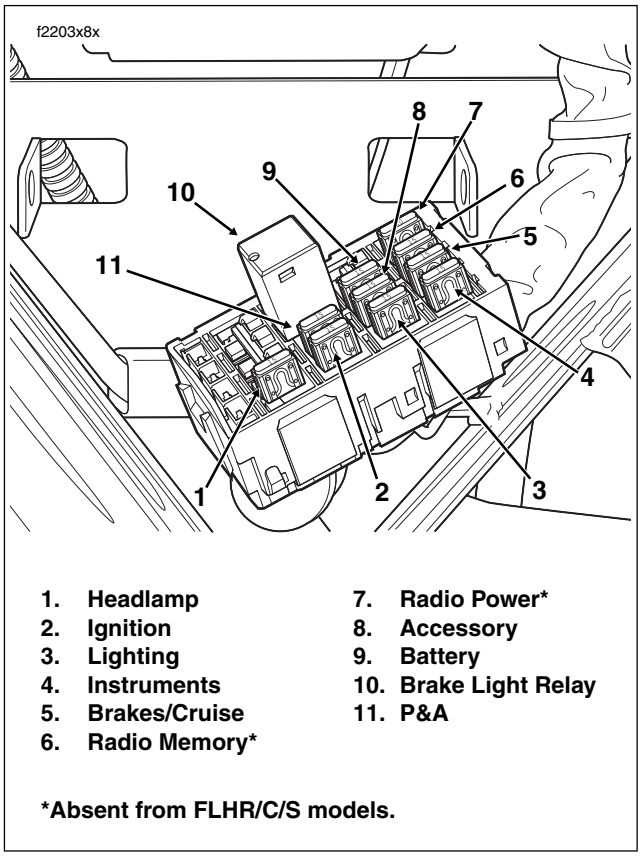

Figure B-44. Fuse Blocks - FLHX, FLHTC/U, FLTR (Under Left Side Cover)

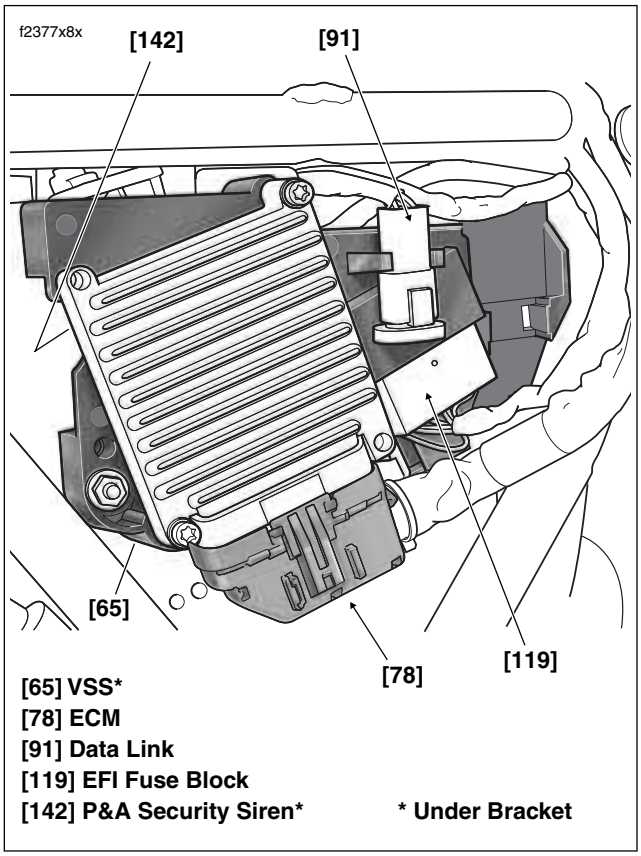

Figure B-45. Under Right Side Cover (Fuel Injected)

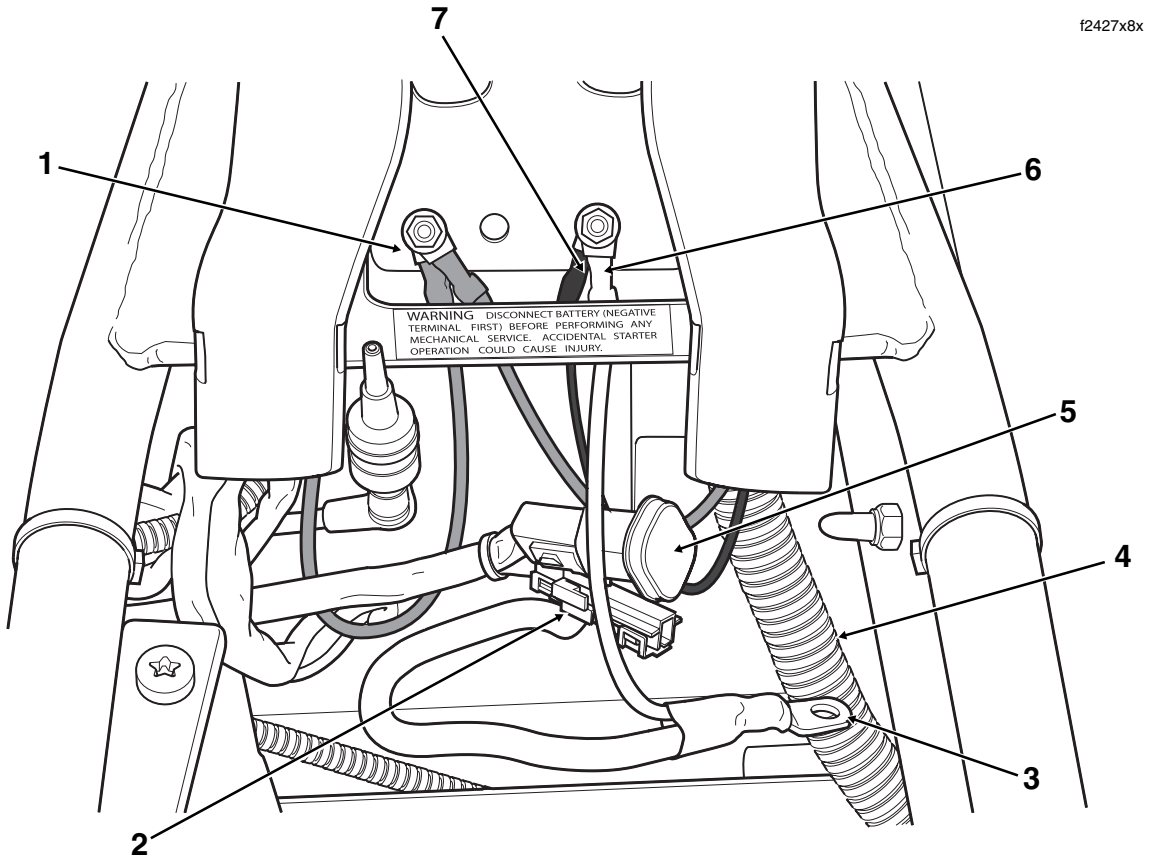

1. Main Harness Ground Ring Terminals (2)
2. B+ Connector [160]
3. Battery Negative Cable
4. Battery Positive Cable
5. Accessory Connector [4]
6. Chassis Ground Cable
7. Main Harness Ground Ring Terminal

Figure B-46. Electrical Connectors - Upper Frame Cross Member (Under Seat)

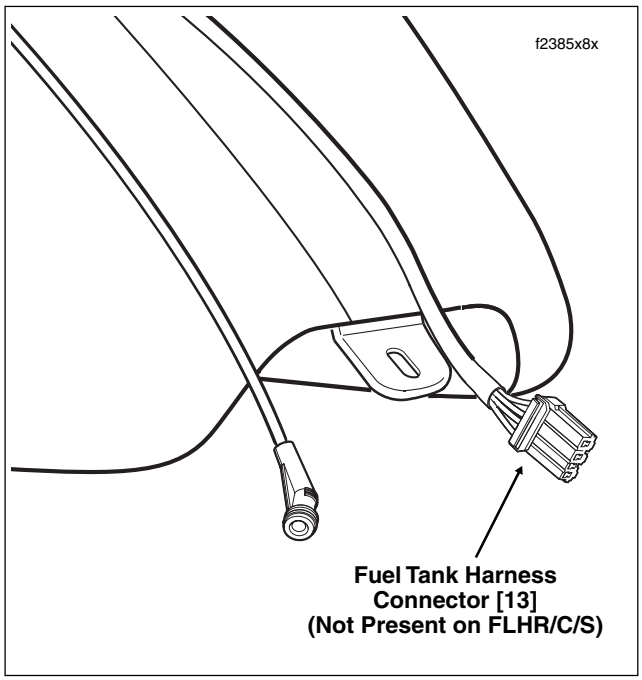

Figure B-47. Rear of Fuel Tank (Under Seat)

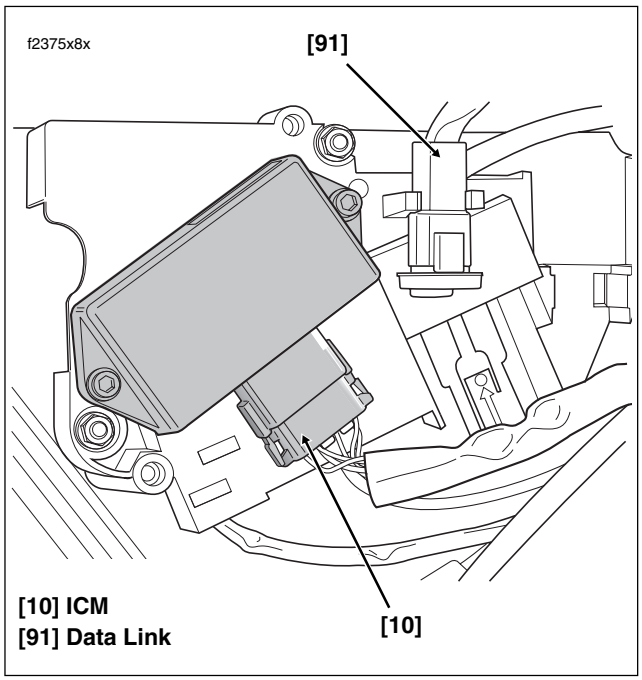

Figure B-48. Under Right Side Cover (Carbureted)

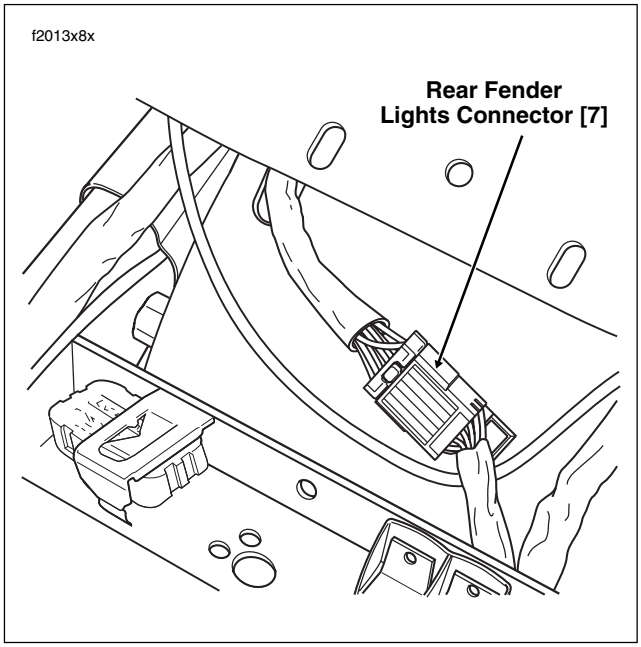

Figure B-49. Rear Fender (Under Seat)

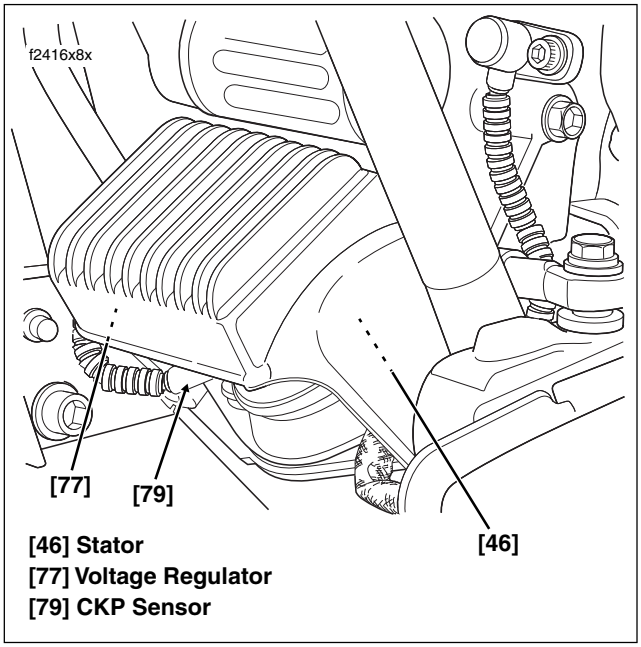

Figure B-51. Voltage Regulator (Left Side View)

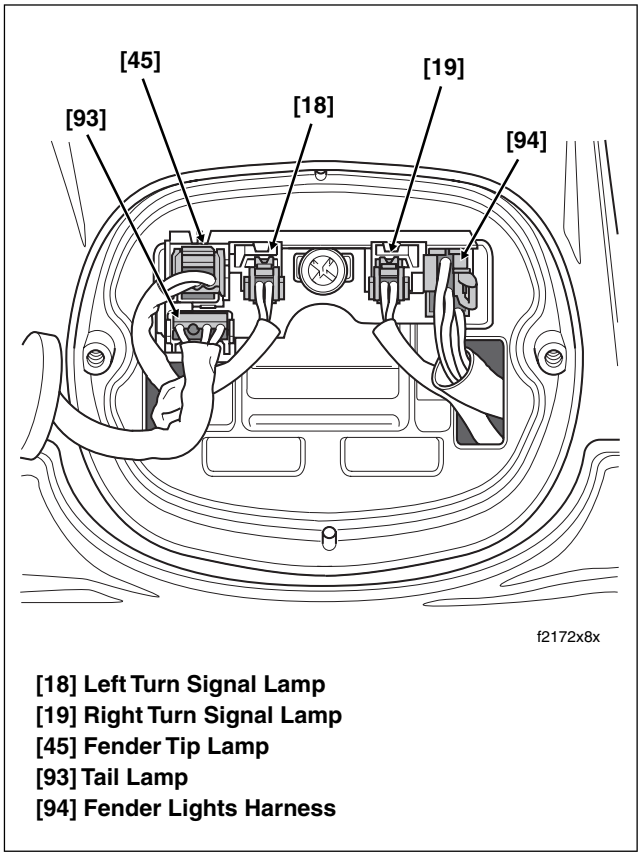

Figure B-50. Rear Fender Lights Assembly

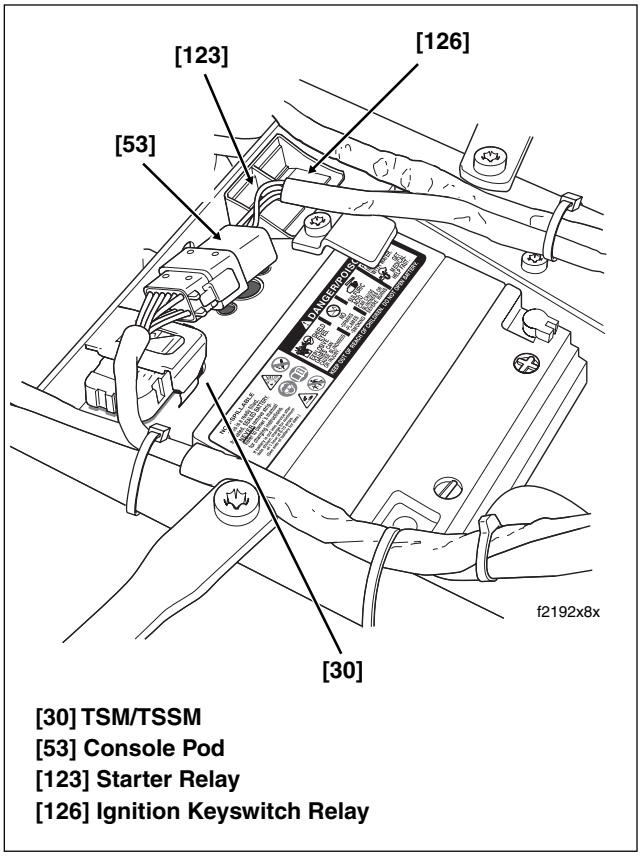

Figure B-52. Electrical Connectors/Relays (Under Seat)

FLTR

No.	Description	Type	Location	Fig.
[1]	Main to Interconnect Harness	12 - Place Deutsch (Black)	Inner Fairing - Below Radio (Right Side)	54
[2]	Main to Interconnect Harness	12 - Place Deutsch (Gray)	Inner Fairing - Below Radio (Right Side)	54
[4]	Accessory	4 - Place Deutsch	Upper Frame Cross Member (Under Seat)	46
[5]	Maxi-Fuse	2 - Place Packard	Under Left Side Cover	43
[7]	Rear Fender Lights Harness	8 - Place Multilock	Top of Rear Fender (Under Seat)	49
[10]	ICM ****	12 - Place Deutsch (Black)	Under Right Side Cover	48
[13]	Fuel Tank Harness	4 - Place Multilock	Behind Fuel Tank (Under Seat)	47
[15]	Main to Interconnect Harness	4 - Place Packard	Inner Fairing - Below Radio (Right Side)	54
[17]	Cruise Control Module	10 - Place Packard	Under Left Side Cover	43
[18]	Left Rear Turn Signal	2 - Place Multilock	Circuit Board Under Tail Lamp Assembly	50
[19]	Right Rear Turn Signal	2 - Place Multilock	Circuit Board Under Tail Lamp Assembly	50
[21]	Indicator Lamps	10 - Place Multilock	Inside Instrument Nacelle (Under Bezel)	53
[22]	Interconnect to Right Handlebar Switches	12 - Place Deutsch (Black)	Inner Fairing - Left Side of Radio Bracket	54
[24]	Interconnect to Left Handlebar Switches	12 - Place Deutsch (Gray)	Inner Fairing - Left Side of Radio Bracket	54
[27]	Radio	23 - Place Amp	Inner Fairing - Back of Radio (Right Side)	54
[30]	TSM/TSSM	12 - Place Deutsch (Gray)	Cavity at Rear of Battery Box (Under Seat)	52
[31L]	Left Front Turn Signal	3 - Place Multilock	Inner Fairing - Left Side	54
[31R]	Right Front Turn Signal	3 - Place Multilock	Inner Fairing - Right Side	54
[33]	Ignition/Light Key Switch	3 - Place Packard	Front of Ignition Switch Housing	-
[34]	Right Front Speaker	Spade Contacts	Back of Speaker	-
[35]	Left Front Speaker	Spade Contacts	Back of Speaker	-
[38]	Headlamp	Headlamp Connector	Inner Fairing	54
[39]	Speedometer	12 - Place Packard (Black)	Inside Instrument Nacelle (Back of Speedometer)	53
[45]	Rear Fender Tip Lamp (DOM)	3 - Place Multilock	Circuit Board Under Tail Lamp Assembly	50
[46]	Stator	3 - Place Lyall	Bottom of Voltage Regulator (Left Side)	51

FLTR Continued ...

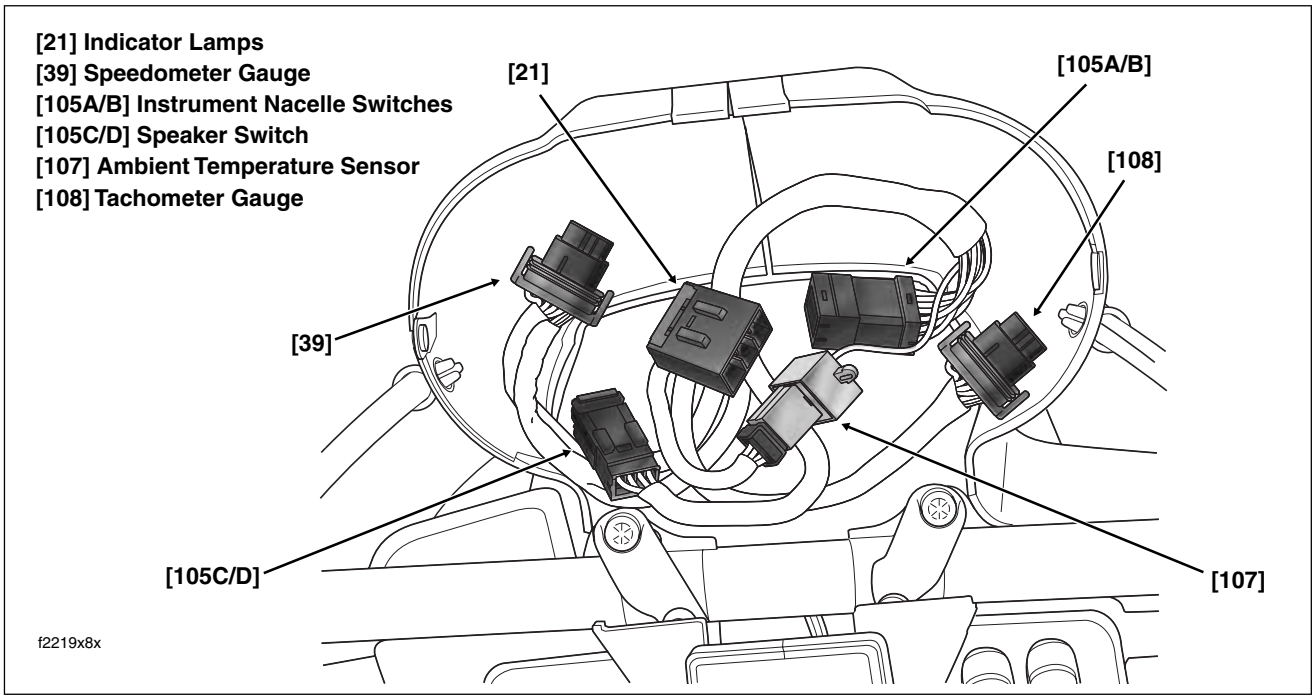

Figure B-53. Instrument Nacelle Connectors (FLTR)

FLTR (Continued)

No.	Description	Type	Location	Fig.
[51]	Radio Antenna Cable	-	Inner Fairing - Back of Radio (Left Side)	54
[64]	Fuse Block	Packard	Under Left Side Cover	43,44
[65]	VSS	3 - Place Deutsch	Under Right Side Cover (Behind Electrical Bracket)	45
[75]	Cruise Roll-Off Switch	Spade Contacts	Right Side of Steering Head	-
[77]	Voltage Regulator	2 - Place Lyall	Bottom of Voltage Regulator (Right Side)	51
[78]	ECM ***	36 - Place Packard	Under Right Side Cover	45
[79]	CKP Sensor	2 - Place Deutsch	Bottom of Voltage Regulator	51
[80]	MAP Sensor	3 - Place Packard	Top of Intake Manifold/Induction Module	-
[83]	Ignition Coil	4 - Place Delphi	Below Fuel Tank (Left Side)	-
[84]	Front Injector ***	2 - Place Delphi	Below Fuel Tank (Left Side)	-
[85]	Rear Injector ***	2 - Place Delphi	Below Fuel Tank (Left Side)	-
[87]	IAC ***	4 - Place Delphi	Below Fuel Tank (Right Side)	-

FLTR Continued ...

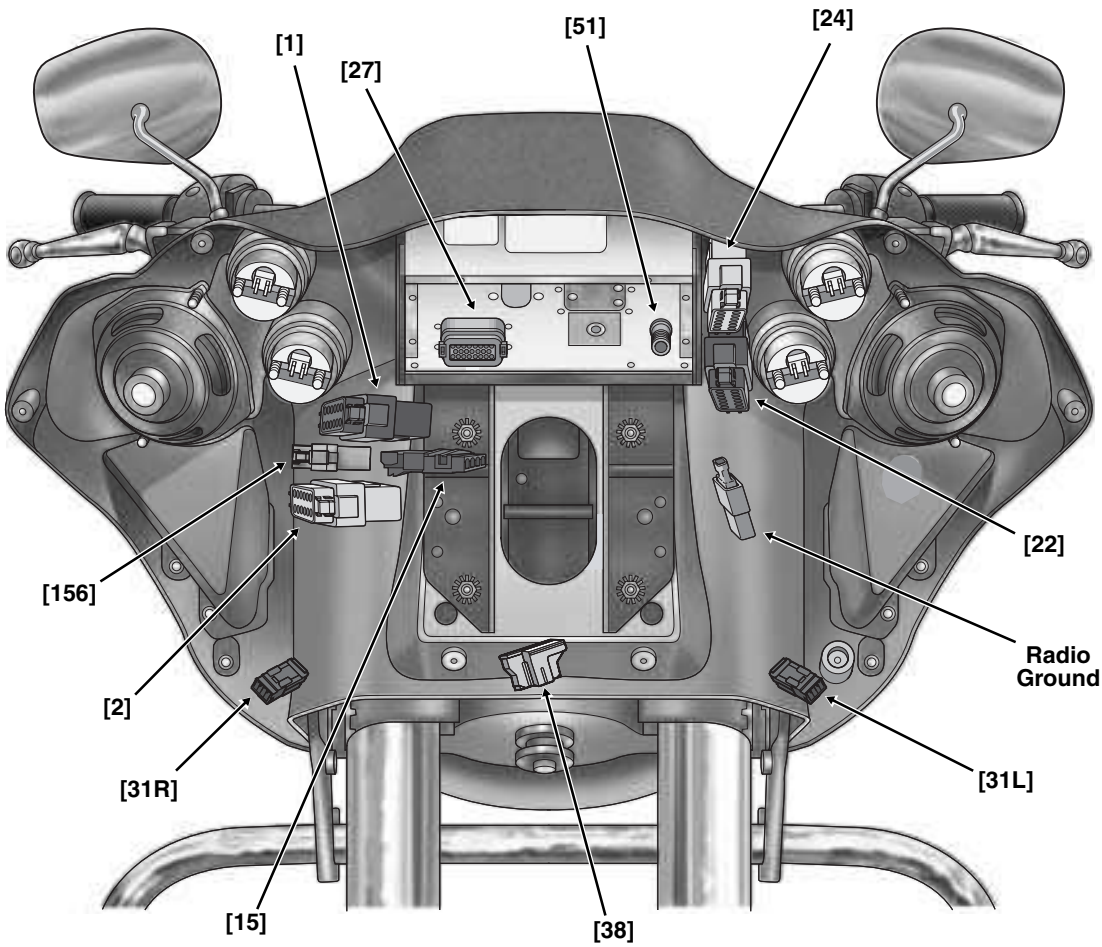

[1] Main to Interconnect Harness
[2] Main to Interconnect Harness
[15] Main to Interconnect Harness
[22] Right Handlebar Switches
[24] Left Handlebar Switches
[27] Radio
[31L] Left Turn Signal
[31R] Right Turn Signal
[38] Headlamp
[51] Radio Antenna Cable
[156] Main to Interconnect Harness

Figure B-54. Inner Fairing Connectors (FLTR)

FLTR (Continued)

No.	Description	Type	Location	Fig.
[88]	TP Sensor ***	3 - Place Delphi	Below Fuel Tank (Right Side)	-
[89]	IAT Sensor ***	2 - Place Delphi	Below Fuel Tank (Right Side)	-
[90]	ET Sensor ***	2 - Place Delphi	Back of Front Cylinder (Left Side)	-
[91]	Data Link	4 - Place Deutsch	Under Right Side Cover	45
[93]	Tail Lamp	4 - Place Multilock	Circuit Board Under Tail Lamp Assembly	50
[94]	Rear Fender Lights Harness to Circuit Board	6 - Place Multilock	Circuit Board Under Tail Lamp Assembly	50
[105]	Instrument Nacelle Switches			
	Interconnect to Nacelle Switch Harness [105A, 105B]	12 - Place Multilock	Inside Instrument Nacelle (Under Bezel)	53
	Nacelle Switch Harness to Speaker Switch [105C, 105D]	4 - Place Multilock	Inside Instrument Nacelle (Under Bezel)	53
[107]	Ambient Air Temperature Sensor	3 - Place Multilock	Inside Instrument Nacelle (Under Bezel)	53
[108]	Tachometer	12 - Place Packard (Gray)	Inside Instrument Nacelle (Back of Tachometer)	53
[110]	Voltmeter Lamp	Spade Connector	Inner Fairing	-
[111]	Voltmeter	Spade Connector	Inner Fairing	-
[112]	Oil Pressure Gauge Lamp	Spade Connector	Inner Fairing	-
[113]	Oil Pressure Gauge	Spade Connector	Inner Fairing	-
[114]	Air Temperature Gauge Lamp	Spade Connector	Inner Fairing	-
[115]	Air Temperature Gauge	Spade Connector	Inner Fairing	-
[116]	Fuel Gauge Lamp	Spade Connector	Inner Fairing	-
[117]	Fuel Gauge	Spade Connector	Inner Fairing	-
[119]	EFI Fuses ***	Fuse Terminals	Fuse Block (Under Right Side Cover)	45
[121]	Rear Brake Light Switch	Spade Terminals	Beneath Transmission (Right Side)	-
[122]	Horn	Spade Terminals	Between Cylinders (Left Side)	-
[123]	Starter Relay	Relay Connector	Rear of Battery Box (Under Seat) - Left Side	52
[124]	Brake Light Relay	Relay Connector	Fuse Block (Under Left Side Cover)	44
[126]	Ignition Keyswitch Relay	Relay Connector	Rear of Battery Box (Under Seat) - Left Side	52
[128]	Starter Solenoid	Spade Terminals	Top of Starter	-
[129]	Harness Grounds	Ring Terminals	Upper Frame Cross Member (Under Seat)	46
[131]	Neutral Switch	Post Terminals	Transmission Top Cover	-
[132]	Cigarette Lighter	Spade Terminals	Inner Fairing	-
[135]	EFI System Relay ***	Relay Connector	Fuse Block (Under Right Side Cover)	45
[139]	Oil Pressure Sender	4 - Place Delphi	Front Right Crankcase	-
[141]	Fuel Level Sender (and Fuel Pump on EFI models)	4 - Place Packard	Top of Canopy (Under Console)	-
[142]	Security Siren (Optional)	3 - Place Delphi	Under Right Side Cover (Behind Electrical Bracket)	45
[156]	Main to Interconnect Harness	6 - Place Deutsch	Inner Fairing - Below Radio (Right Side)	54
[160]	B+	1 - Place Packard	Upper Frame Cross Member (Under Seat)	46

*** Fuel Injected Models **** Carbureted Models

FLHR/C/S

No.	Description	Type	Location	Fig.
[4]	Accessory	4 - Place Deutsch	Upper Frame Cross Member (Under Seat)	46
[5]	Maxi-Fuse	2 - Place Packard	Under Left Side Cover	43
[7]	Rear Fender Lights Harness	8 - Place Multilock	Top of Rear Fender (Under Seat)	49
[10]	ICM ****	12 - Place Deutsch (Black)	Under Right Side Cover	48
[18]	Left Rear Turn Signal	2 - Place Multilock	Circuit Board Under Tail Lamp Assembly	50
[19]	Right Rear Turn Signal	2 - Place Multilock	Circuit Board Under Tail Lamp Assembly	50
[21]	Indicator Lamps	8 - Place Deutsch	Under Console	56
[22]	Right Handlebar Switches	6 - Place Deutsch	Inside Headlamp Nacelle - Fork Stem Nut Lock Plate (Right Side)	55
[24]	Left Handlebar Switches	6 - Place Deutsch	Inside Headlamp Nacelle - Fork Stem Nut Lock Plate (Left Side)	55
[30]	TSM/TSSM	12 - Place Deutsch	Cavity at Rear of Battery Box (Under Seat)	52
[31]	Front Turn Signals	6 - Place Multilock	Inside Headlamp Nacelle - Fork Stem Nut Lock Plate (Left Side)	55
[32]	Front Fender Tip Lamp Jumper Harness (DOM)	2 - Place Multilock (Black)	Inside Headlamp Nacelle	55
[33]	Ignition/Light Key Switch	3 - Place Packard	Under Console	56
[38]	Headlamp	Headlamp Connector	Inside Headlamp Nacelle	55
[39]	Speedometer	12 - Place Packard	Back of Speedometer (Under Console)	56
[45]	Rear Fender Tip Lamp (DOM)	3 - Place Multilock	Circuit Board Under Tail Lamp Assembly	50
[46]	Stator	3 - Place Lyall	Bottom of Voltage Regulator (Left Side)	51
[64]	Fuse Block	Packard	Under Left Side Cover	43,44
[65]	VSS	3 - Place Deutsch	Under Right Side Cover (Behind Electrical Bracket)	45
[67]	Accessory Switch	4 - Place Amp	Inside Headlamp Nacelle	55
[73]	Auxiliary Lamps	2 - Place Multilock (White)	Inside Headlamp Nacelle	55
[75]	Cruise Roll-Off Switch **	Spade Contacts	Right Side of Steering Head	-
[77]	Voltage Regulator	2 - Place Lyall	Bottom of Voltage Regulator (Right Side)	51
[78]	ECM ***	36 - Place Packard	Under Right Side Cover	45

FLHR/C/S Continued ...

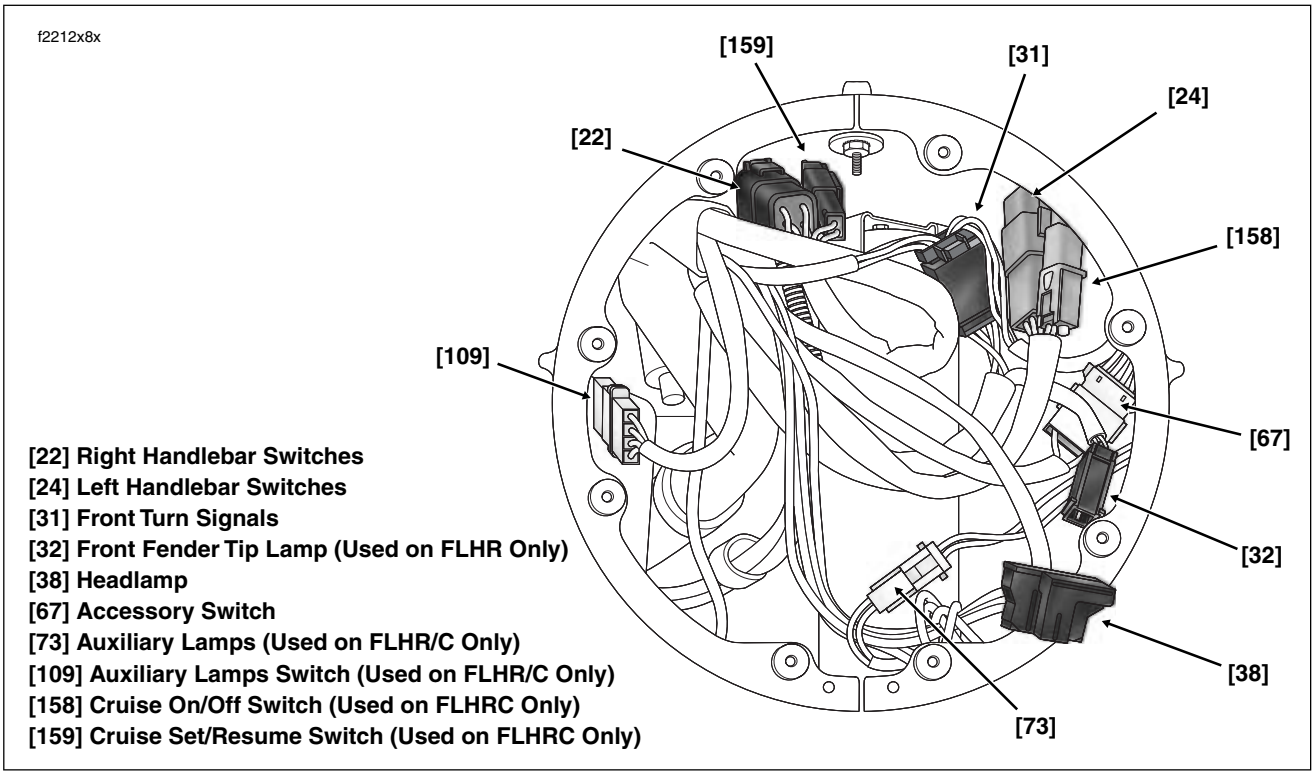

Figure B-55. Headlamp Nacelle Connectors (FLHR/C/S)

FLHR/C/S (Continued)

No.	Description	Type	Location	Fig.
[79]	CKP Sensor	2 - Place Deutsch	Bottom of Voltage Regulator	51
[80]	MAP Sensor	3 - Place Packard	Top of Intake Manifold/Induction Module	-
[83]	Ignition Coil	4 - Place Delphi	Below Fuel Tank (Left Side)	-
[84]	Front Injector ***	2 - Place Delphi	Below Fuel Tank (Left Side)	-
[85]	Rear Injector ***	2 - Place Delphi	Below Fuel Tank (Left Side)	-
[87]	IAC ***	4 - Place Delphi	Below Fuel Tank (Right Side)	-
[88]	TP Sensor ***	3 - Place Delphi	Below Fuel Tank (Right Side)	-
[89]	IAT Sensor ***	2 - Place Delphi	Below Fuel Tank (Right Side)	-
[90]	ET Sensor ***	2 - Place Delphi	Back of Front Cylinder (Left Side)	-
[91]	Data Link	4 - Place Deutsch	Under Right Side Cover	45
[93]	Tail Lamp	4 - Place Multilock	Circuit Board Under Tail Lamp Assembly	50
[94]	Rear Fender Lights Harness to Circuit Board	6 - Place Multilock	Circuit Board Under Tail Lamp Assembly	50
[108]	Optional Tachometer	1 - Place Amp	Inside Headlamp Nacelle	-
[109]	Auxiliary Lamps Switch	4 - Place Amp	Inside Headlamp Nacelle	55
[117]	Fuel Gauge	4 - Place Multilock	Below Fuel Tank (Left Side)	-
[119]	EFI Fuses ***	Fuse Terminals	Fuse Block (Under Right Side Cover)	45
[120]	Oil Pressure Switch	Post Terminal	Front Right Crankcase	-
[121]	Rear Brake Light Switch	Spade Terminals	Beneath Transmission	-
[122]	Horn	Spade Terminals	Between Cylinders (Left Side)	-
[123]	Starter Relay	Relay Connector	Fuse Block (Under Left Side Cover)	-
[124]	Brake Light Relay	Relay Connector	Fuse Block (Under Left Side Cover)	44
[126]	Ignition Keyswitch Relay	Relay Connector	Rear of Battery Box (Under Seat) - Left Side	52
[128]	Starter Solenoid	Spade Terminals	Top of Starter	-
[129]	Harness Grounds	Ring Terminals	Upper Frame Cross Member (Under Seat)	46
[131]	Neutral Switch	Post Terminals	Top of Transmission	-
[135]	EFI System Relay ***	Relay Connector	Fuse Block (Under Right Side Cover)	45
[141]	Fuel Level Sender (and Fuel Pump on EFI models)	4 - Place Packard	Top of Canopy (Under Console)	-
[142]	Security Siren (Optional)	3 - Place Delphi	Under Right Side Cover (Behind Electrical Bracket)	45
[143]	Front Fender Tip Lamp (DOM)	2 - Place Multilock (Black)	Under Front Fender Tip Lamp Bracket	-
[158]	Left Handlebar Switches (Cruise Control) **	2 - Place Deutsch (Gray)	Inside Headlamp Nacelle	55
[159]	Right Handlebar Switches (Cruise Control) **	2 - Place Deutsch (Black)	Inside Headlamp Nacelle	55
[160]	B+	1 - Place Packard	Upper Frame Cross Member (Under Seat)	46

** FLHRC Only *** Fuel Injected Models **** Carbureted Models

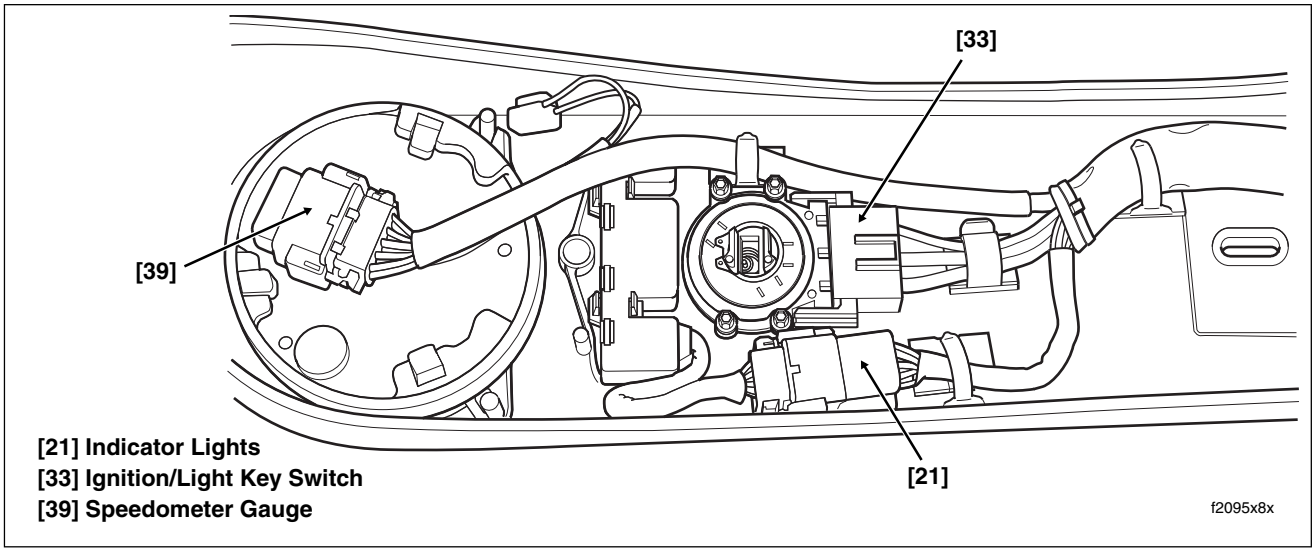

Figure B-56. Instrument Console Connectors (FLHR/C)

WIRING DIAGRAMS B.8

SUBJECT	PAGE NO.
FLHX, FLHT, FLHTC, FLHTCU	
Main Harness	B-41, B-43
Interconnect Harness	B-45
Tail Lamp, Auxiliary Lamps, Fender Tip Lamps, Directional Lamps and Tour-Pak Lights	B-47
Starting and Charging	B-49
Handlebar Switches and Indicator Lamps	B-51
Fairing Cap Switches	B-51
Radio, CB/Intercom and Rear Speakers	B-53
XM, Hands Free Phone and Navigation	B-53
FLTR	
Main Harness	B-41, B-43
Interconnect Harness	B-45
Tail Lamp and Directional Lamps	B-47
Starting and Charging	B-49
Handlebar Switches and Indicator Lamps	B-51
Instrument Nacelle Switches	B-51
Radio	B-53
FLHR, FLHRC, FLHRS	
Main Harness	B-55, B-57
Starting and Charging	B-59
Handlebar Switches, Speedometer, Indicator Lamps, Tail Lamp, Auxiliary Lamps, Directional Lamps, Fender Tip Lamps and Aux Lamp/Accessory Switches	B-61
TLE Sidecar, TLE Ultra Sidecar	
Amplifier	B-63
Sidecar Speakers and Switches	B-63

NOTE

Harness Part No.'s may be included on some wiring diagrams. Use these numbers for reference only. ALWAYS REFER TO THE PARTS CATALOG WHEN ORDERING WIRING HARNESSES.

NOTES

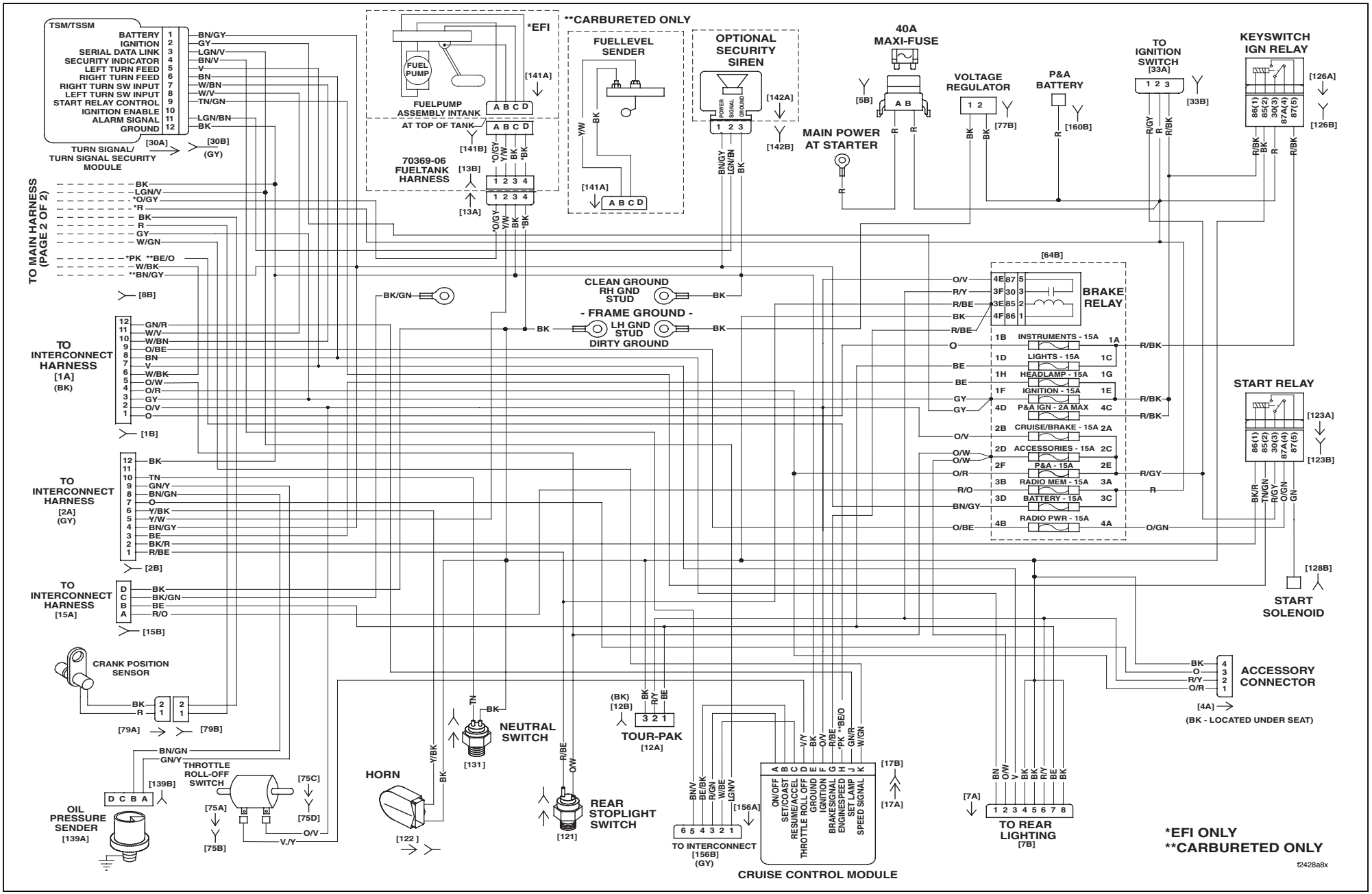

2006 FLHX, FLHT, FLHTC, FLHTCU and FLTR, DOMESTIC and INTERNATIONAL Models, Main Harness (Page 1 of 2)

2006 FLHX, FLHT, FLHTC, FLHTCU and FLTR DOMESTIC and INTERNATIONAL Models, Main Harness (Page 1 of 2)

2006 FLHX, FLHT, FLHTC, FLHTCU and FLTR DOMESTIC and INTERNATIONAL Models, Main Harness (Page 1 of 2)

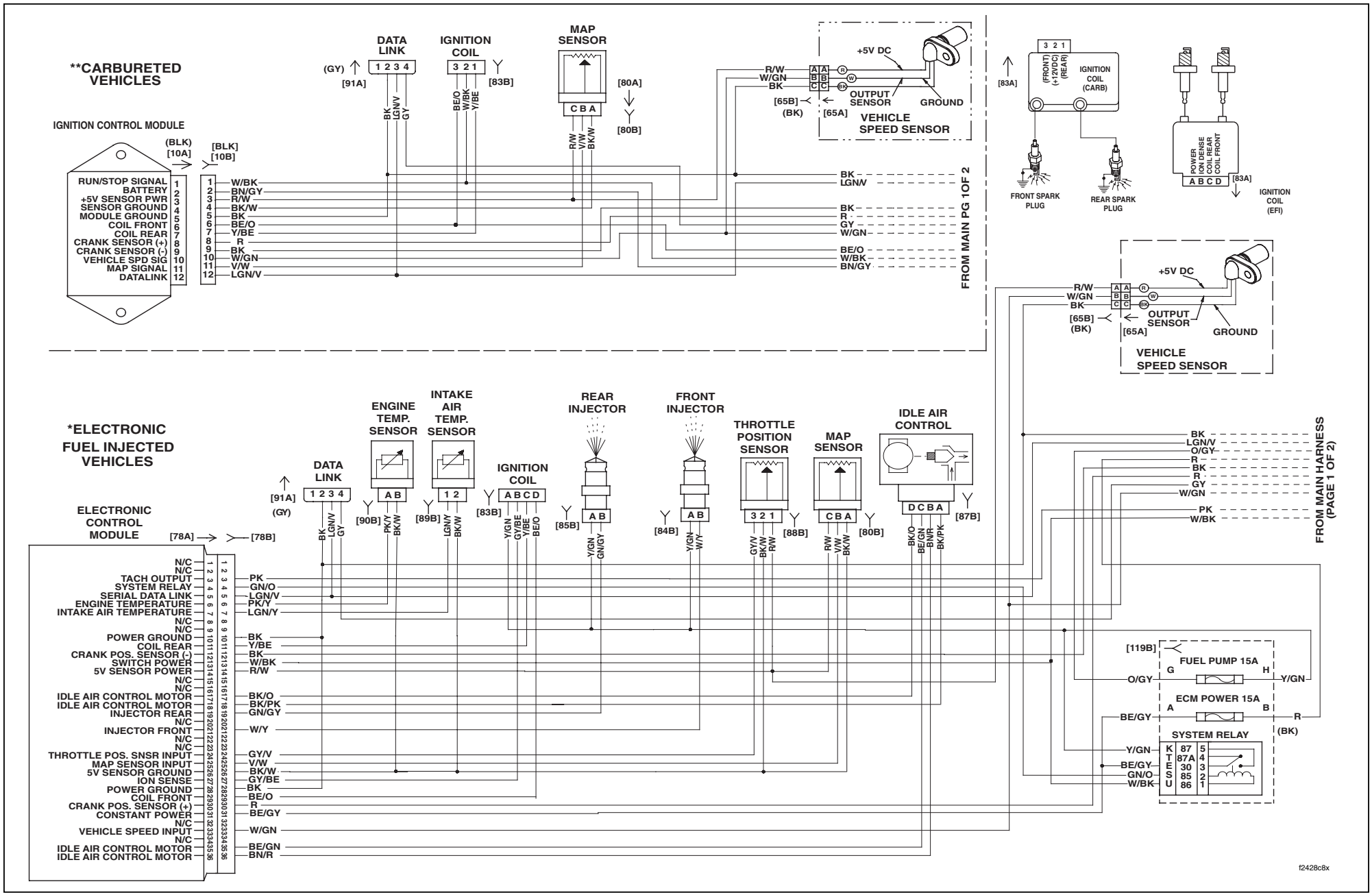

2006 FLHX, FLHT, FLHTC, FLHTCU and FLTR, DOMESTIC and INTERNATIONAL Models, Main Harness (Page 2 of 2)

2006 FLHX, FLHT, FLHTC, FLHTCU and FLTR DOMESTIC and INTERNATIONAL Models, Main Harness (Page 2 of 2)

2006 FLHX, FLHT, FLHTC, FLHTCU and FLTR DOMESTIC and INTERNATIONAL Models, Main Harness (Page 2 of 2)

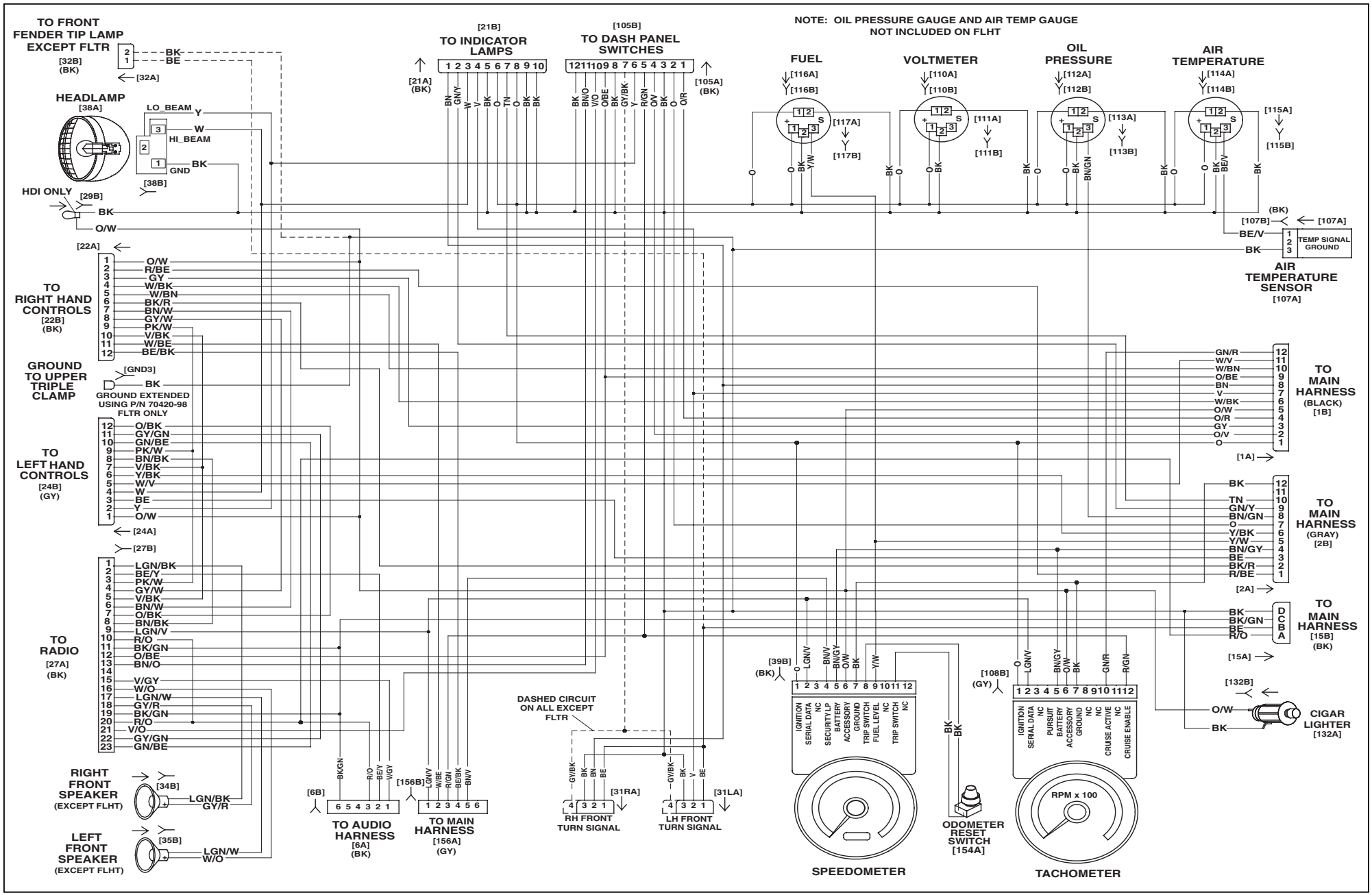

2006 FLHX, FLHT, FLHTC, FLHTCU and FLTR, DOMESTIC and INTERNATIONAL Models, Interconnect Harness

2006 FLHX, FLHT, FLHTC, FLHTCU and FLTR DOMESTIC and INTERNATIONAL Models, Interconnect Harness

2006 FLHX, FLHT, FLHTC, FLHTCU and FLTR DOMESTIC and INTERNATIONAL Models, Interconnect Harness

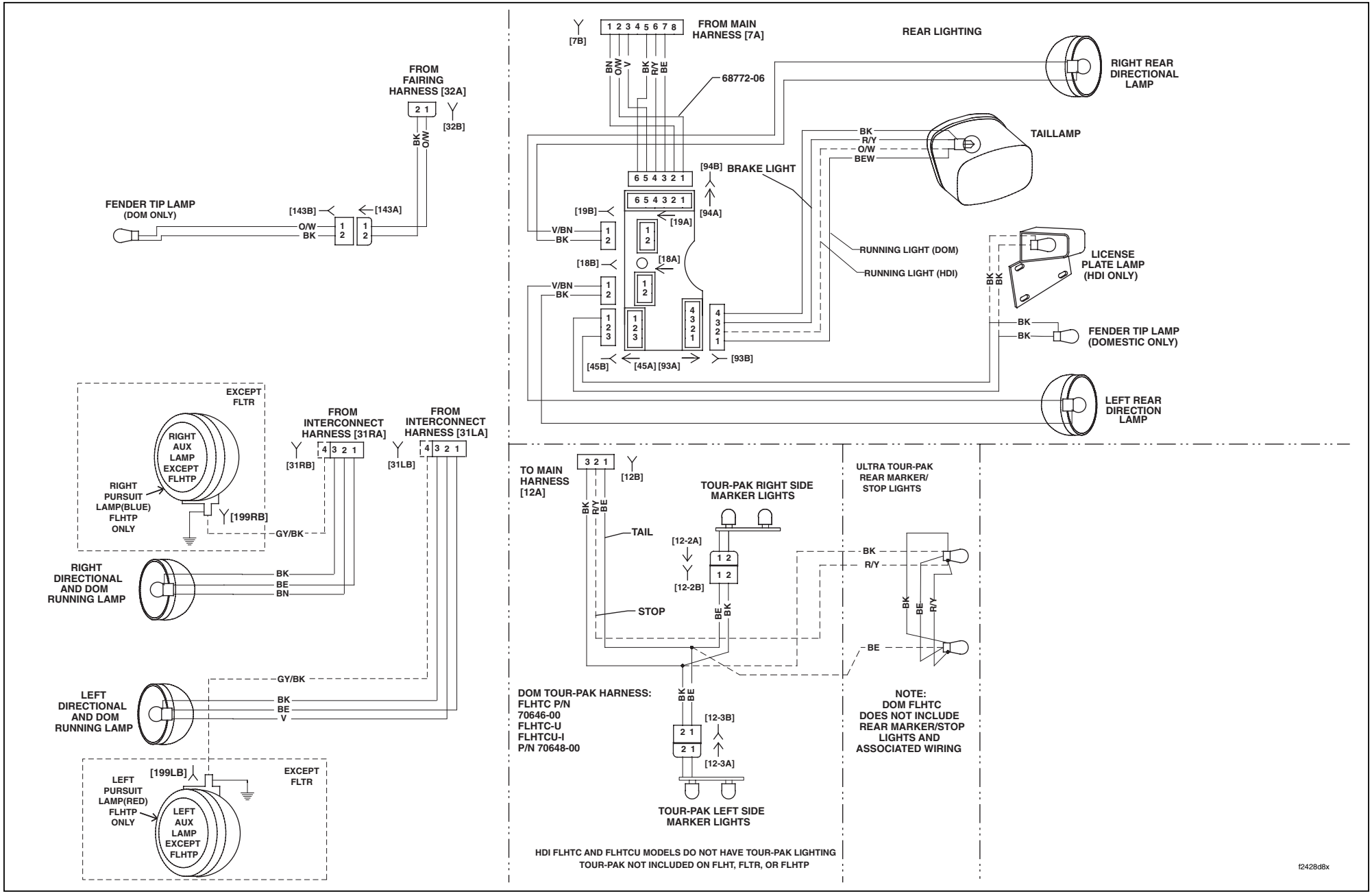

2006 FLHX, FLHT, FLHTC, FLHTCU and FLTR, DOMESTIC and INTERNATIONAL Models, Tail Lamp, Auxiliary Lamps, Fender Tip Lamps, Directional Lamps and Tour-Pak Lights

2006 FLHX, FLHT, FLHTC, FLHTCU and FLTR DOMESTIC and INTERNATIONAL Models, Tail Lamp, Auxiliary Lamps, Fender Tip Lamps, Directional Lamps and Tour-Pak Lights

2006 FLHX, FLHT, FLHTC, FLHTCU and FLTR DOMESTIC and INTERNATIONAL Models, Tail Lamp, Auxiliary Lamps, Fender Tip Lamps, Directional Lamps and Tour-Pak Lights

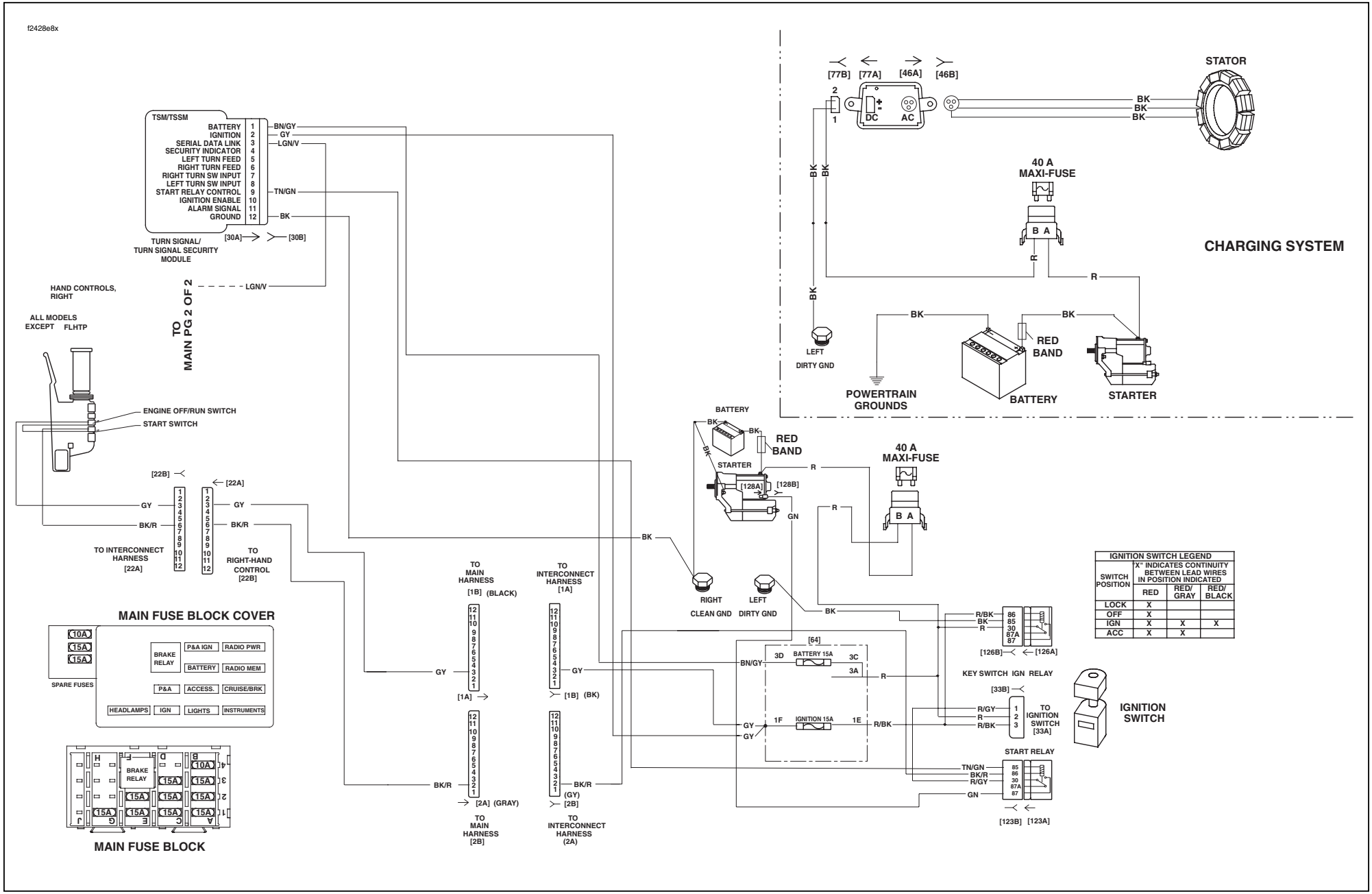

2006 FLHX, FLHT, FLHTC, FLHTCU and FLTR, DOMESTIC and INTERNATIONAL Models, Starting and Charging

2006 FLHX, FLHT, FLHTC, FLHTCU and FLTR DOMESTIC and INTERNATIONAL Models, Starting and Charging

2006 FLHX, FLHT, FLHTC, FLHTCU and FLTR DOMESTIC and INTERNATIONAL Models, Starting and Charging

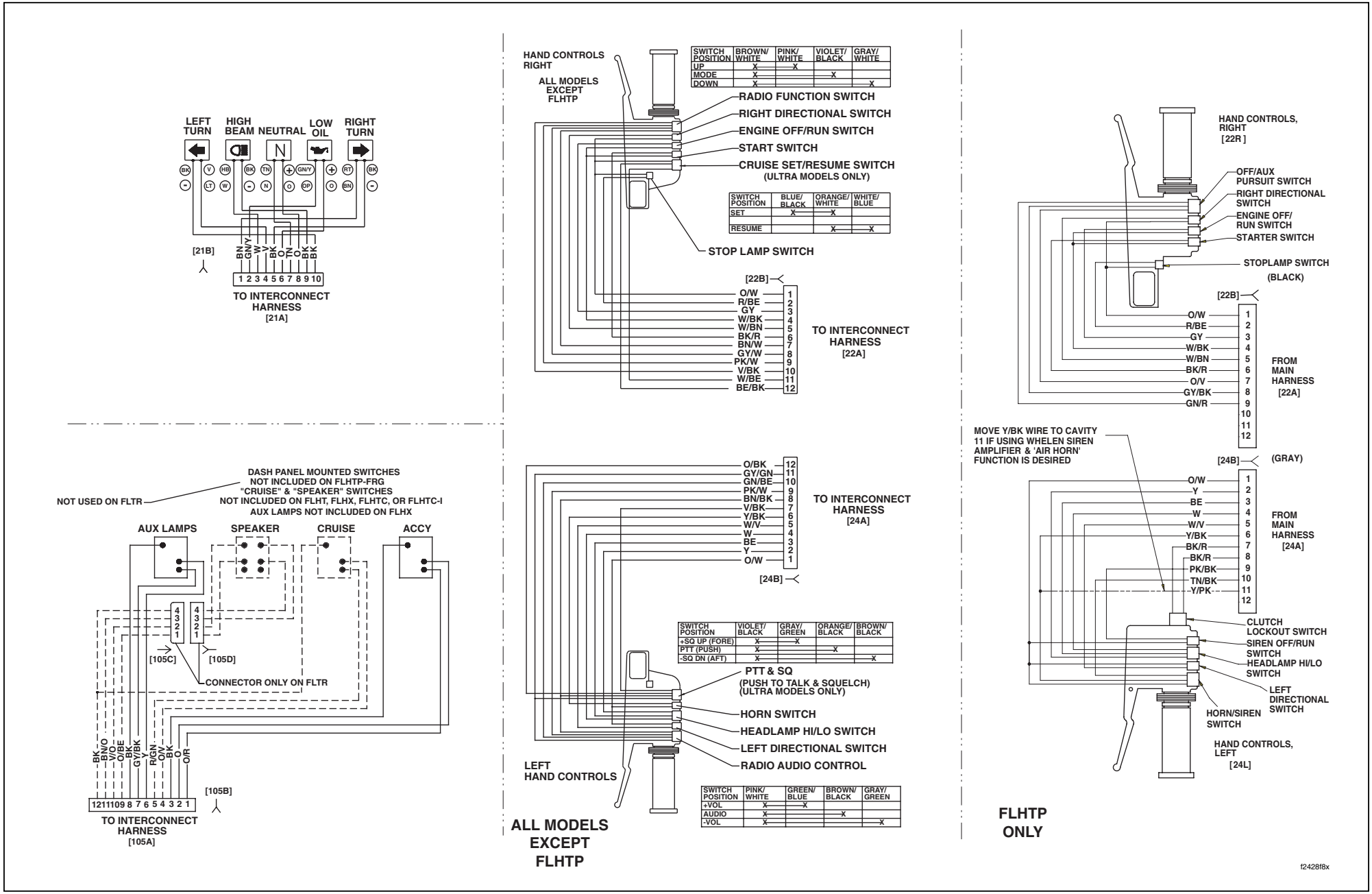

SWITCH POSITION	BROWN/ WHITE	PINK/ WHITE	VIOLET/ BLACK	GRAY/ WHITE
UP	X	X		
MODE	X		X	
DOWN	X			X

SWITCH POSITION	BLUE/ BLACK	ORANGE/ WHITE	WHITE/ BLUE
SET	X	X	
RESUME		X	X

2006 FLHX, FLHT, FLHTC, FLHTCU and FLTR, DOMESTIC and INTERNATIONAL Models, Handlebar Switches, Indicator Lamps and Fairing Cap/Instrument Nacelle Switches

2006 FLHX, FLHT, FLHTC, FLHTCU and FLTR DOMESTIC and INTERNATIONAL Models, Handlebar Switches, Indicator Lamps and Fairing Cap/Instrument Nacelle Switches

2006 FLHX, FLHT, FLHTC, FLHTCU and FLTR DOMESTIC and INTERNATIONAL Models, Handlebar Switches, Indicator Lamps and Fairing Cap/Instrument Nacelle Switches

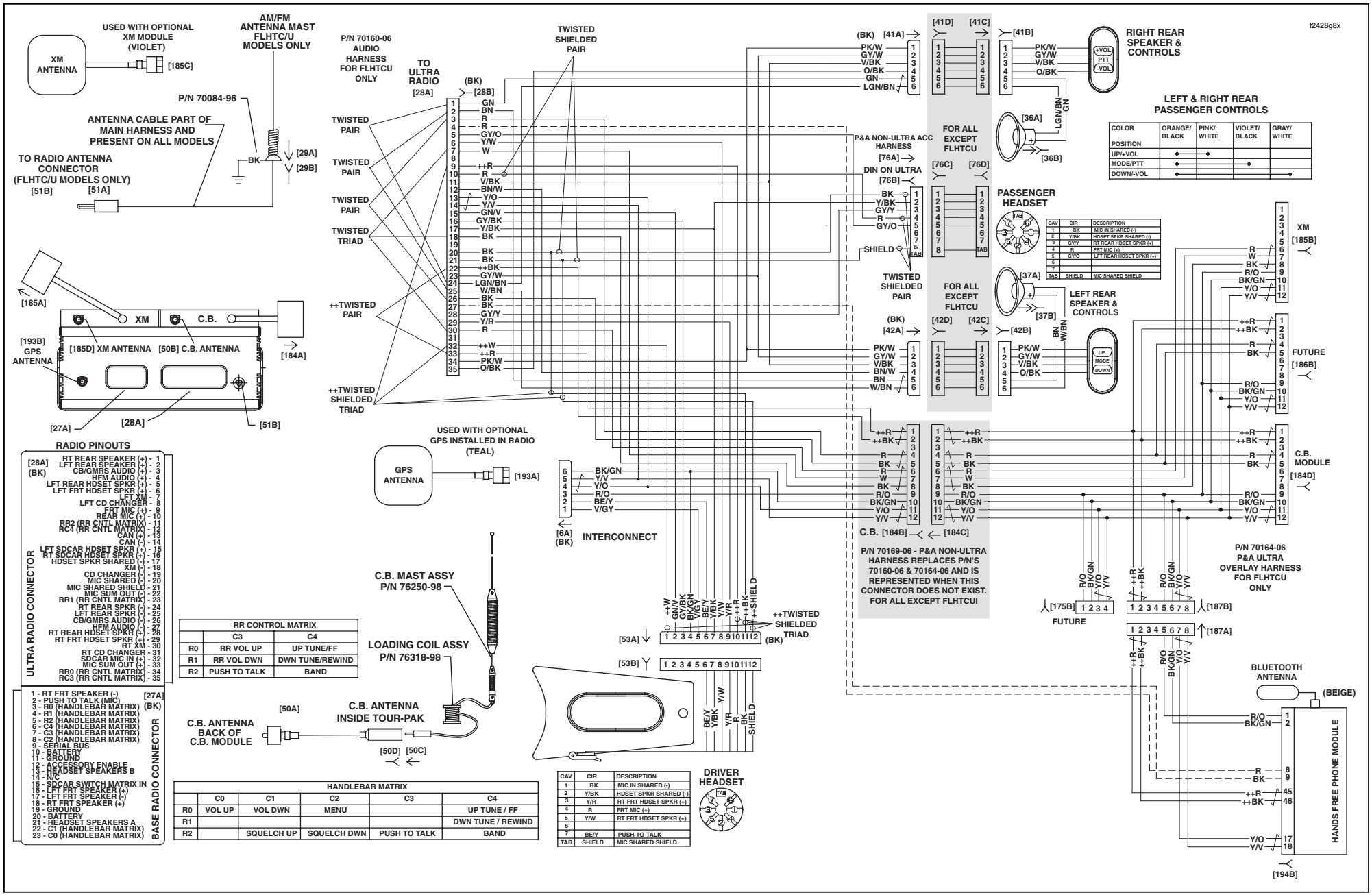

COLOR / POSITION	ORANGE/ BLACK	PINK/ WHITE	VIOLET/ BLACK	GRAY/ WHITE
UP/+VOL	●	●		
MODE/PTT	●		●	
DOWN/-VOL	●			●

CAV	CIR	DESCRIPTION
1	BK	MIC IN SHARED (-)
2	Y/BK	HDSET SPKR SHARED (-)
3	GY/Y	RT REAR HDSET SPKR (+)
4	R	FRT MIC (+)
5	GY/O	LFT REAR HDSET SPKR (+)
6		
7		
TAB	SHIELD	MIC SHARED SHIELD

RR CONTROL MATRIX		
	C3	C4
R0	RR VOL UP	UP TUNE/FF
R1	RR VOL DWN	DWN TUNE/REWIND
R2	PUSH TO TALK	BAND

HANDLEBAR MATRIX					
	C0	C1	C2	C3	C4
R0	VOL UP	VOL DWN	MENU		UP TUNE / FF
R1					DWN TUNE / REWIND
R2		SQUELCH UP	SQUELCH DWN	PUSH TO TALK	BAND

CAV	CIR	DESCRIPTION
1	BK	MIC IN SHARED (-)
2	Y/BK	HDSET SPKR SHARED (-)
3	Y/R	RT FRT HDSET SPKR (+)
4	R	FRT MIC (+)
5	Y/W	RT FRT HDSET SPKR (+)
6		
7	BE/Y	PUSH-TO-TALK
TAB	SHIELD	MIC SHARED SHIELD

2006 FLHX, FLHTC, FLHTCU and FLTR, DOMESTIC and INTERNATIONAL Models, Radio, CB/Intercom, Rear Speakers, XM, Hands Free Phone and Navigation

2006 FLHX, FLHTC, FLHTCU and FLTR DOMESTIC and INTERNATIONAL Models, Radio, CB/Intercom, Rear Speakers, XM, Hands Free Phone and Navigation

2006 FLHX, FLHTC, FLHTCU and FLTR DOMESTIC and INTERNATIONAL Models, Radio, CB/Intercom, Rear Speakers XM, Hands Free Phone and Navigation

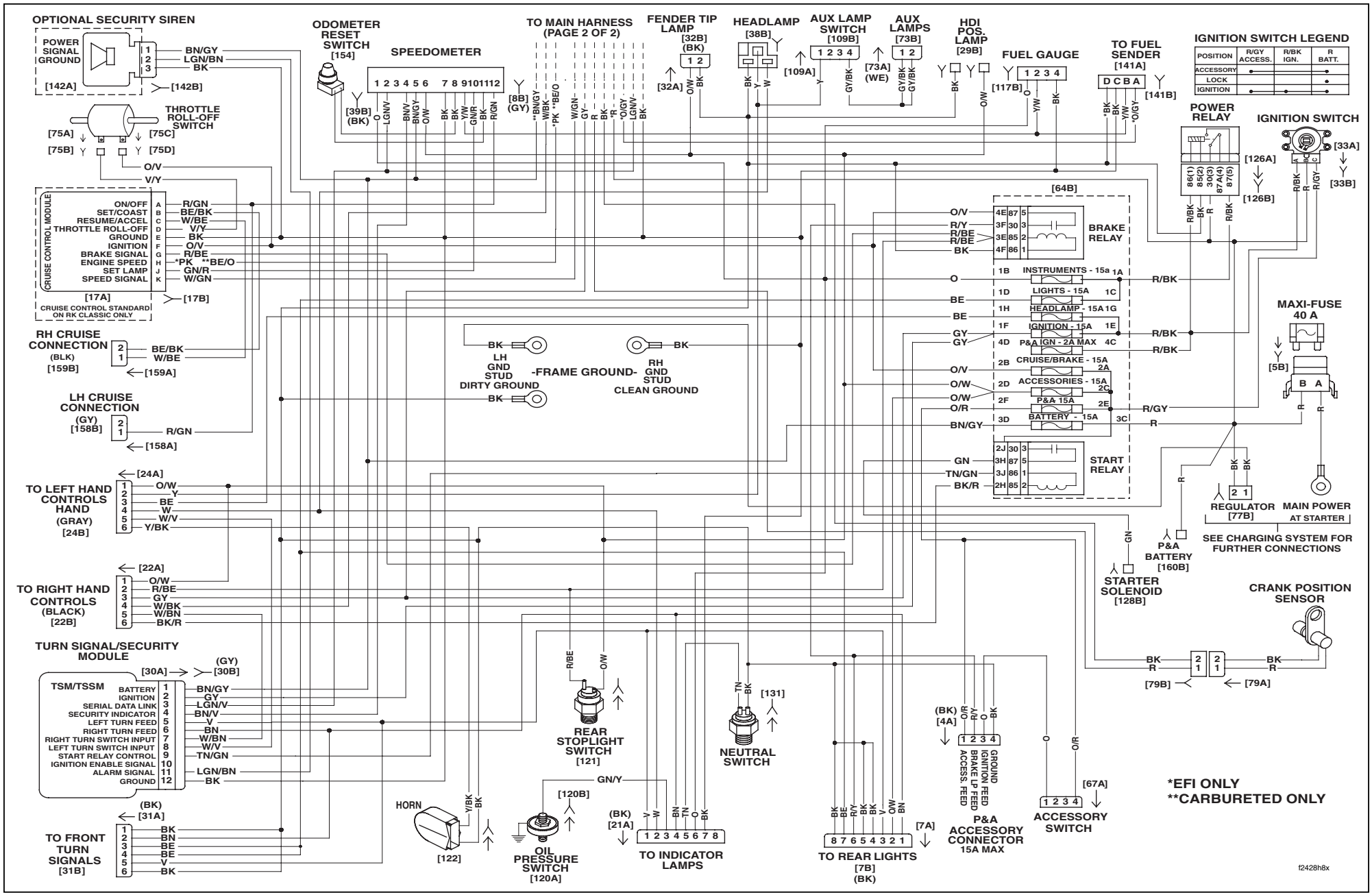

2006 FLHR, FLHRC and FLHRS, DOMESTIC and INTERNATIONAL Models, Main Harness (Page 1 of 2)

2006 FLHR, FLHRC and FLHRS, DOMESTIC and INTERNATIONAL Models, Main Harness (Page 1 of 2)

2006 FLHR, FLHRC and FLHRS, DOMESTIC and INTERNATIONAL Models, Main Harness (Page 1 of 2)

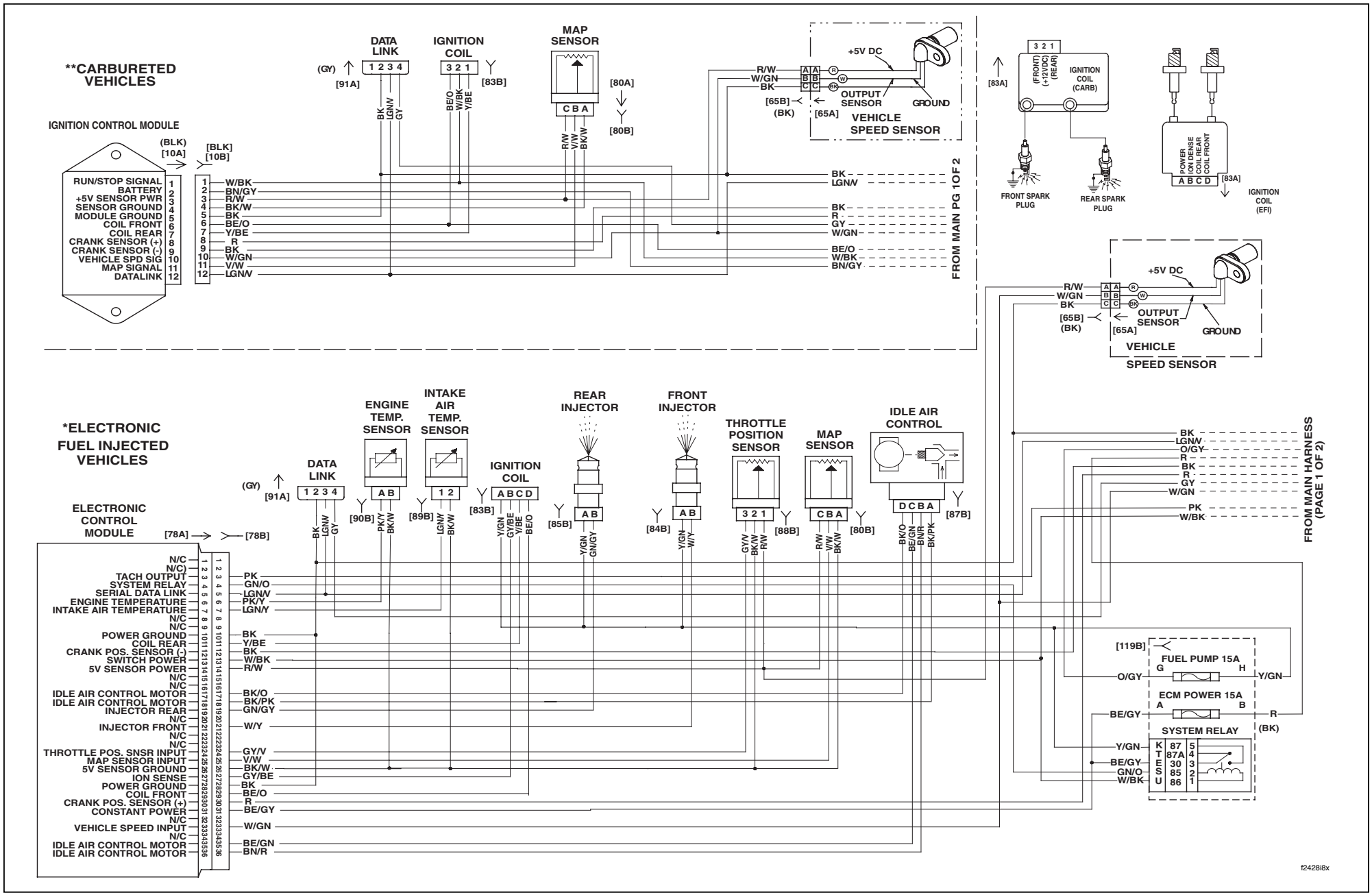

2006 FLHR, FLHRC and FLHRS, DOMESTIC and INTERNATIONAL Models, Main Harness (Page 2 of 2)

2006 FLHR, FLHRC and FLHRS, DOMESTIC and INTERNATIONAL Models, Main Harness (Page 2 of 2)

2006 FLHR, FLHRC and FLHRS, DOMESTIC and INTERNATIONAL Models, Main Harness (Page 2 of 2)

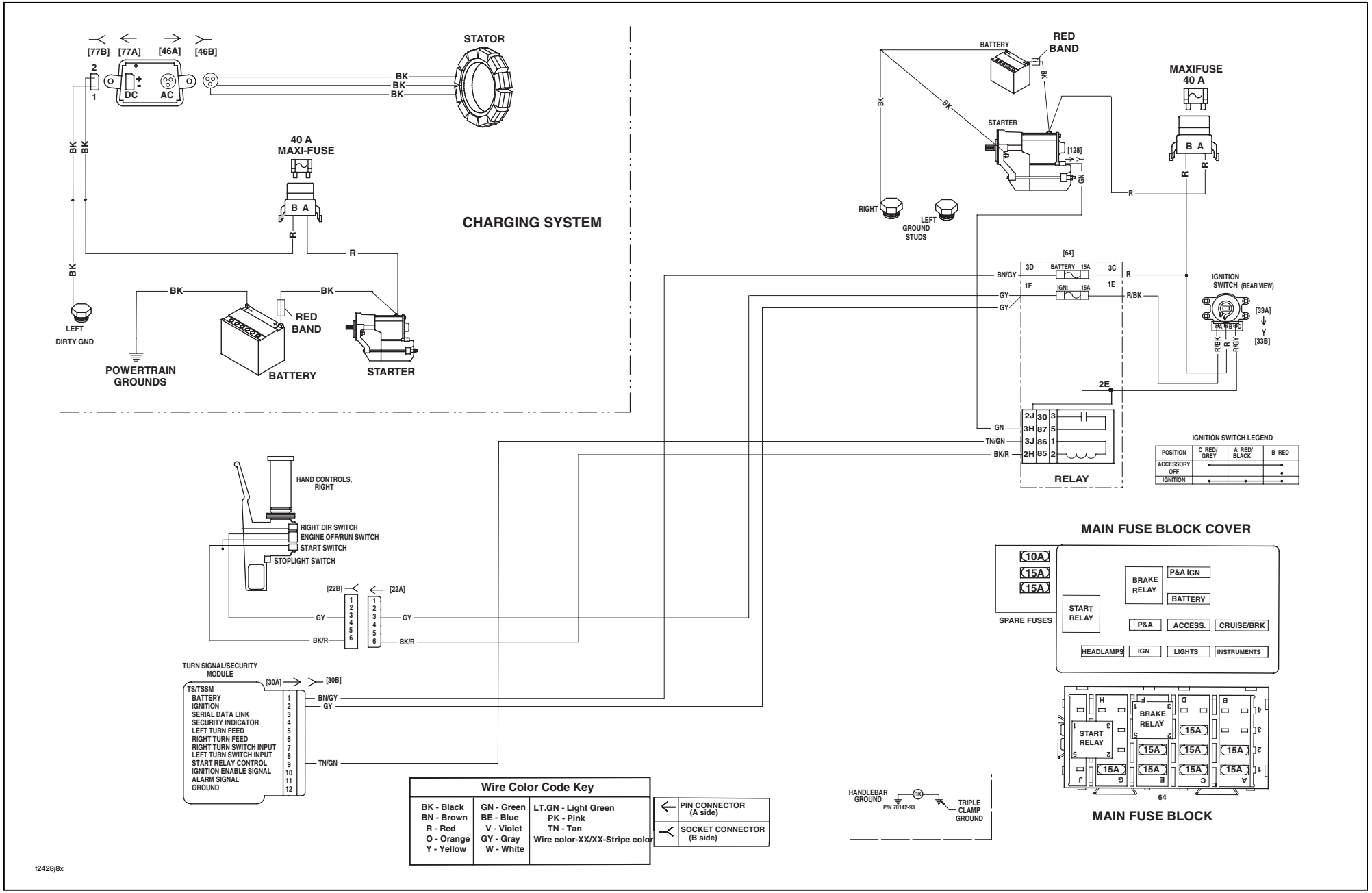

2006 FLHR, FLHRC and FLHRS, DOMESTIC and INTERNATIONAL Models, Starting and Charging

2006 FLHR, FLHRC and FLHRS, DOMESTIC and INTERNATIONAL Models, Starting and Charging

2006 FLHR, FLHRC and FLHRS, DOMESTIC and INTERNATIONAL Models, Starting and Charging

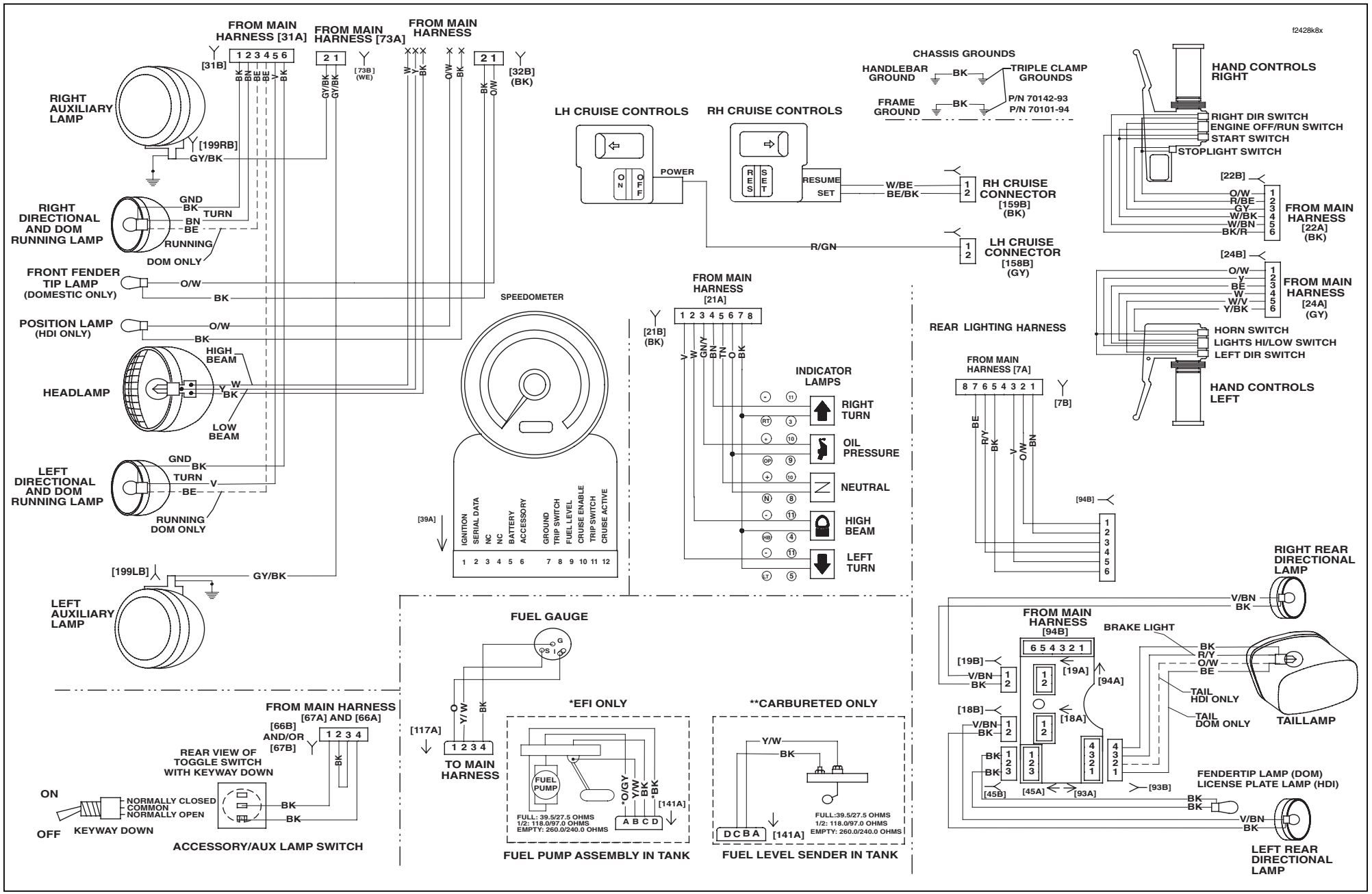

2006 FLHR, FLHRC and FLHRS, DOMESTIC and INTERNATIONAL Models,

Handlebar Switches, Speedometer, Indicator Lamps, Tail Lamp, Auxiliary Lamps, Directional Lamps, Fender Tip Lamps and Aux Lamp/Accessory Switches

2006 FLHR, FLHRC and FLHRS, DOMESTIC and INTERNATIONAL Models, Handlebar Switches, Speedometer, Indicator Lamps, Tail Lamp, Auxiliary Lamps, Directional Lamps, Fender Tip Lamps and Aux Lamp/Accessory Switches

2006 FLHR, FLHRC and FLHRS, DOMESTIC and INTERNATIONAL Models, Handlebar Switches, Speedometer, Indicator Lamps, Tail Lamp, Auxiliary Lamps, Directional Lamps, Fender Tip Lamps and Aux Lamp/Accessory Switches

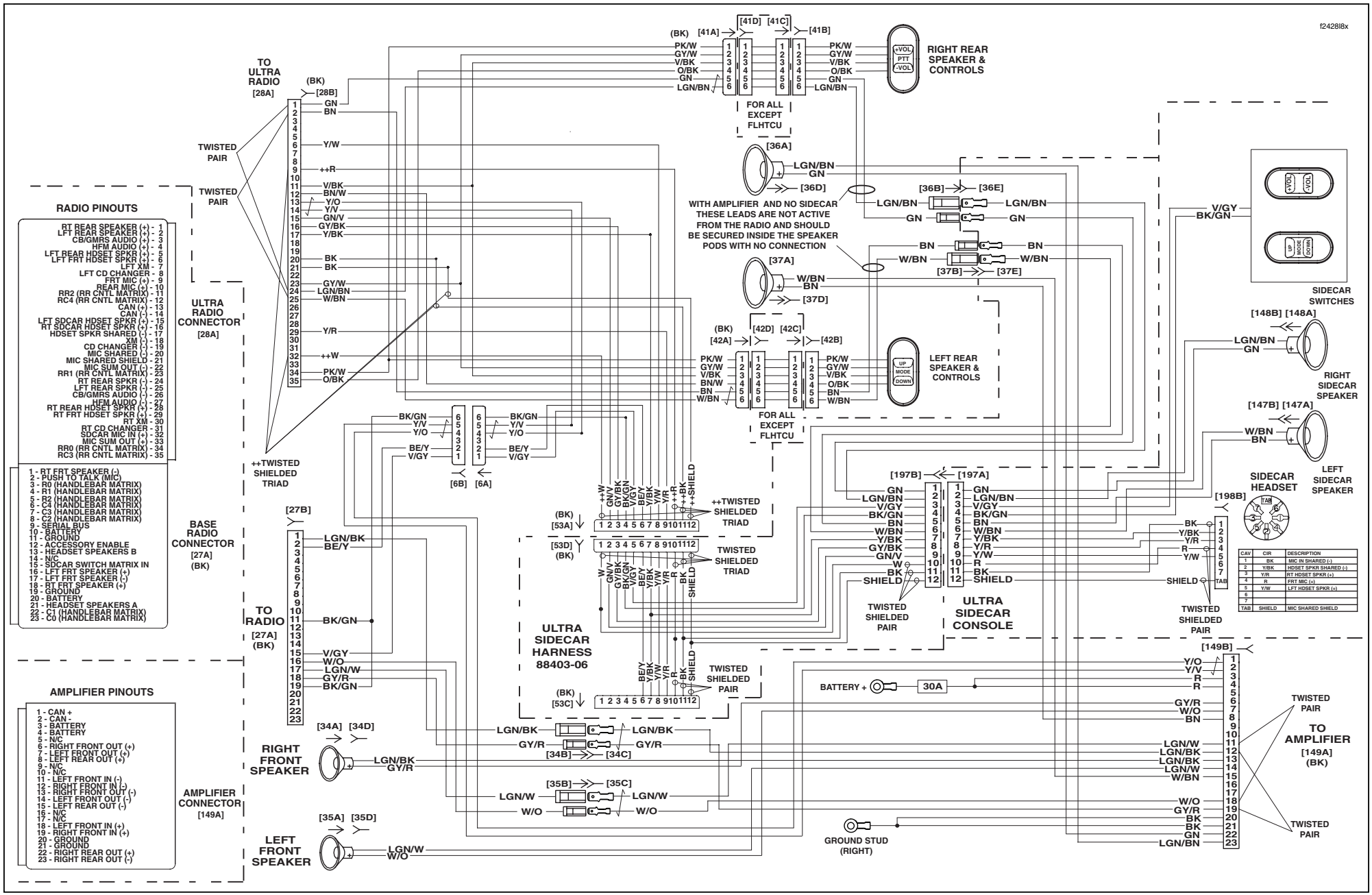

2006 TLE, TLE-U SIDECARS, DOMESTIC AND INTERNATIONAL Models, Amplifier, Sidecar Speakers and Switches

Table Of Contents

SUBJECT **PAGE NO.**

1.1 Starter Troubleshooting 1-1
1.2 Starting System Diagnosis 1-3
1.3 Starter Activation Circuits 1-7
1.4 Diagnostics/Troubleshooting 1-8
1.5 Starter System Testing 1-9
1.6 Testing Assembled Starter 1-11
1.7 Charging System 1-13
1.8 Battery Testing 1-20

STARTER TROUBLESHOOTING 1.1

Table 1-1. Starter Does Not Run or Runs At Very Low Speeds

SOURCE OF PROBLEM	PROBABLE CAUSE	SOLUTION
Battery	Voltage drop due to discharged battery.	Charge battery.
	Short-circuited or open between electrodes.	Replace battery.
	Poor contact condition of battery terminal(s).	Clean and retighten.
Wiring	Poor or no connection at either battery positive or negative cable, at either end.	Repair or replace cable(s).
	Cracked or corroded battery cable ends.	Clean, tighten or replace cable(s) as needed.
	Open wire(s) or poor connection at handlebar switch or starter relay, especially relay ground wire.	Tighten connections or repair or replace wire(s).
Handlebar start switch	Poor switch contacts or open switch.	Replace switch.
Starter relay	Open coil winding.	Replace relay.
	Poor or no continuity at relay points.	Replace relay.
	TSM/TSSM has disabled starter relay.	Check for open on wire to TSM/TSSM. Correct lack of ground.
Solenoid	Poor contact condition caused by burnt contact.	Polish contact surface or replace solenoid assembly.
	Pull-in winding open or short-circuited.	Repair or replace solenoid assembly.
	Hold-in winding open or short-circuited.	Repair or replace solenoid assembly.
Starting motor	Brushes worn below specification.	Check brush spring tension. Replace field frame and holder.
	Commutator burnt.	Re-face or replace.
	Commutator high mica.	Correct by undercutting.
	Field winding grounded.	Replace.
	Armature winding grounded or short-circuited.	Replace.
	Reduction gears damaged.	Replace.
	Insufficient brush spring tension.	Replace.
	Disconnected lead wire between solenoid and field windings.	Repair or replace lead wire.
	Ball bearing sticks.	Replace bearing.

Table 1-2. Pinion Does Not Engage With Ring Gear While Starter is Cranked or Engine Cannot Be Cranked

SOURCE OF PROBLEM	PROBABLE CAUSE	SOLUTION
Battery	Voltage drop due to discharged battery.	Charge battery.
	Short-circuited or open between electrodes.	Replace battery.
	Poor contact condition of battery terminal(s).	Clean and retighten.
Overrunning clutch.	Overrunning clutch malfunction (rollers or compression spring).	Replace overrunning clutch.
	Pinion teeth worn out.	Replace pinion.
	Pinion does not run in overrunning direction.	Replace overrunning clutch.
	Poor sliding condition of spline teeth.	Remove foreign materials, dirt or replace overrunning clutch or pinion shaft.
	Reduction gears damaged.	Replace overrunning clutch and idler gear.
Jackshaft assembly	Improper jackshaft parts assembly.	Disassemble and assemble parts properly.
Gear teeth on clutch shell	Excessively worn teeth.	Replace clutch shell.

Table 1-3. Starter Does Not Stop Running

SOURCE OF PROBLEM	PROBABLE CAUSE	SOLUTION
Starting switch or starter relay.	Unopened contacts.	Replace starting switch or starter relay.
	Poor return caused by sticky switch or relay contacts.	Replace starting switch or starter relay.
Gear teeth on clutch shell	Excessively worn teeth.	Replace clutch shell.
Solenoid.	Return spring worn.	Replace spring.
	Coil layer shorted.	Replace solenoid.
	Contact plate melted and stuck.	Replace solenoid.

STARTING SYSTEM DIAGNOSIS 1.2

DIAGNOSTICS

Diagnostic Notes

The reference numbers below correlate with the circled numbers on the starter system flow charts.

1. See Section 1.4 DIAGNOSTICS/TROUBLESHOOTING, VOLTAGE DROPS.
2. Remove starter motor. Connect jumper wires as described under Section 1.6 TESTING ASSEMBLED STARTER, FREE RUNNING CURRENT DRAW TEST.
3. Remove TSSM and use HARNESS CONNECTOR TEST KIT (Part No. HD-41404A) to short Pin 9 on connector [30] to ground. If starter motor cranks, replace TSSM.
4. See Section 1.5 STARTER SYSTEM TESTING, STARTER CURRENT DRAW TEST.
5. See Section 1.6 TESTING ASSEMBLED STARTER, FREE RUNNING CURRENT DRAW TEST.
6. Connect BREAKOUT BOX (Part No. HD-42682) to TSM/TSSM. See BREAKOUT BOX, TSM/TSSM.
7. Connect BREAKOUT BOX (Part No. HD-42682) (black) and 6-pin Harness Adapters (Part no. HD-42962) between wiring harness connector [22A] and Right Hand Control harness connector [22B] (adapters not used on FLHR/C/S models).

Job/Time Code Values

Dealership technicians filing warranty claims should use the job/time code values printed in **bold text** underneath the appropriate repair.

Starter Testing 1

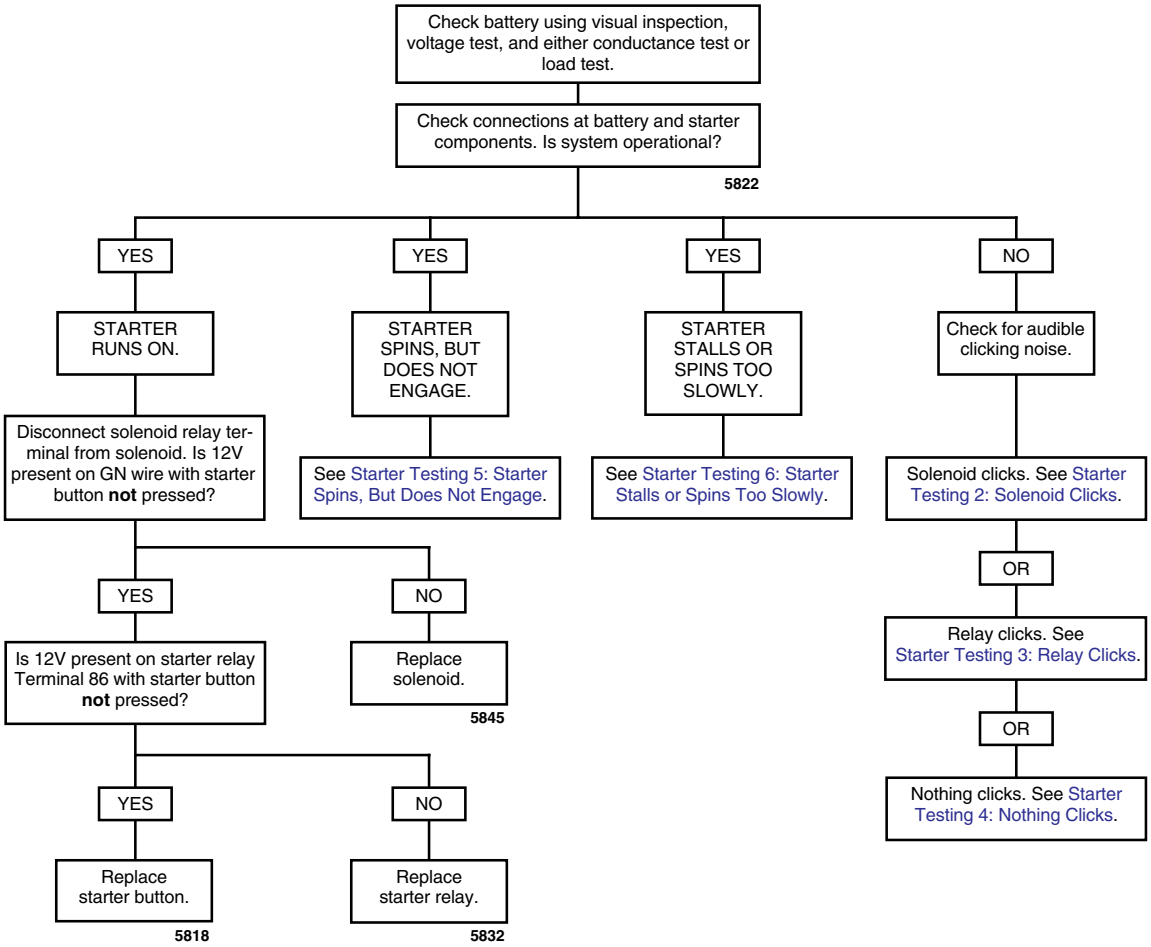

Starter Testing 2: Solenoid Clicks

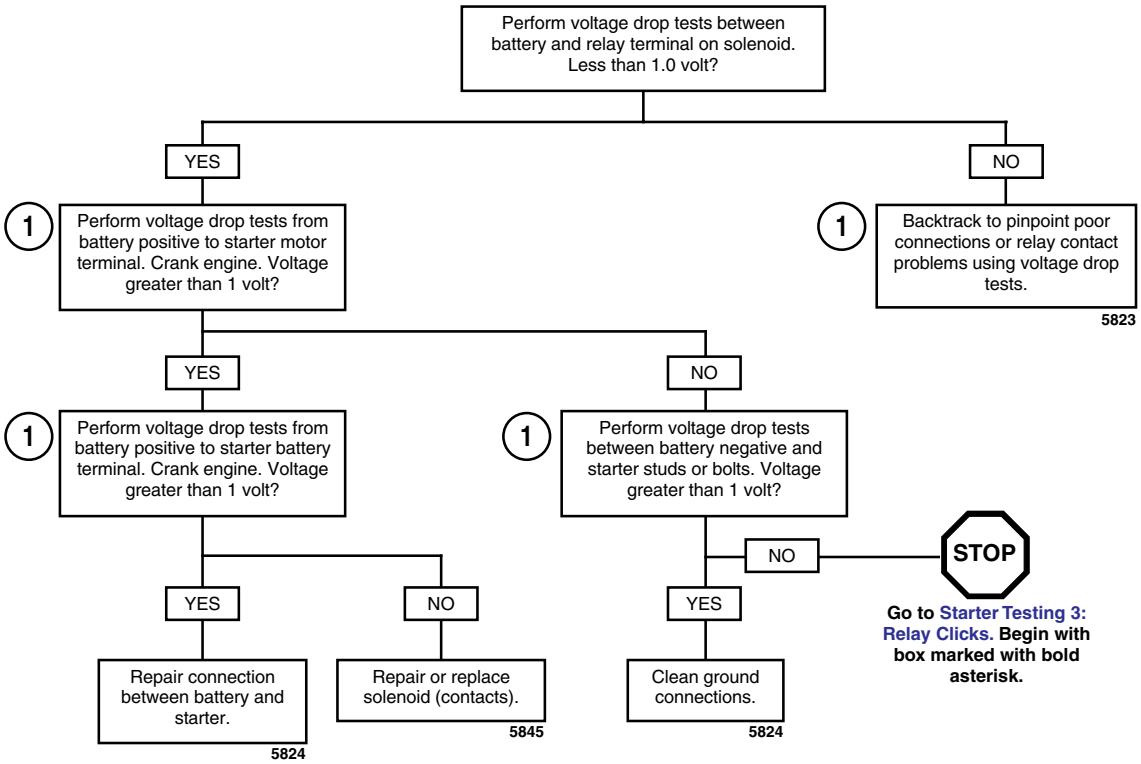

Starter Testing 3: Relay Clicks

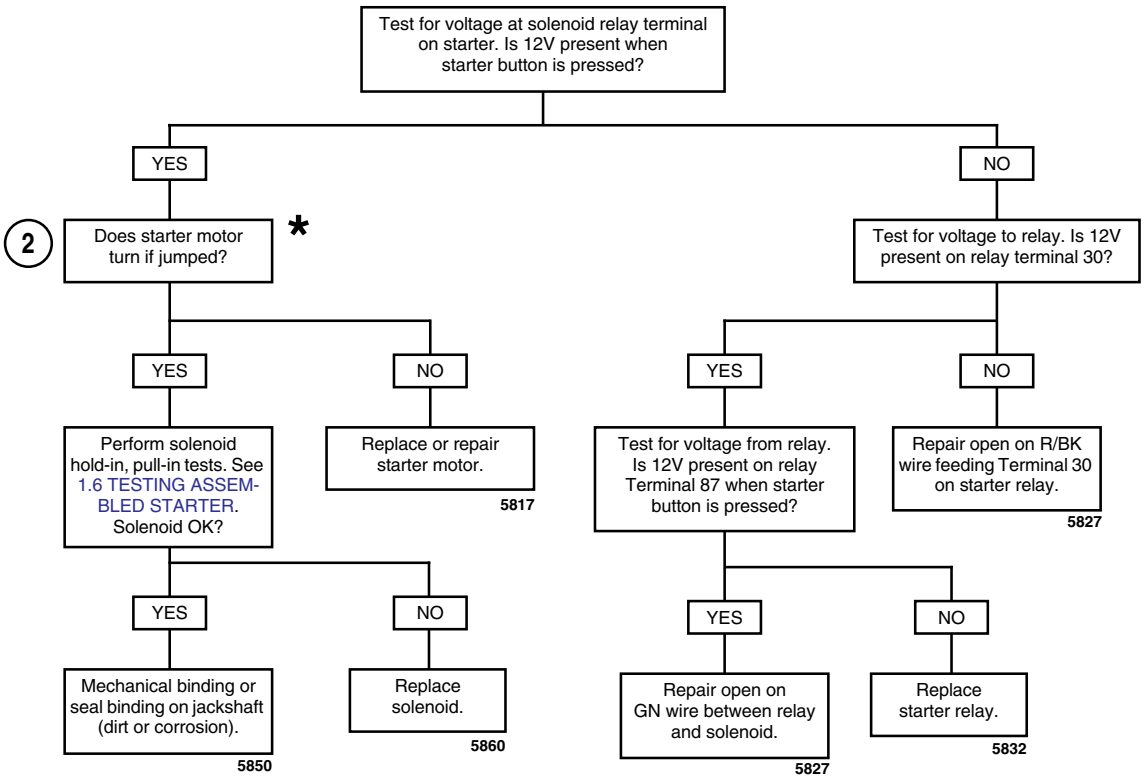

HOME

Starter Testing 4: Nothing Clicks

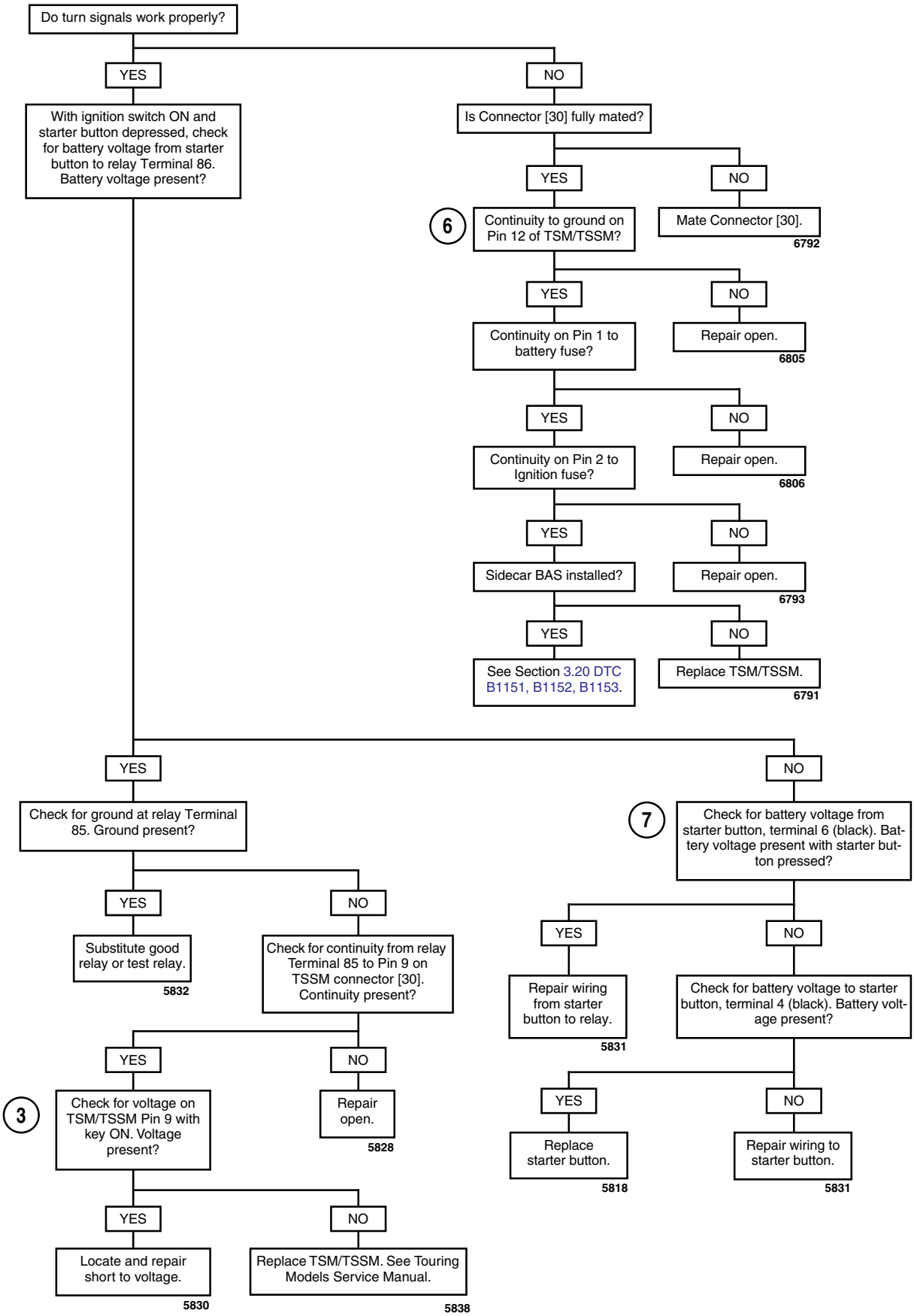

Starter Testing 5: Starter Spins, But Does Not Engage

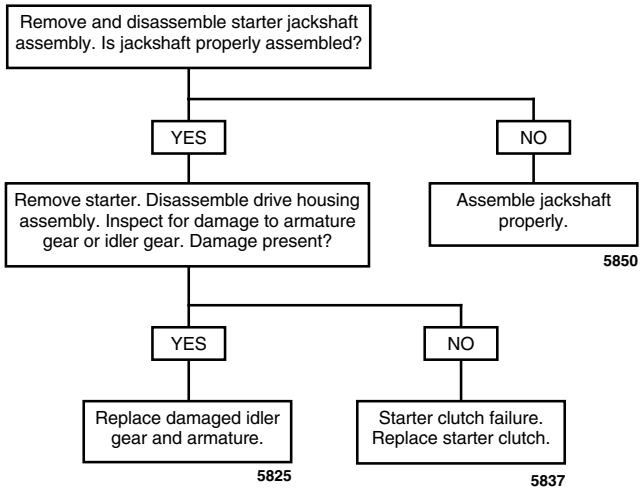

Starter Testing 6: Starter Stalls or Spins Too Slowly

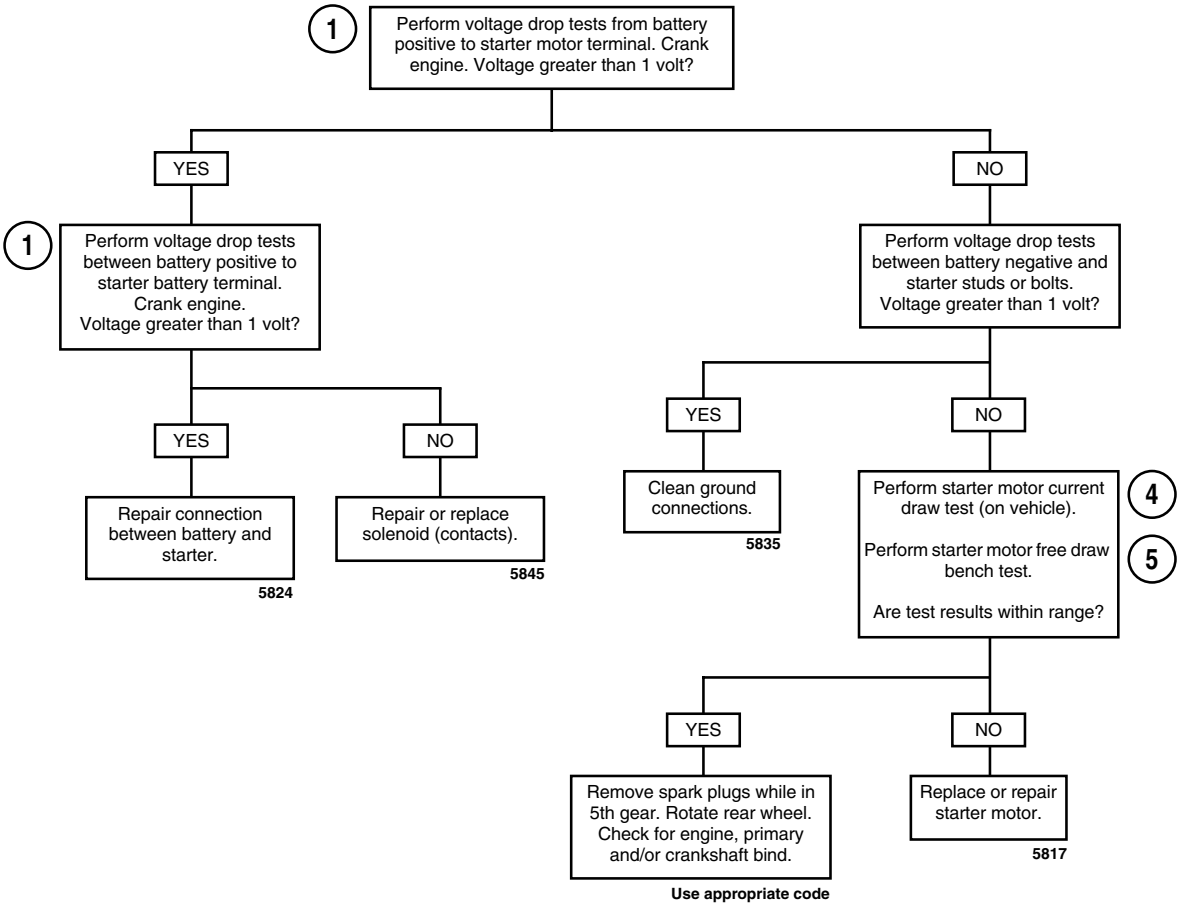

STARTER ACTIVATION CIRCUITS 1.3

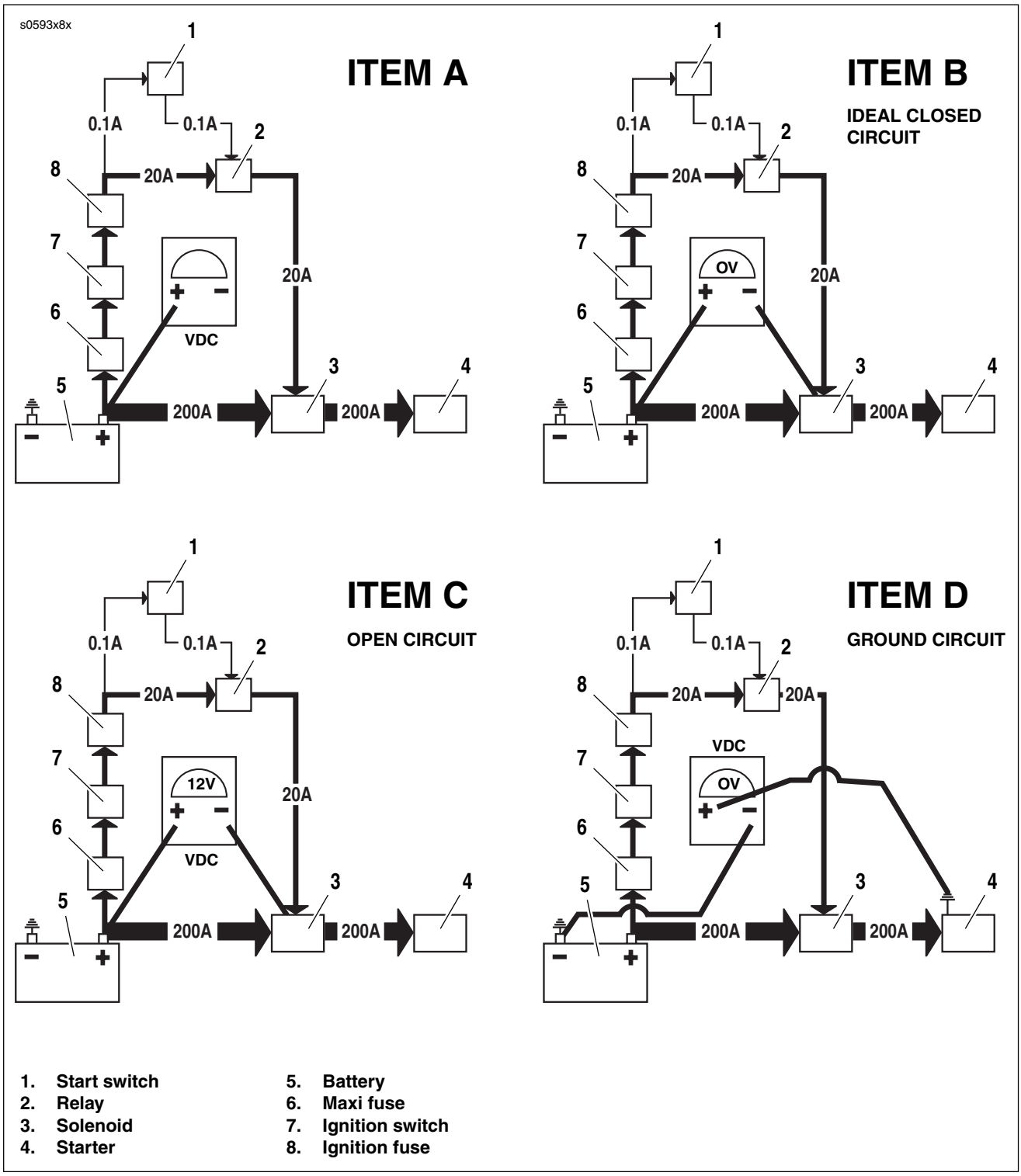

Figure 1-1. Typical Circuity. Refer to wiring diagrams for more information.

GENERAL

The troubleshooting tables beginning on page 1-1 contain detailed procedures to solve and correct problems. Follow the 1.2 STARTING SYSTEM DIAGNOSIS diagram to diagnose starting system problems. The VOLTAGE DROPS procedure below will help you to locate poor connections or components with excessive voltage drops.

VOLTAGE DROPS

Check the integrity of all wiring, switches, circuit breakers and connectors between the source and destination.

The voltage drop test measures the difference in potential or the actual voltage dropped between the source and destination.

1. See ITEM A in Figure 1-1. Attach your red meter lead to the most positive part of the circuit, which in this case would be the positive post of the battery.
2. See ITEM B in Figure 1-1. Attach the black meter lead to the final destination or component in the circuit (solenoid terminal from relay).
3. Activate the starter and observe the meter reading. The meter will read the voltage dropped or the difference in potential between the source and destination.
4. An ideal circuit's voltage drop would be 0 volts or no voltage dropped, meaning no difference in potential.
5. See ITEM C in Figure 1-1. An open circuit should read 12 volts, displaying all the voltage dropped, and the entire difference in potential displayed on the meter.

NOTE

Open circuits on the ground side will read zero.

6. Typically, a good circuit will drop less than 1 volt.
7. If the voltage drop is greater, back track through the connections until the source of the potential difference is found. The benefit of doing it this way is speed.
   a. Your readings aren't as sensitive to real battery voltage.
   b. Your readings show the actual voltage dropped, not just the presence of voltage.
   c. This tests the system as it is actually being used. It is more accurate and will display hard to find poor connections.
   d. This approach can be used on lighting circuits, ignition circuits, etc. Start from most positive and go to most negative (the destination or component).
8. See ITEM D in Figure 1-1. The negative or ground circuit can be checked as well.
   a. Place the negative lead on the most negative part of the circuit (or the negative battery post). Remember, there is nothing more negative than the negative post of the battery.
   b. Place the positive lead to the ground you wish to check.
   c. Activate the circuit. This will allow you to read the potential difference or voltage dropped on the negative or ground circuit. This is very effective for identifying poor grounds due to powdered paint. Even the slightest connection may cause an ohmmeter to give a good reading. However, when sufficient current is passed through, the resistance caused by the powdered paint will cause a voltage drop, or potential difference in the ground circuit.

STARTER SYSTEM TESTING 1.5

GENERAL

Before removing the starter, perform one of the Starter Relay Tests which follow. If the relay is known to be good, perform the STARTER CURRENT DRAW TEST in this section.

STARTER RELAY TEST 1

1. Remove relay. For FLHR/C/S models, see upper frame of Figure 1-2. For all other models, see upper frame of Figure 1-3.

2. Substitute a **new** relay known to be good and verify operation. For convenience, use the brake light relay as a temporary substitute on FLHR/C/S models, or use the ignition keyswitch relay as a temporary substitute on FLTR and FLHT/C/U models.

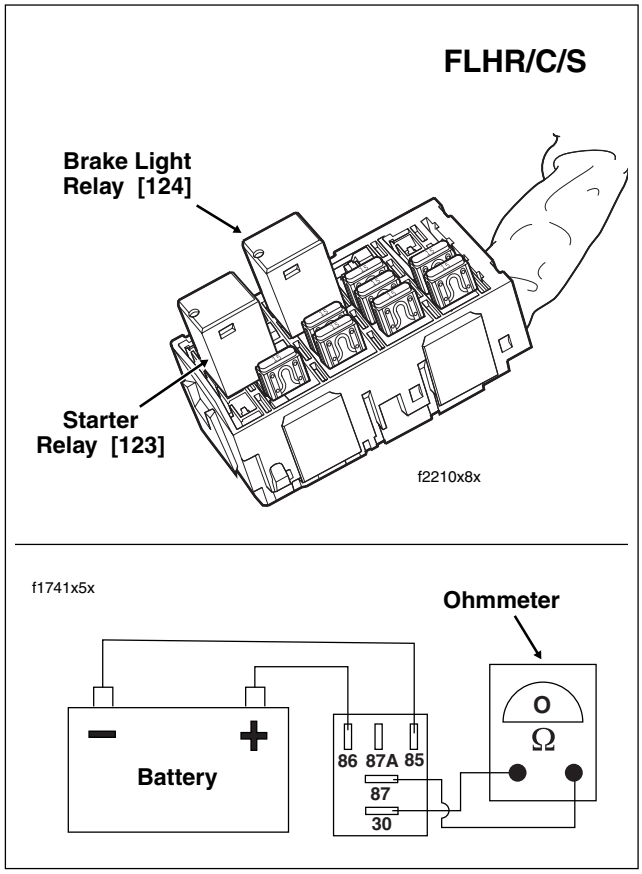

Figure 1-2. Locate Relay Under Left Side Cover

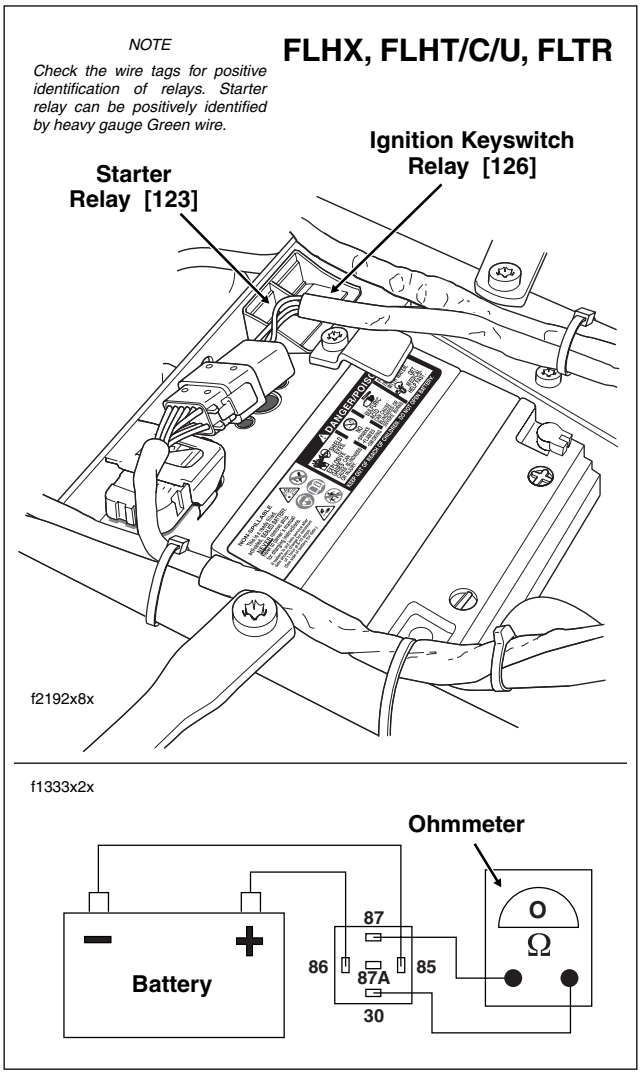

Figure 1-3. Locate Relay Under Seat

STARTER RELAY TEST 2

The starter relay can be tested using the vehicle's 12 volt battery and a continuity tester or ohmmeter (HD-35500B). Proceed as follows:

1. Remove relay. For FLHR/C/S models, see upper frame of Figure 1-2. For all other models, see upper frame of Figure 1-3.

2. To energize the relay, connect the battery leads to terminals 86 and 85. For FLHR/C/S models, see lower frame of Figure 1-2. For all other models, see lower frame of Figure 1-3.

3. Check for continuity between terminals 30 and 87.

4. If the tester lamp illuminates or there is a zero ohm reading on the ohmmeter, then continuity is present and the relay is good. Replace the relay if continuity is not present.

CAUTION

Relay terminal "85" must be connected to the negative battery terminal to avoid damaging the diode connected across the relay winding.

STARTER CURRENT DRAW TEST

Check the starter current draw with an inductive amp probe (HD-39617) or induction ammeter. Before proceeding, be sure that the battery is fully charged and that the engine temperature is stable and at room temperature.

1. Verify that the transmission is in neutral.
2. Disconnect the spark plug wires from the spark plug terminals.
3. Clamp induction ammeter over the positive battery cable. See Figure 1-4.
4. With the ignition ON, turn the engine over by pressing start switch while taking a reading on the ammeter. Disregard initial high current reading which is normal during time the engine is first turned over.
   a. Typical starter current draw will range between 160 and 200 amperes.
   b. If the starter current draw exceeds 250 amperes, the problem may be in the starter or starter drive.
5. Remove the starter for testing, if necessary. See the Touring Models Service Manual, STARTER, REMOVAL.
6. See Section 1.6 TESTING ASSEMBLED STARTER, FREE RUNNING CURRENT DRAW TEST.

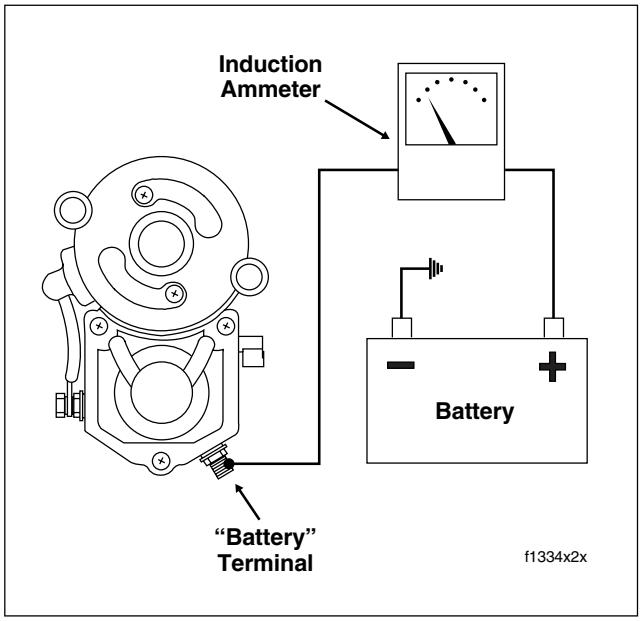

Figure 1-4. Starter Current Draw Test

TESTING ASSEMBLED STARTER 1.6

STARTER SOLENOID

WARNING

Wear eye protection during this series of tests. These tests may produce flying sparks which could result in death or serious injury.

NOTE

Do not disassemble solenoid. Before testing, disconnect field wire from motor terminal as shown in Figure 1-5.

CAUTION

Each test should be performed for only 3-5 seconds to prevent damage to solenoid.

NOTE

The solenoid Pull-in, Hold-in, and Return tests must be performed together in one continuous operation. Conduct all three tests one after the other in the sequence listed.

SOLENOID PULL-IN TEST

1. See Figure 1-5. Using a 12 volt battery, connect three separate test leads as follows:
   a. Solenoid housing to negative battery post.
   b. Solenoid motor terminal to negative battery post.
   c. Solenoid relay terminal to positive battery post.
2. Observe starter shaft.
   a. If starter shaft extends strongly, solenoid is working properly.
   b. If starter shaft does not extend strongly, replace the solenoid.

SOLENOID HOLD-IN TEST

1. See Figure 1-6. With test leads still connected in the manner specified in the previous SOLENOID PULL-IN TEST, disconnect solenoid motor terminal/battery negative test lead (B) at negative battery post only; reconnect loose end of this test lead to positive battery post instead.

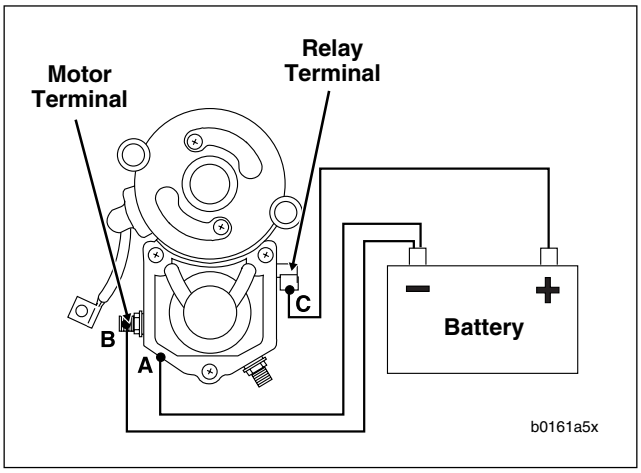

Figure 1-5. Test 1: Pull-In Test

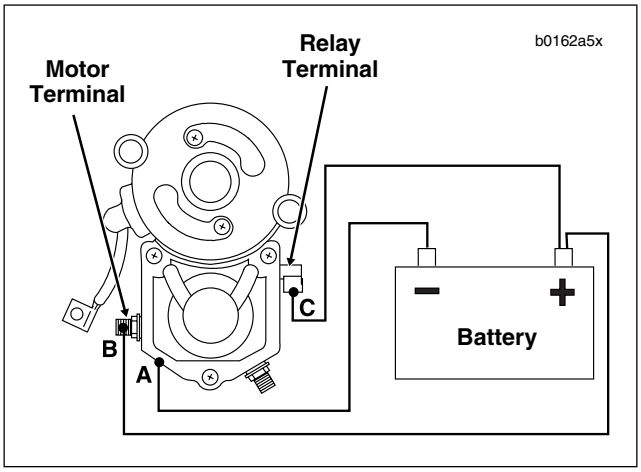

Figure 1-6. Test 2: Hold-In Test

2. Observe starter shaft.
   a. If starter shaft remains extended, solenoid is working properly.
   b. If starter shaft retracts, replace the solenoid.
   c. If starter shaft does not retract, replace the solenoid.

SOLENOID RETURN TEST

1. See Figure 1-7. With test leads still connected in the manner specified at the end of the previous SOLENOID HOLD-IN TEST, disconnect solenoid relay terminal/positive battery post test lead (C) at either end.
2. Observe starter pinion.
   a. If starter shaft retracts, solenoid is working properly.
   b. If starter shaft does not retract, replace the solenoid.

FREE RUNNING CURRENT DRAW TEST

1. Place starter in vise, using a clean shop towel to prevent scratches or other damage.
2. Connect a heavy jumper cable (6 gauge minimum) to starter mounting flange as shown in Figure 1-8.
3. Connect other end to the negative (-) terminal of a fully charged battery.
4. Connect a heavy jumper cable (6 gauge minimum) to the positive (+) terminal of the battery.
5. Attach an inductive ammeter to positive cable and connect the other end of the positive cable to the “Battery” terminal of the starter solenoid.
6. Use a smaller jumper cable (14 gauge) and connect to the positive (+) terminal of the battery.
7. Connect other end of small jumper cable to the solenoid “Relay” terminal.
8. Check ammeter reading. Ammeter should show 90 amps maximum. If reading is higher, disassemble starter for inspection.

NOTE

If starter current draw on vehicle was over 200 amps and the starter FREE RUNNING CURRENT DRAW TEST was within specification, there may be a problem with engine, primary drive or starter jackshaft.

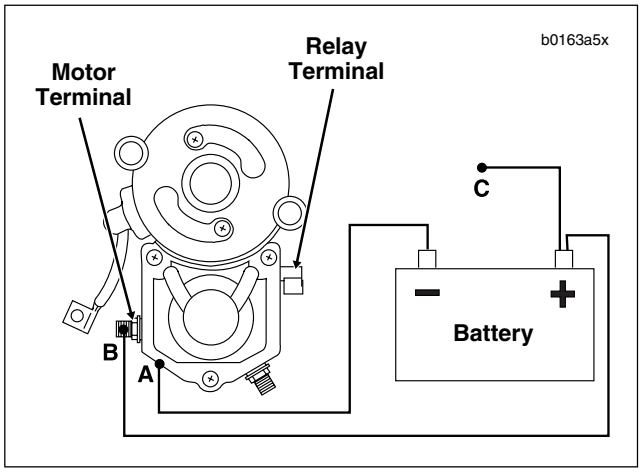

Figure 1-7. Test 3: Return Test

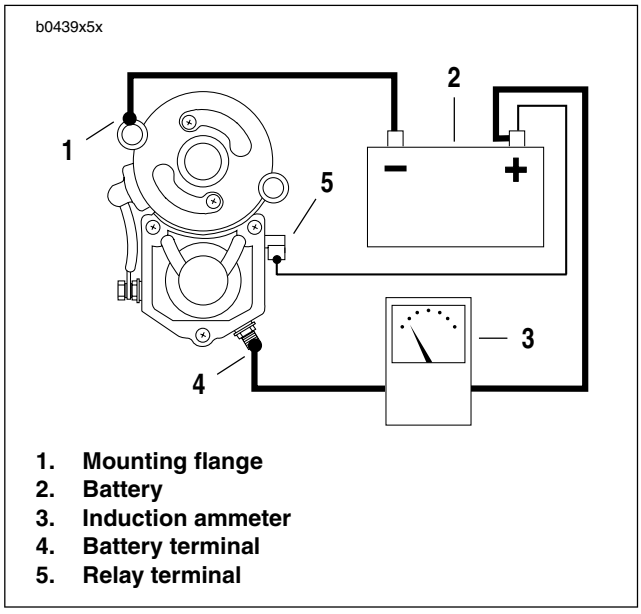

1. **Mounting flange**
2. **Battery**
3. **Induction ammeter**
4. **Battery terminal**
5. **Relay terminal**

Figure 1-8. Free Running Current Draw Test

CHARGING SYSTEM 1.7

GENERAL

The charging system consists of the alternator and voltage regulator. Charging system circuits are shown in Figure 1-9.

Alternator

The alternator consists of two main components:

- the rotor mounted on the engine sprocket shaft
- the stator bolted to the engine crankcase.

Voltage Regulator

The voltage regulator is a series regulator with a circuit that combines the functions of rectifying and regulating. See Figure 1-10.

TROUBLESHOOTING

When the charging system fails to charge or does not charge at a satisfactory rate, it is recommended that the following checks be made.

Battery

Check for a weak or dead battery. See Section 1.8 BATTERY TESTING for battery testing procedures. Battery must be fully charged in order to perform a load test, or starting or charging tests. However, a partially discharged battery may be tested using the BATTERY TEST function of the ADVANCED BATTERY CONDUCTANCE AND ELECTRICAL SYSTEM ANALYZER (HD-48053).

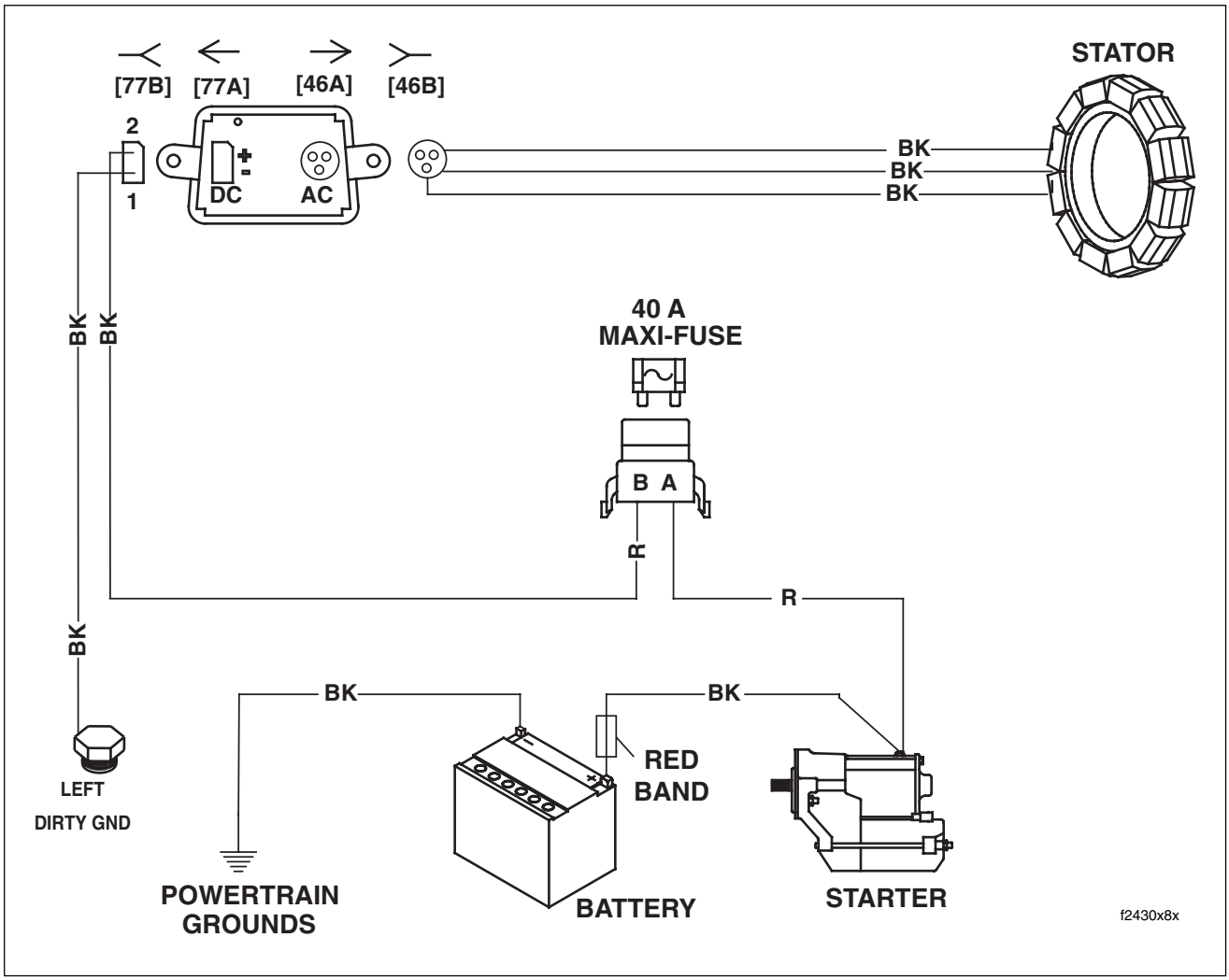

Figure 1-9. Charging System Circuit (Typical)

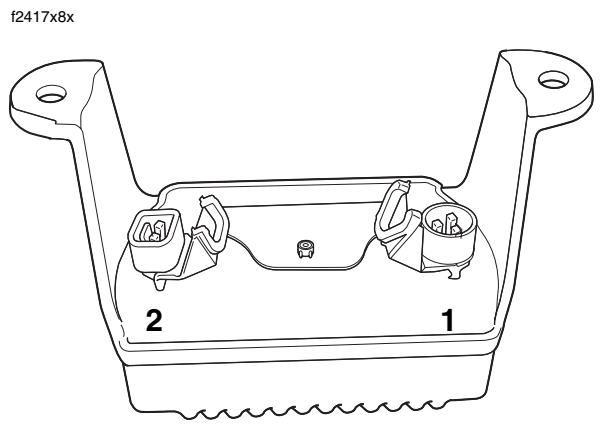

1. **Stator (AC) Connector [46A]**
2. **Voltage Regulator (DC) Connector [77A]**

Figure 1-10. Voltage Regulator (Bottom View) AC and DC Connectors

Wiring

See charging system circuit in Figure 1-9. Check for corroded or loose connections.

Voltage Regulator Inspection

The regulator must have a clean, tight ground connection for proper operation. Using an ohmmeter with one lead on the battery ground cable and the other on the regulator ground terminal, check with the voltage regulator DC connector disengaged. The electrical continuity test is performed with the ohmmeter set to the RX1 scale. A resistance value below 1 ohm should be observed.

.

Job/Time Code Values

Dealership technicians filing warranty claims should use the job/time code values printed in **bold text** underneath the appropriate repair.

Test 1.7 (Part 1 of 2)

SYMPTOM: BATTERY BECOMES DISCHARGED

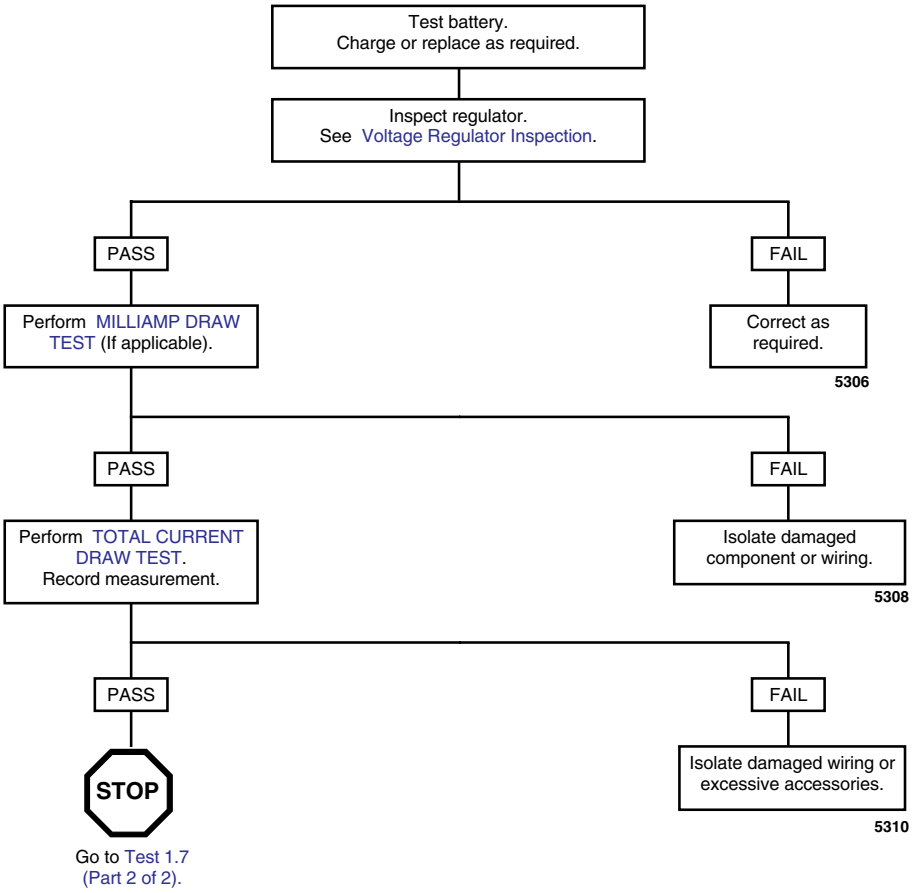

NOTE

Whenever a charging system component fails a test and is replaced, retest the system to be sure the problem has been corrected.

Test 1.7 (Part 2 of 2)

SYMPTOM: BATTERY BECOMES DISCHARGED

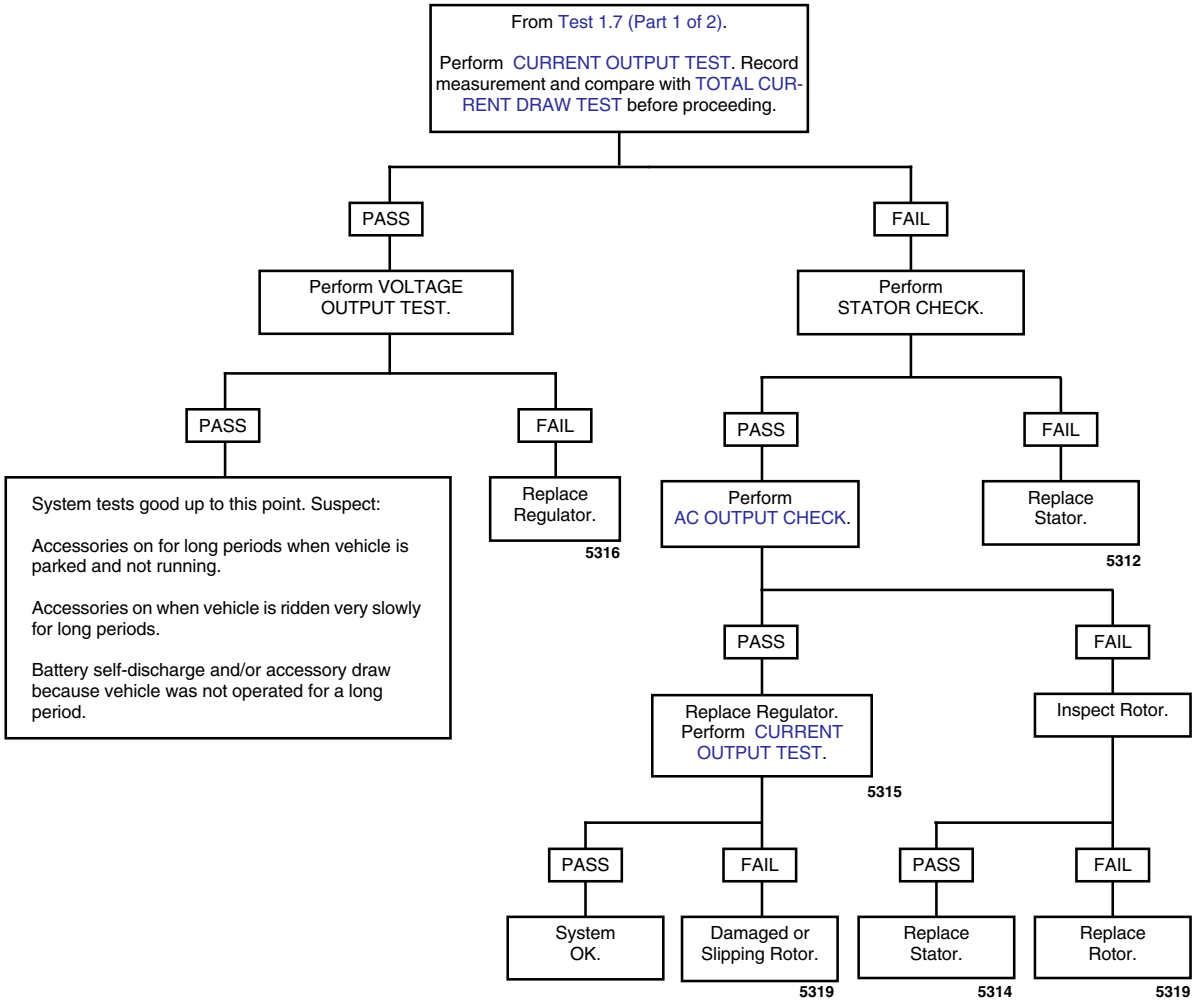

NOTE

Whenever a charging system component fails a test and is replaced, retest the system to be sure the problem has been corrected.

TESTING

MILLIAMP DRAW TEST

NOTES

- *Be sure accessories are not wired so they stay on at all times. Check for this by connecting ammeter between negative battery terminal and battery.*
- *TSM/TSSM will continue to draw 16-25 mA for 30 seconds after ignition is turned OFF. Any disruption and reconnection of battery power, such as disconnecting the battery to place a meter in series, will cause TSM/TSSM to draw 16-25 mA for 30 seconds.*

See Figure 1-11. Remove maxi-fuse. Connect ammeter using HARNESS CONNECTOR TEST KIT (HD-41404A) red pin probes and patch cords. With this arrangement, you will also pick up any regulator drain.

The limits for these drains are listed in Table 1-4.

- Any accessories must be considered and checked for excessive drain.
- This condition could drain battery completely if vehicle is parked for a long time.

NOTES

- *A battery with surface discharge condition could cause a static drain. Correct by cleaning battery case.*
- *Any reading that exceeds the "Average Meter Reading" values below indicates excessive current draw. Check for bad radio, voltage regulator or short in the interconnecting wiring. Alarms and customer accessories are also prime suspects. Isolate problem by disconnecting suspect components and observe change in meter reading.*

Table 1-4. Milliampere Draw Test (Ignition Switch OFF)

COMPONENT	DRAW IN MILLIAMPERES Average Meter Reading
ECM (EFI models)	1.0
Speedometer	0.5
Tachometer	0.5
TSM (no security)	0.5
TSSM (armed)	3.0
TSSM (disarmed)	3.0
TSSM (storage mode)	0.5
Security Siren (Optional)	20.0*
Voltage Regulator	2.0
Radio	2.0
High Output Amplifier	0.2
CB Module	0.4
XM Module	0.1

* Siren will draw for 2-24 hours from time motorcycle battery is connected and 0.05 milliamperes once siren battery is charged. For best results, disconnect siren during milliampere draw test.

TOTAL CURRENT DRAW TEST

If the battery runs down during use, the current draw of the motorcycle components and accessories may exceed the output of the charging system. To check for this condition, place load tester induction pickup or current probe pickup over battery negative cable as shown in Figure 1-12. Disconnect regulator from stator. Start engine and run at 3000 rpm.

With ignition and all continuously running lights and accessories turned on (headlamp on high beam), read the total current draw. Compare this reading to the reading obtained in CURRENT OUTPUT TEST. The current output should exceed current draw by 3.5 amps, minimum. If not, there may be too many accessories for the charging system to handle. Reconnect regulator when test is complete.

NOTE

Rider's habits may require output test at lower RPM.

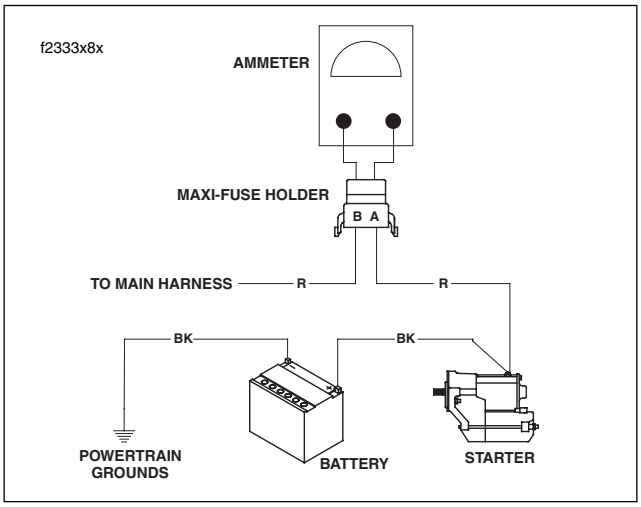

Figure 1-11. Milliamp Draw Test

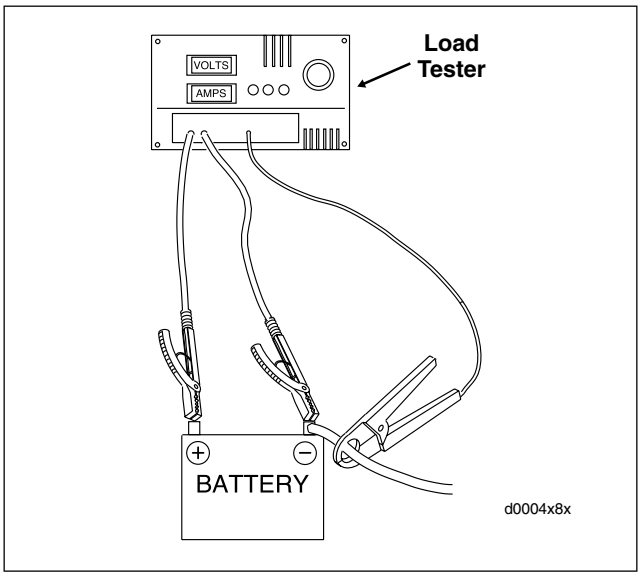

Figure 1-12. Check Current Draw (Ignition Switch On)

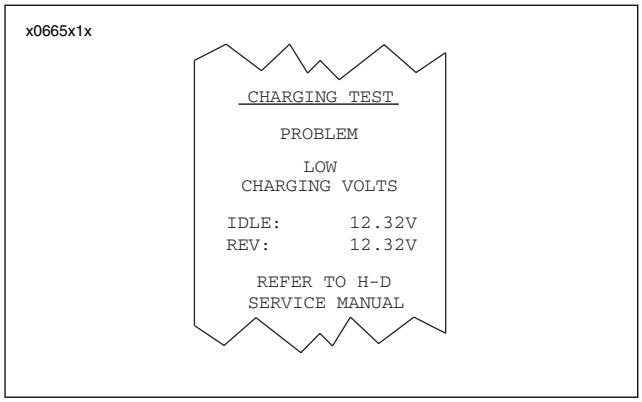

Figure 1-13. Charging System Test Results–Printout

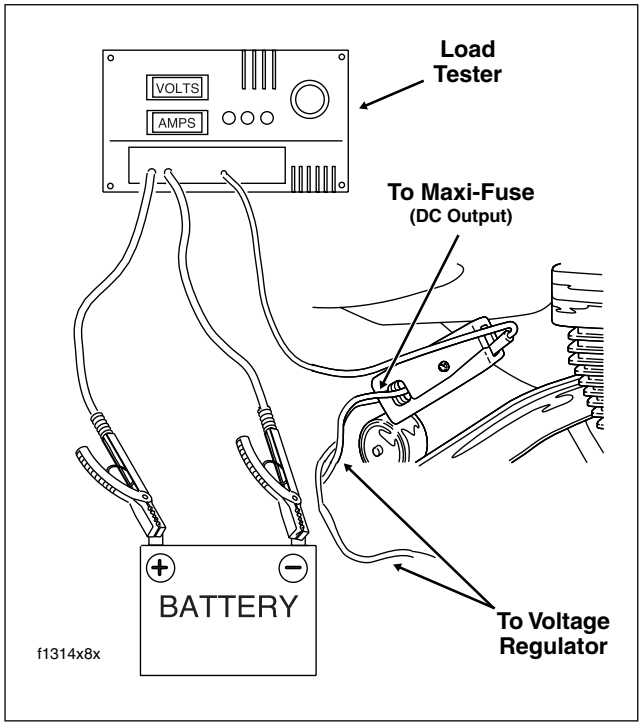

Figure 1-14. Current and Voltage Output Test

CURRENT OUTPUT TEST

For this test, you may use either the ADVANCED BATTERY CONDUCTANCE AND ELECTRICAL SYSTEM ANALYZER (HD-48053) or a load tester.

ELECTRICAL SYSTEM ANALYZER

1. Connect the analyzer leads to the battery.
2. Follow the instructions in the analyzer instruction manual to perform a charging system test.

The test results will include a decision on the condition of the charging system and the measured output voltage at idle and at 3000 RPM.

See Figure 1-13. The analyzer printer will provide a printout including one of two possible test results:

- CHARGING SYSTEM NORMAL–No problem found.
- CHARGING SYSTEM PROBLEM–The analyzer detected a problem and will display one of the three following results:
  - a. LOW CHARGING VOLTS–the alternator is not supplying sufficient current for the system's electrical loads.
  - b. HIGH CHARGING VOLTS–The voltage output from the alternator exceeds the normal regulator limits.
  - c. INVESTIGATE VOLT OUTPUT–The rev voltage is lower than the idle voltage.

LOAD TESTER

1. Connect load tester negative and positive leads to battery terminals and place load tester induction pickup over positive regulator cable as shown in Figure 1-14.
2. Run the engine at 3000 rpm and increase the load as required to obtain a constant 13.0 volts DC.
3. The current output should be 45-60 amps.

VOLTAGE OUTPUT TEST

See Figure 1-14. After removing the load, read the load tester voltage meter. Voltage to the battery must be less than 15 volts. If voltage is higher, the voltage regulator is not functioning properly or connections are loose or dirty.

CAUTION

Do not leave any load switch turned on for more than 20 seconds or overheating and tester damage are possible.

STATOR CHECK

Grounded Stator

1. Turn ignition keyswitch OFF.
2. Connect ohmmeter as follows:
   - a. Disconnect stator from voltage regulator.
   - b. Insert ohmmeter probe into one of the three stator connector sockets. See Figure 1-15.
   - c. Attach the other ohmmeter probe to a suitable ground point on the engine. Check several places to ensure good continuity is made.
3. Test for continuity between all three stator connector sockets and the ground point with ohmmeter.
   - a. A GOOD stator will show a large resistance to ground (infinite ohms) between stator socket and ground.
   - b. A BAD stator will show continuity between stator socket and ground.
4. Replace stator if grounded (BAD).

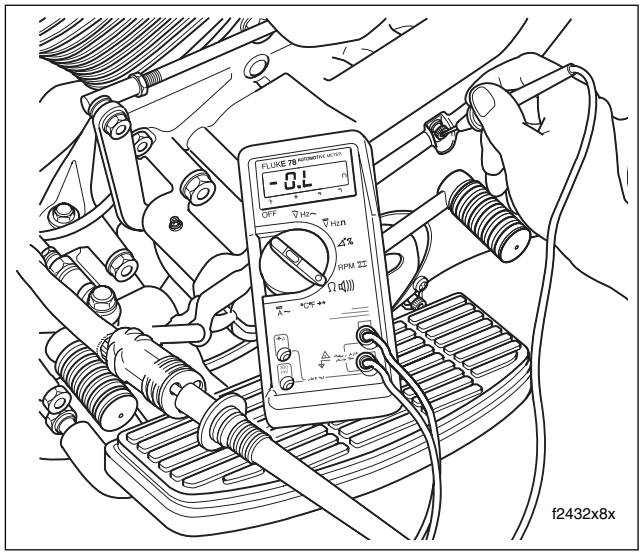

Figure 1-15. Test for Grounded Stator

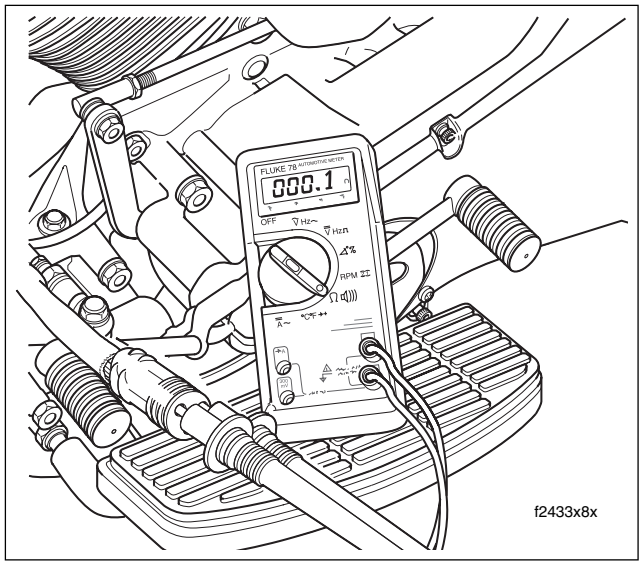

Figure 1-16. Check for Stator Resistance

AC OUTPUT CHECK

1. See Figure 1-17. To test AC output:
2. Disconnect stator from voltage regulator.
   a. Connect an AC voltmeter across any two stator connector socket combinations.
   b. Run the engine at 2000 rpm. The AC voltage output should be greater than 30-40 volts AC.
   c. Repeat AC voltage test across the other two stator socket combinations.
3. If the output is below specifications, charging problem could be a faulty rotor or stator. Replace the rotor or stator.
4. Check the output again as described under CURRENT OUTPUT TEST given earlier.

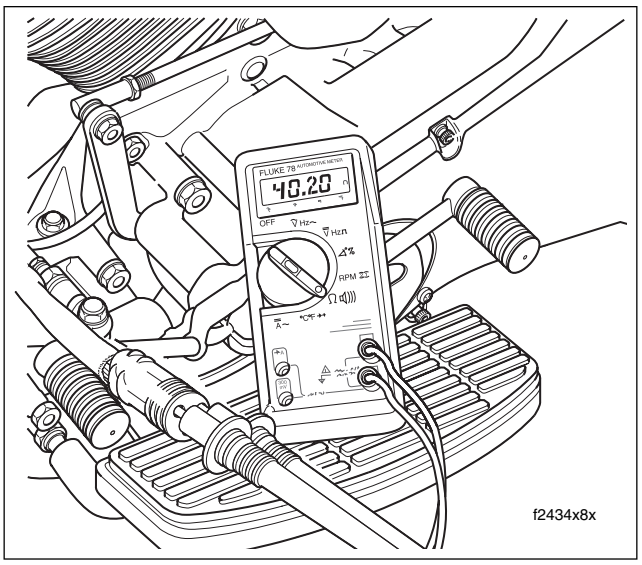

Figure 1-17. Check AC Output

Open Stator

1. Turn ignition keyswitch OFF.
2. Using ohmmeter probe, test for electrical continuity between all three stator connector socket combinations, that is, 1-2, 2-3, 1-3.
   a. See Figure 1-16.
   b. Resistance across all three stator socket combinations should be less than 1 ohm (typically 0.1-0.3 ohms).
   c. If resistance is greater than 1 ohm, then stator is OPEN and must be replaced.

BATTERY TESTING 1.8

GENERAL

Three different procedures may be performed to provide a good indicator of battery condition: a voltage test, a conductance test, or a load test.

A battery may be tested, whether fully charged or not, via the voltmeter or conductance tests. In order to perform a load test, however, the battery must be fully charged.

VOLTMETER TEST

Refer to Table 1-5. The voltmeter test provides a general indicator of battery condition. Check the voltage of the battery to verify that it is in a 100% fully charged condition. If the open circuit (disconnected) voltage reading is below 12.6V, charge the battery and then recheck the voltage after the battery has set for one to two hours. If the voltage reading is 12.7V or above, perform the LOAD TEST described in this section.

Table 1-5. Voltmeter Test

Voltage (OCV)	State of Charge
12.7	100%
12.6	75%
12.3	50%
12.0	25%
11.8	0%

CONDUCTANCE TEST

Test battery using the ADVANCED BATTERY CONDUCTANCE AND ELECTRICAL SYSTEM ANALYZER (HD-48053). Proceed as follows:

1. Connect the analyzer leads to the battery.
2. Follow the instructions in the analyzer instruction manual to perform a battery test.

The test results will include a decision on the battery condition, the measured state of charge and the measured CCA.

See Figure 1-19. The analyzer printer will provide you with a printout including one of five possible test results:

- GOOD BATTERY–return the battery to service.
- GOOD-RECHARGE–fully charge the battery and return to service.

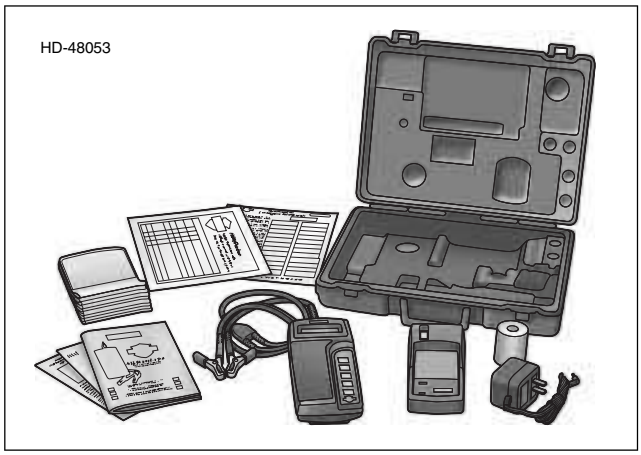

Figure 1-18. Advanced Battery Conductance and Electrical System Analyzer (Part No. HD-48053)

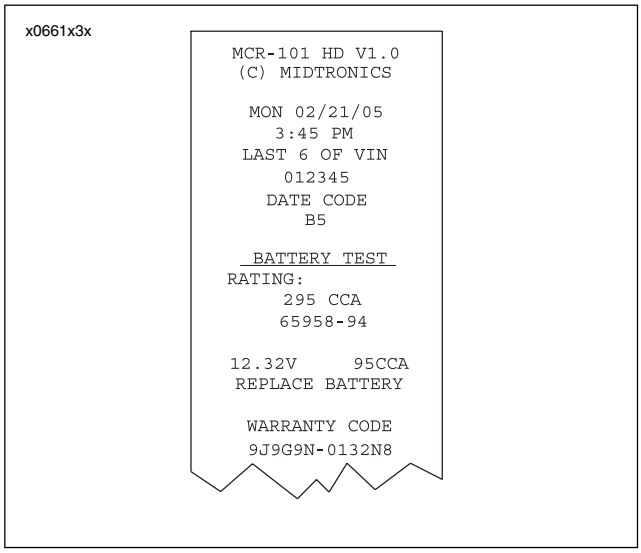

Figure 1-19. Battery Test Results–Printout

- CHARGE & RETEST–Fully charge the battery and retest.
- REPLACE BATTERY–replace the battery and retest.
- BAD CELL-REPLACE–replace the battery and retest.

NOTE

A REPLACE BATTERY test result may also mean a poor connection between the battery cables and the motorcycle. After disconnecting the battery cables from the battery, retest the battery using the out-of-vehicle test before replacing.

LOAD TEST

The load test measures battery performance under full current load and is the best indicator of battery condition. To load test the battery, proceed as follows:

1. Remove seat.

WARNING

Always disconnect the negative battery cable first. If the positive cable should contact ground with the negative cable installed, the resulting sparks may cause a battery explosion which could result in death or serious injury.

2. Unthread bolt and remove battery negative cable (black) from battery negative (-) terminal.
3. Unthread bolt and remove battery positive cable (red) from battery positive (+) terminal.
4. Using a T-40 TORX drive head, loosen bolt to move lip of hold-down clamp off edge of battery. Remove battery from battery box.

CAUTION

Load testing a discharged battery can result in permanent battery damage.

5. Always fully charge the battery before testing or test readings will be incorrect. Load testing a discharged battery can also result in permanent battery damage.
6. After charging, allow battery to stand for at least one hour before testing.

WARNING

Always turn the battery load tester OFF before connecting the tester cables to the battery terminals. Connecting tester cables with the load tester ON could cause a spark resulting in a battery explosion. A battery explosion may rupture the battery case causing a discharge or spray of sulfuric acid which could result in death or serious injury.

7. Connect tester leads to battery posts and place induction pickup over negative (black) cable. See Figure 1-20.

CAUTION

To avoid load tester and/or battery damage, do not leave the load tester switch turned ON for more than 20 seconds.

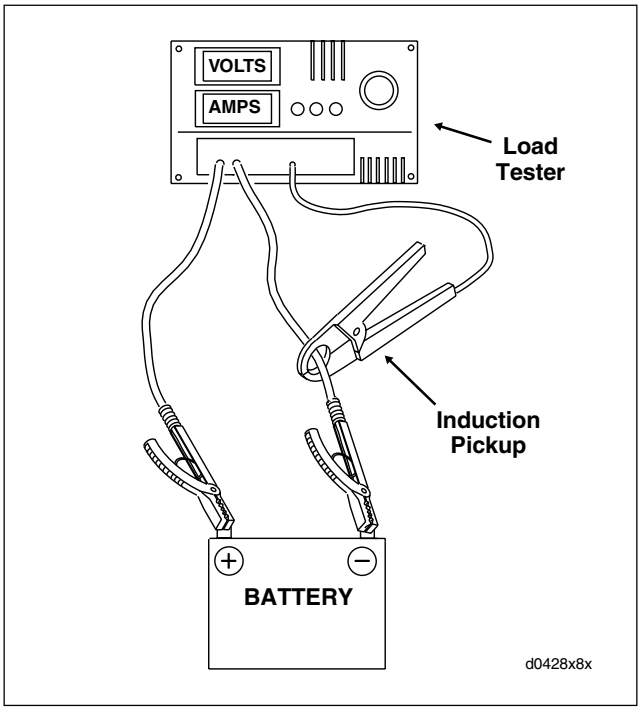

Figure 1-20. Load Test Battery

8. Load battery at 50% of CCA rating using the load tester. Voltage reading after 15 seconds should be 9.6V or more at 70°F. (21°C).

Table 1-6. Battery Load Test

COLD CRANKING AMPERAGE (CCA)	100%	50%
TOURING	300	150

WARNING

Always turn the battery load tester OFF before disconnecting the tester cables from the battery terminals. Disconnecting tester cables with the load tester ON could cause a spark resulting in a battery explosion. A battery explosion may rupture the battery case causing a discharge or spray of sulfuric acid which could result in death or serious injury.

9. Place the fully charged battery into the battery box, terminal side forward.

CAUTION

Connect the cables to the correct battery terminals or damage to the motorcycle electrical system will occur.

⚠WARNING

Always connect the positive battery cable first. If the positive cable should contact ground with the negative cable installed, the resulting sparks may cause a battery explosion which could result in death or serious injury.

CAUTION

Overtightening bolts can damage battery terminals.

10. Insert bolt through battery positive cable (red) into threaded hole of battery positive (+) terminal. Tighten bolt to 60-96 **in-lbs** (6.8-10.9 Nm).
11. Insert bolt through battery negative cable (black) into threaded hole of battery negative (-) terminal. Tighten bolt to 60-96 **in-lbs** (6.8-10.9 Nm).
12. Apply a light coat of petroleum jelly or corrosion retardant material to both battery terminals.
13. Rotate the hold-down clamp so that the lip (with rubber pad) rests on the edge of the battery. Using a T-40 TORX drive head, tighten the clamp bolt to 15-20 ft-lbs (20-27 Nm).
14. Install seat.

INSTRUMENTS 2

Table Of Contents

SUBJECT	PAGE NO.
2.1 Checking For Diagnostic Trouble Codes	2-1
2.2 Initial Diagnostic Check: Speedometer	2-4
2.3 Speedometer Self Diagnostics	2-13
2.4 Speedometer/Tachometer	2-15
2.5 Breakout Box: Speedometer	2-19
2.6 Fuel Gauge	2-20
2.7 Oil, Air and Voltmeter Gauges	2-21
2.8 Indicator Lamps: FLTR, FLHT/C/U	2-23
2.9 Indicator Lamps: FLHR/C/S	2-25
2.10 DTC B1004, B1005	2-27
2.11 DTC B1006, B1007	2-31
2.12 DTC B1008	2-33
2.13 DTC U1016	2-36
2.14 DTC U1064, U1255	2-42
2.15 DTC U1300, U1301 or "BUS Er"	2-48

CHECKING FOR DIAGNOSTIC TROUBLE CODES 2.1

CHECK ENGINE LAMP

To diagnose ECM or ICM system problems, start by observing the behavior of the check engine lamp.

NOTES

- *See Figure 2-2. "Key ON" means that the ignition key is turned to ON and the engine stop switch is set to RUN (although the engine is **not** running).*
- *When the ignition switch is turned ON, the check engine lamp will illuminate for approximately four seconds and then turn off.*
- *If the check engine lamp is not illuminated at Key ON. See Section 2.2 INITIAL DIAGNOSTIC CHECK: SPEEDOMETER.*
- *If the check engine lamp comes on late (after 20 seconds). See Section 2.2 INITIAL DIAGNOSTIC CHECK: SPEEDOMETER.*
- *If the check engine lamp fails to turn OFF after the initial four second period. See Section 2.2 INITIAL DIAGNOSTIC CHECK: SPEEDOMETER.*

1. See Figure 2-3. After lamp turns off after being illuminated for the first four second period, one of three situations may occur.
   a. The lamp remains off. This indicates there are no current fault conditions or stored DTC's currently detected by the ICM or ECM.
   b. The lamp stays off for only four seconds and then comes back on for an eight second period. This indicates a DTC is stored, but no current DTC exists.
   c. If the lamp remains on beyond the eight second period, then a current DTC exists.
2. See CODE TYPES which follows for a complete description of DTC formats.

NOTES

Some DTC's can only be fully diagnosed during actuation. For example, a problem with the ignition coil will be considered a current fault even after the problem is corrected, since the ECM/ICM will not know of its resolution until after the coil is exercised by vehicle start sequence. In this manner, there may sometimes be a false indication of a current DTC.

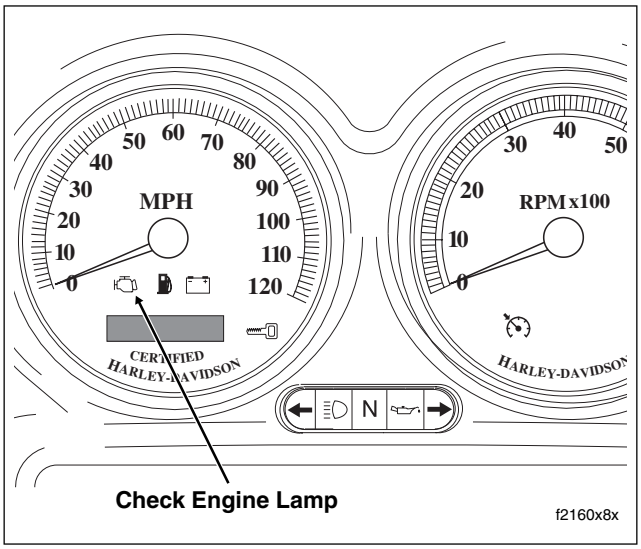

Figure 2-1. Speedometer

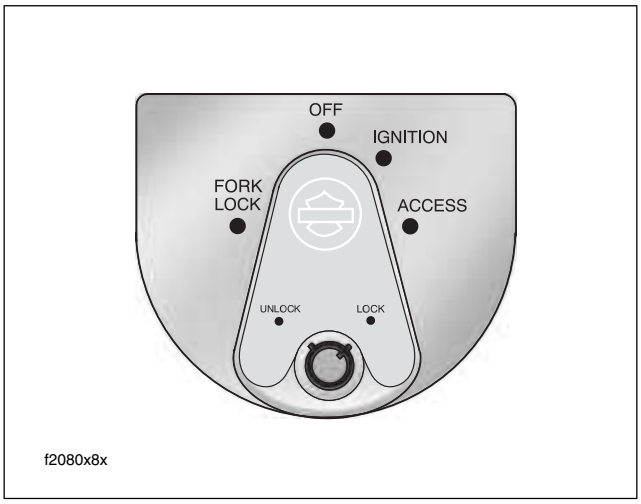

Figure 2-2. Ignition Switch (FLHX, FLHT/C/U, FLTR)

SECURITY LAMP

To diagnose TSM/TSSM system problems, start by observing the behavior of the security lamp.

NOTES

- *To provide an indication of TSSM DTC's, the security lamp is enabled on TSSM models.*
- *See Figure 2-2. "Key ON" means that the ignition key is turned to ON and the engine stop switch is set to RUN (although the engine is **not** running).*
- *When the ignition switch is turned ON, the check engine lamp will illuminate for approximately four seconds and then turn off.*
- *If the check engine lamp is not illuminated at Key ON, see Section 2.2 INITIAL DIAGNOSTIC CHECK: SPEEDOMETER.*
- *If the check engine lamp comes on late (after 20 seconds), see Section 2.2 INITIAL DIAGNOSTIC CHECK: SPEEDOMETER.*
- *If the check engine lamp fails to turn OFF after the initial four second period, see Section 2.2 INITIAL DIAGNOSTIC CHECK: SPEEDOMETER.*

1. See Figure 2-3. After lamp turns off after being illuminated for the first four second period, one of three situations may occur.
   a. The lamp remains off. This indicates there are no current fault conditions or stored DTC's currently detected by the ICM or ECM.
   b. The lamp stays off for only four seconds and then comes back on for an eight second period. This indicates a DTC is stored, but no current DTC exists.
   c. If the lamp remains on beyond the eight second period, then a current DTC exists.
2. See CODE TYPES which follows for a complete description of DTC formats.

NOTE

Some DTC's can only be fully diagnosed during actuation. For example, a problem with the turn signals will be considered a current fault even after the problem is corrected, since the TSM/TSSM will not know of its resolution until after the turn signals are activated. In this manner, there may sometimes be a false indication of a DTC.

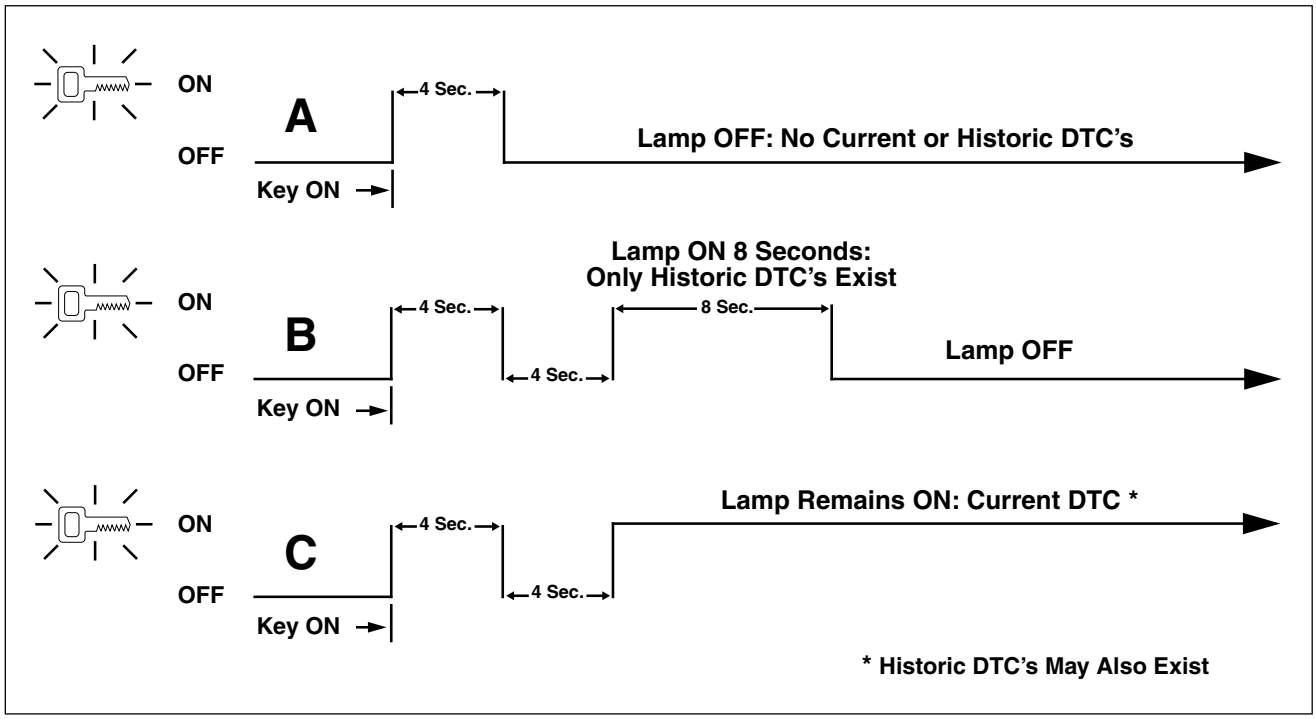

Figure 2-3. Check Engine and Security Lamp Operation

CODE TYPES

There are two types of DTC's: current and historic. If a DTC is stored, it can be read using speedometer self diagnostics. See Section 2.3 SPEEDOMETER SELF DIAGNOSTICS.

All DTC's reside in the memory of the ECM/ICM, TSM/TSSM, speedometer or tachometer until the code is cleared by use of the speedometer self diagnostics. See Section 2.3 SPEEDOMETER SELF DIAGNOSTICS.

A historic DTC is also cleared after a total of 50 trips has elapsed. A trip consists of a start and run cycle. After the 50 trip retention period, the DTC is automatically erased from memory providing that no subsequent faults of the same type are detected in that period.

Current

Current DTC's are those which presently disrupt motorcycle operation. See the appropriate flow charts for solutions.

Historic

If a particular problem happens to resolve itself, the active status is dropped and it becomes a historic fault rather than a current fault.

Historic trouble codes can only be retrieved using a computer based diagnostic package called DIGITAL TECHNICIAN (Part No. HD-44750).

Historic trouble codes are stored for a length of time to assist in the diagnosis of intermittent faults.

It is important to note that historic trouble codes may also be present whenever the system indicates the existence of a current fault. See MULTIPLE DIAGNOSTIC TROUBLE CODES if multiple DTC's are found.

Diagnostic charts are designed for use with current trouble codes and as a result they frequently suggest wire repair or part replacement.

RETRIEVING DIAGNOSTIC TROUBLE CODES

The engine management system provides two levels of diagnostics.

- The most sophisticated mode employs a computer based diagnostic package called DIGITAL TECHNICIAN (Part No. HD-44750).
- The second mode requires using the speedometer self diagnostics. Speedometer, tachometer (if equipped), TSM/TSSM and ECM/ICM DTC's can be accessed and cleared. See Section 2.3 SPEEDOMETER SELF DIAGNOSTICS.

MULTIPLE DIAGNOSTIC TROUBLE CODES

While it is possible for more than one fault to occur and set more than one DTC, there are several conditions which may result in **one** fault setting **multiple** DTC's:

Serial data DTC's (DTC U1016, U1064, U1097, U1255, U1300 and U1301) may be accompanied by other codes. **Always** correct the serial data DTC's before resolving the other codes.

For proper resolution of multiple DTC's refer to DTC priority chart page 2-6,Table 2-2.

INITIAL DIAGNOSTIC CHECK: SPEEDOMETER 2.2

GENERAL

- Constant power is supplied to the speedometer through terminal 5 of connector [39]. The speedometer turns on when power is applied to terminal 1 of connector [39]. The speedometer goes through an initialization sequence every time power is removed and re-applied to terminal 6. The visible part of this sequence is the check engine lamp (in “run” mode), security lamp (models with security only), backlighting, odometer and fuel level (EFI only). Upon key ON, the check engine lamp and security lamp will illuminate for 4 seconds and then (if parameters are normal) go out.
- To locate faulty circuits or other system problems, follow the diagnostic flow charts and tests in this section. For a systematic approach, always begin with INITIAL DIAGNOSTICS which follows. Read the general information and then work your way through the flow chart box by box.
- Loss of power on any of the four power inputs will change speedometer behavior. Refer to Table 2-1. Speedometer Function Chart-Loss Of Input.

Diagnostic Notes

If a numbered circle appears adjacent to a flow chart box, then more information is offered in the diagnostic notes. Many diagnostic notes contain supplemental information, descriptions of various diagnostic tools or references to other parts of the manual where information on the location and removal of components may be obtained.

Circuit Diagram/Wire Harness Connector Table

When working through a flow chart, refer to the illustrations, the associated circuit diagram and the wire harness connector table as necessary. The wire harness connector table for each circuit diagram identifies the connector number, description, type and general location.

In order to perform most diagnostic routines, a Breakout Box and a digital volt/ohm meter (DVOM) are required. See Section 2.5 BREAKOUT BOX: SPEEDOMETER.

To perform the circuit checks with any degree of efficiency, a familiarity with the various wire connectors is also necessary.

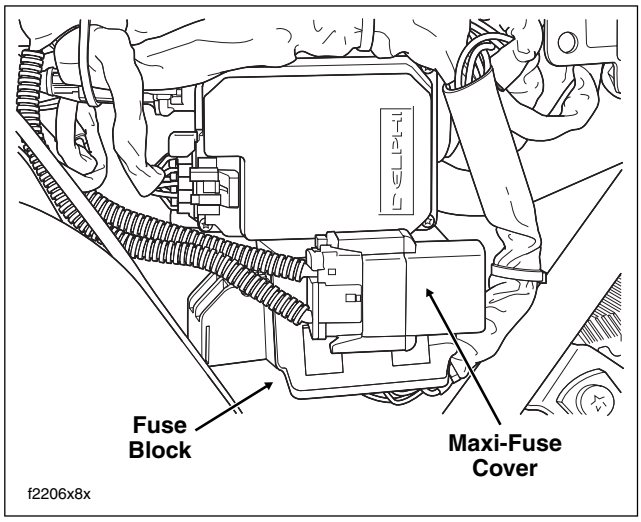

Figure 2-4. Remove Left Side Cover

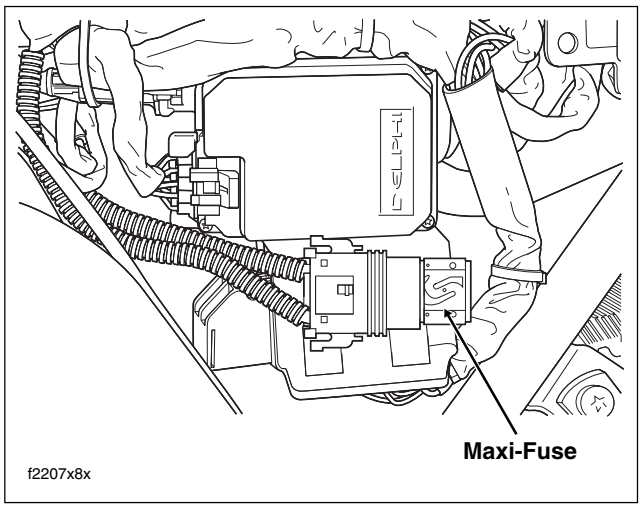

Figure 2-5. Remove Maxi-Fuse Cover

INITIAL DIAGNOSTICS

Diagnostic Tips

- If Speedometer reads “BUS Er” with the ignition key turned ON (engine stop switch at RUN with the engine off), check data bus for an open or short to ground. between data link connector [91A] terminal 3 and ICM connector [10B] terminal 12 (carbureted models), ECM connector [78B] terminal 5 (EFI models), TSSM connector [30B] terminal 3, Speedometer connector [39B] terminal 2 or tachometer (if equipped) connector [108B] terminal 2.
- Check for an open data test terminal between data link connector [91A] terminal 3 and TSM/TSSM connector [30B] terminal 3. With ignition key turned ON, serial data bus voltage should be typically 0.6-0.8 volts. The range of acceptable voltage is greater than 0 and less than 7.0 volts.
- To identify intermittents, wiggle instrument and/or vehicle harness while performing steps in the Diagnostic Check charts.

Diagnostic Notes

The reference numbers below correlate with the circled numbers on the diagnostic check flow charts. See page 2-11.

1. Connect BREAKOUT BOX (Part No. HD-42682) and INSTRUMENT HARNESS ADAPTERS (Part No. HD-46601) between wire harness and speedometer.

All Speedometer DTC’s are listed on page 2-6 in Table 2-2.

Other Codes

See Section 3.9 INITIAL DIAGNOSTIC CHECK: TSM/TSSM for any DTC’s related to the turn signal module (TSM) or turn signal security module (TSSM).

See Section 4.4 INITIAL DIAGNOSTIC CHECK: ICM for any DTC’s related to the ICM.

See Section 5.5 INITIAL DIAGNOSTIC CHECK: EFI for any DTC’s related to the ECM.

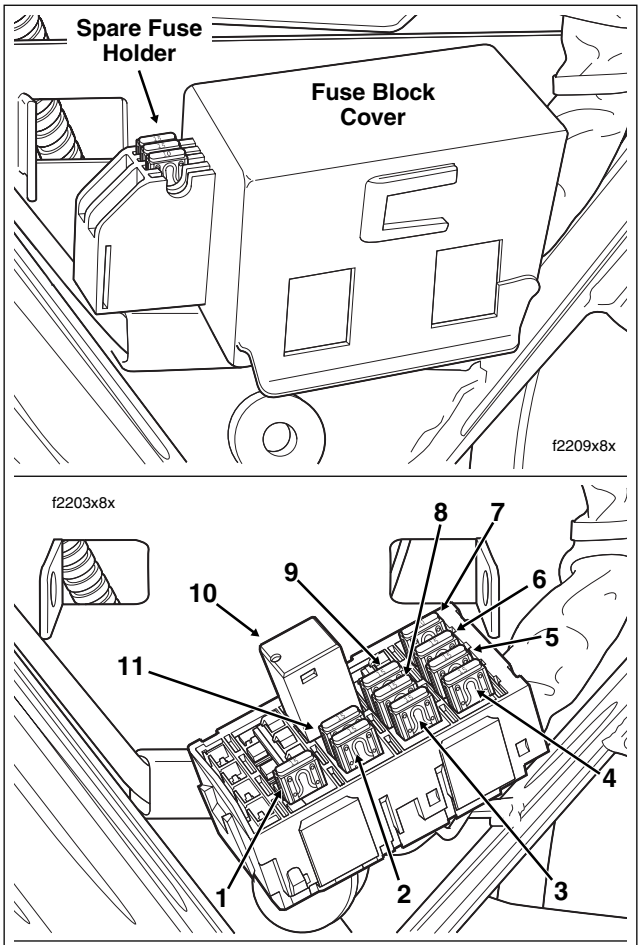

1. Headlamp
2. Ignition
3. Lighting
4. Instruments
5. Brakes/Cruise
6. Radio Memory
7. Radio Power
8. Accessory
9. Battery
10. Brake Light Relay
11. P&A

Figure 2-6. Fuse Block (FLHX, FLHTC/U, FLTR)

Table 2-1. Speedometer Function Chart-Loss Of Input

Terminal 5 (Constant)	Terminal 1 (IGN)	Terminal 6 (ACC)	Terminal 7 (GRD)	Terminal 8 and 11 (Reset Switch)
● Security lamp glows dimly during 4-second bulb check	● Will not “wow” ● Turn signals still functional ● Speedometer will indicate vehicle speed (zero) ● Tachometer unaffected ● Security lamp still functional ● Check engine lamp and battery lamp non-functional ● Diagnostics absent	● Speedometer will be non-functional in accessory and ignition modes ● Security lamp still performs 4-second bulb check in ignition mode	● Speedometer completely non-functional ● Diagnostics absent	● No reset switch function ● Will not “wow”

Table 2-2. Speedometer/Tachometer Diagnostic Trouble Codes (DTC) Priority Chart

DTC	PRIORITY	FAULT CONDITION	SOLUTION	MODULE
“BUS Er”	1	Serial data bus shorted low/open/high	2.15 DTC U1300, U1301 or “BUS ER”	Speedometer/tachometer
U1300	2	Serial data bus shorted low	2.15 DTC U1300, U1301 or “BUS ER”	Speedometer/tachometer
U1301	3	Serial data bus shorted open/high	2.15 DTC U1300, U1301 or “BUS ER”	Speedometer/tachometer
U1016	4	Loss of ECM serial data	2.13 DTC U1016	Speedometer/tachometer
U1064	5	Loss of TSM/TSSM serial data	2.14 DTC U1064, U1255	Speedometer/tachometer
U1255	6	Missing response from other module (TSM/TSSM and/or ICM/ECM) at startup	2.14 DTC U1064, U1255	Speedometer/tachometer
B1007	7	Ignition line overvoltage	2.11 DTC B1006, B1007	Speedometer/tachometer
B1006	8	Accessory line overvoltage	2.11 DTC B1006, B1007	Speedometer/tachometer
B1008	9	Reset switch closed	2.12 DTC B1008	Speedometer
B1004	10	Fuel level sending unit low	2.10 DTC B1004, B1005	Speedometer
B1005	11	Fuel level sending unit high/open	2.10 DTC B1004, B1005	Speedometer

HOME

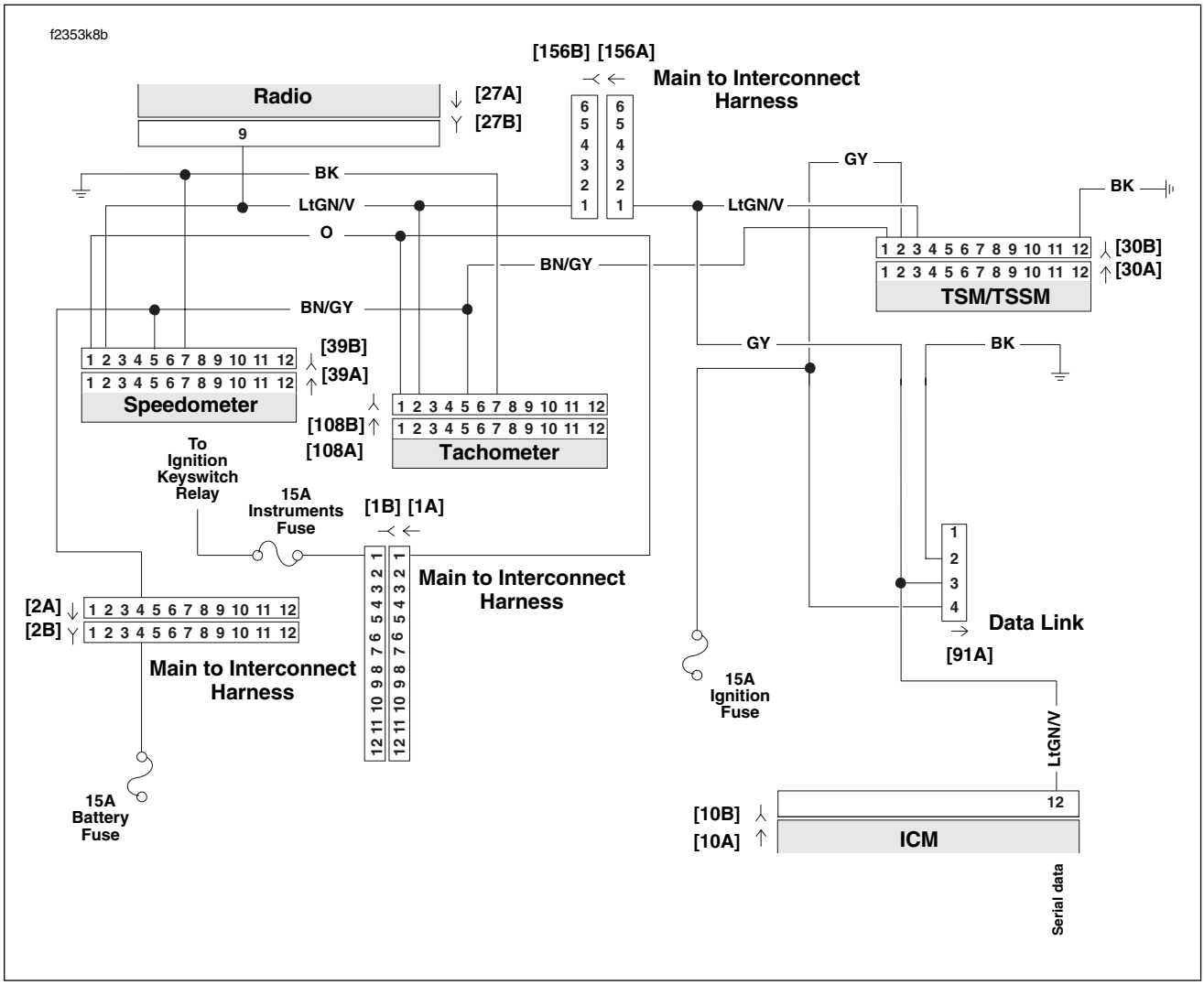

Figure 2-7. Diagnostic Check: FLHX, FLHT/C (Carbureted)

Table 2-3. Wire Harness Connectors in Figure 2-7.

NO.	DESCRIPTION	TYPE	LOCATION
[1]	Main to Interconnect Harness	12-Place Deutsch (Black)	Inner Fairing - Right Radio Support Bracket
[2]	Main to Interconnect Harness	12-Place Deutsch (Gray)	Inner Fairing - Right Fairing Support Brace
[10]	ICM	12-Place Deutsch	Under Right Side Cover
[27]	Radio	23-Place Amp	Inner Fairing - Back of Radio (Right Side)
[30]	TSM/TSSM	12-Place Deutsch	Cavity in Crossmember at Rear of Battery Box (Under Seat)
[39]	Speedometer	12-Place Packard	Inner Fairing (Back of Speedometer)
[91]	Data Link	4-Place Deutsch	Under Right Side Cover
[108]	Tachometer	12-Place Packard	Inner Fairing (Back of Tachometer)
[156]	Main to Interconnect Harness	6-Place Deutsch	Inner Fairing - Right Fairing Support Brace

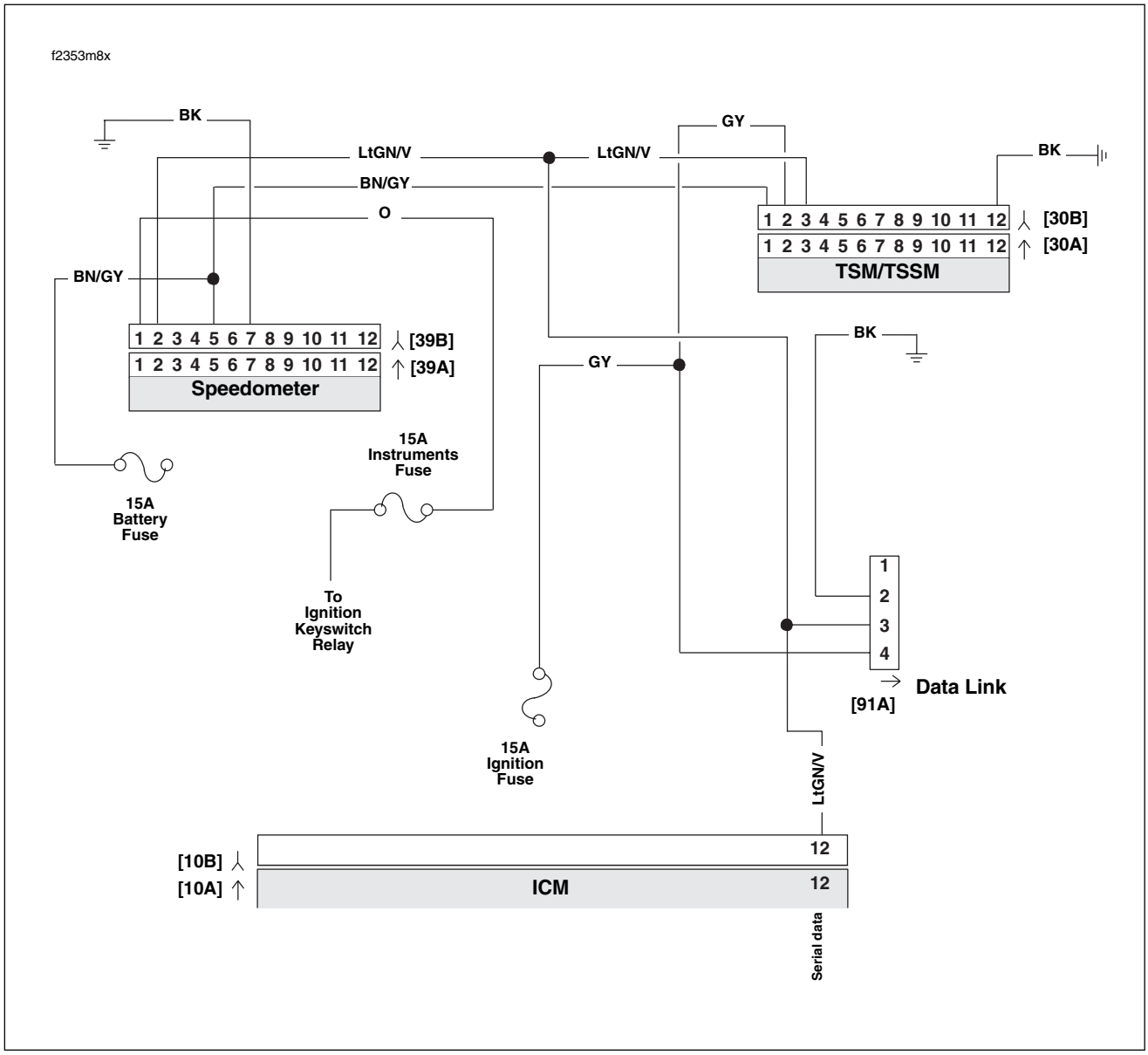

Figure 2-8. Diagnostic Check: FLHR/S (Carbureted)

Table 2-4. Wire Harness Connectors in Figure 2-8.

NO.	DESCRIPTION	TYPE	LOCATION
[10]	ICM	12-Place Deutsch	Under Right Side Cover
[30]	TSM/TSSM	12-Place Deutsch	Cavity in Crossmember at Rear of Battery Box (Under Seat)
[39]	Speedometer	12-Place Packard	Under Console (Back of Speedometer)
[91]	Data Link	4-Place Deutsch	Under Right Side Cover

HOME

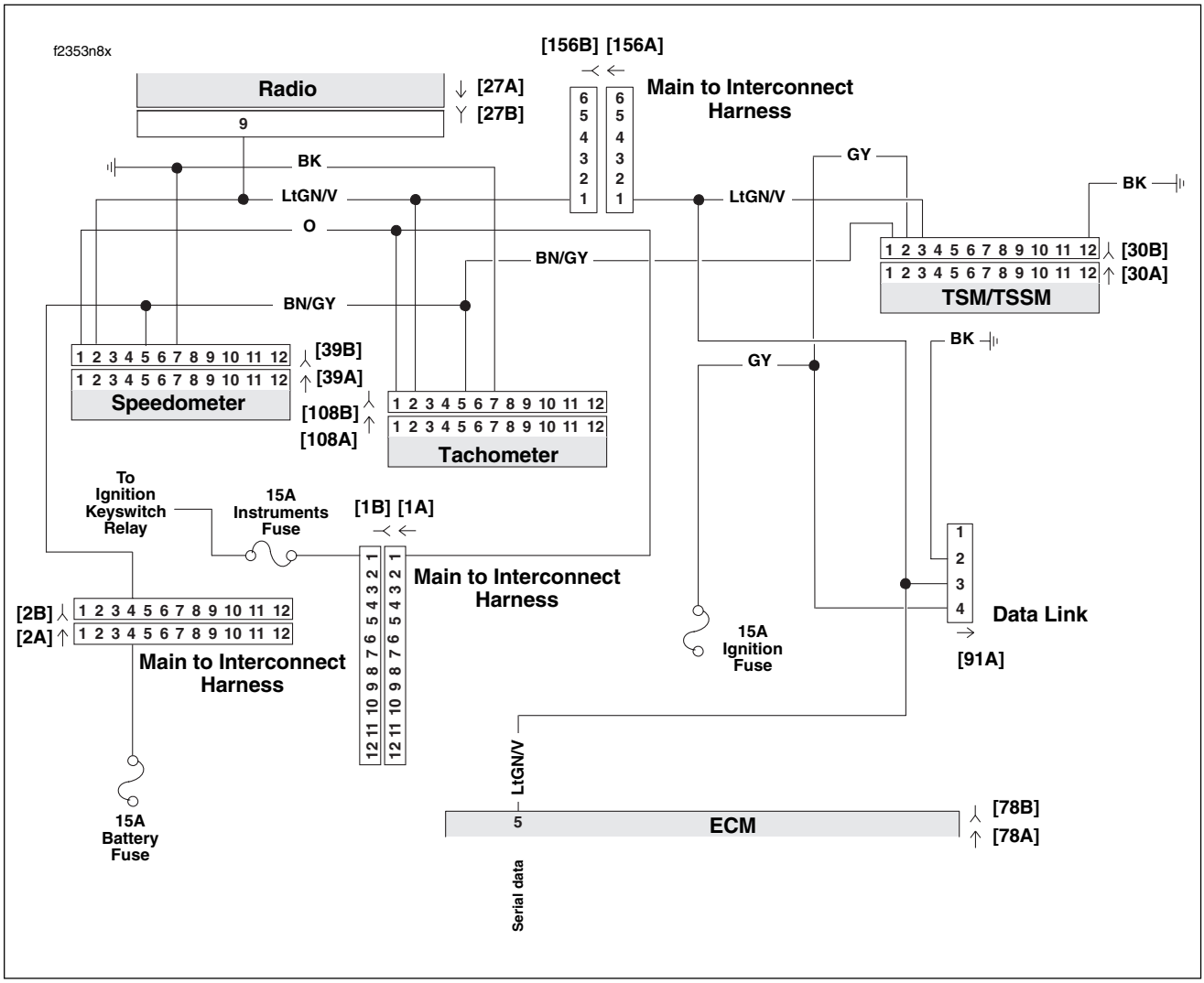

Figure 2-9. Diagnostic Check: FLHX, FLHT/C/U, FLTR (Fuel Injected)

Table 2-5. Wire Harness Connectors in Figure 2-9.

NO.	DESCRIPTION	MODEL	TYPE	LOCATION
[1]	Main to Interconnect Harness	FLHT/C	12-Place Deutsch (Black)	Inner Fairing - Right Radio Support Bracket
		FLTR	12-Place Deutsch (Black)	Inner Fairing - Below Radio (Right Side)
[2]	Main to Interconnect Harness	FLHT/C	12-Place Deutsch (Gray)	Inner Fairing - Right Fairing Support Brace
		FLTR	12-Place Deutsch (Gray)	Inner Fairing - Below Radio (Right Side)
[27]	Radio	All	23-Place Amp	Inner Fairing - Back of Radio (Right Side)
[30]	TSM/TSSM	All	12-Place Deutsch	Cavity in Crossmember at Rear of Battery Box (Under Seat)
[39]	Speedometer	FLHT/C	12-Place Packard	Inner Fairing (Back of Speedometer)
		FLTR	12-Place Packard	Under Bezel (Back of Speedometer)
[78]	ECM	All	36-Place Packard	Under Right Side Cover
[91]	Data Link	All	4-Place Deutsch	Under Right Side Cover
[108]	Tachometer	FLHT/C	12-Place Packard	Inner Fairing (Back of Tachometer)
		FLTR	12-Place Packard	Under Bezel (Back of Tachometer)
[156]	Main to Interconnect Harness	FLHT/C	6-Place Deutsch	Inner Fairing - Right Fairing Support Brace
		FLTR	6-Place Deutsch	Inner Fairing - Below Radio (Right Side)

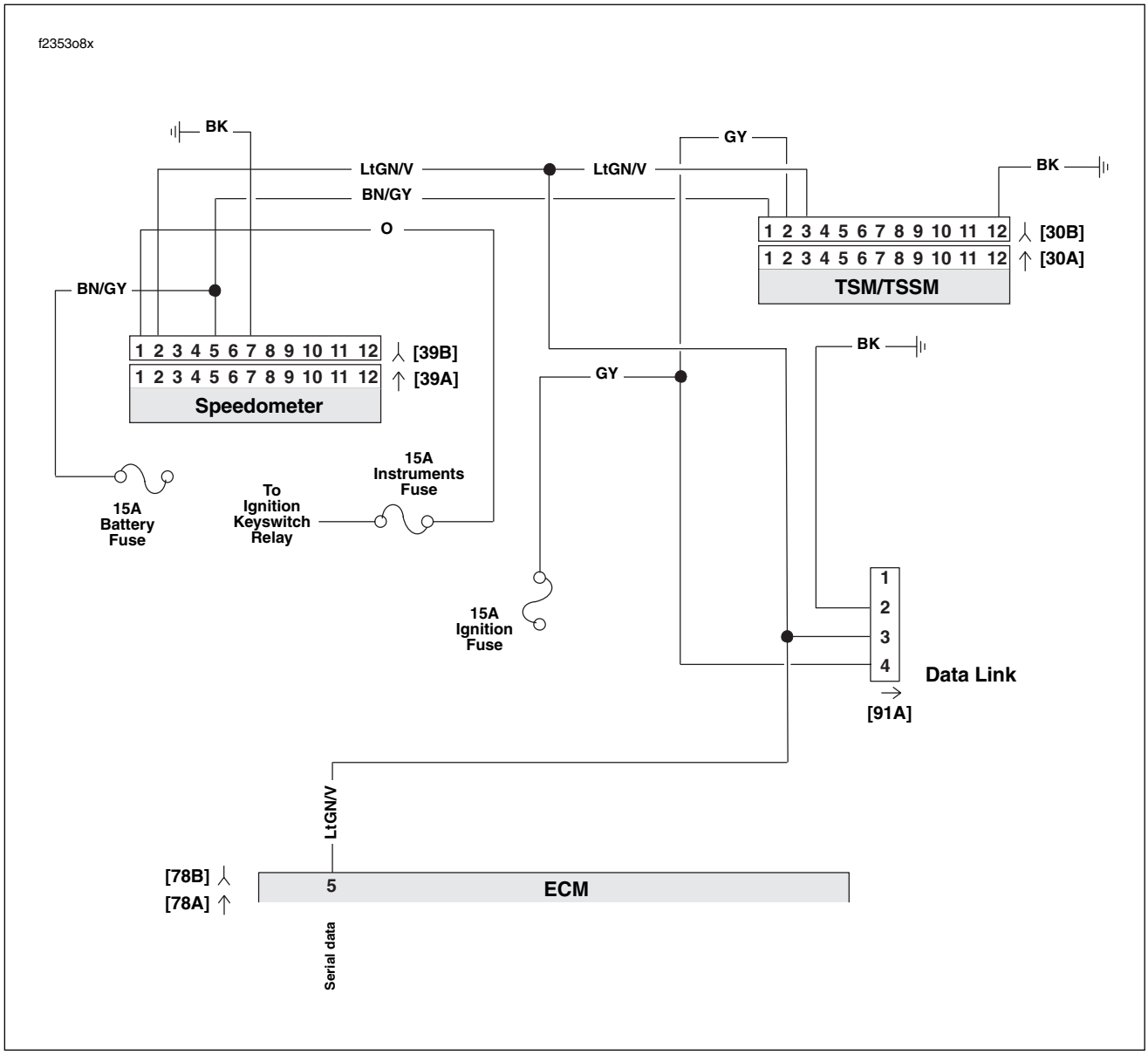

Figure 2-10. Diagnostic Check: FLHR/C/S (Fuel Injected)

Table 2-6. Wire Harness Connectors in Figure 2-10.

NO.	DESCRIPTION	TYPE	LOCATION
[30]	TSM/TSSM	12-Place Deutsch	Cavity in Crossmember at Rear of Battery Box (Under Seat)
[39]	Speedometer	12-Place Mini-Deutsch	Under Console (Back of Speedometer)
[78]	ECM	36-Place Packard	Under Right Side Cover
[91]	Data Link	4-Place Deutsch	Under Right Side Cover

Diagnostic Check (Part 1 of 2)

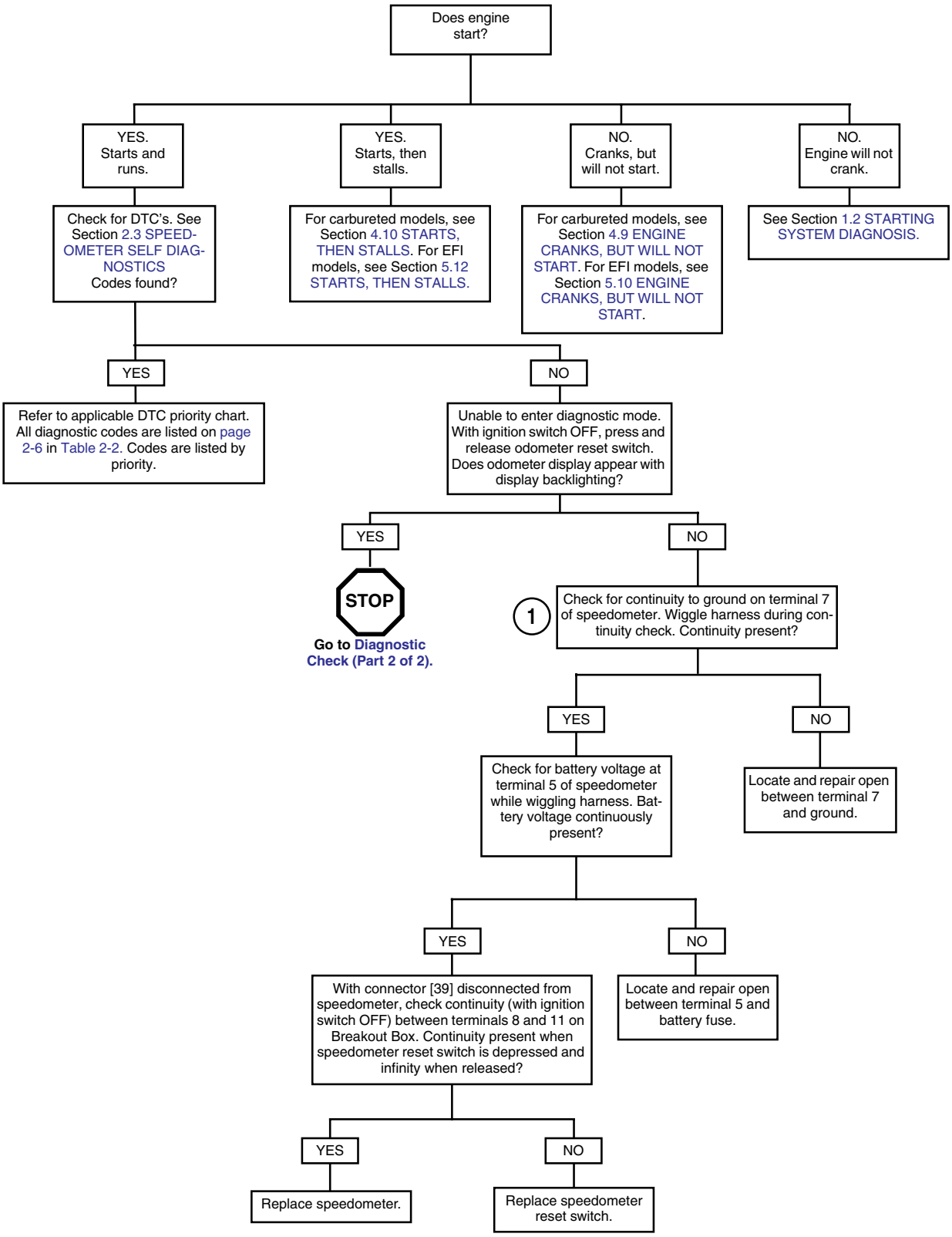

Diagnostic Check (Part 2 of 2)

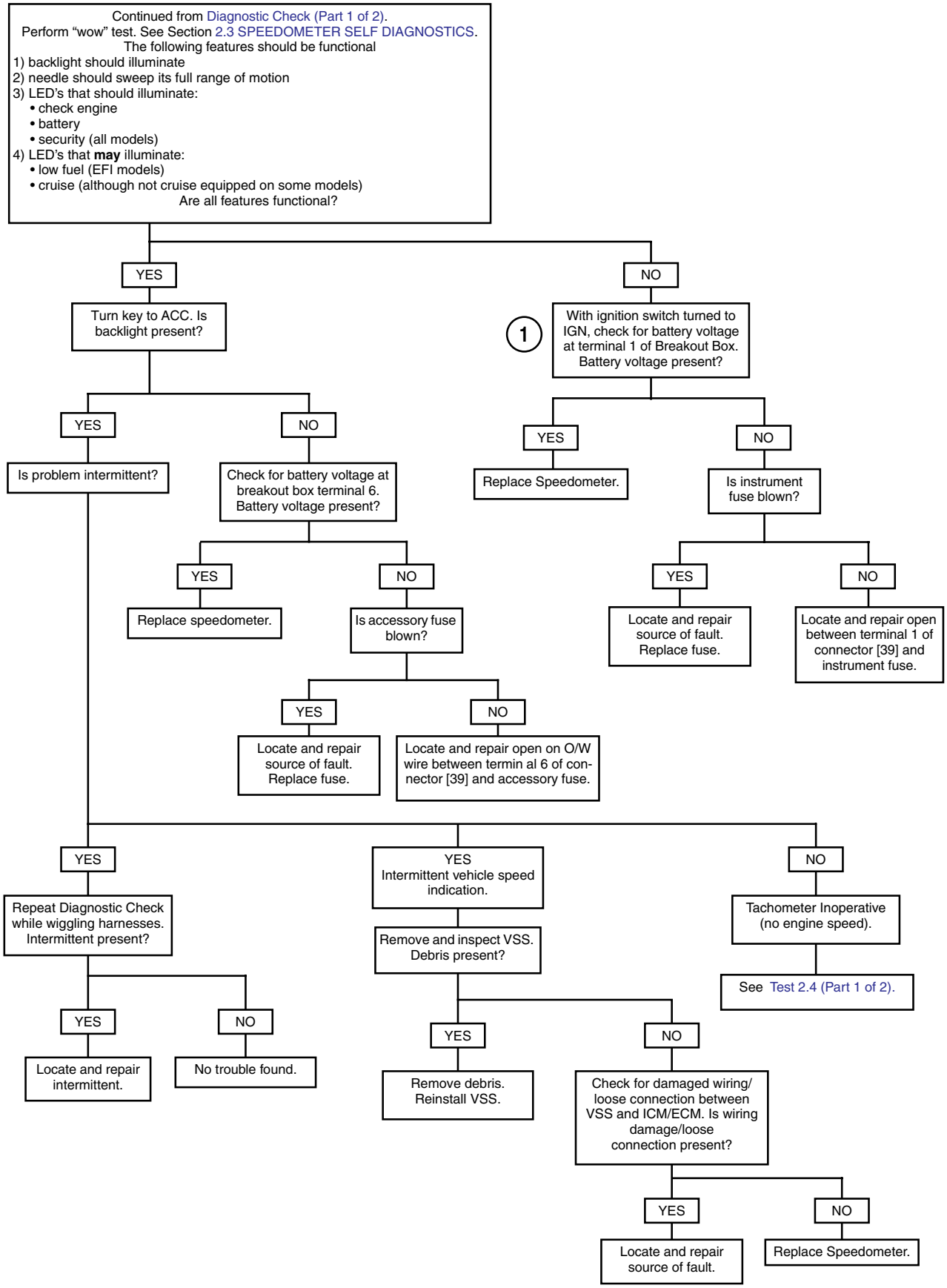

SPEEDOMETER SELF DIAGNOSTICS 2.3

GENERAL

The speedometer is capable of displaying and clearing speedometer, tachometer, TSM/TSSM, and ICM/ECM DTC's.

DIAGNOSTICS

Diagnostic Tips

- For a quick check of speedometer function, a "wow" test can be performed. Press and hold odometer reset switch then turn ignition switch ON. Release reset switch. Background lighting should illuminate, speedometer needle should sweep its full range of motion, and indicator lamps [battery, security, low fuel (EFI models) check engine and cruise should illuminate. Some lamps may illuminate even though they do not apply to the vehicle. For example, the cruise lamp may illuminate although this feature does not apply to some models.

- If instrument module fails "wow" test, check for battery, ground, ignition, speedometer reset switch and accessory to speedometer. If any feature in the speedometer is non-functional, see Section 2.2 INITIAL DIAGNOSTIC CHECK: SPEEDOMETER.

Diagnostic Notes

Use of speedometer self diagnostics assumes that DIGITAL TECHNICIAN (Part No. HD-44750) is not available.

The reference numbers below correlate with the circled numbers in the Speedometer Self Diagnostics (chart)

1. To exit diagnostic mode, turn ignition switch OFF.

2. To clear DTC's for selected module, press speedometer reset switch for more than 5 seconds when code is displayed.

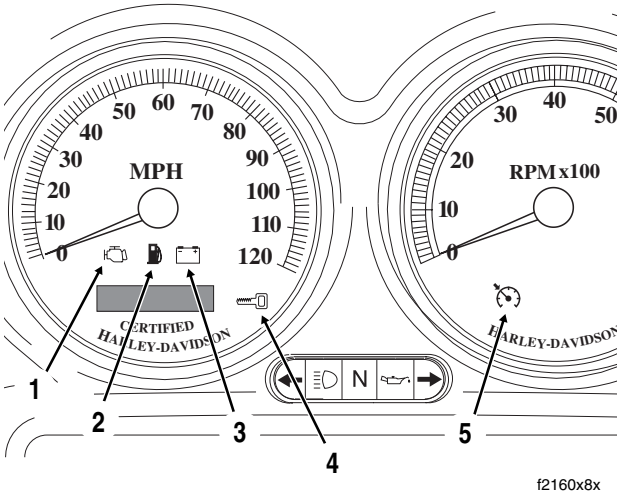

1. **Check Engine**
2. **Low Fuel**
3. **Battery**
4. **Security**
5. **Cruise (Where Applicable)**

Figure 2-11. Icons

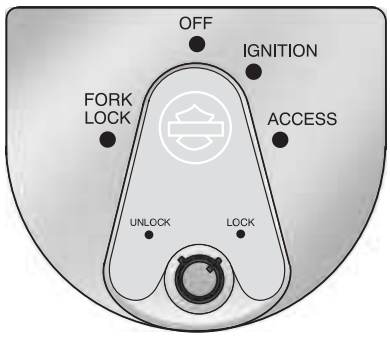

Figure 2-12. Ignition Switch (FLHX, FLHT/C/U, FLTR)

Speedometer Self Diagnostics (chart)

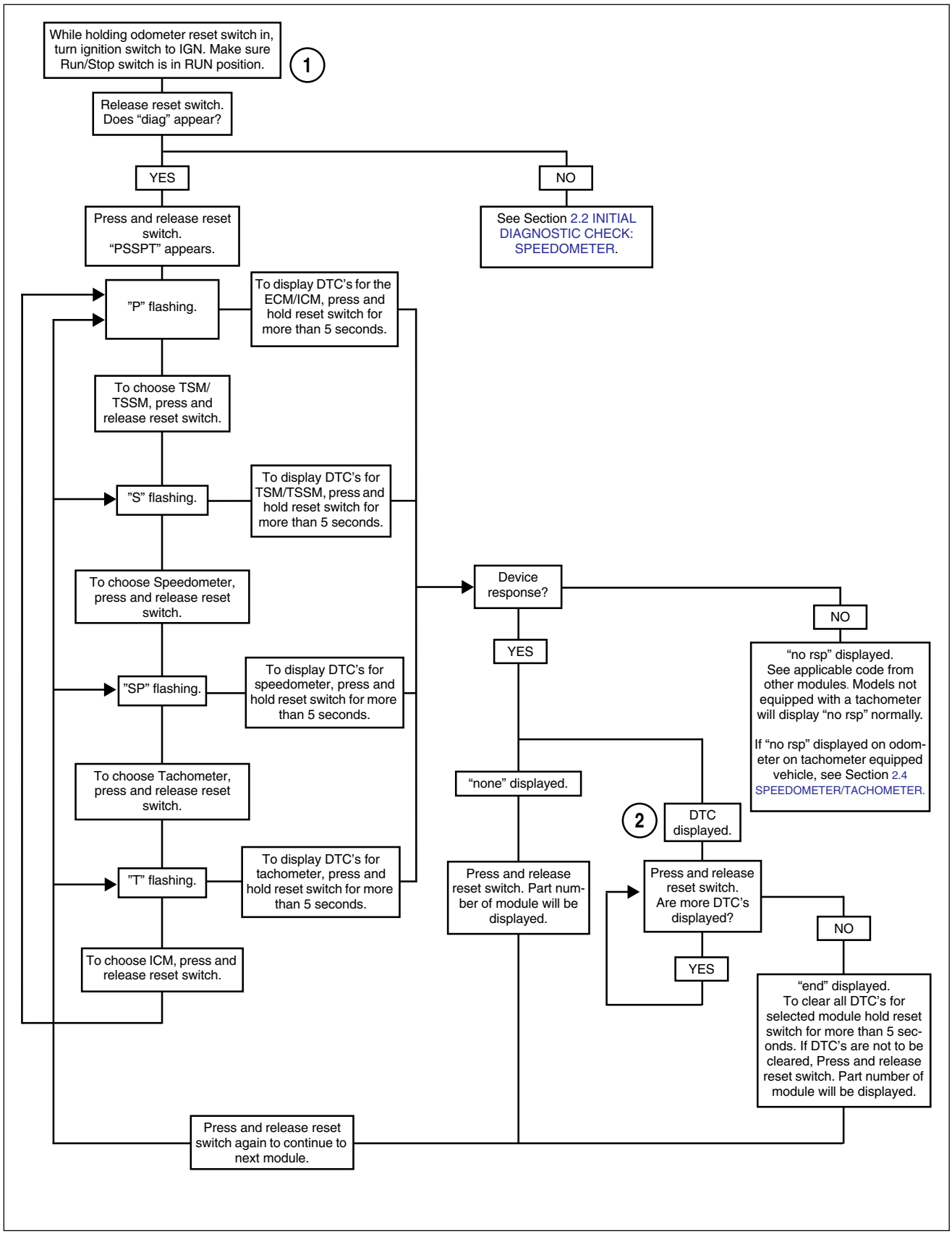

Figure 2-13. Speedometer Self Diagnostics

SPEEDOMETER/TACHOMETER 2.4

GENERAL

NOTE

Some icons may illuminate during "wow" test though the icon has no functionality on that vehicle.

The speedometer consists of a speedometer display and several icons. The icons include: check engine, security, battery, and low fuel (EFI only).

Reset Switch

See Figure 2-14. Pressing the odometer reset switch provides the following capabilities:

- Change the odometer display between mileage, trip A and trip B values (press and immediately release).
- Reset an individual trip odometer (press and hold 2-3 seconds).
- Gain access to the diagnostic mode, clear DTC's and exit diagnostic mode. See Section 2.3 SPEEDOMETER SELF DIAGNOSTICS.
- Display odometer while key is OFF. Press and hold reset switch while key is OFF and odometer mileage will be displayed.
- On models with dual scale speedometers, toggle between miles/kilometers on odometer and trip odometer display. To toggle display, turn key ON. Press and hold reset switch while odometer is displayed. Release switch when change is noted. (If reset switch is held while trip odometer is displayed, trip odometer will reset.)

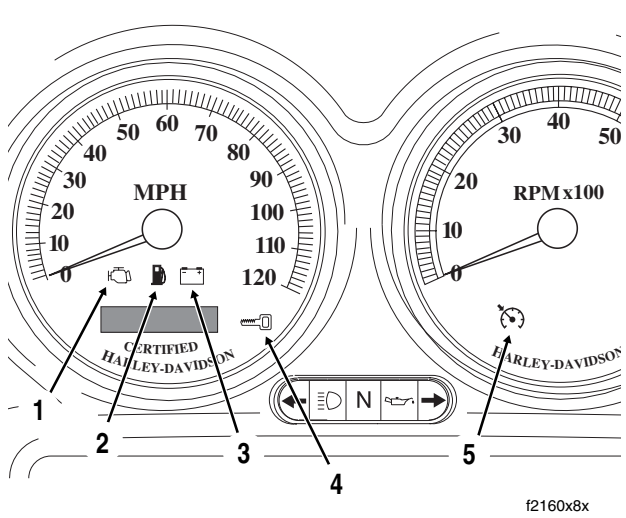

1. **Check Engine**
2. **Low Fuel**
3. **Battery**
4. **Security**
5. **Cruise (Where Applicable)**

Figure 2-14. Icons (FLHX, FLHT/C/U)

SPEEDOMETER THEORY OF OPERATION

The speedometer consists of a VSS, ICM/ECM, odometer reset switch and the speedometer. The VSS is mounted on the right side of transmission case below the starter. The sensor circuitry is that of a Hall-Effect sensor that is triggered by the gear teeth of 4th gear on the transmission mainshaft.

The output from the sensor is a series of pulses that are interpreted by ICM/ECM circuitry, converted into serial data inside the ICM/ECM then sent to the speedometer to control the position of the speedometer needle and the liquid crystal (LCD) odometer display. The vehicle speed serial data is also transmitted to the TSM/TSSM for turn signal cancellation, sound system for automatic volume control (AVC), and cruise control (for vehicle speed control).

The odometer mileage is permanently stored and will not be lost when electrical power is turned off or disconnected. The odometer reset switch allows switching between the odometer, trip odometer A and trip odometer B displays.

To zero the trip odometer, have the desired trip odometer display visible, press and keep the reset switch depressed. The trip odometer mileage will be displayed for 2-3 seconds and then the trip mileage will return to zero miles.

The odometer can display six numbers to indicate a maximum of 999999 miles/kilometers. The trip odometers can display six numbers with a tenth of a mile accuracy for a maximum of 99999.9 miles/kilometers.

Job/Time Code Values

Dealership technicians filing warranty claims should use the job/time code values in Digital Technician.

TACHOMETER THEORY OF OPERATION

The tachometer receives serial data from the ICM/ECM. The tachometer interprets the serial data and converts it into tachometer needle movement.

DIAGNOSTICS

Diagnostic Notes

The reference numbers below correlate with circled numbers on the tachometer diagnostic flow chart.

1. If problems are intermittent, wiggle harness while performing tests.
2. Connect BREAKOUT BOX (Part No. HD-42682) and INSTRUMENT HARNESS ADAPTERS (Part No. HD-46601) between wire harness and tachometer.
3. Use HARNESS CONNECTOR TEST KIT (Part No. HD-41404A), black pin probe and patch cord.

HOME

Test 2.4 (Part 1 of 2)

TACHOMETER INOPERATIVE

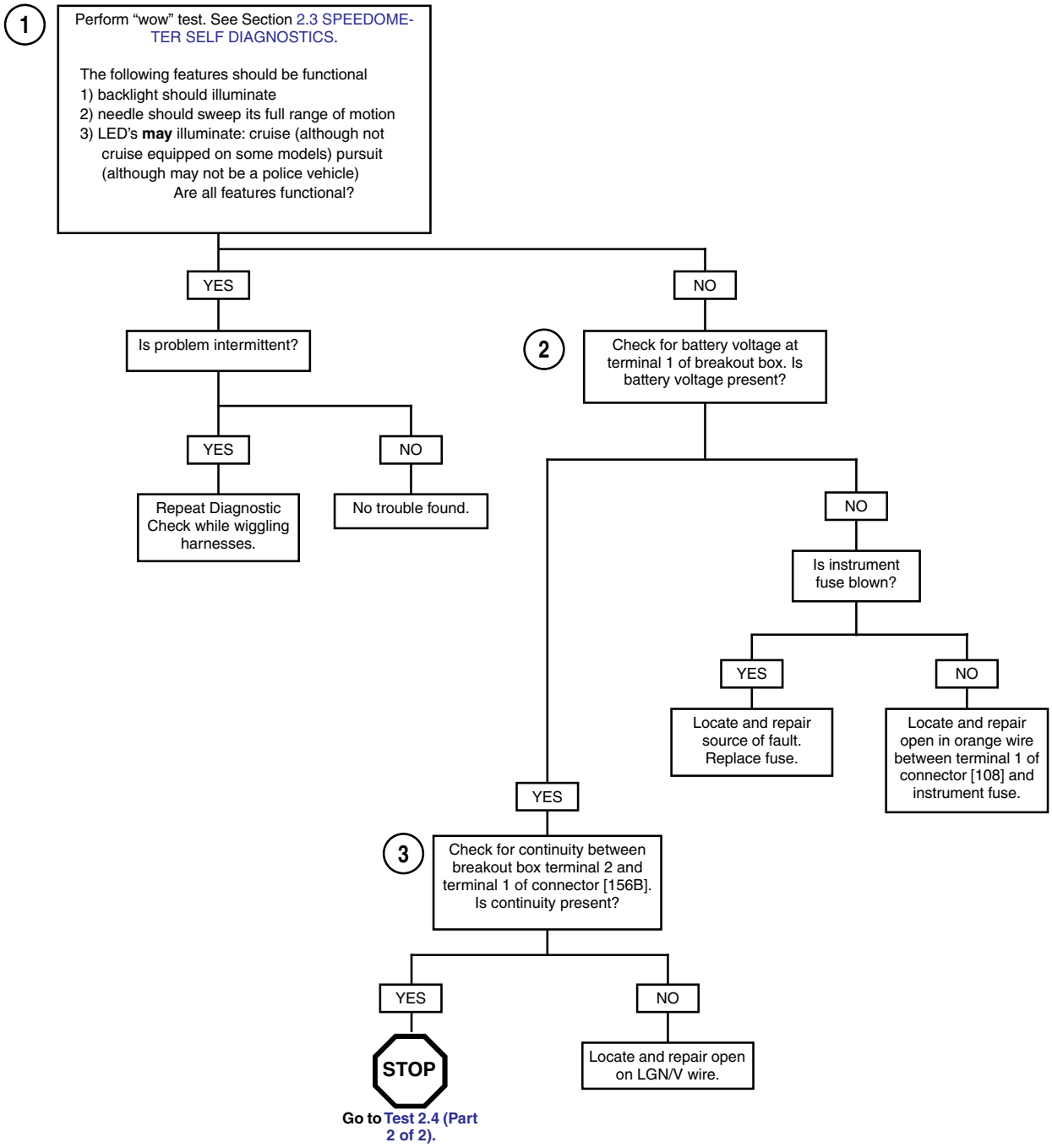

Test 2.4 (Part 2 of 2)

TACHOMETER INOPERATIVE

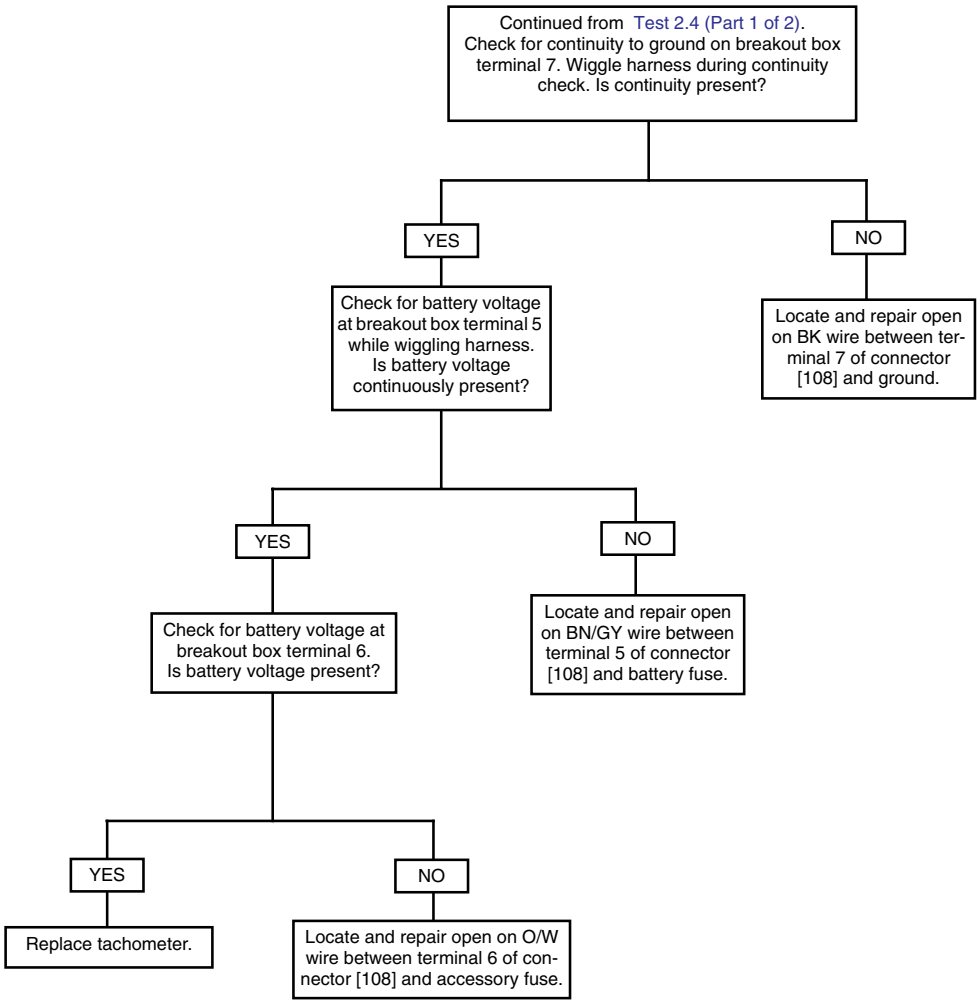

BREAKOUT BOX: SPEEDOMETER 2.5

GENERAL

The BREAKOUT BOX (Part No. HD-42682) and INSTRUMENT HARNESS ADAPTERS (Part No. HD-46601) connect to speedometer connector [39]. Used in conjunction with a DVOM, it allows circuit diagnosis of wiring harness and connections without having to probe with sharp objects

NOTE

See wiring diagrams for speedometer terminal functions.

INSTALLATION

1. See Figure 2-16. Bend back the external latches slightly and remove connector [39B].
2. Connect Instrument Harness Adapters to connectors [39A] and [39B].
3. Attach connectors from Breakout Box to Instrument Harness Adapters.

REMOVAL

1. Detach connectors from Breakout Box to Instrument Harness Adapters.
2. See Figure 2-15. Detach Instrument Harness Adapters from connectors [39A] and [39B].
3. Install connector [39B] to speedometer.

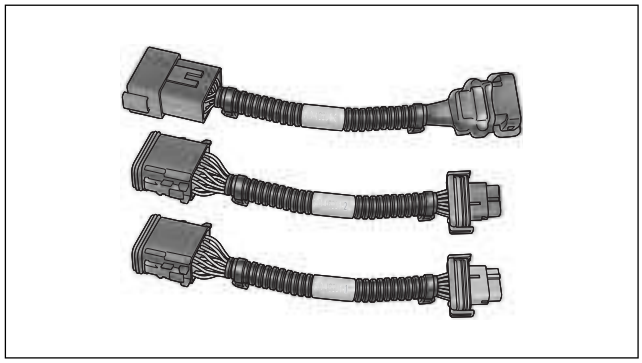

Figure 2-15. Instrument Harness Adapters (Part No. HD-46601)

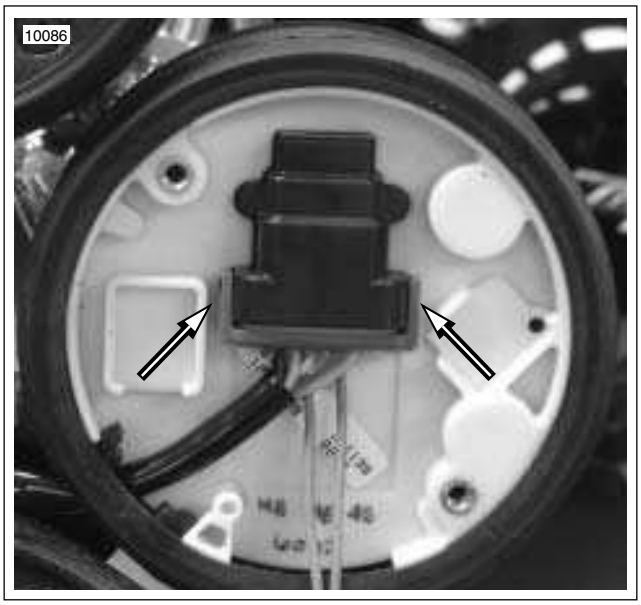

Figure 2-16. Speedometer Connector [39]

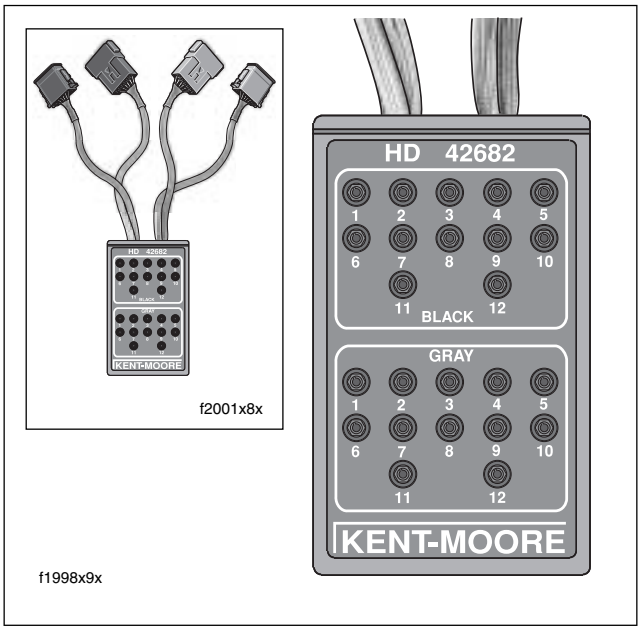

Figure 2-17. Breakout Box (Part No. HD-42682)

FUEL GAUGE 2.6

THEORY OF OPERATION

With ignition switch ON, the fuel gauge is connected to +12 volts. Current flows through the gauge and variable resistor in the fuel gauge sending unit to ground. The sending unit float controls the amount of resistance in the variable resistor.

Inoperative gauges may be caused by three circumstances.

- Sender or fuel gauge not grounded.
- Malfunction in sender or fuel gauge.
- Broken or disconnected wire from ignition switch to fuel gauge.

Use the FUEL GAUGE AND SENDER TEST to test suspect components.

FUEL GAUGE AND SENDER TEST

NOTE

Always refer to the applicable wiring diagram (at the rear of this manual) when troubleshooting instruments or gauges.

1. Remove gauge. Ground Y/W wire of fuel gauge sender located at bottom of gauge. Turn ignition switch ON.
   a. Fuel gauge must indicate FULL. If gauge indicated FULL, gauge is functioning correctly. Proceed to step 2.
   b. If gauge did not indicate FULL, proceed to step 3.
2. Set MULTI-METER (Part No. HD-35500) to RXI scale to measure the resistance of the sending unit. Place one probe on Y/W and the other probe on a good ground.

   FLHX, FLHT/C/U, FLTR:

   If fuel tank is full, the reading should be 7-14 ohms. An empty tank should have a 74-95 ohm resistance. A half full tank will be approximately 30-38 ohms.

   FLHR/C/S:

   If fuel tank is full, the reading should be 27-40 ohms. An empty tank should have a 240-264 ohm resistance. A half full tank will be approximately 97-118 ohms.

   ALL MODELS:

   If a very high resistance or infinity is indicated on the meter, the sender may be “open” or not grounded. Check that sender and fuel tank are grounded by placing one probe of Multi-Meter on sender flange and the other probe on crankcase. Meter must indicate one ohm or less. Replace sender if one ohm or less was present. If a higher resistance is present, check for poor connection on ground wire.
3. Check voltage to O/W (+) and BK (-) wire of fuel gauge connector [117] if gauge did not indicate FULL.
   a. Correct reading is equivalent to battery voltage.
   b. If battery voltage is not present check for broken or disconnected wire. Replace gauge if wiring problem is not found.

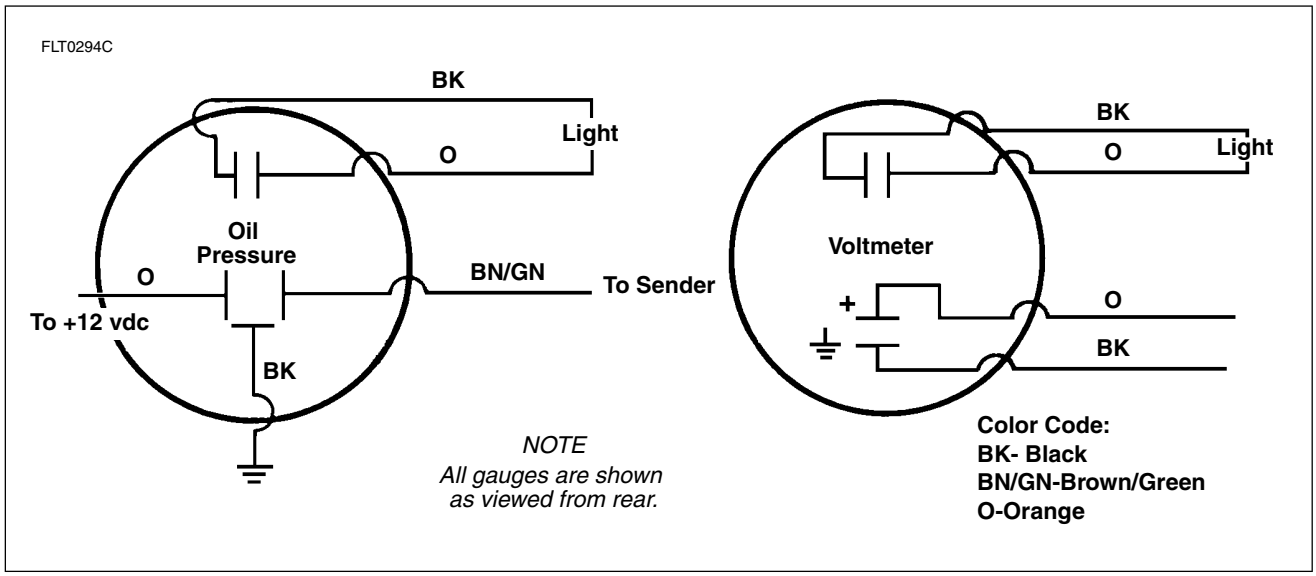

Figure 2-18. Connections for Gauges

OIL PRESSURE GAUGE AND INDICATOR LIGHT

Problem

Low oil pressure light remains on with engine running above idle and/or oil pressure gauge does not work.

Cause	Solution
No oil pressure due to lack of oil or faulty oil pump.	**CAUTION** **Running engine when OIL pressure light remains on and gauge indicates low pressure will result in engine damage.** 1. Check oil level. Add oil if low. 2. Restart engine and verify that oil pressure light goes off and gauge indicates pressure. If problem still exists, refer to OIL PUMP in the Touring Service Manual.
Contacts in pressure sending unit not opening to shut off light. Variable resistor in sender is shorted to ground.	1. Locate the oil pressure sending unit on the front right side of the crankcase. 2. Verify that the electrical connector is properly connected to the sending unit. 3. If the oil pressure gauge indicates pressure but the low oil pressure light remains on, proceed as follows: a. Remove electrical connector from oil pressure sending unit. Using ohmmeter and Harness Connector Test Kit (HD-41404A), gray socket probe and patch cord, place one probe on indicator lamp terminal (closest to latch on sending unit), place the other probe on the crankcase. Ohmmeter must read less than one ohm. b. Start the engine and run at a fast idle. The ohmmeter must read infinity. c. Replace the sending unit if the above meter readings are **not** obtained. 4. If the low oil pressure light functions correctly, but the pressure gauge does not, then proceed as follows: a. Remove electrical connector from oil pressure sending unit. Turn the Ignition/ Light Key Switch to IGNITION. The gauge must read zero. b. Ground BN/GN wire terminal to crankcase. The gauge must read full scale 60 PSI. c. Replace the sending unit if the above gauge readings are obtained. If the gauge readings are **not** obtained, then replace the pressure gauge.
No power to gauge.	See Voltmeter.

AMBIENT AIR TEMPERATURE GAUGE

Problem

Gauge inoperative.

Cause	Solution
Sensor not grounded or open between sensor and gauge.	Test for continuity between pin 1 and ground and pin 3 and gauge. Repair if open.
Broken or disconnected power or ground wire to gauge.	Check for 12 vdc between pins 1 and 3 at connector [115A]. Replace gauge if voltage is present. Use voltage drop tests and continuity checks to isolate if voltage is not present.
Malfunction in gauge or sensor.	Measure resistance between pins 1 and 3 at 65˚ to 85˚ F. Resistance should be 43-31 ohms. Replace sensor if out of range, replace gauge if within range.

VOLTMETER GAUGE

Problem

Meter inoperative.

Cause	Solution
Broken or disconnected leads to meter or open meter winding.	1. With Ignition/Light Key Switch turned to IGNITION, verify that 12 vdc is present at “±” terminal on voltmeter. With switch turned to OFF, check ground terminal for continuity to ground. 2. Replace the voltmeter if 12 vdc is present and ground terminal is grounded. 3. If 12 vdc is not present, trace wiring until disconnected or broken wire is found and repair as necessary. If ground terminal is not grounded, refer to wiring diagram and repeat procedure given for 12 vdc lead.

INDICATOR LAMPS: FLHX, FLHT/C/U, FLTR 2.8

GENERAL

See Figure 2-19. All models except FLHR/C/S are equipped with incandescent indicator lamps which may be replaced individually. See the Touring Models Service Manual for lamp replacement procedure. See DIAGNOSTICS which follows for troubleshooting procedures.

Table 2-7. Indicator Lamp Connector [21]

TERMINAL	WIRE COLOR	FUNCTION
1	Brown	Right Turn Power
2	Green/Yellow	Oil Pressure Lamp To Switch
3	White	High Beam Power
4	Violet	Left Turn Power
5	Black	Right Turn Ground
6	Orange	Oil Pressure Power
7	Tan	Neutral Lamp To Switch
8	Orange	Neutral Power
9	Black	High Beam Ground
10	Black	Left Turn Ground

Table 2-8. Indicator Lamp Wiring

INDICATOR LAMP	CONNECTION
Oil pressure	Ground Through Switch
Neutral	Ground Through Harness
High beam	12 VDC When Active
Right/left turn	12 VDC When Active

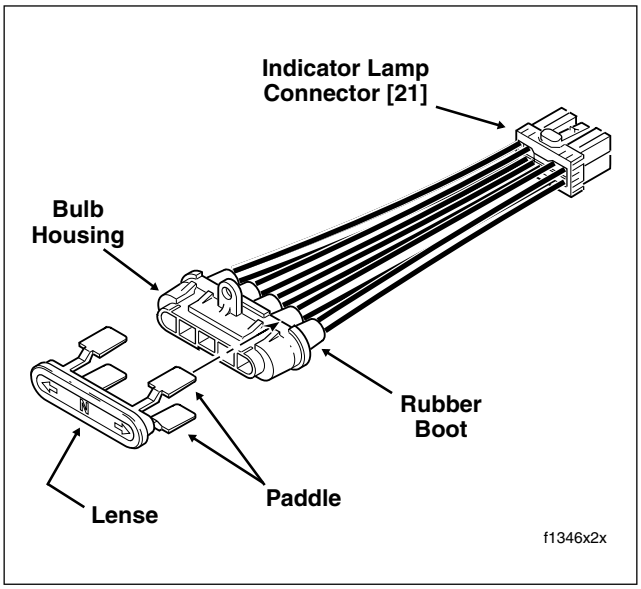

Figure 2-19. Indicator Lamp Assembly (FLHX, FLHT/C/U, FLTR)

Job/Time Code Values

Dealership technicians filing warranty claims should use the job/time code values printed in **bold text** underneath the appropriate repair.

DIAGNOSTICS

Oil Pressure or Neutral Indicator Will Not Function

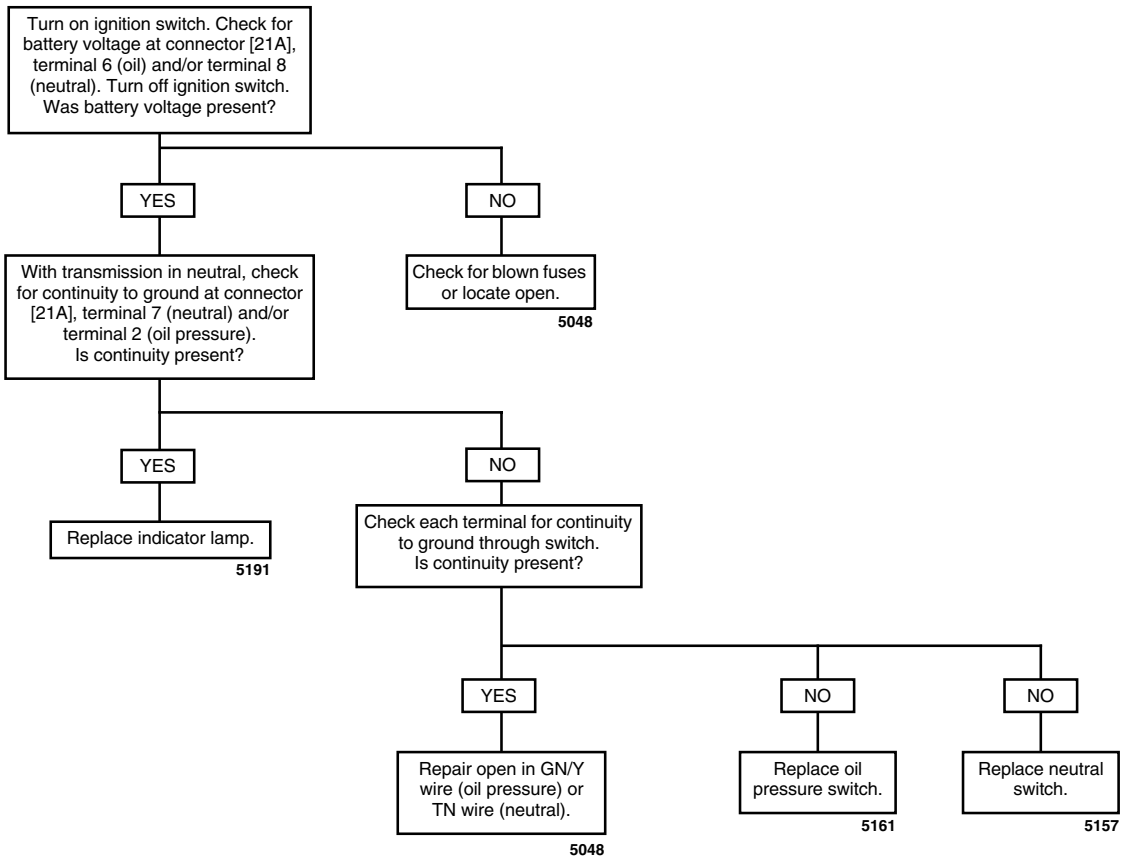

High Beam or R/L Turn Signal Indicator Will Not Function

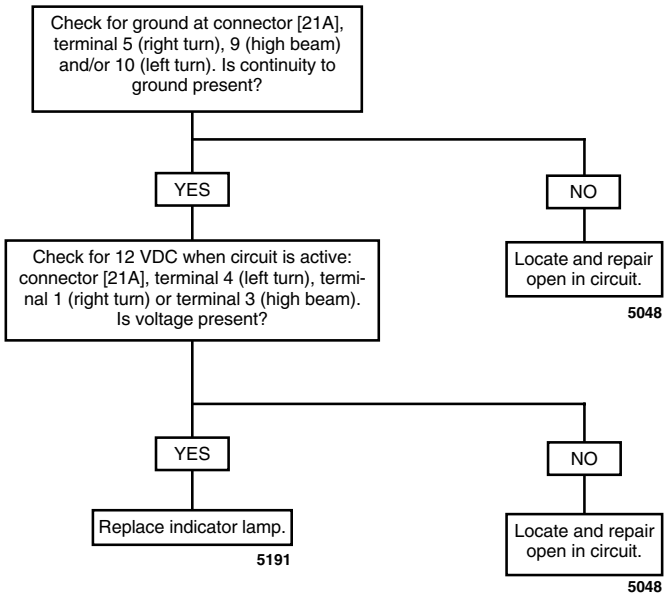

INDICATOR LAMPS: FLHR/C/S 2.9

GENERAL

FLHR/C/S models are equipped with Light Emitting Diode (LED) indicators. The indicator lamp assembly is not serviceable. If one LED is bad, the entire assembly must be replaced.

See DIAGNOSTICS which follows for troubleshooting procedures.

Table 2-9. Indicator Lamp Connector [21]

TERMINAL	WIRE COLOR	FUNCTION
1	Violet	Left Turn
2	White	High Beam
3	Green/yellow	Oil Pressure
4	Brown	Right Turn
5	Tan	Neutral
6	Orange	Neutral/Oil Pressure
7	Black	Left Turn/high Beam
8	Not used	N/A

Table 2-10. LED Assembly Wiring

INDICATOR LAMP	CONNECTION
Oil pressure	Ground Through Switch
Neutral	Ground Through Harness
High beam	12 VDC When Active
Right/left turn	12 VDC When Active

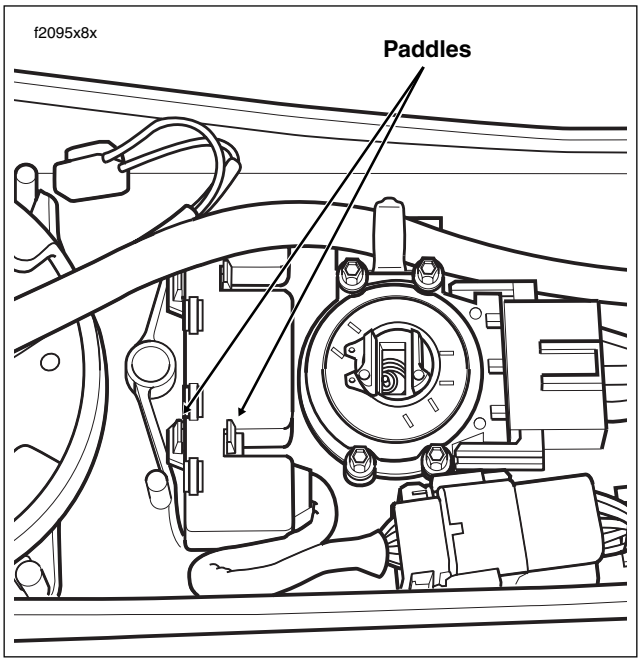

Figure 2-20. Release Paddles to Free Indicator Lights Assembly (FLHR/C/S)

Job/Time Code Values

Dealership technicians filing warranty claims should use the job/time code values printed in **bold text** underneath the appropriate repair.

DIAGNOSTICS

Oil Pressure or Neutral Indicator Will Not Function

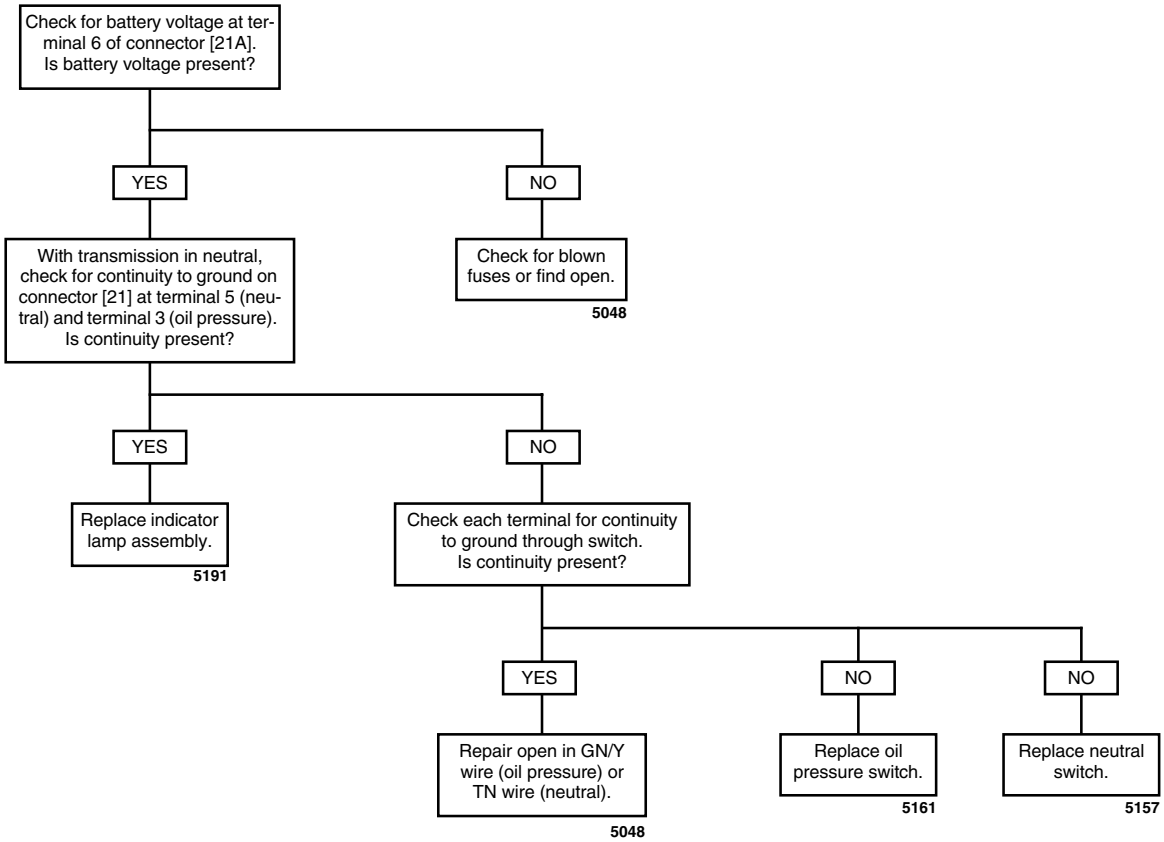

High Beam or R/L Turn Signal Indicator Will Not Function

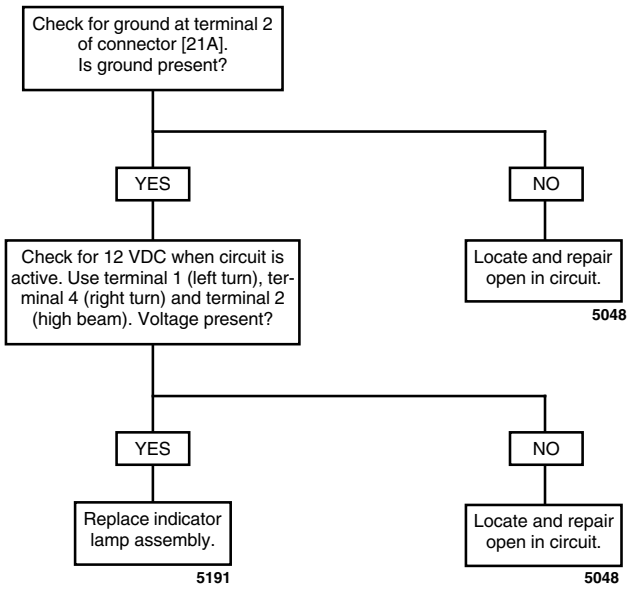

DTC B1004, B1005 2.10

GENERAL

The fuel level is monitored by the speedometer pin 9 of connector [39] (Y/W).

- If the voltage on pin 9 of connector [39] exceeds the lower limit for greater than or equal to 15 seconds, DTC B1004 will set.
- If the voltage on pin 9 of connector [39] exceeds the upper limit (or is open) for greater than or equal to 15 seconds a DTC B1005 will set.

Table 2-11. Code Description

DTC	DESCRIPTION
B1004	Fuel level sending unit low.
B1005	Fuel level sending unit high/open.

DIAGNOSTICS

Diagnostic Tips

If fuel gauge is performing erratically (possible false DTC's), inspect for unobstructed movement of sending unit arm. Repair or align as necessary.

Diagnostic Notes

The reference numbers below correlate with the circled numbers on the 2.10 flow chart.

1. Use HARNESS CONNECTOR TEST KIT (Part No. HD-41404A), brown pin probe and patch cord.
2. Connect BREAKOUT BOX (Part No. HD-42682) and INSTRUMENT HARNESS ADAPTERS (Part No. HD-46601) between wire harness and speedometer.

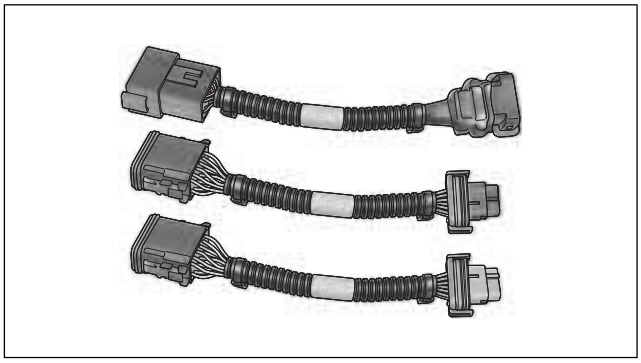

Figure 2-21. Instrument Harness Adapters (Part No. HD-46601)

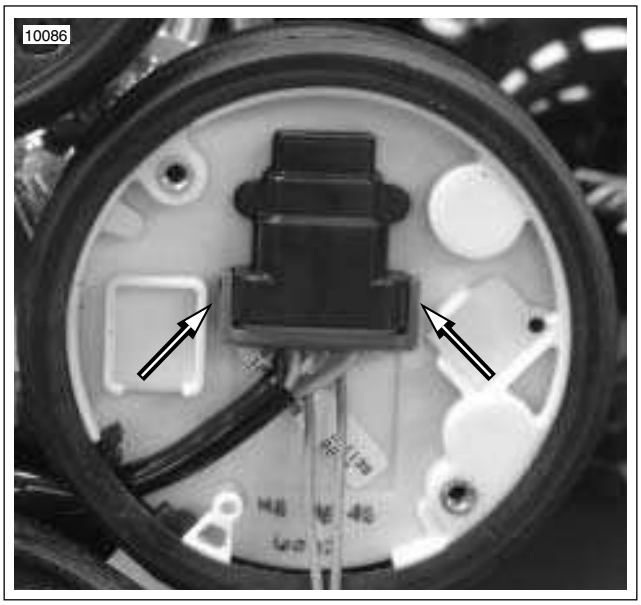

Figure 2-22. Speedometer Connector [39]

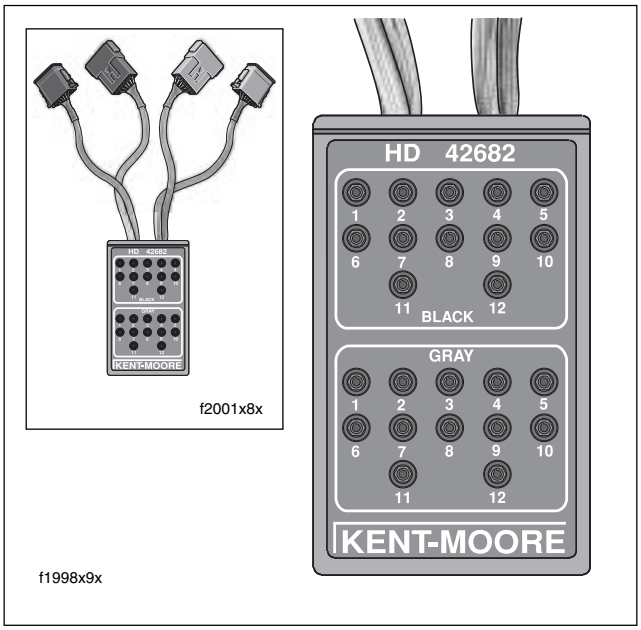

Figure 2-23. Breakout Box (Part No. HD-42682)

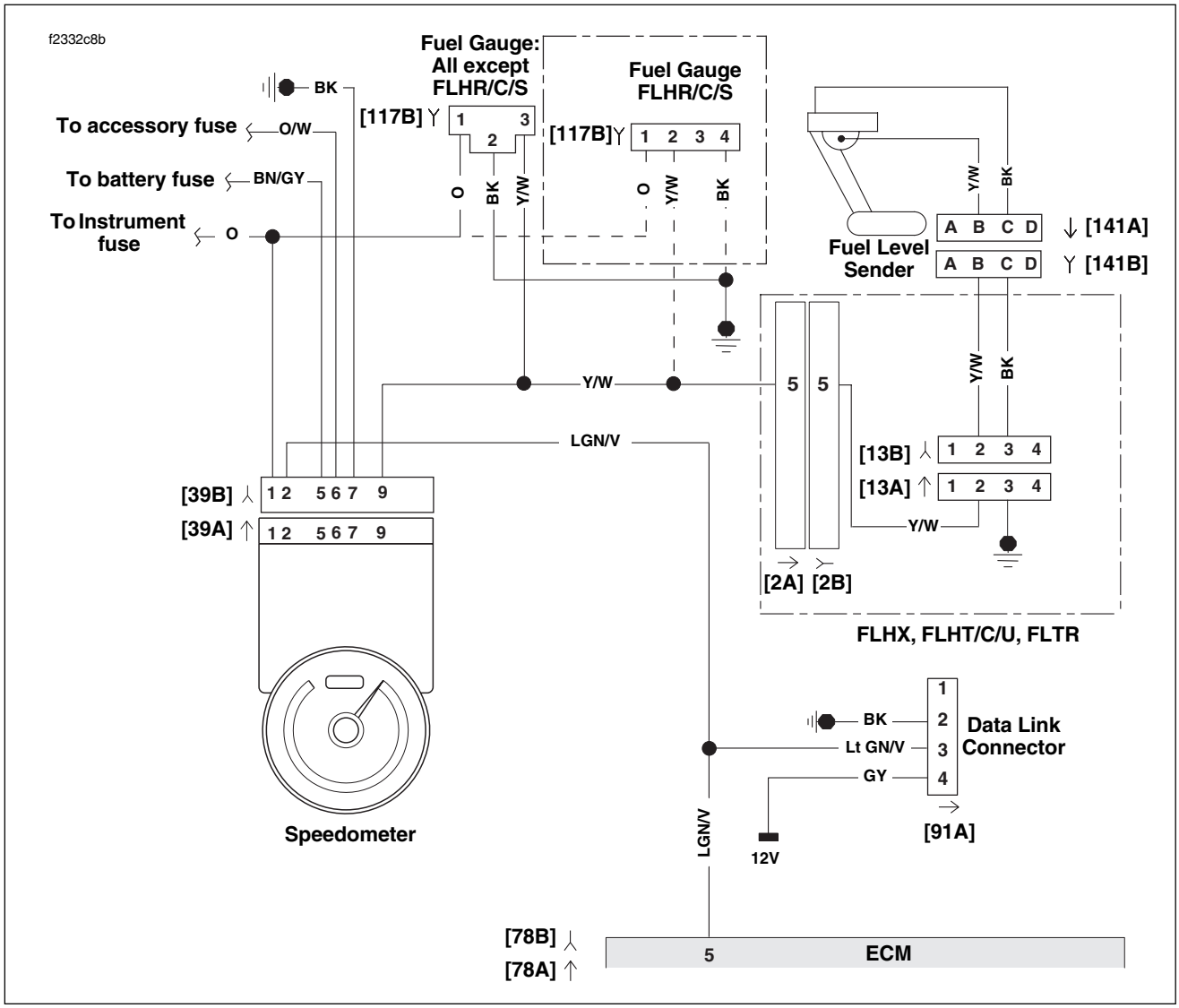

Figure 2-24. Fuel Sender Circuit

Table 2-12. Wire Harness Connectors in Figure 2-24.

NO.	DESCRIPTION	MODEL	TYPE	LOCATION
[2]	Main to Interconnect Harness	FLHT/C	12-Place Deutsch (Gray)	Inner Fairing - Right Fairing Support Brace
		FLTR	12-Place Deutsch (Gray)	Inner Fairing - Below Radio (Right Side)
[13]	Fuel Tank Harness	FLHT/C	4-Place Multilock	Behind Fuel Tank (Under Seat)
		FLTR	4-Place Multilock	Behind Fuel Tank (Under Seat)
[39]	Speedometer	FLHT/C	12-Place Packard	Inner Fairing (Back of Speedometer)
		FLTR	12-Place Packard	Under Bezel (Back of Speedometer)
[78]	ECM	All	36-Place Packard	Under Right Side Cover
[91]	Data Link	All	4-Place Deutsch	Under Right Side Cover
[141]	Fuel Level Sender	FLHT/C	4-Place Packard	Top of Canopy (Under Console)
		FLTR	4-Place Packard	Top of Canopy (Under Console)

HOME

Test 2.10: DTC B1004

FUEL LEVEL SENDING UNIT

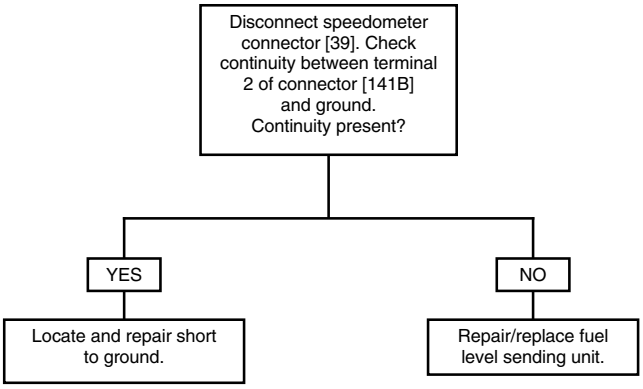

Clear codes using speedometer self diagnostics. See Section 2.3 SPEEDOMETER SELF DIAGNOSTICS. Confirm proper operation with no check engine lamp.

Test 2.10: DTC B1005

FUEL LEVEL SENDING UNIT

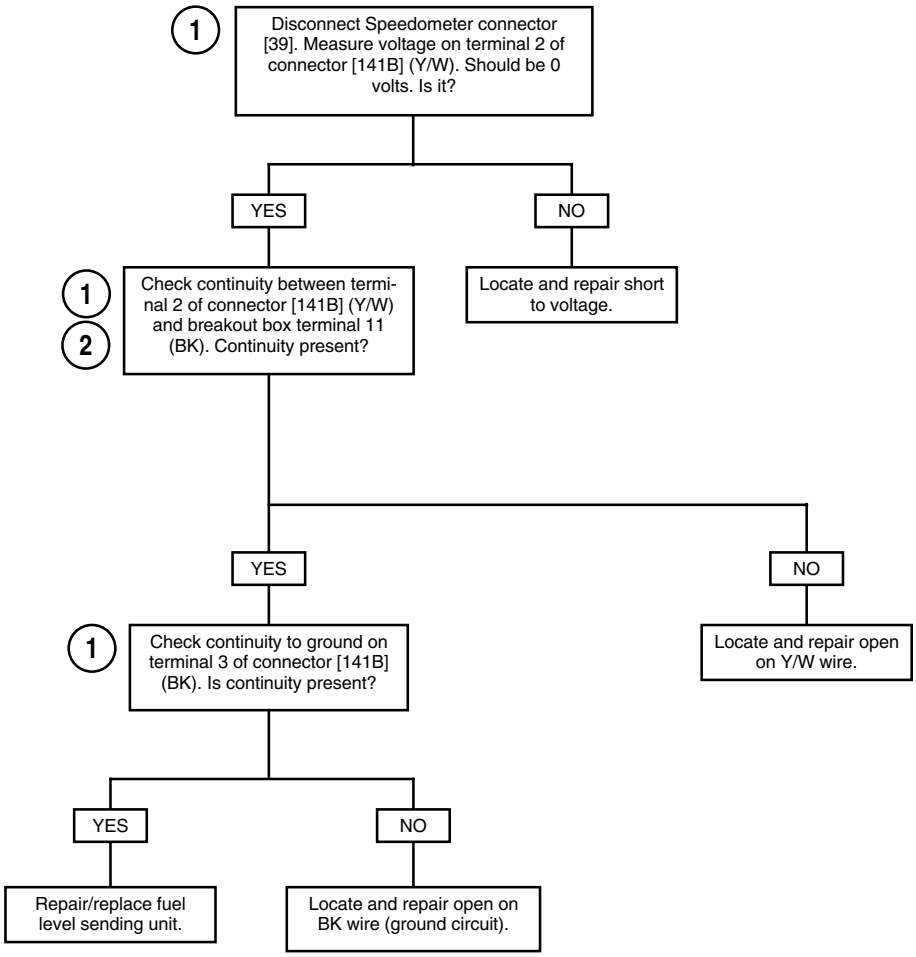

Clear diagnostic trouble codes using speedometer self diagnostics. See Section 2.3 SPEEDOMETER SELF DIAGNOSTICS. Confirm proper operation with no check engine lamp.

DTC B1006, B1007 2.11

GENERAL

Accessory Or Ignition Line Overvoltage

Ignition and accessory voltage is constantly monitored by the speedometer (terminal 1-ignition and terminal 6-accessory). If the battery voltage fails to meet normal operating parameters, a DTC is set.

- DTC B1006 is displayed when accessory line voltage is greater than 16.0 volts for longer than 5 seconds.
- DTC B1007 is displayed when ignition line voltage is greater than 16.0 volts for longer than 5 seconds.

NOTE

ICM/ECM or TSM/TSSM may also set battery voltage DTC's.

Table 2-13. Code Description

DTC	DESCRIPTION
B1006	Accessory line overvoltage
B1007	Ignition line overvoltage

Test 2.11

ACCESSORY OR IGNITION LINE OVERVOLTAGE: DTC B1006/B1007

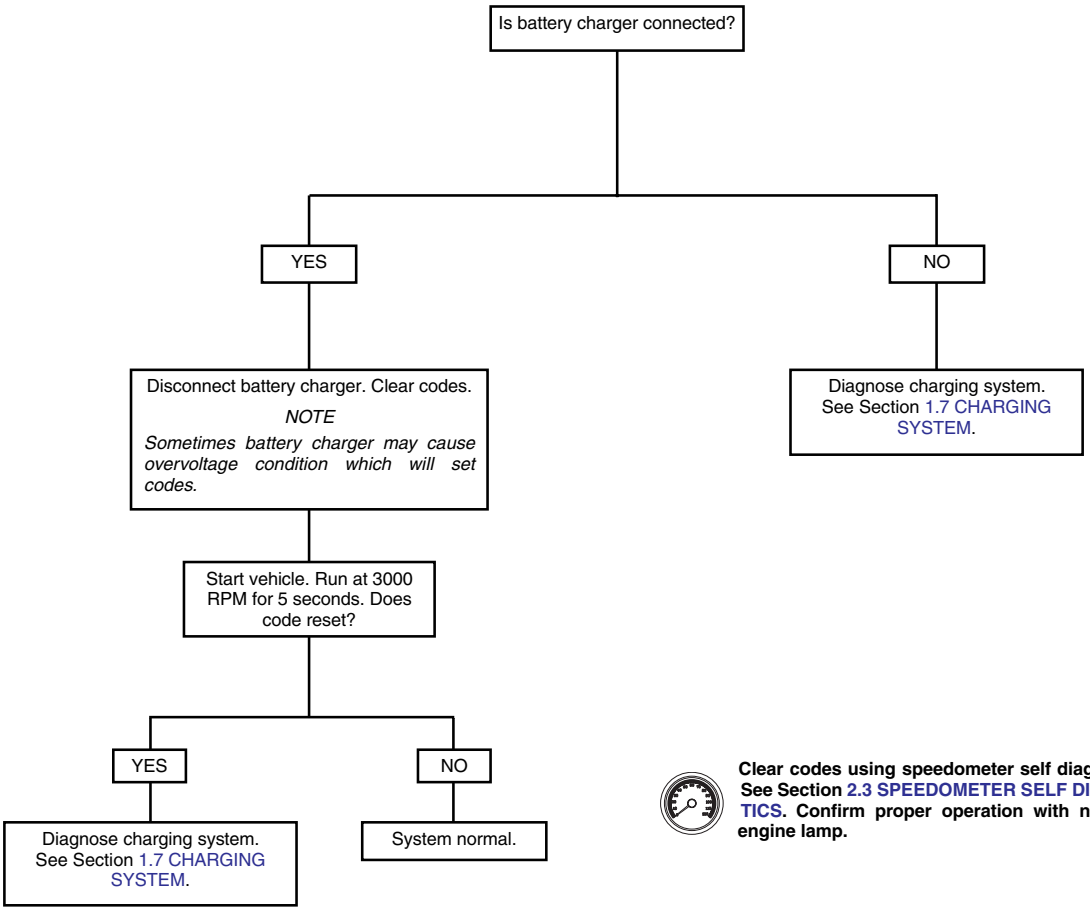

Clear codes using speedometer self diagnostics. See Section 2.3 SPEEDOMETER SELF DIAGNOSTICS. Confirm proper operation with no check engine lamp.

DTC B1008 2.12

GENERAL

Reset Switch Closed

DTC B1008 will be set if switch terminals are in a constant shorted state.

Table 2-14. Code Description

DTC	DESCRIPTION
B1008	Reset switch closed

DIAGNOSTICS

Diagnostic Notes

The reference numbers below correlate with the circled numbers on the Test 2.12 flow chart.

1. Connect BREAKOUT BOX (Part No. HD-42682) and INSTRUMENT HARNESS ADAPTERS (Part No. HD-46601) between wire harness and speedometer, **leaving speedometer disconnected**.

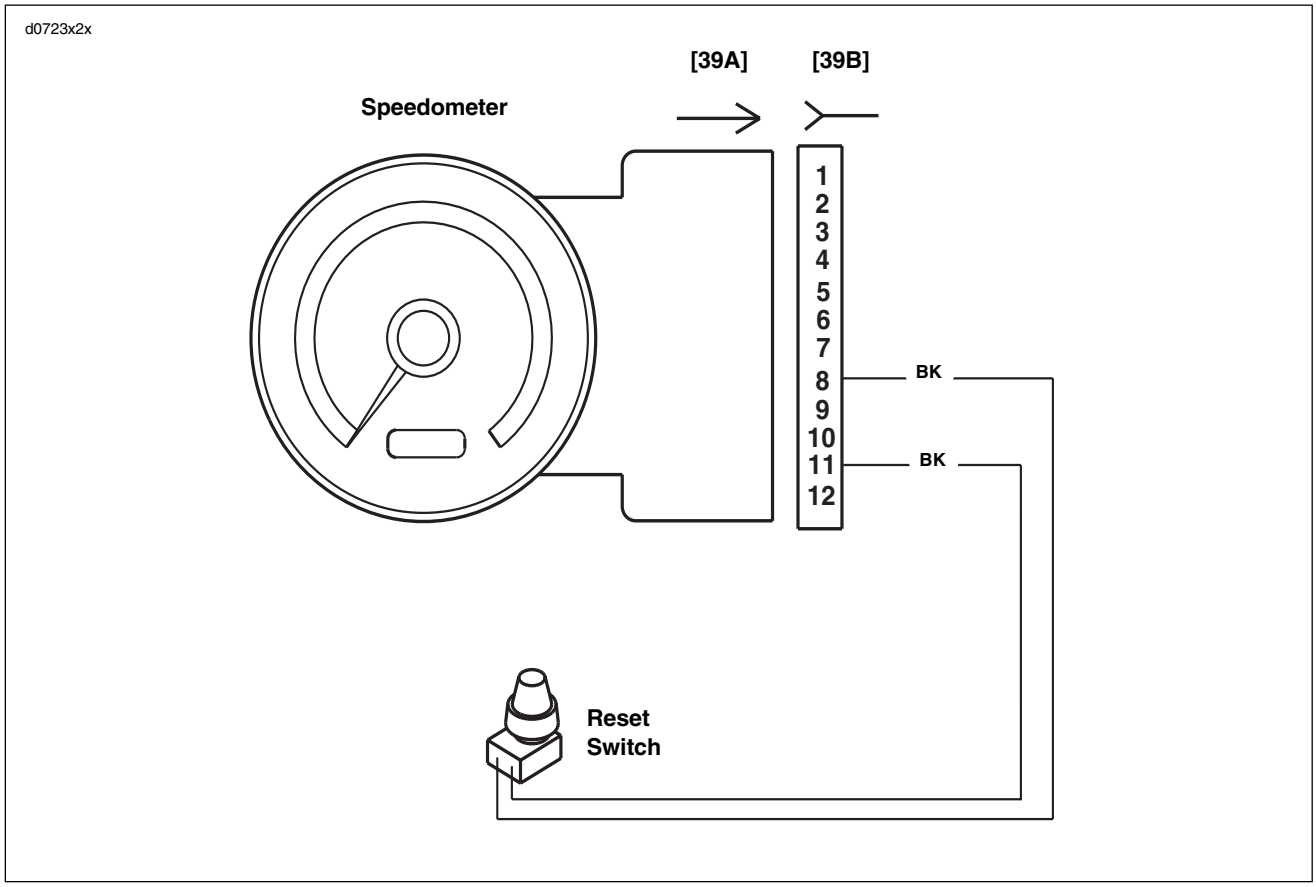

Figure 2-25. Reset Switch Circuit

Table 2-15. Wire Harness Connectors in Figure 2-25.

NO.	DESCRIPTION	MODEL	TYPE	LOCATION
[39]	Speedometer	FLHT/C	12-Place Packard	Inner Fairing (Back of Speedometer)
		FLTR	12-Place Packard	Under Bezel (Back of Speedometer)

HOME

Test 2.12

RESET SWITCH CLOSED: DTC B1008

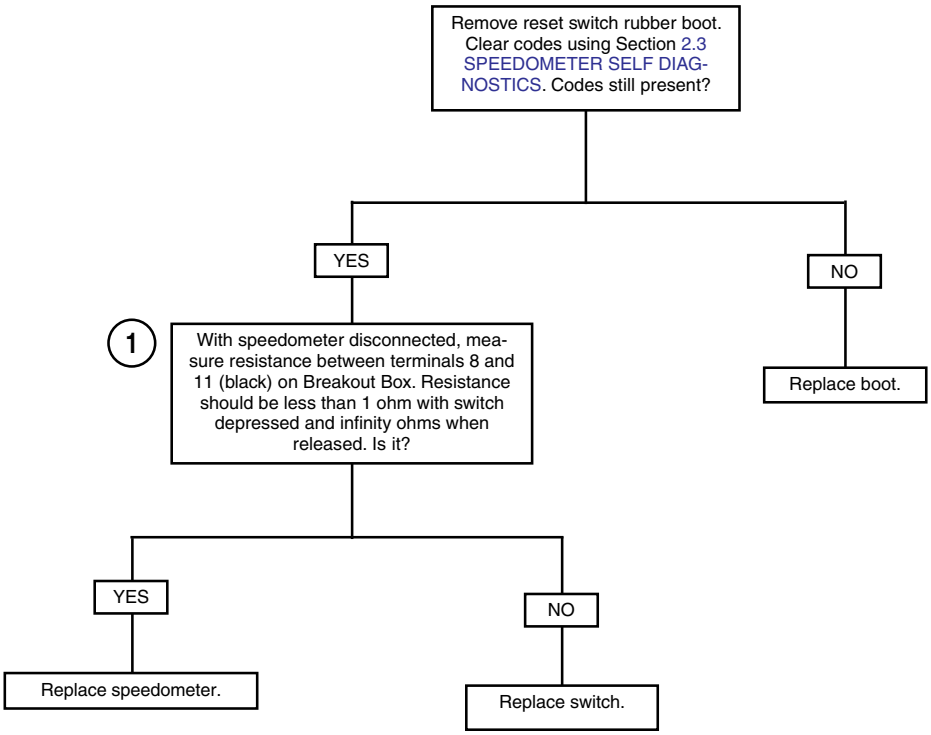

Clear codes using speedometer self diagnostics. See Section 2.3 SPEEDOMETER SELF DIAGNOSTICS. Confirm proper operation with no check engine lamp.

DTC U1016 2.13

GENERAL

Loss of ICM/ECM Serial Data

The serial data connector provides a means for the ICM or ECM, TSM/TSSM and speedometer to communicate their current status. When all operating parameters on the serial data bus are within specifications, a state of health message is sent between the components. A DTC U1016 indicates that the ICM/ECM is not capable of sending this state of health message.

Table 2-16. Code Description

DTC	DESCRIPTION
U1016	Loss of all ICM/ECM serial data (state of health)
	Loss of vehicle speed
	Loss of vehicle inhibit motion
	Loss of powertrain security status

DIAGNOSTICS

Diagnostic Notes

The reference numbers below correlate with the circled numbers on the Test 2.13 flow chart.

1. Connect BREAKOUT BOX (Part No. HD-42682) (gray) between TSM/TSSM connector [30A] and wire harness connector [30B]. See Section 3.11 BREAKOUT BOX: TSM/TSSM.

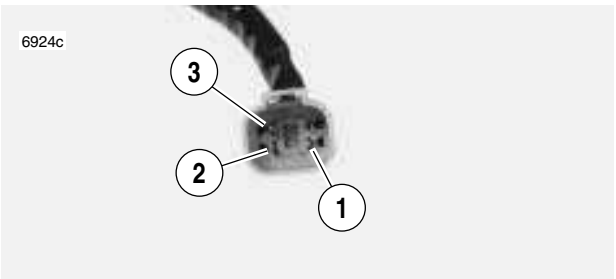

1. **Terminal 2: ground (BK)**
2. **Terminal 3: serial data (Lt GN/V)**
3. **Terminal 4: power (GY)**

Figure 2-26. Data Link Connector

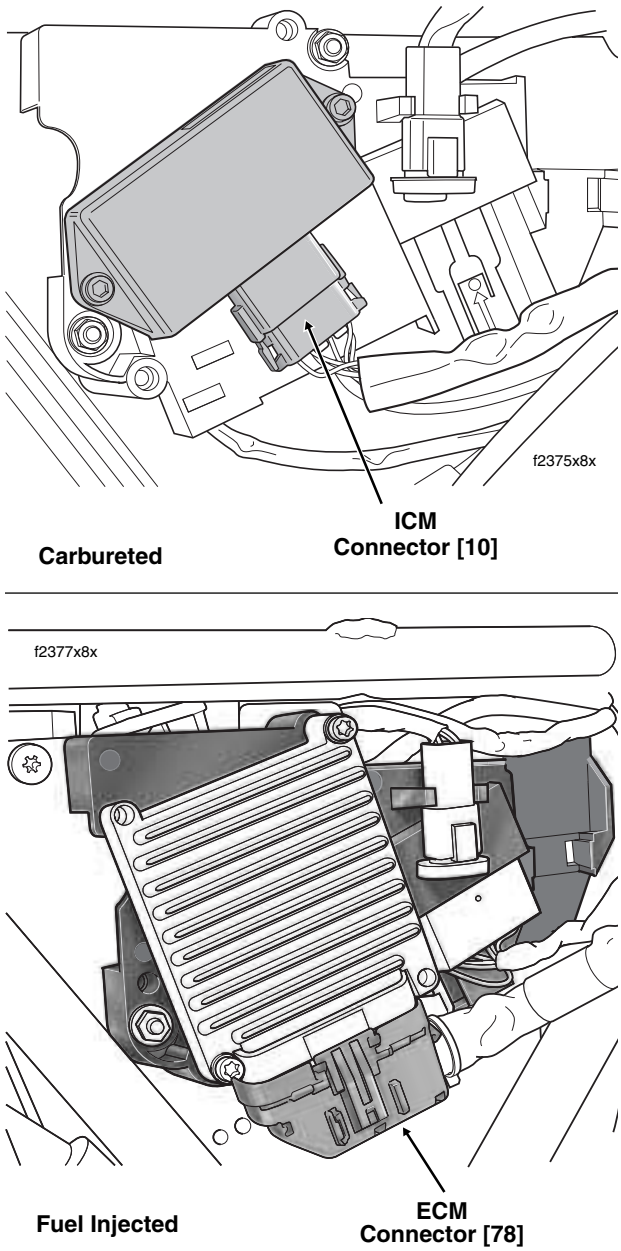

Figure 2-27. Electrical Bracket (Under Right Side Cover)

2. Connect BREAKOUT BOX (Part No. HD-42682) (black) between ICM connector [10A] and wiring harness connector [10B]. See Section 4.6 BREAKOUT BOX: ICM
3. Connect BREAKOUT BOX (Part No. HD-43876) between wire harness and ICM/ECM. See Section 5.7 BREAKOUT BOX: EFI.

HOME

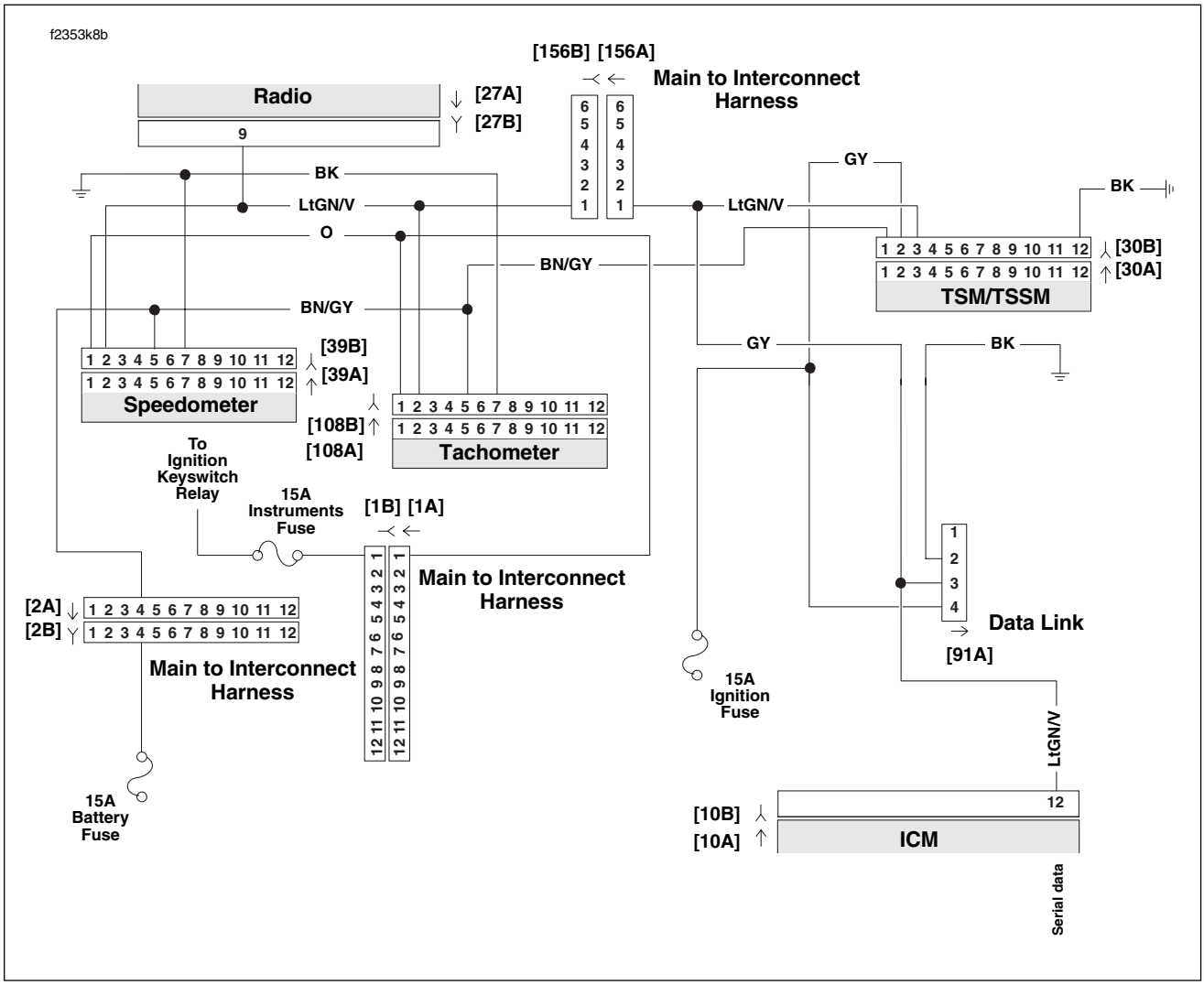

Figure 2-28. Serial Data Circuit: FLHX, FLHT/C (Carbureted)

Table 2-17. Wire Harness Connectors in Figure 2-28.

NO.	DESCRIPTION	TYPE	LOCATION
[1]	Main to Interconnect Harness	12-Place Deutsch (Black)	Inner Fairing - Right Radio Support Bracket
[2]	Main to Interconnect Harness	12-Place Deutsch (Gray)	Inner Fairing - Right Fairing Support Brace
[10]	ICM	12-Place Deutsch	Under Right Side Cover
[27]	Radio	23-Place Amp	Inner Fairing - Back of Radio (Right Side)
[30]	TSM/TSSM	12-Place Deutsch	Cavity in Crossmember at Rear of Battery Box (Under Seat)
[39]	Speedometer	12-Place Packard	Inner Fairing (Back of Speedometer)
[91]	Data Link	4-Place Deutsch	Under Right Side Cover
[108]	Tachometer	12-Place Packard	Inner Fairing (Back of Tachometer)
[156]	Main to Interconnect Harness	6-Place Deutsch	Inner Fairing - Right Fairing Support Brace

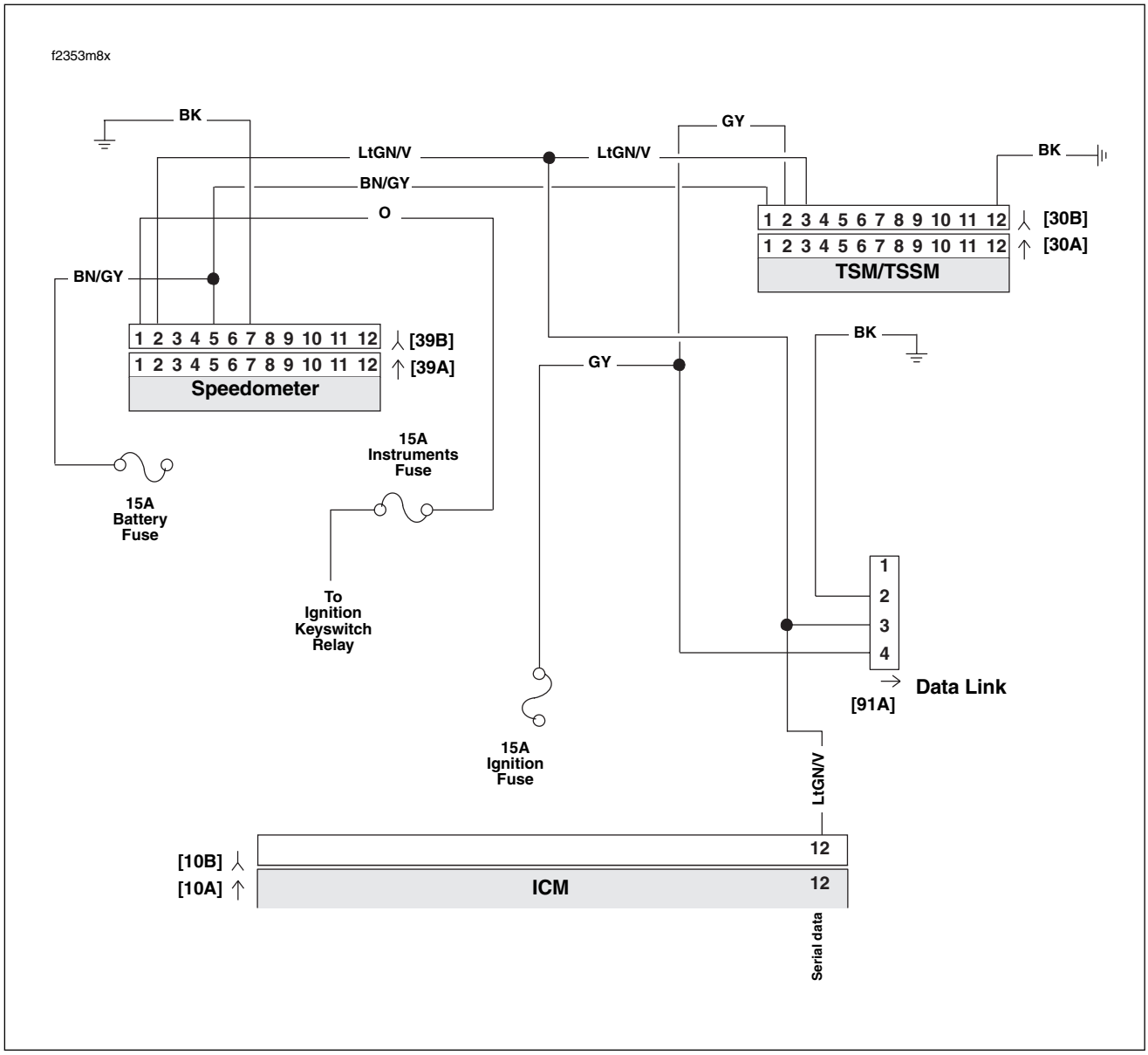

Figure 2-29. Serial Data Circuit: FLHR/S (Carbureted)

Table 2-18. Wire Harness Connectors in Figure 2-29.

NO.	DESCRIPTION	TYPE	LOCATION
[10]	ICM	12-Place Deutsch	Under Right Side Cover
[30]	TSM/TSSM	12-Place Deutsch	Cavity in Crossmember at Rear of Battery Box (Under Seat)
[39]	Speedometer	12-Place Packard	Under Console (Back of Speedometer)
[91]	Data Link	4-Place Deutsch	Under Right Side Cover

HOME

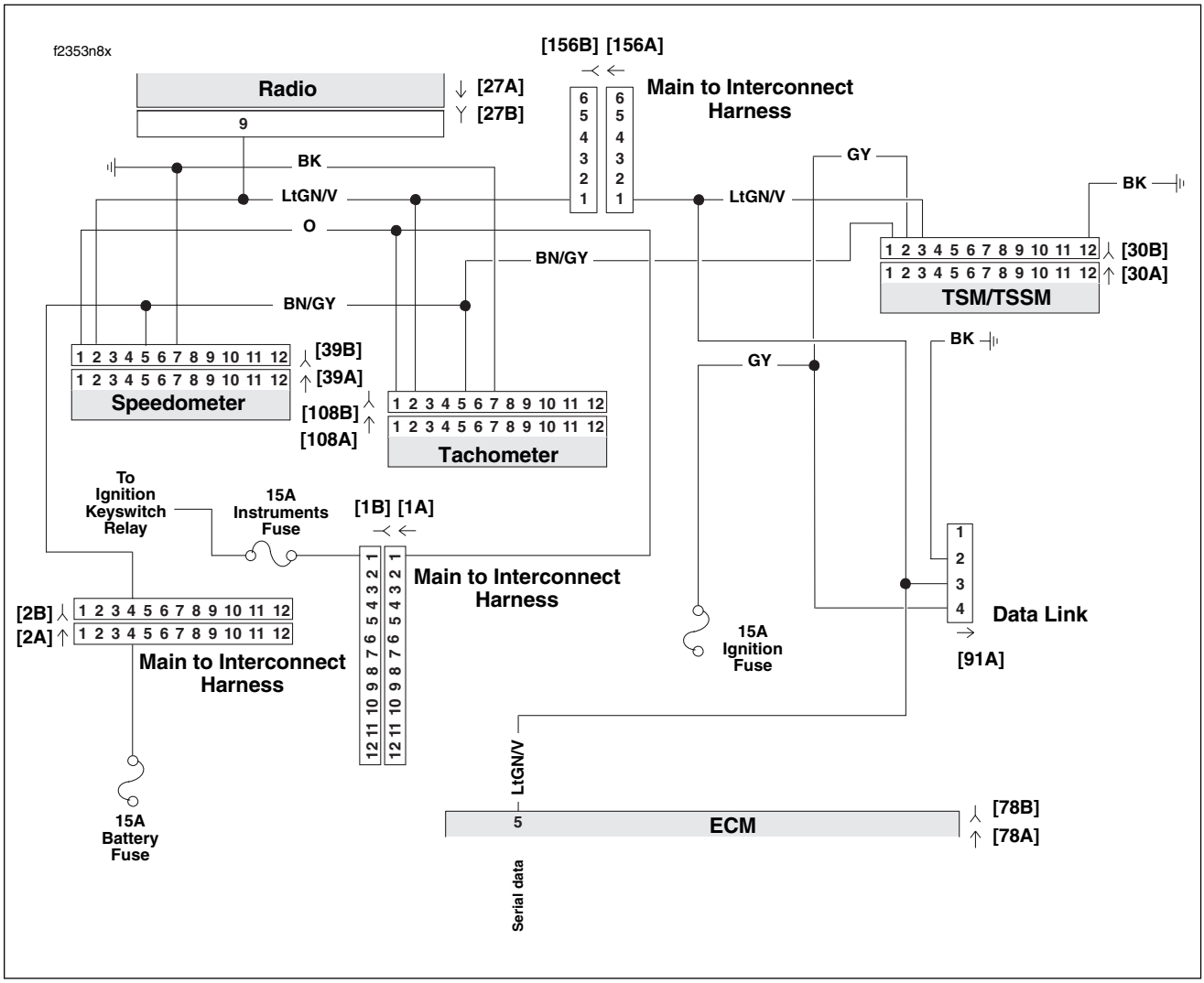

Figure 2-30. Serial Data Circuit: FLHX, FLHT/C/U, FLTR (Fuel Injected)

Table 2-19. Wire Harness Connectors in Figure 2-30.

NO.	DESCRIPTION	MODEL	TYPE	LOCATION
[1]	Main to Interconnect Harness	FLHT/C	12-Place Deutsch (Black)	Inner Fairing - Right Radio Support Bracket
		FLTR	12-Place Deutsch (Black)	Inner Fairing - Below Radio (Right Side)
[2]	Main to Interconnect Harness	FLHT/C	12-Place Deutsch (Gray)	Inner Fairing - Right Fairing Support Brace
		FLTR	12-Place Deutsch (Gray)	Inner Fairing - Below Radio (Right Side)
[27]	Radio	All	23-Place Amp	Inner Fairing - Back of Radio (Right Side)
[30]	TSM/TSSM	All	12-Place Deutsch	Cavity in Crossmember at Rear of Battery Box (Under Seat)
[39]	Speedometer	FLHT/C	12-Place Packard	Inner Fairing (Back of Speedometer)
		FLTR	12-Place Packard	Under Bezel (Back of Speedometer)
[78]	ECM	All	36-Place Packard	Under Right Side Cover
[91]	Data Link	All	4-Place Deutsch	Under Right Side Cover
[108]	Tachometer	FLHT/C	12-Place Packard	Inner Fairing (Back of Tachometer)
		FLTR	12-Place Packard	Under Bezel (Back of Tachometer)
[156]	Main to Interconnect Harness	FLHT/C	6-Place Deutsch	Inner Fairing - Right Fairing Support Brace
		FLTR	6-Place Deutsch	Inner Fairing - Below Radio (Right Side)

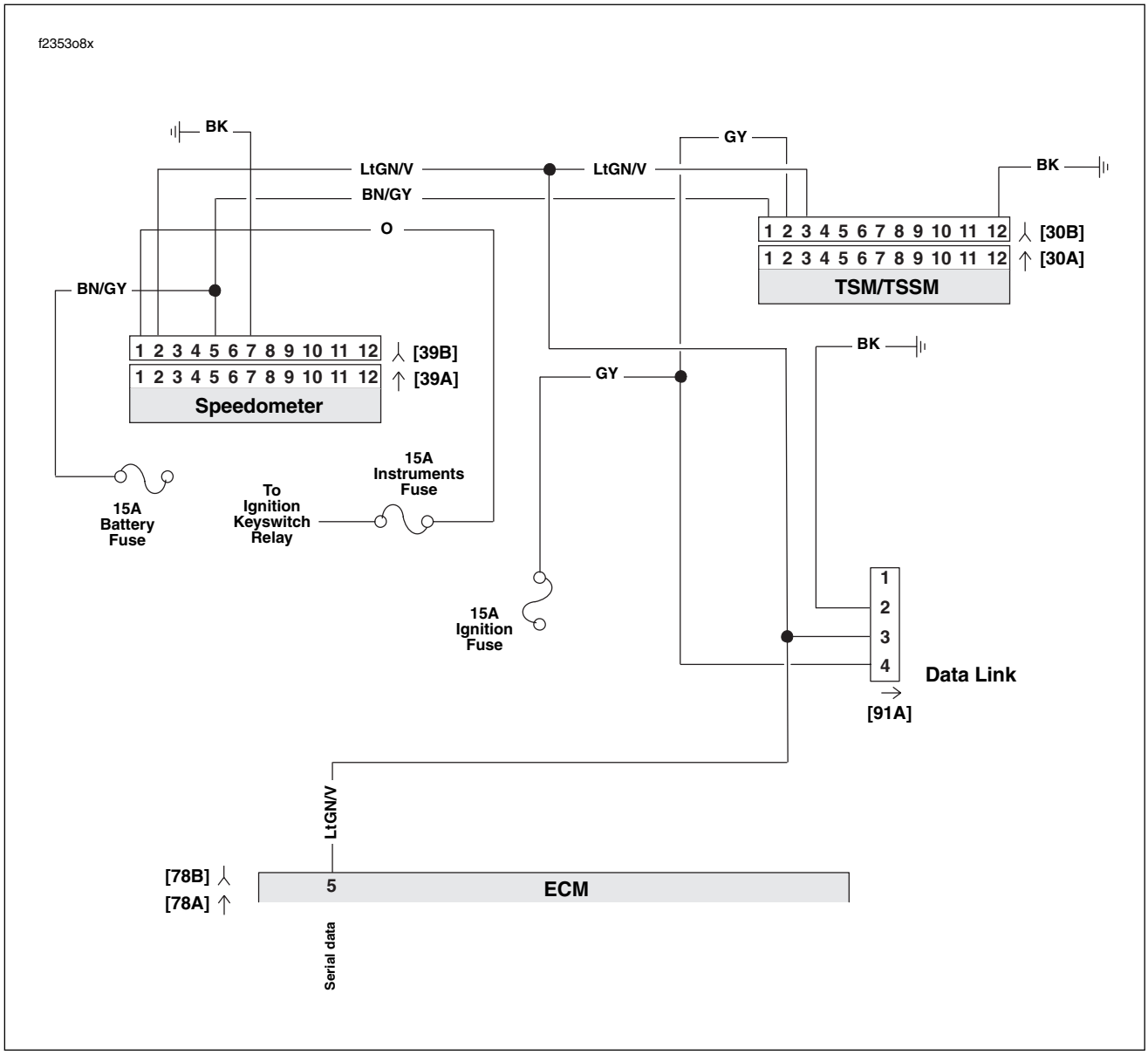

Figure 2-31. Serial Data Circuit: FLHR/C/S (Fuel Injected)

Table 2-20. Wire Harness Connectors in Figure 2-31.

NO.	DESCRIPTION	TYPE	LOCATION
[30]	TSM/TSSM	12-Place Deutsch	Cavity in Crossmember at Rear of Battery Box (Under Seat)
[39]	Speedometer	12-Place Mini-Deutsch	Under Console (Back of Speedometer)
[78]	ECM	36-Place Packard	Under Right Side Cover
[91]	Data Link	4-Place Deutsch	Under Right Side Cover

HOME

Test 2.13

LOSS OF ICM/ECM SERIAL DATA: DTC U1016

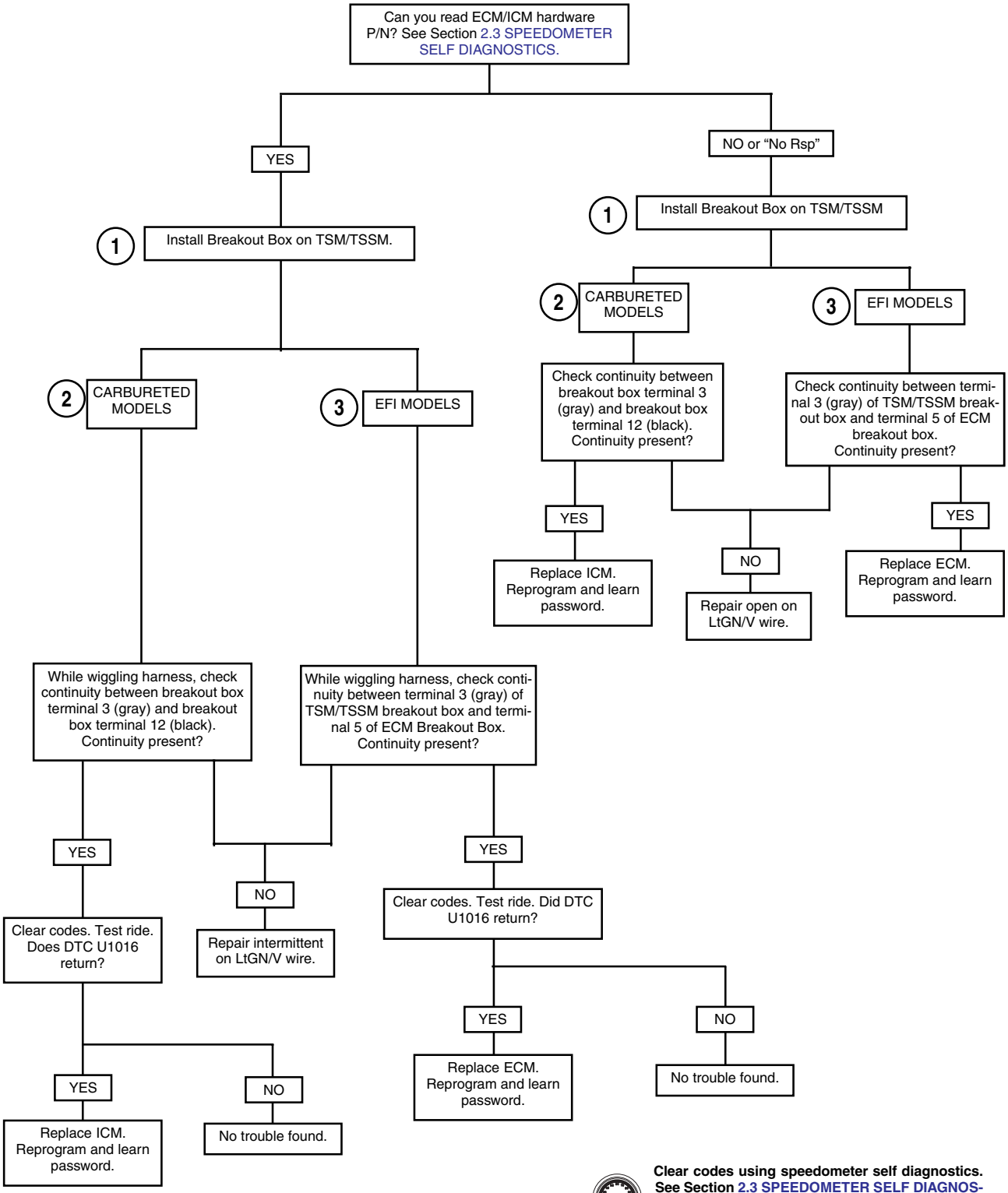

Clear codes using speedometer self diagnostics. See Section 2.3 SPEEDOMETER SELF DIAGNOSTICS. Confirm proper operation with no check engine lamp.

DTC U1064, U1255 2.14

GENERAL

Loss of TSM/TSSM Serial Data

The serial data connector provides a means for the ICM or ECM, TSM/TSSM and speedometer to communicate their current status. When all operating parameters on the serial data bus are within specifications, a state of health message is sent between the components. A DTC U1255 (only reported by the TSM/TSSM or speedometer) indicates that no messages were present during power up of the current key cycle. A DTC U1064 indicates that there was communication on the data bus since power up, but was lost or interrupted during that key cycle.

Table 2-21. Code Description

DTC	DESCRIPTION
U1064	Loss of TSM/TSSM serial data
U1255	Serial data error/missing message

DIAGNOSTICS

Diagnostic Notes

The reference numbers below correlate with the circled numbers on the Test 2.14 flow chart.

1. Connect BREAKOUT BOX (Part No. HD-42682) as follows:
   a. Mate black socket housing on Breakout Box with speedometer connector [39] using SPEEDOMETER HARNESS ADAPTER (Part No. HD-46601).
   b. Mate black pin housing on Breakout Box with speedometer harness connector [39B] using SPEEDOMETER HARNESS ADAPTER (Part No. HD-46601).
   c. Mate gray socket housing on Breakout Box with TSM/TSSM connector [30A].
   d. Mate gray pin housing on Breakout Box with harness connector [30B].

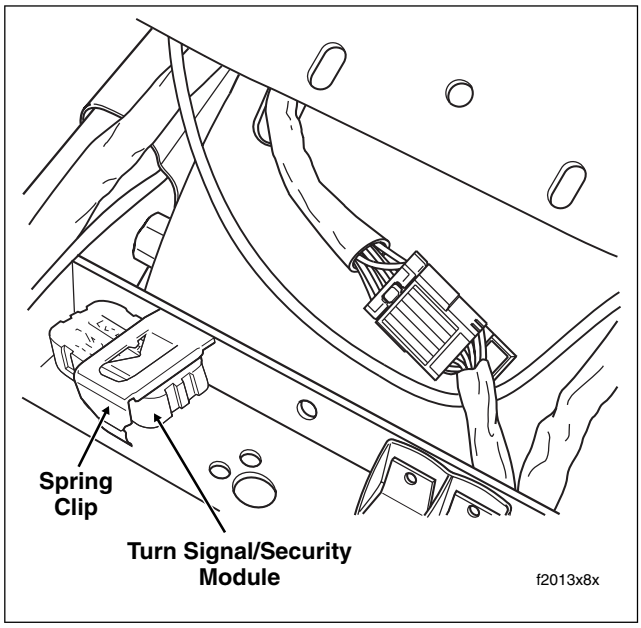

Figure 2-32. Frame Crossmember (Under Seat)

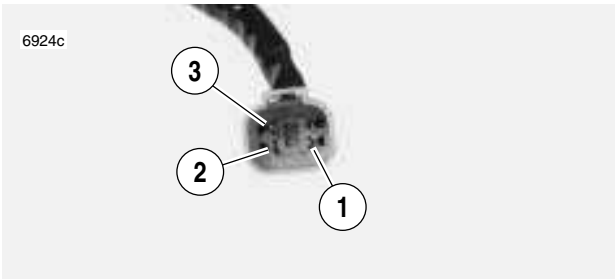

1. **Terminal 2: ground (BK)**
2. **Terminal 3: serial data (Lt GN/V)**
3. **Terminal 4: power (GY)**

Figure 2-33. Data Link Connector

HOME

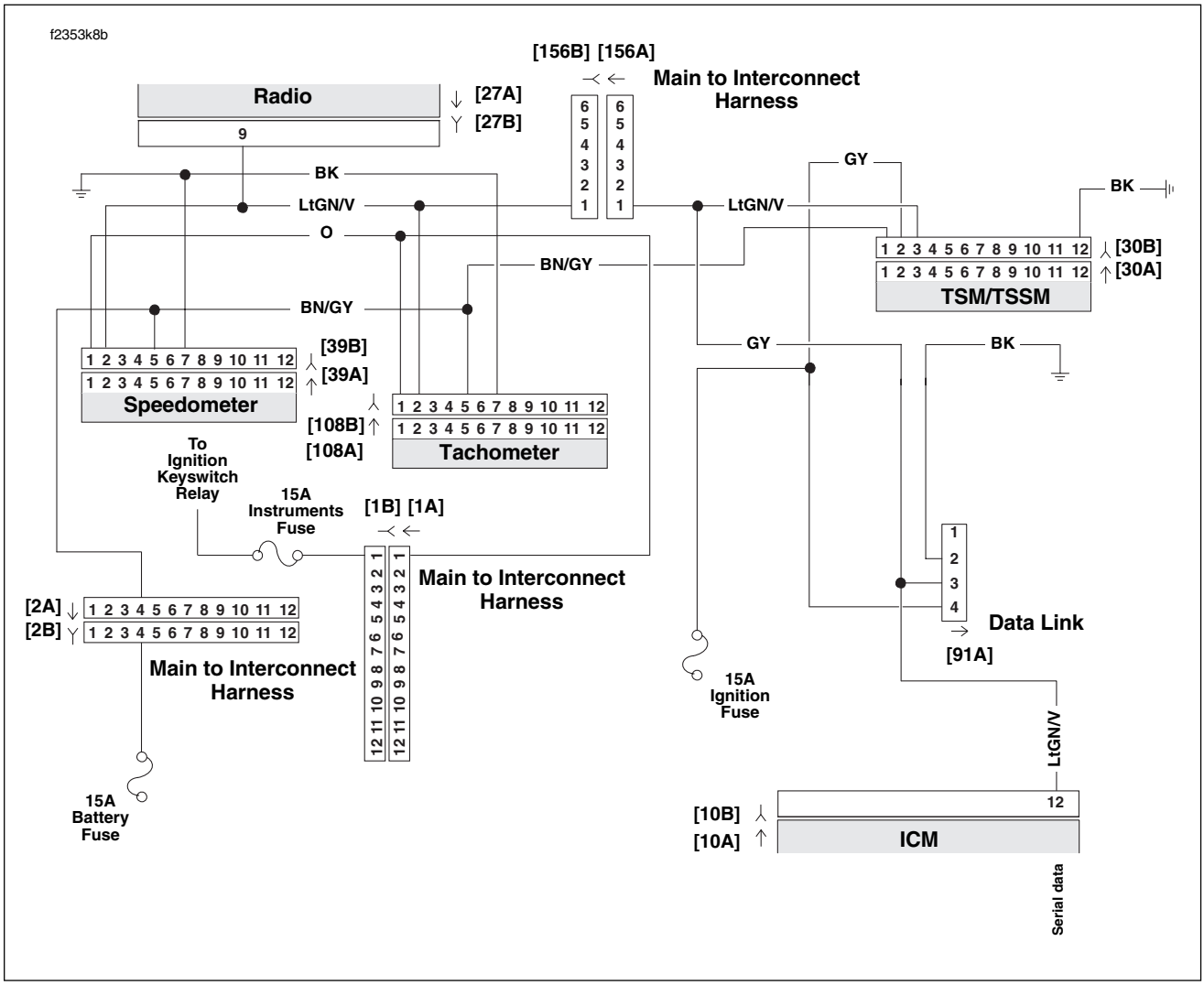

Figure 2-34. Serial Data Circuit: FLHX, FLHT/C (Carbureted)

Table 2-22. Wire Harness Connectors in Figure 2-34.

NO.	DESCRIPTION	TYPE	LOCATION
[1]	Main to Interconnect Harness	12-Place Deutsch (Black)	Inner Fairing - Right Radio Support Bracket
[2]	Main to Interconnect Harness	12-Place Deutsch (Gray)	Inner Fairing - Right Fairing Support Brace
[10]	ICM	12-Place Deutsch	Under Right Side Cover
[27]	Radio	23-Place Amp	Inner Fairing - Back of Radio (Right Side)
[30]	TSM/TSSM	12-Place Deutsch	Cavity in Crossmember at Rear of Battery Box (Under Seat)
[39]	Speedometer	12-Place Packard	Inner Fairing (Back of Speedometer)
[91]	Data Link	4-Place Deutsch	Under Right Side Cover
[108]	Tachometer	12-Place Packard	Inner Fairing (Back of Tachometer)
[156]	Main to Interconnect Harness	6-Place Deutsch	Inner Fairing - Right Fairing Support Brace

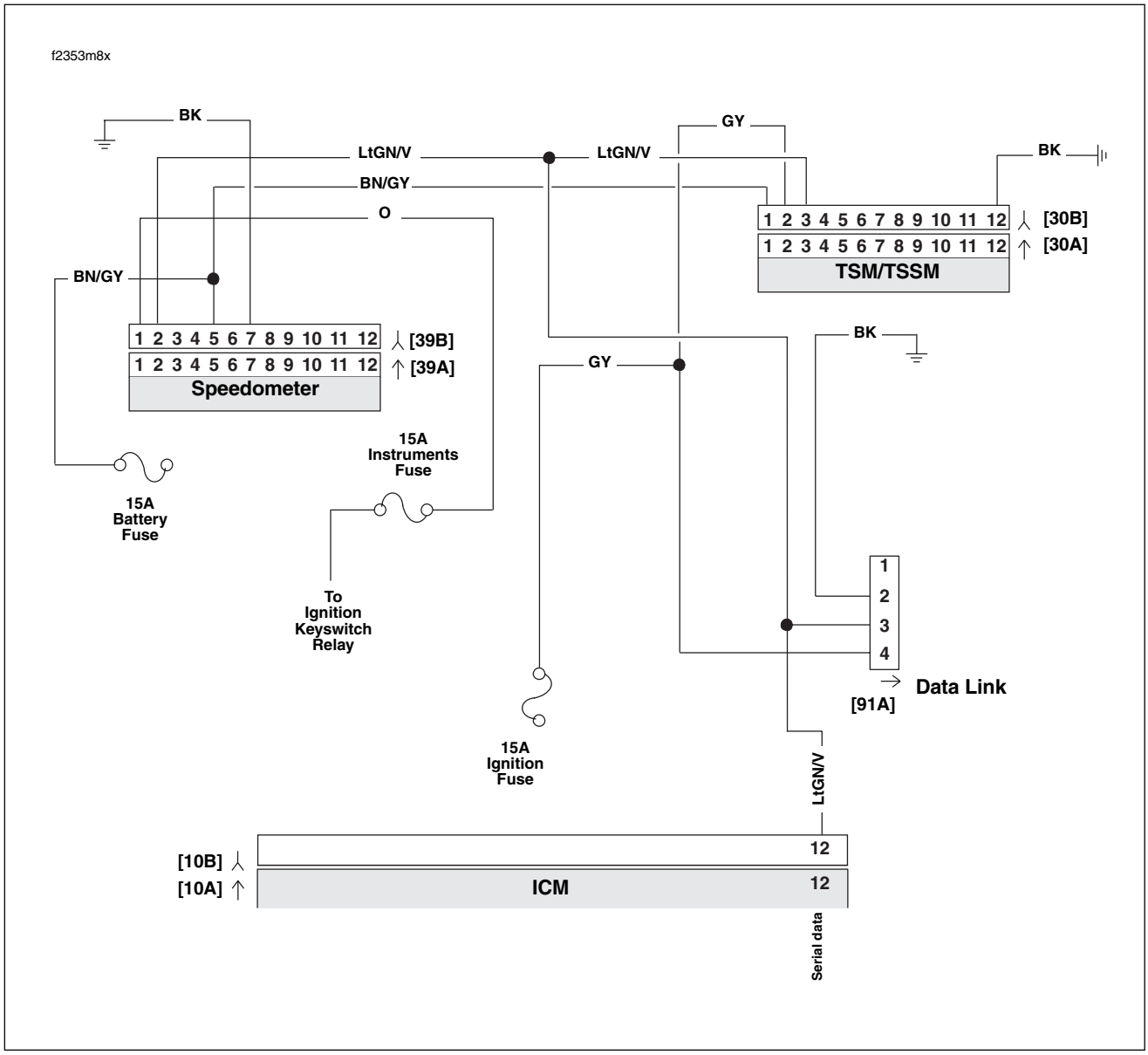

Figure 2-35. Serial Data Circuit: FLHR/S (Carbureted)

Table 2-23. Wire Harness Connectors in Figure 2-35.

NO.	DESCRIPTION	TYPE	LOCATION
[10]	ICM	12-Place Deutsch	Under Right Side Cover
[30]	TSM/TSSM	12-Place Deutsch	Cavity in Crossmember at Rear of Battery Box (Under Seat)
[39]	Speedometer	12-Place Packard	Under Console (Back of Speedometer)
[91]	Data Link	4-Place Deutsch	Under Right Side Cover

HOME

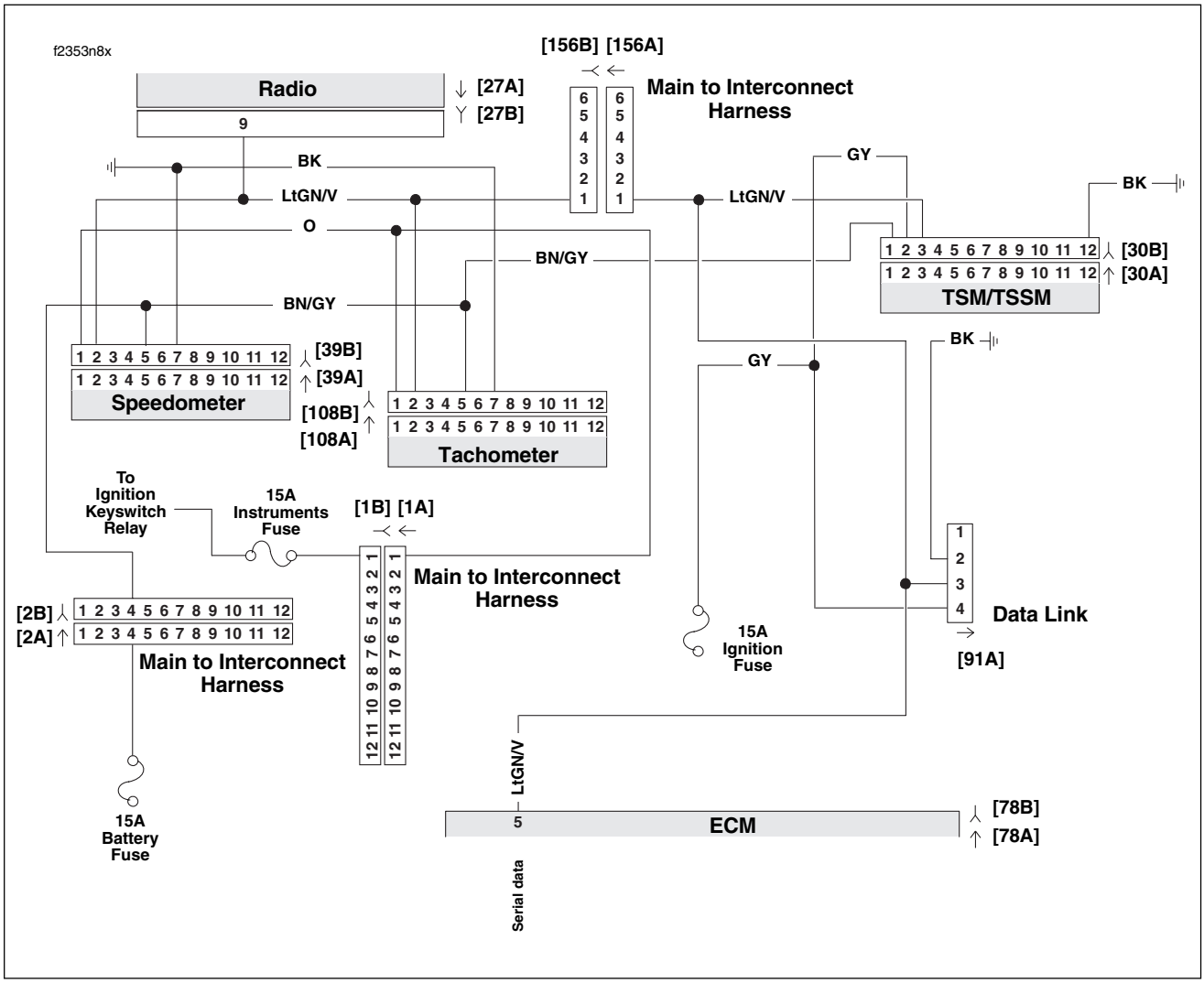

Figure 2-36. Serial Data Circuit: FLHX, FLHT/C/U, FLTR (Fuel Injected)

Table 2-24. Wire Harness Connectors in Figure 2-36.

NO.	DESCRIPTION	MODEL	TYPE	LOCATION
[1]	Main to Interconnect Harness	FLHT/C	12-Place Deutsch (Black)	Inner Fairing - Right Radio Support Bracket
		FLTR	12-Place Deutsch (Black)	Inner Fairing - Below Radio (Right Side)
[2]	Main to Interconnect Harness	FLHT/C	12-Place Deutsch (Gray)	Inner Fairing - Right Fairing Support Brace
		FLTR	12-Place Deutsch (Gray)	Inner Fairing - Below Radio (Right Side)
[27]	Radio	All	23-Place Amp	Inner Fairing - Back of Radio (Right Side)
[30]	TSM/TSSM	All	12-Place Deutsch	Cavity in Crossmember at Rear of Battery Box (Under Seat)
[39]	Speedometer	FLHT/C	12-Place Packard	Inner Fairing (Back of Speedometer)
		FLTR	12-Place Packard	Under Bezel (Back of Speedometer)
[78]	ECM	All	36-Place Packard	Under Right Side Cover
[91]	Data Link	All	4-Place Deutsch	Under Right Side Cover
[108]	Tachometer	FLHT/C	12-Place Packard	Inner Fairing (Back of Tachometer)
		FLTR	12-Place Packard	Under Bezel (Back of Tachometer)
[156]	Main to Interconnect Harness	FLHT/C	6-Place Deutsch	Inner Fairing - Right Fairing Support Brace
		FLTR	6-Place Deutsch	Inner Fairing - Below Radio (Right Side)

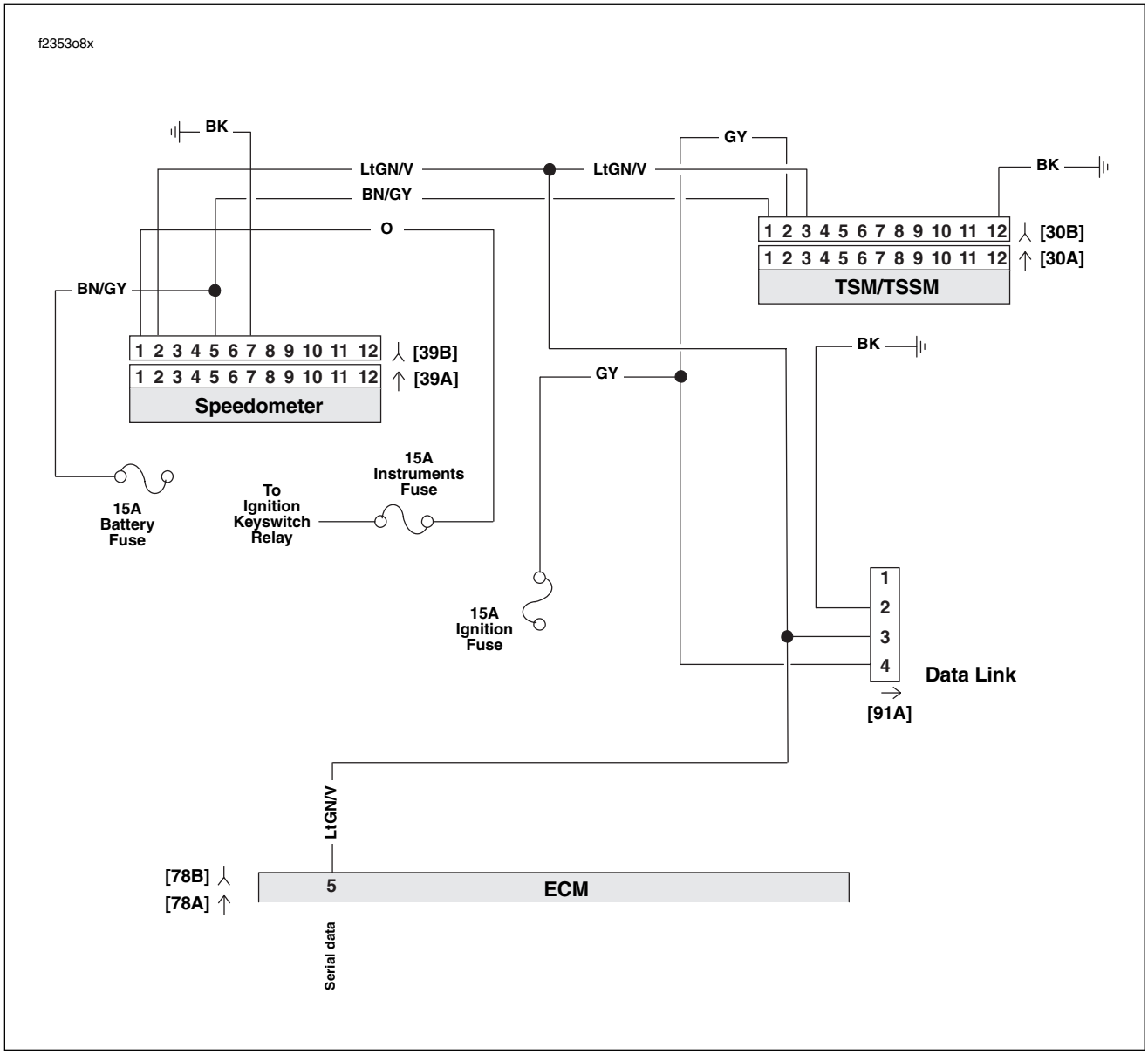

Figure 2-37. Serial Data Circuit: FLHR/C/S (Fuel Injected)

Table 2-25. Wire Harness Connectors in Figure 2-37.

NO.	DESCRIPTION	TYPE	LOCATION
[30]	TSM/TSSM	12-Place Deutsch	Cavity in Crossmember at Rear of Battery Box (Under Seat)
[39]	Speedometer	12-Place Mini-Deutsch	Under Console (Back of Speedometer)
[78]	ECM	36-Place Packard	Under Right Side Cover
[91]	Data Link	4-Place Deutsch	Under Right Side Cover

HOME

Test 2.14

LOSS OF TSM/TSSM SERIAL DATA: DTC U1064, U1255

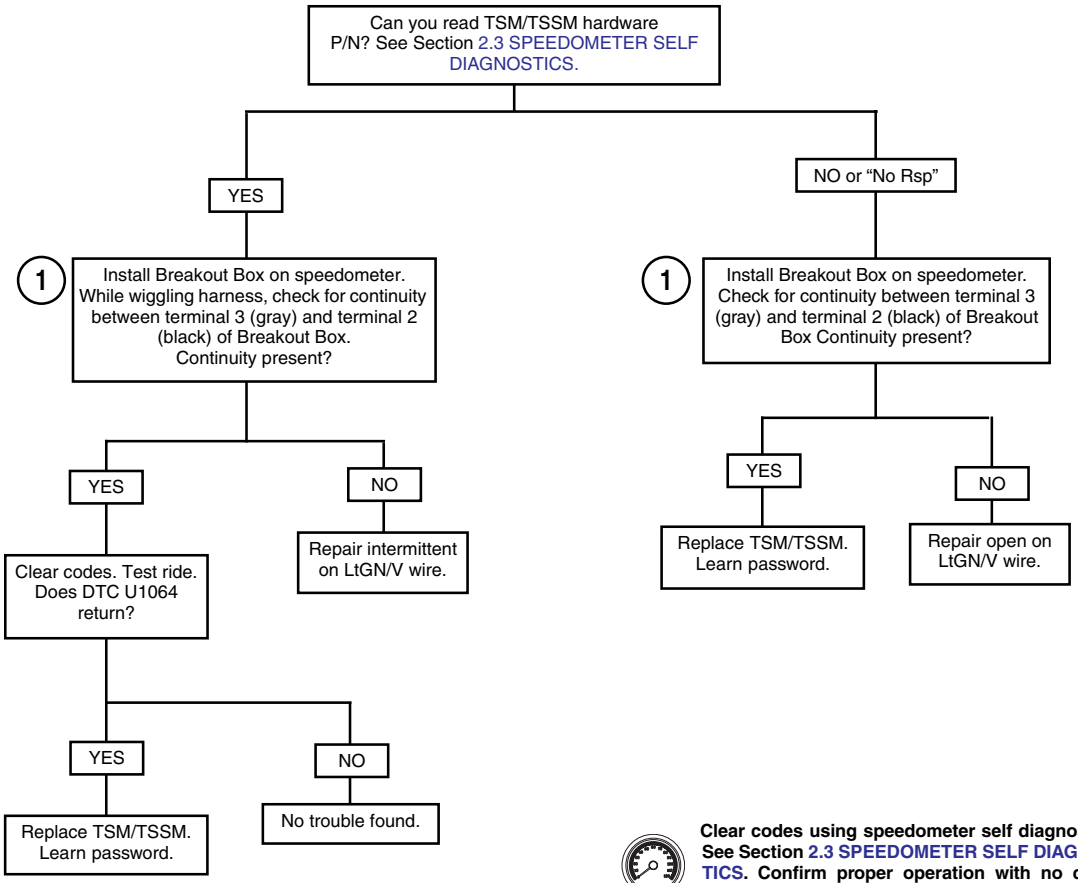

Clear codes using speedometer self diagnostics. See Section 2.3 SPEEDOMETER SELF DIAGNOSTICS. Confirm proper operation with no check engine lamp.

DTC U1300, U1301 OR “BUS ER” 2.15

GENERAL

Serial Data Low or Serial Data Open/High

See Figure 2-38. The typical serial data voltage range is 0 volts (inactive) to 7 volts (active). Due to the short pulse, voltages will be much lower on a DVOM. In analog mode, a DVOM reading serial data will show continuous voltage when active, typically 0.6-0.8 volts. The range for acceptable operations is 0-7.0 volts.

Table 2-26. Code Description

DTC	DESCRIPTION
U1300	Serial data low
U1301	Serial data open/high

DIAGNOSTICS

Diagnostic Tips

- If serial data is shorted, these DTC’s will automatically cause the check engine lamp to illuminate. The odometer will read “Bus Er” in this condition.
- DTC’s P1009 and P1010 may accompany DTC’s U1300 and U1301.
- If a U1300, U1301 or “BUS Er” is present on **carbureted** models, perform diagnostic procedures listed in Section 4.10 STARTS, THEN STALLS.
- If a U1300, U1301 or “BUS Er” is present on **EFI** models, perform diagnostic procedures listed in Section 5.12 STARTS, THEN STALLS.

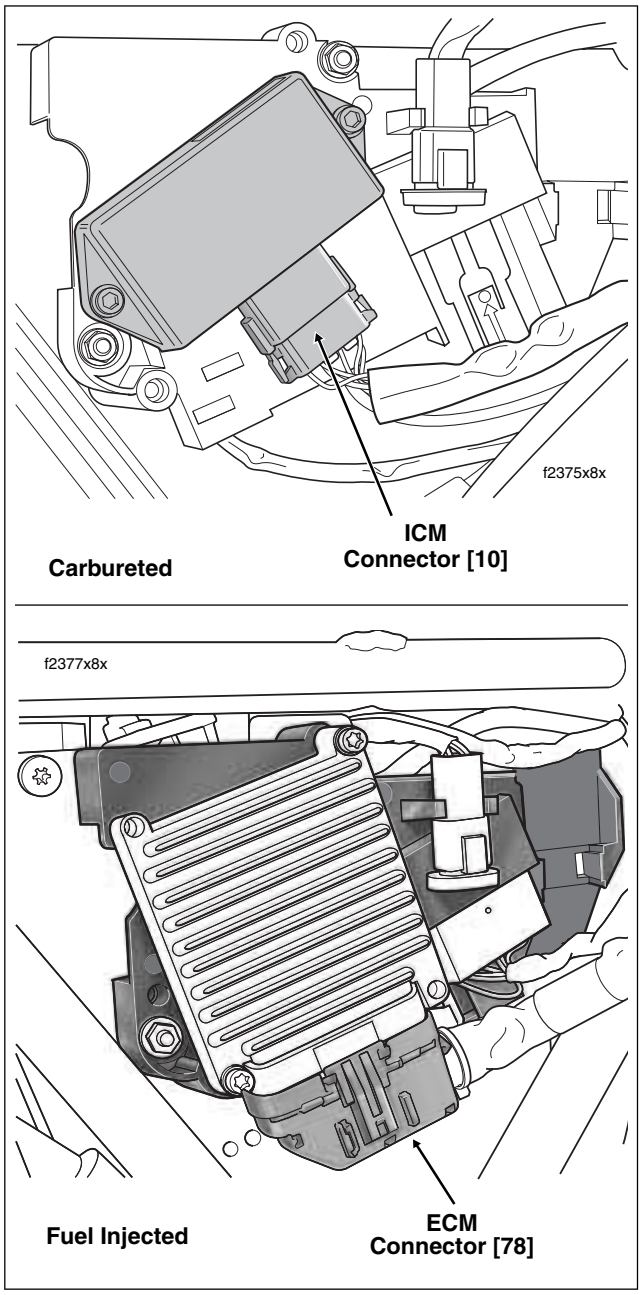

Figure 2-38. Electrical Bracket (Under Right Side Cover)

TSM/TSSM 3

Table Of Contents

SUBJECT	PAGE NO.
3.1 TSM/TSSM Overview	3-1
3.2 TSM/TSSM Features	3-3
3.3 TSM/TSSM Vehicle Delivery	3-5
3.4 TSM/TSSM Turn Signal Functions	3-10
3.5 TSM/TSSM Bank Angle Function	3-12
3.6 TSSM Security Functions	3-13
3.7 TSSM Arming/Disarming	3-17
3.8 Checking For Diagnostic Trouble Codes	3-19
3.9 Initial Diagnostic Check: TSM/TSSM	3-22
3.10 Speedometer Self Diagnostics	3-31
3.11 Breakout Box (TSM/TSSM)	3-33
3.12 No Security Lamp at Key ON	3-34
3.13 Security Lamp on Continuously	3-39
3.14 Key Fob Signal To TSSM Weak or Fails	3-43
3.15 Turn Signal Errors	3-46
3.16 DTC B0563	3-57
3.17 DTC B1131, B1132	3-58
3.18 DTC B1134	3-61
3.19 DTC B1135	3-64
3.20 DTC B1151, B1152, B1153	3-65
3.21 DTC U1016	3-68
3.22 DTC U1097, U1255	3-74
3.23 DTC U1300, U1301 or "BUS Er"	3-80
3.24 Password Learn	3-81
3.25 TSSM Maintenance	3-83

TSM/TSSM OVERVIEW 3.1

GENERAL

See Figure 3-1. The turn signal module (TSM) has two major functions:

- Control turn signals.
- Serve as bank angle sensor.

The optional, factory-installed, security system (turn signal security module or TSSM) provides the same functionality as the TSM, but also includes security and immobilization functions.

See Section 3.2 TSM/TSSM FEATURES for complete details.

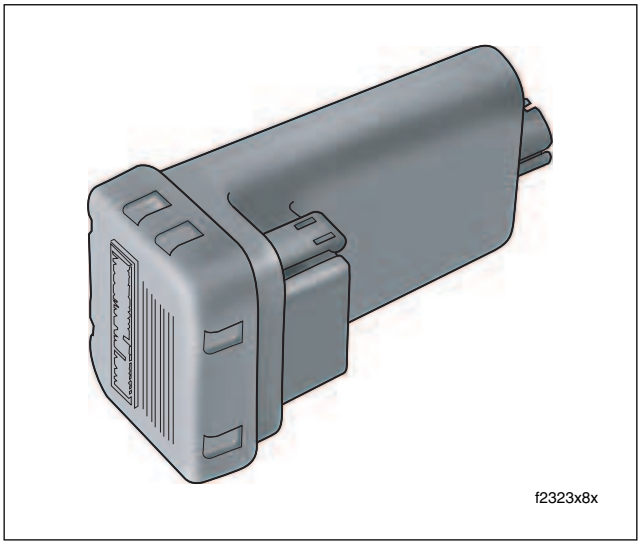

Figure 3-1. TSM/TSSM

TROUBLESHOOTING

Problems fall into at least one of four categories:

- Turn signal malfunction.
- Bank angle (engine disable).
- Security lamp problem (TSSM only).
- Security system malfunction (TSSM only).

To resolve TSM/TSSM problems, four basic steps are involved. In order of occurrence, they are:

1. Retrieve DTC's using speedometer self diagnostics. See Section 3.10 SPEEDOMETER SELF DIAGNOSTICS.
2. Diagnose system problems. This involves using special tools and the diagnostic flow charts in this section.
3. Correct problems through the replacement and/or repair of the affected components.
4. After repairs are performed, the work must be validated. This involves clearing the DTC's and confirming proper vehicle operation as indicated by the behavior of the turn signals.

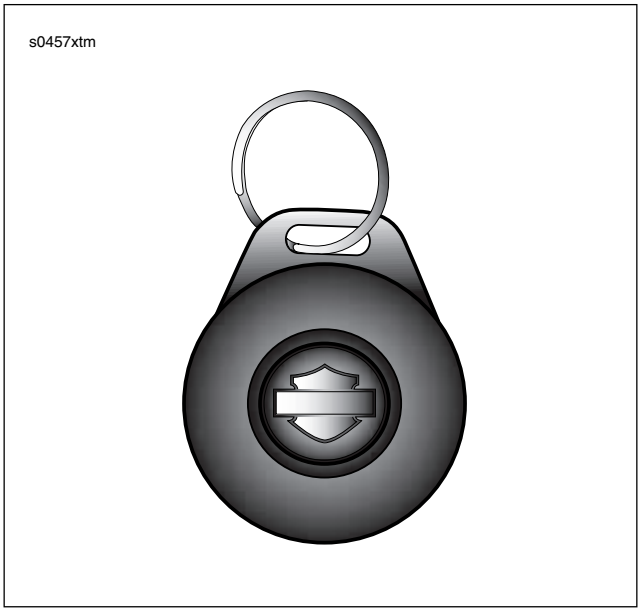

Figure 3-2. Key Fob

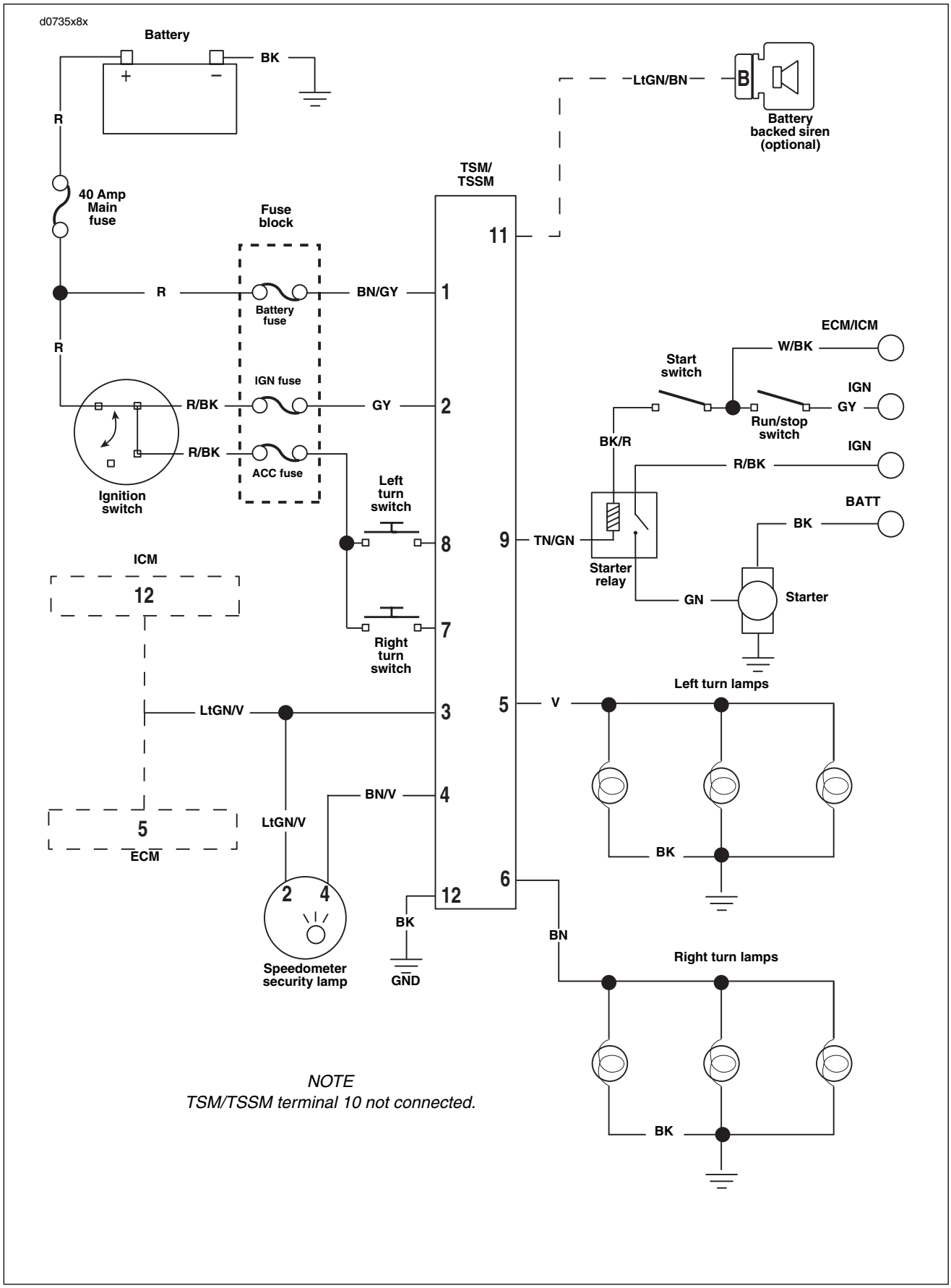

Figure 3-3. Simplified TSM/TSSM Wiring

TSM/TSSM FEATURES 3.2

GENERAL

The Turn Signal Module (TSM) and the Turn Signal Security Module (TSSM) provide the following capabilities. Note that some hardware options and software settings are dependent upon vehicle market specifications.

TURN SIGNAL FUNCTIONS

TSM/TSSM Features

See Section 3.4 TSM/TSSM TURN SIGNAL FUNCTIONS for complete details.

- **Manual turn signal control:** Manual activation/deactivation of left and right turn signal flashing sequences.
- **Automatic turn signal cancellation:** Automatic cancellation of left and right turn signal flashing sequences based on either vehicle speed, vehicle acceleration or turn completion.
- **Emergency flashers:** Four-way left and right turn signal flashing capability.
- **Turn signal lamp diagnostics:** Self-diagnostics for short circuit and open lamp conditions on both left and right turn signal systems.

BANK ANGLE FUNCTIONS

TSM/TSSM Features

See Section 3.5 TSM/TSSM BANK ANGLE FUNCTION for complete details.

- **Emergency engine shutdown:** Monitors vehicle lean and will provide engine shutdown when lean exceeds 45° from vertical for more than one second.
- **Emergency outputs disable:** Monitors vehicle lean and will disable turn signal lamps and starter motor when lean exceeds 45° from vertical for more than one second.

SECURITY ALARM AND IMMOBILIZATION FUNCTIONS

TSSM Only Feature

The following information applies only to vehicles with the security option (TSSM). See Section 3.6 SECURITY SYSTEM (TSSM) FUNCTIONS for more information.

- **Remote arming/disarming:** See Figure 3-4. Owners may enable and disable security alarm and immobilization functions with a remote, personally carried transmitter. This transmitter is referred to as a **key fob** within this document.

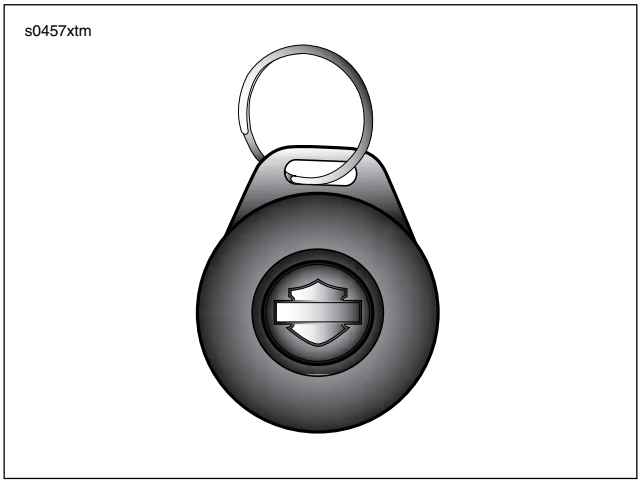

Figure 3-4. Key Fob

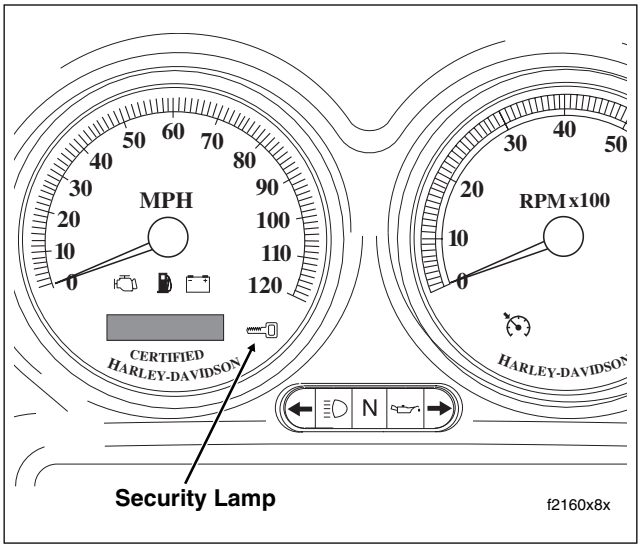

Figure 3-5. Speedometer

- **Security lamp:** See Figure 3-5. A lamp within the speedometer face tells the rider if the system is armed or disarmed.
- **Personal code disarming:** If a key fob is not available, the TSSM allows the rider to disable the security alarm and immobilization functions if the rider knows the previously entered personal code.
- **Security command confirmation:** When the system is armed or disarmed, the system provides visual feedback to the rider by flashing the turn signals and sounding the optional siren.

- **Auto-arming:** Automatically enables the security alarm and immobilization functions within 30 seconds after the ignition key is switched OFF.

NOTE

Default auto-arming behavior depends upon vehicle market. All vehicles are shipped without auto-arming. All vehicles delivered to The Netherlands market require auto-arming activation using Digital Technician. Motorcycles sold in other markets have auto-arming disabled, but it may be activated. See Section 3.3 TSM/TSSM VEHICLE DELIVERY.

- **Transport mode:** It is possible to arm the security system without enabling the motion detector for one ignition cycle. This allows the vehicle to be moved in an immobilized state.
- **Starter/ignition disable:** Should the security alarm and immobilization functions be triggered by a vehicle security condition, the starter and ignition system will be disabled.
- **Security system alarm:** See Figure 3-6. The system will alternately flash the left and right turn signals and sound an optional siren if a vehicle security condition is detected while the system is armed.

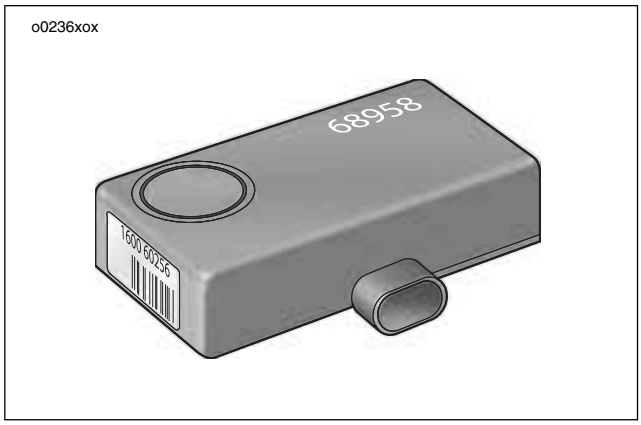

Figure 3-6. Siren

TSM/TSSM VEHICLE DELIVERY 3.3

GENERAL

⚠WARNING

Only Touring Harley-Davidson Motorcycles are suitable for sidecar use. Consult a Harley-Davidson dealer. Use of motorcycles other than Touring models with sidecars could result in death or serious injury. (00040a)

Setting up a vehicle TSM/TSSM depends on whether the vehicle has a turn signal module (TSM) or the optional security system (TSSM) installed.

All motorcycles ship with the TSM/TSSM set for use **without** a sidecar installed. If a motorcycle is equipped with a TSM, no further configuration is required. However, if a motorcycle has an optional security system (TSSM) installed, perform the following steps as necessary.

1. Configure TSSM motorcycles by assigning **both** key fobs to the vehicle.
2. Configure TSSM motorcycles by entering a personal code picked by the owner. The personal code allows the owner to operate the system if the key fob is lost or inoperable. Record this code in the owner's manual and instruct the customer to carry a copy.

IMPORTANT NOTE

Do not forget to enter a personal code for TSSM vehicles. If a code is not assigned and both key fobs are lost or damaged while the vehicle is armed, the TSSM and ECM/ICM must be replaced.

Changes to TSM/TSSM settings are made by a series of programming operations involving the ignition key, left/right turn signal switches and key fob (security systems).

At certain steps in the programming sequence, the motorcycle may provide confirmation of settings by flashing the turn signals, turn signal indicators and/or security lamp. In addition, when programming a personal code into a TSSM system, the odometer displays the personal code to the user and dynamically updates it as the code is entered or changed.

All programming operations are listed in table format. Follow the numbered steps to configure the system. If a confirmation response is listed, wait for the confirmation before continuing to the next step. Important information pertaining to certain actions will be found in the NOTES column.

SIDECAR CONFIGURATION

⚠WARNING

Only Touring Harley-Davidson Motorcycles are suitable for sidecar use. Consult a Harley-Davidson dealer. Use of motorcycles other than Touring models with sidecars could result in death or serious injury. (00040a)

On motorcycles equipped with a sidecar, the TSM/TSSM **must** be switched from the factory solo vehicle setting to the sidecar setting using a computer based diagnostic package called DIGITAL TECHNICIAN (Part No. HD-44750) and a BAS kit must then be installed. If the sidecar is then permanently removed, the TSM/TSSM **must** be reconfigured back to the solo setting and the BAS kit removed. To verify whether the TSM/TSSM is configured for solo or sidecar usage, refer to Table 3-1.

POWER DISRUPTION AND CONFIGURING

The TSM/TSSM will not enter configuration mode on the first attempt after battery voltage has been removed from terminal 1. This will occur after any of the following situations:

- Battery disconnect or power drain.
- Battery fuse or maxi-fuse removal.
- Connecting Breakout Box to TSM/TSSM connector.

Therefore, after all battery reconnects, the configuration sequence must be modified as follows.

1. Set run switch to **OFF**, cycle ignition key **ON**-OFF-**ON**-OFF-**ON** and press left turn signal switch **twice**.
2. Repeat step listed above.
3. Continue with configuration sequence listed.

KEY FOB ASSIGNMENT

The key fob on TSSM motorcycles must be set so it will operate the alarm system on the vehicle. This assignment **must** be completed with no pauses between steps greater than 10 seconds. Turn the ignition OFF after all key fobs have been assigned. The programming mode will also exit after 60 seconds has elapsed without detecting any fob signup messages or turn signal switch activity.

Two key fobs may be assigned to the TSSM. The first successful attempt to program a fob will disable all previously assigned fobs. If a second fob is to be programmed, it must be done in the same programming sequence as the initial fob.

To assign a key fob to a motorcycle, refer to Table 3-2.

PERSONAL CODE ENTRY

First Time Code Entry: TSSM Only

IMPORTANT NOTE

Do not forget to enter a personal code for TSSM vehicles. If a code is not assigned and both key fobs are lost or damaged while the vehicle is armed, the TSSM must be replaced.

The TSSM personal code (Personal Identification Number or PIN) consists of five digits. Each digit can be any number from 1-9. The personal code **must** be used to disarm the security system in case the key fob becomes unavailable.

To set a personal code on a motorcycle with no code previously installed, refer to Table 3-3. The procedure listed uses 3-1-3-1-3 as the desired personal code.

NOTE

For better security, do not use 3-1-3-1-3 as a personal code. It is shown as an example only.

Decide what five digit code the owner would like to use. The code will be programmed using the turn signal switches and key fob. Keep a record of the code in a secure place such as your wallet or the owner's manual.

- When programming the personal code, the security lamp flashes to provide feedback when entering each digit. The odometer also displays the PIN and the change dynamically.
- The number of security lamp flashes corresponds to the number currently selected for a given digit. Therefore, the lamp may flash 1-9 times depending on the number entered. The five-digit code will change on the odometer display and the active digit will blink.
- Press the left turn switch one time to increment each digit of the code.
- Quickly press the key fob button twice to advance to the next digit of the code.

NOTE

The programming mode exits upon turning the ignition switch to OFF or if no turn signal switch/key fob button activity occurs for 60 seconds. No data is saved for partial configuration attempts if entering a PIN for the first time. If a PIN has previously been entered, the user can change any digit or group of digits.

Modifying Existing Codes: TSSM Only

If a code was previously entered, the security lamp will flash the equivalent digit, and the odometer will display the existing code with the active digit blinking. Each additional press of the left turn switch will increment the digit.

- To advance from 5 to 6, press and release the left turn switch 1 time.
- To advance from 8 to 2, press and release the left turn switch 3 times (9-1-2).

Table 3-1. Verifying Whether TSM/TSSM is Configured for Solo/Sidecar* Use

NO.	ACTION	WAIT FOR CONFIRMATION	NOTES
1	Set **RUN/OFF** switch to **OFF**		Verify that security lamp is not blinking (vehicle is disarmed)
2	Turn **IGN** key **ON**-OFF-**ON**-OFF-**ON**		
3	Press **left** turn switch **2 times** and release	1-4 flashes turn signals & indicators depending on vehicle configuration (See Section 3.3 TSM/TSSM VEHICLE DELIVERY regarding battery disconnects.)	1 flash-Worldwide TSM, no security 2 flashes-North American/ Domestic configurationTSSM 3 flashes-Netherlands configuration TSSM 4 flashes-European/HDI configuration TSSM
4	Press **right** turn switch **1 time** and release	1 flash turn signals & indicators	
5	Press **right** turn switch **1 time** and release	2 flashes turn signals & indicators	
6	Press **left** turn switch **1 time** and release	1-2 flashes turn signals & indicators depending on vehicle configuration	1 flash-Solo 2 flashes-Sidecar
7	Turn **IGN** key OFF		
* Only Touring models can be configured for sidecar usage and then access to Digital Technician is required.			

Table 3-2. TSSM Key Fob Assignment

NO.	ACTION	WAIT FOR CONFIRMATION	NOTES
1	Set **RUN/OFF** switch to **OFF**		Verify that security lamp is not blinking (vehicle is disarmed) This assignment procedure **must** be completed with no pauses between steps greater than 10 seconds
2	Turn **IGN** key **ON**-OFF-**ON**-OFF-**ON**		
3	Press **left** turn switch **2 times** and release	1-4 flashes turn signals & indicators depending on vehicle configuration (See Section 3.3 TSM/TSSM VEHICLE DELIVERY regarding battery disconnects.)	1 flash-Worldwide TSM, no security 2 flashes-North American/ Domestic configuration TSSM 3 flashes-The Netherlands configuration TSSM 4 flashes-European/HDI configuration TSSM
4	Press **right** turn switch **1 time** and release	1 flash turn signals & indicators	
5	Press **left** turn switch **1 time** and release	2 flashes turn signals & indicators	
6	Press and hold **key fob** button until confirmation is received	2 flashes turn signals & indicators	This may take 10-25 seconds
7	If you have two key fobs, press and hold button on second **key fob** until confirmation is received	2 flashes turn signals & indicators	optional step
8	Turn **IGN** key OFF		

Table 3-3. Programming A TSSM Personal Code (Example: 3-1-3-1-3) With No Code Previously Installed

NO.	ACTION	WAIT FOR CONFIRMATION	NOTES
1	Set **RUN/OFF** switch to **OFF**		Verify that security lamp is not blinking (vehicle is disarmed) This assignment procedure **must** be completed with no pauses between steps greater than 10 seconds
2	Turn **IGN** key **ON**-OFF-**ON**-OFF-**ON**		
3	Press **left** turn switch **2 times** and release	1-4 flashes turn signals and indicators depending on vehicle configuration (See Section 3.3 TSM/TSSM VEHICLE DELIVERY regarding battery disconnects)	1 flash-Worldwide TSM, no security 2 flashes-North American/ Domestic configuration TSSM 3 flashes-The Netherlands configuration TSSM 4 European/HDI configuration TSSM
4	Quickly press **key fob** button **2 times** and release	One flash turn signals and indicators Odometer displays current five-digit personal code (five dashes if no code entered), first digit blinks	Vehicle is in personal code entry mode ready to enter or modify first digit
5	Press **left** turn switch **1 time** and release	Security lamp flashes 1 - 9 times if code was previously entered	A lack of confirmation flashes indicates no digit is entered
6	Press and release **left** turn switch to advance through the digits In this example, you will press and release three times	Blinking digit in odometer display increments, security lamp flashes to indicate each digit selected In this example, the blinking digit displayed is 3 and the security lamp will flash three times	You've selected 3 as a number for the first digit
7	Quickly press **key fob** button **2 times** and release	Two flashes turn signals and indicators second digit in odometer display blinks	You've confirmed 3 as a number for the first digit and have advanced to entering the second digit
8	Press **left** turn switch **1 time** and release	none	A lack of confirmation flashes indicates no digit is entered
9	Press and release **left** turn switch to advance through the digits In this example, you will perform this step one time	Blinking digit in odometer display increments, security lamp flashes to indicate each digit selected In this example, the blinking digit displayed is 1 and the security lamp will flash one time	You've selected 1 as a number for the second digit
10	Quickly press **key fob** button **2 times** and release	Three flashes turn signals and indicators third digit in odometer display blinks	You've confirmed 1 as a number for the second digit and have advanced to entering the third digit
11	Press **left** turn switch **1 time** and release	none	A lack of confirmation flashes indicates no digit is entered

Table 3-3. Programming A TSSM Personal Code (Example: 3-1-3-1-3) With No Code Previously Installed

NO.	ACTION	WAIT FOR CONFIRMATION	NOTES
12	Press and release **left** turn switch to advance through the digits In this example, you will repeat this step three times	Blinking digit in odometer display increments, security lamp flashes to indicate each digit selected In this example, the blinking digit displayed is 3 and the security lamp will flash three times	You've selected 3 as a number for the third digit
13	Quickly press **key fob** button **2 times** and release	Four flashes turn signals and indicators fourth digit in odometer display blinks	You've confirmed 3 as a number for the third digit and have advanced to entering the fourth digit
14	Press **left** turn switch **1 time** and release	none	A lack of confirmation flashes indicates no digit is entered
15	Press and release **left** turn switch to advance through the digits In this example, you will perform this step one time	Blinking digit in odometer display increments, security lamp flashes to indicate each digit selected In this example, the blinking digit displayed is 1 and the security lamp will flash one time	You've selected 1 as a number for the fourth digit
16	Quickly press **key fob** button **2 times** and release	Five flashes turn signals and indicators fifth digit in odometer display blinks	You've confirmed 1 as a number for the fourth digit and have advanced to entering the fifth digit
17	Press **left** turn switch **1 time** and release	none	A lack of confirmation flashes indicates no digit is entered
18	Press and release **left** turn switch to advance through the digits In this example, you will repeat this step three times	Blinking digit in odometer display increments, security lamp flashes to indicate each digit selected In this example, the blinking digit displayed is 3 and the security lamp will flash three times	You've selected 3 as a number for the fifth digit
19	Quickly press **key fob** button **2 times** and release	One flash turn signals and indicators first digit in odometer display blinks	You've confirmed 3 as a number for the fifth digit and have gone back to the first digit
20	Turn **IGN** key OFF		
21	Write down code in owner's manual		
22	Arm the security system and attempt to disarm using personal code entry. Refer to Table 3-9.		

TSM/TSSM TURN SIGNAL FUNCTIONS 3.4

GENERAL

The TSM/TSSM's turn signal feature has several modes:

- Automatic cancellation.
- Manual cancellation.
- Four-way flashing.
- Diagnostics mode.

The turn signals cannot be activated or deactivated when the ignition key is in the ACC position. The turn signals can only be activated or deactivated with the ignition key in the IGN position.

⚠WARNING

Only Touring Harley-Davidson Motorcycles are suitable for sidecar use. Consult a Harley-Davidson dealer. Use of motorcycles other than Touring models with sidecars could result in death or serious injury. (00040a)

AUTOMATIC CANCELLATION

Press the left or right turn switch to activate automatic turn signal cancellation. There is no need to hold the turn switch in when approaching the turn. The TSM/TSSM will not cancel the signal before the turn is actually completed.

- When the directional switch is released, the system starts a 20 count. As long as the vehicle is traveling above 7 MPH (11.3 KPH) the directional will always cancel after 20 flashes if the system does not recognize any other input.
- If the vehicle speed drops to 7 MPH (11.3 KPH) or less, including stopped, the directionals will continue to flash. Counting will resume when vehicle speed reaches 8 MPH (12.9 KPH) and will automatically cancel when the count total equals 20 as stated above.
- The turn signals will cancel within two seconds upon turn completion. A sensor inside the TSM/TSSM cancels the signal after the vehicle has been returned to an upright position.

NOTE

The bank angle cancellation function has an automatic calibration feature. Ride the motorcycle for 1/4 mile (0.4 KM) at steady speeds (upright) to calibrate the system. Performance of bank angle function may not be optimal until this calibration is performed. This self-calibration is performed automatically every time the vehicle is started and ridden.

MANUAL CANCELLATION

If you want to stop the turn signals from flashing, briefly depress the turn signal switch a second time.

If you are signalling to turn in one direction and you depress the switch for the opposite turn signal, the first signal is cancelled and the opposite side begins flashing.

FOUR-WAY FLASHING

Use the following method to activate the four-way flashers.

1. With the ignition key ON and security system disarmed (models with security only), press the left and right turn signal switches at the same time.
2. Turn the ignition key OFF and arm the security system if present and desired. The four-way flashers will continue for two hours.
3. To cancel four-way flashing, disarm the security system if necessary, turn the ignition key ON and press the left and right turn signal switches at the same time.

NOTE

Auto-arming (always active on The Netherlands bikes, user selectable on other vehicles) requires that the four-way flashers be activated within 30 seconds of key OFF or after the vehicle has been disarmed.

This system allows a stranded vehicle to be left in the four-way flashing mode and secured until help is found.

If the security system is disarmed while the four-way flashers are active, the lights will flash as follows:

1. TSSM stops four-way flashing mode. Motorcycle sits for 1 second with turn signals off.
2. TSSM performs disarming confirmation (1 flash).
3. Motorcycle sits for 1 second with turn signals off.
4. Motorcycle restarts four-way flashing mode.

DIAGNOSTICS MODE

The TSM/TSSM measures the current when the turn signals are used. If there is a burned out light bulb on one side, the remaining light and the corresponding turn signal indicator flash at double the normal rate starting with the fifth flash.

Other diagnostic conditions monitored include:

- Short circuit in the turn signal wiring.
- Open circuit in the turn signal wiring.
- Stuck turn signal switch.

NOTES

- *A stuck turn signal switch will disable the automatic turn signal cancellation feature.*
- *If a stuck switch is detected, you must hold the left and right turn signal switches in for more than one second to activate the four-way flashers.*

See Section 3.8 CHECKING FOR DIAGNOSTIC TROUBLE CODES for more information.

TSM/TSSM BANK ANGLE FUNCTION 3.5

GENERAL

The turn signals, starter motor, ICM (carbureted models), ECM (EFI models), fuel pump (EFI models) and coil will be disabled in the event the vehicle tilts more than 45° from vertical for longer than one second.

⚠WARNING

Only Touring Harley-Davidson Motorcycles are suitable for sidecar use. Consult a Harley-Davidson dealer. Use of motorcycles other than Touring models with sidecars could result in death or serious injury. (00040a)

If a sidecar is installed, install Sidecar BAS Kit (Part No. 88115-03) and reconfigure the TSM/TSSM using Digital Technician.

OPERATION

The engine will shut off automatically if the vehicle tilts more than 45 degrees from vertical for longer than one second. The engine will automatically shut off even if the tilt occurs at a very slow speed. The odometer displays “tIP” when a tip over condition is detected.

To restart the motorcycle after shutdown has occurred:

1. Return the motorcycle to an upright position.
2. Cycle the ignition key OFF-**ON** before restarting the vehicle.

SECURITY SYSTEM (TSSM) FUNCTIONS 3.6

GENERAL

Security System Operation

The TSSM provides security and immobilization functions not found on the TSM. The TSSM will disable the starter and ignition system. Additional functions include the ability to alternately flash the left and right turn signals and sound a siren (if purchased as an option) if a theft attempt is detected.

Conditions that activate the security system when system is armed include:

- **Detecting tampering of the ignition circuit:** Turn signals flash three times, optional siren chirps once and then turns off. If the tampering continues, a second warning will activate after four seconds. Continued tampering will cause the alarm to activate for 30 seconds and then turn off. The two warnings/alarm cycle is repeated for each tampering incident.
- **Detecting vehicle movement:** Turn signals flash three times, optional siren chirps once and then turns off. If the vehicle is not returned to its original position, a second warning will activate after four seconds. If the vehicle is not returned to its original position, the alarm activates for 30 seconds then turns off. The two warnings/alarm cycle may repeat a maximum of 10 times.
- **Detecting tampering of the security lamp circuit:** Turn signals flash three times, optional siren chirps once and then turns off. If the tampering continues, a second warning will activate after four seconds. Continued tampering will cause the alarm to activate for 30 seconds and then turn off. The two warnings/alarm cycle repeats once for each tampering incident.
- **Detecting that a battery or ground disconnect has occurred while armed.** Siren, if installed, activates its self-alarm mode. Turn signals will not flash.

See Section 3.7 ARMING/DISARMING SECURITY SYSTEM (TSSM) for more information.

NOTE

Always disarm the TSSM before removing or disconnecting the battery to prevent the siren (if installed) from activating. If the TSSM is in auto-arming mode, you must disarm the system using two clicks of the key fob and disconnect the battery or remove the battery fuse before the 30 second arming period expires.

Security System Options

The following customization options are only available on the TSSM unit: alarm sensitivity, auto-arming feature and storage mode.

Default settings for the TSSM include:

- Solo vehicle configuration.
- High motion sensitivity on alarm sensitivity.
- Default auto-arming behavior depends upon vehicle market. All vehicles are shipped without atuo-arming. Vehicles delivered to The Netherlands market require auto-arming activation using Digital Technician. Motorcycles sold in other markets have auto-arming disabled, but it may be activated.
- Storage mode set to 20 days.

Differences By Market Specifications

The Netherlands TSSM set-up differs from other TSSM set-ups in the following ways:

- The Netherlands configuration always auto-arms itself within 30 seconds after the ignition key is turned OFF.
- The Netherlands version does not have the remote arming only option.

ALARM SENSITIVITY

Sensitivity

The TSSM has four sensitivity settings: extremely low, low, medium or high. The selection picked controls the sensitivity of the security system in regards to motion detection.

To set alarm sensitivity, refer to Table 3-4.

Transport Mode

It is possible to arm the security system without enabling the motion detector for one ignition cycle. This allows the vehicle to be picked up and moved in an armed state. In this mode, any attempt to hot-wire the vehicle will trigger the security system.

- To enter the transport mode, refer to Table 3-5.
- To exit from transport mode and return the system to normal operation/functions, disarm the system using either the key fob or personal code.

NOTE

Transport mode is especially useful when working on The Netherlands vehicles. If it is not used, the alarm will activate under many typical service activities.

AUTO-ARMING FUNCTION

Auto-arming causes the system to automatically arm itself (no key fob needed) within 30 seconds after the ignition key is turned OFF. During this period, the security lamp stays on solid to indicate auto-arming is starting up.

The vehicle may be moved during these 30 seconds without triggering the alarm. However, any motion after that period will trigger the security alarm. Upon expiration of the auto-arming period, the turn signals flash twice, the security lamp begins to flash and the siren (if installed) chirps twice.

The TSSM allows remote arming via the key fob at any time. However, if the system is remotely disarmed (with the key fob) but the ignition key is not turned ON within 30 seconds, the system will rearm itself when auto-arming is enabled.

The auto-arming setting depends upon vehicle market specifications.

- Domestic and HDI motorcycles have auto-arming **disabled** by default. However, the feature may be enabled if the customer desires.
- Vehicles sold in The Netherlands have auto-arming **enabled** and this setting cannot be changed.

When auto-arming is disabled, the key fob must be used to arm the security system.

To set the auto-arming function, if it is available on your vehicle, refer to Table 3-6.

STORAGE MODE

The TSSM has a special mode for long term storage. This mode prevents the security system from draining the battery after a period of days (10, 20, 60 or infinite) without any ignition key switch activity.

- If the TSSM is set to infinite, the system will not go into storage mode.
- Vehicles will enter storage mode whether the security system is armed or disarmed.
- If set to 20 days or greater, the customer must use an approved trickle charger to keep the battery from discharging.

In storage mode, all alarm functions remain active but the receiver is shut down and will not respond to the key fob. The vehicle is immobilized because the starter motor and ECM are disabled. When the storage mode is entered, the security lamp stops flashing to conserve power.

To wake up the TSSM from storage mode, the ignition key must be turned ON. This will trigger a warning/alarm if the system was previously armed. You must use the key fob or personal code to disarm the system and stop the alarm.

To set the storage mode preferences, refer to Table 3-7.

Table 3-4. TSSM Alarm Sensitivity

NO.	ACTION	WAIT FOR CONFIRMATION	NOTES
1	Set **RUN/OFF** switch to **OFF**		Verify that security lamp is not blinking (vehicle is disarmed)
2	Turn **IGN** key **ON**-OFF-**ON**-OFF-**ON**		
3	Press **left** turn switch **2 times** and release	2-4 flashes turn signals & indicators depending on vehicle configuration (See Section 3.3 TSM/TSSM VEHICLE DELIVERY regarding battery disconnects.)	2 flashes-North American/ Domestic configuration TSSM 3 flashes-The Netherlands configuration TSSM 4 European/HDI configuration TSSM
4	Press and hold **key fob** button until confirmation is received	1 flash turn signals & indicators	
5	Press **left** turn switch **1 time** and release	turn signals & indicators flash to indicate option selected	1 flash-extremely low 2 flashes-low sensitivity 3 flashes-medium sensitivity 4 flashes-high sensitivity
6	Press and release **left** turn switch to advance through options	turn signals & indicators flash to indicate option selected	1 flash-extremely low 2 flashes-low sensitivity 3 flashes-medium sensitivity 4 flashes-high sensitivity
7	Turn **IGN** key OFF		

Table 3-5. TSSM Transport Mode

NO.	ACTION	WAIT FOR CONFIRMATION	NOTES
1	Set **RUN/OFF** switch to **OFF**		Verify that security lamp is not blinking (vehicle is disarmed)
2	Turn **IGN** key **ON**		
3	Press and hold **key fob** button until confirmation is received	3 flashes turn signals & indicators	
4	Turn **IGN** key OFF		
5	Press and hold **key fob** button until confirmation is received	3 flashes turn signals & indicators	The vehicle can be moved without tripping the alarm

Table 3-6. Selecting TSSM Auto-arming Function (Not Available on The Netherlands Vehicles)

NO.	ACTION	WAIT FOR CONFIRMATION	NOTES
1	Set **RUN/OFF** switch to **OFF**		Verify that security lamp is not blinking (vehicle is disarmed)
2	Turn **IGN** key **ON**-OFF-**ON**-OFF-**ON**		
3	Press **left** turn switch **2 times** and release	2-4 flashes turn signals & indicators depending on vehicle configuration (See Section 3.3 TSM/TSSM VEHICLE DELIVERY regarding battery disconnects.)	2 flashes-North American/ Domestic configuration TSSM 3 flashes-The Netherlands configuration TSSM 4 European/HDI configuration TSSM
4	Press and hold **key fob** button until confirmation is received	1 flash turn signals & indicators	
5	Press and hold **key fob** button until confirmation is received	2 flashes turn signals & indicators	
6	Press **left** turn switch **1 time** and release	turn signals & indicators flash to indicate option selected	1 flash- auto-arming disabled 2 flashes- auto-arming enabled
7	Press and release **left** turn switch to advance through options	turn signals & indicators flash to indicate option selected	
8	Turn **IGN** key OFF		

Table 3-7. TSSM Storage Mode Preferences

NO.	ACTION	WAIT FOR CONFIRMATION	NOTES
1	Set **RUN/OFF** switch to **OFF**		Verify that security lamp is not blinking (vehicle is disarmed)
2	Turn **IGN** key **ON**-OFF-**ON**-OFF-**ON**		
3	Press **left** turn switch **2 times** and release	2-4 flashes turn signals & indicators depending on vehicle configuration (See Section 3.3 TSM/TSSM VEHICLE DELIVERY regarding battery disconnects.)	2 flashes-North American/ Domestic configuration TSSM 3 flashes-The Netherlands configuration TSSM 4 European/HDI configuration TSSM
4	Press and hold **key fob** button until confirmation is received	1 flash turn signals & indicators	
5	Release and then hold **key fob** button until confirmation is received	2 flashes turn signals & indicators	
6	Release and then hold **key fob** button until confirmation is received	3 flashes turn signals & indicators	
7	Press **left** turn switch **1 time** and release	turn signals & indicators flash to indicate option selected	1 flash-10 days 2 flashes-20 days 3 flashes-60 days 4 flashes-Infinite
8	Press **left** turn switch to advance through options	turn signals & indicators flash to indicate option selected	1 flash-10 days 2 flashes-20 days 3 flashes-60 days 4 flashes-Infinite
9	Turn **IGN** key OFF		

ARMING/DISARMING SECURITY SYSTEM (TSSM) 3.7

GENERAL

There are two methods to arm the security system:

- Using the key fob.
- Using auto-arming. See Section 3.6 SECURITY SYSTEM (TSSM) FUNCTIONS.

NOTE

The vehicle cannot be armed with the engine running or the ignition ON.

There are two ways to disarm the system:

- Using the key fob. This method works in all situations **except** before turning ignition key ON when TSSM storage mode is activated.
- Using the personal code.

SECURITY LAMP

Refer to Table 3-8. The security lamp within the speedometer provides feedback to the rider confirming armed or disarmed status.

Table 3-8. Security Lamp Status

LAMP	MODE
Does not flash	No security system (TSM), security system not armed or storage mode active
Flashes every second	10 minute timeout after failed personal code entry attempt or a battery reconnect has occurred while armed
Flashes every 2 seconds	Security system armed
Flashes 3 times a second	Personal code entry mode
Stays on solid with ignition key OFF	Auto-arming is starting up. You have 30 seconds before system is armed.
Stays on solid with ignition key ON	If solid for more than 4 seconds after key ON, a current DTC is present
Four-way flashers flash 6 times (TSM)	See Section 3.8 CHECKING FOR DIAGNOSTIC TROUBLE CODES

USING KEY FOB

General

The TSSM's reception range for the key fob signal depends on a specific receiver pattern.

NOTE

Environmental and geographic conditions may affect signal range.

Arming the System

1. Hold key fob horizontal at waist level.
2. Point key fob at the front of the vehicle.
3. Hold down the key fob button until the system responds with two turn signal flashes.

Disarming the System

1. Hold key fob horizontal at waist level.
2. Point key fob at the front of the vehicle.
3. Quickly press the key fob button twice. The system will respond with one turn signal flash.

NOTE

*Disarming function may require practice. The key fob button **must** be pressed twice within 1.5 seconds to send the disarm command. The action is very similar to double-clicking a computer mouse. Light quick taps work best; very hard or very slow taps are less likely to work.*

Troubleshooting

If the key fob button has been pressed numerous times while away from the vehicle, the fob may fall out of synchronization with the TSSM. If this happens, the TSSM might fail to recognize the key fob's commands.

To solve this problem, press and hold the key fob button for 10-15 seconds until the security system responds with two turn signal flashes. After confirmation, you may resume normal fob operation.

USING THE PERSONAL CODE

General

The personal code consists of five digits entered using the left and right turn signal switches. Each digit can be any number from 1-9. The personal code is intended to be used to disarm the vehicle in case the key fob becomes unavailable or inoperable.

See Section 3.3 TSM/TSSM VEHICLE DELIVERY to set a personal code.

Disarming the System

Refer to Table 3-9. If you make an error while disarming the TSSM using the personal code, the alarm will activate for 30 seconds after the last digit is entered. After a failed attempt, the security lamp will flash once every second for 10 minutes. **During this time, the vehicle will not accept any attempt to enter a personal code.**

Table 3-9. Entering A Personal Code To Disarm TSSM (Example: 3-1-3-1-3)

NO.	ACTION	WAIT FOR CONFIRMATION	NOTES
1	Set **RUN/OFF** switch to **OFF**		
2	Turn **IGN** key to **ACC**		
3	Hold **both** turn switches in until confirmation	security lamp blinks at fast rate	System is ready for personal code entry
4	Enter first digit of code (3) by pressing **left** turn switch **3 times**		
5	Press **right** turn switch **1 time**		Serves as “enter” key for first digit
6	Enter second digit of code (1) by pressing **left** turn switch **1 time**		
7	Press **right** turn switch **1 time**		Serves as “enter” key for second digit
8	Enter third digit of code (3) by pressing **left** turn switch **3 times**		
9	Press **right** turn switch **1 time**		Serves as “enter” key for third digit
10	Enter fourth digit of code (1) by pressing **left** turn switch **1 time**		
11	Press **right** turn switch **1 time**		Serves as “enter” key for fourth digit
12	Enter fifth digit of code (3) by pressing **left** turn switch **3 times**		
13	Press **right** turn switch **1 time**	security lamp stops blinking	System is disarmed. You may use the vehicle or program another key fob

TSM

If the turn signals flash six four-way flashes shortly after key ON, it indicates a DTC has been logged sometime in the last three ignition cycles.

TSSM

To diagnose system problems, start by observing the behavior of the security lamp.

NOTES

- *See Figure 3-7. "Key ON" means that the ignition key is turned to IGNITION and the engine stop switch is set to RUN (although the engine is **not** running).*
- *See Figure 3-8. When the ignition key is turned ON, the security lamp will illuminate for approximately four seconds and then turn off.*
- *If the security lamp is not illuminated at Key ON or if it fails to turn OFF after the initial four second period, the speedometer may need to be replaced. See Section 3.10 SPEEDOMETER SELF DIAGNOSTICS. If "BUS Er" is displayed on the odometer, it may take up to twenty seconds for the security lamp to illuminate.*
- *The security lamp will also light for eight seconds after the bulb check if historic DTC's are present. The security lamp will stay on if current DTC's are set. If a historic DTC is present, the security lamp will light for 50 ignition cycles or until the DTC is cleared manually.*

1. See Figure 3-9. After the lamp turns off after being illuminated for the first four second period, one of three events may occur:
   a. The lamp remains off. This indicates there are no current fault conditions or stored historic DTC's currently detected by the TSSM.
   b. The lamp stays off for only four seconds and then comes back on for an eight-second period. This indicates a historic DTC is stored, but no current DTC exists.
   c. If the lamp remains on beyond the eight-second period, a current DTC exists.
2. See CODE TYPES under Section 3.8 CHECKING FOR DIAGNOSTIC TROUBLE CODES for a complete description of DTC formats.

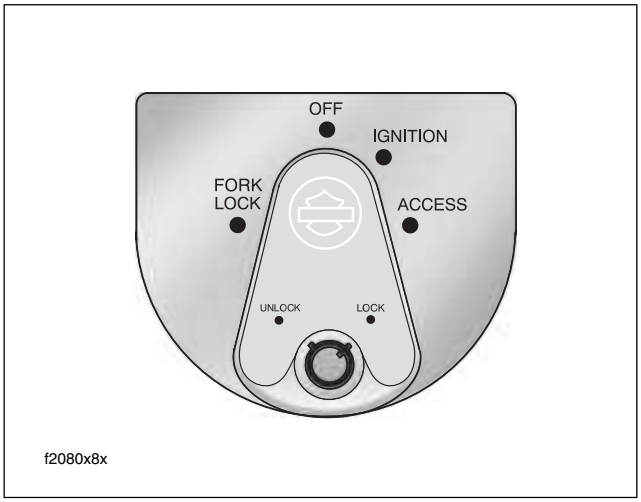

Figure 3-7. Ignition Switch (FLHX, FLHT/C/U, FLTR)

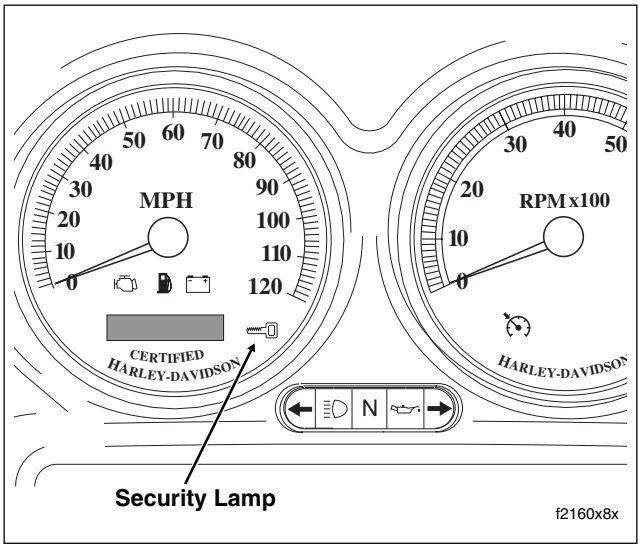

Figure 3-8. Speedometer (FLHX, FLHT/C/U)

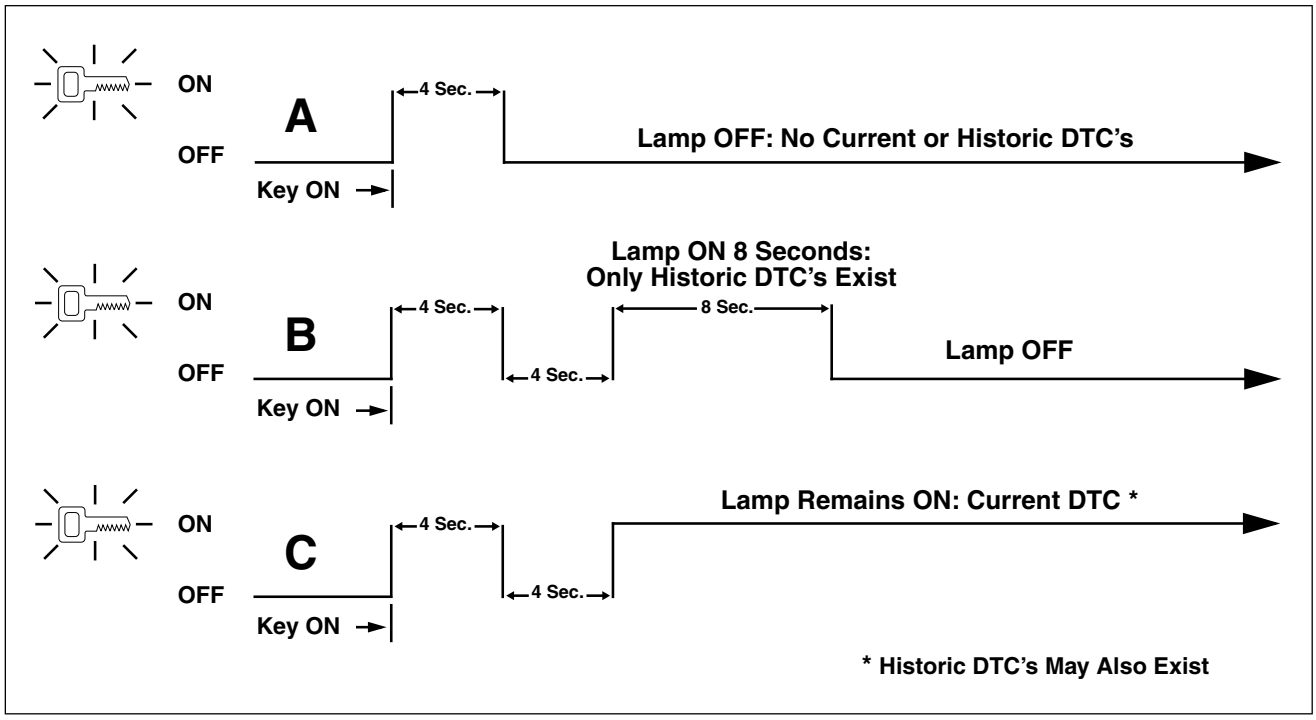

Figure 3-9. Security Lamp Operation

CODE TYPES

There are two types of DTC's: current and historic. If a DTC is stored, it can be read using either a computer based diagnostic package called DIGITAL TECHNICIAN (Part No. HD-44750) or speedometer self diagnostics. See Section 3.10 SPEEDOMETER SELF DIAGNOSTICS.

NOTES

- *To differentiate between current and historic DTC's a computer based diagnostic package called DIGITAL TECHNICIAN (Part No. HD-44750) must be employed.*
- *All DTC's reside in the memory of the ECM/ICM, TSM/TSSM, speedometer or tachometer until the DTC is cleared by use of the speedometer self diagnostics. See Section 3.10 SPEEDOMETER SELF DIAGNOSTICS.*
- *A historic DTC is also cleared after a total of 50 trips has elapsed. A trip consists of a start and run cycle. After the 50 trip retention period, the DTC is automatically erased from memory providing that no subsequent faults of the same type are detected in that period.*

Current

Current DTC's are those which are present during the current ignition cycle. See the appropriate flow charts for solutions.

Historic

If a particular problem happens to resolve itself, the active status problem is dropped and it becomes a historic DTC rather than a current DTC. For example, intermittent output shorts can become typical historic DTC's.

Historic DTC's can only be retrieved using a computer based diagnostic package called DIGITAL TECHNICIAN (Part No. HD-44750).

Historic DTC's are stored for 50 ignition cycles after any DTC was last set as current to assist in the diagnosis of intermittent faults. On the 50th cycle, the DTC will clear itself. The check engine lamp will not indicate the existence of only historic DTC's.

It is important to note that historic DTC's will exist whenever the system indicates the existence of a current fault. See MULTIPLE DIAGNOSTIC TROUBLE CODES if multiple DTC's are found.

Diagnostic charts are designed for use with current DTC's and as a result they frequently suggest part replacement. When diagnosing a historic DTC the charts can be helpful but should not lead to part replacement without verification the part is faulty.

RETRIEVING DIAGNOSTIC TROUBLE CODES

The TSM/TSSM allows two levels of diagnostics:

- The most sophisticated mode employs a computer based diagnostic package called DIGITAL TECHNICIAN (Part No. HD-44750).
- The second mode requires using the speedometer self diagnostics. Speedometer, tachometer (if equipped), TSM/TSSM and ICM/ECM DTC's can be accessed and cleared. See Section 3.10 SPEEDOMETER SELF DIAGNOSTICS.

Use of speedometer self diagnostics assumes that Digital Technician is not available.

MULTIPLE DIAGNOSTIC TROUBLE CODES

While it is possible for more than one fault to occur and set more than one DTC, there are several conditions which may result in **one** fault setting **multiple** DTC's:

Serial data DTC's (U1016, U1064, U1097, U1255, U1300 and U1301) may be accompanied by other DTC's. **Always** correct the serial data DTC's before resolving the other DTC's.

Refer to Table 3-10. This table gives most TSM/TSSM DTC's a priority ranking.

INITIAL DIAGNOSTIC CHECK: TSM/TSSM 3.9

GENERAL

To locate faulty circuits or other system problems, follow the diagnostic flow charts in this section. For a systematic approach, always begin with INITIAL DIAGNOSTICS which follows. Read the general information and then work your way through the flow chart box by box.

Diagnostic Notes

If a numbered circle appears adjacent to a flow chart box, then more information is offered in the diagnostic notes. Many diagnostic notes contain supplemental information, descriptions of various diagnostic tools or references to other parts of the manual where information on the location and removal of components may be obtained.

Circuit Diagram/Wire Harness Connector Table

When working through a flow chart, refer to the illustrations, the associated circuit diagram and the wire harness connector table as necessary. The wire harness connector table for each circuit diagram identifies the connector number, description, type and general location.

In order to perform most diagnostic routines, a Breakout Box and a digital volt/ohmmeter (DVOM) are required. See Section 3.11 BREAKOUT BOX: TSM/TSSM.

To perform the circuit checks with any degree of efficiency, a familiarity with the various wire connectors is also necessary.

Job/Time Code Values

Some charts may contain warranty job/time codes. Dealership technicians filing warranty claims should use the job/time code values printed in **bold text** underneath the appropriate repair.

Reprogramming ICM/ECM

Diagnostic charts frequently suggest ECM/ICM replacement. In the event an ICM or ECM needs to be replaced, it must be reprogrammed using a computer based diagnostic package called DIGITAL TECHNICIAN (Part No. HD-44750). See your dealer. Password learn procedure must also be performed. See Section 3.24 PASSWORD LEARN.

INITIAL DIAGNOSTICS

Diagnostic Tips

- If speedometer reads “BUS Er” with the ignition key turned ON (engine stop switch at RUN with the engine off), check data bus for an open or short to ground between data link connector [91A] terminal 3 and ICM connector [10B] terminal 12 (carbureted models), ECM connector [78B] terminal 5 (EFI models), TSSM connector [30B] terminal 3, speedometer connector [39B] terminal 2 or tachometer (if equipped) connector [108B] terminal 2.
- Check for an open diagnostic test terminal between data link connector [91A] terminal 3 and TSM/TSSM connector [30B] terminal 3. With ignition key turned ON, serial data bus voltage should be typically 0.6-0.8 volts. The range of acceptable voltage is 0-7.0 volts.
- To identify intermittents, wiggle instrument and/or vehicle harness while performing steps in the Diagnostic Check charts.

Diagnostic Notes

The reference numbers below correlate with the circled numbers on the diagnostic check flow charts. See page 3-36.

1. Connect BREAKOUT BOX (Part No. HD-42682) between wire harness connector [39B] and speedometer connector [39A] using INSTRUMENT HARNESS ADAPTERS (Part No. HD-46601). See Section 2.5 BREAKOUT BOX: SPEEDOMETER.
2. Compare TSM/TSSM system behavior to symptoms in Table 3-11.

All TSM/TSSM DTC’s are listed in Table 3-10.

Other Diagnostic Trouble Codes (DTC’s)

See Section 2.5 BREAKOUT BOX: SPEEDOMETER for any DTC’s related to the speedometer.

See Section 4.4 INITIAL DIAGNOSTIC CHECK: ICM for any DTC’s related to the ICM.

See Section 5.5 INITIAL DIAGNOSTIC CHECK: EFI for any DTC’s related to the ECM.

Table 3-10. TSM/TSSM Diagnostic Trouble Codes (DTC) and Fault Conditions

PRIORITY	DTC	FAULT CONDITION	SOLUTION
1	“BUS Er”	Serial data bus shorted low/open/high	3.23 DTC U1300, U1301 or “BUS ER”
2	U1300	Serial data low	3.23 DTC U1300, U1301 or “BUS ER”
3	U1301	Serial data high	3.23 DTC U1300, U1301 or “BUS ER”
4	U1016	Loss of ICM/ECM serial data (state of health)	3.21 DTC U1016, U1255
5	U1097	Loss of Speedometer serial data (state of health)	3.22 DTC U1097, U1255
6	U1255	Missing response from other module (speedometer) at startup	3.22 DTC U1097, U1255
7	B1135	Accelerometer fault	3.19 DTC B1135
8	B1151	Sidecar BAS low	Sidecar DTC’s apply only to Touring models equipped with sidecars. If these DTC’s are present on non sidecar equipped motorcycles, the TSM/TSSM is not properly configured.
	B1152	Sidecar BAS high	
	B1153	Sidecar BAS out of range	
9	B1134	Starter output high	3.18 DTC B1134
10	B1121	Left turn output fault	3.15 TURN SIGNAL ERRORS
11	B1122	Right turn output fault	3.15 TURN SIGNAL ERRORS
12	B0563	Battery voltage high	3.16 DTC B0563
13	B1131	Alarm output low	3.17 DTC B1131, B1132
14	B1132	Alarm output high	3.17 DTC B1131, B1132
15	B1141	Ignition switch open/low	3.15 TURN SIGNAL ERRORS

Table 3-11. Symptoms That May Not Set Diagnostic Trouble Codes

SYMPTOM	SOLUTION
Fob signal to TSSM weak or fails	See 3.14 KEY FOB SIGNAL TO TSSM WEAK OR FAILS
Turn signal will not cancel or cancels erratically	See Turn Signal Error 1A in 3.15 TURN SIGNAL ERRORS
Turn signal flashes double normal rate, all bulbs good	See Turn Signal Error 3A in 3.15 TURN SIGNAL ERRORS

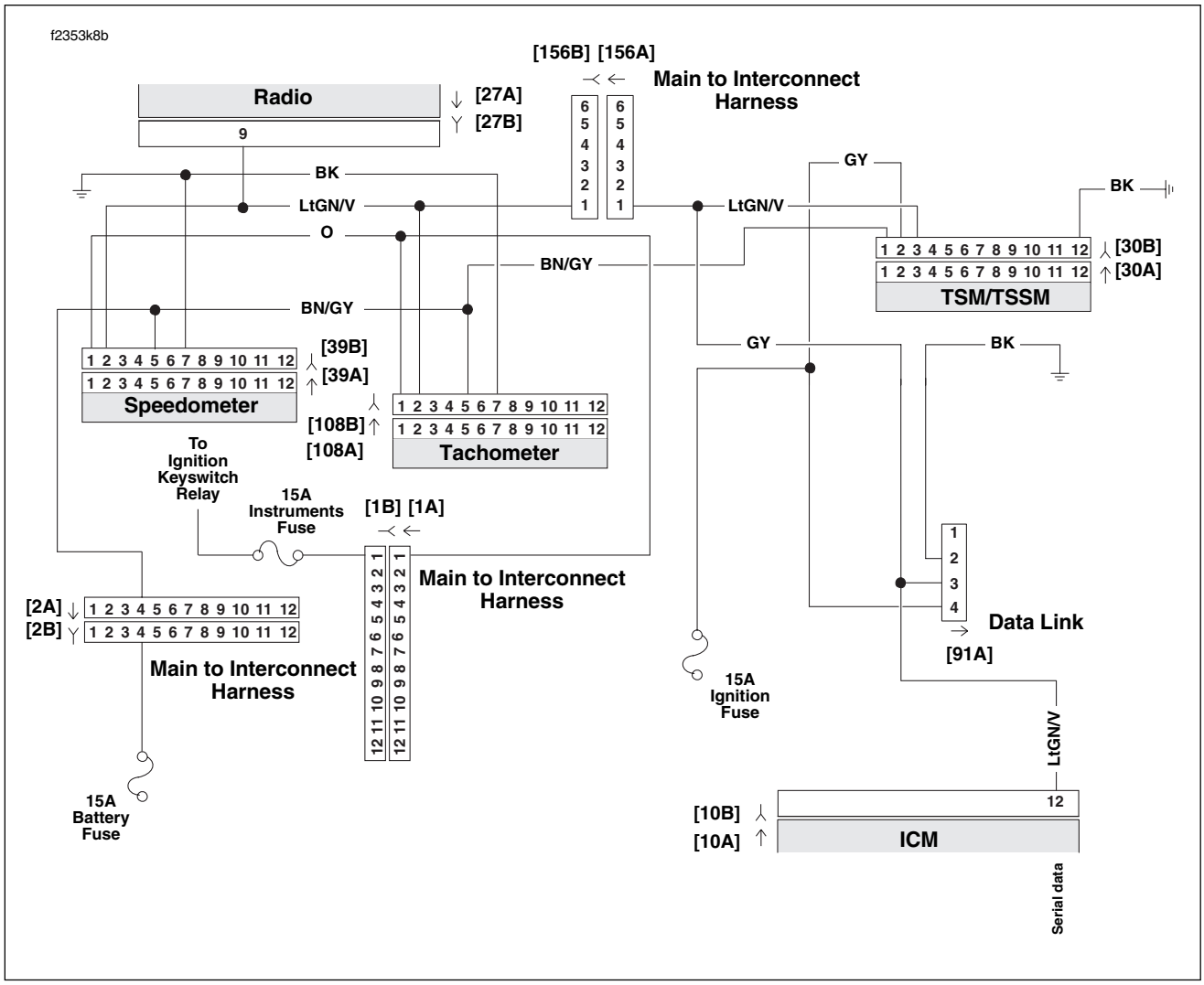

Figure 3-10. Diagnostic Check: FLHX, FLHT/C (Carbureted)

Table 3-12. Wire Harness Connectors in Figure 3-10.

NO.	DESCRIPTION	TYPE	LOCATION
[1]	Main to Interconnect Harness	12-Place Deutsch (Black)	Inner Fairing - Right Radio Support Bracket
[2]	Main to Interconnect Harness	12-Place Deutsch (Gray)	Inner Fairing - Right Fairing Support Brace
[10]	ICM	12-Place Deutsch	Under Right Side Cover
[27]	Radio	23-Place Amp	Inner Fairing - Back of Radio (Right Side)
[30]	TSM/TSSM	12-Place Deutsch	Cavity in Crossmember at Rear of Battery Box (Under Seat)
[39]	Speedometer	12-Place Packard	Inner Fairing (Back of Speedometer)
[91]	Data Link	4-Place Deutsch	Under Right Side Cover
[108]	Tachometer	12-Place Packard	Inner Fairing (Back of Tachometer)
[156]	Main to Interconnect Harness	6-Place Deutsch	Inner Fairing - Right Fairing Support Brace

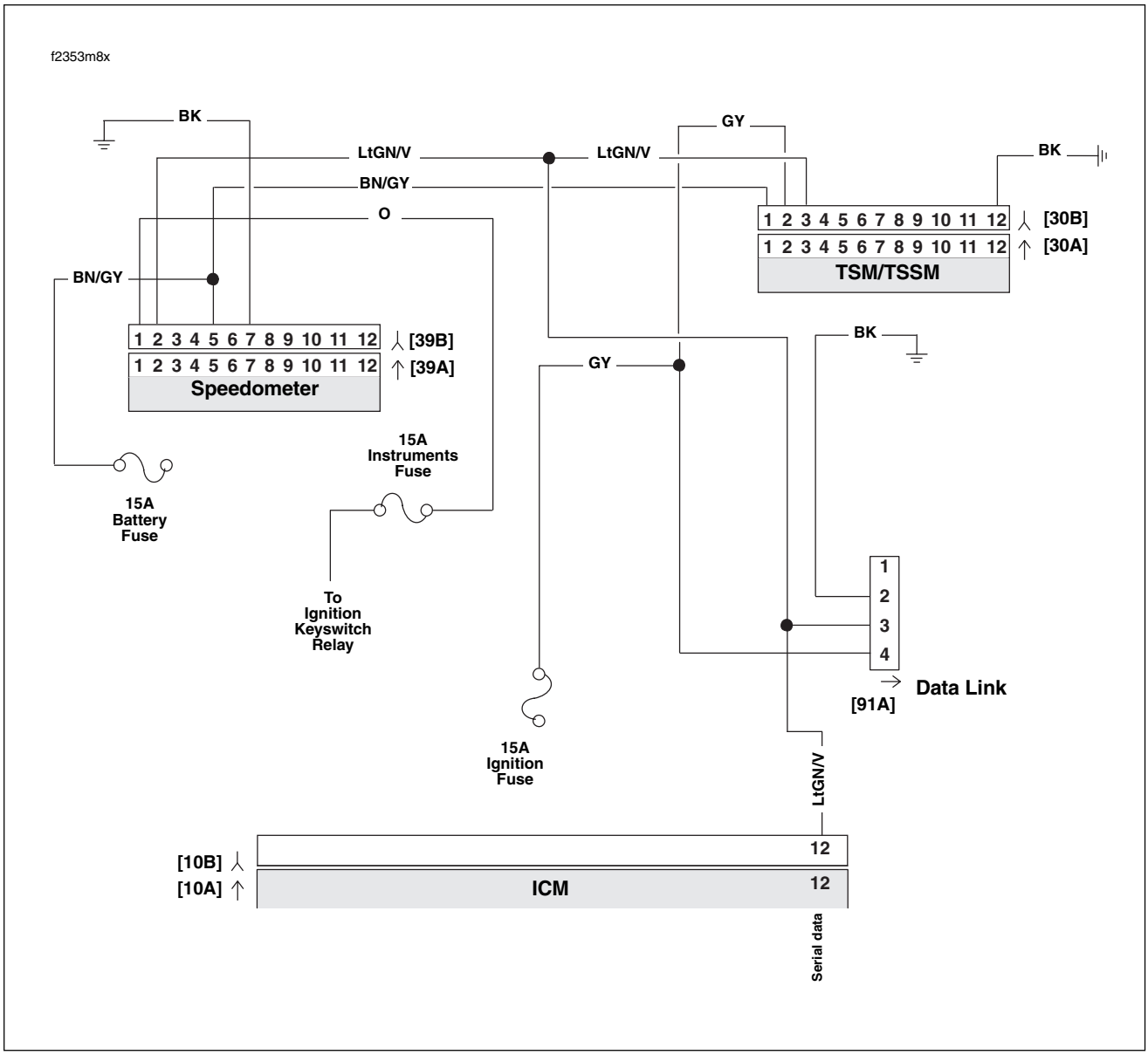

Figure 3-11. Diagnostic Check: FLHR/S (Carbureted)

Table 3-13. Wire Harness Connectors in Figure 3-11.

NO.	DESCRIPTION	TYPE	LOCATION
[10]	ICM	12-Place Deutsch	Under Right Side Cover
[30]	TSM/TSSM	12-Place Deutsch	Cavity in Crossmember at Rear of Battery Box (Under Seat)
[39]	Speedometer	12-Place Packard	Under Console (Back of Speedometer)
[91]	Data Link	4-Place Deutsch	Under Right Side Cover

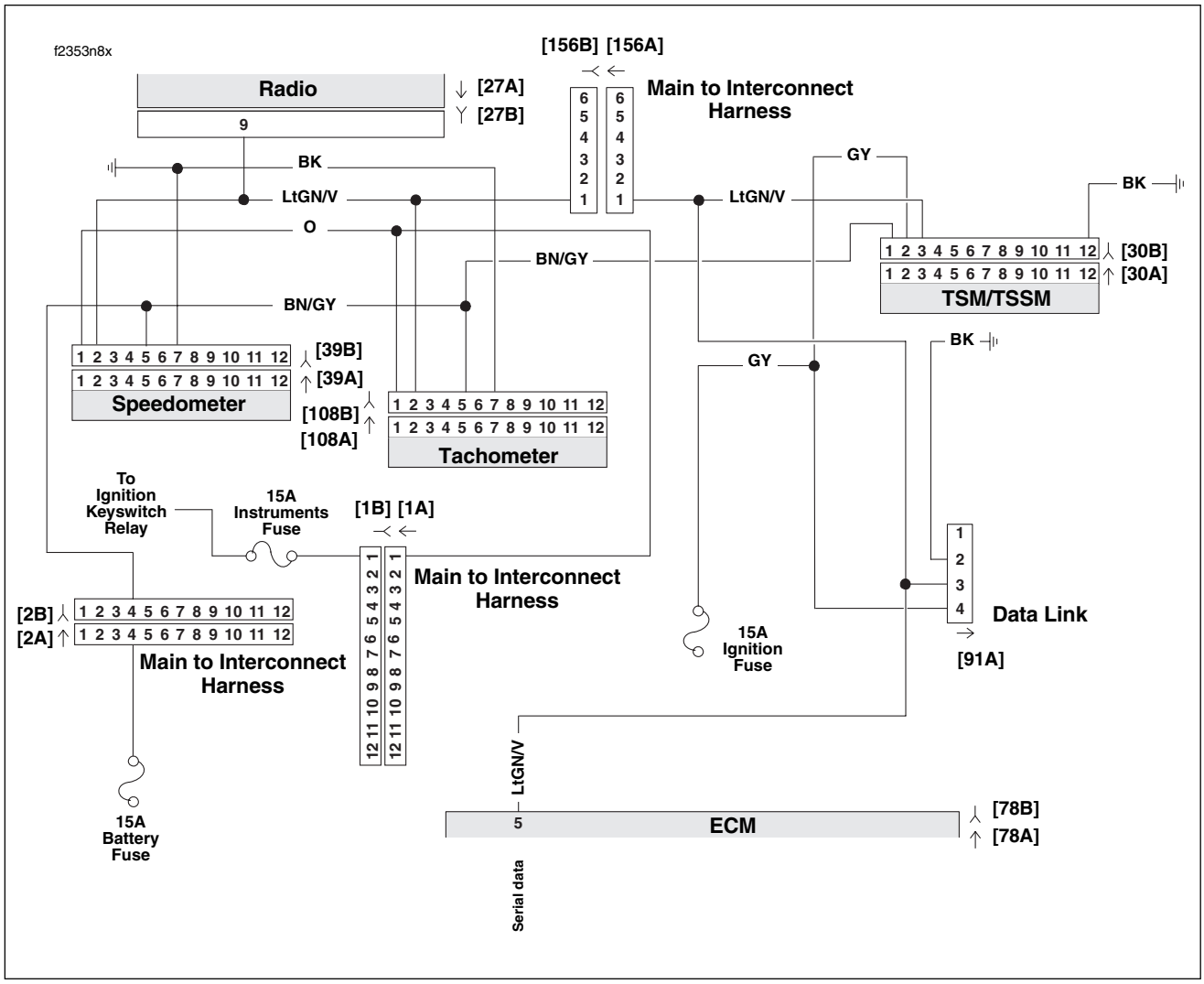

Figure 3-12. Diagnostic Check: FLHX, FLHT/C/U, FLTR (Fuel Injected)

Table 3-14. Wire Harness Connectors in Figure 3-12.

NO.	DESCRIPTION	MODEL	TYPE	LOCATION
[1]	Main to Interconnect Harness	FLHT/C	12-Place Deutsch (Black)	Inner Fairing - Right Radio Support Bracket
		FLTR	12-Place Deutsch (Black)	Inner Fairing - Below Radio (Right Side)
[2]	Main to Interconnect Harness	FLHT/C	12-Place Deutsch (Gray)	Inner Fairing - Right Fairing Support Brace
		FLTR	12-Place Deutsch (Gray)	Inner Fairing - Below Radio (Right Side)
[27]	Radio	All	23-Place Amp	Inner Fairing - Back of Radio (Right Side)
[30]	TSM/TSSM	All	12-Place Deutsch	Cavity in Crossmember at Rear of Battery Box (Under Seat)
[39]	Speedometer	FLHT/C	12-Place Packard	Inner Fairing (Back of Speedometer)
		FLTR	12-Place Packard	Under Bezel (Back of Speedometer)
[78]	ECM	All	36-Place Packard	Under Right Side Cover
[91]	Data Link	All	4-Place Deutsch	Under Right Side Cover
[108]	Tachometer	FLHT/C	12-Place Packard	Inner Fairing (Back of Tachometer)
		FLTR	12-Place Packard	Under Bezel (Back of Tachometer)
[156]	Main to Interconnect Harness	FLHT/C	6-Place Deutsch	Inner Fairing - Right Fairing Support Brace
		FLTR	6-Place Deutsch	Inner Fairing - Below Radio (Right Side)

HOME

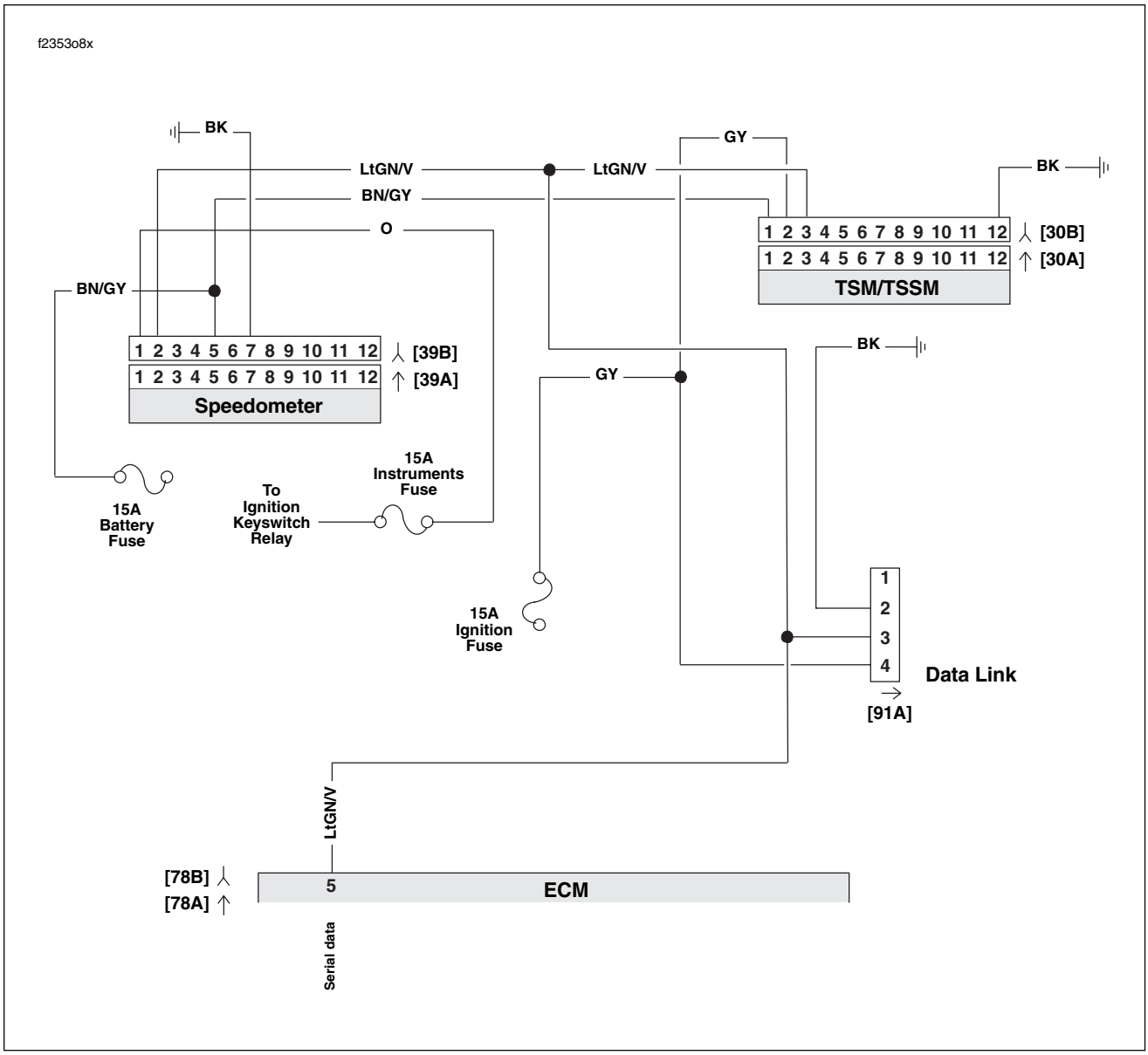

Figure 3-13. Diagnostic Check: FLHR/C/S (Fuel Injected)

Table 3-15. Wire Harness Connectors in Figure 3-13.

NO.	DESCRIPTION	TYPE	LOCATION
[30]	TSM/TSSM	12-Place Deutsch	Cavity in Crossmember at Rear of Battery Box (Under Seat)
[39]	Speedometer	12-Place Packard	Under Console (Back of Speedometer)
[78]	ECM	36-Place Packard	Under Right Side Cover
[91]	Data Link	4-Place Deutsch	Under Right Side Cover

Initial Diagnostic Check (Part 1 of 3)

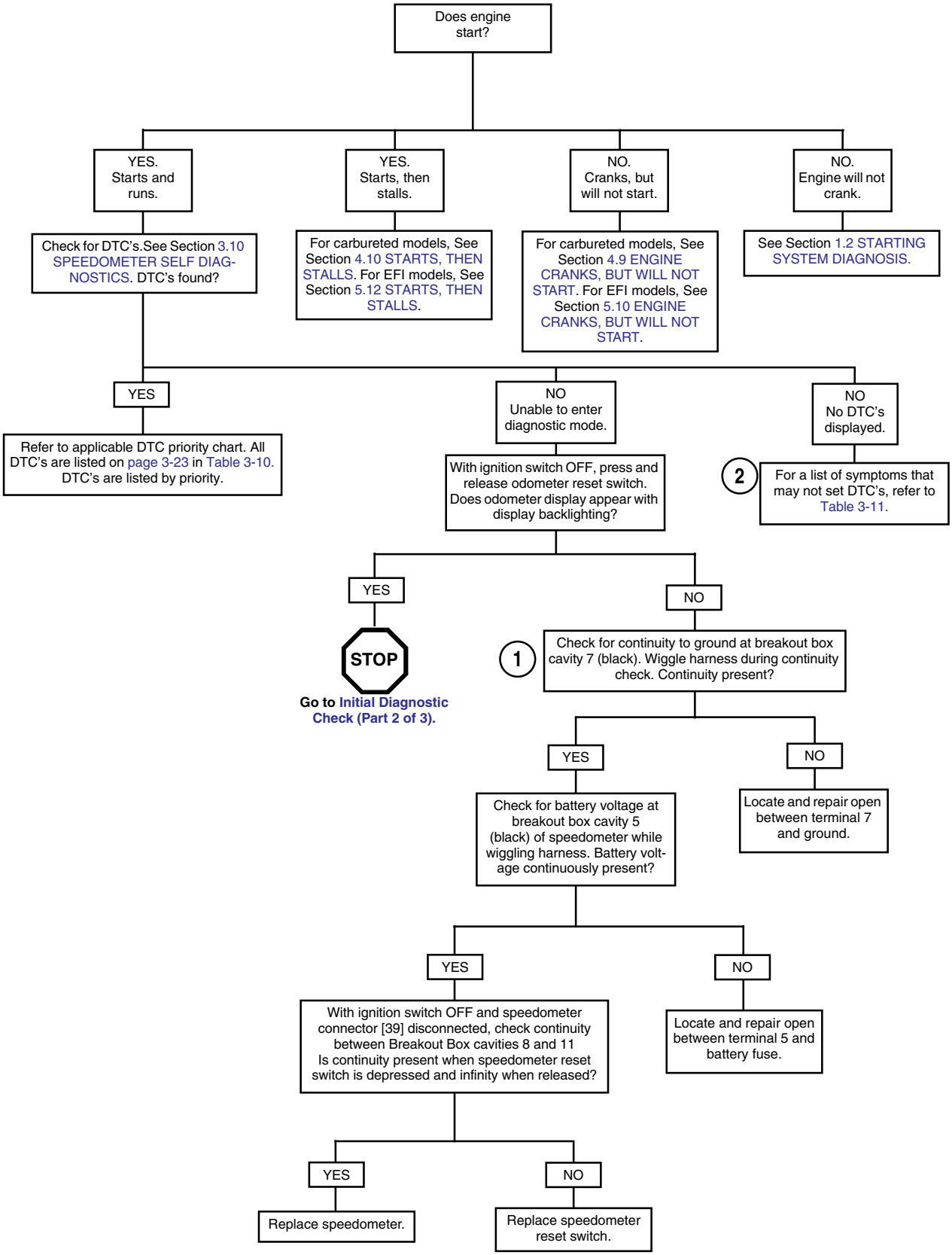

HOME

Initial Diagnostic Check (Part 2 of 3)

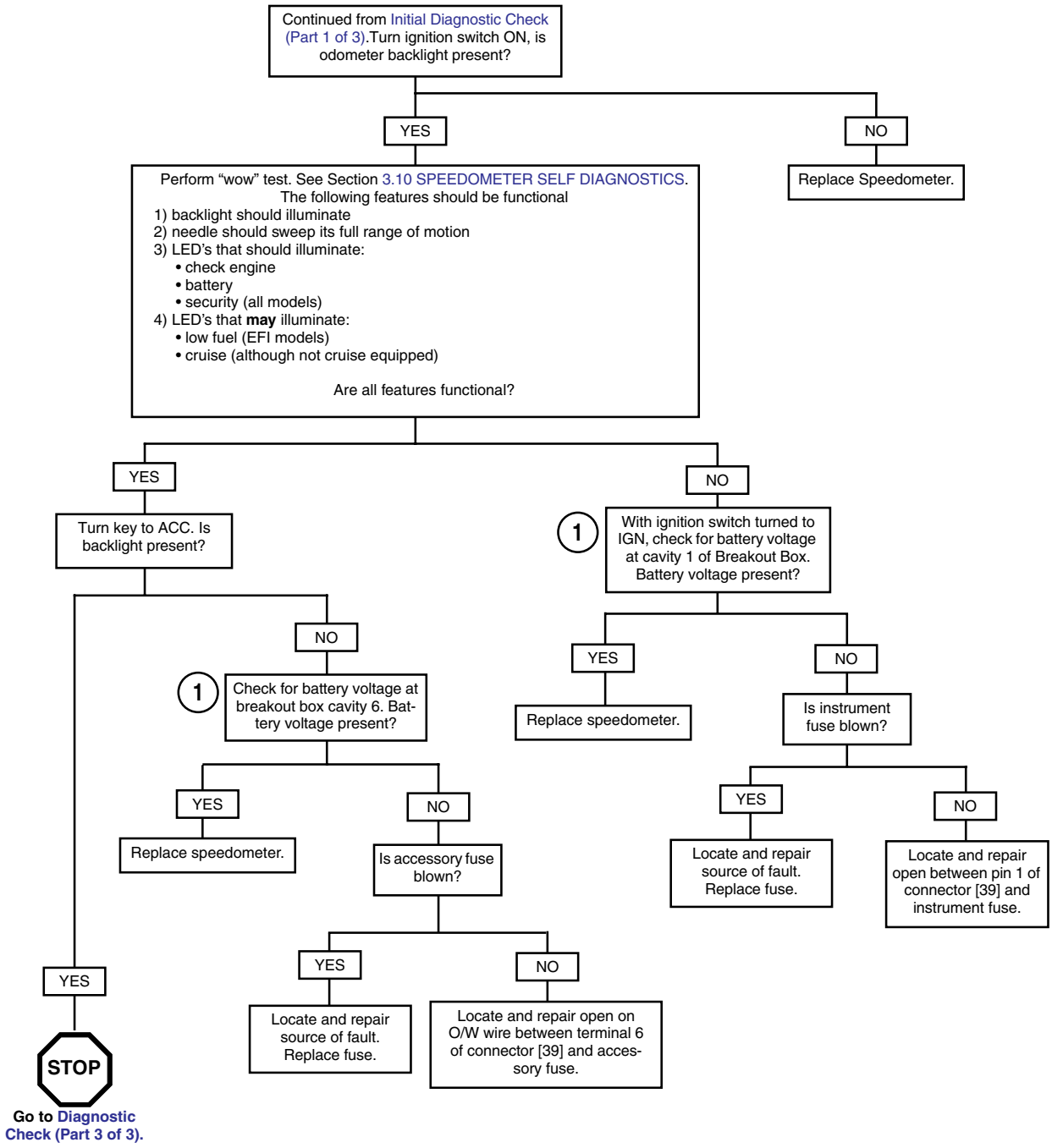

Diagnostic Check (Part 3 of 3)

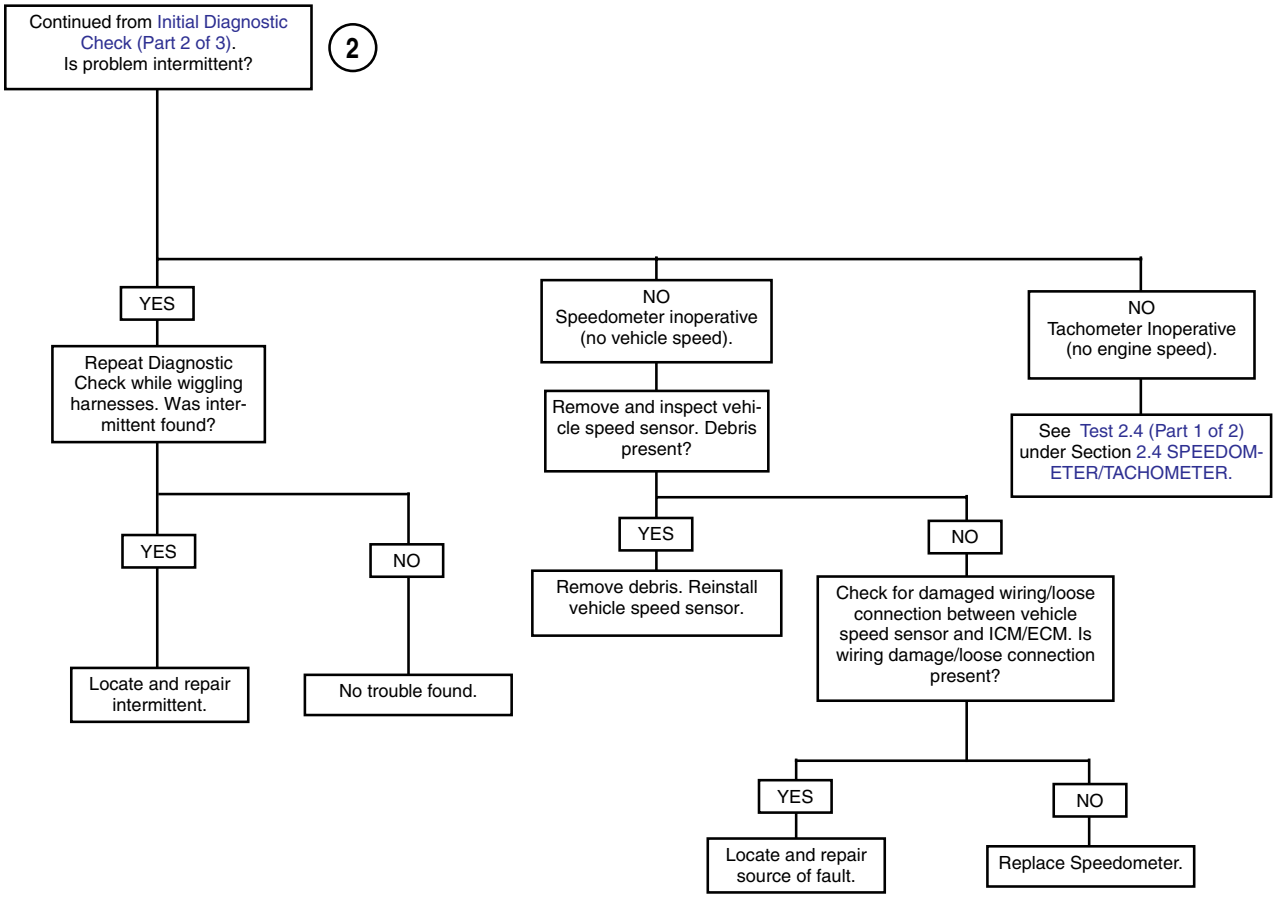

SPEEDOMETER SELF DIAGNOSTICS 3.10

GENERAL

The speedometer is capable of displaying and clearing speedometer, tachometer, TSM/TSSM, and ICM/ECM DTC's (diagnostic mode).

DIAGNOSTICS

Diagnostic Tips

- For a quick check of speedometer function, a "wow" test can be performed. Press and hold odometer reset switch then turn ignition switch ON. Release reset switch. See Figure 3-14. Background lighting should illuminate, gauge needles should sweep their full range of motion, and indicator lamps [battery, security, low fuel (EFI models), check engine and cruise] should illuminate. Some lamps may illuminate even though they do not apply to the vehicle. For example, the cruise lamp may illuminate even though the motorcycle is not equipped with cruise control.
- If speedometer fails "wow" test, check for battery, ground, ignition, accessory and speedometer reset switch to speedometer. If any feature in the speedometer is non-functional, See Section 2.2 INITIAL DIAGNOSTIC CHECK: SPEEDOMETER.

Diagnostic Notes

Use of speedometer self diagnostics assumes that DIGITAL TECHNICIAN (Part No. HD-44750) is not available.

The reference numbers below correlate with the circled numbers in the Speedometer Self Diagnostics (chart)

1. To exit diagnostic mode, turn ignition switch OFF.
2. To clear DTC's for selected module, press the odometer reset switch for more than 5 seconds when DTC is displayed. This procedure will clear all DTC's for selected module.

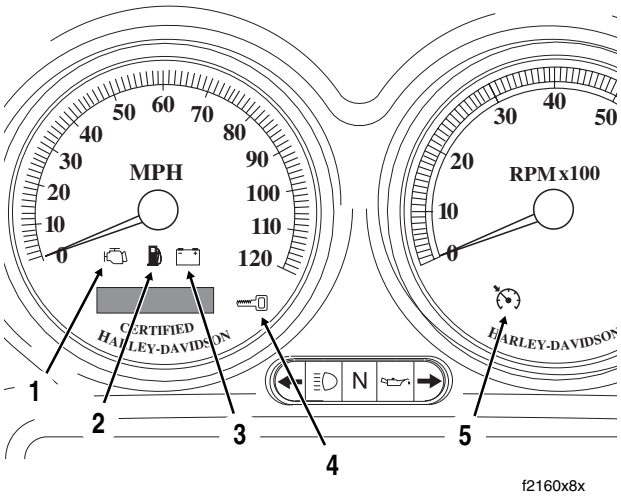

1. **Check Engine**
2. **Low Fuel**
3. **Battery**
4. **Security**
5. **Cruise (Where Applicable)**

Figure 3-14. Icons

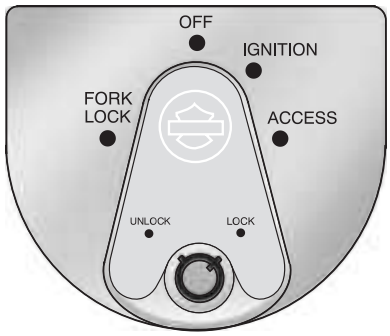

Figure 3-15. Ignition Switch (FLHX, FLHT/C/U, FLTR)

Speedometer Self Diagnostics (chart)

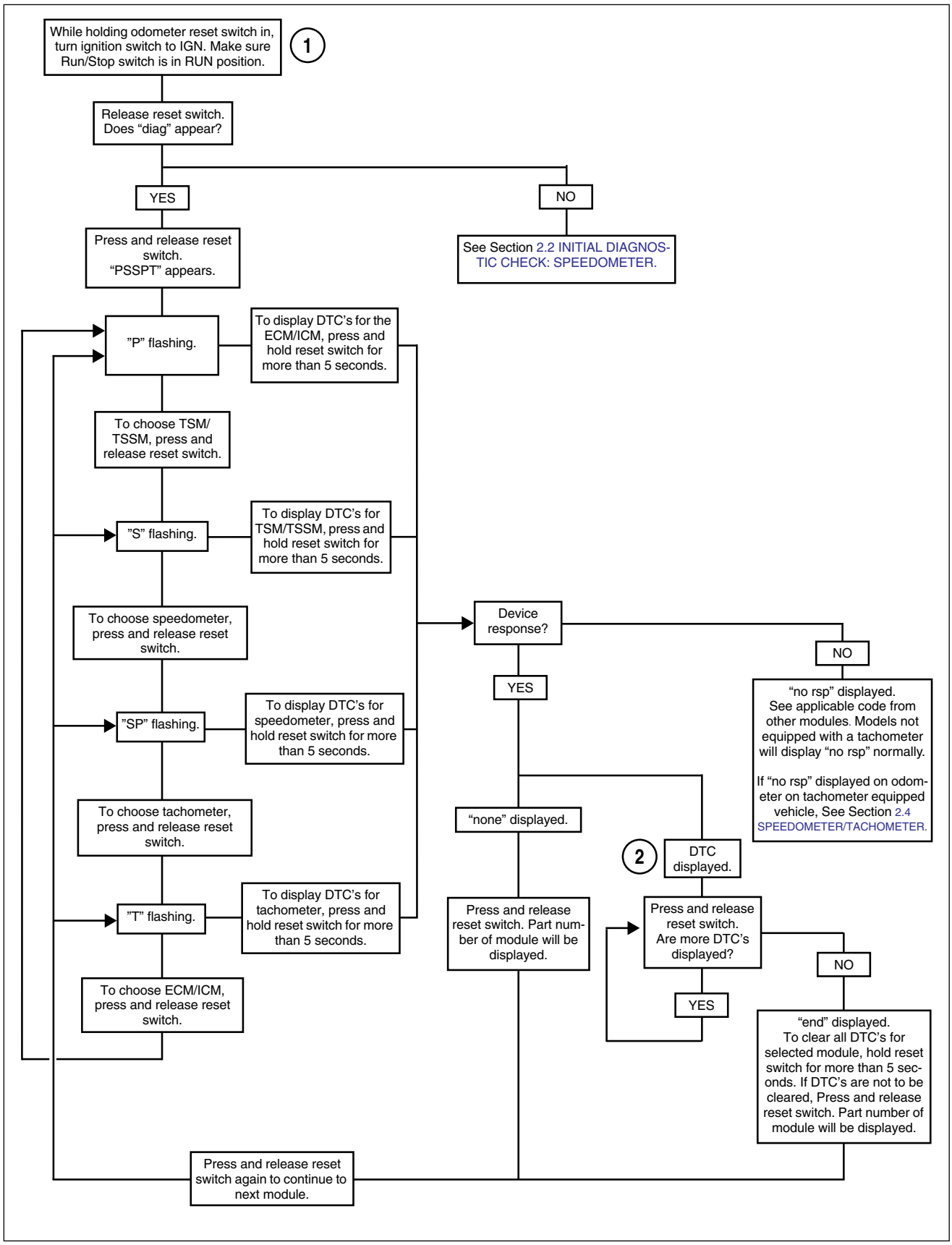

Figure 3-16. Initial Diagnostic Check

BREAKOUT BOX: TSM/TSSM 3.11

GENERAL

The BREAKOUT BOX (Part No. HD-42682) splices into the main harness. Used in conjunction with a digital volt/ohmmeter (DVOM), it allows circuit diagnosis of wiring harness and connections without having to probe with sharp objects.

INSTALLATION

1. Gain access to TSM/TSSM. See Touring Service Manual.
2. See Figure 3-17. Depress latches on connector [30B].
3. See Figure 3-18. Attach Breakout Box to connector.
   a. Mate gray socket housing on Breakout Box with TSM/TSSM connector [30A].
   b. Mate gray pin housing on Breakout Box with wire harness connector [30B].

REMOVAL

1. See Figure 3-17. Depress latches on connector [30B].
2. Detach gray Breakout Box connector from TSM/TSSM connector [30A].
3. Detach gray Breakout Box connector from wire harness connector [30B].
4. Reinstall TSM/TSSM. See the Touring Service Manual.
5. Install parts removed for access.

NOTE

Vehicle will not start with TSM/TSSM disconnected or incorrectly mounted.

.

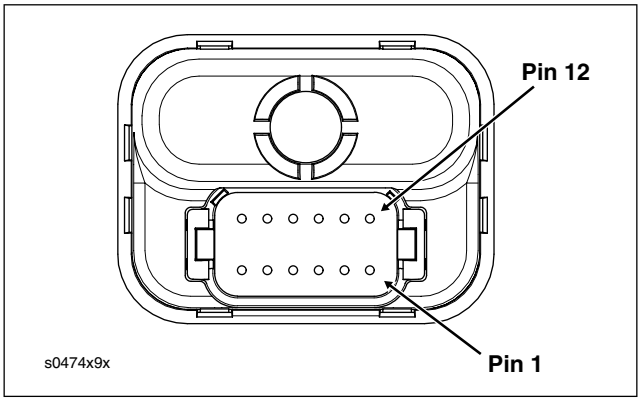

Figure 3-17. TSM/TSSM Connector

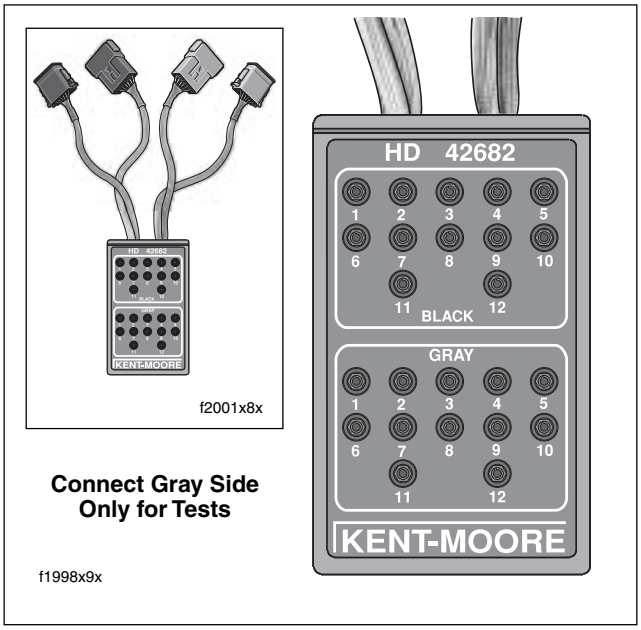

Figure 3-18. Breakout Box (Part No. HD-42682)

Table 3-16. TSM/TSSM Connector [30B]

PIN	FUNCTION	PIN	FUNCTION
1	Battery	7	Right turn switch input
2	Ignition	8	Left turn switch input
3	Serial data	9	Start relay control
4	Security lamp	10	Ignition enable signal (not used)
5	Left turn feed	11	Alarm signal
6	Right turn feed	12	Ground

NO SECURITY LAMP AT KEY ON 3.12

GENERAL

No TSSM Power (Security Equipped Vehicles Only)

See Figure 3-19. When the Ignition/Light Key Switch is turned to IGNITION, the security lamp should illuminate for 4 seconds. Following the initial period of illumination, the lamp should go off for 4 seconds. It may then come back on for an 8 second period, indicating an historic DTC, or remain on, indicating a current DTC.

Power and ground are supplied to the Security lamp from the speedometer circuitry. The TSSM activates an LED driver circuit in the speedometer to illuminate the security lamp. A lack of power to the TSSM will cause the security lamp to be inoperative and will also create a no start situation.

Job/Time Code Values

Dealership technicians filing warranty claims should use the job/time code values printed in **bold text** underneath the appropriate repair.

DIAGNOSTICS

Diagnostic Tips

- Check for open in BN/V wire.
- Check for blown battery fuse. See Figure 3-19.

Diagnostic Notes

The reference numbers below correlate with the circled numbers on the Test 3.12 flow charts.

1. Connect BREAKOUT BOX (Part No. HD-42682) (gray) as follows:
   a. Mate gray socket housing on Breakout Box with TSM/TSSM connector [30A].
   b. Mate gray pin housing on Breakout Box with wire harness connector [30B].
2. Connect BREAKOUT BOX (Part No. HD-42682) (black) as follows:
   a. Mate black socket housing on Breakout Box with speedometer connector [39A] (at the back of the speedometer) using INSTRUMENT HARNESS ADAPTERS (Part No.HD-46601).
   b. Mate black pin housing on Breakout Box with wire harness connector [39B] using INSTRUMENT HARNESS ADAPTERS (Part No.HD-46601).
3. Use HARNESS CONNECTOR TEST KIT (Part No. HD-41404A), purple pin probe and patch cord between breakout Breakout Box and ground. Align blade with slot in terminal of Breakout Box.
4. Security lamp failure requires speedometer replacement. See the Touring Service Manual.

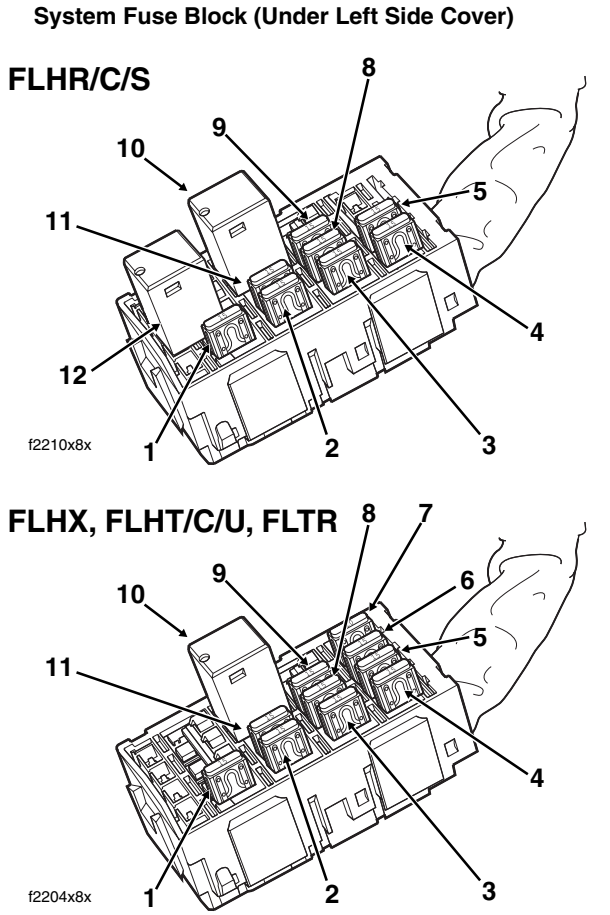

1.	Headlamp	7.	Radio Power
2.	Ignition	8.	Accessory
3.	Lighting	9.	Battery
4.	Instruments	10.	Brake Light Relay
5.	Brakes/Cruise	11.	P&A
6.	Radio Memory	12.	Starter Relay

Figure 3-19. Fuse Locations

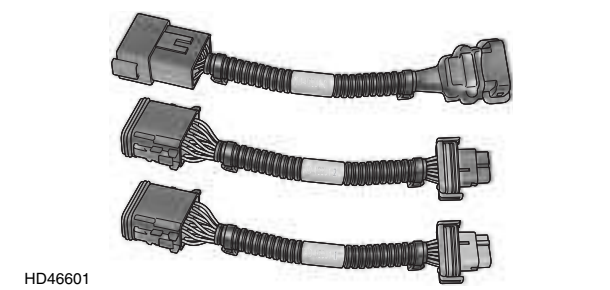

Figure 3-20. Instrument Harness Adapters (Part No. HD-46601)

HOME

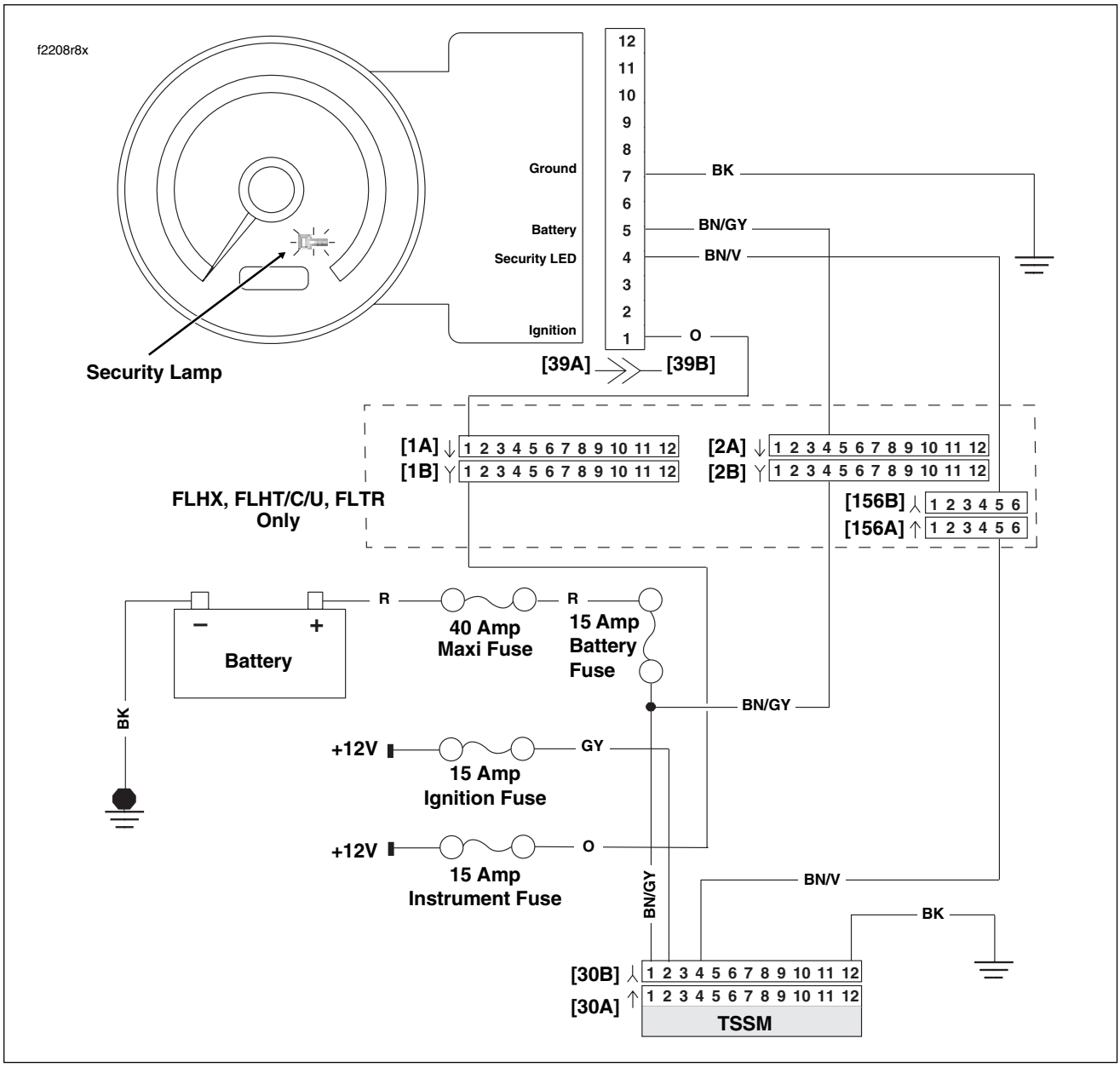

Figure 3-21. Security Lamp Circuit

Table 3-17. Wire Harness Connectors in Figure 3-21.

NO.	DESCRIPTION	MODEL	TYPE	LOCATION
[1]	Main to Interconnect Harness	FLHT/C	12-Place Deutsch (Black)	Inner Fairing - Right Radio Support Bracket
		FLTR	12-Place Deutsch (Black)	Inner Fairing - Below Radio (Right Side)
[2]	Main to Interconnect Harness	FLHT/C	12-Place Deutsch (Gray)	Inner Fairing - Right Fairing Support Brace
		FLTR	12-Place Deutsch (Gray)	Inner Fairing - Below Radio (Right Side)
[30]	TSM/TSSM	All	12-Place Deutsch	Cavity in Crossmember at Rear of Battery Box (Under Seat)
[39]	Speedometer	FLHT/C	12-Place Packard	Inner Fairing (Back of Speedometer)
		FLTR	12-Place Packard	Under Bezel (Back of Speedometer)
		FLHR/C/S	12-Place Packard	Under Console (Back of Speedometer)
[156]	Main to Interconnect Harness	FLHT/C	6-Place Deutsch	Inner Fairing - Right Fairing Support Brace
		FLTR	6-Place Deutsch	Inner Fairing - Below Radio (Right Side)

Test 3.12 (Part 1 of 3)

NO SECURITY LAMP AT KEY ON

Security equipped vehicles only.

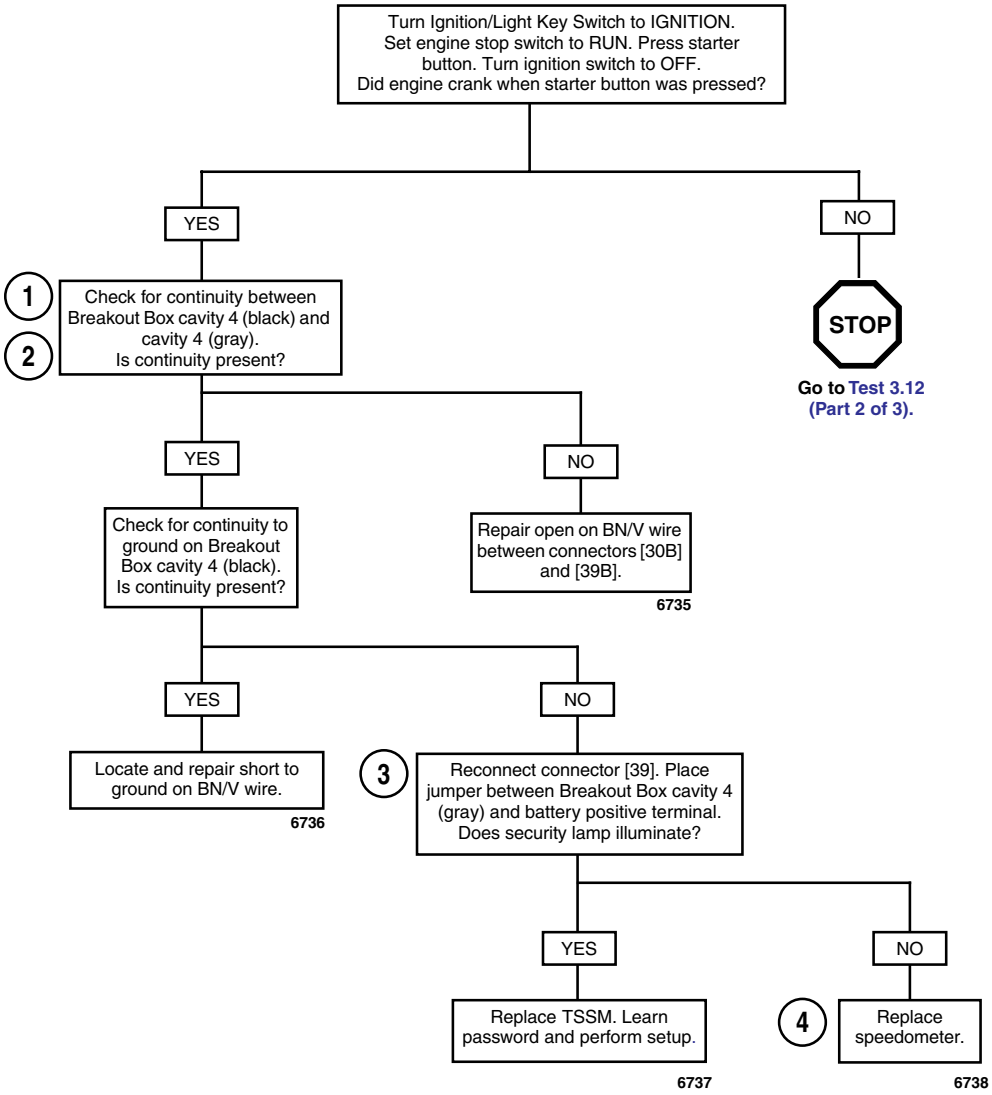

Clear DTC's using speedometer self diagnostics. See Section 3.10 SPEEDOMETER SELF DIAGNOSTICS. Confirm proper operation with no check engine lamp.

HOME

Test 3.12 (Part 2 of 3)

NO SECURITY LAMP AT KEY ON

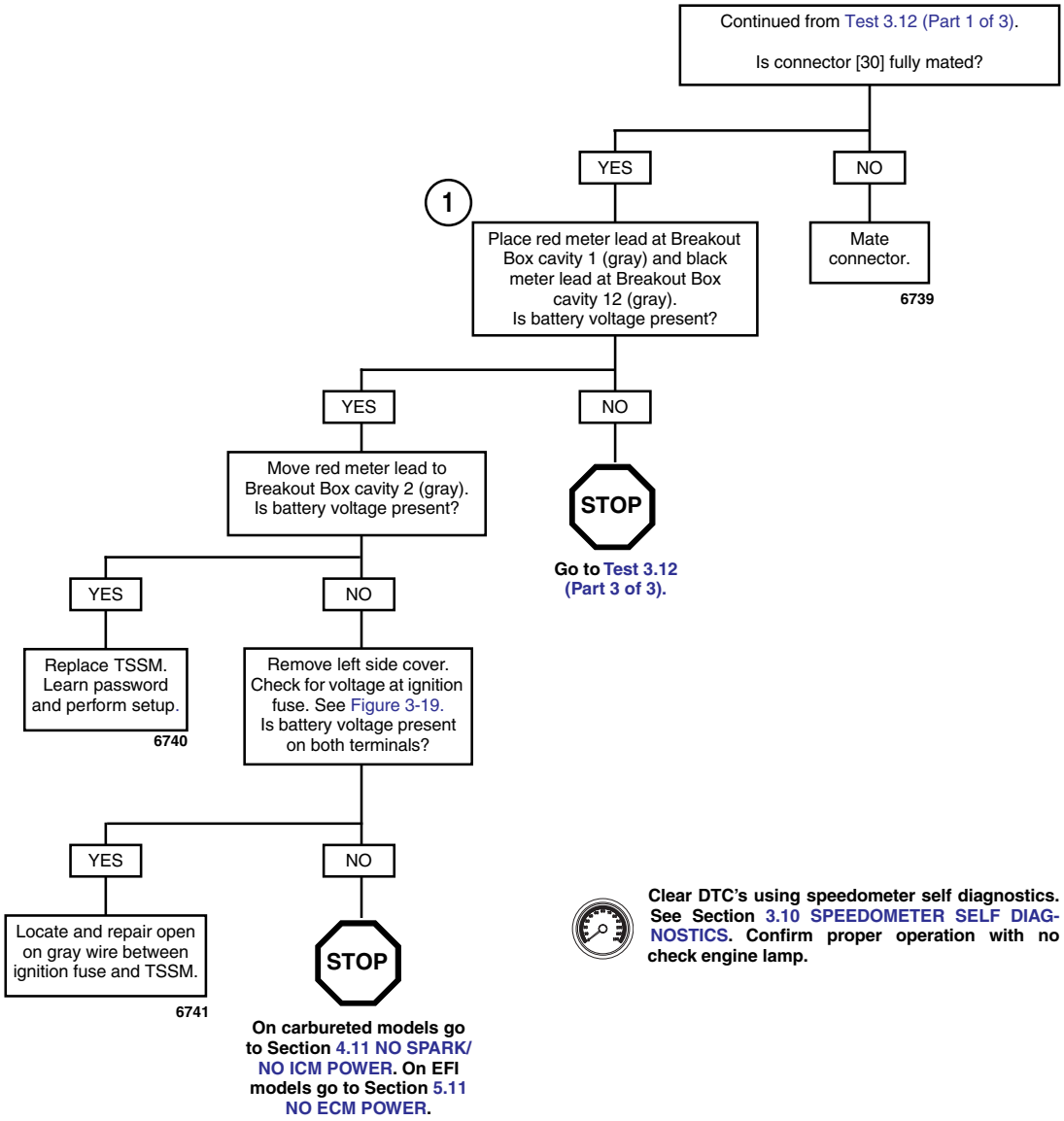

Test 3.12 (Part 3 of 3)

NO SECURITY LAMP AT KEY ON

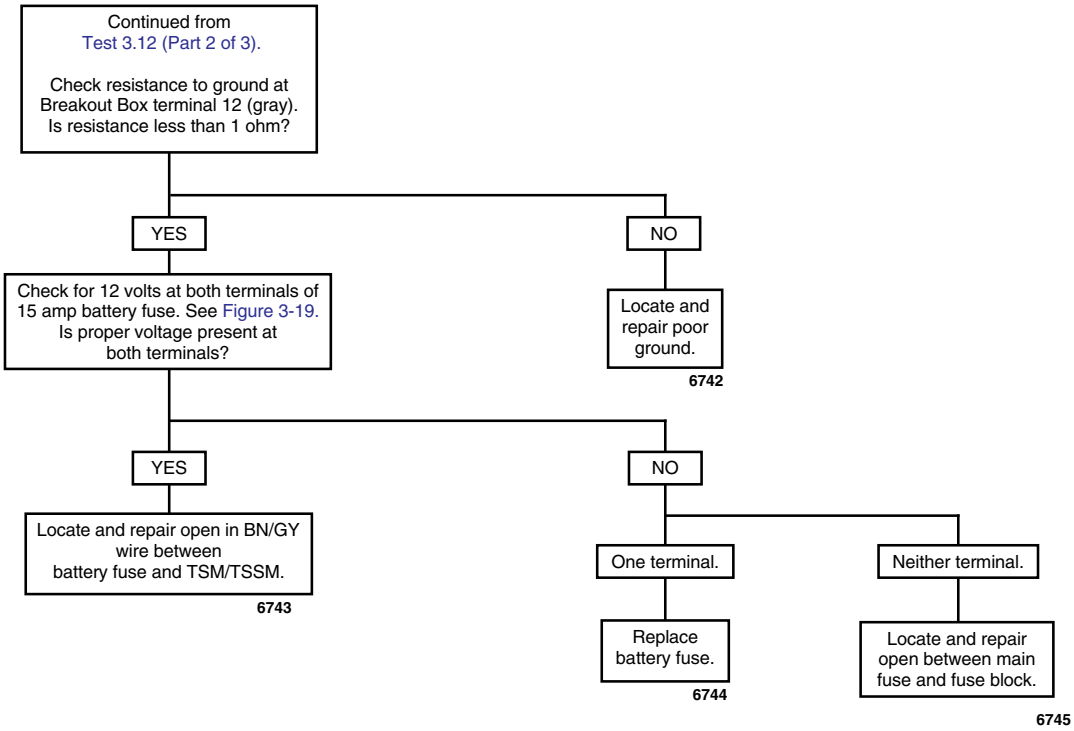

Clear DTC's using speedometer self diagnostics. See Section 3.10 SPEEDOMETER SELF DIAGNOSTICS. Confirm proper operation with no check engine lamp.

SECURITY LAMP ON CONTINUOUSLY 3.13

GENERAL

See Figure 3-22. When the Ignition/Light Key Switch is turned to IGNITION, the security lamp should illuminate for 4 seconds. Following the initial period of illumination, the lamp should go off for 4 seconds. It may then come back on for an 8 second period, indicating an historic DTC, or remain on, indicating a current DTC.

Job/Time Code Values

Dealership technicians filing warranty claims should use the job/time code values printed in **bold text** underneath the appropriate repair.

DIAGNOSTICS

Diagnostic Notes

The reference number below correlates with the circled number on the Test 3.13 flow chart.

1. Connector [39B] is on the back of the speedometer. Use HARNESS CONNECTOR TEST KIT (Part No. HD-41404A), black pin probe and patch cord.

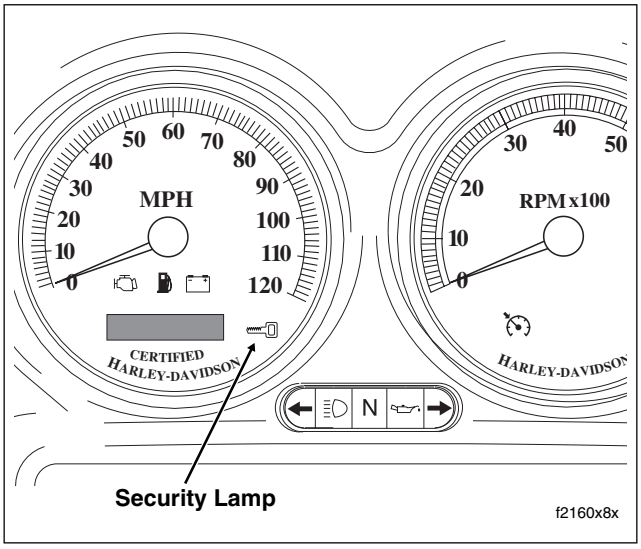

Figure 3-22. Speedometer

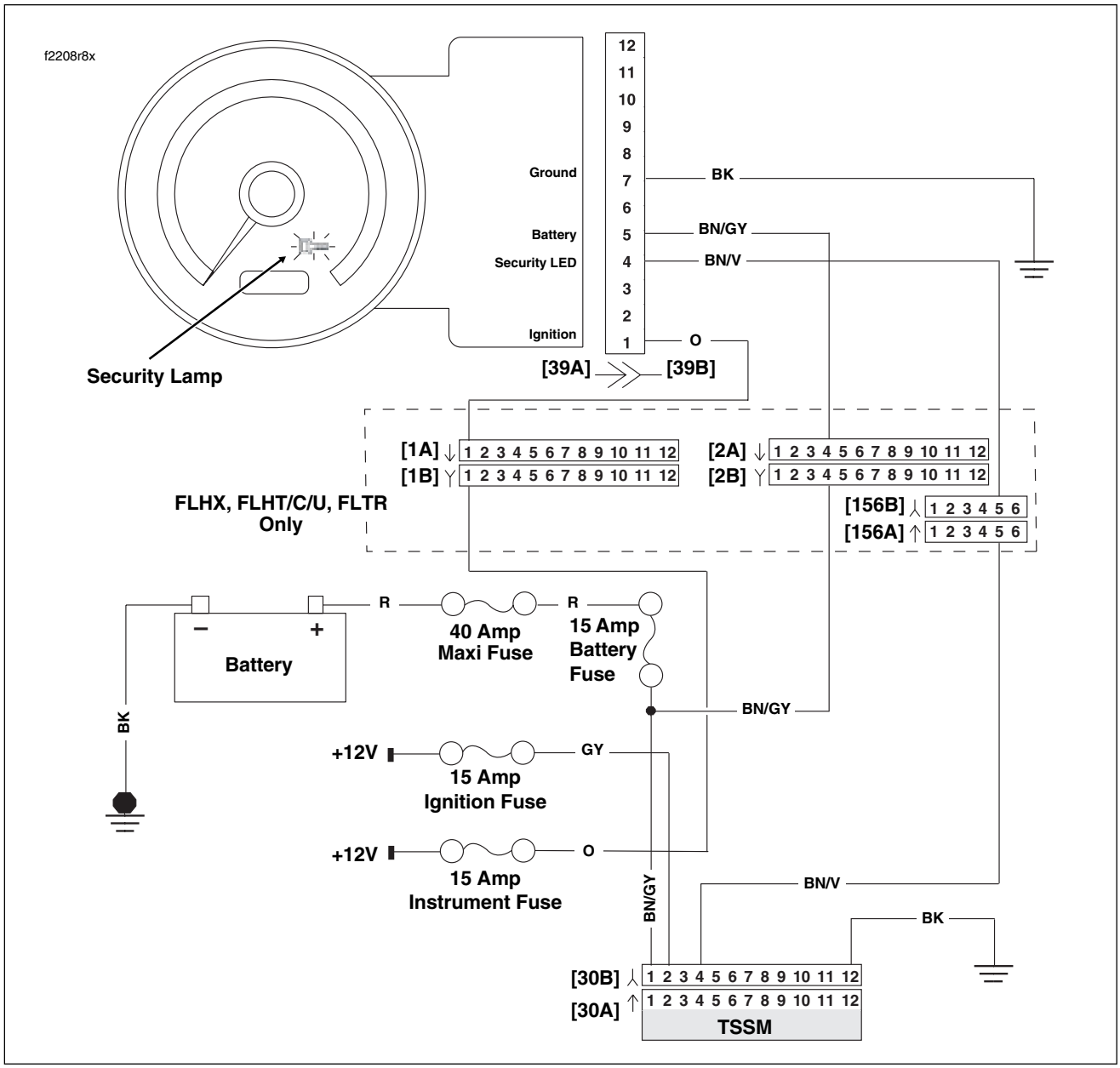

Figure 3-23. Security Lamp Circuit

Table 3-18. Wire Harness Connectors in Figure 3-23.

NO.	DESCRIPTION	MODEL	TYPE	LOCATION
[1]	Main to Interconnect Harness	FLHT/C	12-Place Deutsch (Black)	Inner Fairing - Right Radio Support Bracket
		FLTR	12-Place Deutsch (Black)	Inner Fairing - Below Radio (Right Side)
[2]	Main to Interconnect Harness	FLHT/C	12-Place Deutsch (Gray)	Inner Fairing - Right Fairing Support Brace
		FLTR	12-Place Deutsch (Gray)	Inner Fairing - Below Radio (Right Side)
[30]	TSM/TSSM	All	12-Place Deutsch	Cavity in Crossmember at Rear of Battery Box (Under Seat)
[39]	Speedometer	FLHT/C	12-Place Packard	Inner Fairing (Back of Speedometer)
		FLTR	12-Place Packard	Under Bezel (Back of Speedometer)
		FLHR/C/S	12-Place Packard	Under Console (Back of Speedometer)
[156]	Main to Interconnect Harness	FLHT/C	6-Place Deutsch	Inner Fairing - Right Fairing Support Brace
		FLTR	6-Place Deutsch	Inner Fairing - Below Radio (Right Side)

Test 3.13

SECURITY LAMP ON CONTINUOUSLY

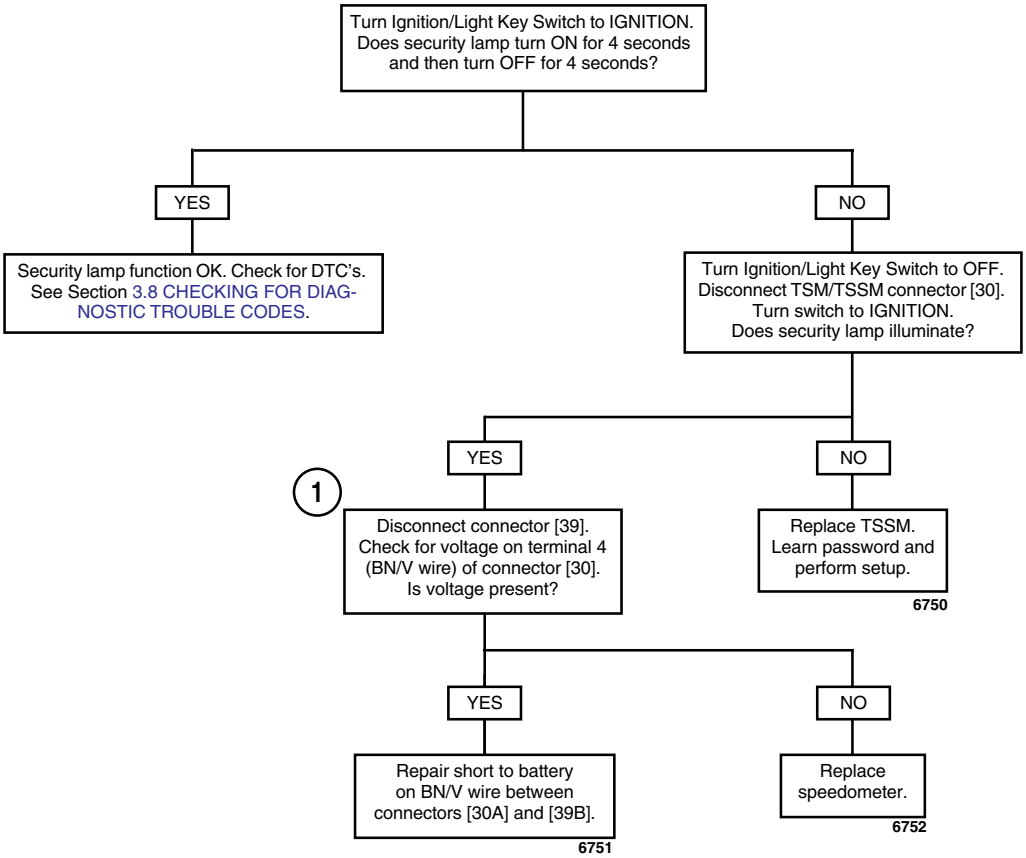

Clear DTC's using speedometer self diagnostics. See Section 3.10 SPEEDOMETER SELF DIAGNOSTICS. Confirm proper operation with no check engine lamp.

NOTES

KEY FOB SIGNAL TO TSSM WEAK OR FAILS 3.14

GENERAL

Security Equipped Vehicles Only

This section applies only to those vehicles equipped with the optional security system.

NOTE

*Disarming function may require practice. The key fob button **must** be pressed twice within 1.5 seconds to send the disarm command. The action is very similar to double-clicking a computer mouse. Light quick taps work best; very hard or very slow taps are less likely to work.*

See Figure 3-24. The key fob sends a RF signal to activate all remote TSSM functions. The left front turn signal switch wire serves as the vehicle's antenna. If the TSSM does not respond (no confirmation at arming/disarming system) or responds weakly (limited range, won't consistently arm/disarm or synchronize), follow the Test 3.14 flow chart.

Job/Time Code Values

Dealership technicians filing warranty claims should use the job/time code values printed in **bold text** underneath the appropriate repair.

DIAGNOSTICS

Diagnostic Tips

- Verify key fob battery voltage is at least 2.9 volts. See Section 3.25 TSSM MAINTENANCE.
- Interference from physical surroundings may affect RF transmission. Place fob next to left handgrip and disarm with two clicks or move motorcycle to a new location and retest.
- Check for damage to antenna wire. Does left turn signal work?

NOTE

See Section 3.7 ARMING/DISARMING SECURITY SYSTEM (TSSM). Use only the proper key fob for your market and TSSM package.

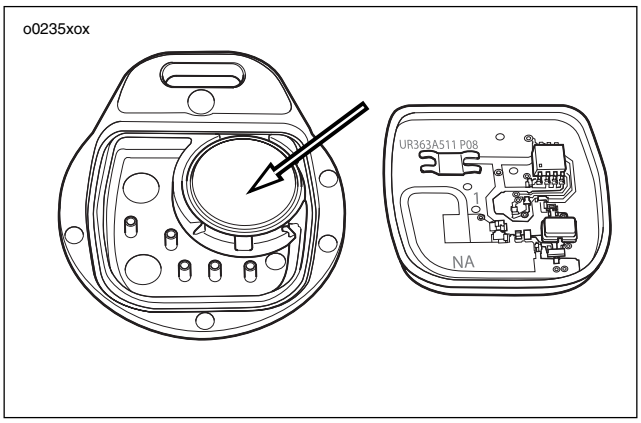

Figure 3-24. Key Fob Battery

Diagnostic Notes

The reference numbers below correlate with the circled numbers on the Test 3.14 flow charts.

1. After a battery disconnect, the TSSM will not enter the configuration mode on the first attempt. All attempts to assign a fob or enter the configuration mode will require at least two attempts.

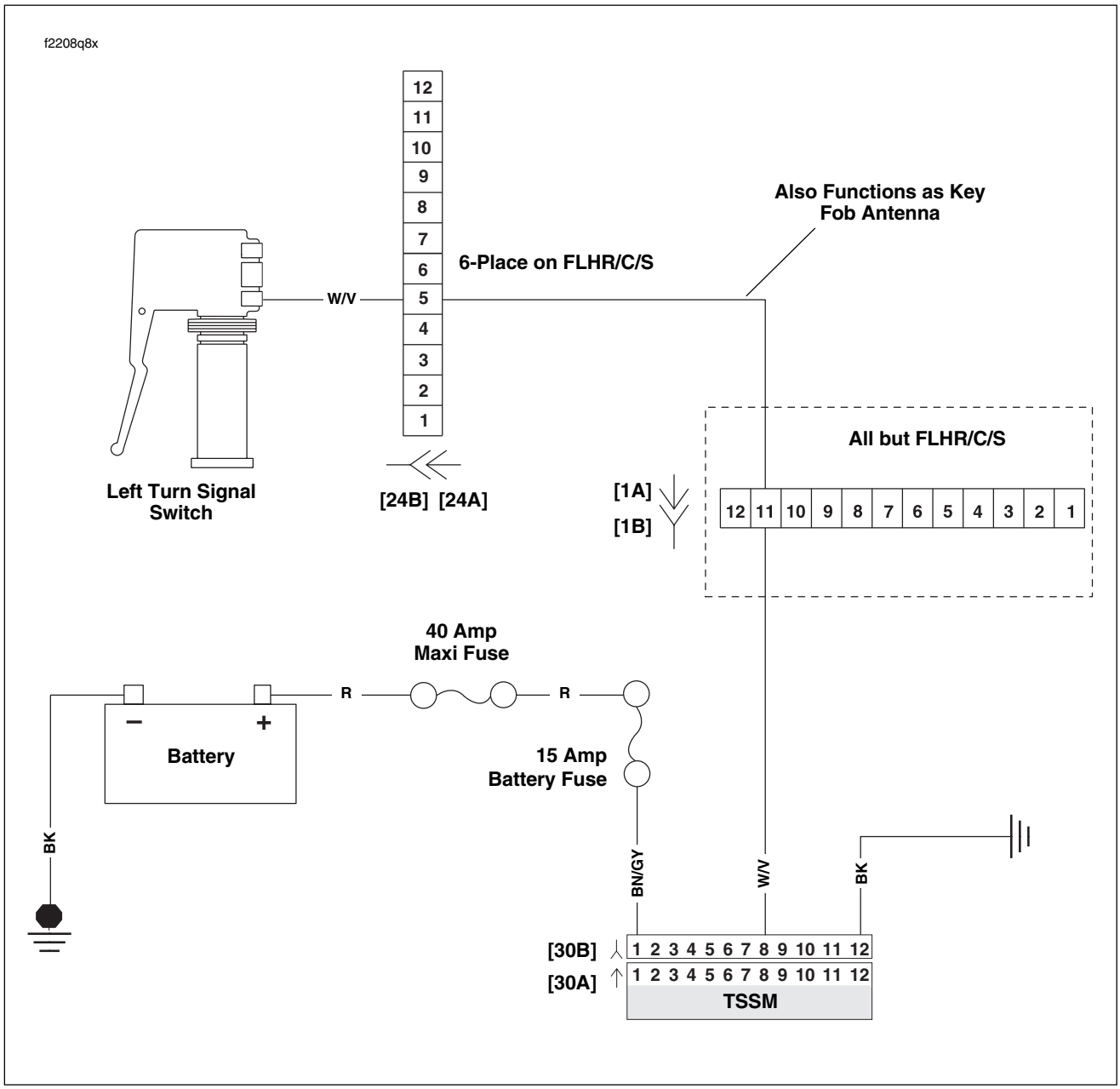

Figure 3-25. Antenna Circuit

Table 3-19. Wire Harness Connectors in Figure 3-25.

NO.	DESCRIPTION	MODEL	TYPE	LOCATION
[1]	Main to Interconnect Harness	FLHT/C	12-Place Deutsch (Black)	Inner Fairing - Right Radio Support Bracket
		FLTR	12-Place Deutsch (Black)	Inner Fairing - Below Radio (Right Side)
[24]	Left Handlebar Switch Controls	FLHT/C/U	12-Place Deutsch	Inner Fairing - Left Fairing Support Brace
		FLTR	12-Place Deutsch	Inner Fairing - Left Side of Radio Bracket
		FLHR/C/S	6-place Deutsch	Inside Headlamp Nacelle
[30]	TSSM	All	12-Place Deutsch	Cavity in Crossmember at Rear of Battery Box (Under Seat)

HOME

Test 3.14

FOB SIGNAL TO TSSM WEAK OR FAILS

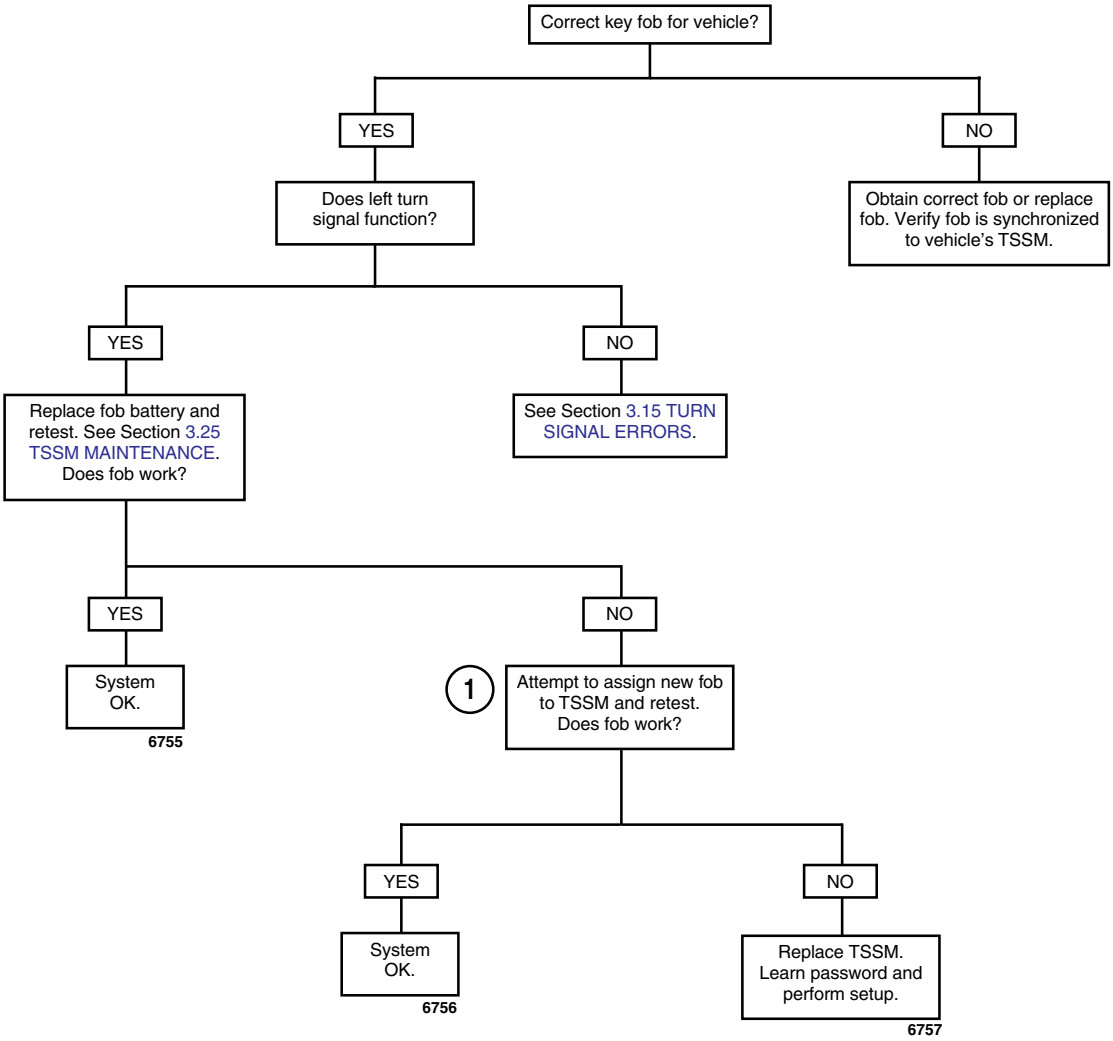

TURN SIGNAL ERRORS 3.15

GENERAL

The turn signals will automatically cancel either based on the speed/acceleration of the vehicle or based upon turn completion. See Section 3.4 TSM/TSSM TURN SIGNAL FUNCTIONS.

For turn signal diagnostics, refer to Table 3-20.

Job/Time Code Values

Dealership technicians filing warranty claims should use the job/time code values printed in **bold text** underneath the appropriate repair.

DIAGNOSTICS

Diagnostic Tips

- DTC B1121 and B1122 will illuminate the security lamp.
- DTC B1141 will not illuminate the security lamp.
- When the TSM/TSSM is in four-way flasher mode, a fault on either the left or right turn lamp output will not cause either DTC B1121 and DTC B1122 to be set. If fault occurs on both left and right outputs, then both DTC B1121 and DTC B1122 will be set.
- When the TSM/TSSM detects an over current (or short to ground) condition, it will turn off the turn lamp outputs. The outputs will be automatically reactivated once the fault is removed.

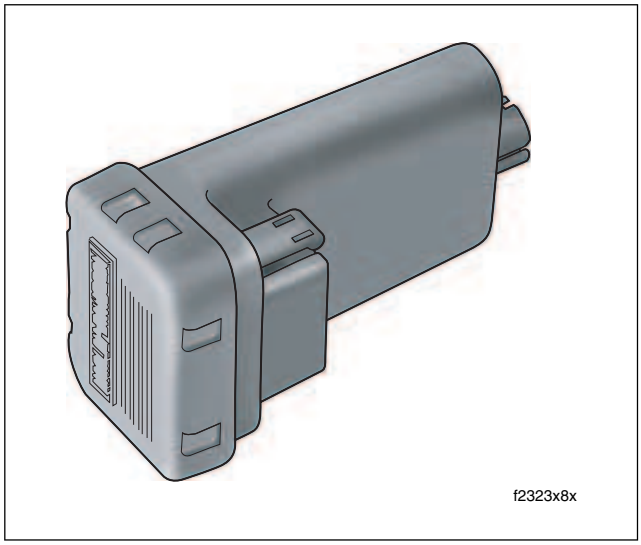

Figure 3-26. TSM/TSSM

Table 3-20. Turn Signal Errors

SYMPTOM	START WITH FLOW CHART	DTC(S)
Turn signals will not cancel upon turn completion	Turn Signal Error 1A (Part 1 of 2)	N/A
Turn signals cancel erratically	Turn Signal Error 1A (Part 2 of 2)	N/A
Turn signals will not flash, 4-way flashers inoperable	Turn Signal Error 2A	B1121, B1122, B1141
Left or right turn signals flash at double the normal rate while all bulbs are working	Turn Signal Error 3A	N/A

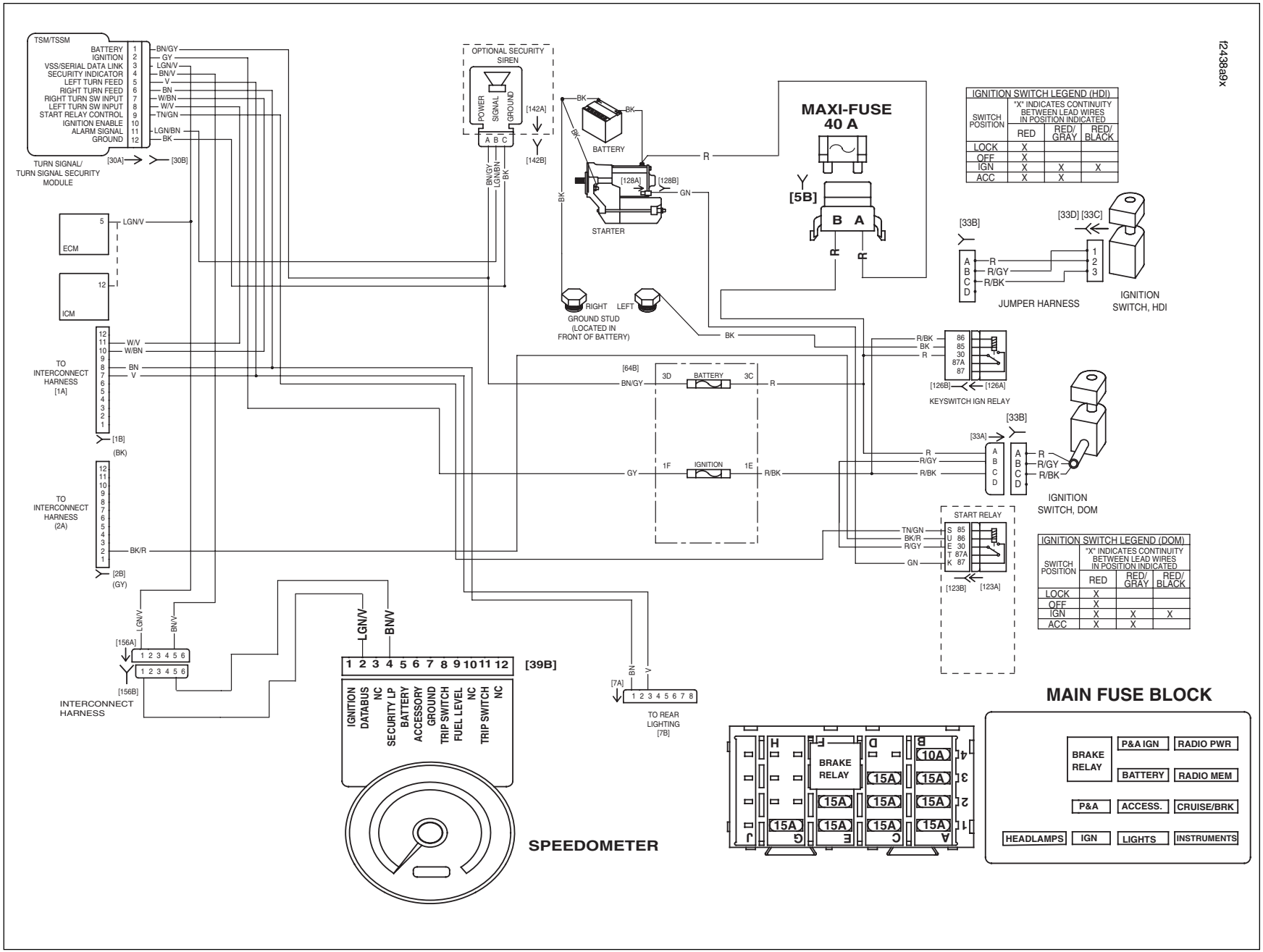

Figure 3-27. Turn Signal Circuit: FLHX, FLHT/C/U, FLTR

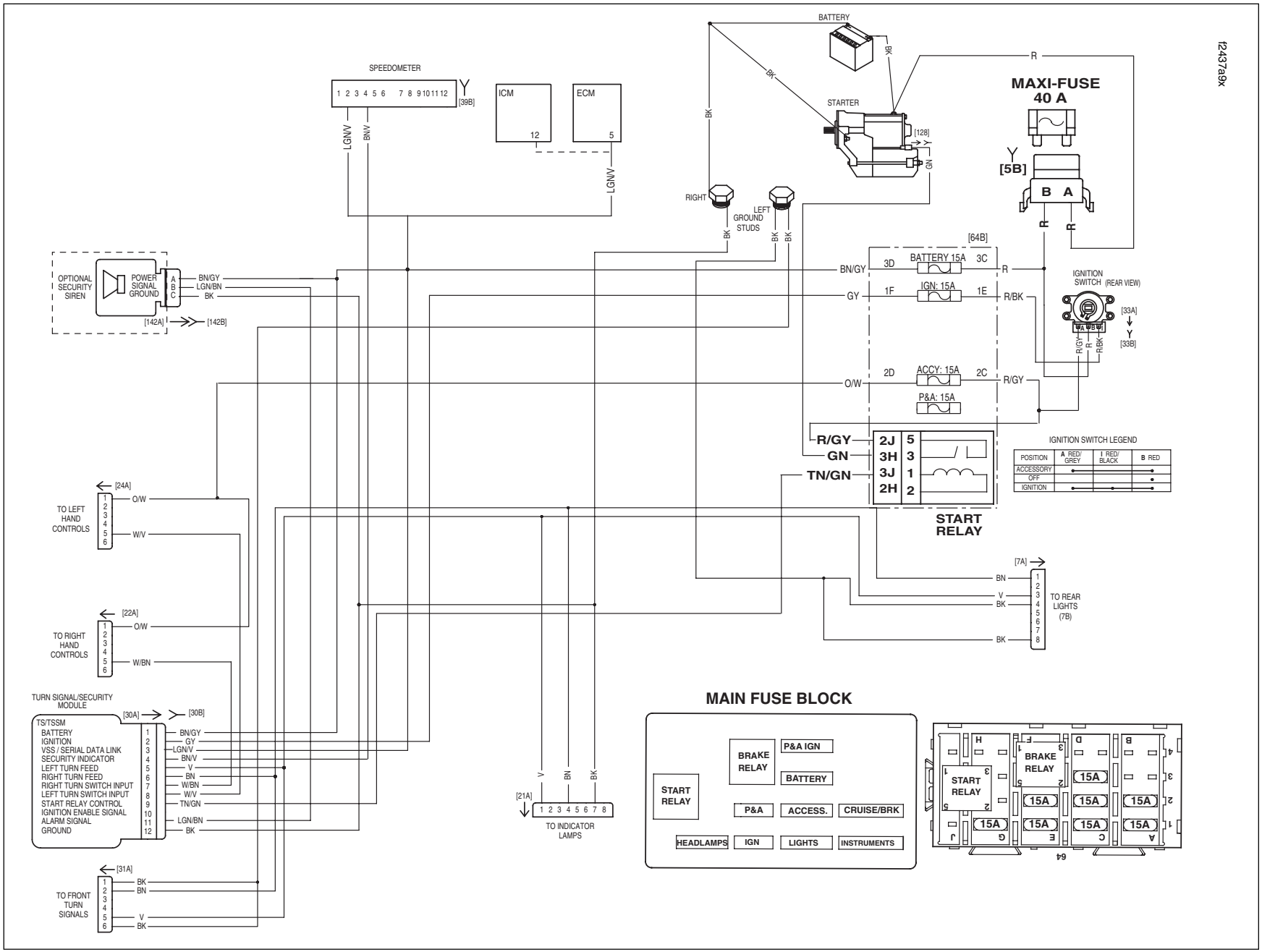

Figure 3-28. Turn Signal Circuit: FLHR/C/S

Diagnostic Notes: All Turn Signal Flow Charts

The reference numbers below correlate with the circled numbers on the turn signal flow charts.

NOTE

See Figure 3-30. To connect the SPEEDOMETER TESTER (Part No. HD-41354) to the 3-place vehicle speed sensor connector [65], fabricate an adapter harness using the following parts:

- *Two Deutsch 3-place socket housings (Part No. 72113-94BK) and six socket terminals (Part No. 72191-94).*
- *Deutsch 3-place pin housing (Part No. 72103-94BK) and three pin terminals (Part No. 72190-94).*
- *Six lengths of 18 gauge wire, each 6.0 in. (15 cm) long.*

1. Gain access to vehicle's TSM/TSSM. Perform the following procedure:
   a. See Figure 3-31. Position TSM/TSSM in same orientation it is mounted on vehicle. Turn on ignition switch. Turn on 4-way flashers by depressing both left and right turn signal switches simultaneously. Turn ignition off; 4-way flashers should continue to flash.
   b. Tilt module greater than 45 degrees to the left.
   c. Repeat step a.
   d. Tilt module greater than 45 degrees to the right.
2. Connect SPEEDOMETER TESTER (Part No. HD-41354) to connector [65B]. Turn on ignition switch. set RUN/STOP switch to the RUN position. Use SPEEDOMETER TESTER to input a signal which duplicates a speed greater than or equal to 20 MPH (32.2 KPH). Enter 528 into the tester. If turn signals are working correctly, they will flash 20 times and then cancel.
3. To enable diagnostic mode, See Section 3.10 SPEEDOMETER SELF DIAGNOSTICS.
4. Connect BREAKOUT BOX (Part No. HD-42682) (gray) between TSM/TSSM connector [30A] and wiring harness connector [30B]. See Section 3.11 BREAKOUT BOX: TSM/TSSM.
5. Closely inspect handlebar controls for pinched wiring.
6. Remove BREAKOUT BOX (Part No. HD-42682) (gray) from between TSM/TSSM connector [30A] and wiring harness connector [30B]. Reconnect [30].
7. Connect BREAKOUT BOX (Part No. HD-42682) (black) between wiring harness connector [24A] and left hand control harness connector [24B]. On FLHR/C/S use 6-pin Harness Adapters (Part no. HD-42962) to mate handlebar controls to Breakout Box.
8. Connect BREAKOUT BOX (Part No. HD-42682) (black) between wiring harness connector [22A] and right hand control harness connector [22B]. On FLHR/C/S use 6-pin Harness Adapters (Part no. HD-42962) to mate handlebar controls to Breakout Box.
9. Check for corrosion at rear lighting harness connector [7], front lighting harness connector [31] and TSSM [30].

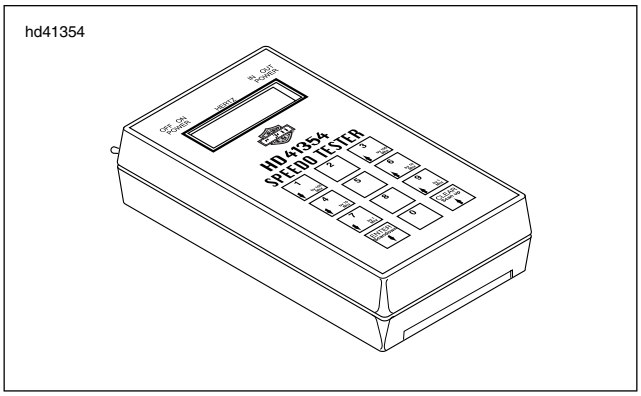

Figure 3-29. Speedometer Tester

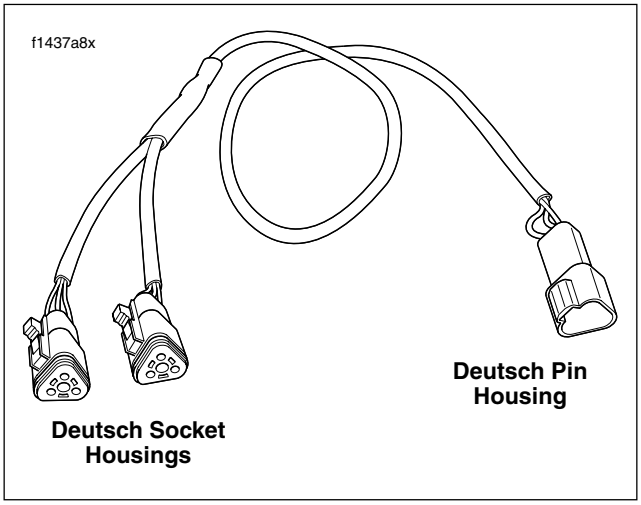

Figure 3-30. Adapter Harness

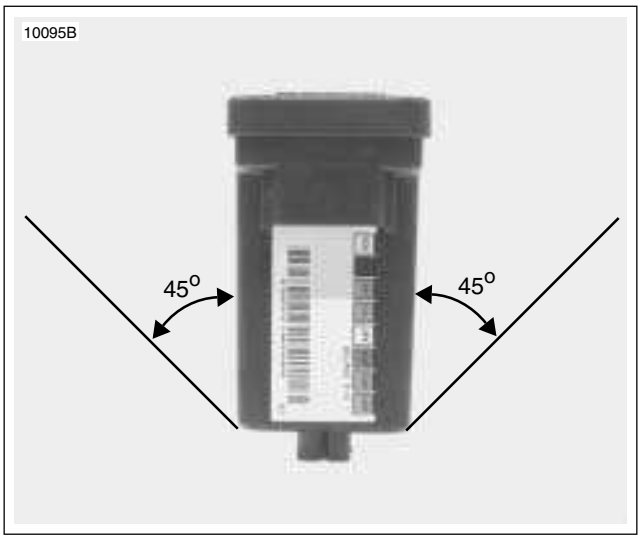

Figure 3-31. Tilting TSM/TSSM

Turn Signal Error 1A (Part 1 of 2)

WILL NOT CANCEL UPON TURN COMPLETION

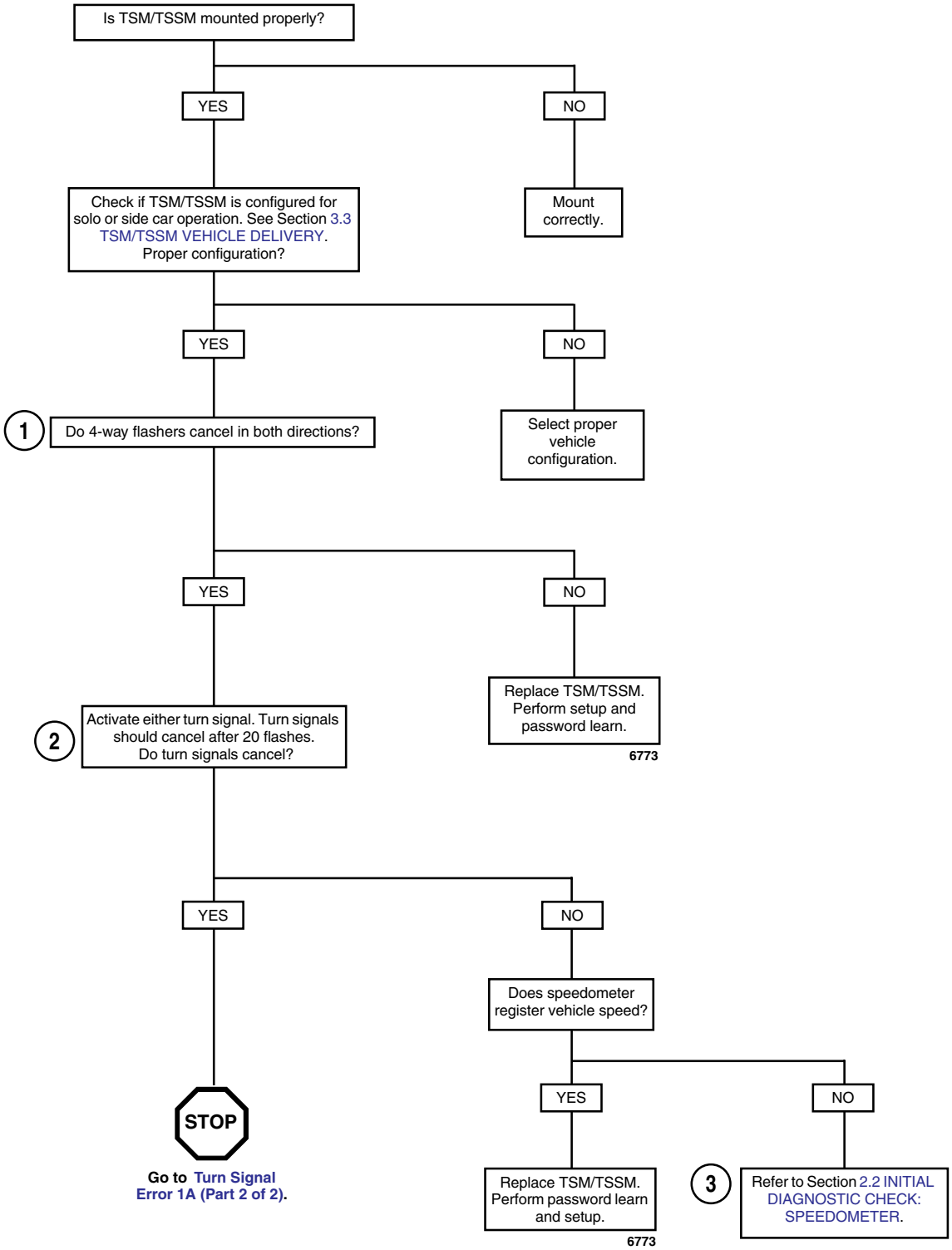

HOME

Turn Signal Error 1A (Part 2 of 2)

CANCELS ERRATICALLY

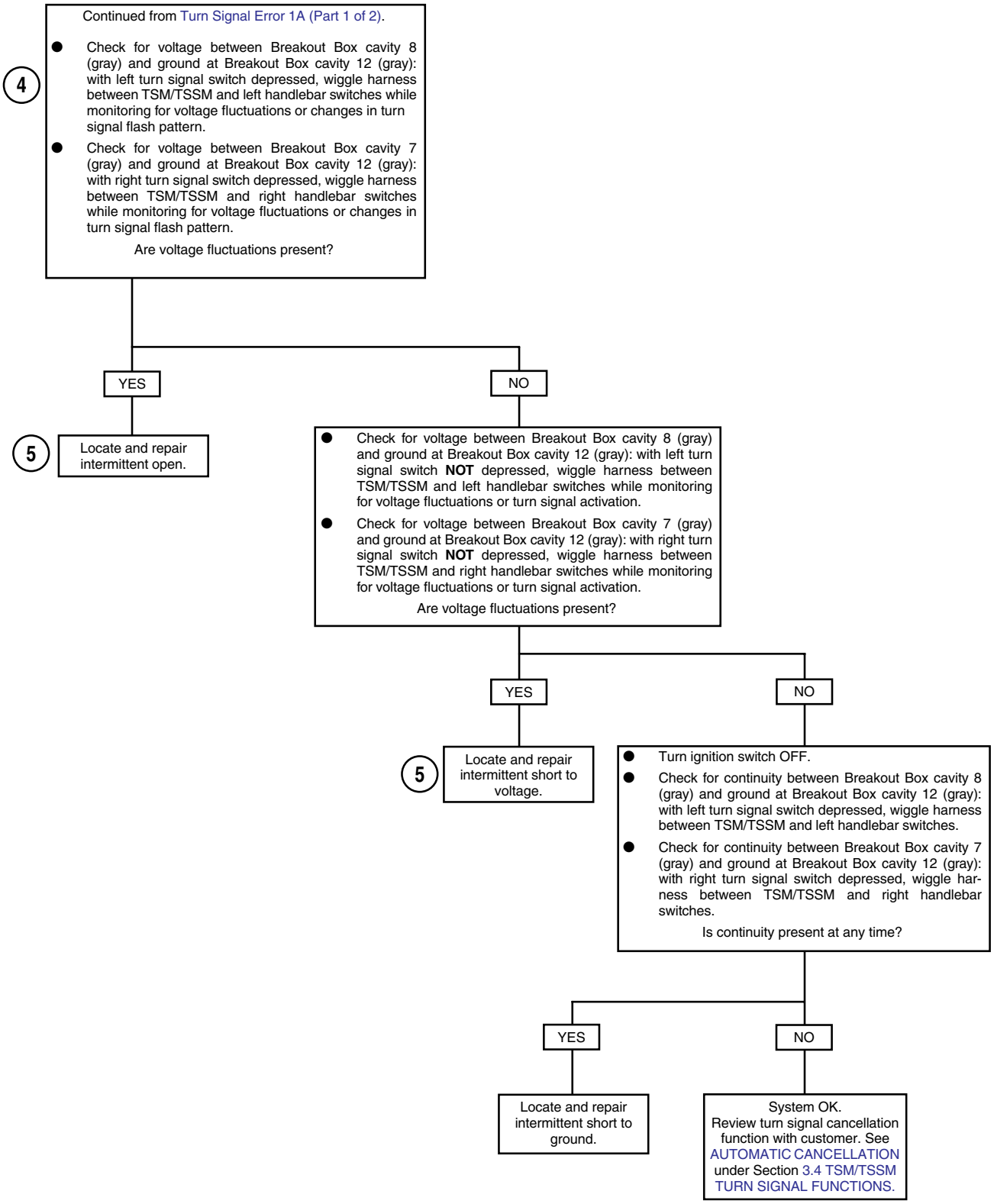

Turn Signal Error 2A

WILL NOT FLASH, 4-WAY FLASHERS INOPERABLE: DTC B1121, B1122, B1141

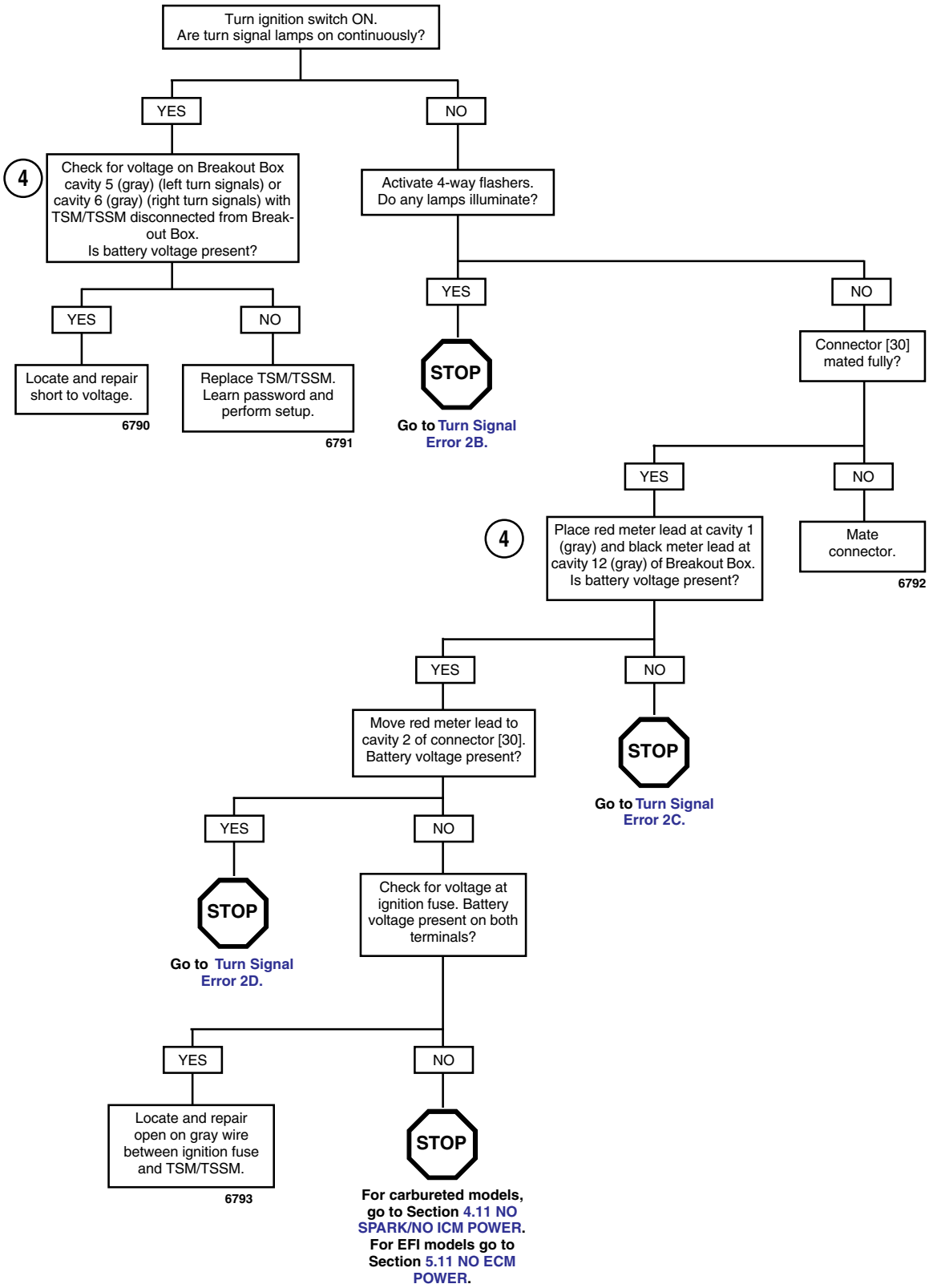

HOME

Turn Signal Error 2B

WILL NOT FLASH, 4-WAY FLASHERS INOPERABLE: DTC B1121, B1122, B1141

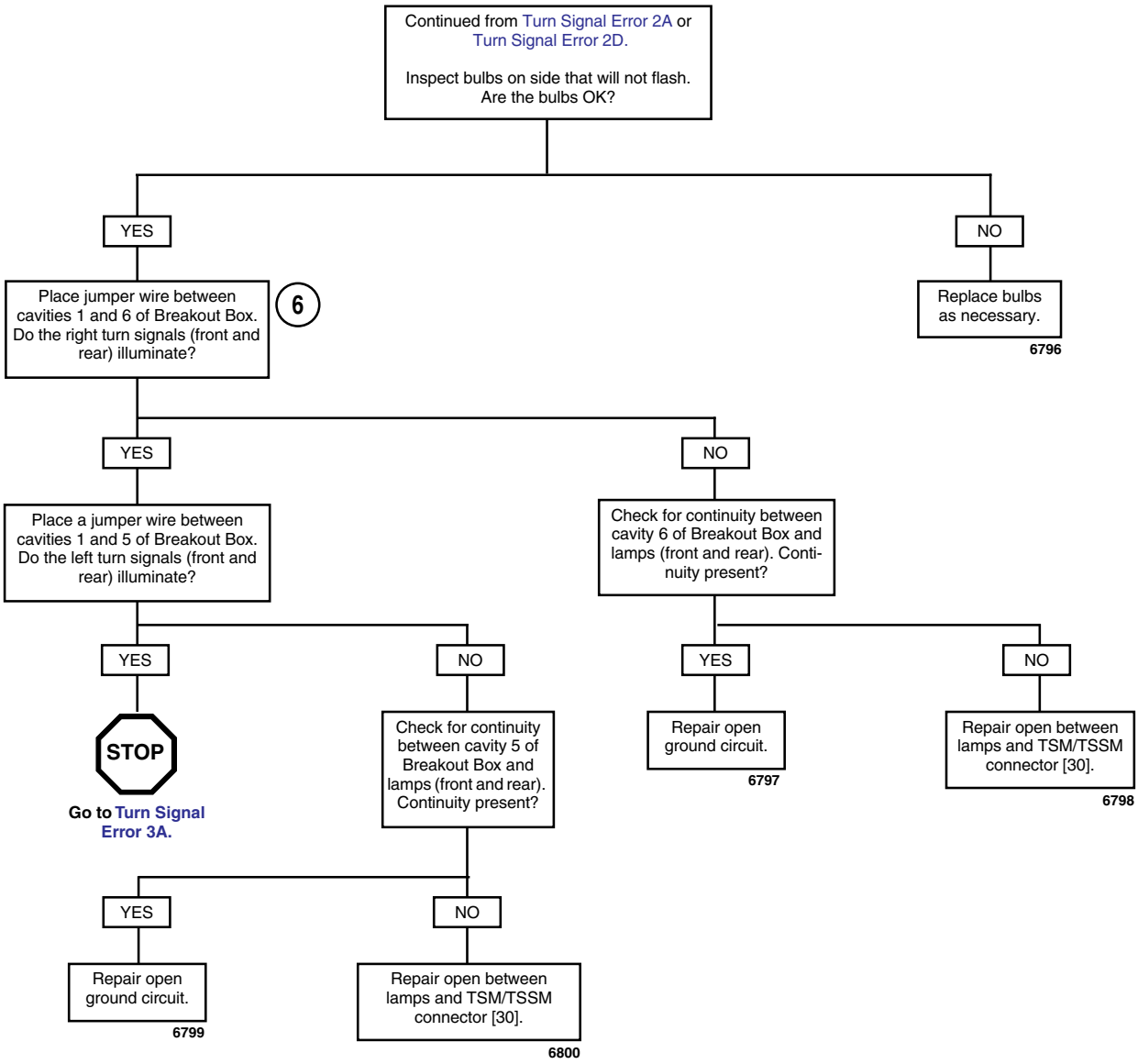

HOME

Turn Signal Error 2C

WILL NOT FLASH, 4-WAY FLASHERS INOPERABLE: DTC B1121, B1122, B1141

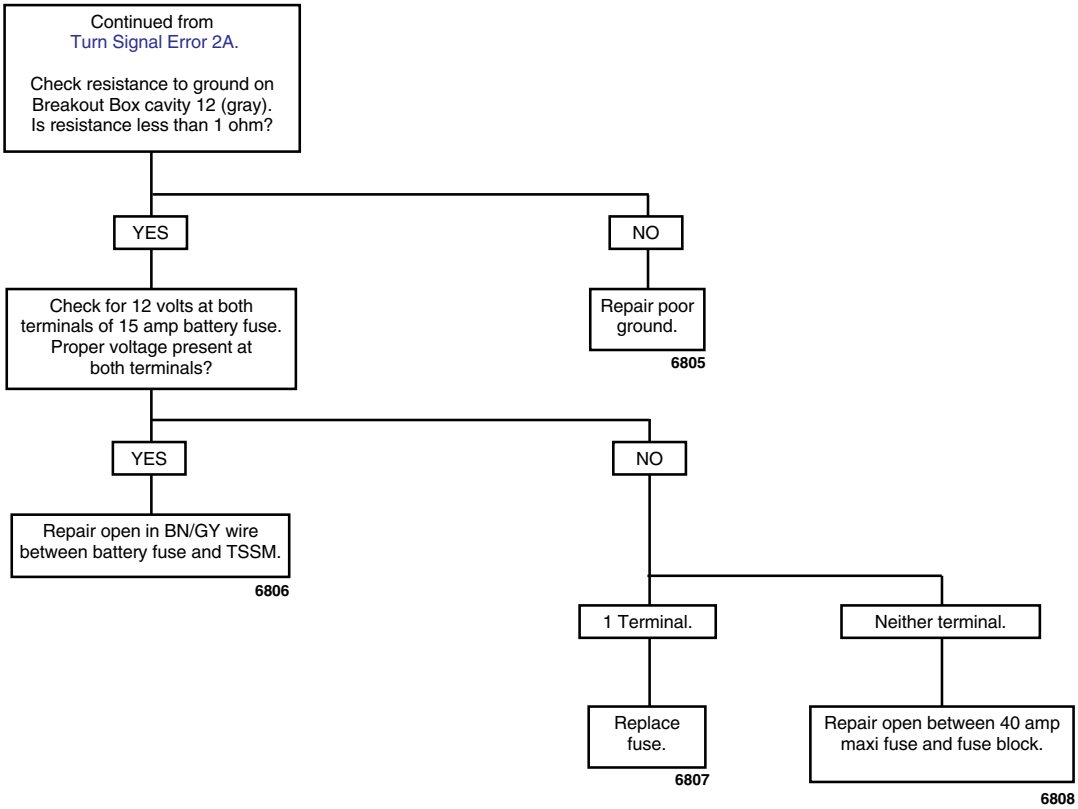

HOME

Turn Signal Error 2D

WILL NOT FLASH, 4-WAY FLASHERS INOPERABLE: DTC B1121, B1122, B1141

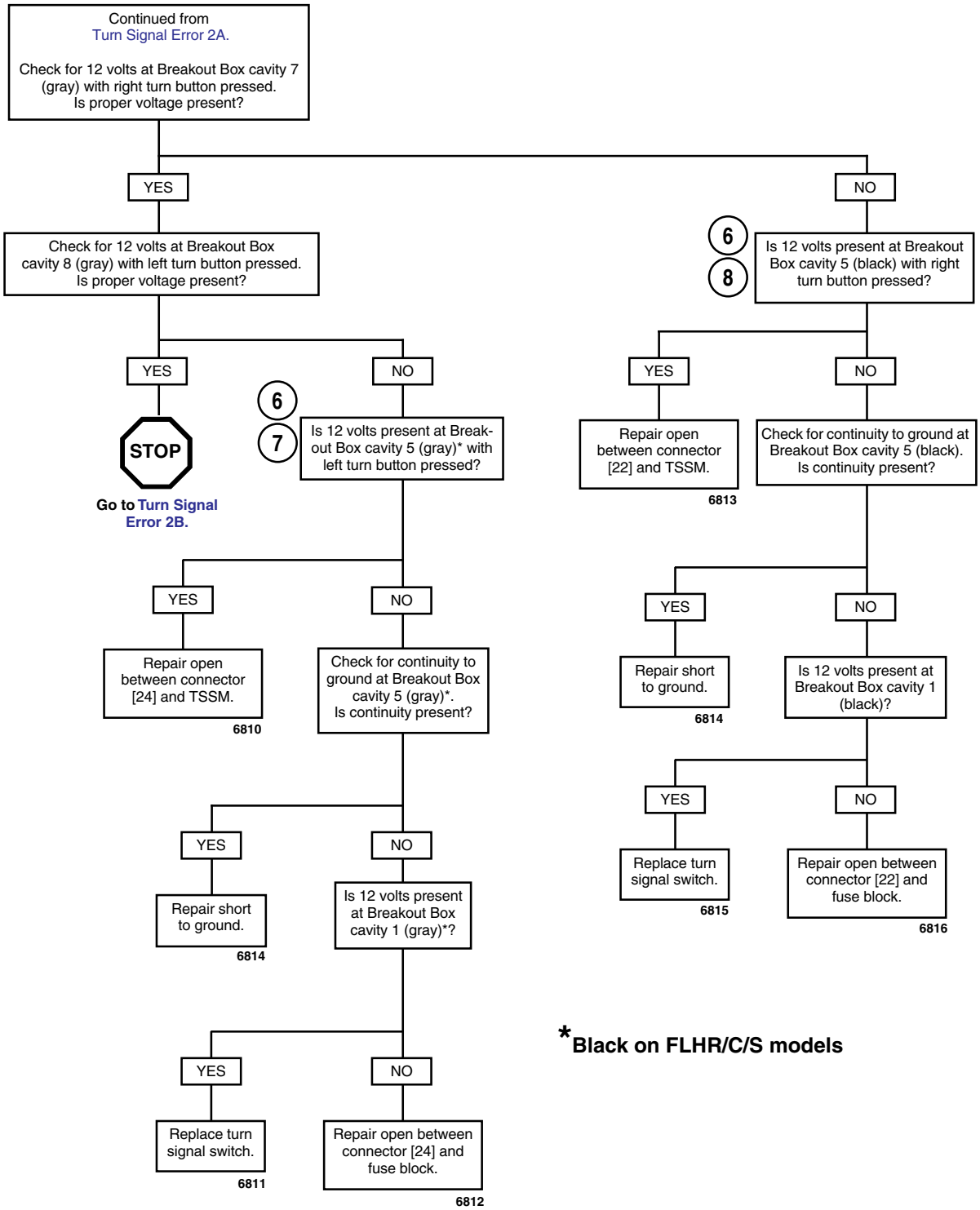

*Black on FLHR/C/S models

Turn Signal Error 3A

FLASH AT DOUBLE NORMAL RATE, ALL BULBS WORKING

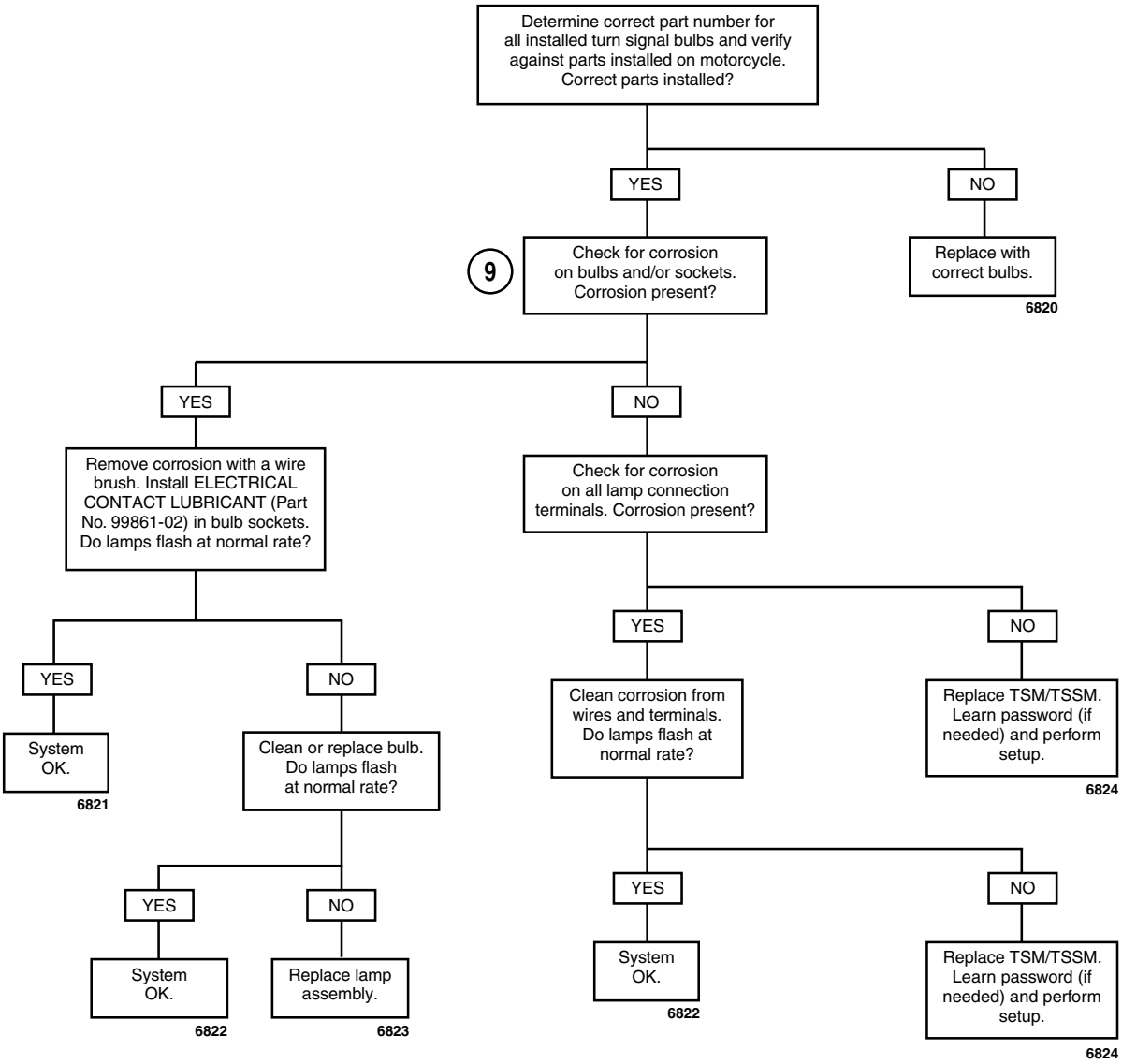

DTC B0563 3.16

GENERAL

Battery Voltage High

The TSM/TSSM continually checks the battery voltage during IGN/OFF and IGN/RUN power modes. If the voltage exceeds 16.0 volts for more than 5.0±0.5 seconds, the TSM/TSSM sets DTC B0563.

DIAGNOSTICS

Diagnostic Tips

- This DTC may set when the vehicle is placed on a battery charger, on fast charge, for a long period of time.
- The TSSM does not illuminate the security lamp when this DTC is set.

Diagnostic Notes

See Section 1.7 CHARGING SYSTEM tests in Section 1 to correct. Problem may be faulty voltage regulator.

DTC B1131, B1132 3.17

GENERAL

NOTE

This section applies only to those vehicles equipped with the optional security system.

Alarm Output Low (DTC B1131) or Alarm Output High (DTC B1132)

See Figure 3-32. An alarm cycle is activated when the TSSM is connected, the siren has been armed by the TSSM and a security event occurs. See Section 3.6 SECURITY SYSTEM (TSSM) FUNCTIONS. Under normal armed operation, the siren input (terminal B) is driven low by the TSSM to trigger the audible alarm. When the siren input is driven high by the TSSM the audible alarm stops.

DIAGNOSTICS

Diagnostic Tips

- If the siren is armed and the internal siren battery is dead, shorted, disconnected, or has been charging for a period longer than 24 hours, the siren will respond with three chirps on arming instead of two.
- The internal siren battery may not charge if the vehicle's battery is less than 12.5 volts.
- If the siren does not chirp, two or three times, on a valid arming command from the TSSM, the siren is either not connected, not working, or the siren wiring was opened or shorted while the siren was disarmed.
- If the siren enters the self-driven mode where it is powered from the siren internal nine-volt battery, the turn-signal lamps will not alternately flash. If the TSSM activates the siren, the turn-signal lamps will flash. If the siren has been armed and a security event occurs, and the siren is in self-driven mode, the siren will alarm for 20 to 30 seconds and then turn off for 5 to 10 seconds. This alarm cycle will be repeated ten times if the siren is in the self-driven mode.
- If the siren does not stop alarming after it has been armed, then either the TSSM output or siren input may be shorted to ground, or the siren vehicle battery connection is open or shorted to ground, or the siren vehicle ground connection is open, or a security event has occurred. See Section 3.6 SECURITY SYSTEM (TSSM) FUNCTIONS for a description of alarm functions.

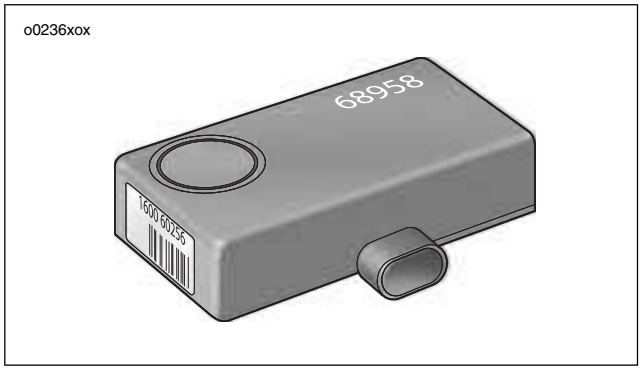

Figure 3-32. Siren

Diagnostic Notes

The reference numbers below correlate with the circled numbers on the Test 3.17 flow chart.

1. Use BREAKOUT BOX (Part No. HD-42682) and HARNESS CONNECTOR TEST KIT (Part No. HD-41404A), gray pin probe and patch cord. See Section 3.11 BREAKOUT BOX: TSM/TSSM.
2. Use HARNESS CONNECTOR TEST KIT (Part No. HD-41404A), gray socket probe and patch cord.
3. Having the correct multimeter ohm scale is important for this test. Some meters may read infinity for high ohm values. If this is the case, check your ohm scale and retest.

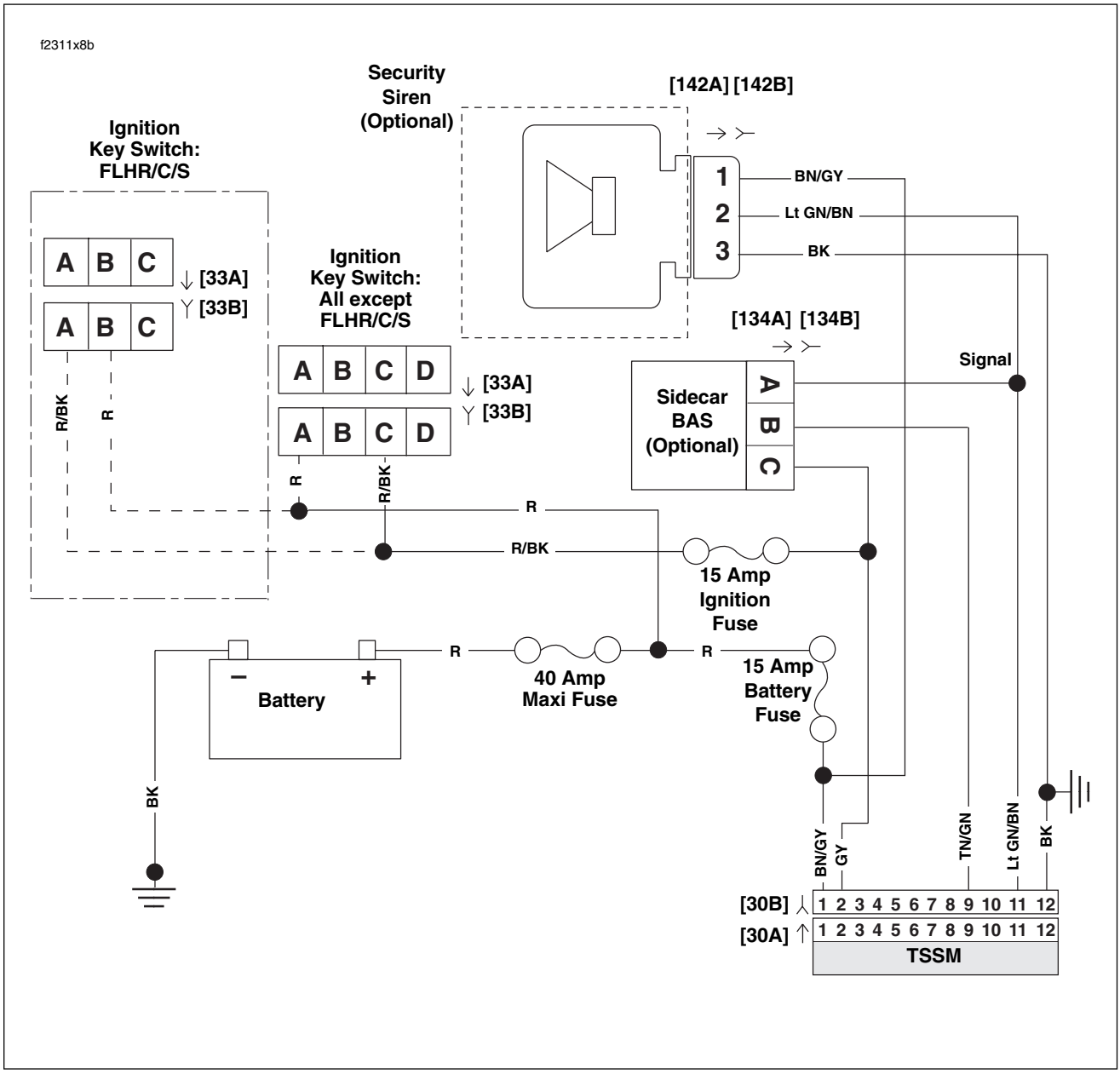

Figure 3-33. Siren Circuit

Table 3-21. Wire Harness Connectors in Figure 3-33.

NO.	DESCRIPTION	TYPE	LOCATION
[30]	TSM/TSSM	12-Place Deutsch	Cavity in Crossmember at Rear of Battery Box (Under Seat)
[134]	Sidecar BAS	3-Place Packard	Under Seat
[142]	Siren	3-Place Packard	Under Right Side Cover (Behind Electrical Bracket)

Test 3.17

ALARM OUTPUT: DTC B1131, B1132

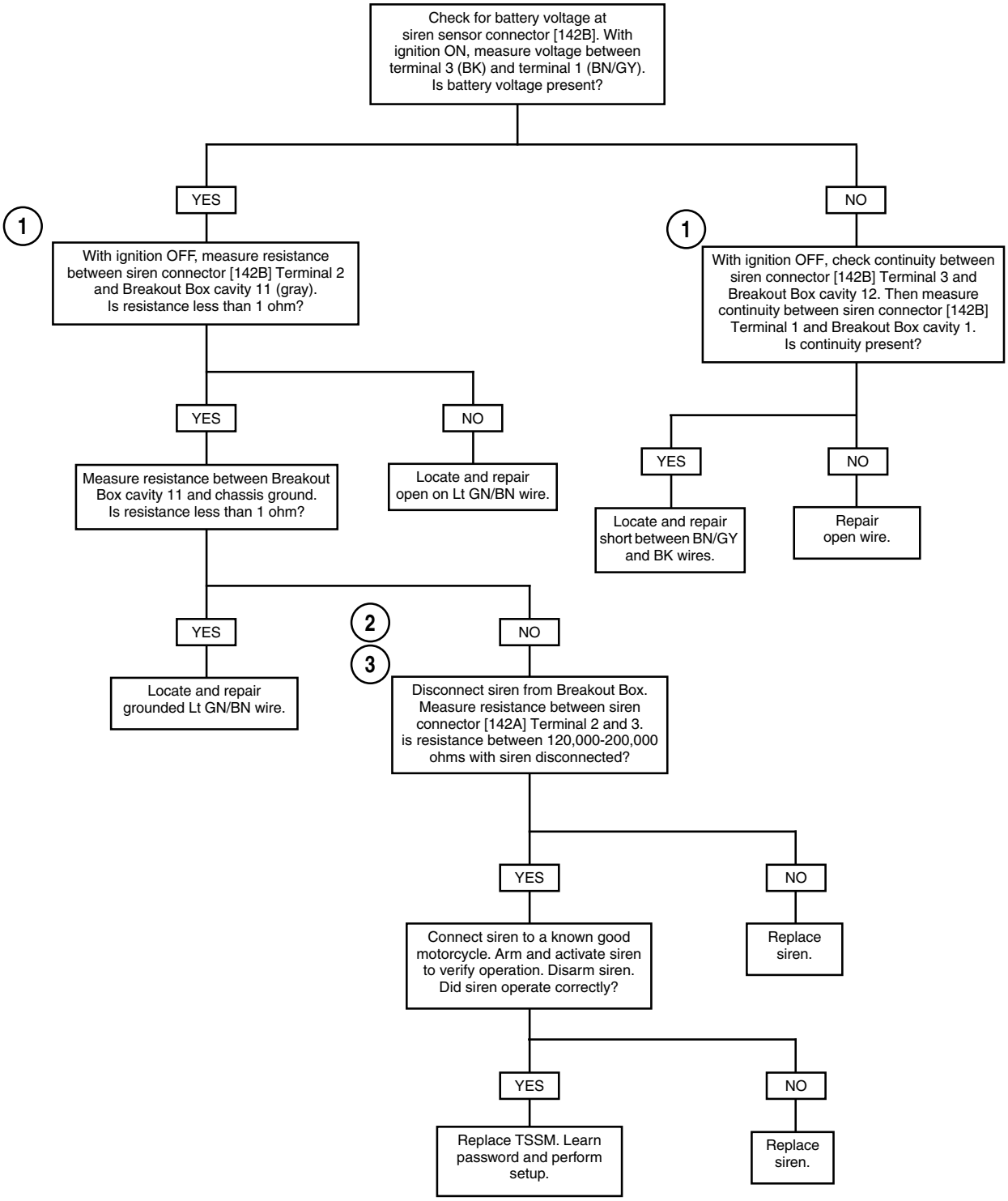

Clear DTC's using speedometer self diagnostics. See Section 3.10 SPEEDOMETER SELF DIAGNOSTICS. Confirm proper operation with no check engine lamp.

DTC B1134 3.18

GENERAL

Starter Output High

With the TSM/TSSM disarmed, ignition ON and RUN/STOP switch set to RUN the starter relay is grounded. Battery voltage is applied to the starter relay and coil which are grounded through the TSM/TSSM. This DTC is set when that ground is not established through the TSM/TSSM.

DIAGNOSTICS

Diagnostic Notes

The reference numbers below correlate with the circled numbers on the Test 3.18 flow charts.

1. Connect BREAKOUT BOX (Part No. HD-42682) (gray) to wire harness connector [30] leaving TSM/TSSM disconnected. See Section 3.11 BREAKOUT BOX: TSM/TSSM.

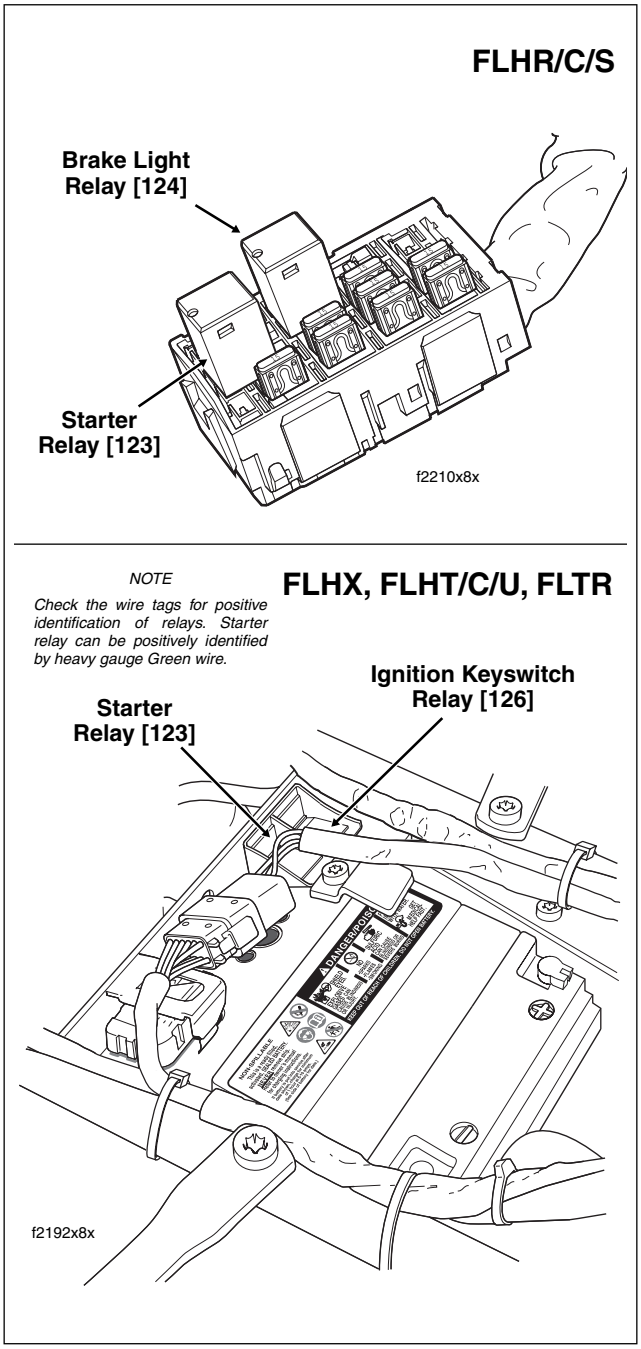

Figure 3-34. Locate Starter Relay

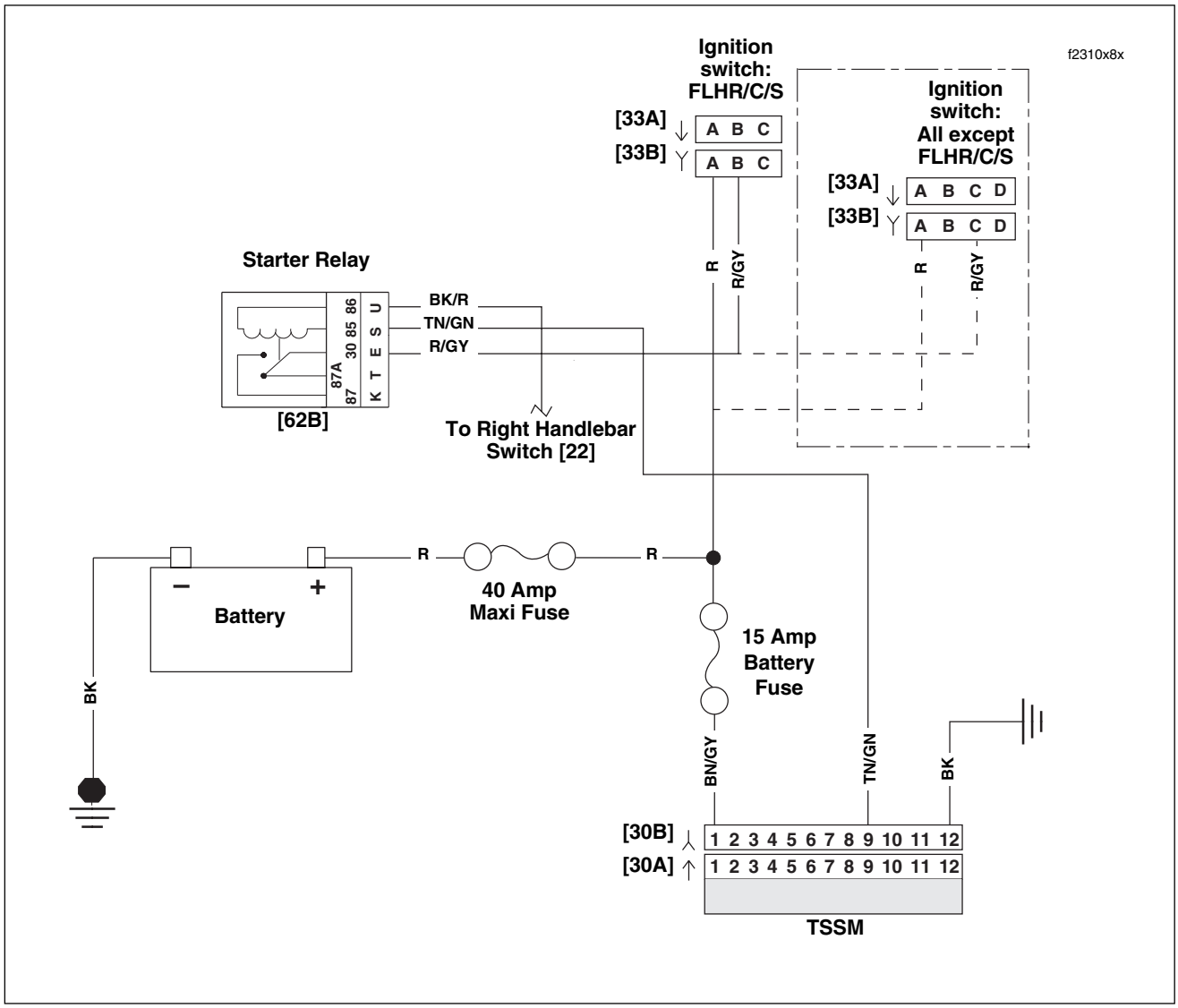

Figure 3-35. Starter/TSSM Circuit

Table 3-22. Wire Harness Connectors in Figure 3-35.

NO.	DESCRIPTION	MODEL	TYPE	LOCATION
[30]	TSSM	All	12-Place Deutsch	Cavity in Crossmember at Rear of Battery Box (Under Seat)
[62]	Starter Relay	FLHR/C/S	Fuse Block	Fuse Block (Under Left Side Cover)
		FLTR, FLHT/C/U	Relay Connector	Rear of Battery Box - Left Side (Under Seat)

HOME

Test 3.18

STARTER OUTPUT HIGH: DTC B1134

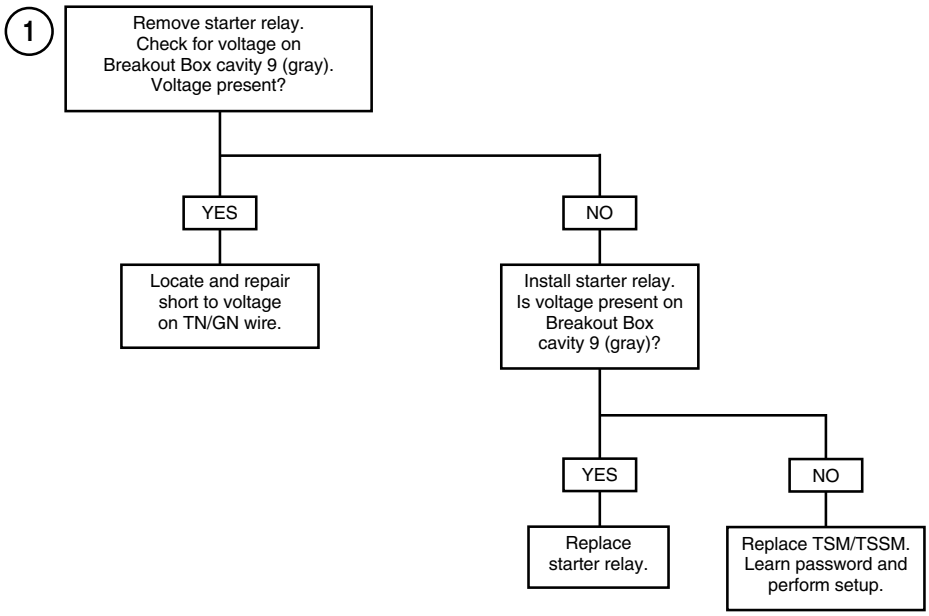

Clear DTC's using speedometer self diagnostics. See Section 3.10 SPEEDOMETER SELF DIAGNOSTICS. Confirm proper operation with no check engine lamp.

DTC B1135 3.19

GENERAL

Accelerometer Fault

This DTC indicates a failure which requires replacement of the TSM/TSSM.

NOTE

When DTC B1135 is set, the tip-over engine shutdown, TSSM tamper alarm and bank angle sensors are disabled. The security lamp will also illuminate on vehicles with security systems.

DTC B1151, B1152, B1153 3.20

GENERAL

Sidecar BAS Low (DTC B1151), High (DTC B1152) or Out of Range (DTC B1153)

These DTC's are set when a TSM/TSSM is configured for sidecar use and a fault is detected with the sidecar BAS.

Table 3-23. Models Affected

VEHICLE	EFI	CARBURETOR
SECURITY	Yes	Yes
NO SECURITY	Yes	Yes

DIAGNOSTICS

Diagnostic Tips

- The smart siren cannot be disarmed when the ignition switch is on and a bank angle sensor is installed. If the ignition switch triggers the security alarm, then the switch must be turned off to disarm the siren.
- Use DIGITAL TECHNICIAN (Part No. HD-44750) to ensure sidecar learn.
- Ensure that no other circuits are tied to terminal 11 of the TSSM.
- If a sidecar is installed without the bank angle sensor kit then the TSM/TSSM will continue to operate in Solo mode on a sidecar bike.
- If the bank angle sensor is removed without disabling sidecar learning then the TSSM will set a DTC until sidecar learning is disabled using Digital Technician or the bank angle sensor is reinstalled.
- The software is designed to prevent the TSM/TSSM from switching to sidecar mode unless the entire system is operating properly (no DTC's set).
- The bank angle sensor cannot be detected when the security function is in the alarm mode (that is, lights flashing, siren sounding).
- A sidecar tip-over event cannot be detected when the security function is in the alarm mode (that is, lights flashing, siren sounding).
- A short to ground fault cannot be detected when the security function is in the alarm mode (that is, lights flashing, siren sounding).
- A short to battery fault cannot be detected **unless** the security function is in the alarm mode (that is, lights flashing, siren sounding).

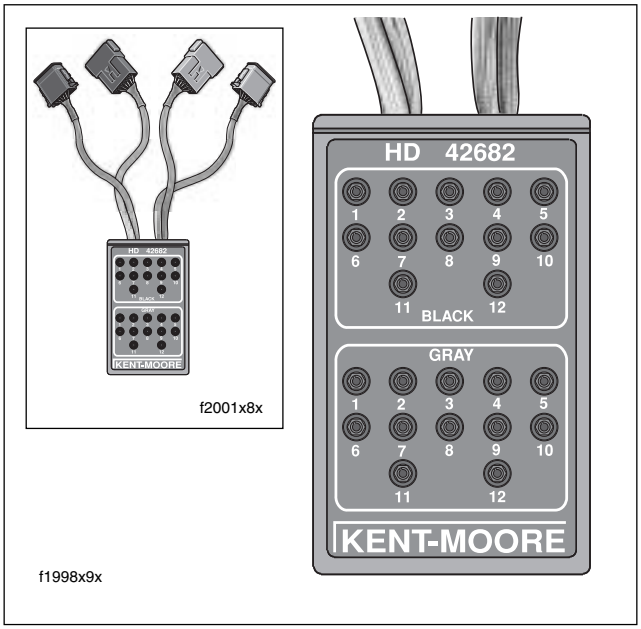

Figure 3-36. Breakout Box (Part No. HD-42682)

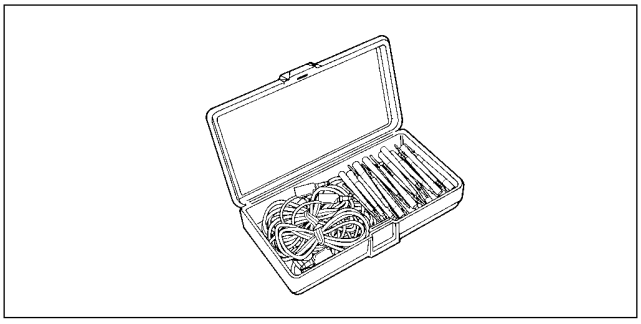

Figure 3-37. Harness Connector Test Kit (Part No. HD-41404A)

- An out of range fault cannot be detected when the security function is in the alarm mode (that is, lights flashing, siren sounding).

Diagnostic Notes

The reference numbers below correlate with the circled numbers on the Test 3.20 flow chart.

1. Use BREAKOUT BOX (Part No. HD-42682) and HARNESS CONNECTOR TEST KIT (Part No. HD-41404A), gray pin probe and patch cord. See Section 3.11 BREAKOUT BOX: TSM/TSSM. See Figure 3-37.
2. Use HARNESS CONNECTOR TEST KIT (Part No. HD-41404A), gray pin probe and patch cord.

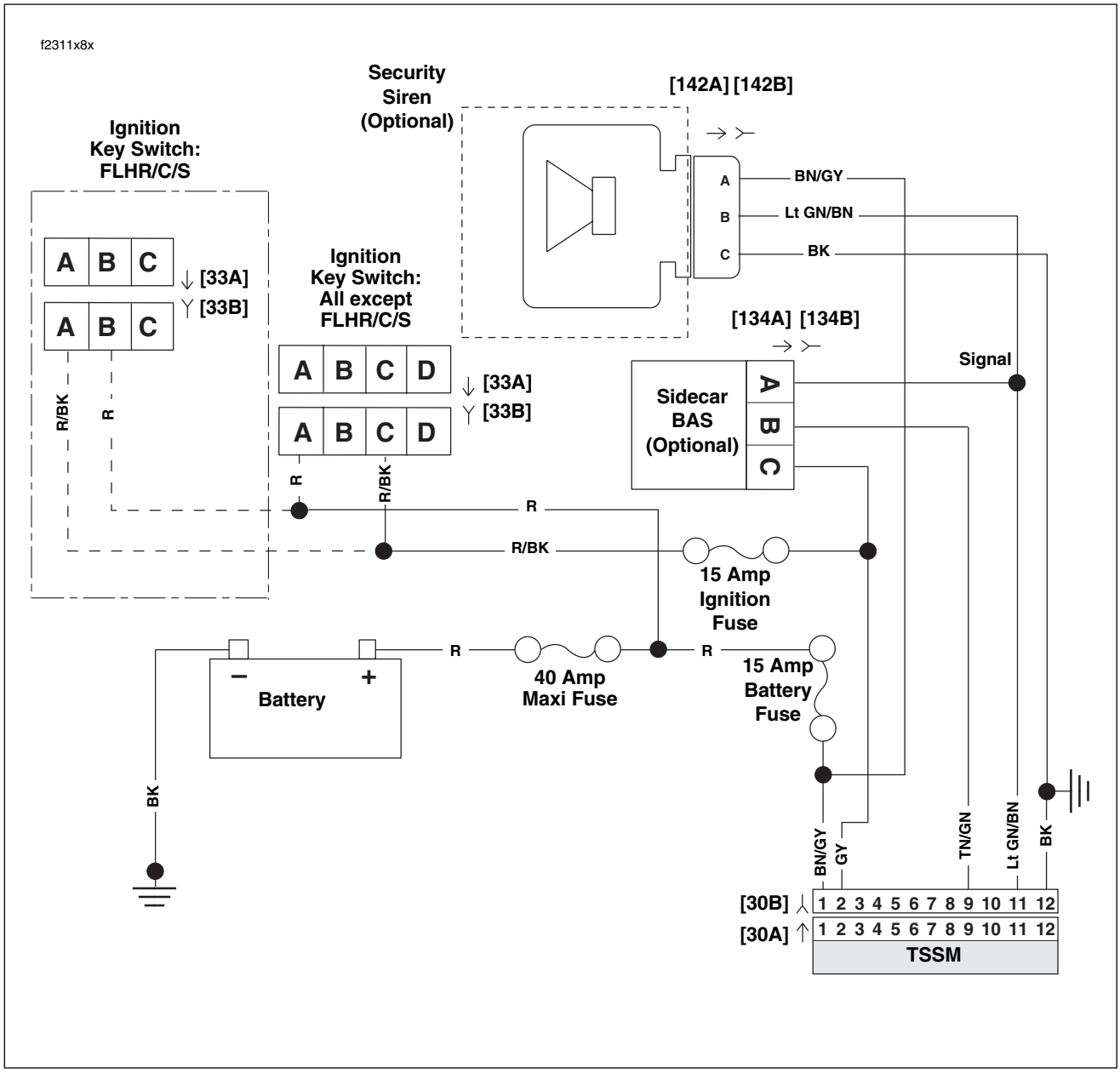

Figure 3-38. Siren Circuit

Table 3-24. Wire Harness Connectors in Figure 3-38.

NO.	DESCRIPTION	TYPE	LOCATION
[30]	TSM/TSSM	12-Place Deutsch	Cavity in Crossmember at Rear of Battery Box (Under Seat)
[134]	Sidecar BAS	3-Place Packard	Under Seat
[142]	Siren	3-Place Packard	Under Right Side Cover (Behind Electrical Bracket)

HOME

Test 3.20

SIDECAR BAS: DTC B1151, B1152, B1153

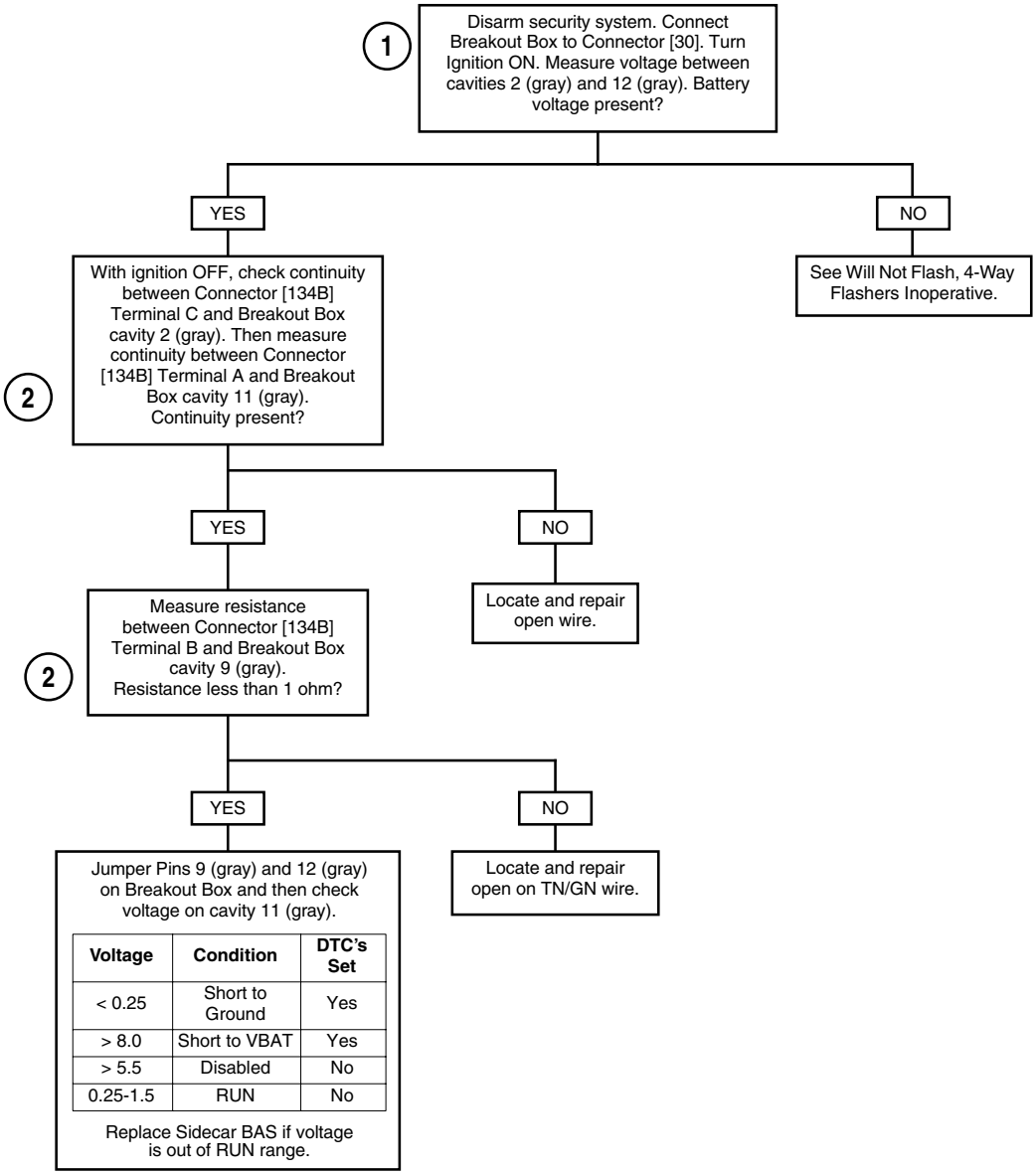

Clear DTC's using speedometer self diagnostics. See Section 3.10 SPEEDOMETER SELF DIAGNOSTICS. Confirm proper operation with no check engine lamp.

DTC U1016, U1255 3.21

GENERAL

Loss of ICM/ECM Serial Data

The serial data connector provides a means for the ICM or ECM, TSM/TSSM and speedometer to communicate their current status. When all operating parameters on the serial data bus are within specifications, a state of health message is sent between the components. A DTC U1016 indicates that the ICM/ECM is not capable of sending this state of health message.

Table 3-25. Code Description

DTC	DESCRIPTION
U1016	Loss of all ECM serial data (state of health)
U1255	Serial data error/missing message

DIAGNOSTICS

Diagnostic Notes

The reference numbers below correlate with the circled numbers on the Test 3.21 flow chart.

1. Connect BREAKOUT BOX (Part No. HD-42682) (gray) between TSM/TSSM connector [30A] and wire harness connector [30B]. See Section 3.11 BREAKOUT BOX: TSM/TSSM.

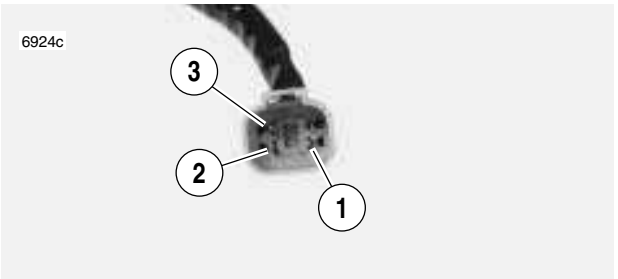

1. **Terminal 2: ground (BK)**
2. **Terminal 3: serial data (Lt GN/V)**
3. **Terminal 4: power (GY)**

Figure 3-39. Data Link Connector

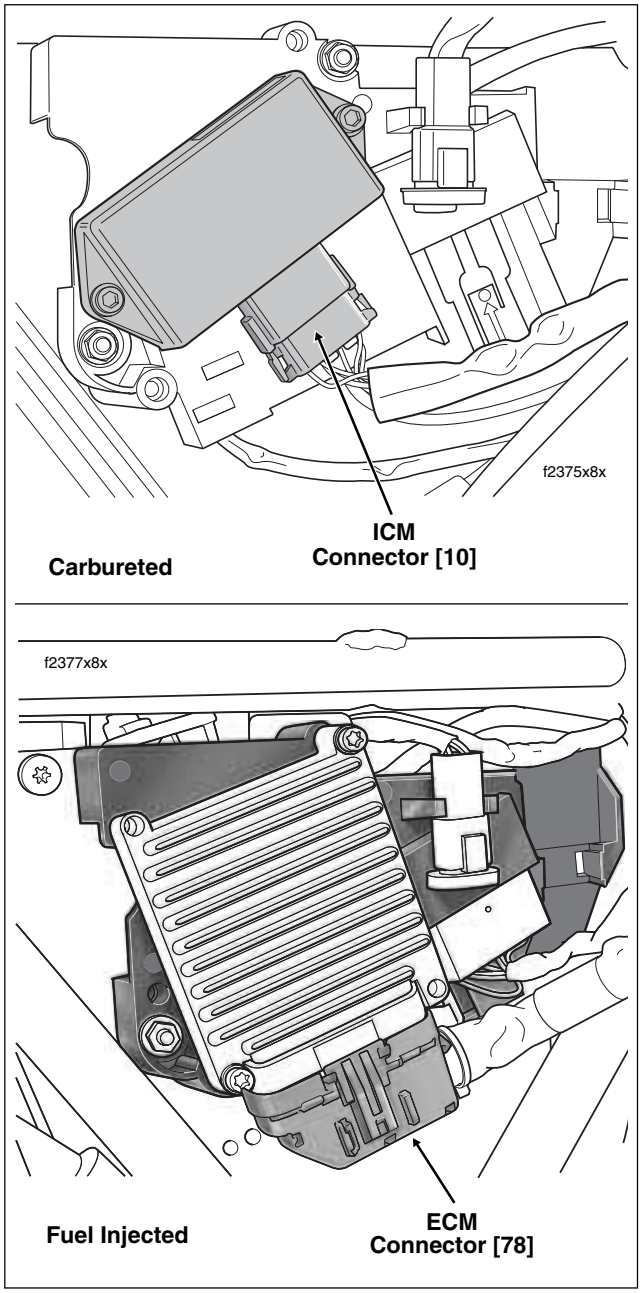

Figure 3-40. Electrical Bracket (Under Right Side Cover)

2. Connect BREAKOUT BOX (Part No. HD-42682) (black) between ICM connector [10A] and wiring harness connector [10B]. See Section 4.6 BREAKOUT BOX: ICM
3. Connect BREAKOUT BOX (Part No. HD-43876) between wire harness and ECM. See Section 5.7 BREAKOUT BOX: EFI.

HOME

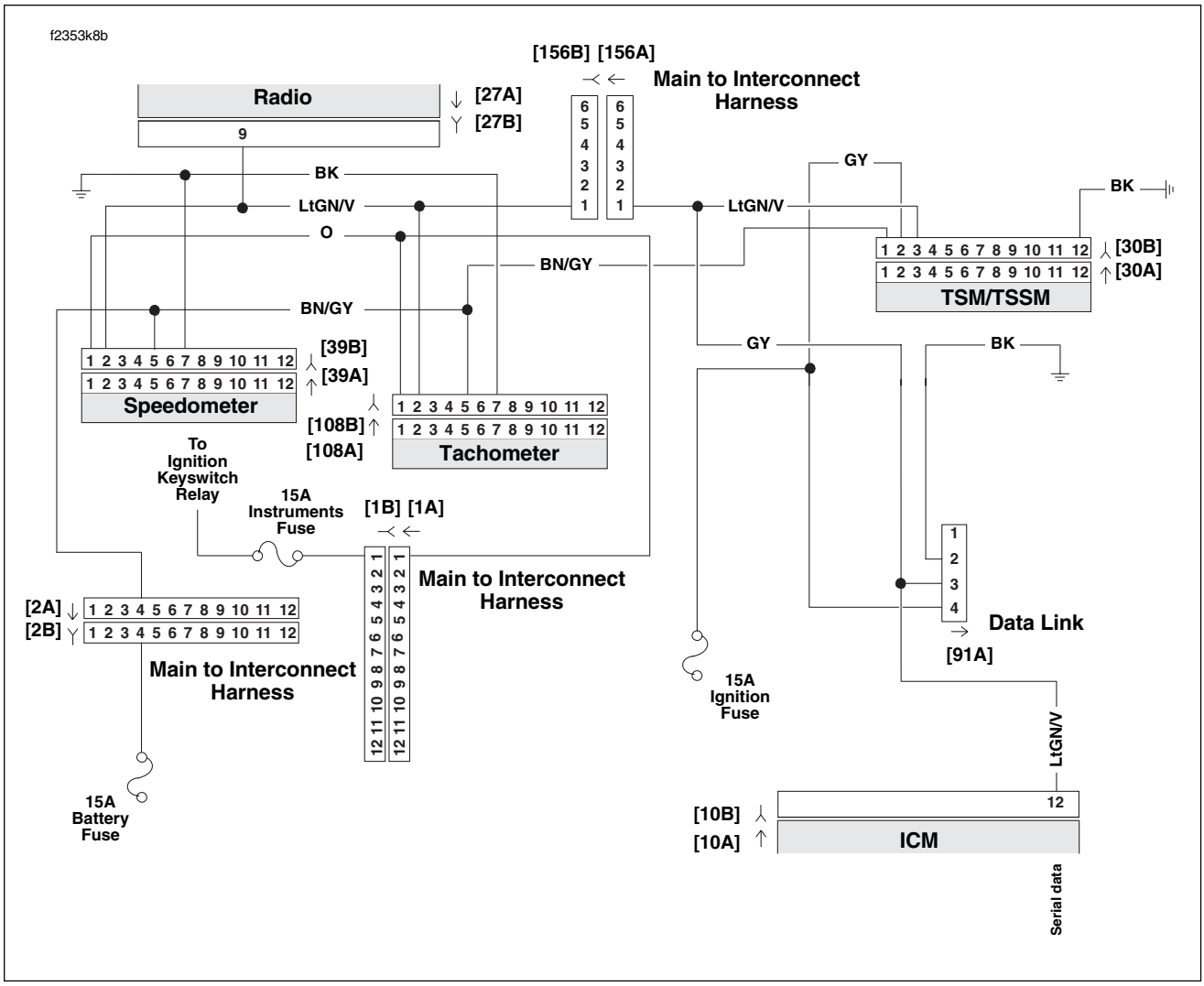

Figure 3-41. Serial Data Circuit: FLHT/C (Carbureted)

Table 3-26. Wire Harness Connectors in Figure 3-41.

NO.	DESCRIPTION	TYPE	LOCATION
[1]	Main to Interconnect Harness	12-Place Deutsch (Black)	Inner Fairing - Right Radio Support Bracket
[2]	Main to Interconnect Harness	12-Place Deutsch (Gray)	Inner Fairing - Right Fairing Support Brace
[10]	ICM	12-Place Deutsch	Under Right Side Cover
[27]	Radio	23-Place Amp	Inner Fairing - Back of Radio (Right Side)
[30]	TSM/TSSM	12-Place Deutsch	Cavity in Crossmember at Rear of Battery Box (Under Seat)
[39]	Speedometer	12-Place Packard	Inner Fairing (Back of Speedometer)
[91]	Data Link	4-Place Deutsch	Under Right Side Cover
[108]	Tachometer	12-Place Packard	Inner Fairing (Back of Tachometer)
[156]	Main to Interconnect Harness	6-Place Deutsch	Inner Fairing - Right Fairing Support Brace

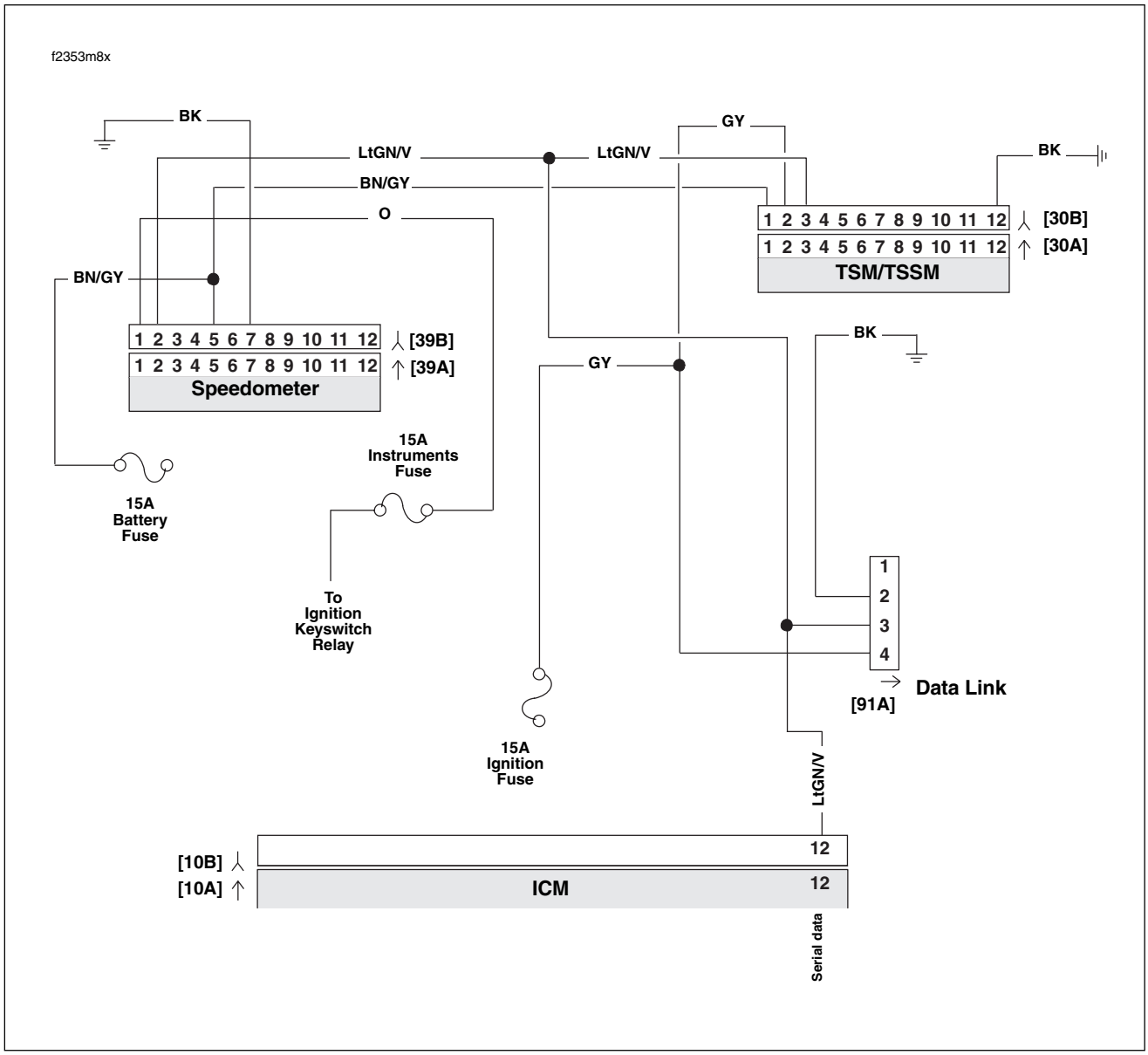

Figure 3-42. Serial Data Circuit: FLHR/S (Carbureted)

Table 3-27. Wire Harness Connectors in Figure 3-42.

NO.	DESCRIPTION	TYPE	LOCATION
[10]	ICM	12-Place Deutsch	Under Right Side Cover
[30]	TSM/TSSM	12-Place Deutsch	Cavity in Crossmember at Rear of Battery Box (Under Seat)
[39]	Speedometer	12-Place Packard	Under Console (Back of Speedometer)
[91]	Data Link	4-Place Deutsch	Under Right Side Cover

HOME

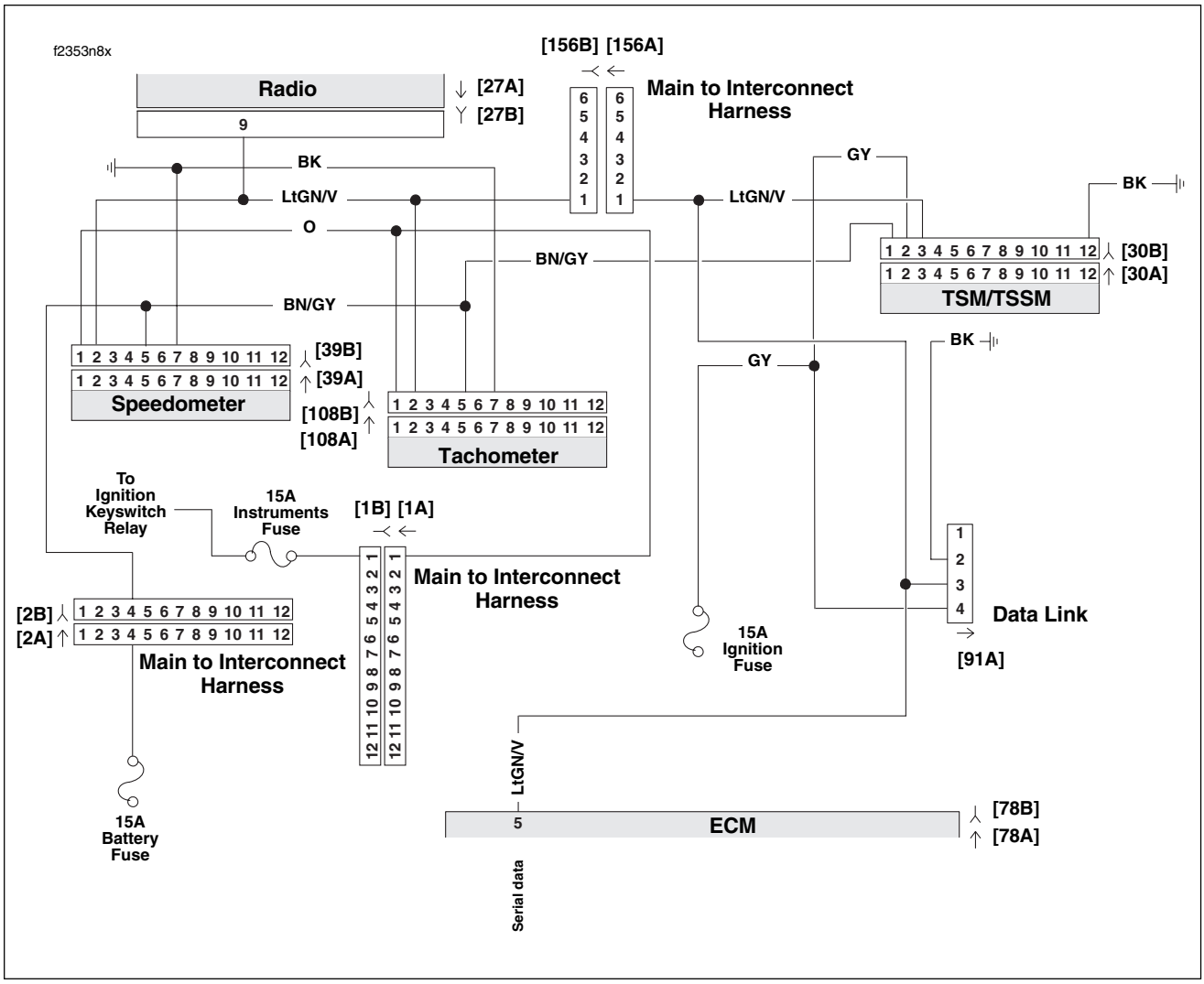

Figure 3-43. Serial Data Circuit: FLHX, FLHT/C/U, FLTR (Fuel Injected)

Table 3-28. Wire Harness Connectors in Figure 3-43.

NO.	DESCRIPTION	MODEL	TYPE	LOCATION
[1]	Main to Interconnect Harness	FLHT/C	12-Place Deutsch (Black)	Inner Fairing - Right Radio Support Bracket
		FLTR	12-Place Deutsch (Black)	Inner Fairing - Below Radio (Right Side)
[2]	Main to Interconnect Harness	FLHT/C	12-Place Deutsch (Gray)	Inner Fairing - Right Fairing Support Brace
		FLTR	12-Place Deutsch (Gray)	Inner Fairing - Below Radio (Right Side)
[27]	Radio	All	23-Place Amp	Inner Fairing - Back of Radio (Right Side)
[30]	Turn Signal/Security Module	All	12-Place Deutsch	Cavity in Crossmember at Rear of Battery Box (Under Seat)
[39]	Speedometer	FLHT/C	12-Place Packard	Inner Fairing (Back of Speedometer)
		FLTR	12-Place Packard	Under Bezel (Back of Speedometer)
[78]	ECM	All	36-Place Packard	Under Right Side Cover
[91]	Data Link	All	4-Place Deutsch	Under Right Side Cover
[108]	Tachometer	FLHT/C	12-Place Packard	Inner Fairing (Back of Tachometer)
		FLTR	12-Place Packard	Under Bezel (Back of Tachometer)
[156]	Main to Interconnect Harness	FLHT/C	6-Place Deutsch	Inner Fairing - Right Fairing Support Brace
		FLTR	6-Place Deutsch	Inner Fairing - Below Radio (Right Side)

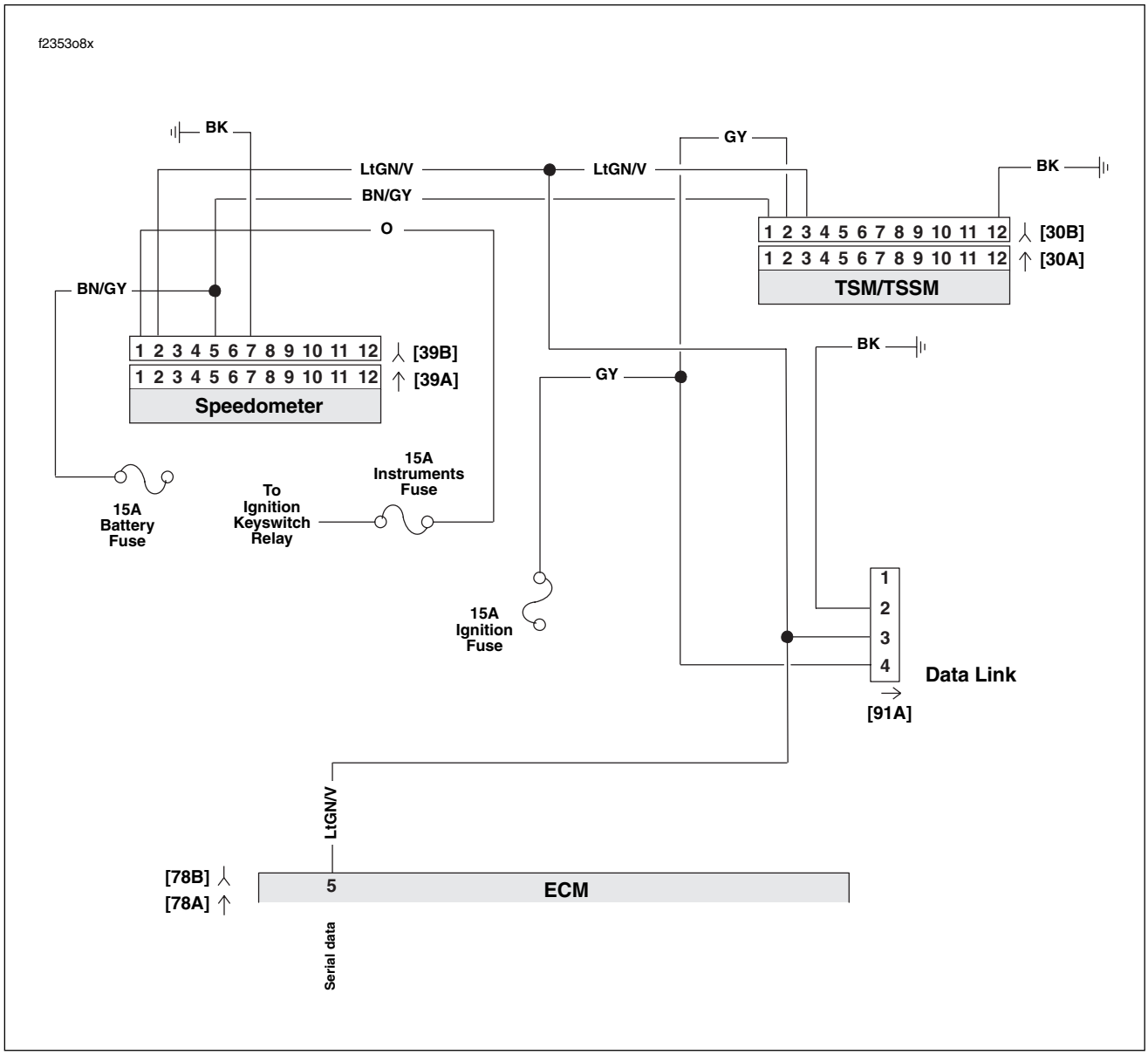

Figure 3-44. Serial Data Circuit: FLHR/C/S (Fuel Injected)

Table 3-29. Wire Harness Connectors in Figure 3-44.

NO.	DESCRIPTION	TYPE	LOCATION
[30]	TSM/TSSM	12-Place Deutsch	Cavity in Crossmember at Rear of Battery Box (Under Seat)
[39]	Speedometer	12-Place Packard	Under Console (Back of Speedometer)
[78]	ECM	36-Place Packard	Under Right Side Cover
[91]	Data Link	4-Place Deutsch	Under Right Side Cover

HOME

Test 3.21

LOSS OF ICM/ECM SERIAL DATA: DTC U1016

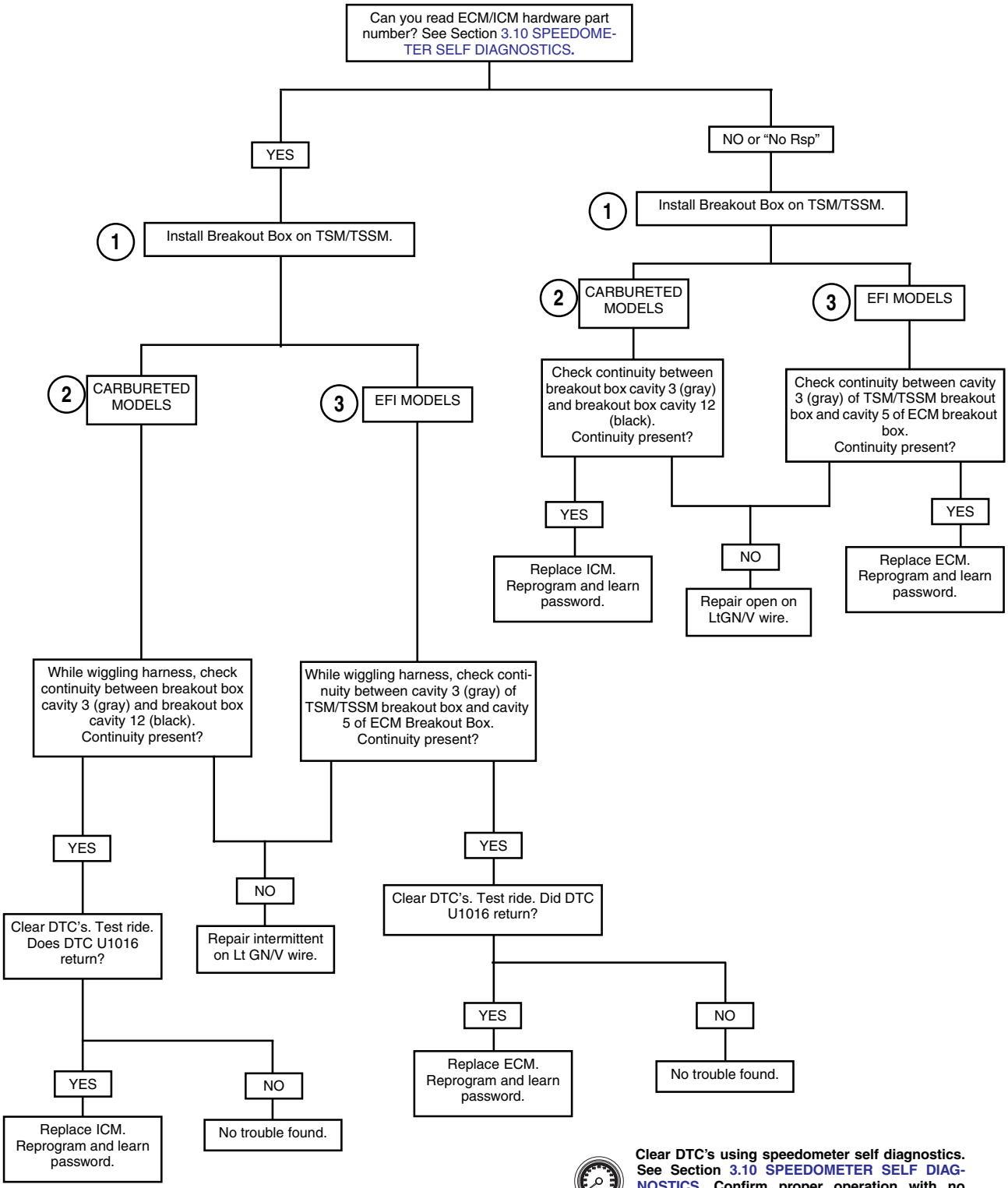

Clear DTC's using speedometer self diagnostics. See Section 3.10 SPEEDOMETER SELF DIAGNOSTICS. Confirm proper operation with no check engine lamp.

DTC U1097, U1255 3.22

GENERAL

Loss of Speedometer Serial Data

The serial data line provides a means for the speedometer, ICM/ECM and TSM/TSSM to communicate their current status. When all operating parameters are within specifications, a state of health message is sent between the components. A DTC U1255 (only reported by the TSM/TSSM or speedometer) indicates that no messages were present during power up of the current key cycle. A DTC U1097 indicates that there was communication on the data bus since power up, but was lost or interrupted during that key cycle.

Table 3-30. Code Description

DTC	DESCRIPTION
U1097	Loss of all speedometer serial data (state of health)
U1255	Serial data error/missing message

DIAGNOSTICS

Diagnostic Notes

The reference numbers below correlate with the circled numbers on the test 3.22 flow chart.

1. Connect BREAKOUT BOX (Part No. HD-42682) as follows:
   a. Mate gray pin housing on Breakout Box with TSM/TSSM harness connector [30B]. Leave TSM/TSSM connector [30A] disconnected.
   b. Mate black pin housing on Breakout Box with harness connector [39B] using INSTRUMENT HARNESS ADAPTERS (Part No.HD-46601). Leave speedometer connector [39A] disconnected.

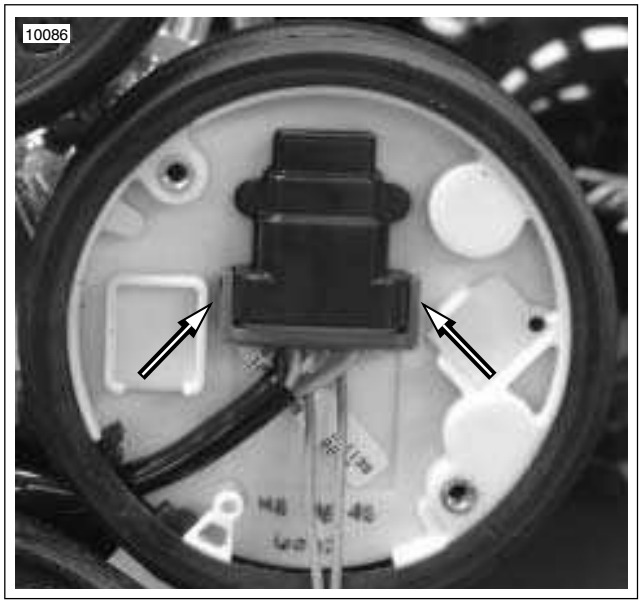

Figure 2-45. Speedometer Connector [39]

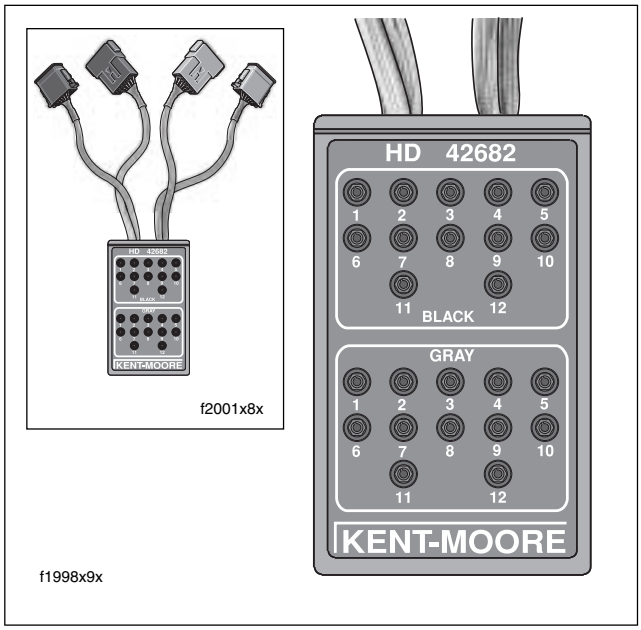

Figure 2-46. Breakout Box (Part No. HD-42682)

HOME

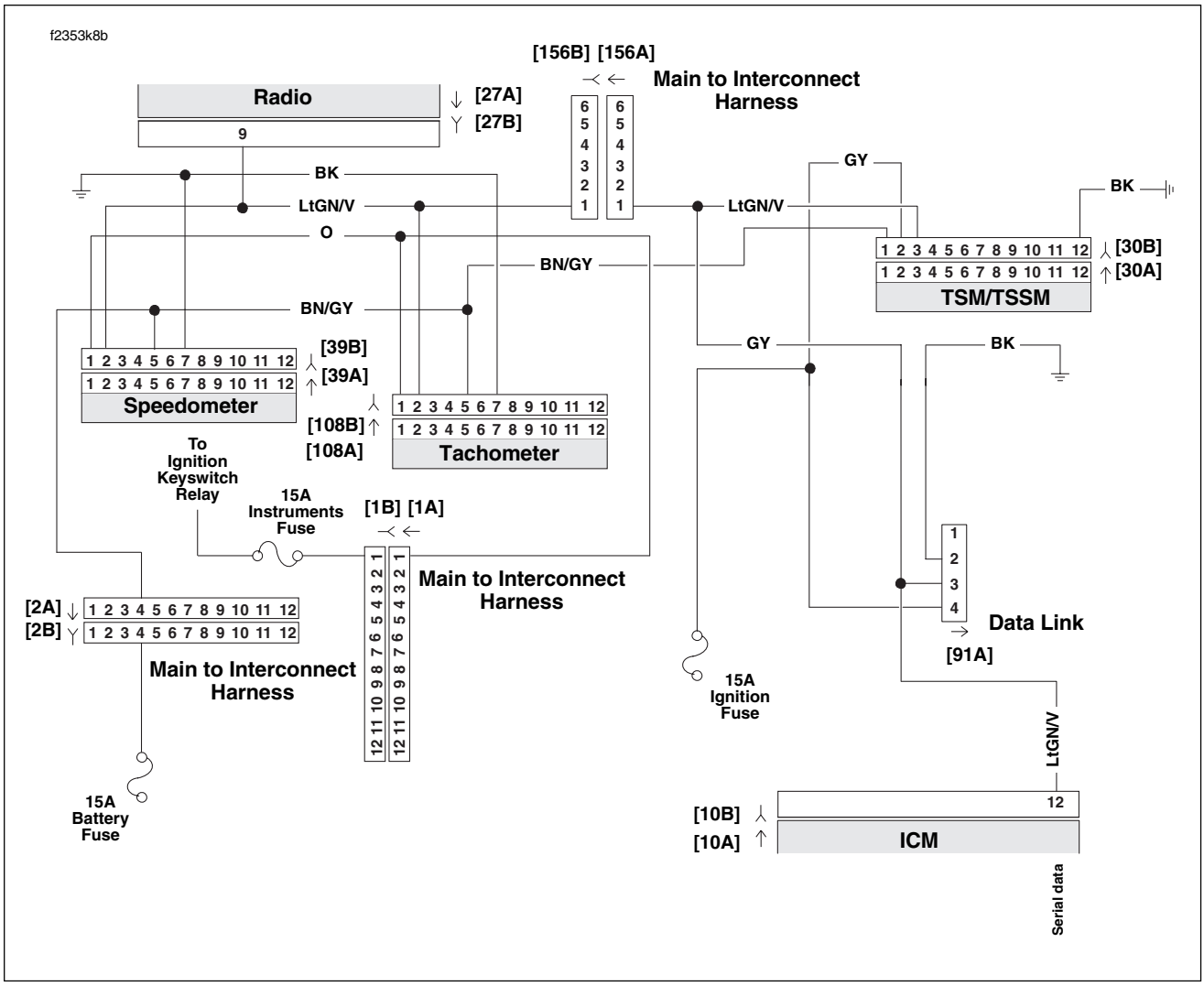

Figure 3-47. Serial Data Circuit: FLHT/C (Carbureted)

Table 3-31. Wire Harness Connectors in Figure 3-47.

NO.	DESCRIPTION	TYPE	LOCATION
[1]	Main to Interconnect Harness	12-Place Deutsch (Black)	Inner Fairing - Right Radio Support Bracket
[2]	Main to Interconnect Harness	12-Place Deutsch (Gray)	Inner Fairing - Right Fairing Support Brace
[10]	ICM	12-Place Deutsch	Under Right Side Cover
[27]	Radio	23-Place Amp	Inner Fairing - Back of Radio (Right Side)
[30]	TSM/TSSM	12-Place Deutsch	Cavity in Crossmember at Rear of Battery Box (Under Seat)
[39]	Speedometer	12-Place Packard	Inner Fairing (Back of Speedometer)
[91]	Data Link	4-Place Deutsch	Under Right Side Cover
[108]	Tachometer	12-Place Packard	Inner Fairing (Back of Tachometer)
[156]	Main to Interconnect Harness	6-Place Deutsch	Inner Fairing - Right Fairing Support Brace

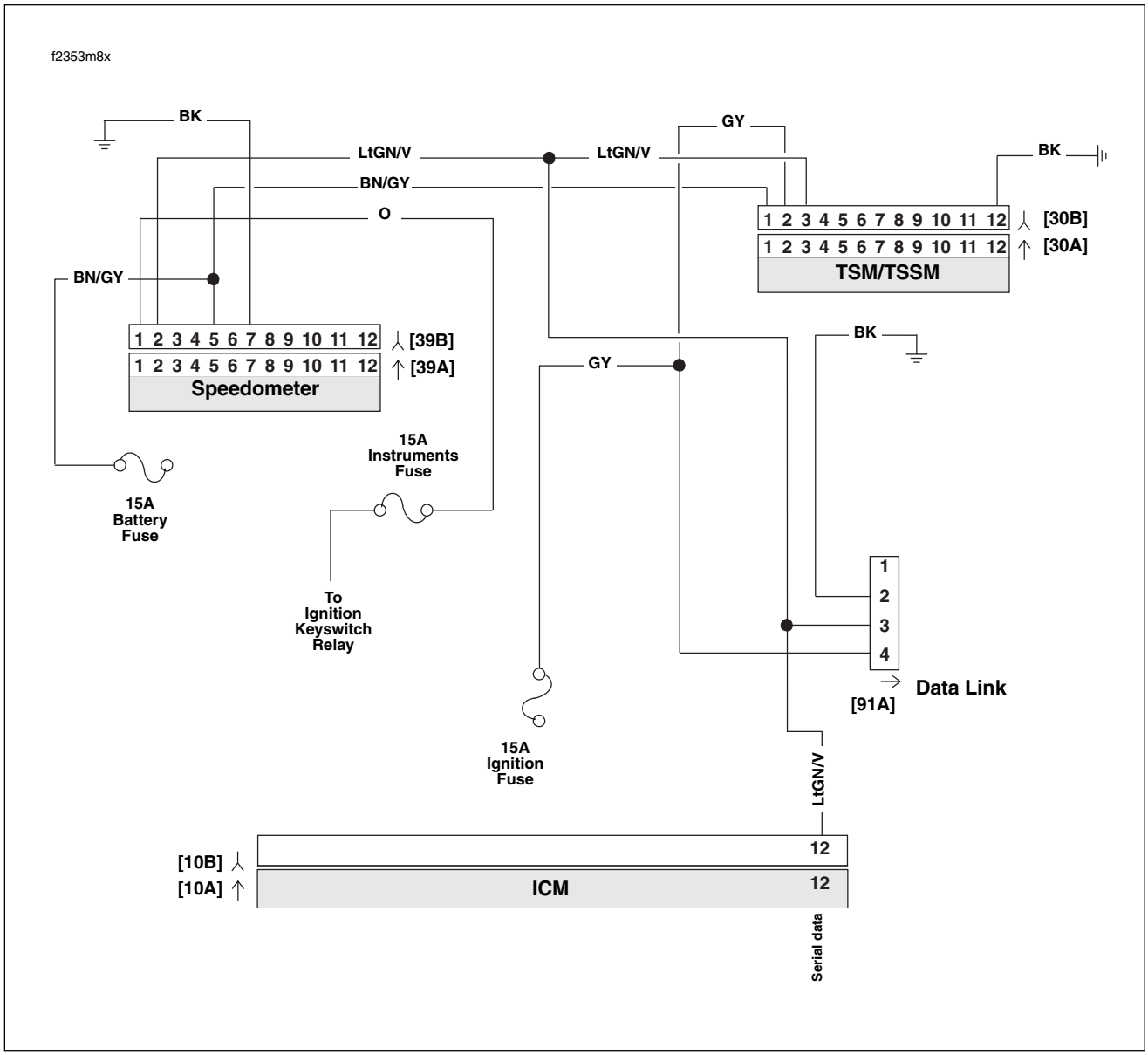

Figure 3-48. Serial Data Circuit: FLHR/S (Carbureted)

Table 3-32. Wire Harness Connectors in Figure 3-48.

NO.	DESCRIPTION	TYPE	LOCATION
[10]	ICM	12-Place Deutsch	Under Right Side Cover
[30]	TSM/TSSM	12-Place Deutsch	Cavity in Crossmember at Rear of Battery Box (Under Seat)
[39]	Speedometer	12-Place Packard	Under Console (Back of Speedometer)
[91]	Data Link	4-Place Deutsch	Under Right Side Cover

HOME

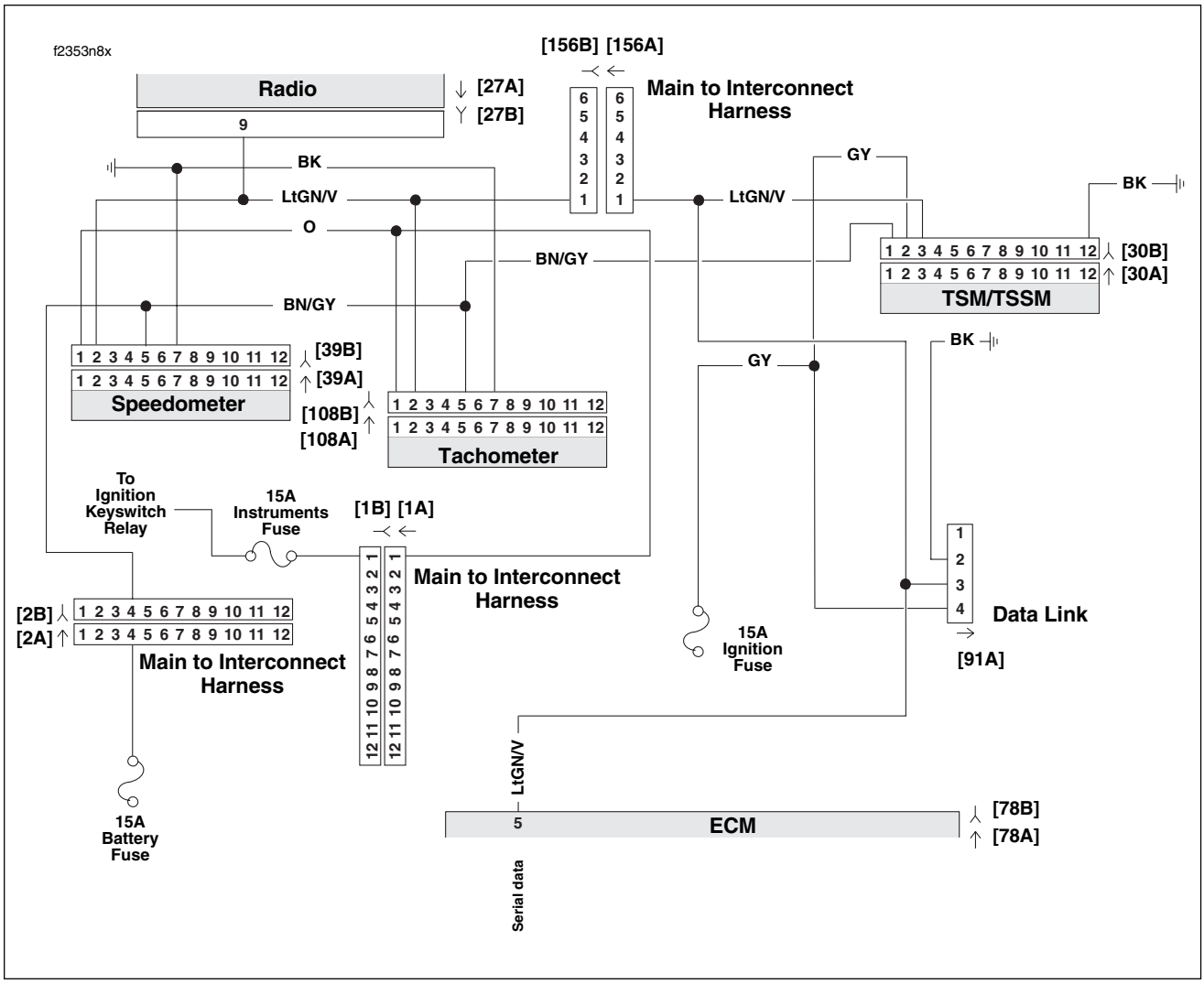

Figure 3-49. Serial Data Circuit: FLHX, FLHT/C/U, FLTR (Fuel Injected)

Table 3-33. Wire Harness Connectors in Figure 3-49.

NO.	DESCRIPTION	MODEL	TYPE	LOCATION
[1]	Main to Interconnect Harness	FLHT/C	12-Place Deutsch (Black)	Inner Fairing - Right Radio Support Bracket
		FLTR	12-Place Deutsch (Black)	Inner Fairing - Below Radio (Right Side)
[2]	Main to Interconnect Harness	FLHT/C	12-Place Deutsch (Gray)	Inner Fairing - Right Fairing Support Brace
		FLTR	12-Place Deutsch (Gray)	Inner Fairing - Below Radio (Right Side)
[27]	Radio	All	23-Place Amp	Inner Fairing - Back of Radio (Right Side)
[30]	TSM/TSSM	All	12-Place Deutsch	Cavity in Crossmember at Rear of Battery Box (Under Seat)
[39]	Speedometer	FLHT/C	12-Place Packard	Inner Fairing (Back of Speedometer)
		FLTR	12-Place Packard	Under Bezel (Back of Speedometer)
[78]	ECM	All	36-Place Packard	Under Right Side Cover
[91]	Data Link	All	4-Place Deutsch	Under Right Side Cover
[108]	Tachometer	FLHT/C	12-Place Packard	Inner Fairing (Back of Tachometer)
		FLTR	12-Place Packard	Under Bezel (Back of Tachometer)
[156]	Main to Interconnect Harness	FLHT/C	6-Place Deutsch	Inner Fairing - Right Fairing Support Brace
		FLTR	6-Place Deutsch	Inner Fairing - Below Radio (Right Side)

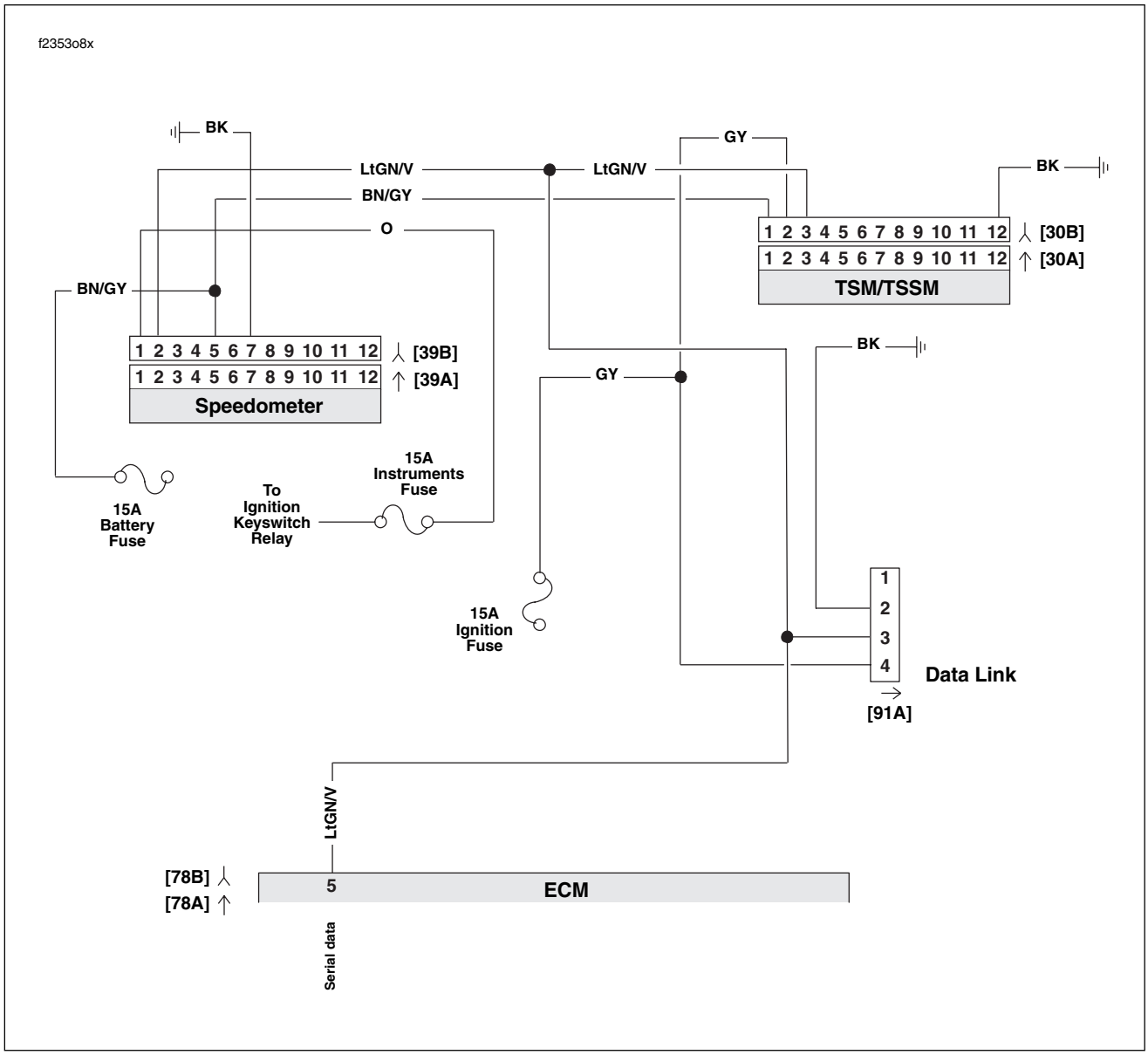

Figure 3-50. Serial Data Circuit: FLHR/C/S (Fuel Injected)

Table 3-34. Wire Harness Connectors in Figure 3-50.

NO.	DESCRIPTION	TYPE	LOCATION
[30]	TSM/TSSM	12-Place Deutsch	Cavity in Crossmember at Rear of Battery Box (Under Seat)
[39]	Speedometer	12-Place Packard	Under Console (Back of Speedometer)
[78]	ECM	36-Place Packard	Under Right Side Cover
[91]	Data Link	4-Place Deutsch	Under Right Side Cover

HOME

Test 3.22

LOSS OF SPEEDOMETER SERIAL DATA: DTC U1097, U1255

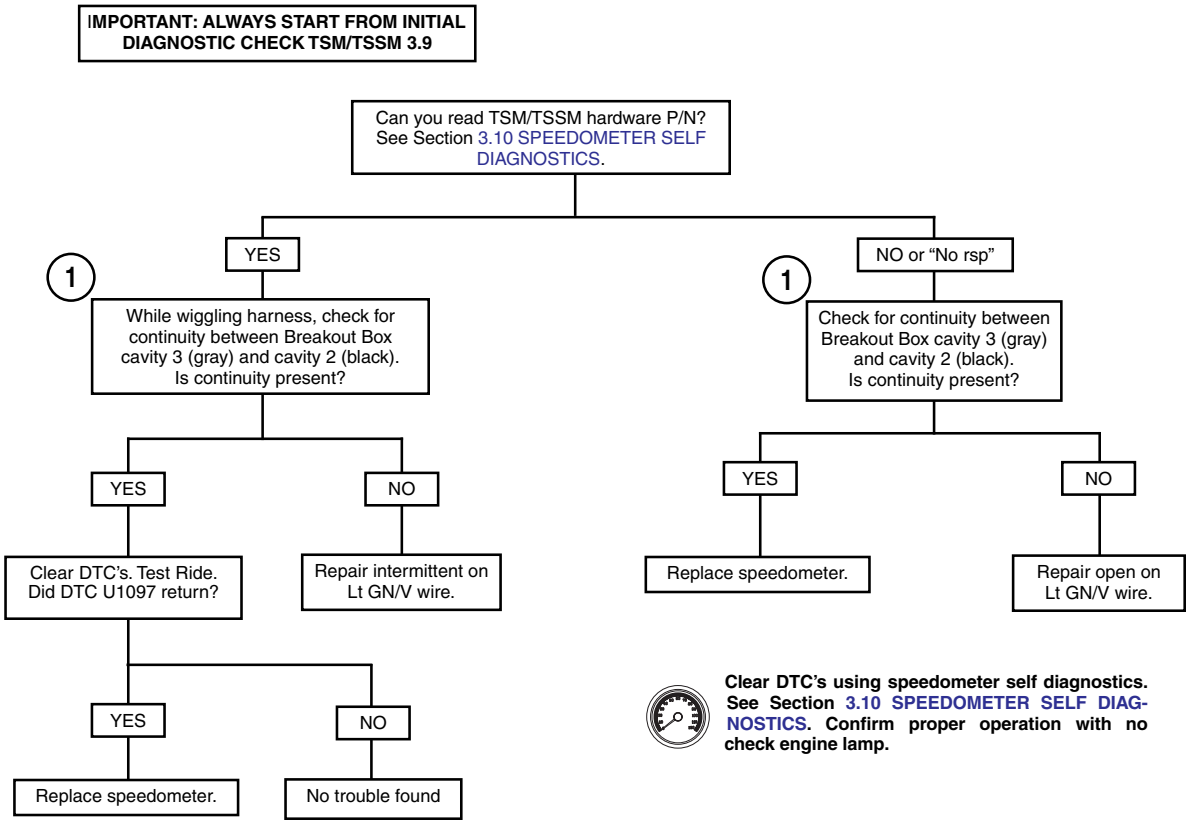

DTC U1300, U1301 OR “BUS ER” 3.23

GENERAL

Serial Data Low or Serial data Open/High

See Figure 3-51. The typical serial data voltage range is 0 volts (inactive) to 7 volts (active). Due to the short pulse, voltages will be much lower on a DVOM. In analog mode, a DVOM reading serial data will show continuous voltage when active, typically 0.6-0.8 volts. The range for acceptable operations is 0-7.0 volts.

Table 3-35. Code Description

DTC	DESCRIPTION
U1300	Serial data low
U1301	Serial data open/high

DIAGNOSTICS

Diagnostic Tips

- If serial data is shorted, these DTC’s will automatically cause the check engine lamp to illuminate. The odometer will read “Bus Er” in this condition.
- DTC’s P1009 and P1010 may accompany DTC’s U1300 and U1301.
- If a U1300, U1301 or “BUS Er” is present on **carbureted** models, perform diagnostic procedures listed in Section 4.10 STARTS, THEN STALLS.
- If a U1300, U1301 or “BUS Er” is present on **EFI** models, perform diagnostic procedures listed in Section 5.12 STARTS, THEN STALLS.

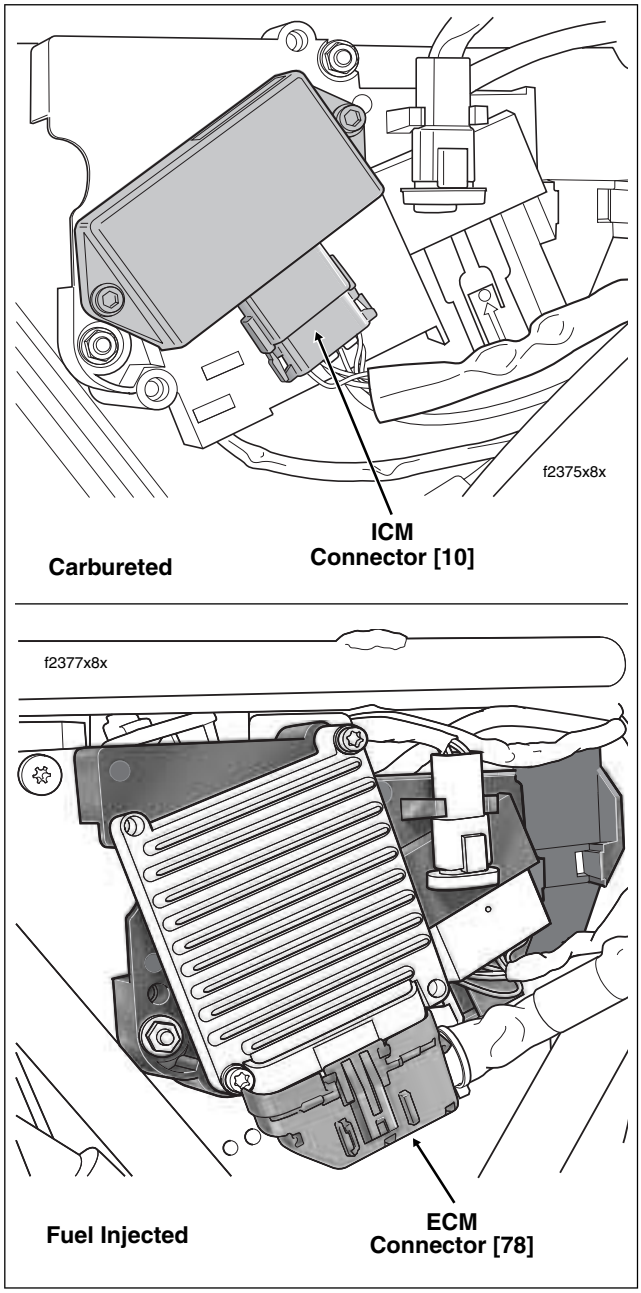

Figure 3-51. Electrical Bracket (Under Right Side Cover)

PASSWORD LEARN 3.24

GENERAL

If the ECM/ICM or TSM/TSSM is faulty, follow the instructions in the Touring Service Manual for ECM/ICM or TSM/TSSM replacement. Then, to determine if password learn is necessary, refer to Table 3-36.

Table 3-36. Password Learn

DEVICE REPLACED	IS PASSWORD LEARN NECESSARY
ECM	Yes
ICM	Yes
TSM	No*
TSSM	Yes
*If a TSM has been replaced by a TSSM, or a TSSM has been replaced by a TSM, password learn **is** necessary.	

PASSWORD LEARNING

To perform password learning procedure, refer to Table 3-37. When finished, continue with all instructions under Section 3.3 TSM/TSSM VEHICLE DELIVERY.

Always perform all appropriate instructions under Section 3.3 TSM/TSSM VEHICLE DELIVERY after TSM/TSSM replacement or removal.

IMPORTANT NOTE

Do not forget to enter a personal code for TSSM vehicles. If a code is not assigned and both key fobs are lost or damaged while the vehicle is armed, the TSSM must be replaced.

Table 3-37. Setting TSM/TSSM and ECM/ICM Password

NO.	ACTION	CONFIRMATION	NOTES
	Ignition must be turned off for at least 15 seconds.	With ignition turned off, Check Engine Lamp and Security Lamp will be off.	
1	Install **new** TSM/TSSM or ECM/ICM. Perform all steps under Section 3.3 TSM/TSSM VEHICLE DELIVERY.		
2	Set **RUN/OFF** switch to **RUN.**		
3	Turn **IGN** key **ON.**	Verify Check Engine Lamp and Security Lamp illuminate and then turn off.	TSM/TSSM enables starter relay.
4	Attempt normal start **one** time.	Engine starts and stalls. Check Engine Lamp illuminates and stays on.	Password has not been learned. ECM/ICM sets DTC P1009.
5	Wait ten seconds. Security lamp will illuminate and stay on.	Security Lamp illuminates.	ECM/ICM enters Password Learning mode for ten minutes. Do not cycle ignition switch or interrupt vehicle power or Password Learn will be unsuccessful.
6	Wait until Security Lamp turns off.		This takes ten minutes.
7	Quickly (within two seconds) turn **IGN** key OFF-**ON.**		ECM/ICM must not be allowed to shutdown.
8	Wait until Security Lamp turns off.		This takes ten minutes.
9	Quickly (within two seconds) turn **IGN** key OFF-**ON.**		ECM/ICM must not be allowed to shutdown.
10	Wait until Security Lamp turns off.		This takes ten minutes.
11	Quickly (within two seconds) turn **IGN** key OFF-**ON.**		ECM/ICM must not be allowed to shutdown.
12	Turn **IGN** key **OFF. Wait 15 seconds before turning IGN on.** Turn **IGN** switch **ON** and start engine to confirm successful Password Learn procedure. Clear DTC's.		
13	Perform all steps under Section 3.3 TSM/TSSM VEHICLE DELIVERY.		

GENERAL

The TSSM system uses batteries in the key fob and siren. These are the only parts requiring periodic maintenance.

KEY FOB

Schedule

Replace the key fob battery every 2 years.

Battery Replacement

1. Open the key fob case.
   a. Place a thin blade between the 2 halves of the case.
   b. Slowly twist the blade.
2. See Figure 3-52. Replace battery (1).
   a. Remove the original battery.
   b. Install a **new** battery with the positive (+) side down. Use a Panasonic® 2032 or equivalent.
3. See Figure 3-53. Align case and circuit board as shown. Snap case halves together.
4. While standing next to the motorcycle, press and hold the key fob button for 10-15 seconds until the security system responds with two turn signal flashes/siren chirps.

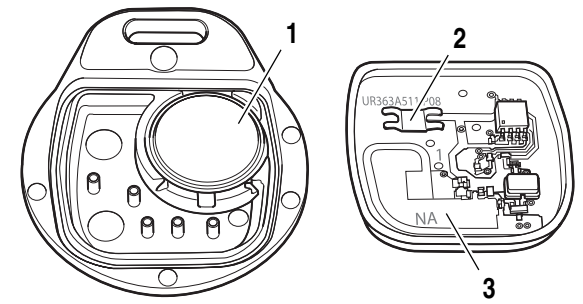

1. **Battery**
2. **Battery contact**
3. **Circuit board**

Figure 3-52. Open Key Fob Case

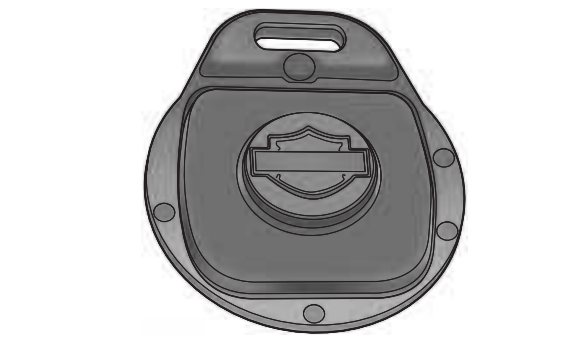

Figure 3-53. Key Fob Assembly

SIREN (IF INSTALLED)

Schedule

The siren's internal 9 volt battery is rechargeable and does not need to be replaced on a regular basis. Battery life under normal conditions is approximately three to six years.

NOTE

The internal siren battery may not charge if the vehicle's battery is less than 12.5 volts.

Battery Replacement

1. Disarm system and remove siren.
2. See Figure 3-54. Remove battery cover.
   a. Place the siren module on a flat and sturdy table with the potted section (area with epoxy covering circuit board) facing up and towards you.
   b. Position a knife blade at a 45 degree angle to the long side of the siren case. Insert the knife blade between the siren case and battery cover at one of the two accessible corners of the battery cover. Keep the blade slightly higher towards the battery cover as this helps keep the blade away from the battery seal.
   c. Slowly twist the blade towards the battery cover and the cover will pop off.

NOTE

*For protection against corrosion, battery terminals and battery clip are covered with a special grease. Do not wipe away this substance. Apply all available existing grease to terminals on **new** battery.*

3. See Figure 3-54. Replace battery by removing old battery from polarized battery clip. Install a **new** 9 volt nickel metal hydride battery. See the Touring Parts Catalog for the correct part number.

NOTE

Only a nickel metal hydride nine-volt battery should be used in the siren.

4. See Figure 3-54. Reinstall battery cover (1).
   a. Carefully replace the rubber seal.
   b. Align battery cover (1) with case placing round corners on cover away from connector [142A]. Snap cover into place.
5. Install siren and check operation. If siren is working properly, it will respond with two chirps after receiving the arm command.

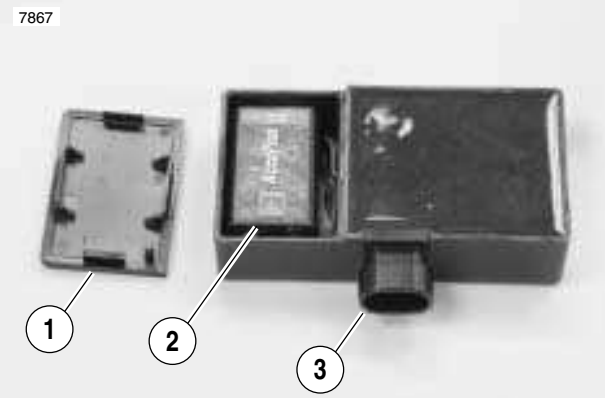

1. **Cover**
2. **Battery**
3. **Siren Connector [142A]**

Figure 3-54. Siren Battery Compartment

Table Of Contents

ENGINE MANAGEMENT (EFI) 5

SUBJECT	PAGE NO.
5.1 Specifications	5-1
5.2 EFI System	5-3
5.3 EFI Diagnostic Introduction	5-5
5.4 Checking For Diagnostic Trouble Codes: EFI	5-6
5.5 Initial Diagnostic Check: EFI	5-8
5.6 Speedometer Self Diagnostics	5-17
5.7 Breakout Box	5-19
5.8 Wiggle Test	5-20
5.9 Intake Leak Test	5-21
5.10 Engine Cranks, But Will Not Start	5-23
5.11 No ECM Power	5-30
5.12 Starts, Then Stalls	5-35
5.13 Fuel System Electrical Test	5-40
5.14 System Relay Check	5-45
5.15 Fuel Pressure Test	5-50
5.16 Idle Air Control, DTC P0505	5-54
5.17 Misfire at Idle or Under Load	5-59
5.18 Combustion Absent/Intermittent, DTC P1353, P1356, P1357, P1358	5-64
5.19 DTC P0107, P0108	5-69
5.20 DTC P0112, P0113	5-73
5.21 DTC P0117, P0118	5-77
5.22 DTC P0122, P0123	5-81
5.23 DTC P0261, P0262, P0263, P0264	5-85
5.24 DTC P0373, P0374	5-91
5.25 DTC P0501, P0502	5-94
5.26 DTC P0562, P0563	5-98
5.27 DTC P0603, P0605	5-103
5.28 DTC P1009, P1010	5-104
5.29 DTC P1351, P1352, P1354, P1355	5-108
5.30 DTC U1064, U1255	5-113
5.31 DTC U1097, U1255	5-117

SPECIFICATIONS 5.1

IGNITION	DATA
Spark timing advance	0°-45° BTDC (range) 12° BTDC@1000 RPM
Idle speed	975 ± 50 RPM
Spark plug size	12 mm
Spark plug gap	0.038-0.043 in
	0.97-1.09 mm
Spark plug type	Harley-Davidson No. 6R12 (no substitute)
Ignition coil primary resistance	0.3-0.5 ohms
Ignition coil secondary resistance	2500-3500 ohms

Circuit	Rating (Amperes)	Color
System Fuses		
Maxi-Fuse	40	Orange
Headlamp	15	Blue
Ignition	15	Blue
Lighting	15	Blue
Instruments	15	Blue
Brakes/Cruise	15	Blue
Radio Memory	15	Blue
Radio Power	10	Red
Accessory	15	Blue
Battery	15	Blue
P & A	15	Blue
EFI Fuses		
Fuel Pump	15	Blue
ECM Power	15	Blue

System Fuse Block (Under Left Side Cover)

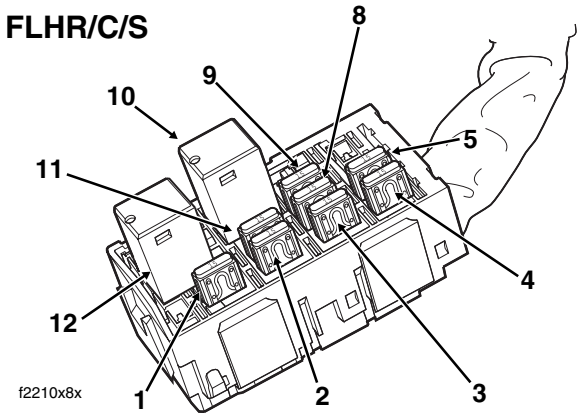

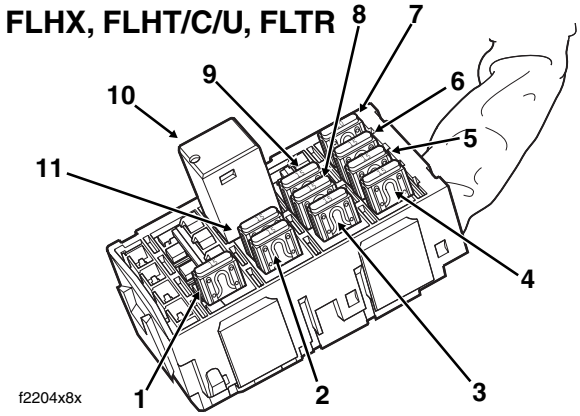

1. Headlamp
2. Ignition
3. Lighting
4. Instruments
5. Brakes/Cruise
6. Radio Memory
7. Radio Power
8. Accessory
9. Battery
10. Brake Light Relay
11. P&A
12. Starter Relay

EFI Fuse Block (Under Right Side Cover)

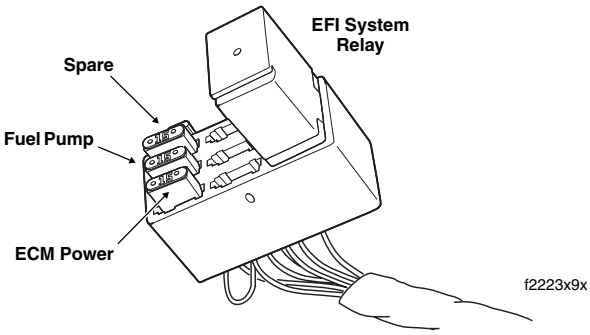

Figure 5-1. Fuse Locations

NOTES

EFI SYSTEM 5.2

GENERAL

The engine management system consists of the following components:

- ECM
- CKP sensor
- MAP sensor
- IAT sensor
- ET sensor
- IAC
- TP sensor
- VSS
- Turn signal module (TSM) or optional, factory-installed turn signal security module (TSSM). This includes an integrated bank angle sensor (BAS).
- Ignition coil.

The ECM is mounted to the electrical bracket under the right side cover. It computes the spark advance for proper ignition timing based on sensor inputs (from CKP, MAP and TP sensor) and regulates the low-voltage circuits between battery and ignition coil.

The ECM contains all of the solid state components used in the ignition system. The dwell time for the ignition coil is also calculated in the microprocessor and is dependent upon battery voltage. The programmed dwell is an added feature to give adequate spark at all speeds. (The ECM has added protection against transient voltages, continuous reverse voltage protection, and damage due to jump starts.) The ECM is fully enclosed to protect it from vibration, dust, water or oil. This unit is a non-repairable item. If it fails, it must be replaced.

The CKP sensor is located in the front left side of the crankcase. The CKP generates an AC signal which is sent to the ECM where it is used to reference engine position (TDC) and speed. It functions by taking readings off the 30 teeth on the left side flywheel (two teeth are missing to establish a reference point).

The MAP sensor is located on top of the intake manifold. The MAP sensor monitors the intake manifold pressure (vacuum) and sends the information to the ECM where the module adjusts the spark and fuel timing advance curve for optimum performance.

The bank angle sensor is within the TSM/TSSM. If the vehicle lean angle exceeds 45 degrees for one second, the fuel injectors are shut off. Once the sensor is tripped, the motorcycle must be uprighted, turned off and then on again before the engine can be restarted. This is communicated across the data bus.

Front and rear coils fire each spark plug independently (one cylinder at a time - no wasted spark). The coil also has an extra terminal to monitor current on the coil secondary circuit. This is used for knock detection and combustion diagnostics.

The ignition system gives a spark near top dead center for starting. At RPM and loads above this, the system gives a spark advance that varies between 0° and 50°.

The IAT, ET and TP sensors are used to provide information to the ECM to fine tune spark and fuel delivery. The VSS is used as an input for idle speed control.

EFI ENGINE HEAT MANAGEMENT

Injected Twin Cam High Temperature Idle

NOTE

Fuel injected Twin Cam engines use a three phase heat management system to reduce engine temperature under extreme conditions. A rider with a very hot engine may notice the effects of this three phase heat management system and incorrectly assume an idle problem exists.

Phase 1

When the ET sensor signals that the cylinder head has reached approximately 291°F (144°C) the ECM will gradually reduce engine idle speed until the engine temperature drops or the engine reaches 800 rpm.

Phase 2

If engine temperature reaches 320°F (160°C), the ECM richens the air/fuel ratio to provide additional cooling.

Phase 3

If the engine temperature reaches 329° F (165° C), fuel injector pulses are interrupted. The air drawn in and expelled helps cool the engine further. Since there is no combustion it would be perceived as a misfire. This third stage will only happen when the motorcycle is stationary.

TROUBLESHOOTING

See the diagnostic charts that follow for troubleshooting information.

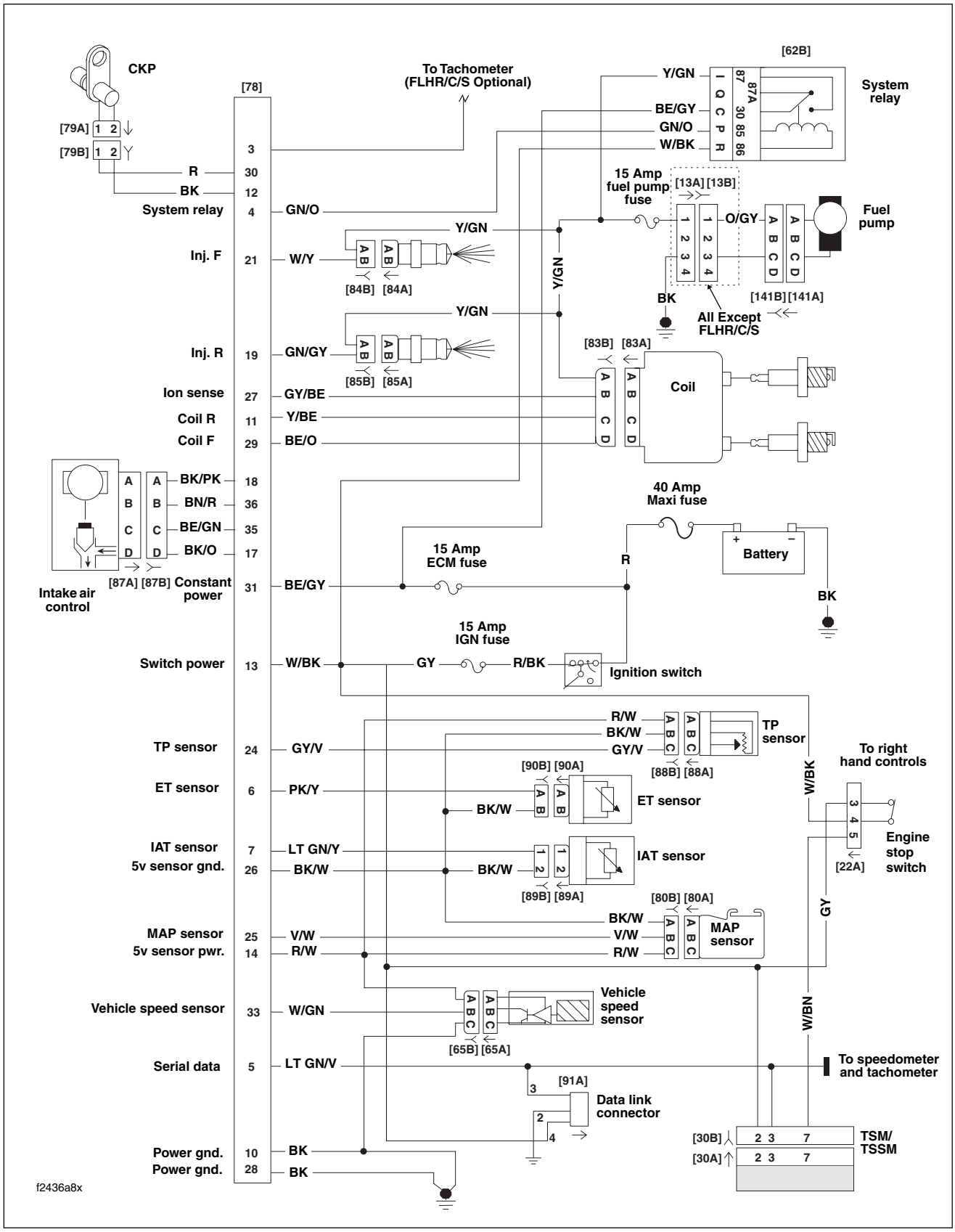

Figure 5-2. Simplified EFI System Circuit

EFI DIAGNOSTIC INTRODUCTION 5.3

SYSTEM PROBLEMS

All system problems fall into at least one of three general categories.

No Start

The engine cranks over freely, but will not start. This does not include situations where the engine will not crank, such as a security disabled starter, dead battery, etc. This condition assumes that all obvious checks (fuel in tank, etc.) have been made.

Poor Performance

The engine starts but there are performance problems. These problems may include poor fuel economy, rough idle, engine misfire, engine hesitation, severe spark knock, etc.

Check Engine Lamp

See Figure 5-3. The check engine lamp indicates the ECM has determined a fault condition exists. There may also be starting or performance problems.

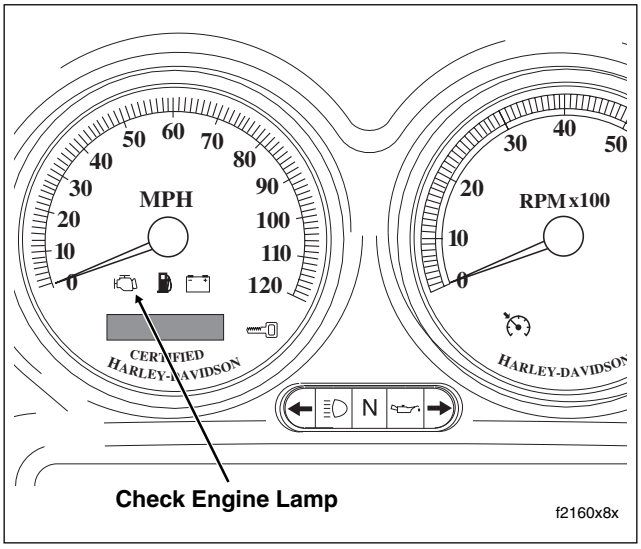

Figure 5-3. Speedometer

RESOLVING PROBLEMS

To resolve system problems, five basic steps are involved. In order of occurrence, they are:

1. Check for DTC's by using speedometer self diagnostics. See Section 5.4 CHECKING FOR DIAGNOSTIC TROUBLE CODES: EFI.
2. Retrieve DTC's by using speedometer self diagnostics. See Section 5.6 SPEEDOMETER SELF DIAGNOSTICS.
3. Diagnose system problems. This involves using special tools and the diagnostic flow charts in this section.
4. Correct problems through the replacement and/or repair of the affected components.
5. After repairs are performed, the work must be validated. This involves clearing the trouble codes and confirming proper vehicle operation as indicated by the lack of trouble codes.

CHECKING FOR DIAGNOSTIC TROUBLE CODES: EFI 5.4

CHECK ENGINE LAMP

To diagnose system problems, start by observing the behavior of the check engine lamp.

NOTES

- *See Figure 5-4. "Key ON" means that the ignition key is turned to IGN and the engine stop switch is set to RUN (although the engine is **not** running).*
- *When the ignition key is turned ON, the check engine lamp will illuminate for approximately four seconds and then turn off.*
- *If the check engine lamp is not illuminated at Key ON or if it fails to turn OFF after the initial four second period, then the speedometer may need to be replaced. See Section 5.5 INITIAL DIAGNOSTIC CHECK: EFI.*

1. When the lamp turns off after being illuminated for the first four second period, it will:
   a. Remain off if there are no fault conditions or trouble codes currently detected by the ignition control module. See A of Figure 5-5.
   b. Come back on for an 8 second period if only historic codes exist. See B of Figure 5-5.
   c. Come back on, and remain on, if a current trouble code exists. See C of Figure 5-5.

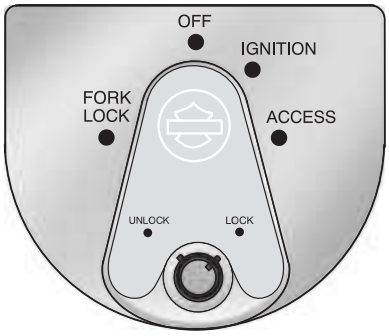

Figure 5-4. Ignition Switch (FLHX, FLHT/C/U, FLTR)

2. See CODE TYPES which follows for a complete description of trouble code formats.

NOTE

Some trouble codes can only be fully diagnosed during actuation. For example, a problem with the ignition coil will be considered a current fault even after the problem is corrected, since the ECM will not know of its resolution until after the coil is exercised by vehicle start sequence. In this manner, there may sometimes be a false indication of the current trouble code.

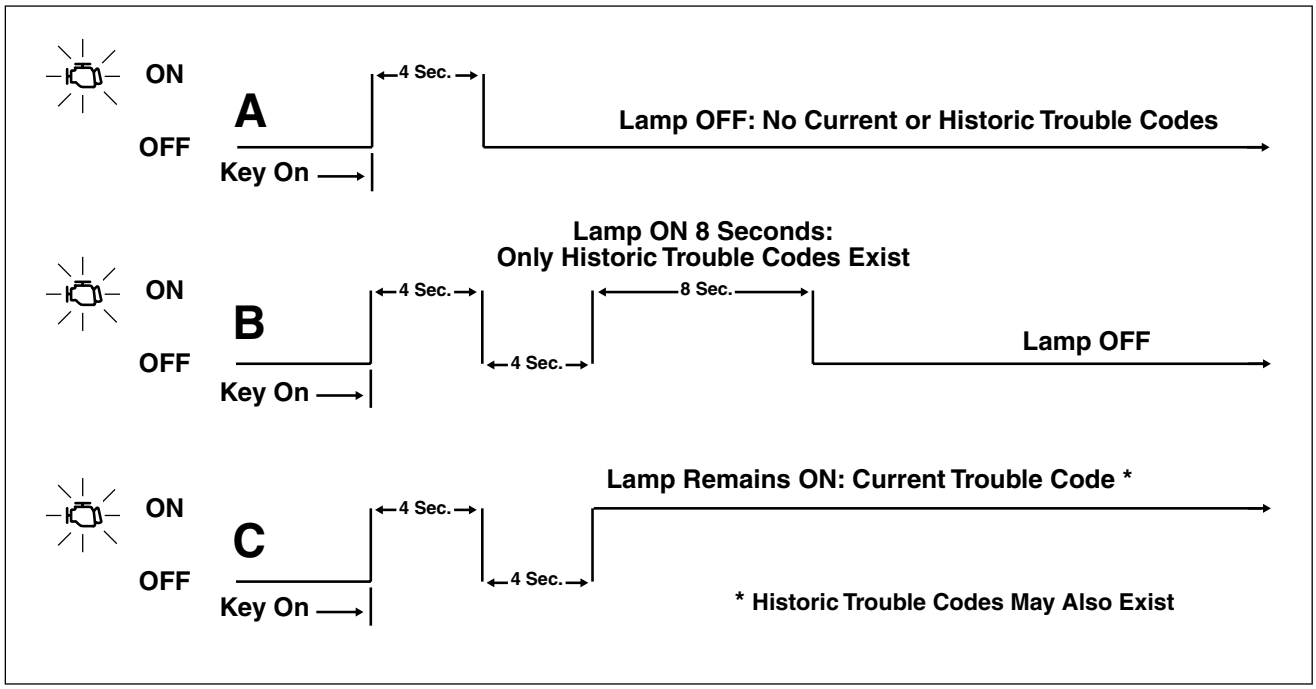

Figure 5-5. Check Engine Lamp Operation

CODE TYPES

There are two types of DTC's: current and historic. If a DTC is stored, it can be read using speedometer self diagnostics. See Section 5.6 SPEEDOMETER SELF DIAGNOSTICS.

All DTC's reside in the memory of the ECM/ICM, TSM/TSSM, speedometer or tachometer until the code is cleared by use of the speedometer self diagnostics. See Section 5.6 SPEEDOMETER SELF DIAGNOSTICS.

A historic DTC is also cleared after a total of 50 trips has elapsed. A trip consists of a start and run cycle. After the 50 trip retention period, the DTC is automatically erased from memory providing that no subsequent faults of the same type are detected in that period.

Current

Current trouble codes are those which occur during the present ignition cycle. See the appropriate flow charts for solutions.

Historic

If a particular problem happens to resolve itself, the active status problem is dropped and it becomes a historic code rather current code.

Historic codes are stored for a length of time to assist in the diagnosis of intermittent faults. See Figure 5-5. The check engine lamp will come back on for 8 seconds to indicate the existence of only historic codes.

It is important to note that historic codes may also be present whenever the system indicates the existence of a current code. See MULTIPLE DIAGNOSTIC TROUBLE CODES if multiple trouble codes are found.

Diagnostic charts are designed for use with current trouble codes and as a result they frequently suggest part replacement. When diagnosing a historic code the charts can be helpful but should not lead to part replacement without verification the part is faulty.

RETRIEVING DIAGNOSTIC TROUBLE CODES

The engine management system provides two levels of diagnostics.

- The most sophisticated mode uses a computer based diagnostic package called the DIGITAL TECHNICIAN (Part No. HD-44750).
- The second mode requires using the speedometer self diagnostics. Speedometer, tachometer (if equipped), TSM/TSSM and ECM codes can be accessed and cleared. See Section 5.6 SPEEDOMETER SELF DIAGNOSTICS for more information.

MULTIPLE DIAGNOSTIC TROUBLE CODES

While it is possible for more than one fault to occur and set more than one trouble code, there are several conditions which may result in **one** fault setting **multiple** trouble codes:

- The MAP sensor, TP sensor and VSS are connected to the same reference line (+5V Vref). If the reference line goes to ground or open, multiple codes will be set (DTC P0107, P0122 and P0501).
- Serial data codes (DTC U1300, U1301, U1016, U1064, U1097 and U1255) may be accompanied by other codes. **Always** correct the serial data codes before resolving the other codes.

Refer to Table 5-5. This table gives most ECM DTC's a priority ranking.

INITIAL DIAGNOSTIC CHECK: EFI 5.5

GENERAL

To locate faulty circuits or other system problems, follow the diagnostic flow charts in this section. For a systematic approach, always begin with INITIAL DIAGNOSTICS which follows. Read the general information and then work your way through the flow chart box by box.

Diagnostic Notes

If a numbered circle appears adjacent to a flow chart box, then more information is offered in the diagnostic notes. Many diagnostic notes contain supplemental information, descriptions of various diagnostic tools or references to other parts of the manual where information on the location and removal of components may be obtained.

Circuit Diagram/Wire Harness Connector Table

When working through a flow chart, refer to the illustrations, the associated circuit diagram and the wire harness connector table as necessary. The wire harness connector table for each circuit diagram identifies the connector number, description, type and general location.

In order to perform most diagnostic routines, a Breakout Box and a DVOM are required. See Section 5.7 BREAKOUT BOX: EFI.

To perform the circuit checks with any degree of efficiency, a familiarity with the various wire connectors is also necessary.

Reprogramming ECM

Diagnostic charts frequently suggest ECM replacement. In the event an ECM needs to be replaced, it must be reprogrammed using a computer based diagnostic package called DIGITAL TECHNICIAN (Part No. HD-44750). See your dealer. Password learn procedure must also be performed. See Section 3.24 PASSWORD LEARN.

INITIAL DIAGNOSTICS

General Information

The diagnostic check (see page 5-15) is an organized approach to identifying a problem caused by an electronic control system malfunction.

Diagnostic Tips

- If speedometer reads “No Rsp” (no response) while in diagnostic mode, check data bus for an open or short to ground between data connector [91A] Terminal 3 and ECM, TSM/TSSM, tachometer (if equipped) or speedometer. For more information on speedometer diagnostic mode See Section 5.6 SPEEDOMETER SELF DIAGNOSTICS.
- Check for an open diagnostic test terminal between data Terminal 3 and ECM Terminal 5. With ignition key turned ON, transmit data should be typically 0.6-0.8 volts. The range of acceptable voltage is greater than 0 and less than 7.0 volts.
- If speedometer reads “BUS er” (serial data bus error), refer to flow charts in Section 5.12 STARTS, THEN STALLS.

Diagnostic Notes

The reference numbers below correlate with the circled numbers on the diagnostic check flow charts. See page 5-15.

1. Compare engine behavior to symptoms tables.
   a. Starts hard. Refer to Table 5-2.
   b. Hesitates, stumbles, surges, misfires and/or sluggish performance. Refer to Table 5-3.
   c. Engine exhaust emits black smoke or fouls plugs. Refer to Table 5-4.
2. Connect BREAKOUT BOX (Part No. HD-43682) to speedometer using HD-46601 adapters.

All EFI diagnostic codes are listed on page 5-11 in Table 5-5.

Other Codes

See Section 3.9 INITIAL DIAGNOSTIC CHECK: TSM/TSSM for any codes related to the turn signal module (TSM) or turn signal security module (TSSM).

See Section 2.2 INITIAL DIAGNOSTIC CHECK: SPEEDOMETER for any codes related to the speedometer or tachometer.

Table 5-1. Typical Scan Values for Engine Data

ITEM	MIN. VALUE	MAX. VALUE	HOT IDLE
MAP sensor	10 kPa	104 kPa	10.3-13.3 in. Hg 35-45 kPa
	0 volts	5.1 volts	
TP sensor	0	100	0%
	0.2 volts	4.5 volts	0.2-1.0 volts
IAC pintle	0	155	30-45 steps
RPM	800	5600	975
ET sensor	3° F (-16° C)	464° F (240° C)	230-300° F (110-150° C)
	0.0 volts	5.0 volts	0.5-3.23 volts
IAT sensor	3° F (-16° C)	248° F (120° C)	104-140° F (40-60° C)
	0.0 volts	5.0 volts	2.0-3.5 volts
INJ PW front	0	50 mS	2-4 mSec
INJ PW rear	0	50 mS	2-4 mSec
Advance front	0	45°	10-15°
Advance rear	0	45°	10-15°
VSS	0	120	0 MPH
Battery voltage	10	15	14.5 volts
ENG RUN	off	Run	Run
Idle RPM	800	1300	940-975

NOTE

Hot idle specifications are with stock exhaust, the engine operating at 975 RPM and an engine temperature of approximately 260° F (127° C). Idle settings may be changed with the idle set procedure. See the Touring Service Manual.

Table 5-2. Engine Starts Hard

SYMPTOM	SOLUTION
Battery discharged	See charging system trouble-shooting in this section.
Spark plugs	5.17 MISFIRE AT IDLE OR UNDER LOAD.
Spark plug wires	5.17 MISFIRE AT IDLE OR UNDER LOAD.
Ignition coil	5.17 MISFIRE AT IDLE OR UNDER LOAD.
Valve sticking	See Section 3 in the Touring Service Manual.
Water or dirt in fuel system	Drain and refill with fresh fuel.
Loss of battery power to ECM terminal 31*	5.11 NO ECM POWER

* Codes will not clear (although they appear to).

Table 5-3. Engine Performance Problems

SYMPTOM	SOLUTION
Manifold leak NOTE- When manifold leak is large enough, IAC will close to 0 and code P0505 will set	See 5.9 INTAKE LEAK TEST. A low IAC count may also indicate an air leak.
MAP sensor plugged or not operating properly	5.19 DTC P0107, P0108.
Water or dirt in fuel system	Drain and refill with fresh fuel.
Spark plugs	5.17 MISFIRE AT IDLE OR UNDER LOAD.
Throttle plate not opening fully	See throttle cable adjustment in the Touring Service Manual.
Low fuel pressure	5.15 FUEL PRESSURE TEST.

Table 5-4. Engine Exhaust Emits Black Smoke or Fouls Plugs

SYMPTOM	SOLUTION
Clogged air filter	See AIR CLEANER FILTER in the Touring Service Manual.
MAP sensor plugged or not operating properly	5.19 DTC P0107, P0108.

Table 5-5. EFI Diagnostic Trouble Codes (DTC) and Fault Conditions

PRIORITY RANKING	DTC NO.	FAULT CONDITION	SOLUTION
1	P0605	ECM flash error	5.27 DTC P0603, P0605
2	P0603	ECM EEPROM error	5.27 DTC P0603, P0605
3	“BUS Er”	Serial data bus shorted low/open/high	5.12 STARTS, THEN STALLS
4	U1300	ECM serial data low	5.12 STARTS, THEN STALLS
5	U1301	ECM serial data open/high	5.12 STARTS, THEN STALLS
6	U1300	TSSM serial data low	5.12 STARTS, THEN STALLS
7	U1301	TSSM serial data open/high	5.12 STARTS, THEN STALLS
8	U1300	Speedometer/tachometer serial data low	5.12 STARTS, THEN STALLS
9	U1301	Speedometer/tachometer serial data open/high	5.12 STARTS, THEN STALLS
10	U1064	Loss of TSM/TSSM serial data at ECM	5.30 DTC U1064, U1255
11	U1064	Loss of TSM/TSSM serial data at speedometer	5.30 DTC U1064, U1255
12	U1016	Loss of all ECM serial data (state of health) at TSSM	3.21 DTC U1016, U1255
		Loss of all ECM serial data (state of health) at speedometer	3.21 DTC U1016, U1255
13	U1097	Loss of speedometer serial data at TSSM	5.31 DTC U1097, U1255
14	U1255	Missing response at TSSM	3.21 DTC U1016, U1255
15	U1255	Missing response at speedometer	5.31 DTC U1097, U1255
16	P1003	System relay contacts open	5.14 SYSTEM RELAY CHECK
17	P1002	System relay coil high/shorted	5.14 SYSTEM RELAY CHECK
18	P1001	System relay coil open/low	5.14 SYSTEM RELAY CHECK
19	P1004	System relay contacts closed	5.14 SYSTEM RELAY CHECK
20	P1009	Incorrect password	5.28 DTC P1009, P1010
21	P1010	Missing password (starts then stalls)	5.28 DTC P1009, P1010
22	P0373	CKP sensor intermittent	5.24 DTC P0373, P0374
23	P0374	CKP sensor synch error	5.24 DTC P0373, P0374
24	B1151	Sidecar BAS low	Sidecar DTC’s apply only to Touring models equipped with sidecars. If these DTC’s are present on non sidecar equipped motorcycles, the TSM/TSSM is not properly configured.
	B1152	Sidecar BAS high	
	B1153	Sidecar BAS out of range	
25	P0122	TP sensor open/low	5.22 DTC P0122, P0123
26	P0123	TP sensor high	5.22 DTC P0122, P0123
27	P0107	MAP sensor open/low	5.19 DTC P0107, P0108
28	P0108	MAP sensor high	5.19 DTC P0107, P0108
29	P0117	ET sensor voltage low	5.21 DTC P0117, P0118
30	P0118	ET sensor open/high	5.21 DTC P0117, P0118
31	P0112	IAT sensor voltage low	5.20 DTC P0112, P0113
32	P0113	IAT sensor open/high	5.20 DTC P0112, P0113
33	P1351	Front ignition coil open/low	5.29 DTC P1351, P1352, P1354, P1355
34	P1354	Rear ignition coil open/low	5.29 DTC P1351, P1352, P1354, P1355
35	P1352	Front ignition coil high/shorted	5.29 DTC P1351, P1352, P1354, P1355
36	P1355	Rear ignition coil high/shorted	5.29 DTC P1351, P1352, P1354, P1355
37	P1357	Front cylinder combustion intermittent	5.18 COMBUSTION ABSENT/INTERMITTENT
38	P1358	Rear cylinder combustion intermittent	5.18 COMBUSTION ABSENT/INTERMITTENT
39	P0261	Front injector open/low	5.23 DTC P0261, P0262, P0263, P0264
40	P0263	Rear injector open/low	5.23 DTC P0261, P0262, P0263, P0264

Table 5-5. EFI Diagnostic Trouble Codes (DTC) and Fault Conditions

PRIORITY RANKING	DTC NO.	FAULT CONDITION	SOLUTION
41	P0262	Front injector high	5.23 DTC P0261, P0262, P0263, P0264
42	P0264	Rear injector high	5.23 DTC P0261, P0262, P0263, P0264
43	P0562	Battery voltage low	5.26 DTC P0562, P0563
44	P0563	Battery voltage high	5.26 DTC P0562, P0563
45	P0501	VSS sensor low	5.25 DTC P0501, P0502
46	P0502	VSS sensor high	5.25 DTC P0501, P0502
47	P1356	Rear cylinder no combustion	5.18 COMBUSTION ABSENT/INTERMITTENT
48	P1353	Front cylinder no combustion	5.18 COMBUSTION ABSENT/INTERMITTENT
49	P0505	Loss of idle speed control	5.16 IDLE AIR CONTROL, DTC P0505
50	B1135	Accelerometer fault	3.19 DTC B1135
51	B1134	Starter output high	3.18 DTC B1134
52	B1121	Left turn output fault	3.15 TURN SIGNAL ERRORS
53	B1122	Right turn output fault	3.15 TURN SIGNAL ERRORS
54	B0563	Battery voltage high	3.16 DTC B0563
55	B1131	Alarm output low	3.17 DTC B1131, B1132
56	B1132	Alarm output high	3.17 DTC B1131, B1132
57	B1141	Ignition switch open/low	3.15 TURN SIGNAL ERRORS

HOME

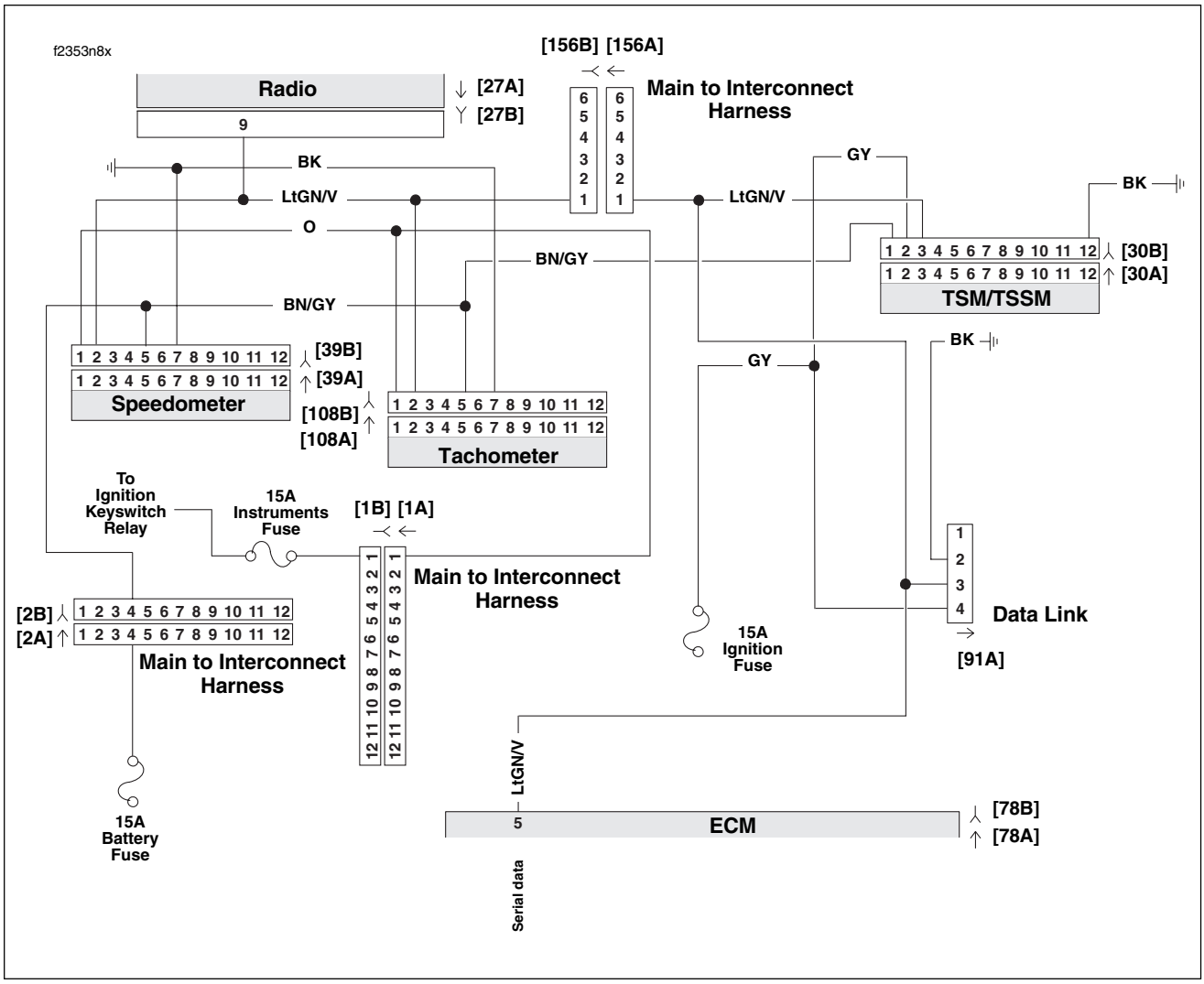

Figure 5-6. Diagnostic Check (FLHX, FLHT/C/U, FLTR)

Table 5-6. Wire Harness Connectors in Figure 5-6.

NO.	DESCRIPTION	MODEL	TYPE	LOCATION
[1]	Main to Interconnect Harness	FLHT/C	12-Place Deutsch (Black)	Inner Fairing - Right Radio Support Bracket
		FLTR	12-Place Deutsch (Black)	Inner Fairing - Below Radio (Right Side)
[2]	Main to Interconnect Harness	FLHT/C	12-Place Deutsch (Gray)	Inner Fairing - Right Fairing Support Brace
		FLTR	12-Place Deutsch (Gray)	Inner Fairing - Below Radio (Right Side)
[27]	Radio	All	23-Place Amp	Inner Fairing - Back of Radio (Right Side)
[30]	TSM/TSSM	All	12-Place Deutsch	Cavity in Crossmember at Rear of Battery Box (Under Seat)
[39]	Speedometer	FLHT/C	12-Place Packard	Inner Fairing (Back of Speedometer)
		FLTR	12-Place Packard	Under Bezel (Back of Speedometer)
[78]	ECM	All	36-Place Packard	Under Right Side Cover
[91]	Data Link	All	4-Place Deutsch	Under Right Side Cover
[108]	Tachometer	FLHT/C	12-Place Packard	Inner Fairing (Back of Tachometer)
		FLTR	12-Place Packard	Under Bezel (Back of Tachometer)
[156]	Main to Interconnect Harness	FLHT/C	6-Place Deutsch	Inner Fairing - Right Fairing Support Brace
		FLTR	6-Place Deutsch	Inner Fairing - Below Radio (Right Side)

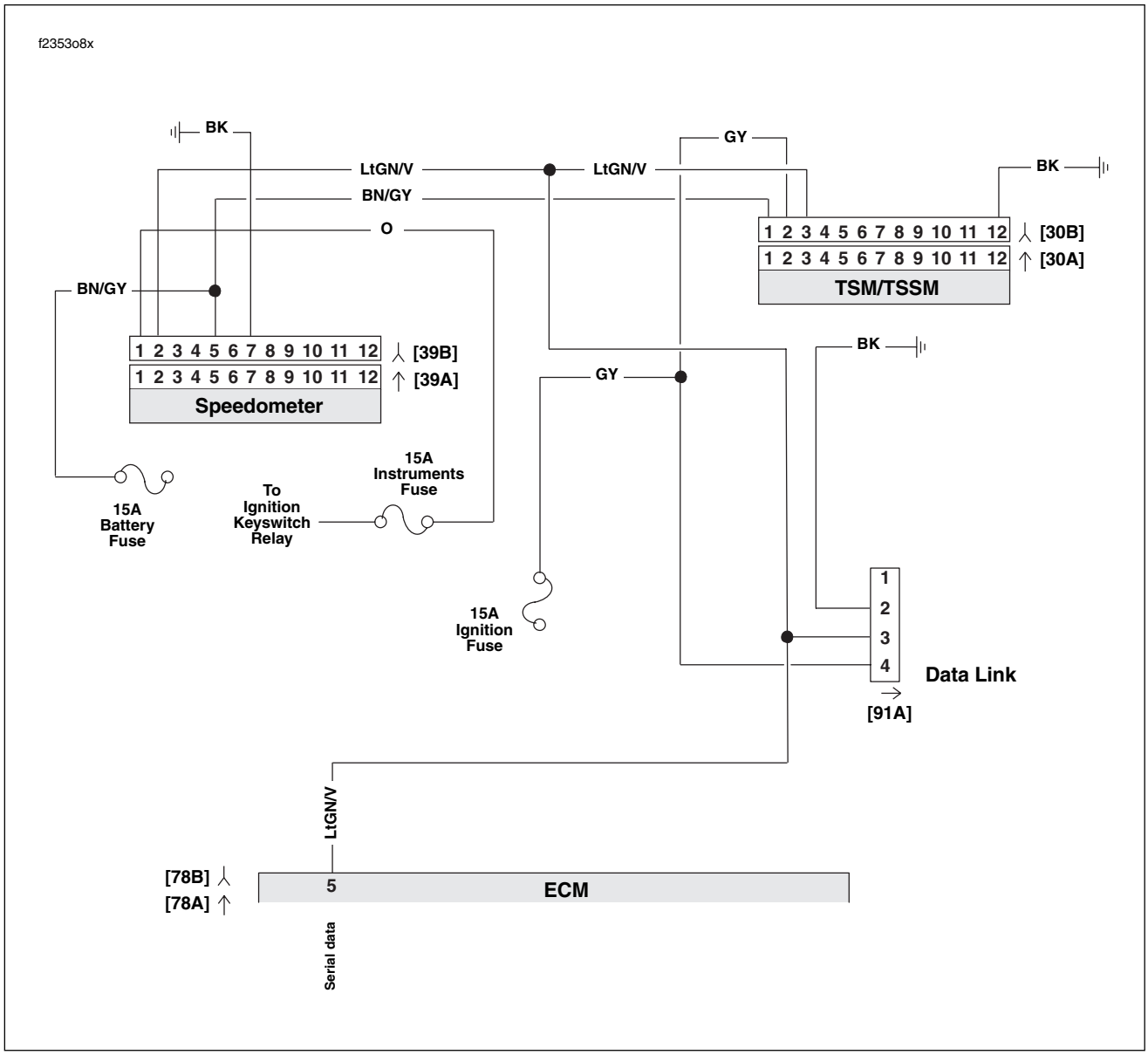

Figure 5-7. Diagnostic Check (FLHR/C/S)

Table 5-7. Wire Harness Connectors in Figure 5-7.

NO.	DESCRIPTION	TYPE	LOCATION
[30]	TSM/TSSM	12-Place Deutsch	Cavity in Crossmember at Rear of Battery Box (Under Seat)
[39]	Speedometer	12-Place Packard	Under Console (Back of Speedometer)
[78]	ECM	36-Place Packard	Under Right Side Cover
[91]	Data Link	4-Place Deutsch	Under Right Side Cover

Diagnostic Check (Part 1 of 2)

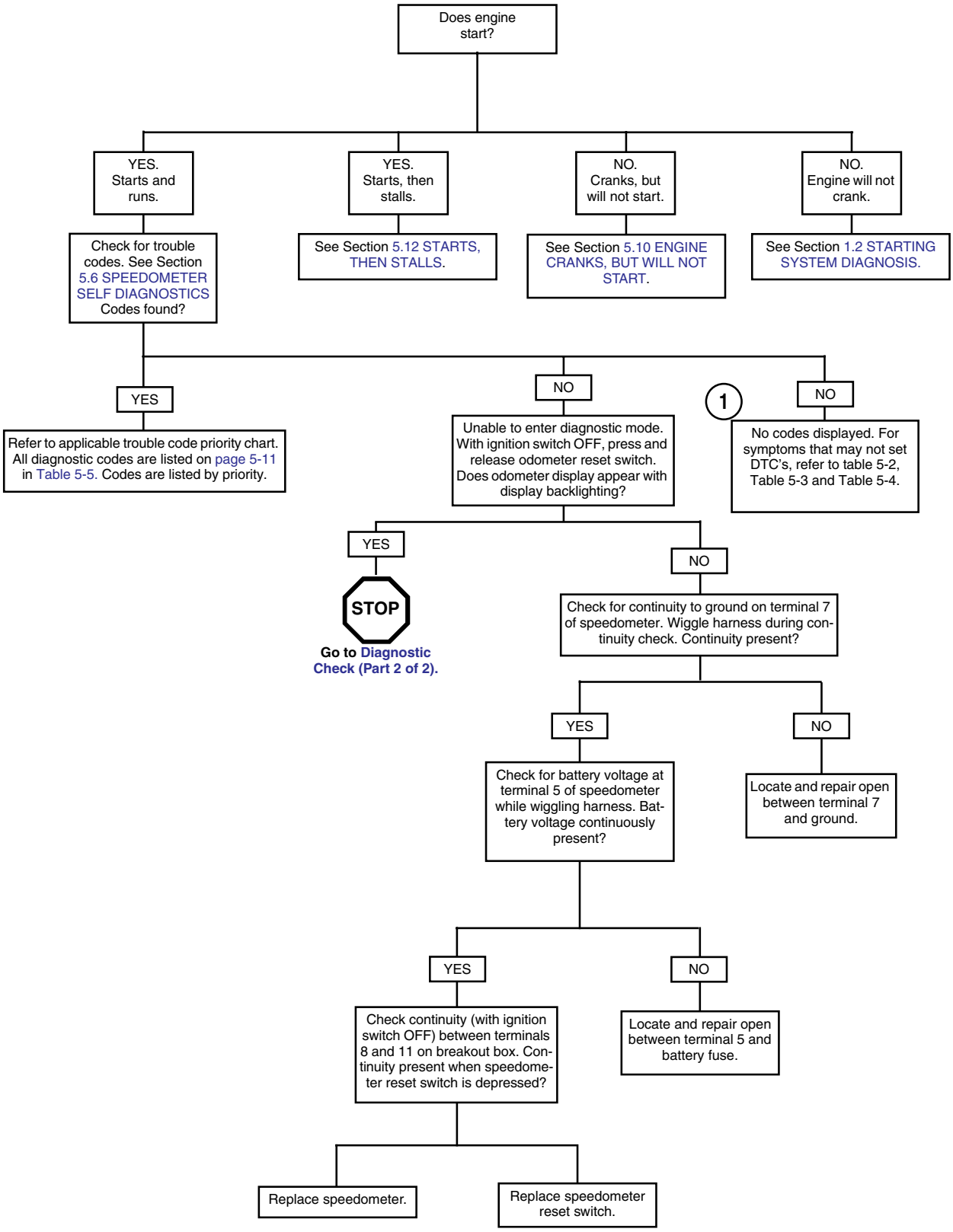

Diagnostic Check (Part 2 of 2)

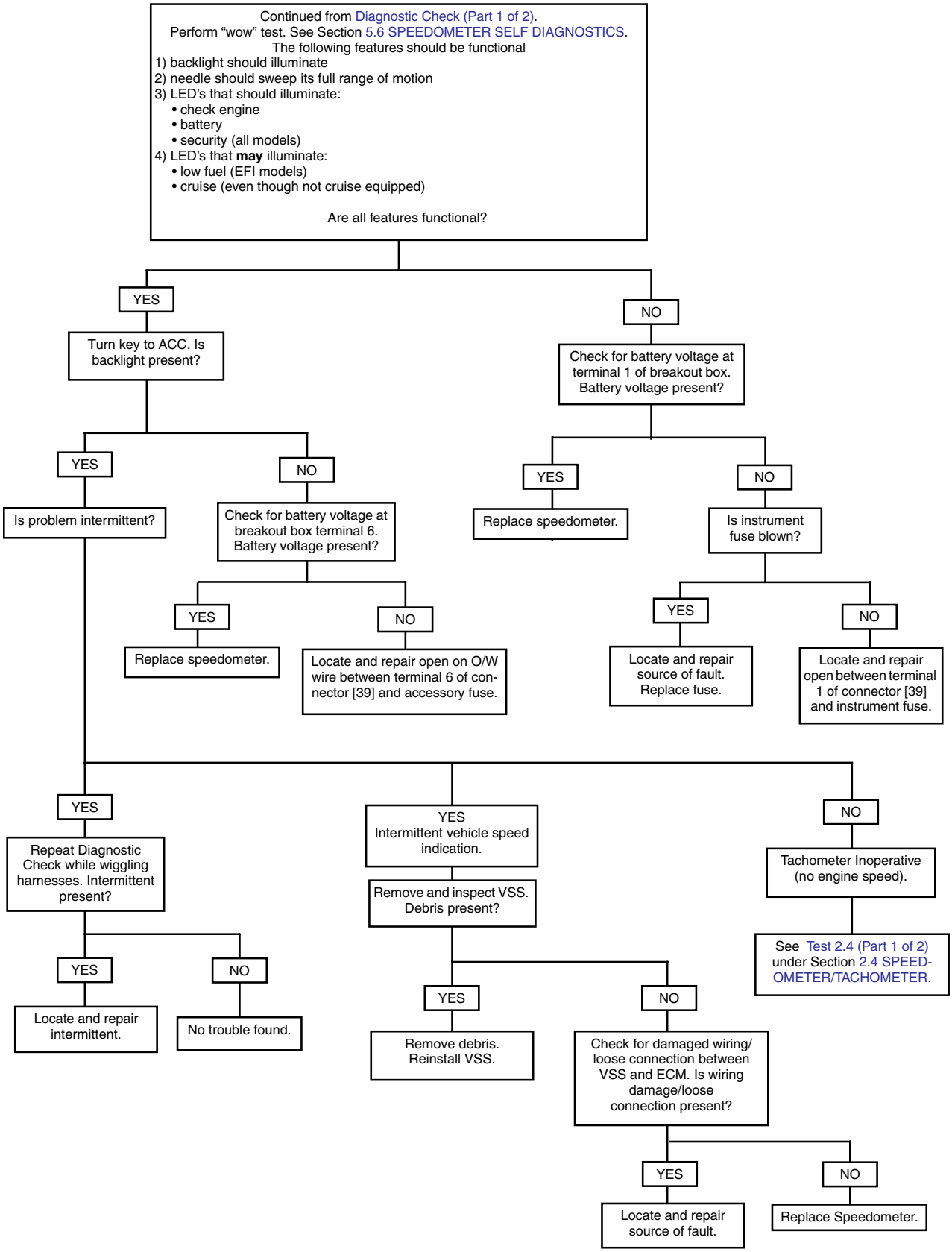

SPEEDOMETER SELF DIAGNOSTICS 5.6

GENERAL

The speedometer is capable of displaying and clearing speedometer, tachometer, TSM/TSSM, and ICM/ECM trouble codes (diagnostic mode).

DIAGNOSTICS

Diagnostic Tips

- For a quick check of speedometer function, a “wow” test can be performed. See Figure 5-8. Press and hold odometer reset switch then turn ignition switch ON. Release reset switch. Background lighting should illuminate, speedometer needle should sweep its full range of motion, and indicator lamps [battery, security, low fuel (EFI models) check engine and cruise] should illuminate. Some lamps may illuminate even though they do not apply to the vehicle. For example, the cruise lamp may illuminate even though the motorcycle may not be equipped with cruise control.
- If instrument module fails “wow” test, check for battery, ground, ignition, speedometer reset switch and accessory to speedometer. If any feature in the speedometer is non-functional, See Section 2.2 INITIAL DIAGNOSTIC CHECK: SPEEDOMETER.

Diagnostic Notes

Use of speedometer self diagnostics assumes that DIGITAL TECHNICIAN (Part No. HD-44750) is **not** available.

The reference numbers below correlate with the circled numbers in the Speedometer Self Diagnostics (chart)

1. To exit diagnostic mode, turn ignition switch OFF.
2. To clear DTC’s for selected module, press speedometer reset switch for more than 5 seconds when code is displayed. This procedure will clear all codes for selected module.

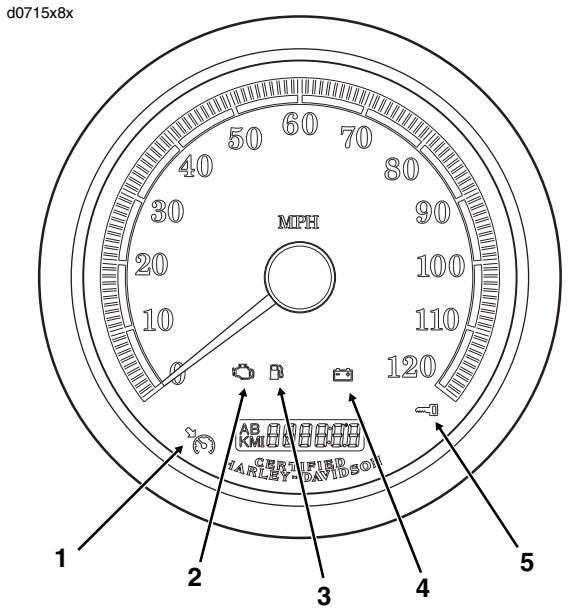

1. **Cruise On/Engaged**
2. **Check Engine**
3. **Low Fuel**
4. **Battery**
5. **Security**

Figure 5-8. Speedometer (FLHR/C/S)

Speedometer Self Diagnostics (chart)

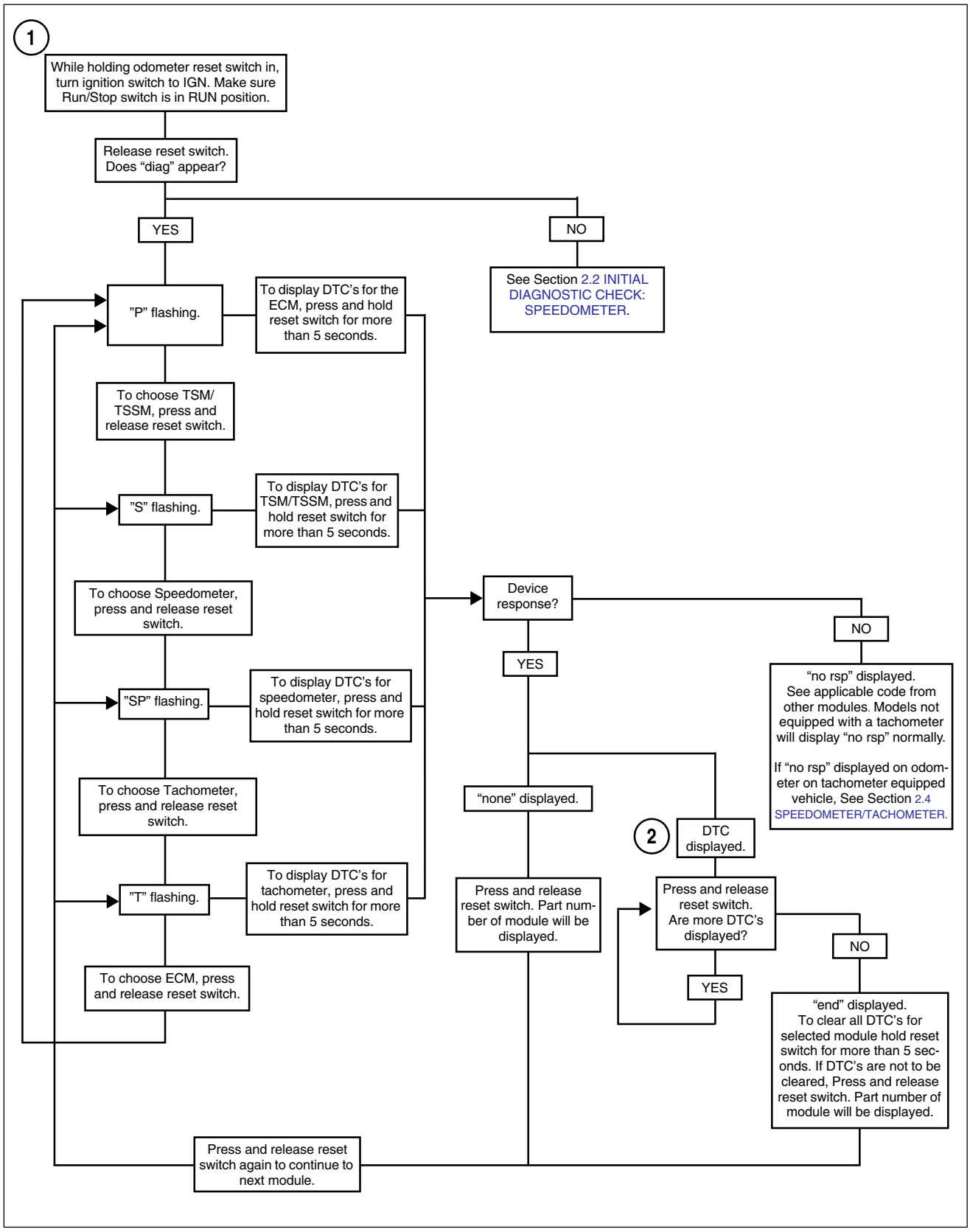

Figure 5-9. Speedometer Self Diagnostics

BREAKOUT BOX: EFI 5.7

GENERAL

The BREAKOUT BOX (Part No. HD-43876) splices into the main harness. Used in conjunction with a DVOM, it allows circuit diagnosis of wiring harness and connections without having to probe with sharp objects.

NOTE

See wiring diagrams for ECM terminal functions.

INSTALLATION

1. Remove right saddlebag and side cover. See Figure 5-10.
2. Depress latch and remove connector [78B] to release EFI harness from ECM.
3. Install connectors on Breakout Box to ECM and EFI harness connectors.

REMOVAL

1. Separate connectors to remove Breakout Box between ECM and EFI harness.
2. Install connector [78B] to connect EFI harness to ECM.
3. Install right side cover and saddlebag.

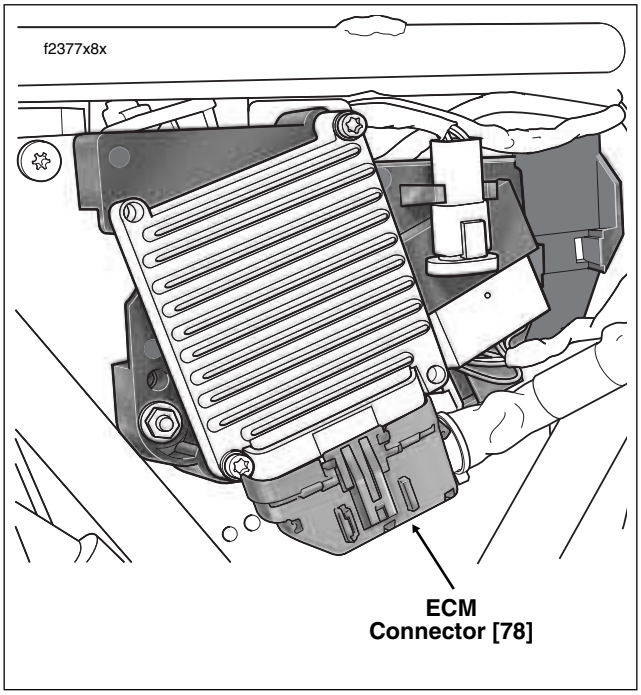

Figure 5-10. Electrical Bracket (Under Right Side Cover)

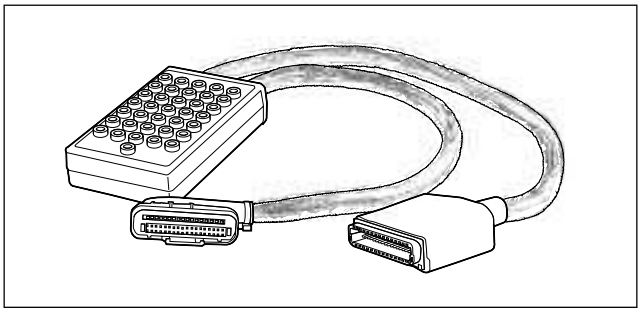

Figure 5-11. Breakout Box (Part No. HD-43876)

WIGGLE TEST 5.8

GENERAL

The wiggle test indicates the presence of intermittents in a wiring harness.

PROCEDURE

1. See Figure 5-12. Connect DVOM (Part No. HD-39978) to wiring harness between the suspect connections. When diagnosing ECM connections, use a BREAKOUT BOX (Part No. HD-43876) to simplify the procedure. See Section 5.7 BREAKOUT BOX: EFI.
2. Set DVOM to read voltage changes.
3. Start motorcycle engine and run at idle.
4. Shake or wiggle harness to detect intermittents. If intermittents are present, radical voltage changes will register on the DVOM.

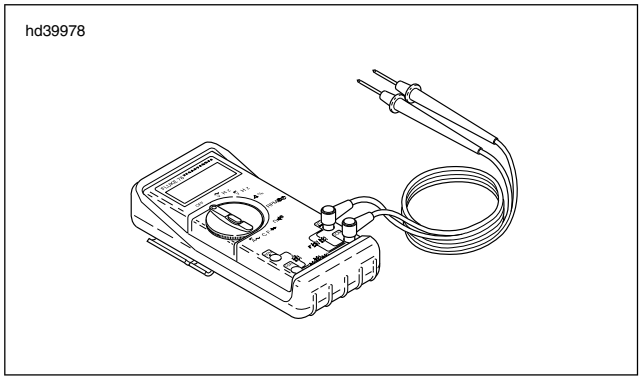

Figure 5-12. Fluke 78 Multimeter (DVOM) (Part No. HD-39978)

INTAKE LEAK TEST 5.9

GENERAL

⚠DANGER

Propane is an extremely flammable liquid and vapor. Vapor may cause flash fire. Keep away from heat, sparks and flame. Keep container closed. Use only with adequate ventilation. Failure to follow this alert can result in death or serious injury.

⚠WARNING

Read all directions and warnings on propane bottle. Failure to follow all directions and warnings on bottle could result in death or serious injury.

- To prevent false readings, keep airbox cover installed when performing test.
- Do not direct propane into air cleaner, false readings will result.

LEAK TESTER

Parts List

- Standard 14 oz. propane cylinder.
- Propane Enrichment Kit (HD-41417).
- 12 in. (304 mm) long-1/4 in. (6 mm) diameter copper tubing.

Tester Assembly

1. Cut rubber hose from kit to 18 in. (457 mm) in length.
2. See Figure 5-13. Flatten one end of copper tube to form a nozzle.
3. Insert round side of copper tube into end of tubing.

Figure 5-13. Nozzle

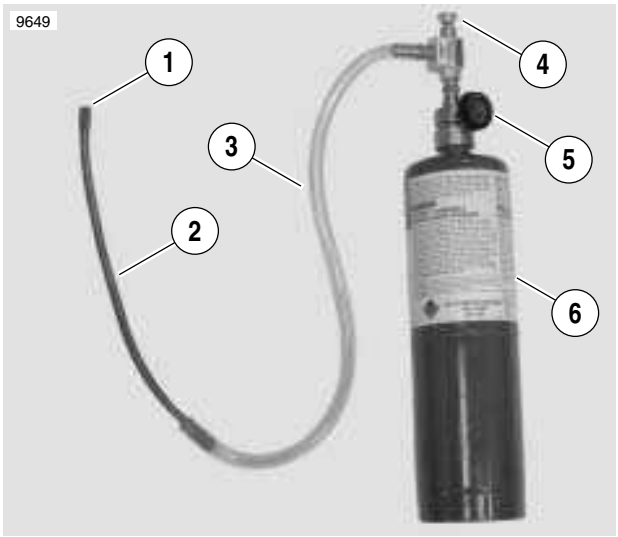

1. **Nozzle**
2. **Copper tube**
3. **Hose**
4. **Valve**
5. **Knob**
6. **Propane bottle**

Figure 5-14. Leak Tester

INTAKE LEAK TESTING

1. Start engine.
2. Warm engine to operating temperature.
3. See Figure 5-14. Turn knob (5) counterclockwise to open propane bottle.

⚠DANGER

Propane is an extremely flammable liquid and vapor. Vapor may cause flash fire. Keep away from heat, sparks and flame. Keep container closed. Use only with adequate ventilation.

NOTE

Do not direct propane stream toward front of engine. If propane enters air cleaner, a false reading will be obtained.

4. See Figure 5-15. Aim nozzle toward possible sources of leak such as fuel injectors and intake tract.
5. See Figure 5-14. Push valve (4) to release propane. Tone of engine will change when propane enters source of leak.

Figure 5-15. Checking for Leaks

ENGINE CRANKS, BUT WILL NOT START 5.10

GENERAL

If the starter will not crank the engine, the problem is not EFI related. Refer to SECTION 1-STARTING & CHARGING or SECTION 3-TSM & TSSM.

DIAGNOSTICS

Diagnostic Notes

The reference numbers below correlate with the circled numbers on the Test 5.10 flow charts.

1. Check for trouble codes. See RETRIEVING DIAGNOSTIC TROUBLE CODES under Section 5.4 CHECKING FOR DIAGNOSTIC TROUBLE CODES: EFI.
2. Check the condition of the battery. Perform a voltage test and recharge if below 12.60V. Check battery connections and perform load test. Replace the battery if necessary. See BATTERY in the Touring Service Manual.
3. Connect BREAKOUT BOX (Part No. HD-43876). See Section 5.7 BREAKOUT BOX: EFI.
4. Remove spark plug cable from spark plug.
   a. Visually check condition of plug.
   b. See Figure 5-16. Attach cable to SPARK TESTER (Part No. HD-26792). Clip tester to cylinder head bolt.
   c. While cranking engine, look for spark. Repeat procedure on other spark plug cables.

NOTE

Engine will not spark with both spark plugs removed. When checking for spark, use SPARK TESTER (Part No. HD-26792) with both plugs installed.

5. Use HARNESS CONNECTOR TEST KIT (Part No. HD-41404A), gray pin probe and patch cord.
6. Typically, when IAC is not functioning, the engine will not start unless throttle is opened and the engine will stall when throttle is closed.
7. See Figure 5-17. Plug IGNITION COIL CIRCUIT TEST ADAPTER (Part No. HD-44687) and FUEL INJECTOR TEST LAMP (Part No. HD-34730-2C) into Breakout Box Terminals 13 and 11. Start engine. If lamp flashes, no problem is found. Repeat for Breakout Box Terminals 13 and 29.
8. Use HARNESS CONNECTOR TEST KIT (Part No. HD-41404A), brown socket probe and patch cord.

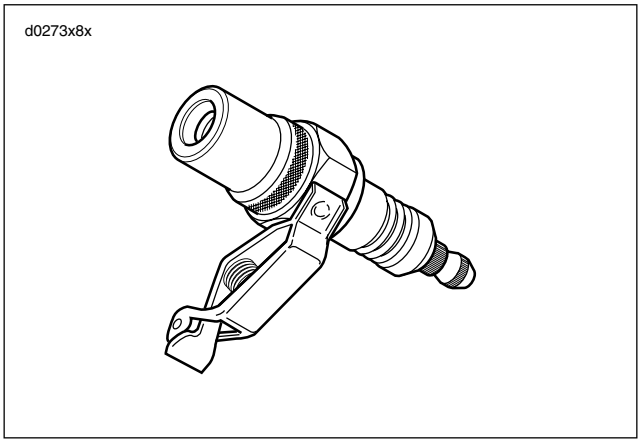

Figure 5-16. Spark Tester

Figure 5-17. Ignition Coil Circuit Test

Diagnostic Tips

Check TP sensor value with DVOM. If TP sensor is equal to or greater than 3.8 volts, system is in “clear flood” mode and engine will not start. While spark is present, fuel is shut off. Problem can be mechanical, such as throttle cables stuck.

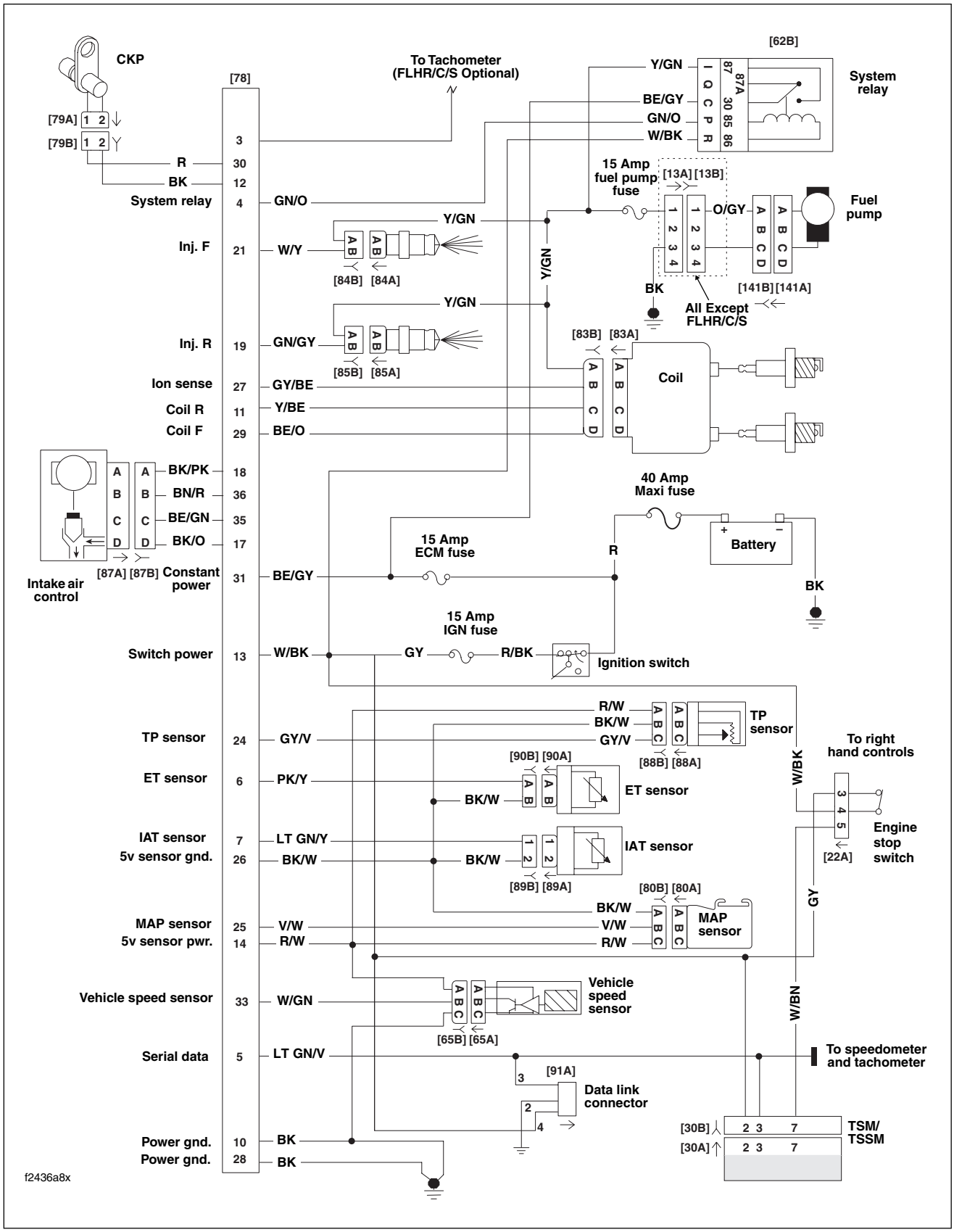

Figure 5-18. Simplified EFI System Circuit

Table 5-8. Wire Harness Connectors in Figure 5-18.

NO.	DESCRIPTION	MODEL	TYPE	LOCATION
[22]	Right Handlebar Switch Controls	FLHT/C/U	12-Place Deutsch (Black)	Inner Fairing - Fork Stem Nut Lock Plate (Left Side)
		FLTR	12-Place Deutsch (Black)	Inner Fairing - Left Side of Radio Bracket
		FLHR/C/S	6 - Place Deutsch	Inside Headlamp Nacelle - Fork Stem Nut Lock Plate (Right Side)
[30]	TSM/TSSM	All	12 - Place Deutsch	Cavity in Crossmember at Rear of Battery Box (Under Seat)
[65]	VSS	All	3 - Place Deutsch	Under Right Side Cover (Behind Electrical Bracket)
[78]	ECM	All	36-Place Packard	Under Right Side Cover
[79]	CKP sensor	All	2 - Place Mini-Deutsch	Bottom of Voltage Regulator
[80]	MAP sensor	All	3 - Place Packard	Top of Induction Module
[83]	Ignition Coil	All	4 - Place Delphi	Below Fuel Tank (Left Side)
[84]	Front Injector	All	2 - Place Delphi	Below Fuel Tank (Left Side)
[85]	Rear Injector	All	2 - Place Delphi	Below Fuel Tank (Left Side)
[87]	IAC	All	4 - Place Delphi	Below Fuel Tank (Right Side)
[88]	TP sensor	All	3 - Place Delphi	Below Fuel Tank (Right Side)
[89]	IAT sensor	All	2 - Place Delphi	Below Fuel Tank (Right Side)
[90]	ET sensor	All	2 - Place Delphi	Back of Front Cylinder (Left Side)
[91]	Data Link	All	4 - Place Deutsch	Under Right Side Cover

Test 5.10 (Part 1 of 4)

ENGINE CRANKS, BUT WILL NOT START

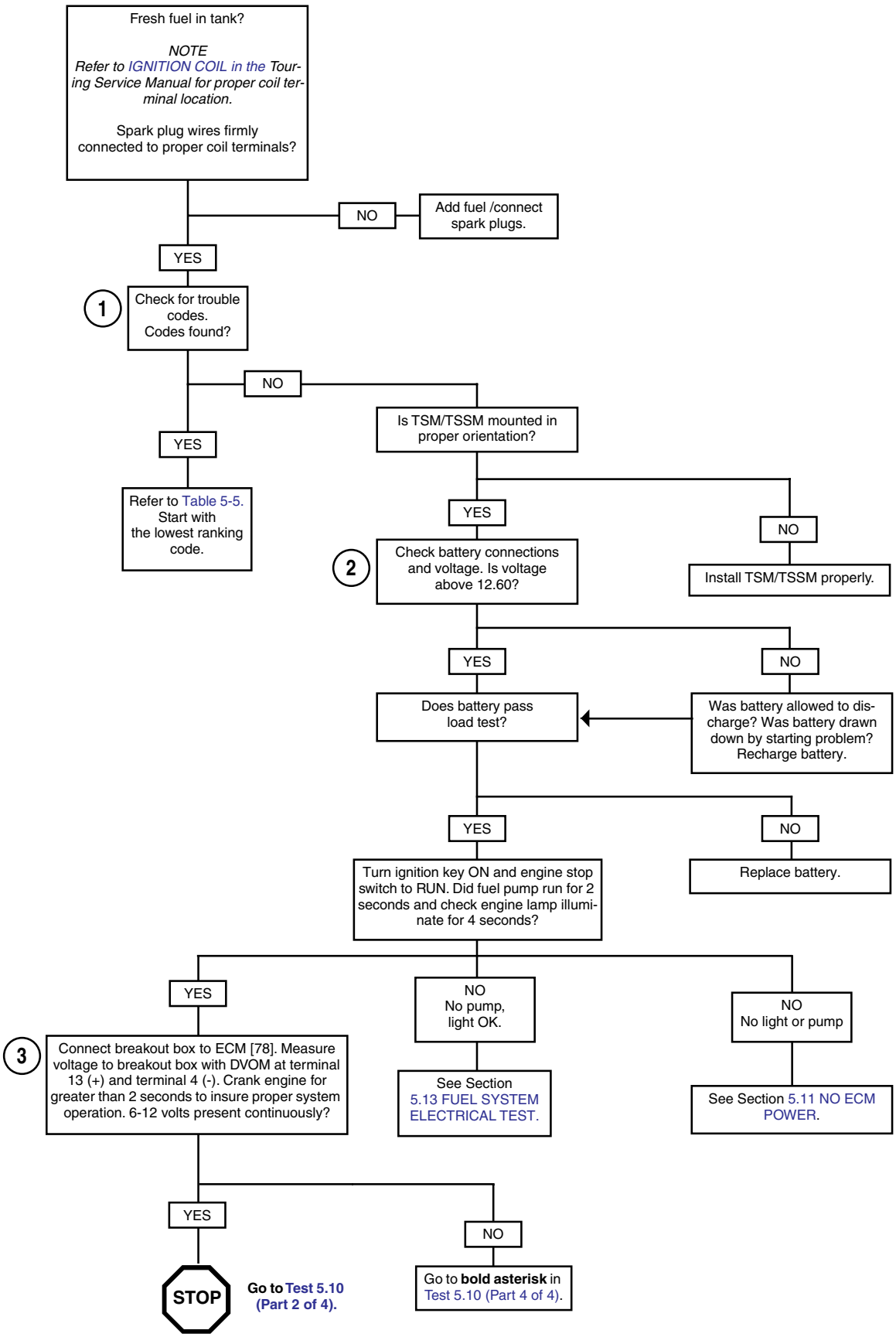

Test 5.10 (Part 2 of 4)

ENGINE CRANKS, BUT WILL NOT START

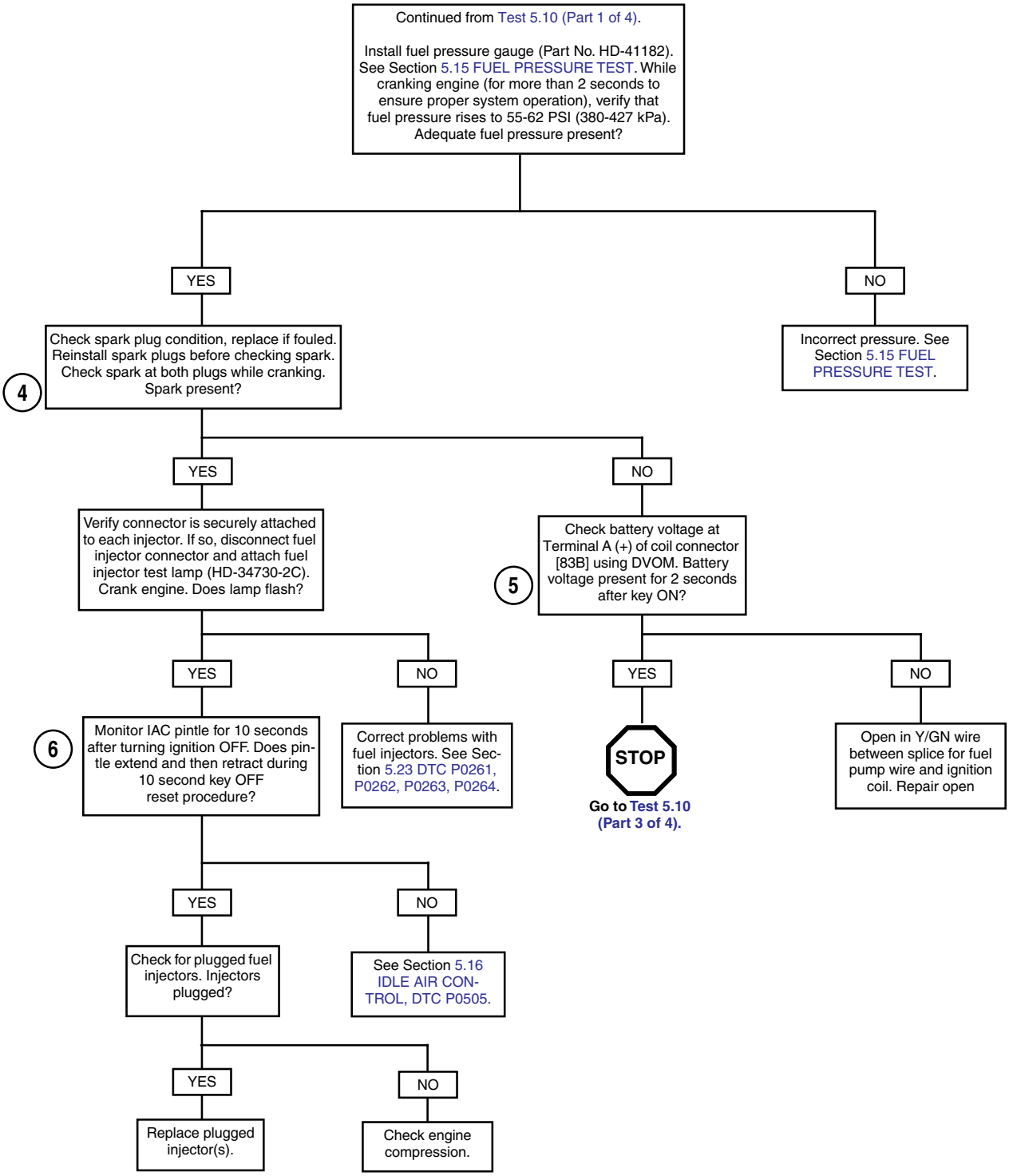

Clear codes using speedometer self diagnostics. See Section 5.6 SPEEDOMETER SELF DIAGNOSTICS. Confirm proper operation with no check engine lamp.

Test 5.10 (Part 3 of 4)

ENGINE CRANKS, BUT WILL NOT START

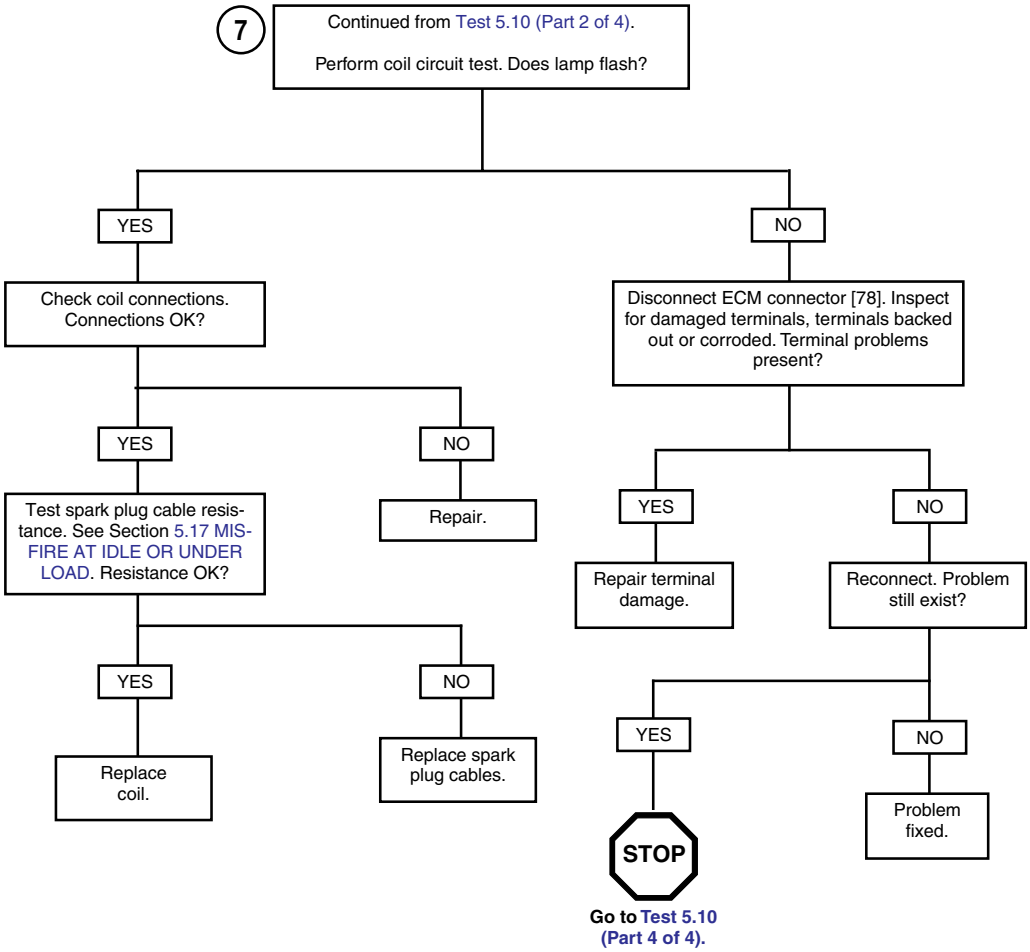

Clear codes using speedometer self diagnostics. See Section 5.6 SPEEDOMETER SELF DIAGNOSTICS. Confirm proper operation with no check engine lamp.

Test 5.10 (Part 4 of 4)

ENGINE CRANKS, BUT WILL NOT START

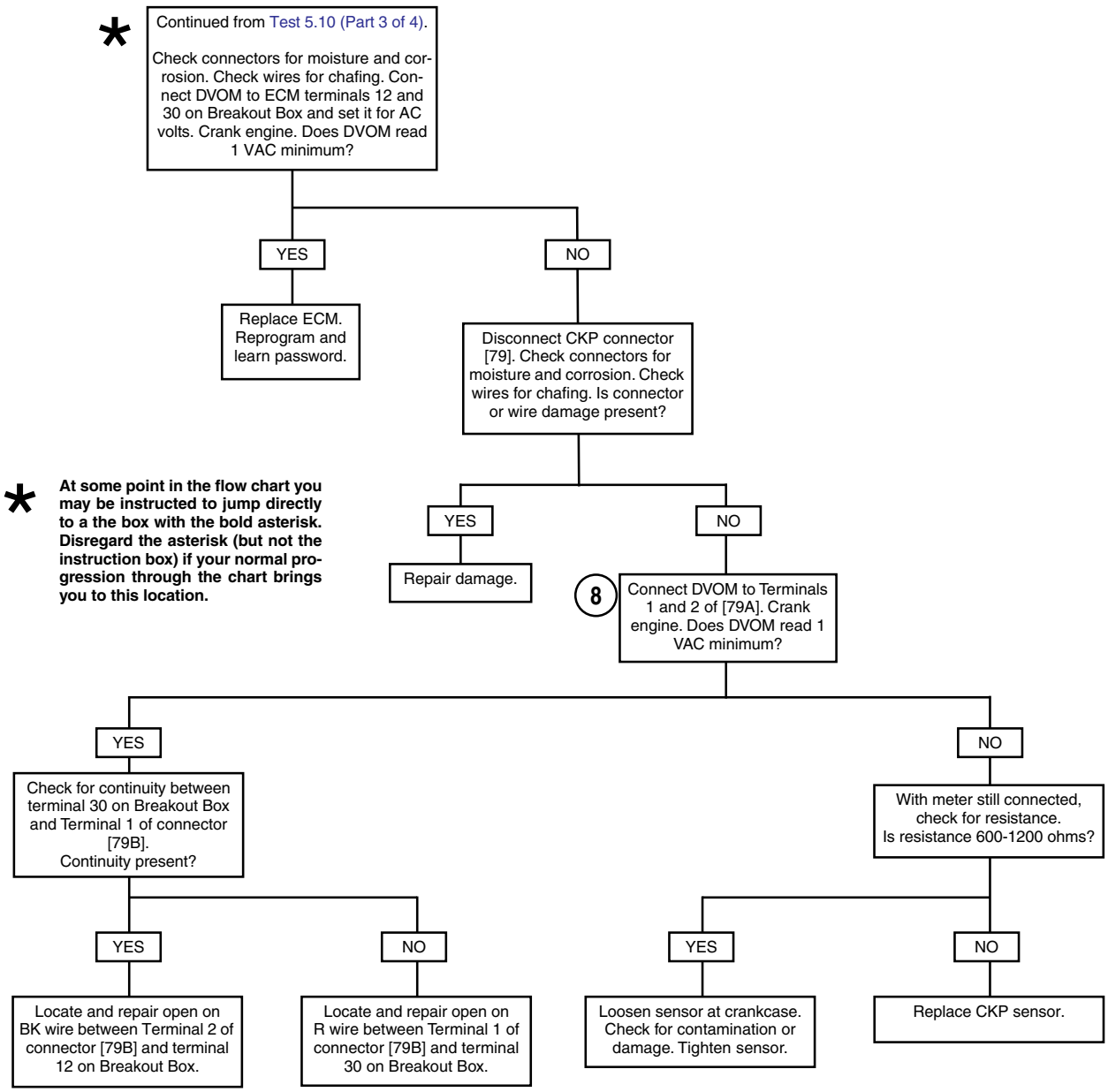

*** At some point in the flow chart you may be instructed to jump directly to a the box with the bold asterisk. Disregard the asterisk (but not the instruction box) if your normal progression through the chart brings you to this location.**

Clear codes using speedometer self diagnostics. See Section 5.6 SPEEDOMETER SELF DIAGNOSTICS. Confirm proper operation with no check engine lamp.

NO ECM POWER 5.11

GENERAL

No Spark/No Check Engine Lamp at Key ON

Constant power is supplied to the ECM through terminal 31. The ECM turns on when power is applied to terminal 13 of connector [78]. The ECM goes through an initialization sequence every time power is removed and re-applied to terminal 13. The only visible part of this sequence is the check engine lamp. Upon starting, the check engine lamp will illuminate for 4 seconds and then (if parameters are normal) go out.

If battery power is absent at ECM terminal 31:

- DTC's cannot be cleared. Tool will show them as cleared but will be present next time ignition key is cycled.
- ECM cannot be re-flashed.
- Vehicle will start but IAC pintle will not reset at key OFF. Eventually pintle will be out of position causing performance problems.

NOTE

The key ON sequence also activates the IAC motor. If power from terminal 31 is disrupted (blown fuse, etc.) always turn the key OFF wait 10 seconds then turn the key ON to reset the motor to the default position.

DIAGNOSTICS

Diagnostic Notes

The reference numbers below correlate with the circled numbers on the Test 5.11 flow charts.

1. Connect BREAKOUT BOX (Part No. HD-43876). See Section 5.7 BREAKOUT BOX: EFI.

NOTE

Adapters not used on FLHX, FLHT/C/U and FLTR models.

2. Connect BREAKOUT BOX (Part No. HD-42682) between connectors [22A] and [22B] using Adapters (HD-42962) on FLHR/C/S models.

System Fuse Block (Under Left Side Cover)

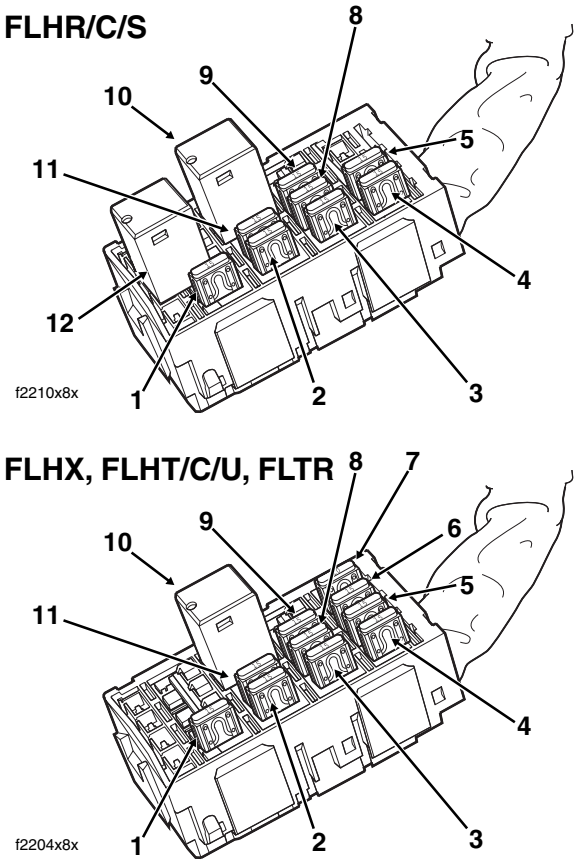

1.	Headlamp	7.	Radio Power
2.	Ignition	8.	Accessory
3.	Lighting	9.	Battery
4.	Instruments	10.	Brake Light Relay
5.	Brakes/Cruise	11.	P&A
6.	Radio Memory	12.	Starter Relay

EFI Fuse Block (Under Right Side Cover)

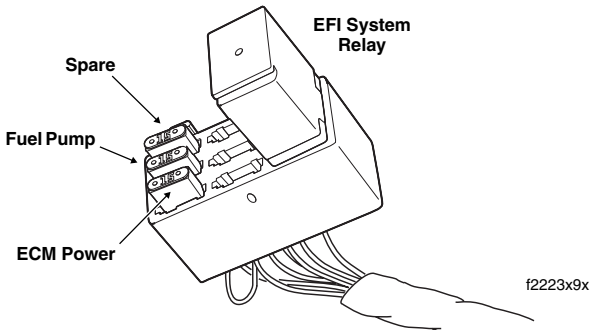

Figure 5-19. Fuse Locations

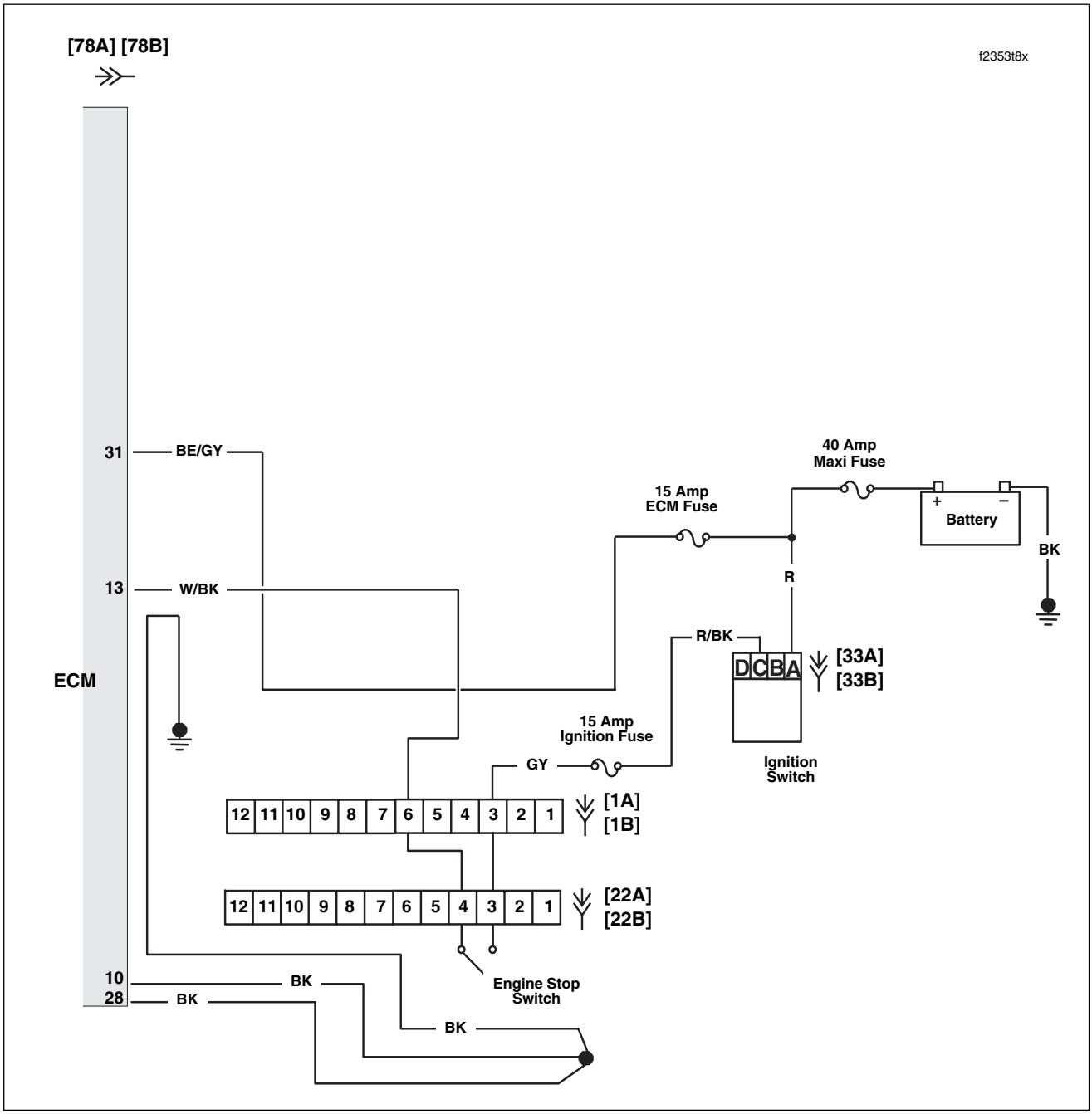

Figure 5-20. ECM Power Circuit (FLHX, FLHT/C/U, FLTR)

Table 5-9. Wire Harness Connectors in Figure 5-20.

NO.	DESCRIPTION	TYPE	LOCATION
[1]	Main to Interconnect Harness	12-Place Deutsch (Black)	Inner Fairing (Right Radio Support Bracket)
[22]	Right Handlebar Switches	12-Place Deutsch (Black)	Inner Fairing (Fork Stem Nut Lock Plate)
[33]	Ignition/Light Key Switch	3-Place Packard	Inner Fairing -Under Radio
[78]	ECM	36-Place Packard	Under Right Side Cover

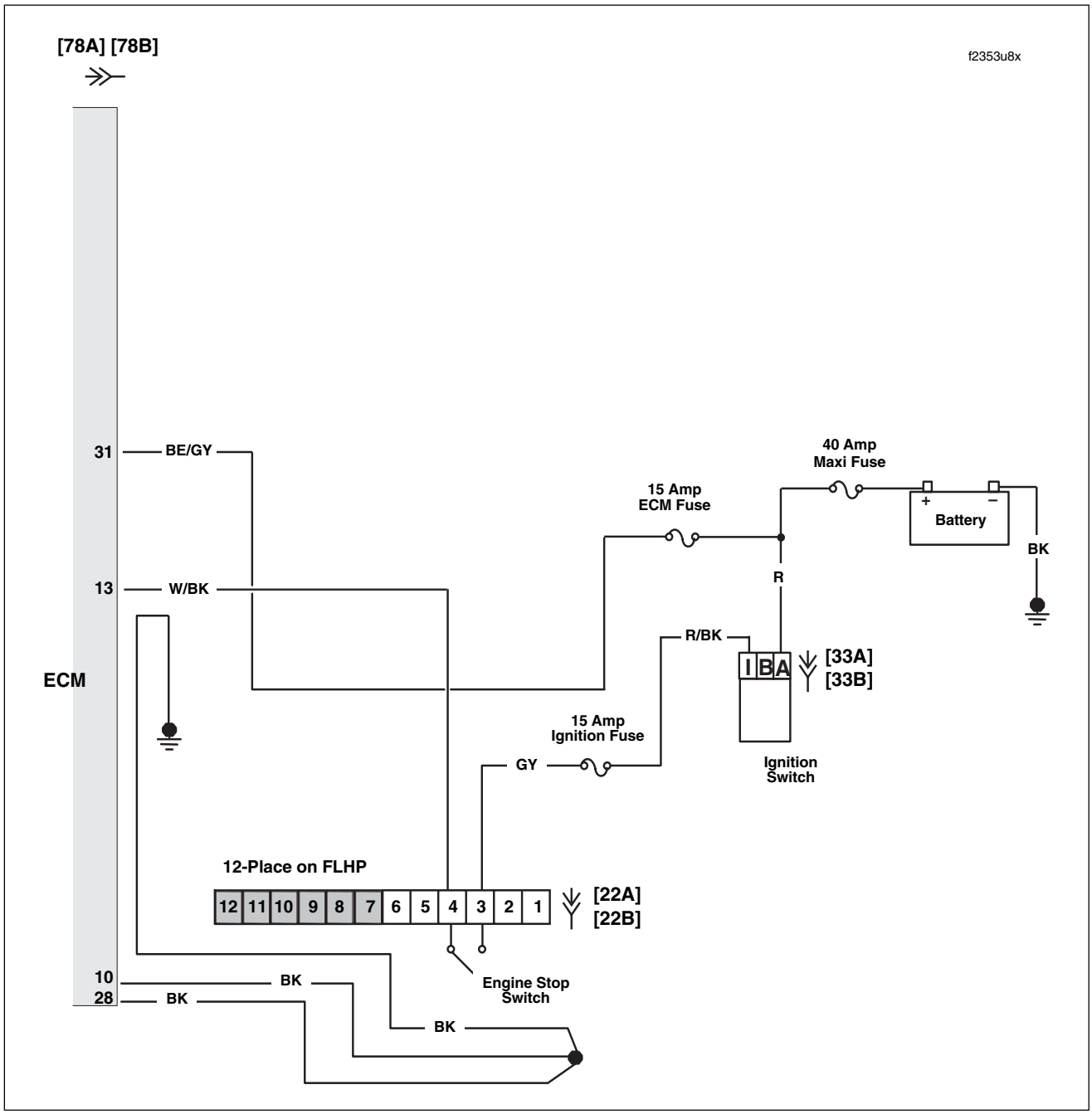

Figure 5-21. ECM Power Circuit (FLHR/C/S)

Table 5-10. Wire Harness Connectors in Figure 5-21.

NO.	DESCRIPTION	TYPE	LOCATION
[22]	Right Handlebar Switches	6-Place Deutsch (Black)	Inside Headlamp Nacelle
[33]	Ignition/Light Key Switch	3-Place Packard	Under Console
[78]	ECM	36-Place Packard	Under Right Side Cover

HOME

Test 5.11 (Part 1 of 2)

NO ECM POWER

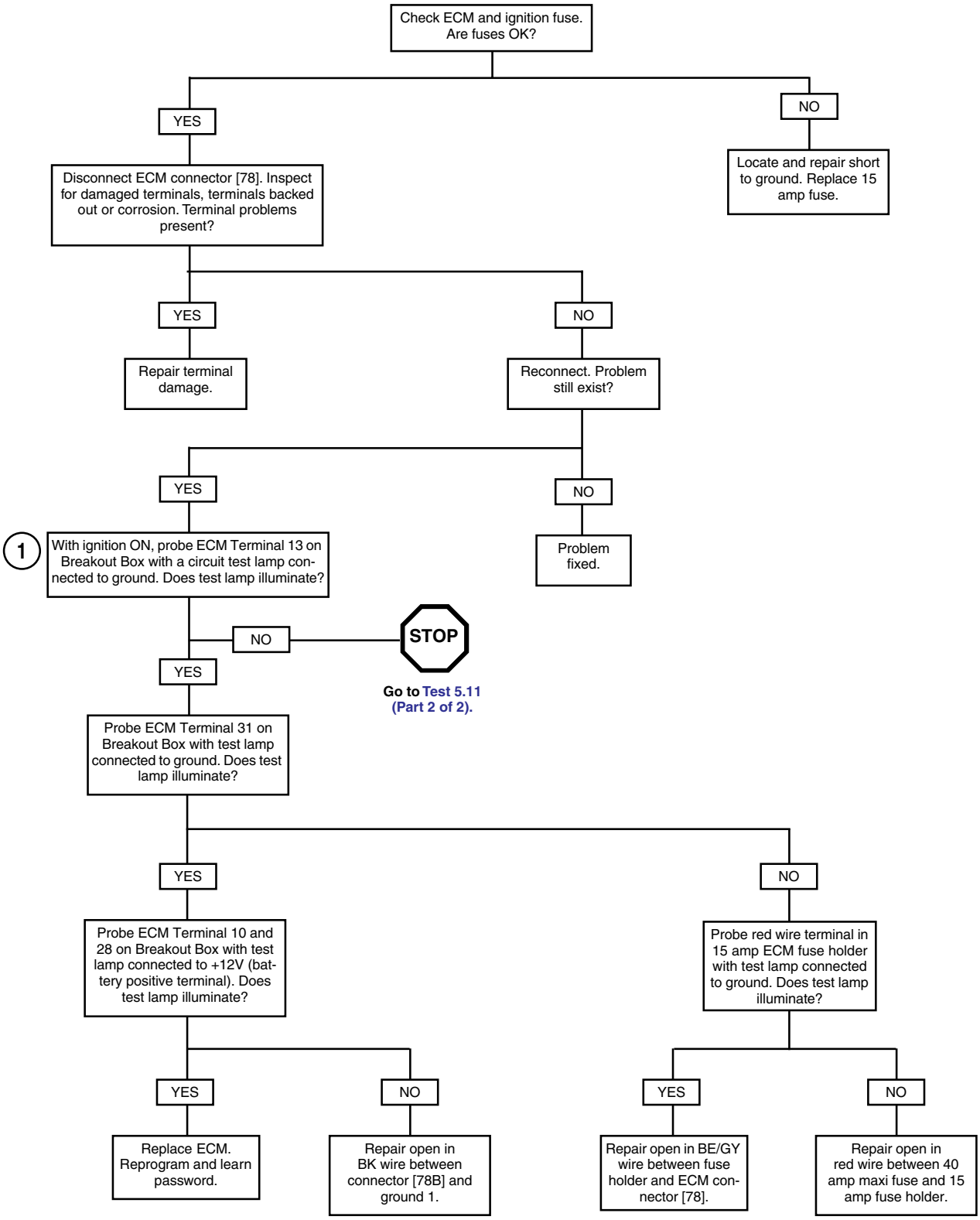

Test 5.11 (Part 2 of 2)

NO ECM POWER

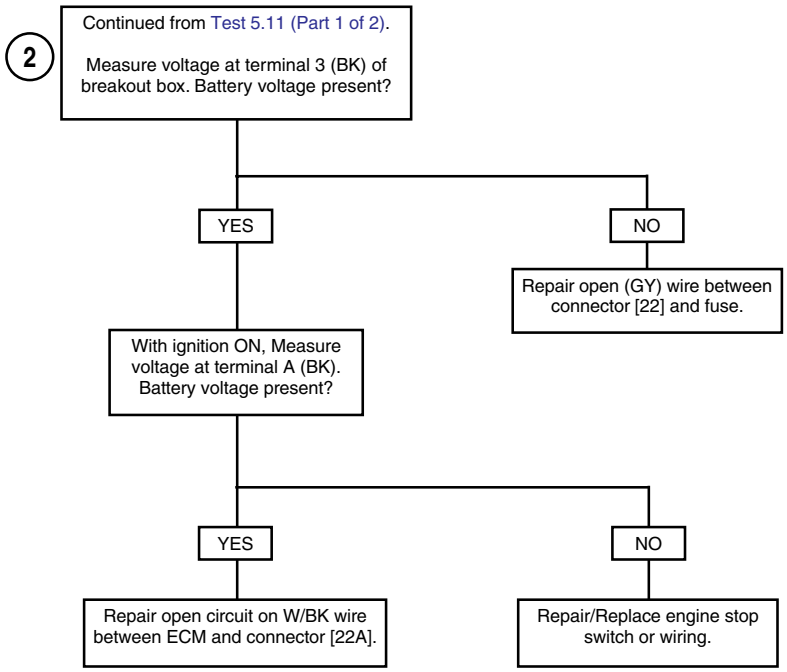

Clear codes using speedometer self diagnostics. See Section 5.6 SPEEDOMETER SELF DIAGNOSTICS. Confirm proper operation with no check engine lamp.

STARTS, THEN STALLS 5.12

GENERAL

Diagnostic Trouble Codes U1300, U1301 or "BUS Er"

See Figure 5-22. The typical serial data voltage range is 0 volts (inactive) to 7 volts (active). Due to the short pulse, voltages will be much lower on a DVOM. In analog mode, a DVOM reading serial data will show continuous voltage when active, typically 0.6-0.8 volts. The range for acceptable operations is greater than 0 and less than 7.0 volts.

NOTE

Problems in the fuel system or IAC system may also create this symptom.

Table 5-11. Code Description

DTC	DESCRIPTION
U1300	Serial data low
U1301	Serial data open/high

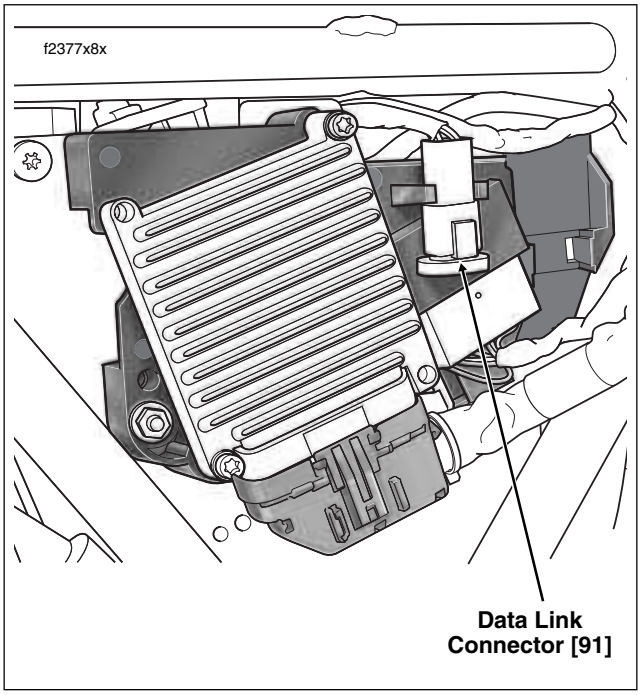

Figure 5-22. Electrical Bracket (Under Right Side Cover)

DIAGNOSTICS

Diagnostic Tips

- If serial data is shorted, these codes will automatically trip the check engine light.
- DTC's P1009 and P1010 may accompany DTC's U1300 and U1301.

Diagnostic Notes

The reference numbers below correlate with the circled numbers on the Test 5.12 flow charts.

1. Check for trouble codes. See RETRIEVING DIAGNOSTIC TROUBLE CODES under Section 5.4 CHECKING FOR DIAGNOSTIC TROUBLE CODES: EFI.
2. Use HARNESS CONNECTOR TEST KIT (Part No. HD-41404A), black socket probes and patch cord.

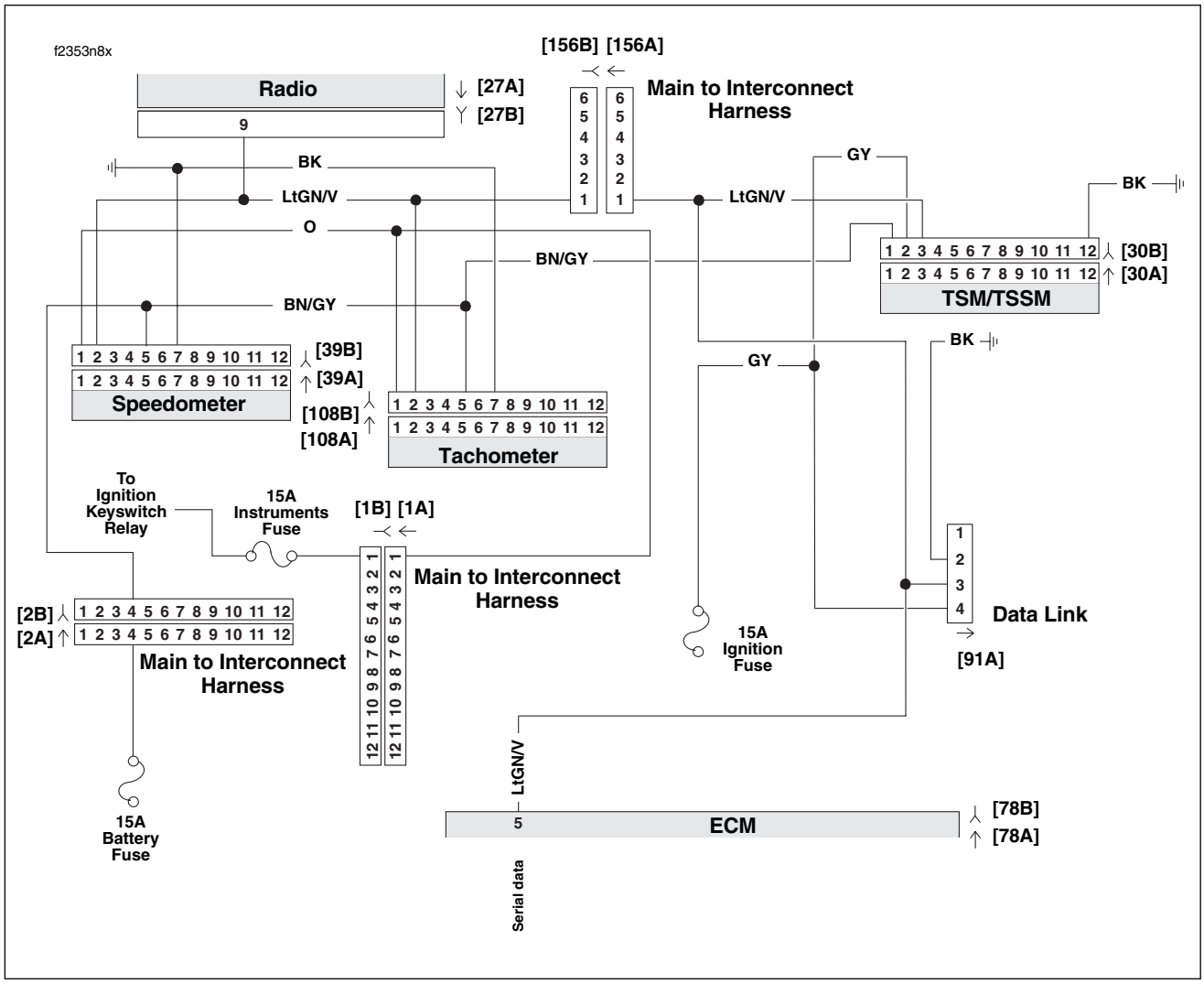

Figure 5-23. Serial Data Circuit (FLHX, FLHT/C/U, FLTR)

Table 5-12. Wire Harness Connectors in Figure 5-23.

NO.	DESCRIPTION	MODEL	TYPE	LOCATION
[1]	Main to Interconnect Harness	FLHT/C	12-Place Deutsch (Black)	Inner Fairing - Right Radio Support Bracket
		FLTR	12-Place Deutsch (Black)	Inner Fairing - Below Radio (Right Side)
[2]	Main to Interconnect Harness	FLHT/C	12-Place Deutsch (Gray)	Inner Fairing - Right Fairing Support Brace
		FLTR	12-Place Deutsch (Gray)	Inner Fairing - Below Radio (Right Side)
[27]	Radio	All	23-Place Amp	Inner Fairing - Back of Radio (Right Side)
[30]	TSM/TSSM	All	12-Place Deutsch	Cavity in Crossmember at Rear of Battery Box (Under Seat)
[39]	Speedometer	FLHT/C	12-Place Packard	Inner Fairing (Back of Speedometer)
		FLTR	12-Place Packard	Under Bezel (Back of Speedometer)
[78]	ECM	All	36-Place Packard	Under Right Side Cover
[91]	Data Link	All	4-Place Deutsch	Under Right Side Cover
[108]	Tachometer	FLHT/C	12-Place Packard	Inner Fairing (Back of Tachometer)
		FLTR	12-Place Packard	Under Bezel (Back of Tachometer)
[156]	Main to Interconnect Harness	FLHT/C	6-Place Deutsch	Inner Fairing - Right Fairing Support Brace
		FLTR	6-Place Deutsch	Inner Fairing - Below Radio (Right Side)

HOME

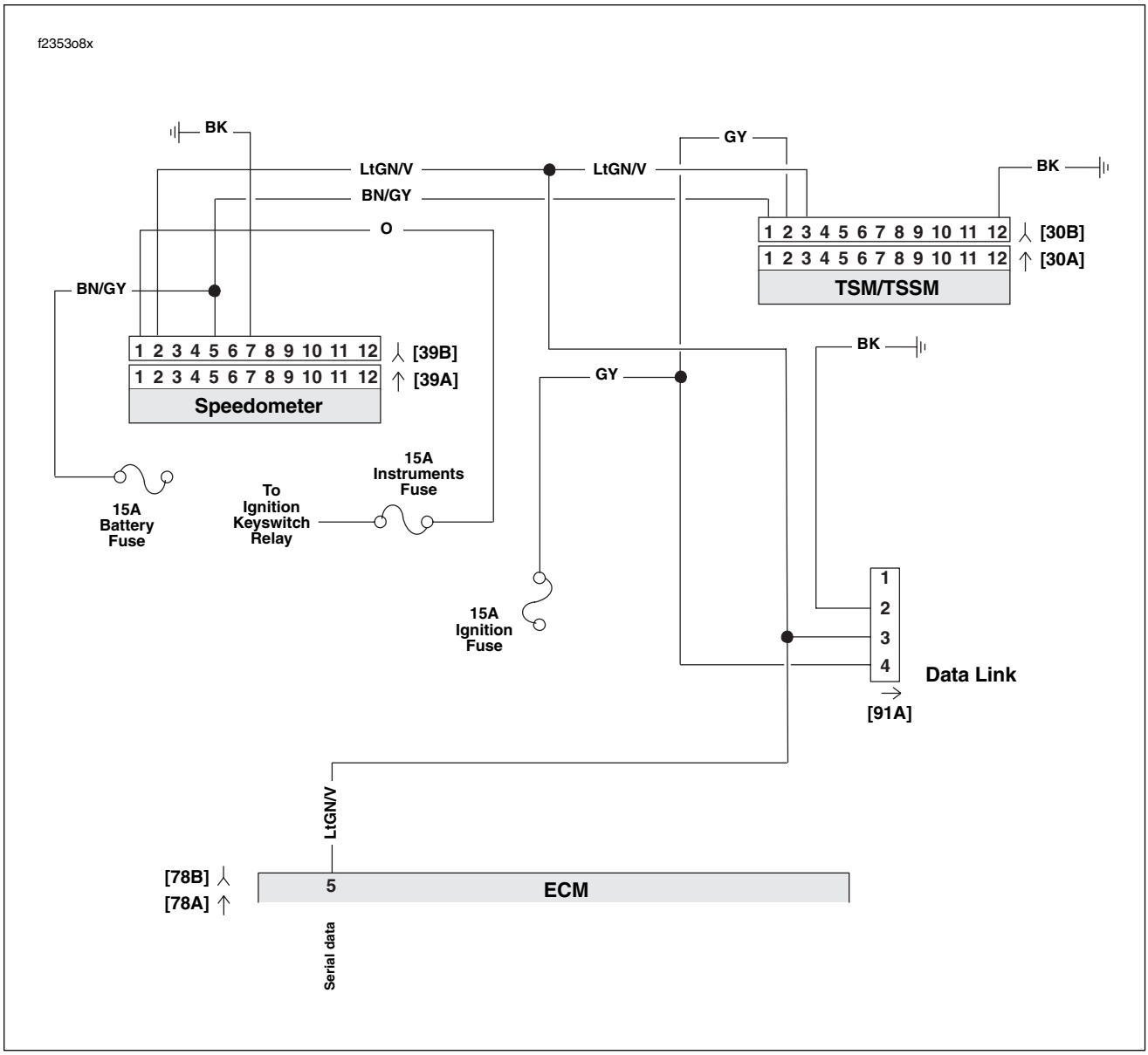

Figure 5-24. Serial Data Circuit (FLHR/C/S)

Table 5-13. Wire Harness Connectors in Figure 5-24.

NO.	DESCRIPTION	TYPE	LOCATION
[30]	TSM/TSSM	12-Place Deutsch	Cavity in Crossmember at Rear of Battery Box (Under Seat)
[39]	Speedometer	12-Place Packard	Under Console (Back of Speedometer)
[78]	ECM	36-Place Packard	Under Right Side Cover
[91]	Data Link	4-Place Deutsch	Under Right Side Cover

Test 5.12 (Part 1 of 2)

STARTS, THEN STALLS: DTC U1300, U1301 or "BUS Er"

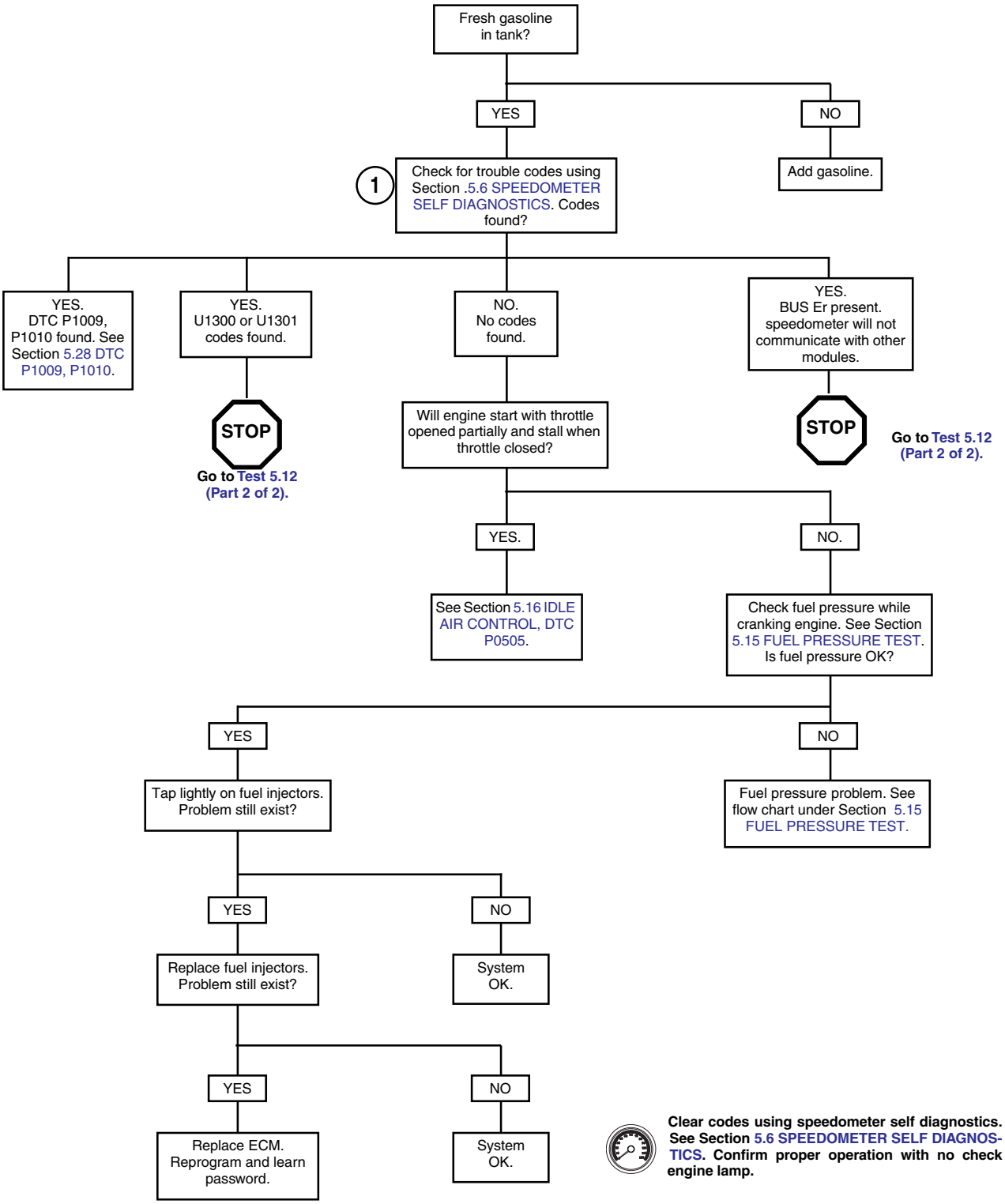

HOME

Test 5.12 (Part 2 of 2)

STARTS, THEN STALLS: DTC U1300, U1301 or "BUS Er"

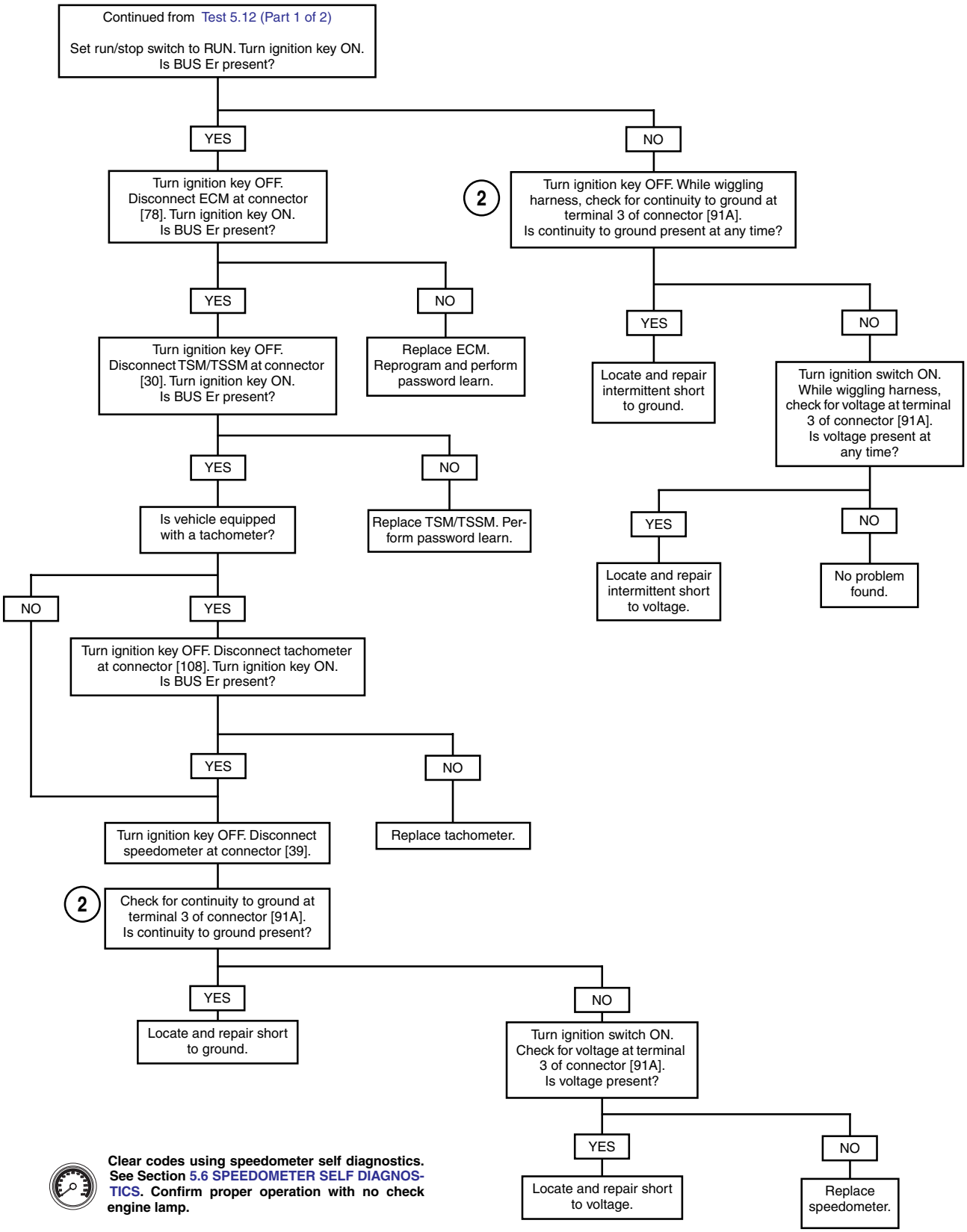

Clear codes using speedometer self diagnostics. See Section 5.6 SPEEDOMETER SELF DIAGNOSTICS. Confirm proper operation with no check engine lamp.

FUEL SYSTEM ELECTRICAL TEST 5.13

GENERAL

With ignition switch turned to IGNITION and the engine stop switch at RUN, the ECM will energize the system relay to complete the circuit to the in-tank fuel pump. It will remain on as long as the engine is cranking or running, and the ECM is receiving ignition reference pulses from the CKP. If there are no reference pulses, the ECM will de-energize the system relay within 2 seconds after ignition is ON or engine has stalled, or immediately after the ignition is shut OFF.

The fuel pump delivers fuel to the injectors. The pressure regulator is where the system pressure is controlled. Excess fuel flow is bypassed into the fuel tank through the pressure regulator. When the engine is stopped, the pump can be turned on by applying battery voltage and ground to the fuel pump connector [141A]. The fuel pump connector is located on the canopy at the top of the fuel tank. Improper fuel system pressure may contribute to one or all of the following symptoms.

- Engine cranks, but won't run.
- Engine cuts out (may feel like ignition problems).
- Hesitation, loss of power and poor fuel economy.

NOTE

After turning ignition OFF, you must wait 10 seconds before turning the ignition back ON to get the fuel pump to reprime. This time out period is necessary for the ECM and IAC to reset.

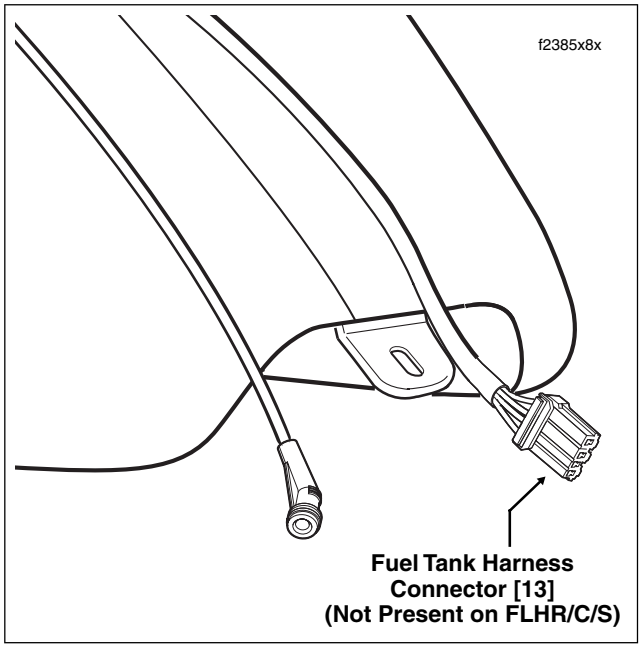

Figure 5-25. Fuel Pump/Fuel Level Sender Connector (FLHX, FLHT/C/U, FLTR)

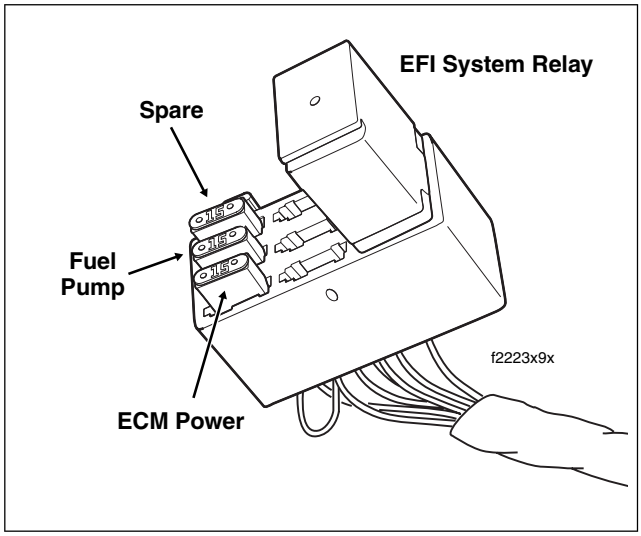

Figure 5-26. EFI Fuse Block

DIAGNOSTICS

Diagnostic Notes

The reference numbers below correlate with the circled numbers on the Test 5.13 flow charts.

1. Turns on fuel pump if wiring is OK. If pump runs, problem is in basic fuel delivery.
2. Use HARNESS CONNECTOR TEST KIT (Part No. HD-41404A), brown pin probe and patch cord.
3. Connect BREAKOUT BOX (Part No. HD-43876). See Section 5.7 BREAKOUT BOX: EFI.
4. Use HARNESS CONNECTOR TEST KIT (Part No. HD-41404A), purple pin probe and patch cord.

HOME

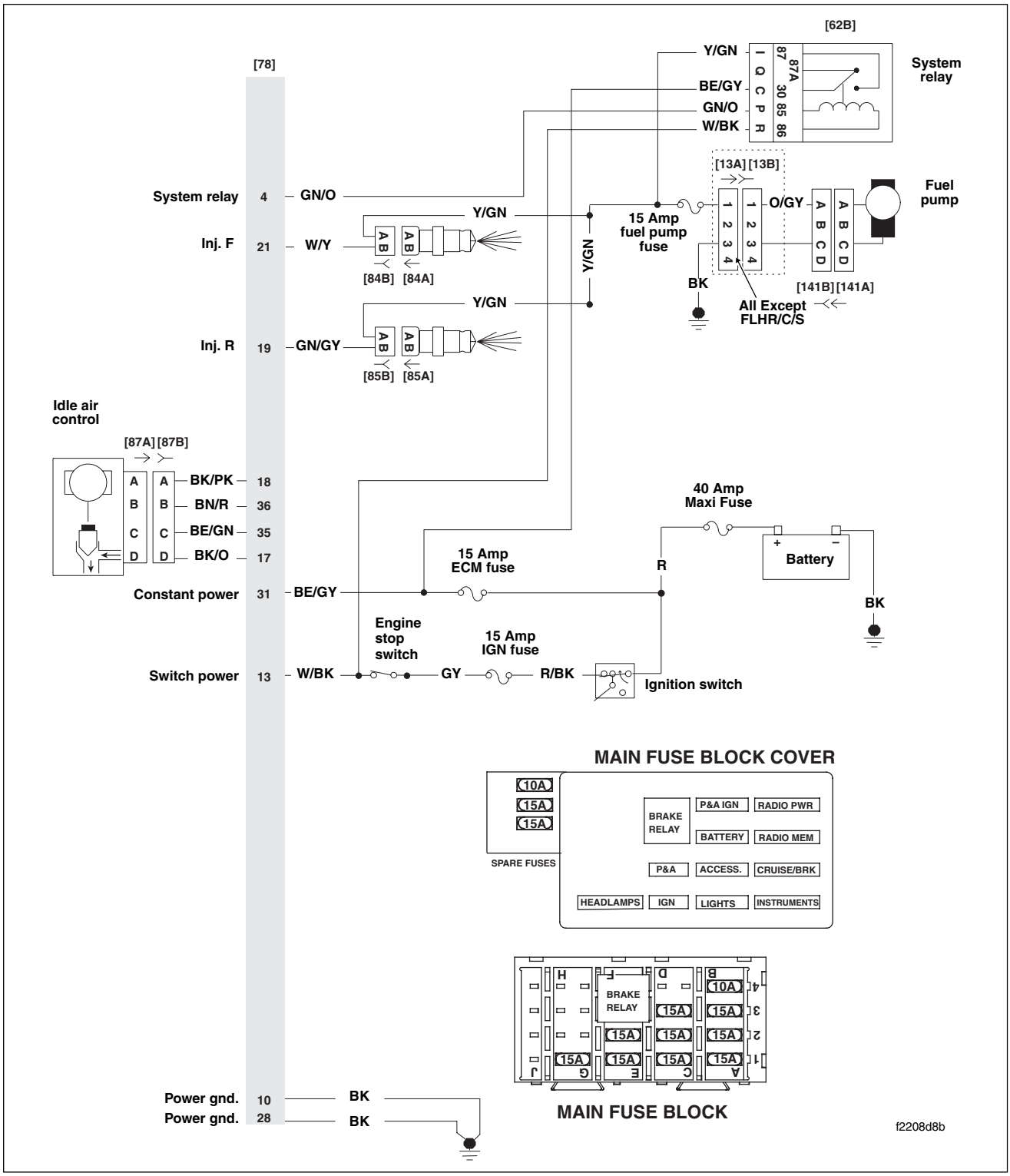

Figure 5-27. Fuel Pump Circuit

Table 5-14. Wire Harness Connectors in Figure 5-27.

NO.	DESCRIPTION	TYPE	LOCATION
[13]	Fuel Tank Harness	4-Place Multilock	Behind Fuel Tank (Under Seat)
[78]	ECM	36-Place Packard	Under Right Side Cover
[141]	Fuel Pump/Fuel Level Sender	4-Place Packard	Top of Canopy (Under Console)

Test 5.13 (Part 1 of 4)

FUEL SYSTEM ELECTRICAL TEST

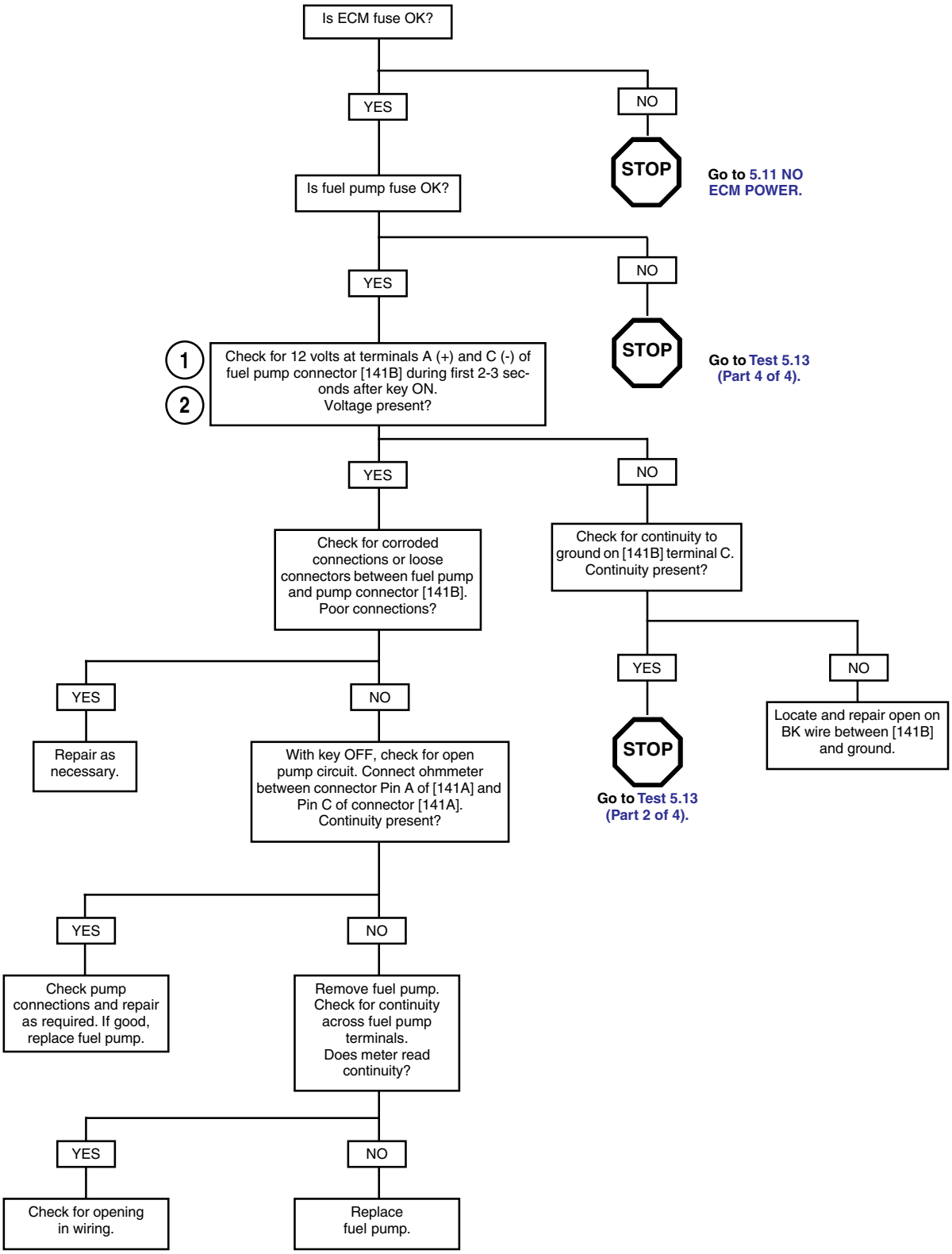

Test 5.13 (Part 2 of 4)

FUEL SYSTEM ELECTRICAL TEST

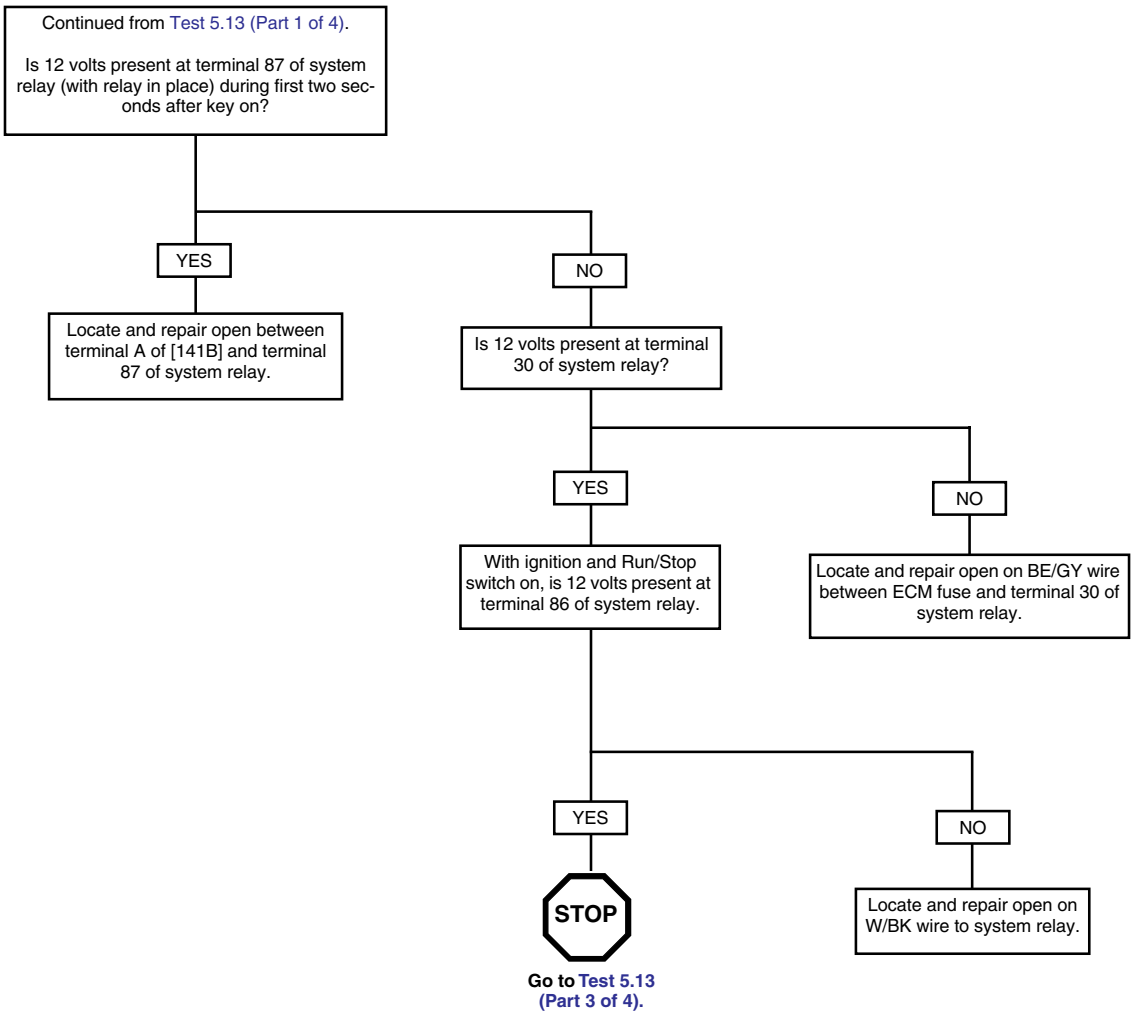

Test 5.13 (Part 3 of 4)

FUEL SYSTEM ELECTRICAL TEST

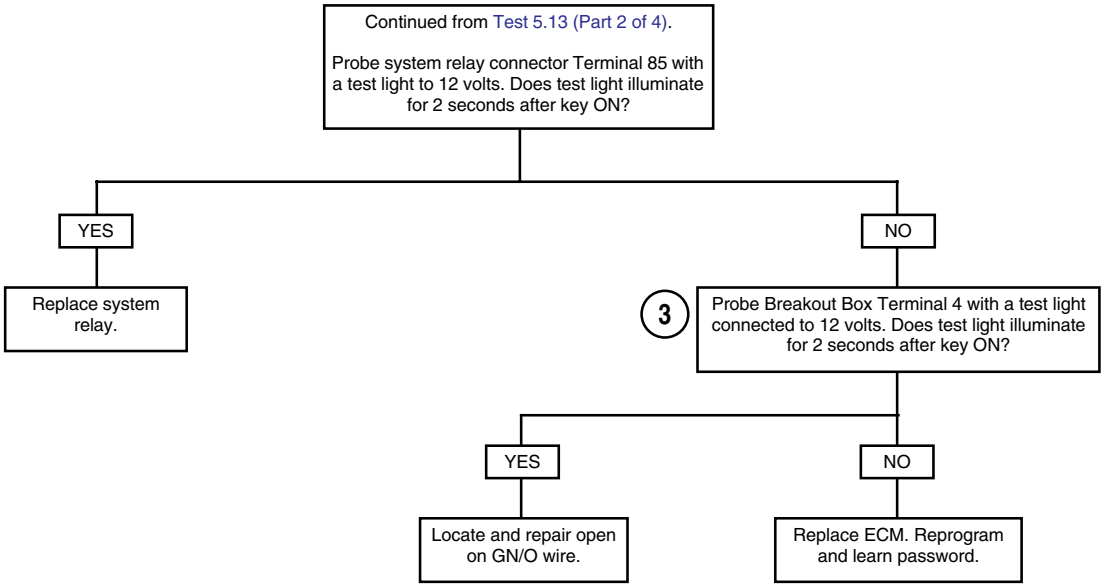

Test 5.13 (Part 4 of 4)

FUEL SYSTEM ELECTRICAL TEST

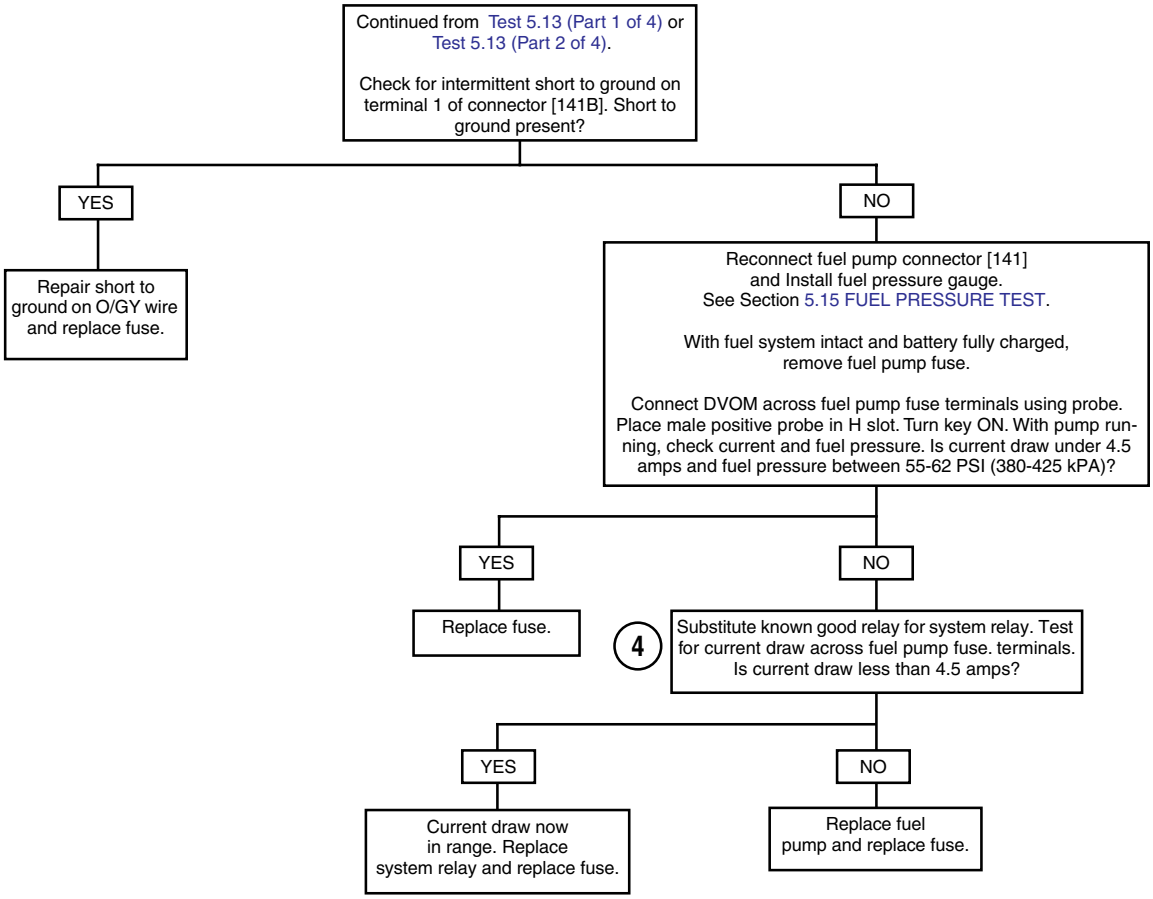

SYSTEM RELAY CHECK 5.14

GENERAL

System Relay

See Figure 5-28. With ignition switch turned to IGNITION and the engine stop/run switch at RUN, the ECM energizes the system relay to complete the circuit to the in-tank fuel pump, ignition coil and fuel injectors. They will remain powered as long as the engine is cranking or running, and the ECM is receiving ignition reference pulses from the CKP. If there are no reference pulses, the ECM will de-energize the system relay within 2 seconds after ignition is ON or engine has stalled, or immediately after the ignition is shut OFF.

Table 5-15. Code Description

DTC	DESCRIPTION
P1001	System relay coil open/low
P1002	System relay coil high/shorted
P1003	System relay contacts open
P1004	System relay contacts closed

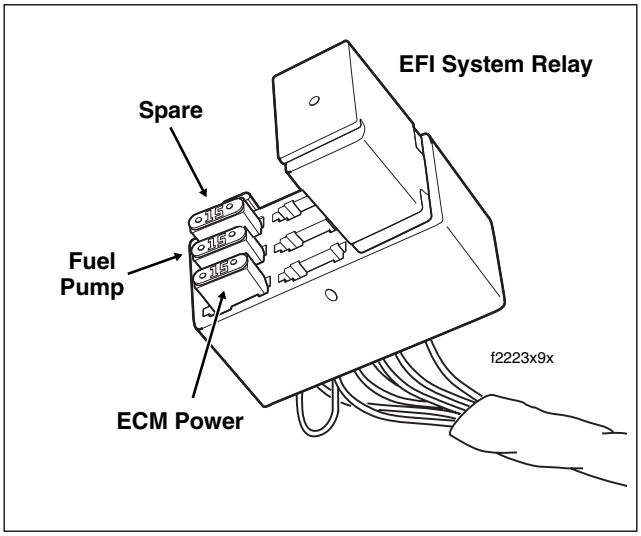

Figure 5-28. EFI Fuse Block

DIAGNOSTICS

Diagnostic Notes

The reference numbers below correlate with the circled numbers on the Test 5.14 flow charts.

1. Use HARNESS CONNECTOR TEST KIT (Part No. HD-41404A), gray pin probe and patch cord.
2. Connect BREAKOUT BOX (Part No. HD-43876) to ECM. See Section 5.7 BREAKOUT BOX: EFI.

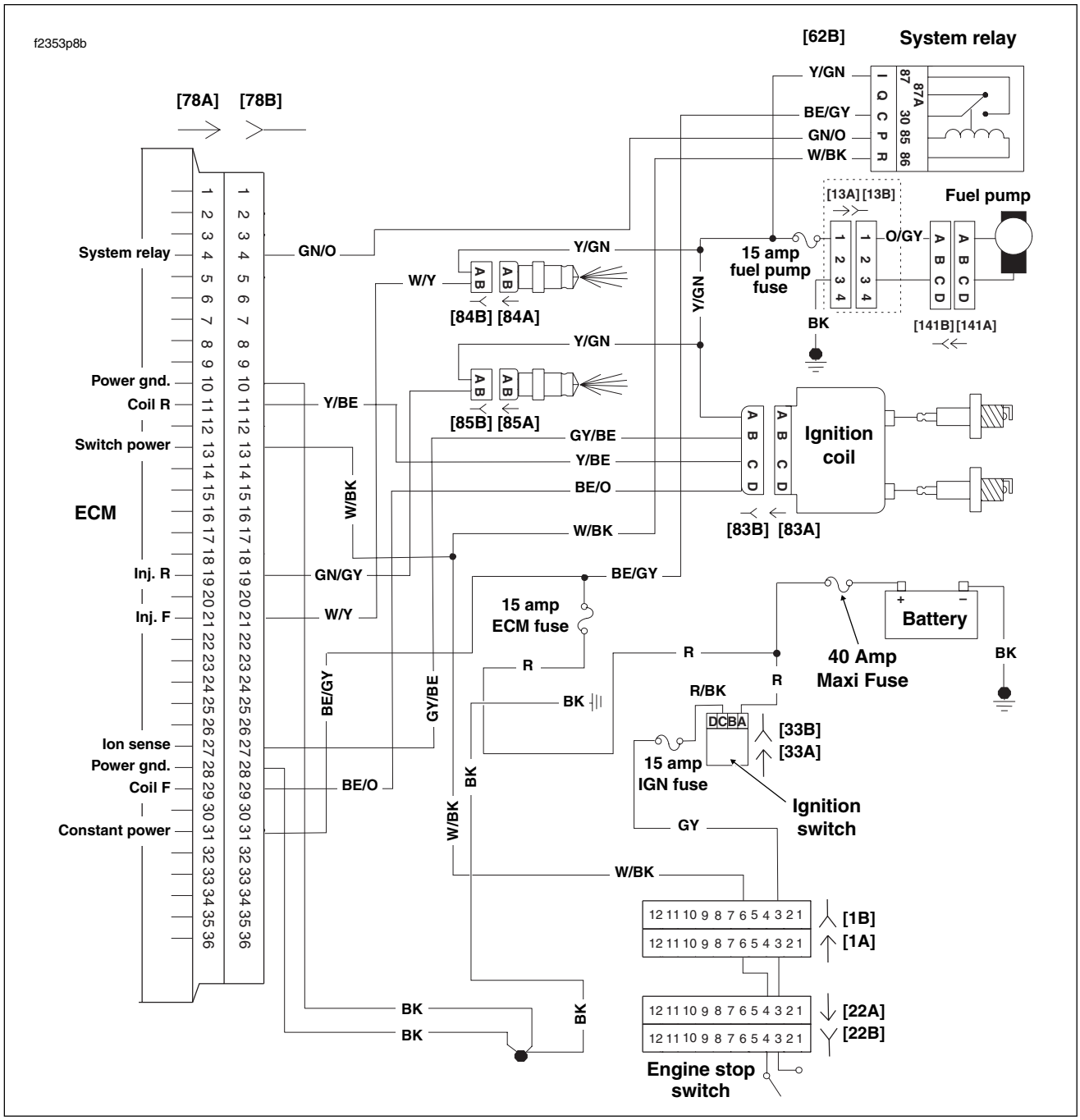

Figure 5-29. System Relay Circuit (FLHX, FLHT/C/U, FLTR)

Table 5-16. Wire Harness Connectors in Figure 5-29.

NO.	DESCRIPTION	TYPE	LOCATION
[1]	Main to Interconnect Harness	12-Place Deutsch (Black)	Inner Fairing (Right Radio Support Bracket)
[22]	Right Handlebar Switches	12-Place Deutsch (Black)	Inner Fairing (Fork Stem Nut Lock Plate)
[33]	Ignition/Light Key Switch	3-Place Packard	Inner Fairing -Under Radio
[78]	ECM	36-Place Packard	Under Right Side Cover
[83]	Ignition Coil	4-Place Delphi	Below Fuel Tank (Left Side)
[84]	Front Injector	2-Place Delphi	Below Fuel Tank (Left Side)
[85]	Rear Injector	2-Place Delphi	Below Fuel Tank (Left Side)

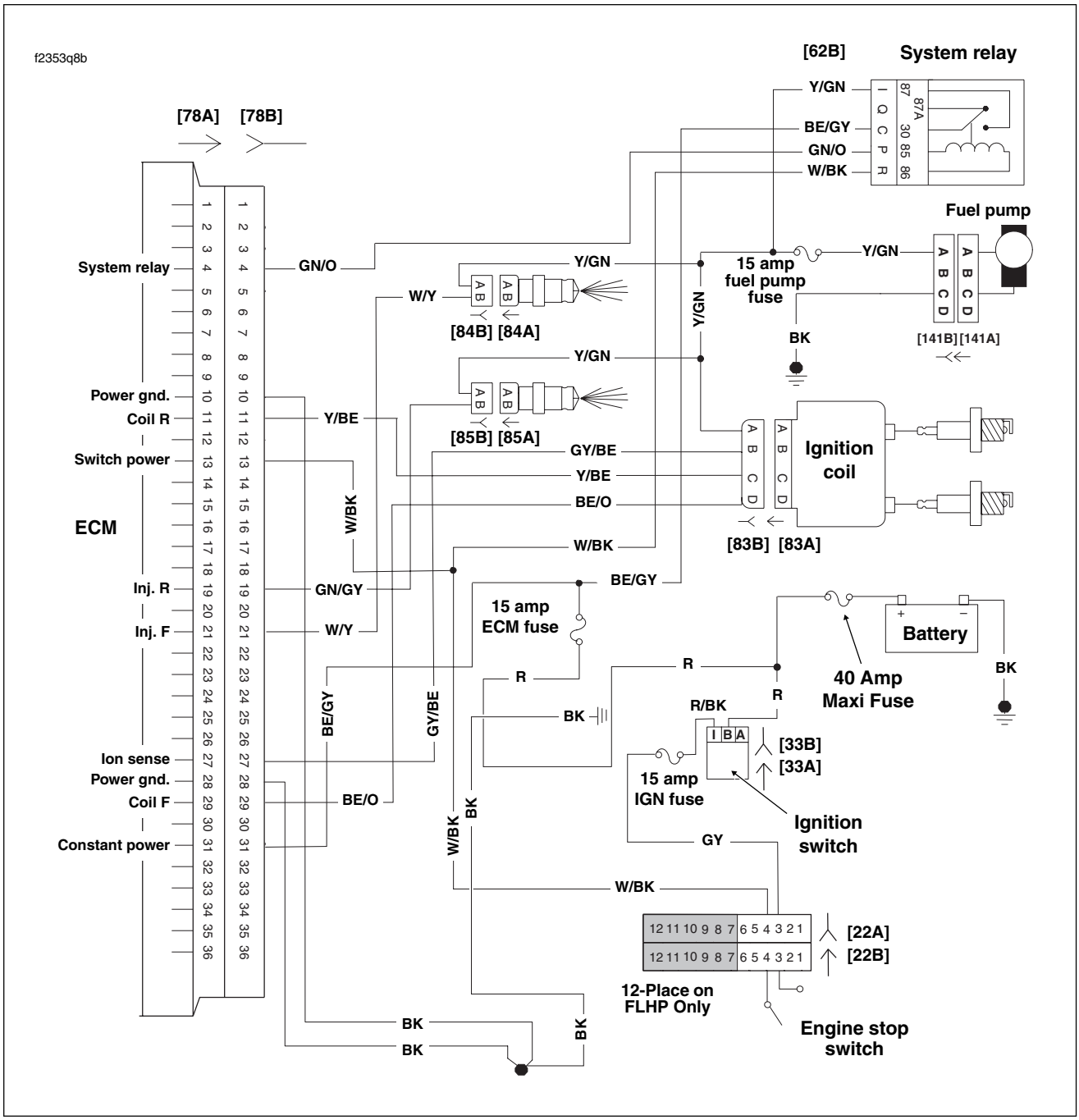

Figure 5-30. System Relay Circuit (FLHR/C/S)

Table 5-17. Wire Harness Connectors in Figure 5-30.

NO.	DESCRIPTION	TYPE	LOCATION
[22]	Right Handlebar Switches	12-Place Deutsch (Black)	Inside Headlamp Nacelle
[33]	Ignition/Light Key Switch	3-Place Packard	Under Console
[78]	ECM	36-Place Packard	Under Right Side Cover
[83]	Ignition Coil	4-Place Delphi	Below Fuel Tank (Left Side)
[84]	Front Injector	2-Place Delphi	Below Fuel Tank (Left Side)
[85]	Rear Injector	2-Place Delphi	Below Fuel Tank (Left Side)

Test 5.14 (Part 1 of 3)

SYSTEM RELAY: DTC P1001, P1003

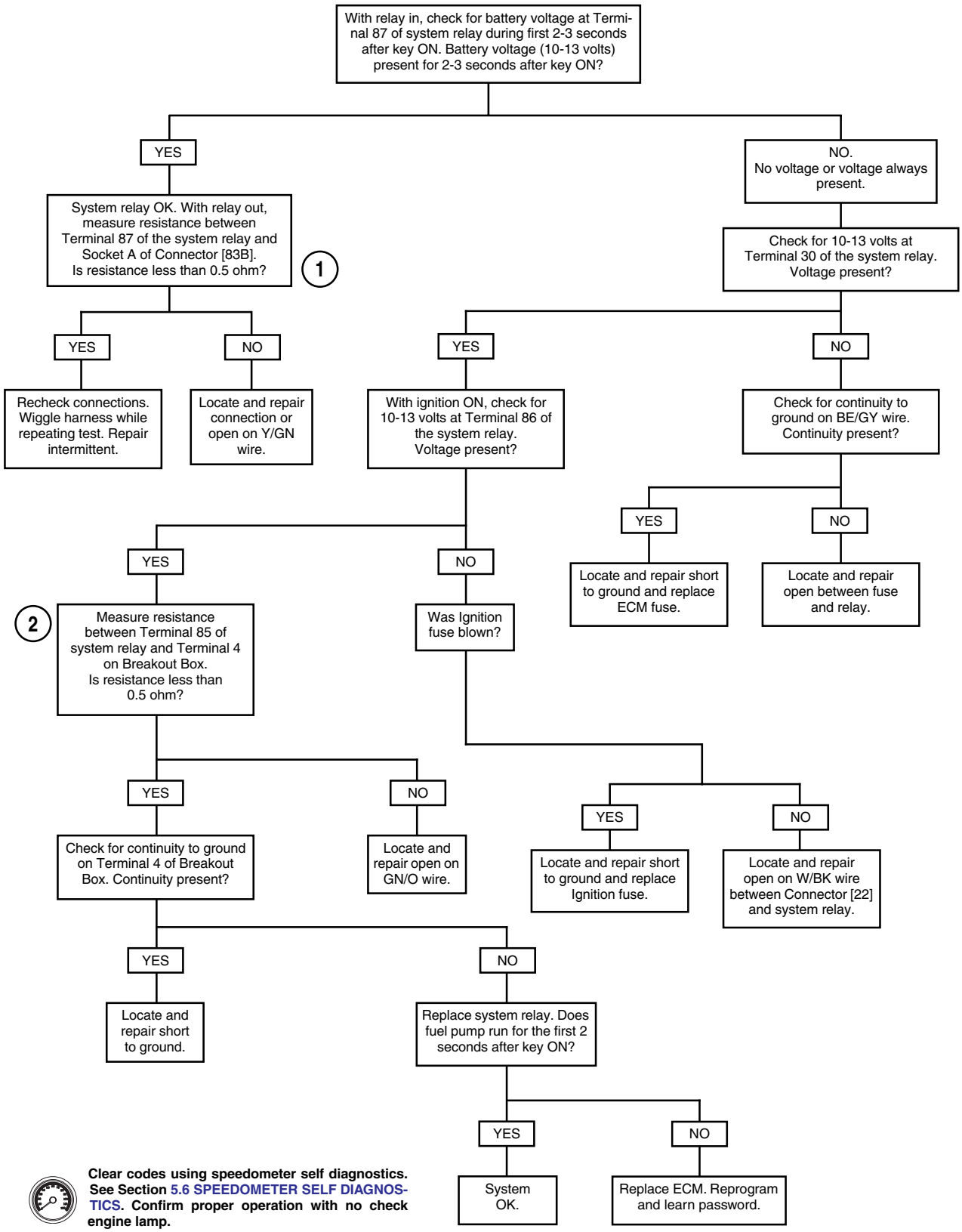

Clear codes using speedometer self diagnostics. See Section 5.6 SPEEDOMETER SELF DIAGNOSTICS. Confirm proper operation with no check engine lamp.

HOME

Test 5.14 (Part 2 of 3)

SYSTEM RELAY: DTC P1002

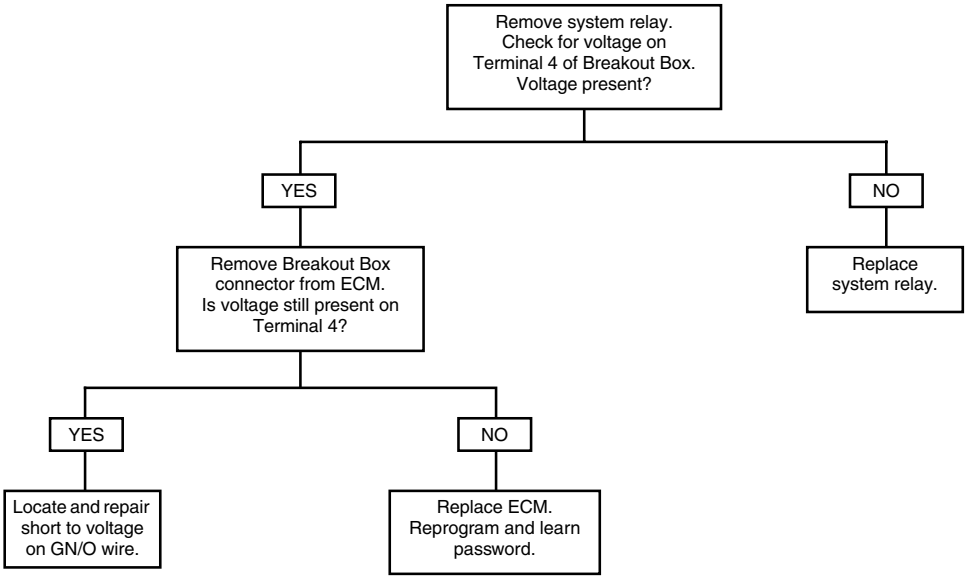

Clear codes using speedometer self diagnostics. See Section 5.6 SPEEDOMETER SELF DIAGNOSTICS. Confirm proper operation with no check engine lamp.

Test 5.14 (Part 3 of 3)

SYSTEM RELAY: DTC P1004

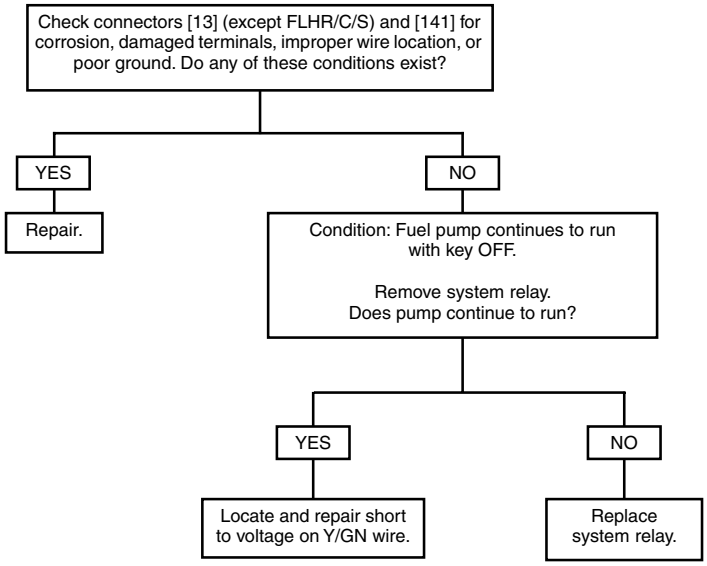

Clear codes using speedometer self diagnostics. See Section 5.6 SPEEDOMETER SELF DIAGNOSTICS. Confirm proper operation with no check engine lamp.

FUEL PRESSURE TEST 5.15

GENERAL

The fuel pump delivers fuel to the fuel line, to a cavity in the induction module that supplies the fuel injectors and to the pressure regulator, where the system pressure is controlled. Excess fuel pressure is bypassed to the fuel tank through the pressure regulator.

See Figure 5-31. The fuel pump fuse is located in the fuse block under the right side cover. The fuel pump can be turned on with the Scanalyzer or by applying battery voltage to the fuel pump fuse.

Improper fuel system pressure may contribute to one of the following conditions:

- Cranks, but won't run.
- Cuts out (may feel like ignition problem).
- Hesitation, loss of power or poor fuel economy.

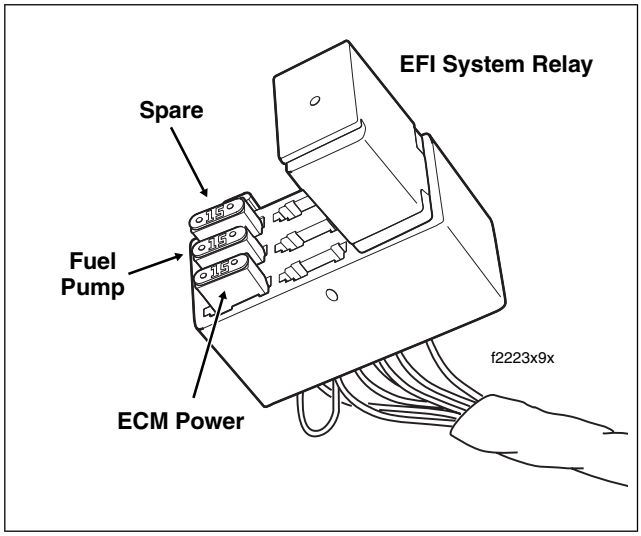

Figure 5-31. EFI Fuse Block

TESTING

The fuel pressure gauge (0-100 PSI) allows for fuel injector and fuel system pressure diagnosis. Special adapters allow the gauge to be attached to the external fuel supply line.

PART NO.	SPECIALTY TOOL
HD-41182	Fuel pressure gauge
HD-44061	Fuel pressure gauge adapters (2)

1. Remove right side saddlebag and side cover.

⚠WARNING

The gasoline in the fuel supply line downstream of the fuel pump is under high pressure (58 psi). To avoid an uncontrolled discharge or spray of gasoline, always purge the system of high pressure gas before removing the fuel supply line from the fuel tank. Gasoline is extremely flammable and highly explosive. Inadequate safety precautions could result in death or serious injury.

2. Purge the fuel supply line of high pressure gas.
   a. See Figure 5-31. Pull the fuel pump fuse from the EFI fuse block.
   b. Start the engine and allow the vehicle to run.
   c. When the engine stalls, operate the starter for 3 seconds to remove any remaining fuel from the fuel lines.

⚠WARNING

A small amount of gasoline may drain from the quick-connect fitting when the fuel supply line is removed. Thoroughly wipe up any spilt fuel immediately. Dispose of rags in a suitable manner. Gasoline is extremely flammable and highly explosive. Inadequate safety precautions could result in death or serious injury.

3. Locate quick-connect fitting on left side of fuel tank. Pull up on chrome sleeve, and then pull down on fuel supply line to disconnect.

CAUTION

The next step requires two fuel pressure gauge adapters. Failure to use two adapters will cause the fuel line to twist. This may result in a broken fuel line or fuel line fitting.

4. Attach fuel line to gauge assembly.
   a. See Figure 5-32. Install a second adapter in series with the first.
   b. See Figure 5-33. Pull up on chrome sleeve of quick-connect fitting and insert neck of FUEL PRESSURE GAUGE ADAPTER (Part No. HD-44061) into fuel supply line.
   c. While pushing up on bottom of adapter, pull down on chrome sleeve until it "clicks" into the locked position. Tug on adapter to be sure that it will not come free.

d. See Figure 5-34. In the same manner, install neck of second fuel supply line fitting into quick-connect fitting on fuel tank. Tug on fuel supply line to be sure that it will not come free.

WARNING

To avoid an uncontrolled discharge or spray of gasoline, always be sure the quick-connect fittings are properly mated. A slight tug on the fuel pressure gauge adapter and fuel supply line will verify this condition. Gasoline is extremely flammable and highly explosive. Inadequate safety precautions could result in death or serious injury.

5. Verify that the fuel valve and air bleed petcock on the FUEL PRESSURE GAUGE (Part No. HD-41182) are closed.
6. See Figure 5-32. Remove protective cap from free end of fuel pressure gauge adapter. Connect fuel pressure gauge to Schroeder valve.
7. See Figure 5-31. Install fuel pump fuse.
8. Start and idle engine to pressurize the fuel system. Open the fuel valve to allow the flow of fuel down the hose of the pressure gauge.
9. Position the clear air bleed tube in a suitable container and open and close the air bleed petcock to purge the gauge and hose of air. Repeat this step several times until only solid fuel (without bubbles) flows from the air bleed tube. Close the petcock.
10. Open and close throttle to change engine speed. Note the reading of the pressure gauge. Fuel pressure should remain steady at 55-62 psi (380-425 kPa).
11. Turn the engine off. Position the air bleed tube in a suitable container. Open the air bleed petcock to relieve the fuel system pressure and purge the pressure gauge of gasoline.

WARNING

A small amount of gasoline may drain from the adapter when the gauge is removed. Thoroughly wipe up any spilt fuel immediately. Dispose of rags in a suitable manner. Gasoline is extremely flammable and highly explosive. Inadequate safety precautions could result in death or serious injury.

12. Remove fuel pressure gauge from the adapter. Install protective cap over Schroeder valve.

WARNING

A small amount of gasoline may drain from the fuel supply line and adapter when these items are removed. Thoroughly wipe up any spilt fuel immediately. Dispose of rags in a suitable manner. Gasoline is extremely flammable and highly explosive. Inadequate safety precautions could result in death or serious injury.

Figure 5-32. Fuel Pressure Gauge Adapters

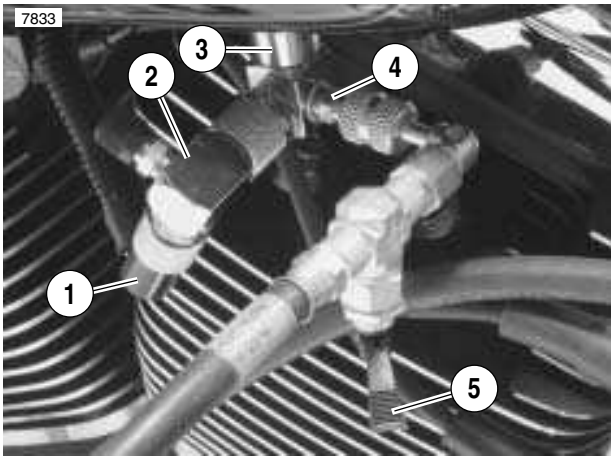

1. **Fuel supply line**
2. **Adapter to fuel line**
3. **Adapter to fuel tank**
4. **Pressure adapter/Schroeder valve union**
5. **Fuel valve (closed position)**

Figure 5-33. Fuel Line

Figure 5-34. Fuel Pressure Gauge Installed (Typical)

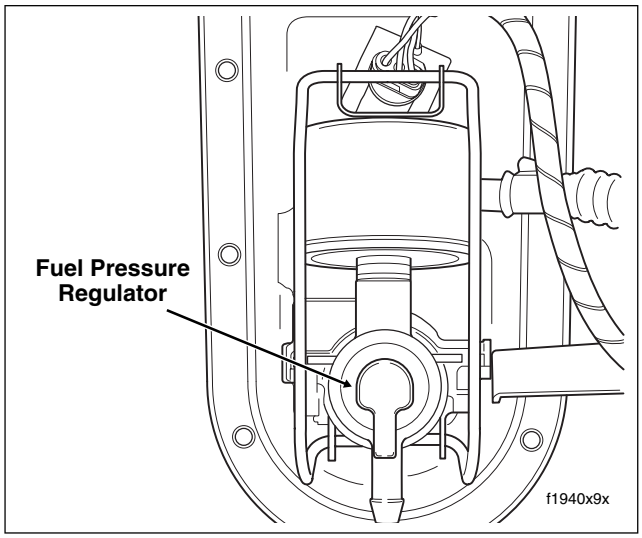

Figure 5-35. Underside of Canopy

13. Pull up on sleeve of quick-connect fitting and remove fuel supply line from fuel pressure gauge adapter. Release adapter from fuel tank in the same manner.

⚠WARNING

To avoid an uncontrolled discharge or spray of gasoline, always be sure the quick-connect fitting is properly mated. A slight tug on the fuel supply line will verify this condition. Gasoline is extremely flammable and highly explosive. Inadequate safety precautions could result in death or serious injury.

14. Pull up on chrome sleeve of quick-connect fitting and insert neck of fuel supply line fitting. While pushing up on bottom of fuel supply line fitting, pull down on chrome sleeve until it “clicks” into the locked position. Tug on fuel supply line to be sure that it will not come free.

15. Install right side cover and saddlebag.

DIAGNOSTICS

Diagnostic Notes

The reference numbers below correlate with the circled numbers on the Test 5.15 flow chart.

1. See FUEL PRESSURE REGULATOR, REMOVAL/INSTALLATION, in the Touring Service Manual.

2. If fuel system has pressure, but it is less than specification, check for the following conditions.

   a. The amount of fuel to the injectors is within limits, but pressure is too low. Also, hard starting cold and overall poor performance condition may exist.

   b. Restricted fuel flow causing pressure drop. However, if pressure drop occurs only when driving, engine may surge and lose power as pressure begins to drop rapidly.

3. This condition may be identified when the fuel level is low and the fuel pump is turned on for the first 2 seconds after key ON. A metallic ringing sound can be heard as the high pressure fuel is sprayed against the inside wall of the fuel tank.

HOME

Test 5.15

FUEL PRESSURE TEST

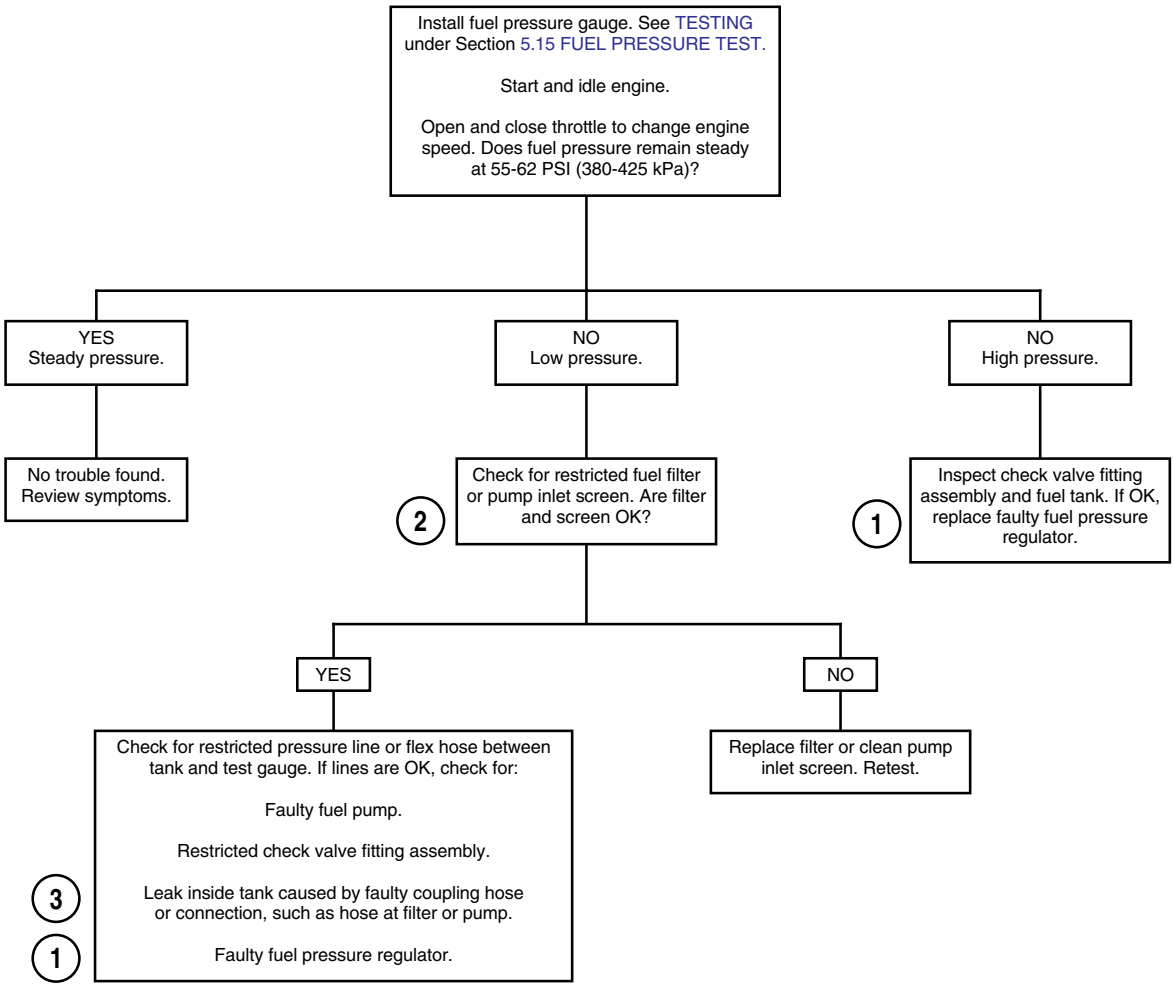

IDLE AIR CONTROL, DTC P0505 5.16

GENERAL

IAC Operation

The ECM controls engine idle speed by moving the IAC to open or close a passage around the throttle plate. It does this by sending voltage pulses to the proper motor winding of the IAC. This causes the pintle to move in or out of the IAC a given distance for each pulse received.

- To increase idle speed, the ECM retracts the pintle, allowing more air to flow through the throttle body.
- To decrease idle speed, the ECM extends the pintle, allowing less air to flow through the throttle body.

The IAC position is measured in steps. This can only be done by using a computer based diagnostic package called DIGITAL TECHNICIAN (Part No. HD-44750).

- A high number of steps represents a fully retracted pintle and open passage around throttle plate. This correlates with an increase in the amount of air flowing through the throttle body.
- Zero steps represents a fully extended pintle. A zero reading indicates that the pintle has been fully extended and has consequently closed the passage around throttle plate, which is an abnormal condition.

Each time the ignition is turned off, the ECM resets the IAC by sending enough pulses to extend the pintle and effectively close the throttle body. The fully extended value is the ECM reference point. A given number of counts are then calculated by the ECM for use in setting the proper idle speed and IAC position.

NOTE

Warm idle speed is controlled by the ECM and can only be adjusted by using a computer based diagnostic package called DIGITAL TECHNICIAN (Part No. HD-44750).

Diagnostic Trouble Code P0505: Loss of Idle Speed Control

Loss of idle speed control will result if the idle RPM is ±200 from preset idle speed and IAC motor is at zero or maximum for greater than 5 seconds. This code may occur with others for a multiple code situation. Resolve the other codes first to correct.

Table 5-18. Code Description

DTC	DESCRIPTION
P0505	Loss of idle speed control

DIAGNOSTICS

Diagnostic Tips

Engine idle speed can be adversely affected by the following:

- A loss of idle speed control does not necessarily imply the IAC actuator or wiring has failed. It can be caused by a number of conditions such as an intake air leak, improperly adjusted throttle stop or a misfiring cylinder.
- Leaking injectors will cause fuel imbalance and poor idle quality due to different air/fuel ratios in each cylinder. To check for leaky injectors, first remove the air cleaner. With the throttle wide open, turn key ON for 2 seconds and then OFF for 2 seconds five consecutive times. Replace the fuel injector if there is any evidence of raw fuel in the bores. See FUEL INJECTORS, REMOVAL/INSTALLATION, in the Touring Service Manual.
- Vacuum leaks. To check for vacuum, See Section 5.9 INTAKE LEAK TEST.
- Contaminated fuel.
- Excessive oil in the crankcase (oil sumping).
- TPS reading greater than 1% (possible throttle cable misadjustment) or battery voltage reading of less than 9 volts or a VSS greater than 0 will disable idle speed control.
- Loss of battery power to ECM pin 31.

Diagnostic Notes

The reference numbers below correlate with the circled numbers on the Test 5.16 flow charts.

1. When the engine is stopped, the IAC pintle extends and then retracts to a fixed “Park” position for increased airflow and idle speed during the next engine start sequence. This key OFF reset procedure takes 10 seconds to perform.

2. Test lamp behavior may follow two patterns. The color of the lights is not relevant to IAC operation.

   a. **Normal behavior:** At key ON, test lights will alternately flash and then remain steady on to confirm ECM signals. At key OFF lights alternately flash and go out after 10 second reset procedure.

   b. **Problem indicated:** One or more lights fail to illuminate during key ON/key OFF cycle.

NOTE

There is a remote possibility that one of the circuits is shorted to voltage which would have been indicated by a steady light. Disconnect ECM and turn the ignition ON. Probe terminals to check for this condition.

3. Connect BREAKOUT BOX (Part No. HD-43876) to EFI wire harness only, leaving ECM disconnected. See Section 5.7 BREAKOUT BOX: EFI.

4. Use HARNESS CONNECTOR TEST KIT (Part No. HD-41404A), gray pin probe and patch cord.

5. Repair faulty ECM connection or replace ECM.

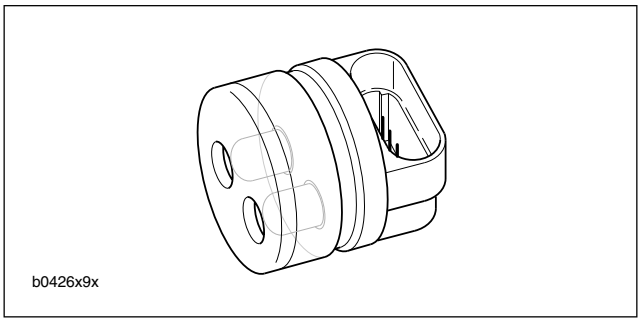

Figure 5-36. IAC Test Lamp (Part No. HD-41199-3)

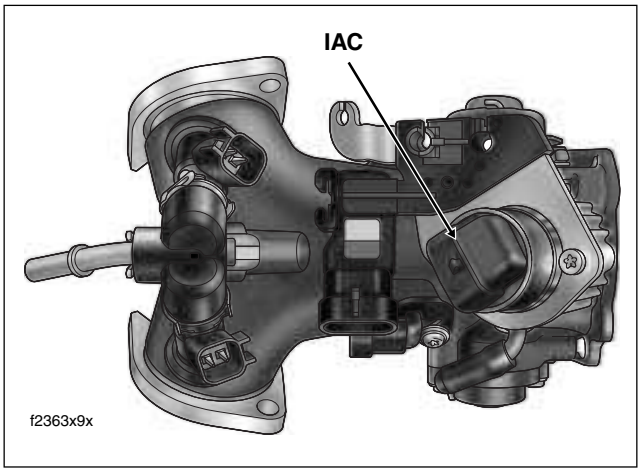

Figure 5-37. Induction Module (Top View)

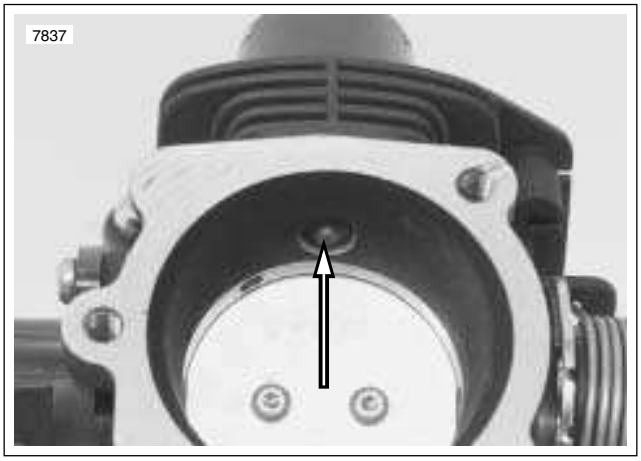

Figure 5-38. IAC Pintle

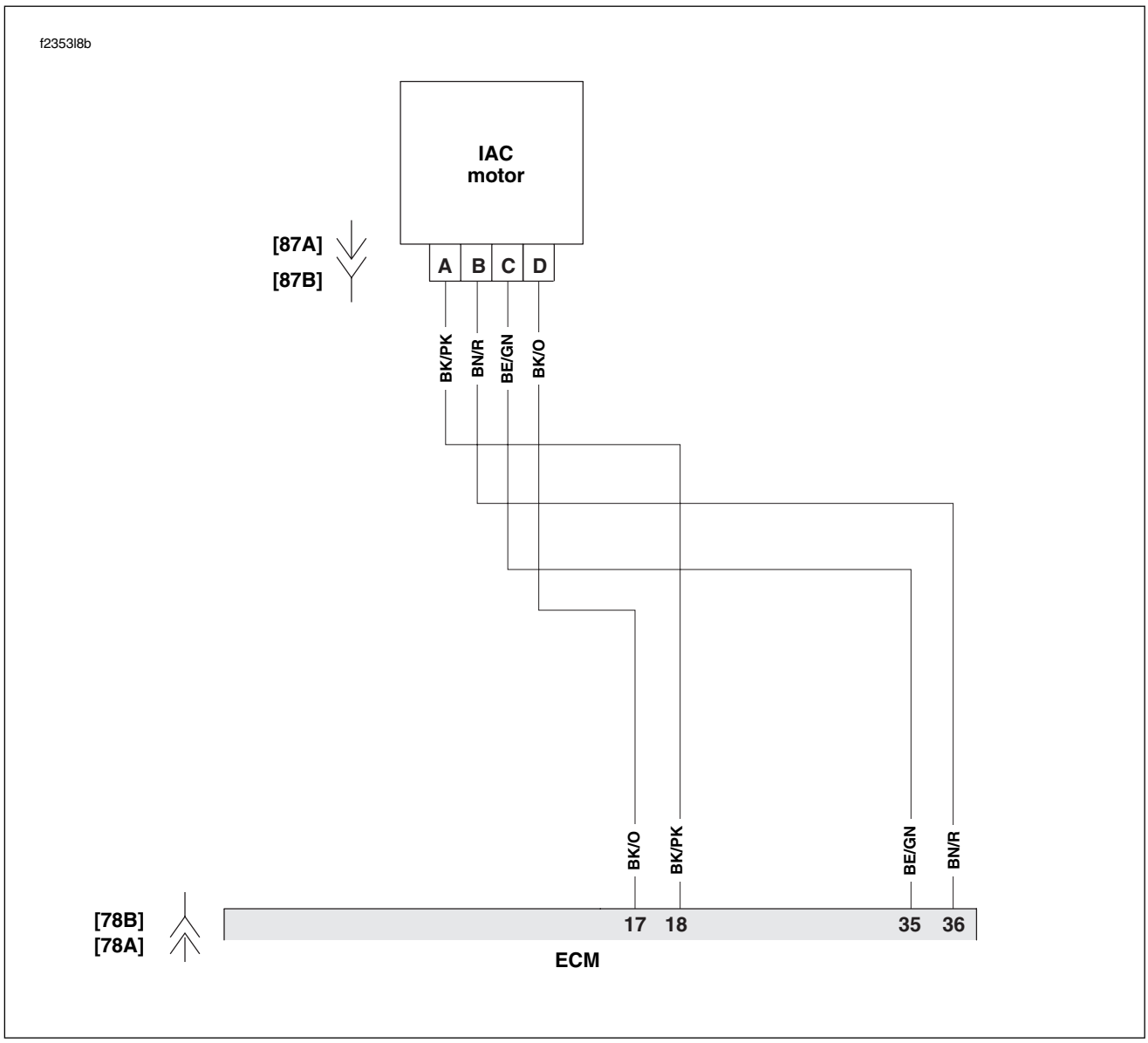

Figure 5-39. IAC Circuit

Table 5-19. Wire Harness Connectors in Figure 5-39.

NO.	DESCRIPTION	TYPE	LOCATION
[78]	ECM	36-Place Packard	Under Right Side Cover
[87]	IAC	4-Place Delphi	Below Fuel Tank (Right Side)

Test 5.16 (Part 1 of 2)

IDLE AIR CONTROL: DTC P0505

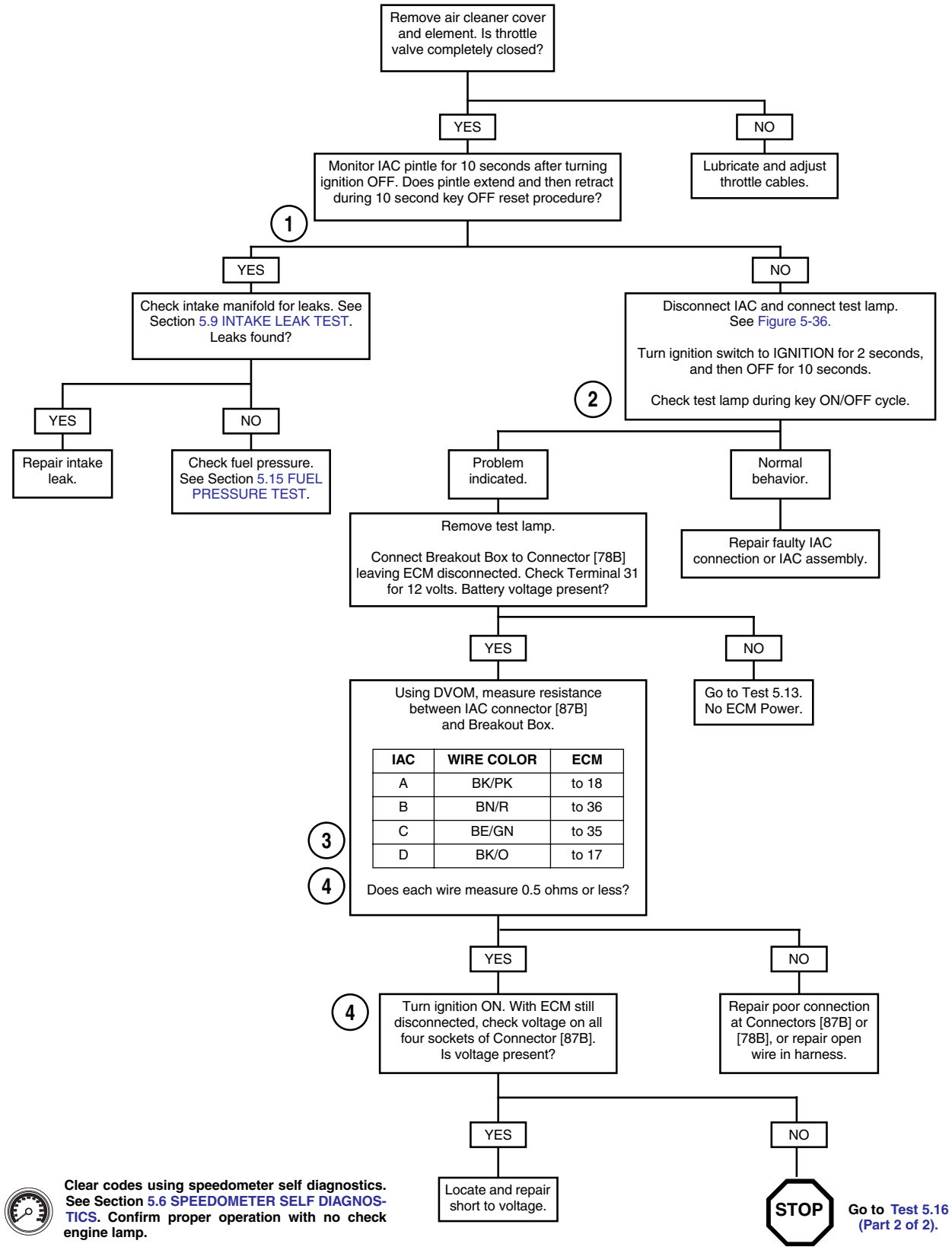

Clear codes using speedometer self diagnostics. See Section 5.6 SPEEDOMETER SELF DIAGNOSTICS. Confirm proper operation with no check engine lamp.

Test 5.16 (Part 2 of 2)

IDLE AIR CONTROL: DTC P0505

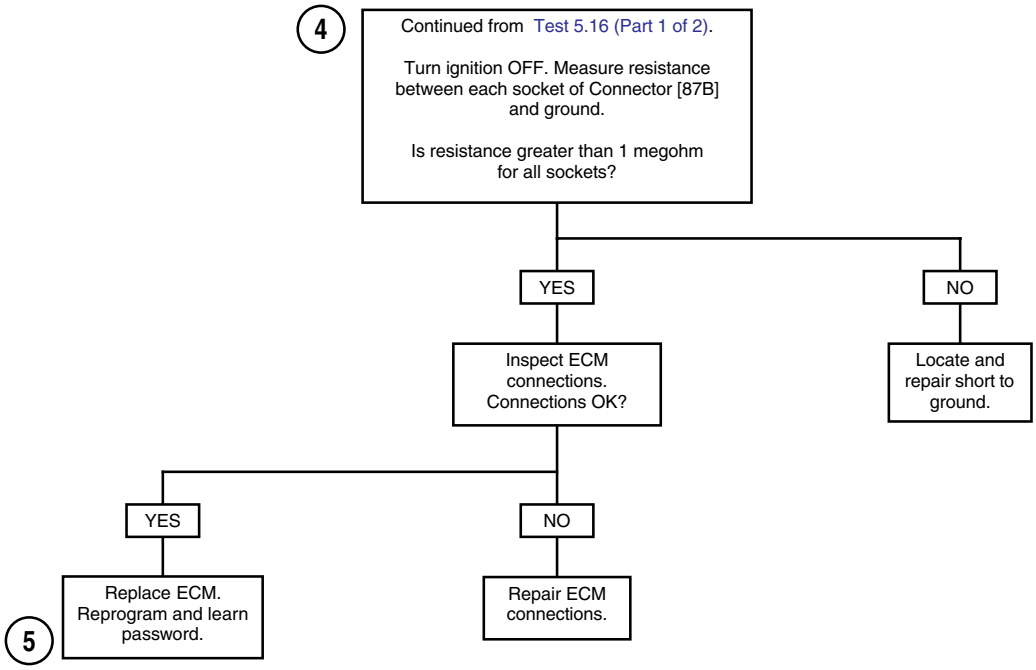

Clear codes using speedometer self diagnostics. See Section 5.6 SPEEDOMETER SELF DIAGNOSTICS. Confirm proper operation with no check engine lamp.

MISFIRE AT IDLE OR UNDER LOAD 5.17

GENERAL

Misfire at Idle or Under Load

- Battery condition and connections may also cause misfires. See BATTERY in the Touring Service Manual for more information.
- Fuel system problems may also cause misfires. Consult Section 5.15 FUEL PRESSURE TEST and then see symptom tables under Section 5.5 INITIAL DIAGNOSTIC CHECK: EFI.
- Mechanical problems with the engine may cause misfires. See Section 3 of the Touring Service Manual for more information.
- Vehicle modifications including intake and exhaust may cause misfires.

DIAGNOSTICS

Diagnostic Notes

The reference numbers below correlate with the circled numbers on the Test 5.17 flow charts.

⚠WARNING

Any open spark around gasoline or other combustibles may result in fire or explosion. Thoroughly wipe up any spilt fuel and dispose of rags in a suitable manner. Gasoline is extremely flammable and highly explosive. Inadequate safety precautions could result in death or serious injury.

1. Connect BREAKOUT BOX (Part No. HD-43876) between wire harness and ECM. See Section 5.7 BREAKOUT BOX: EFI.
2. See Figure 5-40. A SPARK TESTER (Part No. HD-26792) must be used to verify adequate secondary voltage (25,000 volts) at the spark plug.

NOTE

Engine will not spark with both spark plugs removed. When checking for spark, use SPARK TESTER (Part No. HD-26792) with both plugs installed.

   a. Turn ignition key OFF.
   b. Remove spark plug cable from spark plug. Visually check plug condition.
   c. Attach cable to SPARK TESTER. Clip tester to cylinder head bolt.
   d. While cranking engine, watch for spark to jump tester gap on leads.
   e. Reinstall and repeat procedure on other spark plug cable.

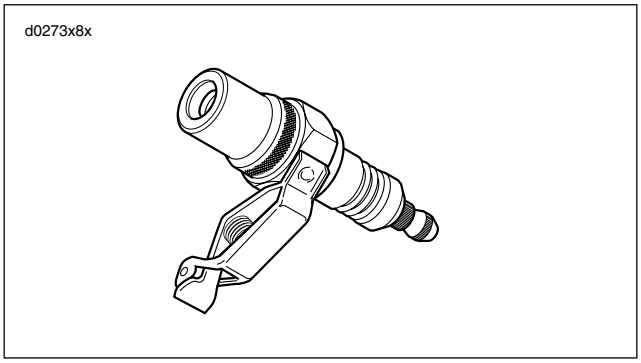

Figure 5-40. Spark Tester

Table 5-20. Spark Plug Cables

LOCATION	LENGTH	RESISTANCE
Front/Rear	20.2 inch (513 mm)	4975-11960

3. Perform spark plug cable resistance test.
   a. Remove spark plug cable from spark plug and ignition coil. For best results, use a needle nose pliers for removal/installation on coil. Gently grasp cable as close to terminals as possible.
   b. Using an ohmmeter, touch probes to terminals on each end plug cable.
   c. Compare resistance values to Table 5-20. Replace cables not meeting specifications. Reinstall and repeat procedure on other spark plug cable.
4. If carbon tracking is evident on outside of coil towers, replace ignition coil and inspect spark plug cables. Cables must be clean and tight. Excessive cable resistance or faulty connections can cause coil damage.
5. This test can also be performed by substituting a known good coil for one causing the no spark condition. The coil does not require full installation to be functional. Verify faulty coil by performing resistance test. See IGNITION COIL in the Touring Service Manual.
6. Use HARNESS CONNECTOR TEST KIT (Part No. HD-41404A), red pin probe and patch cord to relay and gray pin probe and patch cord to the coil connector [83B].

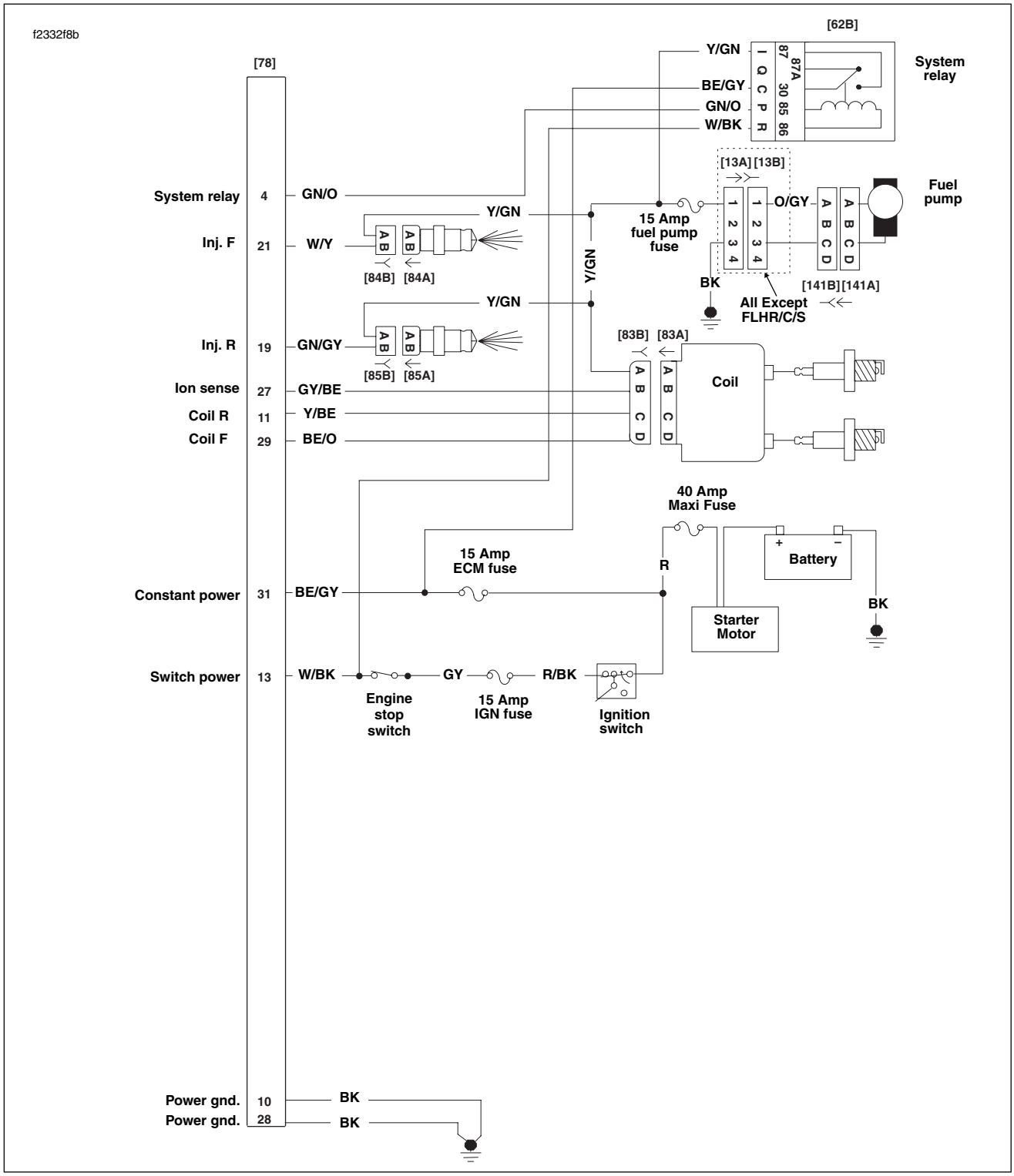

Figure 5-41. Ignition Coil Circuit

Table 5-21. Wire Harness Connectors in Figure 5-41.

NO.	DESCRIPTION	TYPE	LOCATION
[78]	ECM	36-Place Packard	Under Right Side Cover
[83]	Ignition Coil	4-Place Delphi	Below Fuel Tank (Left Side)

HOME

Test 5.17 (Part 1 of 3)

MISFIRE AT IDLE OR UNDER LOAD

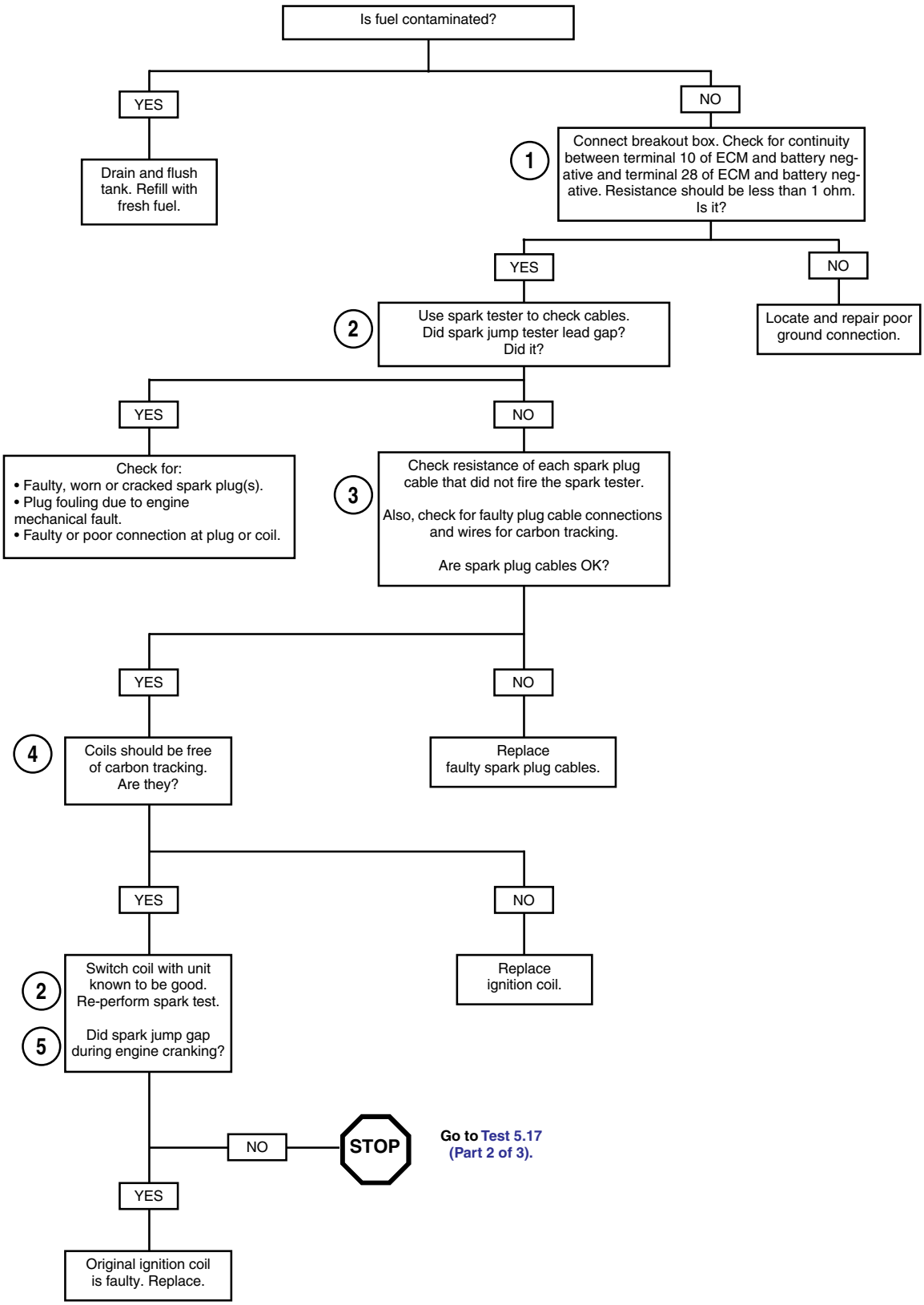

Test 5.17 (Part 2 of 3)

MISFIRE AT IDLE OR UNDER LOAD

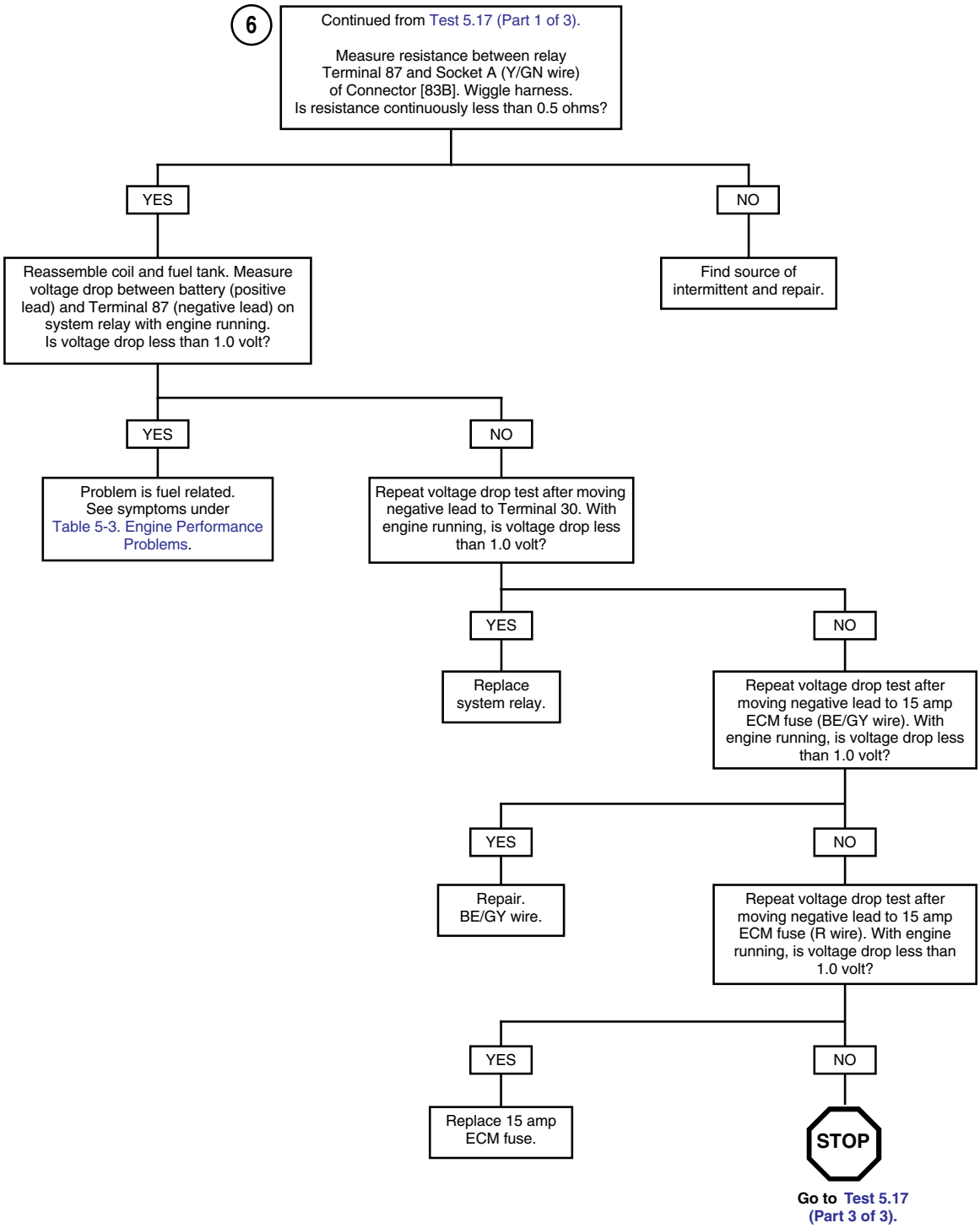

Test 5.17 (Part 3 of 3)

MISFIRE AT IDLE OR UNDER LOAD

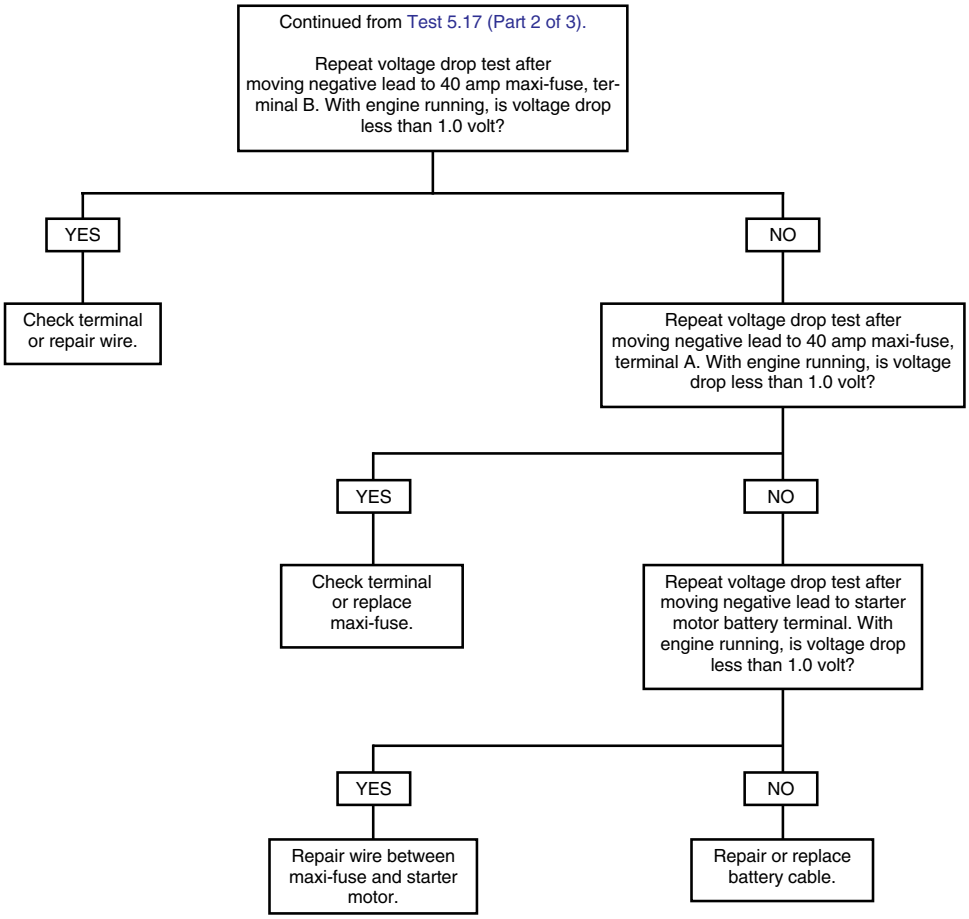

COMBUSTION ABSENT/INTERMITTENT 5.18

GENERAL

Diagnostic Trouble Codes P1353, P1356, P1357, P1358: No Combustion

See Figure 5-42. A feedback voltage signal in the secondary ignition circuit detects the presence of combustion each time a cylinder fires on ECM Pin 27. For diagnostic purposes, this signal is only analyzed under load above 2000 rpm where it may be easily measured. Failure to detect combustion at high speed and load means one of following conditions exist.

- Cylinder is truly misfiring.
- There is a lack of continuity in the ignition coil secondary circuit.

Table 5-22. Code Description

DTC	DESCRIPTION
P1353	Front cylinder no combustion
P1356	Rear cylinder no combustion
P1357	Intermittent secondary front
P1358	Intermittent secondary rear

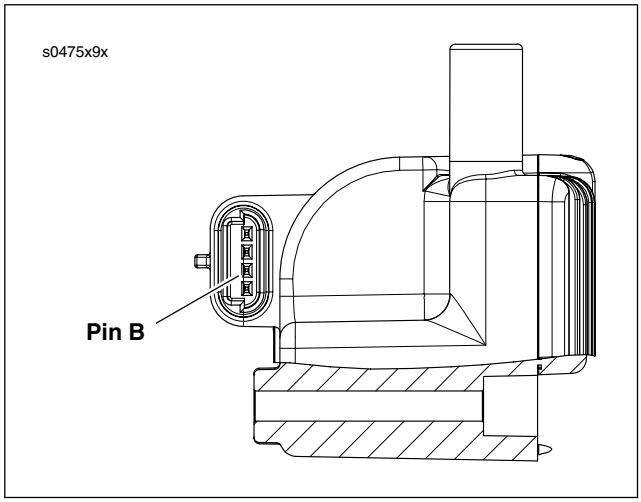

Figure 5-42. Ignition Coil

DIAGNOSTICS

Diagnostic Notes

The reference number below correlates with the circled numbers on the Test 5.18 flow charts.

1. Connect BREAKOUT BOX (Part No. HD-43876) between wire harness and ECM. See Section 5.7 BREAKOUT BOX: EFI.
2. Spark plugs must be correct Harley-Davidson resistor type specified for this model.
3. Use HARNESS CONNECTOR TEST KIT (Part No. HD-41404A), gray pin probes and patch cords.
4. Perform spark plug cable resistance test.
   a. Remove spark plug cable from spark plug and ignition coil. For best results, use a needle nose pliers for removal/installation on coil. Gently grasp cable as close to terminals as possible.
   b. Using an ohmmeter, touch probes to terminals on each end plug wire.
   c. Compare resistance values to Table 5-20. Replace cables not meeting specifications. Reinstall and repeat procedure on other spark plug cable.

Table 5-23. Spark Plug Cables

LOCATION	LENGTH	RESISTANCE
Front/Rear	20.2 inch (513 mm)	4975-11960

HOME

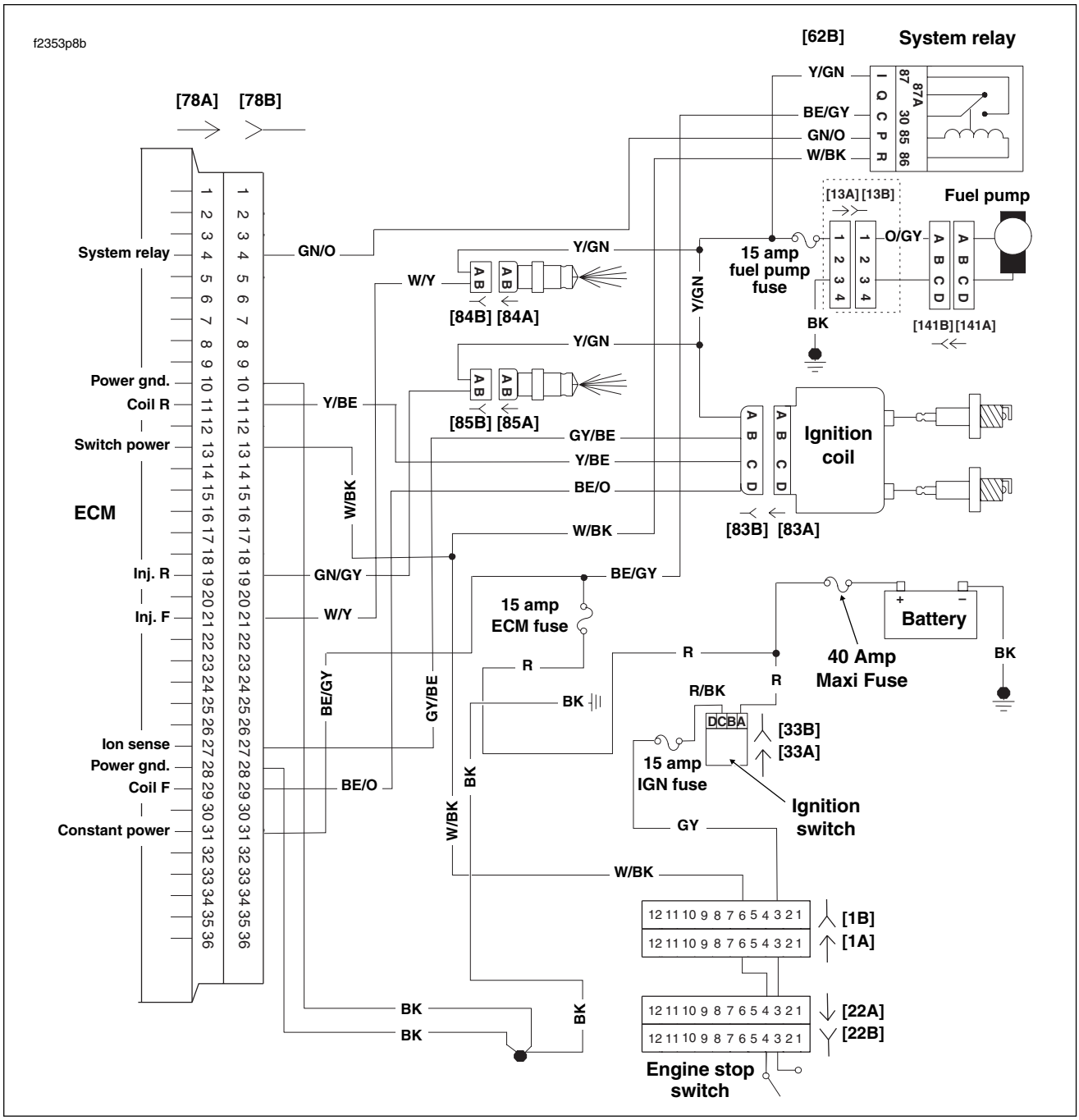

Figure 5-43. Battery Voltage Circuit (FLHX, FLHT/C/U, FLTR)

Table 5-24. Wire Harness Connectors in Figure 5-43.

NO.	DESCRIPTION	TYPE	LOCATION
[1]	Main to Interconnect Harness	12-Place Deutsch (Black)	Inner Fairing (Right Radio Support Bracket)
[22]	Right Handlebar Switches	12-Place Deutsch (Black)	Inner Fairing (Fork Stem Nut Lock Plate)
[33]	Ignition/Light Key Switch	3-Place Packard	Inner Fairing -Under Radio
[78]	ECM	36-Place Packard	Under Right Side Cover
[83]	Ignition Coil	4-Place Delphi	Below Fuel Tank (Left Side)
[84]	Front Injector	2-Place Delphi	Below Fuel Tank (Left Side)
[85]	Rear Injector	2-Place Delphi	Below Fuel Tank (Left Side)

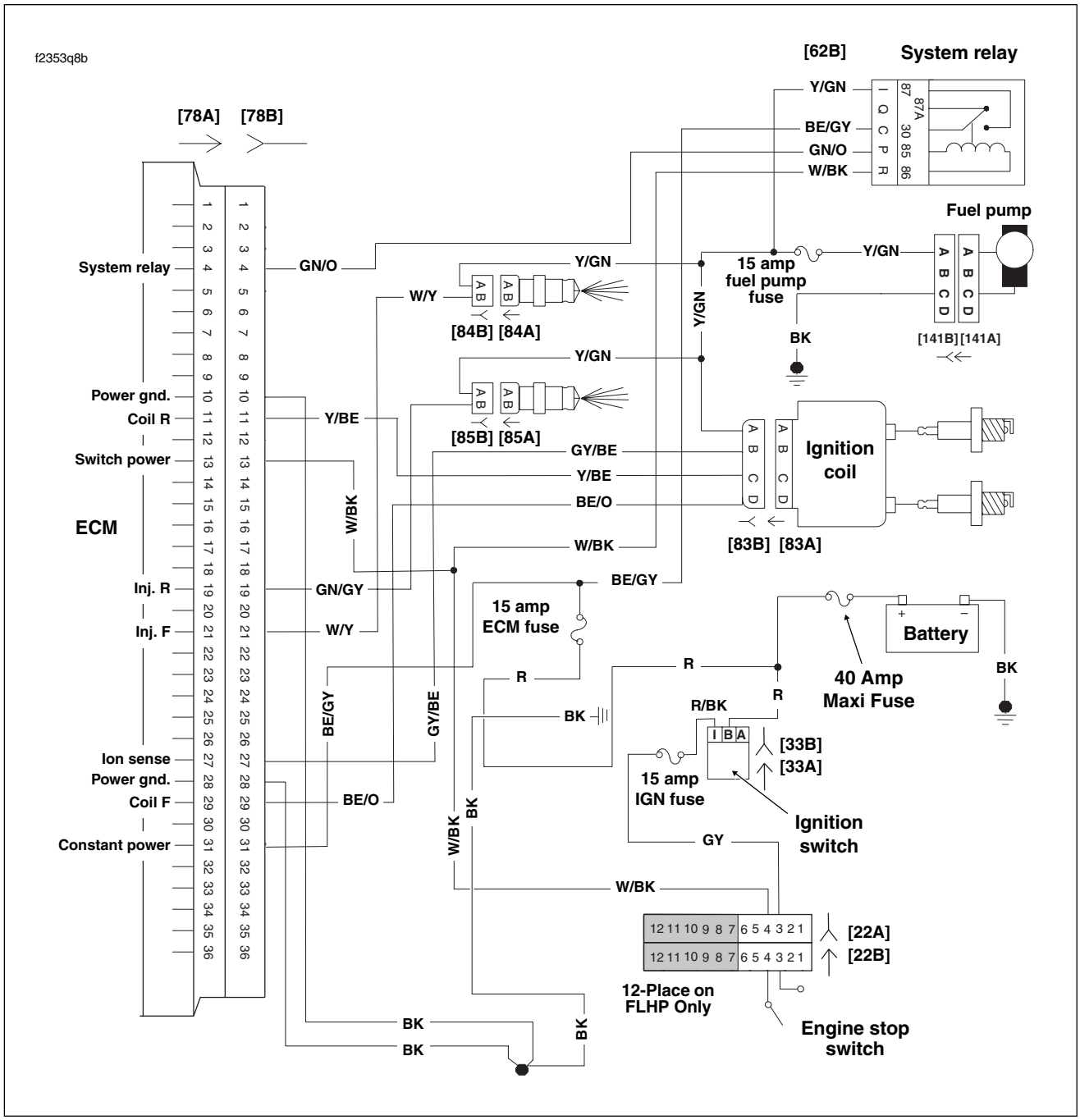

Figure 5-44. Battery Voltage Circuit (FLHR/C/S)

Table 5-25. Wire Harness Connectors in Figure 5-44.

NO.	DESCRIPTION	TYPE	LOCATION
[22]	Right Handlebar Switches	12-Place Deutsch (Black)	Inside Headlamp Nacelle
[33]	Ignition/Light Key Switch	3-Place Packard	Under Console
[78]	ECM	36-Place Packard	Under Right Side Cover
[83]	Ignition Coil	4-Place Delphi	Below Fuel Tank (Left Side)
[84]	Front Injector	2-Place Delphi	Below Fuel Tank (Left Side)
[85]	Rear Injector	2-Place Delphi	Below Fuel Tank (Left Side)

HOME

Test 5.18 (Part 1 of 2)

COMBUSTION ABSENT: DTC P1353, P1356, P1357, P1358

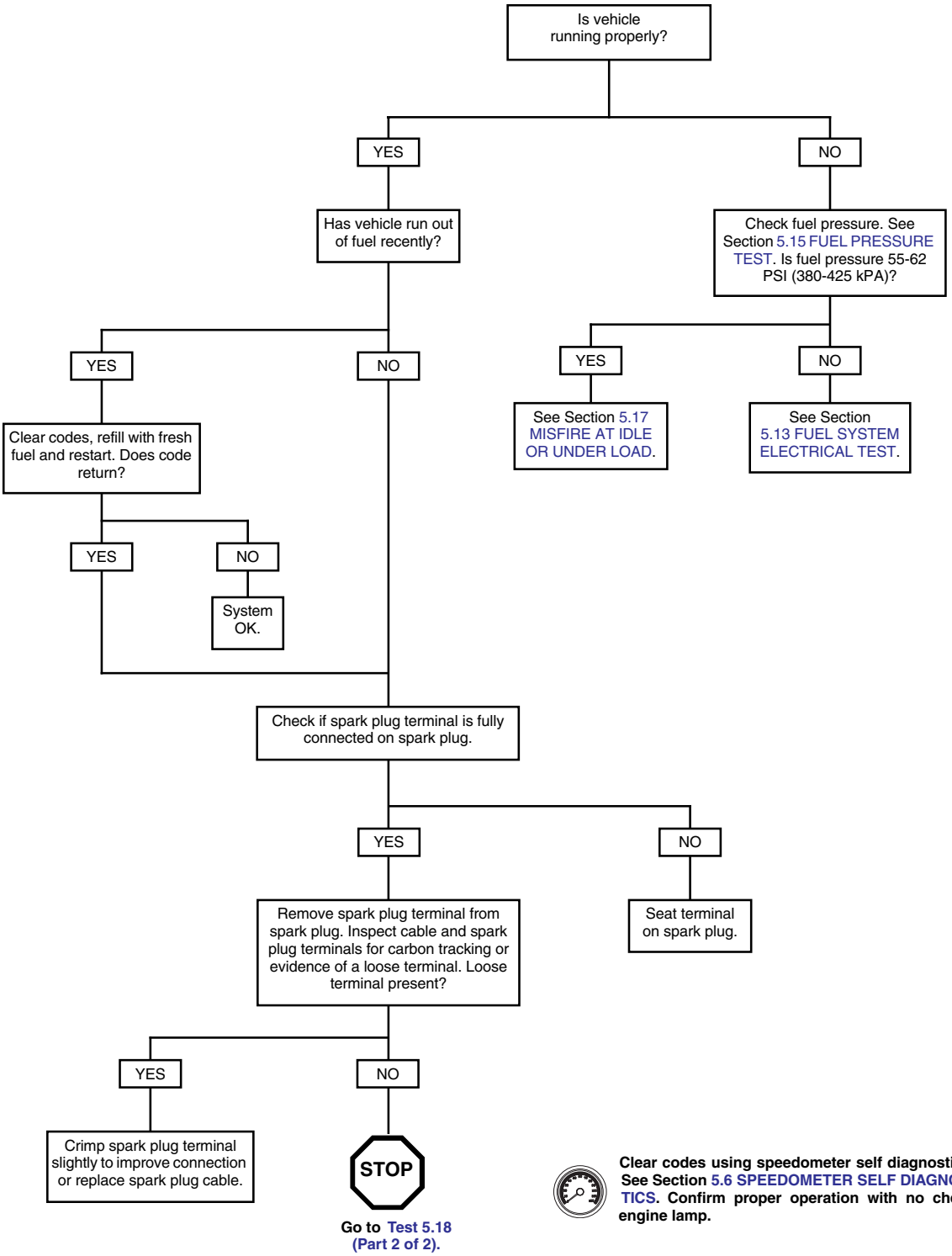

Test 5.18 (Part 2 of 2)

COMBUSTION ABSENT: DTC P1353, P1356, P1357, P1358

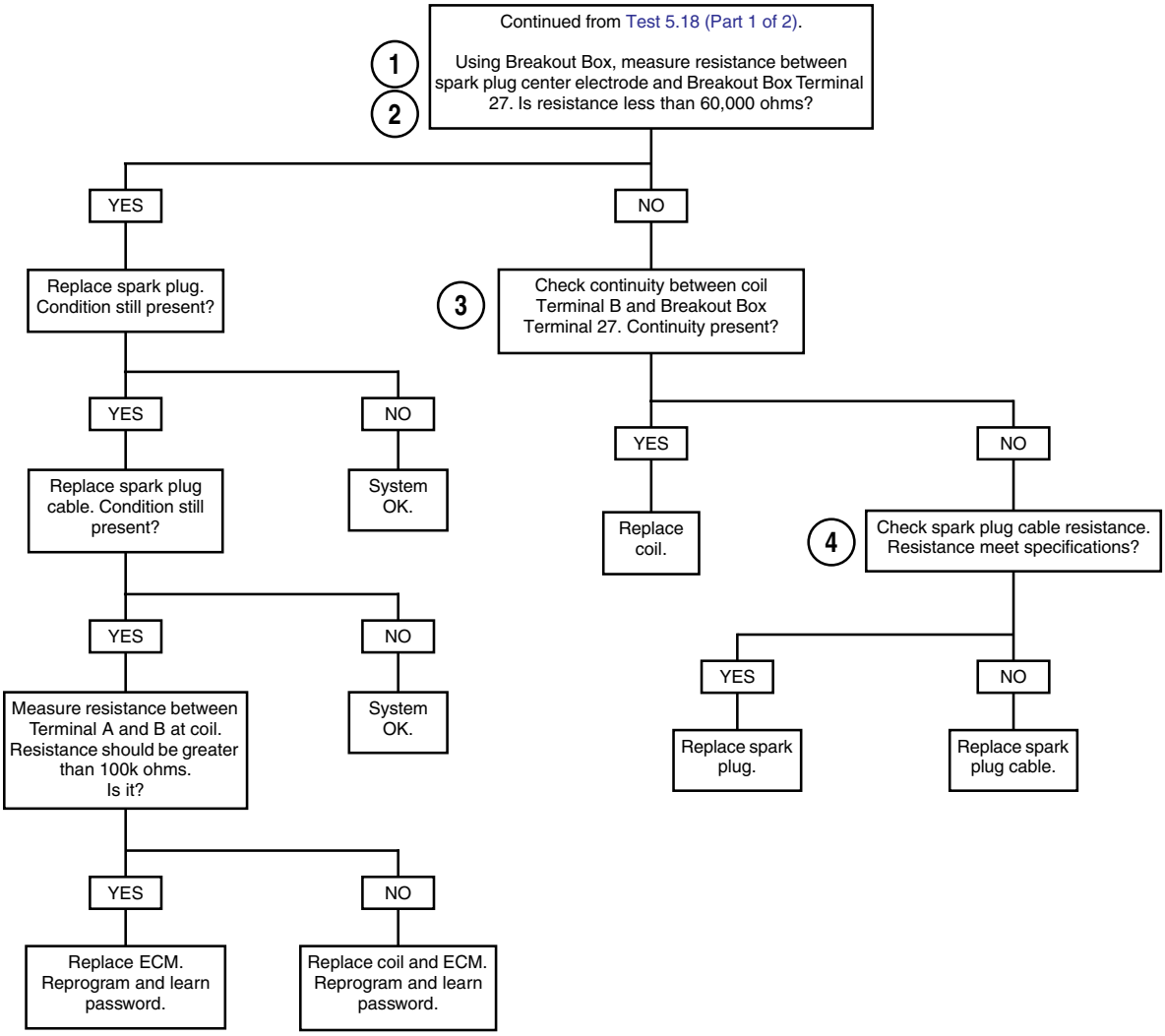

Clear codes using speedometer self diagnostics. See Section 5.6 SPEEDOMETER SELF DIAGNOSTICS. Confirm proper operation with no check engine lamp.

DTC P0107, P0108 5.19

GENERAL

MAP Sensor

See Figure 5-45. The MAP sensor is supplied 5 volts from the ECM (Pin 14) and sends a signal back to the ECM (Pin 25). This signal varies in accordance with engine vacuum and atmospheric barometric pressure. Changes in barometric pressure are influenced by weather and altitude.

Table 5-26. Code Description

DTC	DESCRIPTION
P0107	MAP sensor open/low
P0108	MAP sensor high

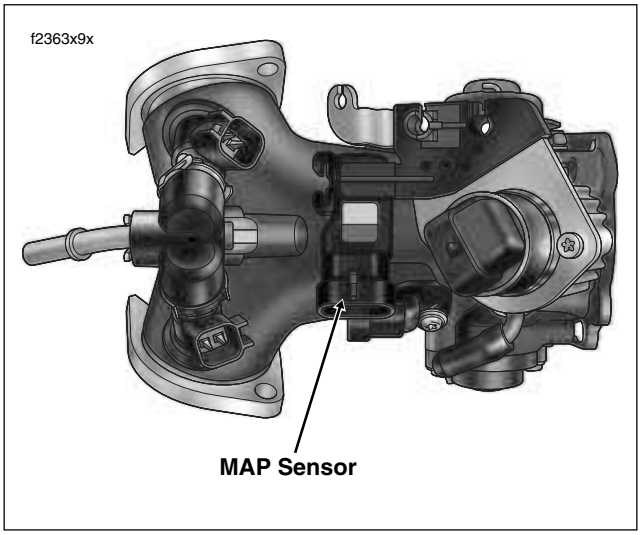

Figure 5-45. Induction Module (Top View)

DIAGNOSTICS

Diagnostic Tips

- These codes will set if the MAP sensor signal is out of range. Code P0108 can only be detected with the engine running.
- MAP sensor output check. Using the VACUUM PUMP (Part No. HD-23738), apply a vacuum to the pressure port of the MAP sensor. The signal voltage should lower as the vacuum is applied.
- The MAP, TP and VSS sensors are connected to the same reference line (+5V Vref). If the reference line goes to ground or open, multiple codes will be set (DTC P0107, P0108, P0122, P0123).

Diagnostic Notes

The reference numbers below correlate with the circled numbers on the Test 5.19 flow charts.

1. Connect BREAKOUT BOX (Part No. HD-43876) between wire harness and ECM. See Section 5.7 BREAKOUT BOX: EFI.
2. Use HARNESS CONNECTOR TEST KIT (Part No. HD-41404A), gray pin probes and patch cords.

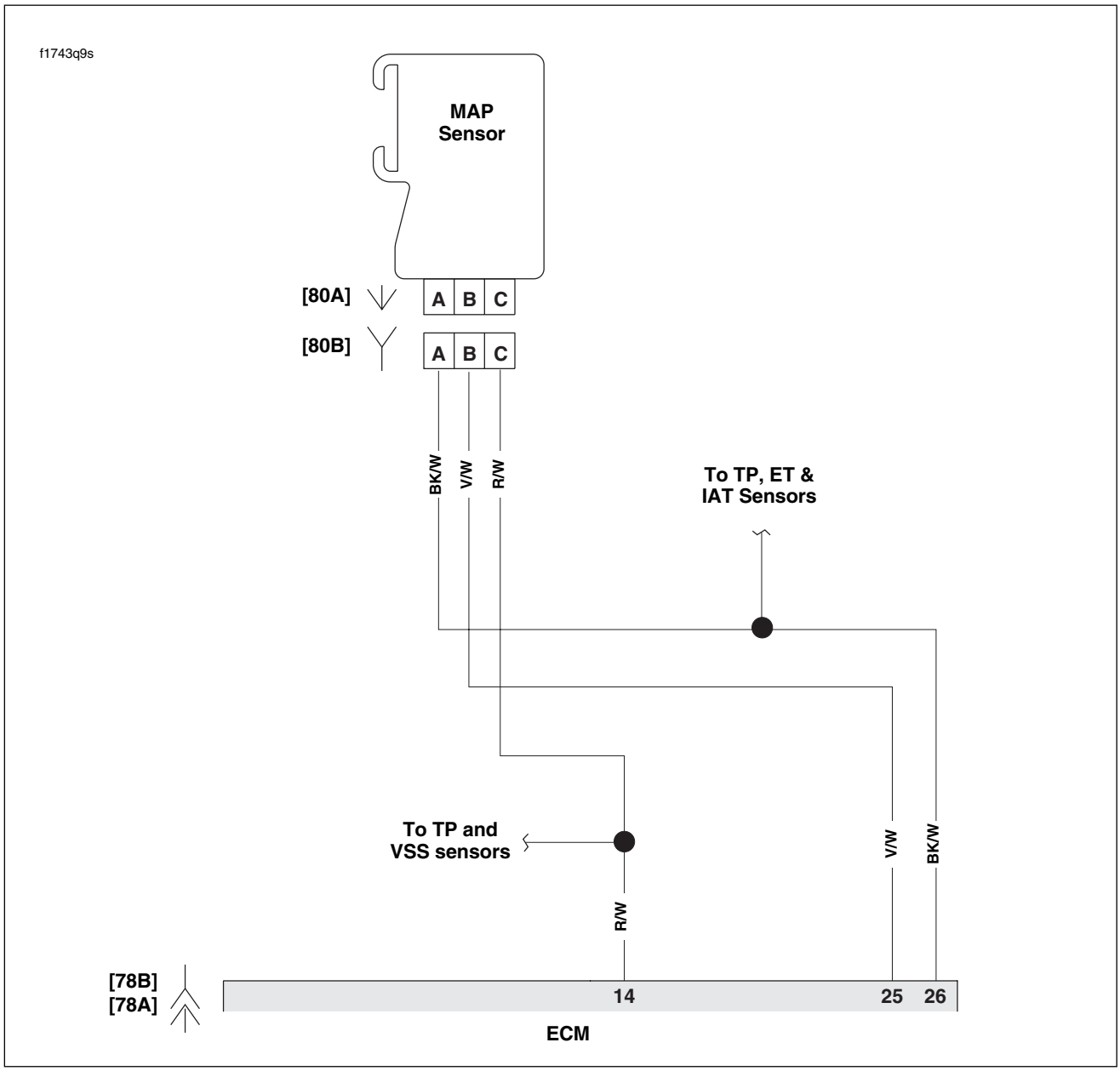

Figure 5-46. MAP Sensor Circuit

Table 5-27. Wire Harness Connectors in Figure 5-46.

NO.	DESCRIPTION	TYPE	LOCATION
[78]	ECM	36-Place Packard	Under Right Side Cover
[80]	MAP Sensor	3-Place Packard	Top of Induction Module

Test 5.19 (Part 1 of 2)

MAP SENSOR: DTC P0107, P0108

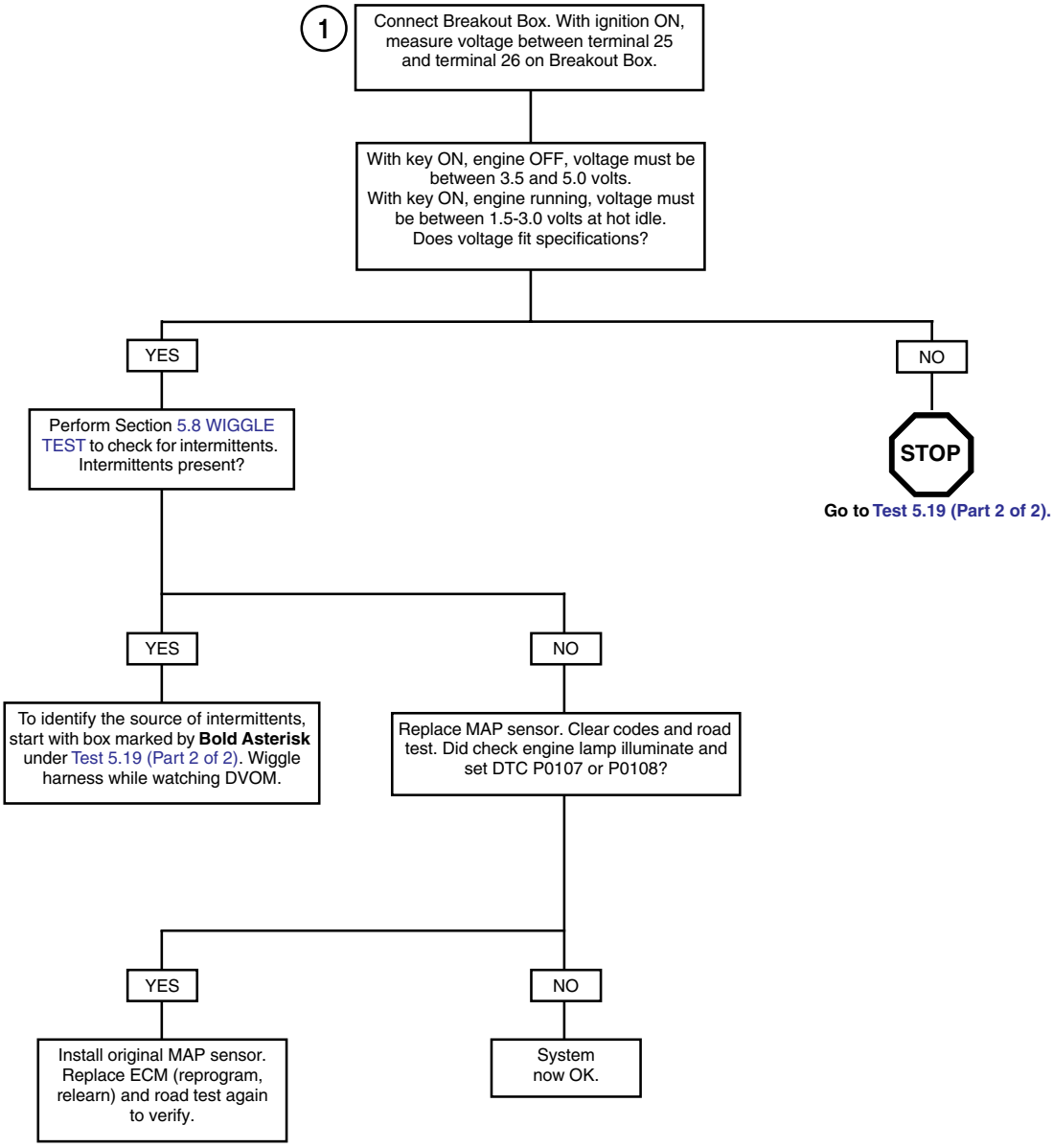

*** At some point in the flow chart you may be instructed to jump directly to a the box with the bold asterisk. Disregard the asterisk (but not the instruction box) if your normal progression through the chart brings you to this location.**

Clear codes using speedometer self diagnostics. See Section 5.6 SPEEDOMETER SELF DIAGNOSTICS. Confirm proper operation with no check engine lamp.

Test 5.19 (Part 2 of 2)

MAP SENSOR: DTC P0107, P0108

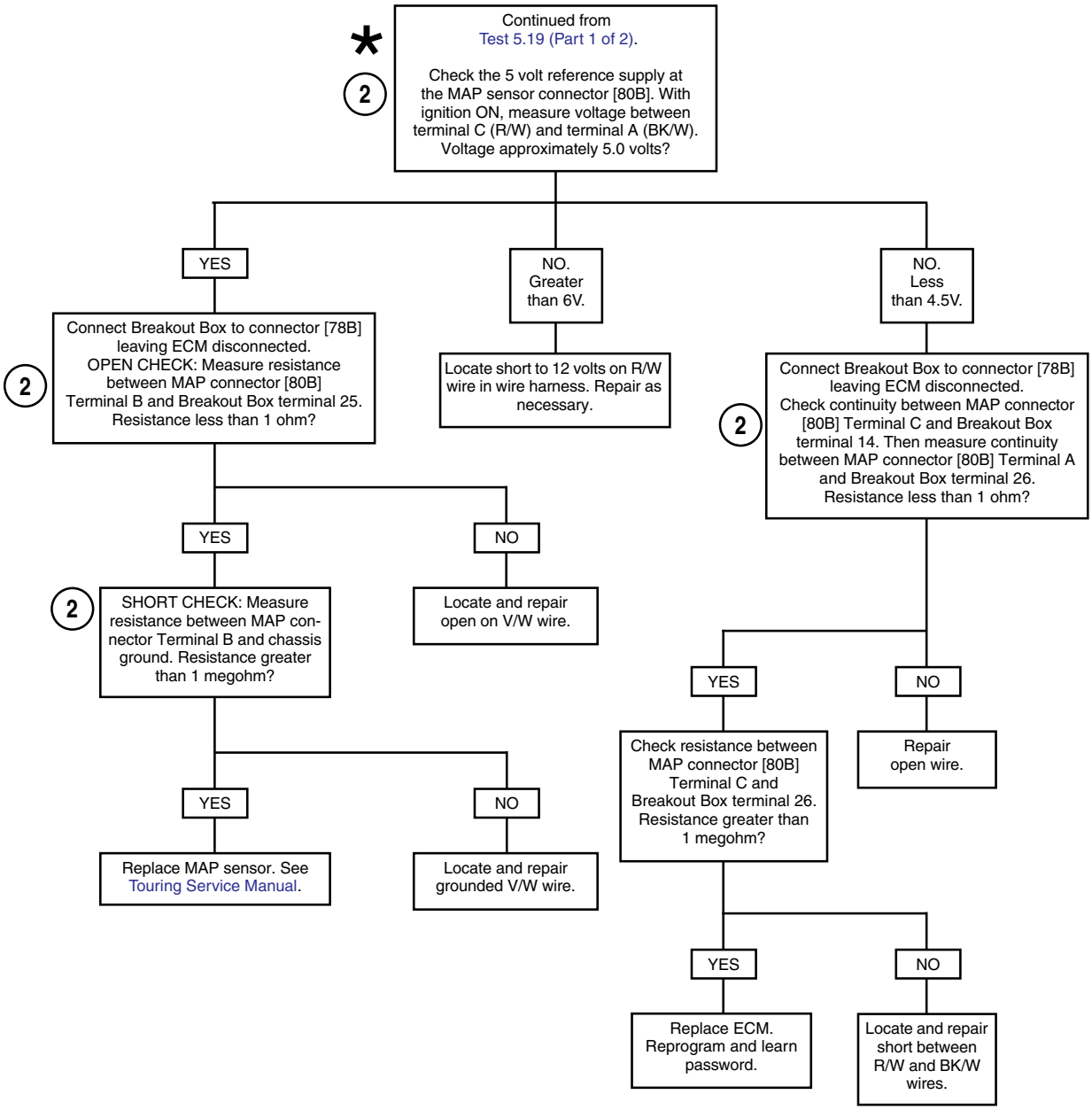

Clear codes using speedometer self diagnostics. See Section 5.6 SPEEDOMETER SELF DIAGNOSTICS. Confirm proper operation with no check engine lamp.

*** At some point in the flow chart you may be instructed to jump directly to a the box with the bold asterisk. Disregard the asterisk (but not the instruction box) if your normal progression through the chart brings you to this location.**

DTC P0112, P0113 5.20

GENERAL

IAT Sensor

The ECM supplies and monitors a voltage signal (terminal 7) to one side of the IAT sensor. The other side of the IAT sensor is connected to a common sensor ground, which is also connected to the ECM (terminal 26).

The IAT sensor is a thermistor device, meaning that at a specific temperature, it will have a specific resistance across its terminals. As this resistance varies, so does the voltage on (terminal 7).

- At high temperatures, the resistance of the sensor is very low, which effectively lowers the signal voltage on terminal 7.
- At low temperatures, the resistance is very high, allowing the voltage to rise close to 5 volts.

The ECM monitors this voltage to compensate for various operating conditions.

Table 5-28. Code Description

DTC	DESCRIPTION
P0112	IAT sensor voltage low
P0113	IAT sensor open/high

Table 5-29. IAT Sensor Table

TEMP °C	RESISTANCE	VOLTAGE	TEMP °F
-20	29121	4.9	-4
-10	16599	4.8	14
0	9750	4.6	32
10	5970	4.3	50
20	3747	4.0	68
25	3000	3.8	77
30	2417	3.6	86
40	1598	3.1	104
50	1080	2.6	122
60	746	2.2	140
70	526	1.7	158
80	377	1.4	176
90	275	1.1	194
100	204	0.9	212

DIAGNOSTICS

Diagnostic Tips

An intermittent may be caused by a poor connection, rubbed through wire insulation or a wire broken inside the insulation.

Check the following conditions:

- **Poor connection:** Inspect ECM and harness connector [78] for backed out terminals, improper mating, broken locks, improperly formed or damaged terminals, poor terminal-to-wire connection and damaged harness.
- **Perform** Section 5.8 WIGGLE TEST **to locate intermittents:** If connections and harness check out OK, use a DVOM to check the IAT sensor voltage reading while moving related connectors and wiring harness. If the failure is induced, the IAT sensor voltage reading will change.
- **Shifted sensor:** Refer to Table 5-29. This table may be used to test the IAT sensor at various temperature levels in order to evaluate the possibility of a shifted (out-of-calibration) sensor which may result in driveability problems.

NOTE

All voltage and resistance values are approximate (±20%). Measure IAT sensor resistance between ECM Terminal 7 and system ground (ECM Terminal 26).

Diagnostic Notes

The reference numbers below correlate with the circled numbers on the Test 5.20 flow charts.

1. Connect BREAKOUT BOX (Part No. HD-43876) to EFI wire harness **only** (leave ECM disconnected). See Section 5.7 BREAKOUT BOX: EFI.
2. Use HARNESS CONNECTOR TEST KIT (Part No. HD-41404A), gray pin probes and patch cords.
3. Use HARNESS CONNECTOR TEST KIT (Part No. HD-41404A), gray socket probes and patch cords.
4. Replace IAT sensor. See Touring Service Manual.

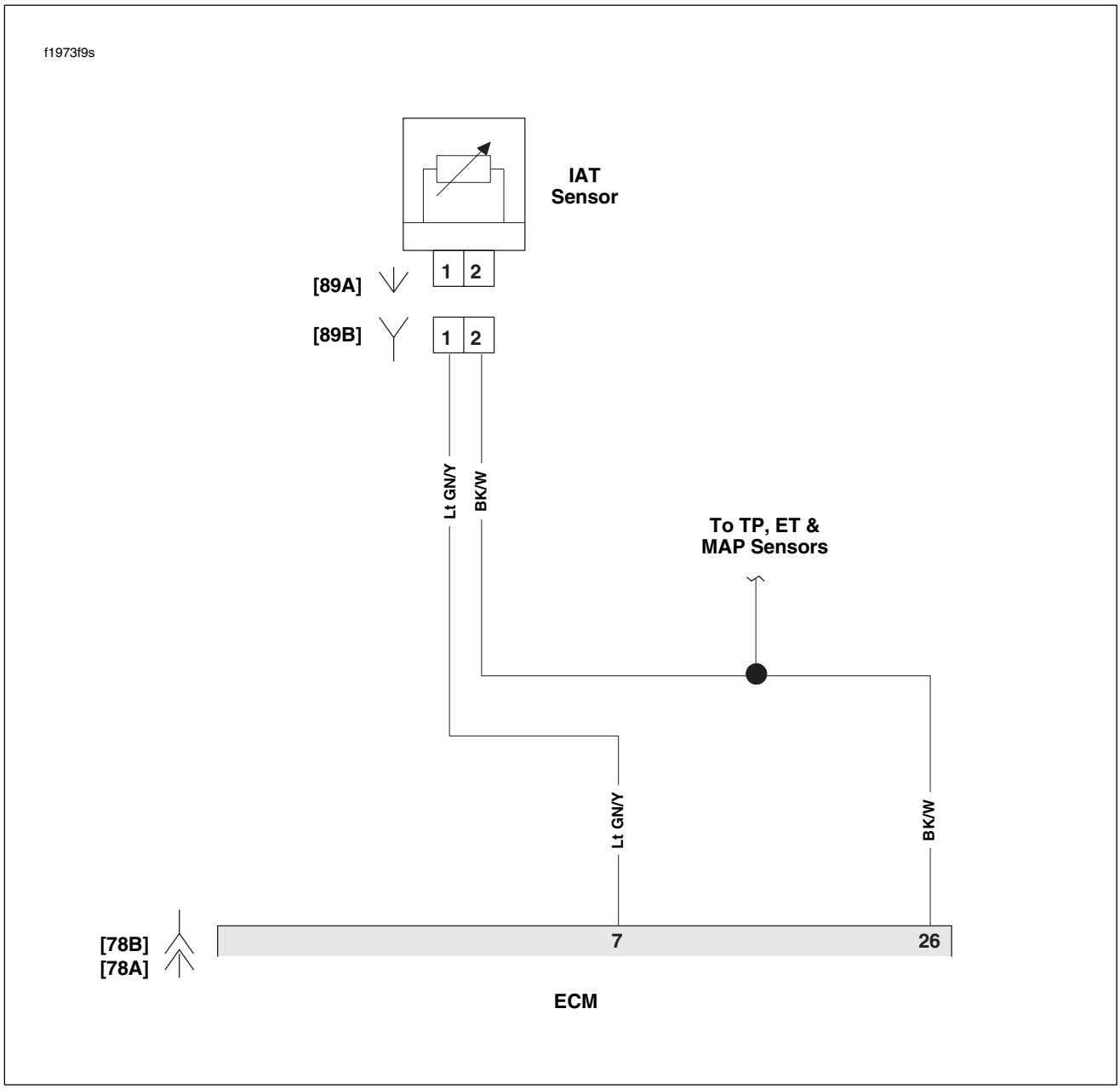

Figure 5-47. IAT Sensor Circuit

Table 5-30. Wire Harness Connectors in Figure 5-47.

NO.	DESCRIPTION	TYPE	LOCATION
[78]	ECM	36-Place Packard	Under Right Side Cover
[89]	IAT Sensor	2-Place Delphi	Below Fuel Tank (Right Side)

Test 5.20 (Part 1 of 2)

IAT SENSOR: DTC P0112, P0113

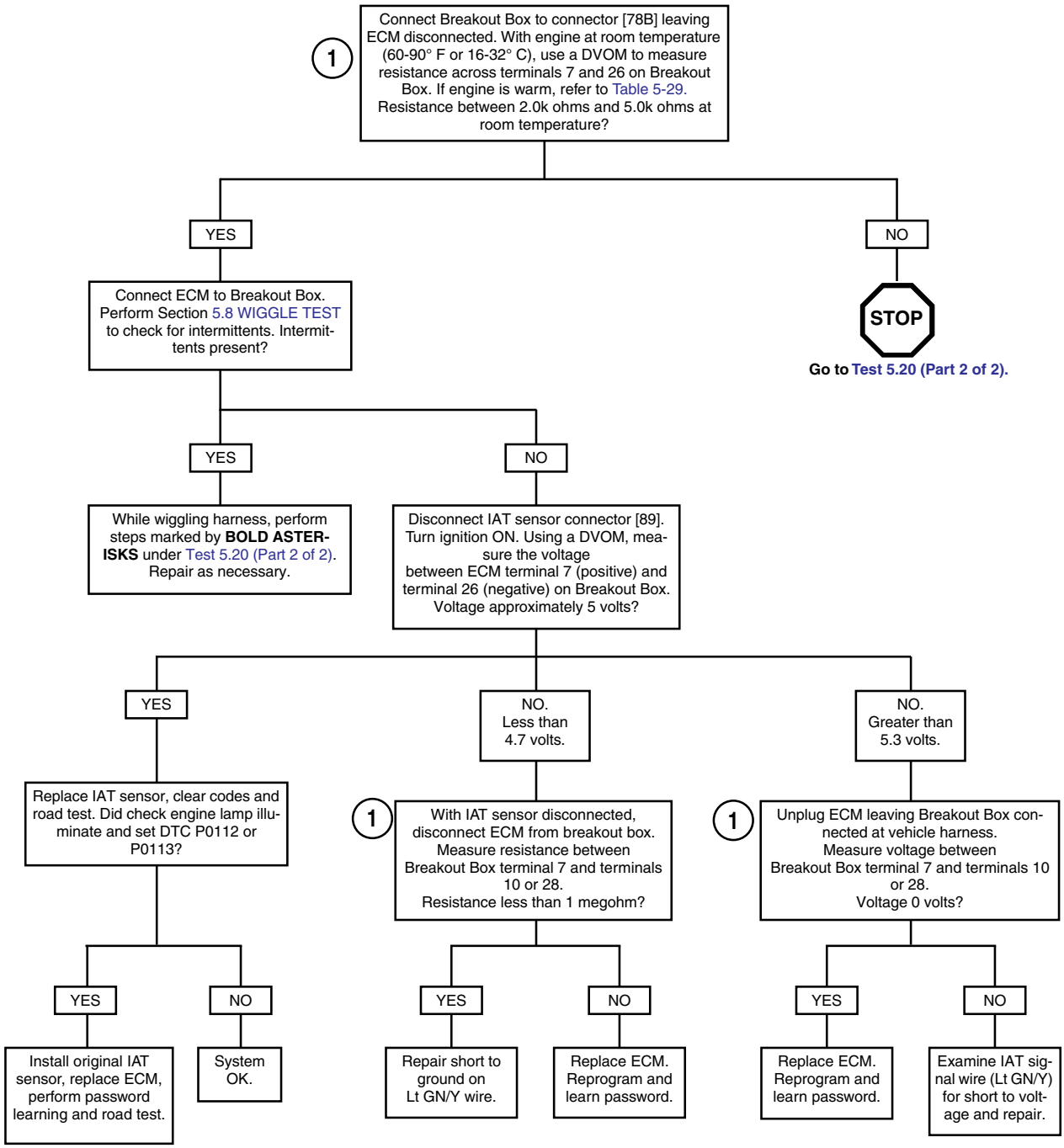

Clear codes using speedometer self diagnostics. See Section 5.6 SPEEDOMETER SELF DIAGNOSTICS. Confirm proper operation with no check engine lamp.

*** At some point in the flow chart you may be instructed to jump directly to a the box with the bold asterisk. Disregard the asterisk (but not the instruction box) if your normal progression through the chart brings you to this location.**

Test 5.20 (Part 2 of 2)

IAT SENSOR: DTC P0112, P0113

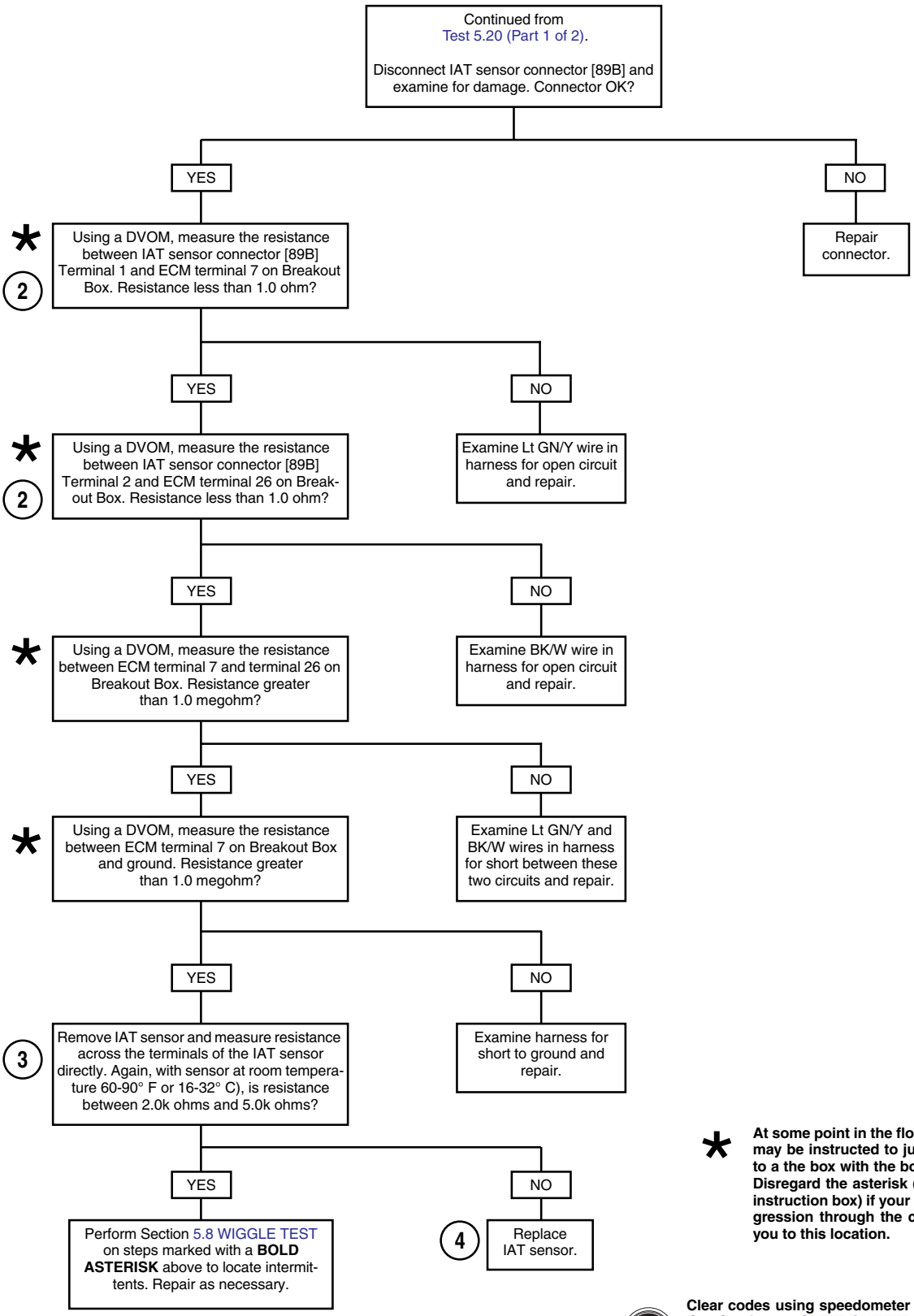

*** At some point in the flow chart you may be instructed to jump directly to a the box with the bold asterisk. Disregard the asterisk (but not the instruction box) if your normal progression through the chart brings you to this location.**

Clear codes using speedometer self diagnostics. See Section 5.6 SPEEDOMETER SELF DIAGNOSTICS. Confirm proper operation with no check engine lamp.

DTC P0117, P0118 5.21

GENERAL

ET Sensor

The ECM supplies and monitors a voltage signal (terminal 6) to one side of the ET sensor. The other side of the ET sensor is connected to a common sensor ground (terminal 26) of the ECM.

The ET sensor is a thermistor device, which means that at a specific temperature it will have a specific resistance across its terminals. As this resistance varies, so does the voltage (terminal 6).

- At high temperatures, the resistance of the sensor is very low, which effectively lowers the signal voltage on terminal 6.
- At low temperatures, the resistance is very high, allowing the voltage to rise close to 5 volts.

The ECM monitors this voltage to compensate for various operating conditions. The ECM also uses the sensor input as a reference for determining IAC pintle position.

Table 5-31. Code Description

DTC	DESCRIPTION
P0117	ET sensor voltage low
P0118	ET sensor open/high

Table 5-32. ET Sensor Table

TEMP °C	RESISTANCE	VOLTAGE	TEMP °F
-20	28144	4.4	-4
-10	15873	4.0	14
0	9255	3.5	32
10	5571	3.0	50
20	3457	2.4	68
25	2750	2.1	77
30	2205	1.8	86
40	1442	1.3 or 4.1*	104
50	965	1.0 or 3.7*	122
60	661	3.3	140
70	462	2.9	158
80	329	2.5	176
90	238	2.1	194
100	175	1.7	212

* Between 40-50°C the ECM changes scaling. Voltages for ECT sensor will shift scales in that range. This provides proper sensor resolution for all temperatures.

DIAGNOSTICS

Diagnostic Tips

- Once the engine is started, the ET voltage should rise steadily.
- An intermittent may be caused by a poor connection, rubbed through wire insulation or a wire broken inside the insulation.

Check the following conditions:

- **Poor connection:** Inspect ECM and harness connector [78] for backed out terminals, improper mating, broken locks, improperly formed or damaged terminals, poor terminal-to-wire connection and damaged harness.
- **Perform** Section 5.8 WIGGLE TEST **to locate intermittents:** If connections and harness check out OK, use a DVOM to check the ET sensor voltage reading while moving related connectors and wiring harness. If the failure is induced, the ET sensor voltage reading will change.
- **Shifted sensor:** Refer to Table 5-32. This table may be used to test the ET sensor at various temperature levels in order to evaluate the possibility of a shifted (out-of-calibration) sensor which may result in driveability problems.

NOTE

All voltage and resistance values are approximate (±20%). Measure ET sensor resistance between ECM Terminal 6 and system ground (ECM Terminal 26).

Diagnostic Notes

The reference numbers below correlate with the circled numbers on the Test 5.21 flow charts.

1. Connect BREAKOUT BOX (Part No. HD-43876) to EFI wire harness **only** (leave ECM disconnected). See Section 5.7 BREAKOUT BOX: EFI.
2. Use HARNESS CONNECTOR TEST KIT (Part No. HD-41404A), gray pin probes and patch cords.
3. Use HARNESS CONNECTOR TEST KIT (Part No. HD-41404A), gray socket probes and patch cords.
4. Replace ET sensor. See Touring Service Manual.

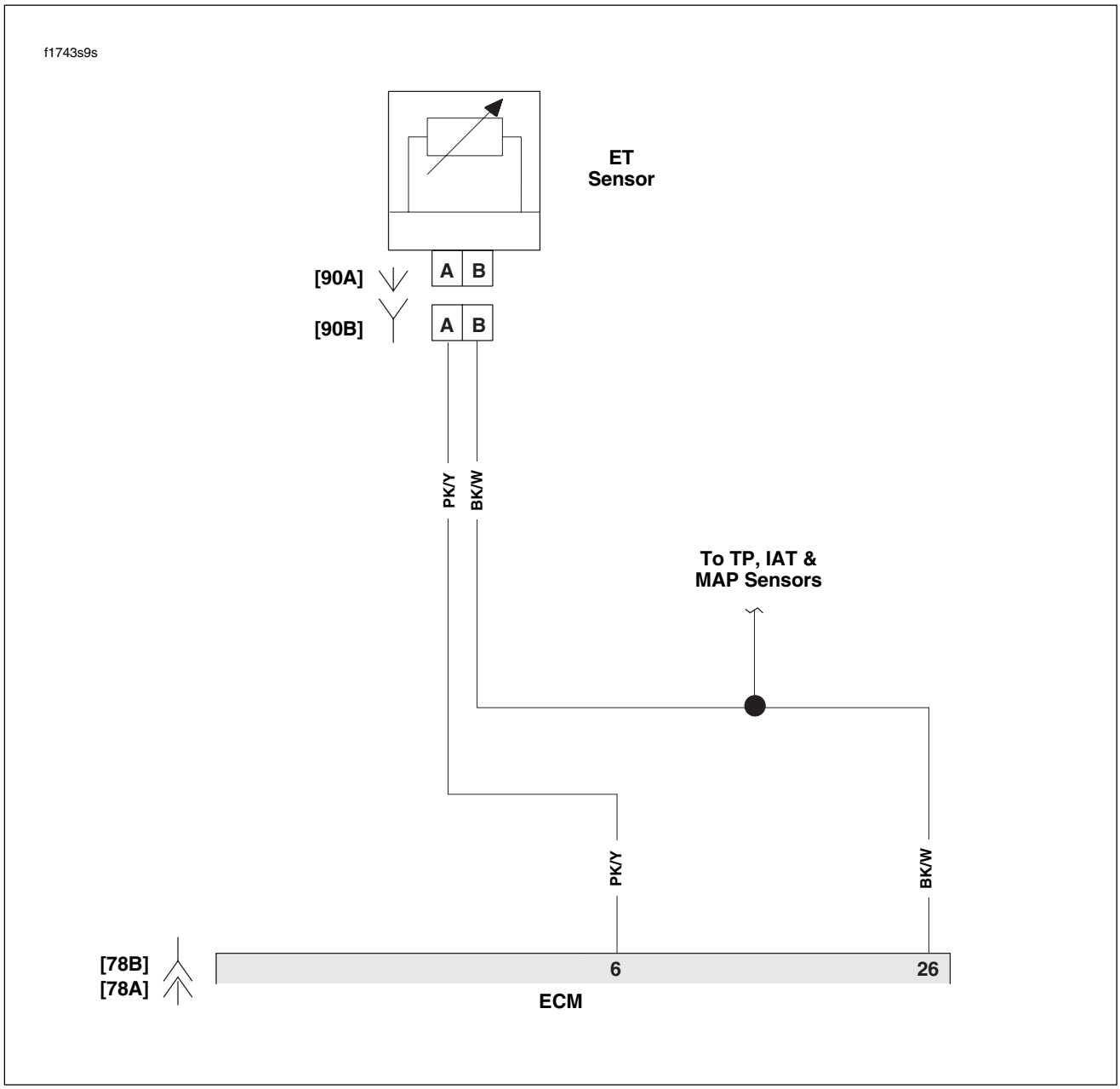

Figure 5-48. ET Sensor Circuit

Table 5-33. Wire Harness Connectors in Figure 5-48.

NO.	DESCRIPTION	TYPE	LOCATION
[78]	ECM	36-Place Packard	Under Right Side Cover
[90]	ET Sensor	2-Place Delphi	Back of Front Cylinder (Left Side)

Test 5.21 (Part 1 of 2)

ET SENSOR: DTC P0117, P0118

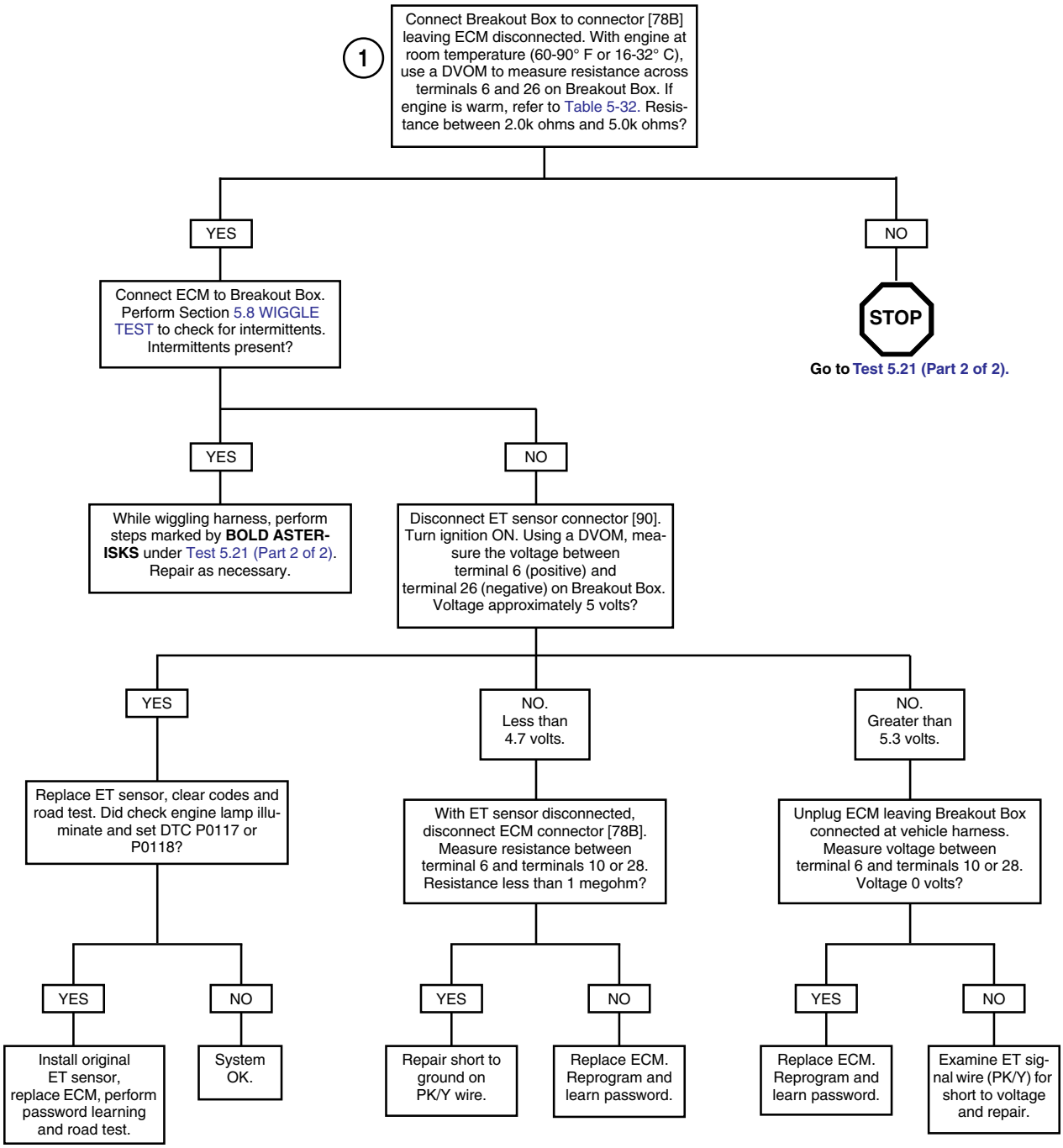

Clear codes using speedometer self diagnostics. See Section 5.6 SPEEDOMETER SELF DIAGNOSTICS. Confirm proper operation with no check engine lamp.

*** At some point in the flow chart you may be instructed to jump directly to a the box with the bold asterisk. Disregard the asterisk (but not the instruction box) if your normal progression through the chart brings you to this location.**

Test 5.21 (Part 2 of 2)

ET SENSOR: DTC P0117, P0118

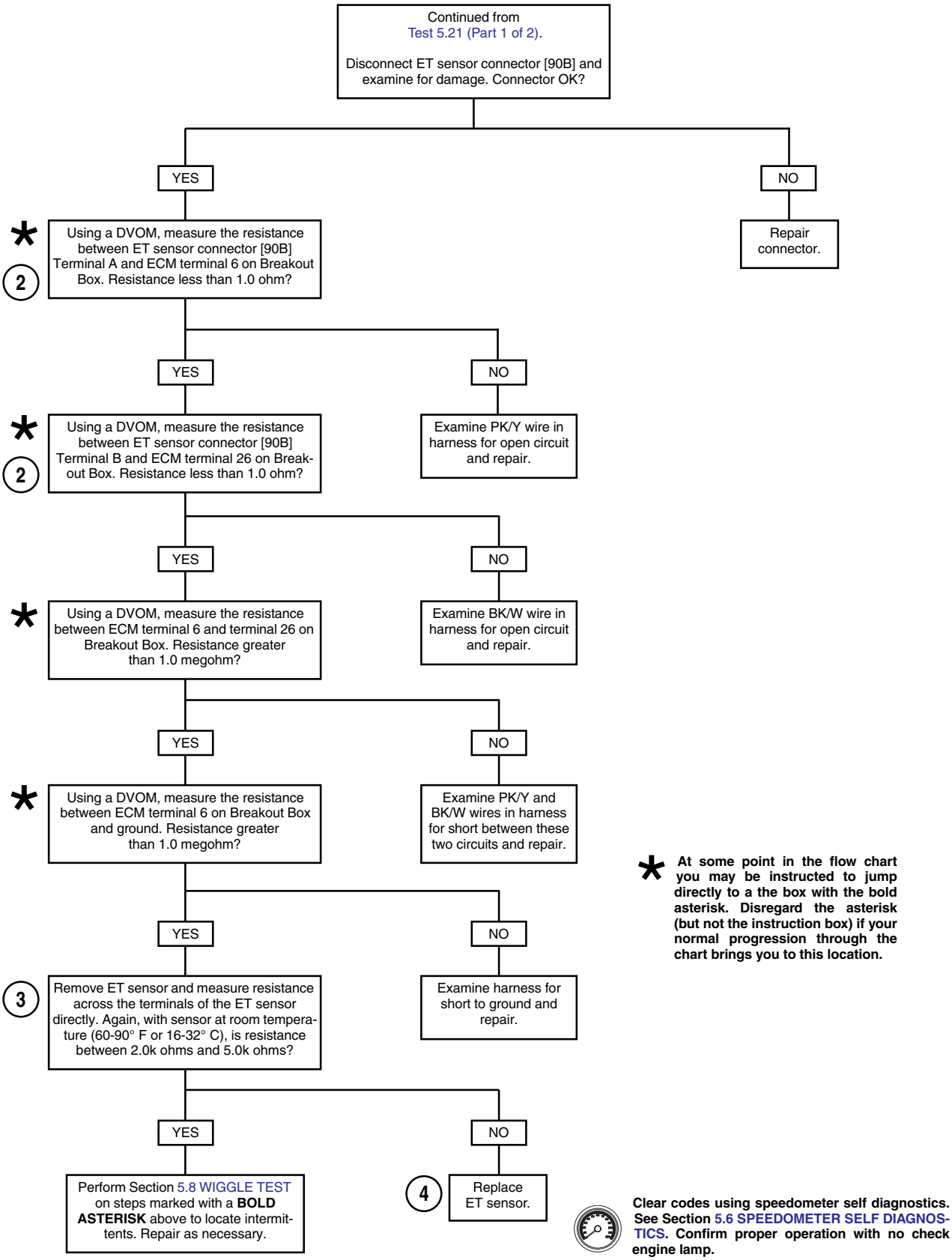

DTC P0122, P0123 5.22

GENERAL

TP Sensor

The ECM supplies a 5 volt signal (terminal 14) to the TP sensor. The TP sensor sends a signal back to the ECM (terminal 24). The returned signal varies in voltage according to throttle position.

- At idle (closed throttle), the signal is typically in the range of 0.20-0.80 volts.
- At wide open throttle, the signal is normally 4.0-4.9 volts.

A code P0122 or P0123 will set if the TP sensor voltage signal does not fall within the acceptable range.

- Check TP sensor voltage reading with DVOM. If TP sensor is equal to or greater than 3.8 volts then the system is in “clear flood” mode and engine will not start. While spark is present, fuel is shut off. Problem can be mechanical, such as stuck throttle cables.

Table 5-34. Code Description

DTC	DESCRIPTION
P0122	TP sensor open/low
P0123	TP sensor high

DIAGNOSTICS

Diagnostic Tips

The DVOM reads throttle position in volts. Voltage should increase at a steady rate as the throttle is moved from idle to wide open. A short to ground or open on the GY/V or R/W wires also will result in a DTC P0122. A short to ground or open on the R/W wire (+5v REF) sets multiple codes as described below.

NOTE

The MAP, TP and VSS sensors are connected to the same reference line (+5V Vref). If the reference line goes to ground or open, multiple codes will be set (DTC P0107, P0108, P0122, P0123, P0501, P0502). Start with the trouble code having the lowest ranking value.

Check for the following conditions:

- **Poor Connection:** Inspect ECM and harness connector [78B] for backed out terminals, improper mating, broken locks, improperly formed or damaged terminals, poor terminal-to-wire connection and damaged harness.
- **Perform** Section 5.8 WIGGLE TEST **to locate intermittents:** If connections and harness check out OK, monitor TP sensor voltage using a DVOM while moving related connectors and wiring harness. If the failure is induced, the TP sensor voltage reading will change.
- **TP sensor scaling:** Observe the TP sensor voltage display while opening the throttle with engine stopped and ignition key ON. Display should vary from closed throttle TP sensor voltage (when throttle is closed) to greater than 4.0 volts (when throttle is held wide open). As the throttle is **slowly** moved, the voltage should change gradually without spikes or low voltages being observed.

Diagnostic Notes

The reference numbers below correlate with the circled numbers on the Test 5.22 flow charts.

1. Connect a BREAKOUT BOX (Part No. HD-43876) between EFI wire harness and ECM before measuring voltage. See Section 5.7 BREAKOUT BOX: EFI. If using a DVOM to measure voltage, take reading across terminal 24 (positive lead) and terminal 26 (negative lead) on Breakout Box.
2. Replace TP sensor. See Touring Service Manual.
3. Use HARNESS CONNECTOR TEST KIT (Part No. HD-41404A), gray pin probes and patch cords.

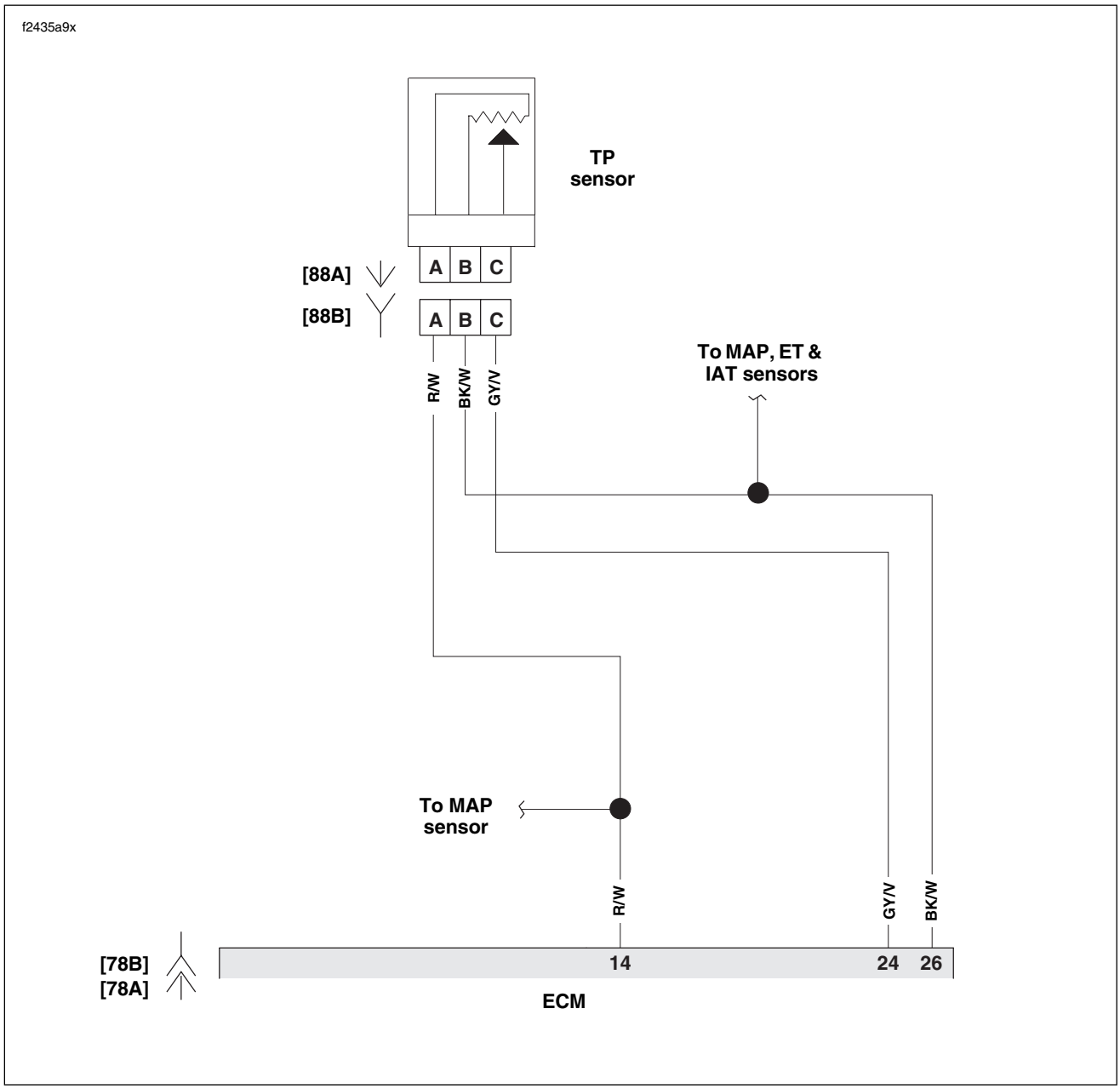

Figure 5-49. TP Sensor Circuit

Table 5-35. Wire Harness Connectors in Figure 5-49.

NO.	DESCRIPTION	TYPE	LOCATION
[78]	ECM	36-Place Packard	Under Right Side Cover
[88]	TP Sensor	3-Place Delphi	Below Fuel Tank (Right Side)

Test 5.22 (Part 1 of 2)

TP SENSOR: DTC P0122, P0123

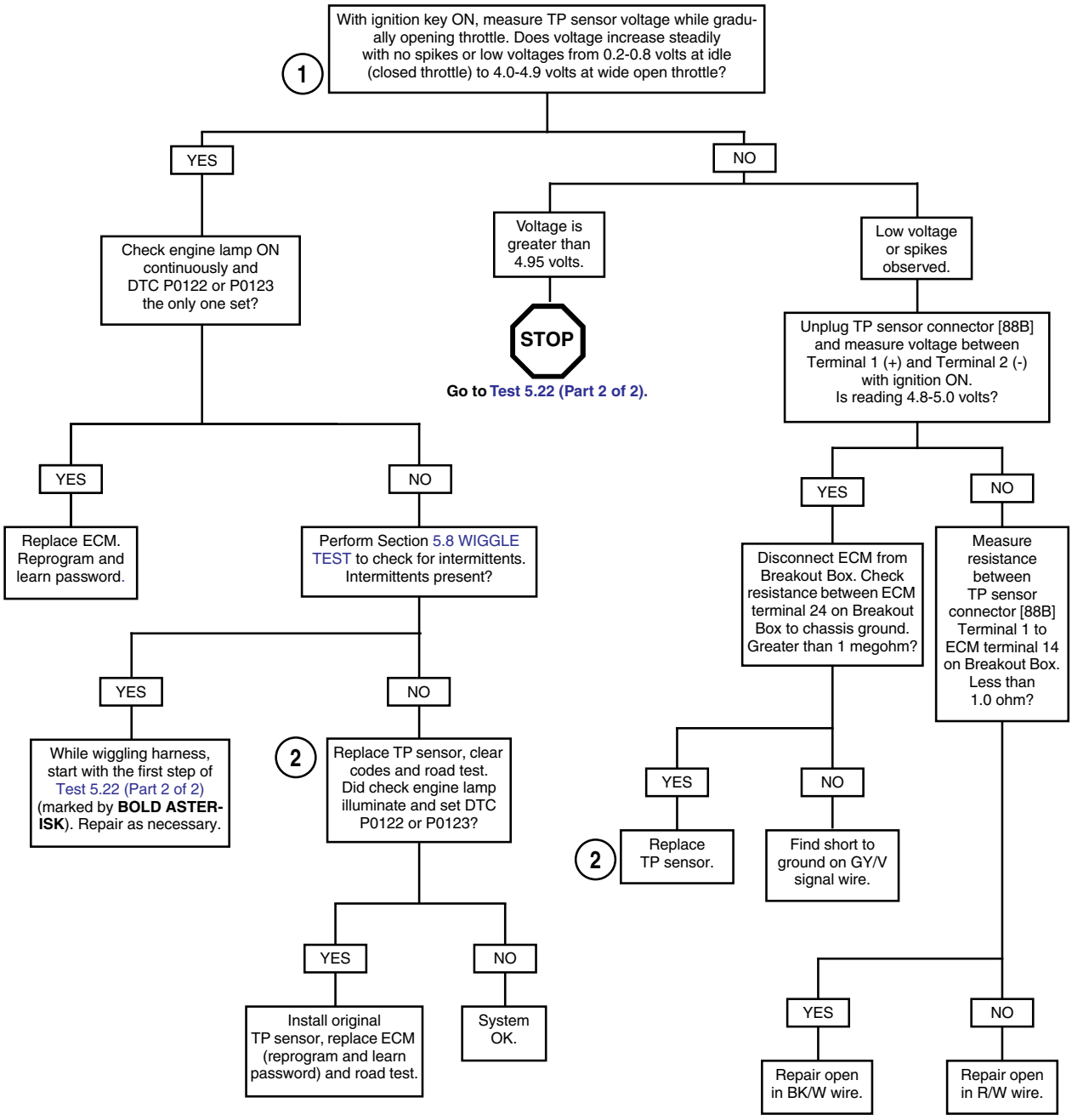

Clear codes using speedometer self diagnostics. See Section 5.6 SPEEDOMETER SELF DIAGNOSTICS. Confirm proper operation with no check engine lamp.

*** At some point in the flow chart you may be instructed to jump directly to a the box with the bold asterisk. Disregard the asterisk (but not the instruction box) if your normal progression through the chart brings you to this location.**

Test 5.22 (Part 2 of 2)

TP SENSOR: DTC P0122, P0123

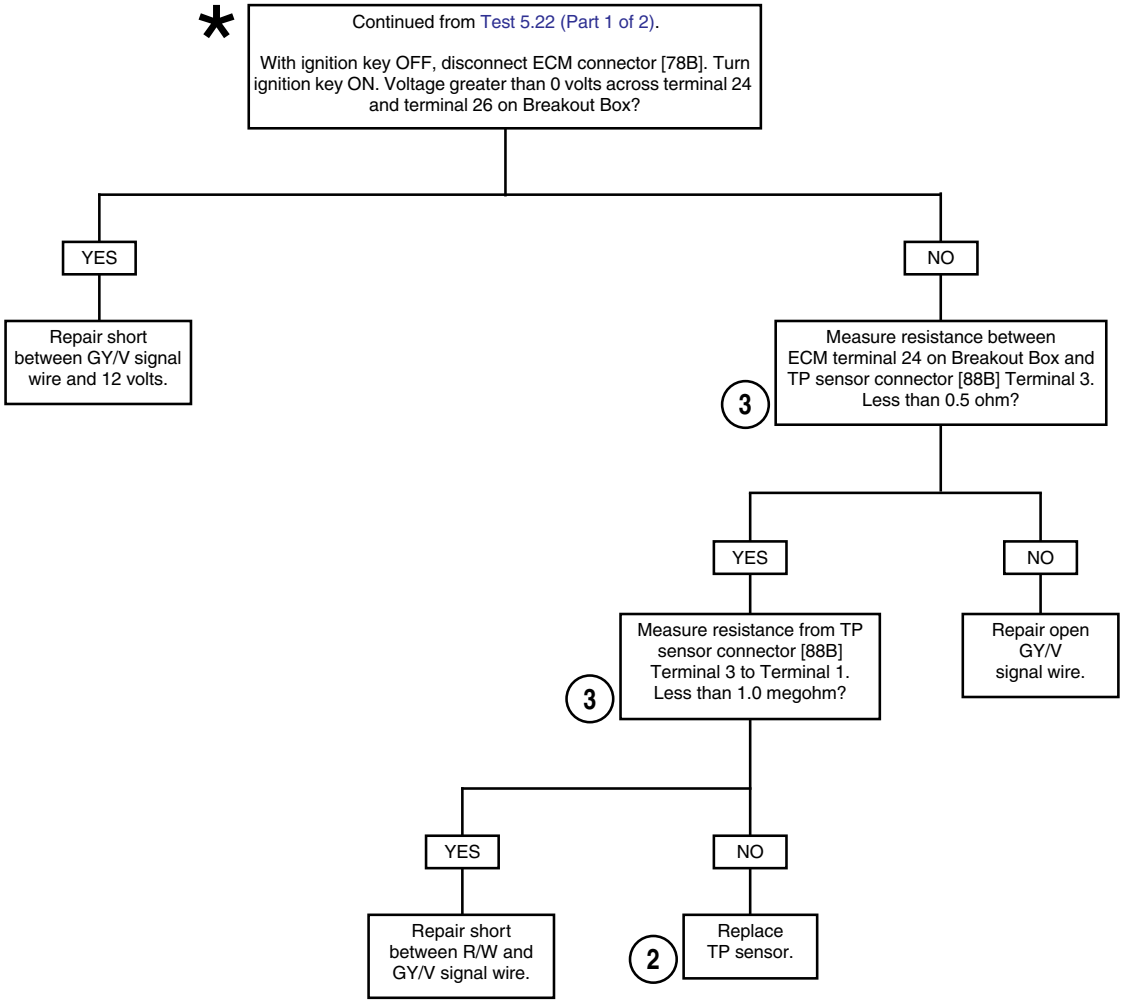

Clear codes using speedometer self diagnostics. See Section 5.6 SPEEDOMETER SELF DIAGNOSTICS. Confirm proper operation with no check engine lamp.

*** At some point in the flow chart you may be instructed to jump directly to a the box with the bold asterisk. Disregard the asterisk (but not the instruction box) if your normal progression through the chart brings you to this location.**

DTC P0261, P0262, P0263, P0264 5.23

GENERAL

Fuel Injectors

The fuel injectors are solenoids that allow pressurized fuel into the intake tract. The injectors are timed to the engine cycle and triggered sequentially. The power for the injectors comes from the system relay. The system relay also provides power for the fuel pump and the ignition coil. The ECM provides the path to ground to trigger the injectors.

NOTE

ECM fuse and system relay failures or wiring harness problems will cause 12 volt power to be lost to both injectors, ignition coils and fuel pump.

Table 5-36. Code Description

DTC	DESCRIPTION
P0261	Front injector open/low
P0262	Front injector high
P0263	Rear injector open/low
P0264	Rear injector high

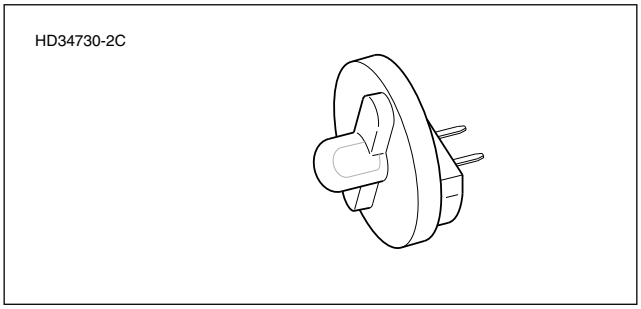

Figure 5-50. Fuel Injector Test Lamp (Part No. HD-34730-2C)

DIAGNOSTICS

Diagnostic Notes

The reference numbers below correlate with the circled numbers on the Test 5.23 flow charts.

1. See Touring Service Manual for all service information.
2. Use HARNESS CONNECTOR TEST KIT (Part No. HD-41404A), purple pin probe and patch cord.
3. Connect a BREAKOUT BOX (Part No. HD-43876) between EFI wire harness and ECM. See Section 5.7 BREAKOUT BOX: EFI.

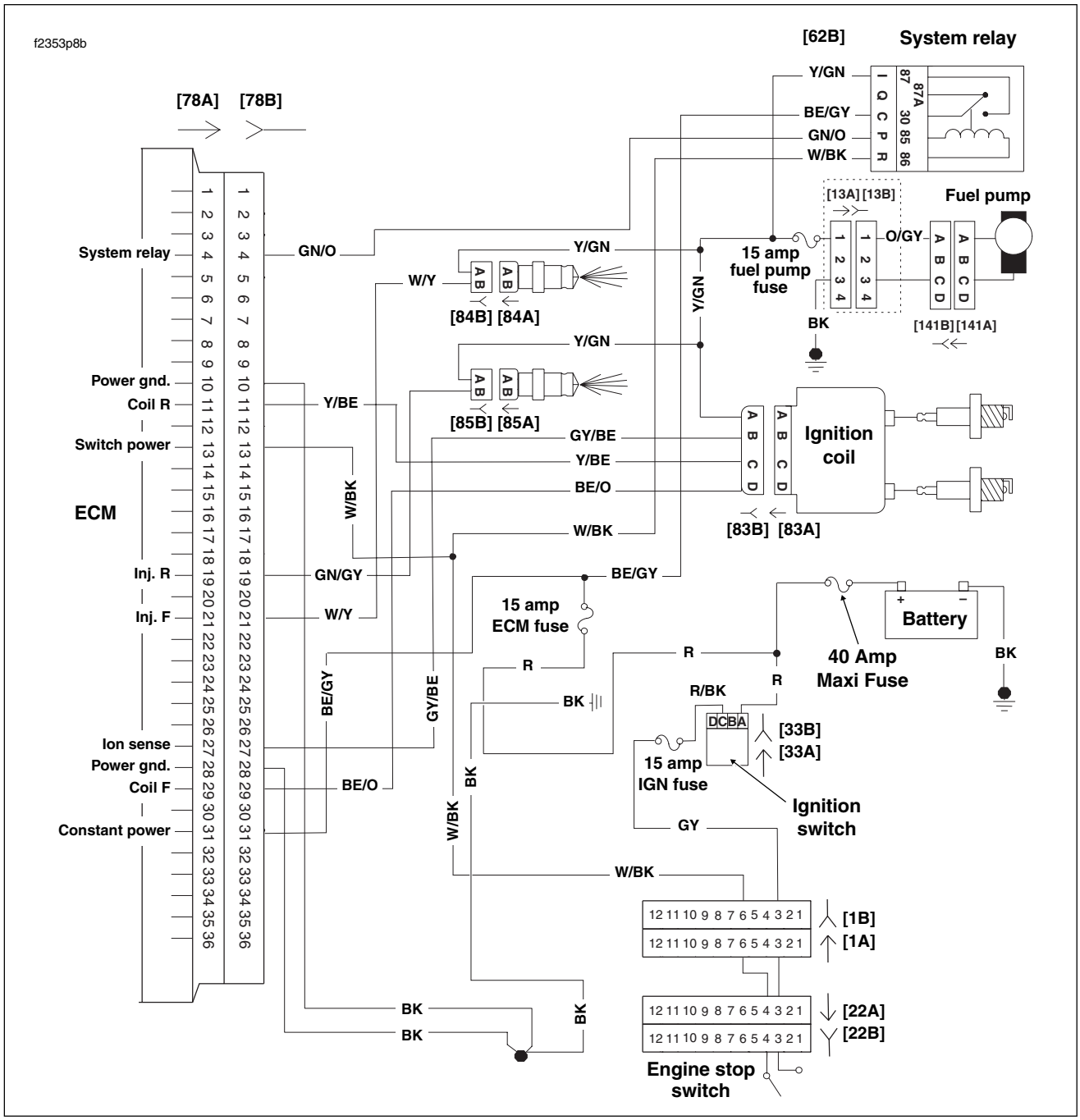

Figure 5-51. Battery Voltage Circuit (FLHX, FLHT/C/U, FLTR)

Table 5-37. Wire Harness Connectors in Figure 5-51.

NO.	DESCRIPTION	TYPE	LOCATION
[1]	Main to Interconnect Harness	12-Place Deutsch (Black)	Inner Fairing - Right Radio Support Bracket
[22]	Right Handlebar Switches	12-Place Deutsch (Black)	Inner Fairing (Fork Stem Nut Lock Plate)
[33]	Ignition/Light Key Switch	3-Place Packard	Inner Fairing -Under Radio
[78]	ECM	36-Place Packard	Under Right Side Cover
[83]	Ignition Coil	4-Place Delphi	Below Fuel Tank (Left Side)
[84]	Front Injector	2-Place Delphi	Below Fuel Tank (Left Side)
[85]	Rear Injector	2-Place Delphi	Below Fuel Tank (Left Side)

HOME

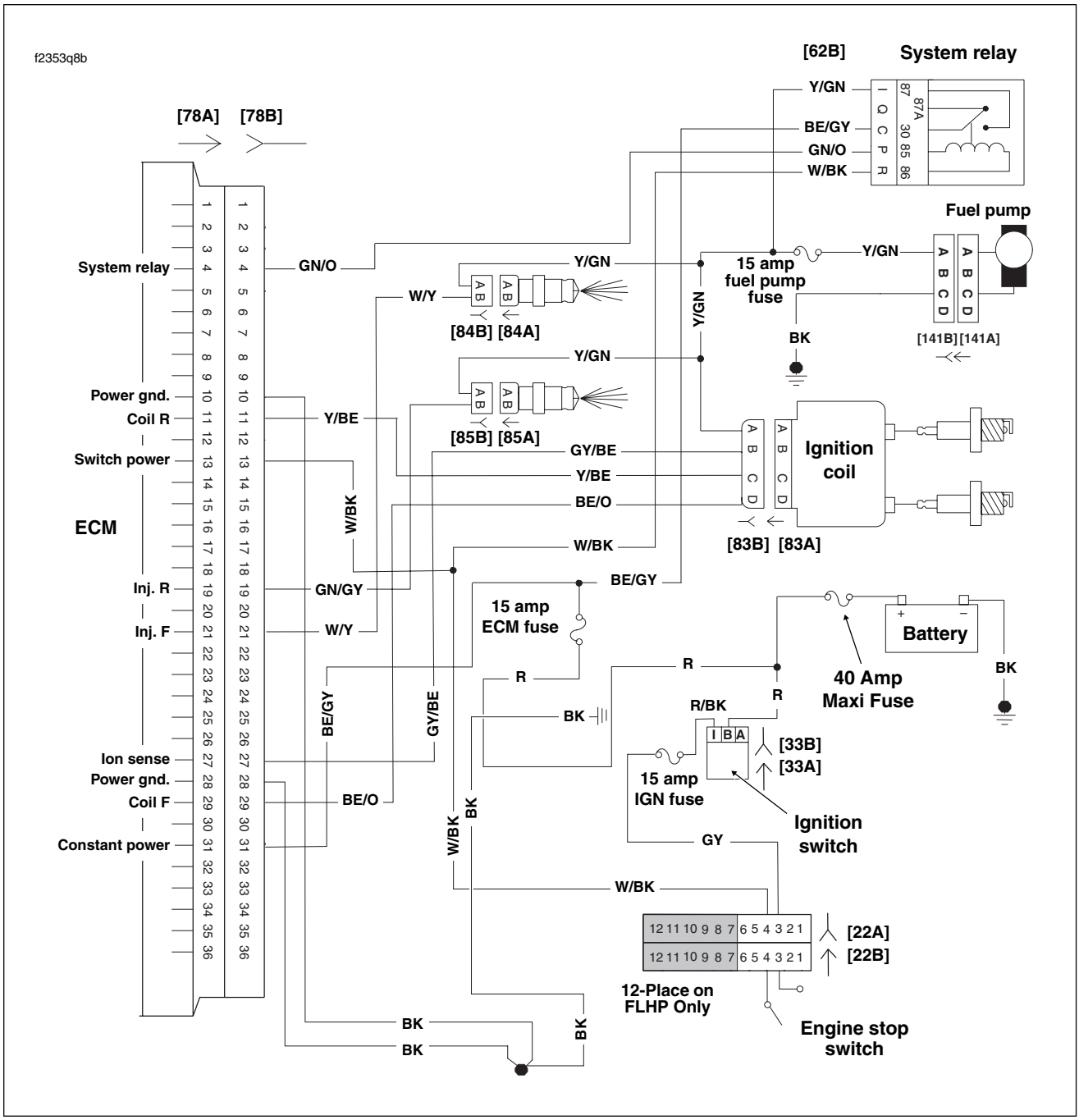

Figure 5-52. Battery Voltage Circuit (FLHR/C/S)

Table 5-38. Wire Harness Connectors in Figure 5-52.

NO.	DESCRIPTION	TYPE	LOCATION
[22]	Right Handlebar Switches	12-Place Deutsch (Black)	Inside Headlamp Nacelle
[33]	Ignition/Light Key Switch	3-Place Packard	Under Console
[78]	ECM	36-Place Packard	Under Right Side Cover
[83]	Ignition Coil	4-Place Delphi	Below Fuel Tank (Left Side)
[84]	Front Injector	2-Place Delphi	Below Fuel Tank (Left Side)
[85]	Rear Injector	2-Place Delphi	Below Fuel Tank (Left Side)

Test 5.23 (Part 1 of 3)

FUEL INJECTORS: DTC P0261, P0262, P0263, P0264

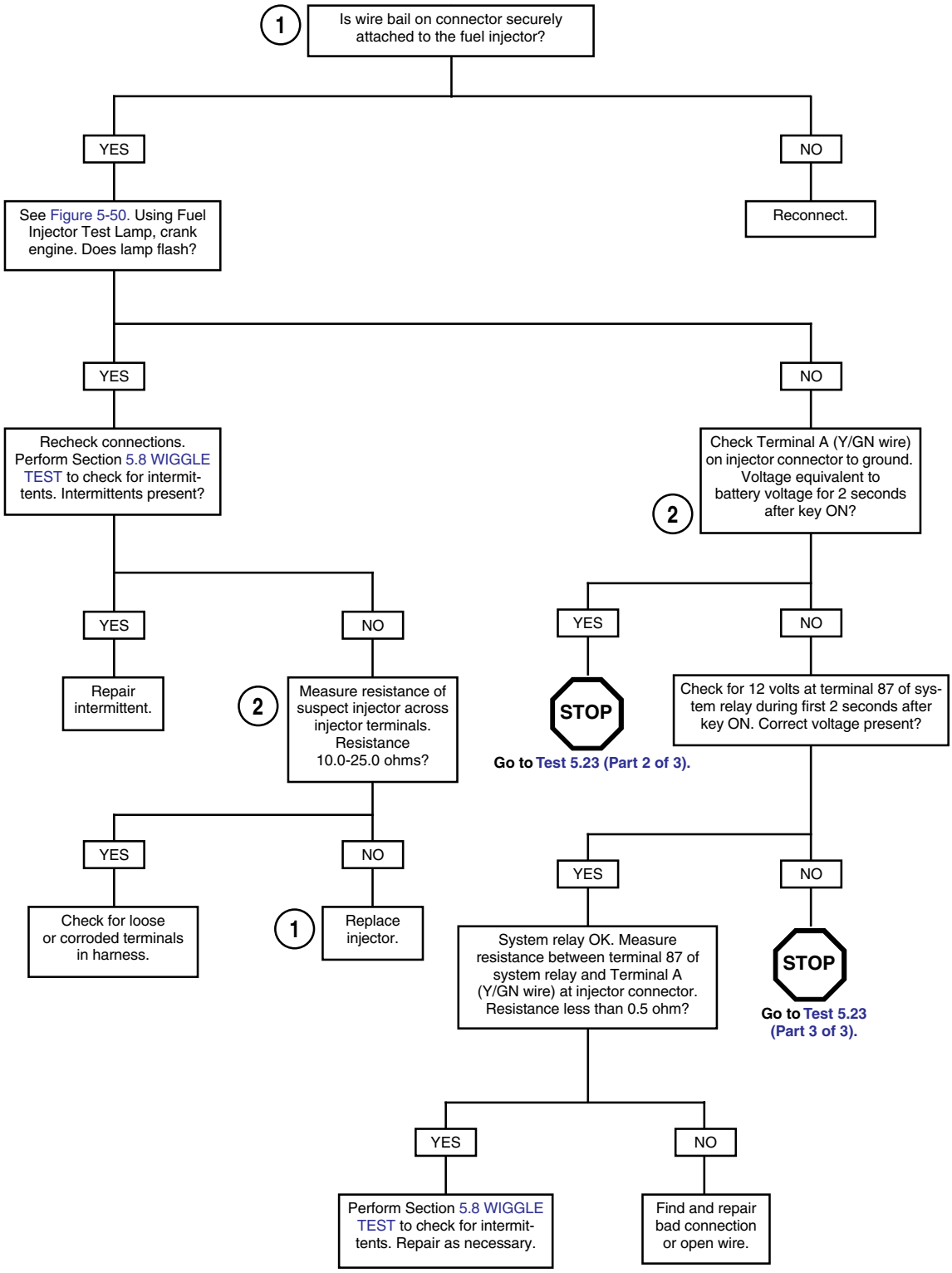

Clear codes using speedometer self diagnostics. See Section 5.6 SPEEDOMETER SELF DIAGNOSTICS. Confirm proper operation with no check engine lamp.

Test 5.23 (Part 2 of 3)

FUEL INJECTORS: DTC P0261, P0262, P0263, P0264

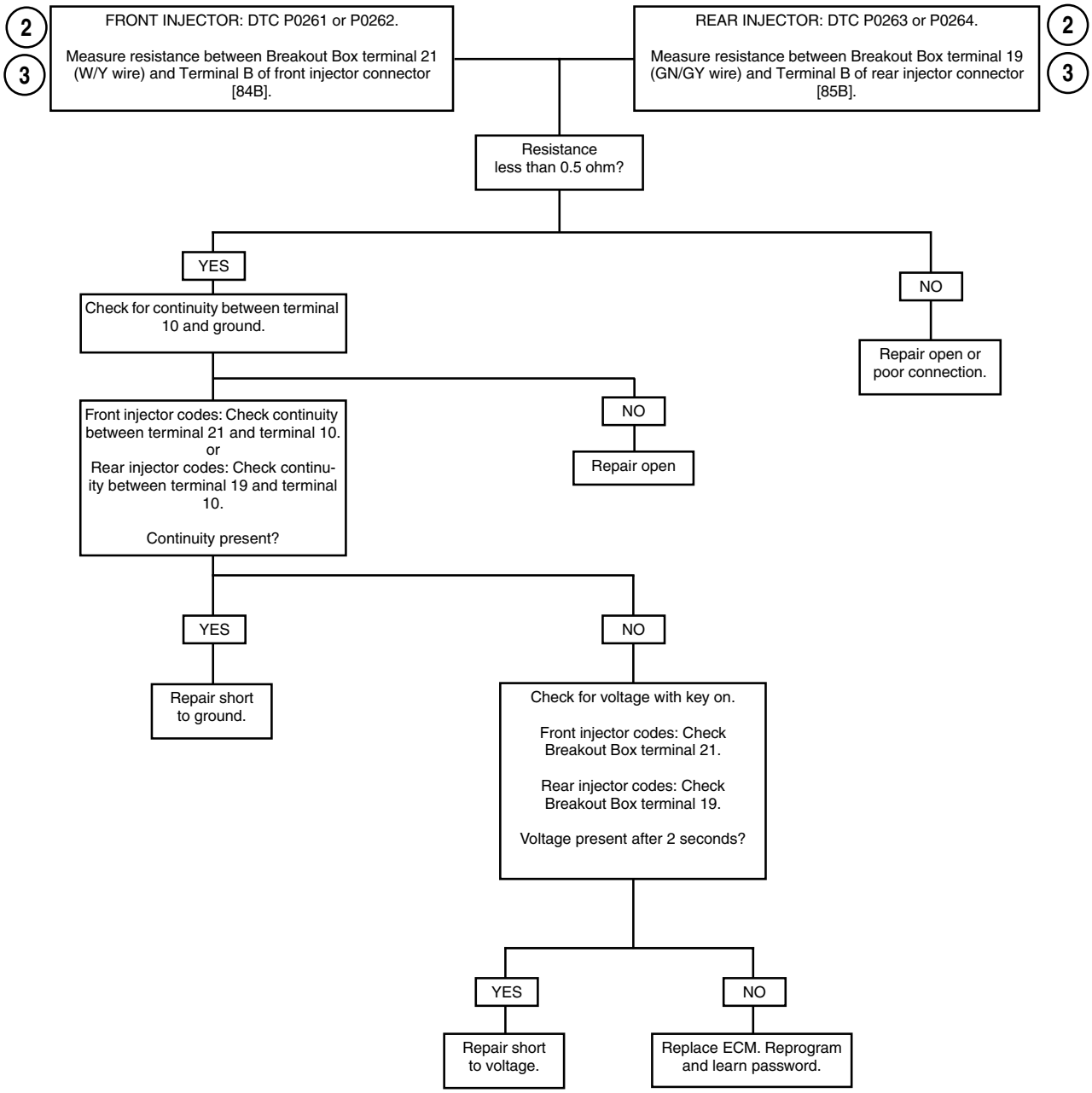

Clear codes using speedometer self diagnostics. See Section 5.6 SPEEDOMETER SELF DIAGNOSTICS. Confirm proper operation with no check engine lamp.

Test 5.23 (Part 3 of 3)

FUEL INJECTORS: DTC P0261, P0262, P0263, P0264

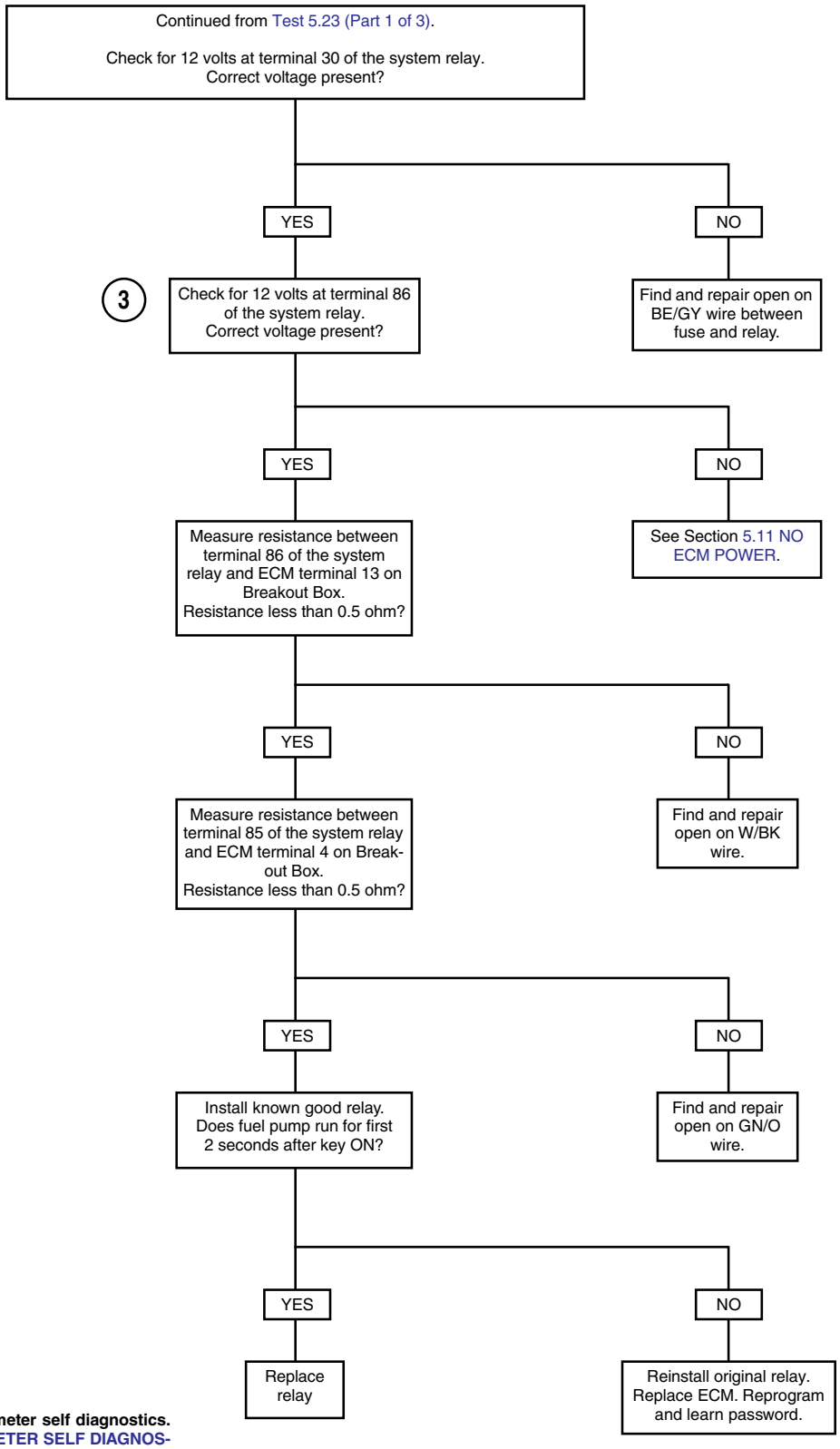

Clear codes using speedometer self diagnostics. See Section 5.6 SPEEDOMETER SELF DIAGNOSTICS. Confirm proper operation with no check engine lamp.

DTC P0373, P0374 5.24

GENERAL

CKP Sensor

If the CKP sensor signal is weak or absent, DTC's P0373 or P0374 will be set.

NOTE

If signal is not detected or cannot synchronize (DTC P0374), engine will not start.

Table 5-39. Code Description

DTC	DESCRIPTION
P0373	CKP sensor intermittent
P0374	CKP sensor synch error

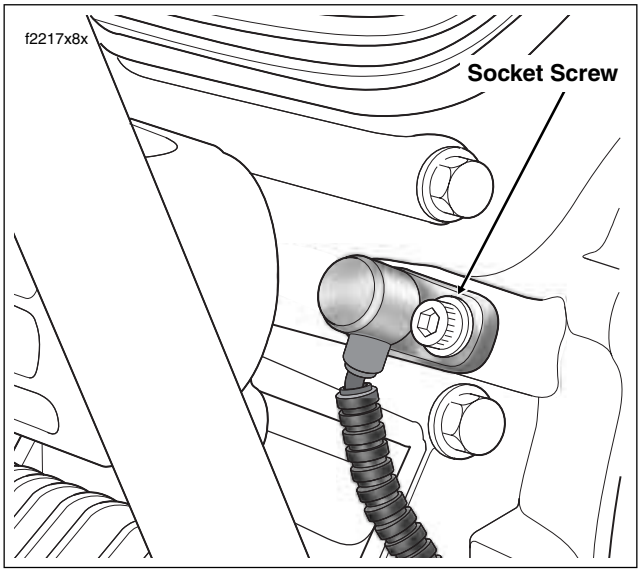

Figure 5-53. CKP Sensor

DIAGNOSTICS

Diagnostic Tips

- Engine must be cranked for more than five seconds without CKP signal to set code.

Diagnostic Notes

The reference numbers below correlate with the circled numbers on the Test 5.24 flow chart.

1. Connect BREAKOUT BOX (Part No. HD-43876) to ECM wire harness **only** (leave ECM disconnected). See Section 5.7 BREAKOUT BOX: EFI.
2. One megohm is very high resistance. Some meters will read ∞, OL, etc.
3. Use HARNESS CONNECTOR TEST KIT (Part No. HD-41404A), brown socket probes and patch cords.
4. For testing purposes, install sensor without running wiring along normal path. Disconnect and route wiring properly if system is now OK.

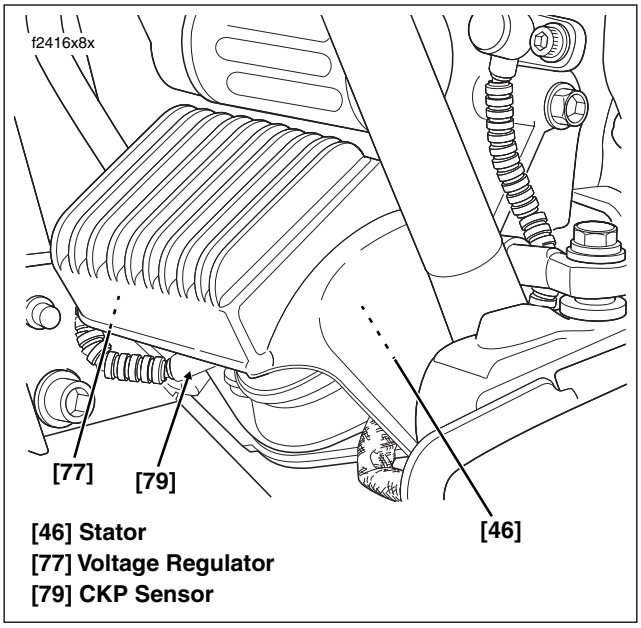

Figure 5-54. Voltage Regulator (Left Side View)

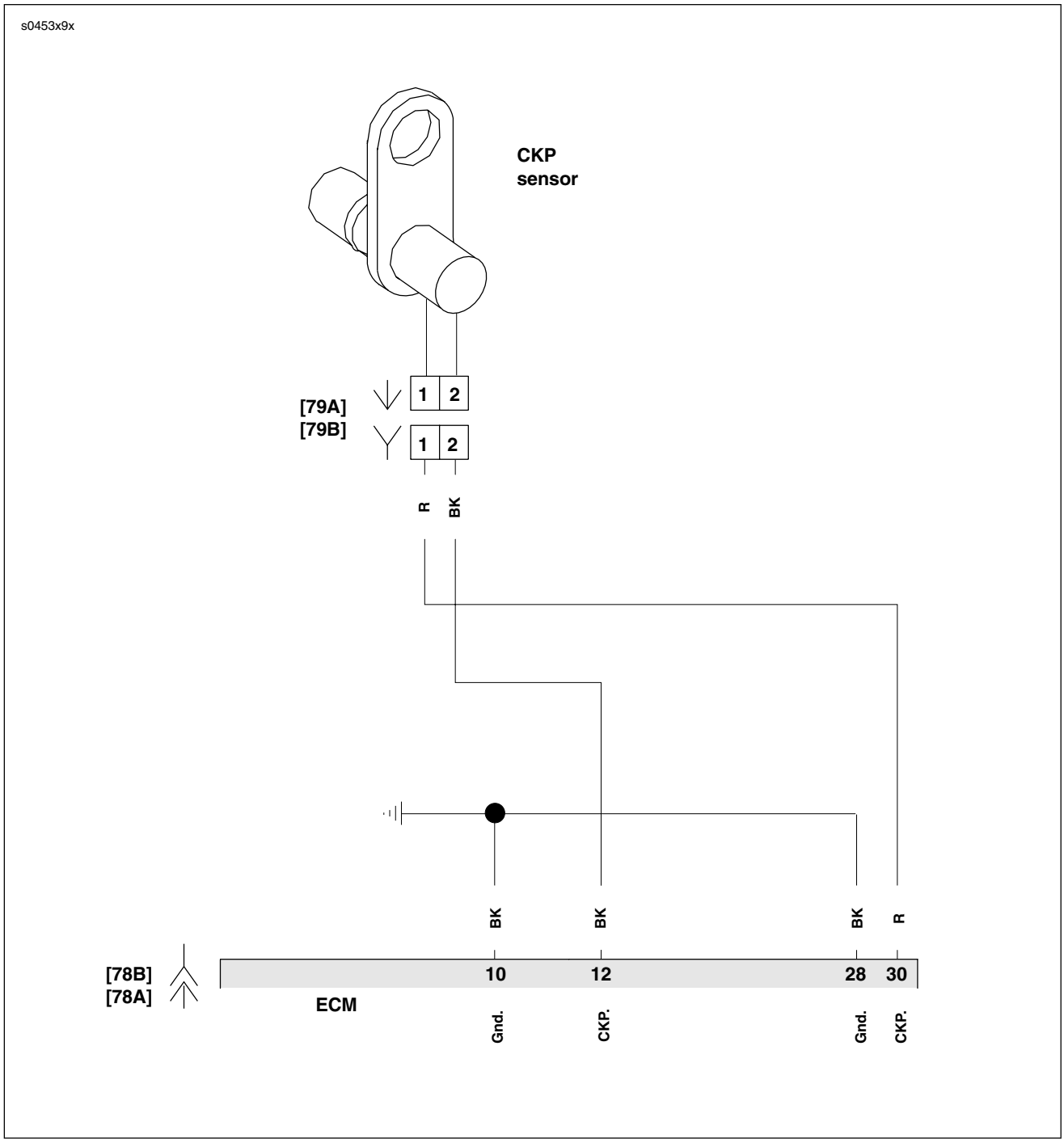

Figure 5-55. CKP Circuit

Table 5-40. Wire Harness Connectors in Figure 5-55.

NO.	DESCRIPTION	TYPE	LOCATION
[78]	ECM	36-Place Packard	Under Right Side Cover
[79]	CKP Sensor	2-Place Mini-Deutsch	Bottom of Voltage Regulator

HOME

Test 5.24

CKP SENSOR: DTC P0373, P0374

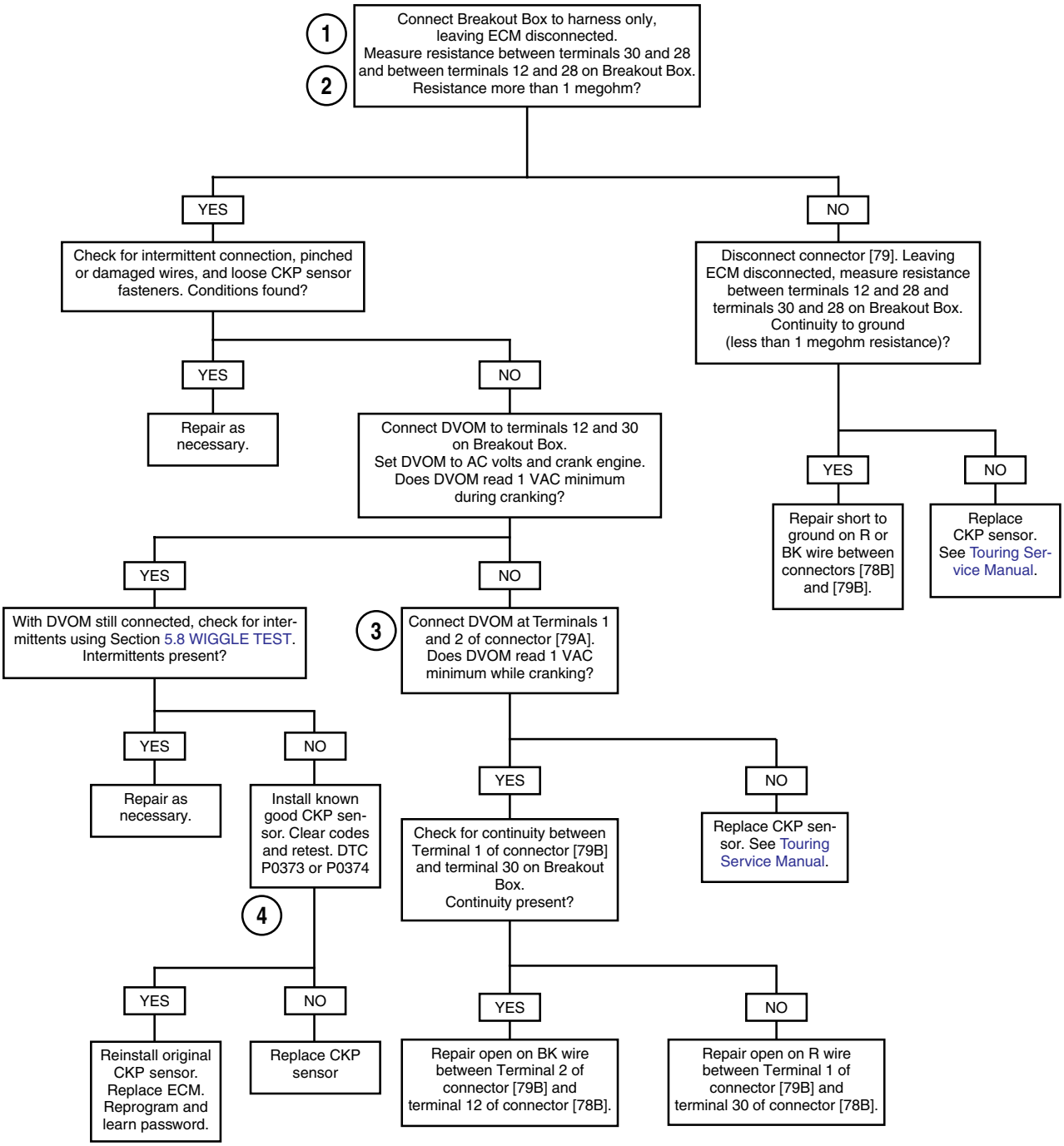

Clear codes using speedometer self diagnostics. See Section 5.6 SPEEDOMETER SELF DIAGNOSTICS. Confirm proper operation with no check engine lamp.

DTC P0501, P0502 5.25

GENERAL

Vehicle Speed Sensor

See Figure 5-56. The VSS is powered and monitored by the ECM. The ECM processes the vehicle speed signal and transmits this signal to the TSM/TSSM and speedometer through serial data.

NOTE

When the vehicle speed is greater than 0, the closed loop idle speed control is inhibited.

Table 5-41. Code Description

DTC	DESCRIPTION
P0501	VSS sensor low
P0502	VSS sensor high/open

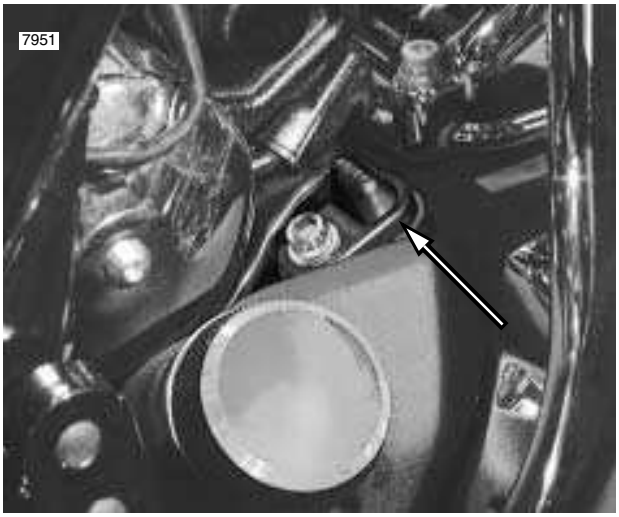

Figure 5-56. VSS

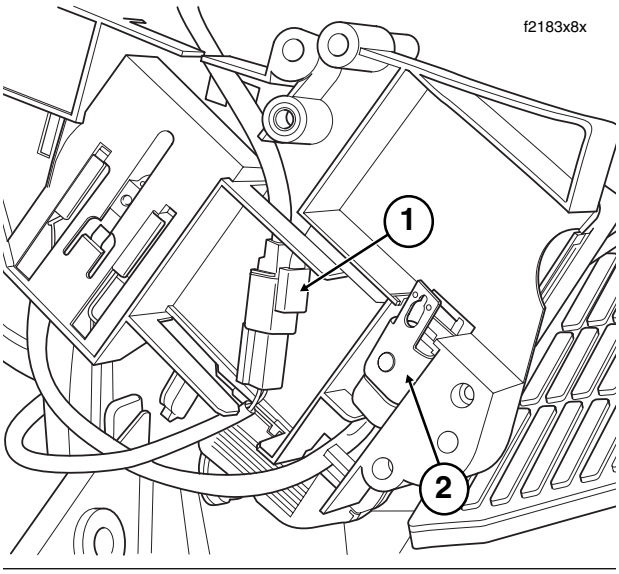

1. **VSS [65]**
2. **P&A Security Siren [142]**

Figure 5-57. Electrical Bracket (Inboard Side)

DIAGNOSTICS

Diagnostic Notes

The reference numbers below correlate with the circled numbers on the Test 5.25 flow charts.

1. The speedometer has a built-in diagnostic mode. See Section 2.3 SPEEDOMETER SELF DIAGNOSTICS.
2. Use HARNESS CONNECTOR TEST KIT (Part No. HD-41404A), black pin probe and patch cord.
3. Connect BREAKOUT BOX (Part No. HD-43876) between wire harness and ECM. See Section 5.7 BREAKOUT BOX: EFI.

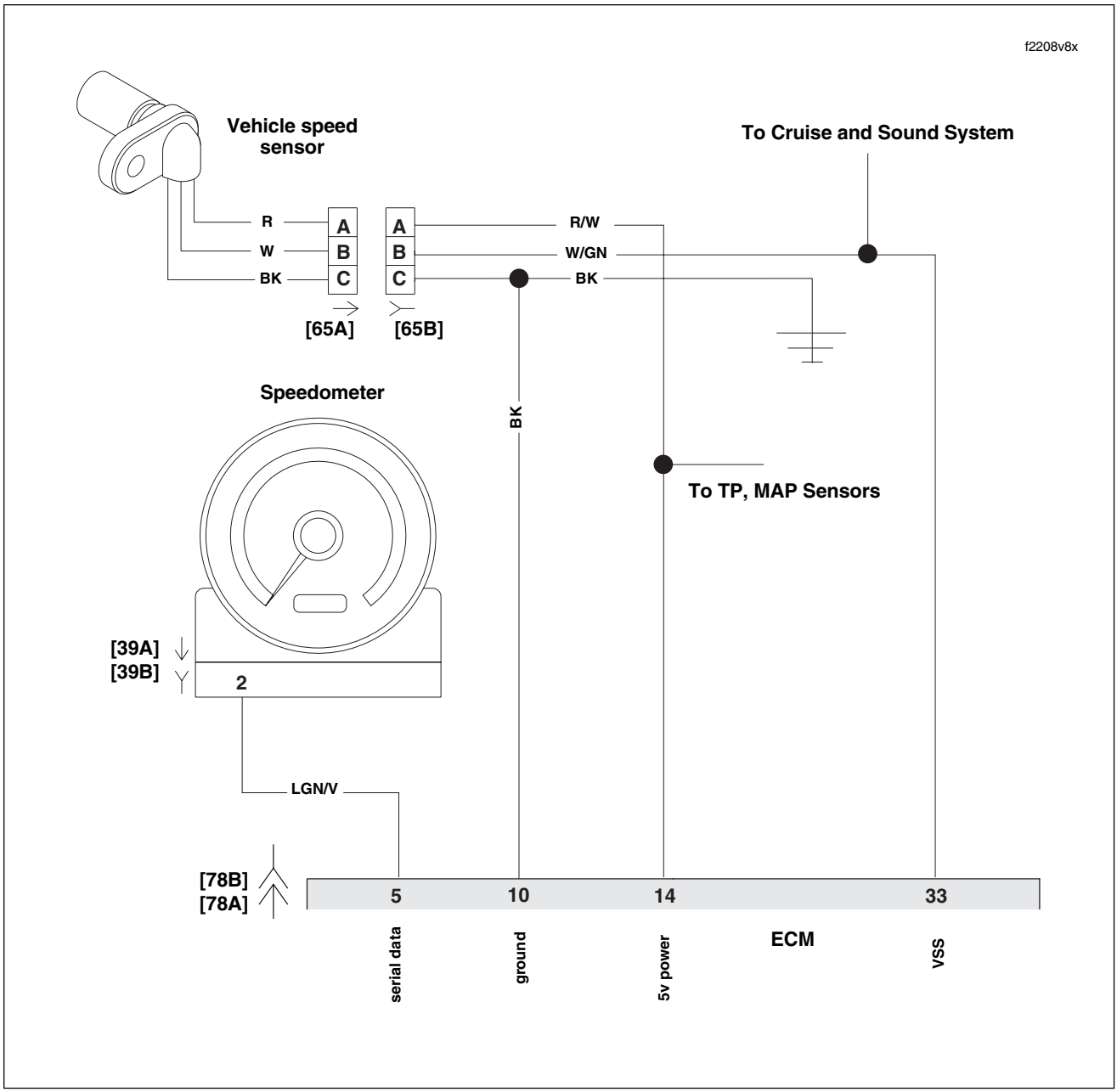

Figure 5-58. VSS Circuit

Table 5-42. Wire Harness Connectors in Figure 5-58.

NO.	DESCRIPTION	MODEL	TYPE	LOCATION
[39]	Speedometer	FLTR	12-Place Packard	Under Instrument Bezel (Back of Speedometer)
		FLHT/C/U	12-Place Packard	Inner Fairing (Back of Speedometer)
		FLHR/C/S	12-Place Packard	Back of Speedometer (Under Console)
[65]	VSS	All	3-Place Deutsch	Under Right Side Cover (Behind Electrical Bracket)
[78]	ECM	All	36-Place Packard	Under Right Side Cover

Test 5.25 (Part 1 of 2)

VEHICLE SPEED SENSOR: DTC P0501, P0502

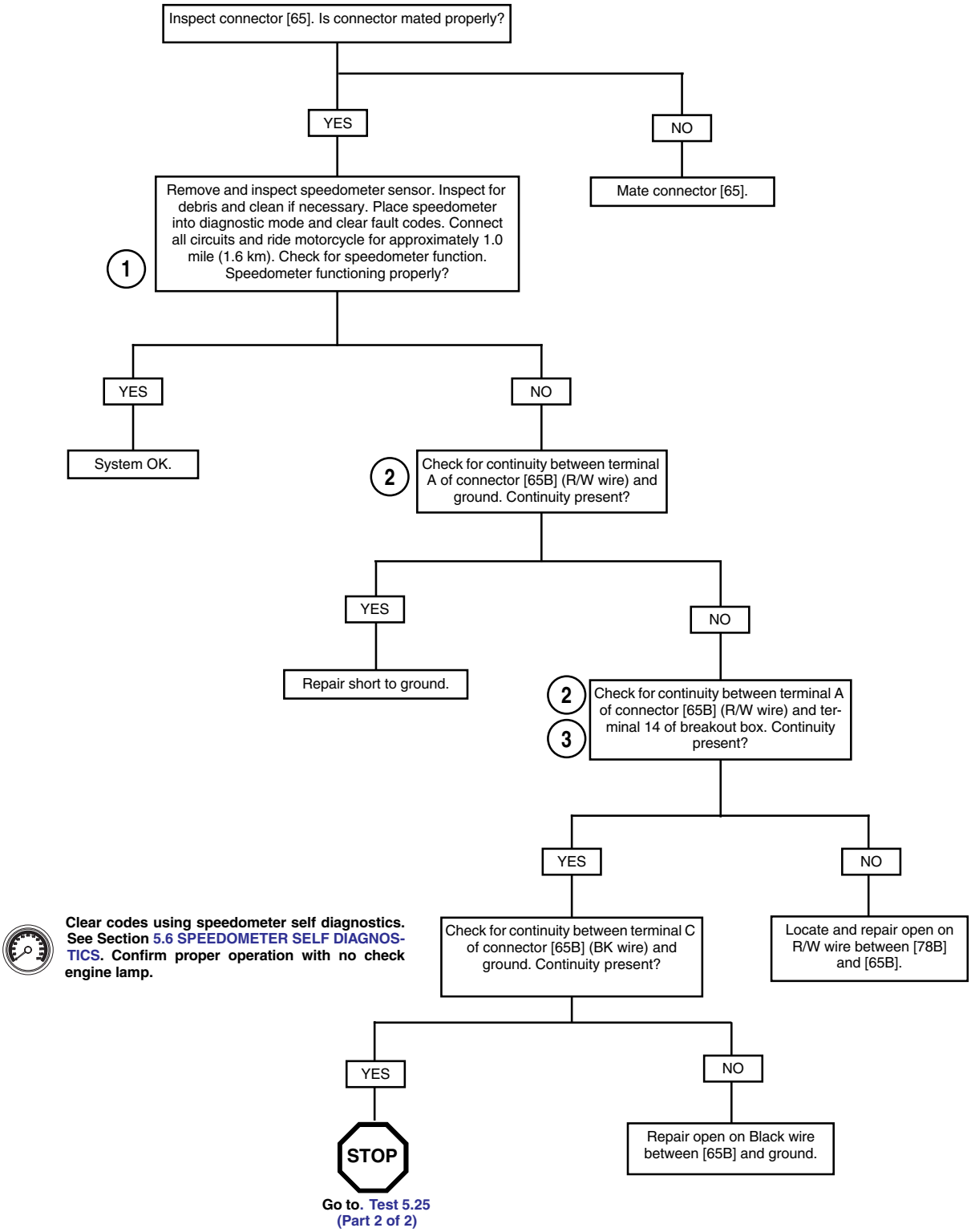

Test 5.25 (Part 2 of 2)

VEHICLE SPEED SENSOR: DTC P0501, P0502

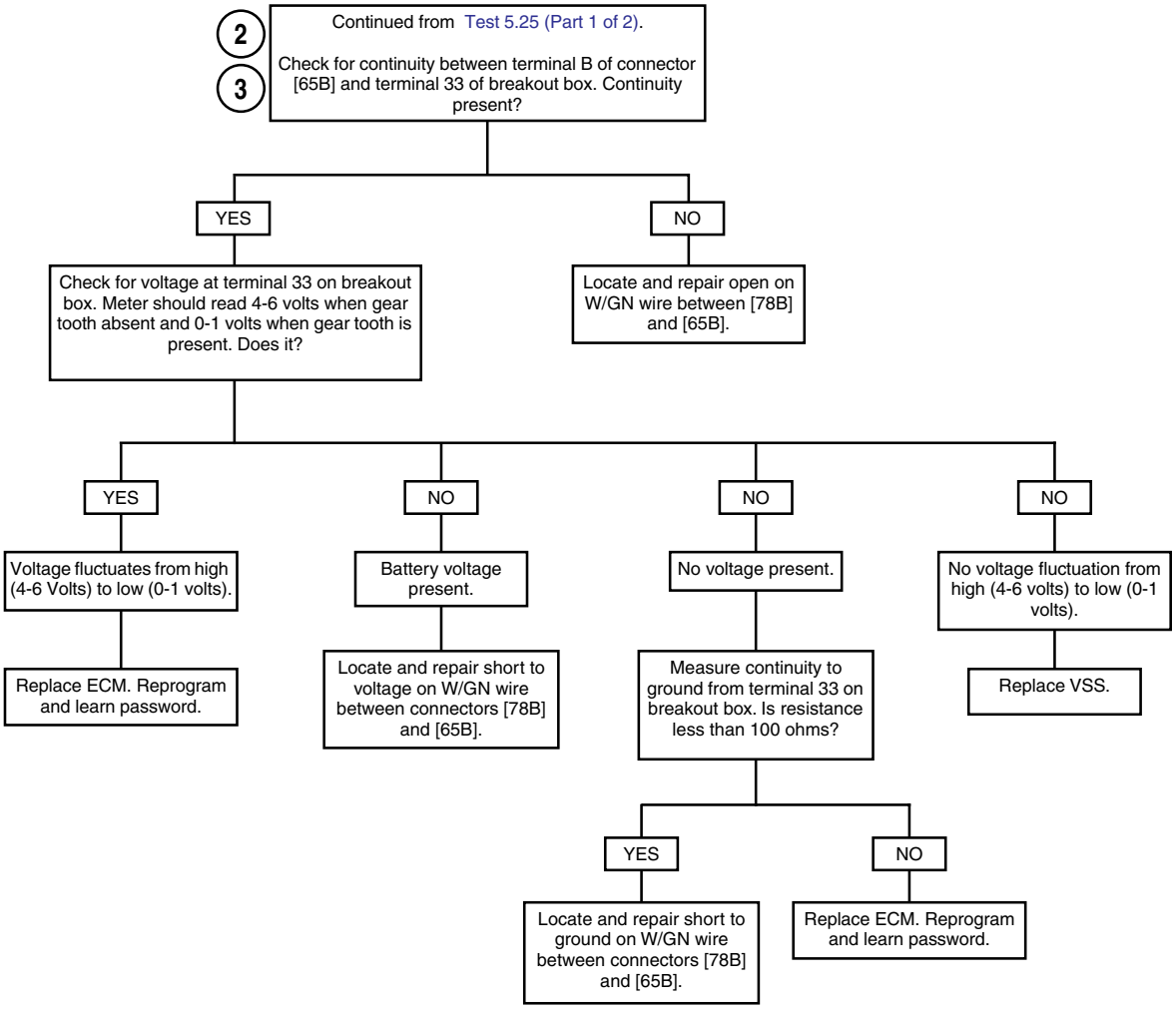

Clear codes using speedometer self diagnostics. See Section 5.6 SPEEDOMETER SELF DIAGNOSTICS. Confirm proper operation with no check engine lamp.

DTC P0562, P0563 5.26

GENERAL

Battery Voltage

Battery voltage is monitored by the ECM (terminal 13). If the battery voltage fails to meet normal operating parameters, a code is set.

- When battery voltage at low rpm (<1300 rpm) is less than 12.5 volts **and** battery voltage at high rpm (>2000 rpm) minus battery voltage at low rpm is less than 0.25 volts, then DTC P0562 is set after 100 counts (up to 15 seconds).
- Code P0563 is displayed when battery positive voltage is greater than 15.0 volts for more than 4 seconds.

NOTES

- *Warm idle speed will be automatically increased if battery voltage is low at idle.*
- *TSSM problems may also set a code P0562 or P0563.*

Table 5-43. Code Description

DTC	DESCRIPTION
P0562	Battery voltage low
P0563	Battery voltage high

DIAGNOSTICS

Diagnostic Tips

- Low voltage generally indicates a loose wire, corroded connections, battery and/or a charging system problem.
- A high voltage condition may be caused by a faulty voltage regulator.

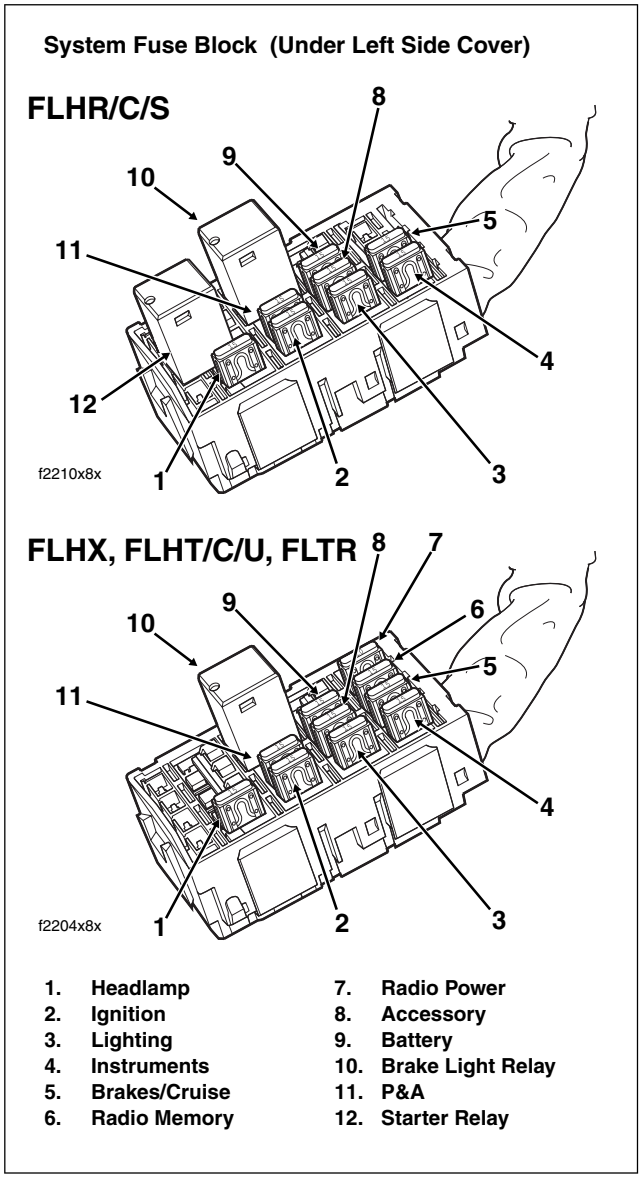

Figure 5-59. Fuse Locations

Diagnostic Notes

The reference numbers below correlate with the circled numbers on the Test 5.26 flow charts.

1. Was battery allowed to discharge? Was battery drawn down by a starting problem?
   a. **Yes.** Charge battery.
   b. **No.** See charging system troubleshooting.
2. Connect BREAKOUT BOX (Part No. HD-43876) between wire harness and ECM. See Section 5.7 BREAKOUT BOX: EFI.
3. Use DVOM with RPM Pick-up to check RPM on vehicles without tachometers.
4. This checks for voltage drops in the ECM circuit.
   a. Place (+) probe to battery positive terminal.
   b. Place (-) probe to W/BK terminal on Breakout Box.
5. Problem is most likely the ground connection at the frame.
6. Connect BREAKOUT BOX (Part No. HD-42682) to Connector [22]. FLHR/C/S models will also need HD-42962 adapters.

HOME

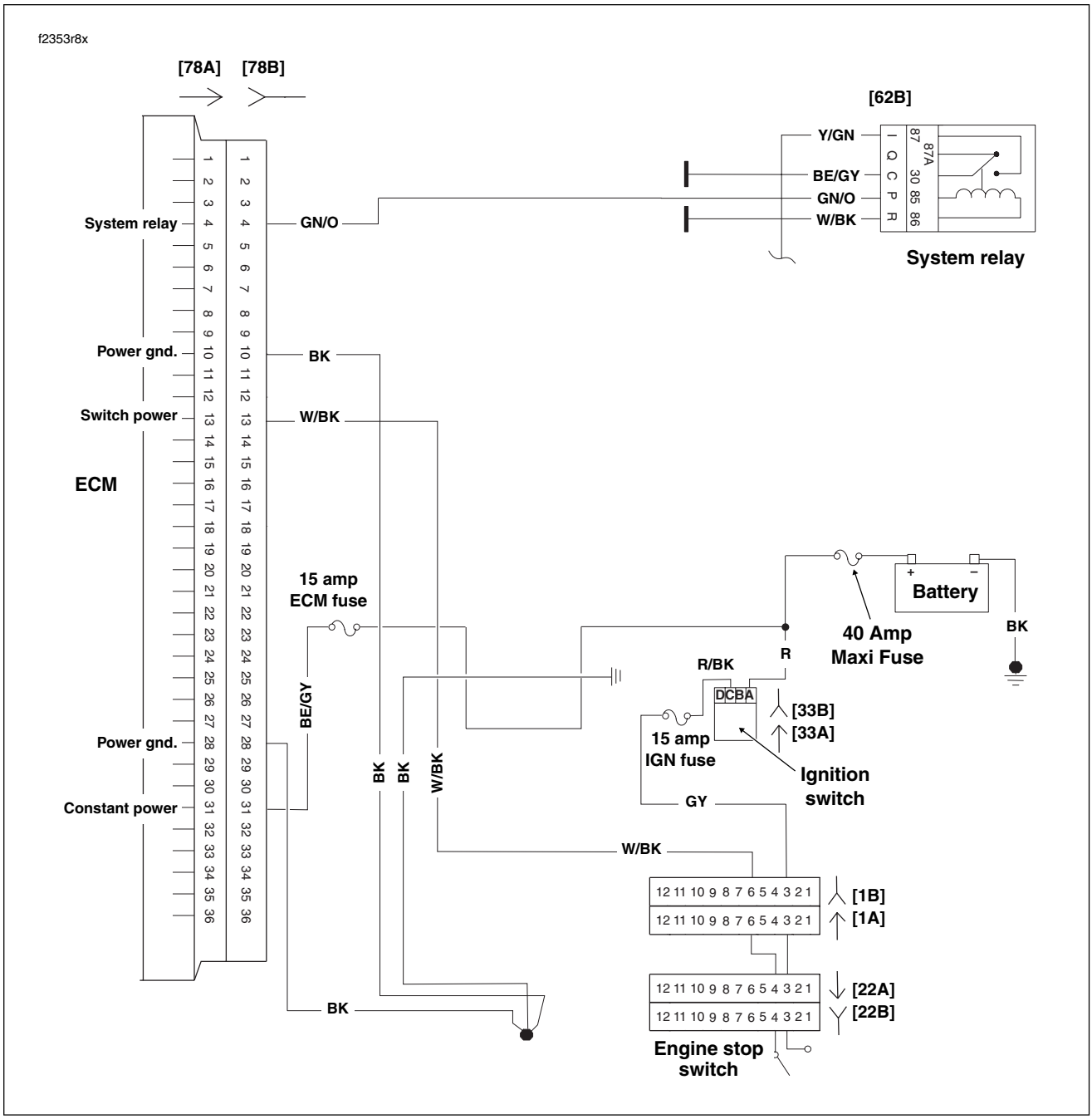

Figure 5-60. Battery Voltage Circuit (FLHX, FLHT/C/U, FLTR)

Table 5-44. Wire Harness Connectors in Figure 5-60.

NO.	DESCRIPTION	TYPE	LOCATION
[1]	Main to Interconnect Harness	12-Place Deutsch (Black)	Inner Fairing - Right Radio Support Bracket
[22]	Right Handlebar Switches	12-Place Deutsch (Black)	Inner Fairing (Fork Stem Nut Lock Plate)
[33]	Ignition/Light Key Switch	3-Place Packard	Inner Fairing -Under Radio
[78]	ECM	36-Place Packard	Under Right Side Cover

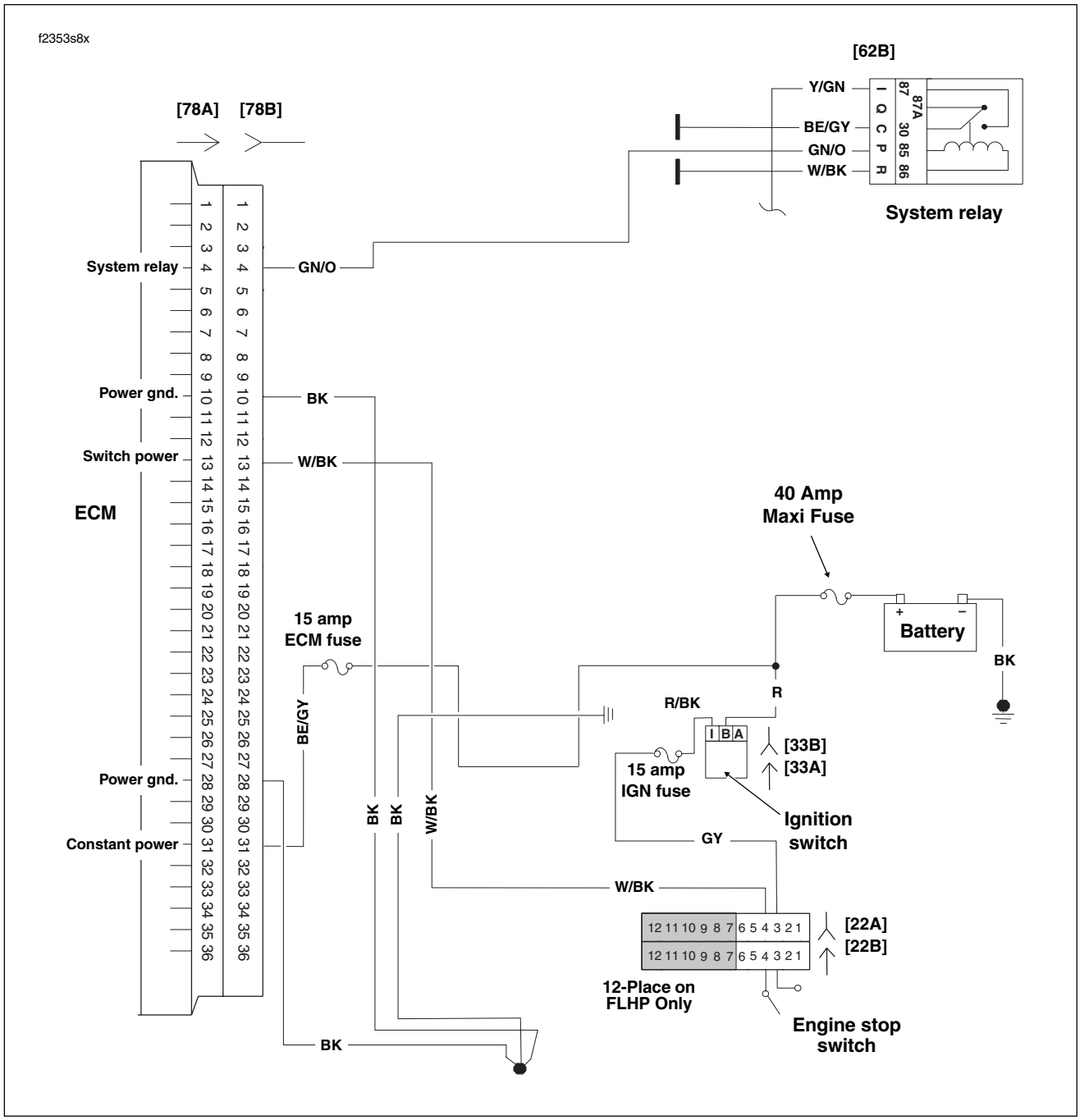

Figure 5-61. Battery Voltage Circuit (FLHR/C/S)

Table 5-45. Wire Harness Connectors in Figure 5-61.

NO.	DESCRIPTION	TYPE	LOCATION
[22]	Right Handlebar Switches	12-Place Deutsch (Black)	Inside Headlamp Nacelle
[33]	Ignition/Light Key Switch	3-Place Packard	Under Console
[78]	ECM	36-Place Packard	Under Right Side Cover

HOME

Test 5.26 (Part 1 of 2)

BATTERY VOLTAGE: DTC P0562, P0563

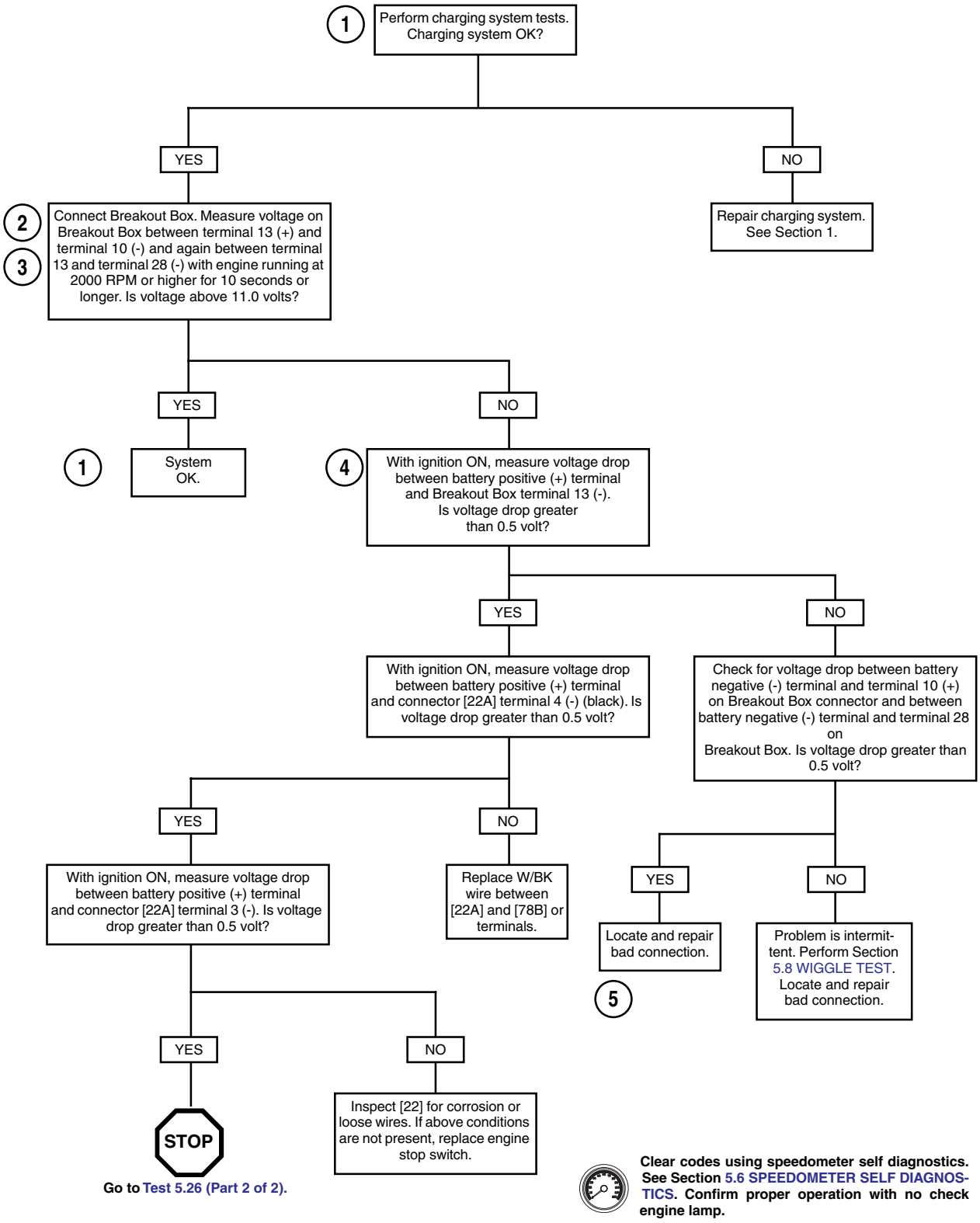

Go to Test 5.26 (Part 2 of 2).

Clear codes using speedometer self diagnostics. See Section 5.6 SPEEDOMETER SELF DIAGNOSTICS. Confirm proper operation with no check engine lamp.

Test 5.26 (Part 2 of 2)

BATTERY VOLTAGE: DTC P0562, P0563

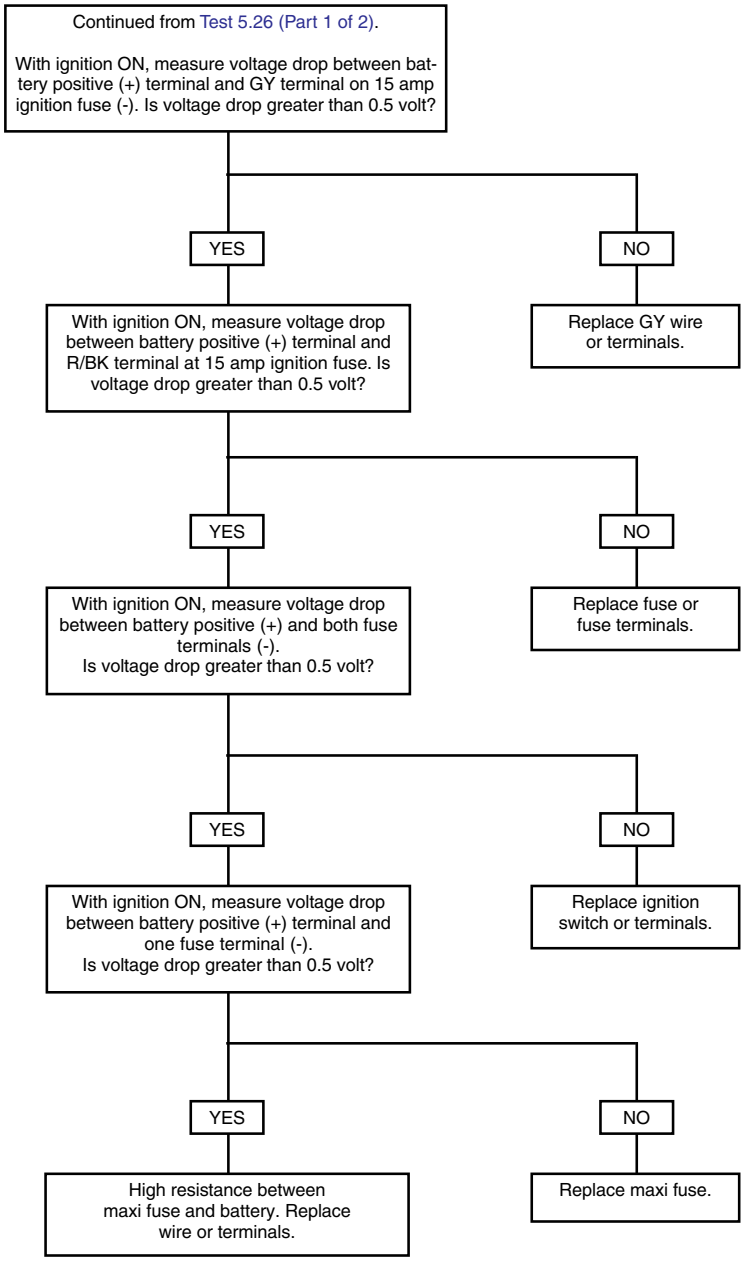

Clear codes using speedometer self diagnostics. See Section 5.6 SPEEDOMETER SELF DIAGNOSTICS. Confirm proper operation with no check engine lamp.

DTC P0603, P0605 5.27

GENERAL

ECM Failure

Refer to Table 5-46. The codes listed indicate a failure which requires replacement of the ECM. See the Touring Service Manual for replacement information.

NOTE

After replacing ECM, perform password learning procedure and clear codes.

Table 5-46. Code Description

DTC	DESCRIPTION
P0603	ECM EEPROM error
P0605	ECM flash error

DIAGNOSTICS

NOTE

These codes are set under two conditions.

- *If DTC P0603 or P0605 occur during normal operation, replace ECM. Reprogram and learn password.*
- *If DTC P0603 or P0605 occur during or after reprogramming, perform the following:*

DTC P0603

1. Clear codes.
2. Power down the vehicle. Wait 10 seconds.
3. Turn ignition ON,
4. Replace ECM if codes reappear.

DTC P0605

1. Clear codes.
2. Power down the vehicle.
3. Attempt to reprogram ECM using correct calibration.
4. Restart vehicle. If code reappears, replace ECM.

DTC P1009, P1010 5.28

GENERAL

Password Problem

The ECM, TSM/TSSM and speedometer exchange passwords during operation. An incorrect password or missing password will set a diagnostic code.

NOTE

If the TSM/TSSM is not connected to the wiring harness, the vehicle will not start.

Table 5-47. Code Description

DTC	DESCRIPTION
P1009	Incorrect password
P1010	Missing password

DIAGNOSTICS

Diagnostic Notes

The reference numbers below correlate with the circled numbers on the Test 5.28 flow charts.

1. DTC P1009 may be set if a recent ECM or TSM/TSSM replacement did not follow the correct password assignment procedure. See Section 3.24 PASSWORD LEARN for details.
2. Use HARNESS CONNECTOR TEST KIT (Part No. HD-41404A), black socket probes and patch cord.
3. Connect BREAKOUT BOX (Part No. HD-43876) between wire harness and ECM. See Section 5.7 BREAKOUT BOX: EFI.
4. Historic codes DTC U1300 or DTC U1301 would also have been set. Clear codes.
5. See the Touring Service Manual for TSM/TSSM replacement. See PASSWORD LEARNING under Section 3.24 PASSWORD LEARN for the password learning procedure.

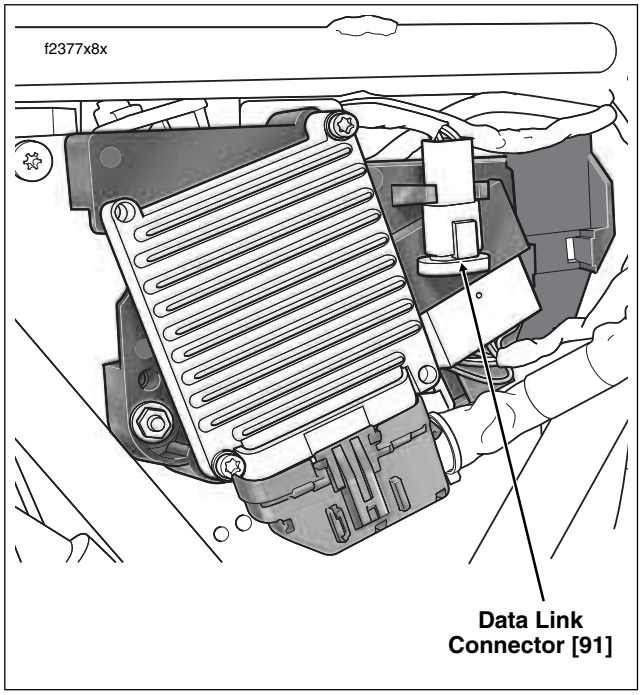

Figure 5-62. Electrical Bracket (Under Right Side Cover)

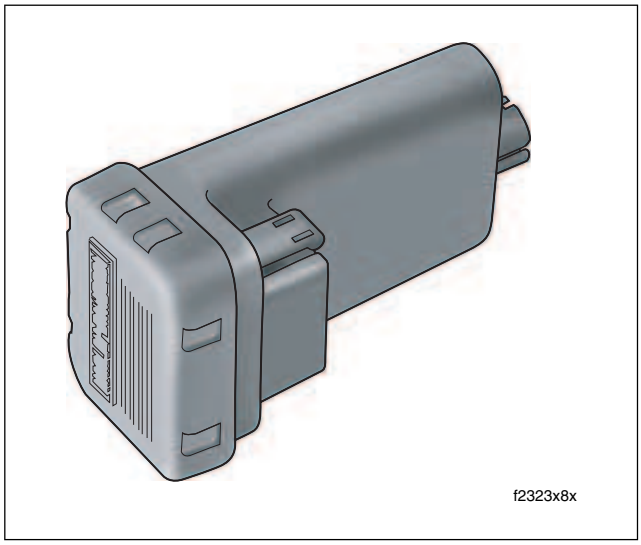

Figure 5-63. TSM/TSSM

HOME

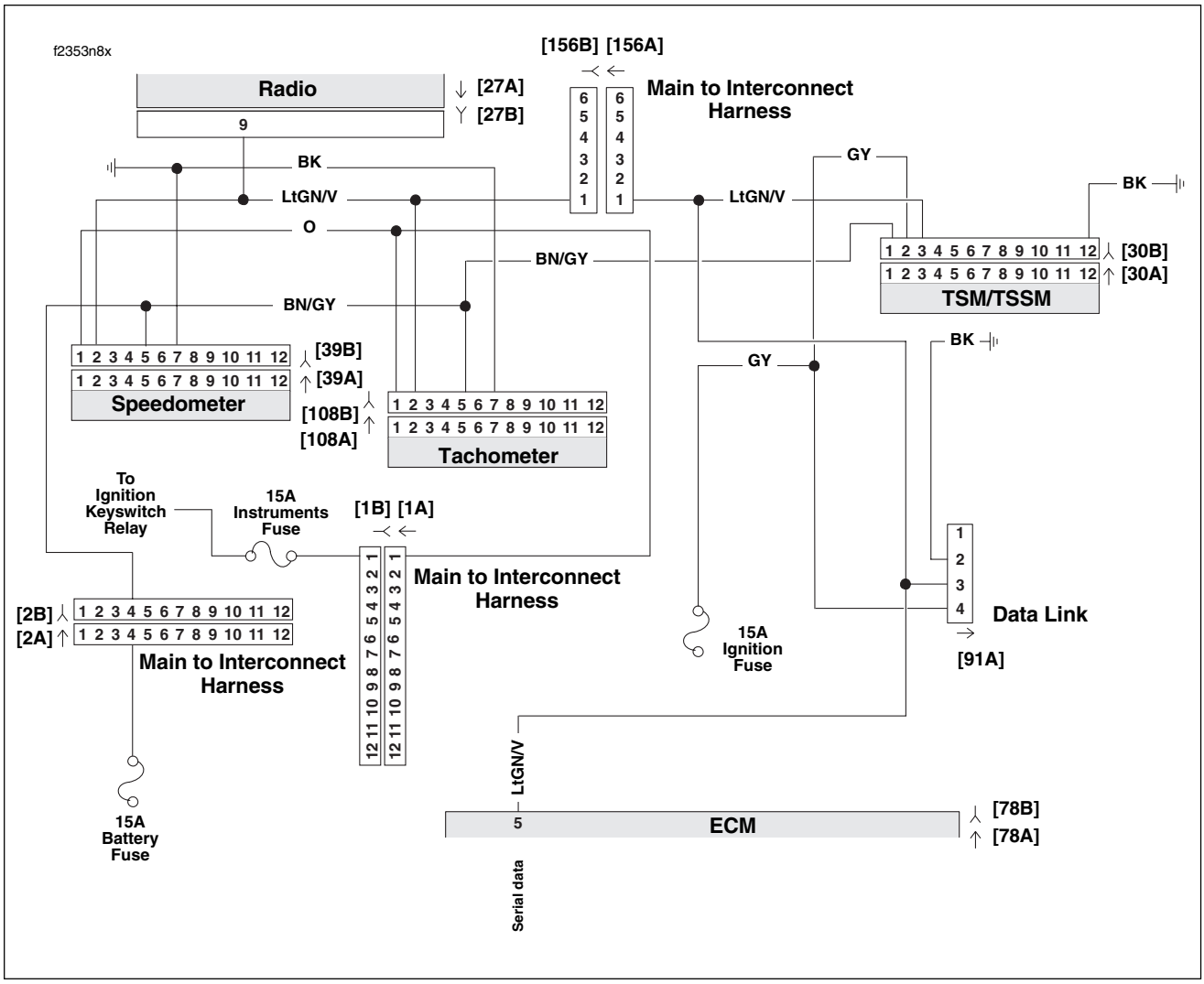

Figure 5-64. Serial Data Circuit (FLHX, FLHT/C/U, FLTR)

Table 5-48. Wire Harness Connectors in Figure 5-64.

NO.	DESCRIPTION	MODEL	TYPE	LOCATION
[1]	Main to Interconnect Harness	FLHT/C	12-Place Deutsch (Black)	Inner Fairing - Right Radio Support Bracket
		FLTR	12-Place Deutsch (Black)	Inner Fairing - Below Radio (Right Side)
[2]	Main to Interconnect Harness	FLHT/C	12-Place Deutsch (Gray)	Inner Fairing - Right Fairing Support Brace
		FLTR	12-Place Deutsch (Gray)	Inner Fairing - Below Radio (Right Side)
[27]	Radio	All	23-Place Amp	Inner Fairing - Back of Radio (Right Side)
[30]	TSM/TSSM	All	12-Place Deutsch	Cavity in Crossmember at Rear of Battery Box (Under Seat)
[39]	Speedometer	FLHT/C	12-Place Packard	Inner Fairing (Back of Speedometer)
		FLTR	12-Place Packard	Under Bezel (Back of Speedometer)
[78]	ECM	All	36-Place Packard	Under Right Side Cover
[91]	Data Link	All	4-Place Deutsch	Under Right Side Cover
[108]	Tachometer	FLHT/C	12-Place Packard	Inner Fairing (Back of Tachometer)
		FLTR	12-Place Packard	Under Bezel (Back of Tachometer)
[156]	Main to Interconnect Harness	FLHT/C	6-Place Deutsch	Inner Fairing - Right Fairing Support Brace
		FLTR	6-Place Deutsch	Inner Fairing - Below Radio (Right Side)

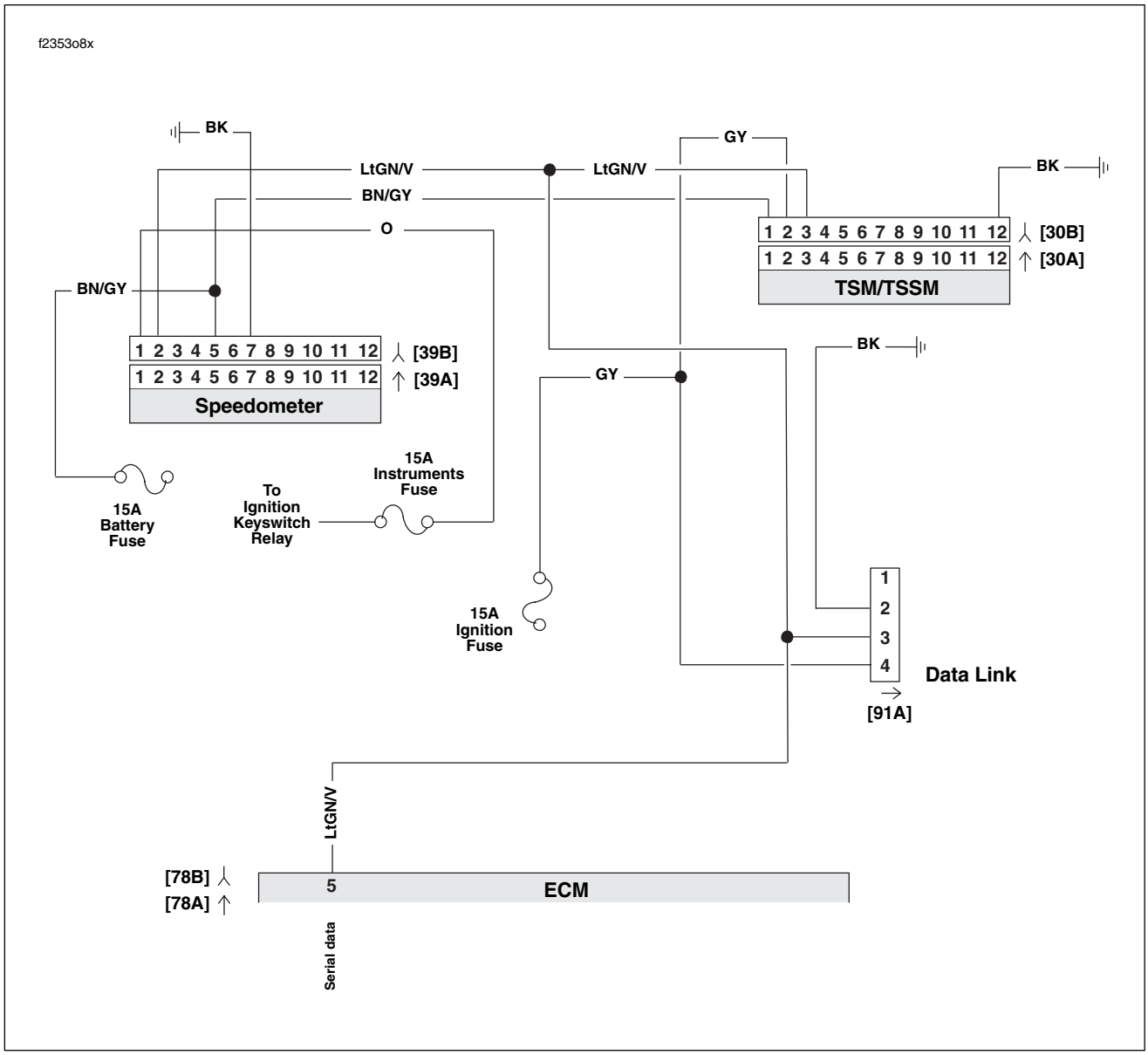

Figure 5-65. Serial Data Circuit (FLHR/C/S)

Table 5-49. Wire Harness Connectors in Figure 5-65.

NO.	DESCRIPTION	TYPE	LOCATION
[30]	TSM/TSSM	12-Place Deutsch	Cavity in Crossmember at Rear of Battery Box (Under Seat)
[39]	Speedometer	12-Place Packard	Under Console (Back of Speedometer)
[78]	ECM	36-Place Packard	Under Right Side Cover
[91]	Data Link	4-Place Deutsch	Under Right Side Cover

HOME

Test 5.28

PASSWORD PROBLEM: DTC P1009, P1010

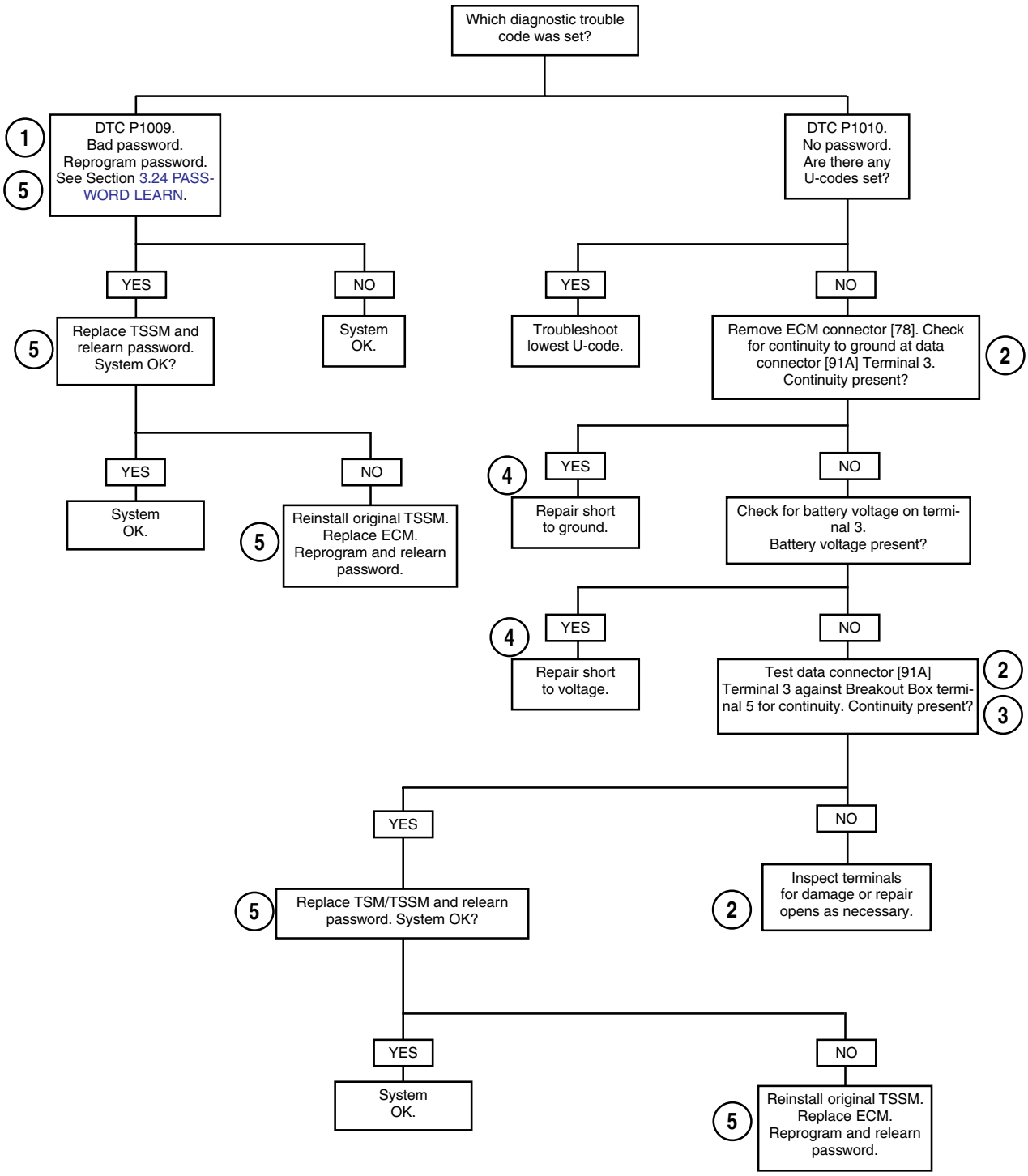

Clear codes using speedometer self diagnostics. See Section 5.6 SPEEDOMETER SELF DIAGNOSTICS. Confirm proper operation with no check engine lamp.

DTC P1351, P1352, P1354, P1355 5.29

GENERAL

Ignition Coil

Ignition coil codes will set if the ignition coil primary voltage is out of range. This could occur if there is an open coil or loss of power to the coil. If front and rear codes are set simultaneously, it is likely a coil power failure or a coil failure.

The coil receives power from the system relay at the same time that the fuel pump and injectors are activated. The system relay is active for the first 2 seconds after the ignition is turned ON and then shuts off until RPM is detected from the CKP sensor, at which time it is reactivated. The ECM is responsible for turning on the system relay by providing the ground to activate the relay, which in turn powers the coil.

Table 5-50. Code Description

DTC	DESCRIPTION
P1351	Front ignition coil open/low
P1352	Front ignition coil high/shorted
P1354	Rear ignition coil open/low
P1355	Rear ignition coil high/shorted

DIAGNOSTICS

Diagnostic Notes

The reference numbers below correlate with the circled numbers on the Test 5.29 flow charts.

1. Use HARNESS CONNECTOR TEST KIT (Part No. HD-41404A), gray pin probes and patch cord.

CAUTION

Gently connect test lamp to connector [83B]. Forcefully inserting test lamp will result in ignition connector terminal damage.

2. See Figure 5-66. Plug IGNITION COIL CIRCUIT TEST ADAPTER (Part No. HD-44687) and FUEL INJECTOR TEST LAMP (Part No. HD-34730-2C) into Breakout Box. Note that cranking the engine with test lamp in place of the ignition coil can sometimes cause a DTC P1351, P1352, P1354 or P1355. This condition is normal and does not by itself indicate a malfunction. Codes must be cleared if this condition occurs.
3. Connect BREAKOUT BOX (Part No. HD-43876) between EFI wire harness and ECM. See Section 5.7 BREAKOUT BOX: EFI.

Figure 5-66. Ignition Coil Circuit Test

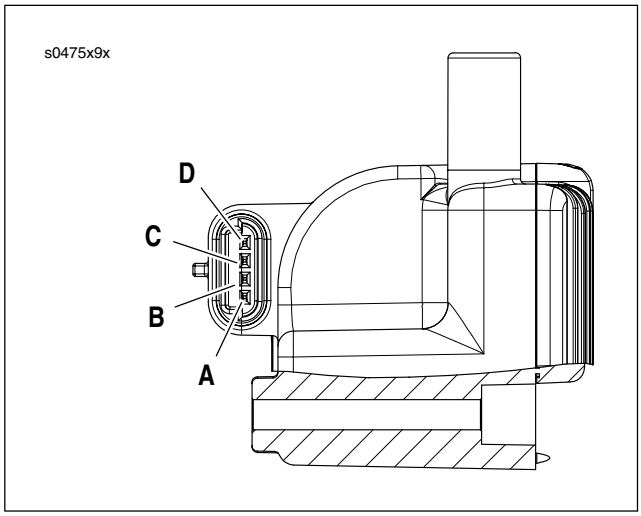

Figure 5-67. Ignition Coil Connector Terminals

Table 5-51. Coil Terminal Description

TERMINAL	DESCRIPTION
A	Power
B	Feedback signal pin
C	Rear coil
D	Front coil

4. Use HARNESS CONNECTOR TEST KIT (Part No. HD-41404A), gray socket probes and patch cord.

HOME

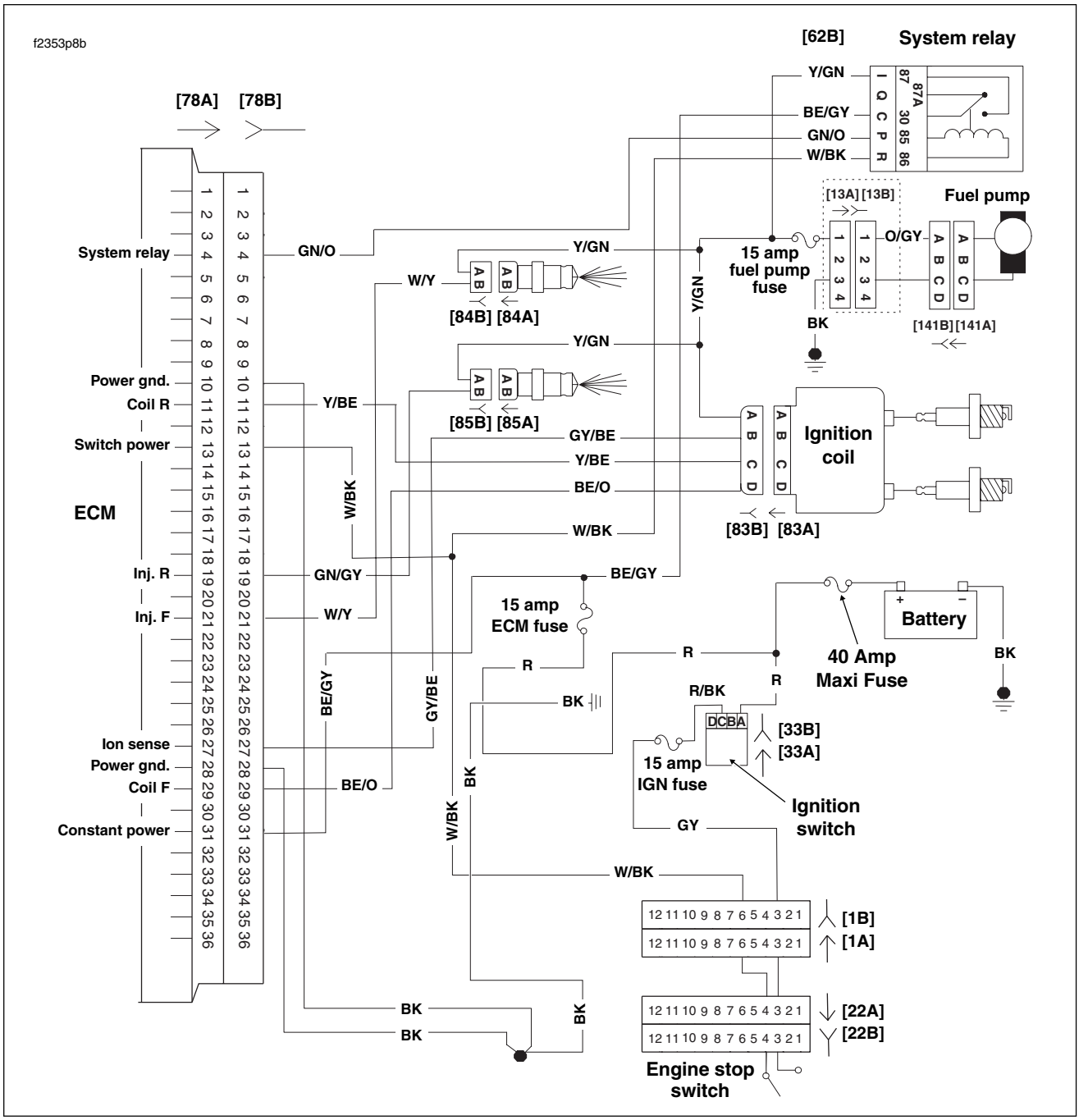

Figure 5-68. Battery Voltage Circuit (FLHX, FLHT/C/U, FLTR)

Table 5-52. Wire Harness Connectors in Figure 5-68.

NO.	DESCRIPTION	TYPE	LOCATION
[1]	Main to Interconnect Harness	12-Place Deutsch (Black)	Inner Fairing - Right Radio Support Bracket
[22]	Right Handlebar Switches	12-Place Deutsch (Black)	Inner Fairing (Fork Stem Nut Lock Plate)
[33]	Ignition/Light Key Switch	3-Place Packard	Inner Fairing -Under Radio
[78]	ECM	36-Place Packard	Under Right Side Cover
[83]	Ignition Coil	4-Place Delphi	Below Fuel Tank (Left Side)
[84]	Front Injector	2-Place Delphi	Below Fuel Tank (Left Side)
[85]	Rear Injector	2-Place Delphi	Below Fuel Tank (Left Side)

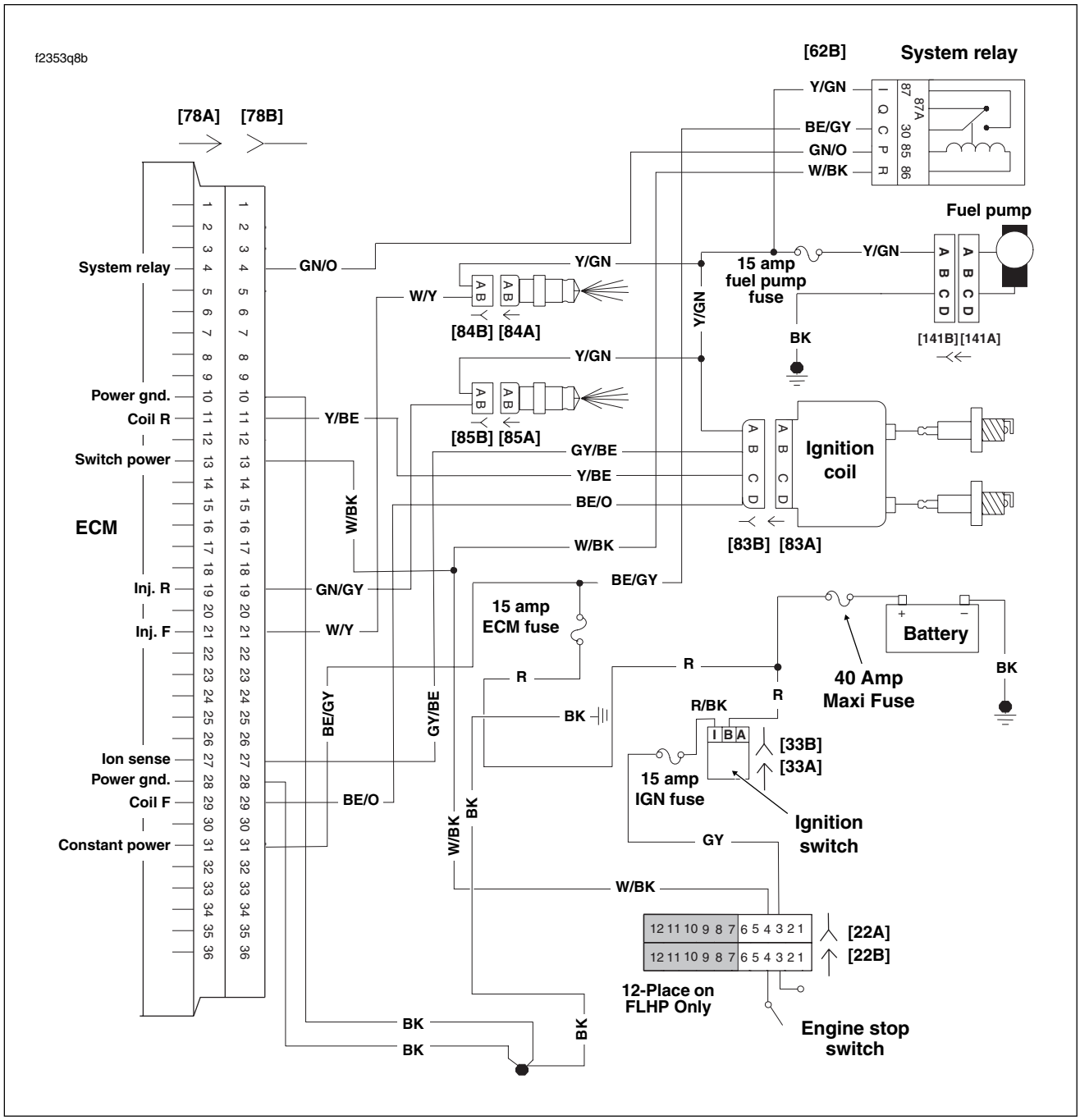

Figure 5-69. Battery Voltage Circuit (FLHR/C/S)

Table 5-53. Wire Harness Connectors in Figure 5-69.

NO.	DESCRIPTION	TYPE	LOCATION
[22]	Right Handlebar Switches	12-Place Deutsch (Black)	Inside Headlamp Nacelle
[33]	Ignition/Light Key Switch	3-Place Packard	Under Console
[78]	ECM	36-Place Packard	Under Right Side Cover
[83]	Ignition Coil	4-Place Delphi	Below Fuel Tank (Left Side)
[84]	Front Injector	2-Place Delphi	Below Fuel Tank (Left Side)
[85]	Rear Injector	2-Place Delphi	Below Fuel Tank (Left Side)

HOME

Test 5.29 (Part 1 of 2)

IGNITION COIL: DTC P1351, P1352, P1354, P1355

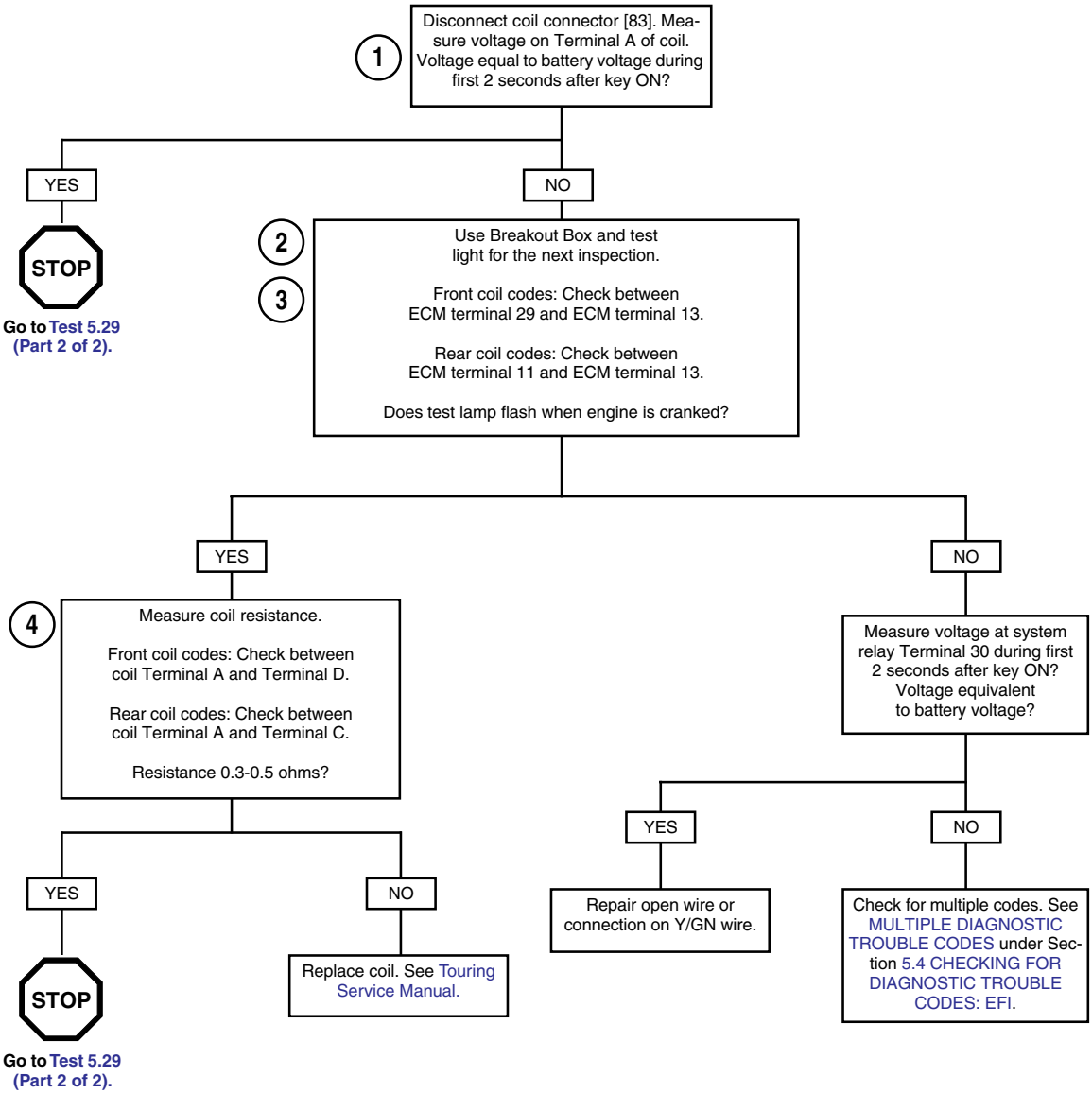

Clear codes using speedometer self diagnostics. See Section 5.6 SPEEDOMETER SELF DIAGNOSTICS. Confirm proper operation with no check engine lamp.

Test 5.29 (Part 2 of 2)

IGNITION COIL: DTC P1351, P1352, P1354, P1355

Continued from Test 5.29 (Part 1 of 2).

Using Breakout Box, measure resistance between ECM and coil terminals as follows.

DTC	COIL TERMINAL	BREAK-OUT BOX TERMINAL
P1351/ P1352	D (BE/O wire)	29
P1353/ P1354	C (Y/BE wire)	11

1

3

Resistance less than 0.5 ohms?

YES → Perform Section 5.8 WIGGLE TEST to check for intermittents. Intermittents present?

- YES → Repair intermittent.
- NO → Check for continuity to ground.

  Front coil codes: Check Breakout Box terminal 29.

  Rear coil codes: Check Breakout Box terminal 11.

  Continuity present?

  - YES → Repair short to ground.
  - NO → Check for voltage.

    Front coil codes: Check Breakout Box terminal 29.

    Rear coil codes: Check Breakout Box terminal 11.

    Voltage present?

    - YES → Repair short to voltage.
    - NO → Replace ECM. Reprogram and learn password.

NO → Repair open wire or connection.

Clear codes using speedometer self diagnostics. See Section 5.6 SPEEDOMETER SELF DIAGNOSTICS. Confirm proper operation with no check engine lamp.

DTC U1064, U1255 5.30

GENERAL

Loss of TSM/TSSM Serial Data

The serial data connector provides a means for the ECM, TSM/TSSM and speedometer to communicate their current status. When all operating parameters on the serial data link are within specifications, a state of health message is sent between the components. A DTC U1255 (only reported by the TSM/TSSM or speedometer) indicates that no messages were present during power up of the current key cycle. A DTC U1064 indicates that there was communication on the data bus since power up, but was lost or interrupted during that key cycle.

Table 5-54. Code Description

DTC	DESCRIPTION
U1064	Loss of TSM/TSSM serial data
U1255	Serial data error/missing message

DIAGNOSTICS

Diagnostic Notes

The reference numbers below correlate with the circled numbers on the Test 5.30 flow chart.

1. Connect BREAKOUT BOX (Part No. HD-42682).
   a. Mate gray socket housing on Breakout Box with TSM/TSSM connector [30A].
   b. Mate gray pin housing on Breakout Box with harness connector [30B].
2. Connect BREAKOUT BOX (Part No. HD-43876).

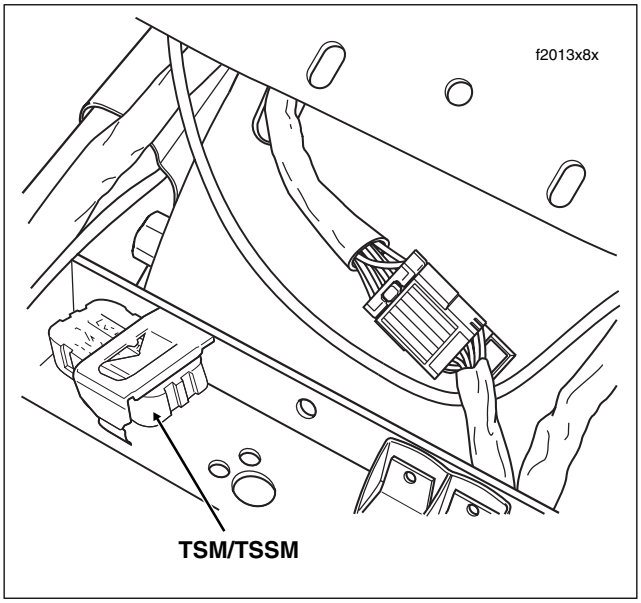

Figure 5-70. Remove Seat

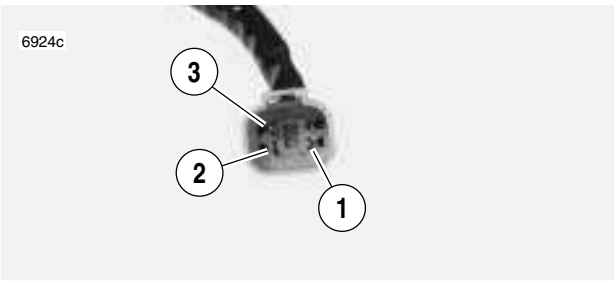

1. **Terminal 2: ground (BK)**
2. **Terminal 3: serial data (Lt GN/V)**
3. **Terminal 4: power (GY)**

Figure 5-71. Data Link Connector

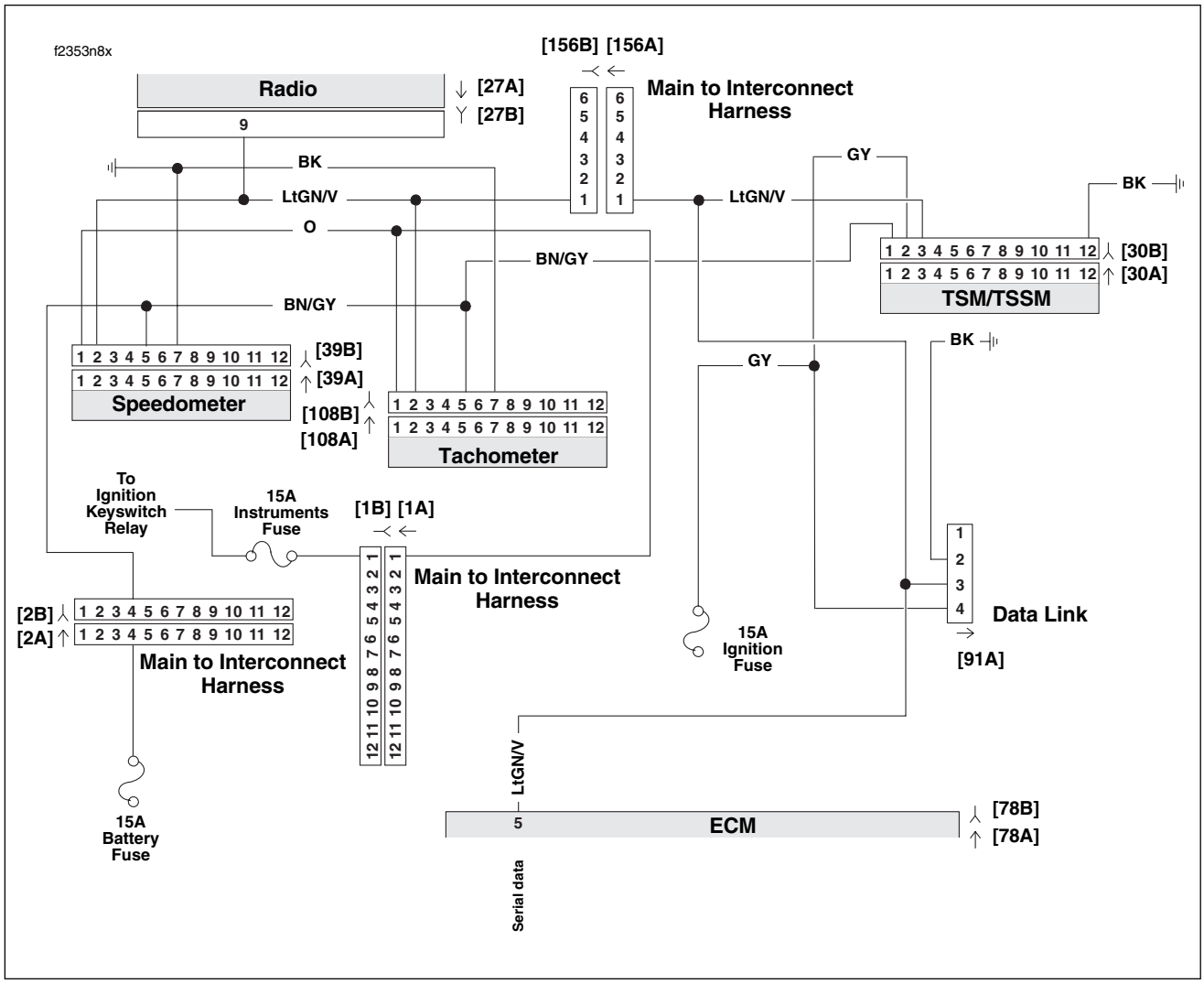

Figure 5-72. ECM and TSM/TSSM Circuit (FLHX, FLHT/C/U, FLTR)

Table 5-55. Wire Harness Connectors in Figure 5-72.

NO.	DESCRIPTION	MODEL	TYPE	LOCATION
[1]	Main to Interconnect Harness	FLHT/C	12-Place Deutsch (Black)	Inner Fairing - Right Radio Support Bracket
		FLTR	12-Place Deutsch (Black)	Inner Fairing - Below Radio (Right Side)
[2]	Main to Interconnect Harness	FLHT/C	12-Place Deutsch (Gray)	Inner Fairing - Right Fairing Support Brace
		FLTR	12-Place Deutsch (Gray)	Inner Fairing - Below Radio (Right Side)
[27]	Radio	All	23-Place Amp	Inner Fairing - Back of Radio (Right Side)
[30]	TSM/TSSM	All	12-Place Deutsch	Cavity in Crossmember at Rear of Battery Box (Under Seat)
[39]	Speedometer	FLHT/C	12-Place Packard	Inner Fairing (Back of Speedometer)
		FLTR	12-Place Packard	Under Bezel (Back of Speedometer)
[78]	ECM	All	36-Place Packard	Under Right Side Cover
[91]	Data Link	All	4-Place Deutsch	Under Right Side Cover
[108]	Tachometer	FLHT/C	12-Place Packard	Inner Fairing (Back of Tachometer)
		FLTR	12-Place Packard	Under Bezel (Back of Tachometer)
[156]	Main to Interconnect Harness	FLHT/C	6-Place Deutsch	Inner Fairing - Right Fairing Support Brace
		FLTR	6-Place Deutsch	Inner Fairing - Below Radio (Right Side)

HOME

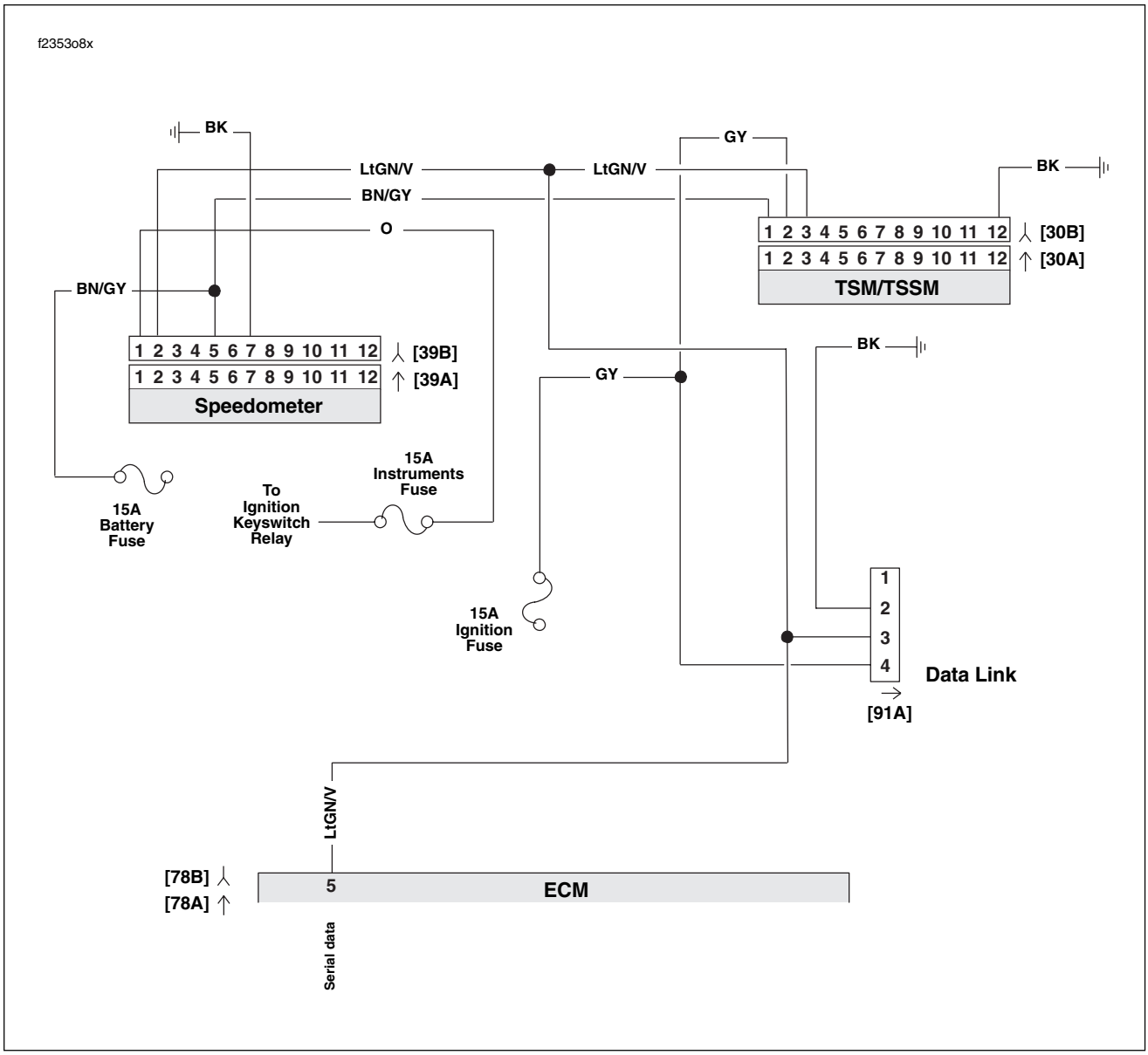

Figure 5-73. ECM and TSM/TSSM Circuit (FLHR/C/S)

Table 5-56. Wire Harness Connectors in Figure 5-73.

NO.	DESCRIPTION	TYPE	LOCATION
[30]	TSM/TSSM	12-Place Deutsch	Cavity in Crossmember at Rear of Battery Box (Under Seat)
[39]	Speedometer	12-Place Packard	Under Console (Back of Speedometer)
[78]	ECM	36-Place Packard	Under Right Side Cover
[91]	Data Link	4-Place Deutsch	Under Right Side Cover

Test 5.30

LOSS OF TSM/TSSM SERIAL DATA: DTC U1064, U1255

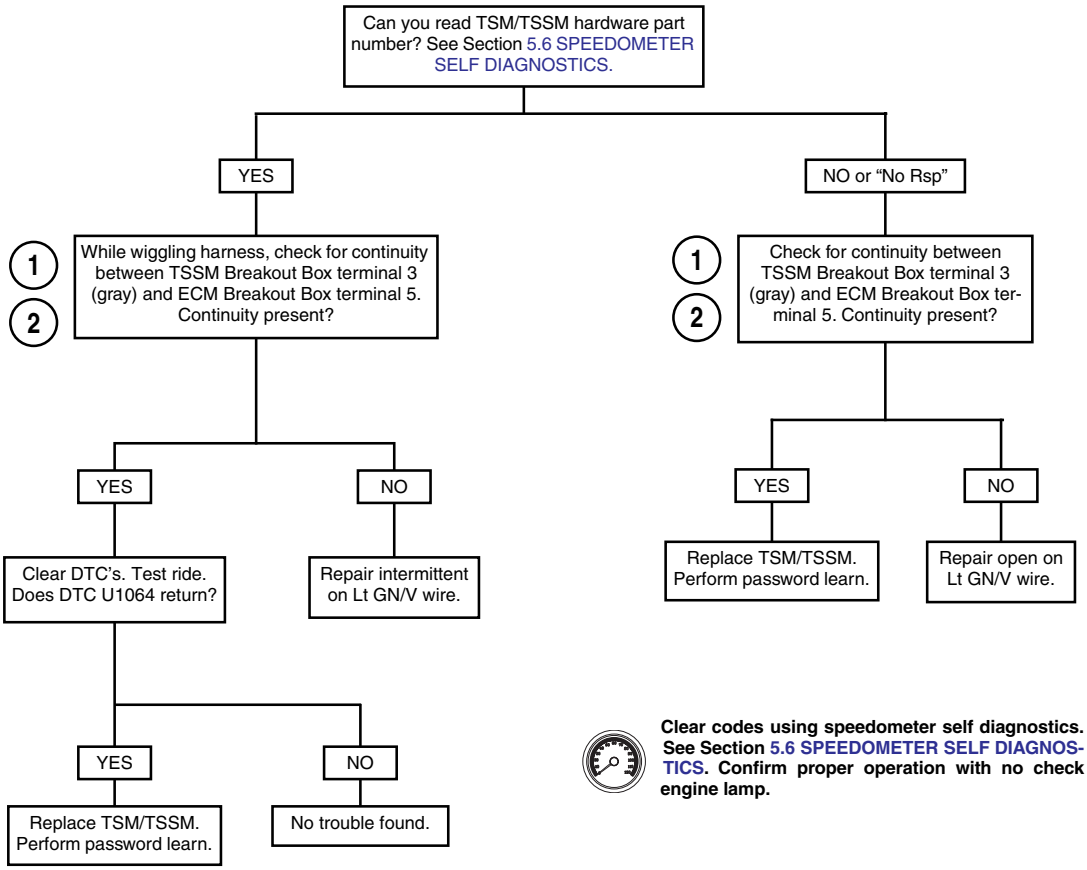

Clear codes using speedometer self diagnostics. See Section 5.6 SPEEDOMETER SELF DIAGNOSTICS. Confirm proper operation with no check engine lamp.

DTC U1097, U1255 5.31

GENERAL

Loss of Speedometer Serial Data

The serial data connector provides a means for the speedometer, ECM and TSM/TSSM to communicate their current status. When all operating parameters on the serial data link are within specifications, a state of health message is sent between the components. A DTC U1255 (only reported by the TSM/TSSM or speedometer) indicates that no messages were present during power up of the current key cycle. A DTC U1097 indicates that there was communication on the data bus since power up, but was lost or interrupted during that key cycle.

Table 5-57. Code Description

DTC	DESCRIPTION
U1097	Loss of all speedometer serial data (state of health)
U1255	Missing message at speedometer

DIAGNOSTICS

NOTE

If DTC is historic and not current, wiggle wire harness while performing voltage and continuity tests to identify intermittents.

Diagnostic Notes

The reference numbers below correlate with the circled numbers on the test 5.31 flow chart.

1. Mate black pin housing on breakout box with wire harness connector [39B] using INSTRUMENT HARNESS ADAPTERS (Part No. HD-46601). Leave speedometer connector [39A] disconnected.
2. Connect BREAKOUT BOX (Part No. HD-43876) to wire harness connector [78B]. Leave ECM connector [78A] disconnected. See Section 5.7 BREAKOUT BOX: EFI.

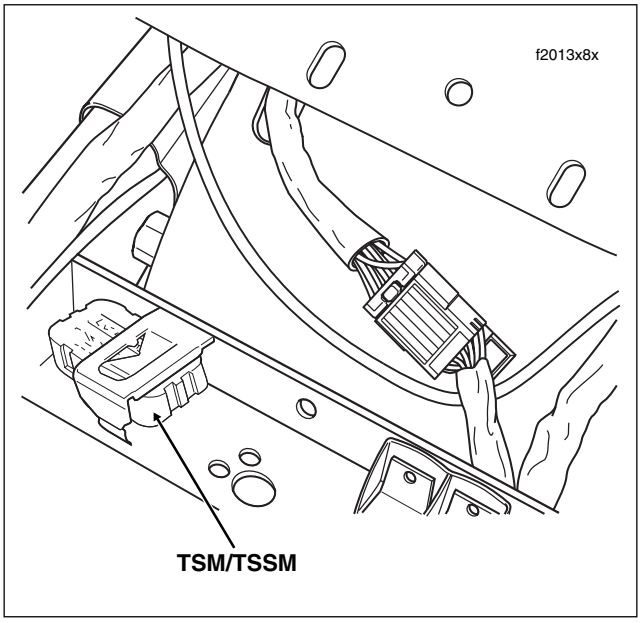

Figure 5-74. Remove Seat

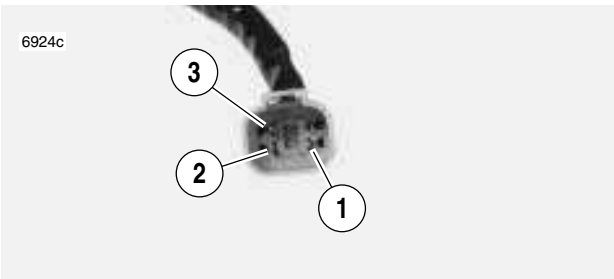

1. **Terminal 2: ground (BK)**
2. **Terminal 3: serial data (Lt GN/V)**
3. **Terminal 4: power (GY)**

Figure 5-75. Data Link Connector

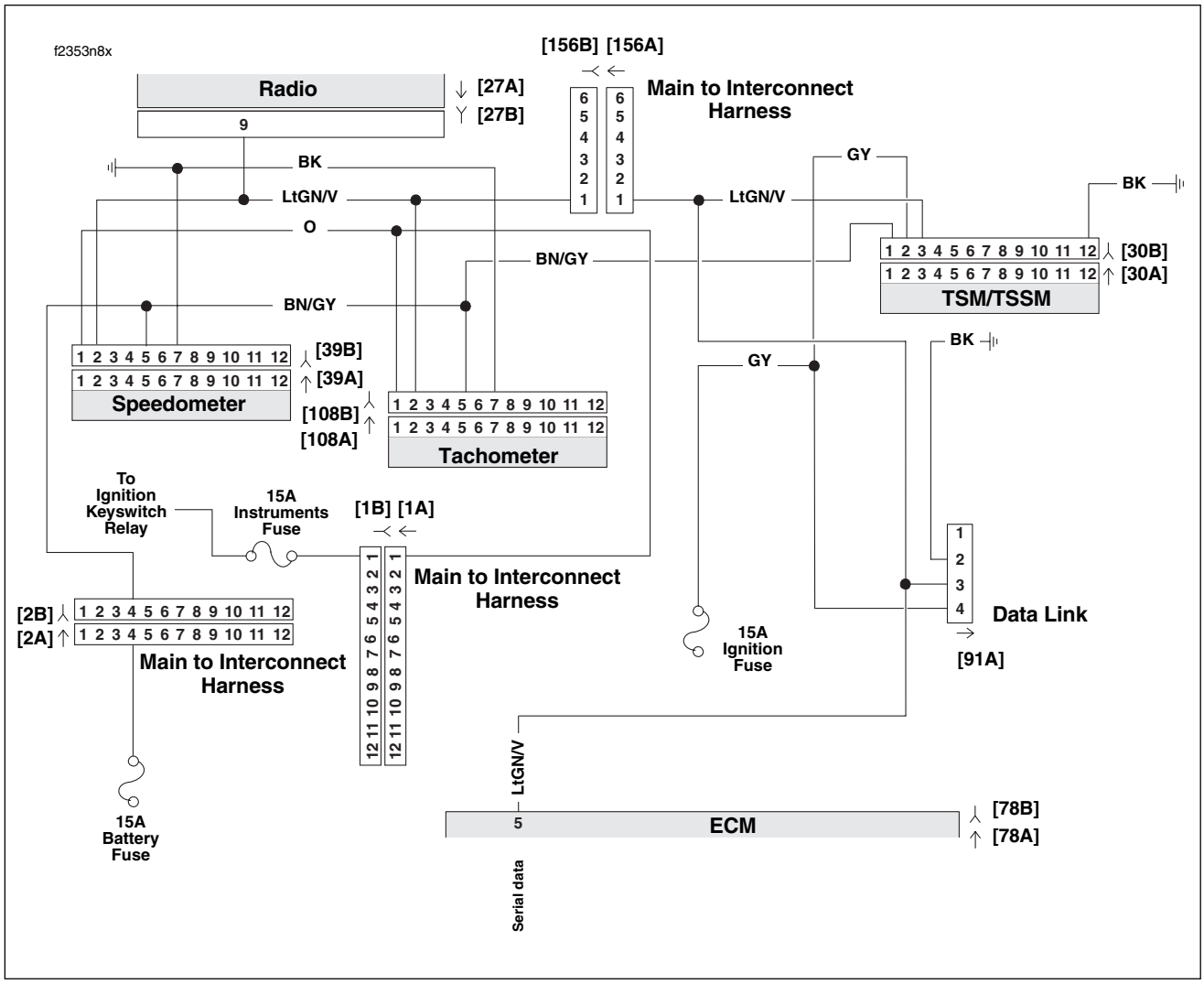

Figure 5-76. Serial Data Circuit (FLHX, FLHT/C/U, FLTR)

Table 5-58. Wire Harness Connectors in Figure 5-76.

NO.	DESCRIPTION	MODEL	TYPE	LOCATION
[1]	Main to Interconnect Harness	FLHT/C	12-Place Deutsch (Black)	Inner Fairing - Right Radio Support Bracket
		FLTR	12-Place Deutsch (Black)	Inner Fairing - Below Radio (Right Side)
[2]	Main to Interconnect Harness	FLHT/C	12-Place Deutsch (Gray)	Inner Fairing - Right Fairing Support Brace
		FLTR	12-Place Deutsch (Gray)	Inner Fairing - Below Radio (Right Side)
[27]	Radio	All	23-Place Amp	Inner Fairing - Back of Radio (Right Side)
[30]	TSM/TSSM	All	12-Place Deutsch	Cavity in Crossmember at Rear of Battery Box (Under Seat)
[39]	Speedometer	FLHT/C	12-Place Packard	Inner Fairing (Back of Speedometer)
		FLTR	12-Place Packard	Under Bezel (Back of Speedometer)
[78]	ECM	All	36-Place Packard	Under Right Side Cover
[91]	Data Link	All	4-Place Deutsch	Under Right Side Cover
[108]	Tachometer	FLHT/C	12-Place Packard	Inner Fairing (Back of Tachometer)
		FLTR	12-Place Packard	Under Bezel (Back of Tachometer)
[156]	Main to Interconnect Harness	FLHT/C	6-Place Deutsch	Inner Fairing - Right Fairing Support Brace
		FLTR	6-Place Deutsch	Inner Fairing - Below Radio (Right Side)

HOME

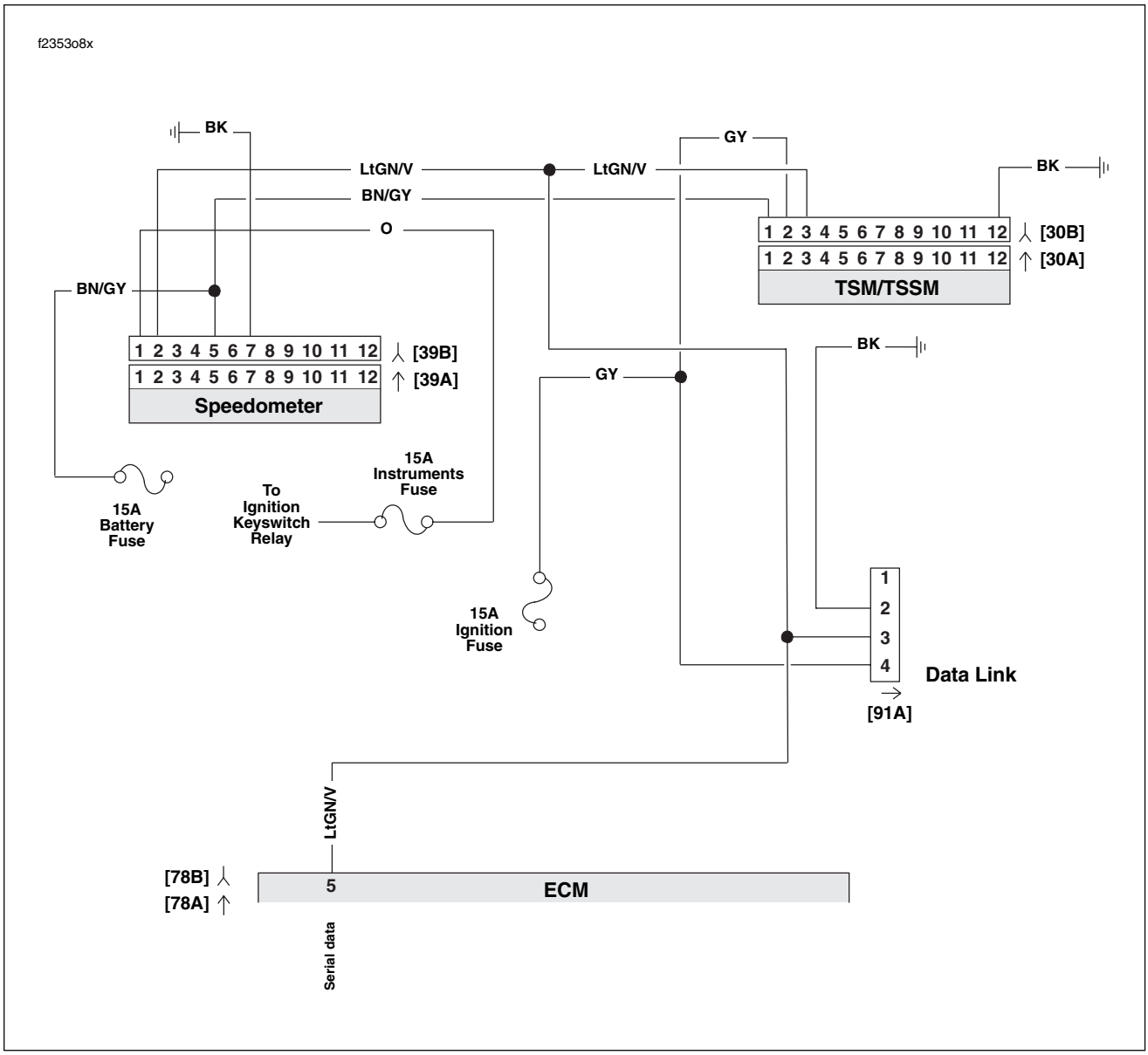

Figure 5-77. Serial Data Circuit (FLHR/C/S)

Table 5-59. Wire Harness Connectors in Figure 5-77.

NO.	DESCRIPTION	TYPE	LOCATION
[30]	TSM/TSSM	12-Place Deutsch	Cavity in Crossmember at Rear of Battery Box (Under Seat)
[39]	Speedometer	12-Place Packard	Under Console (Back of Speedometer)
[78]	ECM	36-Place Packard	Under Right Side Cover
[91]	Data Link	4-Place Deutsch	Under Right Side Cover

HOME

Test 5.31

LOSS OF SPEEDOMETER SERIAL DATA: DTC U1097, U1255

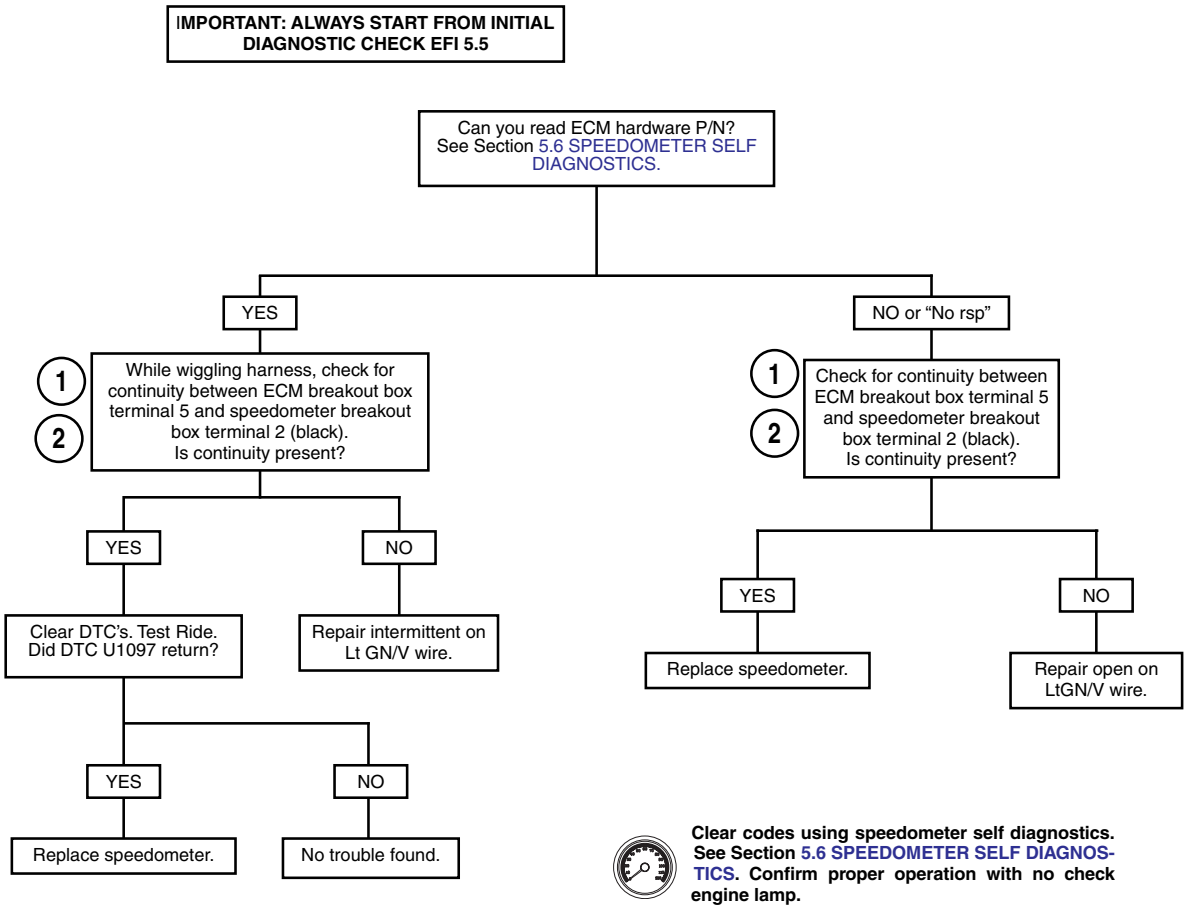

Table Of Contents

SUBJECT	PAGE NO.
7.1 Cruise Control	7-1
7.2 Cruise Inoperative Diagnostics	7-3
7.3 Cruise Dropout Diagnostics	7-6
7.4 Cruise Chart A: Initial Diagnostics	7-9
7.5 Cruise Chart B: Resume Switch	7-11
7.6 Cruise Chart C: Cruise Engaged Lamp	7-12
7.7 Cruise Chart D: Cruise Power	7-13
7.8 Cruise Chart E: Cruise Enable	7-15
7.9 Cruise Chart F-1: Brake Lights ON	7-16
7.10 Cruise Chart F-2: Brake Lights OFF	7-17
7.11 Cruise Chart G: Throttle Switch	7-19
7.12 Cruise Chart H: Speedometer Input	7-20
7.13 Cruise Chart I: Tachometer Input	7-21

CRUISE CONTROL 7

CRUISE CONTROL 7.1

GENERAL

The Cruise Control system provides automatic vehicle speed control. The electronics and stepper motor are contained in a control module mounted under the left side cover. The stepper motor actuates the cruise control cable through a gear train and ribbon reel.

SYSTEM OPERATION

To engage and disengage the cruise control system, proceed as follows:

1. While riding in fourth or fifth gear, turn the Cruise ON/OFF Switch to the ON position. See Figure 7-1. The switch is located on the fairing cap of FLHTCU models, the instrument nacelle of FLTR models, and the left handlebar lower switch housing on FLHRC models. The Cruise Enabled/Engaged lamp in the tachometer face (speedometer on FLHRC models) turns red to indicate that the system is activated. See Figure 7-3. A red lamp in the switch on both FLHTCU and FLTR models also indicates this condition to the rider.
2. Power (12 vdc) is supplied to the cruise control module through a 15 amp fuse located in the fuse block mounted under the left side cover.
3. With the motorcycle traveling at the desired “cruise” speed (30 mph/48 km/h to 85 mph/137 km/h), momentarily push the Cruise SET/RESUME switch to SET. See Figure 7-2.

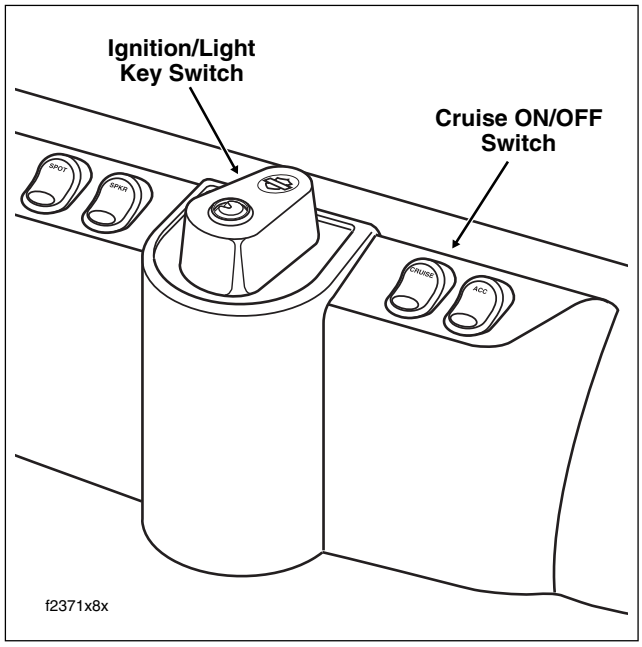

Figure 7-1. Fairing Cap (FLHTCU)

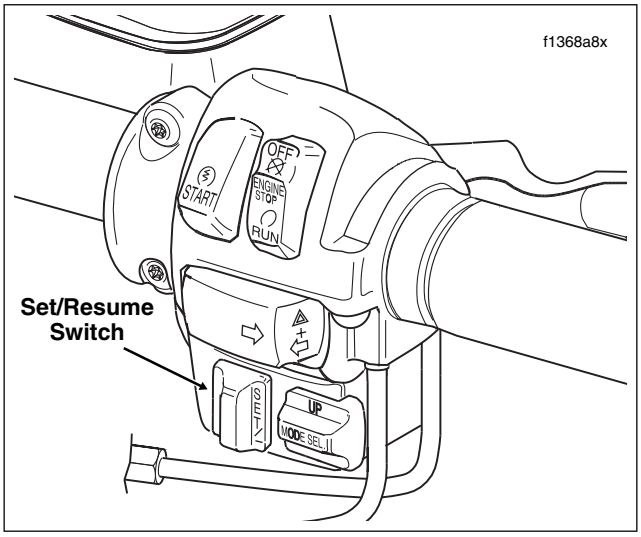

Figure 7-2. Right Handlebar Switch Assembly (FLTR, FLHTCU)

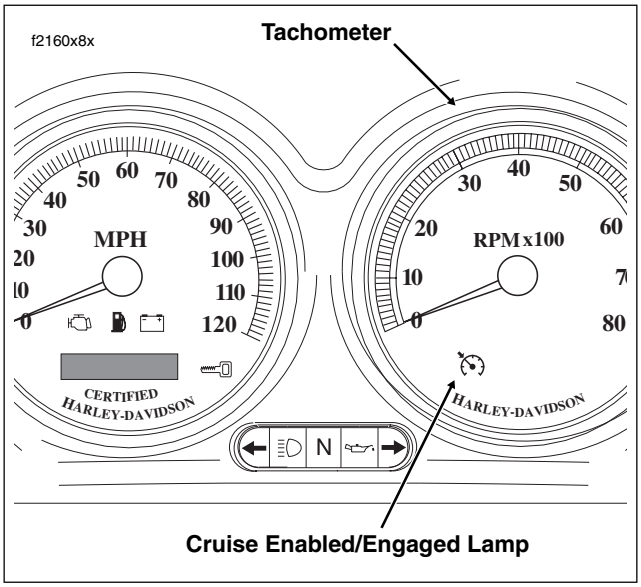

Figure 7-3. Instrument Panel (FLHTCU)

The cruise control module “reads” the vehicle speed sensor (VSS) output to establish the desired vehicle speed. The module then sends a signal to the stepper motor which drives the ribbon reel to take up the slack in the cruise cable. The Cruise Enabled/Engaged lamp in the tachometer face (speedometer on FLHRC models) turns from red to green to indicate that the cruising speed is locked in. See Figure 7-3.

4. The cruise control module monitors both the engine RPM and the VSS output speed signal. The module signals the stepper motor to open or close the throttle to keep the speedometer output speed signal constant. The engine RPM is monitored to detect engine

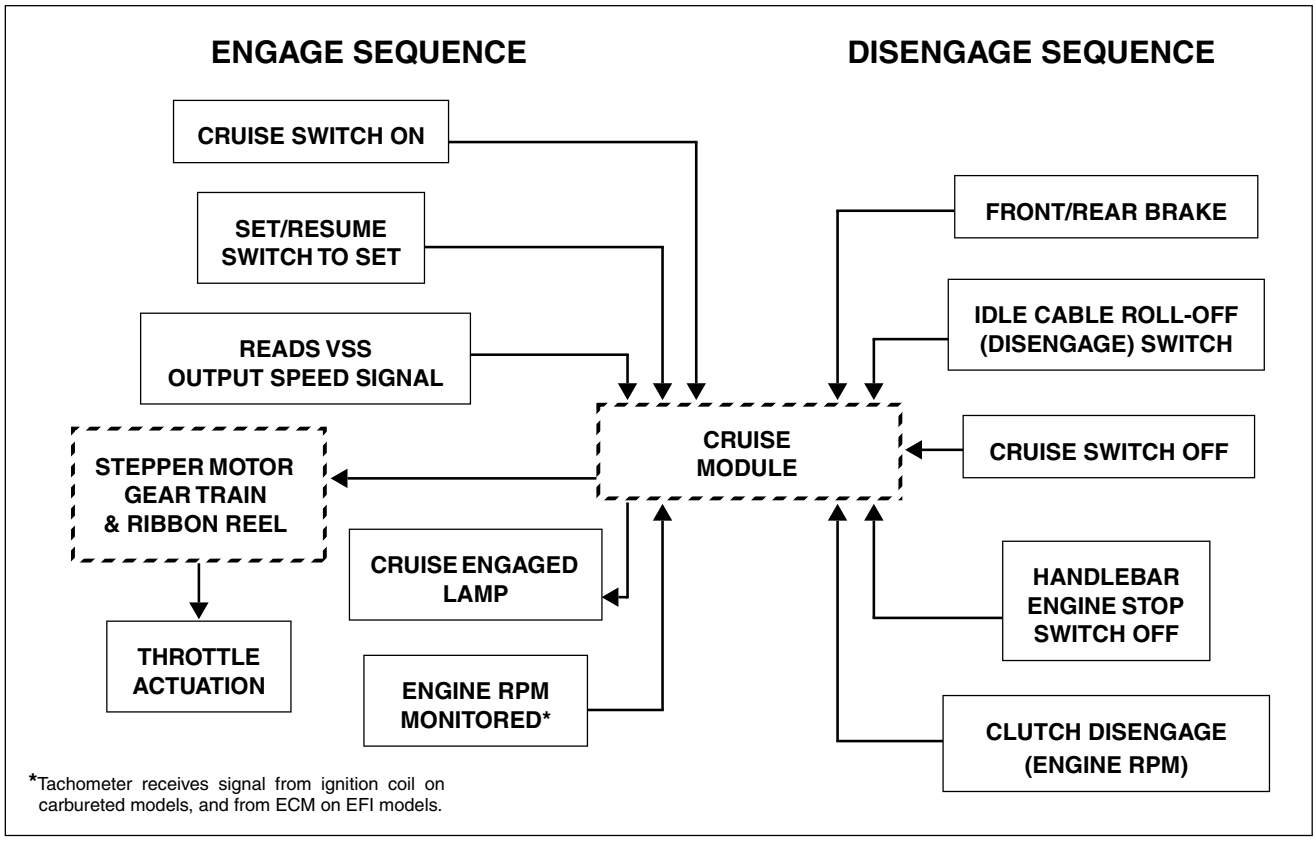

Figure 7-4. Cruise System Diagram

overspeed, a condition which automatically causes cruise disengagement.

5. The cruise control automatically disengages (stepper motor drives cruise cable to the full-out position) whenever the cruise control module receives one of the following inputs:

   a. Front or rear brake is applied.

   b. Throttle is “rolled back” or closed, thereby actuating idle cable roll-off (disengage) switch.

   c. Motorcycle clutch is disengaged (module senses too great an increase in RPM).

   d. Cruise ON/OFF Switch placed in the OFF position. The switch is located on the fairing cap of FLHTCU models, the instrument nacelle of FLTR models, and the left handlebar lower switch housing on FLHRC models. The green Cruise Enabled/Engaged lamp in the tachometer face (speedometer on FLHRC models) is extinguished to indicate that the system is deactivated. The red lamp in the fairing cap switch of FLHTCU models and the instrument nacelle switch of FLTR models is also extinguished.

   e. Handlebar mounted Engine Stop Switch placed in the OFF position. (This removes tachometer input signal which results in module disengagement.)

   f. Handlebar mounted Cruise SET/RESUME switch is pushed to SET and held in that position until vehicle speed drops below 30 mph (48 km/h).

NOTE

If the vehicle speed is above 30 mph (48 km/h) when the Cruise SET/RESUME Switch is released, then the cruise system automatically re-engages.

TROUBLESHOOTING

The cruise module circuitry provides on-board diagnostics to help isolate any problems that might occur with the cruise system.

If the cruise is inoperative or fails to set, begin troubleshooting with 7.2 CRUISE INOPERATIVE DIAGNOSTICS. If the cruise seems to disengage or drop out for no apparent reason, then see 7.3 CRUISE DROPOUT DIAGNOSTICS.

In the diagnostic mode, the Cruise Enabled/Engaged lamp is employed as a test indicator. The lamp is in the tachometer face (speedometer on FLHRC models). See Figure 7-3.

CRUISE INOPERATIVE DIAGNOSTICS 7.2

GENERAL

Perform the following diagnostic procedures in the order presented. If the test sequence is not followed precisely, the diagnostic mode may not be exited at conclusion of the diagnostic routine and the test indicator (Cruise Engaged Lamp) may continue to flash while the engine is running.

INOPERATIVE DIAGNOSTICS

Refer to Table 7-2. All diagnostic steps are listed in table format. Follow the numbered steps to test the system. Compare the system behavior to CORRECT FUNCTION or INCORRECT FUNCTION columns and advance to the next step listed.

Diagnostic Notes

The diagnostic notes below provides supplementary information for Table 7-2.

1. If the cruise engaged lamp does not illuminate at all, check for one or more of the following conditions:
   a. SET/RESUME switch faulty or not wired correctly.
   b. Broken or pinched wire to SET switch or cruise module.
   c. Cruise engaged lamp burned out or miswired. Lamp is turned on by module supplied ground.
   d. Main 10-place connector not plugged into cruise module.
   e. Faulty cruise main switch and associated wiring.
   f. No module ground at Terminal E of 10-place module connector.
   g. Brake light on constantly.
   h. Throttle cables too tight.
   i. Bad cruise control fuse.
2. Repeat step 1. If the cruise engaged lamp still does not illuminate, see 7.4 CRUISE CHART A: INITIAL DIAGNOSTICS. For cruise module connector wire color locations and functions, refer to Table 7-1. Repair any problems and recheck by repeating step 1.

Table 7-1. Cruise Module Connector [17A]

TERMINAL	WIRE COLOR	FUNCTION AND CONNECTION
A	Red/Green	ON/OFF switch enable
B	Blue/Black	SET input from SET/RESUME switch
C	White/Blue	RESUME input from SET/RESUME switch
D	Violet/Yellow	Idle cable disengage switch (12 vdc from 15 amp fuse)
E	Black	Cruise module ground
F	Orange/Violet	12 vdc power from 15 amp fuse
G	Red/Blue	Disengage from brake relay (12 vdc)
H	Blue/Orange	Tachometer input
J	Green/Red	12 vdc from “CRUISE” indicator in instrument panel (module provides ground)
K	White/Green	Vehicle speed signal input

Table 7-2. Cruise Inoperative Diagnostics

NO.	ACTION	CORRECT FUNCTION	INCORRECT FUNCTION
NOTE *For best results, be sure that throttle cables are properly adjusted. If roll-off switch is **not** continually closed, inaccurate results will occur.*			
1	Enter the diagnostic mode: With the fairing cap Cruise ON/OFF Switch at ON, and the handlebar mounted Cruise SET/RESUME Switch **held** at SET, turn the Ignition/Light Key Switch to IGNITION.	The cruise engaged lamp will illuminate and remain on as long as the Cruise SET/ RESUME switch is held in the SET position. **Continue with Step 2.**	If the cruise engaged lamp remains illuminated after the switch is released, then either the switch or related wiring is shorted. See Diagnostic Note 1 for possible causes. **Continue with steps listed under Diagnostic Note 2.**
2	Push the handlebar mounted Cruise SET/RESUME Switch to RES(UME) and hold in this position.	The cruise engaged lamp will illuminate and remain on as long as the SET/RESUME Switch is held in the RES(UME) position. **Continue with Step 3.**	If the cruise engaged lamp does not illuminate at all, check for one or more of the following conditions: ● RES(UME) switch not wired correctly. ● Broken or pinched wire to RES(UME) switch or cruise module. Continue with 7.5 CRUISE CHART B: RESUME SWITCH.
3	Next, turn the throttle grip tightly closed to check the throttle grip switch.	The cruise engaged lamp will illuminate when the switch is closed, and then be extinguished when the throttle grip returns to its free position. **Continue with Step 4.**	If the cruise engaged lamp does not illuminate at all, check for one or more of the following conditions: ● Throttle grip switch not wired correctly. ● Broken or pinched wire to throttle grip switch or cruise module. ● Throttle grip switch not working correctly. Continue with 7.11 CRUISE CHART G: THROTTLE SWITCH.
4	Apply the brake hand lever.	The cruise engaged lamp will illuminate and remain on until the brake lever is released. **Continue with Step 5.**	If the cruise engaged lamp does not illuminate at all, check for one or more of the following conditions: ● Front brake switch not wired correctly. ● Broken or pinched wire to front brake switch or cruise module. ● Front brake switch not working properly. See 7.9 CRUISE CHART F-1: BRAKE LIGHTS ON (constant brake light input) or 7.10 CRUISE CHART F-2: BRAKE LIGHTS OFF (no front and/or rear brake lights).
5	Press and hold the brake foot pedal for at least 5 seconds.	The cruise engaged lamp will illuminate. After depressing and holding the brake foot pedal for 5 seconds, the lamp will be extinguished. Release the brake pedal and the cruise module will momentarily pull the throttle open slightly and then release. **Continue with Step 6.**	The cruise engaged lamp will not illuminate if any of the following conditions exist: ● Rear brake switch not wired correctly. ● Broken or pinched wire to rear brake switch or cruise control module. ● Rear brake switch not working properly. The throttle will not open if the following conditions exist: ● Cables not adjusted properly. ● Faulty cruise control module. See 7.9 CRUISE CHART F-1: BRAKE LIGHTS ON (constant brake light input) or 7.10 CRUISE CHART F-2: BRAKE LIGHTS OFF (no front and/or rear brake lights).

Table 7-2. Cruise Inoperative Diagnostics

NO.	ACTION	CORRECT FUNCTION	INCORRECT FUNCTION
6	Rotate rear wheel.	The cruise engaged lamp will flash on and off indicating that the vehicle speed signal is wired properly and working correctly. **Continue with Step 7.**	The cruise engaged lamp will not illuminate if any of the following conditions exist: ● Vehicle speed signal not wired correctly. ● Broken or pinched wire to speedometer. ● Speedometer not working properly. ● Vehicle speed signal wiring disconnected. See 7.12 CRUISE CHART H: SPEEDOMETER INPUT.
7	Turn the fairing cap Cruise ON/OFF Switch and the Ignition/Light Key Switch to OFF. Disconnect spark plug wires.	**Continue with Step 8.**	
8	Press SET/RESUME Switch to RES(UME), and hold.	**Continue with Step 9.**	
9	While holding SET/RESUME Switch at RES(UME), turn Ignition/Light Key Switch to ON and crank engine. (If weak battery or poor connections result in low system voltage, Diagnostic Mode may be aborted.)	The cruise engaged lamp flashes with RPM input. **Continue with Step 10.**	The cruise engaged lamp does not flash with RPM input. See 7.13 CRUISE CHART I: TACHOMETER INPUT.
10	While continuing to hold SET/RESUME Switch at RES(UME), turn fairing cap Cruise ON/OFF Switch to ON. Release SET/RESUME Switch.	Cruise engaged lamp blinks twice. NOTE: Lamp may go on for three seconds if RPM signal was above cranking speed. **DIAGNOSTIC ROUTINE EXITED**	
11	To restart or repeat the diagnostic sequence, return to step 1.		

CRUISE DROPOUT DIAGNOSTICS 7.3

GENERAL

To check for diagnostic codes, see DROPOUT DIAGNOSTICS below. If other problems are experienced, such as harsh cruise engagement or speed loss, see Table 7-4.

DROPOUT DIAGNOSTICS

The last eight diagnostic codes for cruise disengagement are stored in memory.

1. To enter the diagnostic mode, turn the engine off and proceed as follows:
   a. Turn the fairing cap Cruise ON/OFF switch to OFF. The light in the rocker switch is extinguished to indicate this condition to the operator.
   b. Push the Cruise SET/RESUME Switch on the right handlebar to SET and hold.
   c. Turn the Ignition/Light Key Switch to IGNITION, but do not start the engine.
   d. Release the Cruise SET/RESUME Switch from the SET position while observing the behavior of the Cruise Enabled/Engaged Lamp on the tachometer gauge (speedometer on FLHRC models).
2. The system transmits the most recent cruise dropout code. Each dropout code consists of 3 digits and is sent out as a series of flashes.
3. The lamp will begin by flashing one or more times to indicate the first digit of the dropout code. The length of time the lamp is illuminated and the length of time in which it is off are each about 1/4 second in duration. Simply count the number of times the lamp flashes in order to retrieve the first digit of the dropout code.
4. Following transmission of the first digit, there is a one second pause in which the lamp is off. The lamp will then flash one or more times to indicate the second digit of the dropout code. Count the number of times the lamp flashes to retrieve the second digit. See Figure 7-5.
5. Following transmission of the second digit, there is a another one second pause in which the lamp is off. The lamp will then flash one or more times to indicate the third digit of the dropout code. Again, count the number of times the lamp flashes to retrieve the third digit.
6. Write down the dropout code on a piece of paper. To identify the reason for cruise disengagement see Table 7-3. The last column of the table suggests the appropriate corrective action.
7. To verify the dropout code, toggle the Cruise SET/RESUME Switch to RESUME. The transmission of the most recent dropout code is repeated. To continue with the next code, simply toggle the Cruise Switch to SET. All subsequent codes are sent in the same manner as the first, after which the operator may repeat the code or move on to the next in the series.
8. After the eighth (or oldest) dropout code is flashed, the Cruise Engaged Lamp remains illuminated to indicate that the end of the dropout code buffer has been reached.
9. To start the sequence at the beginning, that is, with transmission of the most recent dropout code, momentarily push the Cruise SET/RESUME Switch to SET.
10. To exit the diagnostic mode, turn the Ignition/Light Key Switch to OFF.

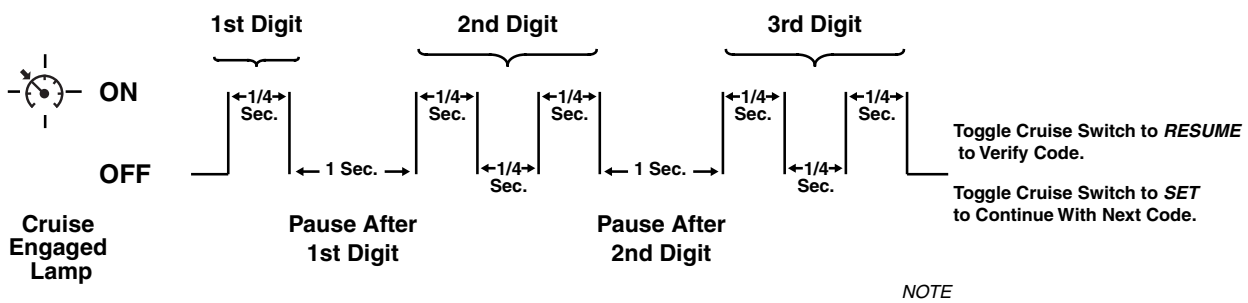

NOTE

Looking at the above transmission, we can see that the dropout code is 122. See Table 7-3. The reason for cruise disengagement is identified as application of front or rear brakes.

Figure 7-5. Cruise Engaged Lamp Dropout Code Timing Diagram

Table 7-3. Cruise Dropout Code Key

CODE	CONDITION	ACTION *NOTE* *While performing instructions under applicable flow chart, wiggle connectors and wires to identify intermittents.*
111	Initial State or Cleared Memory (No Codes Recorded)	-
112	Throttle Roll Off	7.11 CRUISE CHART G: THROTTLE SWITCH
113	Fairing Cap Cruise Switch Turned OFF	7.8 CRUISE CHART E: CRUISE ENABLE
121	Short in Wiring Between Set/Resume	7.4 CRUISE CHART A: INITIAL DIAGNOSTICS or 7.5 CRUISE CHART B: RESUME SWITCH
122	Application of Front or Rear Brakes *NOTE* *May require inspection of brake levers or front brake light switch mounting.*	7.9 CRUISE CHART F-1: BRAKE LIGHTS ON
211	Coast (S/C Button Engaged) Interval Longer than 6 Seconds	7.4 CRUISE CHART A: INITIAL DIAGNOSTICS
212	Speed Drops Below 30 MPH While in Coast (S/C Button Engaged)	7.4 CRUISE CHART A: INITIAL DIAGNOSTICS or 7.12 CRUISE CHART H: SPEEDOMETER INPUT
213	Speed Drops Below 26 MPH or Exceeds 90 MPH	7.12 CRUISE CHART H: SPEEDOMETER INPUT
221	Speed Drops 15 MPH Below Set Speed (Such as When Climbing a Steep Hill)	7.12 CRUISE CHART H: SPEEDOMETER INPUT
222	Speed Decreases Greater than 20 MPH per Second	7.12 CRUISE CHART H: SPEEDOMETER INPUT
223	Vehicle Speed Sensor Input	7.12 CRUISE CHART H: SPEEDOMETER INPUT
231	Over 5000 RPM	7.13 CRUISE CHART I: TACHOMETER INPUT
232	Loss of Tachometer Signal	7.13 CRUISE CHART I: TACHOMETER INPUT
242	High Rate of Change of RPM Detected (Such as When Clutch is Pulled In or Contact is Made With Ice Patch or Slippery Surface)	7.13 CRUISE CHART I: TACHOMETER INPUT
311	Internal Failure	Replace cruise module. See the Touring Models Service Manual.
312		
313		
321		
323		
331		
332		
333		
341	Low Voltage	7.7 CRUISE CHART D: CRUISE POWER
342	Internal Failure	Replace cruise module. See the Touring Models Service Manual.
343		
351		
352		
353		
361		
362		
363		
371		
423		
432		
777		

Table 7-4. Other Malfunctions

CONDITION	SYMPTOM	CHECK FOR
Harsh engagement	Cruise control opens throttle abruptly or harshly	Check for a cruise cable that is too tight. See CABLE LASH INITIALIZATION in the Touring Models Service Manual.
Speed variation	Loses speed	● Cruise cable too loose. See CABLE LASH INITIALIZATION in the Touring Models Service Manual. ● Set switch held too long.
	Gains speed	● Cruise cable too tight. See CABLE LASH INITIALIZATION in the Touring Models Service Manual.
	Speed surges	● Intermittent vehicle speed signal. ● Intermittent speedometer. ● Defective cruise module. See CRUISE MODULE, REMOVAL/INSTALLATION, in the Touring Models Service Manual. *NOTE* *Check for surging with cruise control turned OFF. If surging is still present, a lean fuel mixture may be the cause.*

DIAGNOSTICS

Test 7.4 (Part 1 of 2)

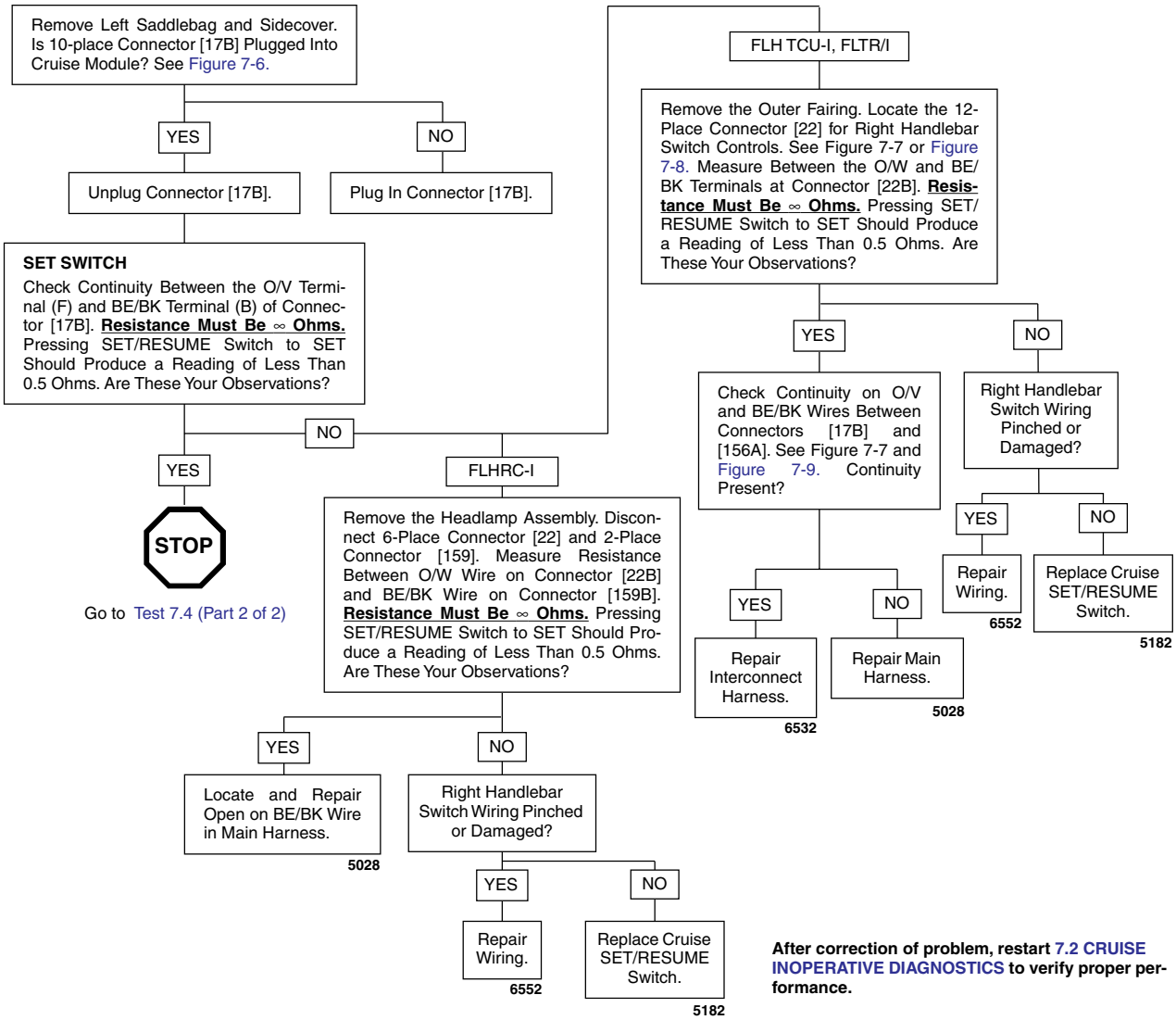

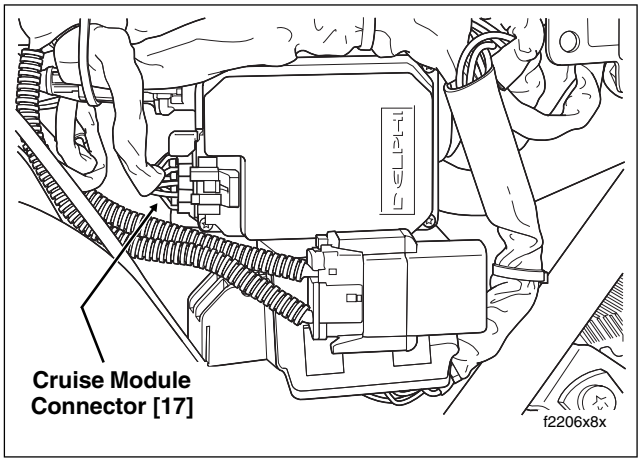

Figure 7-6. Left Side Cover Removed

Test 7.4 (Part 2 of 2)

INITIAL DIAGNOSTICS

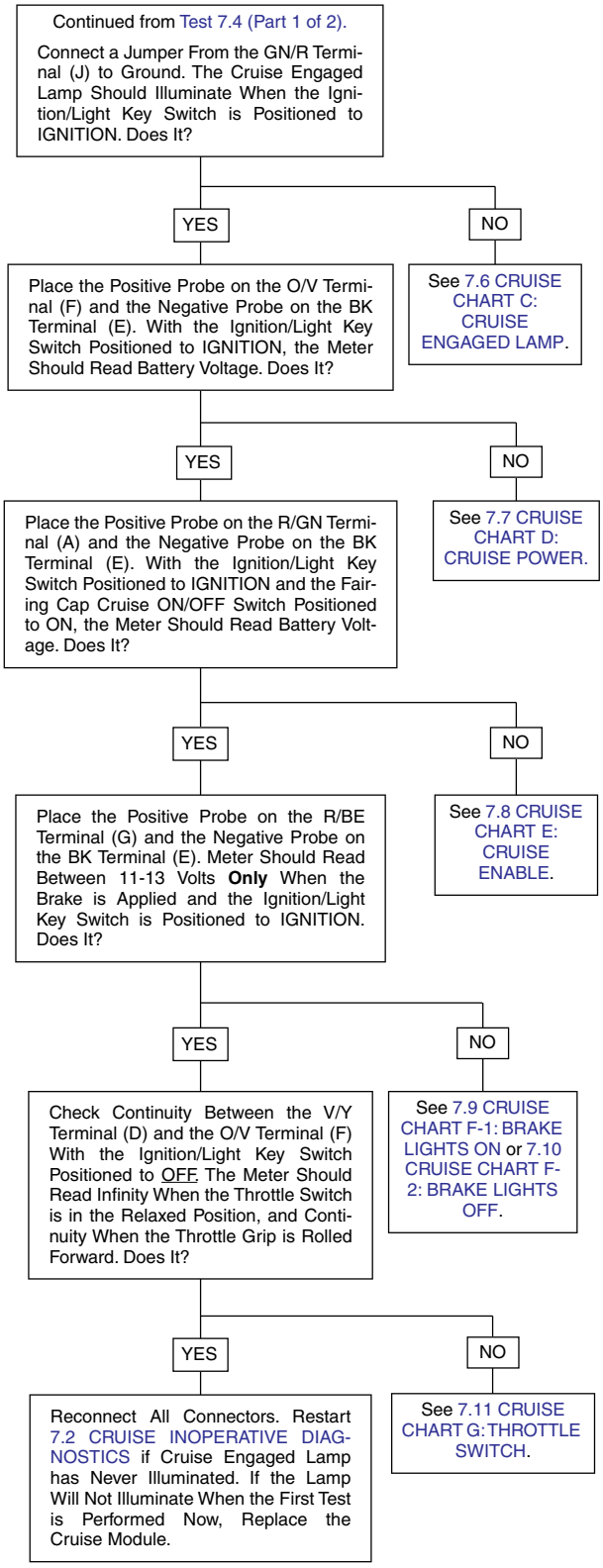

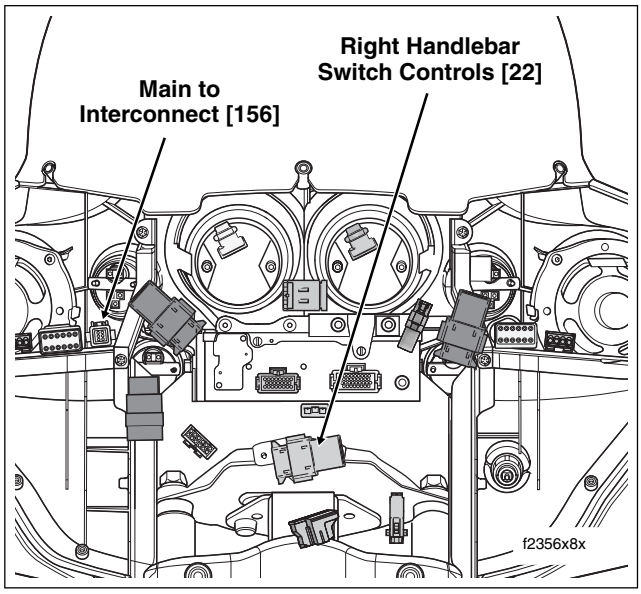

Figure 7-7. Outer Fairing Removed (FLHTC/U)

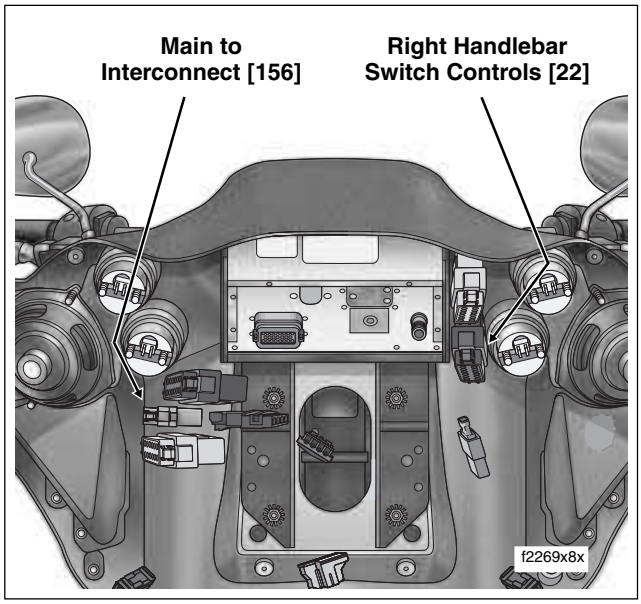

Figure 7-8. Outer Fairing Removed (FLTR)

CRUISE CHART B: RESUME SWITCH 7.5

DIAGNOSTICS

Test 7.5

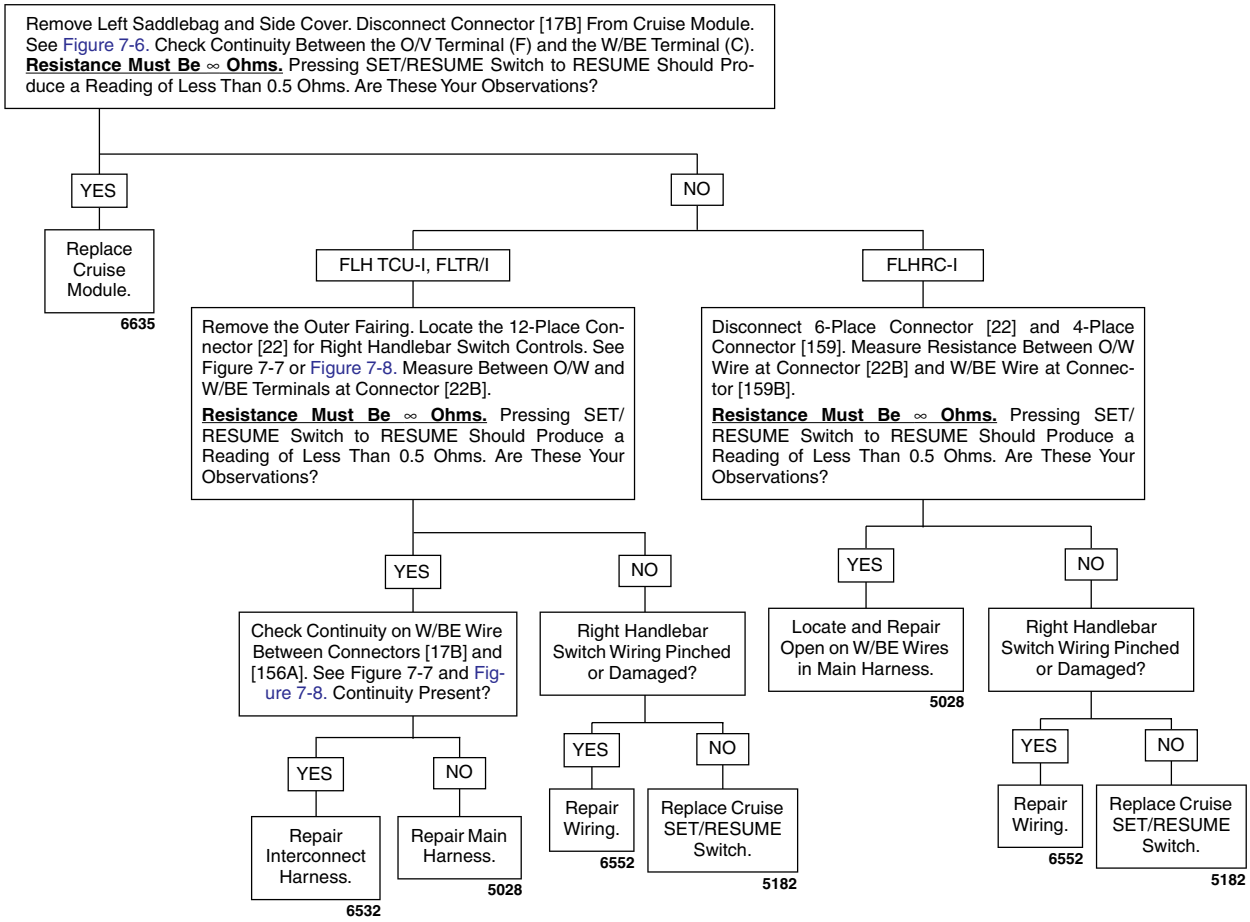

After correction of problem, restart 7.2 CRUISE INOPERATIVE DIAGNOSTICS to verify proper performance.

CRUISE CHART C: CRUISE ENGAGED LAMP 7.6

DIAGNOSTICS

Test 7.6

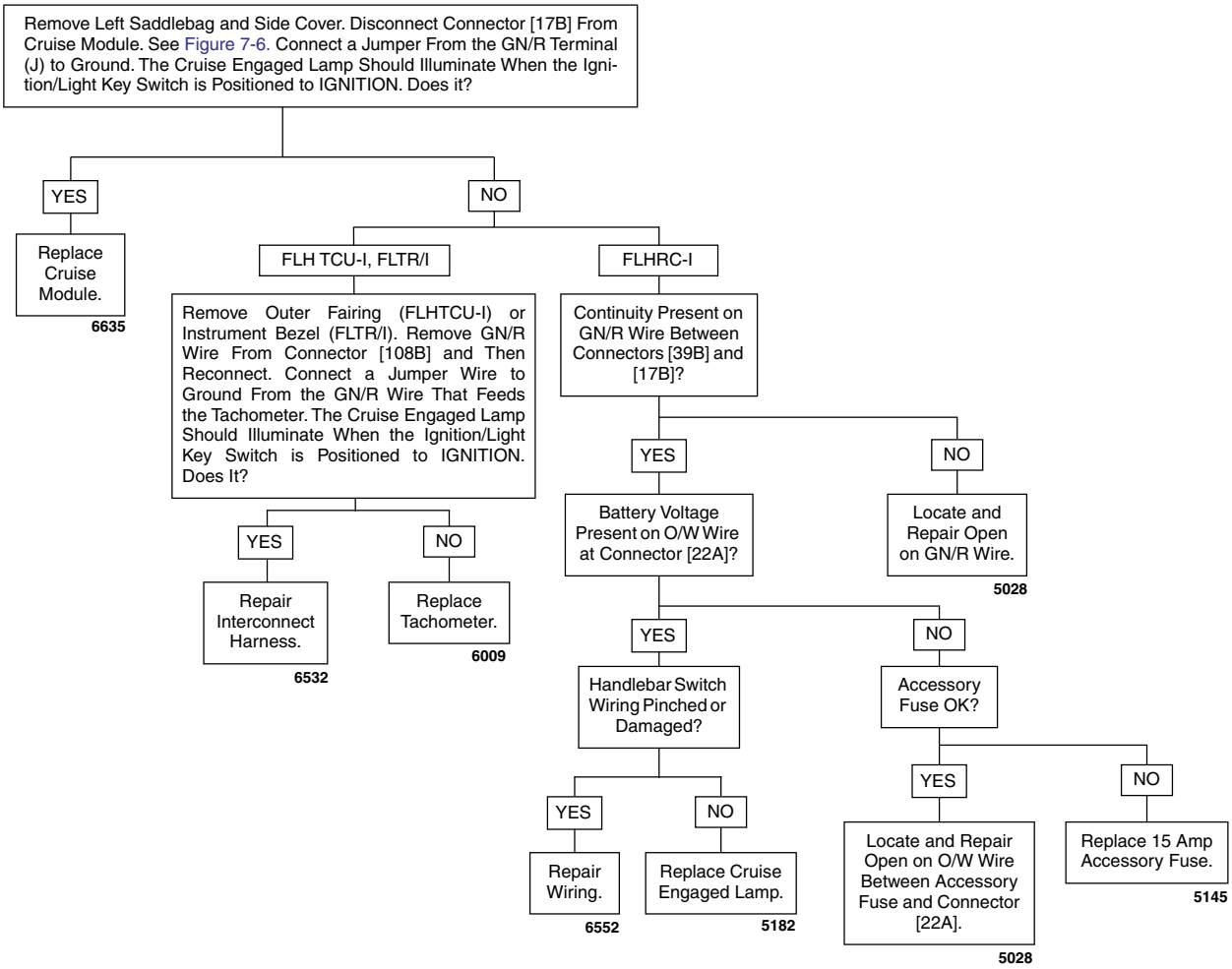

After correction of problem, restart 7.2 CRUISE INOPERATIVE DIAGNOSTICS to verify proper performance.

CRUISE CHART D: CRUISE POWER 7.7

DIAGNOSTICS

Test 7.7

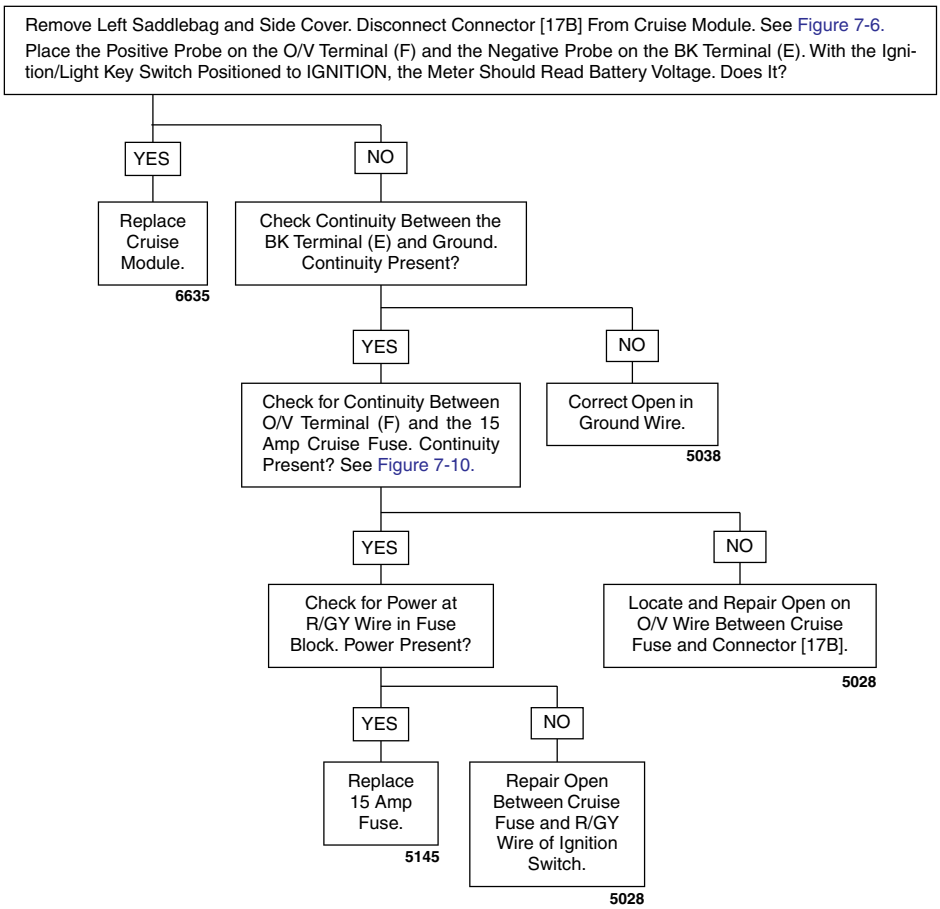

After correction of problem, restart 7.2 CRUISE INOPERATIVE DIAGNOSTICS to verify proper performance.

1. Right Handlebar Switch Controls [22]
2. Main to Interconnect Harness [2]
3. Speedometer Gauge [39]
4. Left Handlebar Switch Controls [24]
5. Fairing Cap [105]
6. Main to Interconnect Harness [1]
7. Main to Interconnect Harness [156]

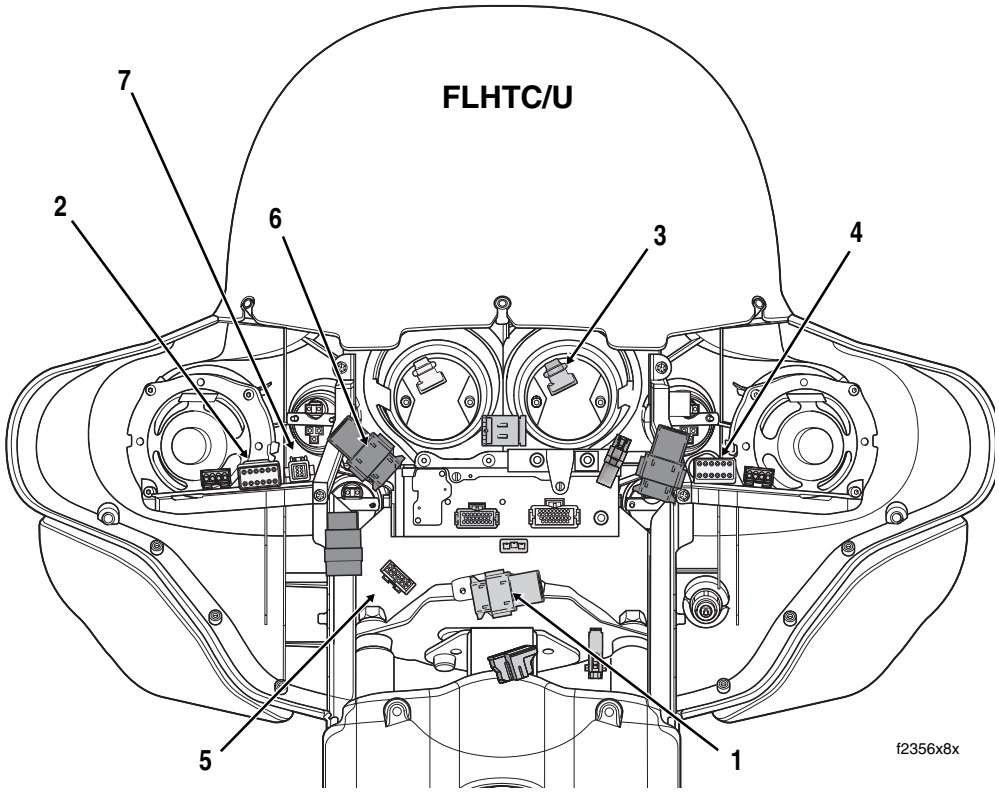

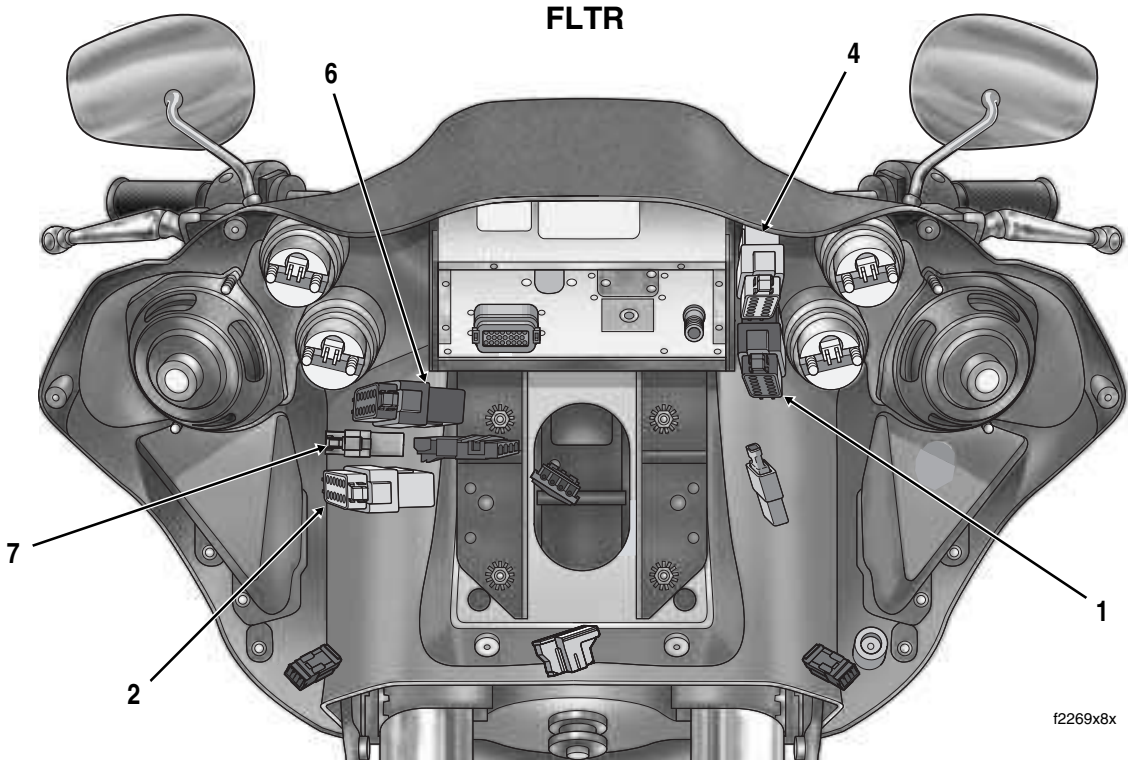

Figure 7-9. Outer Fairing Removed

CRUISE CHART E: CRUISE ENABLE 7.8

DIAGNOSTICS

Test 7.8

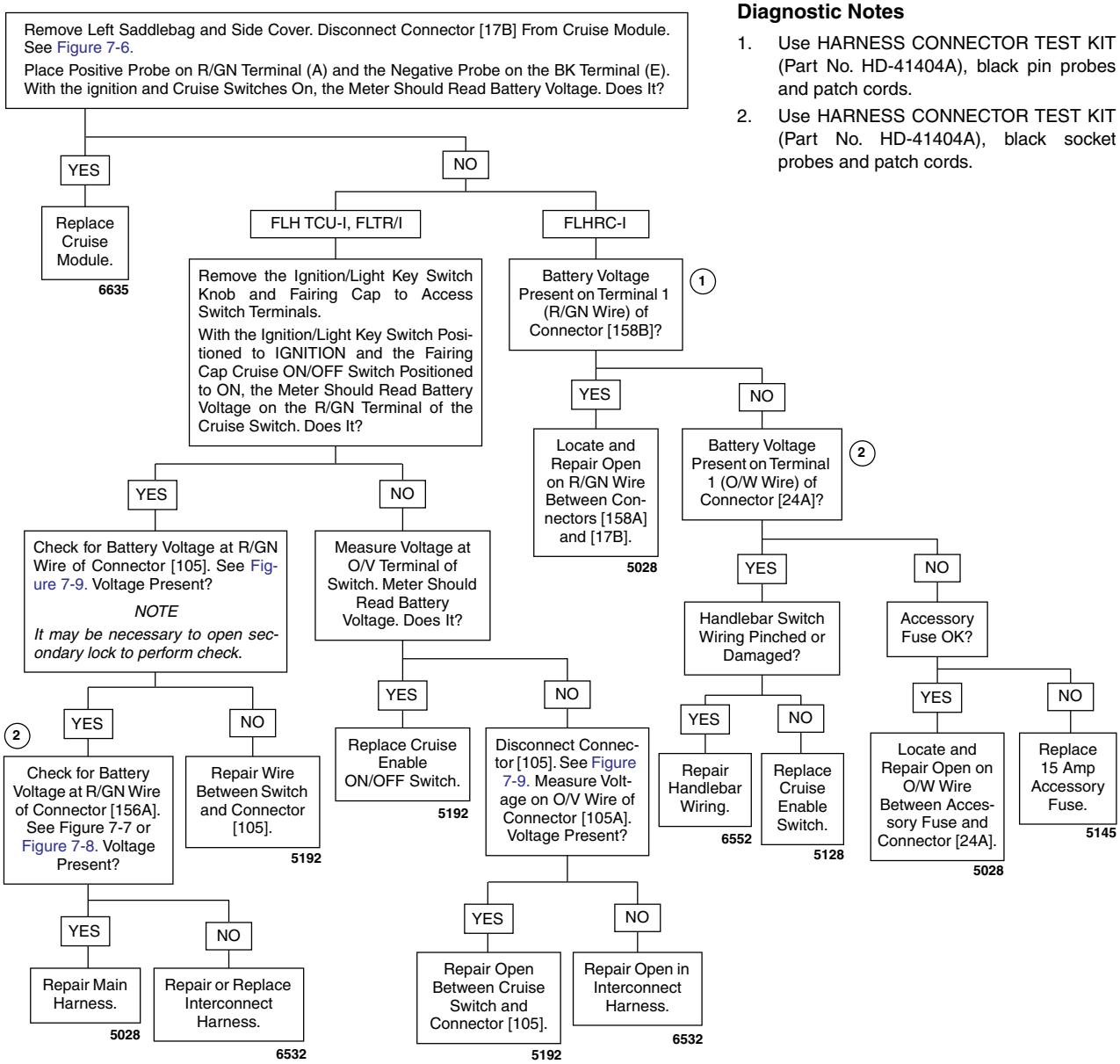

Diagnostic Notes

1. Use HARNESS CONNECTOR TEST KIT (Part No. HD-41404A), black pin probes and patch cords.
2. Use HARNESS CONNECTOR TEST KIT (Part No. HD-41404A), black socket probes and patch cords.

After correction of problem, restart 7.2 CRUISE INOPERATIVE DIAGNOSTICS to verify proper performance.

CRUISE CHART F-1: BRAKE LIGHTS ON 7.9

DIAGNOSTICS

Test 7.9

CONSTANT BRAKE LIGHT INPUT

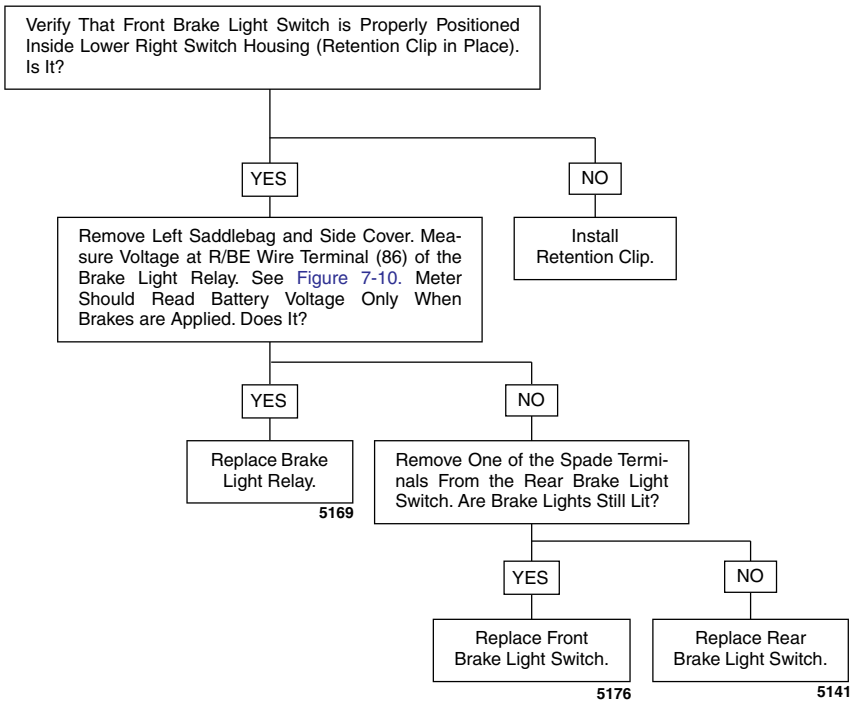

After correction of problem, restart 7.2 CRUISE INOPERATIVE DIAGNOSTICS to verify proper performance.

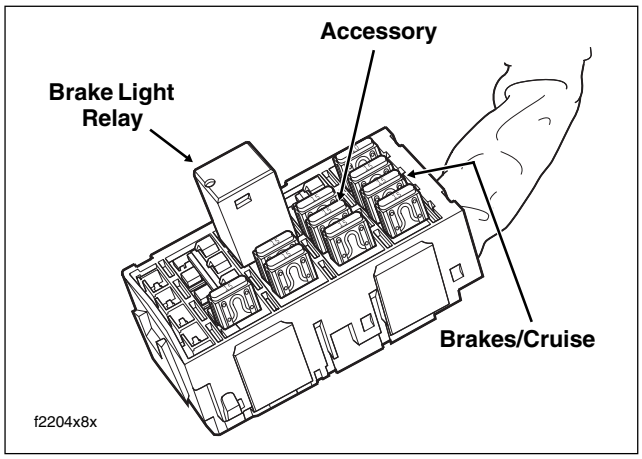

Figure 7-10. Fuse Block (FLHTCU-I)

CRUISE CHART F-2: BRAKE LIGHTS OFF 7.10

DIAGNOSTICS

Test 7.10 (Part 1 of 2)

NO FRONT AND/OR REAR BRAKE LIGHTS

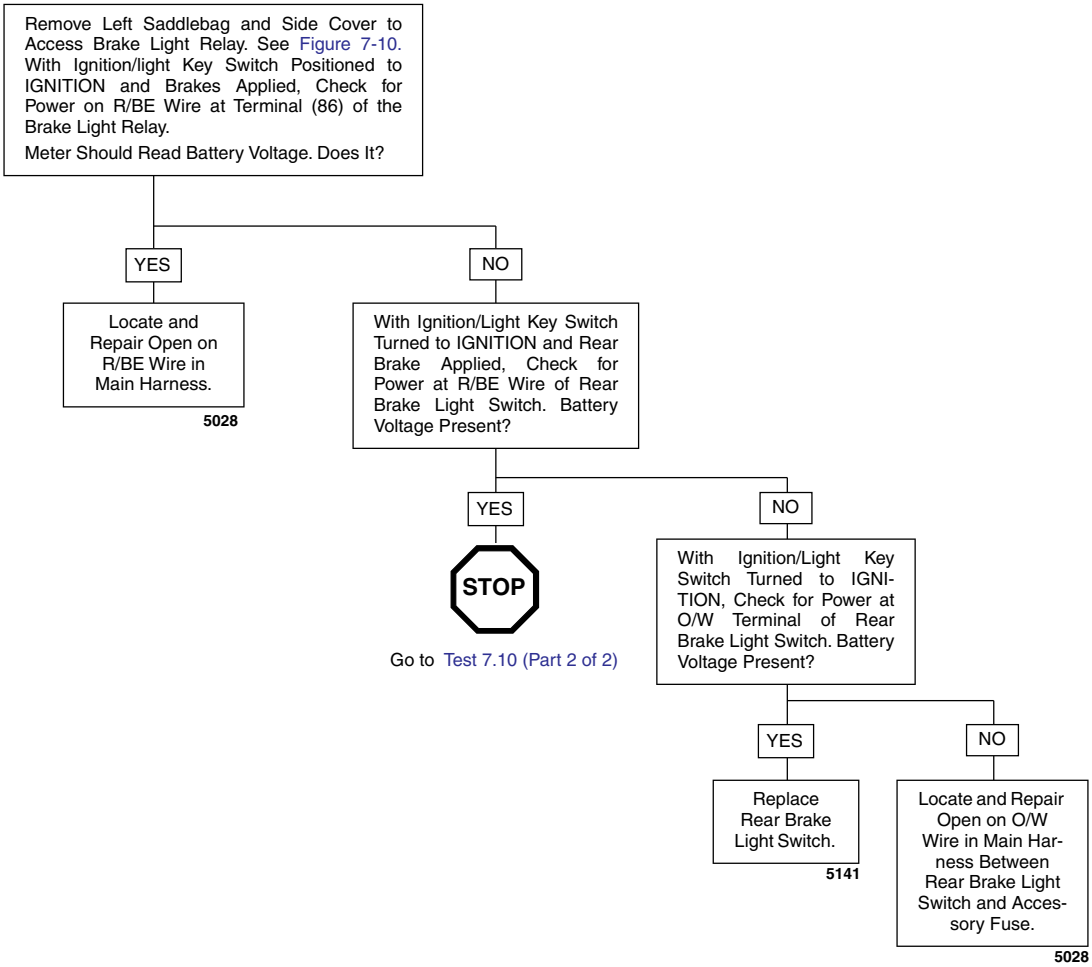

After correction of problem, restart 7.2 CRUISE INOPERATIVE DIAGNOSTICS to verify proper performance.

Test 7.10 (Part 2 of 2)

NO FRONT AND/OR REAR BRAKE LIGHTS

Diagnostic Notes

1. Use HARNESS CONNECTOR TEST KIT (Part No. HD-41404A), black pin probes and patch cords.
2. Use HARNESS CONNECTOR TEST KIT (Part No. HD-41404A), black socket probes and patch cords.

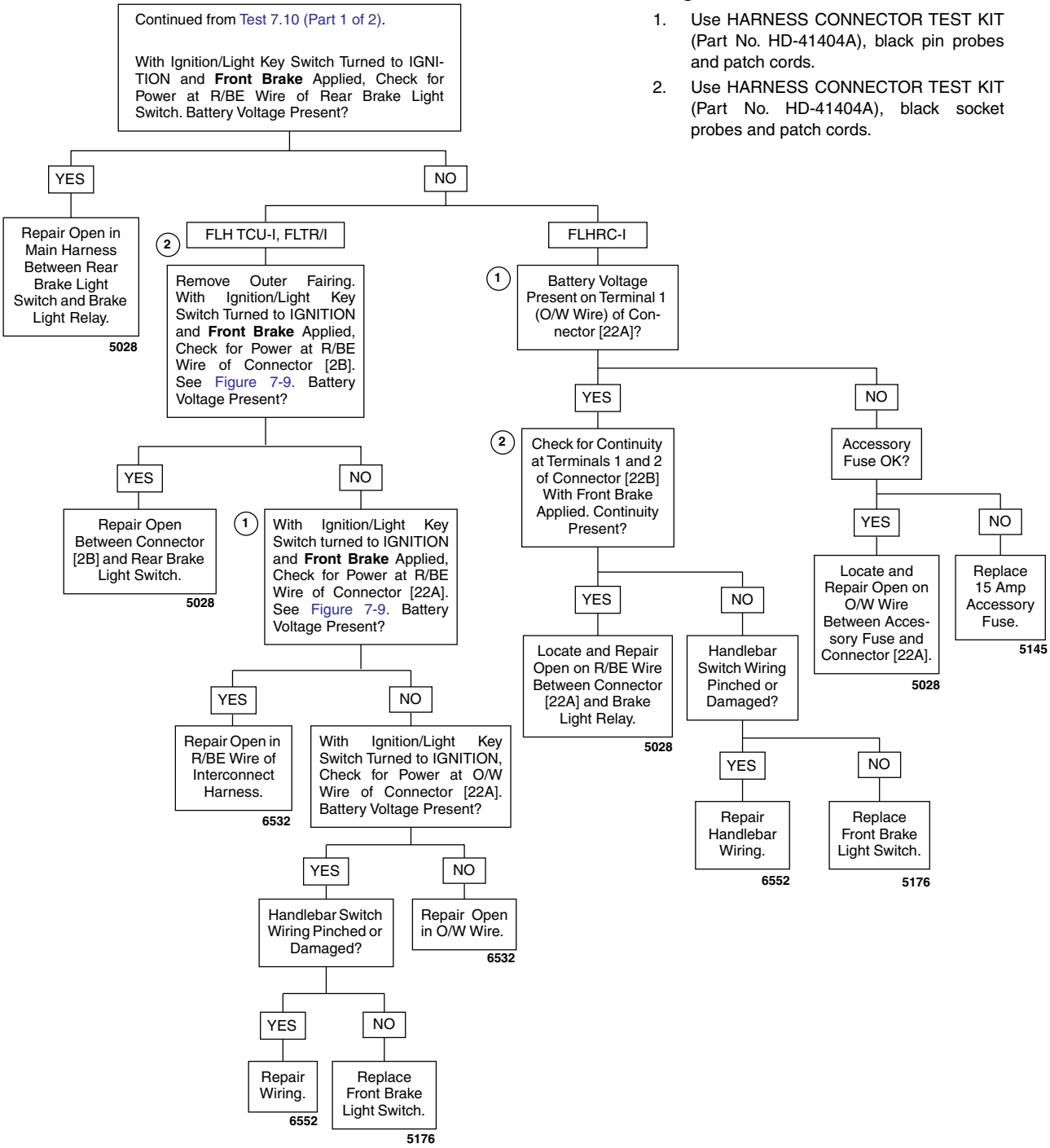

After correction of problem, restart 7.2 CRUISE INOPERATIVE DIAGNOSTICS to verify proper performance.

CRUISE CHART G: THROTTLE SWITCH 7.11

DIAGNOSTICS

Test 7.11

THROTTLE SWITCH

Remove Left Saddlebag and Side Cover. Disconnect Connector [17B] From Cruise Module. See Figure 7-11.

With the Ignition/Light Key Switch Positioned to OFF, Check Continuity Between the V/Y Terminal (D) and the O/V Terminal (F). The Meter Should Read Infinity When the Throttle Switch is in the Relaxed Position and Continuity When the Throttle Grip is Rolled Forward. Are These Your Observations?

- YES → Restart 7.2 CRUISE INOPERATIVE DIAGNOSTICS to Verify That Problem is Corrected. If the Cruise Engaged Lamp Will Not Illuminate When This Step is Performed Now, Replace The Cruise Module. (6635)
- NO → Adjust the Idle Throttle Cable and Retest for Continuity. Continuity Present?
  - YES → System OK.
  - NO → Check for Continuity Directly at Throttle Switch. Continuity Should Only be Present When the Throttle is Rolled Forward Under Pressure. Is It?
    - YES → Battery Voltage Present on O/V Throttle Switch Terminal [75D]?
      - YES → Locate and Repair Open on Y/V Wire in Main Harness. (5028)
      - NO → Locate and Repair Open on O/V Throttle Switch Wires in Main Harness. (5028)
    - NO → Replace Idle Throttle Cable. (2241)

After correction of problem, restart 7.2 CRUISE INOPERATIVE DIAGNOSTICS to verify proper performance.

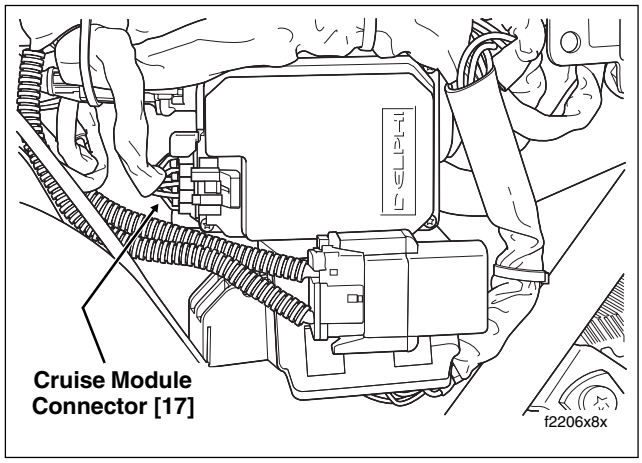

Figure 7-11. Left Side Cover Removed

CRUISE CHART H: SPEEDOMETER INPUT 7.12

DIAGNOSTICS

Diagnostic Notes

1. To enable Diagnostic Mode, see 2.3 SPEEDOMETER SELF DIAGNOSTICS.
2. Use HARNESS CONNECTOR TEST KIT (Part No. HD-41404A), gray pin probe and patch cord.
3. Use HARNESS CONNECTOR TEST KIT (Part No. HD-41404A), black pin probe and patch cord.

Test 7.12

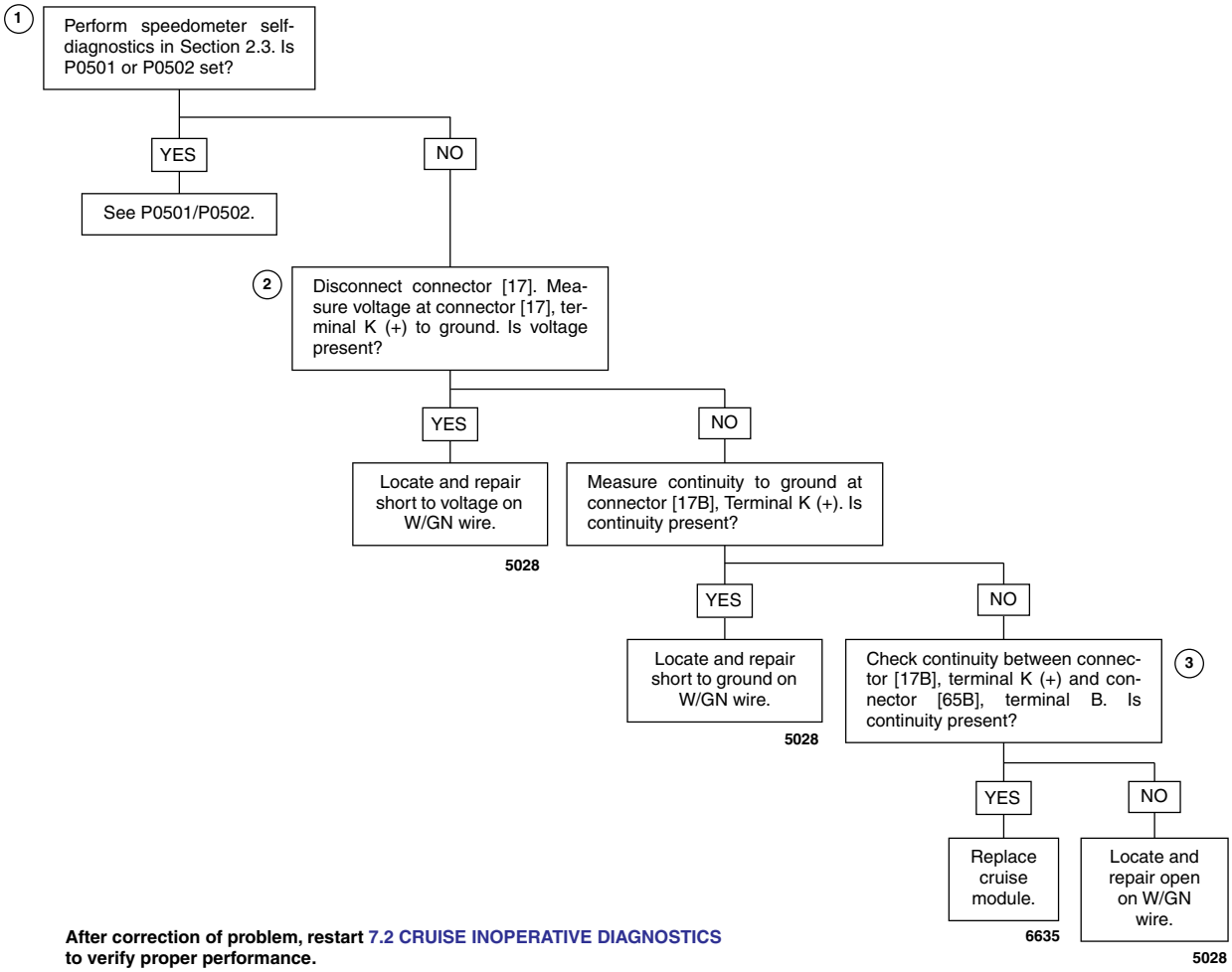

After correction of problem, restart 7.2 CRUISE INOPERATIVE DIAGNOSTICS to verify proper performance.

CRUISE CHART I: TACHOMETER INPUT 7.13

DIAGNOSTICS

Test 7.13

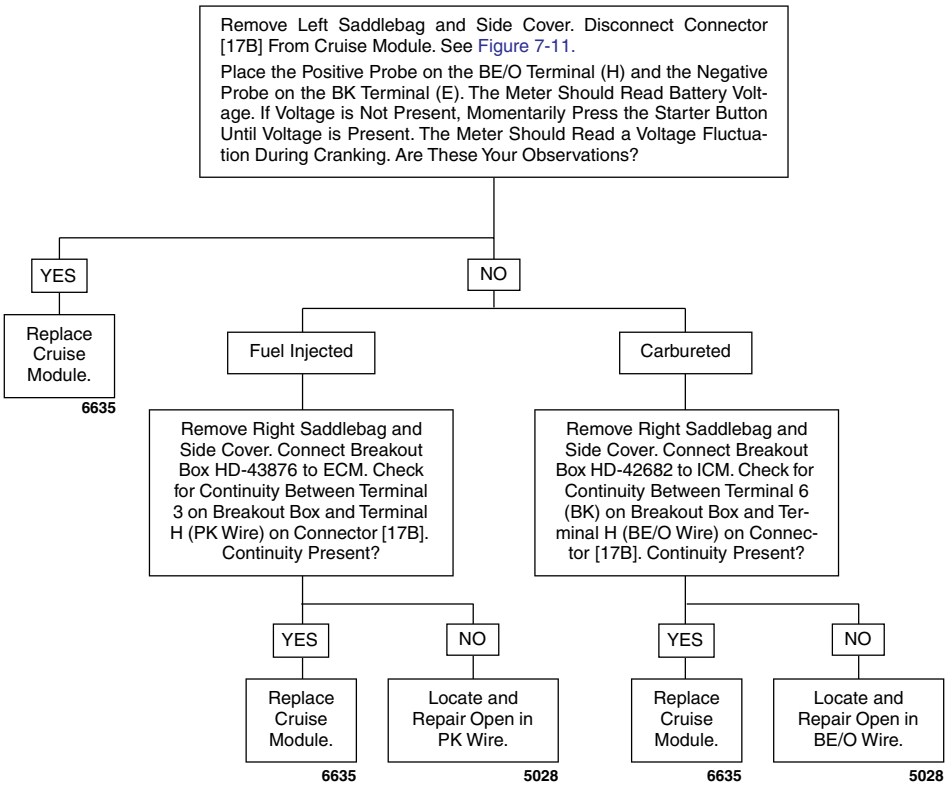

After correction of problem, restart 7.2 CRUISE INOPERATIVE DIAGNOSTICS to verify proper performance.

NOTES