RESTRICTED

ELECTRICAL AND MECHANICAL
ENGINEERING REGULATIONS
(By Command of the Army Council)

WHEELED VEHICLES B418

MOTOR CYCLE 350 C.C. MATCHLESS MC/2 G3L

TECHNICAL HANDBOOK-
INSPECTION STANDARDS

Issue 1, 21 Oct 53

Distribution—Class 110. Code No. 6

www.ais-matchless.info

www.ajs-matchless.info

MOTOR CYCLE 350 C.C. MATCHLESS MC/2 G3L

War Office Code No. 600—92—151

TECHNICAL HANDBOOK—INSPECTION STANDARD

SUBJECT INDEX

	Section	Page
INTRODUCTION … … … …		1
HOW TO APPLY THIS STANDARD …		2

PART 1

	Section	Page
Cylinder, barrel and piston assy … …	1	3
Flywheels and connecting rod … …	2	5
Crankcase and valve timing gears … …	3	3
Oil pump and lubrication system … …	4	11
Cylinder head and valve gear … …	5	12
Ignition system … … … …	6	14
Fuel system … … … … …	7	15
Power unit data … … … …	8	16
Engine reassembly instructions … …	9	16
Engine testing procedure … … …	10	16
Clutch assy … … … … …	11	17
Gearbox and kickstart… … … …	12	19
Chains and sprockets … … … …	13	30
Front and rear axles and hubs … …	14	33
Brakes … … … … … …	15	34
Cables and controls … … … …	16	35
Front forks and steering … … …	17	36
Frame and fittings … … … …	13	33
Electrical equipment and instruments …	19	39
Wheels and tyres … … … …	20	43
General … … … … … …	21	44
Newall standards, fits and clearances …	22	45

PART 2

	Section	Page
General instructions … … … …	1	47
Static test … … … … …	2	47
Road test … … … … …	3	49
Inspection after road test … … …	4	50
Summary of publications … … …	5	51

INTRODUCTION

1. This regulation defines the inspection standards and overhaul limits to be observed by examiners when any of the above-mentioned equipments or their associated assemblies are being overhauled by workshops.

2. The details in this regulation will be strictly observed by all workshops. Departure from these standards and limits will not be permitted unless especially authorised by the War Office or the DME of the overseas command.

www.ajs-matchless.info

HOW TO APPLY THIS STANDARD

1. Part 1 (pages 3 to 46) gives details of wear limits, tolerances and instructions to be observed when component parts are being examined or assembled, or when assemblies are being tested after overhaul. Those parts found to be worn beyond the permissible wear or clearance figures given in Part 1 will be repaired or renewed. If the wear is measured as a clearance between mating parts and a clearance is found to exceed the permissible figure it may only be necessary to replace one of the parts affected to bring the clearance within the permissible limits. If both parts are replaced, plan clearance will be maintained. General instructions regarding splines, gear teeth, bearing spigots, oil seal diameters, screw threads, bearings, etc, are given in Section 21. In cases of doubt, Pan 1 will be used by field units when condemning components and assemblies undergoing repair.

2. Col 1 defines the dimensions and specifications specified by the manufacturers for production limits which must be maintained when a component or unit is being overhauled or repaired, unless a figure is inserted in Col 2 under the heading 'Acceptable', when the dimension or specification can be within the two columns. The High and Low tolerances given in Col 1 are for production purposes, where these are wide, selective fittings by the manufacturers is invariably carried out to obtain a desirable clearance usually midway between the two tolerances. Where no figure is given in Col 2 the dimension or specification must be within the tolerances shown in Col 1 or as indicated in the remarks column. Col 2 defines the dimension or specification at which a component can be expected to give a further useful life of at least 30,000 miles, the equipment being acceptable on completion of overhaul, when these components are used. The acceptable clearance shown in Col 2 is the result of mating two worn parts or one worn part and one new part, this represents the lowest standard to be accepted. Where a worn component has new bushes or bearings requiring reaming, boring, or turning the clearance will be returned as near to the desirable plan figure as possible. Starred items in Col 2 show limits at which parts are acceptable when the equipment is undergoing overhaul for reasons other than normal wear. Pistons, bearings, etc, must be refitted as mated assemblies. The engine must attain the b.h.p. as indicated in Section 10, Col 3 defines the tolerances at which the item has no further useful service life and is primarily for the use of unit and field workshops.

3. Part 2 (Pages 47 to 51) contains instructions to be observed by examiners during and after reassembly of the equipment, and details the tests which it must pass before leaving workshops as serviceable. This part of the Standard is to be used by (A) Workshop examiners and C.I. examiners, after the equipment is overhauled, and by (B) Inspecting officers and examiners for all inspections of vehicles in BVDs and in the hands of troops. In the latter event serviceability will be assessed by using Col 3 of Part 1, as a final limit, ie, a component which is not worn behond the figures shown in Col 3, is serviceable and will not be replaced.

4. The Part numbers quoted in this Standard are taken from War Maintenance Scale, War Office Code No. **17031** and are quoted to give positive identification of components and assemblies. This Standard will not be used as a Parts List. When demanding replacement parts the current edition of the Parts List will be used to enable superseding Part numbers (if any) to be quoted.

www.ajs-manuals.com

PART 1

Wear limits, tolerances and tests for components and sub-assemblies

SECTION 1

Cylinder barrel and piston assy, comprising:—

Item No.	*Designation*	*Part No.*	*Item No.*	*Designation*	*Part No.*
1	**Cylinder barrel**	**W41-G3L-E1**	**3**	**Pin, gudgeon**	**D3-E1614**
2	**Piston**	**D3-E312A**	**4**	**Rings, piston**	**See remarks**

Instructions for examiner

Item No.	*Designation*	*Size (in inches) or Specification*			*Col 4 Remarks*
		Col 1 Plan	*Col 2 Acceptable on overhaul*	*Col 3 Condemnation limit*	
1	**Cylinder barrel**				Material: Cast iron with radial cooling fins.
	(*a*) Bore dia:	High, 2·7192 Low, 2·7182	*2·7215	2·727	Field condemnation rebore when wear exceeds 0·010 inch at top of bore.
	(*b*) Bore oversize:— (i) First O/S:	+0·020			*Pistons will be refitted in original bores.
	(ii) Second O/S:	+0·040			The finning will not be damaged in excess of 2 sq. in. on any one fin or any two adjacent fins.
	(*c*) Plan and rebore cylinder to piston clearance: (bottom of skirt)	High, 0·0054 Low, 0·0034	*0·007	0·015	Measure piston to cylinder clearance at right-angles to gudgeon pin.
	(*d*) Rebore cylinder to accept liner to:	See (*f*)			Fitment of liners to cylinder barrels is permissible when barrels are not available from Ordnance sources.
	(*e*) O.D. of liner:	High, 2·8465 Low, 2·8455			
	(*f*) Interference fit:	High, 0·0030 Low, 0·0025			
	(*g*) Torque tightness of cyl head nuts:	Torque spanner not used	See remarks		Tighten head cold and again when hot using an 8 inch tommy bar.
2	**Piston**				
	(*a*) Dia at top land:	High, 2·6882 Low, 2·6872			
	(*b*) Dia of 2nd and 3rd land:	High, 2·6967 Low, 2·6957			
	(*c*) Dia at top of skirt:	High, 2·7137 Low, 2·7127	*2·7115	2·705	
	(*d*) Dia at bottom of skirt:	High, 2·7148 Low, 2·7138	*2·7125	2·706	
	(*e*) Dia of gudgeon pin bore:	High, 0·8755 Low, 0·8745	0·8757	0·877	

www.aircmatchless.info

Part 1—(contd)

Section 1—(contd)

Instructions for examiner

Cylinder barrel and piston assy,—(contd)—

Item No.	*Designation*	*Size (in inches) or Specification*			*Col 4 Remarks*
		Col 1 Plan	*Col 2 Acceptable on overhaul*	*Col 3 Condemnation limit*	
2 (contd)	(*f*) Width of compression ring grooves:	High, 0·0660 Low, 0·0645	*0·0665	0·071	
	(*g*) Width of scraper ring groove:	High, 0·1285 Low, 0·1270	0·1295	0·133	
3	**Gudgeon pin**				
	(*a*) Dia:	High, 0·8740 Low, 0·8735	*0·8734	0·8725	Type: Tubular, fully floating retained by circlips. Sliding fit in piston bosses and small end bush.
	(*b*) Length:	High, 2·253 Low, 2·243			
	(*c*) Clearance, pin to bore:	High, 0·0010 Low, 0·0005	*0·0013	0·0025	By selective fitting.
4	**Rings, piston**				
	(*a*) Dia of rings (std):	2·7181			Fit new rings on overhaul in all cases.
	(*b*) Thickness of compression ring:	High, 0·0625 Low, 0·0615		0·057	Part No. DE-E311.
	(*c*) Thickness of scraper ring:	High, 0·125 Low, 0·124		0·120	Part No. 38-G3-E111.
	(*d*) Ring gap (compression and scraper):	High, 0·010 Low, 0·006	*0·012	0·030	
	(*e*) Clearance of rings in groove:	0·003	*0·004	0·010	

www.ajs.matchless.info

Part 1—(contd)

SECTION 2

Flywheels and connecting rod, comprising:—

Item No.	*Designation*	*Part No.*	*Item No.*	*Designation*	*Part No.*
1	**Flywheels:—**				
	(i) Timing side	**W41-G3L-E25**	**3**	**Crankpin**	**39-G8-E17**
	(ii) Driving side	**W41-G3L-E19**			
2	**Axles:—**		**4**	**Connecting rod c/w liner and bush**	**37-G8-E44**
	(i) Timing side	**STB-760**			
	(ii) Driving side	**37-G8-E20**			

Instructions for examiner

Item No.	*Designation*	*Size (in inches) or Specification*			*Col 4 Remarks*
		Col 1 Plan	*Col 2 Acceptable on overhaul*	*Col 3 Condemnation limit*	
1	**Flywheels**				Material: Mild steel.
	(*a*) Timing side:—				
	(i) Dia of bore for crankpin:	High, 0·87575 Low, 0·87450	No wear		
	(ii) Dia of bore for axle:	High, 0·871 Low, 0·869	No wear		Morse taper, 1 in 8, measure at throat and secure by hexagon nut.
	(*b*) Driving side:—				
	(i) Dia of bore for crankpin:	High, 0·87575 Low, 0·87450	No wear		Wheel is keyed to shaft by two Woodruff keys and secured by hexagon nut.
	(ii) Dia of bore for axle:	High, 0·9375 Low, 0·9365	No wear		
	(*c*) General to both:—				
	(i) Dia of flywheels:	High, 7·128 Low, 7·122			
	(ii) Flywheels will run true to within:	0·001	0·001	0·004	Measure on 'V' block with clock gauge.
2	**Axles**				Material: Alloy steel.
	(*a*) For timing side, flywheel:—				Morse taper, 1 in 8.
	(i) Dia at flywheel bore:	High, 0·795 Low, 0·794			Measure at neck. Attention is drawn to warning note in Maint Manual No. 101/MC2B, Page 17.
	(ii) Dia of axles at roller bearing and bush:	High, 0·8720 Low, 0·8715	0·870	0·868	This axle is not keyed to the flywheel, use special jig to ensure correct timing setting. Timing mark on small pinion must be in line with centre of crankpin. Nut retaining is locked by a screw.

www.ais-matchless.info

Part 1—(contd)

Section 2—(contd)

Instructions for examiner

Flywheels and connecting rod—(contd)

Item No.	*Designation*	*Size (in inches) or Specification*			*Col 4 Remarks*
		Col 1 Plan	*Col 2 Acceptable on overhaul*	*Col 3 Condemnation limit*	
2 (*a*) (contd)	(iii) I.D. of bush (Part No. 017489):	High, 0·8750 Low, 0·8745	0·876	0·880	This bush Part No. 017489 will replace bush Part No. 41-GE-E27 and roller bearing R 137. Existing sleeve Part No. 41-G3-E541 is retained.
	(iv) O.D. of bush to crankcase:	High, 1·0645 Low, 1·0640			
	(v) Dia of bore in crankcase:	High, 1·0645 Low, 1·0640			The clearance between the axle and bush is greater than when the original was fitted.
	(vi) O.D. of bush for sleeve:	High, 1·3785 Low, 1·3780	See (viii)		It is recommended that this mod be incorporated as soon as existing stocks of roller bearings are exhausted.
	(vii) I.D. of sleeve:	High, 1·37425 Low, 1·37325			
	(viii) Interference fit, bush to sleeve:	High, 0·00525 Low, 0·00375			Bearings will be examined as per Gen O 021, (Issue 4).
	(ix) Nut retaining small timing pinion:	$\frac{7}{16}$			26 t.p.i. (L.H. thread) Morse taper 1 in 8.
	(x) Dia of bore in timing pinion:	High, 0·5605 Low, 0·5585			Measure at throat.
	(xi) Clearance, shaft to bush: (Part No. 017481)	High, 0·0035 Low, 0·0025	0·005	0·010	
	(*b*) For driving side, flywheel:—				
	(i) Dia of flywheel bore:	High, 0·938 Low, 0·937	No wear		Keyed to flywheel.
	(ii) Dia of axle at ball bearing:	High, 1·0002 Low, 0·9998	No wear		
	(*c*) Spline:—				
	(i) Top dia:	High, 0·874 Low, 0·873			
	(ii) Bottom dia:	High, 0·750 Low, 0·746			
	(iii) Width:	High, 0·186 Low, 0·182			
	(iv) Acceptable movement, absorber cam and splines:		7°	10°	

www.ajs.matchless.info

Part 1—(contd)

Section 2—(contd)

Instructions for examiner

Flywheels and connecting rod—(contd)

Item No.	*Designation*	*Size (in inches) or Specification*			*Col 4 Remarks*
		Col 1 Plan	*Col 2 Acceptable on overhaul*	*Col 3 Condemnation limit*	
2 (contd)	(*d*) General to both:—				Measured on 'V' block or between centres using an indicator gauge.
	(i) Flywheel axles will run true to within:	0·001	0·001	0·003	
	(ii) Endfloat of shafts in crankcase:	0·020 approx	0·030 approx	0·050 approx	
3	**Crankpin**				Material: Alloy steel.
	(*a*) Dia at roller race:	High, 1·20350 Low, 1·20325	No wear		Pressed in flywheel and secured by a hexagon nut.
	(*b*) Dia at flywheel bore:	High, 0·8780 Low, 0·8775	No wear		Alternatives to rollers as shown in Col 1 rollers $\frac{3}{4}$ inch long, one roller replacing 3 x $\frac{1}{4}$ inch in line.
	(*c*) Dia and length of rollers:	0·250			
	(*d*) Clearance, pin to bearing:	High, 0·00050 Low, 0·00025	0·001	0·003	
	(*e*) Torque tightness of crankpin nuts:	210 lb/ft			It is important that these nuts are tightened to the correct torque tightness.
	(i) K3 steel (ii) Mild steel	High, 115 lb/ft Low, 110 lb/ft			(i) K3 steel, ground finish (ii) Mild steel, machine finish. Renew mild steel nuts on overhaul.
4	(*a*) **Connecting rod**				Steel stamping 'H' section with solid type big and small ends. It is symmetrical and not handed
	(i) Distance between centres:	$7\frac{3}{8}$			
	(ii) I.D. of big end:	2			
	(iii) Endfloat on crankpin:	High, 0·008 Free on pin	Of no consequence		This is not adjustable, being controlled by the fact that the flywheels are pulled up to shoulders on crankpin.
	(*b*) Liner connecting rod:—				After assembly check that oil passages are clear with oil squirt.
	(i) I.D.:	High, 1·70400 Low, 1·70375			Bearing will be examined as per Gen O 021, Issue 4.
	(ii) O.D.:	High, 2·0005 Low, 2·0000			
	(*c*) Bush small end:—				
	(i) I.D. of bush:	High, 0·8755 Low, 0·8747	*0·8757	0·8770	
	(ii) Clearance, pin to bush:	High, 0·0010 Low, 0·0005	*0·0013	0·0025	

www.ajs-matchless.info

Part 1—(contd)

SECTION 3

Crankcase and valve timing gears, comprising:—

Item No.	*Designation*	*Part No*	*Item No.*	*Designation*	*Part No.*
1	**Crankcase**	**W41-G3-E108**	**2** (contd)	**(ii) Exhaust**	**D8-E2931**
2	**Camshafts:—**				
	(i) Inlet	**42-G3L-E132**	**3**	**Tappets and guides**	**See remarks**

Instructions for examiner

Item No.	*Designation*	*Size (in inches) or Specification*			*Col 4 Remarks*
		Col 1 Plan	*Col 2 Acceptable on overhaul*	*Col 3 Condemnation limit*	
1	**Crankcase**				Material: Aluminium.
	(*a*) Timing side:—				Divided crankcase (mated), do not fit an old half to a new half without first matching in a jig.
	(i) I.D. of bush for axle shaft:	High, 0·87575 Low, 0·87525	See (ii)	See (ii)	
	(ii) Clearance, bush to shaft:	High, 0·00425 Low, 0·00325	0·006	0·010	Ensure that all oilways are clear before assembly.
	(iii) I.D. of bore for camshaft bush:	High, 0·68825 Low, 0·68700			No gasket is used between half cases.
	(iv) I.D. of tappet guide bore:	Interference fit			
	(v) I.D. of camshaft bushes:	High, 0·5005 Low, 0·4995	See (vi)	See (vi)	Inlet camshaft bush has an internal worm thread designed to drive oil back in timing gear case.
	(vi) Clearance, bush to camshaft:	High, 0·00125 Low, 0·00075	0·004	0·006	Material: Bushes, Phos. B.
	(vii) I.D. of minor bore for oil pipe plunger:	High, 0·56325 Low, 0·56200	See Sect 4 Item 1 (*b*)	See Sect 4 Item 1 (*b*)	
	(viii) I.D. of major bore for oil pump plunger:	High, 0·7195 Low, 0·7183			
	(ix) I.D. of recess for axle roller race sleeve:	High, 1·7510 Low, 1·7495			
	(*b*) Driving side:—				
	(i) I.D. for ball bearing (RLS8):	High, 2·24925 Low, 2·24775			Hand push fit in shaft by selective fitting.
	(ii) I.D. of bore to take distance collar:	High, 1·286 Low, 1·281			

www.ais-matchless.info

Part 1—(contd)

Section 3—(contd)

Instructions for examiner

Crankcase and valve timing gears—(contd)

Item No.	*Designation*	*Size (in inches) or Specification*			*Col 4 Remarks*
		Col 1 Plan	*Col 2 Acceptable on overhaul*	*Col 3 Condemnation limit*	
2	**Camshafts**				
	(*a*) Dia:	High, 0·49875 Low, 0·49825	0·4965	0·4950	Individual cams integral with spur type cam gear wheels and spindles.
	(*b*) Endfloat in casing:—	No perceptible	0·005	0·008	Exhaust camshaft is that fitted with the shorter centre shaft. The inlet camshaft has the larger shaft with tapered end to carry the magneto chain sprocket
	(*c*) Dia of cam, exhaust and inlet:	High, 1·399 Low, 1·395	See (*d*)	See (*d*)	
	(*d*) Camlift, exhaust and inlet:	High, 0·288 Low, 0·284	0·278	0·268	Lap high spots off gears. Running in of all timing wheels is recommended. The cam has a quietening profile of 0·014 inch on both lift and return (0·028 inch) Measure lift to include this profile.
	(*e*) Running clearance with bushes:	High, 0·00125 Low, 0·00075	0·003	0·006	
	(*f*) Backlash in gears:	High, 0·0010 Low, 0·0005	0·006	0·010	
3	**Tappets and guides**				
	(*a*) Tappets:—				Part No. Inlet: STD670A Exhaust: STD671A
	(i) Dia of stem:	High, 0·5615 Low, 0·5605	0·5585	0·5550	
	(ii) Valve lifter collar, fit in groove (exhaust):	Tight fit			Metal washer 35-12-E73 should always be replaced on overhaul (fibre on early models). Collar is split for removal after tappet and guide are extracted 'en bloc'.
	(iii) Thickness of head, (smallest point):	High, 0·0938 Low, 0·0930	0·0850	0·0750	
	(iv) Dia of head:	High, 0·9738 Low, 0·9630	No wear		
	(v) Tappet to valve clearance (cold):	Nil	Nil		Push-rods must turn freely with no up- and-down play. Engine T.D.C. compression stroke.
	(*b*) Guides:—				Part No. Inlet: STD661 Exhaust: STD662
	(i) O.D.:	Tight fit in case			It is important that the oil hole in the guide is in line with the hole drilled in the head.
	(ii) I.D.:	High, 0·56325 Low, 0·56200	0·565	0·567	
	(iii) Clearance, guide to tappet:	High, 0·00275 Low, 0·00050	0·005	0·007	

www.ais-matchless.info

Part 1—(contd)

Section 3—(contd)

Instructions for examiner

Crankcase and valve timing gears—(contd)

Item No.	*Designation*	*Size (in inches) or Specification*			*Col 4 Remarks*
		Col 1 Plan	*Col 2 Acceptable on overhaul*	*Col 3 Condemnation limit*	
3 (contd)	(iv) Projection of guide above crankcase:	$\frac{9}{32}$			It is important that the guide projects exactly $\frac{9}{32}$ inch and that the gap for the exhaust valve lift faces to the rear.
	(v) Oil grooves, 6 equally spaced:	$\frac{1}{8} \times \frac{3}{64}$			
4	**Valve timing**				To time, turn engine until timing mark on small pinion is in line with centre of inlet rear cam bush, engage inlet cam gear so that marks coincide. Rotate engine in a forward direction until timing mark on small pinion is in line with centre of exhaust rear cam bush engage as for inlet. Reset tappets to Nil clearance after timing valves.
	With a tappet clearance of 0·016 inch:—				
	(*a*) Exhaust opens. Before B.D.C.:	65°			
	(*b*) Exhaust closes. After T.D.C.:	30°			
	(*c*) Inlet opens. Before T.D.C. (engines up to 54512)	20°			
	(*d*) Inlet closes. After B.D.C. (engines up to 54512)	67°			
	(*e*) Inlet opens. Before T.D.C. (engines after 54512)	32°			
	(*f*) Inlet closes. After B.D.C. (engines after 54512)	63°			

www.ajs-matchless.info

Part 1—(contd)

SECTION 4

Oil pump and lubrication system, comprising:—

Item No.	*Designation*	*Part No.*	*Item No.*	*Designation*	*Part No.*
1	**Plunger, for oil pump**	**STD 770**	3	**Tank, oil**	**W40-G2M-T45**
2	**Spring, oil feed valve**	**STD 701**	4	**Felt filter**	**STD 796**

Instructions for examiner

Item No.	*Designation*	*Size (in inches) or Specification*			*Col 4 Remarks*
		Col 1 Plan	*Col 2 Acceptable on overhaul*	*Col 3 Condemnation limit*	
1	**Plunger, for oil pump**				Dry sump. Single rotary plunger pump. Pump, integral driven by worm on timing side flywheel axle.
	(*a*) Plunger shaft:—				
	(i) Minor dia:	High, 0·56175 Low, 0·56125	0·560	0·558	Reciprocating motion by guide screw in the profiled groove of plunger.
	(ii) Major dia:	High, 0·7180 Low, 0·7175	0·716	0·714	
	(*b*) Clearance, shaft to bore:	High, 0·00200 Low, 0·00025	0·003	0·006	Ensure that the guide screw is a good sliding fit in the plunger groove.
2	**Spring, oil feed valve**				
	(*a*) Free length:	$\frac{9}{16}$	Within limits	$\frac{1}{2}$	Adjustment to inlet valve oil feed is covered under Whd Veh A 413, paras 1 to 6.
	(*b*) Closed length:	$\frac{3}{16}$			
	(*c*) O.D.:	$\frac{1}{4}$			26 S.W.G. (0·018 inch).
3	**Tank, oil**				Tank interchangeable with Part No. 40-G3-T45.
	(*a*) Pressure test in water:	5 lb/sq in	3 lb/sq in		Test with air in water.
	(*b*) Capacity:	3 pt			
4	**Felt filter**				The filter is supported by a wire cage but is not detachable. Check for damage, distortion or perforation; clean in petrol.
	(*a*) Estimated life of filter:	20,000 miles			

www.ais-matchlocks.info

Part 1—(contd)

SECTION 5

Cylinder head and valve gear, comprising:—

Item No.	*Designation*	*Part No.*	*Item No.*	*Designation*	*Part No.*
1	**Cylinder head**	**W41-G5L-E2**	**4**	**Valve springs:—**	
2	**Valves:—**			**(i) Inner**	**CE-211**
	(i) Inlet	**STD-676**		**(ii) Outer**	**CE-212**
	(ii) Exhaust	**STD-677**	**5**	**Overhead valve rockers**	
3	**Guide for valve (Inlet and exhaust)**	**39-12-E148**			

Instructions for examiner

Item No.	*Designation*	*Size (in inches) or Specification*			*Col 4 Remarks*
		Col 1 Plan	*Col 2 Acceptable on overhaul*	*Col 3 Condemnation limit*	
1	**Cylinder head**				Detachable cast-iron, radial cooling fins. Damage to fins is acceptable up to 2 sq. in. on any one fin or 2 adjacent fins. Material: cyl head gasket, C and A. Valve seat inserts are not fitted to the head.
	(*a*) Size of 4 H.T. set-screws for bolting head:	$\frac{7}{16}$			
2	**Valves**				Material: Silicon chrome steel.
	(*a*) Inlet:—				
	(i) Dia of head:	High, 1·59875 Low, 1·58875	1·58875	If below Col 2	A worn valve will not be condemned unless when mated with a new guide the clearance is in excess of those shown in Col 2.
	(ii) Dia of stem:	High, 0·373 Low, 0·372	0·370	0·367	Ensure that the cap for the valve stem is fitted on assy
	(iii) Clearance, stem to guide	High, 0·0030 Low, 0·0025	0·005	0·010	
	(*b*) Exhaust:—				Distance sleeve Part No. 38-8-E191 is fitted on exhaust valve only.
	(i) Dia of head:	High, 1·5005 Low, 1·4995	1·4995	If below Col 2	
	(ii) Dia of stem:	High, 0·3715 Low, 0·3705	0·369	0·365	
	(iii) Clearance, stem to guide:	High, 0·005 Low, 0·003	0·007	0·012	
	(*c*) Common to inlet and exhaust:—				
	(i) Valve lift:	High, 0·260 Low, 0·257	0·240	0·230	
	(ii) Seat angle:	45°			
	(iii) Seat eccentricity:	High, 0·002 Low, Nil	0·002	If above Col 2	
	(iv) Width of seating, valve:	High, $\frac{7}{64}$ Low, $\frac{3}{32}$	$\frac{1}{8}$	If above Col 2	

www.aiscratchless.info

Part 1—(contd)

Section 5—(contd)

Instructions for examiner

Cylinder head and valve gear—(contd)

Item No.	Designation	Size (in inches) or Specification			Col 4 Remarks
		Col 1 Plan	Col 2 Acceptable on overhaul	Col 3 Condemnation limit	
2 (c) (contd)	(v) Width of seating, in block:	$\frac{5}{64}$	$\frac{1}{8}$	If above Col 2	
3	**Guide for valve (inlet and exhaust)**				
	(a) O.D.:	High, 0·62725 Low, 0·62675			Tight press fit in head.
	(b) I.D.:	High, 0·3755 Low, 0·3750	0·3775	0·380	See clearance at Item 2 (a) (iii) and (b) (iii).
	(c) Projection of guide externally:—				
	(i) Inlet:	$\frac{1}{2}$			For fitting instructions see Maint Manual No. 101/MC2B, Page 27
	(ii) Exhaust:	$\frac{5}{8}$			
4	**Valve springs**				
	(a) Inner:—				
	(i) Free length:	$1\frac{13}{16}$	Within limits	$1\frac{5}{8}$	Duplex helical springs.
	(ii) Thickness of wire (12 S.W.G.):	0·104			
	(b) Outer:—				
	(i) Free length:	$2\frac{1}{16}$	Within limits	$1\frac{7}{8}$	
	(ii) Thickness of wire (9 S.W.G.):	0·144			
5	**Overhead valve rockers**				
	(a) I.D. of bushes for rocker shafts:	High, 0·626 Low, 0·625	0·629	0·632	Bushes are a tight fit in cover.
	(b) O.D. of rocker shaft sleeves:	High, 0·6235 Low, 0·6230	0·621	0·618	
	(c) Length of rocker shaft sleeves:	High, 2·004 Low, 2·000			
	(d) Clearance, sleeves to bushes:	High, 0·0030 Low, 0·0015	0·005	0·010	
	(e) Endplay on assembly:	See remarks	As for plan		Drive L.H. bush away from right to take up play.
	(f) Push-rod c/w ends:		No appreciable wear		Part No. 20818-1. Ball ends must be smooth and truly spherical.

www.ajs-matchless.info

Part 1—(contd)

SECTION 6

Ignition system, comprising:—

Item No.	*Designation*	*Part No.*	*Item No.*	*Designation*	*Part No.*
1	**Magneto Lucas Type N1/3/AO**	**MT8/LU/42020**	3	**Spark plug**	**MT4/29943**
2	**Magneto control lever**	**LV7/BC/12-171**			

Instructions for examiner

Item No.	*Designation*	*Size (in inches) or Specification*			*Col 4 Remarks*
		Col 1 Plan	*Col 2 Acceptable on overhaul*	*Col 3 Condemnation limit*	
1	**Magneto**				Removal of sprocket is shown in Whd Veh A 413.
	(*a*) Gap, contact breaker points:	High, 0·010 Low, 0·012			
	(*b*) Contact breaker spring pressure:	High, 24 oz. Low, 18 oz.	Within limits	16 oz.	Part No. MT8/LU/42020 superseded by Part No. MT8/LU/42020B
2	**Magneto control lever**				
	(*a*) Free travel of cable before movement on cam face:	High, $\frac{1}{8}$ Low, $\frac{1}{16}$	Within limits	See remarks	Must be maintained as in Col 1.
3	**Spark plug**				Proprietary Makes and Types:— Lodge H14S Champion L10S K.L.G. F70 A.C. Sphinx 44, or plugs of a similar heat range and reach.
	(*a*) Size:	14 mm			
	(*b*) Reach:	$\frac{3}{8}$–$\frac{9}{16}$			
	(*c*) Gap:	High, 0·025 Low, 0·020			

4 **Test and inspection procedure**

(*a*) Magneto should undergo endurance test run for 1 hr at 3,000 r.p.m. sparking on 8kV annular gaps. During this test short circuit the primary at least 6 times. For continuity in test between slip ring and body use a supply voltage of not more than 2V.

(i) There should be no undue sparking at contact breaker.
(ii) Points should be clean and in line.
(iii) Slip ring to be clean and free from carbon dust.
(iv) Carbon brushes to be free in their holders.

(*b*) Check that the correct type of sparking plug is fitted.

www.aismatchless.info

Part 1—(contd)

SECTION 7

Fuel system, comprising:—

Item No.	*Designation*	*Part No.*	*Item No.*	*Designation*	*Part No.*
1	**Carburetter**	**LV6/MT12/AM/275F/1J**	4	**Main jet:—**	
7	**Body**	**LV6/MT12/AM/275/402R**		**(i) size 120**	**MT12/AM/4/042/120**
3	**Jet taper needle**	**MT12/AM/5/065**		**(ii) size 160**	**MT12/AM/4/042/160**
			5	**Operating cables etc**	

Instructions for examiner

Item No.	*Designation*	*Size (in inches) or Specification*			*Col 4 Remarks*
		Col 1 Plan	*Col 2 Acceptable on overhaul*	*Col 3 Condemnation limit*	
1	**Carburetter**				The pilot jet is a hole drilled in the sprayer base or choke (idling and low rev).
	(*a*) Type: Amal. No. 275 F/IJ bottom feed				
	(*b*) Throttle valve size:	5 x 5			
2	**Body**				Jet block Part No. 275-403.
	(*a*) Bore:	$\frac{7}{8}$			Full details of the correct setting are to be found on Page 73 of Maint Manual Book No. 101/MC 2B.
3	**Jet taper needle**				
	(*a*) Length:	$2\frac{7}{8}$			Petroflex piping is permissible as a fitment in lieu of the standard copper pipe, providing the T-piece is not of a length whereby it fouls the magneto. The union nuts must be std.
	(*b*) Adjustment:—				
	(i) Early models:	3rd notch			
	(ii) Later models:	4th notch			
4	**Main jet**				
	(*a*) With air cleaner, size:	160			
	(*b*) Without air cleaner, size:	120			
5	**Throttle cables, etc**				
	(*a*) Free travel of throttle control cable:	High, $\frac{1}{8}$ Low, $\frac{1}{16}$	Adjustable		Before movement of the throttle slide.
	(*b*) Free travel of air control cable:	High, $\frac{1}{8}$ Low, $\frac{1}{16}$	Adjustable		Before movement of the air slide.
6	**Test and inspection procedure**				
	(*a*) When carburretter is assembled to the engine ensure that a sound joint is made with no air leaks.				
	(*b*) Check that the spring clip locking the fixing ring is serviceable.				
	(*c*) Ensure that all adjustments to the idling mixture are carried out when the engine is at normal running temperature.				
	(*d*) Check that the level of petrol in the float chamber is correct, that jets fitted are the correct size and that they have not been reamed.				
	(*e*) Examine the carburetter for any visible signs of wear in controls, screw threads, etc. Screws, nuts and bolts will be tight and correctly locked.				
	(*f*) Ensure that, cables are in good serviceable condition, the inner cables are correctly lubricated and that connections are properly soldered.				

www.ajs-matchless.info

Part 1—(contd)

SECTION 8

Comprising:—**Power unit data:—**

Instructions for examiner

Type:	Overhead valve, single cyclinder
Model:	G3L
Bore: (nominal)	2·7187 inch (69 mm)
Stroke:	3·6614 inch (93 mm)
Cubic capacity	347 c.c. (0·347 litres)
Compression ratio with plate:	5·88 to 1
without plate:	6·3 to 1
Max compression at kick starter speed:	95-100 lb/sq. in. using (Allen compression tester) or similar instrument
B.h.p. at 4,500 r.p.m.	13
Max torque at 3,500 r.p.m.	184·8 lb. in.
Lubrication	Dry sump system
Engine number:	L.H. side crankcase
Sparking plug:	14 mm $\frac{3}{8}$-$\frac{9}{16}$ inch reach. Types: Lodge N.14S, Champion L-10S, K.L.G. F70, A.C. Sphinx 44, or similar heat range and reach
Carburetter:	AMAL, type 275F/IJ. Bottom feed
Magneto:	Lucas, type NI/3/AO

SECTION 9

Comprising:—**Engine reassembly instructions:—**

Instructions for examiner

1. (*a*) Examiners will inspect the reassembly operations at various stages in order to ensure correct assembly. Special attention will be given to the following operations:—
   - (i) Fitting of crankshafts, flywheels and bearings.
   - (ii) Fitting of connecting rods, pistons and rings.
   - (iii) Fitting of timing wheels and sprockets.
   - (iv) Condition of valves, valve springs and seatings.
   - (v) Valve and ignition timing.
   - (vi) Security of nuts, bolts and split pins.
   - (vii) Fitment of new gaskets, joints and oil seals throughout.
   - (viii) Ensure that previous instructions on Test and inspection procedure for each individual section have been carried out.
   - (ix) Information required on stripping and assembly or any individual items may be found in the maker's Maintenance Manual No. 101/MC2B.

SECTION 10

Comprising:—**Engine testing procedure:—**

Instructions for examiner

1. (*a*) Engine assemblies will be run-in and tested in accordance with the schedule given as follows:—
   Tuning and minor rectifications will be carried out with the engine on the test bed but if a major fault is found the engine will be returned to the workshop for rectification. If an assembly is rejected for a major fault, eg, cylinder block, piston and rings, or defective bearings, the assembly will be retested as for the initial test for an overhauled engine.

   (*b*) Testing procedure and data for an overhauled engine:—
   - (i) Prepare the engine for running.
   - (ii) Give a motoring or 'no load' run for at least 2 hours as follows:—
     750 r.p.m. for 1 hour
     1,500 r.p.m. for ½ hour
     2,500 r.p.m. for ½ hour
   - (iii) 10% of engines will be subjected to a running and performance test on suitable dynamometers for a period of 3 hours as shown in Table at Item 1(*b*) (vi).
   - (iv) Engines will be tested with all accessories fitted.
   - (v) Check, and if necessary, reset the timing to: Piston, $\frac{7}{16}$ inch before T.D.C. with ignition fully advanced.
   - (vi) Run the engine as follows, this is as per Veh Gen A 318 (Issue 2):—

1,000	r.p.m.	for	60	min	at	NIL%	of	full load
1,600	,,	,,	30	,,	,,	10%	,,	,,
2,300	,,	,,	30	,,	,,	20%	,,	,,
3,000	,,	,,	30	,,	,,	50%	,,	,,
3,600	,,	,,	25	,,	,,	80%	,,	,,
4,500	,,	,,	5	,,	,,	100%	,,	,,

www.ajs-matchless.info

Part 1—(contd)

Section 10—(contd)

Engine testing procedure—(contd)

Instructions for examiner

During the run-in period, check for leaks, knocks, or undue noise, temperatures, oil flow, etc, and record findings on the test sheet.

(vii) All rectifications must be complete before commencing endurance test.

(viii) Check cylinder head and base nuts, and ensure they are tight.

(ix) Carry out compression test, remove spark plug, insert gauge, with throttle wide open, revolve engine, compression should be 95-100 lb/sq. in. at kick-starter speed, engine hot.

(x) Engine should develop 13 b.h.p. at 4,500 r.p.m.

(xi) A check will be made to ensure that the engine will open without hesitation to full power load from 350-400 r.p.m. Dynamometer to be set at the full load at which the engine is capable at 4,500 r.p.m. The throttle will be abruptly opened at full throttle, the engine must attain 4,500 r.p.m. without hesitation. Repeat test three times. Shut the throttle abruptly, the engine must return to idling speed without roughness or stalling.

(xii) Test bed consumption test:—

0·76 pt/b.h.p./hr. at 2,250 r.p.m.
0·8 „ „ „ „ 4,500 „
} Period of test runs to be 15 min each.

(*c*) Inspection of completed engine prior to removal from test bed:—

(i) Examine the engine throughly to ensure tightness of nuts and freedom from leaks.

(ii) Ensure that the cylinder head nuts are tightened.

(iii) Ensure that all gaskets and joints have been renewed, all unions are tight, split pins and locking devices are operative.

(iv) Check that all linkage is free from wear.

(*d*) If the engine is to be placed in care and preservation this will be carried out in accordance with Veh Gen A 111/105, examiners will check this operation before passing the engine as serviceable.

SECTION 11

Clutch, comprising:—

Item No.	*Designation*	*Part No.*	*Item No.*	*Designation*	*Part No.*
1	**Clutch centre**	**2-X/M15**	**3**	**Clutch plates**	**See remarks column**
2	**Spring, pressure**	**21-X/M3**	**4**	**Clutch thrust rod**	**28-X-4**

Multiplate, dry type mounted on gearbox mainshaft, four driving plates with 24 fabric inserts, 5 steel driven plates, driving pressure by 4 coil springs, withdrawal by push-rod

Instructions for examiner

Item No.	*Designation*	*Size (in inches) or Specification*			*Col 4 Remarks*
		Col 1 Plan	*Col 2 Acceptable on overhaul*	*Col 3 Condemnation limit*	
1	**Clutch centre**				Examine driving splines on O.D. for indentation, if worn, fit new clutch centre. As a guide an acceptable tolerance for this movement is 0·025 inch to 0·030 inch; indicator reading at O.D. Inner spline is a tight fit on the shaft spline.
	(*a*) Spline data:—				
	(i) Width:	High, 0·129 Low, 0·127	No wear		
	(ii) Bottom dia:	High, 1·1885 Low, 1·1875			
	(iii) Top dia:	High, 1·083 Low, 1·080	No wear		

Part 1—(contd)

Section 11—(contd)

Instructions for examiner

Clutch—(contd)

Item No.	*Designation*	*Size (in inches) or Specification*			*Col 4 Remarks*
		Col 1 Plan	*Col 2 Acceptable on overhaul*	*Col 3 Condemnation limit*	
2	**Spring pressure**				Material: Spring steel wire.
	(*a*) Size 14 S.W.G.:	0·080			To be wound L.H. Ends to be ground, must close solid without taking a set.
	(*b*) Free length:	$1\frac{3}{4}$	Within limits	$1\frac{9}{16}$	
	(*c*) Solid length:	$\frac{11}{16}$			
	(*d*) End of last coil, thickness:	$\frac{1}{32}$			
	(*e*) O.D. of coil:	0·640			
3	**Clutch plates**				Part No. 3-X/M2 (4 off).
	(*a*) Fabric:—				
	(i) Thickness of plate:	0·092			
	(ii) Thickness over inserts:	High, 0·172 Low, 0·164	0·150	See remarks	If projections are worn tapered or if plates are glazed, replace.
	(*b*) Steel, thin:—				Part No. 5-X/M1 (4 off).
	(i) Thickness:	0·040	See remarks		If projections are worn, plates heavily scored or buckled, new plates should be fitted. It is permissible to take out buckling provided the operation is satisfactorily carried out.
	(*c*) Steel, thick:—				
	(i) Thickness:	0·144	See remarks		Part No. 6-X/M2 (1 off).
4	**Clutch thrust rod**				
	(*a*) Length:	$9\frac{7}{8}$			

5 **Test and inspection procedure**

Ensure that:—

(*a*) The inserts are not below the acceptance figure shown at Item 3 (*a*) (ii).
(*b*) Projections are not worn tapered, the plate is not heavily scored, glazed or buckled.
(*c*) Sprocket teeth are not hooked, pitted or damaged.
(*d*) Rivets are sound and well finished off.
(*e*) Clutch spring stud and adjustment nut-threads are not stripped and are well formed.
(*f*) Clutch operating rod is not bent; ends of rod are smoothly rounded and the steel ball is not pitted.
(*g*) The clutch is correctly assembled (see page 44 Maint Manual No. 101/MC2B).
(*h*) A clearance of $\frac{1}{32}$ inch is maintained between the clutch operating rod and nose on operating lever.

www.ajs-matchlessamto

Part 1—(contd)

SECTION 12

Gearbox and kickstart, comprising:—

Item No.	*Designation*	*Part No.*	*Item No.*	*Designation*	*Part No.*
1	**Gearbox assy (c/w clutch)**	**~~W4P-G3E-G68~~**	19	**Layshaft**	**30-C/M9**
2	**Shell**	**1-GP/M16**	20	**Layshaft bushes 1st and 2nd gears**	**355-X**
3	**Bush, layshaft**	**181-X/M1**	21	**Small gear layshaft**	**28-C/M3**
4	**Bush, camshaft**	**159-X/M1**	22	**Second gear layshaft**	**26-C/M5**
5	**Case, kick starter**	**3-G/M7**	23	**First gear layshaft**	**27-C/M5**
6	**Bush, camshaft**	**160-X/M3**	24	**Clutch sliding**	**29-C/M3**
7	**Bush, control spindle**	**CO-91/M1**	25	**Third gear**	**25-C/M3**
8	**Bush, kick starter spindle (inner)**	**201-X/M2**	26	**Camshaft**	**45-C/M3**
9	**Cover, kick starter case**	**4-C/M8**	27	**Fork mainshaft**	**42-C/M1**
10	**Bushes, control quadrant sleeve**	**CO-54/M7**	28	**Fork layshaft**	**43-C/M1**
11	**Bush, kick starter spindle (outer)**	**200-X/M3**	29	**Control spindle**	**CO-90/M3**
12	**Mainshaft**	**10-C/M15**	30	**Main spring fast change**	**CO-66/M1**
13	**Driving gear**	**15-C/**	31	**Spring, pawl**	**CO-67/M1**
14	**Bush for driving gear**	**187-X/M3**	32	**Sleeve, control quadrant**	**CO-94/M3**
15	**Sliding gear**	**14-C/M4**	33	**Quadrant control**	**CO-53/M4**
16	**Third gear and modified gear**	**24-C/M6**	34	**Spring, camshaft pawl**	**193-X/M1**
17	**Ratchet pinion kick starter**	**183-X/M1**	35	**Spindle, kick starter**	**198-X/M4**
18	**Driving ratchet**	**186-X/M1**	36	**Quadrant**	**199-X/M3**
			37	**Spring return**	**130-X/M2**
			38	**Spring, ratchet pinion**	**185-X/M1**

Instructions for examiner

1 **Gearbox assembly**

(*a*) Make: Burman, type C.P.B.L. Attention is drawn to DME Wksp Bulletin No. B5.

(*b*) Description: Four forward gears, constant mesh spur gears with sliding dog engagement. Foot operated change lever.

(*c*) Gear ratios: Top: 5·8 to 1
Third: 7·3 to 1
Second: 12·2 to 1 (Boxes with closer gear ratios will be acceptable after overhaul. Ratios shown are for the standard gearbox).
First: 18·5 to 1

(*d*) Lubricant capacity 1¾ pt; level 2½ inch from bottom of gearbox casing. Lubricant grease LG-380 (approx 2 lb) see Veh Gen J 304.

(*e*) A worn fork will not be condemned for wear unless when assembled with a new mating groove the clearance exceeds 0·018 inch.

(*f*) A worn gear spline will not be condemned for wear unless when assembled with a new mating part the clearance exceeds 0·012 inch.

Item No.	*Designation*	*Size (in inches) or Specification*			*Col 4 Remarks*
		Col 1 Plan	*Col 2 Acceptable on overhaul*	*Col 3 Condemnation limit*	
2	**Shell**				Material: Aluminium casting.
	(*a*) Bore dia main driving gear:	High, 2·4412 Low, 2·4405	No wear		Interference fit.
	(*b*) Bore dia layshaft bush:	High, 0·794 Low, 0·792	No wear		Interference fit.
	(*c*) Bore dia camshaft bush:	High, 0·688 Low, 0·687	No wear		Interference fit.
	(*d*) Bearing, main gearbox shaft:	$1\frac{9}{32}$ x 62 mm x 16 mm			See Gen O 021 (Issue 4).

Part 1—(contd)

Section 12—(contd)

Instructions for examiner

Gearbox and kickstart—(contd)

Item No.	*Designation*	*Size (in inches) or Specification*			*Col 4 Remarks*
		Col 1 Plan	*Col 2 Acceptable on overhaul*	*Col 3 Condemnation limit*	
3	**Bush, layshaft**				Material: 'Compo' H.
	(*a*) O.D.:	High, 0·796 Low, 0·795	No wear		Interference fit in shell.
	(*b*) I.D.:	High, 0·6135 Low, 0·6125	See (*c*)	See (*c*)	
	(*c*) Combined clearance with layshaft:	High, 0·0050 Low, 0·0035	0·006	0·010	
	(*d*) Thickness of flange:	High, 0·125 Low, 0·122			
4	**Bush, camshaft**				Material: Mild steel.
	(*a*) O.D.:	High, 0·690 Low, 0·689	No wear		Interference fit.
	(*b*) I.D.:	High, 0·500 Low, 0·499	See (*c*)	See (*c*)	
	(*c*) Clearance, shaft to bush:	High, 0·003 Low, 0·001	0·006	0·009	
	(*d*) Length:	High, 0·687 Low, 0·677			
	(*e*) Dia of flange:	$\frac{13}{64}$			
	(*f*) Thickness of flange:	High, 0·061 Low, 0·059			
5	**Case, kick starter**				Material: Aluminium die casting.
	(*a*) Dia of recess for mainshaft bearing:	High, 1·5747 Low, 1·5740	No wear		
	(*b*) Bore dia layshaft bush:	High, 0·793 Low, 0·792	No wear		Items (*a*) to (*e*) are interference fit.
	(*c*) Bore dia camshaft bush:	High, 1·063 Low, 1·062	No wear		
	(*d*) Bore dia kick starter spindle bush:	High, 0·813 Low, 0·812	No wear		
	(*e*) Bore dia control spindle bush:	High, 0·430 Low, 0·429	No wear		
	(*f*) Bearing, kick starter case:—				Part No. MT7 6075.
	(i) Size:	12 x 40 x 17 mm			See Gen O 021, (Issue 4).

www.ajs-matchless.info

Part 1—(contd)

Section 12—(contd)

Instructions for examiner

Gearbox and kickstart—(contd)

Item No.	*Designation*	*Size (in inches) or Specification*			*Col 4 Remarks*
		Col 1 Plan	*Col 2 Acceptable on overhaul*	*Col 3 Condemnation limit*	
6	**Bush, camshaft**				Material: Mild steel.
	(*a*) O.D.:	High, 1·065 Low, 1·064	No wear		See DME Mod Circ B343. Interference fit.
	(*b*) I.D.:	High, 0·852 Low, 0·851	See (*c*)	See (*c*)	
	(*c*) Clearance with camshaft:	High, 0·003 Low, 0·001	0·0045	0·009	
	(*d*) Length:	High, 0·937 Low, 0·927			
	(*e*) Dia over flange:	$1\frac{3}{16}$			
	(*f*) Thickness of flange:	High, 0·236 Low, 0·234			
7	**Bush, control spindle**				Material: Mild steel.
	(*a*) O.D.:	High, 0·432 Low, 0·431	No wear		Interference fit.
	(*b*) I.D.:	High, 0·313 Low, 0·312	See (*c*)	See (*c*)	
	(*c*) Clearance, bush to shaft:	0·004	0·006	0·012	By selective fitting.
	(*d*) Length:	$\frac{1}{2}$			
	(*e*) Thickness of flange:	High, 0·093 Low, 0·090			
8	**Bush, kick starter spindle (inner)**				Material: Mild steel.
	(*a*) O.D.:	High, 0·8140 Low, 0·8135	No wear		Interference fit.
	(*b*) I.D.:	High, 0·6285 Low, 0·6275	See (*c*)	See (*c*)	
	(*c*) Clearance, shaft to bush:	High, 0·0050 Low, 0·0035	0·0065	0·012	
	(*d*) Length:	High, 0·966 Low, 0·956			
	(*e*) Thickness of flange:	High, 0·089 Low, 0·086			

www.ais-matchless.info

Part 1—(contd)

Section 12—(contd)

Instructions for examiner

Gearbox and kickstart—(contd)

Item No.	*Designation*	*Size (in inches) or Specification*			*Col 4 Remarks*
		Col 1 Plan	*Col 2 Acceptable on overhaul*	*Col 3 Condemnation limit*	
9	**Cover, kick starter case**				Material: Aluminium die casting.
	(*a*) Bore dia control quadrant sleeve:	High, 1·063 Low, 1·062	No wear		Interference fit.
	(*b*) Bore dia kick starter spindle bush:	High, 0·876 Low, 0·875	No wear		Interference fit.
10	**Bushes, control quadrant sleeve**				Material: Mild steel.
	(*a*) O.D.:	High, 1·0640 Low, 1·0635	No wear		Interference fit.
	(*b*) I.D.:	High, 0·812 Low, 0·811	See (*c*)	See (*c*)	
	(*c*) Clearance, shaft to bush:	High, 0·003 Low, 0·001	0·004	0·009	
	(*d*) Length:	High, 0·880 Low, 0·870			
	(*e*) Thickness of flange:	High, 0·312 Low, 0·309			
11	**Bush, kick starter spindle (outer)**				Material: Mild steel.
	(*a*) O.D.:	High, 0·878 Low, 0·877	No wear		Interference fit.
	(*b*) I.D.:	High, 0·7035 Low, 0·7025	See (*c*)	See (*c*)	
	(*c*) Clearance, shaft to bush:	High, 0·0050 Low, 0·0035	0·006	0·012	
	(*d*) Length:	High, 1·162 Low, 1·157			
	(*e*) Thickness of flange:	High, 0·089 Low, 0·086			
12	**Mainshaft**				
	(*a*) Dia at main gear bushes:	High, 0·844 Low, 0·843	0·840	0·838	
	(*b*) Clearance with bush:	High, 0·0055 Low, 0·0035	0·0065	0·010	
	(*c*) Dia at third gear bush, outer bearing (ratchet pinion bush):	High, 0·6690 Low, 0·6685	0·666	0·664	

www.aircraftmatchless.info

Part 1—(contd)

Section 12—(contd)

Instructions for examiner

Gearbox and kickstart—(contd)

Item No.	*Designation*	*Size (in inches) or Specification*			*Col 4 Remarks*
		Col 1 Plan	*Col 2 Acceptable on overhaul*	*Col 3 Condemnation limit*	
12 (contd)	(*d*) Clearance with third gear bush:	High, 0·0035 Low, 0·0020	0·005	0·009	Mainshaft endfloat is controlled by third gear shoulder, must not exceed 0·015 inch. Keep within this limit by inserting shims over shaft between nut and driving ratchet.
	(*e*) Clearance with ratchet pinion bush:	High, 0·0025 Low, 0·0010	0·004	0·008	
	(*f*) Top dia of spline sliding gear:	High, 0·844 Low, 0·843			
	(*g*) Bottom dia of spline:	High, 0·705 Low, 0·702			
	(*h*) Width of spline:	High, 0·191 Low, 0·189	0·185	0·182	
	(*j*) Top dia of spline, kick starter ratchet:	High, 0·669 Low, 0·668			
	(*k*) Bottom dia of spline:	High, 0·549 Low, 0·544			
	(*l*) Width of spline:	High, 0·154 Low, 0·152	0·148	0·145	
	(*m*) Top dia of spline, clutch centre drive:	High, 1·1865 Low, 1·1860			
	(*n*) Bottom dia of spline:	High, 1·060 Low, 1·055			
	(*o*) Width of spline:	High, 0·134 Low, 0·132	No wear		
	(*p*) Dia over collar:	High, 1·435 Low, 1·420			
	(*q*) Thickness of collar:	High, 0·185 Low, 0·175			
	(*r*) Dia of bore through centre of shaft:	High, 0·263 Low, 0·257			
13	**Driving gear**				Material: W.V.10.
	(*a*) O.D. for ball bearing:	High, 1·2810 Low, 1·2805	No wear		32 teeth external; 23 teeth internal.
	(*b*) I.D. for bushes:	High, 0·938 Low, 0·937	No wear		Interference fit.
	(*c*) Top dia of groove for driving sprocket:	High, 1·2810 Low, 1·2805			

Part 1—(contd)

Section 12—(contd)

Instructions for examiner

Gearbox and kickstart—(contd)

Item No.	*Designation*	*Size (in inches) or Specification*			*Col 4 Remarks*
		Col 1 Plan	*Col 2 Acceptable on overhaul*	*Col 3 Condemnation limit*	
13 (contd)	(*d*) Bottom dia of groove:	High, 1·159 Low, 1·154			
	(*e*) Width of groove:	High, 0·217 Low, 0·215	No wear		Tight fit.
14	**Bush for driving gear**				Material: Compo 'H'. Interference fit.
	(*a*) O.D.:	High, 0·940 Low, 0·939	No wear		
	(*b*) I.D.:	High, 0·8485 Low, 0·8475	See (*c*)	See (*c*)	
	(*c*) Clearance, bush to shaft:	High, 0·0035 Low, 0·0020	0·005	0·010	
	(*d*) Length (overall):	High, 1·130 Low, 1·120			
15	**Sliding gear**				Material: W.V.10.
	(*a*) Operating fork groove width:	High, 0·190 Low, 0·188	0·183	0·180	28 teeth major end; 18 teeth minor end.
	(*b*) Clearance, groove to fork:	High, 0·005 Low, 0·001	0·018	0·025	
	(*c*) Dia of operating fork groove:	High, 1·000 Low, 0·995	Negligible wear		
	(*d*) Top dia of groove:	High, 0·848 Low, 0·846	Negligible wear		
	(*e*) Bottom dia of groove:	High, 0·747 Low, 0·744			
	(*f*) Width of groove:	High, 0·184 Low, 0·182	0·186	0·189	
16	**Third gear/modified gear**				Material: W.V.10.
	(*a*) I.D. of bush:	High, 0·672 Low, 0·671			29 teeth external; 18 teeth internal. Modified 27 teeth external.
	(*b*) Clearance, shaft to bush:	High, 0·0035 Low, 0·0020	0·005	0·009	
	(*c*) Length less flange:	High, 0·745 Low, 0·740			
	(*d*) Thickness of flange:	High, 0·125 Low, 0·120			

www.aisrmatchless.info

Part 1—(contd)

Section 12—(contd)

Instructions for examiner

Gearbox and kickstart—(contd)

Item No.	Designation	Size (in inches) or Specification			Col 4 Remarks
		Col 1 Plan	Col 2 Acceptable on overhaul	Col 3 Condemnation limit	
17	**Ratchet pinion, kick starter**				Material: Direct hard nickel chrome. Teeth, gear 16; ratchet 16.
18	(*a*) **Driving ratchet :—**				
	(i) I.D.:	High, 0·814 Low, 0·813	See (ii)	See (ii)	
	(ii) Clearance, pinion to bush:	High, 0·004 Low, 0·002	0·0055	0·007	
	(*b*) Spline (in ratchet):—				
	(i) Top dia:	High, 0·673 Low, 0·671	Negligible wear		Tops of teeth must be sharp, if rounded in any way a new ratchet pinion must be fitted.
	(ii) Bottom dia:	High, 0·583 Low, 0·580	Negligible wear		
	(iii) Width:	High, 0·149 Low, 0·147	0·143	0·140	
19	**Layshaft**				Material: Carbonising steel.
	(*a*) Dia at 1st and 2nd gear bushes:	High, 0·7820 Low, 0·7815	No wear		Carburised depth 0·015 to 0·020 inch. Bush interference fit.
	(*b*) Dia at end bushes:	High, 0·6090 Low, 0·6085	See 3 (*c*)	See 3 (*c*)	
	(*c*) Clearance, bush to shaft:	See Item 3 (*c*)			
	(*d*) Top dia of spline, small and third gear:	High, 0·7765 Low, 0·7760	Wear negligible		
	(*e*) Bottom dia of spline:	High, 0·672 Low, 0·667			
	(*f*) Width of spline:	High, 0·152 Low, 0·150	0·146	0·142	
	(*g*) Top dia of spline sliding clutch:	High, 0·9985 Low, 0·9980			
	(*h*) Bottom dia of spline:	High, 0·8750 Low, 0·8745			
	(*j*) Width of spline:	High, 0·224 Low, 0·222	0·218	0·215	
	(*k*) Endfloat of shaft after assy:	0·010	0·010	0·015	

www.ais-matchless.info

Part 1—(contd)

Section 12—(contd)

Instructions for examiner

Gearbox and kickstart—(contd)

Item No.	*Designation*	*Size (in inches) or Specification*			*Col 4 Remarks*
		Col 1 Plan	*Col 2 Acceptable on overhaul*	*Col 3 Condemnation limit*	
20	**Layshaft bushes 1st and 2nd gear**				Material: H.T. brass.
	(*a*) O.D.:	High, 0·859 Low, 0·858	See (*c*)	See (*c*)	
	(*b*) I.D.:	High, 0·780 Low, 0·779	No wear		Interference fit on shaft.
	(*c*) Clearance, bush to gear:	High, 0·004 Low, 0·002	0·005	0·010	
21	**Small gear layshaft**				Material: S.82 C and H.
	(*a*) Spline:—				Teeth 18.
	(i) Top dia:	High, 0·7795 Low, 0·7785	Wear negligible		
	(ii) Bottom dia:	High, 0·700 Low, 0·689	Wear negligible		
	(iii) Width:	High, 0·148 Low, 0·146	0·142	0·139	
22 and 23	**First and second gear layshaft**				Material: 5A steel C and H.
	(*a*) Recess dia:	High, 1·591 Low, 1·581	No wear		Second gear Teeth: external 27; internal 18.
	(*b*) I.D.:	High, 0·862 Low, 0·861	See Item 20 (*c*)	See Item 20 (*c*)	
24	**Clutch sliding**				Material: E.N.35A. Teeth 18 both ends.
	(*a*) Top dia of spline:	High, 1·0025 Low, 1·0005	Wear negligible		
	(*b*) Bottom dia of spline:	High, 0·912 Low, 0·910	Wear negligible		
	(*c*) Width of spline:	High, 0·215 Low, 0·213	0·209	0·206	
	(*d*) O.D. over teeth:	High, 1·554 Low, 1·549			
	(*e*) Width of operating fork groove:	High, 0·190 Low, 0·188	See (*f*)	See (*f*)	
	(*f*) Clearance, fork to groove:	High, 0·005 Low, 0·001	0·018	0·025	
	(*g*) Dia of groove:	High, 1·190 Low, 1·185	Wear negligible		

www.ajcmachless.info

Part 1—(contd)

Section 12—(contd)

Instructions for examiner

Gearbox and kickstart—(contd)

Item No.	Designation	Size (in inches) or Specification			Col 4 Remarks
		Col 1 Plan	Col 2 Acceptable on overhaul	Col 3 Condemnation limit	
25	**Third gear spline**				Material: 5A Steel C and H. Teeth 21.
	(*a*) Top dia:	High, 0·7795 Low, 0·7785	Wear negligible		
	(*b*) Bottom dia:	High, 0·700 Low, 0·698	Wear negligible		
	(*c*) Width:	High, 0·148 Low, 0·146	0·142	0·139	
	(*d*) Clearance, all gears to spline:	High, 0·006 Low, 0·002	0·012	0·018	
26	**Camshaft**				Material: Carbonising steel.
	(*a*) Dia of operating forks:	High, 1·124 Low, 1·123	Wear negligible		Camshaft pinion is solid with shaft has 15 teeth, for bushes see Item 6.
	(*b*) Dia at inner bush:	High, 0·498 Low, 0·497	See Item 4 (*c*)	See Item 4 (*c*)	
	(*c*) Dia at outer bush:	High, 0·850 Low, 0·849	See Item 6 (*c*)	See Item 6 (*c*)	
27	**Fork mainshaft**				Material: Aluminium bronze die casting.
	(*a*) Bore dia:	High, 1·126 Low, 1·125	Wear negligible		
	(*b*) Dia between fork ends:	High, 1·010 Low, 1·005	Wear negligible		
	(*c*) Thickness of fork ends:	High, 1·187 Low, 1·185	See Item 15(*b*)	See Item 15(*b*)	
28	**Fork layshaft**				Material: Aluminium bronze die casting.
	(*a*) Bore dia:	High, 1·126 Low, 1·125	Wear negligible		
	(*b*) Dia between fork ends:	High, 1·200 Low, 1·195	Wear negligible		
	(*c*) Thickness of fork ends:	High, 0·187 Low, 0·185	See Item 24 (*f*)	See Item 24 (*f*)	
29	**Control spindle**				Material: Bright mild steel.
	(*a*) Dia of sleeve:	High, 0·530 Low, 0·529			
	(*b*) Clearance, spindle to sleeve:	High, 0·0055 Low, 0·0020	0·007	0·012	
	(*c*) Dia at kick starter case bush:	High, 0·308 Low, 0·303	See Item 7 (*c*)	See Item 7 (*c*)	

www.aismatchless.info

Part 1—(contd)

Section 12—(contd)

Instructions for examiner

Gearbox and kickstart—(contd)

Item No.	*Designation*	*Size (in inches) or Specification*			*Col 4 Remarks*
		Col 1 Plan	*Col 2 Acceptable on overhaul*	*Col 3 Condemnation limit*	
30	**Main spring**				Material: Spring steel wire
	(*a*) Dia of wire:	0·062			
	(*b*) O.D. of coils:	0·55			
	(*c*) Free length:	$1\frac{3}{4}$	Within limits	$1\frac{9}{16}$	
	(*d*) Solid length:	$\frac{9}{16}$	See remarks		Spring must not take a set after test.
31	**Spring pawl**				Material: Spring steel wire.
	(*a*) Dia of wire:	0·041			
	(*b*) O.D. of coils:	0·490			
	(*c*) Free length:	$1\frac{1}{4}$	Within limits	$1\frac{1}{8}$	
	(*d*) Solid length:	$\frac{11}{32}$	See remarks		Must not take a set after test.
32	**Sleeve, control quadrant**				Material: C.M.31.
	(*a*) Dia at bush:	High, 0·810 Low, 0·809	See Item 10 (*c*)	See Item 10 (*c*)	
	(*b*) Bore dia:	High, 0·5345 Low, 0·5320	See Item 29 (*b*)	See Item 29 (*b*)	
	(*c*) Top dia of splines:	High, 0·9375 Low, 0·9365	No wear		Tight fit in quadrant.
	(*d*) Bottom dia of splines:	High, 0·812 Low, 0·807	No wear		Tight fit in quadrant.
	(*e*) Width of splines:	High, 0·188 Low, 0·186	No wear		Tight fit in quadrant.
33	**Quadrant control, spline**				Material: M.S. pressing.
	(*a*) Top dia:	High, 0·937 Low, 0·935			
	(*b*) Bottom dia:	High, 0·847 Low, 0·845			See remarks, Item 32, Col 4.
	(*c*) Width:	High, 0·184 Low, 0·182	No wear		
34	**Spring, camshaft pawl**				Material: Spring steel wire.
	(*a*) Dia of wire:	0·064			
	(*b*) O.D. of coils:	$\frac{13}{32}$	Within limits		
	(*c*) Free length:	$1\frac{11}{32}$		$1\frac{1}{2}$	
	(*d*) Solid length:	$\frac{7}{8}$	See remarks		Should not take a set after test.

www.ajs-matchless.info

Part 1—(contd)

Section 12—(contd)

Instructions for examiner

Gearbox and kickstart—(contd)

Item No.	*Designation*	*Size (in inches) or Specification*			*Col 4 Remarks*
		Col 1 Plan	*Col 2 Acceptable on overhaul*	*Col 3 Condemnation limit*	
35	**Spindle, kick starter**				Material: B.S. 10X.
	(*a*) Dia at outer bush:	High, 0·6990 Low, 0·6985	See Item 11 (*c*)	See Item 11 (*c*)	For clearance see Item 11 (*c*).
	(*b*) Dia at inner bush:	High, 0·6240 Low, 0·6235	See Item 8 (*c*)	See Item 8 (*c*)	For clearance see Item 8 (*c*).
	(*c*) Dia at return spring:	$\frac{15}{16}$	No wear		
	(*d*) Top dia of splines:	High, 0·849 Low, 0·848	No wear		Tight fit on quadrant.
	(*e*) Bottom dia of spline:	High, 0·705 Low, 0·700	No wear		Tight fit on quadrant.
	(*f*) Width of spline:	High, 0·191 Low, 0·189	No wear		Tight fit on quadrant.
36	**Quadrant, splines**				Material: S.82.
	(*a*) Top dia:	High, 0·847 Low, 0·846	No wear		Tight fit on spindle.
	(*b*) Bottom dia:	High, 0·749 Low, 0·744	No wear		If the first half tooth is worn or damaged it can be ground off.
	(*c*) Width:	High, 0·184 Low, 0·182	No wear		
37	**Spring, return**				Material: Chrome vanadium steel. Free dia is not important.
	(*a*) No. of coils:	10			
	(*b*) Width:	$\frac{3}{8}$			
	(*c*) Thickness 20 S.W.G.:	0·036			
	(*d*) Length from centre of loop:	$42\frac{1}{4}$			
	(*e*) Tension when wound tight on $\frac{15}{16}$ inch bar and loosed back ONE turn, at 6 inch radius:	High, $3\frac{1}{2}$ lb Low, $2\frac{1}{2}$ lb	Within limits	$2\frac{1}{4}$ lb	O.D. when free is $3\frac{1}{2}$ inches approx tension is dependent on deflection and should be as shown.
38	**Spring ratchet pinion**				Material: Spring steel wire.
	(*a*) Dia of wire 30 S.W.G.:	0·035			

www.ajsmatchless.info

Part 1—(contd)

Section 12—(contd)

Instructions for examiner

Gearbox and kickstart—(contd)

Item No.	*Designation*	*Size (in inches) or Specification*			*Col 4 Remarks*
		Col 1 Plan	*Col 2 Acceptable on overhaul*	*Col 3 Condemnation limit*	
38 (contd)	(*b*) I.D. to pass freely over a bar (dia):	$\frac{13}{16}$			
	(*c*) Free length:	$\frac{7}{8}$	See remarks		Replace if more than $\frac{1}{16}$ inch collapse is evident.
	(*d*) Solid length:	$\frac{1}{8}$			Must not take a set after test.
39	**Test and inspection procedure**				

(*a*) Ensure that the gearbox has been correctly assembled, all nuts and bolts are tight and correctly locked, new washers fitted where applicable.
(*b*) Engage all gears and ensure that gears engaged are as shown by the gear indicator.
(*c*) Ensure that the gearbox is correctly filled with Grease LG-380 on assembly.
Capacity, $1\frac{3}{4}$ pt (approx 2 lb); Level, $2\frac{1}{2}$ inches from bottom of gearbox casing.
(*d*) Foot control lever must be a firm fit with no movement permissible.
(*e*) Springs will be within tolerance as laid down.
(*f*) Ratchet pinion, kick starter; tops of teeth must be sharp, if rounded in any way a new ratchet pinion and ratchet must be fitted.
(*g*) See Item 6. Gearboxes numbered below 70975 were fitted with roller bearings and bush Part No. 16-X-2. If within limits as per Gen O 021 (Issue 4) these may be retained.
(*h*) Run gearbox on a test rig until box warms up, run gearbox in each gear, check for, noise, roughness and ease of gear change.

SECTION 13

Chains and sprockets, comprising:—

Item No.	*Designation*	*Part No.*	*Item No.*	*Designation*	*Part No.*
1	**Engine sprocket**	**20815-18**	**7**	**Magneto driving sprocket**	**STD 727 and STD 726**
2	**Cam absorber**	**S.T.D.-830**	**8**	**Dynamo sprocket**	**20862**
3	**Spring absorber**	**S.T.D.-702**	**9**	**Front chain**	**MT11/32317**
4	**Clutch sprocket**	**7-X-A/M4**	**10**	**Magneto chain**	**MT11/28611**
5	**Gearbox small sprocket**	**179-X/M7**	**11**	**Dynamo chain**	**MT11/29412**
6	**Rear wheel sprocket**	**W41-G3-B15**	**12**	**Rear chain**	**MT11/46432**

Instructions for examiner

Item No.	*Designation*	*Size (in inches) or Specification*			*Col 4 Remarks*
		Col 1 Plan	*Col 2 Acceptable on overhaul*	*Col 3 Condemnation limit*	
1	**Engine sprocket**				Sprocket teeth will not be hooked, pitted or damaged in any way, and show no signs of undue wear.
	(*a*) No. of teeth:	18			

www.ais-motorcycles.info

Part 1—(contd)

Section 13—(contd)

Instructions for examiner

Chains and sprockets—(contd)

Item No.	*Designation*	*Size (in inches) or Specification*			*Col 4 Remarks*
		Col 1 Plan	*Col 2 Acceptable on overhaul*	*Col 3 Condemnation limit*	
2	**Cam absorber, splines**				
	(*a*) Top dia:	High, 0·895 Low, 0·891			
	(*b*) Bottom dia:	High, 0·760 Low, 0·756			
	(*c*) Width:	High, 0·190 Low, 0·189	See (*d*)	See (*d*)	
	(*d*) Movement, cam on shaft:	High, 0·008 Low, 0·003	7°	10°	
3	**Spring absorber**				Material: $1\frac{1}{4}$ x $\frac{3}{16}$ inches spring steel.
	(*a*) O.D.:	2			
	(*b*) I.D.:	$1\frac{1}{2}$			
	(*c*) Free length:	High, $1\frac{19}{32}$ Low, $1\frac{17}{32}$	Within limits	$1\frac{11}{32}$	
	(*d*) Minimum acceptable length with a poundage of 360 lb:	—	$\frac{3}{4}$	—	
4	**Clutch sprocket**				
	(*a*) No. of teeth:	40			For $\frac{1}{2}$ inch by 0·305 inch chain.
	(*b*) Bore dia for roller race:	High, 2·175 Low, 2·174			For limits of wear on ball or roller bearings see Gen O 021 (Issue 4).
5	**Gearbox small sprocket**				
	(*a*) No. of teeth:	16			For $\frac{5}{8}$ inch x 0·380 inch chain.
6	**Rear wheel sprocket**				
	(*a*) No. of teeth:	42			For $\frac{5}{8}$ inch x 0·380 inch chain. Brake drum and sprocket combined. For brake drum see Section 15, Item 1.
7	**Magneto driving sprockets**				Part No. S.T.D.726 Mag. Armature shaft. Part No. S.T.D.727 Engine camshaft.
	(*a*) No. of teeth:	17			For $\frac{3}{8}$ inch x 0·225 inch chain.
8	**Dynamo sprocket**				
	(*a*) No. of teeth:	17			For $\frac{3}{8}$ inch x 0·225 inch chain.

www.ajs-matchless.info

Part 1—(contd)

Section 13—(contd)

Instructions for examiner

Chains and sprockets—(contd)

Item No.	*Designation*	*Size (in inches) or Specification*			*Col 4 Remarks*
		Col 1 Plan	*Col 2 Acceptable on overhaul*	*Col 3 Condemnation limit*	
9	**Front chain**				
	(*a*) No. of links:	66			Chains will be tested and condemned per DME Wksp Bulletin B46-46A.
	(*b*) Pitch and width:	½ x 0·305			
	(*c*) Length:	33	33·33	33·85	
10	**Magneto chain**				Tension free movement $\frac{3}{16}$ inch to $\frac{5}{16}$ inch, to adjust tilt magneto platform, chain case to be packed with Grease LG-380.
	(*a*) No. of links:	58			
	(*b*) Pitch and width:	⅜ x 0·225			
	(*c*) Length:	21·75	21·967	22·075	
11	**Dynamo chain**				
	(*a*) No. of links:	47			
	(*b*) Pitch and width:	⅜ x 0·225			
	(*c*) Length:	17·625	17·801	17·977	
12	**Rear chain**				
	(*a*) No. of links:	91			
	(*b*) Pitch and width:	⅝ x 0·380			For adjustment and other information see Maint Manual 101/MC2B, pages 50 to 52.
	(*c*) Length:	56·875	57·443	58·011	

13 **Test and inspection procedure:—**

(*a*) Ensure that sprocket teeth are not hooked, worn, pitted or damaged in any way.

(*b*) Ensure that the chains are in sound condition, free from twists, kinks and/or excessive wear on rollers.

(*c*) Check that the chains are not elongated beyond the max permissible limits as laid down in Col 2. Field units condemn as shown at Col 3.

(*d*) Chains will be tested per DME Wksp Bulletin B46 and B46A. Chains will be dry and free from dirt when tested, lubricate after test.

(*e*) For information:—

(i) Dynamo sprocket, Part No. 20862 (built up type) interchangeable with replacement, Part No. S.T.D.725 (solid type).

(ii) Magneto sprocket, Part No. 35-22-E138 (built up type) interchangeable with replacement, Part No. S.T.D.727 (solid type).,

www.ais-matchless.info

Part 1—(contd)

SECTION 14

Front and rear axles and hubs, comprising:—

Item No.	*Designation*	*Part No.*	*Item No.*	*Designation*	*Part No.*
1	**Front hub with brake drum**	**W40-G2M-H19**	3	**Rear hub less brake drum**	**W41-G3L-H2**
2	**Spindle c/w bearing**	**W40-G12M-H10**			

Instructions for examiner

Item No.	*Designation*	*Size (in inches) or Specification*			*Col 4 Remarks*
		Col 1 Plan	*Col 2 Acceptable on overhaul*	*Col 3 Condemnation limit*	
1	**Front hub with brake drum**				For brake drum see Section 15, Item 1.
	(*a*) I.D. of bore for bearing cup:	High, 1·500 Low, 1·499	No wear		Interference fit in bore.
	(*b*) Endplay in wheel bearings:	0·002	0·002	Adjust to plan	Tighten adjusting ring until all slackness has been taken up then slack back ½ turn, lock in position.
2	**Spindle c/w bearings**				
	(*a*) Spindle dia for bearing:	See remarks			See Gen O 021 (Issue 4). Cup and roller bearings are supplied with spindle.
	(*b*) Dia of bearing:				
3	**Rear hub less brake drum**				The speedo drive is by skew gear on rear hub: drive must be in good serviceable order.
	Details as for front hub				
4	**Test and inspection procedure:—**				
	(*a*) Check that the correct distance pieces are used when assembling hubs.				See DME Tech Inst B754.
	(*b*) Bearings will be examined and sentenced as per Gen O 021 (Issue 4).				
	(*c*) Oil seals on hubs to be examined to ensure that they are serviceable.				

www.ais-matchlees.info

Part 1—(contd)

SECTION 15

Brakes, comprising:—

Item No.	*Designation*	*Part No.*	*Item No.*	*Designation*	*Part No.*
1	**Front brake drum**	40-G2H-B115	3	**Spring return**	20408
2	**Linings**	3836-3	4	**Rear brake drum and sprocket**	W41-G3-B15

Instructions for examiner

Item No.	*Designation*	*Size (in inches) or Specification*			*Col 4 Remarks*
		Col 1 Plan	*Col 2 Acceptable on overhaul*	*Col 3 Condemnation limit*	
1	**Front brake drum**				Brakes: Front, hand operated; Rear, foot operated.
	(*a*) I.D.:	High, 5·525 Low, 5·520	5·570	If above Col 2 after skimming	
2	**Lining**				Type: Ferodo. Type B.A. rivets. Part No. S.T.D.105. 8 rivets per shoe.
	(*a*) Length:	$6\frac{3}{8}$			
	(*b*) Width:	$\frac{7}{8}$			
	(*c*) Thickness:	$\frac{3}{16}$	0·160	Just above rivets	
3	**Spring return**				Material: Spring steel wire.
	(*a*) Dia of wire (15 S.W.G.):	0·072			
	(*b*) O.D. of coils:	$\frac{3}{8}$			
	(*c*) No. of coils:	14 (free)			
	(*d*) Free length (inside hooks):	$2\frac{1}{2}$	$2\frac{3}{8}$	$2\frac{1}{2}$	Springs having a free length of $2\frac{1}{8}$ inches are permissible.
4	**Rear brake drum and sprocket**				
	Details as for front drum.				

5 **Test and inspection procedure:—**

(*a*) Ensure when assembling, that the brake shoe tongue is fitted into the deepest slots of the thrust piece to facilitate normal adjustment.

(*b*) For brake adjustment see page 60 and 61 of Maint Manual 101/MC2B.

www.ajs-matchless.info

Part 1—(contd)

SECTION 16

Cables and controls, comprising:—

Item No.	*Designation*	*Part No.*	*Item No.*	*Designation*	*Part No.*
1	**Cable, front brake, complete assy**	**41-B-2**	4	**Cable, ignition control, complete assy**	**39-I-1**
2	**Cable, clutch, complete assy**	**41-C-2**	5	**Cable, throttle control, complete assy**	**41-T-2**
3	**Cable, valve lifter, complete assy**	**41-V-2**	6	**Cable, air control, complete assy**	**41-A-1**

Instructions for examiner

Item No.	*Designation*	*Size (in inches) or Specification*			*Col 4 Remarks*
		Col 1 Plan	*Col 2 Acceptable on overhaul*	*Col 3 Condemnation limit*	
1	**Cable, front brake**				
	(*a*) Length of inner cable:	$42\frac{5}{8}$	$\pm\frac{1}{8}$	43	
	(*b*) Length of outer casing:	$38\frac{1}{4}$			
2	**Cable, clutch**				
	(*a*) Length of inner cable:	$50\frac{1}{2}$	$\pm\frac{1}{8}$	51	
	(*b*) Length of outer casing:	47			
3	**Cable, valve lifter**				
	(*a*) Length of inner cable:	$33\frac{1}{2}$	$\pm\frac{1}{8}$	$33\frac{3}{4}$	
	(*b*) Length of outer casing:	$30\frac{3}{4}$			
	(*c*) Free travel of cable before exhaust valve is operated:	High, $\frac{1}{4}$ Low, $\frac{1}{8}$	$\frac{1}{4}$	$\frac{3}{8}$	Measured with piston on compression stroke.
4	**Cable, ignition control**				
	(*a*) Length of inner cable:	$42\frac{7}{8}$	$\pm\frac{1}{8}$	$43\frac{1}{4}$	
	(*b*) Length of outer casing:	$39\frac{1}{2}$			
5	**Cable, throttle control**				
	(*a*) Length of inner cable:	$39\frac{3}{4}$	$\pm\frac{1}{8}$	$40\frac{1}{8}$	
	(*b*) Length of outer casing:	36			
6	**Cable, air control**				
	(*a*) Length of inner cable:	37	$\pm\frac{1}{8}$	$37\frac{3}{8}$	
	(*b*) Length of outer casing:	32			

www.ajs-matchless.info

Part 1—(contd)

Section 16—(contd)

Instructions for examiner

Cables and controls—(contd)

7	**Test and inspection procedure:—** (*a*) Examine inner cables for chafed or broken strands, renew if damaged. (*b*) Cables will not be frayed and will be lubricated on assembly. (*c*) Outer casings will not be kinked or frayed. (*d*) Controls when assembled will be neatly and securely clipped having no kinks or sharp bends. (*e*) Sufficient cable will be allowed when clipping for the operation of the steering without strain on the controls. See Veh Gen M 306. (*f*) Attention is drawn to Whd Veh B419 with regard to replacement assy. (*g*) Ensure that all adjusting screw threads are serviceable and complete with locking nuts. (*h*) Check that the control levers and twist grip are in good serviceable condition and that they are correctly assembled. (*j*) All nuts and screws will be rustproof, free from damage, tight and correctly locked.

SECTION 17

Front forks and steering, comprising:—

Item No.	*Designation*	*Part No.*	*Item No.*	*Designation*	*Part No.*
1	**Fork assy**	**W41-G3L-FF1**	**5**	**Bush fibre guide**	**40-G12M-FF41**
2	**Fork crown assy**	**W42-G3L-FF17A**	**6**	**Fork slider**	**See Col 4**
3	**Ball races**	**See Col 4**	**7**	**Bush bottom**	**40-G12M-FF151**
4	**Tube inner, fixed**	**W41-G3L-FF3**	**8**	**Fork tube components**	**See Col 4**

Instructions for examiner

Item No.	*Designation*	*Size (in inches) or Specification*			*Col 4 Remarks*
		Col 1 Plan	*Col 2 Acceptable on overhaul*	*Col 3 Condemnation limit*	
1	**Fork assy**				Type: Teledraulic tubular forks with helical spring, hydraulic damper incorporated in forks.
2	**Fork crown assy**	—	No wear		Fork crowns and handlebar lugs after engine No. 57701 were modified, marked 42, use mated assys, do not mix, either are permissible as mated assys
3	**Ball races**				Part No. S.T.D.805 Fork crown
	(*a*) Fork crown:		See Gen O 021 (Issue 4)		Part No. S.T.D.806 Bar lug
	(*b*) Bar lug:				Lower race ring will be an interference fit.
4	**Tube inner, fixed**				Material: Weldless steel tube.
	(*a*) O.D.:	High, 1·1245 Low, 1·1235	See 5 (*b*)	See 5 (*b*)	During assy absolute cleanliness is essential, any dirt or other abrasive matter left on the various sliding parts will cause damage and rapid wear.
5	**Bush fibre guide**				
	(*a*) I.D.:	High, 1·1265 Low, 1·1255	See (*b*)	See (*b*)	

www.ajs-matchless.info

Part 1—(contd)

Section 17—(contd)

Instructions for examiner

Front forks and steering—(contd)

Item No.	*Designation*	*Size (in inches) or Specification*			*Col 4 Remarks*
		Col 1 Plan	*Col 2 Acceptable on overhaul*	*Col 3 Condemnation limit*	
5 (contd)	(*b*) Clearance, bush to inner tube:	High, 0·003 Low, 0·001	0·005	0·012	
6	**Fork slider**				
	(*a*) I.D.:	High, 1·5640 Low, 1·5625	See (*b*)	See (*b*)	Part Nos.: L.H. 40-G12M-FF183-L R.H. 40-G12M-FF183-R
	(*b*) Clearance, slider to bottom bush:	High, 0·0035 Low, 0·0015	0·0055	0·012	
7	**Bush bottom**				Material: Case-hardened Leadloy mild steel.
	(*a*) O.D.:	High, 1·5610 Low, 1·5605	See 6 (*b*)	See 6 (*b*)	
	(*b*) Width:	High, 1·002 Low, 1·000	No wear		Bore to be concentric with O.D. within 0·002 inch.
	(*c*) I.D.:	High, 1·0640 Low, 1·0635	No wear		
8	**Fork centre tube comp**				
	(*a*) Oil seal:				Super oil seal 40-G12M-FF91. Renew on overhaul.
	(i) Size:	$1\frac{1}{8}$ x 1·753 x $\frac{7}{16}$			Part No. W41-G3L-FF32.
	(*b*) Spring for fork:—				Material: Aero quality 0·207 inch dia spring steel.
	(i) P.C.D. (20 working coils):	1·5			
	(ii) Free length:	10	Within limits	9	
	(iii) Min length with poundage of 58 lb:	—	$8\frac{1}{2}$	If below Col 2	
	(iv) Min working length with 201 lb load:	—	5·56	If below Col 2	
	(v) Closed length at 282lb:	—	4·55	See remarks	Condemn if load required is less than 270 lb
	(*c*) Damper tube assy:		Negligible wear		Part No. W41-G3L-FF202 Renew paper and leather washers on assy
9	**Test and inspection procedure:**—				

(*a*) Attention is drawn to DME Tech Inst No. B307/1.
(*b*) Bearings will be condemned per Gen O 021 (Issue 4).
(*c*) Ensure that there is no permissible shake at steering head.
(*d*) Ensure that absolute cleanliness has been observed when assembling parts as any dirt or abrasive matter left on the various sliding parts will cause damage and rapid wear.
(*e*) Ensure that $6\frac{1}{2}$ fluid oz ($\frac{1}{8}$ pt) of Oil OMD-60 is poured into each inner tube.

www.ajs-matchless.info

Part 1—(contd)

SECTION 18

Frame and fittings, comprising:—

Item No.	*Designation*	*Part No.*	*Item No.*	*Designation*	*Part No.*
1	**Spring, rear stand**	**38-G3-F245**	3	**Petrol tank**	**41-G3L-T105**
2	**Spring, prop stand**	**35-G3-F345**	4	**Frame assy**	**41-G3L-F23-24**

Instructions for examiner

Item No.	*Designation*	*Size (in inches) or Specification*			*Col 4 Remarks*
		Col 1 Plan	*Col 2 Acceptable on overhaul*	*Col 3 Condemnation limit*	
1	**Spring, rear stand**				Material: Spring steel wire I.W.G.9.
	(*a*) Dia of wire:	0·144			
	(*b*) P.C.D.:	$\frac{5}{8}$			
	(*c*) No. of coils (full):	36			
	(*d*) Free length (between centres of hook ends):	$10\frac{1}{16}$	Within limits	$11\frac{1}{8}$	When assembling stand, fit plain steel washer under the head of the two bolts, not under the nut
	(*e*) Poundage to expand at $10\frac{1}{16}$ inch centres:	130 lb	Within limits	112 lb	
	(*f*) Length over coils at 130 lb tension:	$7\frac{3}{16}$			
2	**Spring, prop stand**				Material: Spring steel wire I.W.G.10 Permissible wear in prop pin 0·050 inch lift; 0·015 inch clearance pin to lug bore
	(*a*) Dia of wire:	0·064			
	(*b*) No. of coils:	65			
	(*c*) I.D.:	0·444			
	(*d*) Free length inside hooks:	$5\frac{15}{16}$	Within limits	$6\frac{1}{2}$	
	(*e*) Length over coils (solid):	$3\frac{9}{16}$			
3	**Petrol tank**				
	(*a*) Capacity:	3 gal			
	(*b*) Pressure test for leaks:	5 lb/sq in	3 lb/sq in	If below Col 2	Test with air in water
4	**Frame assy**				Diagram of the frame follows the Newall standards.
	For details and measurements see End of Part 1				

www.ajs-matchless.info

Part 1—(contd)

Section 18—(contd)

Instructions for examiner

Frame and fittings—(contd)

5	**Test and inspection procedure:—** (*a*) Front stand: the two bolts fixing front stand are not interchangeable, the L.H. is larger, ensure that these are correctly fitted. (*b*) Silencer: check that it is serviceable and that securing lugs are sound. (*c*) Mudguards, covers and chain guards: Ensure that these are in good serviceable condition, free from cracks and dents and returned to their original smooth contour, that all securing lugs are sound. (*d*) Ensure that new gaskets, joints and seals are fitted where applicable. (*e*) Saddles: Ensure that the saddle and pillion seat is serviceable, and that securing brackets and springs are sound. Attention is drawn to DME Mod Circ B 818. (*f*) Footrests: Check that footrests are not bent out of shape, that the rod for footrest is serviceable and not worn, the screw-thread for the retaining nut will not be stretched or worn. (*g*) Pannier carriers. Ensure that these are in good condition, no cracks or damaged parts, to be c/w all straps and fasteners. (*h*) Tool box. Ensure that the lid closes correctly and that the lid securing knurled screw turns easily by hand. (*j*) Petrol tank. Check that the tank has been thoroughly cleaned out, that all dents are removed. Pressure test at 3-5 lb/sq in for signs of leakage. Tank capacity 3 gal. Petrol pipes from carburetter to tank will be checked for serviceability, these may be of petrol resisting rubber or the standard accessory Part No. W41-G3L-T54, tank and carburetter unions will not be out of standard where Petroflex pipes are fitted. Care will be taken to ensure that sufficient clearance exists between the T-piece of the petrol pipe and the magneto, this is necessary to permit chain adjustment.

SECTION 19

Electrical equipment and instruments, comprising:—

Item No.	*Designation*	*Part No.*	*Item No.*	*Designation*	*Part No.*
1	**Dynamo, Lucas**	**LU/200430**	**7**	**Wire loom and switches**	**See remarks**
2	**Dynamo, Miller**	**MT4/M1/WDM**	**8**	**Horn**	**" "**
3	**Battery, wet Lucas**	**MT4/80230**	**9**	**Speedometer**	**MT1/SM/433-M-EX**
4	**Battery, dry Varley E7/12**		**10**	**Regulator and cut-out:—**	
				(i) Lucas type	**MT4/LU/33018A**
5	**Headlamp**	**See remarks**		**(ii) Miller type**	**MT4/MI/CV1/WD**
6	**Rearlamp**	**" "**			

Item No.	*Designation*	*Size (in inches) or Specification*			*Col 4 Remarks*
		Col 1 Plan	*Col 2 Acceptable on overhaul*	*Col 3 Condemnation limit*	
1	**Dynamo, Lucas**				
	(*a*) Type: E3AR/AO5/1:				Part No. LU/200430 now superseded by Part No. LU/20017
	(*b*) Voltage (nominal):	6			
	(*c*) Amperage:	6			
	(*d*) R.p.m.:	2,100/2,300			

Part 1—(contd)

Section 19—(contd)

Instructions for examiner

Electrical equipment and instruments—(contd)

Item No.	*Designation*	*Size (in inches) or Specification*			*Col 4 Remarks*
		Col 1 Plan	*Col 2 Acceptable on overhaul*	*Col 3 Condemnation limit*	
1 (contd)	(*e*) Cutting-in speed at r.p.m.:	1,250/1,500			
	(*f*) Maximum output at 2,100/2,300 r.p.m.:	42W			
	(*g*) Maximum r.p.m.:	7,000			
	(*h*) Brushes:—				
	(i) Length:	½			
	(ii) Spring tension:	High, 15 oz Low, 12 oz	12 oz	10 oz	
	(*j*) Commutator:—				
	(i) Dia:	0·985	0·930	See remarks	If badly scored and below Col 2 the armature will be renewed.
	(ii) Undercut of mica	$\frac{1}{32}$ (0·8 mm)	$\frac{1}{32}$ (0·8 mm)		
	(*k*) Field coil, resistance:	3·2Ω			
	Dynamo Miller				
	(*a*) Type, W.D.M.				
	(*b*) Voltage (nominal):	6			
	(*c*) Amperage (max):	8			
	(*d*) R.p.m.:	2,200			
	(*e*) Cutting-in speed r.p.m.:	1,150			
	(*f*) Maximum output at r.p.m. (plus):	50W			
	(*g*) Maximum r.p.m.:	5,000			
	(*h*) Brushes:—				
	(i) Length:	½			
	(ii) Spring tension:	High, 32 oz Low, 24 oz	24 oz	21 oz	

www.ajs-matchless.info

Part 1—(contd)

Section 19—(contd)

Instructions for examiner

Electrical equipment and instruments—(contd)

Item No.	Designation	Size (in inches) or Specification			Col 4 Remarks
		Col 1 Plan	Col 2 Acceptable on overhaul	Col 3 Condemnation limit	
2 (contd)	(*j*) Field coils:—				
	(i) Resistance, 'F' winding: Red and white leads)	$4\Omega \pm 0{\cdot}25\Omega$			
	(ii) Resistance, winding: (Green leads)	$7\Omega \pm 0{\cdot}25\Omega$			
	(*k*) Commutator:—				
	(i) Dia:	High, 1·115 Low, 1·105			
	(ii) Undercut of mica:	0·025	0·025		

Test and inspection procedure

(*a*) Dynamo brushes. If the brushes are so worn that the trigger or spring no longer provides effective pressure they must be replaced.

(*b*) For ball and roller bearings, see Gen O 021 (Issue 4).

(*c*) The commutator surface should be clean and free from uneven discoloration. There should be no deposit across the intersegment insulation. The surface can be cleaned with a very fine grade of glass paper (do NOT use emery cloth). In cases where it is in very bad condition it should be set up in a lathe and skimmed. A very light cut should be made and the surface should have a high quality finish. After skimming, the slots between segments can be cleaned out of turnings with the aid of an old hacksaw blade. The undercutting of the mica will conform with and be maintained at the tolerances laid down.

3 and 4

Batteries

(*a*) Wet. Lucas type PUW-7E-5 negative earth.
Level of electrolyte, top of plates. State of battery found by testing with a hydrometer. Sp.gr. fully charged 1·280-1·300; Sp.gr. half discharged, approx 1·210; Sp.gr. fully discharged 1·150.

(*b*) Dry. Varley type E7/12, negative earth. Dry 'Unspillable' type. State of battery found by voltage test. Fully charged 6·5V; Half discharged 6·0V; Fully discharged 5·4V.

Test and inspection procedure

(*a*) Batteries: Lucas type, a lead acid battery in which the electrolyte is in free liquid form. This should be tested with a hydrometer:

(i) Specific gravity: 1·280 to 1·300 at 60°F when fully charged.
1·210 approx at 60°F when half charged.
below 1·150 at 60°F when battery is fully discharged.

(ii) Specific gravity in each cell will not vary more than 0·020.

(iii) Level of electrolyte will be maintained just level with the top of the plates.

(*b*) Varley dry accumulator. Lead acid battery in which electrolyte is completely absorbed by plates and separators, 'Unspillable' type:

(i) Voltage test will determine the state of the battery as gravity readings cannot be taken:—

6·5V = fully charged
6·0V = half discharged
5·4V = fully discharged
} on open circuit

(ii) Remove any surplus liquid from vents before replacing plugs.

Part 1—(contd)

Section 19—(contd)

Instructions for examiner

Electrical equipment and instruments—(contd)

3 and 4 (contd)

(*c*) Batteries. General:—

(i) Check that the battery casing is in a sound condition, and that the sealing of the cells is not cracked.
(ii) Check that the vent plugs are clean and that rubber sealing washers are fitted.
(iii) Check that individual cells show a reading of 2·0V to 2·2V without a load applied. With a load applied the reading will be lower but should remain steady and not continue to fall.
(iv) Attention is drawn to *Power J 315, J 318* and *J 468*.

5 **Headlamp.** Lucas type DU-42: Part No. (early) MT3/LU/DU42/MAG. Fitted with ammeter and main lighting switch.
Part No. (late) MT3/LU/50073: Fitted with changeover switch.
Miller type 72-E: Fitted only to machines with Miller lighting equipment, contains an ammeter.
For both types: Pilot bulb, 6-7V, 3W, S.C.C.
Main bulb, 6-7V, 24/24W, S.B.C.

6 **Rear lamp.** Lucas W.D. M.C.T.1 Miller 31 W.D. Only fitted to their appropriate make.
Bulb, 6-7V, 3W, S.C.C.

Test and inspection procedure:—

Headlamp and rear lamp:—

(i) Ensure that the bulbs are the correct type and fit in serviceable sockets making good contact. 'Top' is etched on the main bulb for normal use.
(ii) Focus bulb in reflector so that the beam is projected below the horizontal ($\frac{1}{2}$°).
(iii) Ensure that the lamps are in a good serviceable condition, reflectors well polished and not damaged. Rear lamp to be sealed against water penetration.
(iv) Ensure that the correct type of lamp is fitted according to their particular proprietory make.

7 **Wire looms and switches**

Test and inspection procedure:—

(*a*) Lucas and Miller looms are not interchangeable, ensure loom is electrically tested and wires changed as necessary. The leads must conform to the standard colour code.

(*b*) Check that joints in wire have been soldered and covered with a rubber sleeve which will remain in position.

(*c*) Ensure that adhesive tape is not used.

(*d*) Check that all connections requiring terminals have standard terminals as laid down in Maint Manual No. 101/MC2B, page 98-99.

(*e*) Check that the electrical components are the correct type as applicable to the particular installation.

(*f*) Ensure that all rubber covered wiring is free from paint.

8 **Horn. Switch Part No. —T4/13917**

Test and inspection procedure:—

(*a*) Check that, the horn is electrically and mechanically sound, all nuts, bolts and screws are tight and correctly locked.

(*b*) Check that, the horn functions when the circuit is closed and that the tone has been correctly adjusted.

(*c*) Examine securing bracket for fractures or fatigue lines and ensure that all electrical connections are sound.

Part 1—(contd)

Section 19—(contd)

Instructions for examiner

Electrical equipment and instruments—(contd)

9 **Speedometer**

Test and inspection procedure:—

(i) Check head for external damage.
(ii) Check that the mechanism turns freely, for this test use a short piece of drive cable with the top staked to take the speedo drive spindle. There should be no tightness or binding. The needle should move freely up-and-down the scale. If the head is in the guarantee period and is faulty it will be returned to the manufacturers through Ordnance sources.
(iii) Assuming that there are no mechanical faults the instrument will be checked for accuracy against a master tachometer and the known calibration figure of the instrument, 1,600 r.p.m. is equal to 60 m.p.h. Equipment for this purpose is held by certain workshops.

10 **Regulator and cut-out.** Lucas M.G.R.1. Cut-in setting 7·8V to 8·2V at 20°C.
Miller G.V.I. W.D.M. Cut-in setting: Positive contacts 7·5V to 7·7V. Negative contacts 7·9V to 8·1V.

Test and inspection procedure

(*a*) Ensure that voltage setting for a Lucas regulator is taken on open circuit at a dynamo speed of 2,000 r.p.m. and with a Miller regulator the voltage setting can be checked on a rising voltage at speeds approx 1,300 to 2,000 r.p.m. The contact operation is transitory.
(*b*) Ensure that the cut-out setting is between 6V to 6·6V with the dynamo in open circuit, Voltmeter across D+ and earth.

SECTION 20

Wheels and tyres, comprising:—

Item No.	*Designation*	*Part No.*	*Item No.*	*Designation*	*Part No.*
1	**Front wheel assy c/w fittings**	**W41-G2L-H45A**	3	**Tyres**	——
2	**Rear wheel assy c/w fittings**	**W41-G3L-H31A**			

Instructions for examiner

Item No.	*Designation*	*Size (in inches) or Specification*			*Col 4 Remarks*
		Col 1 Plan	*Col 2 Acceptable on overhaul*	*Col 3 Condemnation limit*	
1	**Front wheel assy**				Material: Pressed steel rims. Both wheels are mounted on taper roller bearings. Rear wheel sprocket bolted to the hub.
	(*a*) Rim size (Part No. W41-G3L-H20)	19 x 2½			
	(*b*) Spokes:—				
	(i) Left:—				
	(*a*) No.:	20			
	(*b*) Length under head:	5⅝ x 8 W.G. x 10 W.G.			Butted.
	(ii) Right:—				
	(*a*) No.:	20			
	(*b*) Length under head:	8 3/16 x 9 W.G. x 11 W.G.			Butted.

Part 1—(contd)

Section 20—(contd)

Instructions for examiner

Wheels and tyres—(contd)

Item No.	*Designation*	*Size (in inches) or Specification*			*Col 4 Remarks*
		Col 1 Plan	*Col 2 Acceptable on overhaul*	*Col 3 Condemnation limit*	
2	**Rear wheel assy**				
	(*a*) Rim size (Part No. W41-G3L-H21):	19 x 2½			
	(*b*) Spokes: Left and right:—				
	(i) No.:	40			
	(ii) Length:	8 3/16 x 6 W.G. x 9 W.G.			Butted.
3	**Tyres:—**				
	(*a*) Size:	3·25 x 19			
	(*b*) Pressures:—				Effective dia 25·46 inches.
	(i) Front:	18 lb/sq in			
	(ii) Rear:	22 lb/sq in			

General:—

The procedure to be adopted to ascertain the alignment of the wheel hubs and rims when wheels are being rebuilt or repaired will be carried out as follows: A straight-edge will be placed across the front wheel brake drum, the measurement to the rim from the edge of the straight-edge will read ¾ inch. Reverse the wheel placing the straight-edge on the hollow wheel spindle, the measurement to the rim should now read one inch. This procedure applies to the rear wheel before the drum is assembled the measurements being the same.

Test and inspection procedure:—

(*a*) Ensure that wheel rims are inspected for cracks, distortions and flats.

(*b*) Wheel rims will be undamaged, will run true and centrally in frame. Spokes to be tight and of even tension.

(*c*) Ensure that tyres are serviceable and that walls are undamaged and fitted concentrically to the rim.

SECTION 21

General instructions, comprising:—

Instructions for examiner

1. **General**

Splines: Items with distorted splines will be discarded. Items with worn splines requiring not more than 0·002 inch deposit (electro-deposition of nickel) on the sides of the splines and fitting dia may be used after re-work. Splined items beyond this wear figure will be discarded.

2. *Gear teeth:* Both faces of the gear teeth must be carefully examined for uneven wear, pitting and surface cracks. If any of these faults are evident, the gear will be discarded. If the gear teeth are worn, but have a well burnished and even surface, the gear may be re-used, subject to the existing backlash being within the given range.

3. *Oil seal bearing dia:* These surfaces must be well polished and free from surface scratches and blemishes. Reclamation of worn dia is permissible by grinding the dia to 0·008 inch below plan size, building up with electro-deposition of chromium, regrinding and polishing to plan size. Attention is drawn to DME Wksp Bulletin G 39.

www.ajs-hatchless.info

Part 1—(contd)

Section 21—(contd)

General instructions—(contd)

Instructions for examiner

4. *Bearing and spigot dia:* These dimensions must be accurate. Reclamation where necessary by electro-deposition of nickel is permissible. In such cases the dia to be rectified must be ground to 0·010 inch below plan size, built up with deposit and then re-machined back to plan size.
5. *Screw threads:* These must be free from distortion and damage. Recutting or repair of screw threads is not permissible.
6. *Ball and roller bearings:* To be examined and sentenced in accordance with Gen 0 021 (Issue 4).
7. *Joints, nuts and bolts etc:* Where not specifically mentioned joints will normally be renewed on overhaul, nuts and bolts will be tightened and correctly locked.
8. *Lubrication:* Examiners will ensure that all items affected are correctly lubricated during assembly.
9. *Lubricating oil:* Used oil drained from assemblies must not be used again until it has passed through a reclaiming process. The correct oil as published in current publications will be used in individual assemblies.

SECTION 22

Comprising:—**Newall Standards:**—

Instructions for examiner

The following tolerances are given as a guide where no tolerances are given in this standard

Tolerances in standard holes

Nominal dia	*Up to* $\frac{1}{2}$ *in*	$\frac{9}{16}$-1 *in*	$1\frac{1}{16}$-2 *in*	$2\frac{1}{16}$-3 *in*	$3\frac{1}{16}$-4 *in*	$4\frac{1}{16}$-5 *in*	$5\frac{1}{16}$-6 *in*
High limit	+ 0·00025	+ 0·00050	+ 0·00075	+ 0·00100	+ 0·00100	+ 0·00100	+ 0·00150
Low limit	− 0·00025	− 0·00025	− 0·00025	− 0·00050	− 0·00050	− 0·00050	− 0·00050

Allowances on shafts

Nominal dia	*Up to* $\frac{1}{2}$ *in*	$\frac{9}{16}$-1 *in*	$1\frac{1}{16}$-2 *in*	$2\frac{1}{16}$-3 *in*	$3\frac{1}{16}$-4 *in*	$4\frac{1}{16}$-5 *in*	$5\frac{1}{16}$-6 *in*
			Force fits (F)				
High limit	+ 0·00100	+ 0·00200	+ 0·00400	+ 0·00600	+ 0·00800	+ 0·01000	+ 0·01200
Low limit	+ 0·00050	+ 0·00150	+ 0·00300	+ 0·00450	+ 0·00600	+ 0·00800	+ 0·01000
			Driving fits (D)				
High limit	+ 0·00050	+ 0·00100	+ 0·00150	+ 0·00250	+ 0·00300	+ 0·00350	+ 0·00400
Low limit	+ 0·00025	+ 0·00075	+ 0·00100	+ 0·00150	+ 0·00200	+ 0·00250	+ 0·00300
			Push fits (P)				
High limit	− 0·00025	− 0·00025	− 0·00025	− 0·00050	− 0·00050	− 0·00050	− 0·00050
Low limit	− 0·00075	− 0·00075	− 0·00075	− 0·00100	− 0·00100	− 0·00100	− 0·00100
			Running fits—Easy running (X)				
High limit	− 0·00100	− 0·00125	− 0·00175	− 0·00200	− 0·00250	− 0·00300	− 0·00350
Low limit	− 0·00200	− 0·00275	− 0·00350	− 0·00425	− 0·00500	− 0·00575	− 0·00650
			Running fits—High speeds (Y)				
High limit	− 0·00075	− 0·00100	− 0·00125	− 0·00150	− 0·00200	− 0·00225	− 0·00250
Low limit	− 0·00125	− 0·00200	− 0·00250	− 0·00300	− 0·00350	− 0·00400	− 0·00450
			Running fits—Fine tool work (Z)				
High limit	− 0·00050	− 0·00075	− 0·00075	− 0·00100	− 0·00100	− 0·00125	− 0·00125
Low limit	− 0·00075	− 0·00125	− 0·00150	− 0·00200	− 0·00225	− 0·00250	− 0·00275

Table 1—Tolerances in standard holes and allowances on shafts for various classes of engineering fits

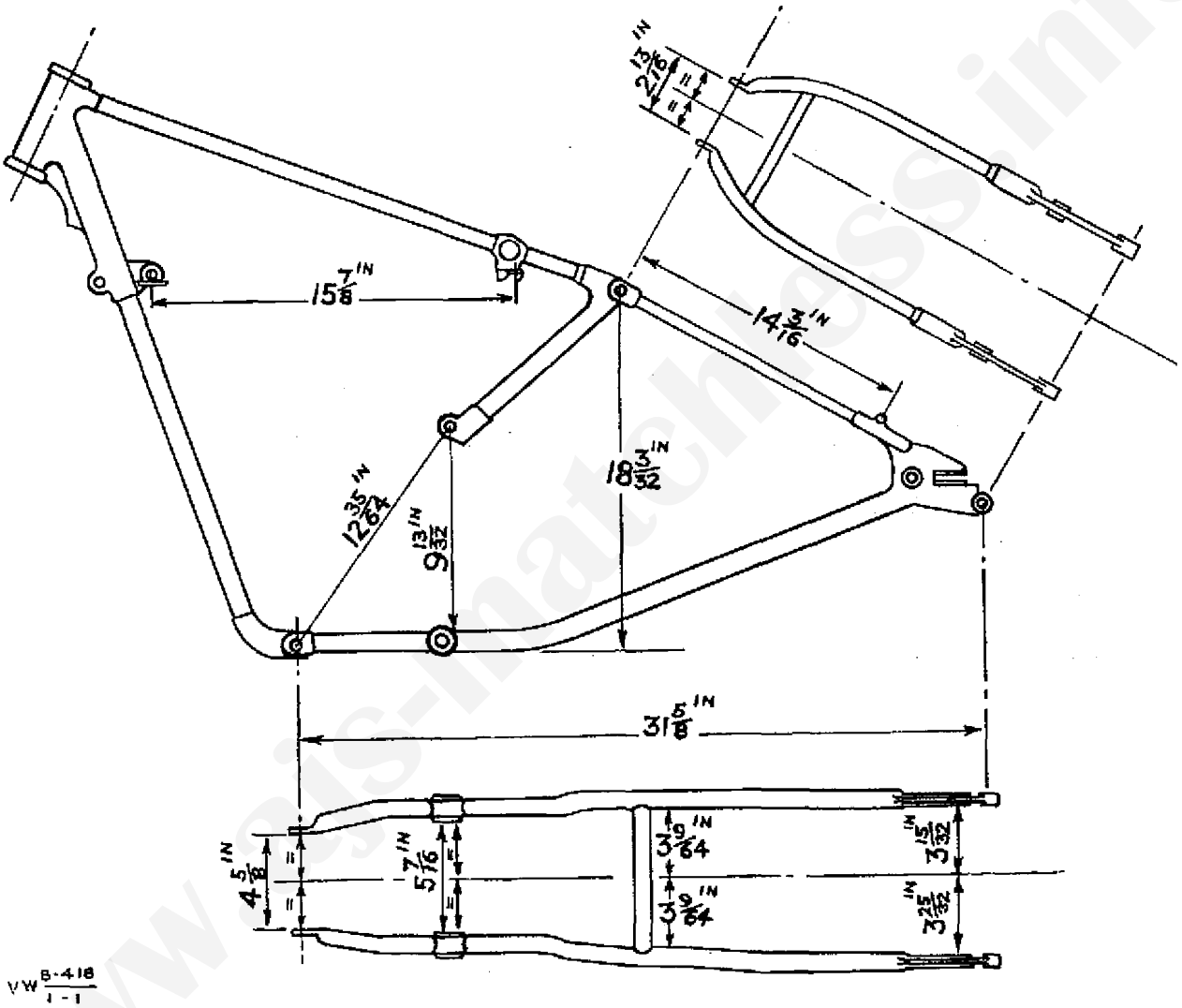

Fig 1—Diagram of Matchless MC frame Part No. 41/G3/F23 and 24

www.sis-matchless.info

PART 2

INSTRUCTIONS TO BE OBSERVED AFTER ASSY ALL ASSEMBLIES AND SUB-ASSEMBLIES WILL HAVE PASSED INSPECTION STANDARD PART 1

SECTION 1

Comprising:—**General instructions**

Instructions for examiner

(*a*) All parts or assemblies will have been visually examined before reassembly to the vehicle to ensure that they are in serviceable condition.

(*b*) Examiners must ensure that all repaired assemblies bear evidence of previous inspection. If assemblies are drawn from stock and examiners are not satisfied that they are in a serviceable condition, such assemblies will be subjected to a short test on the appropriate testing appliance.

(*c*) All cases of recurrent reasons for rejects will be reported to the OC workshops through the normal channels.

(*d*) Where not previously mentioned all motor cycle assemblies and sub-assemblies for motor cycles will be examined to ensure that:—

(i) All bolts, nuts and screws are properly tightened and locked.

(ii) There are no fuel or oil leaks, levels are correct, indicators and plugs are replaced and tight.

(iii) They are satisfactory as to noise on drive and overdrive, acceleration, deceleration and braking tests; after overhaul these tests will be carried out with a fully loaded machine.

(iv) Vehicles, assemblies and sub-assemblies are painted in accordance with Veh Gen A 111 series, Wksp N 251, and current Wksp practice.

(v) All filters are fitted, clean and not punctured, copper fuel and oil pipes are free from sharp kinks and are annealed. Burnt scale that might be adhering to the inside of the pipe will be cleared out.

(vi) All joints and gaskets have been renewed.

(*e*) The general inspection of each item applies also to any supporting member or connection and generally includes a check to see whether the item is in good condition, correctly assembled, secure or excessively worn:—

(i) The inspection for 'good condition' is usually an external visual inspection to determine whether the unit is damaged beyond safe or serviceable limits. The term is explained by the following terms, not bent or twisted, not chafed or burnt, not broken or cracked, not bare or frayed, not dented or collapsed, not torn or cut.

(ii) The inspection of the unit to see that it is 'correctly assembled' is usually an external visual inspection to see whether it is in its normal position on the vehicle.

(iii) The inspection of a unit to see if it is 'secure' is usually an external visual inspection, a hand feel or a lever check for looseness, such an inspection should include any brackets, lock-washers, nuts, wire, or cotter pins used in assembly.

(*f*) Attention will be given to all EMER, DME Circulars, Technical Instructions and Wksp Bulletins applicable to this range of vehicles as detailed in current summaries. Attention is drawn to Section 5—Summary of Publications.

SECTION 2

Comprising:—**Static test**

Instructions for examiner

1. Engine:—

(*a*) Check tightness of cylinder barrel nuts and rocker cover studs.

(*b*) Ensure that tappet adjustment is Nil with the engine cold, push-rods should be free to revolve but there should be no appreciable up-and-down play.

(*c*) Contact breaker gap should be 0·012 inch.

(*d*) Ensure that the engine is free from any excessive noise.

(*e*) Ignition timing when fully advanced should be $\frac{7}{16}$ inch. before T.D.C.

(*f*) Check carburetter joint for air leaks.

(*g*) Ensure engine idles evenly and does not stall.

(*h*) Check for satisfactory acceleration and deceleration.

(*j*) Ensure that oil circulates freely, check by watching the flow of oil from the oil return spout located inside the filler neck.

(*k*) Ensure that the 'Petroflex' petrol pipe T-piece (where fitted) permits full adjustment of the magneto driving chain.

2. Cooling

(*a*) Ensure that the finning is clear and open and not damaged in excess of 2 sq. in. on any one fin or any two adjacent fins. Minor chipping is acceptable.

3. Clutch

(*a*) Check that the control lever operates correctly, is undamaged and firmly secured to the handlebars.

Part 2—(contd)

Section 2—(contd)

Static test—(contd)

Instructions for examiner

(*b*) Free movement in the cable should be just sufficient to ensure the clutch fully engages when the lever is released ie, $\frac{1}{16}$ to $\frac{1}{8}$ inch clearance, see Section 16 Part 1.

(*c*) Ensure that the cable is lubricated, not frayed, clipped firmly to the frame and shows no sign of wear on the outer cover.

4. Gearbox

(*a*) Ensure that the foot lever is secure on its spline and the clamp bolt tight.

(*b*) Check that the moving gear indicator is properly positioned and secure.

(*c*) Check that the gear selection is positive on all gears.

(*d*) Ensure that the box is packed with grease LG-380 in accordance with Veh Gen J 304 (Capacity $1\frac{3}{4}$ pt-2 lb).

5. Chains and sprockets

(*a*) Ensure that the chains are properly adjusted:—

(i) Chain whip on primary chain should be $\frac{3}{8}$ inch.
(ii) Chain whip on secondary chain should be $\frac{3}{8}$ inch to $\frac{1}{2}$ inch.
(iii) Chain whip on magneto and dynamo chain should be $\frac{1}{4}$ inch.
} measured at the tightest point.

(*b*) Ensure that the joining link clip is fitted with the closed end of the clip facing the direction of rotation.

(*c*) Magneto and secondary chains should be smeared with grease.

(*d*) Ensure that sprocket teeth are not hooked or damaged in any way.

6. Front and rear axles

(*a*) Ensure that wheel bearings are adjusted correctly to have slight perceptible rock at wheel rim not exceeding 0·002 inch.

7. Steering

(*a*) Test the steering head for correct adjustment by exerting pressure upwards from the extreme ends of the handlebars; there should be no perceptible movement.

(*b*) Ensure that front and rear wheels are in correct alignment, check with a wooden straight-edge laid down to touch each tyre, check both sides of wheels.

(*c*) Ensure that the handlebars are not damaged and are firmly secured in the centre clip lug.

8. Brakes

(*a*) Ensure all linkage operates freely.

(*b*) Check that the front brake cable is serviceable and correctly lubricated.

(*c*) Front brake handlebar control must operate freely and show no sign of damage or excessive wear on the fulcrum pin.

(*d*) Check that there is no drag when brakes are released.

(*e*) Ensure that, front and rear brakes are correctly adjusted to give smooth but definite braking.

9. Front forks

(*a*) Check the forks for dents or damage of any sort.

(*b*) Test forks for freedom of action.

(*c*) Check oil level and ensure level screws are fitted complete with fibre washers. Fill with oil OMD-60 to level plugs $\frac{1}{3}$ pt each. Attention is drawn to DME Tech Inst No. B 307/1.

10. Frame and fittings, tanks, etc

(*a*) Ensure that the frame is not damaged in any way and that all fittings are secure.

(*b*) Check that the stands are not bent and that the springs return them readily to the 'out of use' position.

(*c*) Check the mudguards for dents, smoothness of contours, and security of stays, all dents will have been removed.

(*d*) Ensure that, the petrol and oil tanks are not damaged, there are no leaks, tanks are secure on their mountings, rubber washers are correctly fitted, there are no leaks at point where cocks are screwed into the tank, the tank security bolts are locked in position by steel wire.

(*e*) Ensure that, the exhaust system is serviceable and secure, the exhaust gases do not blow at the joints.

(*f*) Ensure that, all covers and guards have been returned to their original contours, new joints and seals have been fitted where applicable.

(*g*) Ensure that the tyre pump locators and pump guard are correctly fitted.

(*h*) Ensure that saddle springs and cover are in a serviceable condition and securely attached to the seat frame.

(*j*) Ensure that the foot-rests are secure and not bent.

(*k*) Check that the panniers are in good serviceable condition and that all straps and fasteners are complete and secure.

(*l*) Ensure that, the toolbox is securely fitted and undamaged, the lid closes correctly and the lid securing knurled screw is free to turn by hand.

(*m*) Petrol pipes of petrol resisting rubber are permissible in lieu of the correct accessory, Part No. W41-G3L-T54, the T-piece will not interfere with the full adjustment of the magneto driving chain.

11. Electrical and instruments

(*a*) A lead acid type battery. Specific gravity to be 1·280—1·300 battery fully charged at atmospheric pressure, temperature 60°F.

(*b*) Ensure that, the electrolyte is clear and level with the top of the separators, the battery casing is sound, the terminals are clean and not corroded, vent plugs are fitted with rubber sealing washers, the battery is securely clamped in its carrier.

(*c*) Leads should conform to the standard colour code, joints in wiring will be soldered and covered with suitable rubber sleeves which will remain in position, connections will have standard terminals.

Part 2—(contd)

Section 2—(contd)

Static test—(contd)

Instructions for examiner

11.—(contd)

(*d*) Ensure that all wiring is neatly secured in place with clips. Adhesive tape will not be used and all rubber covered wiring will be free from paint.

(*e*) Bulbs as enumerated will be fitted:—

Headlamp main bulb	6·7V, 24W/24W, S.B.C. Part No. 12534
Headlamp pilot bulb	6·7V, 3W, S.C.C. Part No. 47174
Tail lamp bulb	6·7V, 3W, S.C.C. Part No. 47174

(*f*) Ensure that the dynamo is charging, ammeter should show a charge rate of 2A-4A if battery is charged and dynamo charging at normal rate. Check that the end cover is not damaged and that terminals are secure.

(*g*) Ensure that, the speedometer drive is positive at the head, the needle registers without flickering.

(*h*) Regulator, check that the regulator is operating correctly, cut-out should be set so that the contacts close at 6·2-6·6V. Regulator should be sealed when setting is complete.

(*j*) Lamps, should operate correctly. Reflector of headlamp should be polished and not damaged in any way. Lamps should be securely clamped in position and ammeter panel securely screwed to headlamp body, a rubber seal being fitted below panel to provide a watertight joint.

(*k*) Horn, ensure that the tone of the horn has been suitably adjusted and that the push button is immediately effective when depressed, horn will be secure on its mounting bolt.

12. Wheels, tyres and tubes

(*a*) Ensure that wheels are running true and all spokes are secure and serviceable.

(*b*) Check that tyre pressures are correct as per Veh Gen 0 761:

	Pressures	
Size of Tyre	Font	Rear
3·25 x 19	18 lb/sq. in.	22 lb/sq. in.

(*c*) Check that tyres are serviceable and walls undamaged. Effective dia of wheel is 25·46 inches.

(*d*) Note remaining life of tyres in AB 417 as percentage or original tread.

(*e*) Check that dust caps are fitted to tyre valves as per DME Tech Inst No. B 648. See also Veh Gen 0 783/1.

(*f*) Ensure that holes are not elongated and nuts are tight, there will be no distortion of, or flats, on rims of wheels.

(*g*) Ensure that tyre security bolt is fitted to rear wheel. It is recommended that vertical ribbed tyres when available be fitted on the front wheels.

SECTION 3

Comprising:—**Road test**

Instructions for examiner

1. General

(*a*) The vehicle should cover a distance of 5 to 10 miles, which should include one uphill and one downhill section with a check halt after 10 min running or as the location permits.

(*b*) The brakes and steering must be tested when first moving off.

(*c*) The vehicle will be driven in such a way as to comply with the conditions laid down in the Road Traffic Acts, Local Regulations or other safety regulations.

(*d*) During the road test the fuel supply will be changed from one tank to the other (where two fuel tanks are fitted).

2. Engine

(*a*) Ensure that throttle linkage is free and that engine accelerates and decelerates without hesitation, and that there are no knocks, squeaks etc from engine, or excessive vibration.

(*b*) Fuel consumption figure: 75 m.p.g as per Gen N 342.

(*c*) Ensure that the governor operates satisfactorily and is adjusted to:—

Road speed in second gear 35-38 m.p.h. Machines with newly overhauled engines will not exceed this speed in top gear until run in.

3. Clutch

(*a*) Check that the clutch does not slip under full load on gradients.

(*b*) Ensure that the clutch completely frees when lever is fully depressed and that the engagement is smooth.

4. Gearbox

(*a*) Ensure that there is no mechanical difficulty in gear changing, no overheating takes place, gears are reasonably quiet.

5. Chains and sprockets

(*a*) Ensure that chains run quietly and smooth with no slap against guards or cases.

6. Brakes

(*a*) With top gear and the clutch engaged and the engine running ensure that the laden vehicle will be held to a road speed of 8 mp.h. down a gradient of 1 in 10 over a distance of 440 yards by continuous application of the footbrake only, any deterioration of brake performance or any marked increase in the pressure necessary on the brake pedal will be recorded.

Section 3—(contd)

Road test—(contd)

Instructions for examiner

(*b*) Check that the brakes pull up the vehicle evenly. (Ensure that the tyre pressures are correct before commencing this test).

(*c*) Ensure that the efficiency of the brake is 60% to 70%, test by Tapley brake testing meter where available, the stopping distance, to obtain this being:—

20 m.p.h. to stop in 19·2-22 ft
30 m.p.h. to stop in 43-50 ft
40 m.p.h. to stop in 76·6-89 ft
} a Tapley brake meter will be used when available.

Note: If testing the brakes without a meter the highest efficiency is that obtained when the drums are just revolving and tyres are not locked and skidding. An efficiency of 70% should be aimed at after overhaul and adjustment.

7. Steering

(*a*) Ensure that the steering is free in operation, does not pull to left or right, does not wander and has no symptoms of wheel wobble.

8. Front forks

(*a*) Ensure that the vehicle rides reasonably over rough terrain and that the forks do not overflex or bump.

(*b*) Check that the front forks smooth out the road shocks.

9. Speedometer

Check that the speedometer is accurate over a known distance.

SECTION 4

Comprising:—**Inspection after road test**

Instructions for examiner

1. Engine

(*a*) Ensure that the engine is free from fuel or oil leaks and that no nuts or bolts have loosened due to vibration, recheck for oil leaks after the vehicle has stood for 10 minutes.

2. Cooling

(*a*) Check that there are no signs of the engine having overheated whilst on the test run.

3. Gearbox

(*a*) Ensure that there are no signs of oil leaks past the seals or drain plugs, check after the vehicle has stood for 10 minutes.

4. Front forks

(*a*) Ensure that steering forks have no leaks, securing nuts and bolts are tight and correctly locked.

5. Brakes

(*a*) Check that, the brakes are completely free when the foot pedal and hand lever are in the fully 'Off' position.

(*b*) The brake drums have not overheated on road test.

(*c*) Ensure that handbrake cable and casing are in good serviceable condition and correctly lubricated.

6. Frame

(*a*) Ensure that all securing nuts and bolts are tight and correctly locked.

www.ajsmatchless.info

Part 2—(contd)

SECTION 5

Comprising:—**Summary of publications**

A summary of publications affecting this machine, previously mentioned in Parts 1 and 2 and other publications considered to be useful are appended below:—

Veh Gen	A 111/105	Preservation and packing.
	A 202	Prevention of damage to k/start ratchet gears.
	A 261	Tappet clearances and valve timing.
	A 318 (Issue 2)	Acceptance data, running-in and testing for overhauled engine.
	C 127 Inst No. 1	Headlamp and dipper switch M/C.
	C 679/1 Inst No. 1	Replacement of A.C. speedometers.
	J 304	Lubrication of Burman gearboxes.
	M 306	Tropicalisation of brake equipment.
	O 721	Correct fitting of road wheels on 'B' Vehicles.
	O 761	Tyre pressures.
	O 763	Synthetic rubber tubes.
	O 783/1	Replacement valves on tubes.
Wd. Veh.	B 413	Oil up of sparking plug (in accordance with A 001 27/11/50.)
	B 414	Bearing flywheel timing side.
	B 417 Inst No. 1	Kick-starter stop peg.
	B 419	Replacement of handlebar control assy.
General	H 202	Reporting defects on tyres.
	N 342	Petrol consumption target figures.
	O 021 Issue 4	Inspection of ball and roller bearings.
	O 331	Repair of petrol tanks etc.
Wksp	N 251	Painting techniques.
	N 631	Jointing and terminating of electrical cables and wires.
Power	J 315	Topping up Varley Accumulators.
	J 318	Maintenance lead acid batteries.
	J 468	Maintenance vehicle batteries.
DMM Mod Circ	B 238	Cracking of c/shaft timing pinion.
DME Mod Circ	B 343	Gearbox camshaft bearing.
	B 356	Improved type speedo head and cable drive.
	B 388	Steering caster angle trail Teledraulic forks.
	B 728	Loading into aircraft.
	B 818	Saddle strands of Lycett (aero elastic type).
DME Tecl Inst	B 260	Fracture of casing kick-start gears.
	B 307/1	Maintenance of teledraulic forks.
	B 323	Dynamo and Regulator settings.
	B 402	Rubber substitute handlebar grip.
	B 432	Dynamo method of removal and replacement.
	B 609	Replacement of H.T. leads.
	B 648	Replacement of tyre valve caps.
	B 754	Front and rear hub bearing seals.
DME Wksp Bulletins	B 1	Testing and Topping up of Teledraulic forks.
	B 5	Damage to Burman gearboxes.
	B 45	Burman type gearbox oil leaks.
	B 46 and 46A	Measuring of chains for limit of wear.

ACIs	378/49	Speed limits and traffic regulations.
	38/50	Classification of vehicles.
	489/50	Registration plates.
	830/50	Lighting of army vehicles UK.

Maint Manual and Inst Book No. 101/MC2B.

Equipt Regulations Pamphlet No. 5 Vehicle markings.

Regs for Army Ordnance Services Vol 3 Pamphlet No. 43 — Preservation and packaging of Ordnance stores. Methods and materials.

Lubricants. WO Code No. 2224 Correct types to be used on service vehicles.

Chilwell Data Book 81/54 Engine overhaul data book.

Servicing Schedule WO Code No. 6814

END

www.ajs-matchless.info

www.ajs-matchless.info