SUZUKI

DL1000

SERVICE MANUAL

99500-39230-03E
(英)

SUZUKI MOTOR CORPORATION PRINTED IN JAPAN FEBRUARY, 2002 (TK)

IMPORTANT

All street-legal Suzuki motorcycles with engine displacement of 50 cc or greater are subject to Environmental Protection agency emission regulations. These regulations set specific standards for exhaust emission output levels as well as particular servicing requirements. This manual includes specific imformation required to properly inspect and service DL1000 in accordance with all EPA regulations. It is strongly recommended that the chapter on Emission Control, Periodic Servicing and FI SYSTEM be thoroughly reviewed before any type of service work is performed.

Further information concerning the EPA emission regulations and U.S. Suzuki's emission control program can be found in the U.S. SUZUKI EMISSION CONTROL PROGRAM MANUAL/SERVICE BULLETIN.

FOREWORD

This manual contains an introductory description on the SUZUKI DL1000 and procedures for its inspection/service and overhaul of its main components. Other information considered as generally known is not included.
Read the GENERAL INFORMATION section to familiarize yourself with the motorcycle and its maintenance. Use this section as well as other sections to use as a guide for proper inspection and service. This manual will help you know the motorcycle better so that you can assure your customers of fast and reliable service.

- *This manual has been prepared on the basis of the latest specifications at the time of publication. If modifications have been made since then, differences may exist between the content of this manual and the actual motorcycle.*
- *Illustrations in this manual are used to show the basic principles of operation and work procedures. They may not represent the actual motorcycle exactly in detail.*
- *This manual is written for persons who have enough knowledge, skills and tools, including special tools, for servicing SUZUKI motorcycles. If you do not have the proper knowledge and tools, ask your authorized SUZUKI motorcycle dealer to help you.*

⚠ WARNING

Inexperienced mechanics or mechanics without the proper tools and equipment may not be able to properly perform the services described in this manual.
Improper repair may result in injury to the mechanic and may render the motorcycle unsafe for the rider and passenger.

GROUP INDEX

GENERAL INFORMATION	1
PERIODIC MAINTENANCE	2
ENGINE	3
FI SYSTEM	4
COOLING AND LUBRICATION SYSTEM	5
CHASSIS	6
ELECTRICAL SYSTEM	7
SERVICING INFORMATION	8
EMISSION CONTROL INFORMATION	9
WIRING DIAGRAM	10

SUZUKI MOTOR CORPORATION

© COPYRIGHT SUZUKI MOTOR CORPORATION 2002

HOW TO USE THIS MANUAL

TO LOCATE WHAT YOU ARE LOOKING FOR:

1. The text of this manual is divided into sections.
2. The section titles are listed in the GROUP INDEX.
3. Holding the manual as shown at the right will allow you to find the first page of the section easily.
4. The contents are listed on the first page of each section to help you find the item and page you need.

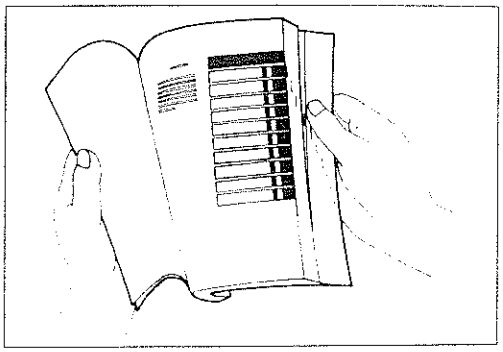

COMPONENT PARTS AND WORK TO BE DONE

Under the name of each system or unit, is its exploded view. Work instructions and other service information such as the tightening torque, lubricating points and locking agent points, are provided.

Example: Front wheel

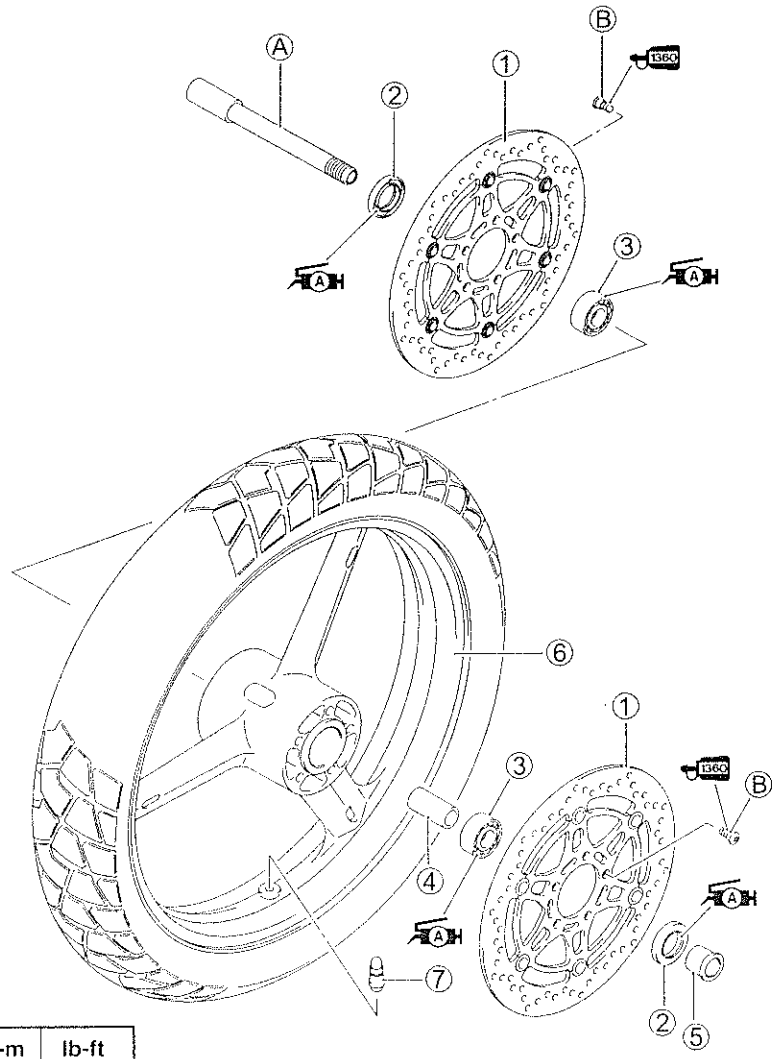

① Brake disc
② Dust seal
③ Bearing
④ Center spacer
⑤ Coller
⑥ Front wheel
⑦ Tire valve

Ⓐ Front axle
Ⓑ Brake disc bolt

ITEM	N·m	kgf-m	lb-ft
Ⓐ	100	10.0	72.5
Ⓑ	23	2.3	16.5

SYMBOL

Listed in the table below are the symbols indicating instructions and other information necessary for servicing. The meaning of each symbol is also included in the table.

SYMBOL	DEFINITION	SYMBOL	DEFINITION
	Torque control required. Data beside it indicates specified torque.	LLC	Use engine coolant.
OIL	Apply oil. Use engine oil unless otherwise specified.	FORK	Use fork oil. 99000-99001-SS8
M/O	Apply molybdenum oil solution. (Mixture of engine oil and SUZUKI MOLY PASTE in a ratio of 1 : 1)	BF	Apply or use brake fluid.
A	Apply SUZUKI SUPER GREASE "A". 99000-25030	V	Measure in voltage range.
M	Apply SUZUKI MOLY PASTE. 99000-25140	A	Measure in current range.
1207B	Apply SUZUKI BOND "1207B" 99104-31140		Measure in diode test range.
1303	Apply THREAD LOCK SUPER "1303". 99000-32030		Measure in continuity test range.
1322	Apply THREAD LOCK SUPER "1322". 99000-32110	TOOL	Use special tool.
1342	Apply THREAD LOCK "1342". 99000-32050	DATA	Indication of service data.
1360	Apply THREAD LOCK SUPER "1360". 99000-32130		

ABBREVIATIONS USED IN THIS MANUAL

A

ABDC	: After Bottom Dead Center
AC	: Alternating Current
ACL	: Air Cleaner, Air Cleaner Box
API	: American Petroleum Institute
ATDC	: After Top Dead Center
ATM Pressure	: Atmospheric Pressure Atmospheric Pressure Sensor (APS)
A/F	: Air Fuel Mixture

B

BBDC	: Before Bottom Dead Center
BTDC	: Before Top Dead Center
B+	: Battery Positive Voltage

C

CKP Sensor	: Crankshaft Position Sensor (CKPS)
CKT	: Circuit
CLP Switch	: Clutch Lever Position Switch (Clutch Switch)
CMP Sensor	: Camshaft Position Sensor (CMPS)
CO	: Carbon Monoxide
CPU	: Central Processing Unit

D

DC	: Direct Current
DMC	: Dealer Mode Coupler
DOHC	: Double Over Head Camshaft
DRL	: Daytime Running Light

E

ECM	: Engine Control Module Engine Control Unit (ECU) (FI Control Unit)
ECT Sensor	: Engine Coolant Temperature Sensor (ECTS), Water Temp. Sensor (WTS)
EVAP	: Evaporative Emission
EVAP Canister	: Evaporative Emission Canister (Canister)

F

FI	: Fuel Injection, Fuel Injector
FP	: Fuel Pump
FPR	: Fuel Pressure Regulator
FP Relay	: Fuel Pump Relay

G

GEN	: Generator
GND	: Ground
GP Switch	: Gear Position Switch

H

HC	: Hydrocarbons

I

IAP Sensor	: Intake Air Pressure Sensor (IAPS)
IAT Sensor	: Intake Air Temperature Sensor (IATS)
IG	: Ignition

L

LCD	: Liquid Crystal Display
LED	: Light Emitting Diode (Malfunction Indicator Lamp)
LH	: Left Hand

M

MAL-Code	: Malfunction Code (Diagnostic Code)
Max	: Maximum
MIL	: Malfunction Indicator Lamp (LED)
Min	: Minimum

N

NOx	: Nitrogen Oxides

O

OHC	: Over Head Camshaft
OPS	: Oil Pressure Switch

P

PCV	: Positive Crankcase Ventilation (Crankcase Breather)

R

RH	: Right Hand
ROM	: Read Only Memory

S

SAE	: Society of Automotive Engineers
STC System	: Secondary Throttle Control System (STCS)
STP Sensor	: Secondary Throttle Position Sensor (STPS)
ST Valve	: Secondary Throttle Valve (STV)
STV Actuator	: Secondary Throttle Valve Actuator (STVA)

T

TO Sensor	: Tip Over Sensor (TOS)
TP Sensor	: Throttle Position Sensor (TPS)

V

VD	: Vacuum Damper

SAE-TO-FORMER SUZUKI TERM

This table lists SAE (Society of Automotive Engineers) J1930 terms and abbreviations which may be used in this manual in compliance with SAE recommendations, as well as their former SUZUKI names.

SAE TERM		FORMER SUZUKI TERM
FULL TERM	ABBREVIATION	
A		
Air Cleaner	ACL	Air Cleaner, Air Cleaner Box
B		
Barometric Pressure	BARO	Barometric Pressure, Atmospheric Pressure (APS, AP Sensor)
Battery Positive Voltage	B+	Battery Voltage, +B
C		
Camshaft Position Sensor	CMP Sensor	Camshaft Position Sensor (CMPS)
Crankshaft Position Sensor	CKP Sensor	Crankshaft Position Sensor (CKPS), Crank Angle
D		
Data Link Connector	DLC	Dealer Mode Coupler
Diagnostic Test Mode	DTM	——
Diagnostic Trouble Code	DTC	Diagnostic Code, Malfunction Code
E		
Electronic Ignition	EI	——
Engine Control Module	ECM	Engine Control Module (ECM) FI Control Unit, Engine Control Unit (ECU)
Engine Coolant Level	ECL	Coolant Level
Engine Coolant Temperature	ECT	Coolant Temperature, Engine Coolant Temperature Water Temperature
Engine Speed	RPM	Engine Speed (RPM)
Evaporative Emission	EVAP	Evaporative Emission
Evaporative Emission Canister	EVAP Canister	——(Canister)
Exhaust Control System	EXCS	EXC System (EXCS)
Exhaust Control Valve	EXCV	EXC Valve (EXCV)
Exhaust Control Valve Actuator	EXCVA	EXCV Actuator (EXCVA)
Purge Valve	Purge Valve	Purge Valve (SP Valve)
F		
Fan Control	FC	——
Fuel Level Sensor	——	Fuel Level Sensor, Fuel Level Gauge
Fuel Pump	FP	Fuel Pump (FP)

SAE TERM		FORMER SUZUKI TERM
FULL TERM	ABBREVIATION	
G		
Generator	GEN	Generator
Ground	GND	Ground (GND, GRD)
I		
Idle Speed Control	ISC	——
Ignition Control	IC	Electronic Spark Advance (ESA)
Ignition Control Module	ICM	——
Intake Air Temperature	IAT	Intake Air Temperature (IAT), Air Temperature
M		
Malfunction Indicator Lamp	MIL	LED Lamp Malfunction Indicator Lamp (MIL)
Manifold Absolute Pressure	MAP	Intake Air Pressure, Intake Vacuum
Mass Air Flow	MAF	Air Flow
O		
On-Board Diagnostic	OBD	Self-Diagnosis Function Diagnostic
Open Loop	OL	——
P		
Programmable Read Only Memory	PROM	——
Pulsed Secondary Air Injection	PAIR	Pulse Air Control (PAIR)
R		
Random Access Memory	RAM	——
Read Only Memory	ROM	ROM
S		
Secondary Air Injection	AIR	——
Secondary Throttle Control System	STCS	STC System (STCS)
Secondary Throttle Valve	STV	ST Valve (STV)
Secondary Throttle Valve Actuator	STVA	STV Actuator (STVA)
T		
Throttle Body	TB	Throttle Body (TB)
Throttle Body Fuel Injection	TBI	Throttle Body Fuel Injection (TBI)
Throttle Position Sensor	TP Sensor	TP Sensor (TPS)
V		
Voltage Regulator	VR	Voltage Regulator
Volume Air Flow	VAF	Air Flow

GENERAL INFORMATION

1

CONTENTS

WARNING/CAUTION/NOTE 1- 2
GENERAL PRECAUTIONS 1- 2
SUZUKI DL1000K2 ('02-MODEL) 1- 4
SERIAL NUMBER LOCATION 1- 4
FUEL, OIL AND ENGINE COOLANT RECOMMENDATION 1- 4
- FUEL 1- 4
- ENGINE OIL 1- 5
- BRAKE FLUID 1- 5
- FRONT FORK OIL 1- 5
- ENGINE COOLANT 1- 5
- WATER FOR MIXING 1- 5
- ANTI-FREEZE/ENGINE COOLANT 1- 5
- LIQUID AMOUNT OF WATER/ENGINE COOLANT 1- 5

BREAK-IN PROCEDURES 1- 6
CYLINDER IDENTIFICATION 1- 6
INFORMATION LABELS 1- 7
SPECIFICATIONS 1- 8
COUNTRY AND AREA CODES 1-10

WARNING/CAUTION/NOTE

Please read this manual and follow its instructions carefully. To emphasize special information, the symbol and the words WARNING, CAUTION and NOTE have special meanings. Pay special attention to the messages highlighted by these signal words.

⚠ WARNING

Indicates a potential hazard that could result in death or injury.

CAUTION

Indicates a potential hazard that could result in motorcycle damage.

NOTE:
Indicates special information to make maintenance easier or instructions clearer.

Please note, however, that the warnings and cautions contained in this manual cannot possibly cover all potential hazards relating to the servicing, or lack of servicing, of the motorcycle. In addition to the WARNINGS and CAUTIONS stated, you must use good judgement and basic mechanical safety principles. If you are unsure about how to perform a particular service operation, ask a more experienced mechanic for advice.

GENERAL PRECAUTIONS

⚠ WARNING

* **Proper service and repair procedures are important for the safety of the service mechanic and the safety and reliability of the motorcycle.**
* **When 2 or more persons work together, pay attention to the safety of each other.**
* **When it is necessary to run the engine indoors, make sure that exhaust gas is forced outdoors.**
* **When working with toxic or flammable materials, make sure that the area you work in is well-ventilated and that you follow all of the material manufacturer's instructions.**
* **Never use gasoline as a cleaning solvent.**
* **To avoid getting burned, do not touch the engine, engine oil, radiator and exhaust system until they have cooled.**
* **After servicing the fuel, oil, water, exhaust or brake systems, check all lines and fittings related to the system for leaks.**

CAUTION

* If parts replacement is necessary, replace the parts with Suzuki Genuine Parts or their equivalent.
* When removing parts that are to be reused, keep them arranged in an orderly manner so that they may be reinstalled in the proper order and orientation.
* Be sure to use special tools when instructed.
* Make sure that all parts used in reassembly are clean. Lubricate them when specified.
* Use the specified lubricant, bond, or sealant.
* When removing the battery, disconnect the negative cable first and then the positive cable. When reconnecting the battery, connect the positive cable first and then the negative cable, and replace the terminal cover on the positive terminal.
* When performing service to electrical parts, if the service procedures not require use of battery power, disconnect the negative cable the battery.
* When tightening the cylinder head and case bolts and nuts, tighten the larger sizes first. Always tighten the bolts and nuts diagonally from the inside toward outside and to the specified tightening torque.
* Whenever you remove oil seals, gaskets, packing, O-rings, locking washers, self-locking nuts, cotter pins, circlips and certain other parts as specified, be sure to replace them with new ones. Also, before installing these new parts, be sure to remove any left over material from the mating surfaces.
* Never reuse a circlip. When installing a new circlip, take care not to expand the end gap larger than required to slip the circlip over the shaft. After installing a circlip, always ensure that it is completely seated in its groove and securely fitted.
* Use a torque wrench to tighten fasteners to the specified torque. Wipe off grease and oil if a thread is smeared with them.
* After reassembling, check parts for tightness and proper operation.

* To protect the environment, do not unlawfully dispose of used motor oil, engine coolant and other fluids: batteries, and tires.
* To protect Earth's natural resources, properly dispose of used motorcycle and parts.

SUZUKI DL1000K2 ('02-MODEL)

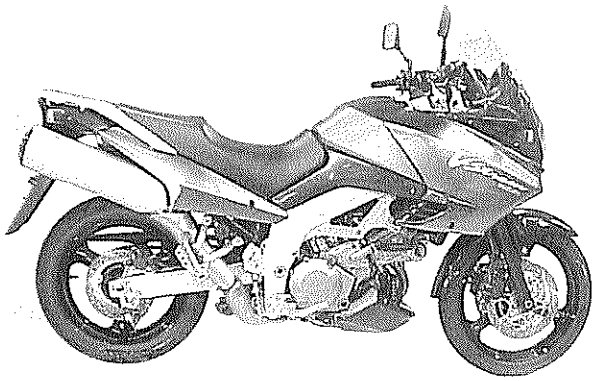

RIGHT SIDE

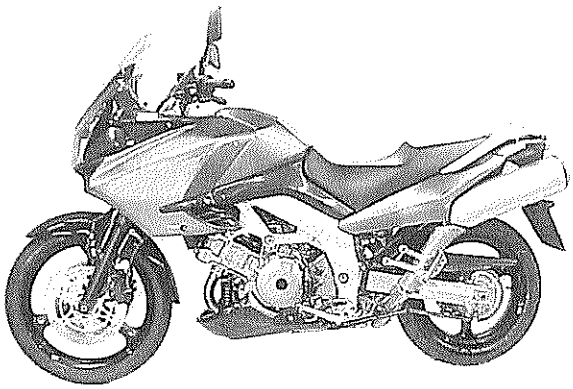

LEFT SIDE

* Difference between photographs and actual motorcycles may exist depending on the markets.

SERIAL NUMBER LOCATION

The frame serial number or V.I.N. (Vehicle Identification Number) ① is stamped on the right side of the steering head pipe. The engine serial number ② is located on the right side of the crankcase. These numbers are required especially for registering the machine and ordering spare parts.

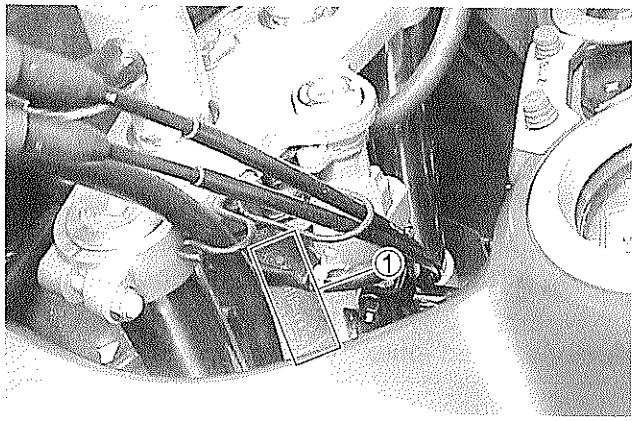

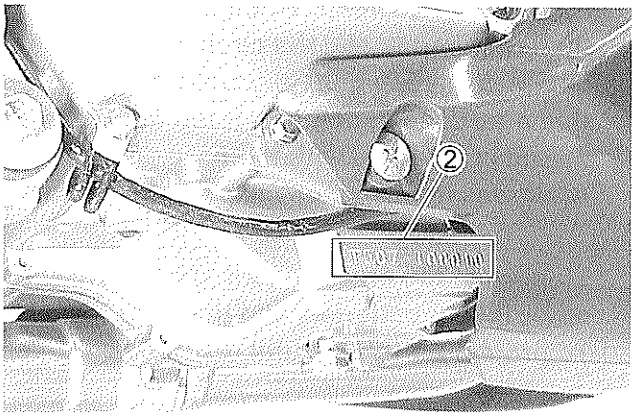

FUEL, OIL AND ENGINE COOLANT RECOMMENDATION

FUEL (FOR USA MODEL)

Use only unleaded gasoline of at least 87 pump octane ($\frac{R+M}{2}$) or 91 octane or higher rated by the research method.

Gasoline containing MTBE (Methyl Tertiary Butyl Ether), less than 10% ethanol, or less than 5% methanol with appropriate cosolvents and corrosion inhibitor is permissible.

FUEL (FOR OTHER COUNTRIES)

Gasoline used should be graded 91 octane (Research Method) or higher. Unleaded gasoline is recommended.

ENGINE OIL

SUZUKI recommends the use of SUZUKI PERFORMANCE 4 MOTOR OIL or an oil which is rated SF or SG under the API (American Petroleum Institute) service classification. The recommended viscosity is SAE 10W-40. If an SAE 10W-40 oil is not available, select an alternative according to the right chart.

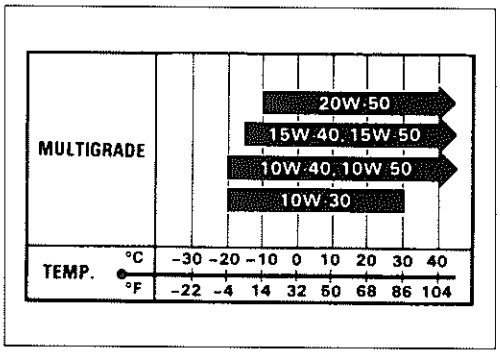

BRAKE FLUID

Specification and classification: DOT 4

⚠ WARNING

Since the brake system of this motorcycle is filled with a glycol-based brake fluid by the manufacturer, do not use or mix different types of fluid such as silicone-based and petroleum-based fluid for refilling the system, otherwise serious damage will result.
Do not use any brake fluid taken from old or used or unsealed containers.
Never re-use brake fluid left over from a previous servicing, which has been stored for a long period.

FRONT FORK OIL

Use fork oil SS8 or an equivalent fork oil.

ENGINE COOLANT

Use an anti-freeze/engine coolant compatible with an aluminum radiator, mixed with distilled water only.

WATER FOR MIXING

Use distilled water only. Water other than distilled water can corrode and clog the aluminum radiator.

ANTI-FREEZE/ENGINE COOLANT

The engine coolant perform as a corrosion and rust inhibitor as well as anti-freeze. Therefore, the engine coolant should be used at all times even though the atmospheric temperature in your area does not go down to freezing point.

Suzuki recommends the use of SUZUKI COOLANT anti-freeze/engine coolant. If this is not available, use an equivalent which is compatible with an aluminum radiator.

LIQUID AMOUNT OF WATER/ENGINE COOLANT

Solution capacity (total): 2 200 ml (2.3/1.9 US/Imp qt)

For engine coolant mixture information, refer to cooling system section, page 5-2.

CAUTION

Mixing of anti-freeze/engine coolant should be limited to 60%. Mixing beyond it would reduce its efficiency. If the anti-freeze/engine coolant mixing ratio is below 50%, rust inhabiting performance is greatly reduced. Be sure to mix it above 50% even though the atmospheric temperature does not go down to the freezing point.

BREAK-IN PROCEDURES

During manufacture only the best possible materials are used and all machined parts are finished to a very high standard but it is still necessary to allow the moving parts to "BREAK-IN" before subjecting the engine to maximum stresses. The future performance and reliability of the engine depends on the care and restraint exercised during its early life. The general rules are as follows.

- Keep to these break-in engine speed limits:

Initial 800 km (500 miles): Below 4 500 r/min
Up to 1 600 km (1 000 miles): Below 7 000 r/min
Over 1 600 km (1 000 miles): Below 9 500 r/min

- Upon reaching an odometer reading of 1 600 km (1 000 miles) you can subject the motorcycle to full throttle operation. However, do not exceed 9 500 r/min at any time.

CYLINDER IDENTIFICATION

The two cylinders of this engine are identified as No.1 and No.2 cylinder, as counted from front to rear (as viewed by the rider on the seat).

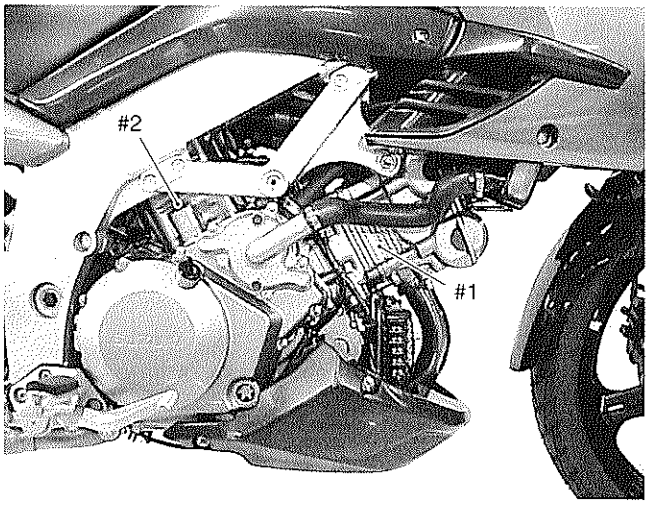

INFORMATION LABELS

①	Noise label (For E-03, 24, 33)
②	Information label (For E-03, 28, 33)
③	ICES Canada label (For E-28)
④	Vacuum hose routing label (For E-33)
⑤	Fuel caution label (For E-02, 24)
⑥	Manual notice label (For E-03, 33)
⑦	Tire pressure label
⑧	Warning safety label
⑨	Rear carrier warning label
⑩	Frame caution label
⑪	Steering warning label
⑫	Screen warning label
⑬	ID label (For E-02, 19, 24)
⑭	Safety label (For E-03, 28, 33)

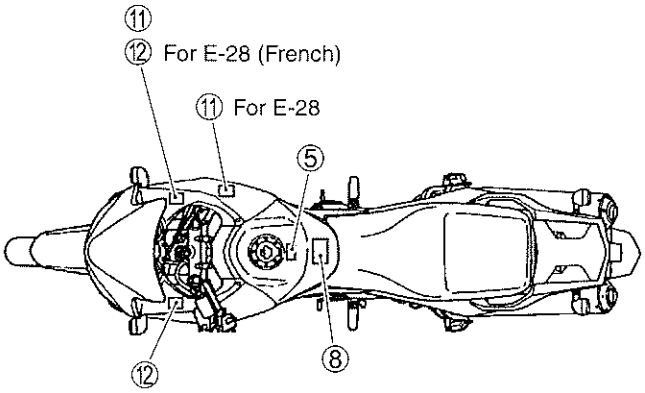

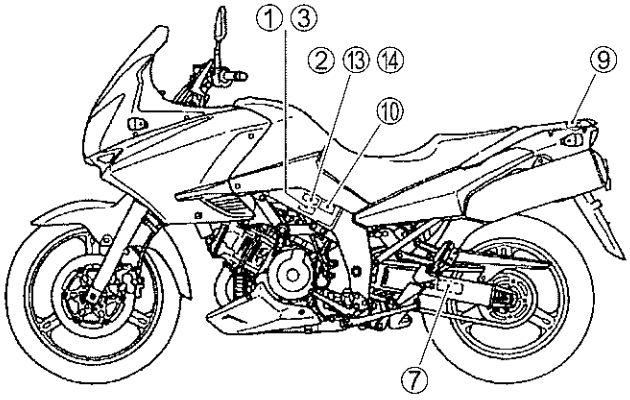

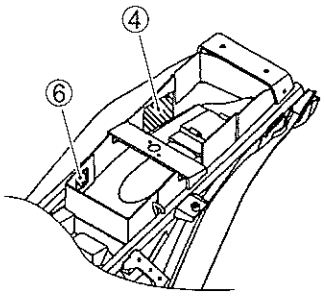

SPECIFICATIONS

DIMENSIONS AND DRY MASS

Overall length	2 295 mm (90.4 in)
Overall width	865 mm (34.1 in)
Overall height	1 335 mm (52.6 in)
Wheelbase	1 535 mm (60.4 in)
Ground clearance	165 mm (6.5 in)
Seat height	840 mm (33.1 in)
Dry mass	207 kg (456 lbs)
	209 kg (461 lbs) E-33

ENGINE

Type	Four-stroke, Liquid-cooled, DOHC, 90-degree V-twin
Number of cylinders	2
Bore	98.0 mm (3.858 in)
Stroke	66.0 mm (2.598 in)
Piston displacement	996 cm^3 (60.8 cu. in)
Compression ratio	11.3 : 1
Fuel system	Fuel injection system
Air cleaner	Non-woven fabric element
Starter system	Electric starter
Lubrication system	Wet sump

DRIVE TRAIN

Clutch	Wet multi-plate type
Transmission	6-speed constant mesh
Gearshift pattern	1-down, 5-up
Primary reduction ratio	1.838 (57/31)
Final reduction ratio	2.411 (41/17)
Gear ratios, Low	3.000 (36/12)
2nd	1.933 (29/15)
3rd	1.500 (27/18)
4th	1.227 (27/22)
5th	1.086 (25/23)
Top	0.913 (21/23)
Drive chain	RK525 SMOZ7, 112 links

CHASSIS

Front suspension	Inverted telescopic, coil spring, oil damped
Rear suspension	Link type, coil spring, oil damped
Steering angle	40° (right & left)
Caster	26° 30'
Trail	111 mm (4.3 in)
Turning radius	2.7 m (8.86 ft)
Front brake	Disc brake, twin
Rear brake	Disc brake
Front tire size	110/80 R19M/C 59H, tubeless
Rear tire size	150/70 R17M/C 69H, tubeless
Front fork stroke	160 mm (6.3 in)
Rear wheel travel	159 mm (6.2 in)

ELECTRICAL

Ignition type	Electronic ignition (ECM, Transistorized)
Ignition timing	4° B. T. D. C at 1 200 r/min
Spark plug	NGK: CR8EK or DENSO: U24ETR
Battery	12 V 43.2 kC (12 Ah)/10 HR
Generator	Three-phase A.C. Generator
Fuse	30/15/15/15/15/15/10 A
Headlight	12 V 60/55 W H4
Position light	12 V 5 W × 2.....Except for E-03, 24, 28, 33
Turn signal light	12 V 10 W
License light	12 V 5 W
Brake light/Taillight	12 V 21/5 W ×2
Speedometer/Tachometer light	LED
Neutral indicator light	LED
High beam indicator light	LED
Turn signal indicator light	LED
Over drive indicator light	LED
Fuel indicator warning light	LED
Engine coolant temperature warning light	LED
Oil pressure warning light	LED

CAPACITIES

Fuel tank		22 L (5.8/4.8 US/Imp gal)
Engine oil,	oil change	2 700 ml (2.9/2.4 US/Imp qt)
	with filter change	2 900 ml (3.1/2.6 US/Imp qt)
	overhaul	3 300 ml (3.5/2.9 US/Imp qt)
Engine coolant, including reserve		2 200 ml (2.3/1.9 US/Imp oz)
Front fork oil (each leg)		505 ml (17.1/17.8 US/Imp oz)

These specifications are subject to change without notice.

COUNTRY AND AREA CODES

The following codes stand for the applicable country(-ies) and area(-s).

CODE	COUNTRY or AREA
E-02	U. K.
E-03	U. S. A. (Except for California)
E-19	EU
E-24	Australia
E-28	Canada
E-33	California (U. S. A.)

PERIODIC MAINTENANCE

2

CONTENTS

PERIODIC MAINTENANCE SCHEDULE 2- 2
PERIODIC MAINTENANCE CHART 2- 2
LUBRICATION POINTS 2- 4
MAINTENANCE AND TUNE-UP PROCEDURES 2- 5
AIR CLEANER 2- 5
SPARK PLUG 2- 6
TAPPET CLEARANCE 2- 8
FUEL HOSE 2-13
ENGINE OIL AND OIL FILTER 2-13
ENGINE IDLE SPEED 2-15
THROTTLE CABLE PLAY 2-15
THROTTLE VALVE SYNCHRONIZATION 2-16
EVAPORATIVE EMISSION CONTROL SYSTEM (E-33 only) 2-16
PAIR (AIR SUPPLY) SYSTEM 2-16
CLUTCH 2-17
COOLING SYSTEM 2-18
DRIVE CHAIN 2-20
BRAKE 2-22
TIRE 2-26
STEERING 2-26
FRONT FORK 2-27
REAR SUSPENSION 2-27
EXHAUST PIPE BOLT 2-27
CHASSIS BOLT AND NUT 2-28
COMPRESSION PRESSURE CHECK 2-30
COMPRESSION TEST PROCEDURE 2-30
OIL PRESSURE CHECK 2-31
OIL PRESSURE TEST PROCEDURE 2-31

PERIODIC MAINTENANCE SCHEDULE

The chart below lists the recommended intervals for all the required periodic service work necessary to keep the motorcycle operating at peak performance and economy. Mileages are expressed in terms of kilometers, miles and time for your convenience.

IMPORTANT: The periodic maintenance intervals and service requirements have been established in accordance with EPA regulations. Following these instructions will ensure that the motorcycle will not exceed emission standards and it will also ensure the reliability and performance of the motorcycle.

NOTE:
More frequent servicing may be performed on motorcycles that are used under severe conditions.

PERIODIC MAINTENANCE CHART

Item \ Interval	km	1 000	6 000	12 000	18 000	24 000
	miles	600	4 000	7 500	11 000	15 000
	months	1	6	12	18	24
Air cleaner element		—	I	I	R	I
Exhaust pipe bolts and muffler bolts		T	—	T	—	T
Valve clearance		—	—	—	—	I
Spark plugs		—	I	R	I	R
Fuel hose		—	I	I	I	I
		Replace every 4 years				
Engine oil		R	R	R	R	R
Engine oil filter		R	—	—	R	—
Idle speed		I	I	I	I	I
Throttle cable play		I	I	I	I	I
Throttle valve synchronization		I	—	I	—	I
		(E-33 only)				
Evaporative emission control system (E-33 only)		—	—	I	—	I
		Replace vapor hose every 4 years				
PAIR(air supply)system		—	—	I	—	I
Engine coolant		Replace every 2 years.				
Radiator hose		—	I	I	I	I
Clutch hose		—	I	I	I	I
		Replace every 4 years				
Clutch fluid		—	I	I	I	I
		Replace every 2 years				
Drive chain		I	I	I	I	I
		Clean and lublicate every 1 000 km (600 miles)				
Brakes		I	I	I	I	I
Brake hose		—	I	I	I	I
		Replace every 4 years				
Brake fluid		—	I	I	I	I
		Replace every 2 years				

Item \ Interval	km	1 000	6 000	12 000	18 000	24 000
	miles	600	4 000	7 500	11 000	15 000
	months	1	6	12	18	24
Tires		—	I	I	I	I
Steering		I	—	I	—	I
Front fork		—	—	I	—	I
Rear suspension		—	—	I	—	I
Chassis bolts and nuts		T	T	T	T	T

NOTE:
I=Inspect and clean, adjust, replace or lubricate as necessary;
R=Replace; T=Tighten

LUBRICATION POINTS

Proper lubrication is important for smooth operation and long life of each working part of the motorcycle. Major lubrication points are indicated below.

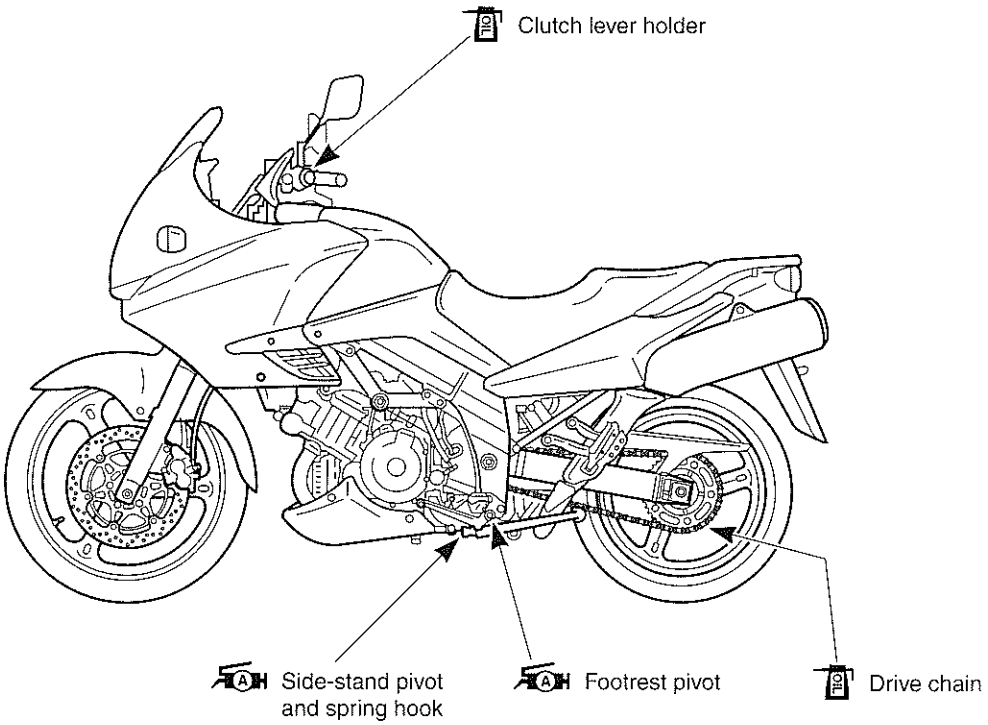

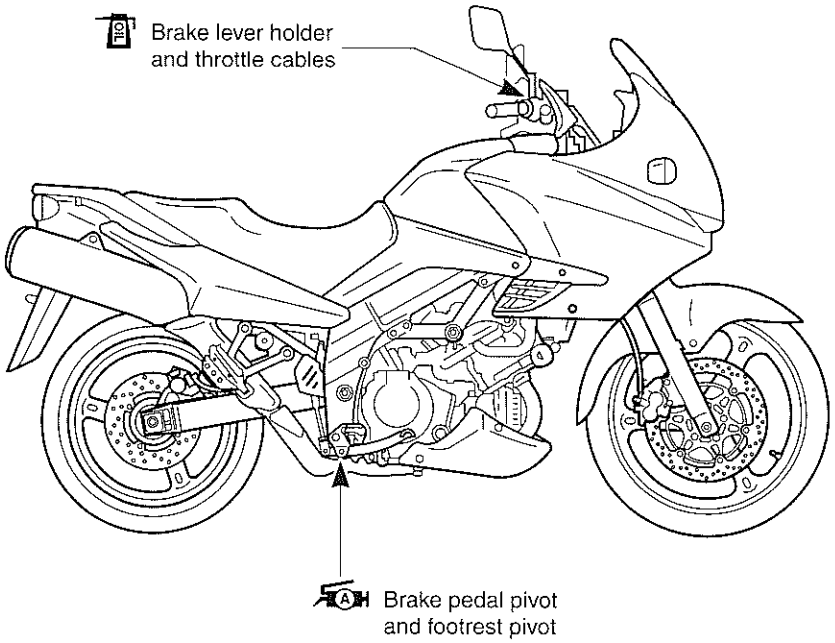

NOTE:

* *Before lubricating each part, clean off any rusty spots and wipe off any grease, oil, dirt or grime.*
* *Lubricate exposed parts which are subject to rust, with a rust preventative spray whenever the motorcycle has been operated under wet or rainy conditions.*

MAINTENANCE AND TUNE-UP PROCEDURES

This section describes the servicing procedures for each item of the Periodic Maintenance requirements.

AIR CLEANER

Inspect every 6 000 km (4 000 miles, 6 months) and replace every 18 000 km (11 000 miles, 18 months).

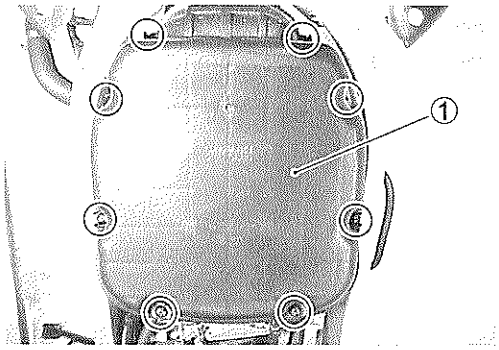

- Remove the seat. (☞6-4)
- Remove the fuel tank. (☞4-52)
- Remove the air cleaner box cap ①.
- Remove the air cleaner element ②.

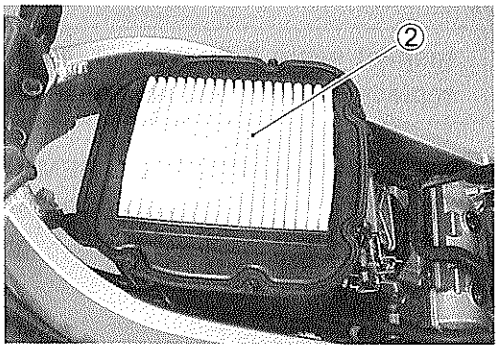

- Carefully use air hose to blow the dust from the cleaner element.

CAUTION

Always use air pressure on the throttle body side of the air cleaner element. If air pressure is used on the other side, dirt will be forced into the pores of the air cleaner element thus restricting air flow through the air cleaner element.

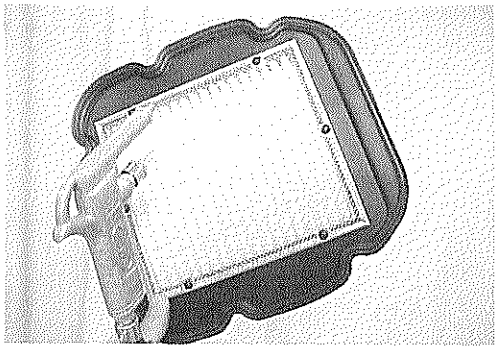

- Install the O-ring ③ properly.
- Reinstall the cleaned or new air cleaner element in the reverse order of removal.

CAUTION

If driving under dusty condition, clean the air cleaner element more frequently. The surest way to accelerate engine wear is to use the engine without the element or to use a ruptured element. Make sure that the air cleaner is in good condition at all times. Life of the engine depends largely on this component!

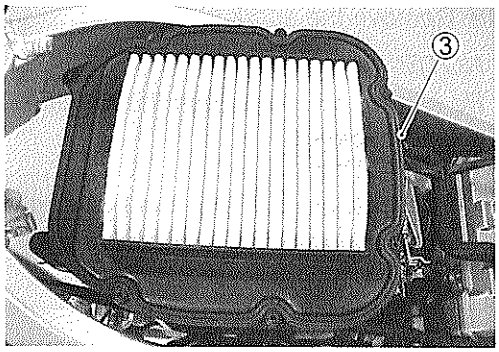

NOTE:
When cleaning the air cleaner element, drain water from the air cleaner by removing the drain plug.

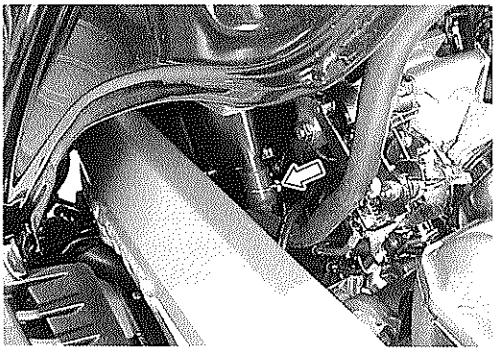

SPARK PLUG

Inspect every 6 000 km (4 000 miles, 6 months) and replace every 12 000 km (7 500 miles, 12 months).

NO.1 (FRONT) SPARK PLUG REMOVAL

- Remove the spark plug mounting bolts Ⓐ and Ⓑ.

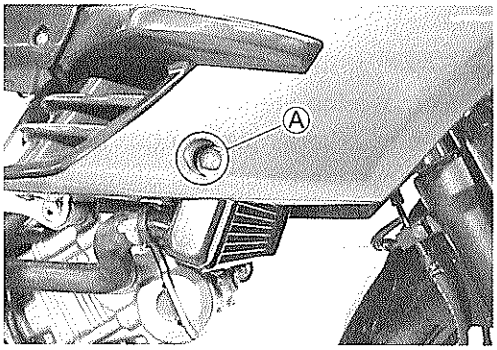

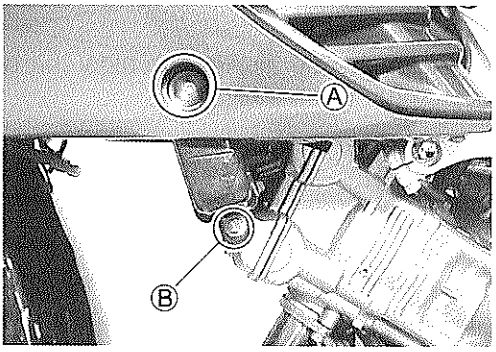

- Move the radiator forward.
- Remove the spark plug cap ①.

NOTE:
Be careful not to damage the radiator fins.

⚠ WARNING

The hot radiator and the hot engine can burn you. Wait until the radiator and the engine are cool enough to touch.

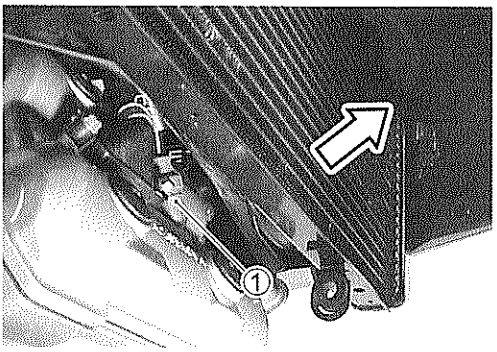

- Remove the spark plug with a spark plug wrench.

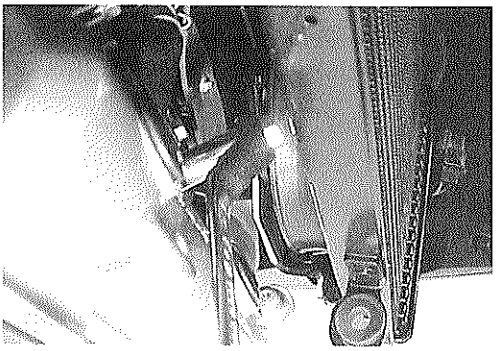

NO.2 (REAR) SPARK PLUG REMOVAL

- Remove the seat. (☞6-4)
- Lift and support the fuel tank. (☞4-51)
- Remove the spark plug cap.
- Remove the spark plug with a spark plug wrench.

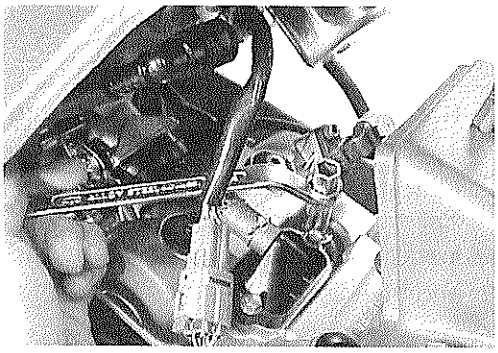

HEAT RANGE

- Check to see the heat range of the plug.

	Standard	Cold type
NGK	CR8EK	CR9EK or CR10EK
DENSO	U24ETR	U27ETR or U31ETR

CARBON DEPOSIT

- Check to see if there are carbons deposit on the plugs. If carbon is deposited, remove it with a spark plug cleaner machine or carefully using a tool with a pointed end.

SPARK PLUG GAP

- Measure the plug gap with a thickness gauge. If out of specification, adjust it to the following gap.

TOOL 09900-20803: Thickness gauge

DATA Spark plug gap Ⓐ
Standard: 0.6 – 0.7 mm (0.024 – 0.028 in)

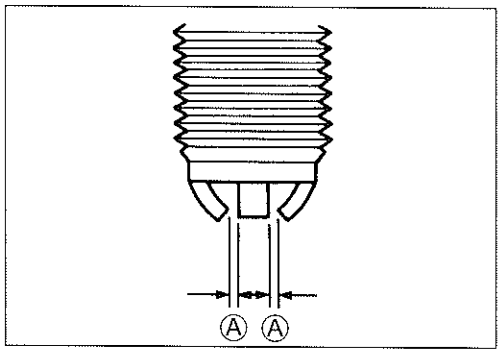

ELECTRODES CONDITION

- Check to see the worn or burnt condition of the electrodes. If it is extremely worn or burnt, replace the plug. And also replace the plug if it has a broken insulator, damaged thread.

CAUTION

Confirm the thread size and reach when replacing the plug. If the reach is too short, carbon will be deposited on the screw portion of the plug hole and engine damage may result.

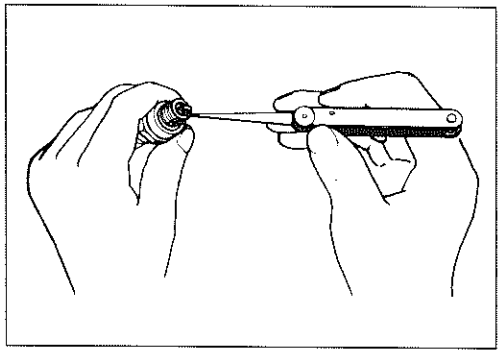

SPARK PLUG AND PLUG CAP INSTALLATION

CAUTION

Before using a spark plug wrench, carefully turn the spark plug by finger into the threads of the cylinder head to prevent damage the aluminum threads.

- Install the spark plugs to the cylinder heads by finger tight, and then tighten them to the specified torque.

Spark plug: 11 N·m (1.1 kgf-m, 8.0 lb-ft)

NOTE:
When fitting the spark plug caps, front and rear, face the triangle mark Ⓐ on the water-proof cover to each cylinder exhaust side.

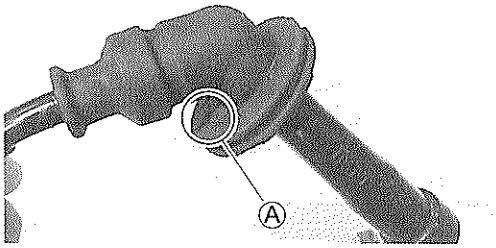

TAPPET CLEARANCE

Inspect every 24 000 km (15 000 miles, 24 months).

- Remove the seat. (☞6-4)
- Lift and support the fuel tank. (☞4-51)
- Remove the fuel tank side covers, cowlings and inner cover. (☞6-6)
- Remove the radiator. (☞5-4)
- Remove the spark plugs. (☞2-6)
- Remove the cylinder head covers.

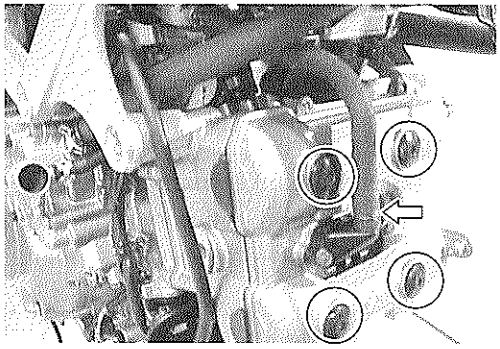

The tappet clearance specification is different for intake and exhaust valves.
Tappet clearance must be checked and adjusted, 1) at the time of periodic inspection, 2) when the valve mechanism is serviced, and 3) when the camshafts are disturbed by removing them for servicing.

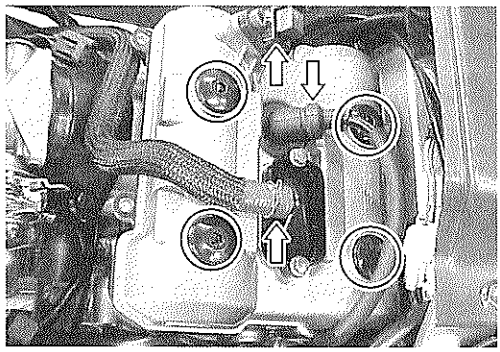

DATA Tappet clearance (when cold)
IN. : 0.10 – 0.20 mm (0.004 – 0.008 in)
EX. : 0.20 – 0.30 mm (0.008 – 0.012 in)

NOTE:
- *The tappet clearance should be taken when each cylinder is at Top Dead Center (TDC) of compression stroke.*
- *The cams (IN & EX) on the front cylinder at position Ⓐ show the front cylinder at TDC of compression stroke.*
- *The cams (IN & EX) on the rear cylinder at position Ⓑ show the rear cylinder at TDC of compression stroke.*
- *The clearance specification is for COLD state.*
- *To turn the crankshaft for clearance checking, be sure to use a 17-mm wrench, and rotate in the normal running direction. All spark plugs should be removed.*

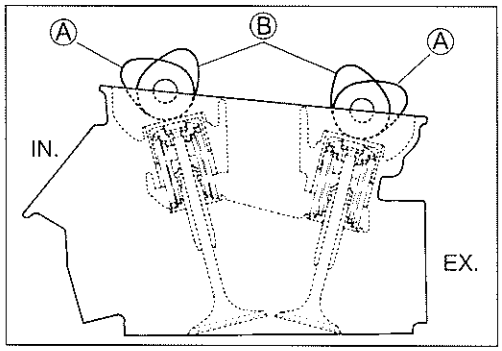

- Remove the generator cover plug ① and timing inspection plug ②.

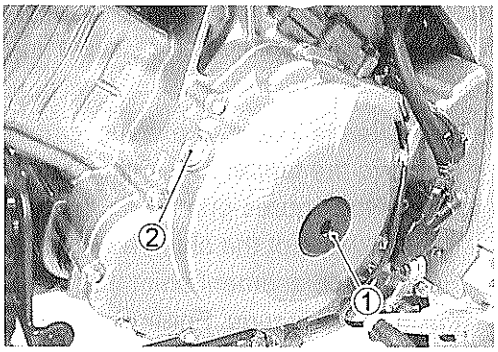

- Turn the crankshaft to set the No.1 (Front) cylinder at TDC of compression stroke. (Align the "F | T" line on the generator rotor to the index mark of valve timing inspection hole and also bring the camshafts to the position as shown in page 2-8.)

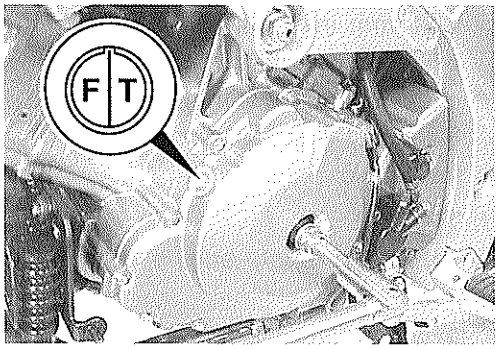

- To inspect the No.1 (Front) cylinder tappet clearance, use a thickness gauge between the tappet and the cam. If the clearance is out of specification, adjust it into the specified range.

TOOL 09900-20803: Thickness gauge

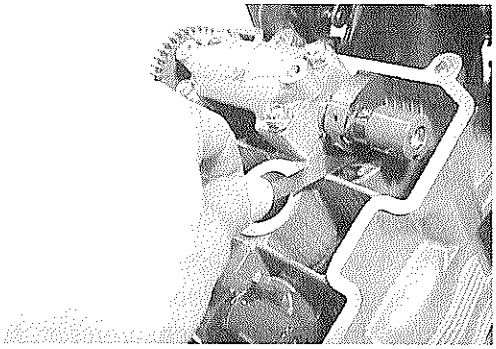

- Turn the crankshaft 270 degrees (¾ turns) to set the No.2 (Rear) cylinder at TDC of compression stroke. (Align the "R | T" line on the generator rotor to the index mark of valve timing inspection hole and also bring the camshafts to the position as shown in page 2-8.)

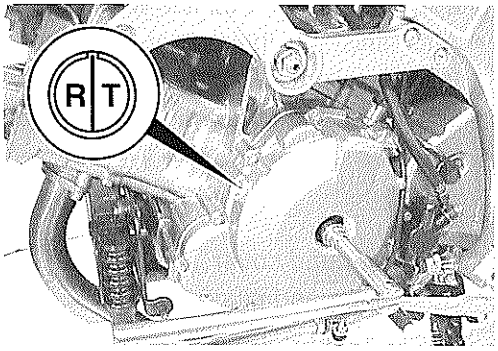

- Inspect the No.2 (Rear) cylinder tappet clearance as the same manner of No.1 (Front) cylinder and adjust the clearance if necessary.

TOOL 09900-20803: Thickness gauge

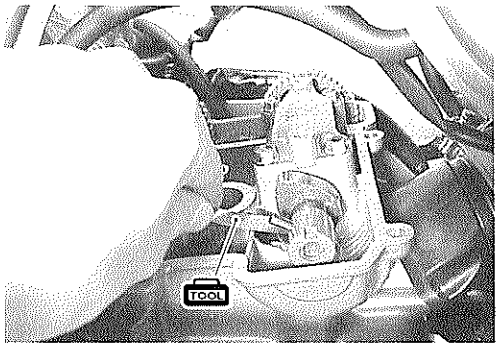

TAPPET CLEARANCE ADJUSTMENT

The clearance is adjusted by replacing the existing tappet shim by a thicker or thinner shim.

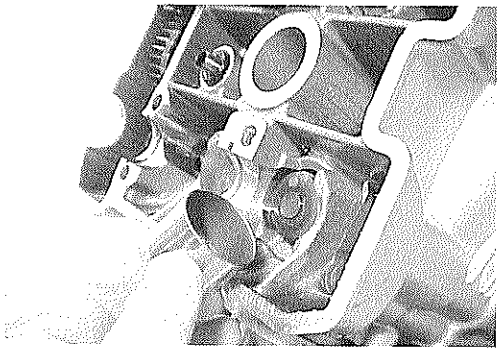

- Remove the intake or exhaust camshafts. (☞3-20)
- Remove the tappet and shim by fingers or magnetic hand.
- Check the figures printed on the shim. These figures indicate the thickness of the shim, as illustrated.
- Select a replacement shim that will provide a clearance within the specified range. For the purpose of this adjustment, a total of 25 sizes of tappet shim are available ranging from 2.30 to 3.50 mm in steps of 0.05 mm. Fit the selected shim to the valve stem end, with numbers toward tappet. Be sure to check shim size with micrometer to ensure its size.
  Refer to the tappet shim selection table (Pages 2-11 and -12) for details.

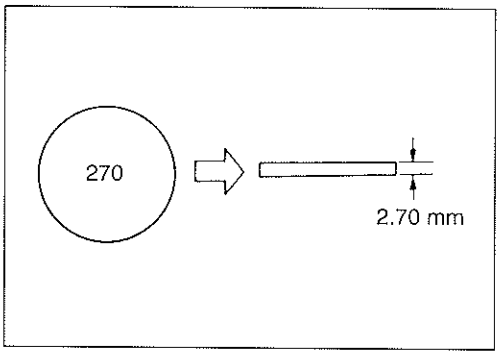

NOTE:

** Be sure to apply engine oil to tappet shim top and bottom faces.*

** When seating the tappet shim, be sure to face figure printed surface to the tappet.*

CAUTION

Reinstall the camshafts as the specified manner. (☞3-105)

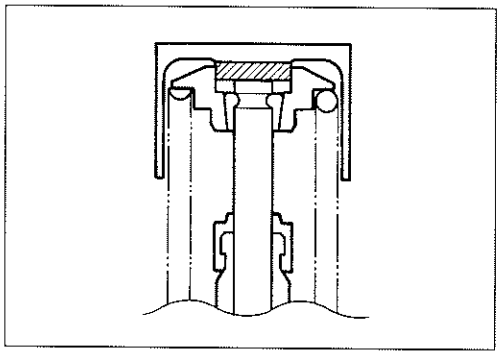

- After replacing the tappet shim and camshafts, rotate the engine so that the tappet is depressed fully. This will squeeze out oil trapped between the shim and the tappet that could cause an incorrect measurement, then check the clearance again to confirm that it is within the specified range.
- After finishing the tappet clearance adjustment, reinstall the following items.
- When installing the cylinder head cover, do not forget the gasket Ⓐ.

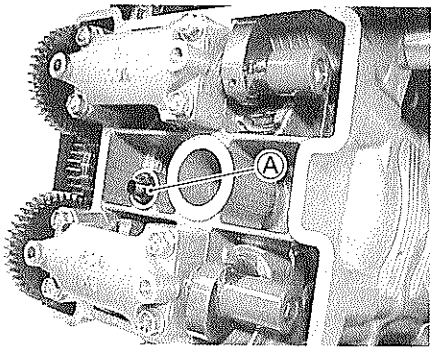

	Page
* Cylinder head cover	3-111
* Spark plug and plug cap	2-8
* Valve timing inspection plug	3-111
* Generator cover plug	3-112

TAPPET SHIM SELECTION TABLE [INTAKE]

TAPPET SHIM NO. (12892-41C00-XXX)

OPTION

TAPPET SHIM SET (12800–41810)

MEASURED TAPPET CLEARANCE (mm) \ SUFFIX NO. / PRESENT SHIM SIZE (mm)	230	235	240	245	250	255	260	265	270	275	280	285	290	295	300	305	310	315	320	325	330	335	340	345	350
	2.30	2.35	2.40	2.45	2.50	2.55	2.60	2.65	2.70	2.75	2.80	2.85	2.90	2.95	3.00	3.05	3.10	3.15	3.20	3.25	3.30	3.35	3.40	3.45	3.50
0.00–0.04			2.30	2.35	2.40	2.45	2.50	2.55	2.60	2.65	2.70	2.75	2.80	2.85	2.90	2.95	3.00	3.05	3.10	3.15	3.20	3.25	3.30	3.35	3.40
0.05–0.09		2.30	2.35	2.40	2.45	2.50	2.55	2.60	2.65	2.70	2.75	2.80	2.85	2.90	2.95	3.00	3.05	3.10	3.15	3.20	3.25	3.30	3.35	3.40	3.45
0.10–0.20	SPECIFIED CLEARANCE/NO ADJUSTMENT REQUIRED																								
0.21–0.25	2.40	2.45	2.50	2.55	2.60	2.65	2.70	2.75	2.80	2.85	2.90	2.95	3.00	3.05	3.10	3.15	3.20	3.25	3.30	3.35	3.40	3.45	3.50	3.50	
0.26–0.30	2.45	2.50	2.55	2.60	2.65	2.70	2.75	2.80	2.85	2.90	2.95	3.00	3.05	3.10	3.15	3.20	3.25	3.30	3.35	3.40	3.45	3.50	3.50		
0.31–0.35	2.50	2.55	2.60	2.65	2.70	2.75	2.80	2.85	2.90	2.95	3.00	3.05	3.10	3.15	3.20	3.25	3.30	3.35	3.40	3.45	3.50	3.50			
0.36–0.40	2.55	2.60	2.65	2.70	2.75	2.80	2.85	2.90	2.95	3.00	3.05	3.10	3.15	3.20	3.25	3.30	3.35	3.40	3.45	3.50	3.50				
0.41–0.45	2.60	2.65	2.70	2.75	2.80	2.85	2.90	2.95	3.00	3.05	3.10	3.15	3.20	3.25	3.30	3.35	3.40	3.45	3.50	3.50					
0.46–0.50	2.65	2.70	2.75	2.80	2.85	2.90	2.95	3.00	3.05	3.10	3.15	3.20	3.25	3.30	3.35	3.40	3.45	3.50	3.50						
0.51–0.55	2.70	2.75	2.80	2.85	2.90	2.95	3.00	3.05	3.10	3.15	3.20	3.25	3.30	3.35	3.40	3.45	3.50	3.50							
0.56–0.60	2.75	2.80	2.85	2.90	2.95	3.00	3.05	3.10	3.15	3.20	3.25	3.30	3.35	3.40	3.45	3.50	3.50								
0.61–0.65	2.80	2.85	2.90	2.95	3.00	3.05	3.10	3.15	3.20	3.25	3.30	3.35	3.40	3.45	3.50	3.50									
0.66–0.70	2.85	2.90	2.95	3.00	3.05	3.10	3.15	3.20	3.25	3.30	3.35	3.40	3.45	3.50	3.50										
0.71–0.75	2.90	2.95	3.00	3.05	3.10	3.15	3.20	3.25	3.30	3.35	3.40	3.45	3.50	3.50											
0.76–0.80	2.95	3.00	3.05	3.10	3.15	3.20	3.25	3.30	3.35	3.40	3.45	3.50	3.50												
0.81–0.85	3.00	3.05	3.10	3.15	3.20	3.25	3.30	3.35	3.40	3.45	3.50	3.50													
0.86–0.90	3.05	3.10	3.15	3.20	3.25	3.30	3.35	3.40	3.45	3.50	3.50														
0.91–0.95	3.10	3.15	3.20	3.25	3.30	3.35	3.40	3.45	3.50	3.50															
0.96–1.00	3.15	3.20	3.25	3.30	3.35	3.40	3.45	3.50	3.50																
1.01–1.05	3.20	3.25	3.30	3.35	3.40	3.45	3.50	3.50																	
1.06–1.10	3.25	3.30	3.35	3.40	3.45	3.50	3.50																		
1.11–1.15	3.30	3.35	3.40	3.45	3.50	3.50																			
1.16–1.20	3.35	3.40	3.45	3.50	3.50																				
1.21–1.25	3.40	3.45	3.50	3.50																					
1.26–1.30	3.45	3.50	3.50																						
1.31–1.35	3.50	3.50																							
1.36–1.40	3.50																								

HOW TO USE THIS CHART:

I. Measure tappet clearance. "ENGINE IS COLD"

II. Measure present shim size.

III. Match clearance in vertical column with present shim size in horizontal column.

EXAMPLE

Tappet clearance is	0.23 mm
Present shim size	2.70 mm
Shim size to be used	2.80 mm

(EXHAUST SIDE)

TAPPET SHIM SELECTION TABLE [EXHAUST]
TAPPET SHIM NO. (12892-41C00-XXX)

OPTION

TAPPET SHIM SET (12800–41810)

MEASURED TAPPET CLEARANCE (mm) / SUFFIX NO.	230	235	240	245	250	255	260	265	270	275	280	285	290	295	300	305	310	315	320	325	330	335	340	345	350
PRESENT SHIM SIZE (mm)	2.30	2.35	2.40	2.45	2.50	2.550	2.60	2.65	2.70	2.75	2.80	2.85	2.90	2.95	3.00	3.05	3.10	3.15	3.20	3.25	3.30	3.35	3.40	3.45	3.50
0.00–0.04					2.30	2.35	2.40	2.45	2.50	2.55	2.60	2.65	2.70	2.75	2.80	2.85	2.90	2.95	3.00	3.05	3.10	3.15	3.20	3.25	3.30
0.05–0.09				2.30	2.35	2.40	2.45	2.50	2.55	2.60	2.65	2.70	2.75	2.80	2.85	2.90	2.95	3.00	3.05	3.10	3.15	3.20	3.25	3.30	3.35
0.10–0.14			2.30	2.35	2.40	2.45	2.50	2.55	2.60	2.65	2.70	2.75	2.80	2.85	2.90	2.95	3.00	3.05	3.10	3.15	3.20	3.25	3.30	3.35	3.40
0.15–0.19		2.30	2.35	2.40	2.45	2.50	2.55	2.60	2.65	2.70	2.75	2.80	2.85	2.90	2.95	3.00	3.05	3.10	3.15	3.20	3.25	3.30	3.35	3.40	3.45
0.20–0.30	SPECIFIED CLEARANCE/NO ADJUSTMENT REQUIRED																								
0.31–0.35	2.40	2.45	2.50	2.55	2.60	2.65	2.70	2.75	2.80	2.85	2.90	2.95	3.00	3.05	3.10	3.15	3.20	3.25	3.30	3.35	3.40	3.45	3.50	3.50	
0.36–0.40	2.45	2.50	2.55	2.60	2.65	2.70	2.75	2.80	2.85	2.90	2.95	3.00	3.05	3.10	3.15	3.20	3.25	3.30	3.35	3.40	3.45	3.50	3.50		
0.41–0.45	2.50	2.55	2.60	2.65	2.70	2.75	2.80	2.85	2.90	2.95	3.00	3.05	3.10	3.15	3.20	3.25	3.30	3.35	3.40	3.45	3.50	3.50			
0.46–0.50	2.55	2.60	2.65	2.70	2.75	2.80	2.85	2.90	2.95	3.00	3.05	3.10	3.15	3.20	3.25	3.30	3.35	3.40	3.45	3.50	3.50				
0.51–0.55	2.60	2.65	2.70	2.75	2.80	2.85	2.90	2.95	3.00	3.05	3.10	3.15	3.20	3.25	3.30	3.35	3.40	3.45	3.50	3.50					
0.56–0.60	2.65	2.70	2.75	2.80	2.85	2.90	2.95	3.00	3.05	3.10	3.15	3.20	3.25	3.30	3.35	3.40	3.45	3.50	3.50						
0.61–0.65	2.70	2.75	2.80	2.85	2.90	2.95	3.00	3.05	3.10	3.15	3.20	3.25	3.30	3.35	3.40	3.45	3.50	3.50							
0.66–0.70	2.75	2.80	2.85	2.90	2.95	3.00	3.05	3.10	3.15	3.20	3.25	3.30	3.35	3.40	3.45	3.50	3.50								
0.71–0.75	2.80	2.85	2.90	2.95	3.00	3.05	3.10	3.15	3.20	3.25	3.30	3.35	3.40	3.45	3.50	3.50									
0.76–0.80	2.85	2.90	2.95	3.00	3.05	3.10	3.15	3.20	3.25	3.30	3.35	3.40	3.45	3.50	3.50										
0.81–0.85	2.90	2.95	3.00	3.05	3.10	3.15	3.20	3.25	3.30	3.35	3.40	3.45	3.50	3.50											
0.86–0.90	2.95	3.00	3.05	3.10	3.15	3.20	3.25	3.30	3.35	3.40	3.45	3.50	3.50												
0.91–0.95	3.00	3.05	3.10	3.15	3.20	3.25	3.30	3.35	3.40	3.45	3.50	3.50													
0.96–1.00	3.05	3.10	3.15	3.20	3.25	3.30	3.35	3.40	3.45	3.50	3.50														
1.01–1.05	3.10	3.15	3.20	3.25	3.30	3.35	3.40	3.45	3.50	3.50															
1.06–1.10	3.15	3.20	3.25	3.30	3.35	3.40	3.45	3.50	3.50																
1.11–1.15	3.20	3.25	3.30	3.35	3.40	3.45	3.50	3.50																	
1.16–1.20	3.25	3.30	3.35	3.40	3.45	3.50	3.50																		
1.21–1.25	3.30	3.35	3.40	3.45	3.50	3.50																			
1.26–1.30	3.35	3.40	3.45	3.50	3.50																				
1.31–1.35	3.40	3.45	3.50	3.50																					
1.36–1.40	3.45	3.50	3.50																						
1.41–1.45	3.50	3.50																							
1.46–1.50	3.50																								

HOW TO USE THIS CHART:

I. Measure tappet clearance. "ENGINE IS COLD"

II. Measure present shim size.

III. Match clearance in vertical column with present shim size in horizontal column.

EXAMPLE

Tappet clearance is	0.38 mm
Present shim size	2.90 mm
Shim size to be used	3.05 mm

FUEL HOSE

Inspect every 6 000 km (4 000 miles, 6 months).
Replace every 4 years.

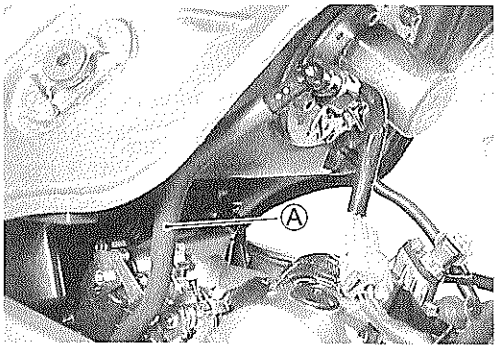

Inspect the fuel feed hose Ⓐ for damage and fuel leakage. If any defects are found, the fuel hoses must be replaced.

ENGINE OIL AND OIL FILTER

(ENGINE OIL)
Replace initially at 1 000 km (600 miles, 1 month) and every 6 000 km (4 000 miles, 6 months) thereafter.

(OIL FILTER)
Replace initially at 1 000 km (600 miles, 1 month) and every 18 000 km (11 000 miles, 18 months) thereafter.

Oil should be changed while the engine is warm. Oil filter replacement at the above intervals, should be done together with the engine oil change.

ENGINE OIL REPLACEMENT

- Keep the motorcycle upright.
- Place an oil pan below the engine, and drain oil by removing the drain plug ① and filler cap ②.

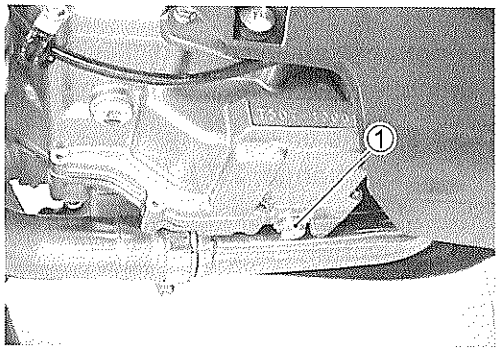

- Tighten the drain plug ① to the specified torque, and pour fresh oil through the oil filler. The engine will hold about 2.7 L (2.9/2.4 US/Imp qt) of oil. Use an API classification of SF or SG oil with SAE 10W-40 viscosity.

Oil drain plug: 23 N·m (2.3 kg-m, 16.5 lb-ft)

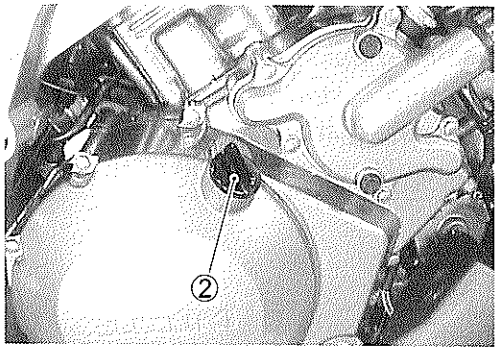

- Start up the engine and allow it to run for several minutes at idling speed.
- Turn off the engine and wait about one minute, then check the oil level through the inspection window Ⓐ. If the level is below mark "L", add oil to "F" level. If the level is above mark "F", drain oil to "F" level.

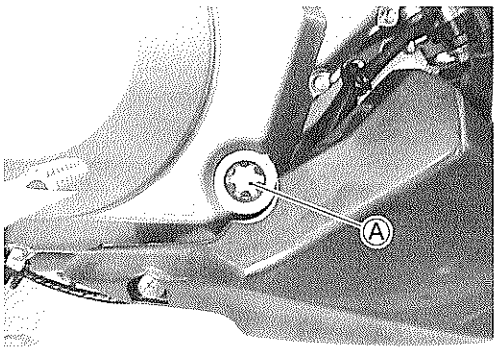

OIL FILTER REPLACEMENT

- Remove the engine under cover ①.
- Drain engine oil in the same manner of engine oil replacement procedure.
- Remove the oil filter ② by using the oil filter wrench. (Special tool)
- Apply engine oil lightly to the gasket of the new filter before installation.
- Install the new filter turning it by hand until you feel that the filter gasket contacts the mounting surface. Then tighten it 2 turns using the oil filter wrench.

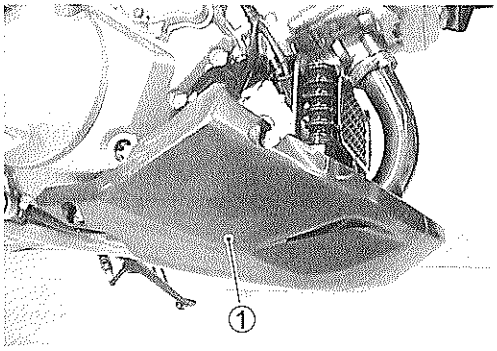

TOOL 09915-40610: Oil filter wrench

NOTE:
To properly tighten the filter, use the special tool. Never tighten the filter by hand.

- Pour fresh engine oil and check the oil level in the same manner of engine oil replacement procedure.

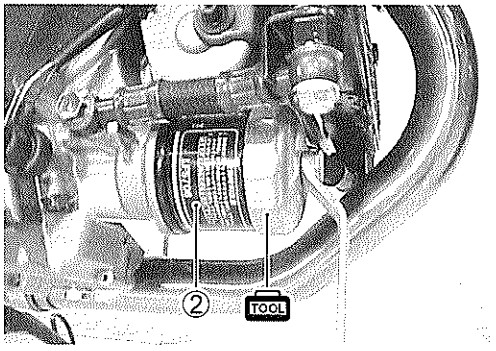

DATA Engine oil capacity
Oil change: 2.7 L (2.9/2.4 US/Imp qt)
Filter change: 2.9 L (3.1/2.6 US/Imp qt)
Overhaul engine: 3.3 L (3.5/2.9 US/Imp qt)

CAUTION

ONLY USE A GENUINE SUZUKI MOTORCYCLE OIL FILTER. Other manufacturer's oil filters may differ in thread specifications (thread diameter and pitch), filtering performance and durability which may lead to engine damage or oil leaks. Also, do not use a genuine Suzuki automobile oil filter on this motorcycle.

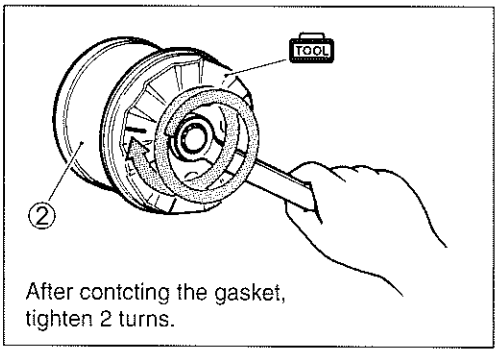

After contcting the gasket, tighten 2 turns.

ENGINE IDLE SPEED

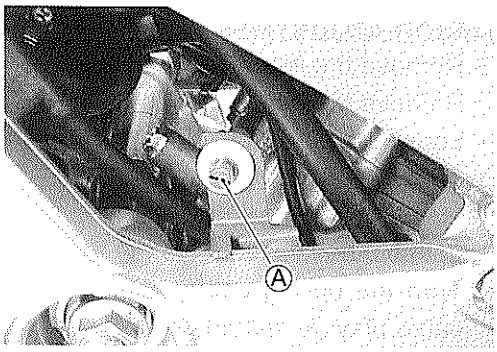

Inspect initially at 1 000 km (600 miles, 1 month) and every 6 000 km (4 000 miles, 6 months) thereafter.

NOTE:
Make this adjustment when the engine is hot.

- Start up the engine and set its idle speed to the specified range by turning the throttle stop screw Ⓐ.

DATA Engine idle speed: 1 200 ± 100 r/min

THROTTLE CABLE PLAY

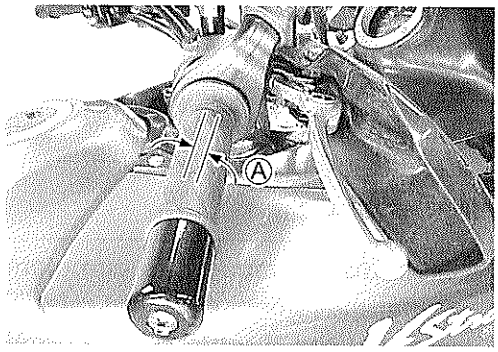

Inspect initially at 1 000 km (600 miles, 1 month) and every 6 000 km (4 000 miles, 6 months) thereafter.

Adjust the throttle cable play Ⓐ with the following three steps.

MINOR ADJUSTMENT

First step:

- Remove cable adjuster covers Ⓑ.
- Loosen the locknut ③ of the throttle returning cable ① and turn in the adjuster ④ fully into the threads.

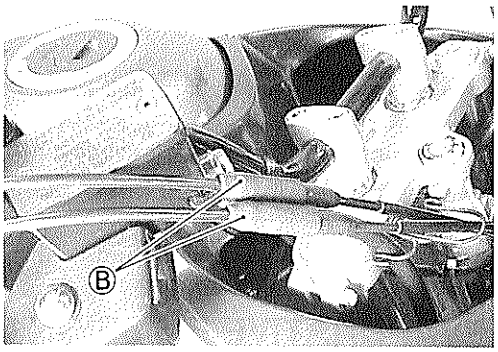

Second step:

- Loosen the locknut ⑤ of the throttle pulling cable ②.
- Turn the adjuster ⑥ in or out until the throttle cable play Ⓐ should be 2.0 – 4.0 mm (0.08 – 0.16 in) at the throttle grip.
- Tighten the locknut ⑤ while holding the adjuster ⑥.

Third step:

- While holding the throttle grip at the fully closed position, slowly turn out the adjuster ④ of the throttle returning cable ① to feel resistance.
- Tighten the locknut ③ while holding the adjuster ④.

DATA Throttle cable play Ⓐ: 2.0 – 4.0 mm (0.08 – 0.16 in)

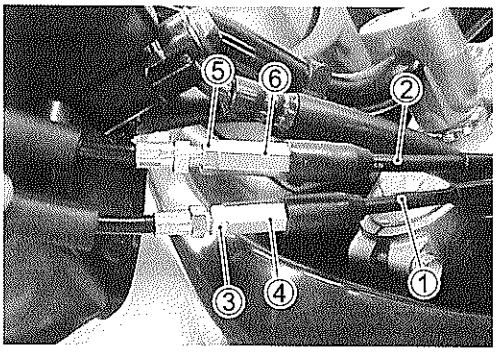

⚠ WARNING

After the adjustment is completed, check that handlebar movement does not raise the engine idle speed and that the throttle grip returns smoothly and automatically.

NOTE:
Major adjustment can be made by the throttle body side adjuster.

MAJOR ADJUSTMENT

- Remove the fuel tank. (☞4-52)
- Remove the air cleanet box. (☞4-60)
- Loosen the locknut ① of the throttle returning cable.
- Turn the returning cable adjuster ② to obtain proper cable play.
- Loosen the locknut ③ of the throttle pulling cable.
- Turn the pulling cable adjuster ④ in or out until the throttle cable play Ⓐ should be 2.0 – 4.0 mm (0.08 – 0.16 in) at the throttle grip.
- Tighten the locknut ③ securely while holding the adjuster ④.

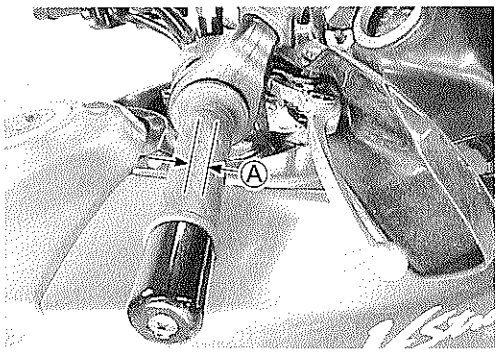

DATA Throttle cable play Ⓐ: 2.0 – 4.0 mm (0.08 – 0.16 in)

- While holding the throttle grip at the fully closed position, slowly turn the returning cable adjuster ② to obtain a slack of 1.0 mm (0.04 in).
- Tighten the locknut ① securely.

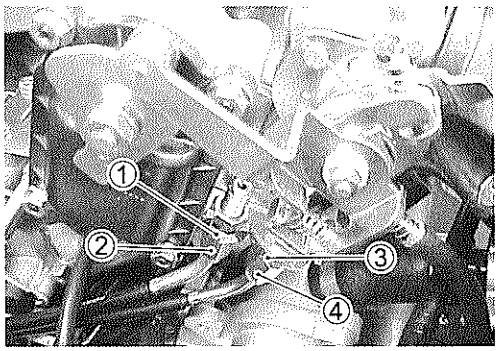

⚠ WARNING

After the adjustment is completed, cheack that handlebar movement does not raise the engine idle speed and that the throttle grip returns smoothly and automatically.

THROTTLE VALVE SYNCHRONIZATION

Inspect initially at 1 000 km (600 miles, 1 months) (E-33 only) and every 12 000 km (7 500 miles, 12 months).

(☞4-72)

EVAPORATIVE EMISSION CONTROL SYSTEM (E-33 only)

Inspect every 12 000 km (7 500 miles, 12 months).
Replace vapor hose every 4 years.

(☞9-8)

PAIR (AIR SUPPLY) SYSTEM

Inspect every 12 000 km (7 500 miles, 12 months).

(☞9-6)

CLUTCH

(CLUTCH HOSE AND CLUTCH FLUID)
Inspect every 6 000 km (4 000 miles, 6 months).
Replace hose every 4 years.
Replace fluid every 2 years.

CLUTCH FLUID LEVEL

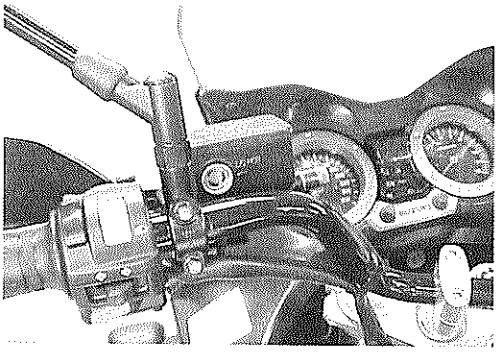

- Keep the motorcycle upright and place the handlebars straight.
- Check the clutch fluid level by observing the lower limit line on the clutch fluid reservoir.
- If the level is found to be lower than the lower mark, replenish with BRAKE FLUID that the following specification.

Specification and Classification: DOT 4

WARNING

The clutch system of this motorcycle is filled with a glycol-based brake fluid. Do not use or mix different types of fluid such as silicone-based or petroleum based. Do not use any brake fluid taken from old, used or unsealed containers. Never re-use brake fluid left over from the last servicing or stored for a long periods. Check the clutch hose and hose joints for cracks and oil leakage.

BLEEDING AIR FROM THE CLUTCH FLUID CIRCUIT

The clutch fluid circuit may be purged of air in the following manner.

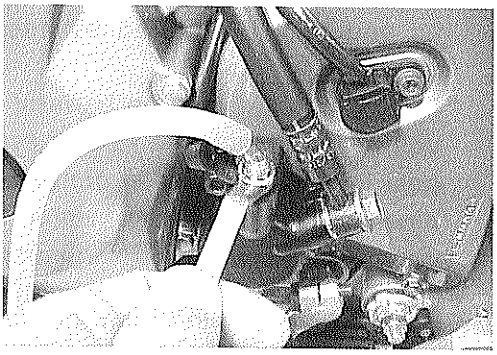

- Keep the motorcycle upright and place the handlebars straight.
- Fill up the master cylinder reservoir to the upper end of the inspection window. Replace the reservoir cap to prevent entry of dirt.
- Attach a pipe to the bleeder valve and insert the free end of the pipe into a receptacle.

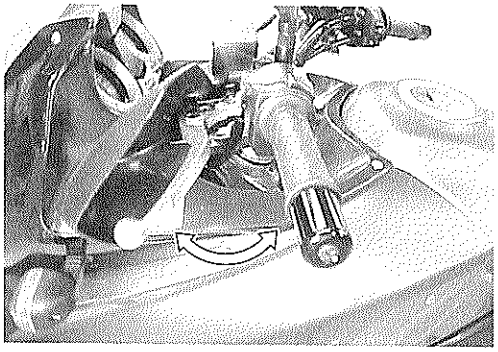

- Squeeze and release the clutch lever several times in rapid succession, and squeeze the lever fully without releasing it. Loosen the bleeder valve by turning it a quarter of a turn so that the fluid runs into the receptacle; this will remove the tension of the clutch lever causing it to touch the handlebar grip. Then, close the valve, pump and squeeze the lever, and open the valve. Repeat this process until the fluid flowing into the receptacle no longer contains air bubbles.
- Close the bleeder valve, and disconnect the pipe. Fill the reservoir with brake fluid to the upper end of the inspection window.

Air bleeder valve: 7.5 N·m (0.75 kg-m, 5.5 lb-ft)

COOLING SYSTEM

Inspect every 6 000 km (4 000 miles, 6 months).
Replace engine coolant every 2 years.

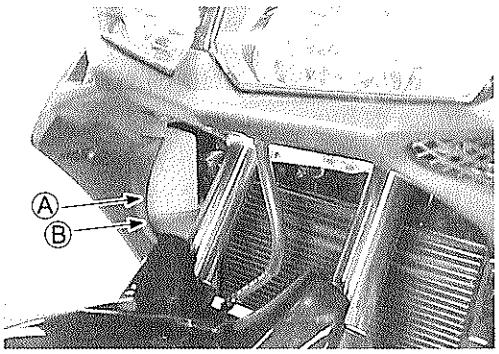

ENGINE COOLANT LEVEL CHECK

- Keep the motorcycle upright.
- Check the engine coolant level by observing the full and lower lines on the engine coolant reserve tank.
  Ⓐ Full line Ⓑ Lower line
- If the level is below the lower line, add engine coolant to the full line from the engine coolant reserve tank filler. To remove the filler cap, remove the right fuel tank side cover. (☞6-4)

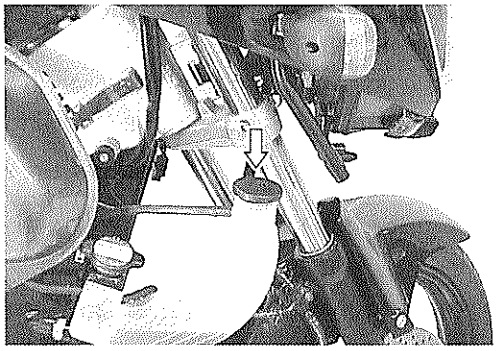

ENGINE COOLANT CHANGE

- Remove the right fuel tank side cover. (☞6-4)
- Remove the radiator cap ①.
- Drain engine coolant by removing the drain bolts Ⓐ and Ⓑ.

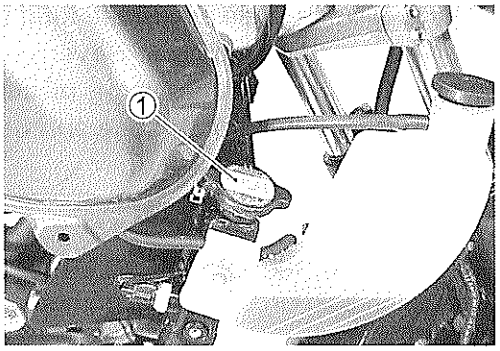

⚠ WARNING

*** Do not open the radiator cap when the engine is hot, as you may be injured by escaping hot liquid or vapor.**
*** Engine coolant may be harmful if swallowed or if it comes in contact with skin or eyes. If engine coolant gets into the eyes or in contact with the skin, flush thoroughly with plenty of water. If swallowed, induce vomiting and call physician immediately!**

- Flush the radiator with fresh water if necessary.
- Tighten the water drain bolts Ⓐ and Ⓑ to the specified torque.

Water drain bolt Ⓐ: 13 N·m (1.3 kgf-m, 9.5 lb-ft)
Ⓑ: 5.5 N·m (0.55 kgf-m, 4.0 lb-ft)

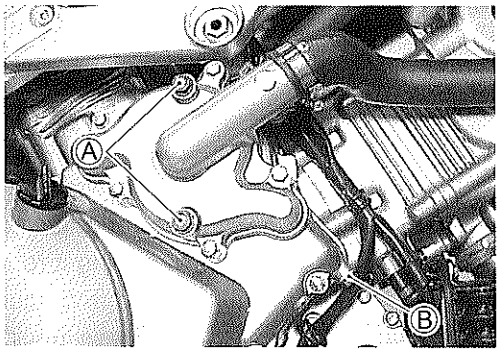

- Pour the specified engine coolant up to the radiator inlet.
- Bleed the air from the engine coolant circuit as following procedure.

NOTE:
For engine coolant information, refer to page 5-2.

AIR BLEEDING THE ENGINE COOLANT CIRCUIT

- Bleed air from the air bleeder bolt ①.
- Tighten the air bleeder bolt ① to the specified torque.

Air bleeder bolt: 13 N·m (1.3 kgf-m, 9.5 lb-ft)

- Add engine coolant up to the radiator inlet.
- Support the motorcycle upright.

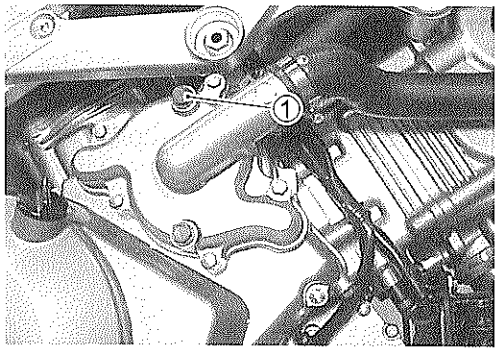

- Lightly tap the thermostat case ② and slowly swing the motorcycle, right and left, to bleed the air trapped in the case ②.
- Add engine coolant up to the radiator inlet.

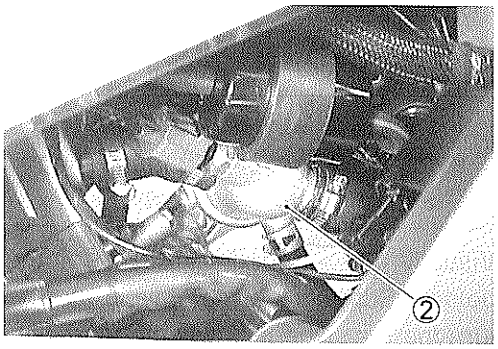

- Start up the engine and bleed air from the radiator inlet completely.
- Add engine coolant up to the radiator inlet.
- Repeat the above procedure until bleed no air from the radiator inlet.

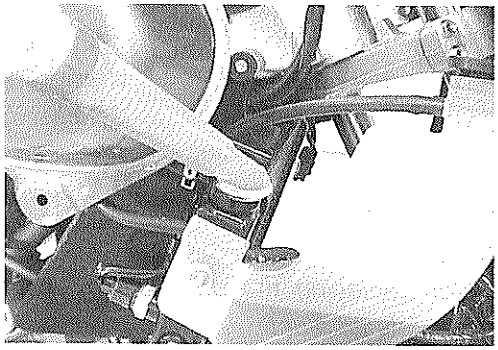

- Close the radiator cap ③ securely.
- After warming up and cooling down the engine several times, add the engine coolant up to the full level of the reserve tank.

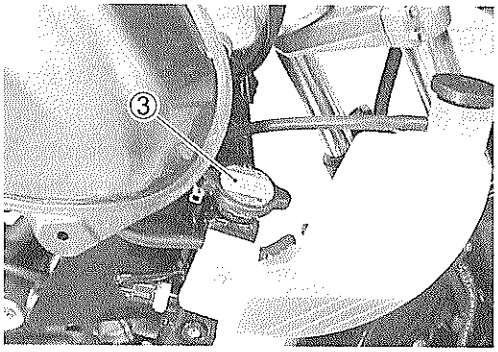

CAUTION

> **Repeat the above procedure several times and make sure that the radiator is filled with engine coolant up to the reserve tank full level.**

LLC Engine coolant capacity

Reverse tank side : 250 ml (0.3/0.2 US/Imp qt)
Engine side : 1 950 ml (2.1/1.7 US/Imp qt)

RADIATOR HOSES

Check to see the radiator hoses for crack, damage or engine coolant leakage.
If any defects are found, replace the radiator hoses with new ones.

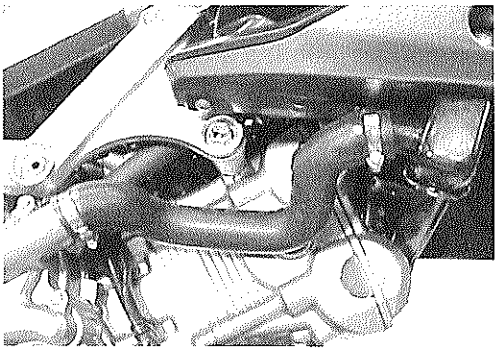

DRIVE CHAIN

Inspect initially at 1 000 km (600 miles, 1 month) and every 6 000 km (4 000 miles, 6 months) thereafter.
Clean and Lubricate every 1 000 km (600 miles).

Visually check the drive chain for the possible defects listed below. (Support the motorcycle by a jack and a wooden block, turn the rear wheel slowly by hand with the transmission shifted to Neutral.)

* Loose pins
* Damaged rollers
* Dry or rusted links
* Kinked or binding links
* Excessive wear
* Improper chain adjustment
* Missing O-ring seals

If any defects are found, the drive chain must be replaced.

NOTE:
When replacing the drive chain, replace the drive chain and sprockets as a set.

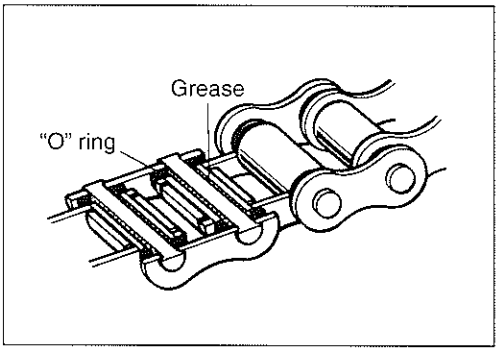

CHECKING

- Remove the axle cotter pin. (For E-03, 28 and 33 models)
- Loosen the axle nut ①.
- Loosen the chain adjuster locknuts ②.
- Tense the drive chain fully by turning both chain adjusters ③.

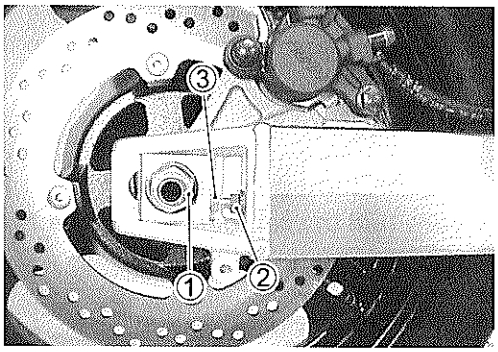

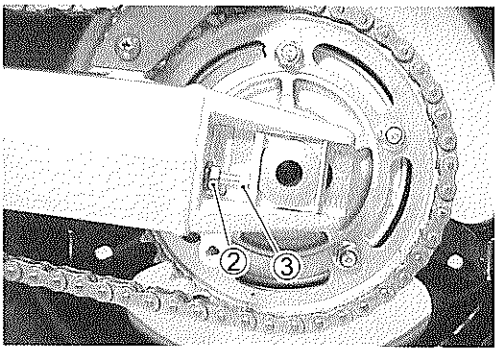

- Count out 21 pins (20 pitches) on the chain and measure the distance between the two points. If the distance exceeds the service limit, the chain must be replaced.

DATA Drive chain 20-pitch length
Service Limit: 319.4 mm (12.6 in)

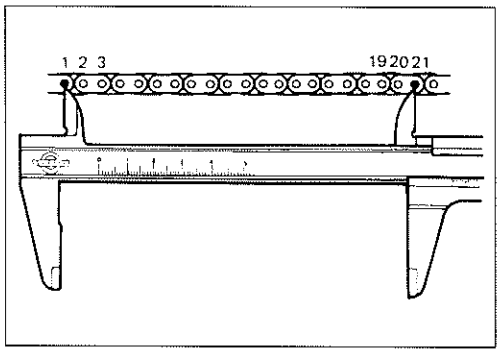

ADJUSTING

- Loosen or tighten both chain adjusters ① until the chain has 20 – 30 mm (0.8 – 1.2 in) of slack in the middle between engine and rear sprockets. The ends of left and right spacers must be at the same position on the scales Ⓐ to ensure that the front and rear wheels are correctly aligned.
- Place the motorcycle on its side-stand for accurate adjustment.
- After adjusting the drive chain, tighten the axle nut ② to the specified torque.
- Recheck the drive chain slack after tightening the axle nut ①.
- Tighten both chain adjuster locknuts ③ securely.

Rear axle nut: 100 N·m (10.0 kgf-m, 72.5 lb-ft)

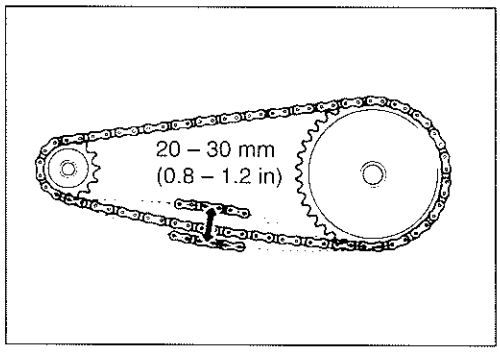

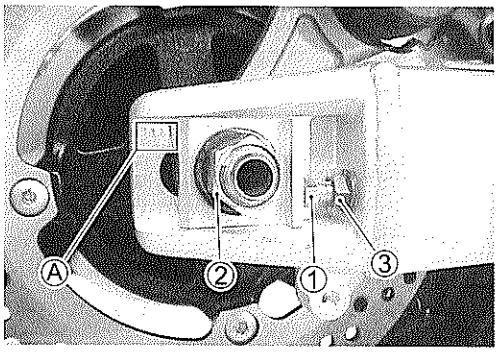

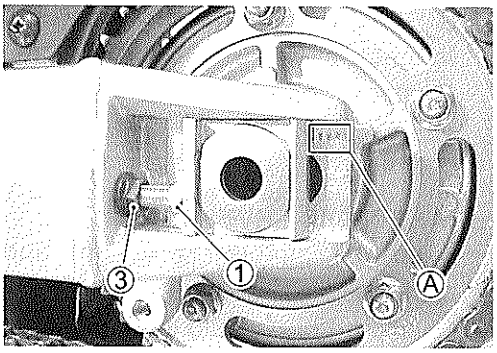

CLEANING AND LUBRICATING

- Wash the chain with kerosene. If the chain tends to rust quickly, the intervals must be shortened.

CAUTION

Do not use trichlene, gasoline or any similar fluids: These fluids have too great a dissolving power for this chain and, what is more important, they can damage the "O"-rings (or seals) confining the grease in the bush to pin clearance. Remember, high durability comes from the presence of grease in that clearance.

- After washing and drying the chain, oil it with a heavy-weight motor oil.

CAUTION

*** Do not use any oil sold commercially as "drive chain oil". Such oil can damage the "O"-rings (or seals).**
*** The standard drive chain is RK525SMOZ7. SUZUKI recommends that this standard drive chain should be used for the replacement.**

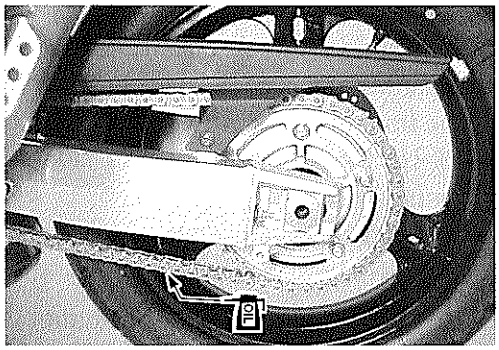

BRAKE

(BRAKE)
Inspect initially at 1 000 km (600 miles, 1 month) and every 6 000 km (4 000 miles, 6 months) thereafter.

(BRAKE HOSE AND BRAKE FLUID)
Inspect every 6 000 km (4 000 miles, 6 months). Replace hoses every 4 years. Replace fluid every 2 years.

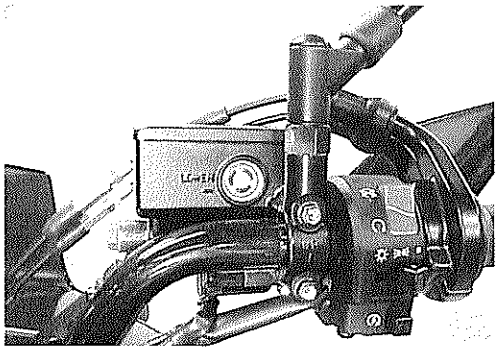

BRAKE FLUID LEVEL CHECK

- Keep the motorcycle upright and place the handlebars straight.
- Check the brake fluid level by observing the lower limit lines on the front and rear brake fluid reservoirs.
- When the level is below the lower limit line, replenish with brake fluid that meets the following specification.

Specification and Classification: DOT 4

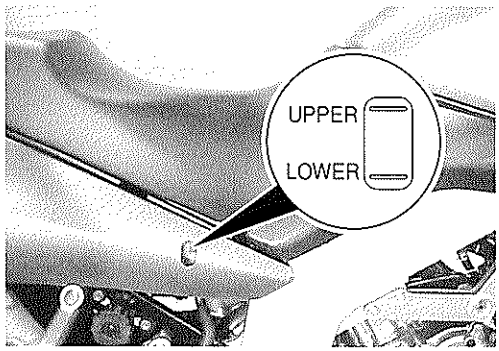

⚠ WARNING

The brake system of this motorcycle is filled with a glycol-based brake fluid. Do not use or mix different types of fluid such as silicone-based or petroleum-based. Do not use any brake fluid taken from old, used or unsealed containers. Never re-use brake fluid left over from the last servicing or stored for a long period.

⚠ WARNING

Brake fluid, if it leaks, will interfere with safe running and immediately discolor painted surfaces. Check the brake hoses and hose joints for cracks and oil leakage before riding.

- Remove the brake caliper. (Front)

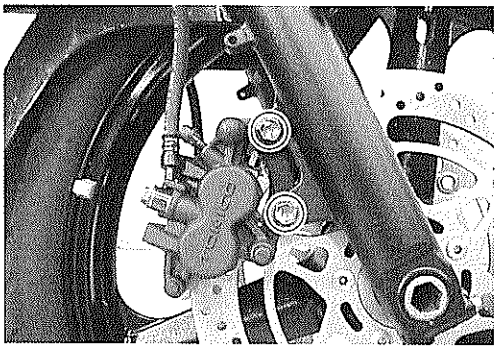

BRAKE PADS

The extent of brake pad wear can be checked by observing the grooved limit Ⓐ on the pad. When the wear exceeds the grooved limit, replace the pads with new ones. (☞6-57, 67)

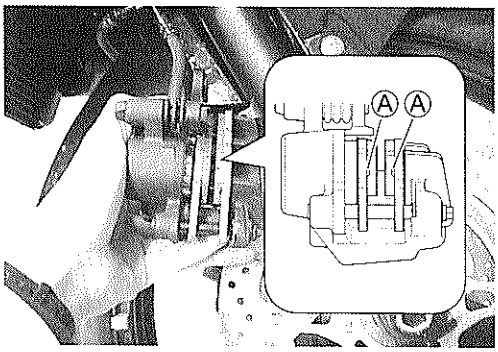

CAUTION

Replace the brake pad as a set, otherwise braking performance will be adversely affected.

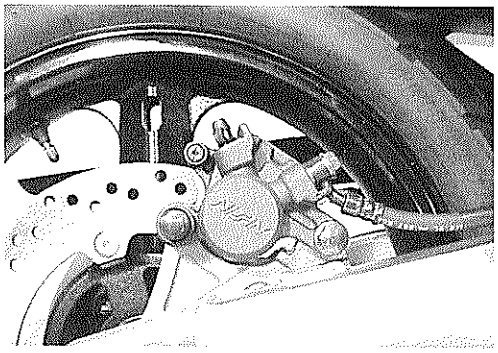

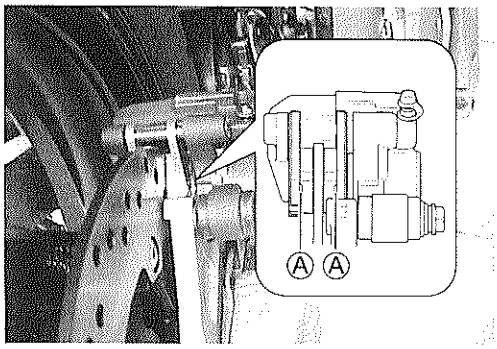

BRAKE PEDAL HEIGHT

- Loosen the locknut ① and rotate the push rod ② to locate brake pedal 20 – 30 mm (0.8 – 1.2 in) Ⓐ below the top face of the footrest.
- Retighten the locknut ① to secure the push rod ② in the proper position.

DATA Brake pedal height Ⓐ: 20 – 30 mm (0.8 – 1.2 in)

Rear brake master cylinder rod locknut ①:
18 N·m (1.8 kgf-m, 13.0 lb-ft)

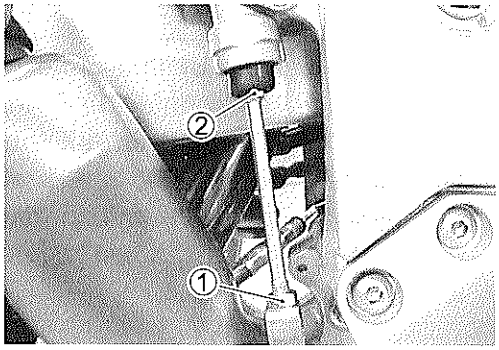

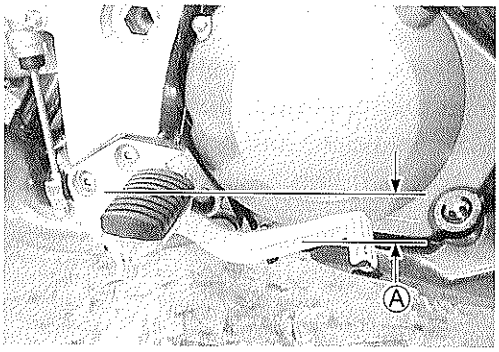

BRAKE LIGHT SWITCH

Adjust the rear brake light switch so that the brake light will come on just before pressure is felt when the brake pedal is depressed.

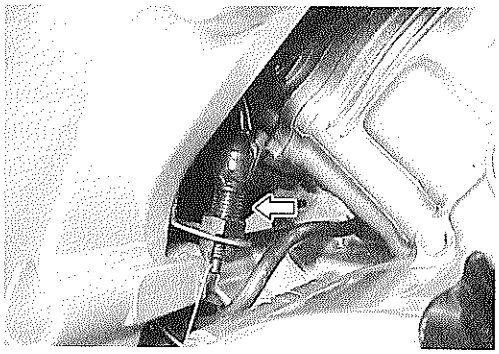

AIR BLEEDING THE BRAKE FLUID CIRCUIT

Air trapped in the fluid circuit acts like a cushion to absorb a large proportion of the pressure developed by the master cylinder and thus interferes with the full braking performance of the brake caliper. The presence of air is indicated by "sponginess" of the brake lever and also by lack of braking force. Considering the danger to which such trapped air exposes the machine and rider, it is essential that, after remounting the brake and restoring the brake system to the normal condition, the brake fluid circuit be purged of air in the following manner:

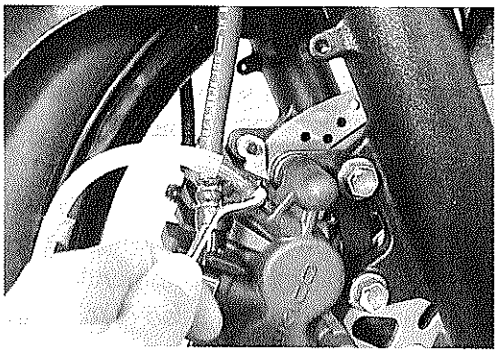

- Fill up the master cylinder reservoir to the "UPPER" line. Place the reservoir cap to prevent entry of dirt.
- Attach a pipe to the air bleeder valve, and insert the free end of the pipe into a receptacle.

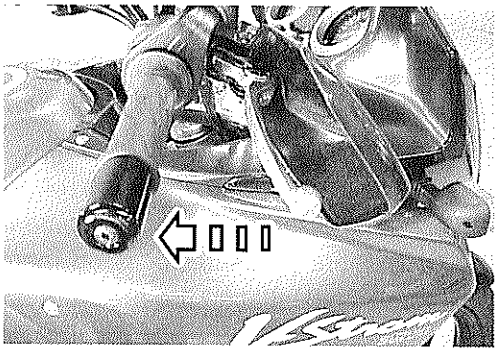

Air bleeder valve: 7.5 N·m (0.75 kgf-m, 5.5 lb-ft)

- Front brake: Bleed the air from the air bleeder valve.
- Squeeze and release the brake lever several times in rapid succession and squeeze the lever fully without releasing it. Loosen the bleeder valve by turning it a quarter of a turn so that the brake fluid runs into the receptacle; this will remove the tension of the brake lever causing it to touch the handlebar grip. Then, close the valve, pump and squeeze the lever, and open the valve. Repeat this process until the fluid flowing into the receptacle no longer contains air bubbles.

NOTE:
Replenish the brake fluid in the reservoir as necessary while bleeding the brake system. Make sure that there is always some fluid visible in the reservoir.

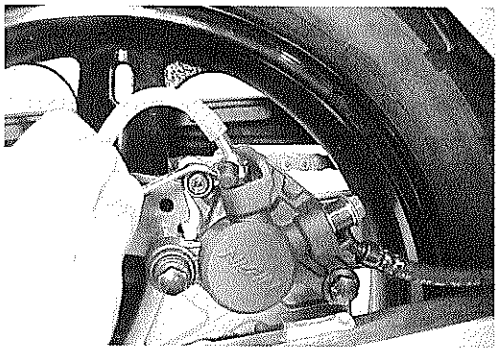

- Close the bleeder valve, and disconnect the pipe. Fill the reservoir with brake fluid to the "UPPER" line.

CAUTION

Handle brake fluid with care: the fluid reacts chemically with paint, plastics, rubber materials and so on.

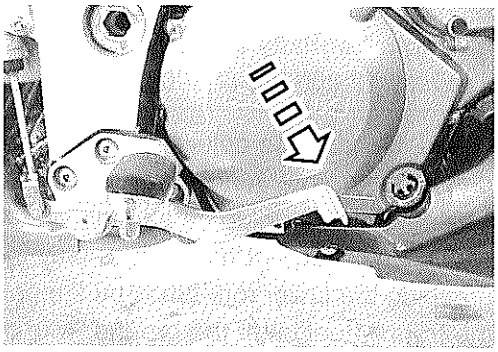

- The only difference between bleeding the front and rear brakes is that the rear master cylinder is actuated by a pedal.

TIRE

Inspect every 6 000 km (4 000 miles, 6 months).

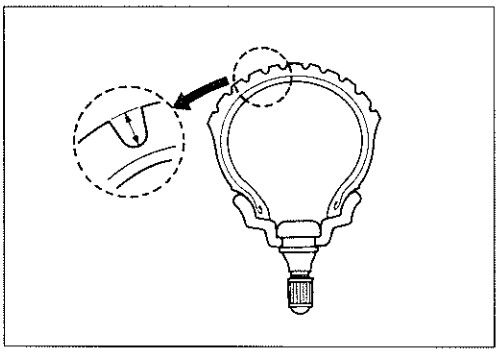

TIRE TREAD CONDITION

Operating the motorcycle with excessively worn tires will decrease riding stability and consequently invite a dangerous situation. It is highly recommended to replace a tire when the remaining depth of tire tread reaches the following specification.

TOOL 09900-20805: Tire depth gauge

DATA Tire tread depth
Service Limit (FRONT) : 1.6 mm (0.06 in)
(REAR) : 2.0 mm (0.08 in)

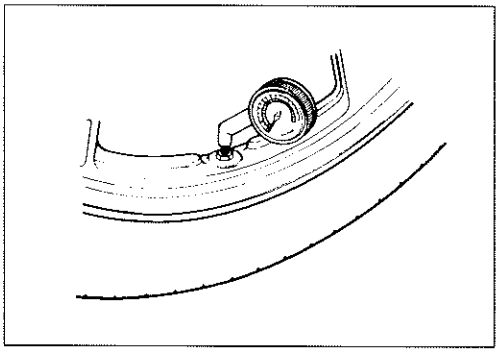

TIRE PRESSURE

If the tire pressure is too high or too low, steering will be adversely affected and tire wear increased. Therefore, maintain the correct tire pressure for good roadability or shorter tire life will result. Cold inflation tire pressure is as follows.

COLD INFLATION TIRE PRESSURE	SOLO RINDING			DUAL RIDING		
	kPa	kgf/cm²	psi	kPa	kgf/cm²	psi
FRONT	250	2.50	36	250	2.50	36
REAR	250	2.50	36	280	2.80	41

CAUTION

The standard tire fitted on this motorcycle is 110/80 R19M/C (59H) for front and 150/70 R17M/C (69H) for rear. The use of tires other than those specified may cause instability. It is highly recommended to use a SUZUKI Genuine Tire.

TIRE TYPE

BRIDGESTONE (Front : TW101F Rear : TW152F)

STEERING

Inspect initially at 1 000 km (600 miles, 1 month) and every 12 000 km (7 500 miles, 12 months) thereafter.

Steering should be adjusted properly for smooth turning of handlebars and safe running. Overtight steering prevents smooth turning of the handlebars and too loose steering will cause poor stability. Check that there is no play in the steering stem while grasping the lower fork tubes by supporting the machine so that the front wheel is off the ground, with the wheel straight ahead, and pull forward. If play is found, perform steering bearing adjustment as described in page 6-32 of this manual.

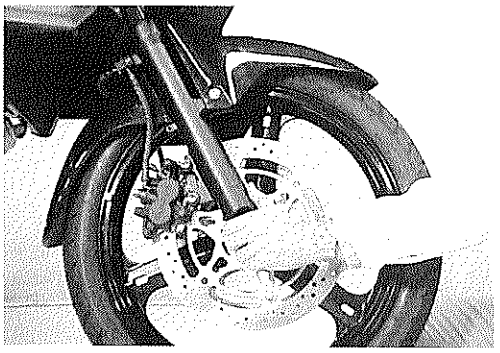

FRONT FORK

Inspect every 12 000 km (7 500 miles, 12 months).

Inspect the front forks for oil leakage, scoring or scratches on the outer surface of the inner tubes. Replace any defective parts, if necessary. (☞6-15)

REAR SUSPENSION

Inspect every 12 000 km (7 500 miles, 12 months).

Inspect the rotary damper for oil leakage and the spring unit for damage. Check that there is no play in the swingarm assembly. Replace any defective parts, if necessary. (☞6-43)

EXHAUST PIPE BOLT

Tighten initially at 1 000 km (600 miles, 1 month) and every 12 000 km (7 500 miles, 12 months) thereafter.

- Tighten the exhaust pipe bolts and muffler mounting bolts to the specified torque.

Muffler mounting bolt /nut Ⓐ: 23 N·m (2.3 kgf-m, 16.5 lb-ft)
Exhaust pipe bolt ⒷⒸ: 23 N·m (2.3 kgf-m, 16.5 lb-ft)

NOTE:
When installing the muffler protectors, apply a small quantity of THREAD LOCK "1342" to its mounting bolts.

99000-32050: THREAD LOCK "1342"

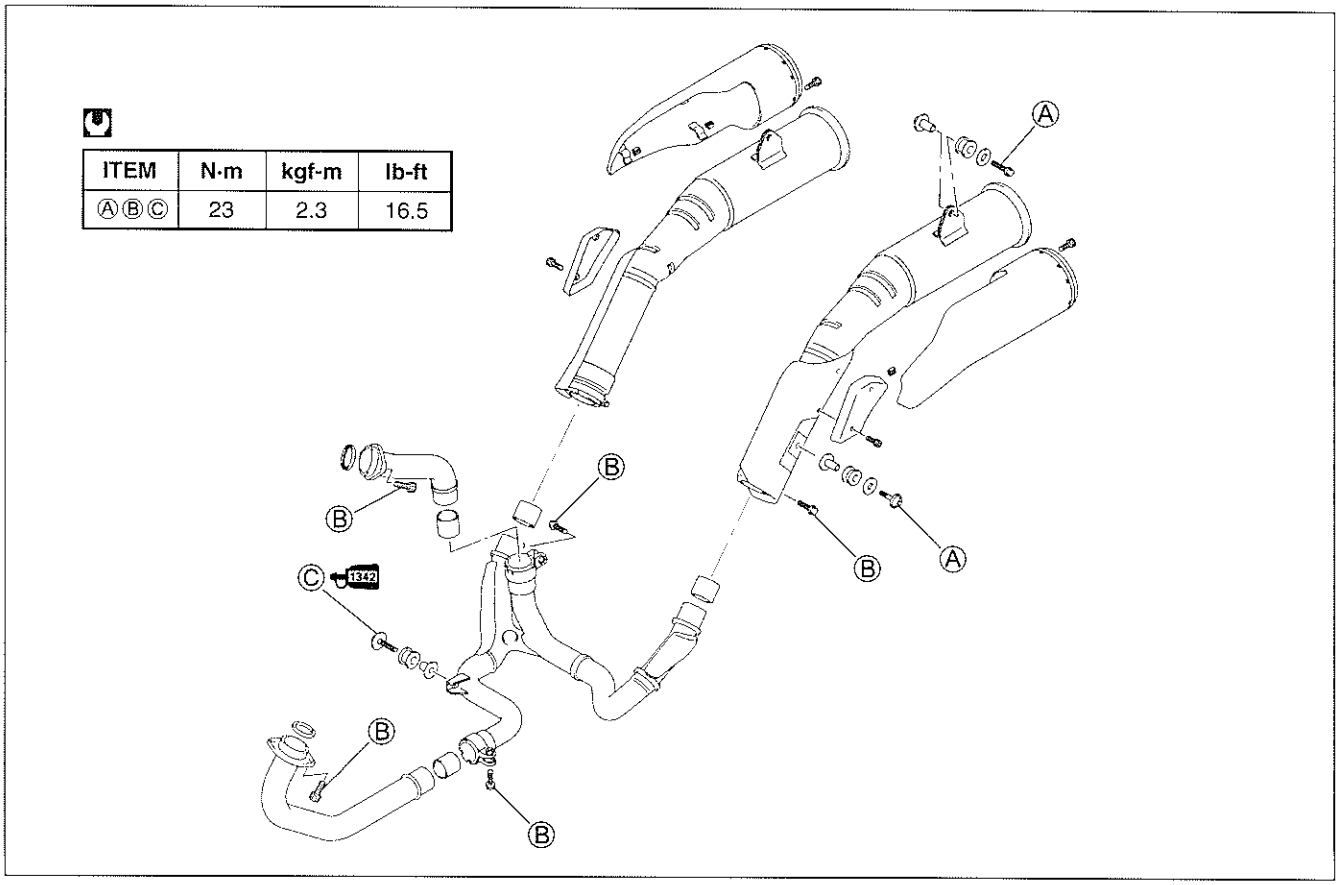

ITEM	N·m	kgf-m	lb-ft
ⒶⒷⒸ	23	2.3	16.5

CHASSIS BOLT AND NUT

Tighten initially at 1 000 km (600 miles, 1 month) and every 6 000 km (4 000 miles, 6 months) thereafter.

Check that all chassis bolts and nuts are tightened to their specified torque. (Refer to page 2-29 for the locations of the following nuts and bolts on the motorcycle.)

ITEM	N·m	kgf-m	lb-ft
① Steering stem head nut	90	9.0	65.0
② Steering stem locknut	80	8.0	58.0
③ Front fork upper clamp bolt	23	2.3	16.5
④ Front fork lower clamp bolt	23	2.3	16.5
⑤ Front axle	100	10.0	72.5
⑥ Front axle pinch bolt	23	2.3	16.5
⑦ Handlebar holder bolt	23	2.3	16.5
⑧ Handlebar holder set nut	45	4.5	32.5
⑨ Front brake master cylinder mounting bolt	10	1.0	7.0
⑩ Front brake caliper mounting bolt	39	3.9	28.0
⑪ Brake hose union bolt	23	2.3	16.5
⑫ Clutch master cylinder mounting bolt	10	1.0	7.0
⑬ Clutch hose union bolt	23	2.3	16.5
⑭ Air bleeder valve	7.5	0.75	5.5
⑮ Brake disc bolt (Front & Rear)	23	2.3	16.5
⑯ Rear brake caliper mounting bolt	23	2.3	16.5
⑰ Rear brake master cylinder mounting bolt	10	1.0	7.0
⑱ Rear brake master cylinder rod locknut	18	1.8	13.0
⑲ Front footrest bracket mounting bolt	26	2.6	19.0
⑳ Swingarm pivot nut	100	10.0	72.5
㉑ Swingarm pivot shaft locknut	90	9.0	65.0
㉒ Rear shock absorber mounting nut (Upper & Lower)	50	5.0	36.0
㉓ Cusion lever mounting nut	78	7.8	56.5
㉔ Cusion lever rod mounting nut	78	7.8	56.5
㉕ Rear axle nut	100	10.0	72.5
㉖ Seat rail bolt	55	5.5	40.0

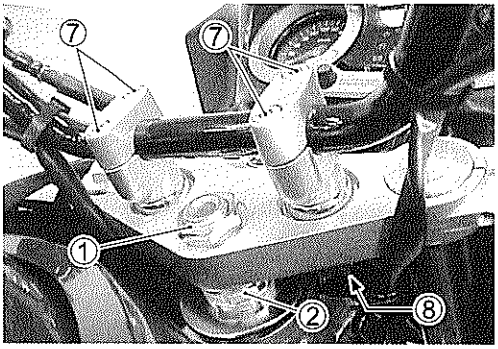
7
7
1
2
8

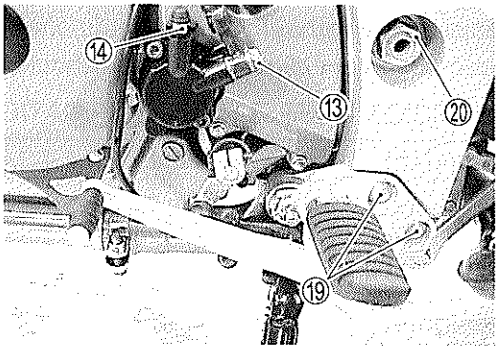
14
13
20
19

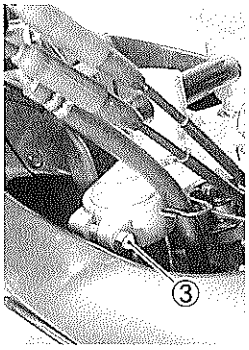
3

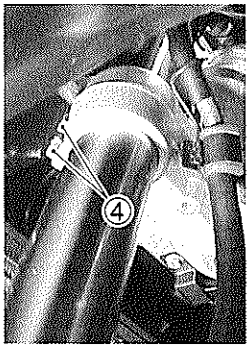
4

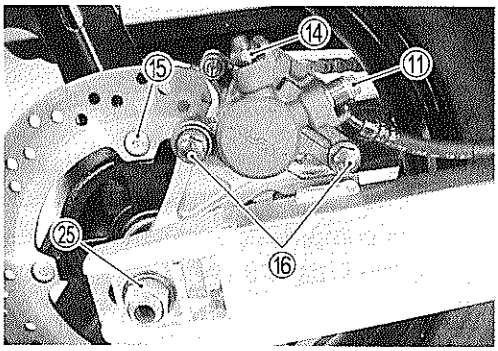
14
15
11
25
16

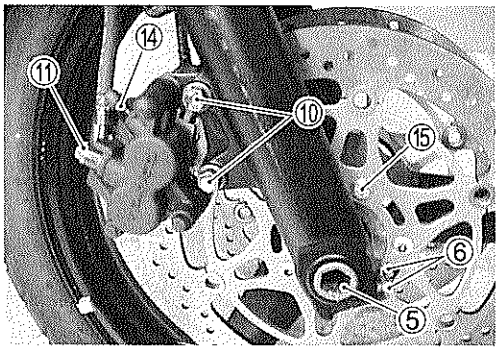
14
11
10
15
6
5

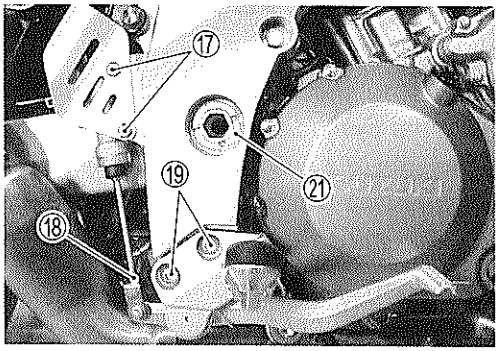
17
21
19
18

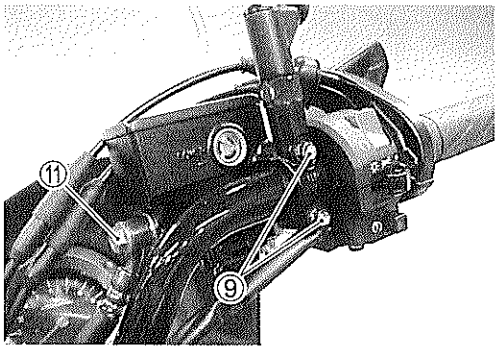
11
9

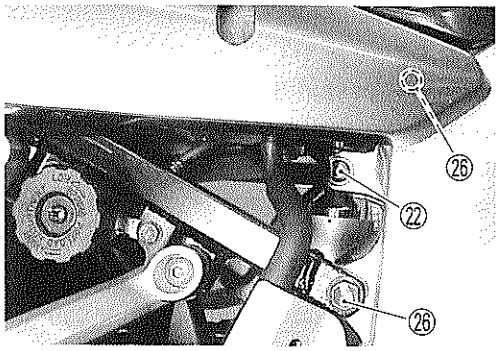
26
22
26

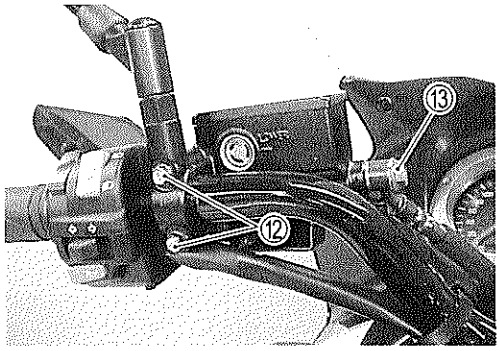
13
12

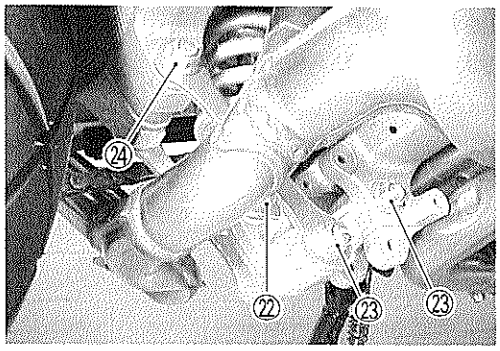
24
22
23
23

COMPRESSION PRESSURE CHECK

The compression of a cylinder is a good indicator of its internal condition.
The decision to overhaul the cylinder is often based on the results of a compression test. Periodic maintenance records kept at your dealership should include compression readings for each maintenance service.

COMPRESSION PRESSURE SPECIFICATION (Automatic de-comp. actuated)

Standard	Limit	Difference
1 000 – 1 400 kPa (10 – 14 kgf/cm² 142 – 199 psi)	800 kPa (8 kgf/cm² 114 psi)	200 kPa (2 kgf/cm² 28 psi)

Low compression pressure can indicate any of the following conditions:
* Worn-down piston or piston rings
* Piston rings stuck in grooves
* Poor seating of valves
* Ruptured or otherwise defective cylinder head gasket

Overhaul the engine in the following cases:
* Compression pressure in one of the cylinders is less than 800 kPa (8 kgf/cm², 114 psi).
* Difference in compression pressure between two cylinders is more than 200 kPa (2 kgf/cm², 28 psi).
* All compression pressure are below 1 000 kPa (10 kgf/cm², 142 psi) even when they measure more than 800 kPa (8 kgf/cm², 114 psi).

COMPRESSION TEST PROCEDURE

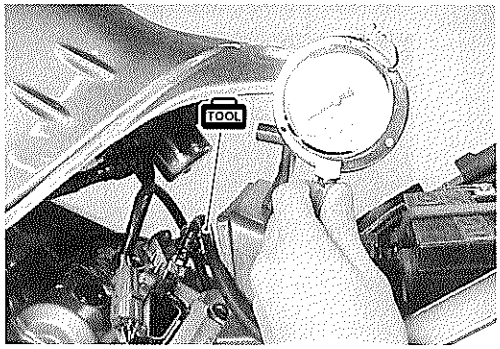

NOTE:
* *Before testing the engine for compression pressure, make sure that the cylinder head bolts are tightened to the specified torque values and valves are properly adjusted.*
* *Have the engine warmed up by idling before testing.*
* *Be sure that the battery used is in fully-charged condition.*

Remove the parts concerned and test the compression pressure in the following manner.

- Remove the radiator. (☞5-4)
- Remove all the spark plugs. (☞2-6)
- Fit the compression gauge in one of the plug holes, while taking care of the tight connection.
- Keep the throttle grip in full-open position.
- While cranking the engine a few seconds with the starter, and record the maximum gauge reading as the compression of that cylinder.
- Repeat this procedure with an other cylinder.

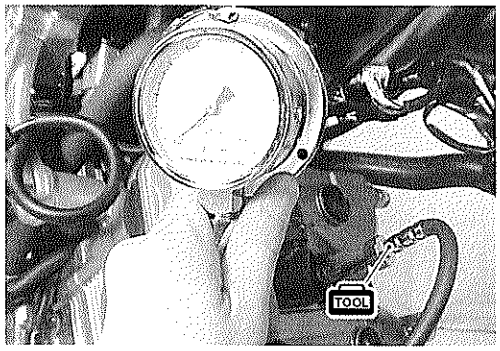

TOOL 09915-64510: Compression gauge
09913-10750: Adaptor

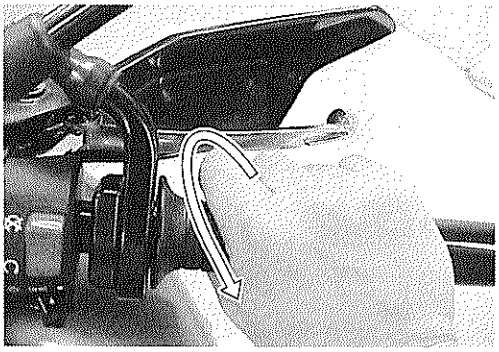

OIL PRESSURE CHECK

Check periodically the oil pressure in the engine to judge roughly the condition of the moving parts.

OIL PRESSURE SPECIFICATION

Above 400 kPa (4.0 kgf/cm², 57 psi) **Below 700 kPa (7.0 kgf/cm², 100 psi)**	**at 3 000 r/min., Oil temp. at 60°C (140°F)**

If the oil pressure is lower or higher than the specification, the following causes may be considered.

LOW OIL PRESSURE

* Clogged oil filter
* Oil leakage from the oil passage way
* Damaged O-ring
* Defective oil pump
* Combination of the above items

HIGH OIL PRESSURE

* Used of high viscosity engine oil
* Clogged oil passage way
* Combination of the above items

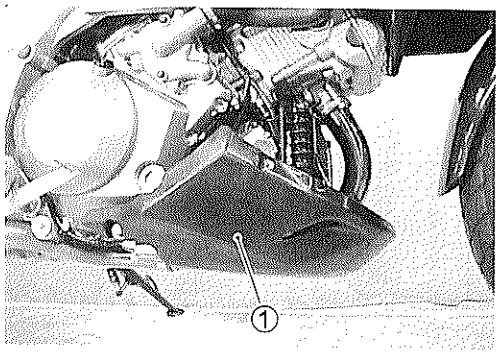

OIL PRESSURE TEST PROCEDURE

Start the engine and check if the oil pressure indicator light is turned on. If it keeps on lighting, check the oil pressure indicator light circuit. If it is in good condition, check the oil pressure in the following manner.

- Remove the engine under cover ①.
- Remove the main oil gallery plug ②.
- Install the oil pressure gauge with attachment in the position shown in the figure.

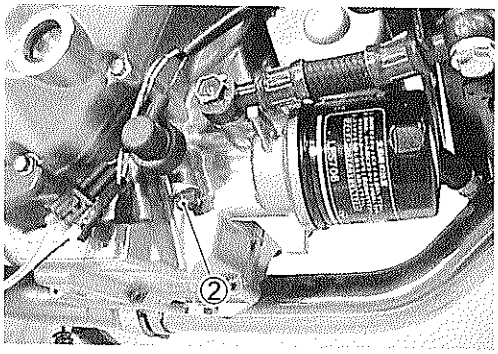

- Warm up the engine as follows:
  Summer 10 min. at 2 000 r/min.
  Winter 20 min. at 2 000 r/min.
- After warming up, increase the engine speed to 3 000 r/min. (with the engine tachometer), and read the oil pressure gauge.

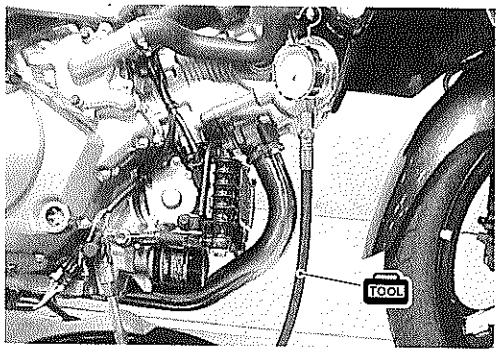

TOOL 09915-72410: Oil pressure gauge attachment
09915-74521: Oil pressure gauge hose
09915-74532: Oil pressure gauge attachment
09915-77331: Meter (for high pressure)

Oil gallery plug [M 8]: 18 N·m (1.8 kgf-m, 13.0 lb-ft)

ENGINE

CONTENTS

ENGINE COMPONENTS REMOVABLE WITH ENGINE IN PLACE ...3- 2
ENGINE REMOVAL AND INSTALLATION 3- 3
ENGINE REMOVAL 3- 3
ENGINE INSTALLATION 3-12
ENGINE DISASSEMBLY 3-19
ENGINE TOP SIDE 3-19
ENGINE BOTTOM SIDE 3-25
ENGINE COMPONENTS INSPECTION AND SERVICING 3-34
CYLINDER HEAD COVER 3-34
CAMSHAFT/CYLINDER HEAD 3-35
CYLINDER/PISTON INSPECTION 3-47
CONROD/CRANKSHAFT 3-50
CLUTCH 3-54
TRANSMISSION 3-56
GEARSHIFT FORK 3-62
PRIMARY DRIVE GEAR 3-63
STARTER TORQUE LIMITER 3-64
STARTER CLUTCH 3-65
GEARSHIFT 3-66
CRANKCASE 3-66
CRANKCASE-CRANKSHAFT BEARING 3-71
GENERATOR COVER 3-77
CLUTCH COVER 3-77
GEARSHIFT COVER 3-77
ENGINE REASSEMBLY 3-78
ENGINE BOTTOM SIDE 3-78
ENGINE TOP SIDE 3-92

ENGINE COMPONENTS REMOVABLE WITH ENGINE IN PLACE

The parts listed below can be removed and reinstalled without removing the engine from the frame. Refer to the page listed in this section for removal and reinstallation instructions.

ENGINE LEFT SIDE

PARTS	REMOVAL	INSTALLATION
Generator rotor	3-31	3-82
Gearshift	3-31	3-80

ENGINE RIGHT SIDE

PARTS	REMOVAL	INSTALLATION
Clutch cover	3-26	3-89
Clutch	3-26	3-86
Oil pump driven gear	3-29	3-86
Primary drive gear	3-30	3-83
Cam drive idle gear/sprocket	3-29	3-84
Gear position switch	3-28	3-85
Oil sump filter	3-29	3-85
Oil pressure switch	3-67	3-67
Oil jet	3-67	3-68, 94

ENGINE CENTER

PARTS	REMOVAL	INSTALLATION
Cylinder head cover	3-19, 22	3-111
Camshaft	3-20, 23	3-105
Cylinder head (Front)	3-20	3-95
Cylinder (Front)	3-21	3-94
Piston (Front)	3-22	3-92
Cam chain tension adjuster	3-20, 23	3-101, 104
Oil filter	3-25	3-92
Starter motor	3-21	3-112

ENGINE REMOVAL AND INSTALLATION

ENGINE REMOVAL

Before taking the engine out of the frame, wash the engine using a steam cleaner. Engine removal is sequentially explained in the following steps. Reinstall the engine by reversing the removal procedure.

- Drain engine oil. (☞2-13)
- Drain engine coolant. (☞2-18)
- Remove the seat. (☞6-4)

- Disconnect the battery ⊖ lead wire.

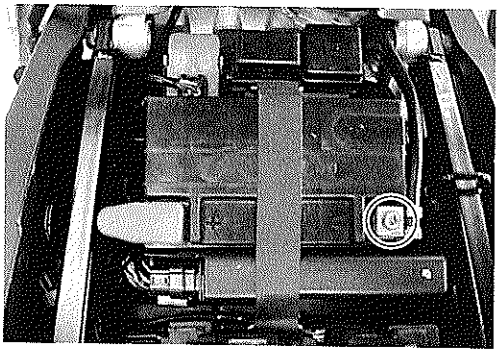

- Remove the engine under cover ①.

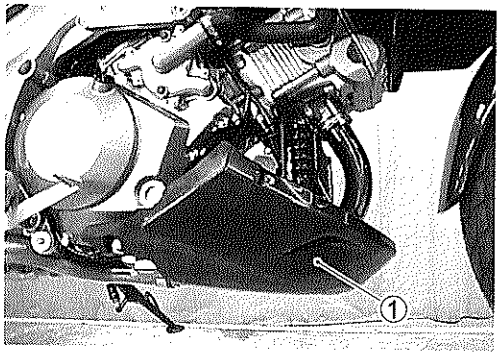

- Remove the fuel tank side covers ②, cowlings ③ and inner cowling. (☞6-6)

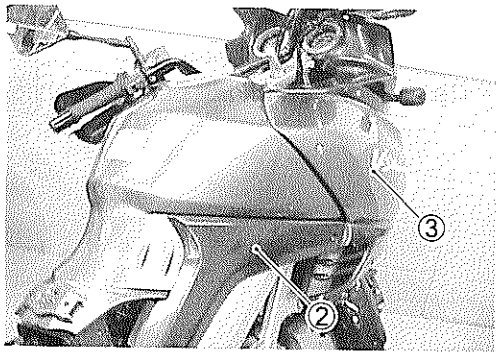

- Remove the radiator and water hoses.

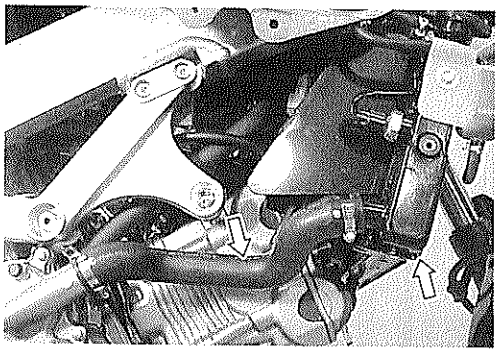

- Remove the fuel tank ①.

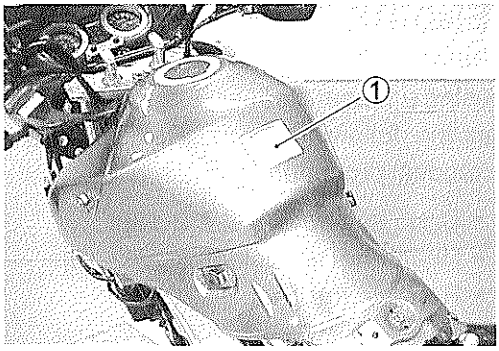

- Remove the air cleaner.

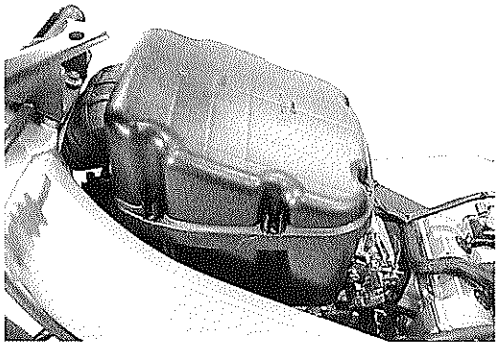

- Remove the throttle body.

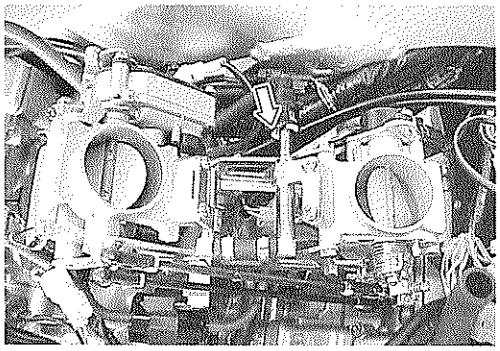

- Remove the spark plug caps.
- Remove the camshaft position sensor lead wire coupler ①.

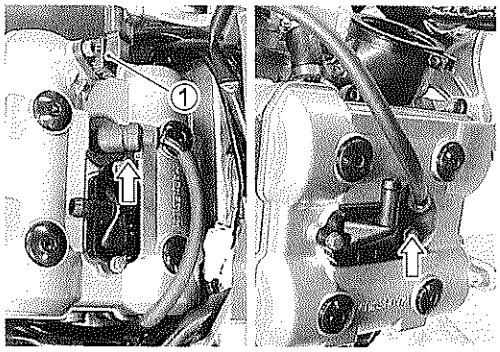

- Disconnect the gear position switch lead wire coupler ②.

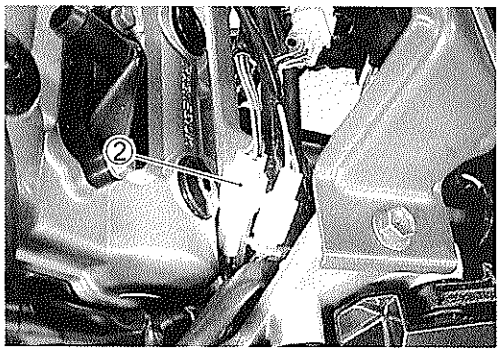

- Disconnect the generator lead wire coupler ① and signal generator lead wire coupler ② by removing the screw Ⓐ.

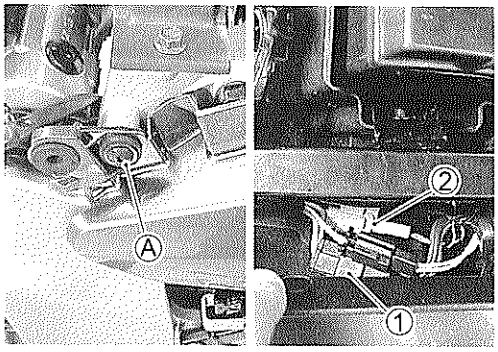

- Remove the gearshift lever link.

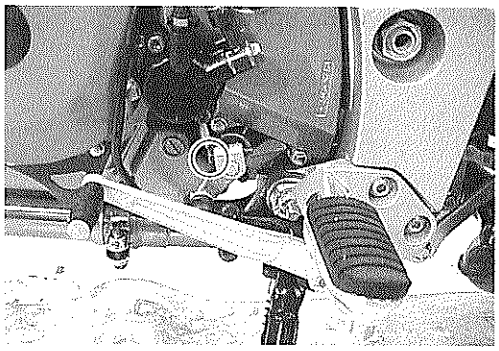

- Remove the engine coolant temperature sensor lead wire coupler ③.

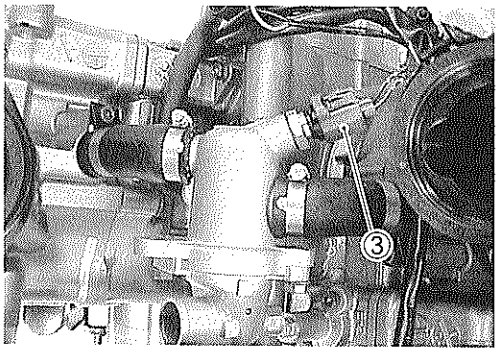

- Bind the clutch lever with a rubber band to prevent the clutch release cylinder piston from coming out.

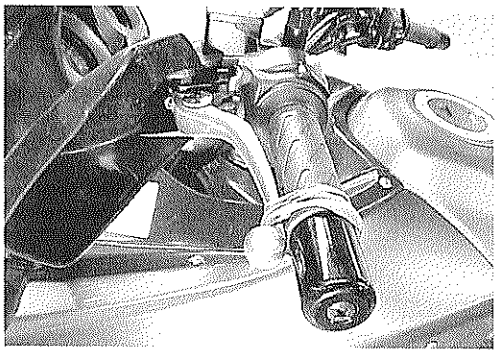

- Remove the clutch release cylinder ④.

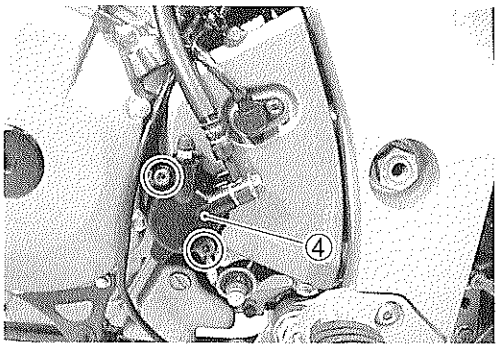

- Remove the push rod ①.
- Remove the engine sprocket cover ②.

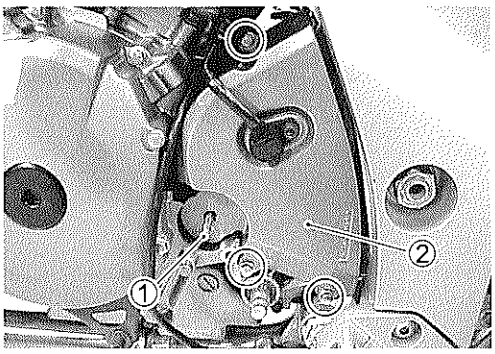

- Remove the speed sensor ③.

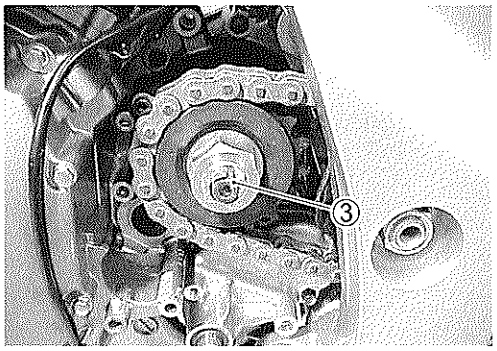

- Remove the engine sprocket nut and washer while depressing the brake pedal.

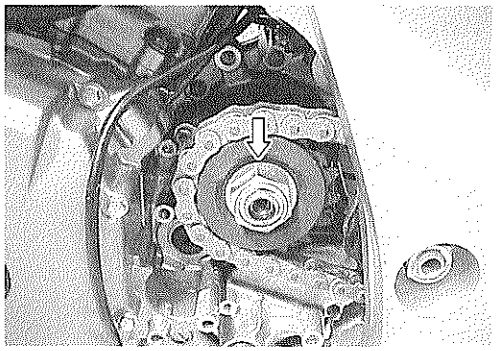

- Remove the cotter pin. (For E-03, 28, 33)
- Loosen the rear axle nut ④.
- Loosen the chain adjusters ⑤ by loosening the lock nuts ⑥.

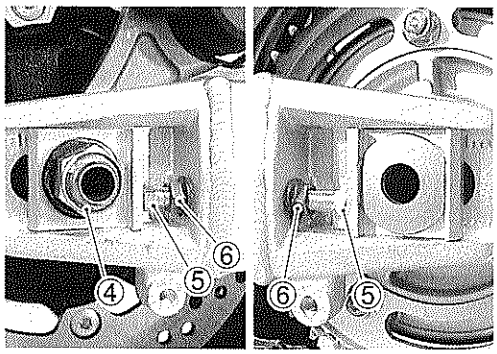

- Remove the engine sprocket ⑦.

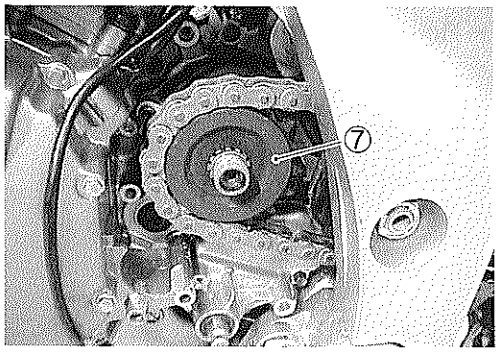

- Disconnect the engine ground lead wire ①.

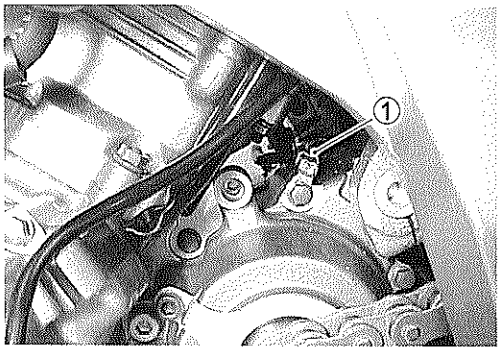

- Disconnect the O_2 sensor lead wire couplers ②, ③.

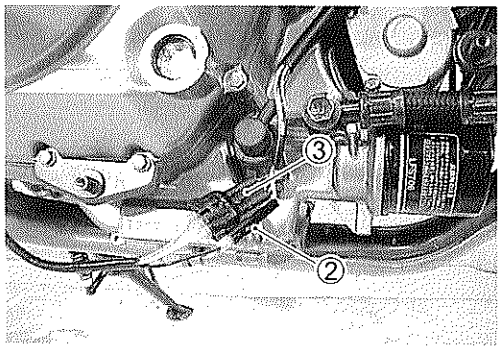

- Remove the mufflers. (L & R)

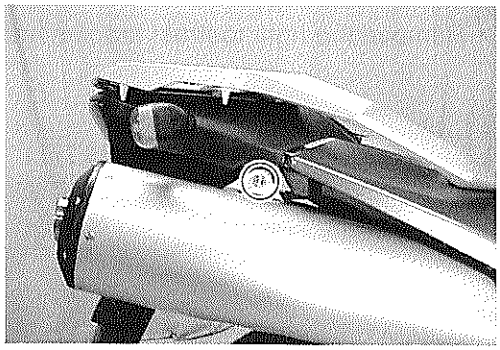

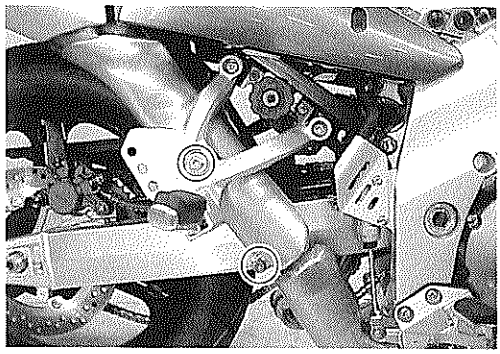

- Loosen the front exhaust pipe mounting bolts.

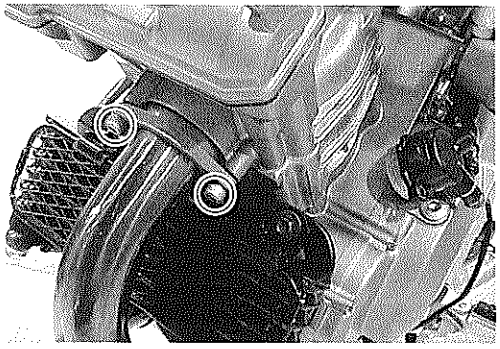

- Remove the front exhaust pipe.

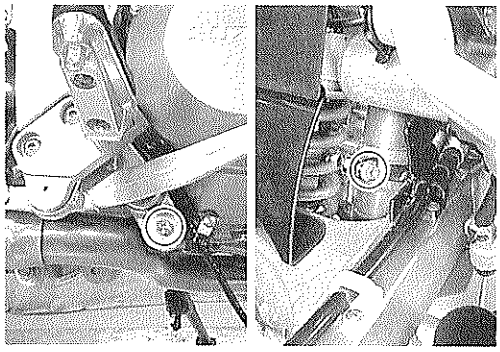

- Remove the mud guard ①.
- Remove the rear exhaust pipe.

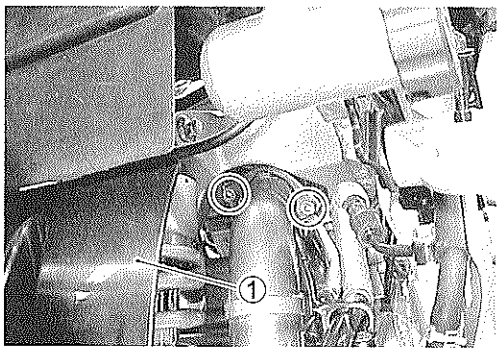

- Remove the right footrest bracket and brake pedal.

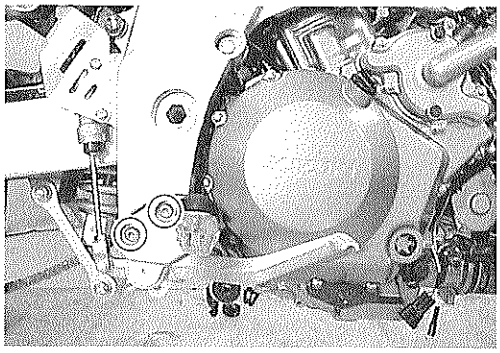

- Remove the oil cooler ②.

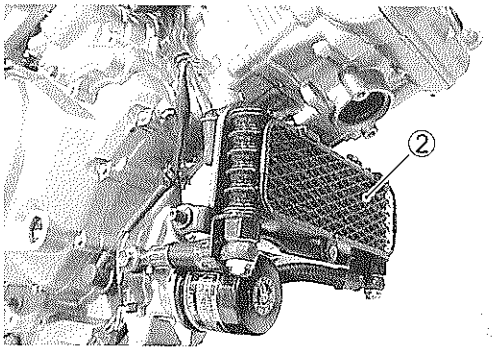

- Disconnect the starter motor lead wire ③ and oil pressure switch lead wire ④.

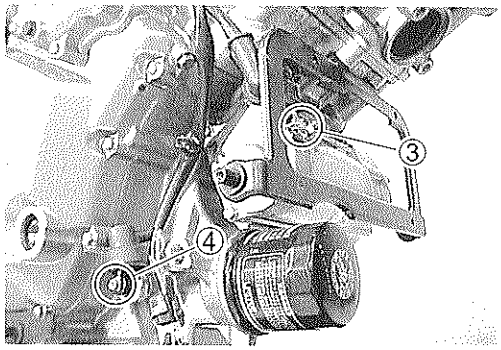

- Support the engine with an engine jack.

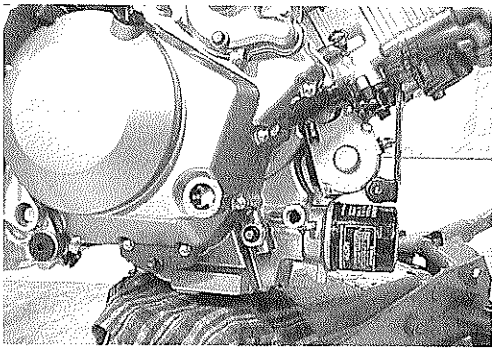

- Remove the engine mounting nut ① and bolt.
- Loosen the engine mounting thrust adjuster lock nut with the special tool.

TOOL 09940-14990: Engine mounting thrust adjuster socket wrench

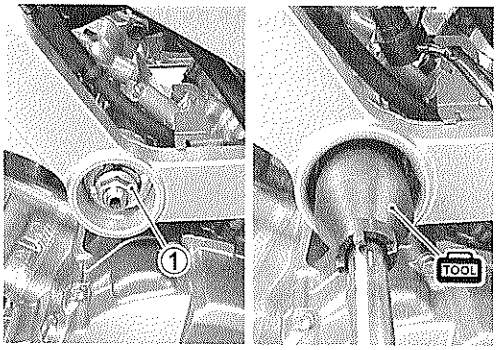

- Loosen the engine mounting thrust adjuster.

TOOL 09940-14990: Engine mounting thrust adjuster socket wrench

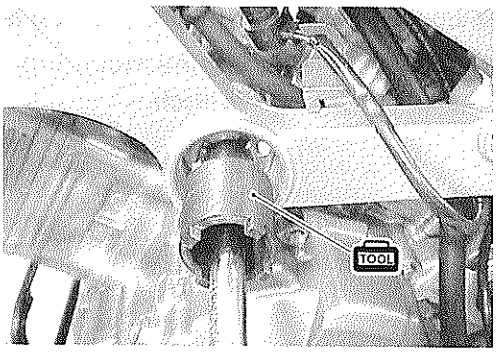

- After removing the pinch bolt ②, remove the engine mounting bolt ③.

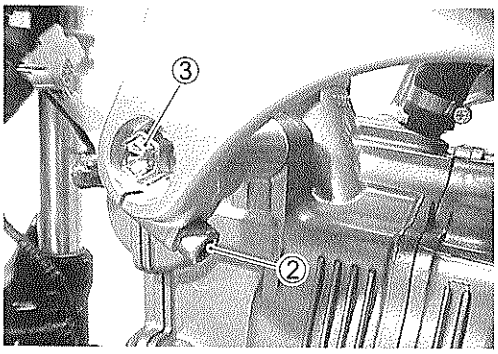

- Remove the engine mounting bolt ④.
- Remove the engine mounting bracket ⑤.

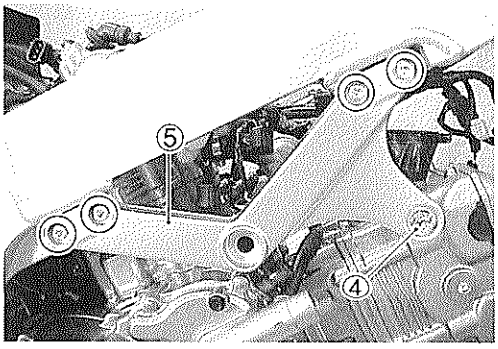

- Remove the ignition coil lead wires.

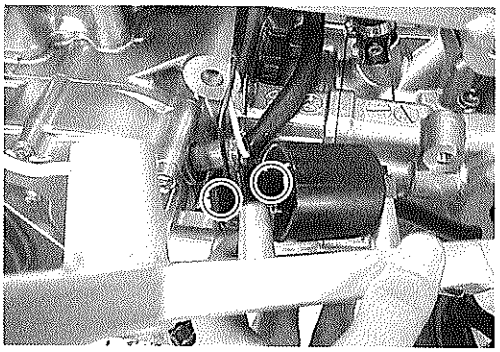

- Remove the engine mounting nut ①.

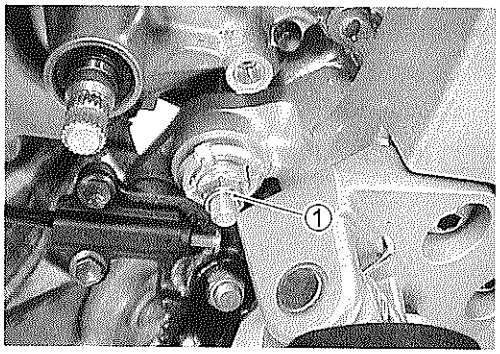

- Loosen the engine mounting thrust adjuster lock nut.

TOOL 09940-14990: Engine mounting thrust adjuster socket wrench

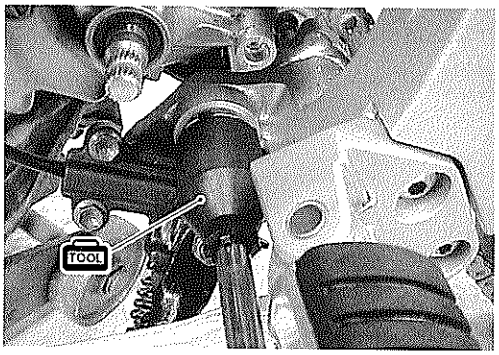

- Loosen the engine mounting thrust adjuster ②.

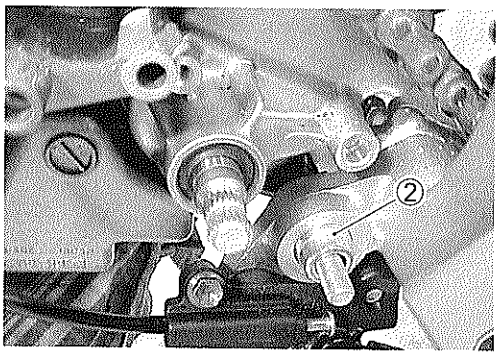

- Loosen the pinch bolt ③.

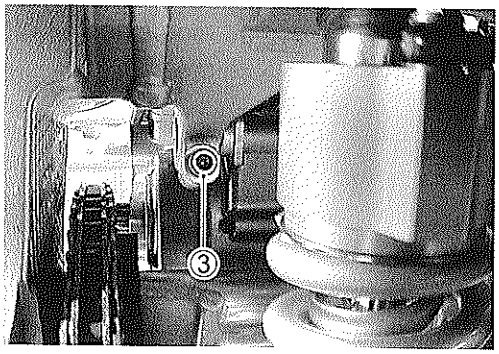

- Gradually lower the engine assembly by removing the bolt ①, ②.

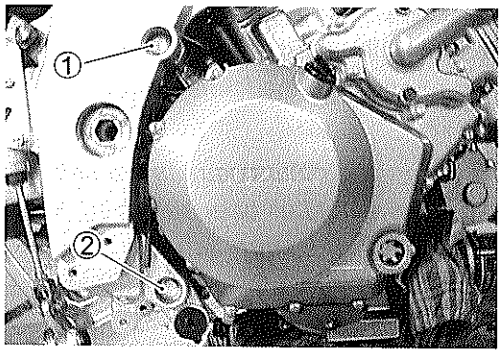

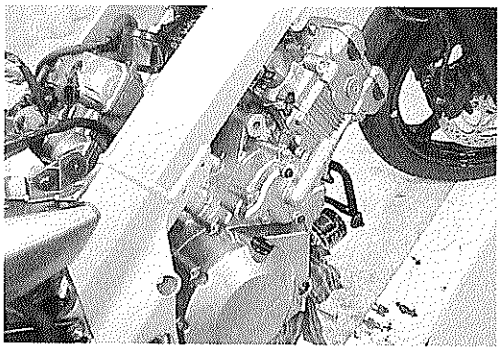

CAUTION

Be careful not to damage the frame and engine when removing the engine from the frame.

ENGINE INSTALLATION

Remount the engine in the reverse order of engine removal.
Pay attention to the following points:

NOTE:

* *The engine mounting nuts are self-locking.*
* *Once the nut has been removed, it is no longer of any use. Be sure to use new nuts, and then tighten them to the specified torque.*

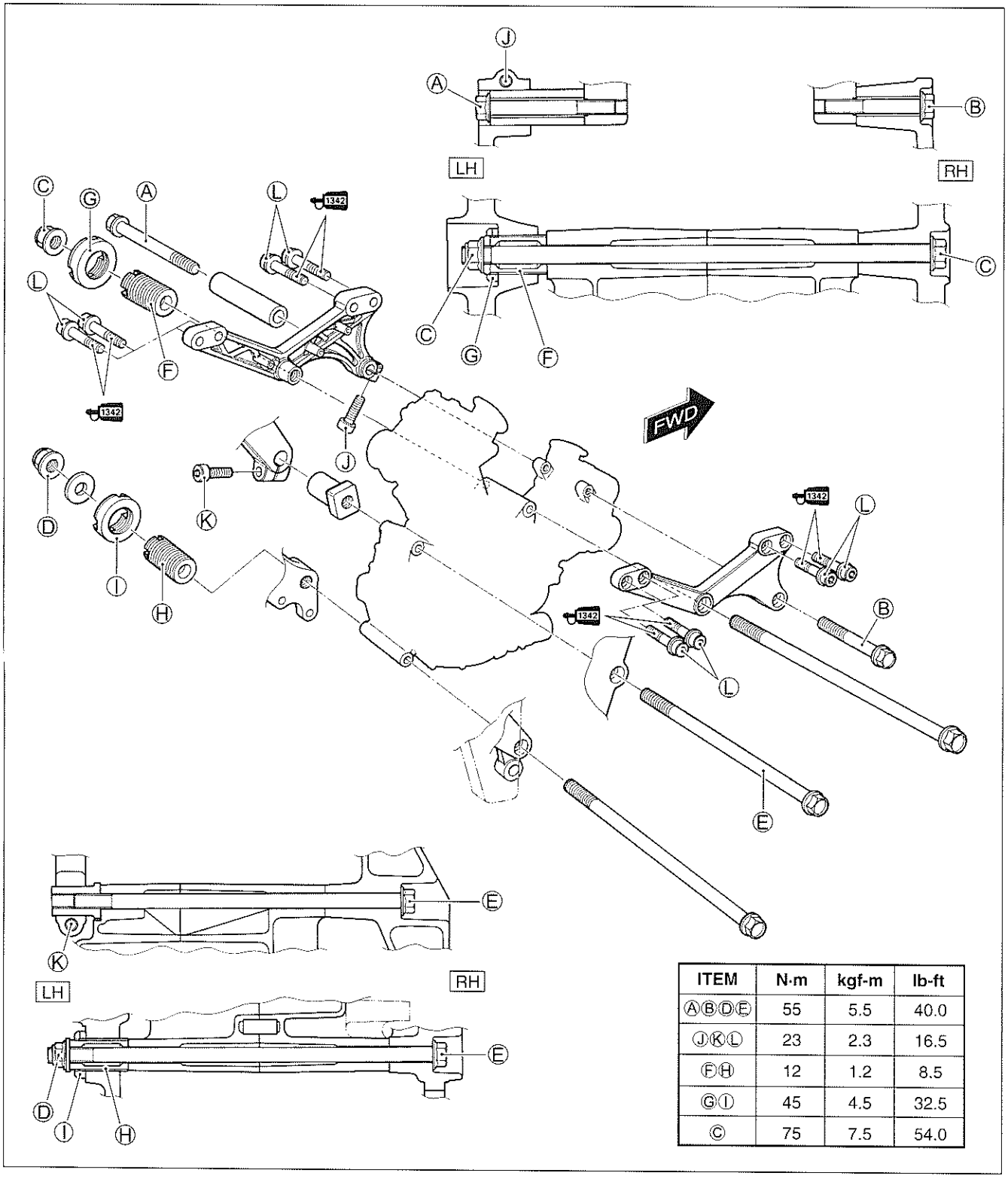

ITEM	N·m	kgf-m	lb-ft
ⒶⒷⒹⒺ	55	5.5	40.0
ⒿⓀⓁ	23	2.3	16.5
ⒻⒽ	12	1.2	8.5
ⒼⒾ	45	4.5	32.5
Ⓒ	75	7.5	54.0

- Before installing the engine assembly, install the spacer Ⓐ, collar Ⓑ and engine thrust adjuster Ⓒ, Ⓓ.

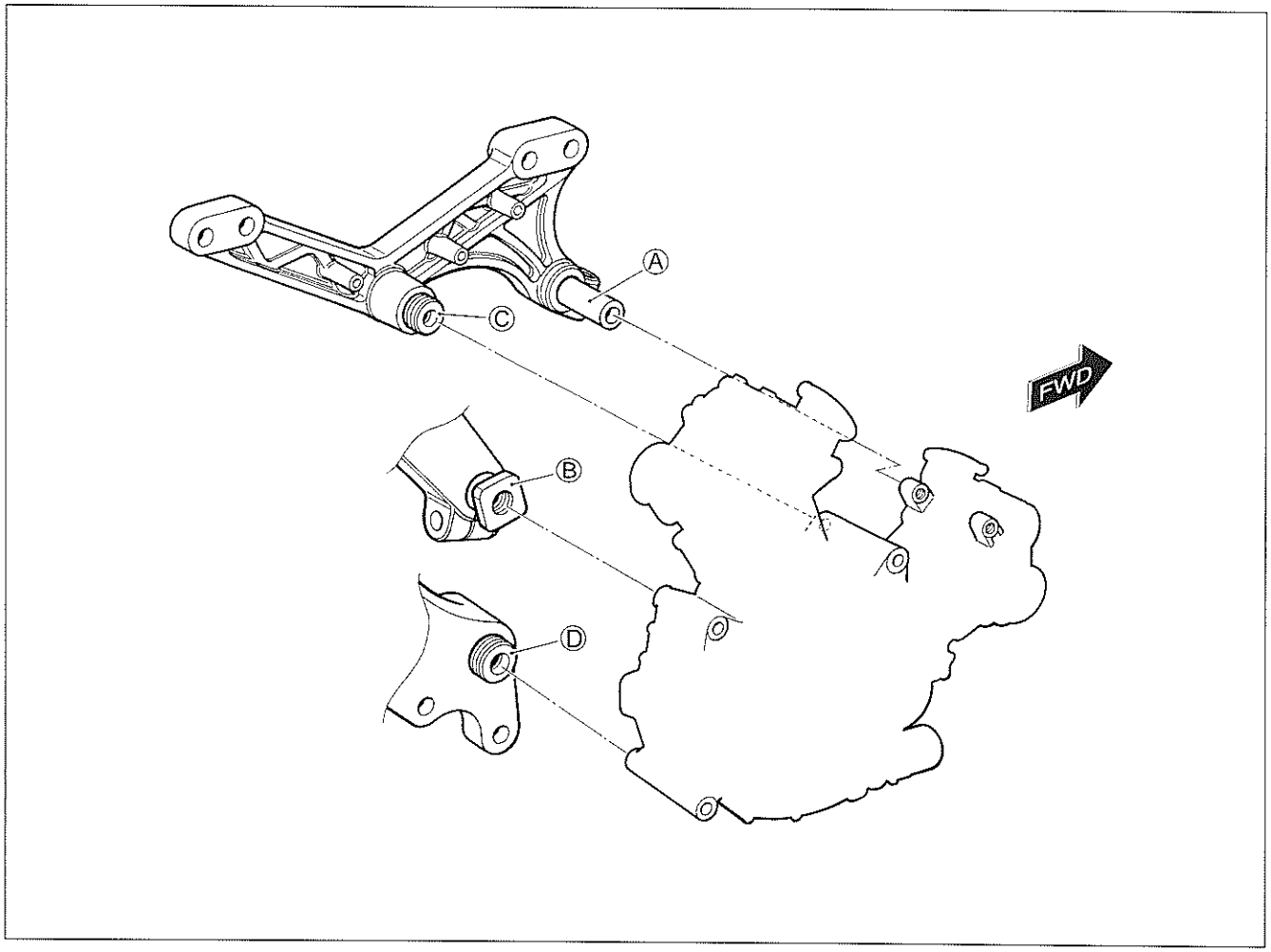

- Install the collar Ⓑ onto the crankcase properly as shown.

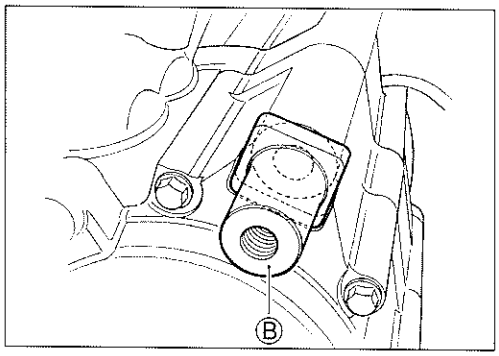

- Apply THREAD LOCK "1342" to the engine mounting bracket bolts.
- Tighten the bolts to the specified torque.

Engine mounting bracket bolt:
23 N·m (2.3 kgf-m, 16.5 lb-ft)

99000-32050: THREAD LOCK "1342"

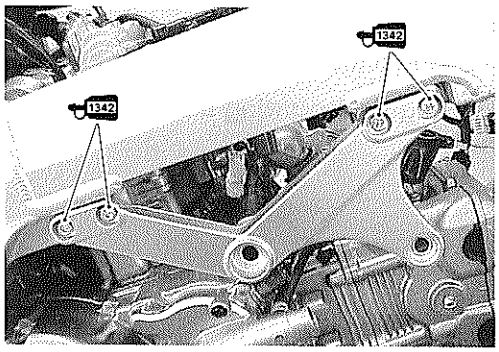

- Put the drive chain on the driveshaft.

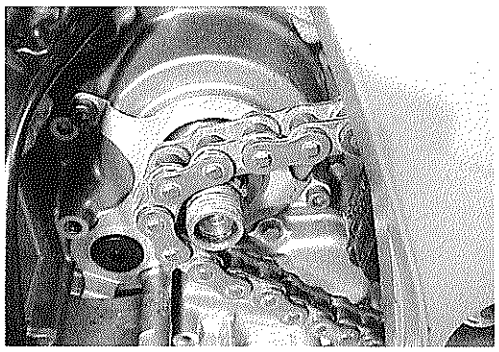

- Gradually raise the engine assembly and align all the bolt holes.
- Install the engine mounting bolts and bracket bolts, and tighten them temporarily.
- Tighten the engine mounting thrust adjuster and its lock nut to the specified torque with the special tool.

Engine mounting thrust adjuster: 12 N·m (1.2 kgf-m, 8.5 lb-ft)
Engine mounting thrust adjuster lock nut: 45 N·m (4.5 kgf-m, 32.5 lb-ft)

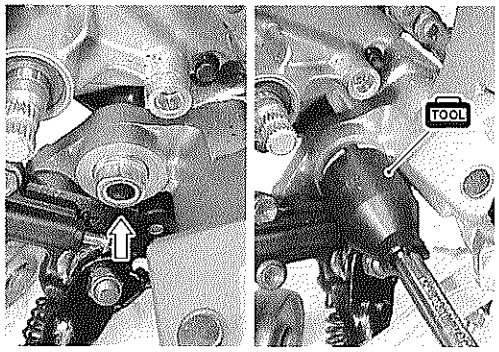

TOOL 09940-14990: Engine mounting thrust adjuster socket wrench

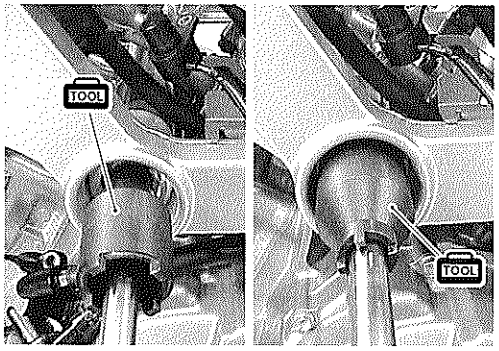

- After tightening the engine mounting bolt Ⓐ, tighten the pinch bolt Ⓑ.

Engine mounting bolt Ⓐ: 55 N·m (5.5 kgf-m, 40.0 lb-ft)
Engine mounting pinch bolt Ⓑ: 23 N·m (2.3 kgf-m, 6.5 lb-ft)

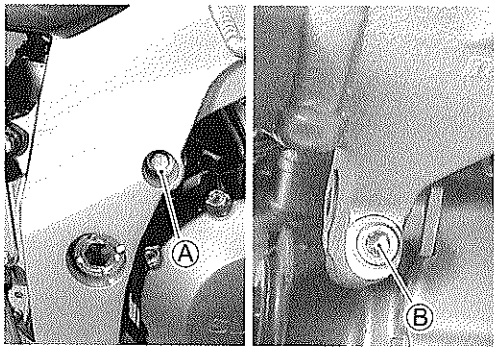

- Tighten the engine mounting bolt to the specified torque.

Engine mounting bolt Ⓒ: 55 N·m (5.5 kgf-m, 40.0 lb-ft)

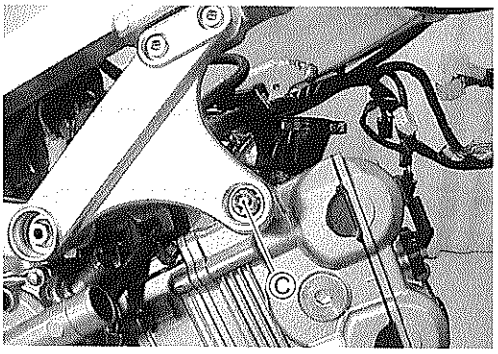

- Tighten the engine mounting nut Ⓐ, Ⓑ to the specified torque.

Engine mounting nut Ⓐ: 75 N·m (7.5 kgf-m, 54.0 lb-ft)
Engine mounting nut Ⓑ: 55 N·m (5.5 kgf-m, 40.0 lb-ft)

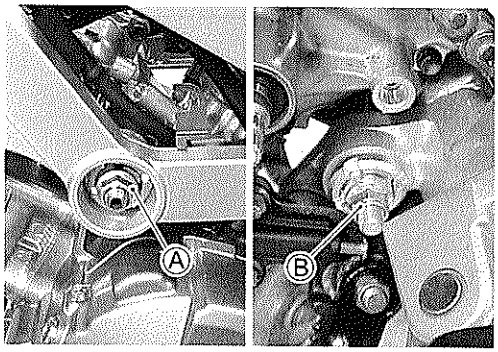

- After tightening the bolt Ⓒ, tighten the pinch bolt Ⓓ to the specified torque.

Engine mounting bolt Ⓒ: 55 N·m (5.5 kgf-m, 40.0 lb-ft)
Engine mounting pinch bolt Ⓓ:
23 N·m (2.3 kgf-m, 16.5 lb-ft)

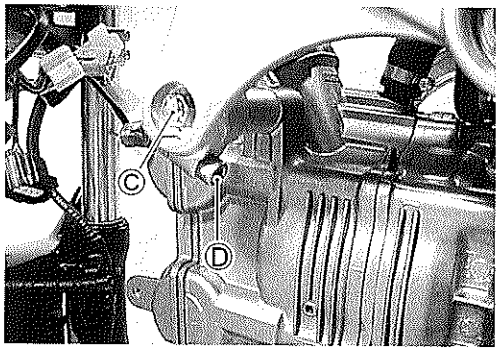

- Install the washers and tighten the union bolt to the specified torque.

Oil hose union bolt: 23 N·m (2.3 kgf-m, 16.5 lb-ft)

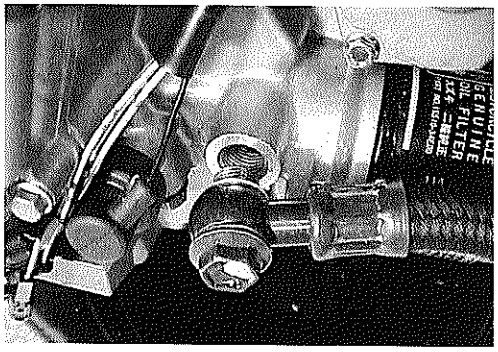

- Install the new gaskets.

- Install the exhaust pipes and mufflers.

NOTE:
Apply THREAD LOCK "1342" to the bolt Ⓔ.

1342 99000-32050: THREAD LOCK "1342"

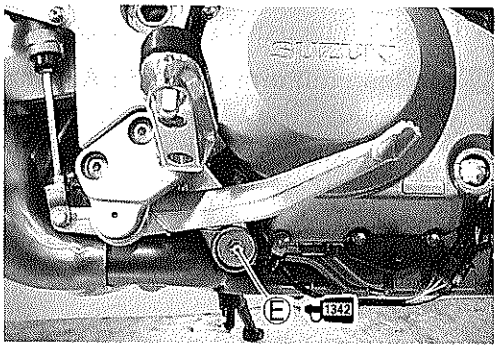

ITEM	N·m	kgf-m	lb-ft
ⒶⒷ	23	2.3	16.5

- Adjust the brake pedal height.

DATA Brake pedal height Ⓐ
Standard: 20 – 30 mm (0.8 – 1.2 in)

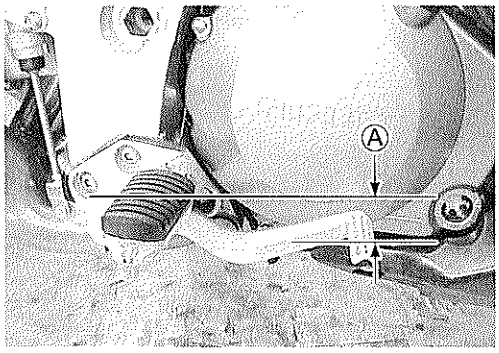

- Install the gearshift arm as shown.

DATA Gearshift arm angle Ⓐ: Approx. 60°

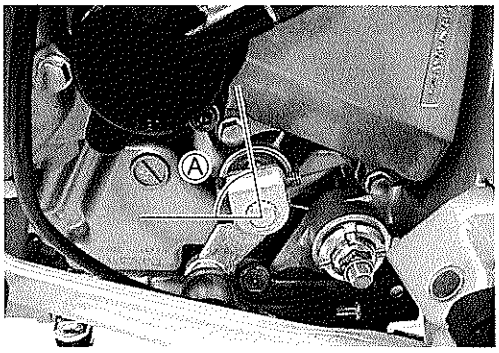

- Adjust the gearshift lever as shown.

DATA Gearshift lever height Ⓐ
Standard: 20 – 30 mm (0.8 – 1.2 in)

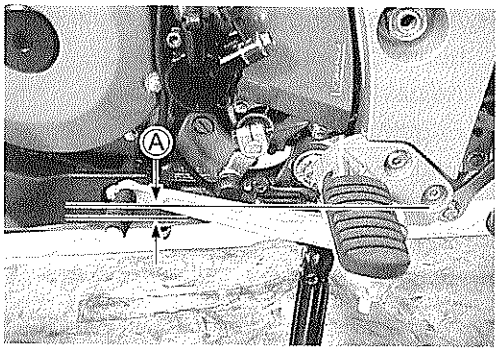

- Install the engine sprocket.

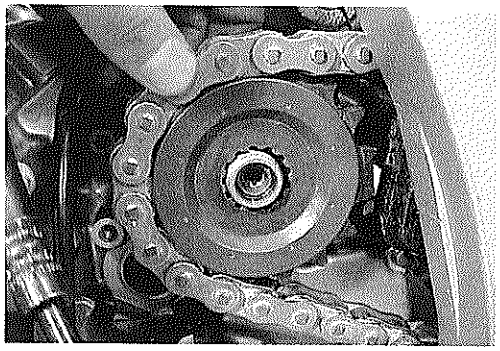

- Apply THREAD LOCK SUPER "1303" to the engine sprocket nut and tighten it to the specified torque while depressing the brake pedal.

Engine sprocket nut: 115 N·m (11.5 kgf-m, 83.0 lb-ft)

1303 99000-32030: THREAD LOCK SUPER "1303"

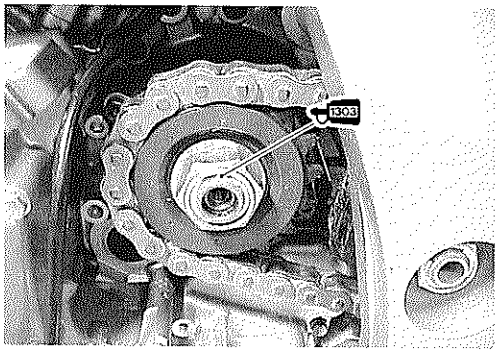

- Tighten the speed sensor rotor bolt to the specified torque.

Speed sensor rotor bolt: 18 N·m (1.8 kgf-m, 13.0 lb-ft)

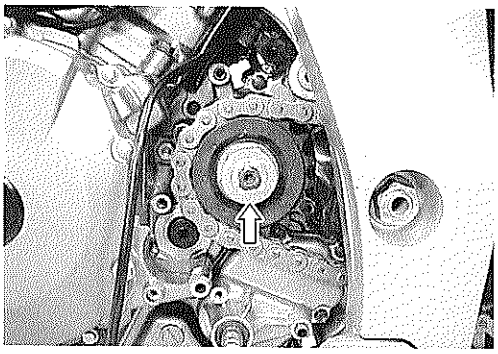

- Apply SUZUKI SUPER GREASE "A" to the push rod ① and install it.
- Install the clutch release cylinder.

A 99000-25030: SUZUKI SUPER GREASE "A" (USA)
99000-25010: SUZUKI SUPER GREASE "A" (Others)

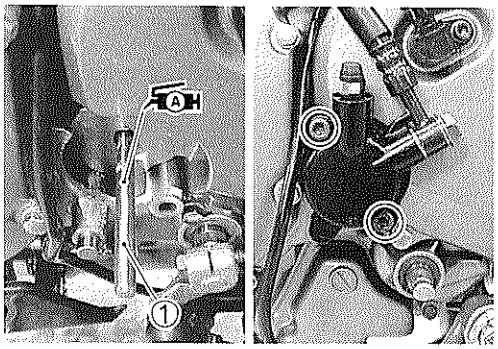

- After installing the engine, route the wire harness, cables and hoses properly. (☞8-14)
- Adjust the following items.

* Engine oil ☞2-13
* Engine coolant ☞2-18
* Engine idle speed ☞2-15
* Throttle cable play ☞2-15

DATA Engine oil capacity

Oil change:	**2.7 L (2.9/2.4 US/Imp qt)**
Oil and filter change:	**2.9 L (3.1/2.6 US/Imp qt)**
Engine overhaul:	**3.3 L (3.5/2.9 US/Imp qt)**

ENGINE DISASSEMBLY

ENGINE TOP SIDE

- Remove the thermostat.

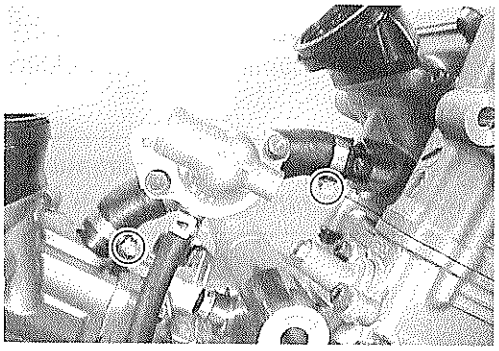

- Remove the valve timing inspection plug ① and generator cover plug ②.

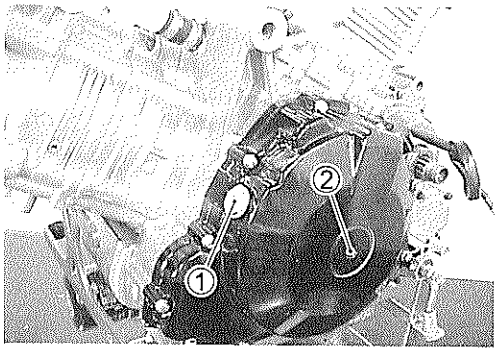

FRONT CYLINDER HEAD COVER

- Remove the front cylinder head cover ①.

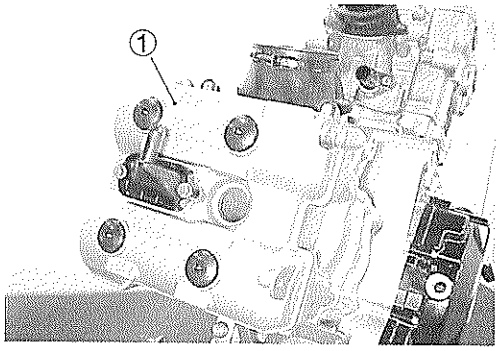

- Turn the crankshaft to bring the "F | T" line on generator rotor to the index mark of the valve inspection hole and also to bring the cams to the position as shown.

NOTE:
At the above condition, the No.1 (Front) cylinder is at TDC of compression stroke and also the engraved lines Ⓐ on the camshafts are parallel with the mating surface of the cylinder head cover.

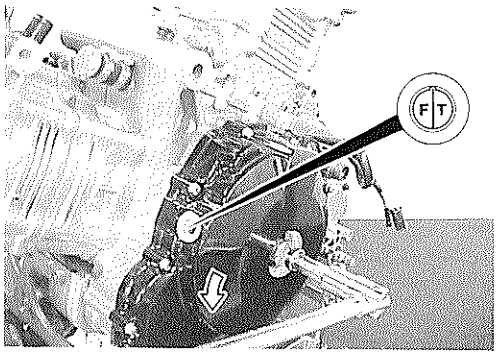

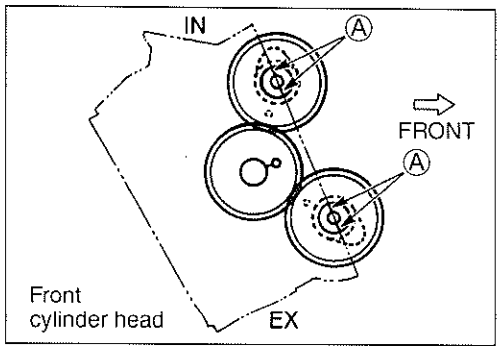

FRONT CYLINDER CAMSHAFT

- Remove the camshaft journal holders.

CAUTION

Be sure to loosen the camshaft journal holder bolts evenly by shifting the wrench diagonally.

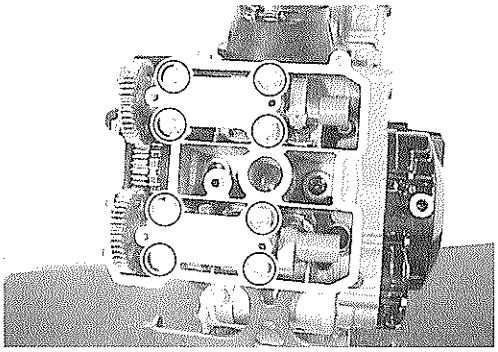

- Remove the camshafts.

NOTE:
Do not drop the dowel pins into the crankcase.

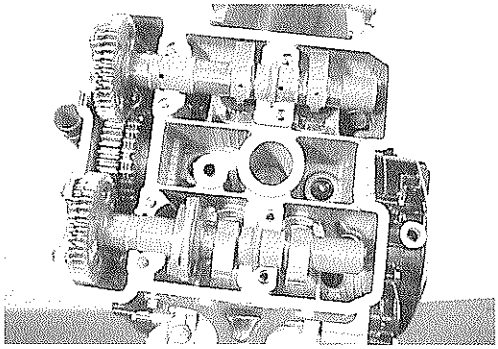

FRONT CAM CHAIN TENSION ADJUSTER

- After loosing the spring holder bolt ①, remove the cam chain tension adjuster.

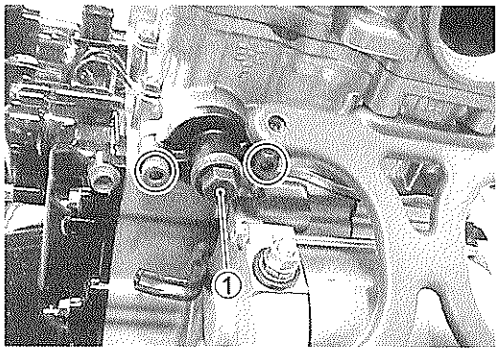

FRONT CYLINDER HEAD

- Remove the cam drive idle gear/sprocket ① by removing its shaft with the copper washer and the thrust washer ②.

NOTE:
Do not the drop the thrust washer ② into the crankcase.

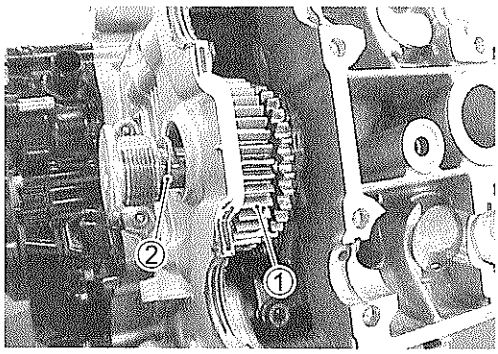

- Remove the cylinder head bolts and cam chain tensioner mounting bolt.
- Remove the cam chain tensioner.

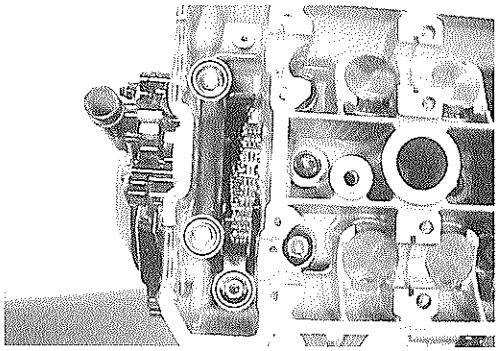

STARTER MOTOR

- Remove the starter motor.

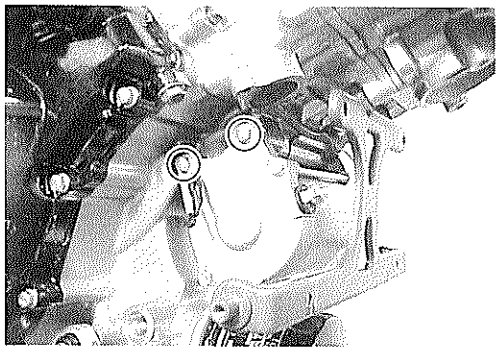

- Remove the cylinder head nut.
- Loosen the cylinder nuts.

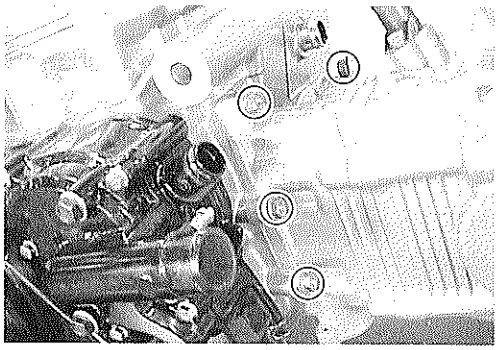

- Remove the oil cooler mounting bracket ①.

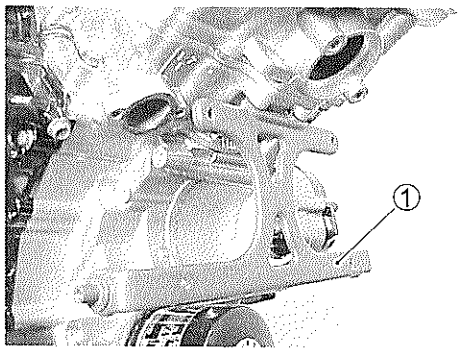

- Remove the cylinder head bolts.
- Remove the cylinder head.

NOTE:

* *When loosening the cylinder head bolts, loosen each bolt little by little diagonally.*
* *To identify each cylinder head, mark the cylinder as the front and rear, cylinder head uses the same part.*

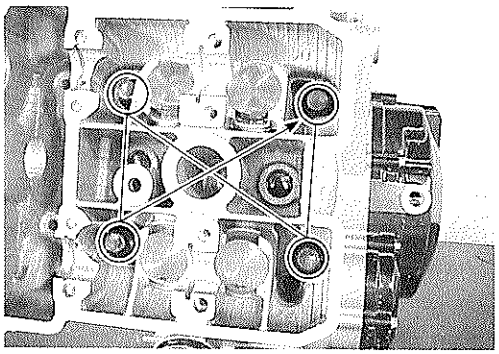

FRONT CYLINDER

- Remove the cylinder.

NOTE:

Firmly grip the cylinder at both ends, and lift it straight up. If the cylinder does not come off, lightly tap on the finless portions of the cylinder with a plastic mallet to make the gasketed joint loose.

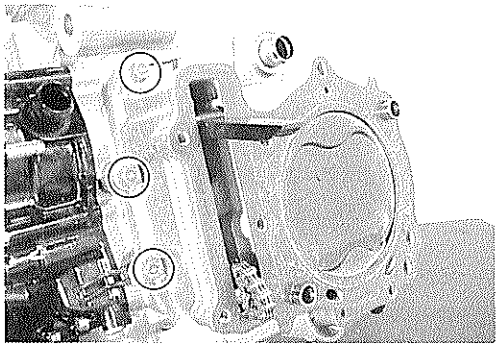

- Remove the cylinder base gasket and dowel pins.

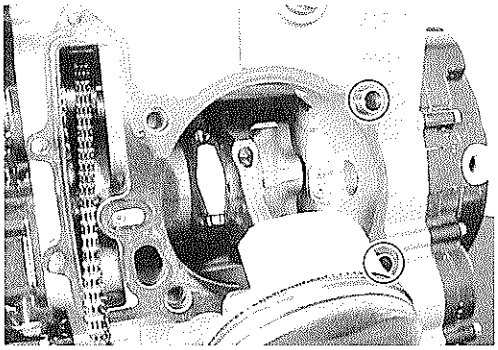

FRONT PISTON

- Place a clean rag over the cylinder base so as not to drop the piston pin circlip into the crankcase.
- Remove the piston pin circlip.
- Remove the piston by driving out the piston pin.

NOTE:
Scribe the cylinder number on the head of the piston.

REAR CYLINDER HEAD COVER

- Remove the rear cylinder head cover ①.

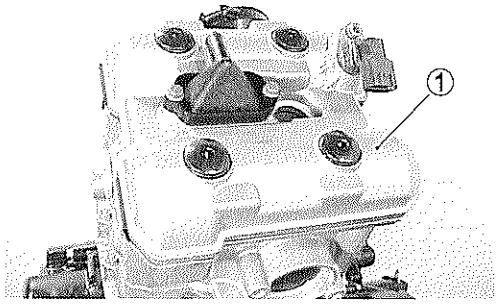

- Turn the crankshaft to bring the "F | T" line mark on generator rotor to the index mark of the valve inspection hole and also to bring the cams to the position as shown.

NOTE:
At the above condition, the rear cylinder is at ATDC 90° on expansion stroke and also the engraved lines Ⓐ on the camshafts are parallel with the mating surface of the cylinder head cover.

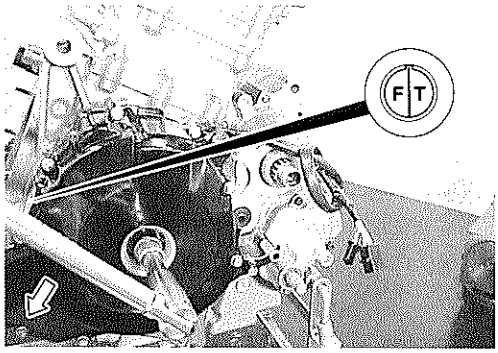

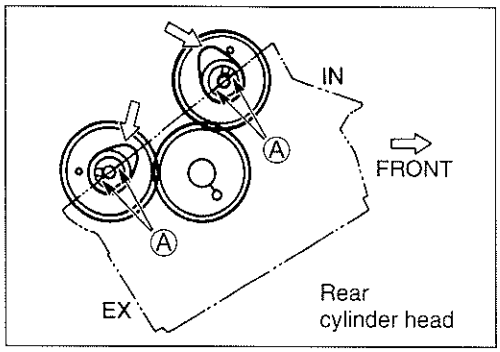

CAUTION

Pull the front cam chain upward, or the chain will be caught between the crankcase and cam drive idle gear/sprocket when turning the crankshaft.

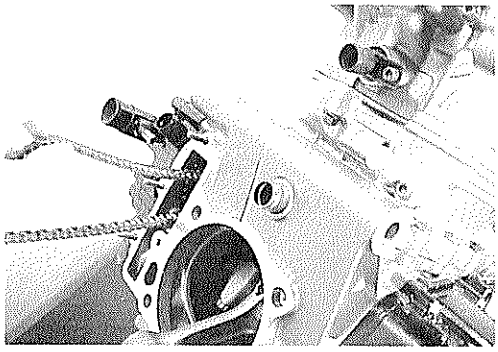

REAR CYLINDER CAMSHAFT

- Remove the two camshaft journal holders.

CAUTION

Be sure to loosen the camshaft journal holder bolts evenly by shifting the wrench diagonally.

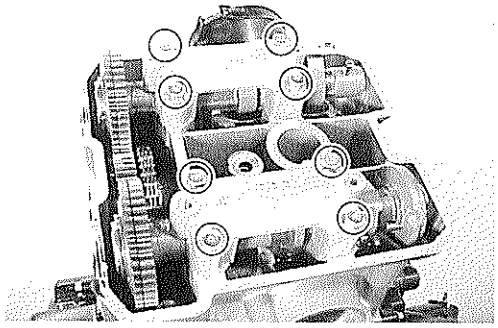

- Remove the camshafts.

NOTE:
Do not drop the dowel pins into the crankcase.

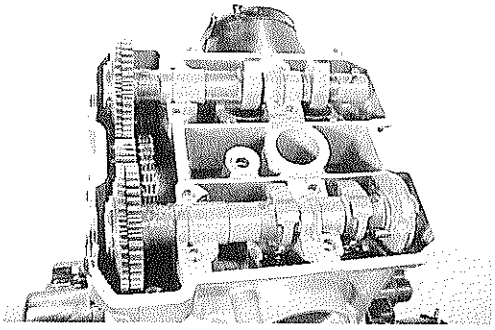

REAR CAM CHAIN TENSION ADJUSTER

- After loosing the spring holder bolt ①, remove the cam chain tension adjuster.

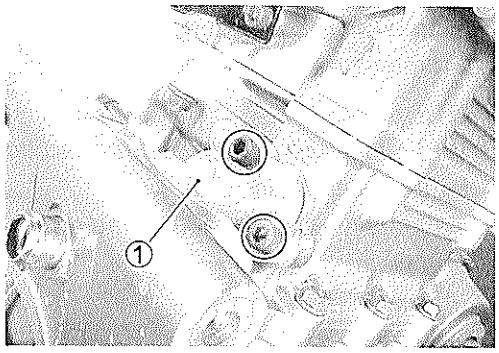

REAR CYLINDER HEAD

- Remove the cam drive idle gear/sprocket ① by removing its shaft, the copper washer and the thrust washer ②.

NOTE:
Do not drop the thrust washer ② into the crankcase.

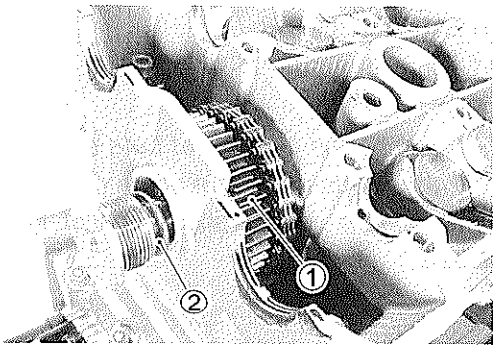

- Remove the cylinder head bolts and cam chain tensioner mounting bolt.
- Remove the cam chain tensioner.

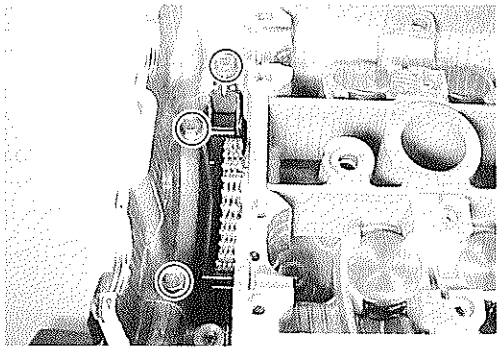

- Remove the cylinder head nuts ①.

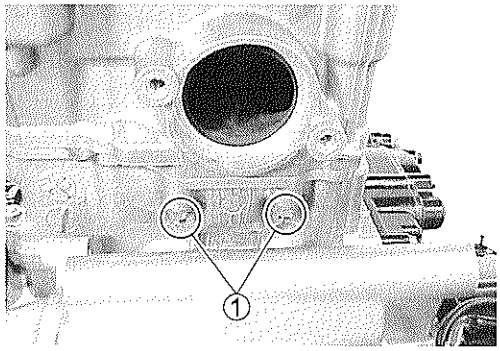

- Remove the cylinder head nut ②.
- Loosen the cylinder nuts ③.

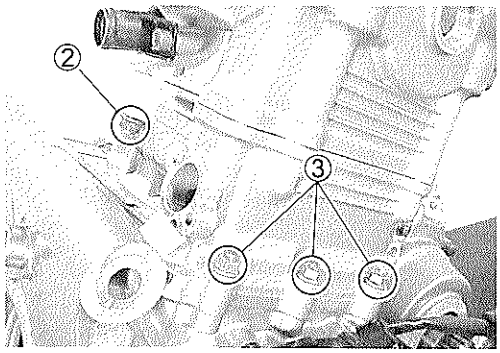

- Remove the cylinder head bolts.
- Remove the cylinder head.

NOTE:

* *When loosening the cylinder head bolts, loosen each bolt little by little diagonally.*
* *To identify each cylinder head, mark the cylinder as the Front and Rear.*

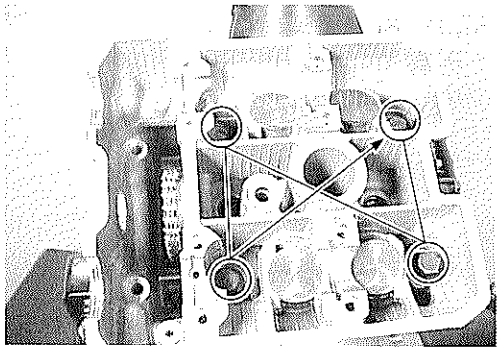

REAR CYLINDER

- Remove the rear cylinder.

NOTE:

Firmly grip the cylinder at both ends, and lift it straight up. If the cylinder does not come off, lightly tap on the finless portions of the cylinder with a plastic mallet to make the gasketed joint loose.

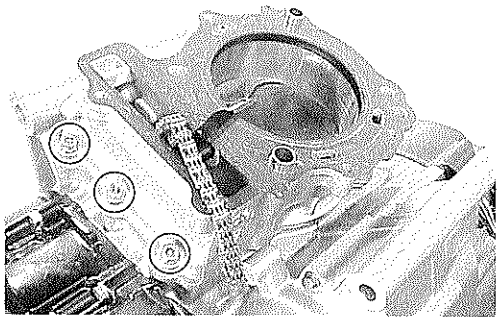

- Remove the cylinder base gasket and dowel pins.

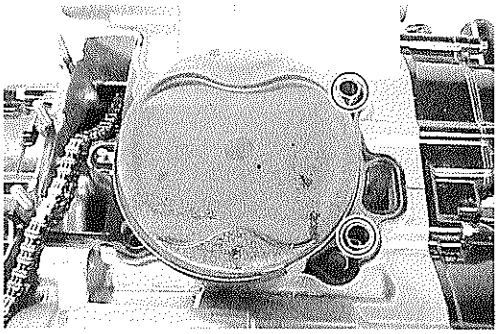

REAR PISTON

- Place a clean rag over the cylinder base so as not to drop the piston pin circlip into the crankcase.
- Remove the piston pin circlip.
- Remove the piston by driving out the piston pin.

NOTE:
Scribe the cylinder number on the head of the piston.

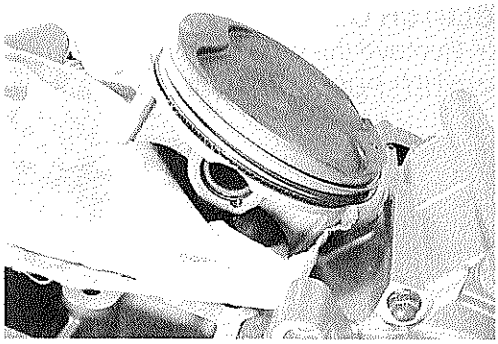

ENGINE BOTTOM SIDE

OIL FILTER

- Remove the oil filter with the special tool.

TOOL 09915-40610: Oil filter wrench

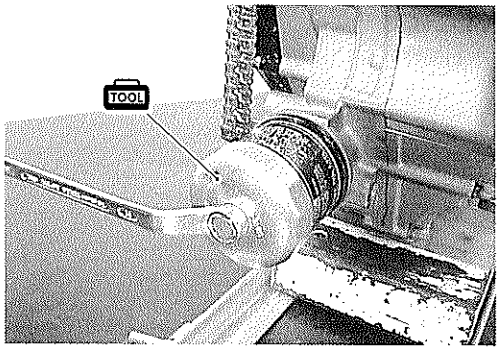

- Remove the generator cover.

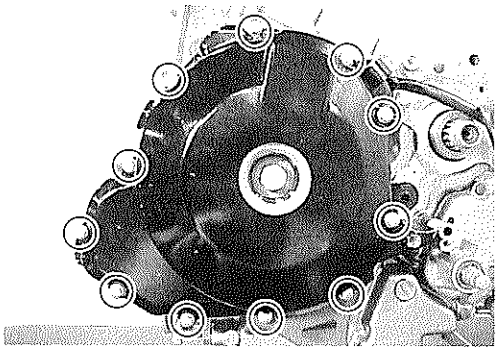

- Remove the starter torque limiter ① and starter idle gear ②.

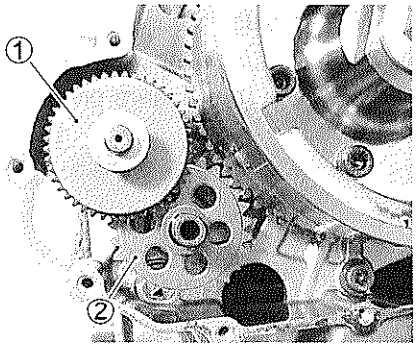

- Remove the bushings ① from the crankcase and generator cover.

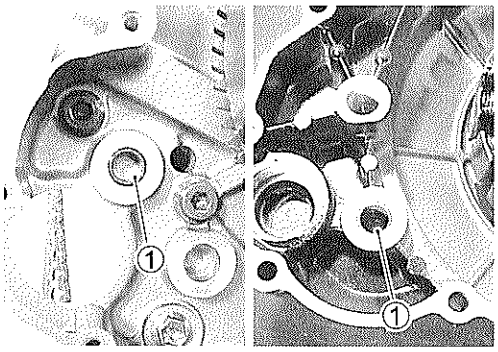

CLUTCH COVER

- Remove the water pump case.

WATER PUMP DISASSEMBLY ☞5-13

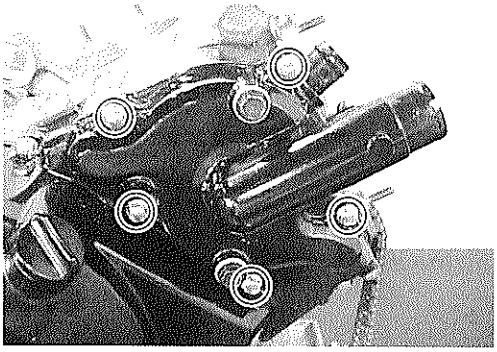

CLUTCH

- Remove the clutch cover.

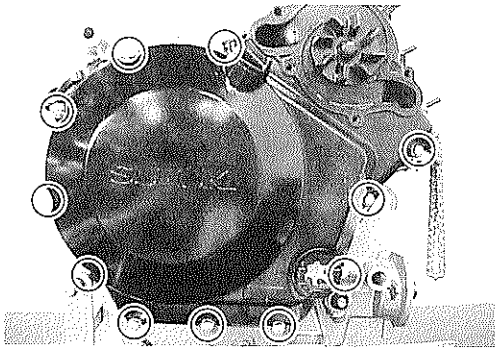

- Hold the generator rotor with the special tool.

TOOL 09930-44541: Rotor holder

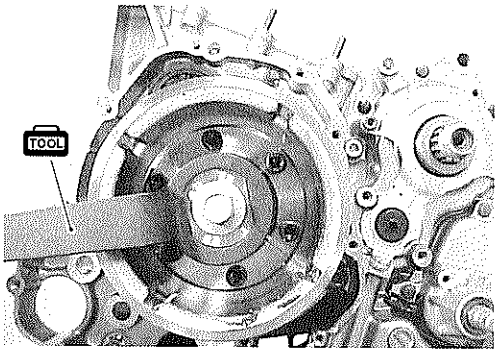

- While holding the generator rotor, remove the clutch spring set bolts and springs diagonally.
- Remove the pressure plate ①.

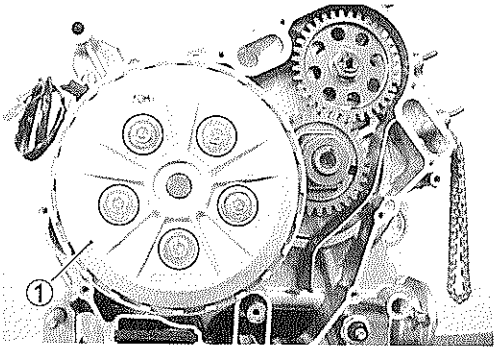

- Remove the clutch push piece, bearing and thrust washer.

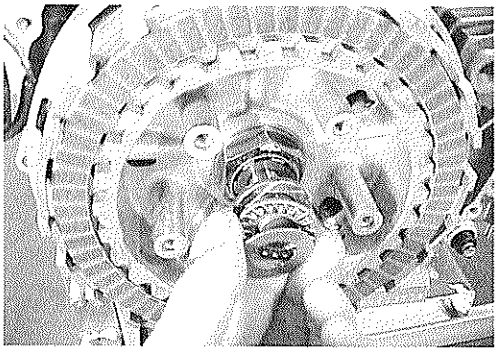

- Remove the clutch push rod ①.
- Remove the clutch drive and driven plates.

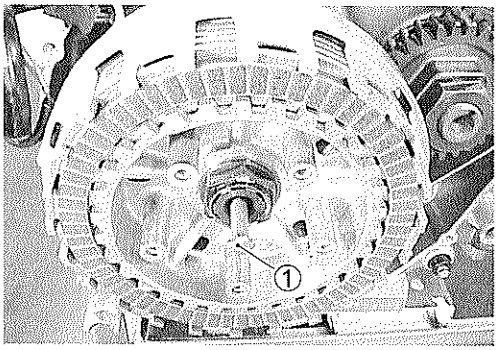

- Remove the wave washer ② and wave washer seat ③.

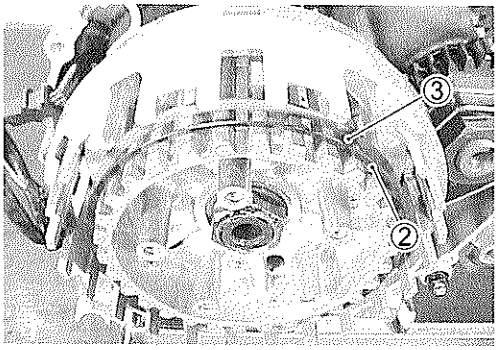

- Unlock the clutch sleeve hub nut.

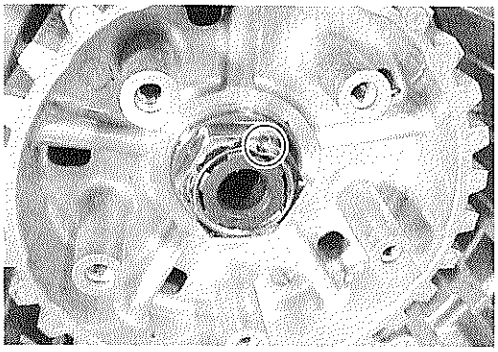

- While holding the clutch sleeve hub with the special tool, remove the clutch sleeve hub nut.

TOOL 09920-53740: Clutch sleeve hub holder

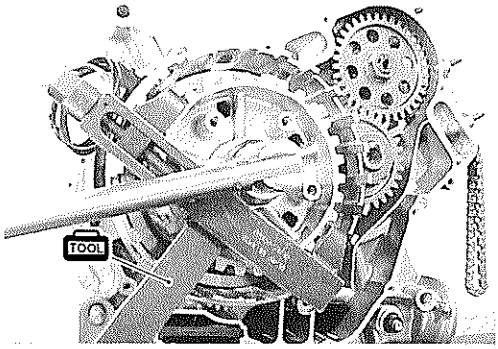

- Remove the washer ① and ②.
- Remove the clutch sleeve hub ③.

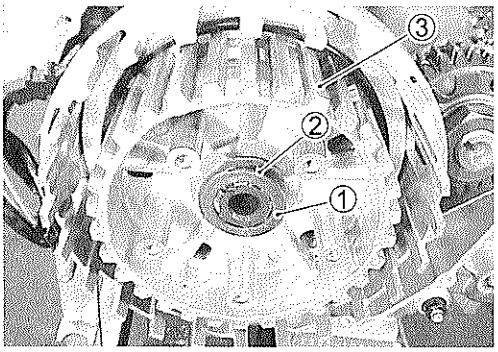

- Remove the thrust washer ④.
- Remove the primary driven gear assembly.

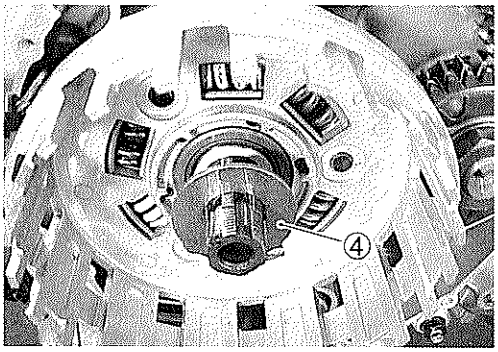

- Remove the needle roller bearing, spacer and thrust washer.

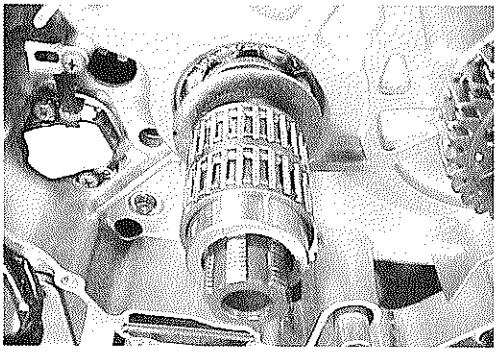

GEAR POSITION SWITCH

- Remove the gear position switch.

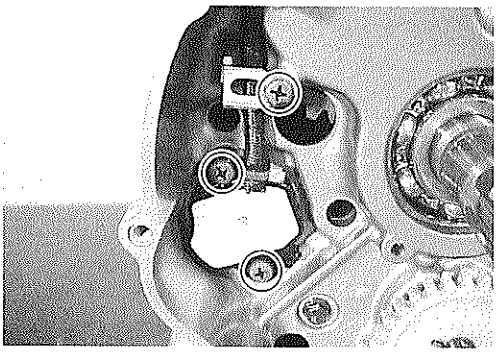

- Remove the gear position switch contacts ① and springs ②.

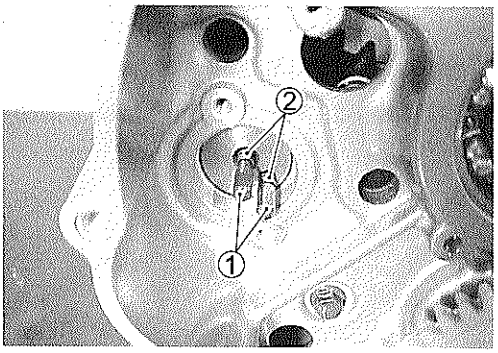

OIL SUMP FILTER

- Remove the oil sump filter.

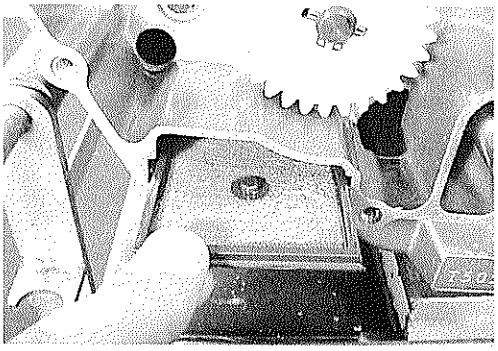

OIL PUMP

- Remove the oil pump driven gear ① by removing the snap ring.

TOOL 09900-06107: Snap ring pliers

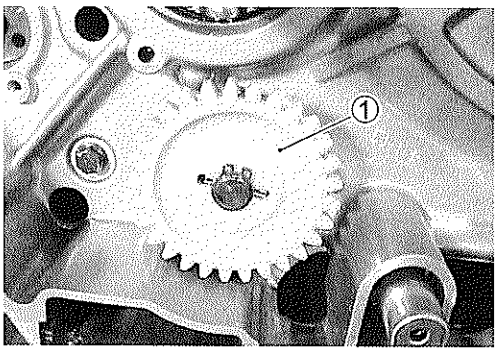

- Remove the pin ② and washer ③.

NOTE:
Do not drop the snap ring, pin and washer into the crankcase.

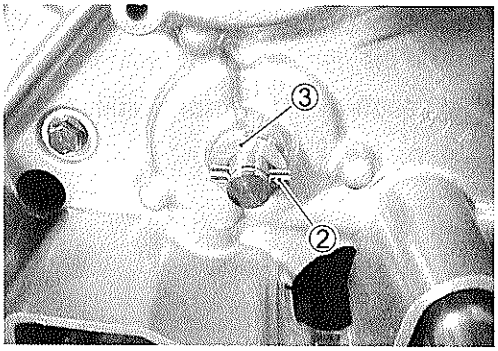

- Hold the generator rotor with the special tool.

TOOL 09930-44541: Rotor holder

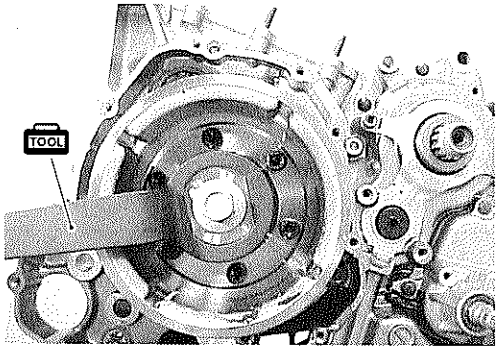

CAM DRIVE IDLE GEAR/SPROCKET

- While holding the generator rotor, remove the cam drive idle gear/sprocket nut.

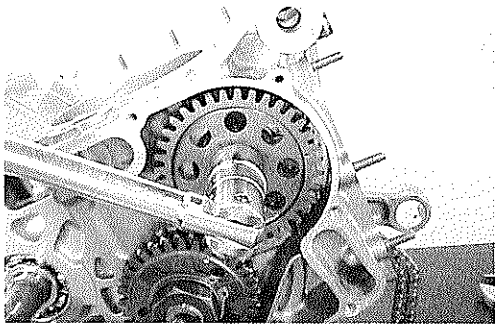

- Insert a suitable bar into the holes of primary drive gears to align the teeth of scissors gears.
- Remove the cam drive idle gear/sprocket and cam chain.

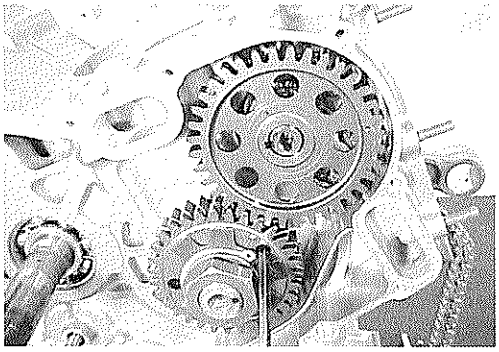

- Remove the key ①.

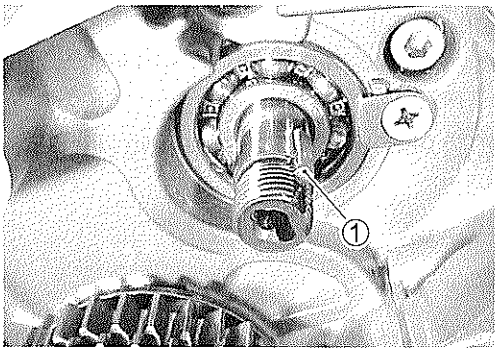

PRIMARY DRIVE GEAR

- Hold the generator rotor with the special tool.

TOOL 09930-44541: Rotor holder

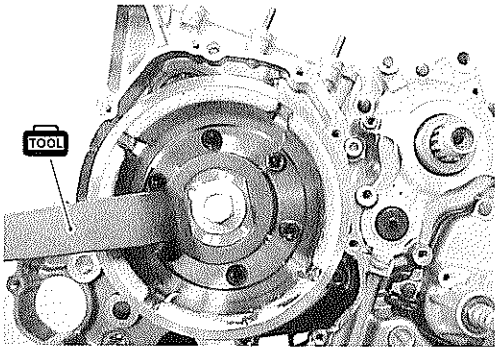

- While holding the generator rotor, remove the primary drive gear nut.

CAUTION

This bolt has left-hand thread. Turning it counter-clockwise may cause damage.

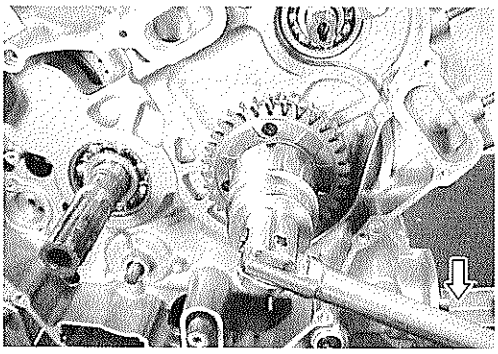

- Remove the washer ①.
- Remove the primary drive gear assembly ②.

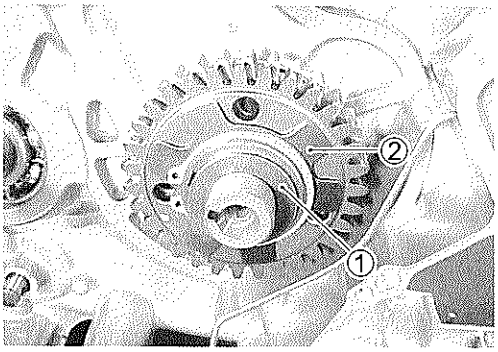

- Remove the key ① and thrust washer ②.

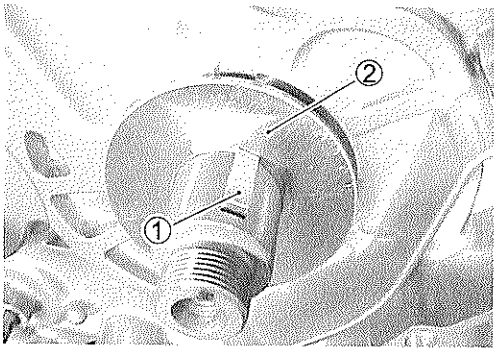

GENENRATOR ROTOR

- While holding the generator rotor with the special tool, remove its bolt.

TOOL 09930-44541: Rotor holder

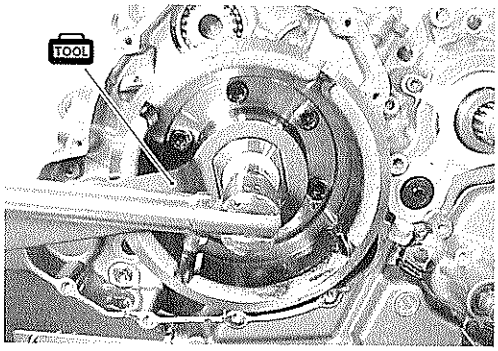

- Install the special tool to the boss.
- Remove the generator rotor by turning the special tool while holding the generator rotor with the special tool.

TOOL 09930-30450: Generator rotor remover bolt

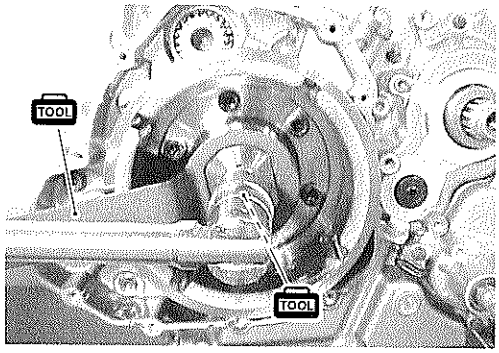

- Remove the key ① and starter driven gear ②.

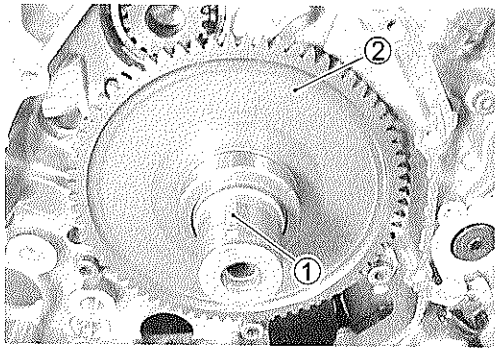

GEARSHIFT

- Remove the gearshift cover.

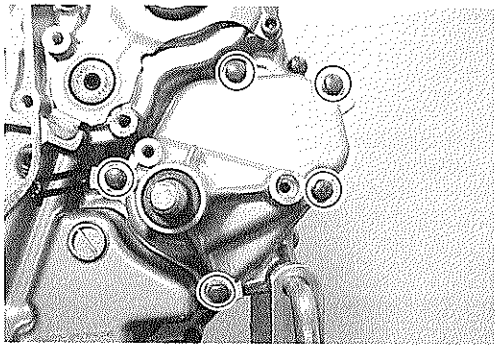

- Draw out the gearshift shaft ①.

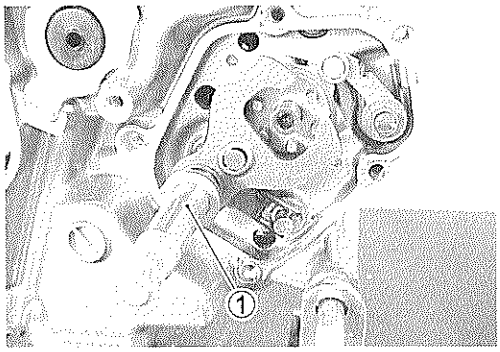

- Remove the gearshift cam plate ②.
- Remove the gearshift cam stopper ③.

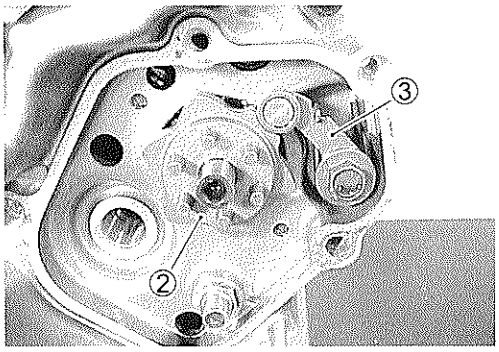

- Remove the engine sprocket spacer ④.

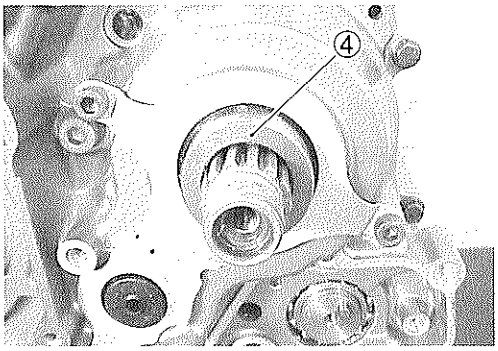

- Remove the cam drive idle gear shaft ⑤.
- Remove the crankcase bolts.

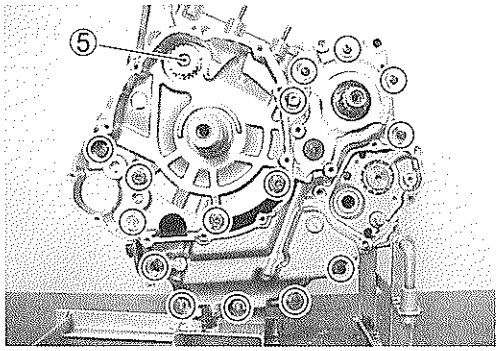

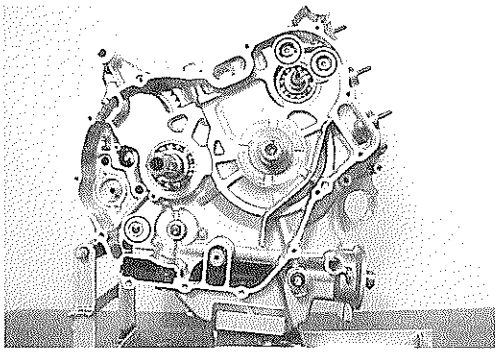

- Separator the crankcase into 2 parts, right and left with the crankcase separating tool.

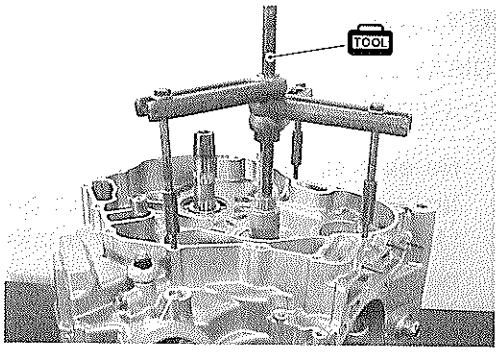

TOOL 09920-13120: Crankcase separating tool

NOTE:

* *Fit the crankcase separating tool, so that the tool arms are in parallel with the side of crankcase.*
* *The crankshaft and transmission components should remain in the left crankcase half.*
* *When separating the crankcase, tap the end of the countershaft with a plastic hammer.*

- Remove the gearshift fork shafts, gearshift forks and gearshift cam.

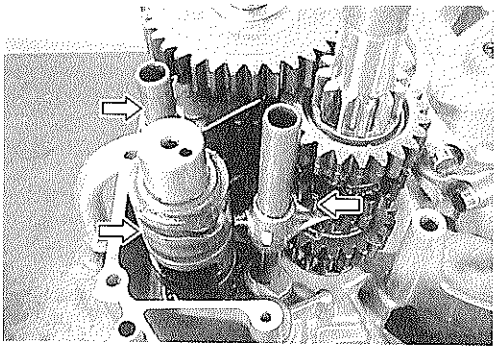

- Remove the countershaft and driveshaft.

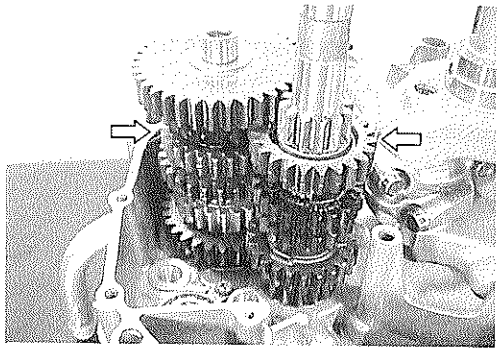

- Remove the crankshaft.

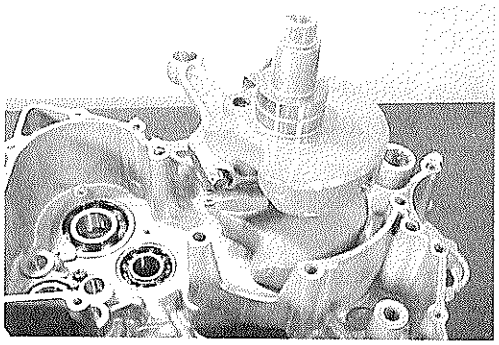

ENGINE COMPONENTS INSPECTION AND SERVICING

CYLINDER HEAD COVER

DISASSEMBLY

CAUTION

Be sure to identify each removed part as to its location, and lay the parts out in groups designated as "No.1", "No.2" "Exhaust", "Intake", so that each will be restored to the original location during assembly.

- Remove the camshaft position sensor ①.
- Remove the PAIR reed valve cover ②.

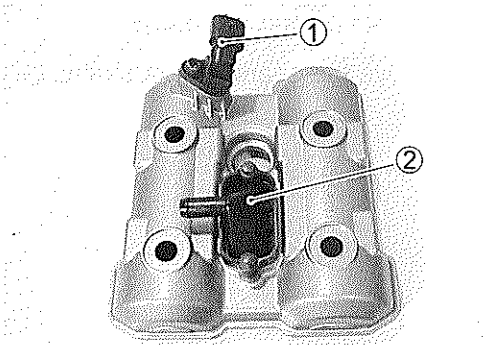

INSPECTION

- Inspect the PAIR reed valve for the carbon deposit.
- If the carbon deposit is found in the reed valve, replace it with a new one.

REASSEMBLY

- Apply SUZUKI SUPER GREASE "A" to the O-ring and install it.

99000-25030: SUZUKI SUPER GREASE "A" (USA)
99000-25010: SUZUKI SUPER GREASE "B" (Others)

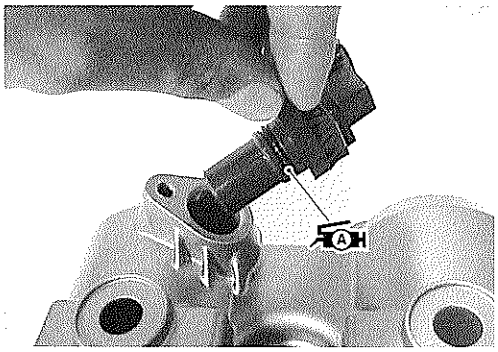

- Apply THREAD LOCK "1342" to the thread and install the PAIR reed valve cover.

99000-32050: THREAD LOCK "1342"

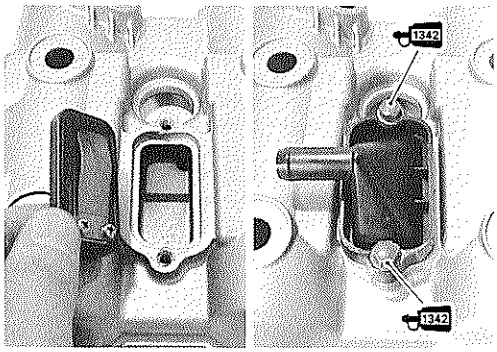

CAMSHAFT/CYLINDER HEAD

CAUTION

Be sure to identify each removed part as to its location, and lay the parts out in groups designated as "No.1", "No.2", "Exhaust", "Intake", so that each will be restored to the original location during assembly.

CAMSHAFT

All camshafts should be checked for runout and also for wear of cams and journals if the engine has been noted as giving abnormal noise, vibration or lack power output. Any of these conditions may be caused by camshafts worn down or distorted to the service limit.

The camshafts can be identified by the engraved letter.

① No.1 (Front) intake camshaft ("INF" and "I": Intake)
② No.1 (Front) exhaust camshaft ("EXF" and "E": Exhaust)
③ No.2 (Rear) intake camshaft ("INR" and "I": Intake)
④ No.2 (Rear) exhaust camshaft ("EXR" and "E": Exhaust)

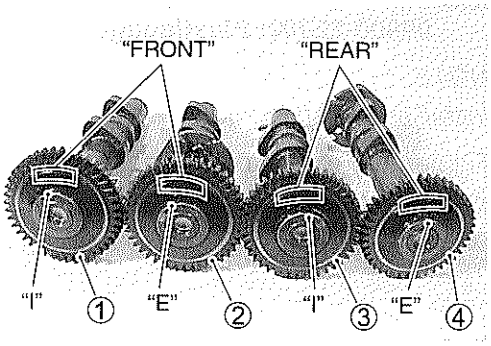

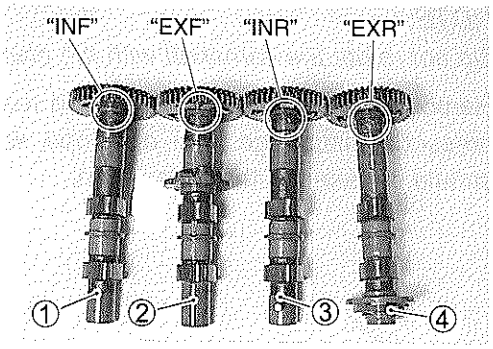

CAM WEAR

Worn-down cams are often the cause of mistimed valve operation resulting in reduced power output.

The limit of cam wear is specified for both intake and exhaust cams in terms of cam height Ⓗ, which is to be measured with a micrometer. Replace camshaft if it wears worn down to the limit.

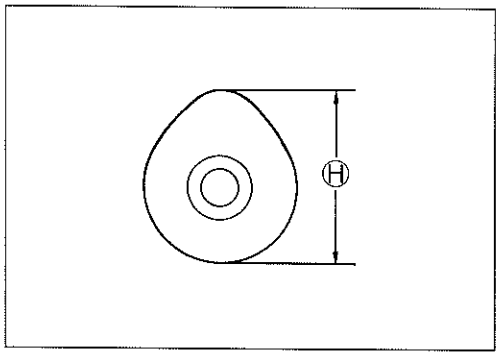

DATA Cam height Ⓗ

Service Limit (IN) : 35.98 mm (1.417 in)
(EX) : 35.38 mm (1.393 in)

TOOL 09900-20202: Micrometer (25 – 50 mm)

CAMSHAFT JOURNAL WEAR

Determine whether or not each journal is worn down to the limit by measuring the oil clearance with the camshaft installed in place. Use the plastigauge Ⓐ to read the clearance at the widest portion, which is specified as follows:

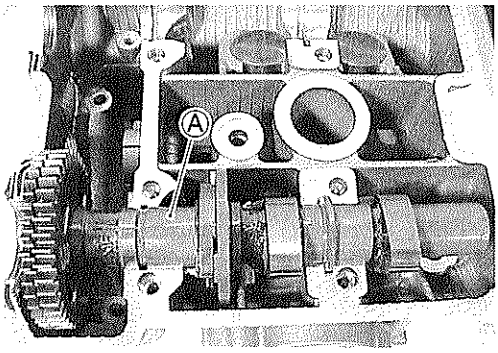

DATA Camshaft journal oil clearance
Service Limit (IN & EX): 0.150 mm (0.0059 in)

TOOL 09900-22301: Plastigauge
09900-22302: Plastigauge

NOTE:
Install camshaft journal holder to their original positions.

Tighten the camshaft journal holder bolts evenly and diagonally to the specified torque.

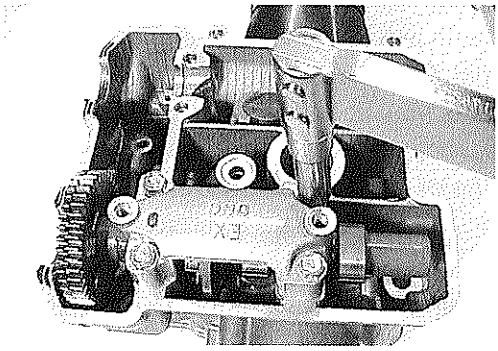

Camshaft journal holder bolt: 10 N·m (1.0 kgf-m, 7.0 lb-ft)

NOTE:
Do not rotate the camshaft with the plastigauge in place.

Remove the camshaft holders, and read the width of the compressed plastigauge with envelope scale. This measurement should be taken at the widest part.

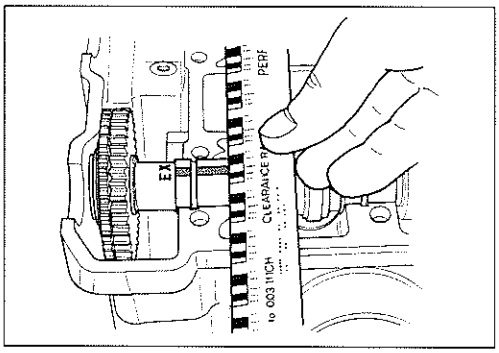

If the camshaft journal oil clearance measured exceeds the limit, measure the inside diameter of the camshaft journal holder and outside diameter of the camshaft journal. Replace the camshaft or the cylinder head depending upon which one exceeds the specification.

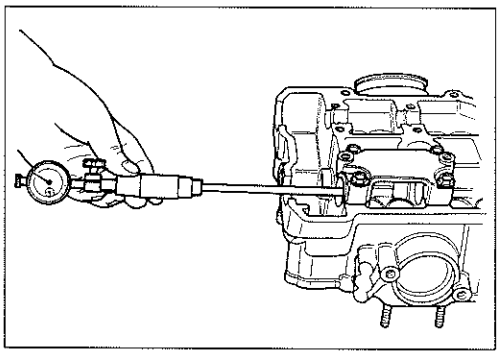

DATA Camshaft journal holder I.D.
Standard (IN & EX):
22.012 – 22.025 mm (0.8666 – 0.8671 in)

TOOL 09900-20602: Dial gauge (1/1000, 1 mm)
09900-22403: Small bore gauge (18 – 35 mm)

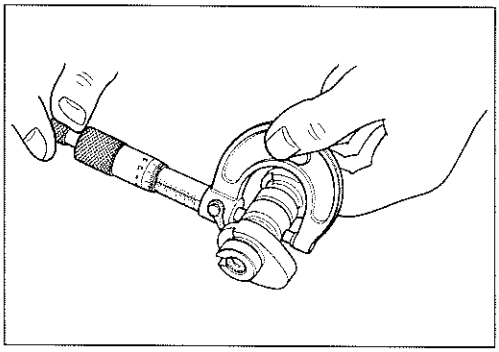

DATA Crankshaft journal O.D.
Standard (IN & EX):
21.972 – 21.993 mm (0.8650 – 0.8659 in)

TOOL 09900-20205: Micrometer (0 – 25 mm)

CAMSHAFT RUNOUT

Measure the runout with a dial gauge. Replace the camshaft if the runout exceeds the limit.

DATA Camshaft runout
Service Limit (IN & EX): 0.10 mm (0.004 in)

TOOL 09900-20607: Dial gauge (1/100 mm, 10 mm)
09900-20701: Magnetic stand
09900-21304: V-block (100 mm)

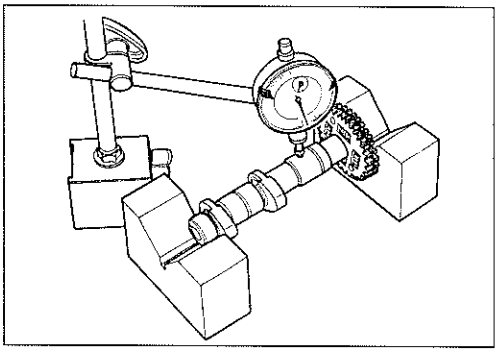

CAM GEAR AND AUTOMATIC-DECOMP.

Inspect the cam gear teeth for wear and damage.
Inspect the automatic-decomp. for damage and smooth operation.
If there are unusual, replace the camshaft assembly and cam chain as a set.

CAUTION

Do not attempt to disassemble the cam gears and automatic-decomp. assembly. They are unserviceable.

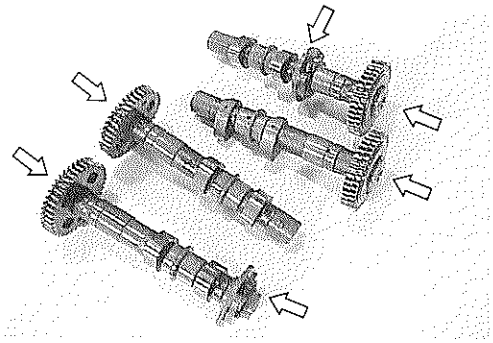

CAM CHAIN TENSION ADJUSTER

The cam chain tension adjusters are maintained at the proper cam chain tension automatically.
Unlock the ratchet Ⓐ, and move the push rod Ⓑ in place to see if it slides smoothly. If any stickiness is noted or ratchet mechanism is faulty, replace the cam chain tension adjuster assembly with a new one.

① Front cam chain tension adjuster
② Rear cam chain tension adjuster

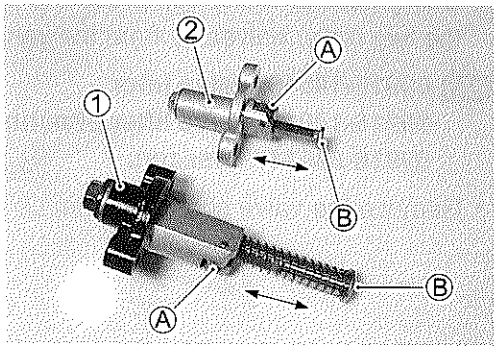

CAM CHAIN GUIDE AND CAM CHAIN TENSIONER

Check the cam chain guide and tensioner for wear and damage. If they are found to be damaged, replace them with the new ones.

③ Front cam chain tensioner
④ Rear cam chain tensioner
⑤ Front and Rear cam chain guide

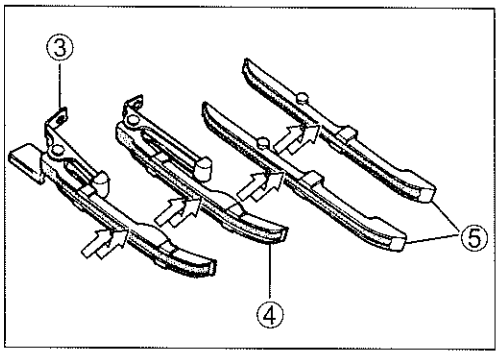

CYLINDER HEAD

- Remove the tappets and shims ① by fingers or magnetic hand.

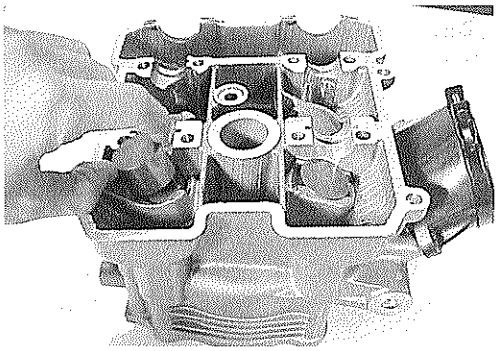

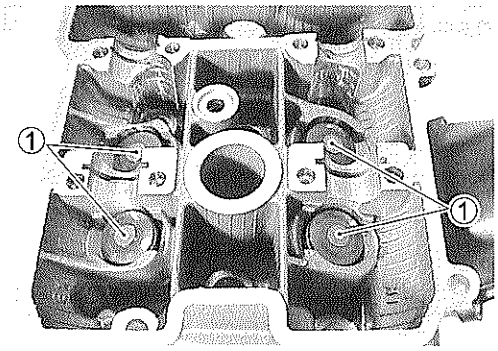

- Using special tools, compress the valve spring and remove the two cotter halves ② from the valve stem.

TOOL 09916-14510: Valve lifter
09916-14910: Valve lifter attachment
09916-84511: Tweezers

- Remove the valve spring retainer ③ and valve spring ④.

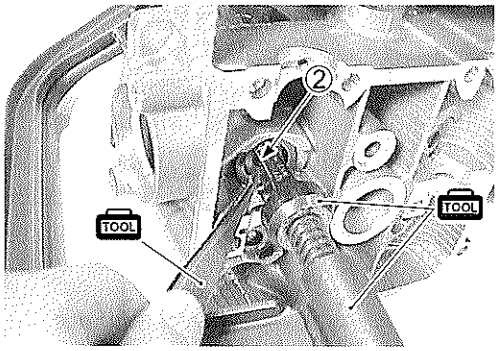

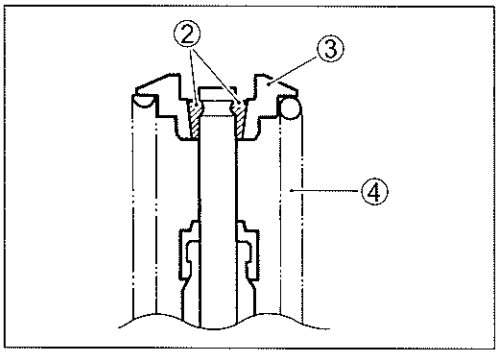

- Pull out the valve from the other side.

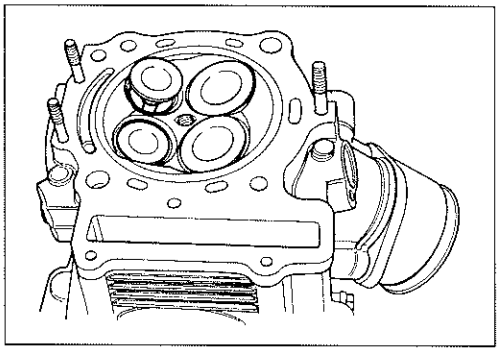

- Remove the oil seals ① and the spring seats ②.

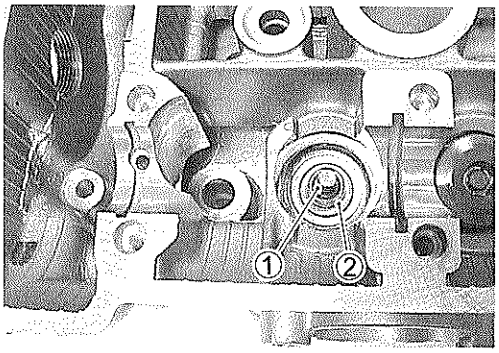

CAUTION

Do not reuse the removed oil seals.

CYLINDER HEAD DISTORTION

Decarbonize the combustion chambers.

Check the gasketed surface of the cylinder head for distortion with a straightedge and thickness gauge, taking a clearance reading at several places indicated. If the largest reading at any position of the straightedge exceeds the limit, replace the cylinder head.

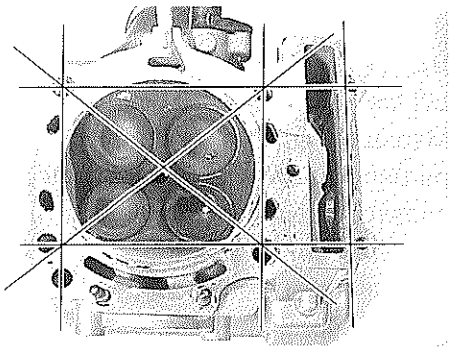

DATA Cylinder head distortion
Service Limit: 0.05 mm (0.002 in)

TOOL 09900-20803: Thickness gauge

VALVE STEM RUNOUT

Support the valve with "V" blocks, as shown, and check its runout with a dial gauge.

The valve must be replaced if the runout exceeds the limit.

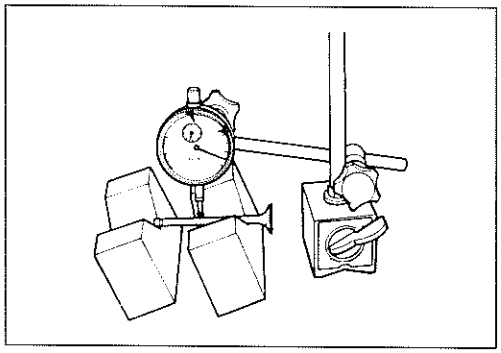

DATA Valve stem runout
Service Limit: 0.05 mm (0.002 in)

TOOL 09900-20607: Dial gauge (1/100 mm)
09900-20701: Magnetic stand
09900-21304: V-block (100 mm)

VALVE HEAD RADIAL RUNOUT

Place the dial gauge at right angles to the valve head face, and measure the valve head radial runout.

If it measures more than the limit, replace the valve.

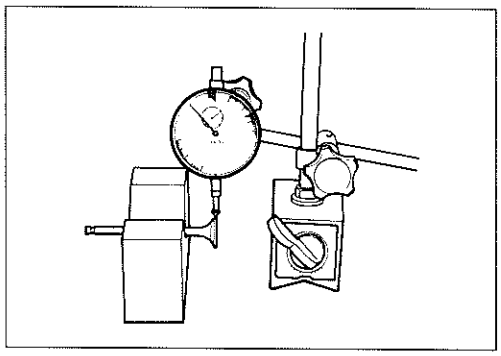

DATA Valve head radial runout
Service Limit: 0.03 mm (0.001 in)

TOOL 09900-20607: Dial gauge (1/100 mm)
09900-20701: Magnetic stand
09900-21304: V-block (100 mm)

VALVE FACE WEAR

Visually inspect each valve for wear of its seating face. Replace any valve with an abnormally worn face. The thickness Ⓣ decreases as the wear of the face advances.
Measure the thickness and, if the thickness is found to have been reduced to the limit, replace it.

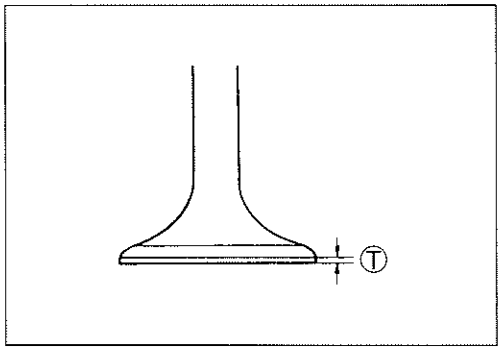

DATA Valve head thickness Ⓣ
Service Limit: 0.5 mm (0.02 in)

TOOL 09900-20101: Vernier calipers

VALVE STEM DEFLECTION

Lift the valve about 10 mm (0.39 in) from the valve seat.
Measure the valve stem deflection in two directions, "X" and "Y", perpendicular to each other, by positioning the dial gauge as shown. If the deflection measured exceeds the limit, (see below) then determine whether the valve or the guide should be replaced with a new one.

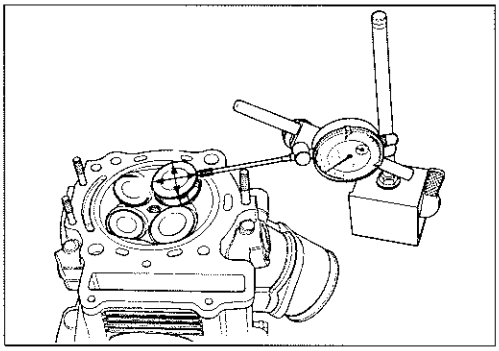

DATA Valve stem deflection (IN & EX)
Service Limit: 0.35 mm (0.014 in)

TOOL 09900-20607: Dial gauge (1/100 mm)
09900-20701: Magnetic stand

VALVE STEM WEAR

If the valve stem is worn down to the limit, as measured with a micrometer, where the clearance is found to be in excess of the limit indicated, replace the valve; if the stem is within the limit, then replace the guide. After replacing valve or guide, be sure to recheck the clearance.

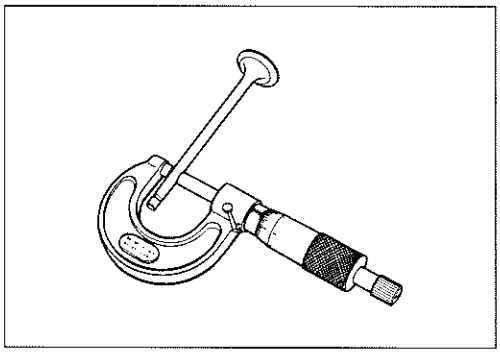

DATA Valve stem O.D.
Standard (IN) : 5.475 – 5.490 mm (0.2156 – 0.2161 in)
(EX) : 5.455 – 5.470 mm (0.2148 – 0.2154 in)

TOOL 09900-20205: Micrometer (0 – 25 mm)

NOTE:
If valve guides have to be removed for replacement after inspecting related parts, carry out the steps shown in valve guide servicing.

VALVE GUIDE SERVICING

- Using the valve guide remover, drive the valve guide out toward the intake or exhaust camshaft side.

TOOL 09916-44910: Valve guide remover/installer

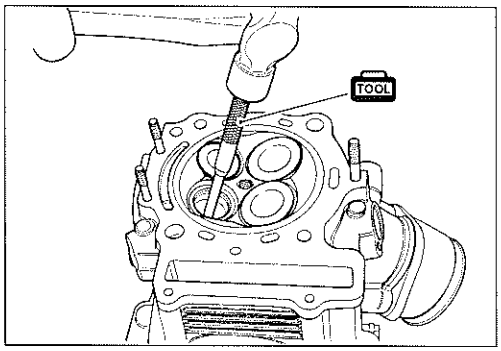

NOTE:
** Discard the removed valve guide subassemblies.*
** Only oversized valve guides are available as replacement parts. (Part No.11115-32E70)*

- Re-finish the valve guide holes in cylinder head with the reamer and handle.

TOOL 09916-34580: Valve guide reamer
09916-34542: Reamer handle

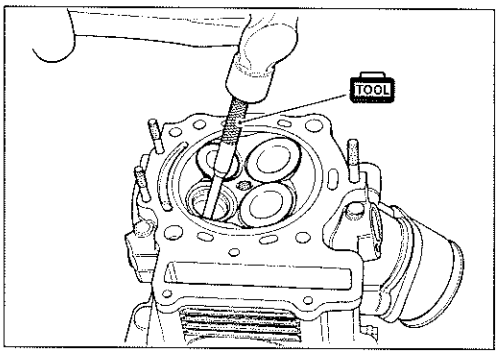

- Oil the stem hole, too, of each valve guide and drive the guide into the guide hole with the valve guide installer and attachment.

TOOL 09916-44910: Valve guide remover/installer
09916-53340: Attachment

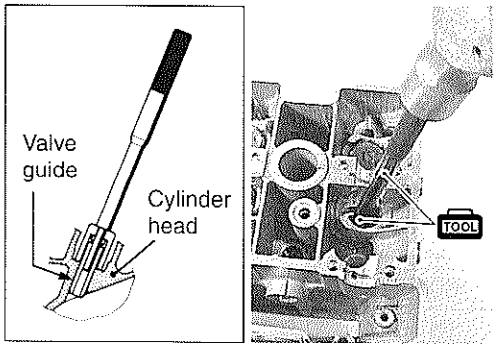

CAUTION

Failure to oil the valve guide hole before driving the new guide into place may result in a damaged guide or head.

- After fitting the valve guides, re-finish their guiding bores with the reamer. Be sure to clean and oil the guides after reaming.

TOOL 09916-34550: Valve guide reamer
09916-34542: Reamer handle

NOTE:
Insert the reamer from the combustion chamber and always turn the reamer handle clockwise.

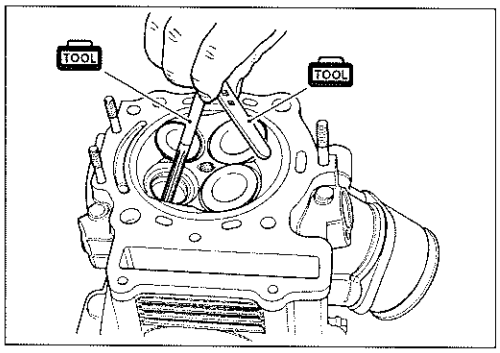

VALVE SEAT WIDTH

- Coat the valve seat uniformly with Prussian blue. Fit the valve and tap the coated seat with the valve face in a rotating manner, in order to obtain a clear impression of the seating contact. In this operation, use the valve lapper to hold the valve head.

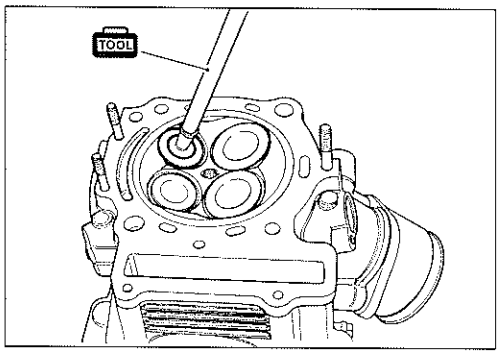

- The ring-like dye impression left on the valve face must be continuous without any break. In addition, the width of the dye ring, which is the visualized seat "width", must be within the following specification:

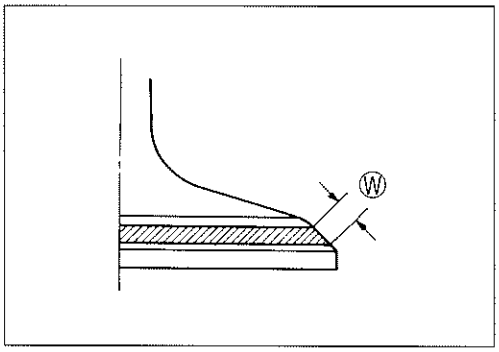

DATA Valve seat width Ⓦ
Standard: 0.9 – 1.1 mm (0.035 – 0.043 in)

TOOL 09916-10911: Valve lapper set

If either requirement is not met, correct the seat by servicing is as follows:

VALVE SEAT SERVICING

The valve seats for both intake and exhaust valves are machined to four different angles. (The seat contact surface is cut 45°.)

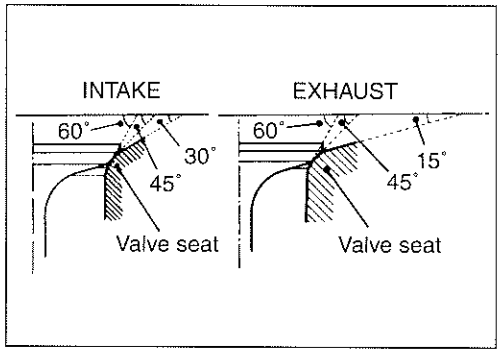

	INTAKE	EXHAUST
45°	N-615 or N-626	N-615 or N-626
60°	N-211	N-211
15°		N-615
30°	N-626	

NOTE:
The valve seat contact area must be inspected after each cut.

TOOL 09916-21111: Valve seat cutter set
09916-24210: Valve seat cutter (N-615)
09916-24480: Solid pilot (N-140-5.5)
09916-24810: Valve seat cutter (N-626)
09916-27710: Valve seat cutter (N-211)

- Insert the solid pilot with a slight rotation. Seat the pilot snugly. Install the 45° cutter, attachment and T-handle.
- Using the 45° cutter, descale and clean up the seat with one or two turns.
- Inspect the seat by the previously described seat width measurement procedure. If the seat is pitted or burned, additional seat conditioning with the 45° cutter is required.

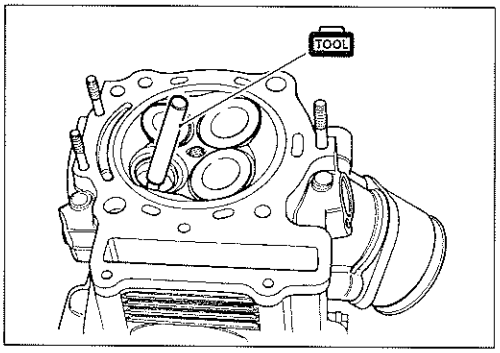

NOTE:
Cut only the minimum amount necessary from the seat to prevent the possibility of the tappet shim replacement.

If the contact area is too high on the valve, or if it is too wide, use the 15°/60° cutters (for exhaust side) and 30°/60° cutters (for intake side) to lower and narrow the contact area.

Contact area too high and too wide on face of valve

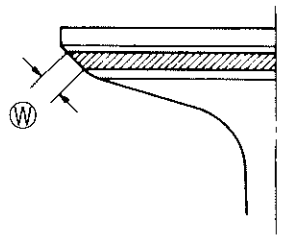

If the contact area is too low or too narrow, use the 45° cutter to raise and widen the contact area.

Contact area too low and too narrow on face of valve

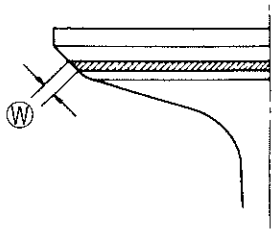

- After the desired seat position and width is achieved, use the 45° cutter very lightly to clean up any burrs caused by the previous cutting operations.

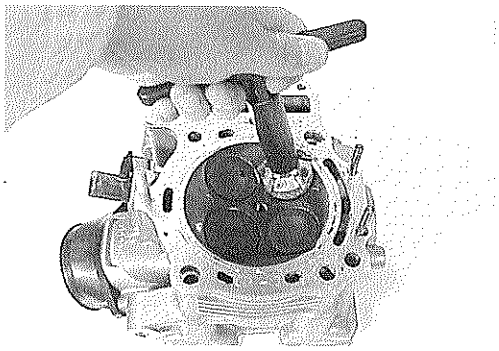

CAUTION

DO NOT use lapping compound after the final cut is made. The finished valve seat should have a velvety smooth finish and not a highly polished or shiny finish.
This will provide a soft surface for the final seating of the valve which will occur during the first few seconds of engine operation.

- Clean and assemble the head and valve components. Fill the intake and exhaust ports with gasoline to check for leaks. If any leaks occur, inspect the valve seat and face for burrs or other things that could prevent the valve from sealing.

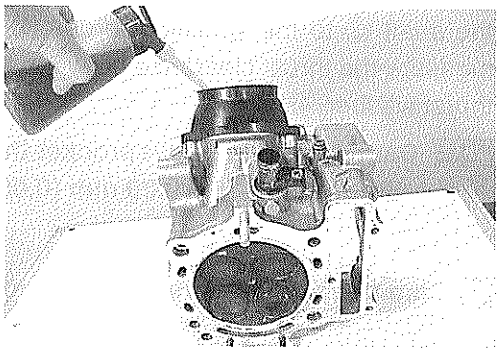

⚠ WARNING

Always use extreme caution when handling gasoline.

NOTE:
After servicing the valve seats, be sure to check the tappet clearance after the cylinder head has been reinstalled. (☞2-8)

VALVE SPRING

The force of the coil spring keeps the valve seat tight. Weakened spring results in reduced engine power output, and often account for the chattering noise coming from the valve mechanism.

Check the valve springs for proper strength by measuring their free length and also by the force required to compress them. If the spring length is less than the service limit, or if the force required to compress the spring does not fall within the range specified, replace it.

TOOL 09900-20102: Vernier calipers

DATA Valve spring free length (IN & EX)
Service Limit: 39.6 mm (1.56 in)

Valve spring tension (IN & EX)
Standard: 197 – 227 N/35.6 mm
(20.1 – 23.1 kgf/35.6 mm, 44.3 – 51.0 lbs/1.40 in)

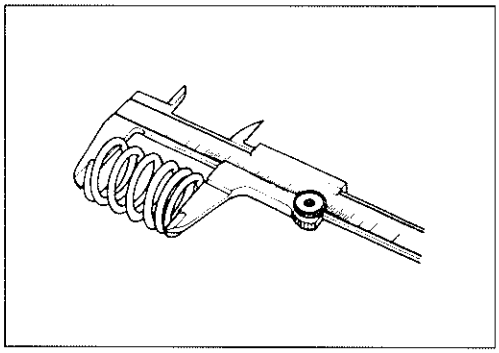

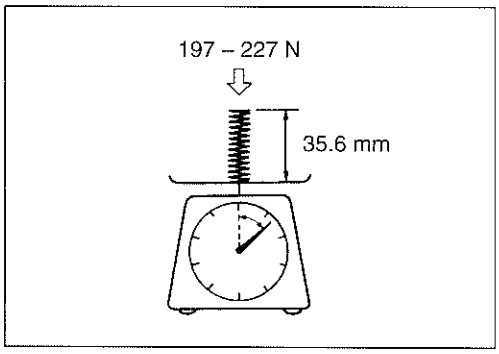

CAM DRIVE IDLE GEAR/SPROCKET THRUST CLEARANCE

Install the cam drive idle gear/sprocket ①, its shaft ②, copper washer ③ and thrust washer ④ to each cylinder head. Tighten the shaft ② to the specified torque. Use a thickness gauge to measure the thrust clearance between the cylinder head and the thrust washer ④.

DATA Cam drive idle gear/sprocket thrust clearance
Standard: 0.15 – 0.29 mm (0.006 – 0.011 in)

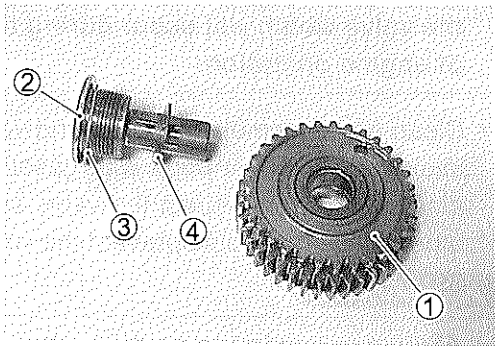

Cam drive idle gear/sprocket shaft:
40 N·m (4.0 kgf-m, 29.0 lb-ft)

TOOL 09900-20803: Thickness gauge

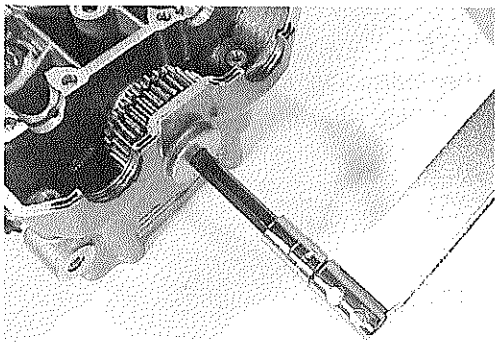

If the thrust clearance exceeds the standard range, adjust the thrust clearance by the following procedures:

- Remove the thrust washer, and measure its thickness with a micrometer.
- Change the thrust washer with the other washer if the thrust clearance is incorrect.
- Perform the thrust clearance measurement described above once again checking to make sure it is within standard.

TOOL 09900-20205: Micrometer (0 – 25 mm)

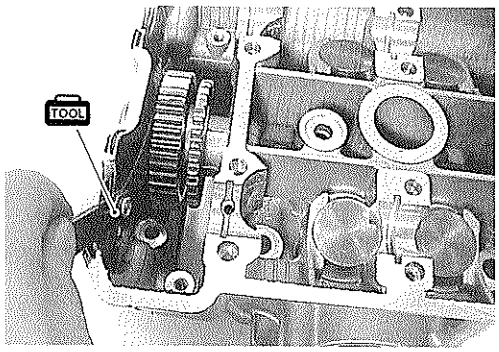

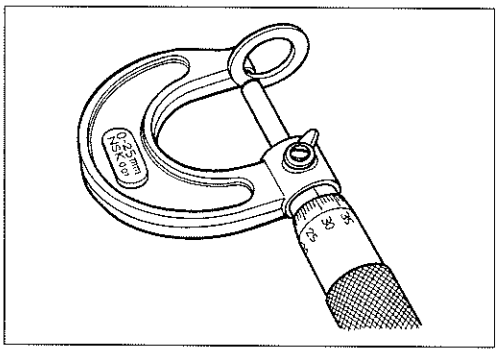

Unit: mm (in)

Color/Mark (Part No.)	Thrust washer thickness Ⓐ
Blue (09181-15182)	1.38 – 1.42 (0.054 – 0.056)
Yellow (09181-15181)	1.28 – 1.32 (0.050 – 0.052)
Light blue (09181-15176)	1.18 – 1.22 (0.046 – 0.048)
Light green (09181-15172)	1.08 – 1.12 (0.043 – 0.044)
Brown (09181-15166)	0.98 – 1.02 (0.039 – 0.040)
"J" mark (09181-15164)	0.88 – 0.92 (0.035 – 0.036)

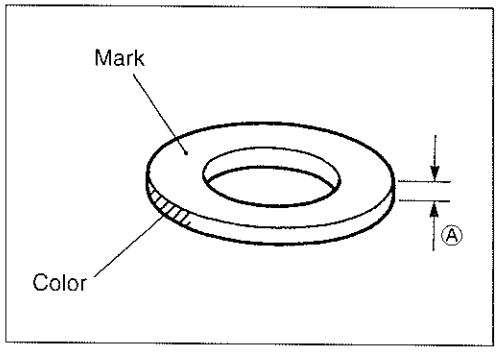

CYLINDER HEAD REASSEMBLY

- Install the valve spring seats.
- Oil each oil seal, and press-fit them into position with the valve guide installer.

TOOL 09916-44910: Valve guide remover/installer

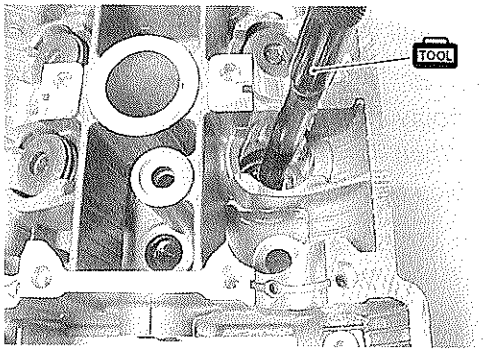

CAUTION

Do not reuse the removed oil seals.

- Insert the valves, with their stems coated with molybdenum oil solution all around and along the full stem length without any break.

CAUTION

When inserting each valve, take care not to damage the lip of the oil seal.

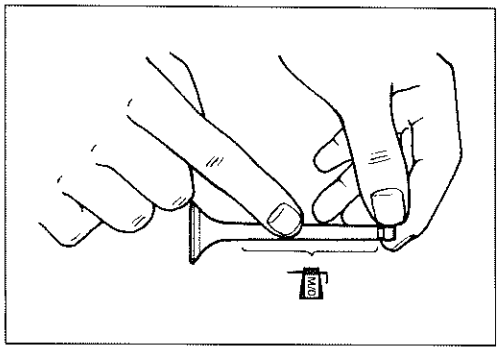

MO MOLYBDENUM OIL

- Install the valve spring with the small-pitch portion Ⓐ facing cylinder head.

Ⓑ: Large-pitch portion

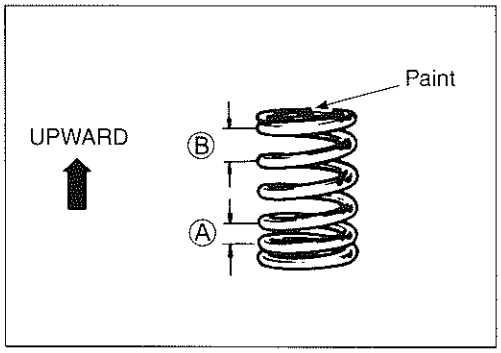

- Put on the valve spring retainer, and using the valve lifter, press down the spring, fit the cotter halves to the stem end, and release the lifter to allow the cotter ① to wedge in between retainer and stem. Be sure that the rounded lip ⓒ of the cotter fits snugly into the groove Ⓓ in the stem end.

TOOL 09916-14510: Valve lifter
09916-14910: Valve lifter attachment
09916-84511: Tweezers

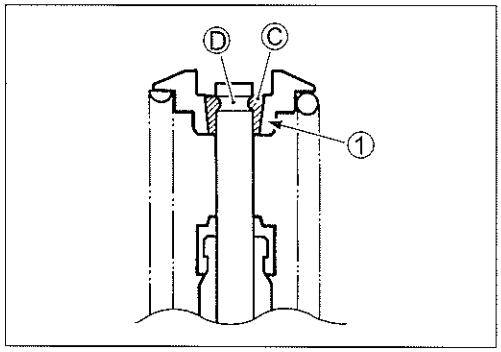

CAUTION

Be sure to restore each spring and valve to their original positions.

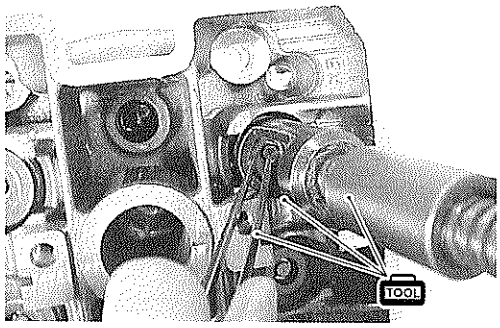

- Install the tappet shim and tappet to their original position.

NOTE:
** Apply engine oil to the shim and tappet before fitting them.*
** When seating the tappet shim, be sure the figure printed surface faces the tappet.*

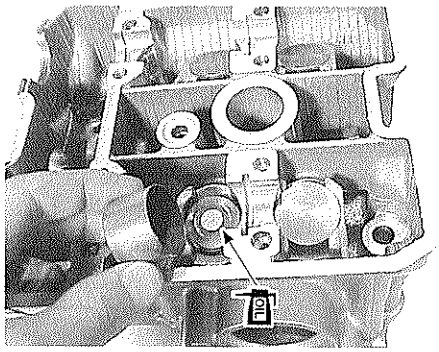

INTAKE PIPE/WATER UNION

- Remove the intake pipe.

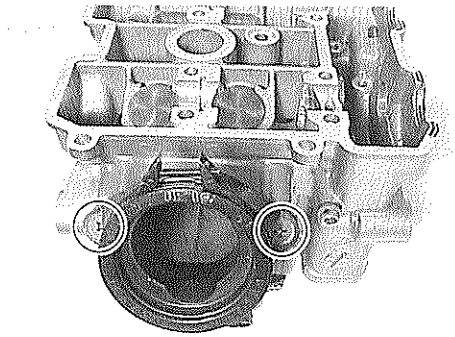

- Remove the water union.

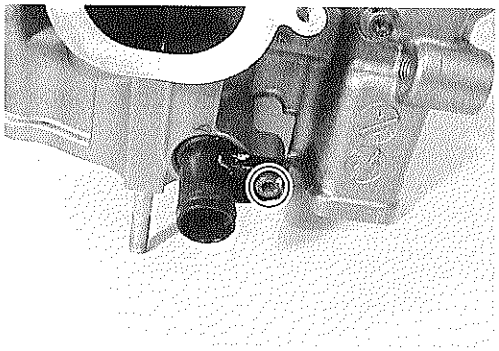

- When installing the intake pipe, apply grease to the O-ring.

NOTE:
"UP" mark faces upward.

99000-25030: SUZUKI SUPER GREASE "A" (USA)
99000-25010: SUZUKI SUPER GREASE "A" (Others)

CAUTION

Use the new O-ring to prevent air from sucking through the joint.

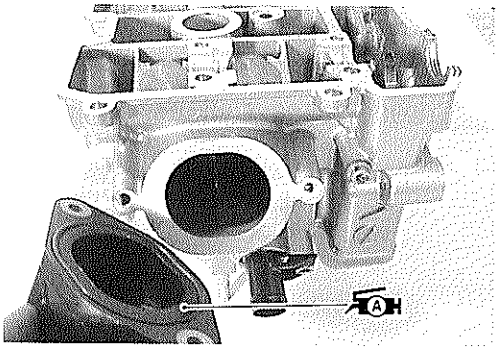

- Apply engine coolant to the new O-ring and install the water union.

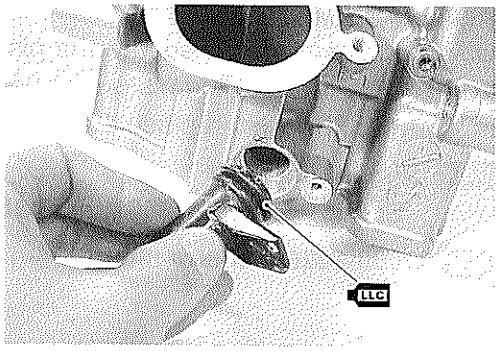

CYLINDER/PISTON INSPECTION

CYLINDER DISTORTION

Check the gasketed surface of the cylinder for distortion with a straightedge and thickness gauge, taking a clearance reading at several places as indicated. If the largest reading at any position of the straightedge exceeds the limit, replace the cylinder.

Cylinder distortion
Service Limit: 0.05 mm (0.002 in)

09900-20803: Thickness gauge

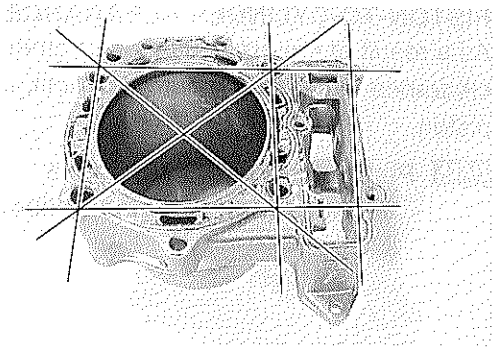

CYLINDER BORE

Inspect the cylinder wall for any scratches, nicks or other damage. Measure the cylinder bore diameter at six places.

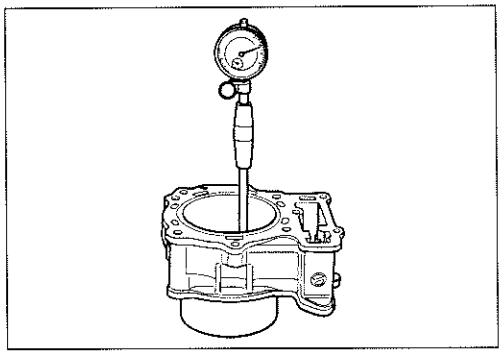

DATA Cylinder bore
Standard: 98.000 – 98.015 mm (3.8583 – 3.8589 in)

TOOL 09900-20508: Cylinder gauge set

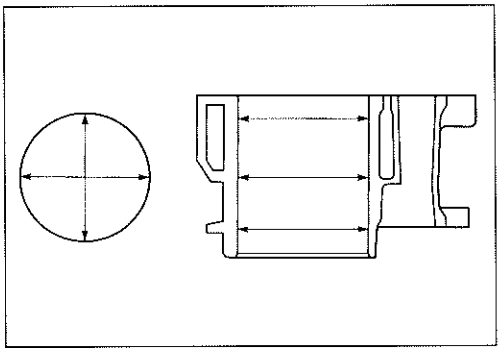

PISTON DIAMETER

Using a micrometer, measure the piston outside diameter at 10 mm (0.4 in) from the piston skirt end. If the measurement is less than the limit, replace the piston.

DATA Piston diameter
Service Limit: 97.880 mm (3.8535 in)

TOOL 09900-20204: Micrometer (75 – 100 mm)

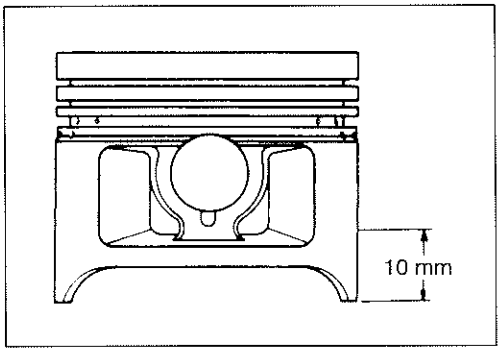

PISTON-TO-CYLINDER CLEARANCE

As a result of the previous measurement, if the piston to cylinder clearance exceeds the following limit, replace both cylinder and piston.

DATA Piston to cylinder clearance
Service Limit: 0.12 mm (0.0047 in)

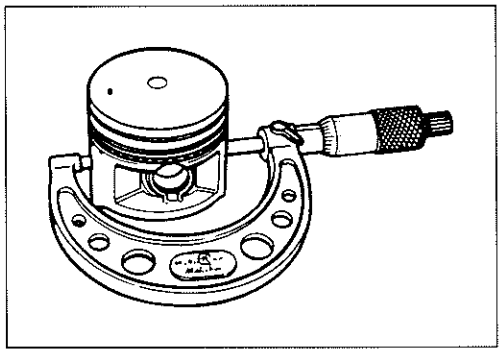

PISTON RING TO GROOVE CLEARANCE

Using a thickness gauge, measure the side clearances of the 1st and 2nd rings. If any of the clearances exceeds the limit, replace both piston and piston rings.

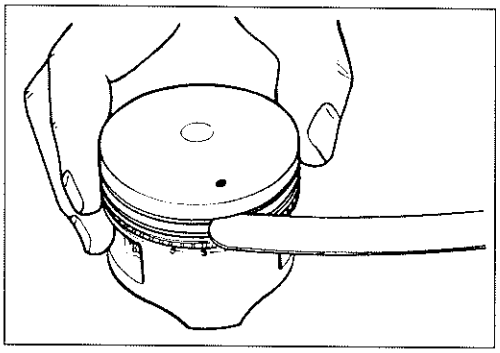

DATA Piston ring to groove clearance

Service Limit (1st) : 0.18 mm (0.0071 in)
(2nd) : 0.15 mm (0.0059 in)

DATA Piston ring groove width

Standard (1st) : 0.93 – 0.95 mm (0.0366 – 0.0374 in)
1.55 – 1.57 mm (0.0610 – 0.0618 in)
(2nd) : 1.01 – 1.03 mm (0.0398 – 0.0406 in)
(Oil) : 2.51 – 2.53 mm (0.0988 – 0.0996 in)

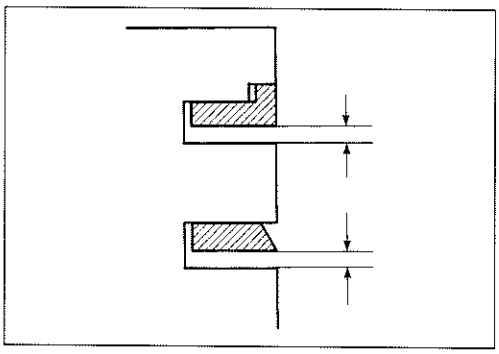

DATA Piston ring thickness

Standard (1st) : 0.86 – 0.91 mm (0.034 – 0.036 in)
1.38 – 1.40 mm (0.054 – 0.055 in)
(2nd) : 0.97 – 0.99 mm (0.038 – 0.039 in)

TOOL 09900-20803: Thickness gauge
09900-20205: Micrometer (0 – 25 mm)

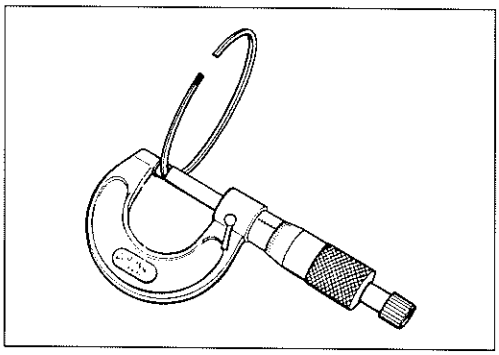

PISTON RING FREE END GAP AND PISTON RING END GAP

Before installing piston rings, measure the free end gap of each ring using vernier calipers. Next, fit the ring in the cylinder, and measure each ring end gap using a thickness gauge.
If any ring has an excess end gap, replace the ring.

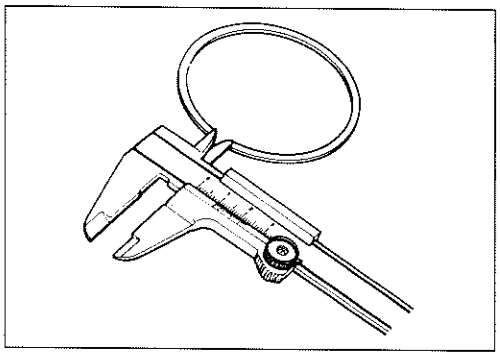

DATA Piston ring free end gap

Service Limit (1st) : 7.0 mm (0.28 in)
(2nd) : 8.1 mm (0.32 in)

TOOL 09900-20101: Vernier caliper

DATA Piston ring end gap

Service Limit (1st) : 0.5 mm (0.02 in)
(2nd) : 0.7 mm (0.03 in)

TOOL 09900-20803: Thickness gauge

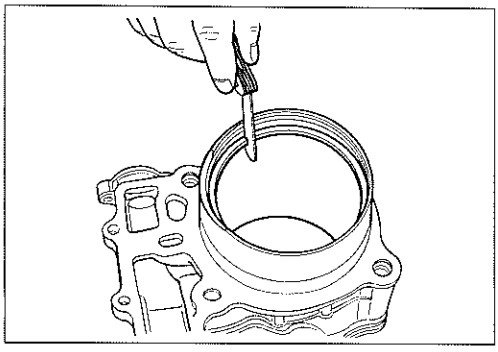

PISTON PIN AND PIN BORE

Using a small bore gauge, measure the piston pin bore inside diameter, and using a micrometer, measure the piston pin outside diameter. If the difference between these two measurements is more than the limits, replace both piston and piston pin.

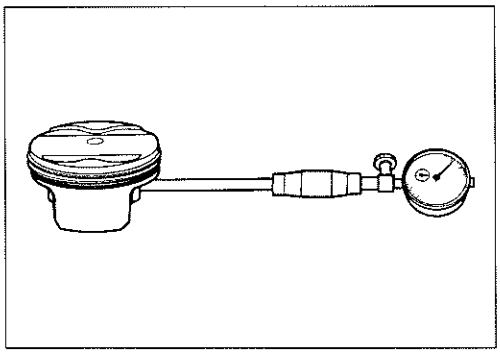

DATA Piston pin bore I.D.
Service limit: 22.030 mm (0.8673 in)

TOOL 09900-20602: Dial gauge (1/1000 mm, 1 mm)
09900-22403: Small bore gauge (18 – 35 mm)

Using a micrometer, measure the piston pin outside diameter at three positions.

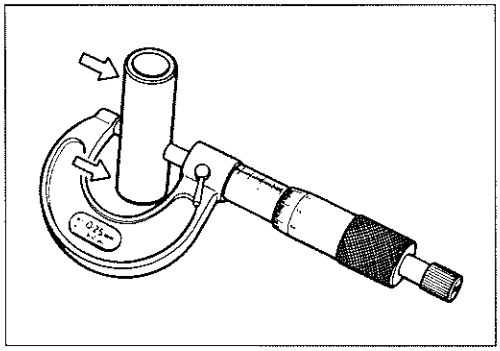

DATA Piston pin O.D.
Service Limit: 21.980 mm (0.8654 in)

TOOL 09900-20205: Micrometer (0 – 25 mm)

CONROD/CRANKSHAFT

CONROD SMALL END I.D.

Using a small bore gauge, measure the inside diameter of the conrod small end.

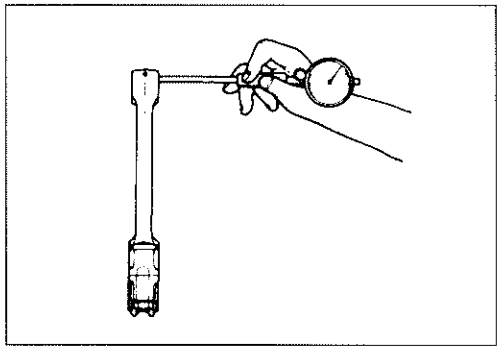

TOOL 09900-20602: Dial gauge (1/1000 mm, 1 mm)
09900-22403: Small bore gauge (18 – 35 mm)

DATA Conrod small end I.D.
Service Limit: 22.040 mm (0.8677 in)

If the inside diameter of the conrod small end exceeds the limit, replace the conrod.

CONROD BIG END SIDE CLEARANCE

Check the conrod side clearance by using a thickness gauge. If the clearance exceeds the limit, replace conrod or crankshaft.

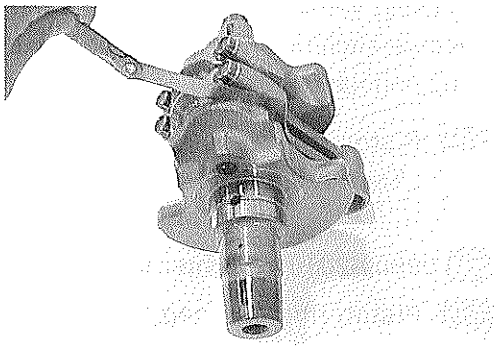

DATA Conrod big end side clearance
Service Limit: 0.50 mm (0.020 in)

TOOL 09900-20803: Thickness gauge

DATA Conrod big end width
Standard: 21.95 – 22.00 mm (0.864 – 0.866 in)

DATA Crank pin width
Standard: 44.17 – 44.22 mm (1.739 – 1.741 in)

TOOL 09900-20205: Micrometer (0 – 25 mm)

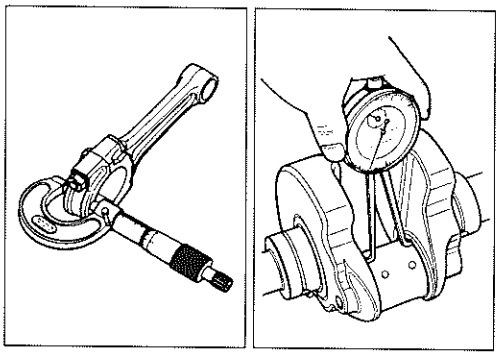

CONROD-CRANK PIN BEARING INSPECTION

- Loosen the bearing cap bolts, and tap the bearing cap bolt lightly with plastic hammer to remove the bearing cap.

CAUTION

Never reuse the bearing cap bolt.

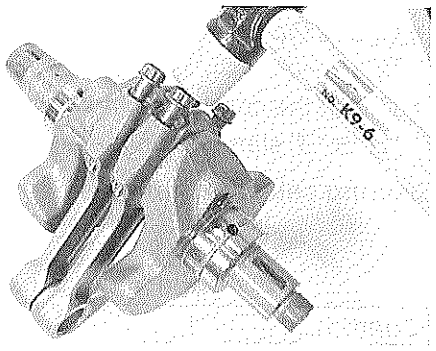

- Remove the conrods, and mark them to identify the cylinder position.
- Inspect the bearing surfaces for any sign of fusion, pitting, burn, or flaws. If any, replace them with a specified set of bearings.

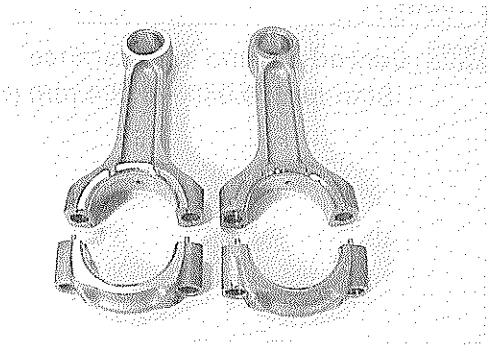

CONROD-CRANK PIN BEARING SELECTION

- Place plastigauge axially on the crank pin avoiding the oil hole, at TDC or BDC side as shown.
- Tighten the bearing cap bolts as the specified manner.

TOOL 09900-22301: Plastigauge
09900-22302: Plastigauge

NOTE:
Never rotate the crankshaft or conrod when a piece of plastigauge is in the clearance.

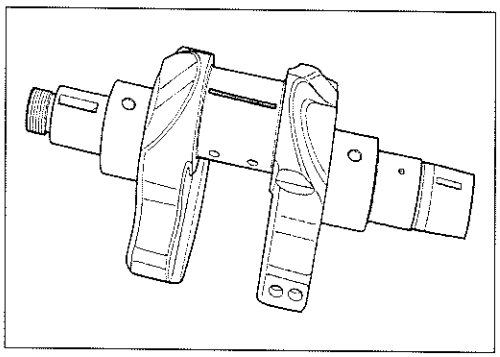

- Remove the caps and measure the width of compressed plastigauge with envelope scale. This measurement should be taken at the widest part.

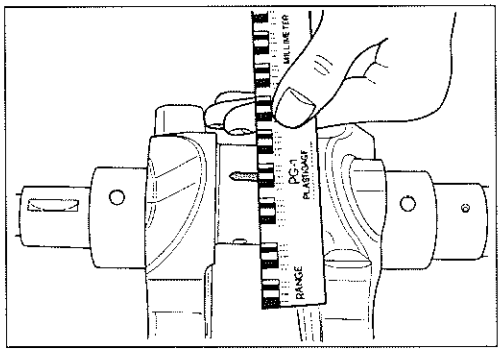

DATA Conrod big end oil clearance
Service Limit: 0.080 mm (0.0031 in)

- If oil clearance exceeds the service limit, select the specified bearings from the bearing selection table.

- Check the corresponding conrod I.D. code number Ⓐ, "1" or "2".
- Check the corresponding crank pin O.D. code number Ⓑ, "1", "2" or "3" stamped on the left crank web.

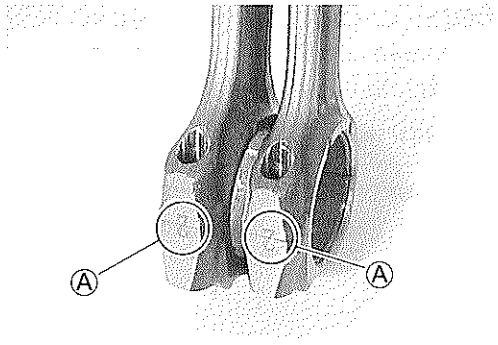

Bearing selection table

		Crank pin O.D. Ⓑ		
	Code	1	2	3
Conrod I.D. code Ⓐ	1	Green	Black	Brown
	2	Black	Brown	Yellow

DATA Conrod big end oil clearance
Standard: 0.040 – 0.064 mm (0.0016 – 0.0025 in)

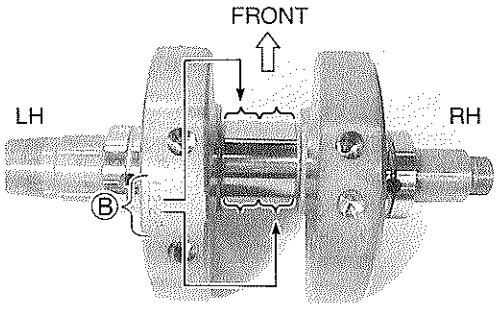

Conrod big end I.D. specification

Code Ⓐ	I.D. specification
1	48.000 – 48.008 mm (1.8898 – 1.8900 in)
2	48.008 – 48.016 mm (1.8900 – 1.8904 in)

Crank pin O.D. specification

Code Ⓑ	O.D. specification
1	44.992 – 45.000 mm (1.7713 – 1.7717 in)
2	44.984 – 44.992 mm (1.7710 – 1.7713 in)
3	44.976 – 47.984 mm (1.7707 – 1.7710 in)

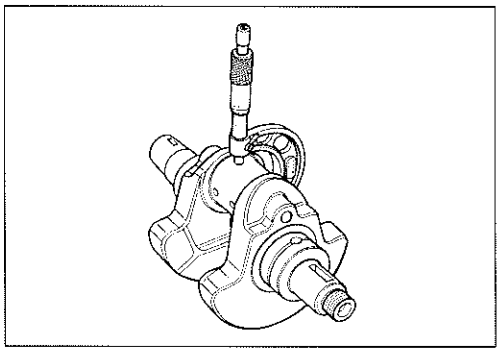

TOOL 09900-20202: Micrometer (25 – 50 mm)

Bearing thickness

Color (Part No.)	Thickness
Green (12164-02F11-0A0)	1.476 – 1.480 mm (0.0581 – 0.0583 in)
Black (12164-02F11-0B0)	1.480 – 1.484 mm (0.0583 – 0.0584 in)
Brown (12164-02F11-0C0)	1.484 – 1.488 mm (0.0584 – 0.0586 in)
Yellow (12164-02F11-0D0)	1.488 – 1.492 mm (0.0586 – 0.0587 in)

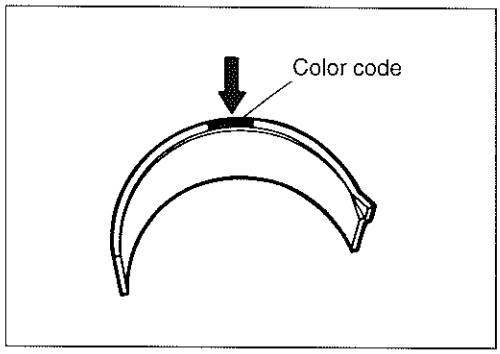

CAUTION

Bearing must be replaced as a set.

BEARING ASSEMBLY

- When fitting the bearings to the bearing cap and conrod, be sure to fix the stopper part Ⓒ first, and press in the other end.

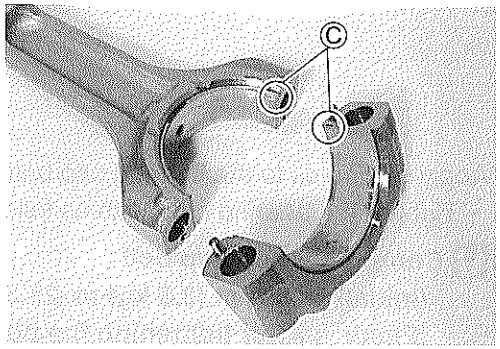

- Apply molybdenum oil solution to the crank pin and bearing surface.

MOLYBDENUM OIL

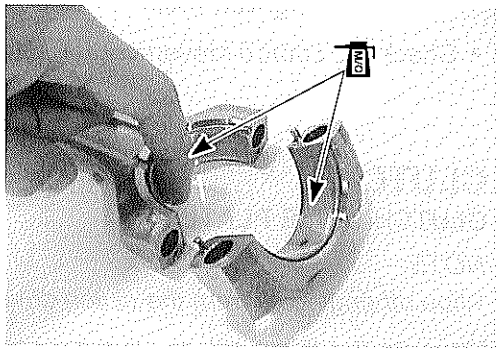

- When fitting the conrods on the crankshaft, make sure that I.D. codes Ⓐ of the conrods face each cylinder intake valve sides.

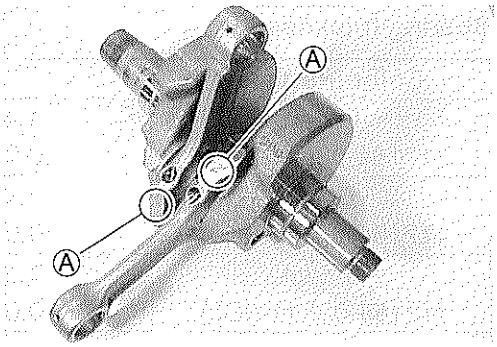

CAUTION

Never reuse the bearing cap bolt.

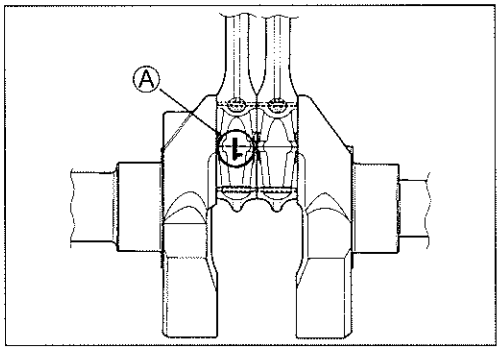

Apply engine oil to the bearing cap bolts.

- Tighten the bearing cap bolts as following two steps.

Conrod bearing cap bolt
(Initial) : 35 N·m (3.5 kgf-m, 25.5 lb-ft)
(Final) : After tightening the bolts to the above torque, tighten them 1/4 of a turn (90°).

- Check the conrod movement for smooth turning.

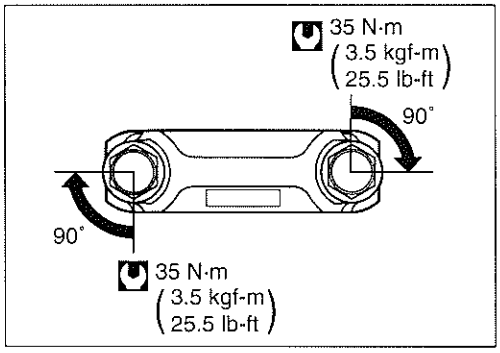

CLUTCH

CLUTCH DRIVE PLATES

NOTE:
Wipe off engine oil from the clutch drive plates with a clean rag.

Measure the thickness of drive plates with a vernier calipers. If each drive plate is not within the standard range, replace it with a new one.

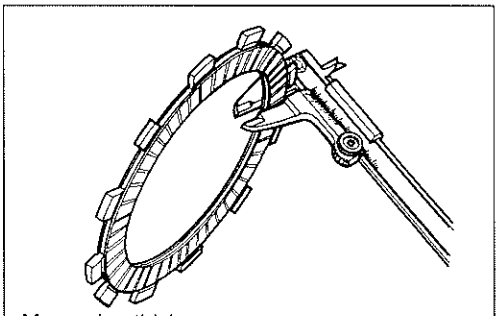
Measuring thickness

DATA Drive plate thickness
Standard (No.1): 2.92 – 3.08 mm (0.115 – 0.121 in)
(No.2 & No.3): 3.72 – 3.88 mm (0.146 – 0.153 in)

TOOL 09900-20102: Vernier calipers

Measure the claw width of drive plates with a vernier calipers. Replace the drive plates found to have worn down to the limit.

DATA Drive plate claw width (No.1 and No.2)
Standard (No.1): 13.85 – 13.96 mm (0.545 – 0.550 in)
(No.2 & No.3): 13.90 – 14.00 mm (0.547 – 0.551 in)

TOOL 09900-20102: Vernier calipers

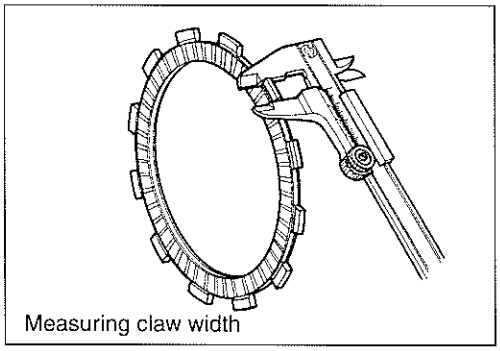
Measuring claw width

CLUTCH DRIVEN PLATES

NOTE:
Wipe off engine oil from the clutch driven plates with a clean rag.

Measure each driven plate for distortion with a thickness gauge and surface plate.
Replace driven plates which exceed the limit.

DATA Driven plate distortion
Service Limit: 0.10 mm (0.004 in)

TOOL 09900-20803: Thickness gauge

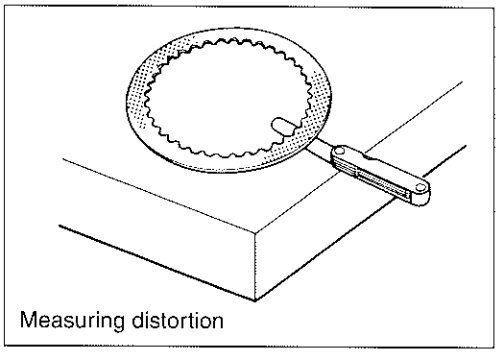
Measuring distortion

CLUTCH SPRING FREE LENGTH

Measure the free length of each coil spring with a vernier calipers, and compare the length with the specified limit. Replace all the springs if any spring is not within the limit.

DATA Clutch spring free length
Service Limit: 59.4 mm (2.34 in)

TOOL 09900-20102: Vernier calipers

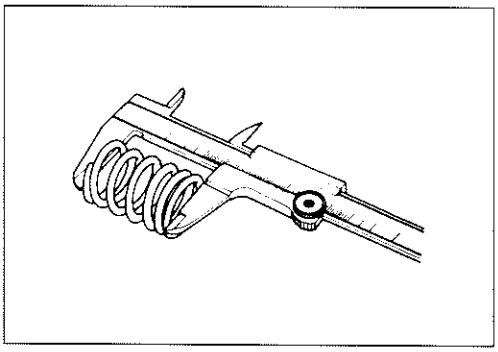

CLUTCH BEARING

Inspect the clutch release bearing for any abnormality, particularly cracks, to decide whether it can be reused or should be replaced.
Smooth engagement and disengagement of the clutch depends on the condition of this bearing.

NOTE:
Thrust washer is located between the pressure plate and the bearing.

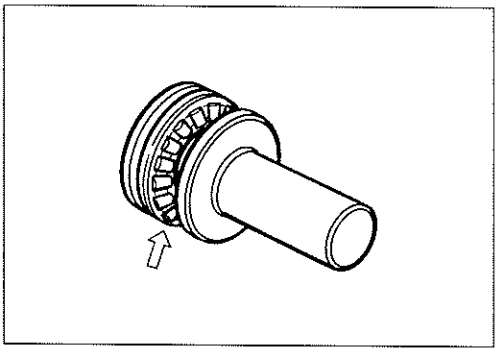

TRANSMISSION

CONSTRUCTION

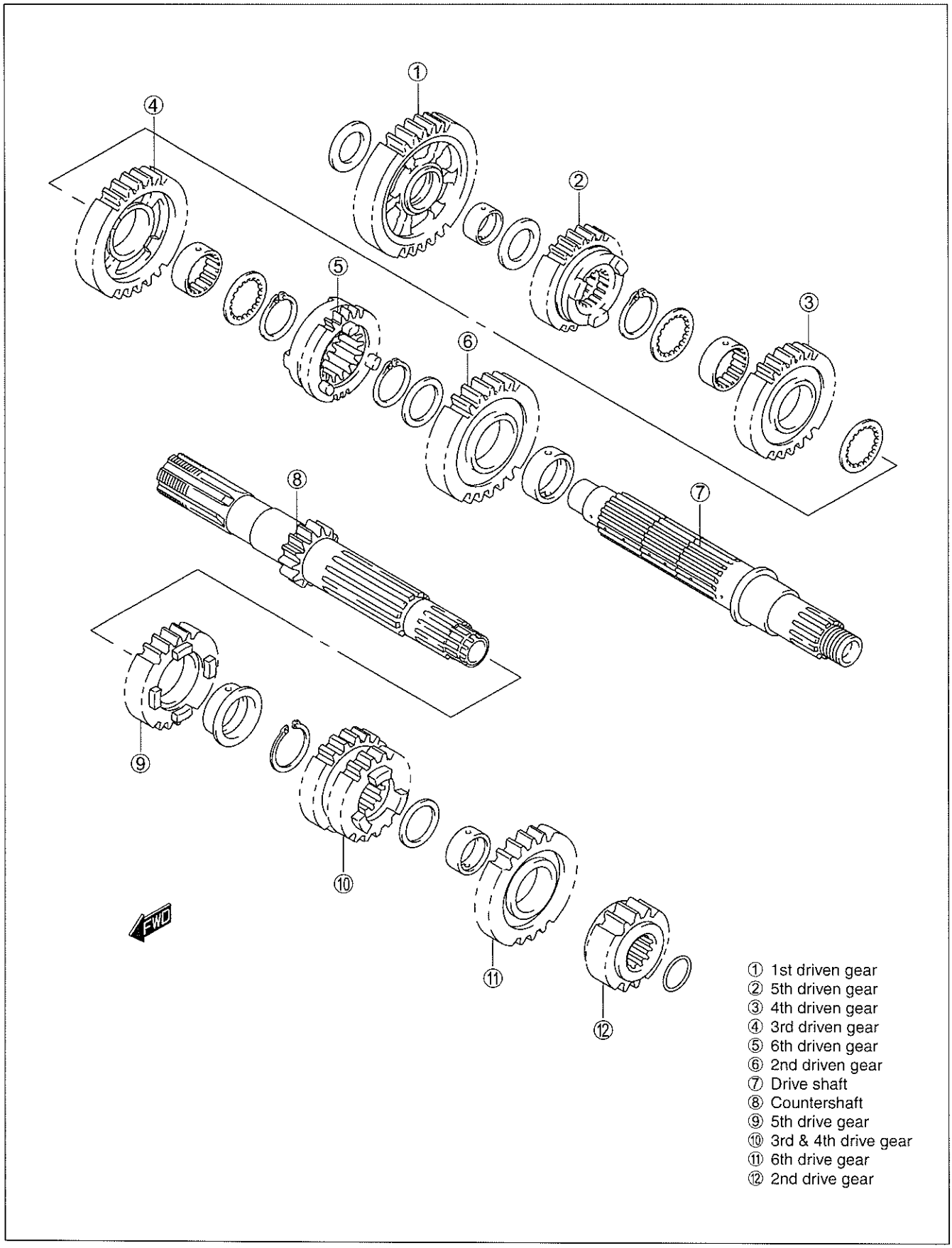

① 1st driven gear
② 5th driven gear
③ 4th driven gear
④ 3rd driven gear
⑤ 6th driven gear
⑥ 2nd driven gear
⑦ Drive shaft
⑧ Countershaft
⑨ 5th drive gear
⑩ 3rd & 4th drive gear
⑪ 6th drive gear
⑫ 2nd drive gear

DISASSEMBLY

CAUTION

Be sure to identify each removed part as to its location, and lay the parts out in groups designated as "Drive" and "Driven", so that each will be restored to the original location during assembly.

Countershaft

- Remove the O-ring ①, 2nd drive gear ② and top drive gear ③.

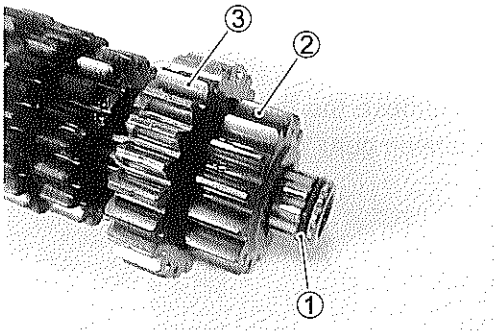

CAUTION

The removed O-ring must be replaced with a new one.

- Remove the top drive gear bushing ④, washer ⑤, and 3rd/4th drive gears ⑥.

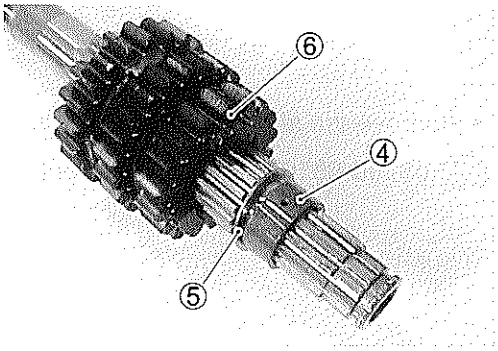

- Remove the snap ring with the special tool.

TOOL 09900-06107: Snap ring pliers

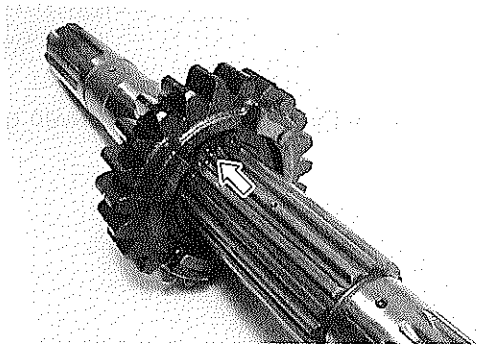

- Remove the 5th drive gear ⑦ and its bushing ⑧.

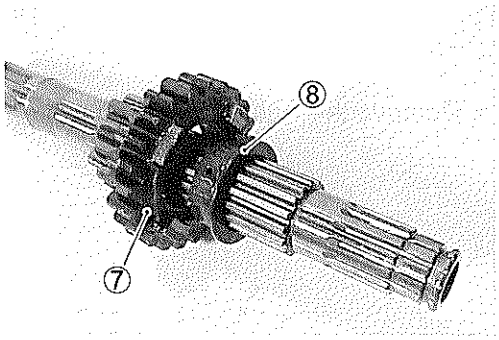

Driveshaft

- Remove the low driven gear ① and washer ②.

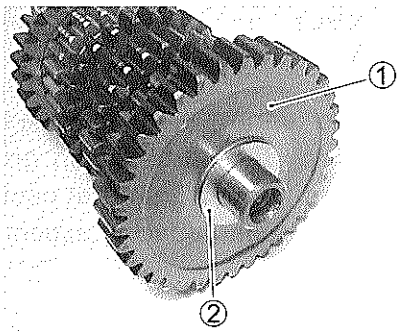

- Remove the low driven gear bushing ③, washer ④ and 5th driven gear ⑤.

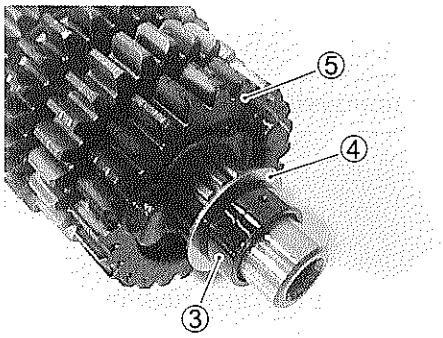

- Remove the snap ring with the special tool.

TOOL 09900-06107: Snap ring pliers

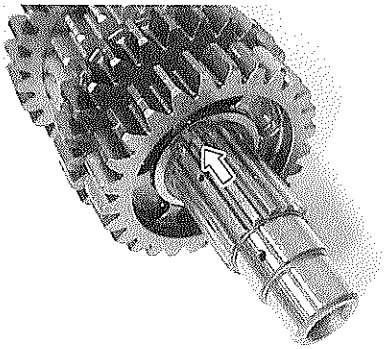

- Remove the washer ⑥, 4th driven gear ⑦ and its bushing ⑧.

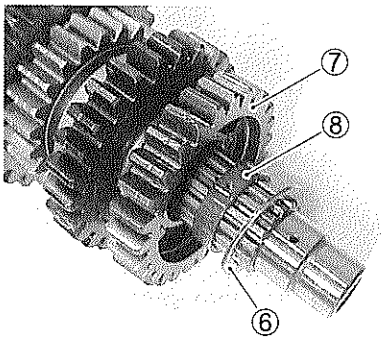

- Remove the washer ⑨, 3rd driven gear ⑩ and its busing ⑪.

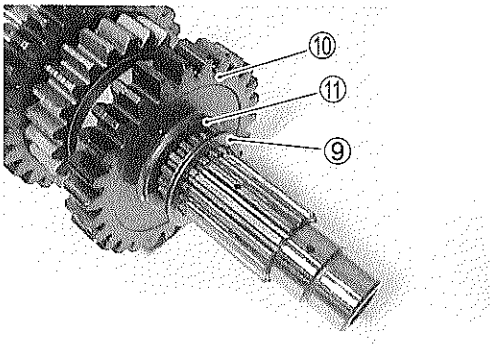

- Remove the washer ①.
- Remove the top driven gear ② by removing the snap ring.

TOOL 09900-06107: Snap ring pliers

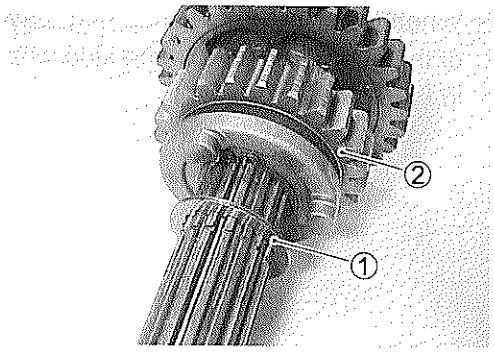

- Remove the snap ring with the special tool.

TOOL 09900-06107: Snap ring pliers

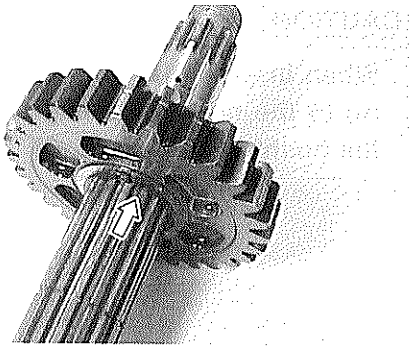

- Remove the 2nd driven gear ③, its bushing ④ and washer ⑤.

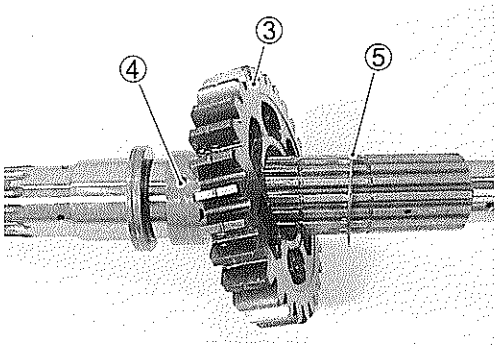

REASSEMBLY

Assemble the transfer in the reverse order of disassembly. Pay attention to the following points:

NOTE:

** Always use new snap rings.*

** Before installing the gears, coat lightly engine oil to the shafts and gears.*

CAUTION

*** Never reuse a snap ring. After a snap ring has been removed from a shaft, it should be discarded and a new snap ring must be installed.**

*** When installing a new snap ring, care must be taken not to expand the end gap larger than required to slip the snap ring over the shaft.**

*** After installing a snap ring, always ensure that it is completely seated in its groove and securely fitted.**

- When installing a new snap ring, pay attention to the direction of the snap ring. Fit it to the side where the thrust is as shown in the figure.

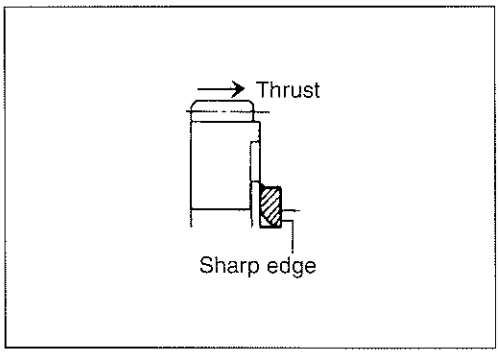

CAUTION

When installing the 3rd and 4th driven gear bushings on to the driveshaft, align the shaft oil holes Ⓐ with the bushing oil hole Ⓑ.

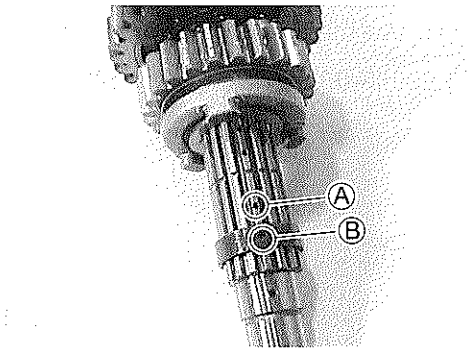

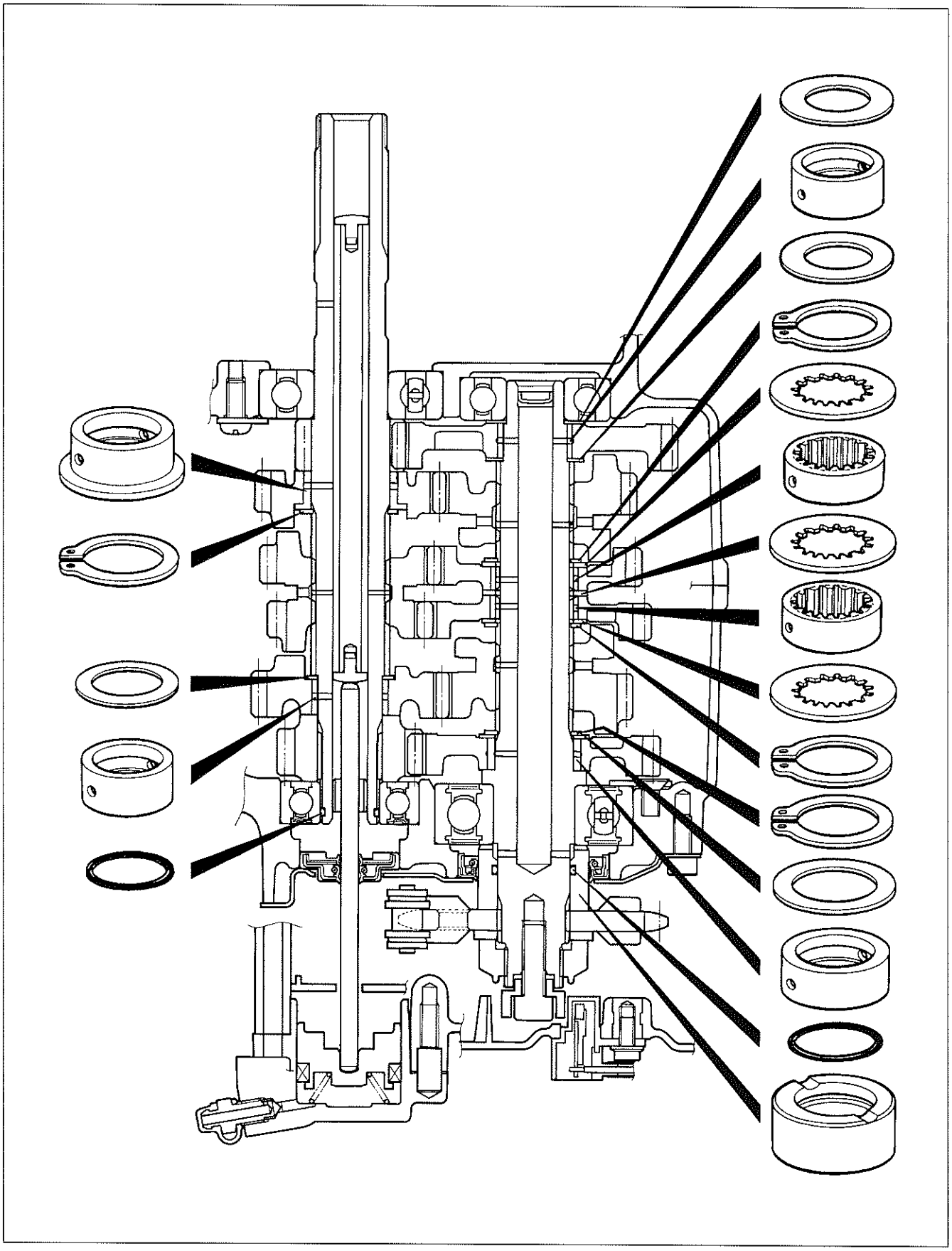

GEARSHIFT FORK

GEARSHIFT FORK TO GROOVE CLEARANCE

Using a thickness gauge, check the gearshift fork clearance in the groove of its gear.

The clearance for each gearshift fork plays an important role in the smoothness and positiveness of the shifting action.

DATA Shift fork to groove clearance
Service Limit: 0.50 mm (0.020 in)

TOOL 09900-20803: Thickness gauge
09900-20102: Vernier calipers

If the clearance checked is noted to exceed the limit specified, replace the fork or its gear, or both.

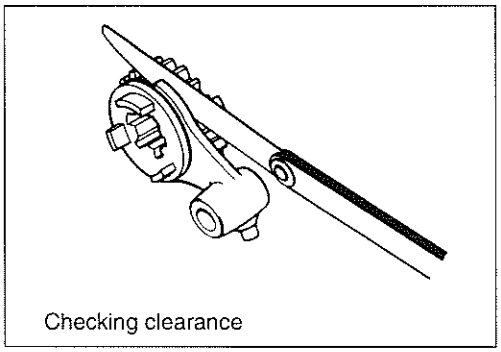

Checking clearance

DATA Shift fork groove width
Standard: 5.0 – 5.1 mm (0.197 – 0.201 in)

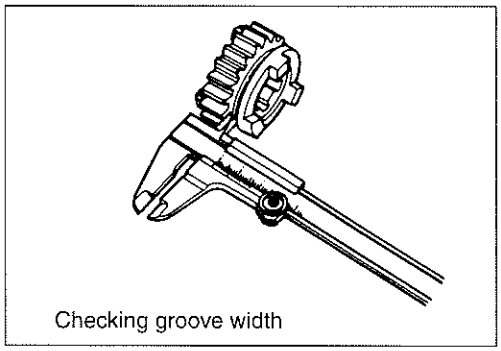

Checking groove width

DATA Shift fork thickness
Standard: 4.8 – 4.9 mm (0.189 – 0.193 in)

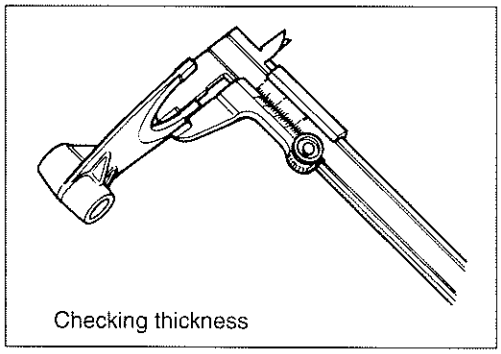

Checking thickness

PRIMARY DRIVE GEAR

PRIMARY DRIVE GEAR INSPECTION

Visually inspect the gear teeth for wear and damage. If they are worn, replace the gear with a new one.

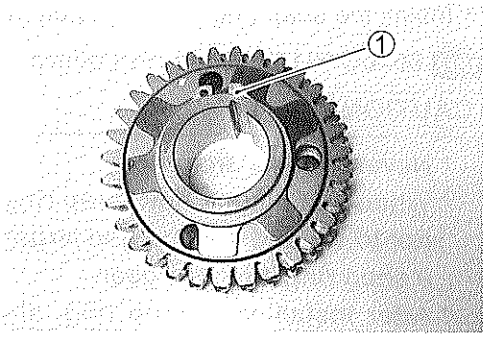

PRIMARY DRIVE GEAR DISASSEMBLY

- Disassemble the primary drive gear by removing the snap ring ①.

TOOL 09900-06107: Snap ring pliers

①: Snap ring
②: Spring washer
③: Scissors gear
④: Spring
⑤: Primary drive gear

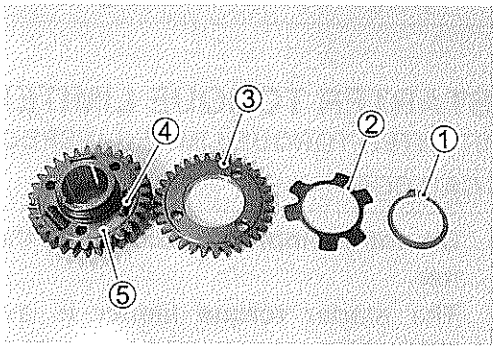

PRIMARY DRIVE GEAR REASSEMBLY

- Set the springs ① into the grooves.
- Install the scissors gear ②.

NOTE:
Align the holes of the primary drive gear and the scissors gear.

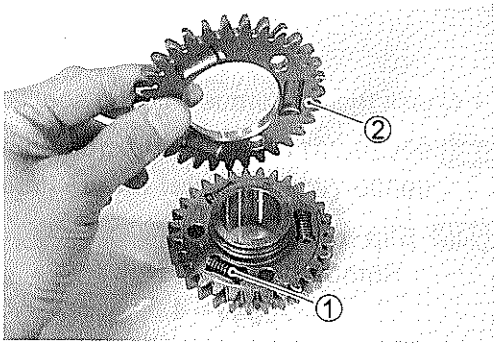

- Install the spring washer ③ not to cover the holes of the gears.

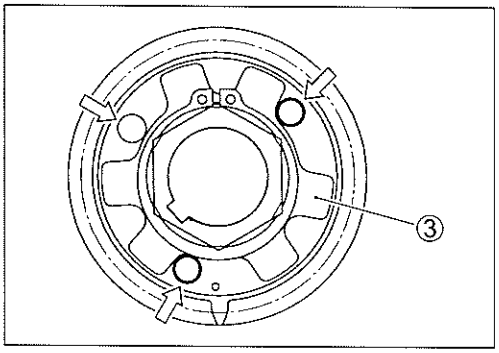

NOTE:
The convex side of the washer faces upward.

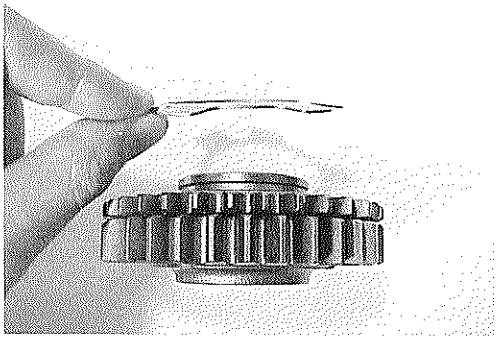

- Install the snap ring ① completely with the special tool.

TOOL 09900-06107: Snap ring pliers

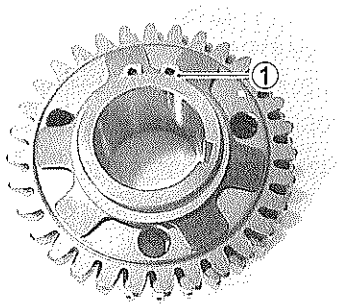

CAUTION

> *** Never reuse a snap ring.**
> *** When installing a new snap ring, care must be taken not to expand the end gap larger than required to slip a snap ring over the gear.**
> *** After installing a snap ring, always insure that it is completely seated in its groove and securely fitted.**

STARTER TORQUE LIMITER

STARTER TORQUE LIMITER INSPECTION

CAUTION

> **Do not attempt to disassemble the starter torque limiter.**
> **The starter torque limiter is available only as an assembly.**

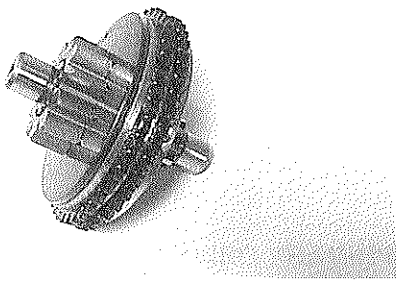

- Check the slip torque with the special tools.

TOOL 09930-73110: Starter torque limiter holder ①
09930-73120: Starter torque limiter socket ②

DATA Slip torque
Standard: 20 – 45 N·m
(2.0 – 4.5 kgf-m, 14.5 – 32.5 lb-ft)

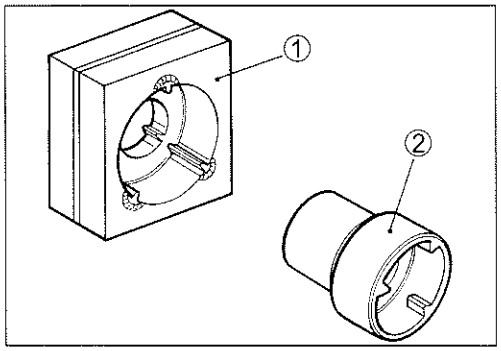

- Set the starter torque limiter to the special tools and vise as shown in the illustration.
- If the slip torque is not within the specification, replace the starter torque limiter with a new one.

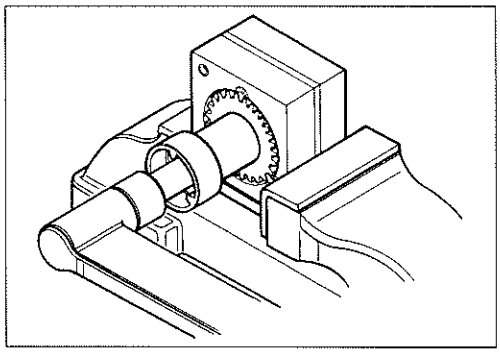

STARTER CLUTCH

DISASSEMBLY

- Remove the starter clutch securing bolts by holding the rotor with the special tool.

TOOL 09930-44541: Rotor holder

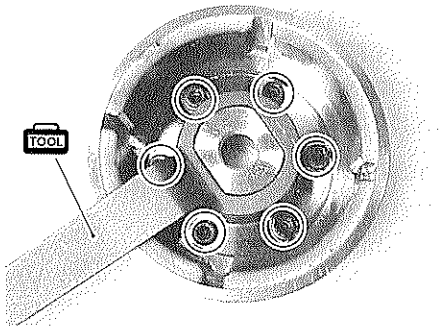

REASSEMBLY

- Install the starter clutch in the proper direction.

NOTE:

** When installing the starter clutch onto the rotor, face the flange side Ⓐ of the one way clutch to the rotor.*

** The arrow mark Ⓑ must face to the engine side.*

- Apply engine oil to the starter clutch.

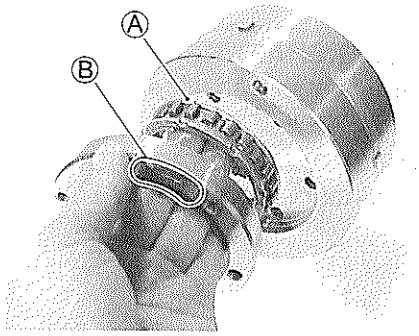

- Apply THREAD LOCK SUPER "1303" to the bolts, and then tighten them to the specified torque with the special tool.

Starter clutch bolt: 26 N·m (2.6 kgf-m, 19.0 lb-ft)

1303 99000-32030: THREAD LOCK SUPER "1303"

TOOL 09930-44541: Rotor holder

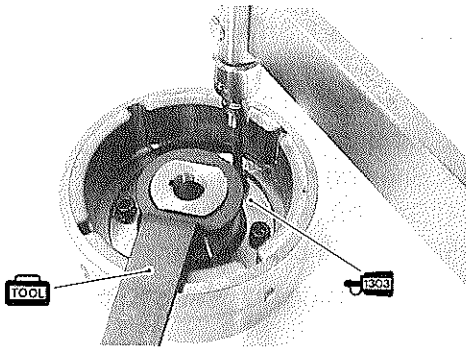

INSPECTION

- Install the starter driven gear to the starter clutch.
- Check that the starter driven gear turns in the opposite direction of the arrow mark Ⓒ on the rotor while holding the generator rotor. The gear never turns in the direction of the arrow.
- If there is anything unusual, replace the one way clutch.

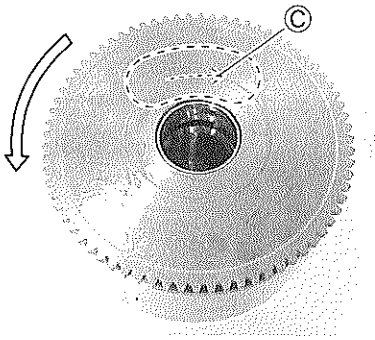

Inspect the starter driven gear bushing for any damage.

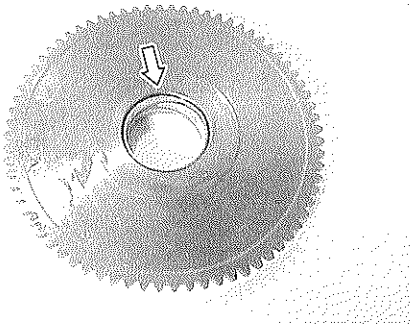

GEARSHIFT

GEARSHIFT SHAFT/GEARSHIFT ARM DISASSEMBLY

- Remove the following parts from the gearshift shaft/gearshift arm ①.

② Washer
③ Snap ring
④ Gearshift shaft return spring
⑤ Gearshift cam drive plate
⑥ Plate return spring
⑦ Washer
⑧ Snap ring
⑨ Washer

TOOL 09900-06107: Snap ring pliers

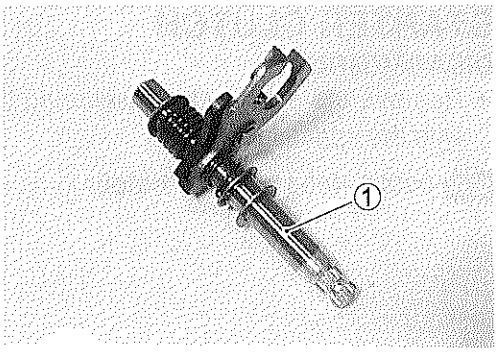

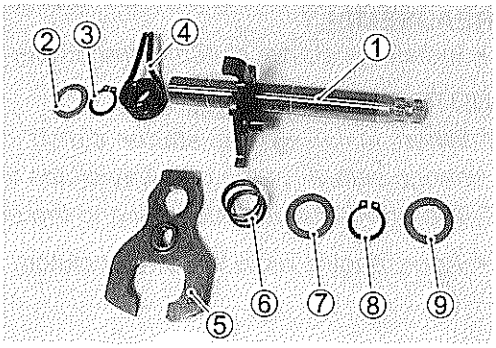

GEARSHIFT SHAFT/GEARSHIFT ARM INSPECTION

Check the gearshift shaft/gearshift arm ① for wear or bend.

RETURN SPRINGS INSPECTION

Check the return springs, ④ and ⑥, for damage or fatigue.

GEARSHIFT SHAFT/GEARSHIFT ARM REASSEMBLY

- Install the following parts to the gearshift shaft/gearshift arm ① as shown in the right illustration.

② Washer
③ Snap ring
④ Gearshift shaft return spring
⑤ Gearshift cam drive plate
⑥ Plate return spring
⑦ Washer
⑧ Snap ring
⑨ Washer

TOOL 09900-06107: Snap ring pliers

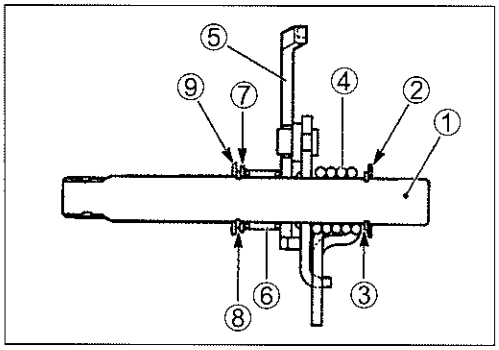

NOTE:
When installing the gearshift shaft return spring ④, position the stopper Ⓐ of the gearshift arm between the shaft return spring ends Ⓑ.

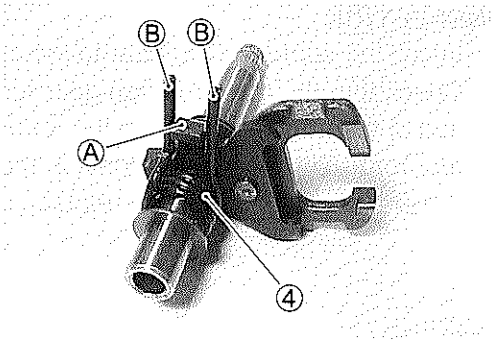

CRANKCASE

OIL PUMP

- Remove the oil pump.

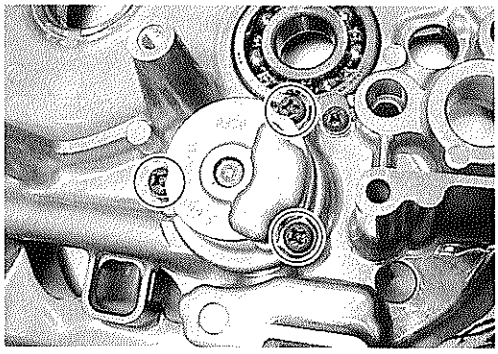

- Rotate the oil pump by hand and check that it moves smoothly.
- If it does not move smoothly, replace the oil pump assembly.

CAUTION

Do not attempt to disassemble the oil pump assembly. The oil pump is available only as an assembly.

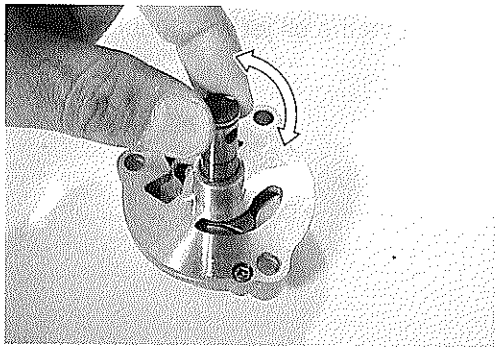

OIL PRESSURE REGULATOR

- Remove the oil pressure regulator ①.
- When installing the oil pressure regulator, apply engine oil to the new O-ring.

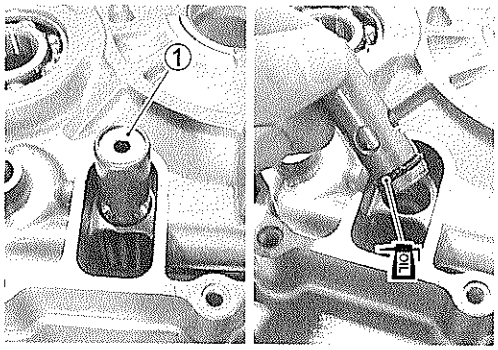

Check the operation of the oil pressure regulator by pushing on the piston with a proper bar. If the piston does not operate, replace the oil pressure regulator with a new one.

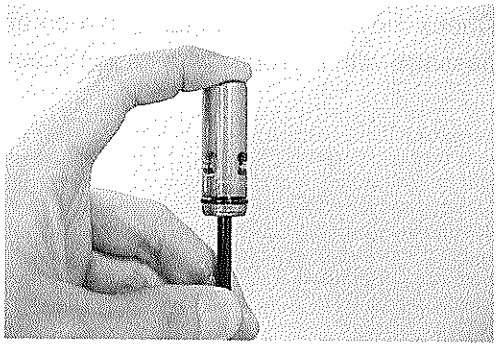

OIL PRESSURE SWITCH

- Remove the oil pressure switch ①.
- When installing the oil pressure switch, apply SUZUKI BOND "1215" to the thread.

Oil pressure switch: 14 N·m (1.4 kgf-m, 10.0 lb-ft)

1207B 99104-31140: SUZUKI BOND "1207B"

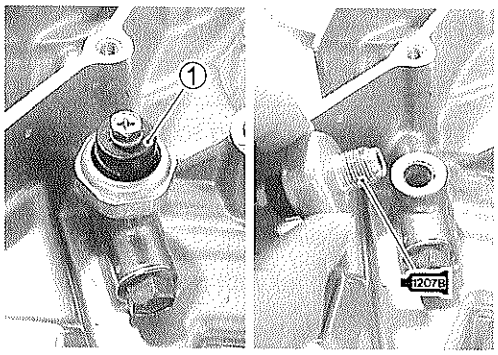

OIL JET

- Remove the oil gallery plug.

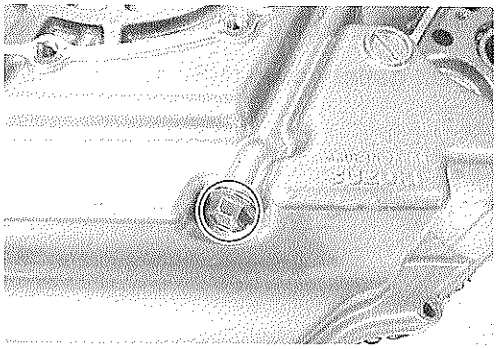

- Remove the oil jet with a suitable bar.

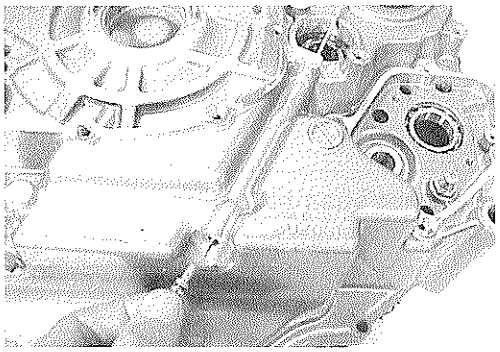

- Remove the oil jet.

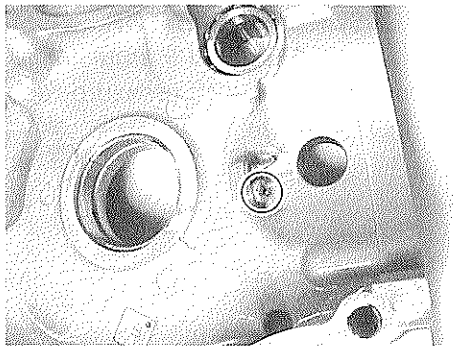

Check the oil jets for clogging. If they are clogged, clean their oil passage with a proper wire or compressed air.

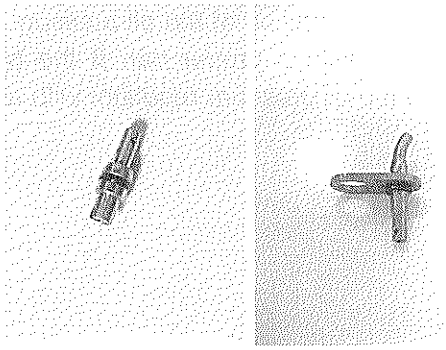

- Fit the new O-ring to the oil jet.

CAUTION

Use the new O-ring to prevent oil leakage.

NOTE:
Apply engine oil to the O-ring when installing the oil jet.

- Install the oil jet with a suitable bar.

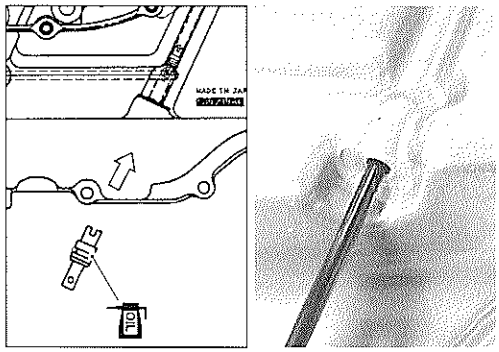

- Tighten the oil gallery plug to the specified torque.

Oil gallery plug (M8): 18 N·m (1.8 kgf-m, 13.0 lb-ft)

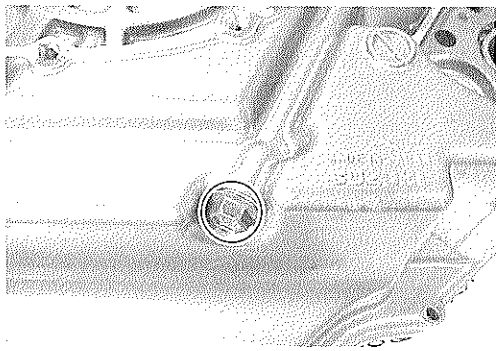

- Apply engine oil to the new O-ring and install it.

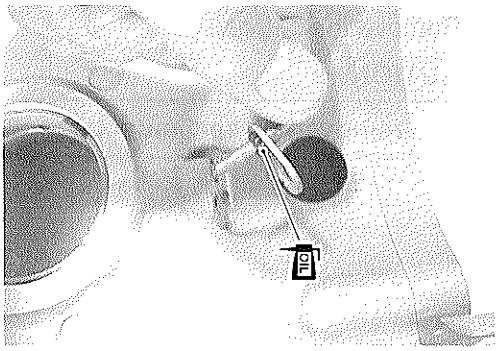

- Apply THREAD LOCK "1342" to the screw and tighten it to the specified torque.

Piston cooling oil nozzle screw: 8 N·m (0.8 kgf-m, 6.0 lb-ft)

1342 99000-32050: THREAD LOCK "1342"

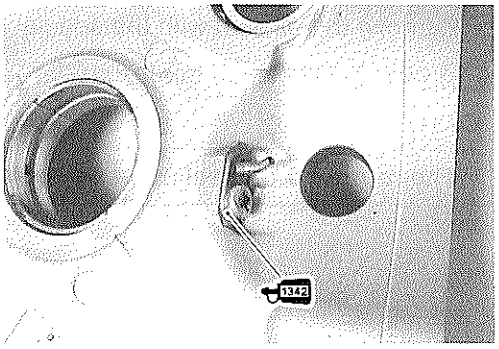

- When replacing the gearshift arm stopper bolt, apply THREAD LOCK SUPER "1303" to it.

Gearshift arm stopper bolt: 23 N·m (2.3 kgf-m, 16.5 lb-ft)

1303 99000-32030: THREAD LOCK SUPER "1303"

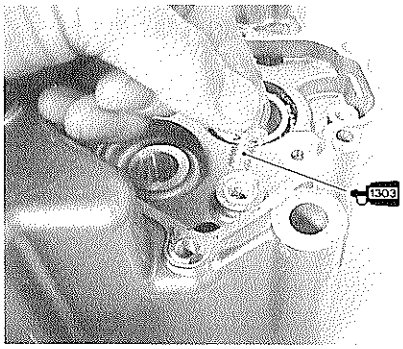

BEARING/OIL SEAL

Rotate the bearing inner race by finger to inspect for abnormal play, noise and smooth rotation while the bearings are in the crankcase.

Replace the bearing in the following procedure if there is anything unusual.

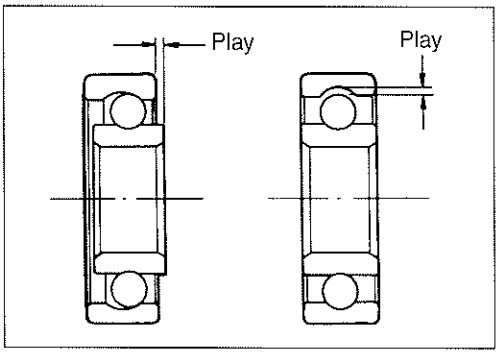

- Remove the oil seal retainer ①.

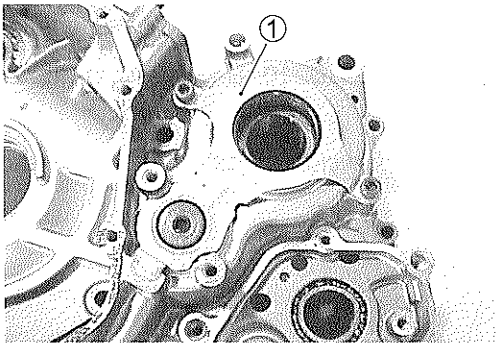

- Remove the oil seal.

CAUTION

The removed oil seal must be replaced with a new one.

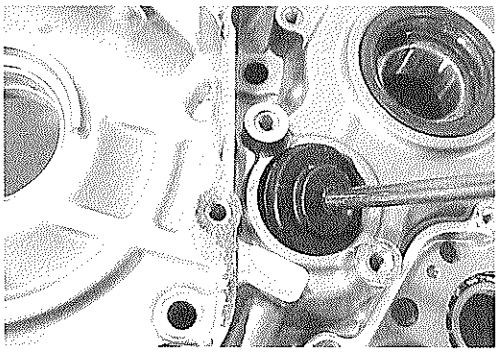

- Remove the oil seal with the special tool.

TOOL 09913-50121: Oil seal remover

CAUTION

The removed oil seal must be replaced with a new one.

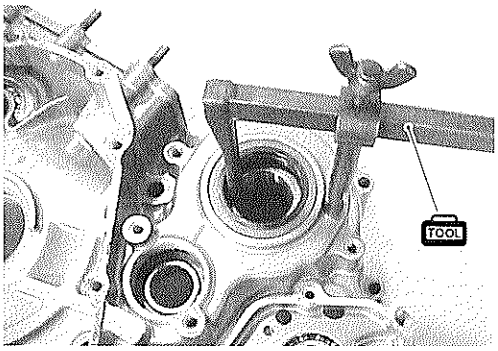

- Remove the bearing retainers.

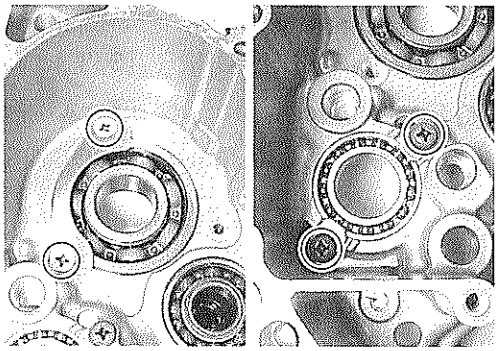

- Remove the bearings with the special tool.

TOOL 09921-20240: Bearing remover set

NOTE:
If there is no abnormal noise, the bearing removal is not necessary.

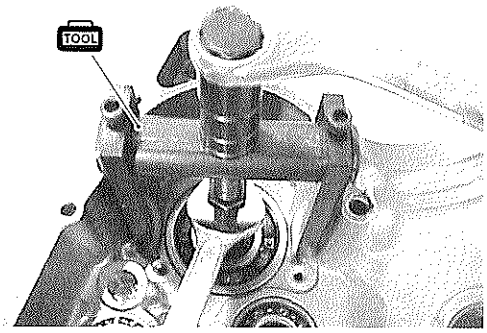

- Install the bearings with the special tool.

TOOL 09913-70210: Bearing installer set

NOTE:
The sealed side of the driveshaft bearing must face outside.

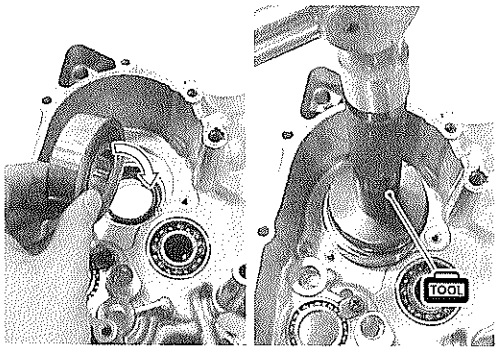

- Install the bearing retainers.

NOTE:
When installing the bearing retainers, apply THREAD LOCK to the screws.

1342 09900-32050: THREAD LOCK "1342"

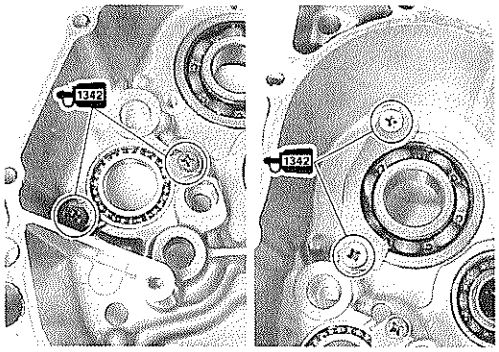

- Install the oil seals with the special tool.

TOOL 09913-70210: Bearing installer set

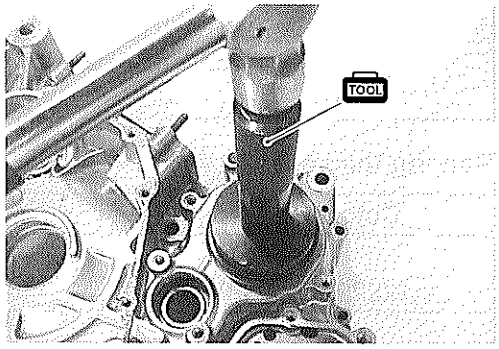

- Install the oil seal retainer.

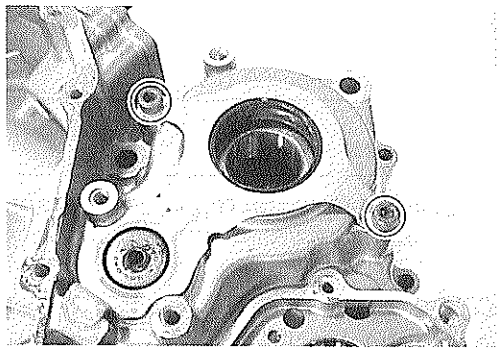

CRANKCASE-CRANKSHAFT BEARING

CRANKCASE-CRANKSHAFT BEARING INSPECTION

- Inspect the crankshaft journal bearings for any damage. If any, replace them with a specified set of bearings.

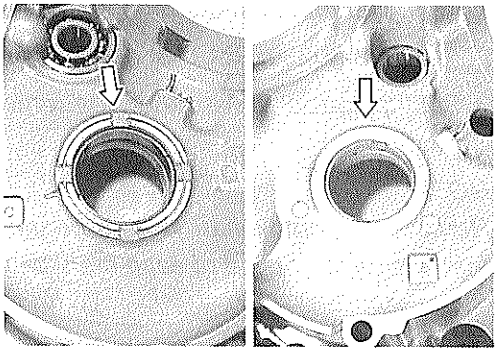

- Inspect the crankshaft journal for any damage.
- Measure the crankshaft journal O.D. with the special tool.

DATA Crankshaft journal O.D.
Standard: 47.985 – 48.000 mm (1.8892 – 1.8898 in)

TOOL 09900-20202: Micrometer (25 – 50 mm)

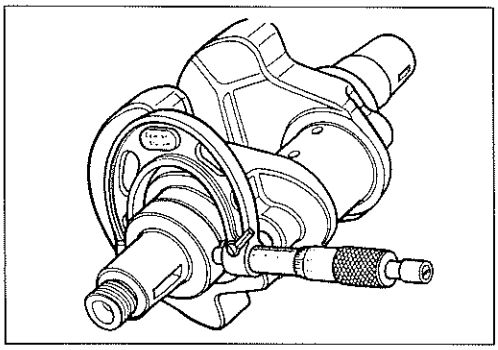

CRANKCASE-CRANKSHAFT BEARING SELECTION

Select the specified bearings from the crankcase bore I.D. code. The crankcase bore I.D. code Ⓐ "A", "B" or "C", is stamped on the inside of each crankcase half.

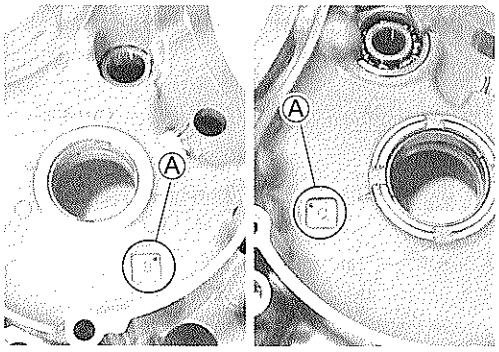

Bearing selection table

I.D. code Ⓐ	I.D. specification	Bearing
A	52.000 – 52.006 mm (2.0472 – 2.0475 in)	Green
B	52.006 – 52.012 mm (2.0475 – 2.0477 in)	Black
C	52.012 – 52.018 mm (2.0477 – 2.0479 in)	Brown

Bearing thickness

Color (Part No.)	Thickness
Green (12229-06G00-0A0)	1.996 – 1.999 mm (0.0786 – 0.0787 in)
Black (12229-06G00-0B0)	1.999 – 2.002 mm (0.0787 – 0.0788 in)
Brown (12229-06G00-0C0)	2.002 – 2.005 mm (0.0788 – 0.0789 in)

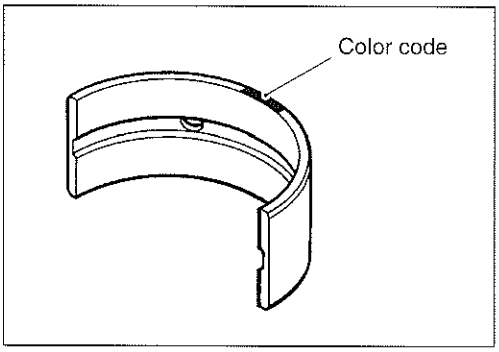

CAUTION

Bearing must be replaced as a set.

CRANKSHAFT JOURNAL BEARING REPLACEMENT

- Use the special tool to replace the crankshaft journal bearings. The replacement procedure is as follows.

TOOL 09913-60230: Journal bearing remover/installer

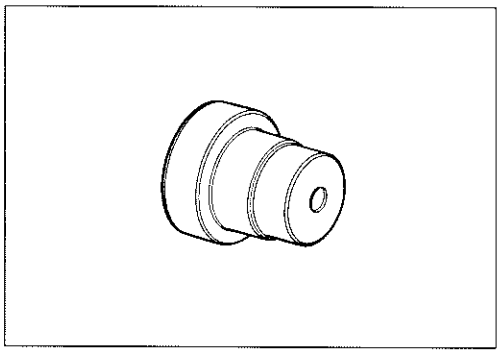

- Set the special tool as shown to remove the crankshaft journal bearings.

NOTE:
Remove the crankshaft journal bearings in only one direction, from inside to outside of each crankcase half.

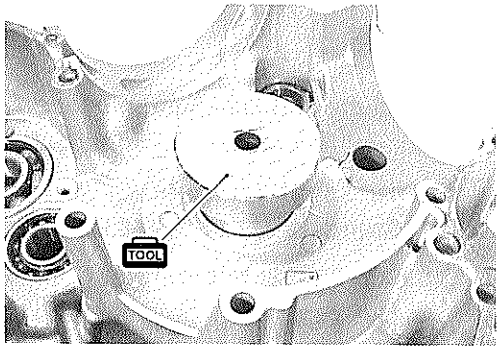

- Gradually press out the bearing with the special tool by using the hand-press.

CAUTION

The removed bearings must be replaced with new ones.

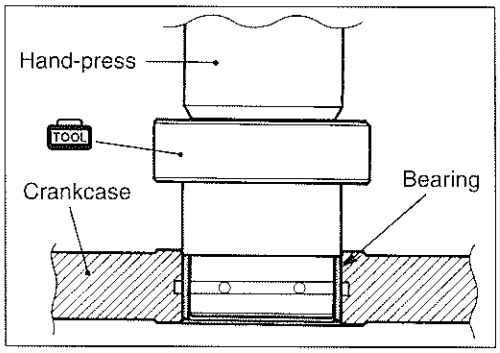

NOTE:
Using the hand-press is recommended to remove the crankshaft journal bearings. However, the crankshaft journal bearings can be removed by using with the following special tools.

TOOL 09924-84510: Bearing installer set
09924-74570: Final drive gear bearing remover/installer

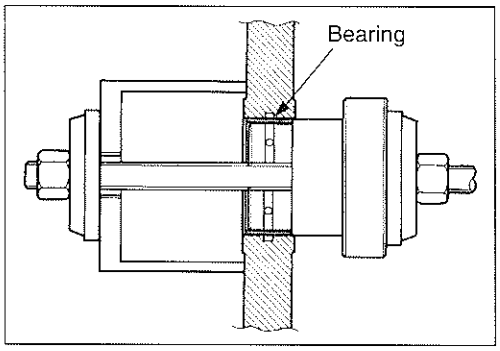

- Set the specified crankshaft journal bearings to the special tool.

CAUTION

*** Before setting the bearing, apply enough engine oil to the special tool and bearings.**
*** When setting the bearing, align the bearing side with the engraved line Ⓐ and also the bearing edge with the mating surface of the special tool.**

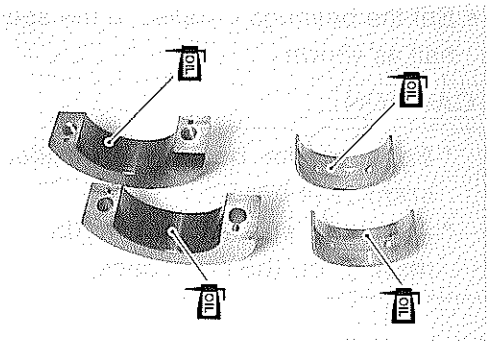

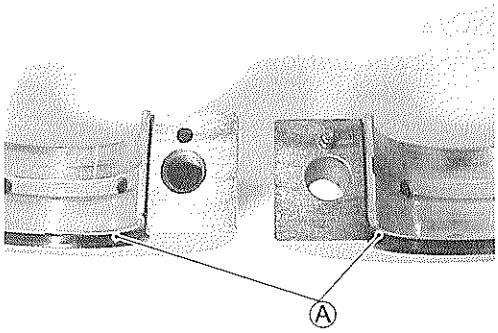

TOOL 09913-60210: Journal bearing remover/installer set or
09913-60240: Journal bearing remover/installer

NOTE:
Journal bearing remover/installer (09913-60240) is included in Journal bearing remover/installer set (09913-60210).

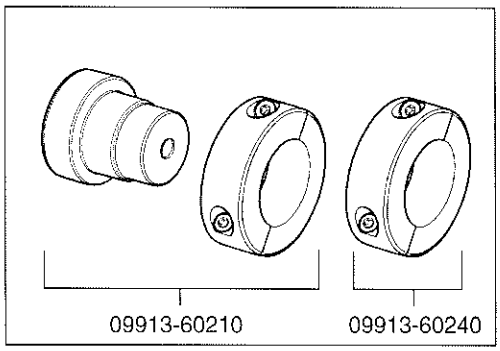

- Tighten the special tool bolt to the specified torque.

Special tool bolt: 23 N·m (2.3 kgf-m, 16.5 lb-ft)

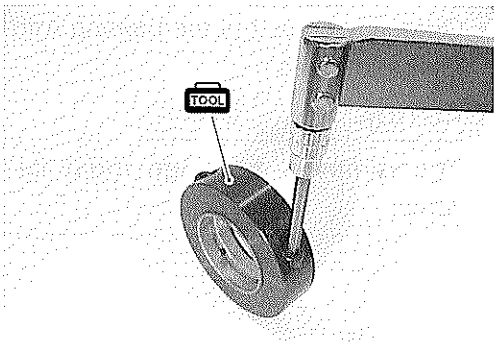

CAUTION

Before installing the bearings, lightly shave off the sharp edge part of the crankcase chamfer by using an oilstone and wash the crankcase bore with enough engine oil.

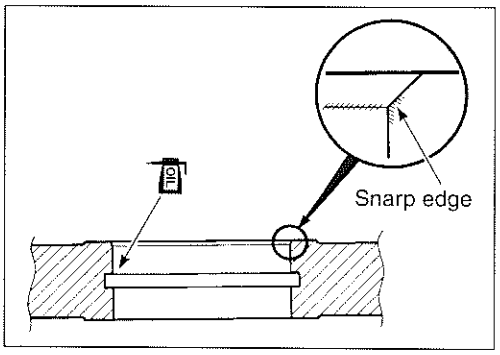

- Set the bearings installed in the special tool to the crankcase half as shown.

CAUTION

*** Be sure the bearing protruded side Ⓐ faces the crankcase bore.**
*** Align the special tool mating surface with the line mark Ⓑ on the crankcase.**

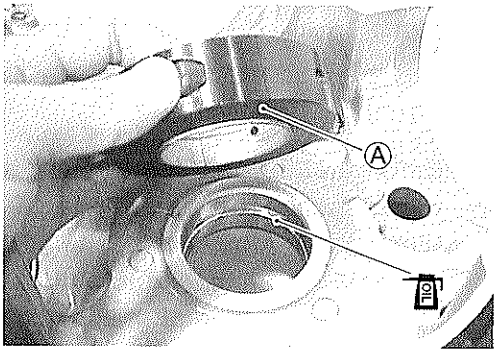

NOTE:
The upper and lower bearings are same.

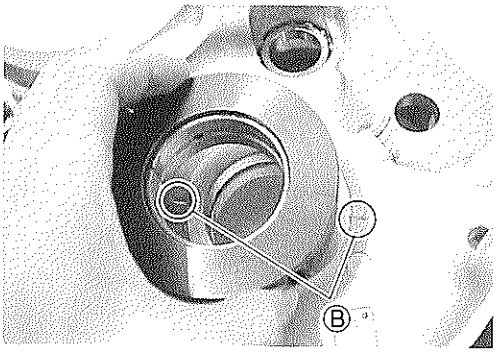

- Apply enough engine oil to the special tool and the bearings and then set the special tool carefully.
- Gradually press in the bearing into the main journal bore by using the hand-press until the special tool ① stops the special tool ②.

TOOL 09913-60230: Journal bearing remover/installer

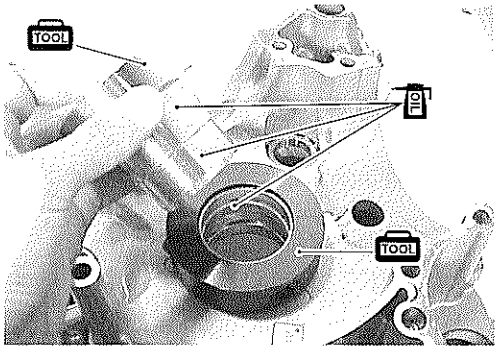

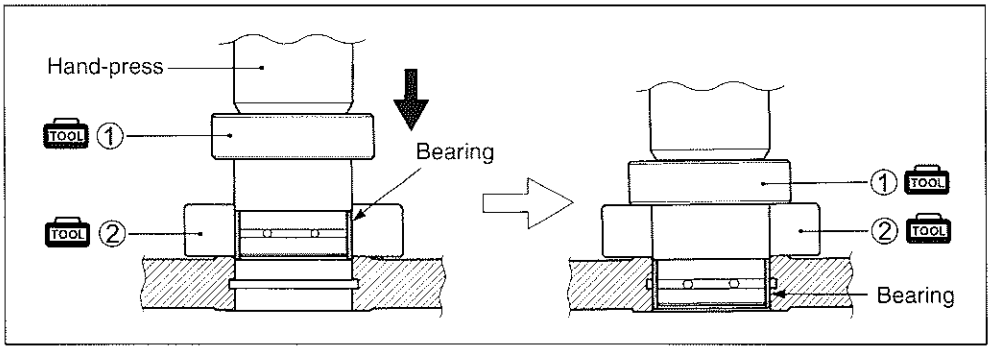

CAUTION

Use the new special tool Ⓐ (09913-60230) for DL1000. The tool Ⓐ and Ⓑ differ in length Ⓒ.

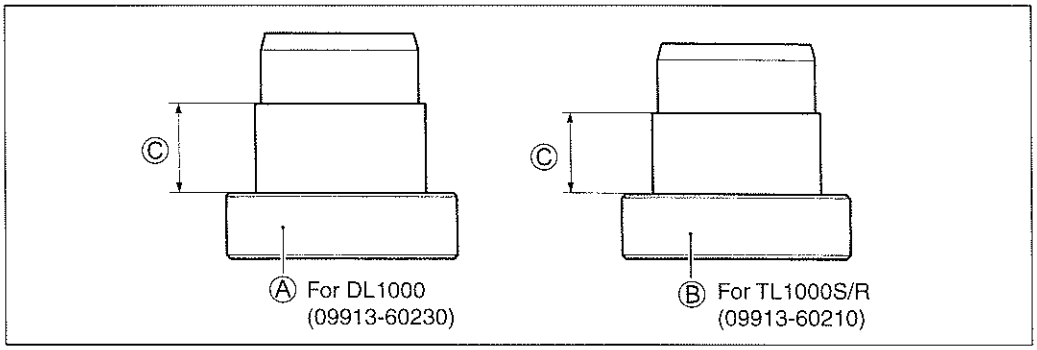

NOTE:
Using the hand-press is recommended to install the crankshaft journal bearings. However, the crankshaft journal bearings can be installed by using the following special tools.

TOOL 09924-84510: Bearing installer set
09924-74570: Final drive gear bearing remover/installer

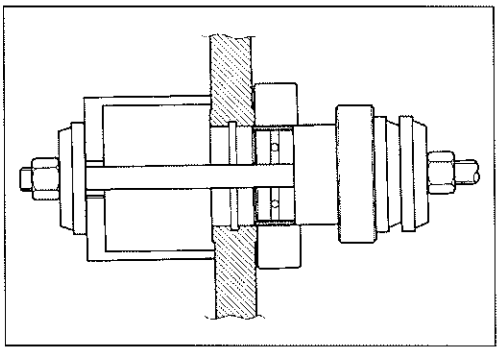

- After installing the bearings, check the bearing surface for any scratch or damage.

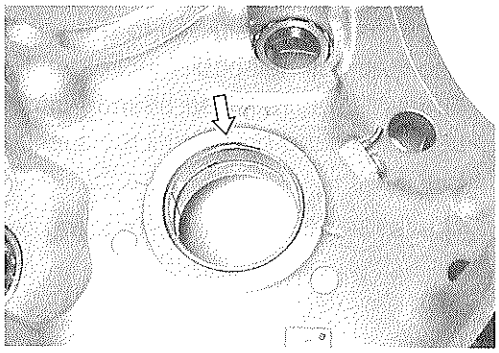

GENERATOR COVER

REPLACEMENT

When replacing the generator stator or crankshaft position sensor, apply THREAD LOCK "1342" to the generator stator set bolts.

99000-32050: THREAD LOCK "1342"

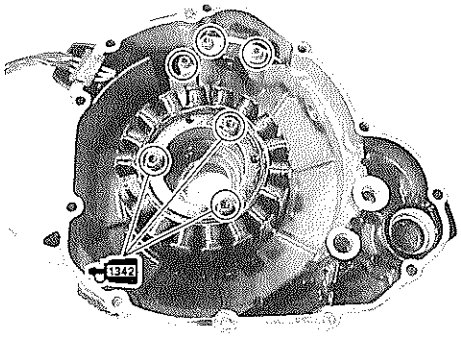

CLUTCH COVER

OIL SEPARATER

- Remove the oil separater ①.

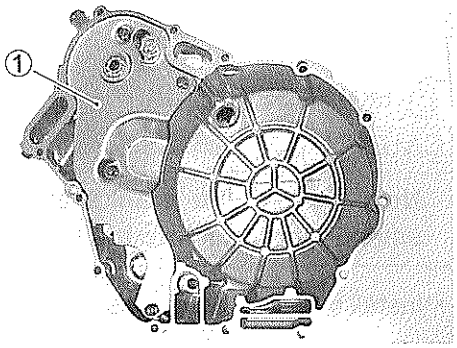

GEARSHIFT COVER

OIL SEAL INSPECTION

Inspect the gearshift shaft oil seal for damage or wear on the lip. If any defects are found, replace the oil seal with a new one.

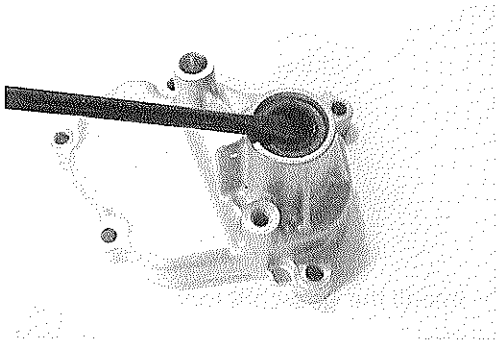

OIL SEAL REPLACEMENT

- Remove the gearshift shaft oil seal.

CAUTION

The removed oil seal must be replaced with a new one.

- Install the new oil seal with the special tool.

09913-70210: Bearing installer set

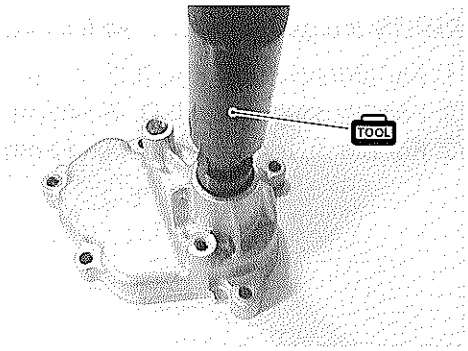

NOTE:
Apply grease to the oil seal lip to prevent damage when installing the gearshift cover.

99000-25030: SUZUKI SUPER GREASE "A" (USA)
99000-25010: SUZUKI SUPER GREASE "A" (Others)

ENGINE REASSEMBLY

Reassemble the engine in the reverse order of disassembly.

NOTE:

Apply engine oil to each running and sliding part before reassembling.

ENGINE BOTTOM SIDE

CRANKSHAFT

- Install the crankshaft into the left crankcase half.

NOTE:

Coat lightly molybdenum oil solution to the crankshaft journal bearings.

MOLYBDENUM OIL

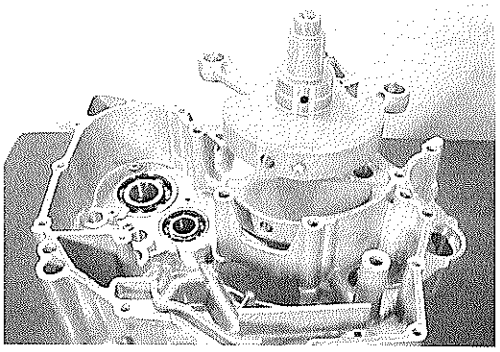

CAUTION

Never strike the crankshaft with a plastic hammer when inserting it into the crankcase.

- Install the countershaft assembly and driveshaft assembly.

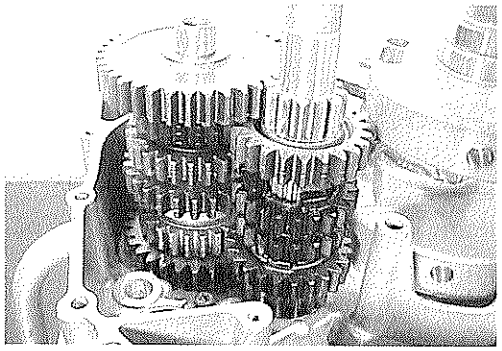

- Install the gearshift forks and gearshift cam.

NOTE:

Identify the gearshift forks as follows.

① For 3rd/4th drive gear [I.D. Ⓐ: 36 mm (1.4 in), Gold]
② For 5th driven gear [I.D. Ⓐ: 40 mm (1.6 in)]
③ For 6th driven gear [I.D. Ⓐ: 40 mm (1.6 in), Gold]

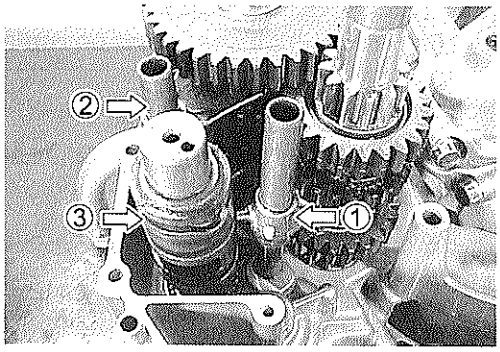

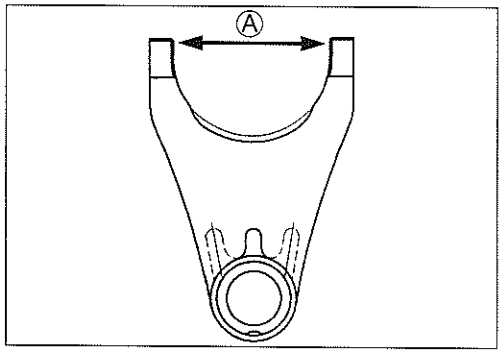

- Fit the dowel pins.

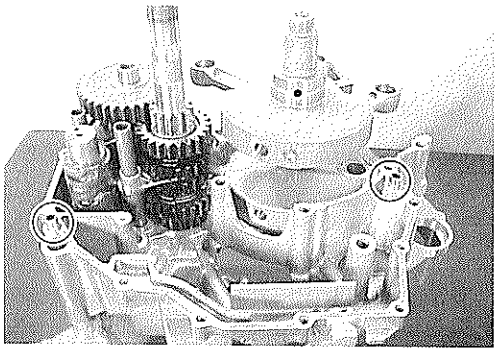

- Apply grease to the O-ring and install it.

99000-25030: SUZUKI SUPER GREASE "A" (USA)
99000-25010: SUZUKI SUPER GREASE "A" (Others)

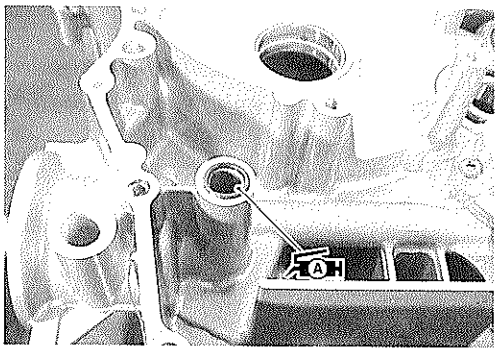

CAUTION

Use the new O-ring to prevent oil leakage.

- Clean the mating surfaces of the left and right crankcase halves.
- Apply SUZUKI BOND "1207B" to the mating surface of the left crankcase.

99104-31140: SUZUKI BOND "1207B"

NOTE:
Use of SUZUKI BOND "1207B" is as follows:
** Make surfaces free from moisture, oil, dust and other foreign materials.*
** Spread on surfaces thinly to form an even layer, and assemble the crankcases within few minutes.*
** Take extreme care not to apply any BOND "1207B" to the oil hole, oil groove and bearing.*
** Apply to distorted surfaces as it forms a comparatively thick film.*

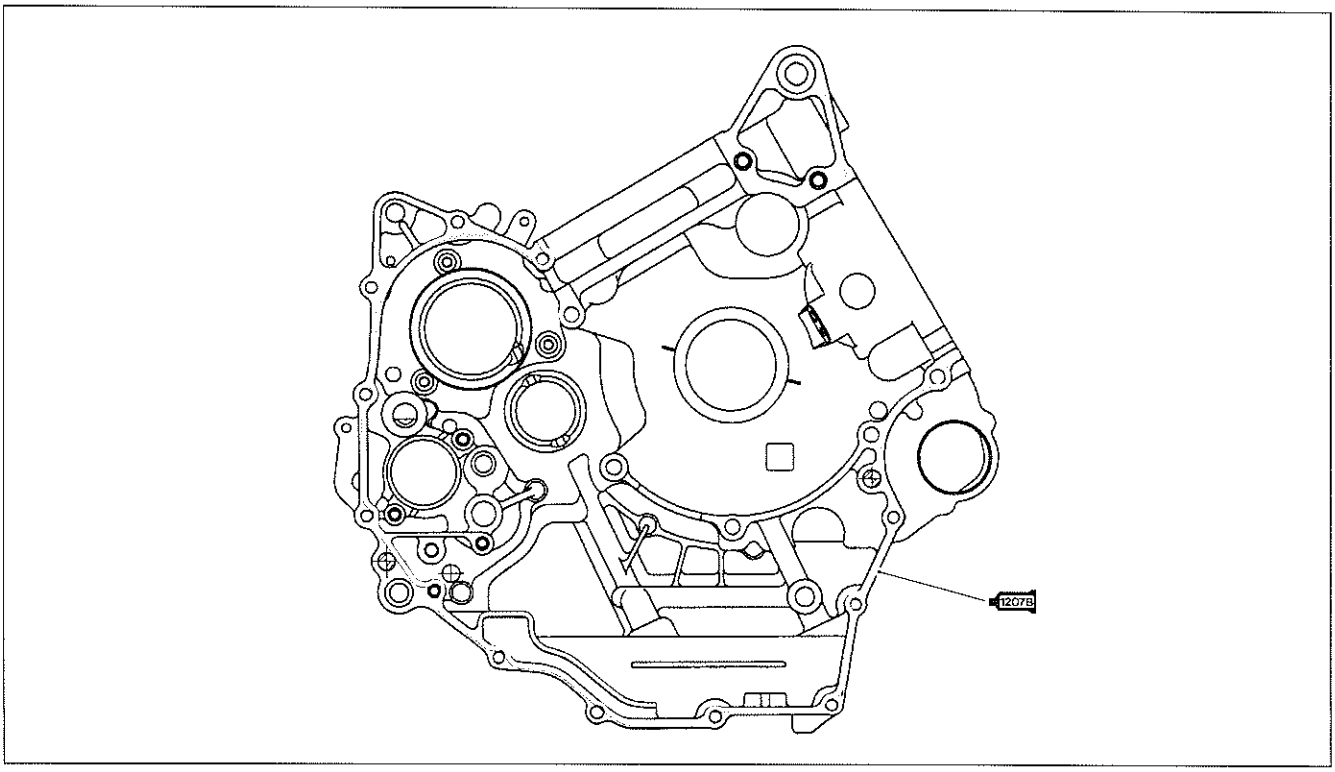

- When securing the right and left crankcase halves, tighten each bolt a little at a time to equalize the pressure. Tighten all the securing bolts to the specified torque values.

Crankcase bolt: (M8) 26 N·m (2.6 kgf-m, 19.0 lb-ft)
(M6) 11 N·m (1.1 kgf-m, 8.0 lb-ft)

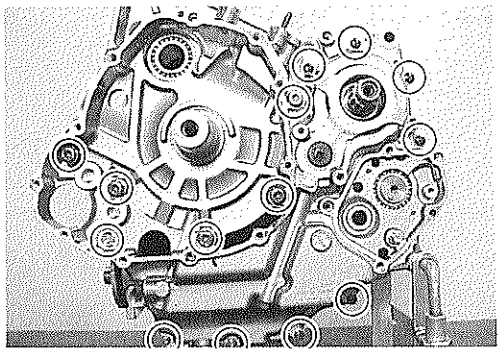

CAUTION

Do not drop the O-ring into the crankcase when assembling the right and left crankcase halves.

NOTE:
After the crankcase bolts have been tightened, check if the crankshaft, the driveshaft and the countershaft rotate smoothly.

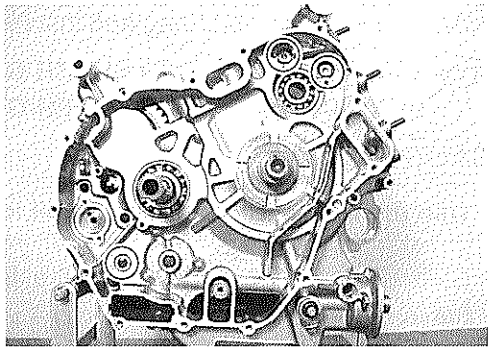

- Install the engine sprocket spacer ① onto the driveshaft.

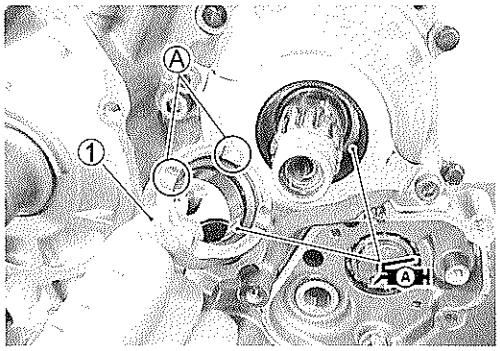

CAUTION

Use the new O-ring to prevent oil leakage.

NOTE:
** The grooved Ⓐ side of the engine sprocket spacer faces crankcase side.*
** Apply grease to the oil seal lip and O-ring.*

99000-25030: SUZUKI SUPER GREASE "A" (USA)
99000-25010: SUZUKI SUPER GREASE "A" (Others)

GEARSHIFT

- Install the gearshift cam stopper ②, its bolt ③, washer ④ and return spring ⑤.

NOTE:
Apply a small quantity of THREAD LOCK "1342" to the gearshift cam stopper bolt ③ and tighten it to the specified torque.

99000-32050: THREAD LOCK "1342"

Gearshift cam stopper bolt: 10 N·m (1.0 kgf-m, 7.0 lb-ft)

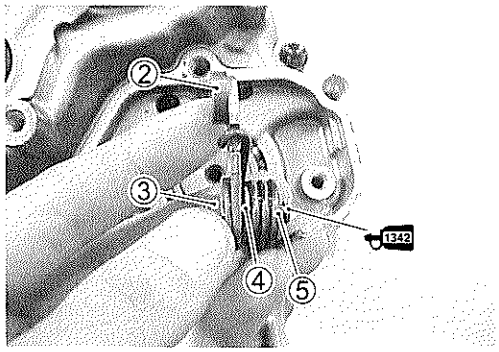

- Confirm the gearshift cam stopper movement.
- Check the neutral position.
- Install the gearshift cam stopper plate after aligning the gearshift cam pin Ⓐ with the gearshift cam stopper plate hole Ⓑ.

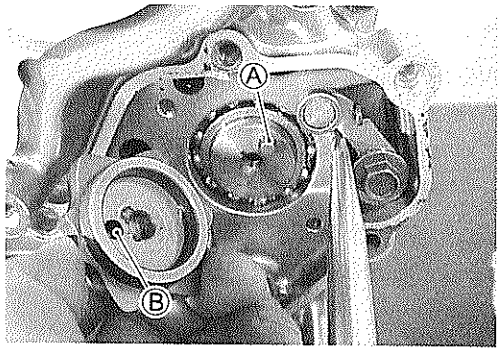

- Apply a small quantity of THREAD LOCK "1342" to the gearshift cam stopper plate bolt ① and tighten it to the specified torque.

1342 99000-32050: THREAD LOCK "1342"

Gearshift cam stopper plate bolt:
10 N·m (1.0 kgf-m, 7.0 lb-ft)

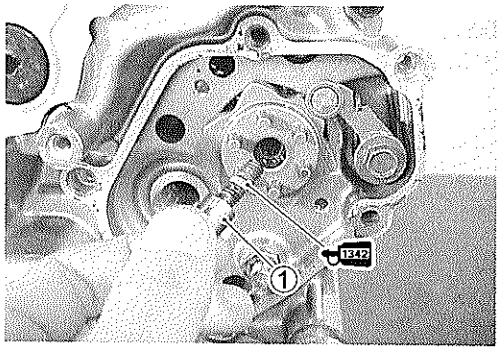

- Assembly the geafshift shaft/gearshift arm.

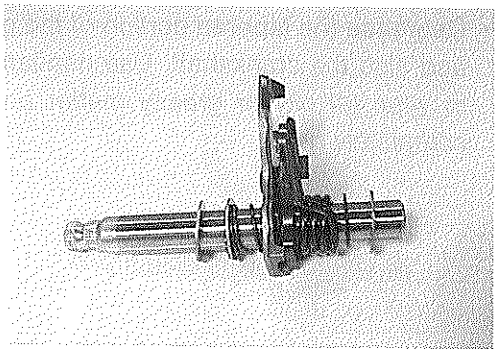

- Install the gearshift shaft as shown.

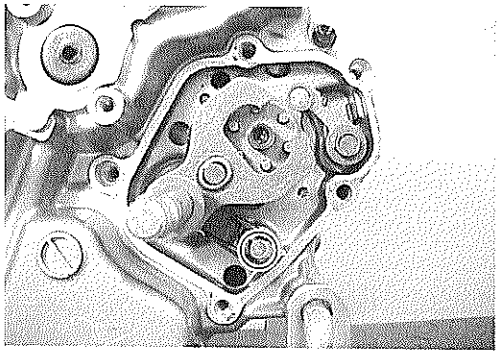

- Install the dowel pins and gasket ②.

CAUTION

Use new gasket to prevent oil leakage.

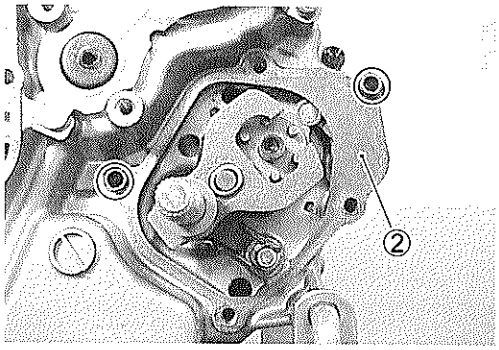

- Install the gearshift cover.

NOTE:

** Fit the clamp to the bolt Ⓐ.*

** Apply grease to the oil seal lip before installing the gearshift cover.*

99000-25030: SUZUKI SUPER GREASE "A" (USA)
99000-25010: SUZUKI SUPER GREASE "A" (Others)

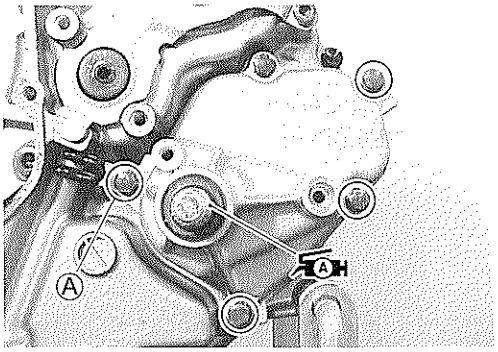

GENERATOR ROTOR

- Install the cam drive idle gear shaft ①.

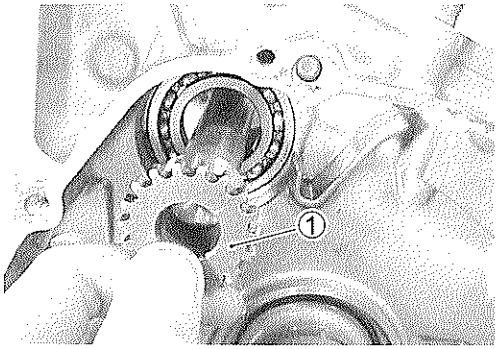

- Degrease the tapered portion of the generator rotor assembly and also the crankshaft. Use nonflammable cleaning solvent to wipe off oily or greasy matter and make these surfaces completely dry.

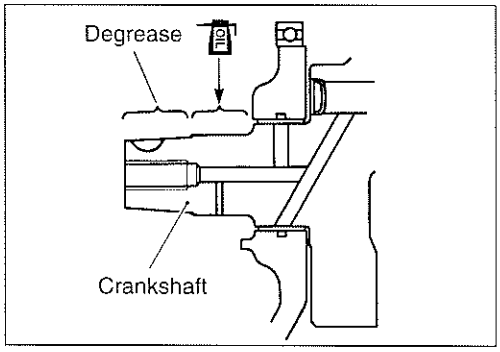

- Install the key ②.

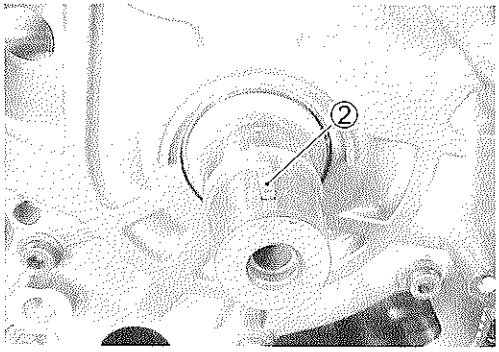

- Install the generator rotor together with the starter drive gear.
- Install the generator rotor bolt.

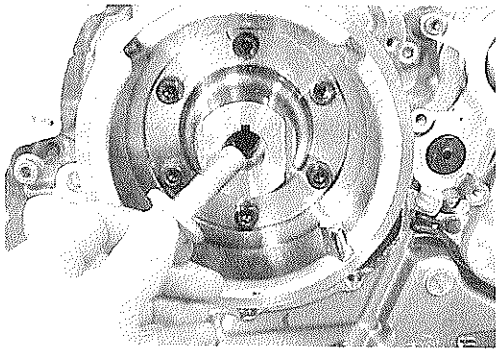

- While holding the generator rotor with the special tool, tighten the bolt to the specified torque.

Generator rotor bolt: 160 N·m (16.0 kgf-m, 115.5 lb-ft)

09930-44541: Rotor holder

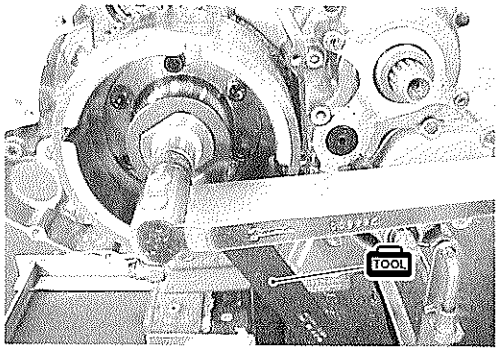

PRIMARY DRIVE GEAR

- Install the thrust washer onto the crankshaft.

NOTE:
The grooved side Ⓐ of the thrust washer faces the crankcase side.

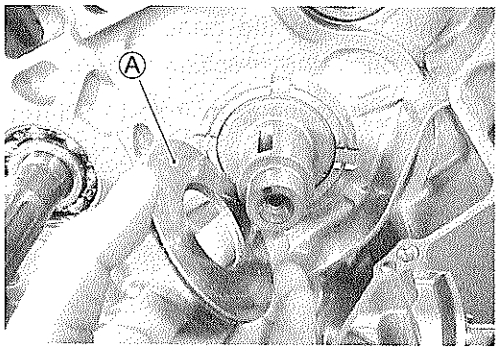

- Install the key ①.

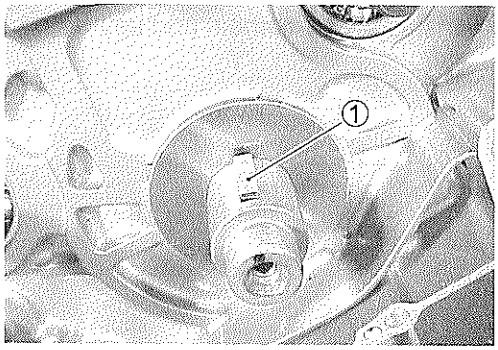

- Install the primary drive gear assembly ② and the washer ③.

NOTE:
The convex side of the washer ③ faces outside.

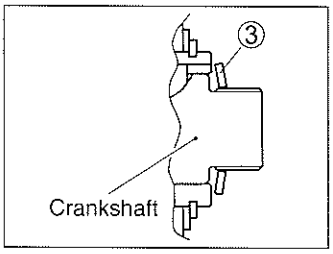

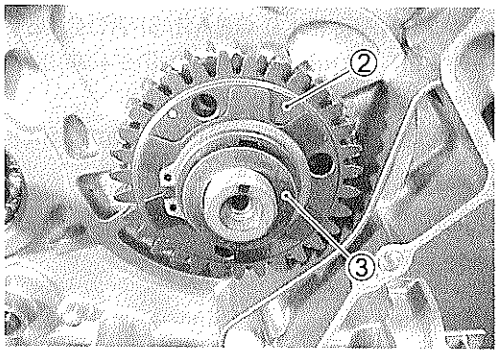

- Install the primary drive gear nut.

NOTE:
** This nut has left-hand thread.*
** The "L" mark on the nut faces outside.*

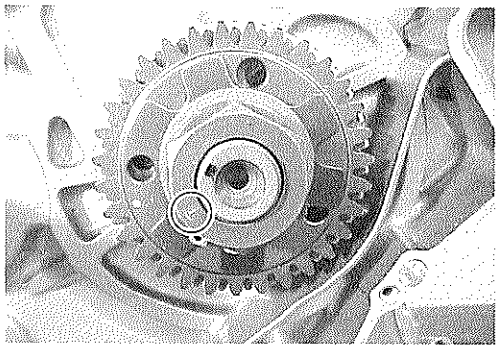

- Hold the generator rotor with the special tool.

TOOL 09930-44541: Rotor holder

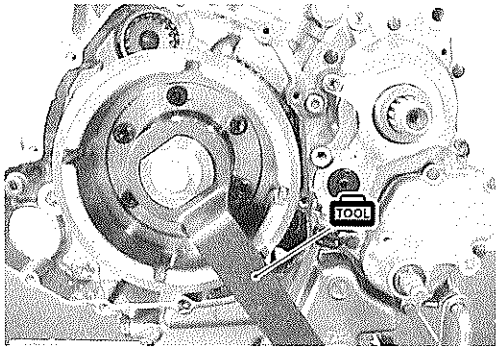

- While holding the generator rotor, tighten the primary drive gear nut to the specified torque.

Primary drive gear nut: 115 N·m (11.5 kgf-m, 83.0 lb-ft)

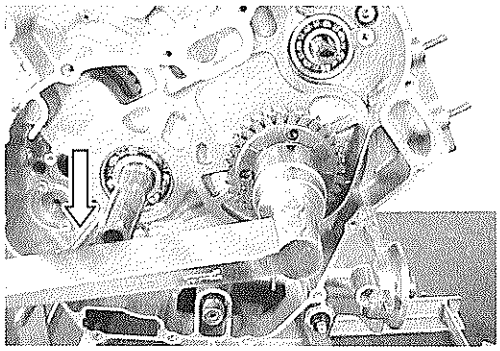

- Install the cam chain and key ①.

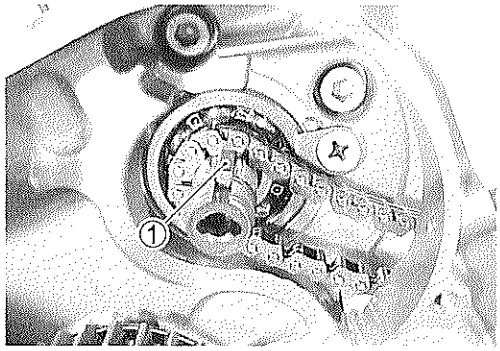

CAM DRIVE IDLE GEAR/SPROCKET

- Insert a suitable bar to the holes of the primary drive gears and align the two gears.
- Install the cam drive idle gear/sprocket ②.

NOTE:
Align the punched marks Ⓐ on the cam drive idle gear/sprocket and primary drive gear.

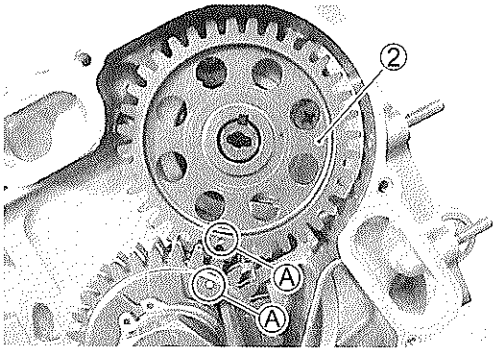

- Install the washer ③ and nut ④.

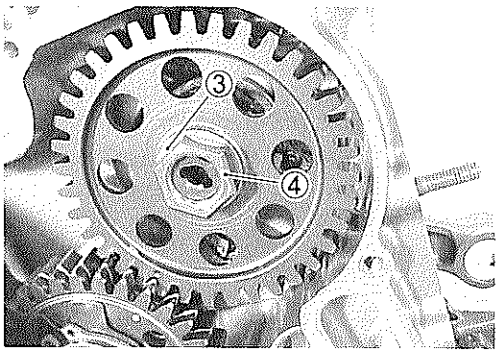

- Hold the generator rotor with the special tool.

TOOL 09930-44541: Rotor holder

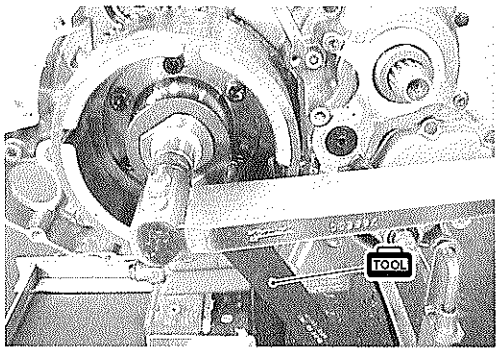

- While holding the generator rotor, tighten the cam drive idle gear/sprocket nut to the specified torque.

Cam drive idle gear/sprocket nut:
70 N·m (7.0 kgf-m, 50.5 lb-ft)

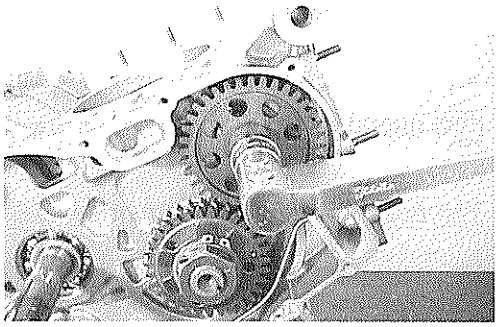

CAUTION

Before tightening the cam drive idle gear/sprocket nut, be sure to engage the front and rear cam chains to each sprocket.

OIL SUMP FILTER

- Clean the oil sump filter using compressed air.

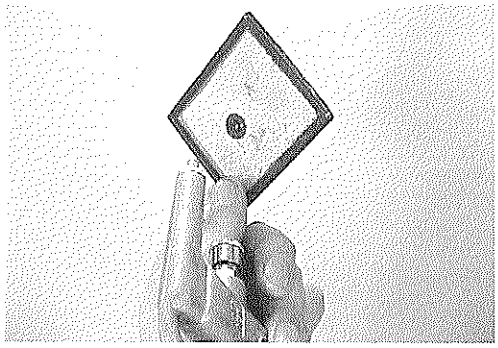

- Install the oil sump filter.

NOTE:
The projection Ⓐ of the oil sump filter faces to the bottom.

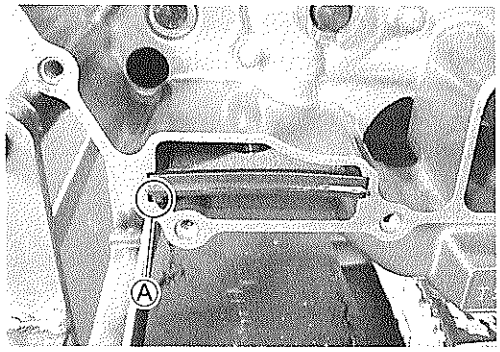

GEAR POSITION SWITCH

- Install the springs ① and gear position switch contacts ②.

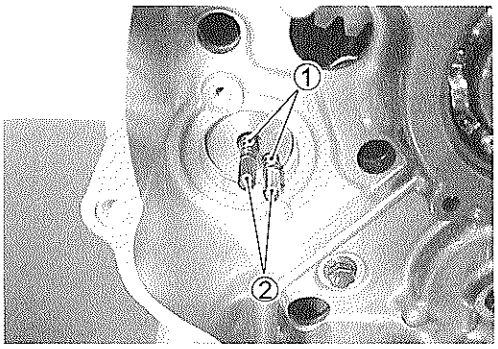

- Install the gear position switch and cable guide.

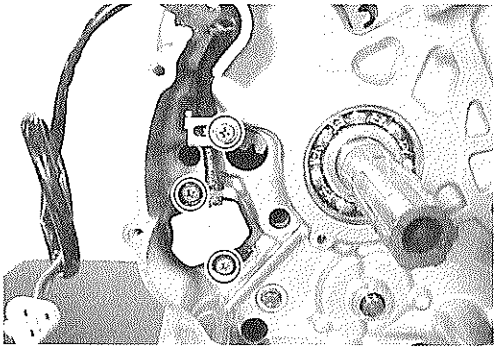

OIL PUMP DRIVEN GEAR

- Install the washer ① and pin ②.
- Install the oil pump driven gear by installing the snap ring.

TOOL 09900-06107: Snap ring pliers

NOTE:
The boss Ⓐ of the oil pump driven gear faces crankcase side.

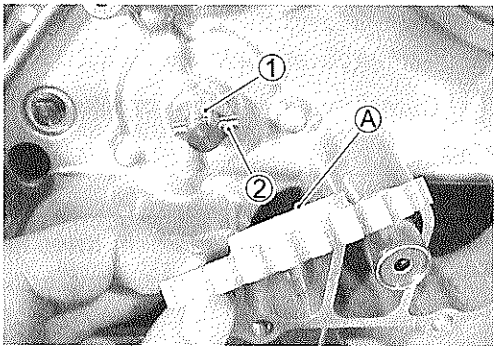

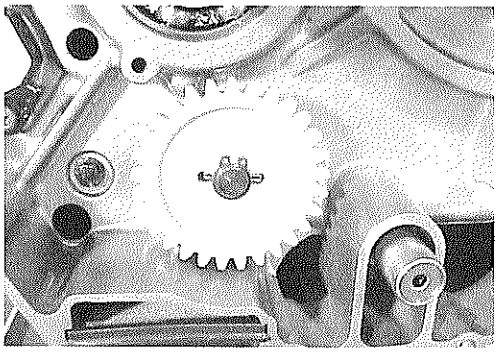

CLUTCH

- Install the thrust washer onto the countershaft.

NOTE:
The chamfer side Ⓐ of thrust washer faces crankcase side.

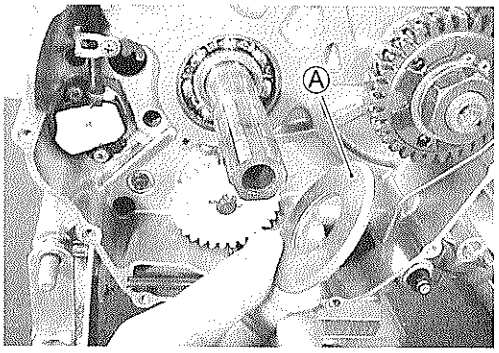

- Install the needle bearing ① and spacer ② onto the countershaft.
- Apply engine oil to them.

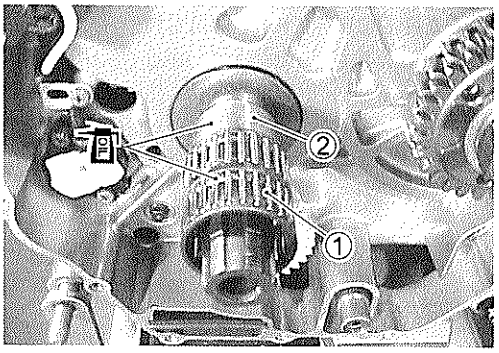

- Install the primary driven gear assembly ① onto the counter-shaft.

NOTE:

** When installing the primary driven gear assembly, align the teeth of the primary drive gears by inserting a suitable bar to the holes of them.*

** Be sure to engage the oil pump drive and driven gears, primary drive and driven gears.*

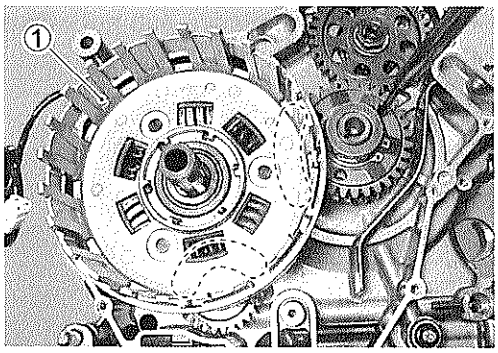

- Install the thrust washer ②.

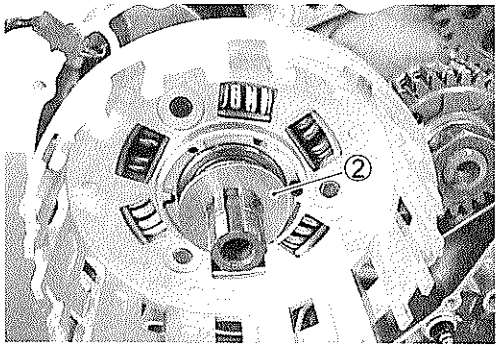

- Install the clutch sleeve hub.
- Install the washer ③, ④ and clutch sleeve hub nut.

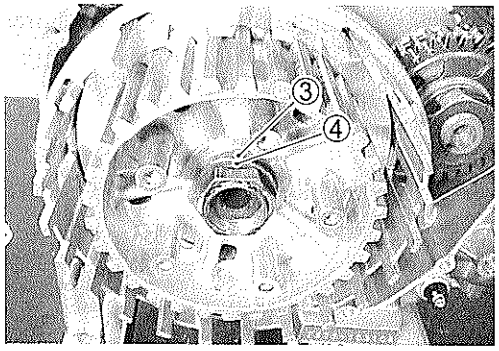

NOTE:

The convex side of the washer faces outside.

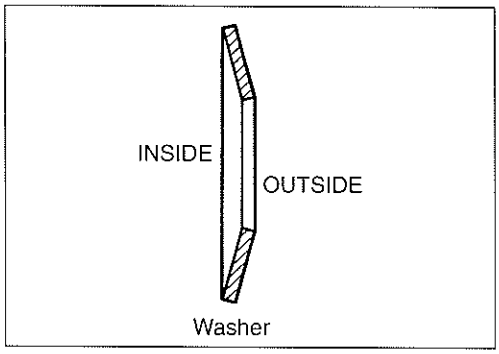

- Tighten the clutch sleeve hub nut to the specified torque with the special tool.

Clutch sleeve hub nut: 150 N·m (15.0 kgf-m, 108.5 lb-ft)

TOOL 09920-53740: Clutch sleeve hub holder

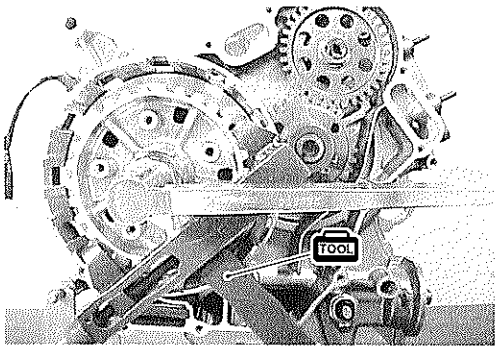

- Lock the clutch sleeve hub nut with a center punch.

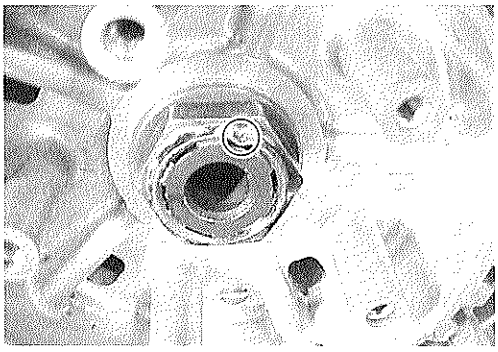

- Install the spring washer seat ① and spring washer ② onto the clutch sleeve hub correctly.

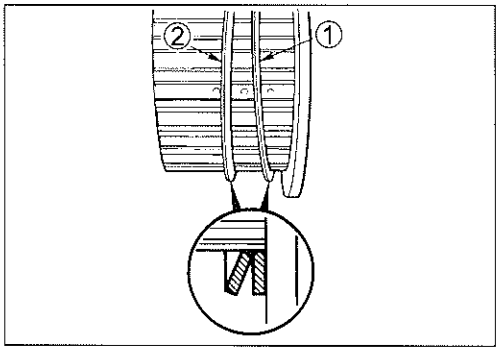

- Insert the clutch drive plates and driven plates one by one into the clutch sleeve hub in the prescribed order, No.3 drive plate being inserted first.

NOTE:
Insert the outermost No.2 drive plate claws to the other slits of clutch housing as shown.

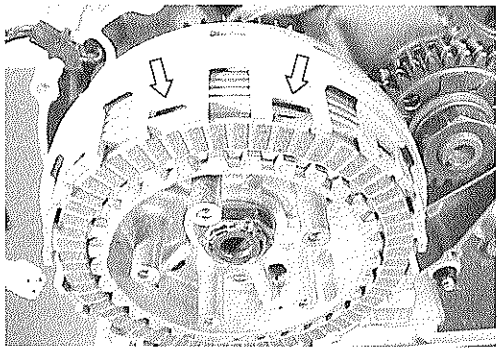

- Install the clutch push rod into the countershaft.
- Install the clutch push piece ③, bearing ④ and thrust washer ⑤.

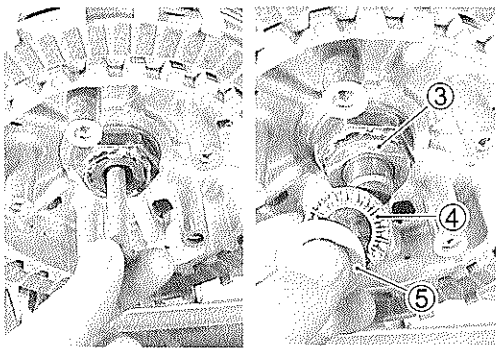

- Tighten the clutch spring set bolts diagonally to the specified torque while holding the generator rotor with the special tool.

Clutch spring set bolts: 10 N·m (1.0 kgf-m, 7.0 lb-ft)

TOOL 09930-44541: Rotor holder

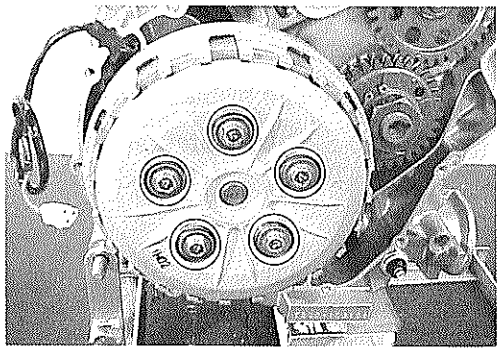

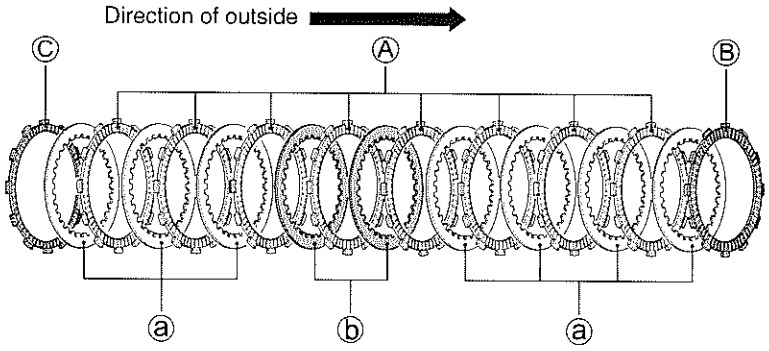

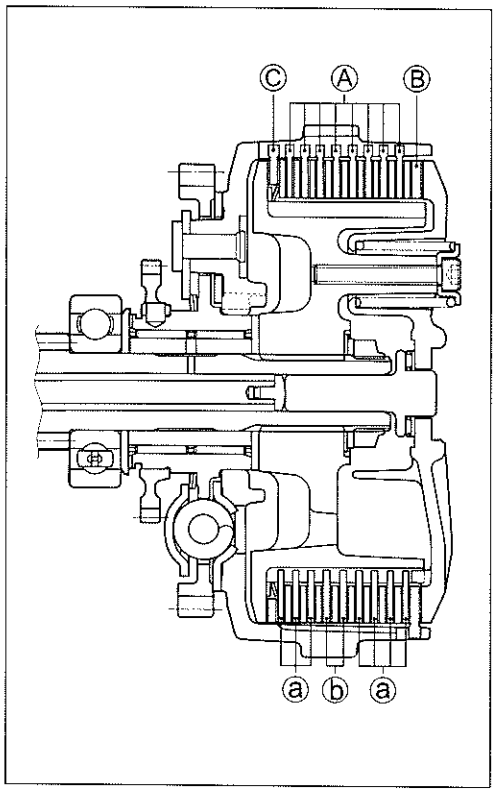

NOTE:

**The No.2 Driven plate should be installed between 4th to 7th position from the clutch sleeve hub.*

**Set the numbers of driven plate to the standard specifications when replacing the driven plates with the new ones.*

DRIVEN PLATE:

ⓐ No.1 Driven plate.....5 – 8 pcs. (Standard: 7pcs.)

ⓑ No.2 Driven plate.....1 – 4 pcs. (Standard: 2pcs.)

DRIVE PLATE:

Ⓐ No.1 Drive plate.....8 pcs.

Ⓑ No.2 Drive plate.....1 pc.

Ⓒ No.3 Drive plate.....1 pc.

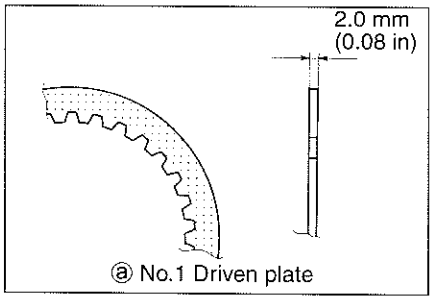

ⓐ No.1 Driven plate

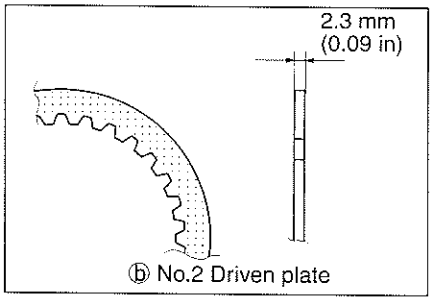

ⓑ No.2 Driven plate

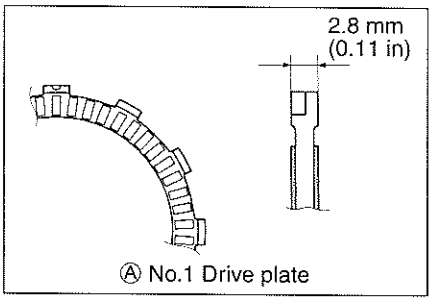

Ⓐ No.1 Drive plate

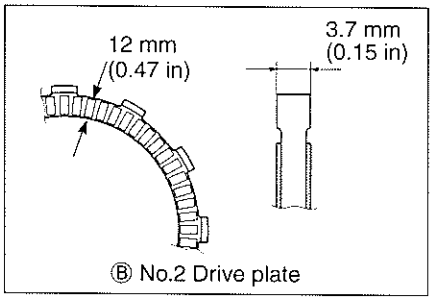

Ⓑ No.2 Drive plate

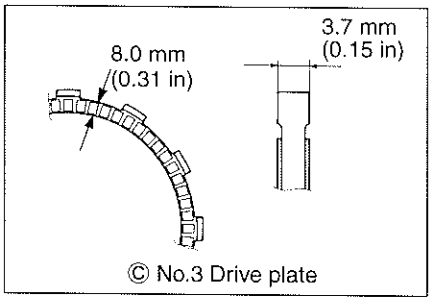

Ⓒ No.3 Drive plate

CLUTCH COVER

- Install the gasket and dowel pins.

CAUTION

Use the new gasket to prevent oil leakage.

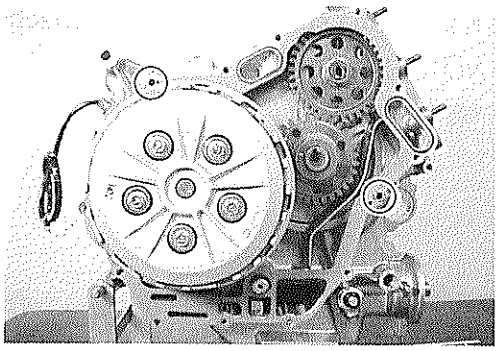

- Install the clutch cover.

NOTE:
Set the impeller shaft end Ⓐ to the cam drive idle shaft Ⓑ.

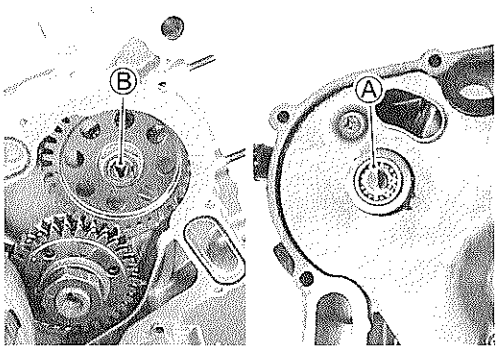

NOTE:
** Fit the clamp to the bolt Ⓒ.*
** Install the bracket Ⓓ.*

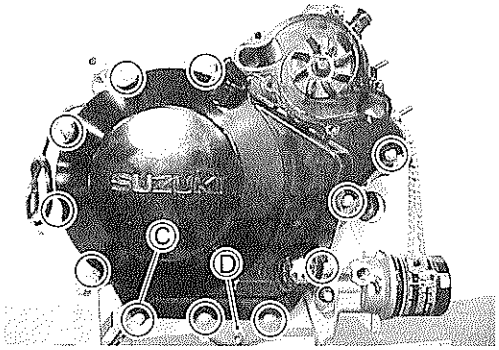

- Fit the dowel pin.
- Apply the grease to the O-ring.

99000-25030: SUZUKI SUPER GREASE "A" (USA)
99000-25010: SUZUKI SUPER GREASE "A" (Others)

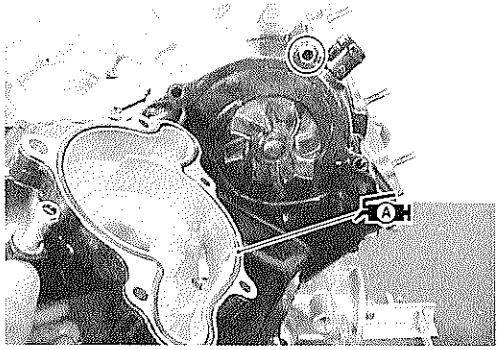

- Install the water pump case.

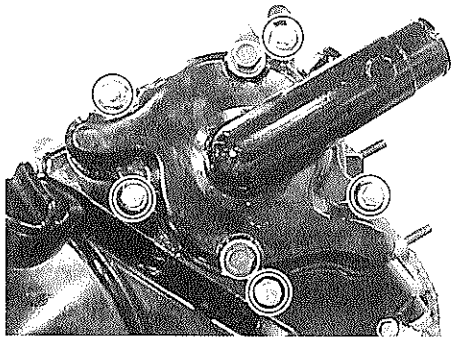

- Install the starter idle gear ①, spacer ② and shaft ③.

NOTE:
Apply engine oil to the shaft ③.

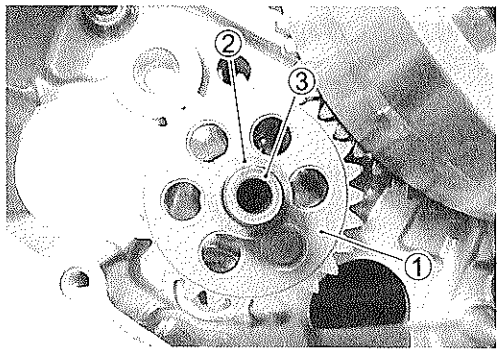

- Install the bushings Ⓐ into the crankcase and generator cover.

NOTE:
Apply molybdenum oil solution to the inside of the bushings.

MOLYBDENUM OIL

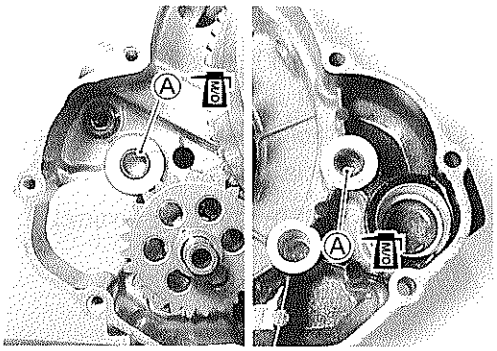

- Fit the washers onto the starter torque limiter.

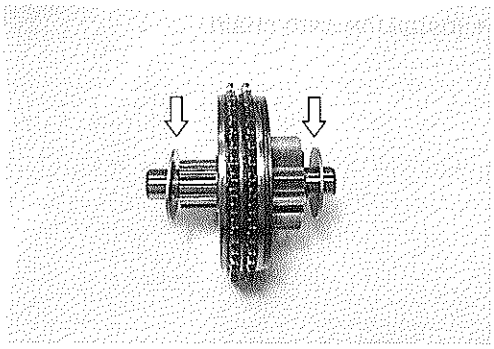

- Install the starter torque limiter.

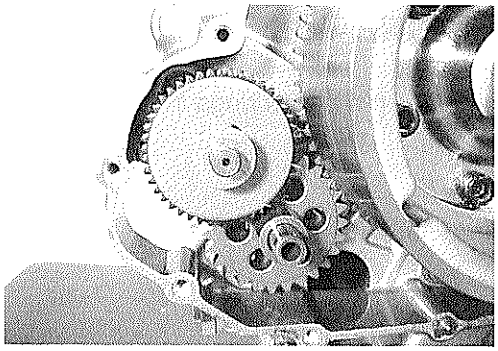

- Install the dowel pin and gasket.

CAUTION

Use the new gasket to prevent oil leakage.

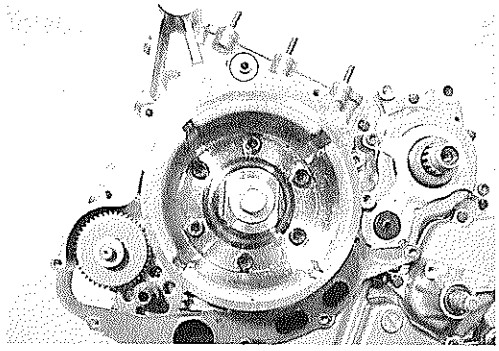

- Install the generator cover.

NOTE:
Install the bracket Ⓑ.

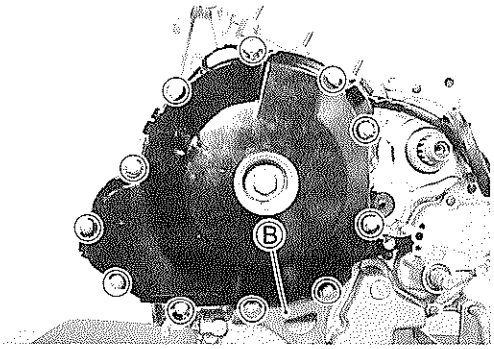

OIL FILTER

- Apply engine oil lightly to the O-ring.
- Install the oil filter turning it by hand until feeling that the O-ring contacts the mounting surface. Then tighten it 2 turns with the special tool.

TOOL 09915-40610: Oil filter wrench

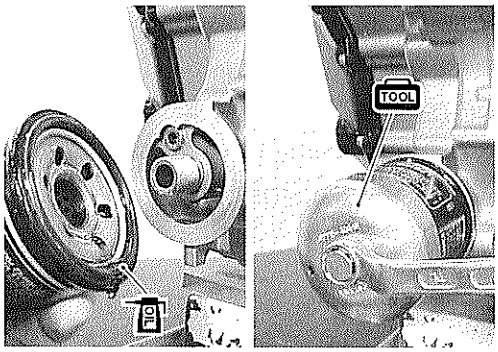

- Install the cam chain.

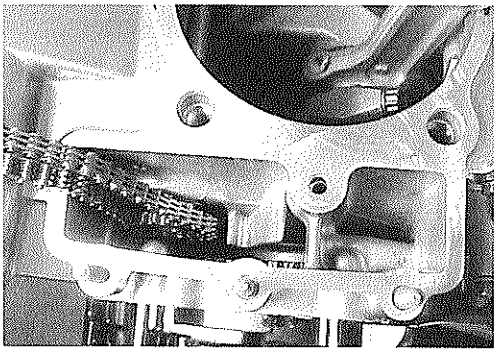

ENGINE TOP SIDE

PISTON

- Install the piston rings in the order of oil ring, 2nd ring and 1st ring.

NOTE:
1st ring and 2nd ring differ in the shape.

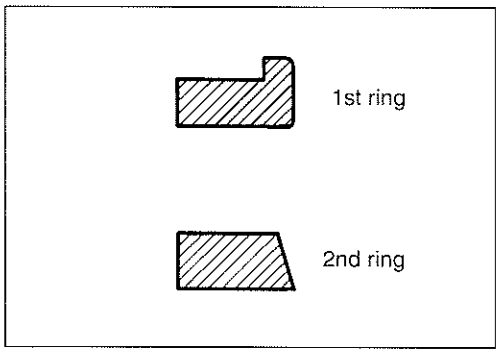

- Be sure to bring the concave side of 1st ring to top when fitting it to the piston.
- 2nd (middle) ring has letters "RN" marked on the side. Be sure to bring the marked side of the 2nd ring to top when fitting it to the piston.

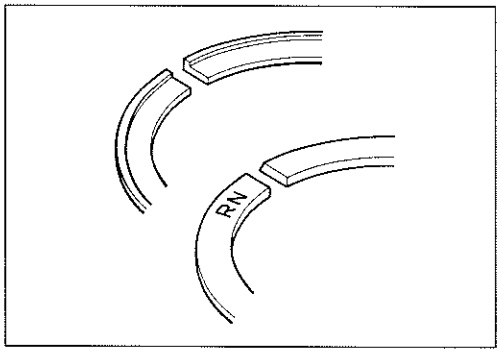

- The first member to go into the ring groove is spacer ①. After placing the spacer, fit the two side rails ②. Side designations, top and bottom, are not applied to the spacer and side rails: you can position each either way.

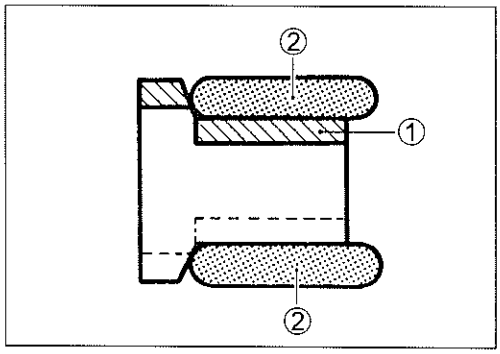

- Position the gaps of the three rings as shown. Before inserting each piston into the cylinder, check that the gaps are so located.

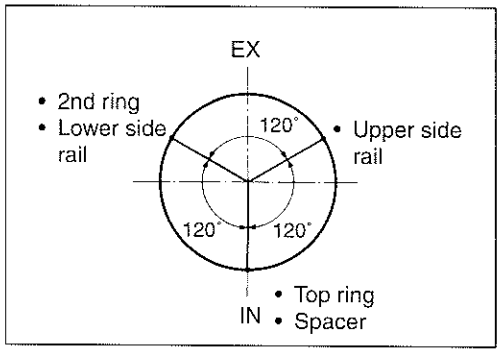

- Apply a light coat of molybdenum oil solution to the piston pin.

MOLYBDENUM OIL

NOTE:
When installing the pistons, front and rear, the indents Ⓐ on the piston heads must be located to each exhaust side.

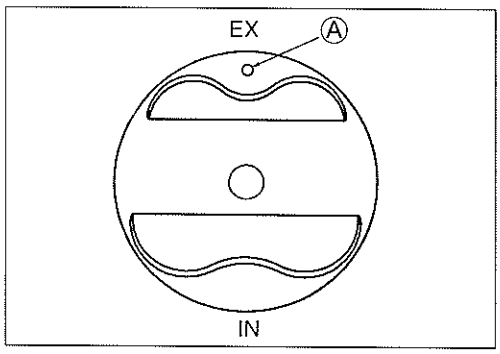

- Place a clean rag over the cylinder base so as not to drop the piston pin circlips into the crankcase.
- Install the pistons, front and rear.
- Install the piston pin circlips.

CAUTION

Use new piston pin circlips to prevent circlip failure which will occur with a bend one.

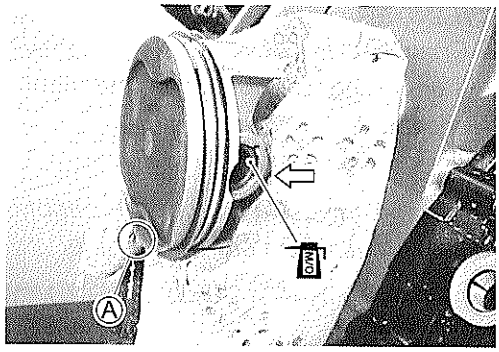

CAUTION

When turning the crankshaft, pull the cam chains upward, or the chains will be caught between the crankcase and the cam drive sprocket.

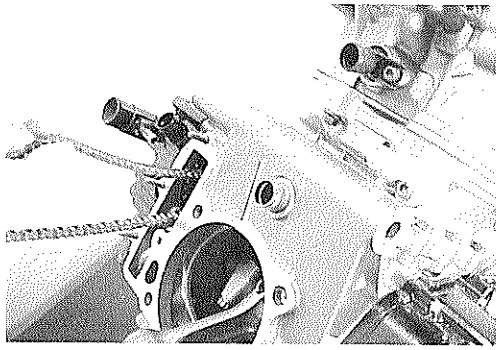

NOTE:
End gap of the circlip should not be aligned with the cutaway in the piston pin bore.

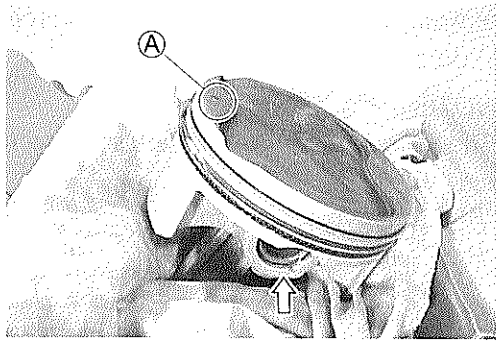

OIL JET

- Apply engine oil to the new O-rings.
- Install each of the oil jets.

CAUTION

Use the new O-rings to prevent oil leakage.

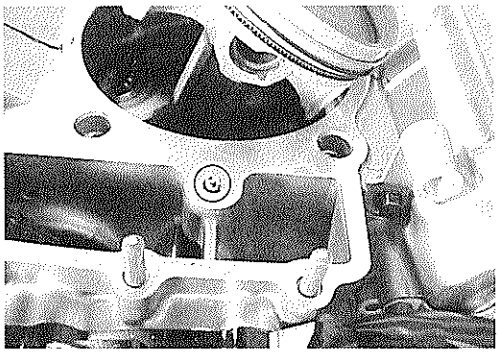

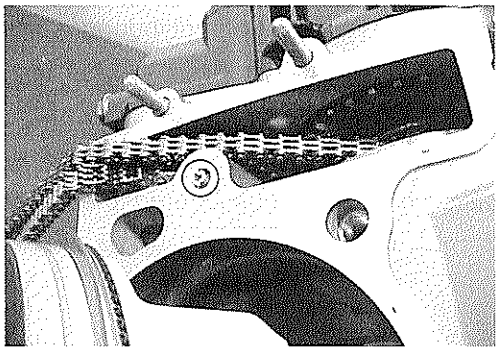

CYLINDER

- Coat SUZUKI BOND "1207B" lightly to the mating surfaces at the parting line between the right and left crankcases as shown.

NOTE:
When replacing the stud bolt Ⓐ, apply SUZUKI BOND "1207B" to the thread of the crankcase side.

1207B 99104-31140: SUZUKI BOND "1207B"

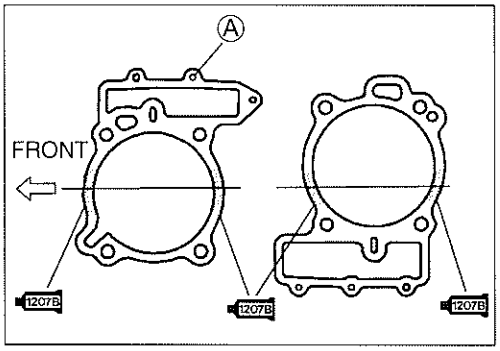

- Fit the dowel pins and new gaskets ① to the crankcase.

CAUTION

Use the new gaskets to prevent oil leakage.

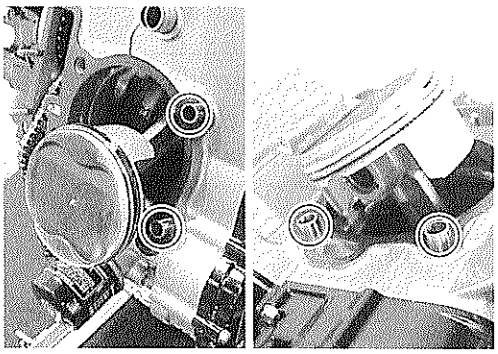

- Apply engine oil to the sliding surface of the pistons and cylinders.

NOTE:
The cylinders can be distinguished by the embossed-letters, "F" and "R".
"F": Front (No.1) cylinder
"R": Rear (No.2) cylinder

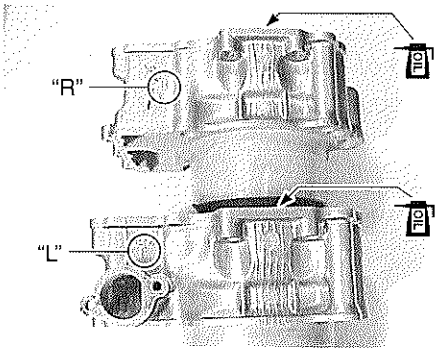

- Hold the piston rings in proper position, and insert each of the pistons into the respective cylinders.

NOTE:
When installing the cylinders, keep the cam chains taut. The cam chain must not be caught between cam drive sprocket and crankcase when turning the crankshaft.

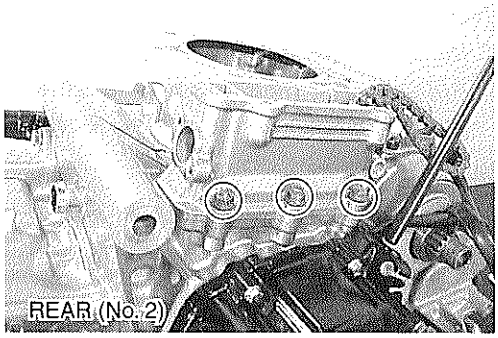

- Tighten the cylinder nuts (M6) temporarily.

NOTE:
Fit the clamp to the front cylinder nut Ⓐ.

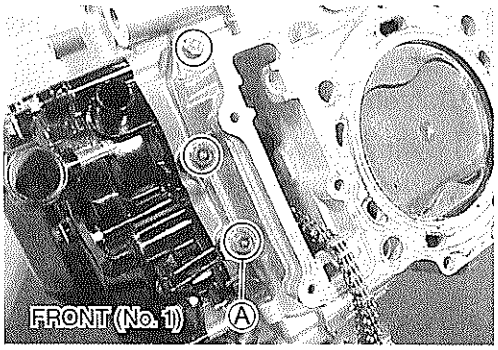

CYLINDER HEAD

- Pull the cam chains out of the cylinders and install the cam chain guides ①.

NOTE:
There are the guide holders for the bottom ends of each cam chain guide cast in the crankcase. Be sure that the cam chain guides are inserted properly.

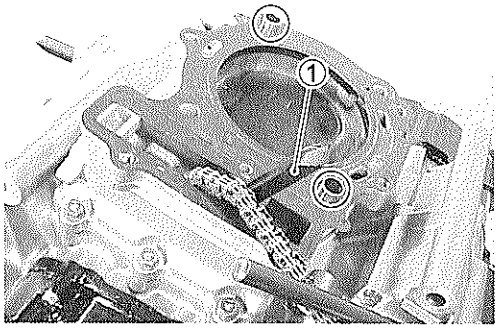

- Fit the dowel pins and new cylinder head gaskets to the cylinders, front and rear.

CAUTION

Use the new gaskets to prevent gas leakage.

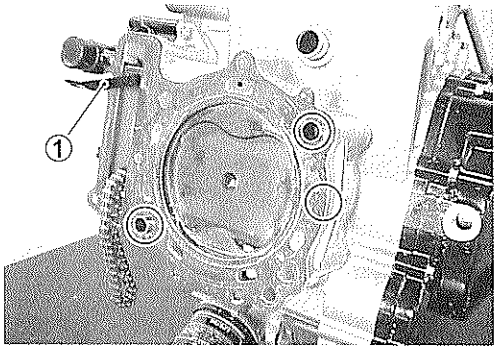

- Place the rear cylinder head on the cylinder.

NOTE:
When installing the cylinder head, keep the cam chain taut.

- Tighten the cylinder head bolts (M10) to the specified two step torque with a torque wrench sequentially and diagonally.

Cylinder head bolt (M10):
Initial 25 N·m (2.5 kgf-m, 18.0 lb-ft)
Final 47 N·m (4.7 kgf-m, 34.0 lb-ft)

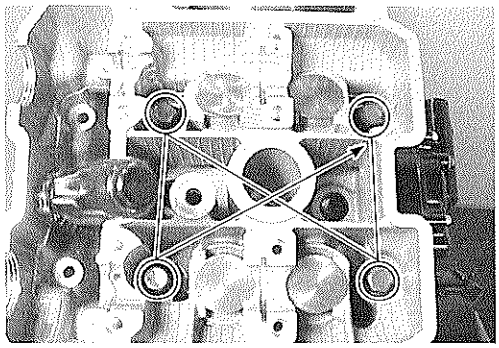

NOTE:
* *Install the washers to the cylinder head bolts (M10) as shown.*
* *Apply engine oil to the washers and thread portion of the bolts before installing the cylinder head bolts.*

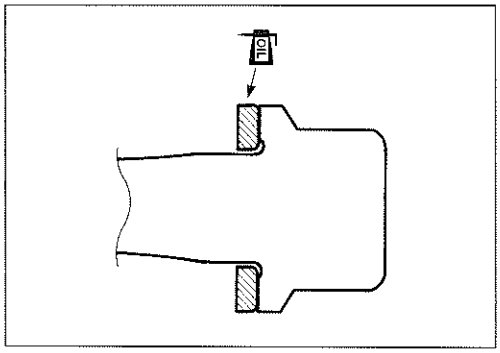

- After firmly tightening the cylinder head bolts (M10), install the cylinder head nuts and bolts.
- Tighten the cylinder head nuts, bolts and the cylinder nuts.

Cylinder head nut (M8): 25 N·m (2.5 kgf-m, 18.0 lb-ft)
Cylinder head nut (M6): 10 N·m (1.0 kgf-m, 7.0 lb-ft)
Cylinder head bolt (M6): 10 N·m (1.0 kgf-m, 7.0 lb-ft)
Cylinder nut (M6): 10 N·m (1.0 kgf-m, 7.0 lb-ft)

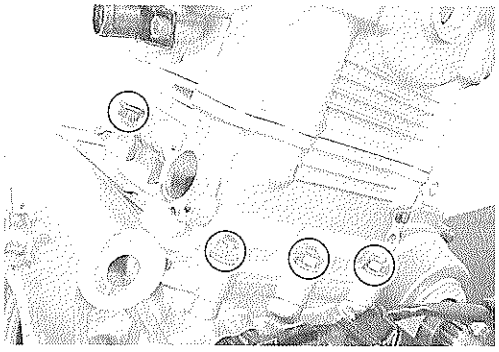

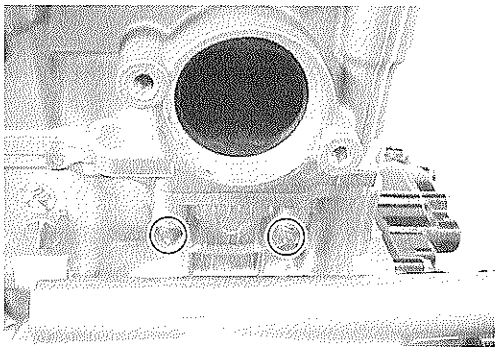

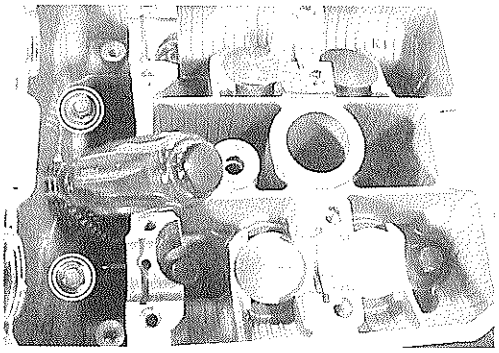

- Place the front cylinder head on the cylinder.

NOTE:

When installing the cylinder head, keep the cam chain taut.

- Tighten the cylinder head bolts (M10) to the specified two-step torque with a torque wrench sequentially and diagonally.

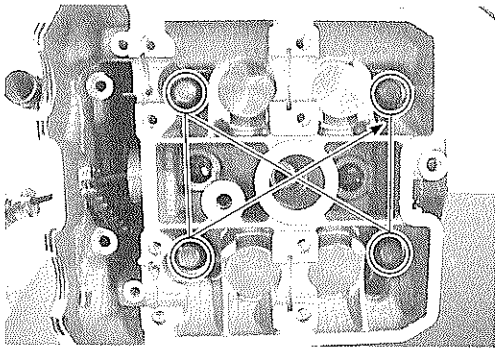

Cylinder head bolt (M10): Initial 25 N·m (2.5 kgf-m, 18.0 lb-ft)
Final 47 N·m (4.7 kgf-m, 34.0 lb-ft)

NOTE:

* *Install the washers to the cylinder head bolts (M10) as shown.*

* *Apply engine oil to the washers and thread portion of the bolts before installing the cylinder head bolts.*

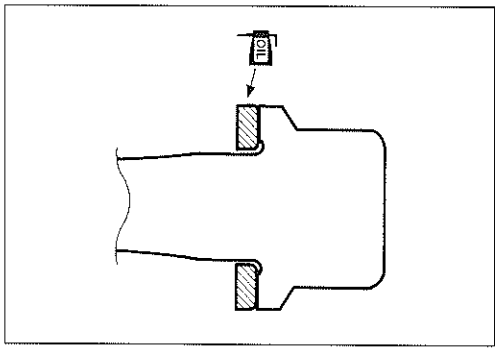

- After firmly tightening the cylinder head bolts (M10), install the cylinder head nuts, bolts and oil cooler mounting bracket ①.
- Tighten the cylinder head nuts, bolts and the cylinder nuts.

Cylinder head nut (M8): 25 N·m (2.5 kgf-m, 18.0 lb-ft)
Cylinder head nut (M6): 10 N·m (1.0 kgf-m, 7.0 lb-ft)
Cylinder head bolt (M6): 10 N·m (1.0 kgf-m, 7.0 lb-ft)
Cylinder nut (M6): 10 N·m (1.0 kgf-m, 7.0 lb-ft)

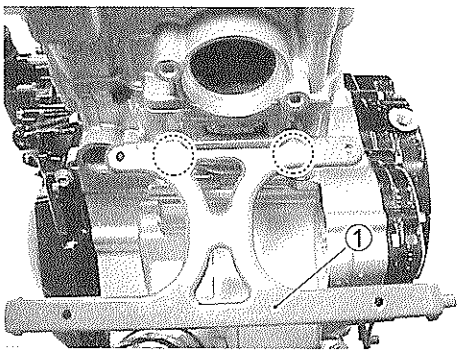

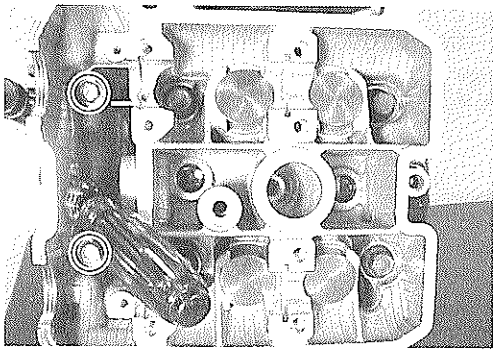

- Pull the cam chains upward and install the cam chain tensioners into each cylinder head.

① For No.1 (Front) cylinder head
② For No.2 (Rear) cylinder head

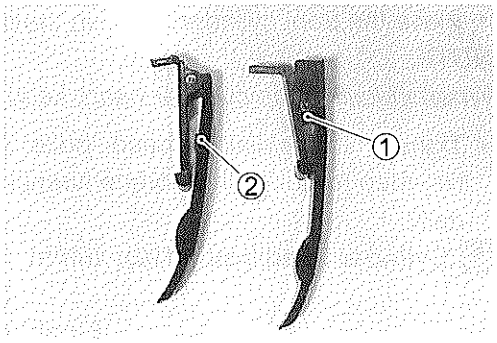

NOTE:

* *When installing the cam chain tensioners, insert the their holder ends Ⓐ into each guide cast on the cylinder.*
* *When installing the No.1 (Front) cam chain tensioner, through it rear side of the rib Ⓑ.*

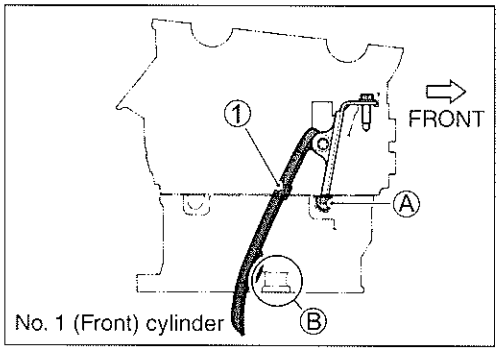

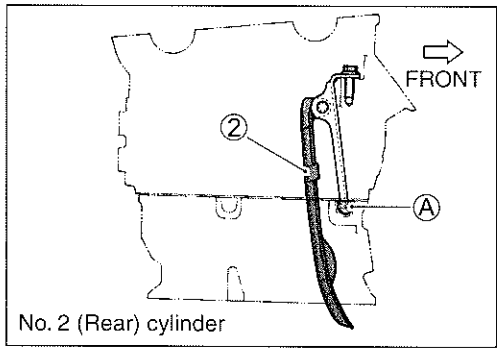

- Tighten the cam chain tensioner mounting bolts to the specified torque.

Cam chain tensioner mounting bolt:
10 N·m (1.0 kgf-m, 7.0 lb-ft)

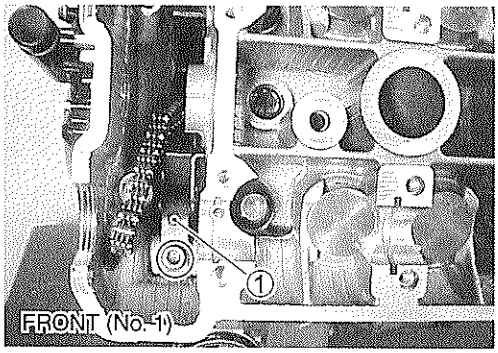

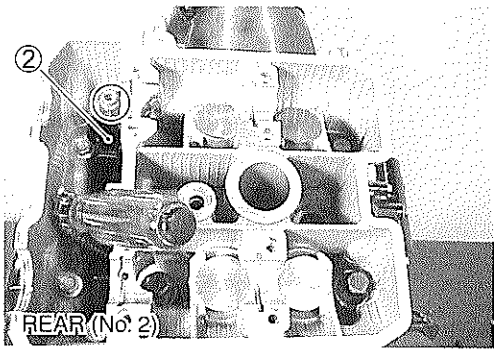

FRONT CAM DRIVE IDLE GEAR/SPROCKET

- Turn the crankshaft counterclockwise with the box wrench and align "F I T" line Ⓐ on the generator rotor with the index mark Ⓑ of the valve timing inspection hole while keeping the camshaft drive chain pulled upward.

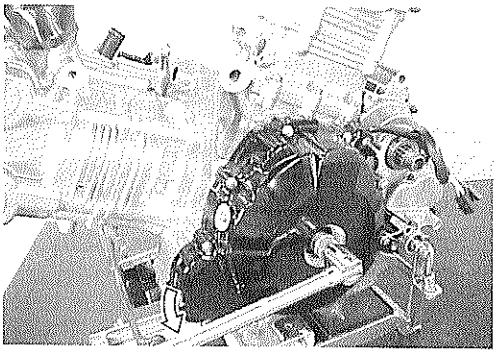

CAUTION

Pull the cam chains upward, or the chain will be caught between crankcase and cam drive sprocket.

CAUTION

To adjust the camshaft timing correctly, be sure to align "F I T" line Ⓐ with the index mark Ⓑ and hold this position when installing the cam drive idle gears/ sprockets, front and rear.

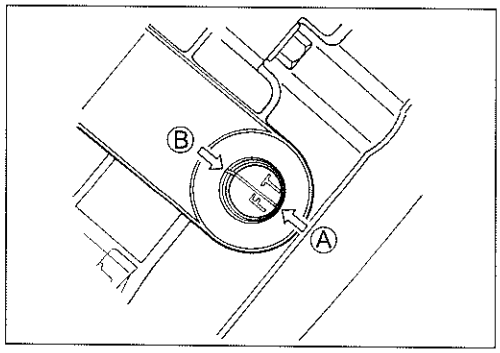

- Apply molybdenum oil solution to the cam drive idle gear/ sprocket bearing, its shaft ①, and thrust washer ②.

MOLYBDENUM OIL

NOTE:

* *The thickness of thrust washer ② must be selected for each cylinder head. THRUST WASHER SELECTION* ☞ *3-44*

* *Paint the engraved line Ⓒ on the cam drive idle gear/sprocket.*

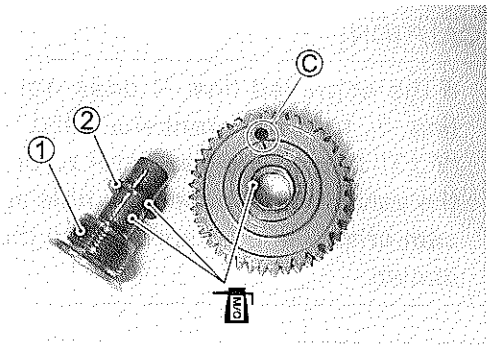

- Install the cam drive idle gear/sprocket onto the front cylinder head and engage the cam chain on it.
- Align the engraved line Ⓒ on the cam drive idle gear/sprocket with the embossed line Ⓓ on the cylinder head.

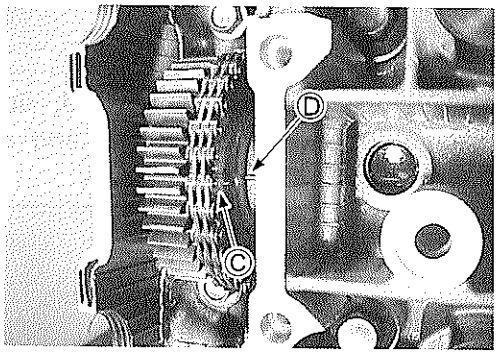

- Install the cam drive idle gear/sprocket shaft ①, the copper washer ③ and the thrust washer ②.

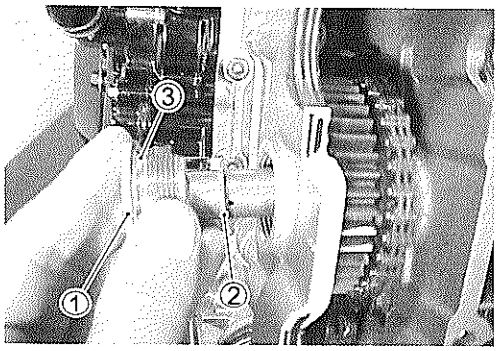

- Check and correct the positions of the "F I T" line on the generator rotor and cam drive idle gear/sprocket ①.

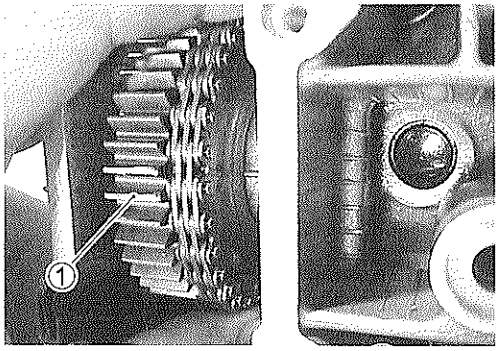

CAUTION

When checking the positions, remove the cam chain slack at the cam chain guide ② side by holding the cam drive idle gear/sprocket by hand.

NOTE:
Due to special valve train mechanism, aligning of the three elements; the engraved line Ⓐ, embossed line Ⓑ and the gear tooth root on the cam drive idle gear/sprocket; can occur once every other rotation of crankshaft.

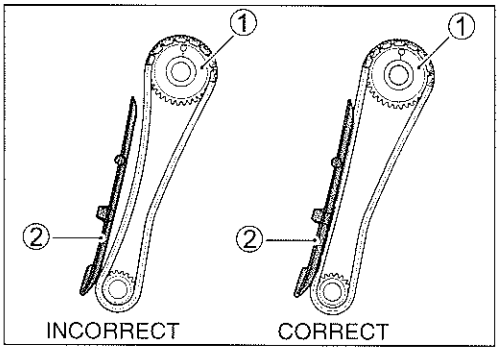

CAUTION

If the engraved line Ⓐ does not align the embossed line Ⓑ, turn the crankshaft 360° (1 turn) to bring the "F I T" line on the generator rotor to the index mark of the valve timing inspection hole again and reinstall the cam drive idle gear/sprocket to the correct position as shown.

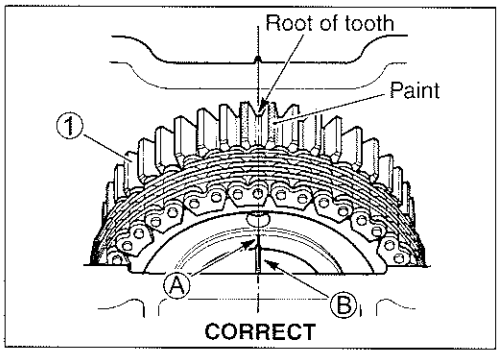

CAUTION

Pull the cam chains upward, or the chain will be caught between crankcase and cam drive sprocket when turning the crankshaft.

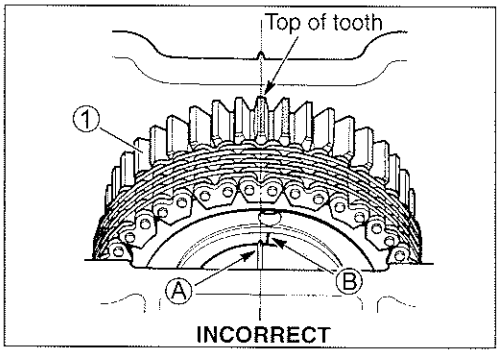

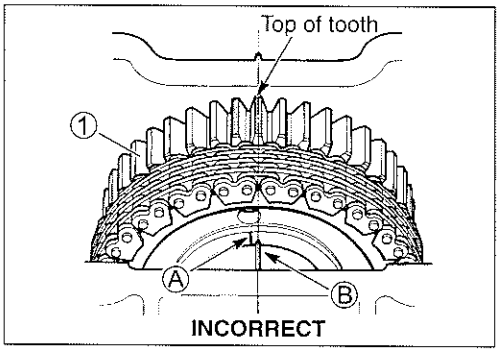

NOTE:
When checking the cam drive idle gear/sprocket ① position at its gear tooth, top or root, bring the eye level as shown in right illustration.

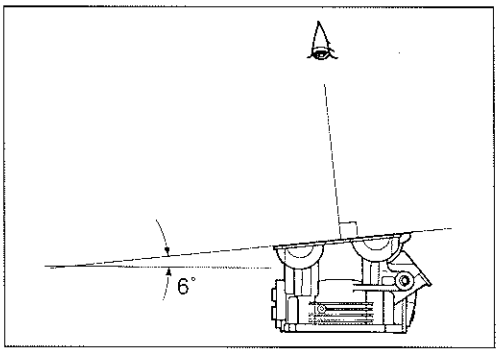

- Tighten the cam drive idle gear/sprocket shaft to the specified torque.

Cam drive idle gear/sprocket shaft:
40 N·m (4.0 kgf-m, 29.0 lb-ft)

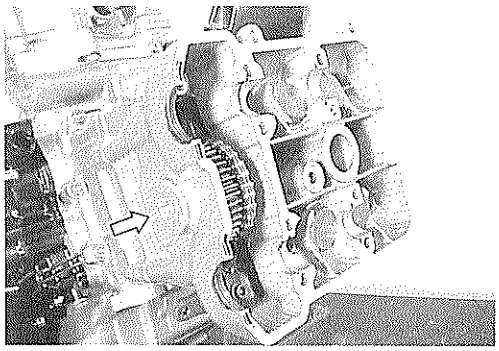

CAM CHAIN TENSION ADJUSTER

- Install the front cam chain tension adjuster to the following procedure.

NOTE:
The cam chain tension adjusters are distinguished by the shapes.
① For No.1 (Front) cylinder
② For No.2 (Rear) cylinder

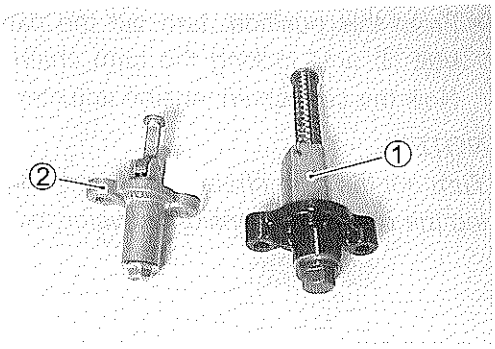

- Turn in the cam chain tension adjuster bolt ③ fully.

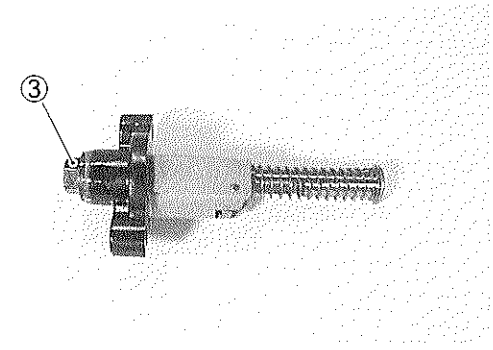

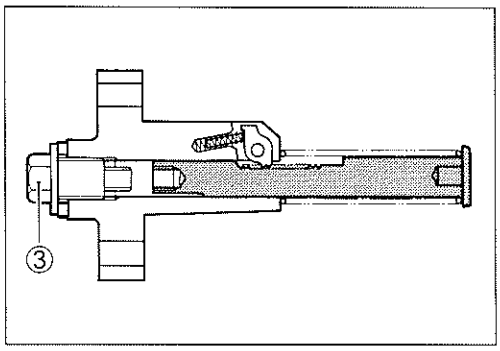

- Compress the cam chain tension adjuster rod ① fully by releasing the ratchet ②.

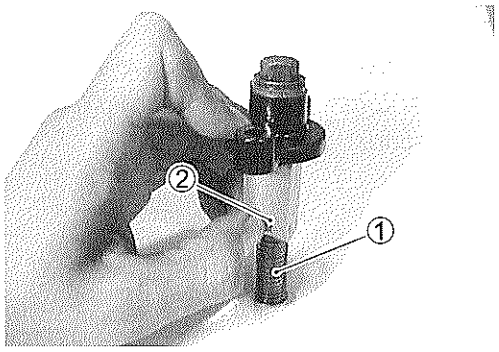

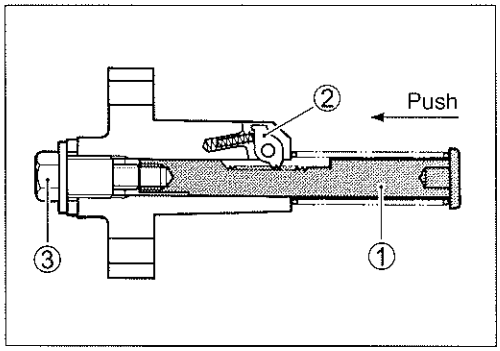

- From this position, turn out the cam chain tension adjuster bolt ③ until locking the cam chain tension adjuster rod ①. Now the cam chain tension adjuster is ready to install.

NOTE:
Turn out the cam chain tension adjuster bolt ③ while compressing the cam chain tension adjuster rod.

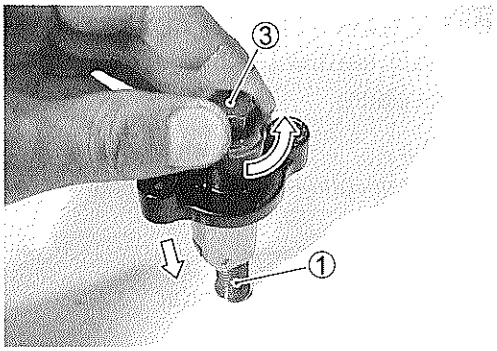

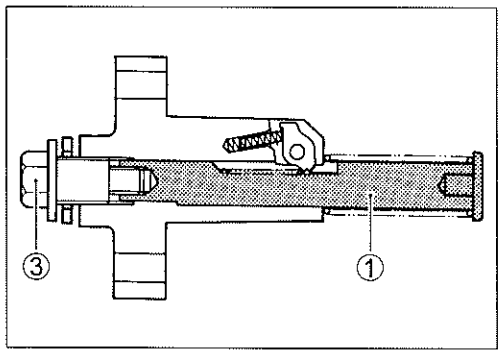

- Install the new gasket ④.

CAUTION

Use the new gasket to prevent oil leakage.

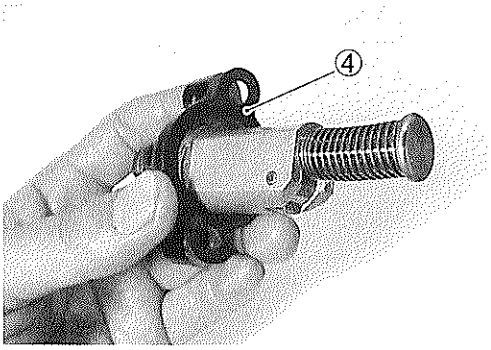

- Install the cam chain tension adjuster as shown and tighten its mounting bolts to the specified torque.

Cam chain tension adjuster mounting bolt:
10 N·m (1.0 kgf-m, 7.0 lb-ft)

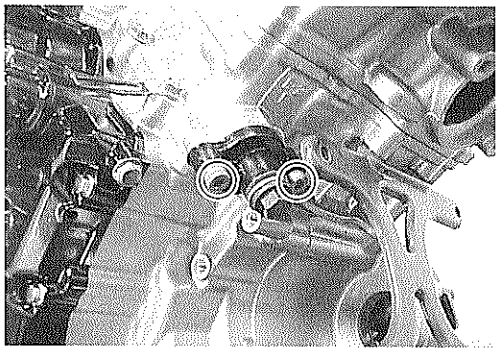

- Release the cam chain tension adjuster by turning in its bolt ①.

NOTE:
Click sound is heard when the cam chain tension adjuster rod is released.

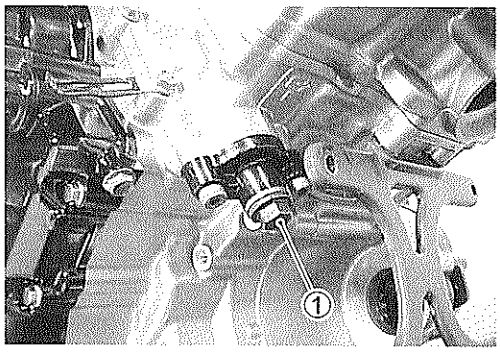

- Tighten the cam chain tension adjuster bolt ① to the specified torque.

Cam chain tension adjuster bolt (Front):
23 N·m (2.3 kgf-m, 16.5 lb-ft)

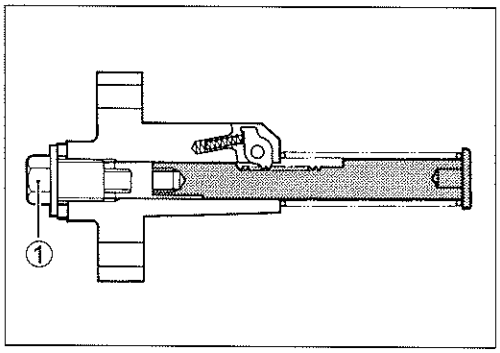

CAUTION

After installing the cam chain tension adjuster, check to be sure that the adjuster work properly by checking the slack of cam chain.

REAR CAM DRIVE IDLE GEAR/SPROCKET

- For the rear cam drive idle gear/sprocket installation, the crankshaft setting position must be set at the same position (TDC of compression stroke) as the front one.
- The procedures are also the same as the front cam drive idle gear/sprocket installation.

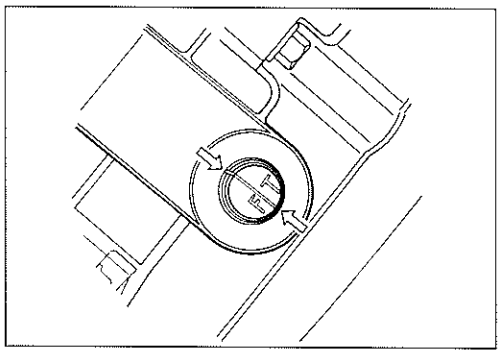

CAUTION

When checking the cam drive idle gear/sprocket position, remove the cam chain slack at the cam chain guide ② side by holding it by hand.

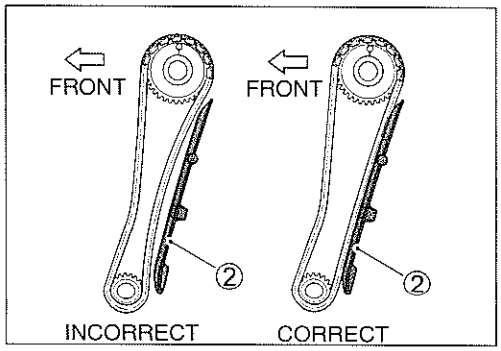

REAR CAM CHAIN TENSION ADJUSTER

- Install the rear cam chain tension adjuster to the following procedure.
- Disassemble the rear cam chain tension adjuster.

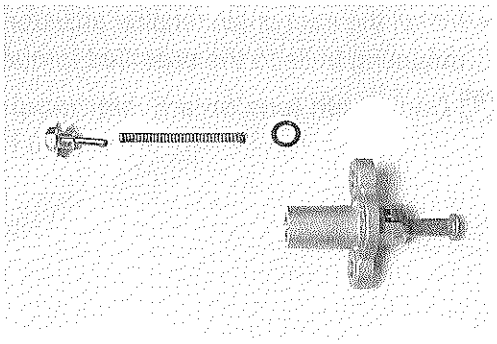

- Compress the cam chain tension adjuster rod by releasing the ratchet.

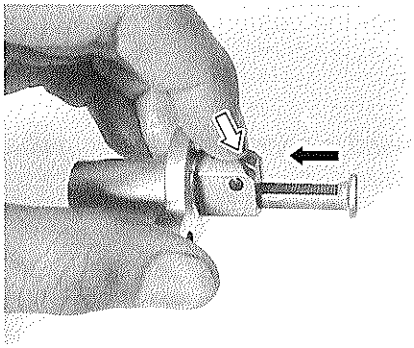

- Install the new gasket ①.

CAUTION

Use the new gasket to prevent oil leakage.

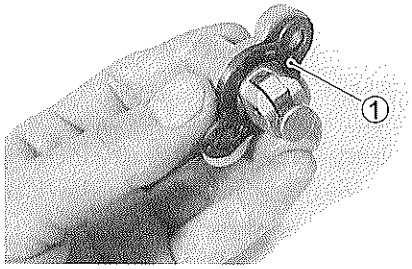

- Install the cam chain tension adjuster as shown and tighten its mounting bolts to the specified torque.

Cam chain tension adjuster mounting bolt:
10 N·m (1.0 kgf-m, 7.0 lb-ft)

- Install a new O-ring, spring and cam chain tension adjuster bolts and tighten them to the specified torque.

NOTE:
Apply grease to the O-ring before installing.

99000-25030: SUZUKI SUPER GREASE "A" (USA)
99000-25010: SUZUKI SUPER GREASE "A" (Others)

Cam chain tension adjuster bolt (Rear):
7 N·m (0.7 kgf-m, 5.0 lb-ft)

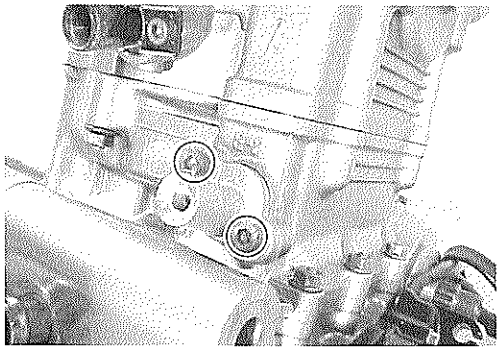

NOTE:
Click sound is heard when extending the cam chain tension adjuster rod.

CAUTION

After installing the cam chain tension adjuster, check to be sure that the adjuster work properly by checking the slack of cam chain.

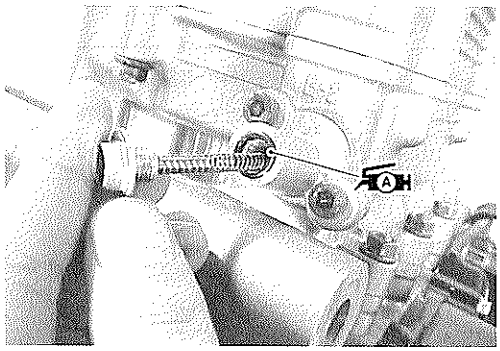

CAMSHAFT

- Rotate the generator rotor 720 degrees (2 turns) and align the "F I T" line on the generator rotor with the index mark of the valve timing inspection hole.
- Recheck the position of the engraved lines Ⓐ on the front and rear cam drive idle gears/sprockets.

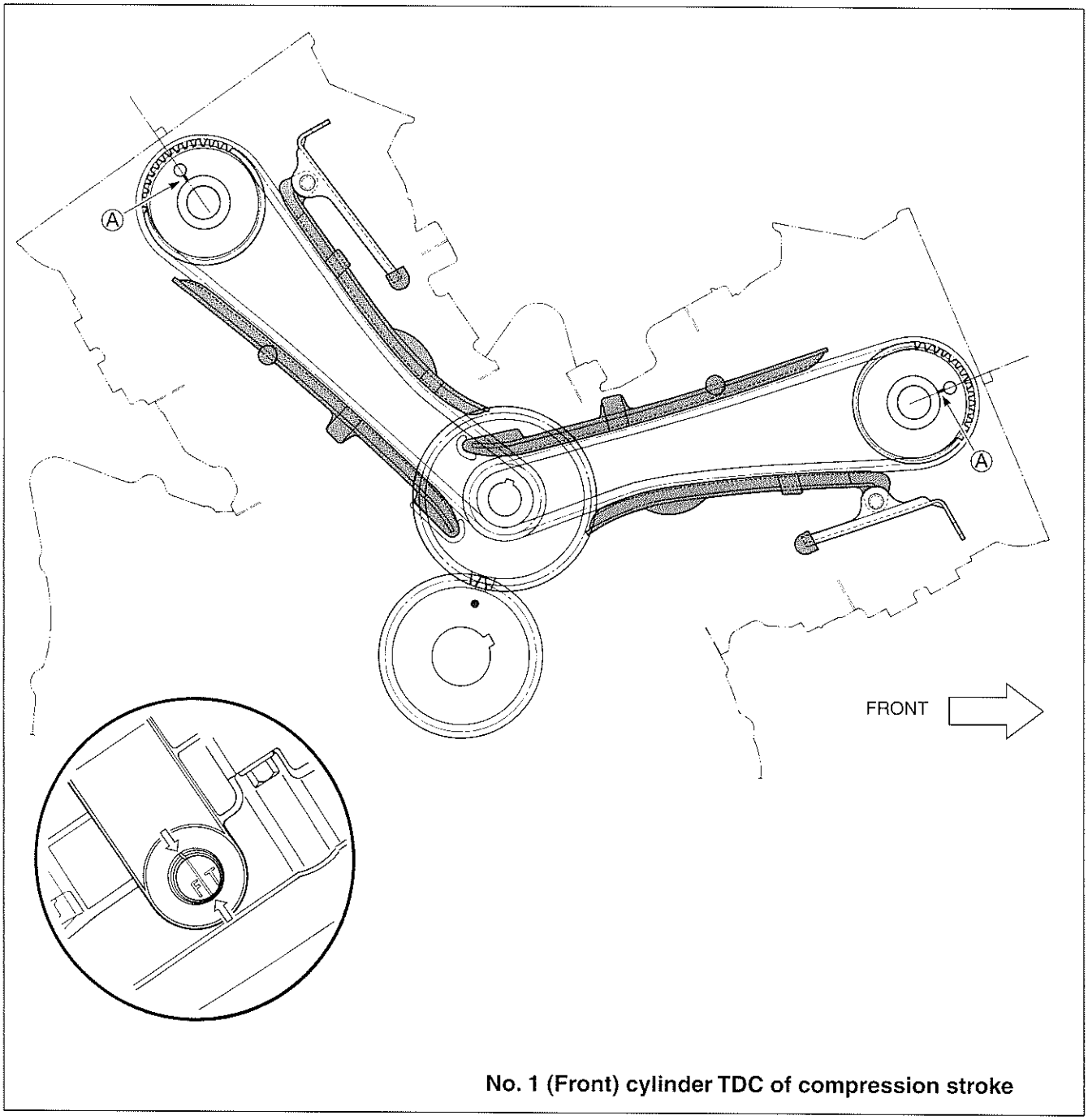

No. 1 (Front) cylinder TDC of compression stroke

NO.1 (FRONT) CAMSHAFTS

- At the above condition, install the No.1 (Front) camshafts, intake and exhaust, in the following procedure.

NOTE:
The cam shafts are identified by the engraved letters.
① No.1 (Front) exhaust camshaft
② No.1 (Front) intake camshaft
③ No.2 (Rear) exhaust camshaft
④ No.2 (Rear) intake camshaft

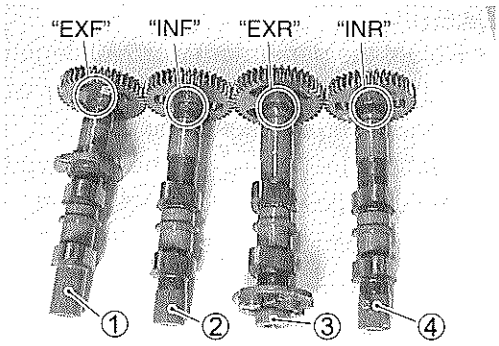

NOTE:
Before placing the camshafts on cylinder head, apply molybdenum oil solution to their journals and cam faces.
Apply engine oil to the camshaft journal holders.

MOLYBDENUM OIL

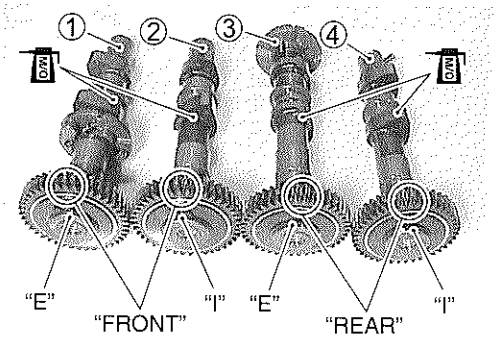

- Place the No.1 (front) camshafts, intake and exhaust.
- Align the engraved lines Ⓐ on the camshafts so it is parallel with the mating surface of the cylinder head cover. Check that the cam faces are located as shown.

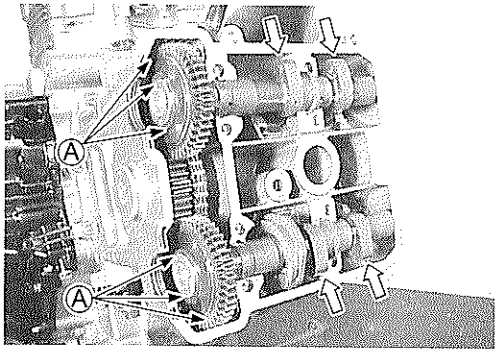

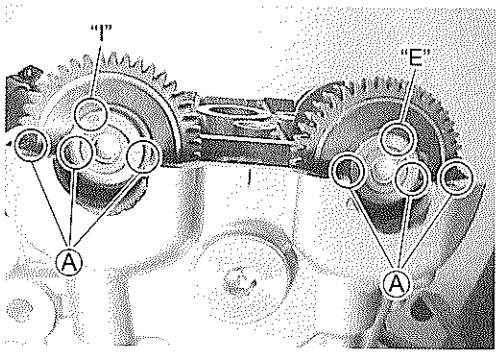

- Install the dowel pins.

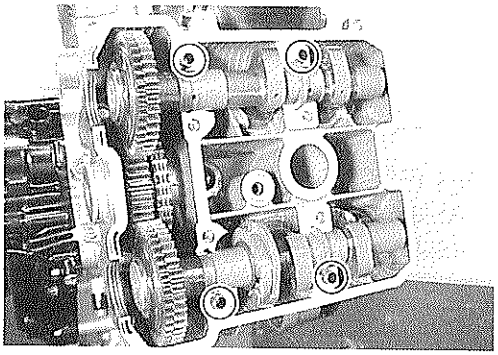

- Install the camshaft journal holders, intake and exhaust.
- Fasten the camshaft journal holders evenly by tightening the camshaft journal holder bolts sequentially and diagonally. (Try to equalize the pressure by shifting the wrench in the above manner, to fasten the shafts evenly.)

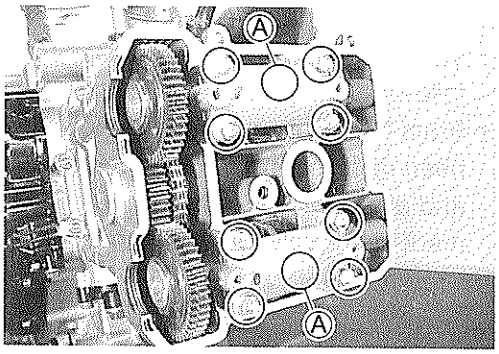

NOTE:

* *Damage to head or camshaft journal holder thrust surfaces may result if the camshaft journal holders are not drawn down evenly.*

* *Each camshaft journal holder is identified with a cast-on letters Ⓐ.*

- Tighten the camshaft journal holder bolts to the specified torque.

Camshaft journal holder bolt: 10 N·m (1.0 kgf-m, 7.0 lb-ft)

CAUTION

The camshaft journal holder bolts are made of a special material and much superior in strength, compared with other types of high strength bolts.
Take special care not to use other types of bolts instead of these special bolts. To identify these bolts, each of them has a figure "9" on its head.

- Recheck the No.1 (Front) camshaft positions, intake and exhaust.

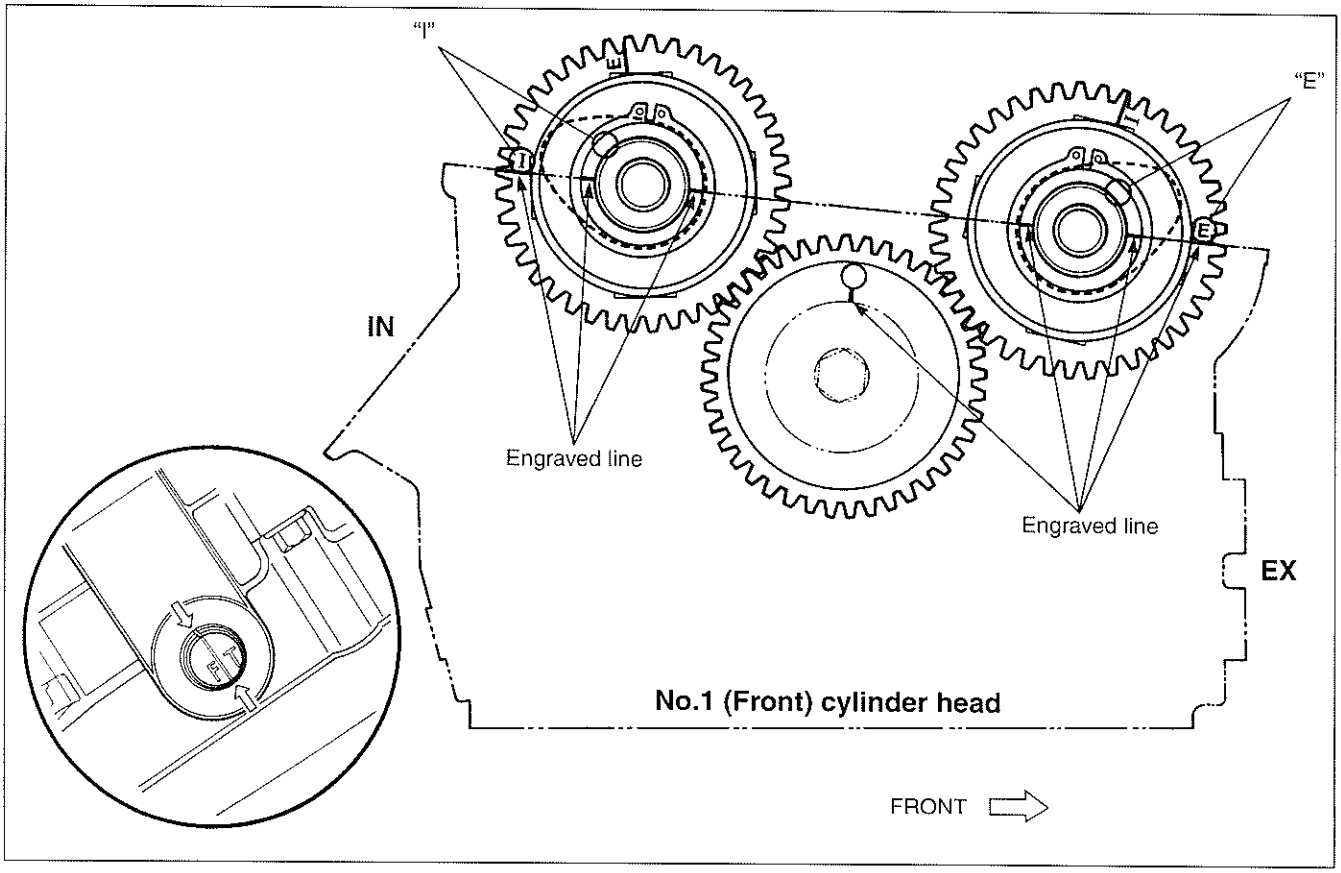

NO.2 (REAR) CAMSHAFTS

- Install the No.2 (Rear) camshafts, intake and exhaust, in the following procedure.
- From the position where the No.1 (Front) camshafts have now been installed, rotate the generator rotor 360 degrees (1 turn) and align the "F I T" line on the generator rotor with the index mark of the valve timing inspection hole.

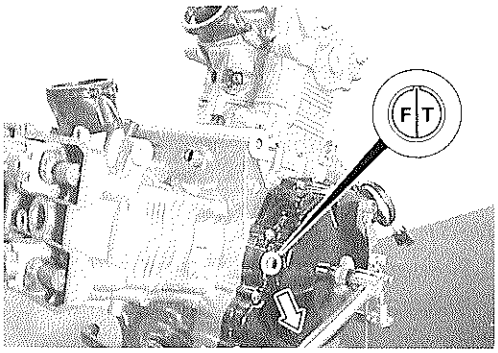

NOTE:
At this position, the engraved line Ⓐ on the cam drive idle gear/ sprocket is inside the cylinder head and not visible.

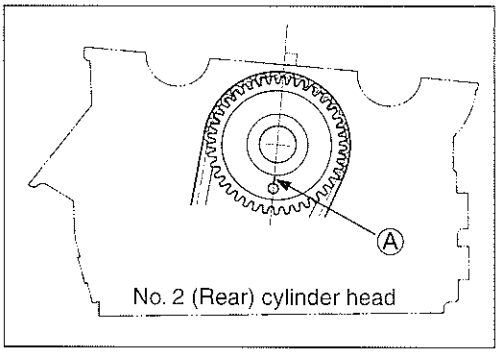

- Place the No.2 (Rear) camshafts, intake ① and exhaust ②.
- Align the engraved lines Ⓑ on the camshafts so that it is parallel with mating surface of the cylinder head cover. Check that the cam faces are located as shown.

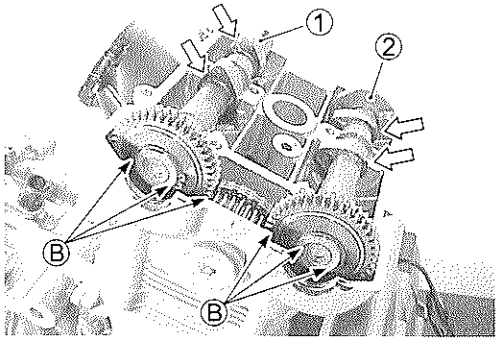

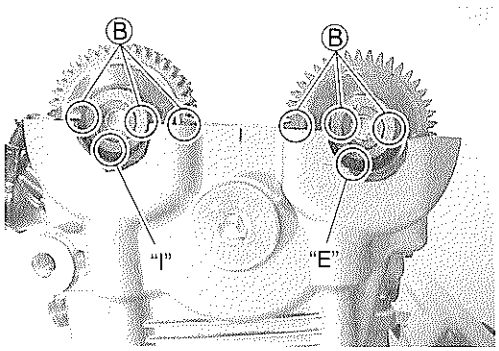

- Install the dowel pins.

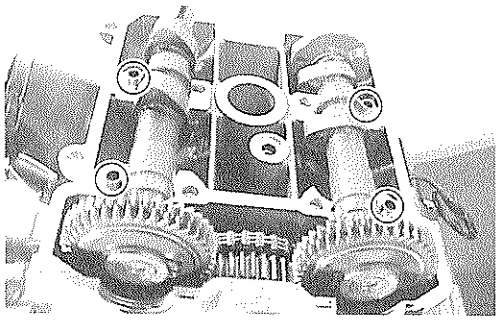

- Install the camshaft journal holders, intake and exhaust.
- Fasten the camshaft journal holders evenly by tightening the camshaft journal holder bolts sequentially and diagonally. (Try to equalize the pressure by shifting the wrench in the above manner, to fasten the shafts evenly.)

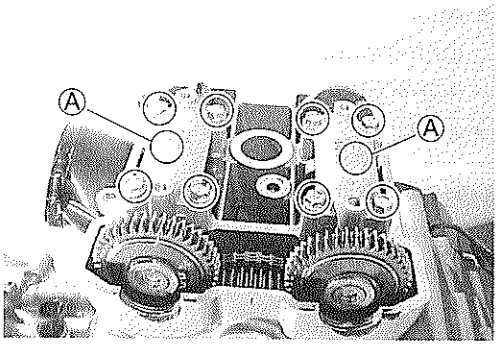

NOTE:

** Damage to head or camshaft journal holder thrust surfaces may result if the camshaft journal holders are not drawn down evenly.*

** Each camshaft journal holder is identified with a cast-on letter Ⓐ.*

- Tighten the camshaft journal holder bolts to the specified torque.

Camshaft journal holder bolt: 10 N·m (1.0 kgf-m, 7.0 lb-ft)

CAUTION

The camshaft journal holder bolts are made of a special material and much superior in strength, compared with other types of high strength bolts.
Take special care not to use other types of bolts instead of these special bolts. To identify these bolts, each of them has a figure "9" on its head.

- Recheck the No.2 (Rear) camshaft positions, intake and exhaust.

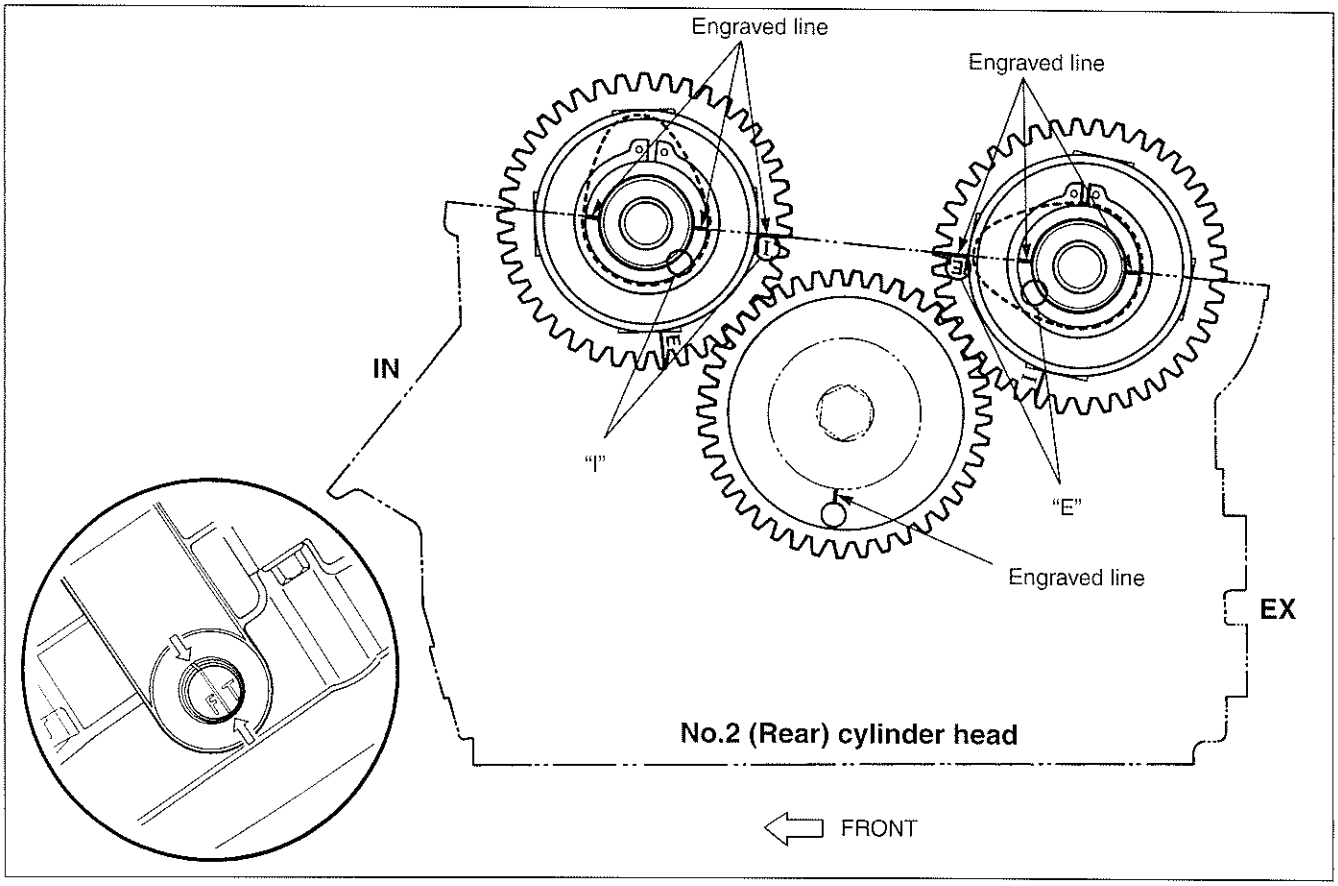

- After installing the No.2 (Rear) camshafts, rotate the generator rotor 360 degrees (1 turn), and recheck the positions of the camshafts.

CAUTION

Be sure to check the positions of the "F I T" line Ⓐ on the generator rotor, engraved line Ⓑ on the cam drive idle gears/sprockets and the engraved line Ⓒ on the camshafts.

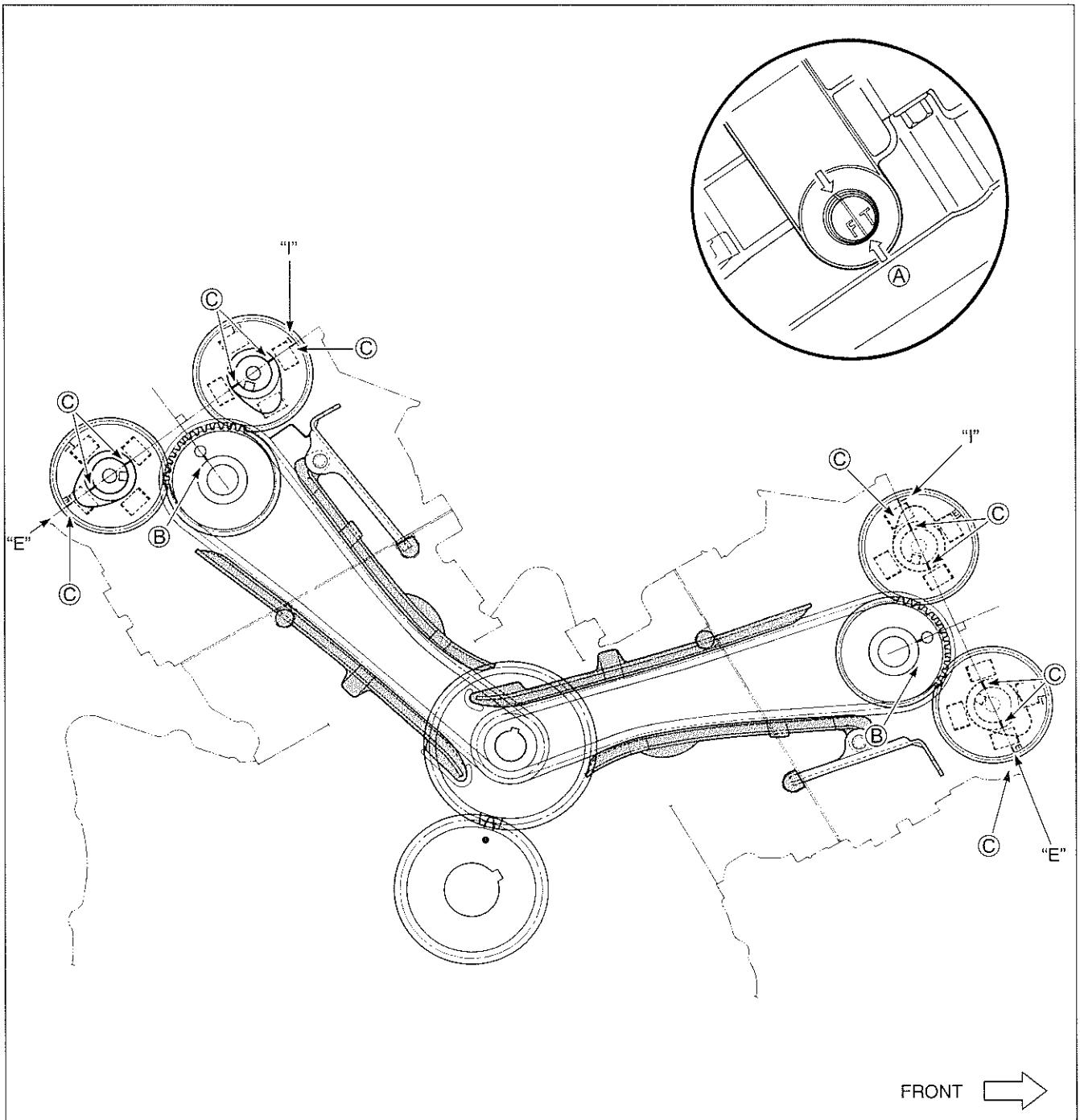

No. 1 (Front) cylinder TDC of compression stroke

- Pour engine oil in each oil pocket in the front and rear cylinder heads.

CAUTION

Be sure to check the tappet clearance.

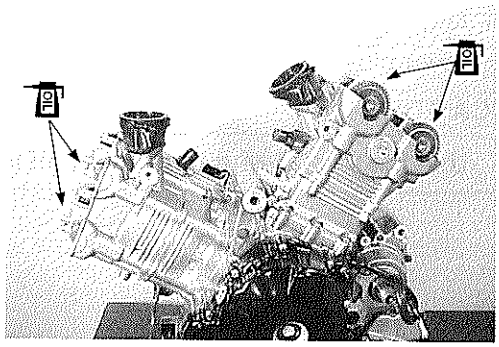

CYLINDER HEAD COVER

- Install the new gaskets (②, ③) to each cylinder head cover.
- Apply SUZUKI BOND "1207B" to the cam end caps of the gaskets as shown.

1207B 99104-31140: SUZUKI BOND "1207B"

CAUTION

Use the new gaskets to prevent oil leakage.

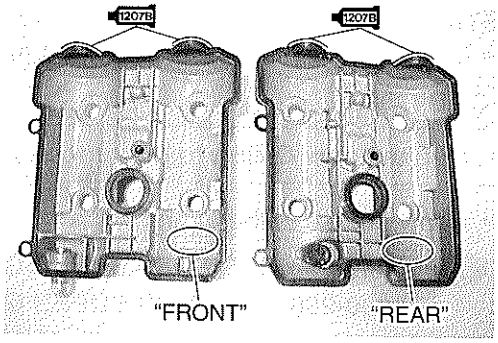

- Place the cylinder head covers on each cylinder head.
- Fit the gaskets to each head cover bolt.

CAUTION

Use the new gaskets to prevent oil leakage.

- After applying engine oil to the gaskets, tighten the head cover bolts to the specified torque.

Head cover bolt: 14 N·m (1.4 kgf-m, 10.0 lb-ft)

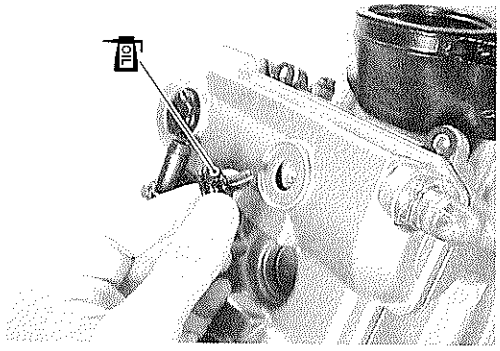

SPARK PLUG

- Install the spark plugs.

TOOL 09930-10121: Spark plug wrench set

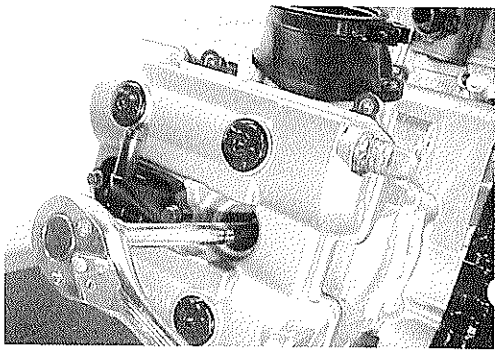

- Install the valve timing inspection plug ①.

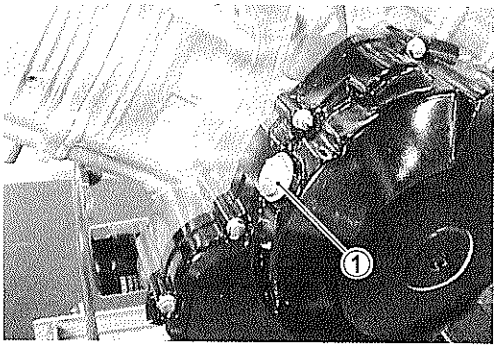

- Apply engine oil to the new O-ring and install the generator cover plug.

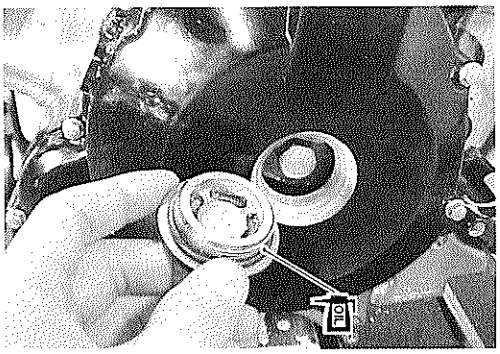

CAUTION

Use the new O-ring to prevent oil leakage.

STARTER MOTOR

- Install the new O-ring to the starter motor.

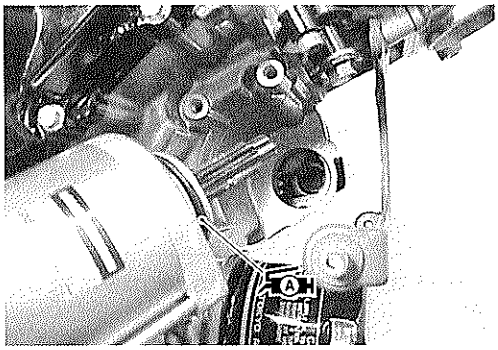

CAUTION

Use the new O-ring to prevent oil leakage.

- Apply grease to the O-ring.

99000-25030: SUZUKI SUPER GREASE "A" (USA)
99000-25010: SUZUKI SUPER GREASE "A" (Others)

- Install the starter motor.

NOTE:
Fit the clamp to the bolt Ⓐ.

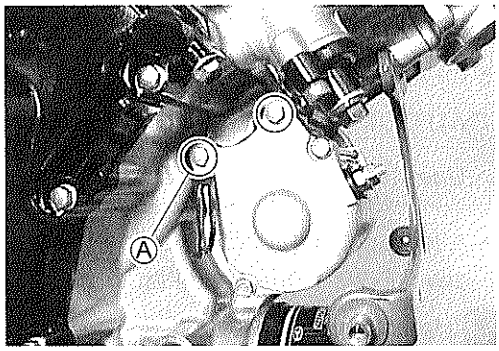

- Install the thermostat case.

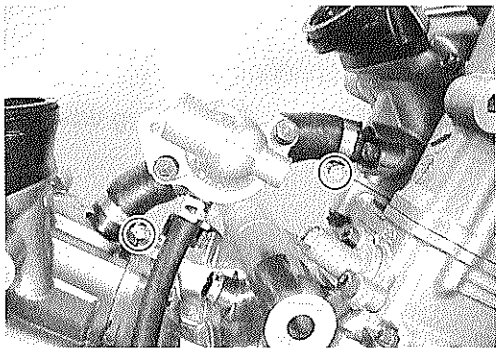

FI SYSTEM

CONTENTS

PRECAUTIONS IN SERVICING 4- 2
CONNECTOR/COUPLER 4- 2
FUSE 4- 3
ECM/VARIOUS SENSORS 4- 3
ELECTRICAL CIRCUIT INSPECTION PROCEDURE 4- 5
USING TESTERS 4- 8
FI SYSTEM TECHNICAL FEATURES 4- 9
INJECTION TIME (INJECTION VOLUME) 4- 9
COMPENSATION OF INJECTION TIME (VOLUME) 4-10
INJECTION STOP CONTROL 4-10
FUEL DELIVERY SYSTEM 4-11
FUEL PUMP 4-12
FUEL PRESSURE REGULATOR 4-13
FUEL INJECTOR 4-13
FUEL PUMP CONTROL SYSTEM 4-14
ECM (FI CONTROL UNIT) 4-15
INJECTION TIMING 4-15
SENSORS 4-16
FI SYSTEM PARTS LOCATION 4-20
FI SYSTEM WIRING DIAGRAM 4-22
SELF-DIAGNOSIS FUNCTION 4-23
USER MODE 4-23
DEALER MODE 4-24
TPS ADJUSTMENT 4-25
FAIL-SAFE FUNCTION 4-26
FI SYSTEM TROUBLESHOOTING 4-27
CUSTOMER COMPLAINT ANALYSIS 4-27
SELF-DIAGNOSTIC PROCEDURES 4-29
SELF-DIAGNOSIS RESET PROCEDURE 4-29
MALFUNCTION CODE AND DEFECTIVE CONDITION 4-30
"C11" CMP SENSOR CIRCUIT MALFUNCTION 4-32
"C12" CKP SENSOR CIRCUIT MALFUNCTION 4-33
"C13" IAP SENSOR CIRCUIT MALFUNCTION 4-34
"C14" TP SENSOR CIRCUIT MALFUNCTION 4-36
"C15" ECT SENSOR CIRCUIT MALFUNCTION 4-38
"C21" IAT SENSOR CIRCUIT MALFUNCTION 4-39
"C22" AP SENSOR CIRCUIT MALFUNCTION 4-40
"C23" TO SENSOR CIRCUIT MALFUNCTION 4-42
"C24" or "C25" IGNITION SYSTEM MALFUNCTION 4-43
"C28" STV ACTUATOR CIRCUIT MALFUNCTION 4-43
"C29" STP SENSOR CIRCUIT MALFUNCTION 4-44
"C31" GEAR POSITION (GP) SWITCH CIRCUIT MALFUNCTION 4-46
"C32" or "C33" FUEL INJECTION MALFUNCTION 4-47
"C41" FP RELAY CIRCUIT MALFUNCTION 4-48
"C42" IG SWITCH CIRCUIT MALFUNCTION 4-48
"C44" HO_2 SENSOR (HO_2S) CIRCUIT MALFUNCTION
(Except for USA) 4-49

FUEL SYSTEM 4-51
FUEL TANK LIFT-UP 4-51
FUEL TANK REMOVAL 4-52
FUEL TANK INSTALLATION 4-52
FUEL PRESSURE INSPECTION 4-53
FUEL PUMP INSPECTION 4-54
FUEL PUMP RELAY INSPECTION 4-55
FUEL PUMP AND FUEL FILTER REMOVAL 4-55
FUEL MESH FILTER INSPECTION AND CLEANING 4-57
FUEL PUMP AND FUEL MESH FILTER INSTALLATION 4-57
THROTTLE BODY AND STV ACTUATOR 4-59
CONSTRUCTION 4-59
THROTTLE BODY REMOVAL 4-60
THROTTLE BODY DISASSEMBLY 4-61
THROTTLE BODY CLEANING 4-65
INSPECTION 4-65
THROTTLE BODY REASSEMBLY 4-65
STP SENSOR ADJUSTMENT 4-68
THROTTLE BODY INSTALLATION 4-69
TP SENSOR ADJUSTMENT 4-69
FUEL INJECTOR INSPECTION 4-69
FUEL INJECTOR REMOVAL 4-70
FUEL INJECTOR INSTALLATION 4-70
FAST IDLE INSPECTION 4-70
FAST IDLE ADJUTMENT 4-71
THROTTLE VALVE SYNCHRONIZATION 4-72
THROTTLE CABLE ADJUSTMENT 4-73
SENSOR 4-74
IAP SENSOR INSPECTION 4-74
IAP SENSOR REMOVAL/INSTALLATION 4-74
TP SENSOR INSPECTION 4-74
TP SENSOR REMOVAL/INSTALLATION 4-74
STP SENSOR INSPECTION 4-74
STP SENSOR REMOVAL/INSTALLATION 4-74
CKP SENSOR INSPECTION 4-75
CKP SENSOR REMOVAL/INSTALLATION 4-75
CMP SENSOR INSPECTION 4-75
CMP SENSOR REMOVAL/INSTALLATION 4-75
IAT SENSOR INSPECTION 4-75
IAT SENSOR REMOVAL/INSTALLATION 4-75
ECT SENSOR INSPECTION 4-76
ECT SENSOR REMOVAL/INSTALLATION 4-76
AP SENSOR INSPECTION 4-76
AP SENSOR REMOVAL/INSTALLATION 4-76
TO SENSOR INSPECTION 4-76
TO SENSOR REMOVAL/INSTALLATION 4-76
HO_2 SENSOR INSPECTION (Except for USA) 4-76
HO_2 SENSOR REMOVAL/INSTALLATION 4-77

PRECAUTIONS IN SERVICING

When handling the FI component parts or servicing the FI system, observe the following points for the safety of the system.

CONNECTOR/COUPLER

- When connecting a connector, be sure to push it in until a click is felt.
- With a lock type coupler, be sure to release the lock when disconnecting, and push it in fully till the lock works when connecting it.
- When disconnecting the coupler, be sure to hold the coupler body and do not pull the lead wires.
- Inspect each terminal on the connector/coupler for looseness or bending.

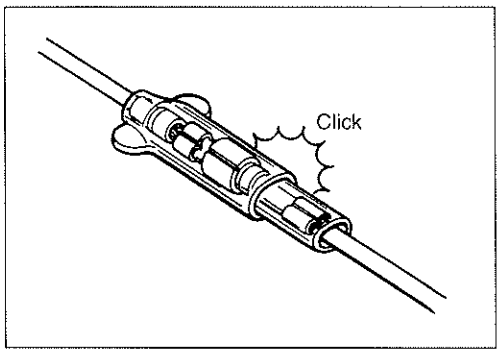

- Inspect each terminal for corrosion and contamination.
  The terminals must be clean and free of any foreign material which could impede proper terminal contact.

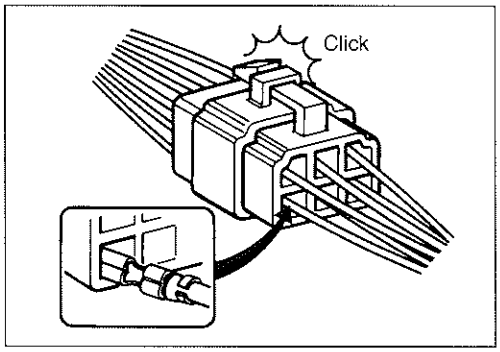

- Inspect each lead wire circuit for poor connection by shaking it by hand lightly. If any abnormal condition is found, repair or replace.

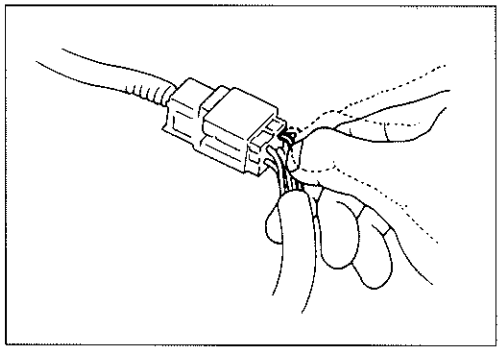

- When taking measurements at electrical connectors using a tester probe, be sure to insert the probe from the wire harness side (backside) of the connector/coupler.

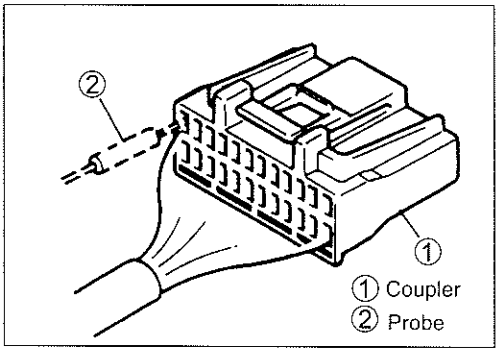

- When connecting meter probe from the terminal side of the coupler (connection from harness side not being possible), use extra care not to force and cause the male terminal to bend or the female terminal to open.
  Connect the probe as shown to avoid opening of female terminal.
  Never push in the probe where male terminal is supposed to fit.
- Check the male connector for bend and female connector for excessive opening. Also check the coupler for locking (looseness), corrosion, dust, etc.

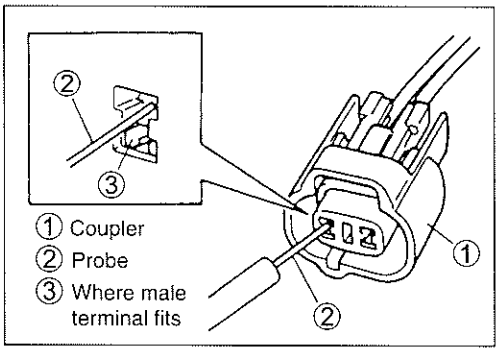

FUSE

- When a fuse blows, always investigate the cause, correct it and then replace the fuse.
- Do not use a fuse of a different capacity.
- Do not use wire or any other substitute for the fuse.

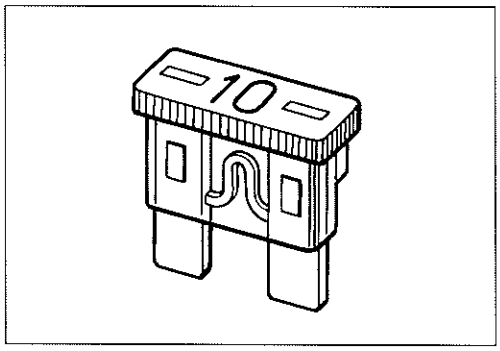

ECM/VARIOUS SENSORS

- Since each component is a high-precision part, great care should be taken not to apply any sharp impacts during removal and installation.

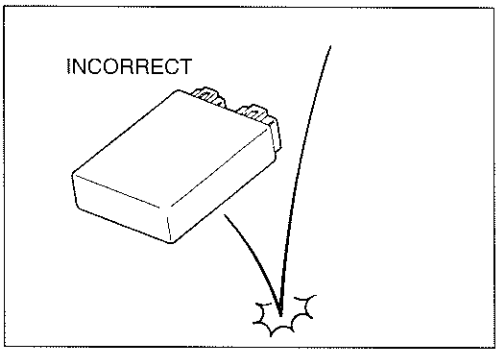

- Be careful not to touch the electrical terminals of the ECM. The static electricity from your body may damage this part.

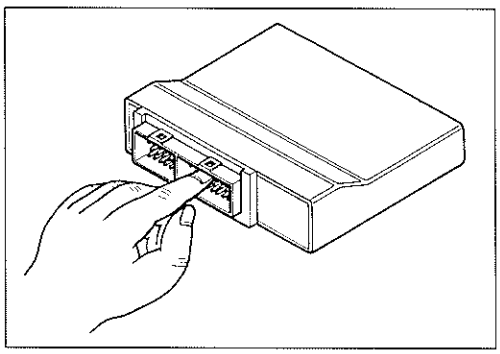

- When disconnecting and connecting the ECM couplers, make sure to turn OFF the ignition switch, or electronic parts may get damaged.

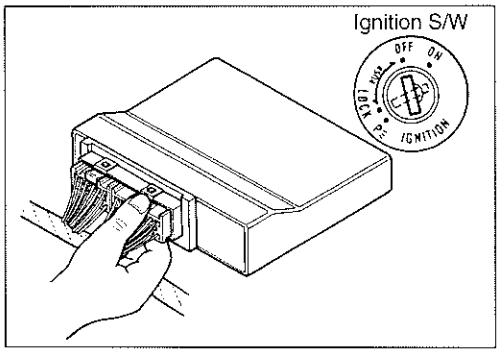

- Battery connection in reverse polarity is strictly prohibited. Such a wrong connection will damage the components of the FI system instantly when reverse power is applied.

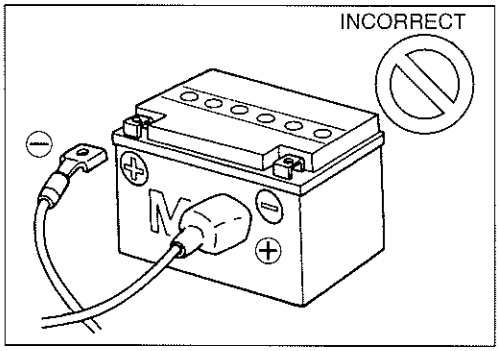

- Removing any battery terminal of a running engine is strictly prohibited.
  The moment such removal is made, damaging counter electromotive force will be applied to the ECM which may result in serious damage.

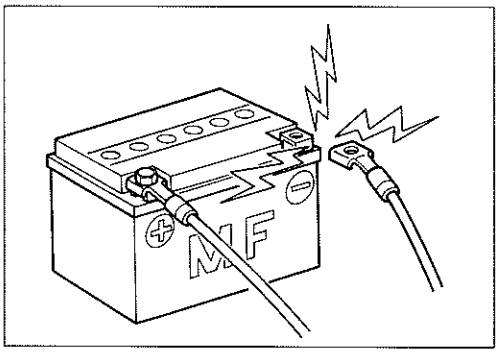

- Before measuring voltage at each terminal, check to make sure that battery voltage is 11 V or higher. Terminal voltage check at low battery voltage will lead to erroneous diagnosis.

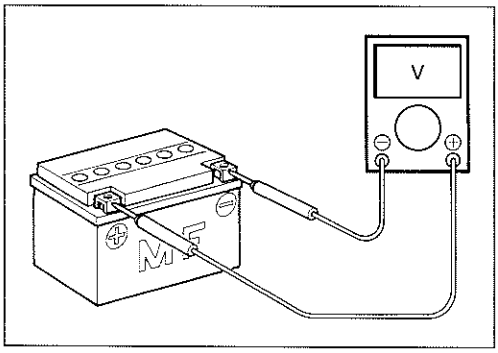

- Never connect any tester (voltmeter, ohmmeter, or whatever) to the ECM when its coupler is disconnected. Otherwise, damage to ECM may result.
- Never connect an ohmmeter to the ECM with its coupler connected. If attempted, damage to ECM or sensors may result.
- Be sure to use a specified voltmeter/ohmmeter. Otherwise, accurate measurements may not be obtained and personal injury may result.

ELECTRICAL CIRCUIT INSPECTION PROCEDURE

While there are various methods for electrical circuit inspection, described here is a general method to check for open and short circuit using an ohmmeter and a voltmeter.

OPEN CIRCUIT CHECK

Possible causes for the open circuit are as follows. As the cause can exist in the connector/coupler or terminal, they need to be checked carefully.

- Loose connection of connector/coupler
- Poor contact of terminal (due to dirt, corrosion or rust, poor contact tension, entry of foreign object etc.)
- Wire harness being open
- Poor terminal-to-wire connection

- Disconnect the negative cable from the battery.
- Check each connector/coupler at both ends of the circuit being checked for loose connection. Also check for condition of the coupler lock if equipped.

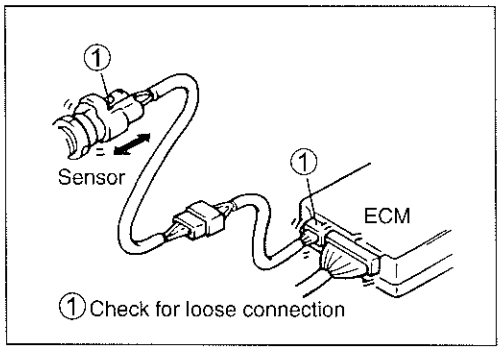

- Using a test male terminal, check the female terminals of the circuit being checked for contact tension.
  Check each terminal visually for poor contact (possibly caused by dirt, corrosion, rust, entry of foreign object, etc.). At the same time, check to make sure that each terminal is fully inserted in the coupler and locked.
  If contact tension is not enough, rectify the contact to increase tension or replace.
  The terminals must be clean and free of any foreign material which could impede proper terminal contact.

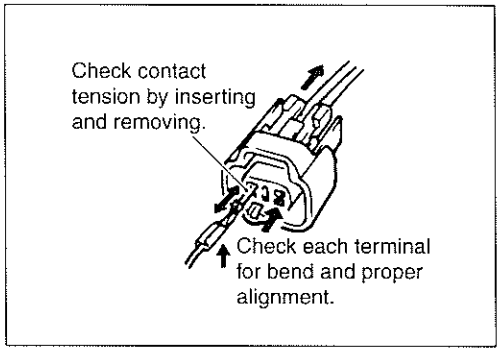

- Using continuity inspect or voltage check procedure as described below, inspect the wire harness terminals for open circuit and poor connection. Locate abnormality, if any.

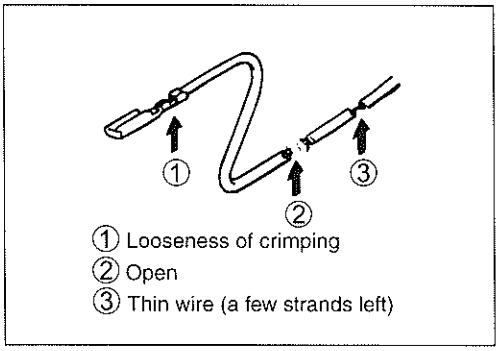

Continuity check

- Measure resistance across coupler Ⓑ (between Ⓐ and Ⓒ in the figure).
  If no continuity is indicated (infinity or over limit), the circuit is open between terminals Ⓐ and Ⓒ.

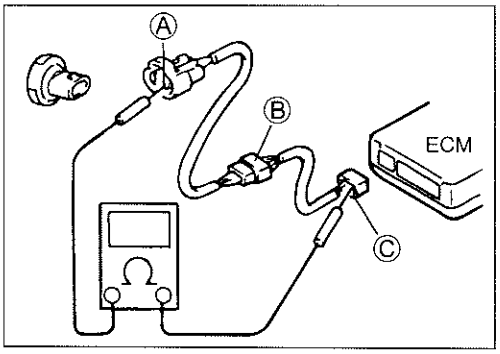

- Disconnect the coupler Ⓑ and measure resistance between couplers Ⓐ and Ⓑ.
  If no continuity is indicated, the circuit is open between couplers Ⓐ and Ⓑ. If continuity is indicated, there is an open circuit between couplers Ⓑ' and Ⓒ or an abnormality in coupler Ⓑ' or coupler Ⓒ.

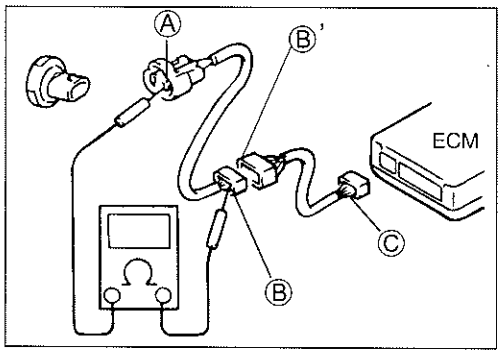

VOLTAGE CHECK

If voltage is supplied to the circuit being checked, voltage check can be used as circuit check.

- With all connectors/couplers connected and voltage applied to the circuit being checked, measure voltage between each terminal and body ground.

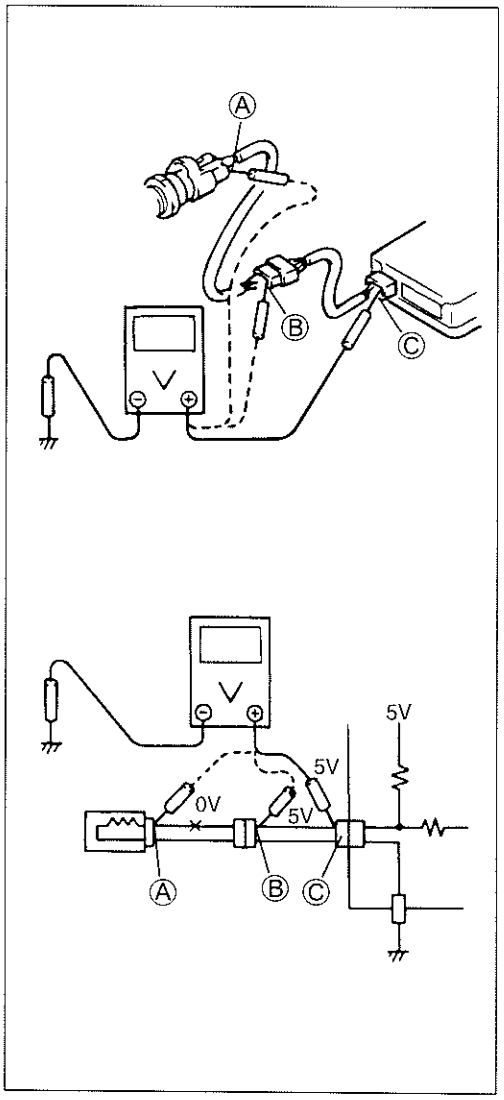

If measurements were taken as shown in the figure at the right and results are as listed below, it means that the circuit is open between terminals Ⓐ and Ⓑ.

Voltage Between:

Ⓒ and body ground: Approx. 5V
Ⓑ and body ground: Approx. 5V
Ⓐ and body ground: 0V

Also, if measured values are as listed below, a resistance (abnormality) exists which causes the voltage drop in the circuit between terminals Ⓐ and Ⓑ.

Voltage Between:

Ⓒ and body ground: Approx. 5V
Ⓑ and body ground: Approx. 5V ——— 2V voltage drop
Ⓐ and body ground: 3V

SHORT CIRCUIT CHECK (WIRE HARNESS TO GROUND)

- Disconnect the negative cable from the battery.
- Disconnect the connectors/couplers at both ends of the circuit to be checked.

NOTE:
If the circuit to be checked branches to other parts as shown, disconnect all connectors/couplers of those parts. Otherwise, diagnosis will be misled.

- Measure resistance between terminal at one end of circuit (Ⓐ terminal in figure) and body ground. If continuity is indicated, there is a short circuit to ground between terminals Ⓐ and Ⓒ.

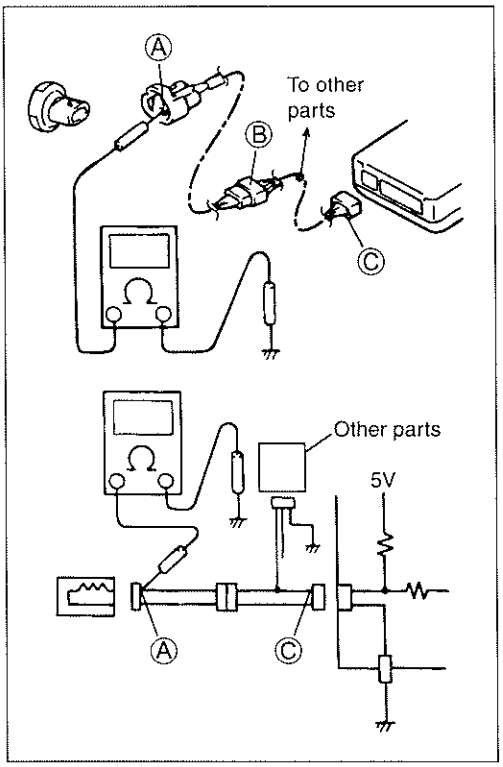

- Disconnect the connector/coupler included in circuit (coupler Ⓑ) and measure resistance between terminal Ⓐ and body ground.
  If continuity is indicated, the circuit is shorted to the ground between terminals Ⓐ and Ⓑ.

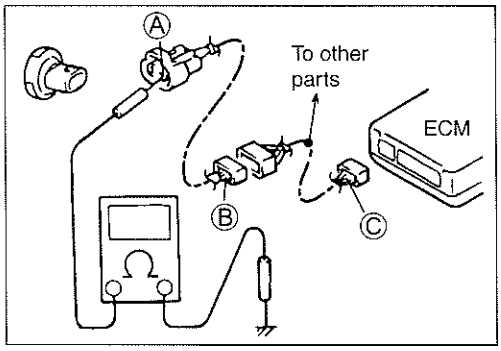

USING TESTERS

- Use the Suzuki multi-circuit tester (09900-25008).
- Use well-charged batteries in the tester.
- Be sure to set the tester to the correct testing range.

Using the tester

- Incorrectly connecting the ⊕ and ⊖ probes may cause the inside of the tester to burnout.
- If the voltage and current are not known, make measurements using the highest range.
- When measuring the resistance with the multi-circuit tester, ∞ will be shown as 10.00 MΩ and "1" flashes in the display.
- Check that no voltage is applied before making the measurement. If voltage is applied, the tester may be damaged.
- After using the tester, turn the power off.

TOOL 09900-25008: Multi-circuit tester

NOTE:

* *When connecting the multi-circuit tester, use a fine needle pointed probe or install fine copper wires (O.D is below 0.5 mm) to the back side of the lead wire coupler and connect the probes of tester to them.*
* *Use a fine copper wire, the outer diameter being below 0.5 mm, to prevent the rubber of the water proof coupler from damage.*

MULTI-CIRCUIT TESTER

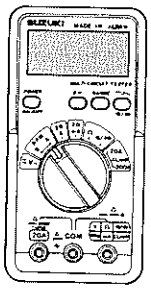

FI SYSTEM TECHNICAL FEATURES

INJECTION TIME (INJECTION VOLUME)

The factors to determine the injection time include the basic fuel injection time which is calculated on the basis of the intake air pressure, engine speed and throttle opening angle, and various compensations. These compensations are determined according to the signals from various sensors that detect the engine and driving conditions.

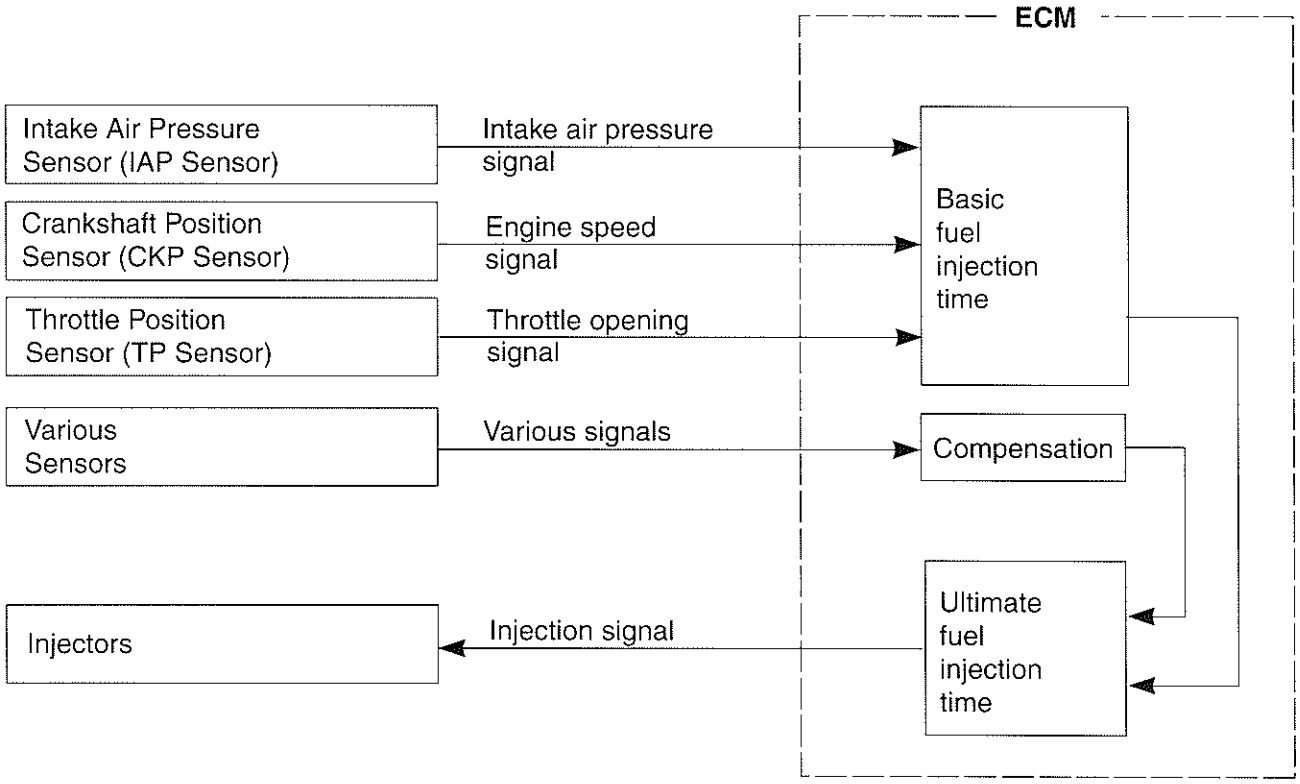

COMPENSATION OF INJECTION TIME (VOLUME)

The following different signals are output from the respective sensors for compensation of the fuel injection time (volume).

SIGNAL	DESCRIPTION
ATMOSPHERIC PRESSURE SENSOR SIGNAL	When atmospheric pressure is low, the sensor sends the signal to the ECM and reduce the injection time (volume).
ENGINE OIL TEMPERATURE SENSOR SIGNAL	When engine oil temperature is low, injection time (volume) is increased.
INTAKE AIR TEMPERATURE SENSOR SIGNAL	When intake air temperature is low, injection time (volume) is increased.
BATTERY VOLTAGE SIGNAL	ECM operates on the battery voltage and at the same time, it monitors the voltage signal for compensation of the fuel injection time (volume). A longer injection time is needed to adjust injection volume in the case of low voltage.
ENGINE RPM SIGNAL	At high speed, the injection time (volume) is increased.
STARTING SIGNAL	When starting engine, additional fuel is injected during cranking engine.
ACCELERATION SIGNAL/ DECELERATION SIGNAL	During acceleration, the fuel injection time (volume) is increased, in accordance with the throttle opening speed and engine rpm. During deceleration, the fuel injection time (volume) is decreased.

INJECTION STOP CONTROL

SIGNAL	DESCRIPTION
TIP OVER SENSOR SIGNAL (FUEL SHUT-OFF)	When the motorcycle tips over, the tip over sensor sends a signal to the ECM. Then, this signal cuts OFF current supplied to the fuel pump, fuel injectors and ignition coils.
OVER-REV. LIMITER SIGNAL	The fuel injectors stop operation when engine rpm reaches rev. limit rpm.

FUEL DELIVERY SYSTEM

The fuel delivery system consists of the fuel tank, fuel pump, fuel filters, fuel feed hose, fuel delivery pipe (including fuel injectors) and fuel pressure regulator. There is no fuel return hose. The fuel in the fuel tank is pumped up by the fuel pump and pressurized fuel flows into the injector installed in the fuel delivery pipe. Fuel pressure is regulated by the fuel pressure regulator. As the fuel pressure applied to the fuel injector (the fuel pressure in the fuel delivery pipe) is always kept at absolute fuel pressure of 300 kPa (3.0 kgf/cm^2, 43 psi), the fuel is injected into the throttle body in conic dispersion when the injector opens according to the injection signal from the ECM.

The fuel relieved by the fuel pressure regulator flows back to the fuel tank.

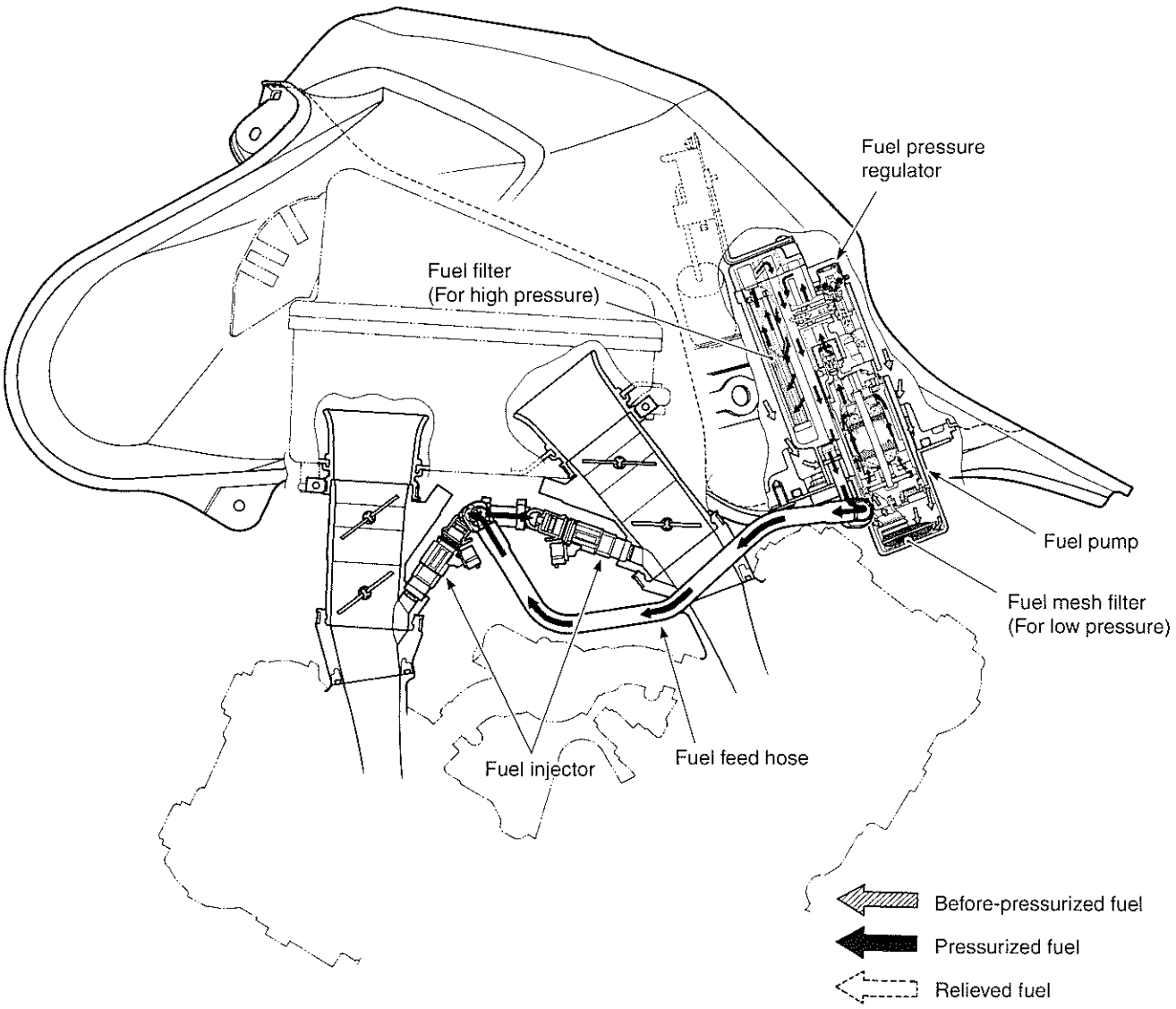

FUEL PUMP

The electric fuel pump is mounted at the bottom of the fuel tank, which consists of the armature, magnet, impeller, brush, check valve and relief valve. The ECM controls its ON/OFF operation as controlled under the FUEL PUMP CONTROL SYSTEM.

When electrical energy is supplied to the fuel pump, the motor in the pump runs and together with the impeller. This causes a pressure difference to occur on both sides of the impeller as there are many grooves around it. Then the fuel is drawn through the inlet port, and with its pressure increased, it is discharged through the outlet port. The fuel pump has a check valve to keep some pressure in the fuel feed hose even when the fuel pump is stopped. Also, the relief valve is equipped in the fuel pump, which releases pressurized fuel to the fuel tank when the outlet of the fuel pressure has increased up to 450 – 600 kPa (4.5 – 6.0 kgf/cm², 64 – 85 psi).

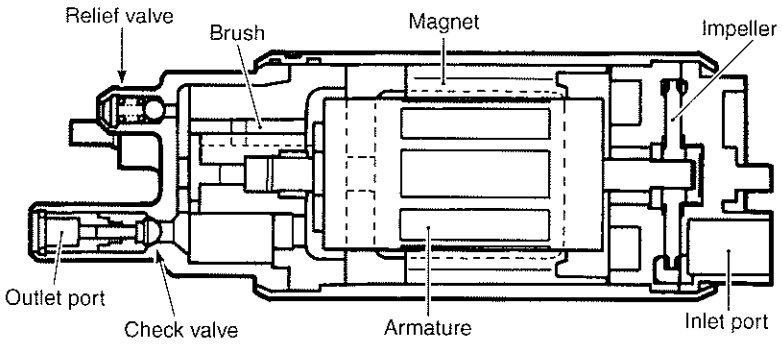

When the impeller is driven by the motor, pressure differential occurs between the front part and the rear part of the blade groove as viewed in angular direction due to fluid friction. This process continuously takes place causing fuel pressure to be built up. The pressurized fuel is then let out from the pump chamber and discharged through the motor section and the check valve.

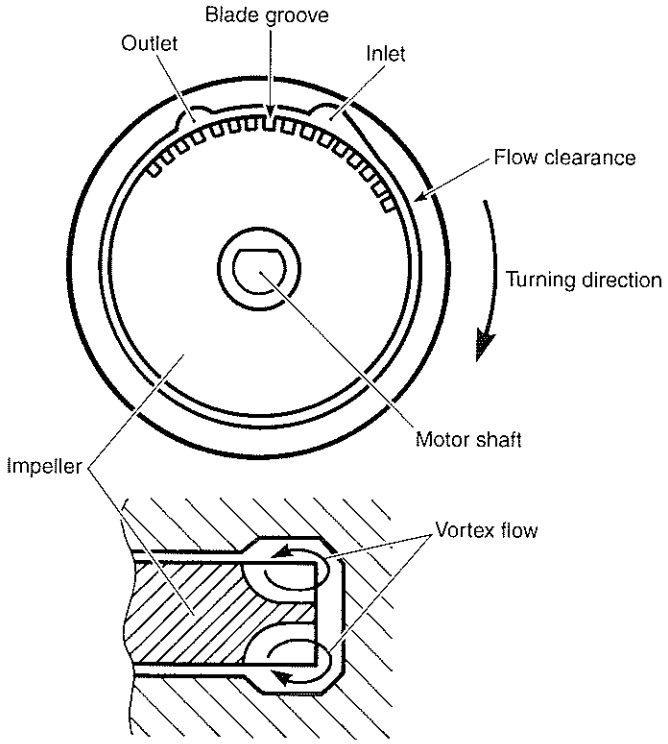

FUEL PRESSURE REGULATOR

The fuel pressure regulator consists of the spring and valve. It keeps absolute fuel pressure of 300 kPa (3.0 kgf/cm², 43 psi) to be applied to the injector at all times.
When the fuel pressure rises more than 300 kPa (3.0 kgf/cm², 43 psi), the fuel pushes the valve in the regulator open and excess fuel returns to the fuel tank.

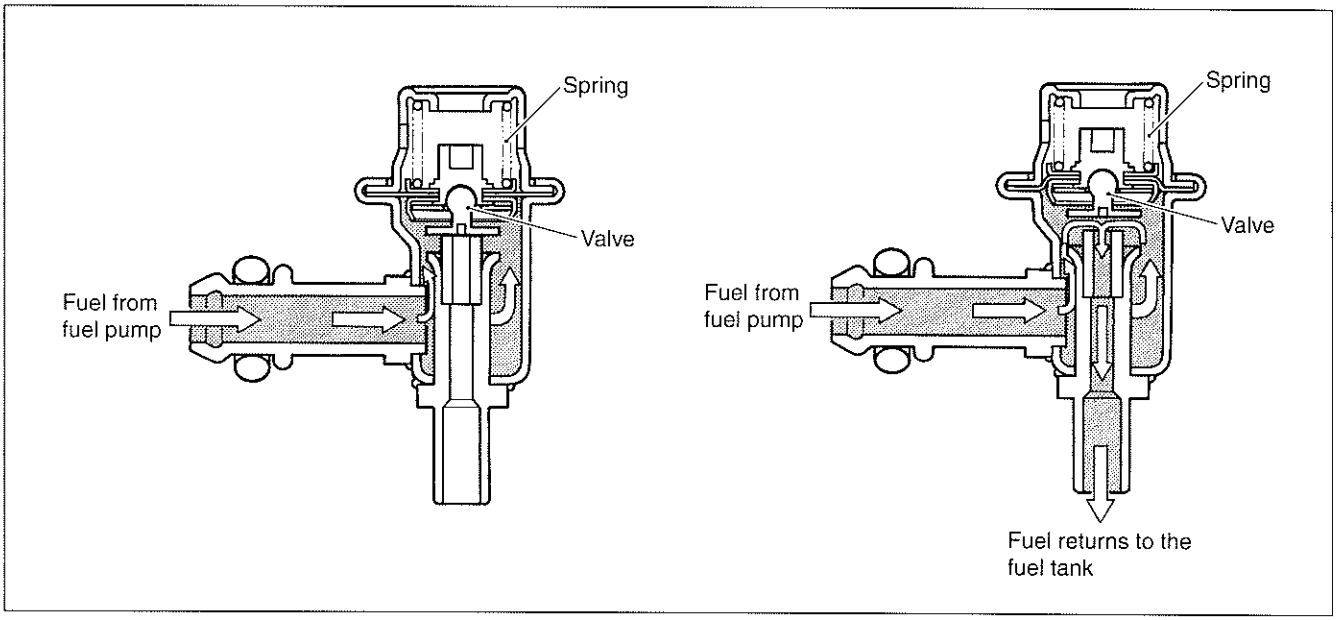

FUEL INJECTOR

The fuel injector consists of the solenoid coil, plunger, needle valve and filter.
It is an electromagnetic type injection nozzle which injects fuel in the throttle body according to the signal from the ECM.
When the solenoid coil of the injector is energized by the ECM, it becomes an electromagnet and attracts the plunger. At the same time, the needle valve incorporated with the plunger opens and the injector which is under the fuel pressure injects fuel in conic dispersion. As the lift stroke of the needle valve of the injector is set constant, the volume of the fuel injected at one time is determined by the length of time during which the solenoid coil is energized (injection time).

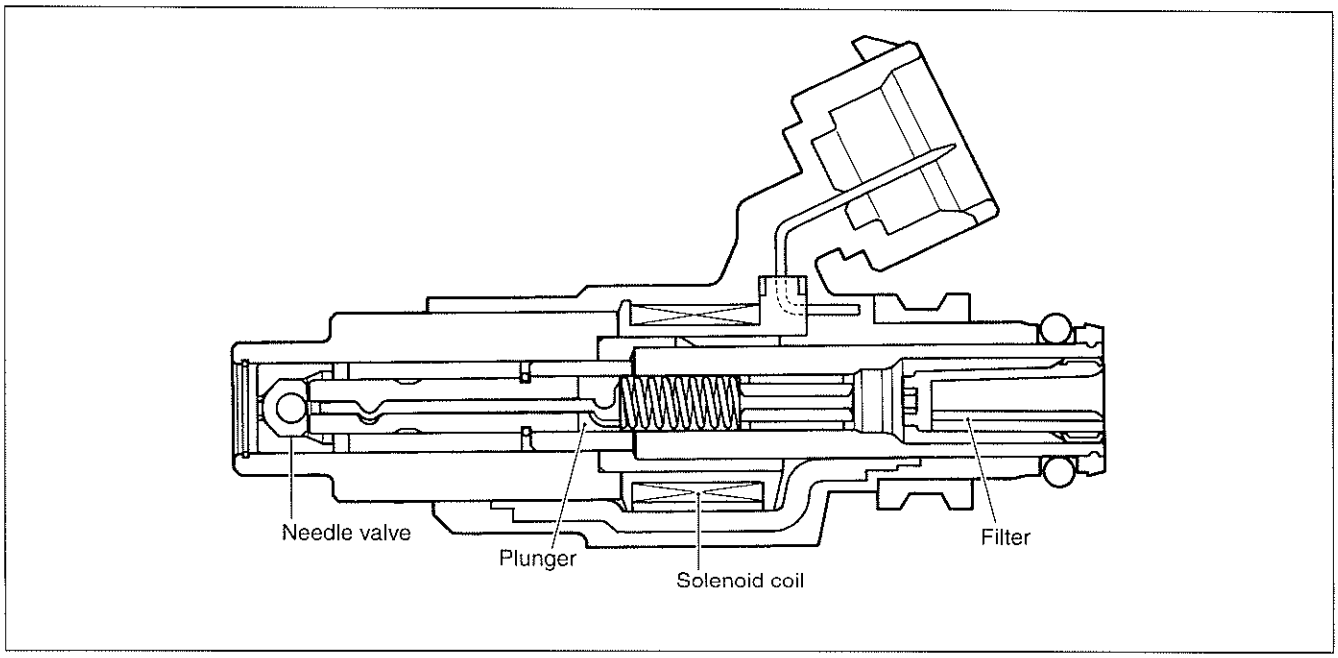

FUEL PUMP CONTROL SYSTEM

When the ignition switch is turned on, current from the battery flows to the fuel pump motor through the side-stand relay and the fuel pump relay causing the motor to turn.

Since the ECM has a timer function, the fuel pump motor stops turning in three seconds after the switch has been turned on.

Thereafter, when the crankshaft is turned by the starter motor or the engine has been started, the engine revolving signal is input to the ECM. Then, current flows to the fuel pump motor from the battery through the side-stand relay and the fuel pump relay so that the pump continues to function.

A tip over sensor is provided in the fuel pump control circuit. By this provision, anytime the motorcycle tips over, the tip over sensor sends a signal to the ECM to turn off power to the fuel pump relay, causing the fuel pump motor to stop. At the same time, current to the fuel injectors as well as the ignition coil is interrupted, which then stops the engine.

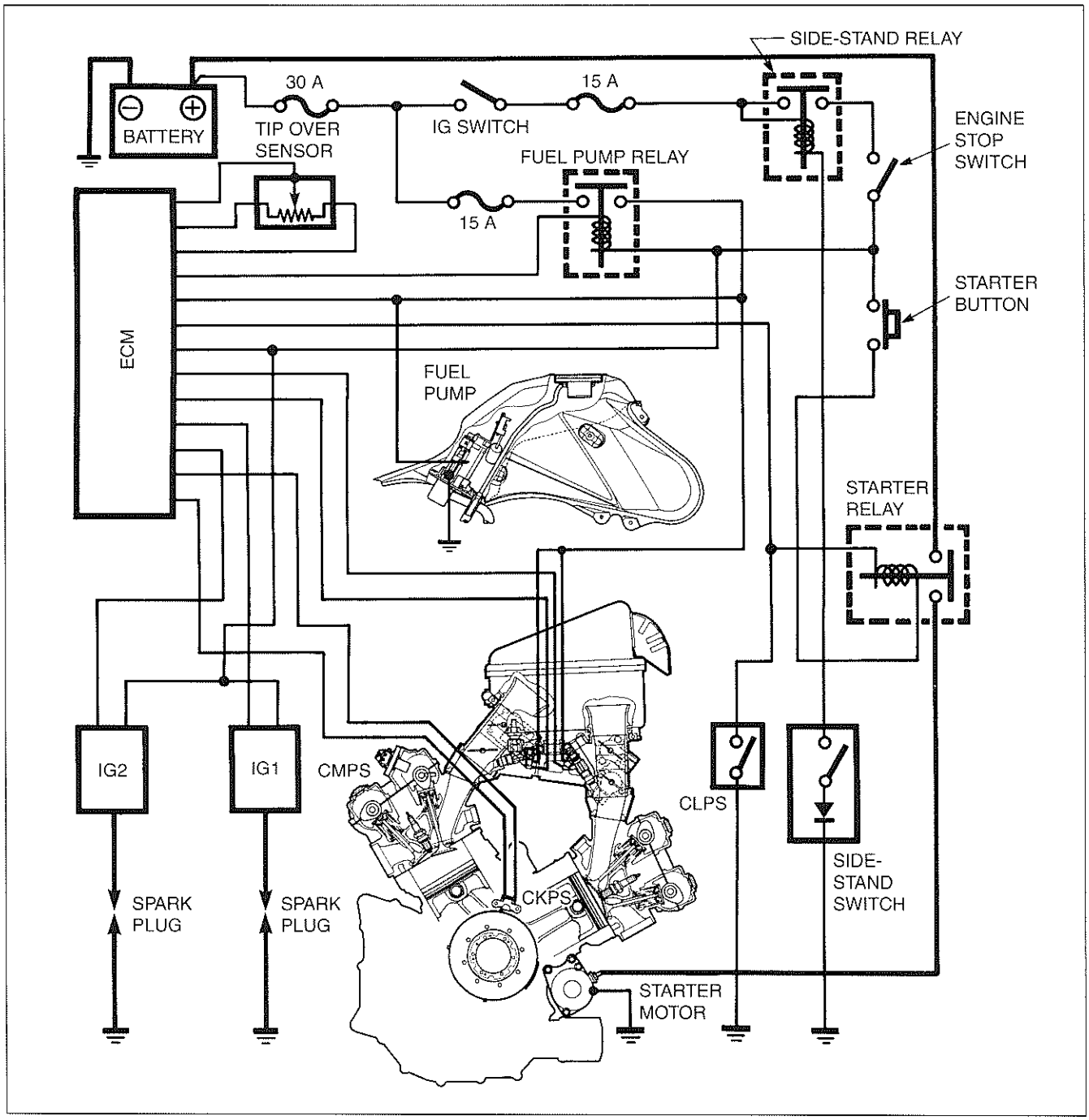

ECM (FI CONTROL UNIT)

The ECM is located under the seat.

The ECM consists of CPU (Central Processing Unit), memory (ROM) and I/O (Input/Output) sections. The signal from each sensor is sent to the input section and then sent to CPU. On the basis of signal information received, CPU calculates the volume of fuel necessary for injection using maps programmed for varying engine conditions. Then, the operation signal of the fuel injection is sent from the output section to the fuel injector.

The eight kinds of independent program maps are programmed in the ROM.

These eight kinds of maps are designed to compensate for differences of the intake/exhaust systems and cooling performance.

LIGHT LOAD: When the engine is running in a light load, the fuel injected volume (time) is determined the on basis of the intake air pressure and engine speed.

HEAVY LOAD: When the engine is running in a heavy load, the fuel injected volume (time) is determined on the basis of the throttle valve opening and engine speed.

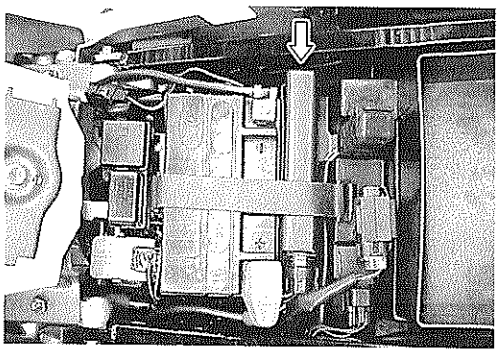

INJECTION TIMING

The system employs a sequential, front-and-rear-cylinder independent injection type, using the crankshaft position sensor (signal generator) to determine the piston position (injection timing and ignition timing) and the camshaft position sensor to identify the cylinder during operation, and these information are sent to the ECM. This makes it possible to inject the optimum volume of fuel in the best timing for the engine operating conditions.

SENSORS

INTAKE AIR PRESSURE SENSOR (IAP SENSOR)

The intake air pressure sensor is located at the rear side of the air cleaner box and its vacuum hose is connected to the throttle body.
The sensor detects the intake air pressure, which is then converted into voltage signal and sent to the ECM.
The basic fuel injection time (volume) is determined according to the voltage signal (output voltage).
The voltage signal increases when the intake air pressure is high.

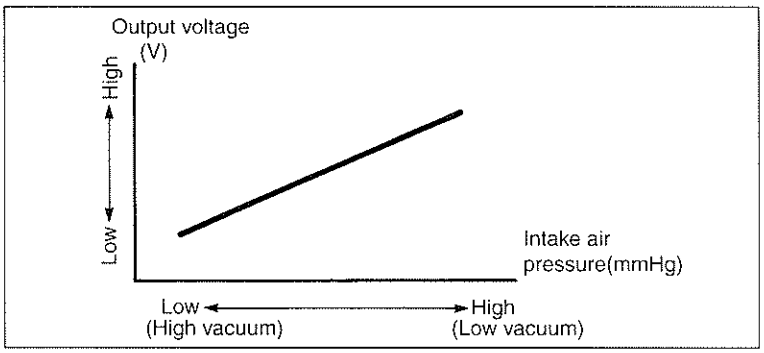

THROTTLE POSITION SENSOR (TP SENSOR)

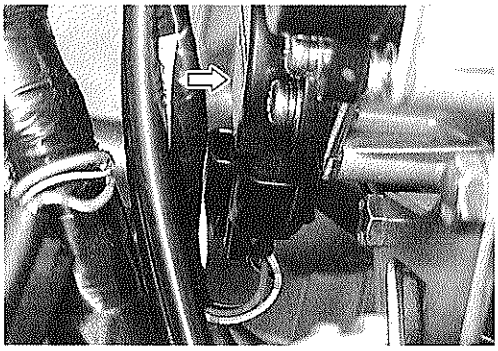

The throttle position sensor is installed on the No.1 throttle body.
The throttle position sensor is a kind of variable resistor which detects the throttle opening angle.
The battery voltage in the sensor is changed to the throttle position voltage which is then sent to the ECM.
The basic fuel injection time (volume) is determined according to the voltage signal (output voltage).
The voltage signal increases as the throttle is opened wider.

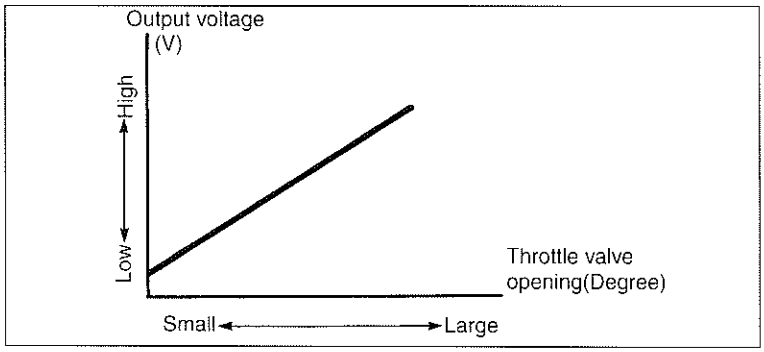

CRANKSHAFT POSITION SENSOR (CKP SENSOR)

The signal rotor is mounted on the left end of the crankshaft, and the crankshaft position sensor (Pick-up coil) is installed in the generator cover.
The sensor generates the pick-up signal to be supplied to the ECM.
The ECM calculates and decides both the fuel injection timing and ignition timing.
The injection volume increases when the engine rpm is high.

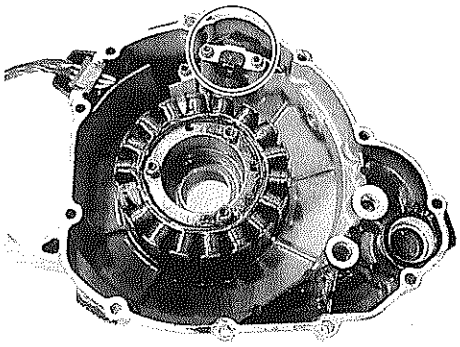

CAMSHAFT POSITION SENSOR (CMP SENSOR)

The signal rotor is installed on the No.2 intake camshaft, and the camshaft position sensor (Pick-up coil) is installed on the No.2 cylinder head cover.
The sensor generates the pick-up signal to be supplied to the ECM.
The ECM calculates and decides the cylinder identity and sequential injection timing.

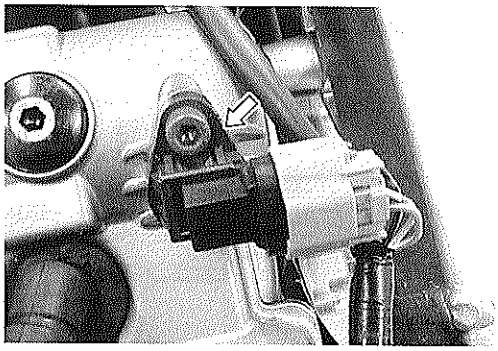

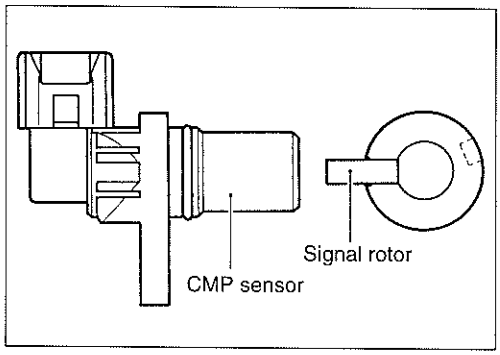

INTAKE AIR TEMPERATURE SENSOR (IAT SENSOR)

The intake air temperature sensor is installed at the rear side of the air cleaner box.
The sensor detects the intake air temperature in thermistor resistance value. With this resistance value converted to voltage signal, the signal is sent to the ECM. The injection volume increases as intake air temperature decreases.
The thermistor resistance value increases when the intake air temperature is low, and decreases when the intake air temperature is high.

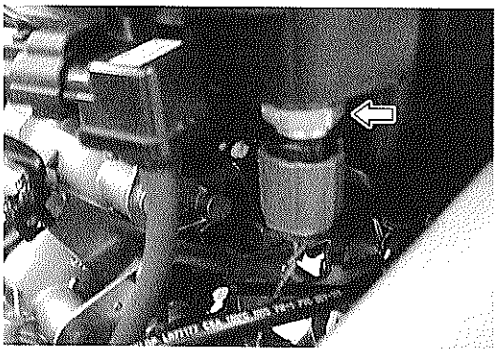

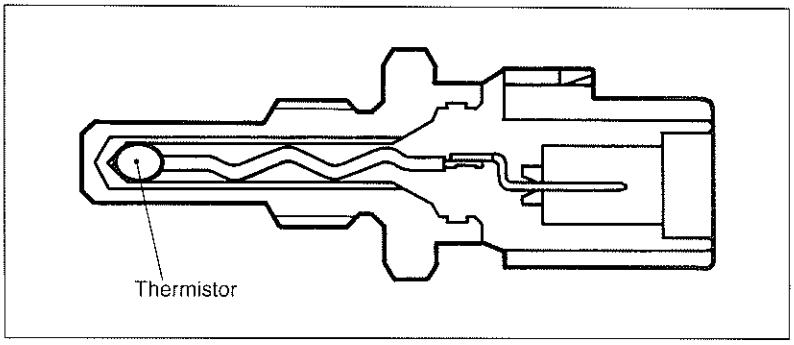

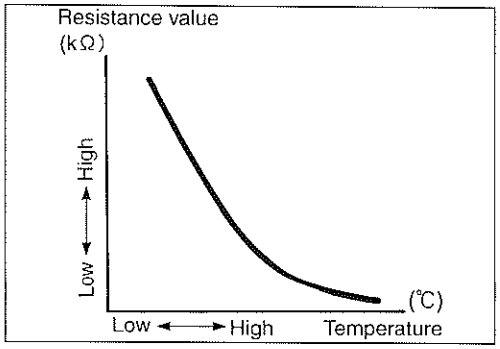

ENGINE COOLANT TEMPERATURE SENSOR (ECT SENSOR)

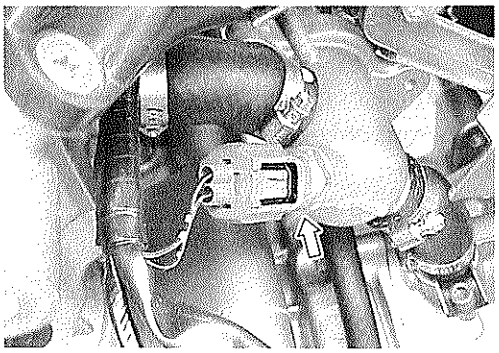

The engine coolant temperature sensor is installed at the thermostat case.
The sensor detects the engine oil temperature in thermistor resistance value, which is then converted to voltage signal and sent to the ECM. The injection volume increases as oil temperature decreases.

The thermistor resistance value increases when the engine oil temperature is low, and decreases when the engine oil temperature is high.

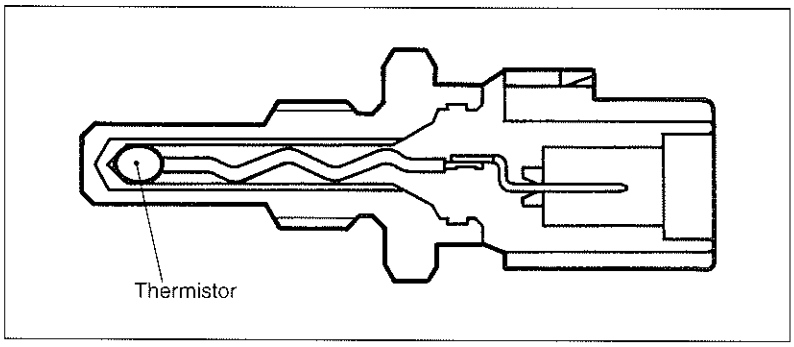

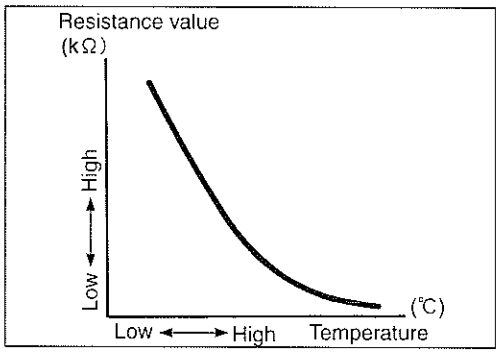

ATMOSPHERIC PRESSURE SENSOR (AP SENSOR)

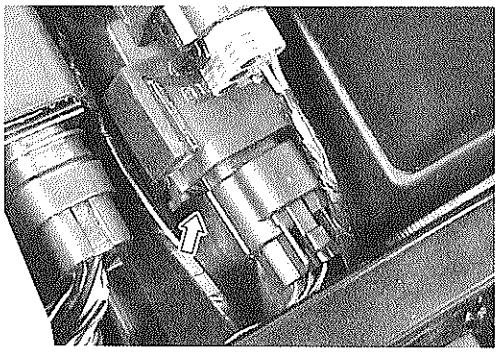

The atmospheric pressure sensor is located under the seat.
The sensor detects the atmospheric pressure. The detected pressure is converted into voltage signal and sent to the ECM.
The injection time (volume) is controlled according to the voltage signal (output voltage).

The voltage signal increases as the atmospheric pressure rises.

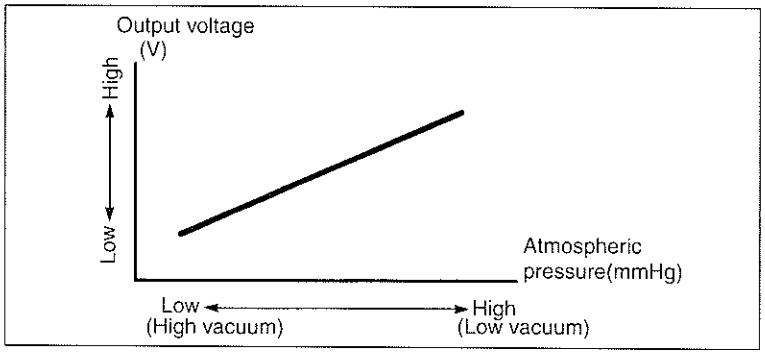

TIP OVER SENSOR (TO SENSOR)

The tip over sensor is located above the AP sensor.
The sensor detects the leaning of the motorcycle. When it leans more than 65°, the mechanical switch turns ON and a signal is sent to the ECM. At the same time, this signal cuts OFF current supply to the fuel pump, fuel injectors and ignition coils.

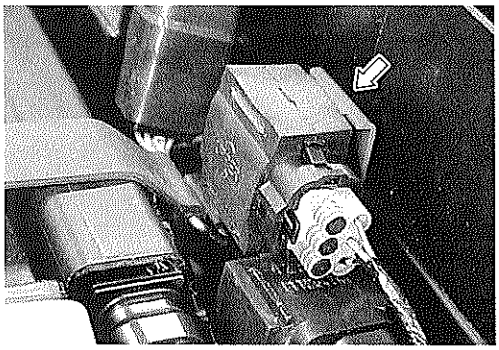

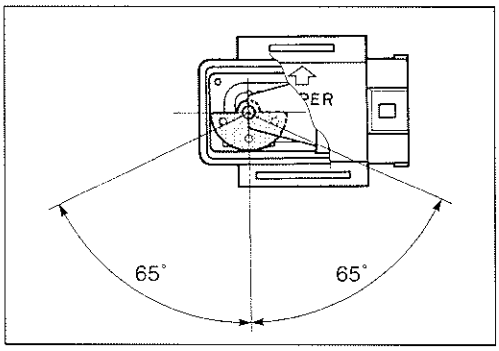

SECONDARY THROTTLE POSITION SENSOR (STP SENSOR)

The secondary throttle position sensor is installed on the No.1 throttle body.
The secondary throttle position sensor is a kind of variable resistor which detects the secondary throttle opening angle.
The STP sensor detects the STV actuator movement by the voltage signal which is then sent to the ECM.
The ECM determines the ST valve angle based on the operation map.
The voltage signal increases as the secondary throttle is opened wider.

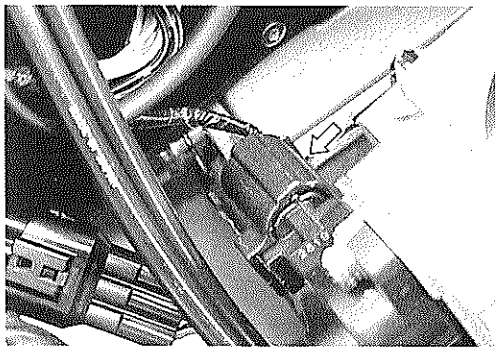

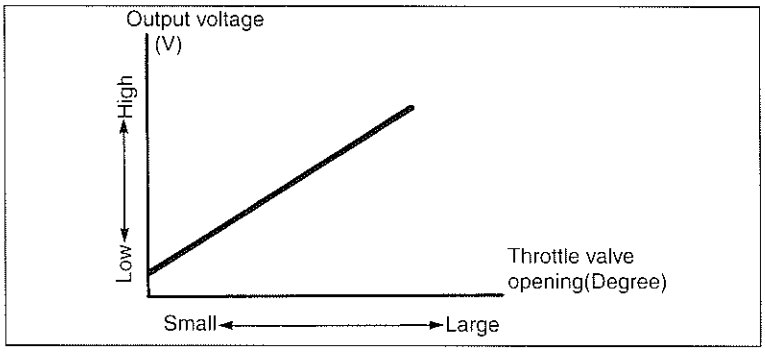

FI SYSTEM PARTS LOCATION

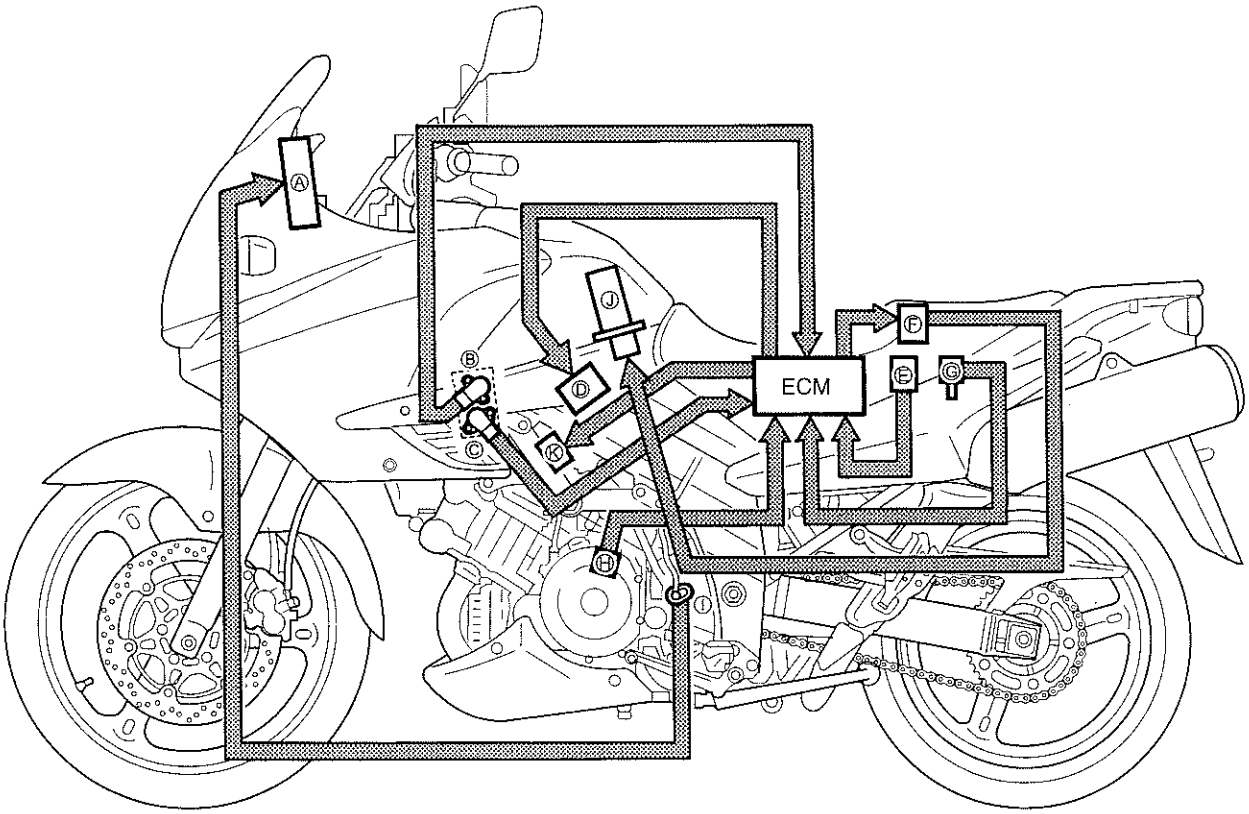

Ⓐ Speedometer
Ⓑ Secondary throttle position sensor (STPS)
Ⓒ Throttle position sensor (TPS)
Ⓓ Secondary throttle valve actuator (STVA)
Ⓔ Tip over sensor (TOS)
Ⓕ Fuel pump relay (FP RELAY)
Ⓖ Atomospheric pressure sensor (APS)
Ⓗ Crankshaft position sensor (CKPS)
Ⓘ Speed sensor
Ⓙ Fuel pump (FP)
Ⓚ Ignition coil (IG COIL)

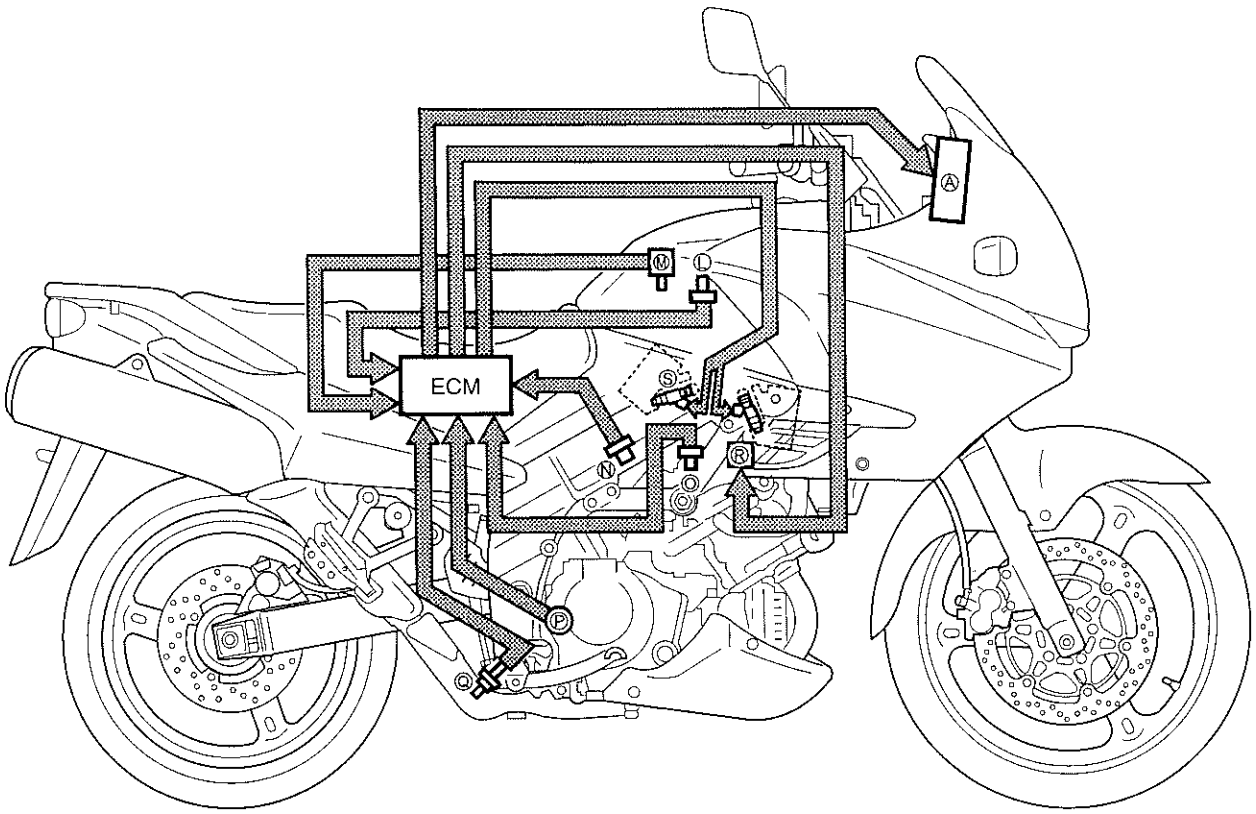

Ⓛ Intake air temperature sensor (IATS)
Ⓜ Intake air pressure sensor (IAPS)
Ⓝ Camshaft position sensor (CMPS)
Ⓞ Engine coolant temperature sensor (ECTS)
Ⓟ Gear position switch
Ⓠ Heated oxygen sensor (HO_2S)
Ⓡ PAIR solenoid valve
Ⓢ Fuel injector (FI)

FI SYSTEM WIRING DIAGRAM

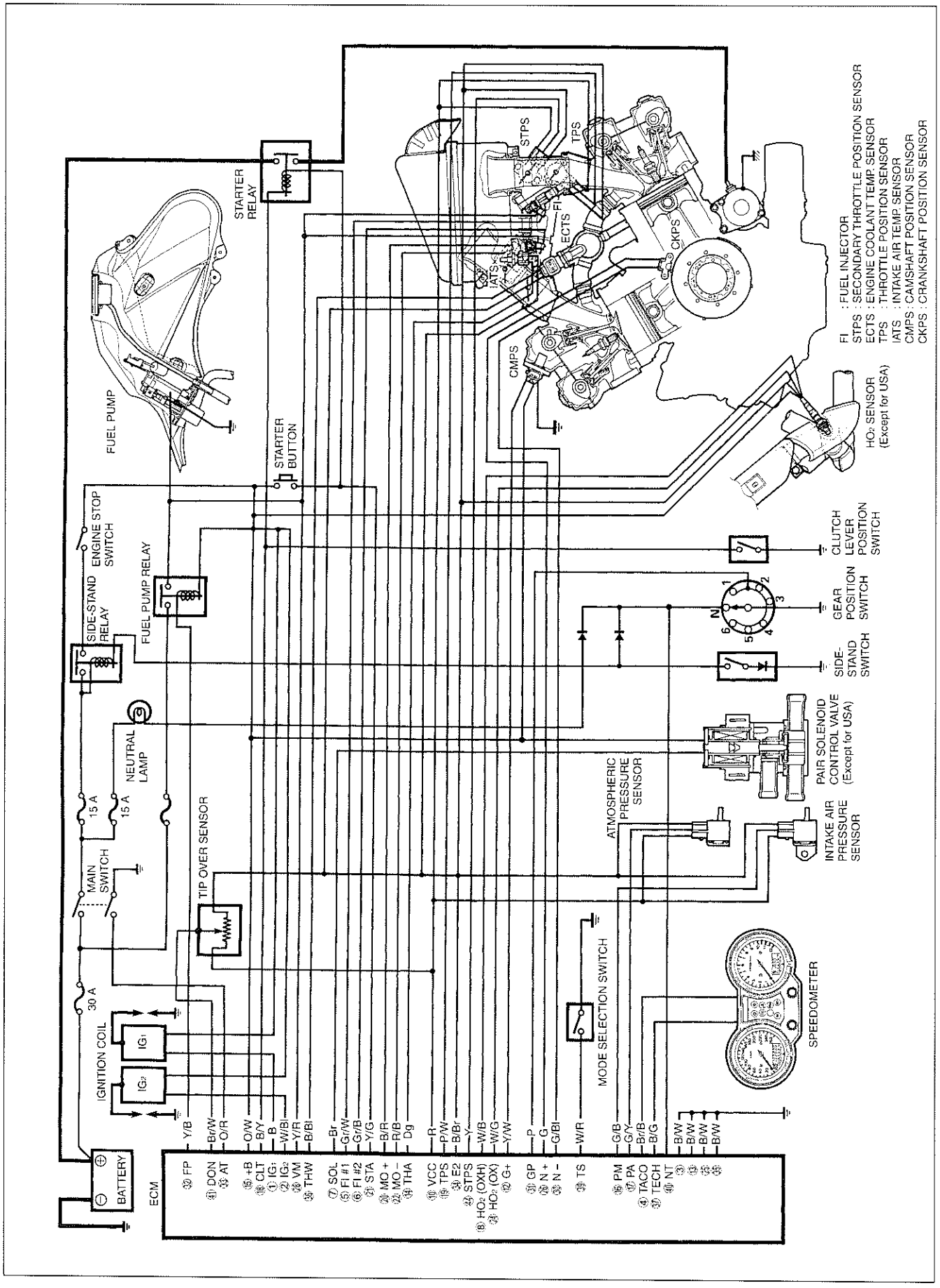

SELF-DIAGNOSIS FUNCTION

The self-diagnosis function is incorporated in the ECM. The function has two modes, "User mode" and "Dealer mode". The user can only be notified by the LCD (DISPLAY) panel and LED (FI light). To check the function of the individual FI system devices, the dealer mode is prepared. In this check, the special tool is necessary to read the code of the malfunction items.

USER MODE

MALFUNCTION		LCD (DISPLAY) INDICATION	FI LIGHT INDICATION	INDICATION MODE
"NO"		Odometer	—	—
"YES"		Odometer and "FI" letters	FI light turns ON.	Each 2 sec. Odometer or "FI" is indicated.
	Engine can start	*1		
	Engine can not start	"FI" letters *2	FI light turns ON and blinks.	"FI" is indicated continuously.

*1

When one of the signals is not received by ECM, the fail-safe circuit works and injection is not stopped. In this case, "FI" and odometer are indicated in the LCD panel and motorcycle can run.

*2

The injection signal is stopped, when the crankshaft position sensor signal, tip over sensor signal, #1/#2 ignition signals, #1/#2 injector signals, fuel pump relay signal or ignition switch signal is not sent to ECM. In this case, "FI" is indicated in the LCD panel. Motorcycle does not run.

"CHEC": The LCD panel indicates "CHEC" when no communication signal from the ECM is received for 3 seconds.

For Example:

The ignition switch is turned ON, and the engine stop switch is turned OFF. In this case, the speedometer does not receive any signal from the ECM, and the panel indicates "CHEC".

If CHEC is indicated, the LCD does not indicate the trouble code. It is necessary to check the wiring harness between ECM and speedometer couplers.

The possible cause of this indication is as follows;

Engine stop switch is in OFF position. Side-stand/ignition inter-lock system is not working. Ignition fuse is burnt.

DEALER MODE

The defective function is memorized in the computer. Use the special tool's coupler to connect to the dealer mode coupler. The memorized malfunction code is displayed on LCD (DISPLAY) panel. Malfunction means that the ECM does not receive signal from the devices. These affected devices are indicated in the code form.

TOOL 09930-82710: Mode select switch

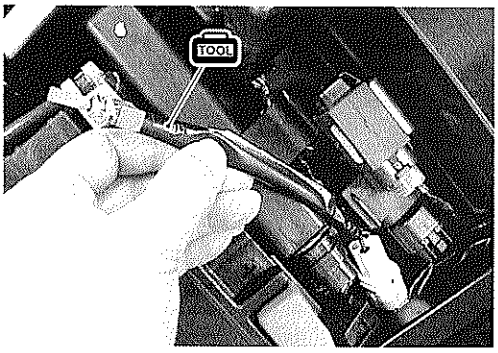

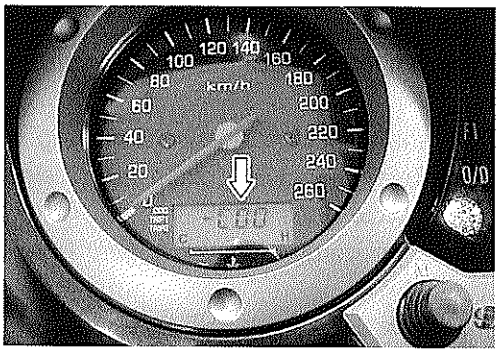

CAUTION

Before checking the malfunction code, do not disconnect the ECM lead wire couplers.
If the couplers from the ECM are disconnected, the malfunction code memory is erased and the malfunction code can not checked.

MALFUNCTION	LCD (DISPLAY) NDICATION	FI LIGHT INDICATION	INDICATION MODE
"NO"	C00	FI light turns OFF.	—
"YES"	C** code is indicated from small numeral to large one.		For each 2 sec., code is indicated.

CODE	MALFUNCTION PART	REMARKS
C00	None	No defective part
C11	Camshaft position sensor (CMPS)	
C12	Crankshaft position sensor (CKPS)	Pick-up coil signal, signal generator
C13	Intake air pressure sensor (IAPS)	
C14	Throttle position sensor (TPS)	
C15	Engine coolant temp. sensor (ECTS)	
C21	Intake air temp. sensor (IATS)	
C22	Atmospheric pressure sensor (APS)	
C23	Tip over sensor (TOS)	
C24	Ignition signal #1 (IG coil #1)	For #1 cylinder
C25	Ignition signal #2 (IG coil #2)	For #2 cylinder
C28	Secondary throttle valve actuator (STVA)	*3
C29	Secondary throttle position sensor (STPS)	
C31	Gear position signal (GP switch)	
C32	Injector signal #1 (FI #1)	For #1 cylinder
C33	Injector signal #2 (F1 #2)	For #2 cylinder
C41	Fuel pump control system (FP control system)	Fuel pump, Fuel pump relay
C42	Ignition switch signal (IG switch signal)	Anti-theft
C44	Heated oxygen sensor (HO_2S)	

In the LCD (DISPLAY) panel, the malfunction code is indicated from small code to large code.
*3
When the secondary throttle valve actuator and secondary throttle position sensor signals are not sent to ECM. C29 is indicated.

TPS ADJUSTMENT

1. Adjust the engine rpm to 1 200 ± 100 rpm. (☞2-15)
2. Stop the engine and connect the special tool (Mode select switch) to the dealer mode coupler at the wiring harness.
3. If the throttle position sensor adjustment is necessary, loosen the screws and turn the throttle position sensor and bring the line to middle.
4. Then, tighten the screws to fix the throttle position sensor.

TOOL 09930-11950: Torx wrench

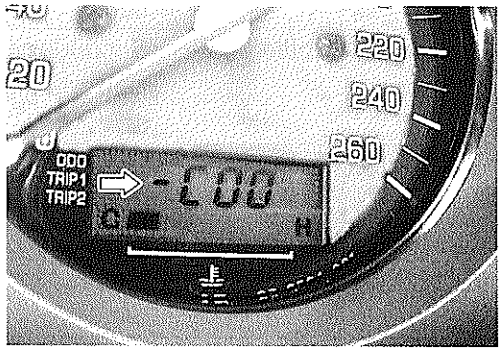

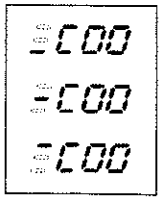

← Incorrect

← Correct position

← Incorrect

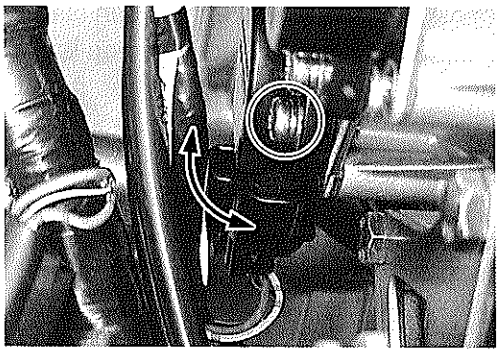

The LCD indicates 0.4 sec./time.
The correct position must be determined when the middle line is indicated twice or more, where the sensor should be fixed.

FAIL-SAFE FUNCTION

FI system is provided with fail-safe function to allow the engine to start and the motorcycle to run in a minimum performance necessary even under malfunction condition.

ITEM		FAIL-SAFE MODE	STARTING ABILITY	RUNNING ABILITY
Intake air pressure sensor		Intake air pressure is fixed to 760 mmHg.	"YES"	"YES"
Throttle position sensor		The throttle opening is fixed to full open position. Ignition timing is also fixed.	"YES"	"YES"
Engine coolant temperature sensor		Engine coolant temperature value is fixed to 80°C.	"YES"	"YES"
Intake air temperature sensor		Intake air temperature value is fixed to 40°C.	"YES"	"YES"
Atmospheric pressure sensor		Atmospheric pressure is fixed to 760 mmHg.	"YES"	"YES"
Ignition signal	#1	#1 Ignition-off	"YES"	"YES"
			#2 cylinder can run.	
	#2	#2 Ignition-off	"YES"	"YES"
			#1 cylinder can run.	
Injection signal	#1	#1 Fuel-cut	"YES"	"YES"
			#2 cylinder can run.	
	#2	#2 Fuel-cut	"YES"	"YES"
			#1 cylinder can run.	
Secondary throttle valve actuator		Secondary throttle valve is fixed to half open position.	"YES"	"YES"
Secondary throttle position sensor		Secondary throttle valve is fixed to half open position.	"YES"	"YES"
Gear position signal		Gear position signal is fixed to 6th gear.	"YES"	"YES"
Heated oxygen sensor (Except for USA)		Fuel-air compensation ratio is fixed to normal condition.	"YES"	"YES"

"Yes" means that the engine can start and can run even if the above signal is not received from each sensor. But, the engine running condition is not complete, providing only emergency help (by fail-safe circuit). In this case, it is necessary to bring the motorcycle to the workshop for complete repair.

FI SYSTEM TROUBLESHOOTING

CUSTOMER COMPLAINT ANALYSIS

Record details of the problem (failure, complaint) and how it occurred as described by the customer. For this purpose, use of such an inspection form will facilitate collecting information to the point required for proper analysis and diagnosis.

EXAMPLE: CUSTOMER PROBLEM INSPECTION FORM

User name:	Model:	VIN:	
Date of issue:	Date Reg.	Date of problem:	Mileage:

Malfunction indicator lamp condition (LED)	☐ Always ON ☐ Sometimes ON ☐ Always OFF ☐ Good condition
Malfunction display/code (LCD)	User mode: ☐ No display ☐ Malfunction display ( )
	Dealer mode: ☐ No code ☐ Malfunction code ( )

PROBLEM SYMPTOMS	
☐ **Difficult Starting**	☐ **Poor Driveability**
☐ No cranking	☐ Hesitation on acceleration
☐ No initial combustion	☐ Back fire/☐ After fire
☐ No combustion	☐ Lack of power
☐ Poor starting at	☐ Surging
(☐ cold ☐ warm ☐ always)	☐ Abnormal knocking
☐ Other _____	☐ Other _____
☐ **Poor Idling**	☐ **Engine Stall when**
☐ Poor fast Idle	☐ Immediately after start
☐ Abnormal idling speed	☐ Throttle valve is opened
(☐ High ☐ Low) (r/min)	☐ Throttle valve is closed
☐ Unstable	☐ Load is applied
☐ Hunting (r/min. to r/min)	☐ Other _____
☐ Other _____	
☐ OTHERS:	

MOTORCYCLE/ENVIRONMENTAL CONDITION WHEN PROBLEM OCCURS	
Environmental condition	
Weather	☐ Fair ☐ Cloudy ☐ Rain ☐ Snow ☐ Always ☐ Other
Temperature	☐ Hot ☐ Warm ☐ Cool ☐ Cold (°F/ °C) ☐ Always
Frequency	☐ Always ☐ Sometimes (times/ day, month) ☐ Only once ☐ Under certain condition
Road	☐ Urban ☐ Suburb ☐ Highway ☐ Mountainous (☐ Uphill ☐ Downhill) ☐ Tarmacadam ☐ Gravel ☐ Other
Motorcycle condition	
Engine condition	☐ Cold ☐ Warming up phase ☐ Warmed up ☐ Always ☐ Other at starting ☐ Immediately after start ☐ Racing without load ☐ Engine speed (r/min)
Motorcycle condition	During driving: ☐ Constant speed ☐ Accelerating ☐ Decelerating ☐ Right hand corner ☐ Left hand corner ☐ When shifting (Gear position) ☐ At stop ☐ Motorcycle speed when problem occurs (km/h, Mile/h) ☐ Other _____

NOTE:
The above form is a standard sample. It should be modified according to conditions characteristic of each market.

SELF-DIAGNOSTIC PROCEDURES

- Don't disconnect couplers from ECM, battery cable from battery, ECM ground wire harness from engine or main fuse before confirming malfunction code (self-diagnostic trouble code) stored in memory. Such disconnection will erase memorized information in ECM memory.
- Malfunction code stored in ECM memory can be checked by the special tool.
- Before checking malfunction code, read SELF-DIAGNOSIS FUNCTION "USER MODE and DEALER MODE" (☞4-23, -24 and -25) carefully to have good understanding as to what functions are available and how to use it.

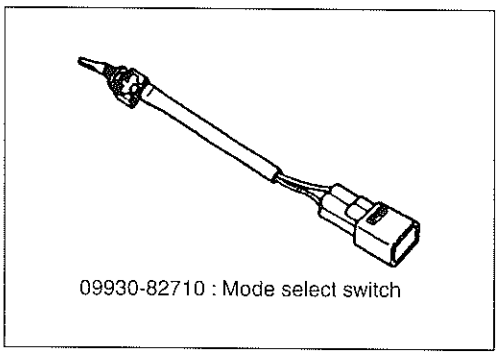
09930-82710 : Mode select switch

- Be sure to read "PRECAUTIONS for Electrical Circuit Service" (☞4-5) before inspection and observe what is written there.
- Remove the seat.
- Connect the special tool to the dealer mode coupler Ⓐ at the wiring harness, and start the engine or crank the engine for more than 4 seconds.
- Turn the special tool's switch ON and check the malfunction code to determine the malfunction part.

TOOL 09930-82710: Mode select switch

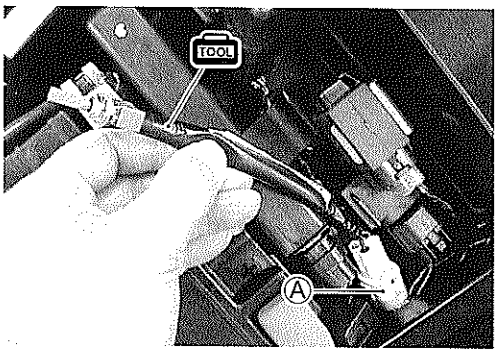

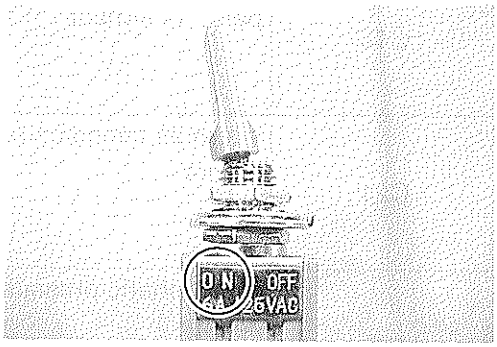

SELF-DIAGNOSIS RESET PROCEDURE

- After repairing the trouble, turn OFF the ignition switch and turn ON again.
- If the malfunction code indicates (C00), the malfunction is cleared.
- Disconnect the special tool from the dealer mode coupler.

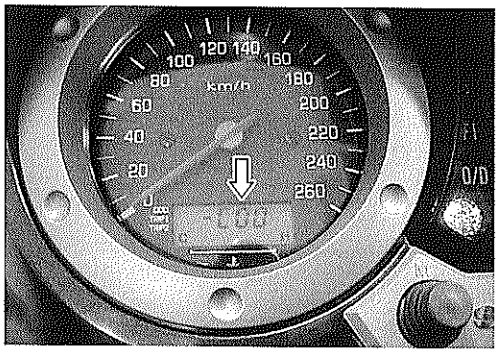

MALFUNCTION CODE AND DEFECTIVE CONDITION

MALFUNCTION CODE	DETECTED ITEM	DETECTED FAILURE CONDITION CHECK FOR
C00	NO FAULT	———
C11	Camshaft position sensor	The signal does not reach ECM for more than 3 sec. after receiving the starter signal. The camshaft position sensor wiring and mechanical parts. (Camshaft position sensor, intake cam pin, wiring/coupler connection)
C12	Crankshaft position sensor	The signal does not reach ECM for more than 3 sec. after receiving the starter signal. The crankshaft position sensor wiring and mechanical parts. (Crankshaft position sensor, wiring/coupler connection)
C13	Intake air pressure sensor	The sensor should produce following voltage. (0.10 V ≦ sensor voltage < 4.80 V) Without the above range, C13 is indicated. Intake air pressure sensor, wiring/coupler connection.
C14	Throttle position sensor	The sensor should produce following voltage. (0.10 V ≦ sensor voltage < 4.80 V) Without the above range, C14 is indicated. Throttle position sensor, wiring/coupler connection.
C15	Engine coolant temperature sensor	The sensor voltage should be the following. (0.10 V ≦ sensor voltage < 4.60 V) Without the above range, C15 is indicated. Engine coolant temperature sensor, wiring/coupler connection.
C21	Intake air temperature sensor	The sensor voltage should be the following. (0.10 V ≦ sensor voltage < 4.60 V) Without the above range, C21 is indicated. Intake air temperature sensor, wiring/coupler connection.
C22	Atmospheric pressure sensor	The sensor voltage should be the following. (0.10 V ≦ sensor voltage < 4.80 V) Without the above range, C22 is indicated. Atm. pressure sensor, wiring/coupler connection.
C23	Tip over sensor	The sensor voltage should be less than the following for more than 4 sec. after ignition switch turns ON. (0.20 V ≦ sensor voltage < 4.60 V) Without the above value, C23 is indicated. Tip over sensor, wiring/coupler connection.
C24 or C25	Ignition signal	Crankshaft position sensor (pick-up coil) signal is produced but signal from ignition coil is interrupted continuous by two times or more. In this case, the code C24 or C25 is indicated. Ignition coil, wiring/coupler connection, power supply from the battery.

C28	Secondary throttle valve actuator	When no actuator control signal is supplied from the ECM or communication signal does not reach ECM or operation voltage does not reach STVA motor, C28 is indicated. STVA can not operate. STVA lead wire/coupler.
C29	Secondary throttle position sensor	The sensor should produce following voltage. (0.10 V ≦ sensor voltage < 4.80 V) Without the above range, C29 is indicated. Secondary throttle position sensor, wiring/coupler connection.
C31	Gear position signal	Gear position signal voltage should be higher than the following for more than 4 seconds. (Gear position switch voltage > 1.0 V) Without the above value, C31 is indicated. Gear position sensor, wiring/coupler connection. Gearshift cam etc.
C32 or C33	Fuel injector signal	When fuel injection signal stops, the C32 or C33 is indicated. Injector, wiring/coupler connection, power supply to the injector.
C41	Fuel pump relay signal	When no signal is supplied from fuel pump relay, C41 is indicated. Fuel pump relay, connecting lead, power source to fuel pump relay.
C42	Ignition switch signal	Ignition switch signal is not input in the ECM. Ignition switch, lead wire/coupler.
C44 (Except for USA)	Heated oxygen sensor (HO_2S)	The sensor voltage should be less than the following after warming up condition. (Sensor voltage < 0.4 V) Without the above value, C44 is indicated. Heater operation voltage does not reach in the oxygen heater circuit, C44 in indicated. The Heater can not operate. HO_2S lead wire/coupler connection. Battery voltage supply to the HO_2S.

"C11" CMP SENSOR CIRCUIT MALFUNCTION

DETECTED CONDITION	POSSIBLE CAUSE
No CMP sensor signal for 3 seconds at engine cranking.	• Metal particles or foreign material being attached on the CMP sensor and rotor tip. • CMP sensor circuit open or short. • CMP sensor malfunction. • ECM malfunction.

INSPECTION

- Lift and support the fuel tank with its prop stay. (☞4-51)

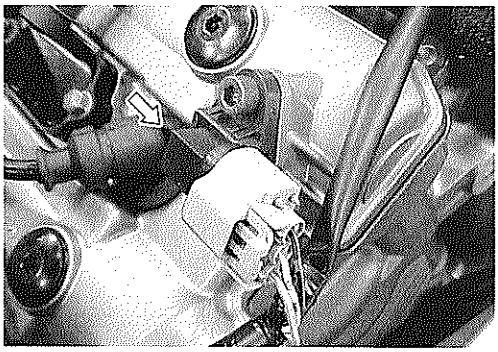

1 Check the CMP sensor coupler for loose or poor contacts. If OK, then measure the CMP sensor peak voltage. Insert the copper wires to the CMP sensor coupler and crank the engine a few seconds or start the engine, and measure the peak voltage.

DATA CMP sensor peak voltage: More than 3.7 V (⊕Y/W – ⊖B/W)

TOOL 09900-25008: Multi circuit tester

Tester knob indication: Voltage (⎓)

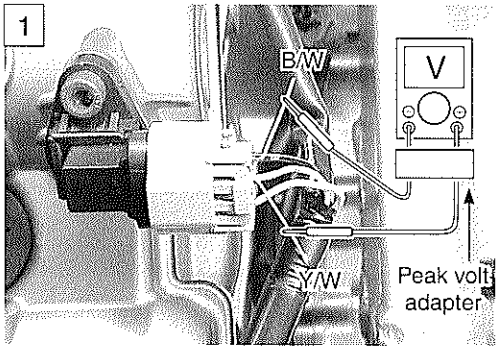

No → Replace the CMP sensor with a new one.

Yes ↓

2 Remove the CMP sensor.
If the metal particles or foreign material is attached on the CMP sensor and rotor tip, signal not flow correctly to the ECM. Clean the CMP sensor and rotor tip with a spray-type carburetor cleaner and blow dry with compressed air and also change the engine oil if necessary.

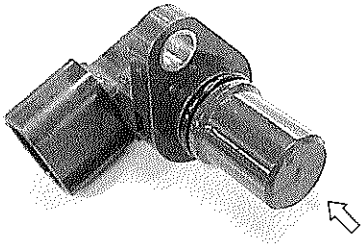

No → Loose or poor contacts on the CMP sensor coupler or ECM coupler.
Replace the CMPsensor with a new one.

Yes ↓

O/W, Y/W or B/W wire open or shorted to ground, or poor ⑫, ⑮ or ㉞ connection. (☞4-22)
If wire and connection are OK, intermittent trouble or faulty ECM.
Recheck each terminal and wire harness for open circuit and poor connection. (☞4-5)

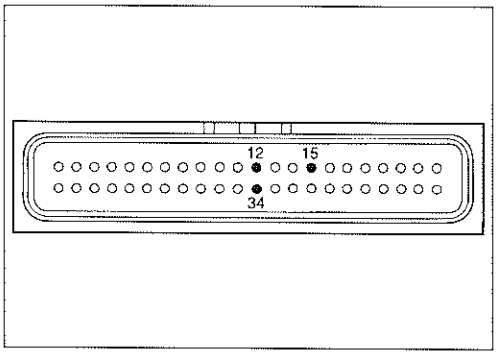

→ Replace the ECM with a new one, and inspect it again.

"C12" CKP SENSOR CIRCUIT MALFUNCTION

DETECTED CONDITION	POSSIBLE CAUSE
No CKP sensor signal for 3 seconds at engine cranking.	• Metal particles or foreign material being attached on the CKP sensor and rotor tip. • CKP sensor circuit open or short. • CKP sensor malfunction. • ECM malfunction.

INSPECTION

- Remove the left frame cover. (☞6-5)

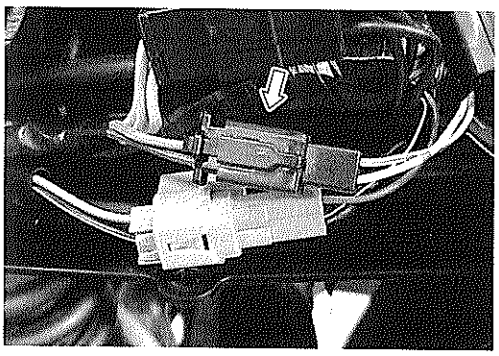

1 Turn the ignition switch OFF.
Check the CKP sensor coupler for loose or poor contacts.
If OK, then measure the CKP sensor resistance.
Disconnect the CKP sensor coupler and measure the resistance.

DATA CKP sensor resistance: 130 – 240 Ω (Blue – Green)

If OK, then check the continuity between each terminal and ground.

DATA CKP sensor continuity: ∞Ω (Infinity) (Blue – Ground / Green – Ground)

TOOL 09900-25008: Multi circuit tester

Tester knob indication: Resistance (Ω)

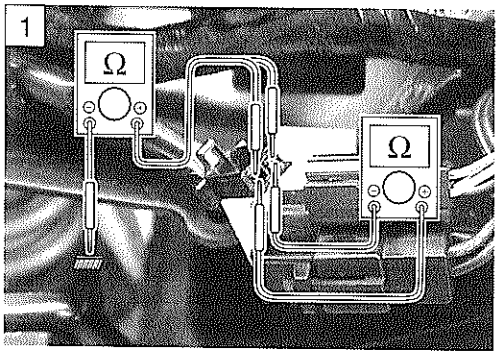

No → Replace the CKP sensor with a new one.

Yes ↓

2 Disconnect the CKP sensor coupler.
Crank the engine a few seconds with the starter motor, and measure the CKP sensor peak voltage at the coupler.

DATA CKP sensor peak voltage: More than 3.7 V (Blue – Green)

Repeat the above test procedure a few times and measure the highest peak voltage.
If OK, then measure the CKP sensor peak voltage at the ECM terminals. (N+/N– or ㉖/㉚)

TOOL 09900-25008: Multi circuit tester

Tester knob indication: Voltage (⎓)

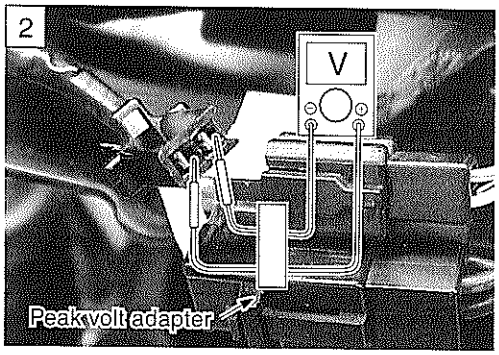

No → Loose or poor contacts on the CKP sensor coupler or ECM coupler. Clean the CKP sensor and rotor tips or replace the CKP sensor with a new one.

Yes ↓

Blue or Green wire open or shorted to ground, or poor ㉖ or ㉚ connection. (☞4-22)
If wire and connection are OK, intermittent trouble or faulty ECM.
Recheck each terminal and wire harness for open circuit and poor connection. (☞4-5)

→ Replace the ECM with a new one, and inspect it again.

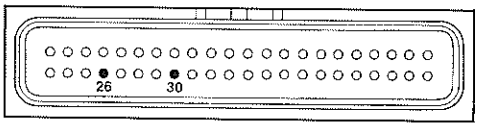

ECM couplers

"C13" IAP SENSOR CIRCUIT MALFUNCTION

DETECTED CONDITION	POSSIBLE CAUSE
Low pressure and low voltage. High pressure and high voltage. (0.10 V ≦ Sensor voltage < 4.80 V without the above range.) *NOTE:* *Note that atmospheric pressure caries depending on weather conditions as well as altitude.* *Take that into consideration when inspecting voltage.*	• Clogged vacuum passage between throttle body and IAP sensor. • Air being drawn from vacuum passage between throttle body and IAP sensor. • Red wire circuit open or shorted to ground. • B/Br or G/B wire circuit shorted to ground. • IAP sensor malfunction. • ECM malfunction.

INSPECTION

- Lift and support the fuel tank with its prop stay. (☞4-51)

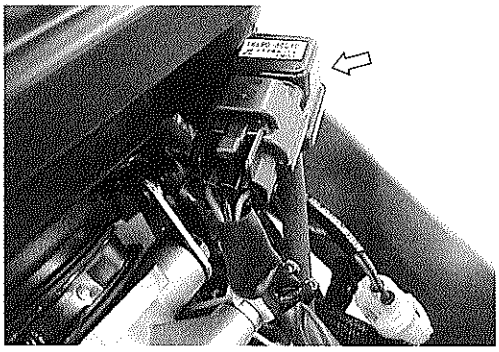

1 Turn the ignition switch OFF.
Check the IAP sensor coupler for loose or poor contacts.
If OK, then measure the IAP sensor input voltage.
Disconnect the IAP sensor coupler.
Turn the ignition switch ON.
Measure the voltage at the Red wire and ground.
If OK, then measure the voltage at the Red wire and B/Br wire.

DATA IAP sensor input voltage: 4.5 – 5.5 V
(⊕Red – ⊖Ground / ⊕Red – ⊖B/Br)

TOOL 09900-25008: Multi circuit tester

Tester knob indication: Voltage (⎓)

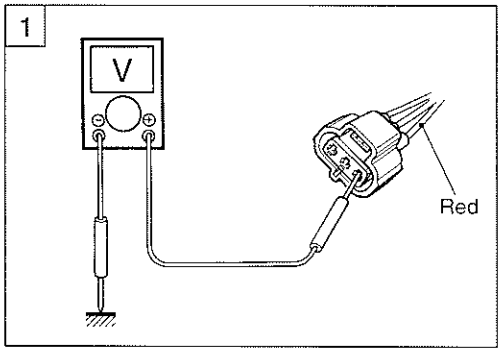

No → Loose or poor contacts on the ECM coupler.
Open or short circuit in the Red wire or B/Br wire.

Yes ↓

2 Connect the IAP sensor coupler.
Insert the copper wires to the lead wire coupler.
Start the engine at idling speed.
Measure the IAP sensor output voltage at the wire side coupler (between G/B and B/Br wires).

DATA IAP sensor output voltage: Approx. 2.5 V at idle speed (⊕G/B – ⊖B/Br)

TOOL 09900-25008: Multi circuit tester

Tester knob indication: Voltage (⎓)

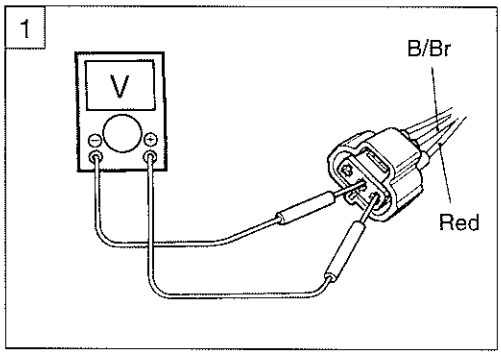

No → Check the vacuum hose for crack or damage.
Open or short circuit in the G/B wire.
Replace the IAP sensor with a new one.

Yes ↓

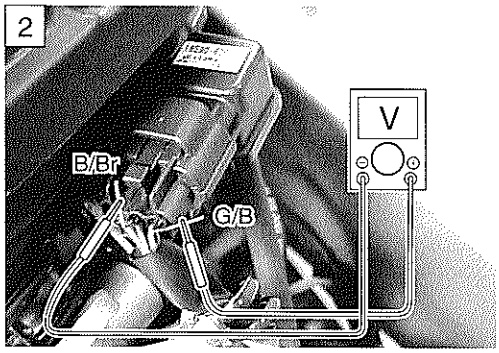

3 Remove the IAP sensor.
Connect the vacuum pump gauge to the vacuum port of the IAP sensor.
Arrange 3 new 1.5 V batteries in series (check that total voltage is 4.5 – 5.0 V) and connect ⊖ terminal to the ground terminal and ⊕ terminal to the Vcc terminal.
Check the voltage between Vout and ground. Also, check if voltage reduces when vacuum is applied up to 40 cmHg by using vacuum pump gauge. (See table below.)

09917-47010: Vacuum pump gauge
09900-25008: Multi circuit tester

Tester knob indication: Voltage (⎓)

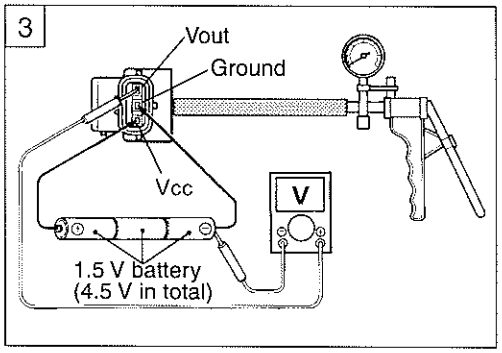

No → If check result is not satisfactory, replace IAP sensor with a new one.

Yes ↓

Red, G/B or B/Br wire open or shorted to ground, or poor ⑩, ⑯ or ㉞ connection. (☞4-22)
If wire and connection are OK, intermittent trouble or faulty ECM.
Recheck each terminal and wire harness for open circuit and poor connection. (☞4-5)

→ Replace the ECM with a new one, and inspect it again.

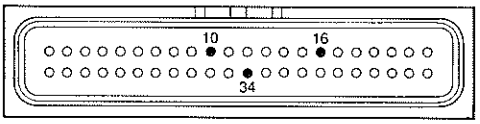

ECM coupler

OUTPUT VOLTAGE (VCC VOLTAGE 4.5 – 5.0 V, AMBIENT TEMP. 20 – 30 °C, 68 – 86 °F)

ALTITUDE (Reference)		ATMOSPHERIC PRESSURE		OUTPUT VOLTAGE
(ft)	(m)	(mmHg)	kPa	(V)
0	0	760	100	3.4 – 4.0
|	|	|	|	
2 000	610	707	94	
2 001	611	707	94	3.0 – 3.7
|	|	|	|	
5 000	1 524	634	85	
5 001	1 525	634	85	2.6 – 3.4
|	|	|	|	
8 000	2 438	567	76	
8 001	2 439	567	76	2.4 – 3.1
|	|	|	|	
10 000	3 048	526	70	

"C14" TP SENSOR CIRCUIT MALFUNCTION

DETECTED CONDITION	POSSIBLE CAUSE
Signal voltage low or high. Difference between actual throttle opening and opening calculated by ECM in larger than specified value. (0.10 V ≦ Sensor voltage < 4.80 V without the above range.)	• TP sensor maladjusted. • TP sensor circuit open or short. • TP sensor malfunction. • ECM malfunction.

INSPECTION

- Remove the fuel tank and air cleaner box. (☞4-52 and -60)

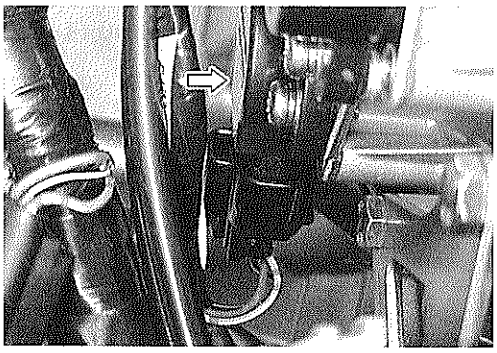

1 Turn the ignition switch OFF.
Check the TP sensor coupler for loose or poor contacts.
If OK, then measure the TP sensor input voltage.
Disconnect the TP sensor/injector coupler ①.
Turn the ignition switch ON.
Measure the voltage at the Red wire and ground.
If OK, then measure the voltage at the Red wire and B/Br wire.

DATA TP sensor input voltage: 4.5 – 5.5 V
(⊕Red – ⊖Ground / ⊕Red – ⊖B/Br)

TOOL 09900-25008: Multi circuit tester

Tester knob indication: Voltage (-)

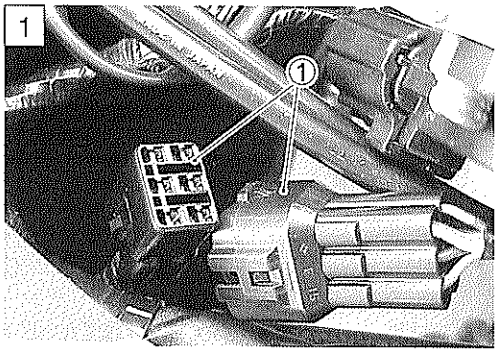

No → Loose or poor contacts on the ECM coupler.
Open or short circuit in the Red wire or B/Br wire.

↓ Yes

2 Turn the ignition switch OFF.
Disconnect the TP sensor/injector coupler.
Check the continuity between P/W wire and ground.

DATA TP sensor continuity: ∞Ω (Infinity)
(P/W – Ground)

If OK, then measure the TP sensor resistance at the coupler (between P/W and B/Br wires).
Turn the throttle grip and measure the resistance.

DATA TP sensor resistance
Throttle valve is closed : Approx. 1.1 kΩ
Throttle valve is opened: Approx. 4.3 kΩ

TOOL 09900-25008: Multi circuit tester

Tester knob indication: Resistance (Ω)

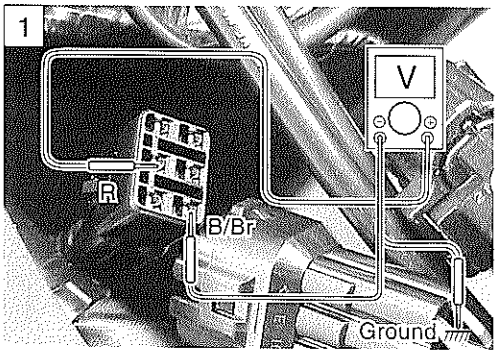

No → Reset the TP sensor position correctly.
Replace the TP sensor with a new one.

↓ Yes

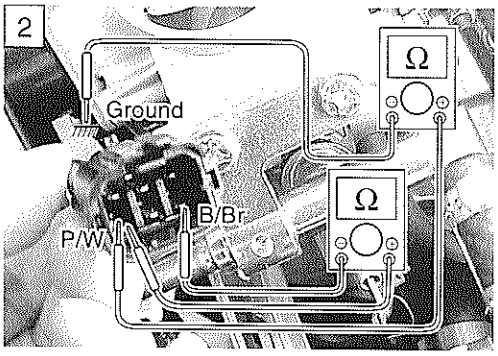

3 Connect the TP sensor/injector coupler ①.
Insert the copper wires to the lead wire coupler.
Turn the ignition switch ON.
Measure the TP sensor output voltage at the coupler (between P/W and B/Br wires) by turning the throttle grip.

DATA TP sensor output voltage
Throttle valve is closed : Approx. 1.1 V
Throttle valve is opened: Approx. 4.3 V

TOOL 09900-25008: Multi circuit tester

Tester knob indication: Voltage (⎓)

No → If check result is not satisfactory, replace TP sensor with a new one.

Yes ↓

Red, P/W or B/Br wire open or shorted to ground, or poor ⑩, ⑲ or ㉞ connection. (☞4-22)
If wire and connection are OK, intermittent trouble or faulty ECM.
Recheck each terminal and wire harness for open circuit and poor connection. (☞4-5)

→ Replace the ECM with a new one, and inspect it again.

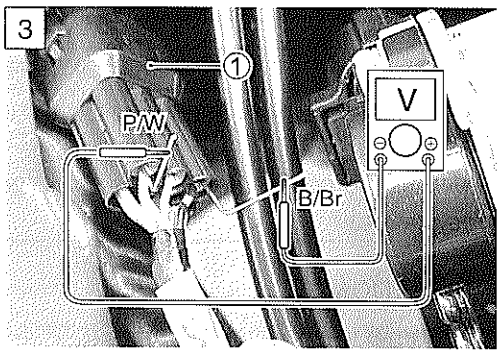

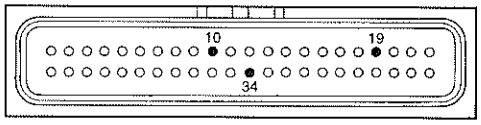

ECM coupler

"C15" ECT SENSOR CIRCUIT MALFUNCTION

DETECTED CONDITION	POSSIBLE CAUSE
High engine coolant temp. (Low voltage – Low resistance) Low engine coolant temp. (High voltage – High resistance)	• B/Bl circuit shorted to ground. • B/Br circuit open. • ECT sensor malfunction. • ECM malfunction.

INSPECTION

- Remove the vacuum damper. (☞4-61)

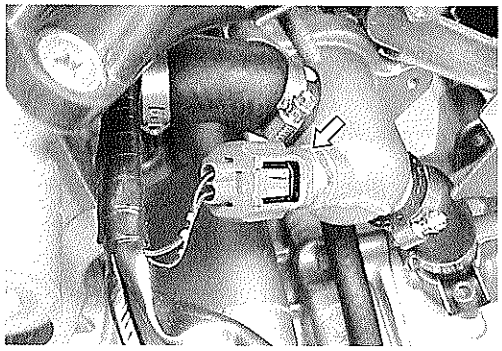

1 Turn the ignition switch OFF.
Check the ECT sensor coupler for loose or poor contacts.
If OK, then measure the ECT sensor voltage at the wire side coupler.
Disconnect the coupler and turn the ignition switch ON.
Measure the voltage between B/Bl wire terminal and ground.
If OK, then measure the voltage between B/Bl wire terminal and B/Br wire terminal.

DATA ECT sensor voltage: 4.5 – 5.5 V
(⊕B/Bl – ⊖Ground / ⊕B/Bl – ⊖B/Br)

TOOL 09900-25008: Multi circuit tester

Tester knob indication: Voltage (⎓)

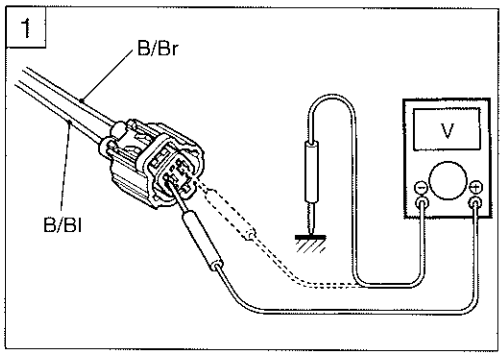

No → Loose or poor contacts on the ECM coupler.
Open or short circuit in the B/Bl wire or B/Br wire.

Yes ↓

2 Turn the ignition switch OFF.
Measure the ECT sensor resistance.

DATA ECT sensor resistance: 2.3 – 2.6 kΩ at 20°C (68°F) (Terminal - Terminal)

TOOL 09900-25008: Multi circuit tester

Tester knob indication: Resistance (Ω)

Refer to page 5-8 for details.

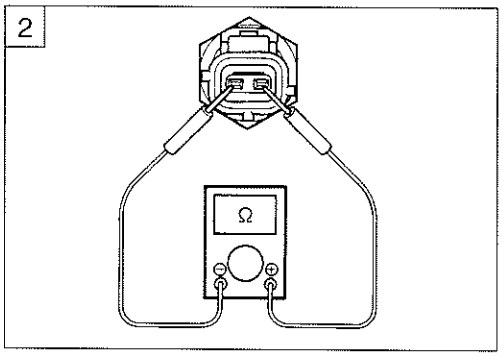

No → Replace the ECT sensor with a new one.

Yes ↓

B/Bl or B/Br wire open or shorted to ground, or poor ㉞ or ㊱ connection. (☞4-22)
If wire and connection are OK, intermittent trouble or faulty ECM.
Recheck each terminal and wire harness for open circuit and poor connection. (☞4-5)

→ Replace the ECM with a new one, and inspect it again.

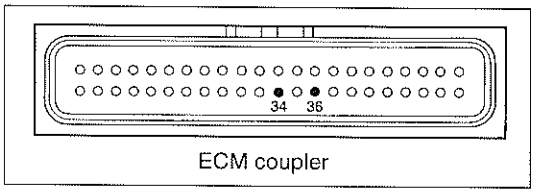

ECM coupler

Engine Coolant Temp.	Resistance
20°C (68 °F)	Approx. 2.45 kΩ
40°C (104 °F)	Approx. 1.148 kΩ
60°C (140 °F)	Approx. 0.587 kΩ
80°C (176 °F)	Approx. 0.322 kΩ

"C21" IAT SENSOR CIRCUIT MALFUNCTION

DETECTED CONDITION	POSSIBLE CAUSE
High intake air temp. (Low voltage – Low resistance) Low intake air temp. (High voltage – High resistance)	• Dg circuit shorted to ground. • B/Br circuit open. • IAT sensor malfunction. • ECM malfunction.

INSPECTION

- Lift and support the fuel tank with its prop stay. (☞4-51)

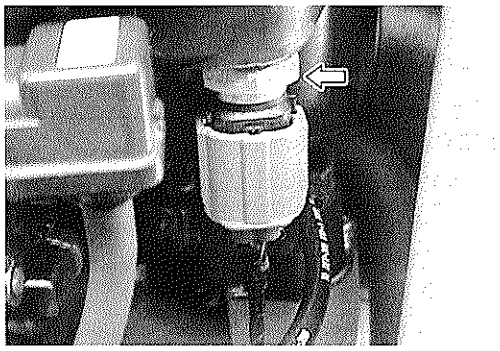

1 Turn the ignition switch OFF.
Check the IAT sensor coupler for loose or poor contacts.
If OK, then measure the IAT sensor voltage at the wire side coupler.
Disconnect the coupler and turn the ignition switch ON.
Measure the voltage between Dg wire terminal and ground.
If OK, then measure the voltage between Dg wire terminal and B/Br wire terminal.

DATA IAT sensor voltage: 4.5 – 5.5 V
(⊕Dg – ⊖Ground / ⊕Dg – ⊖B/Br)

TOOL 09900-25008: Multi circuit tester

Tester knob indication: Voltage (⎓)

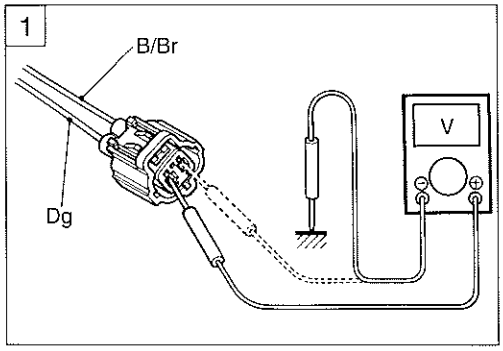

No → Loose or poor contacts on the ECM coupler.
Open or short circuit in the Dg wire or B/Br wire.

Yes ↓

2 Turn the ignition switch OFF.
Measure the IAT sensor resistance.

DATA IAT sensor resistance: 2.3 – 2.6 kΩ at 20°C (68°F) (Terminal – Terminal)

TOOL 09900-25008: Multi circuit tester

Tester knob indication: Resistance (Ω)

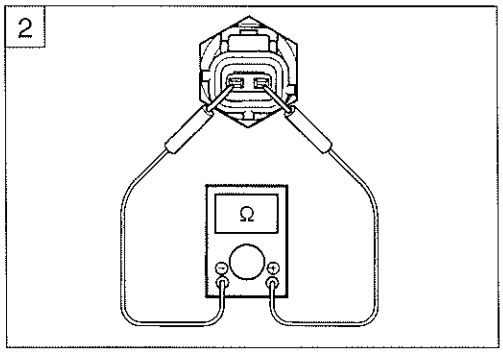

No → Replace the IAT sensor with a new one.

Yes ↓

Dg or B/Br wire open or shorted to ground, or poor ⑭ or ㉞ connection. (☞4-22)
If wire and connection are OK, intermittent trouble or faulty ECM.
Recheck each terminal and wire harness for open circuit and poor connection. (☞4-5)

→ Replace the ECM with a new one, and inspect it again.

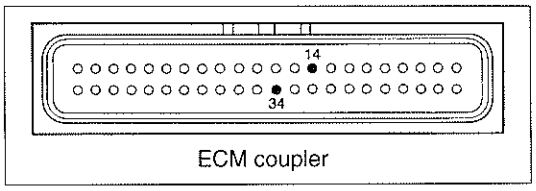

ECM coupler

Intake Air Temp.	Resistance
20°C (68 °F)	Approx. 2.45 kΩ
40°C (104 °F)	Approx. 1.148 kΩ
60°C (140 °F)	Approx. 0.587 kΩ
80°C (176 °F)	Approx. 0.322 kΩ

NOTE:
IAT sensor resistance measurement method is the same way as that of the ECT sensor. Refer to page 5-10 for details.

"C22" AP SENSOR CIRCUIT MALFUNCTION

DETECTED CONDITION	POSSIBLE CAUSE
Low pressure and low voltage. High pressure and high voltage. (0.10 V ≦ Sensor voltage < 4.80 V without the above range.) *NOTE:* *Note that atmospheric pressure caries depending on weather conditions as well as altitude.* *Take that into consideration when inspecting voltage.*	• Clogged air passage with dust. • Red wire circuit open or shorted to ground. • B/Br or G/Y wire circuit shorted to ground. • AP sensor malfunction. • ECM malfunction.

INSPECTION

- Remove the seat. (☞6-4)

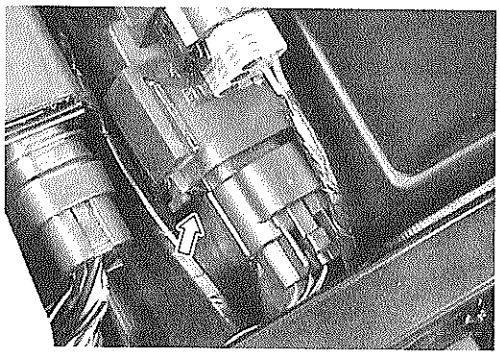

1 Turn the ignition switch OFF.
Check the AP sensor coupler for loose or poor contacts.
If OK, then measure the AP sensor input voltage.
Disconnect the AP sensor coupler.
Turn the ignition switch ON.
Measure the voltage between Red wire and ground.
If OK, then measure the voltage between Red wire and B/Br wire terminal.

DATA **AP sensor input voltage: 4.5 – 5.5 V**
(⊕Red – ⊖Ground / ⊕Red – ⊖B/Br)

TOOL **09900-25008: Multi circuit tester**

Tester knob indication: Voltage (⎓)

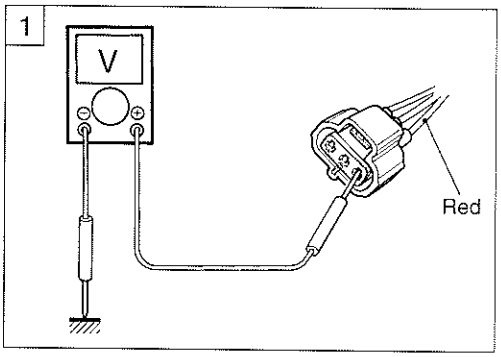

No → Loose or poor contacts on the ECM coupler.
Open or short circuit in the Red wire or B/Br wire.

↓ Yes

2 Connect the AP sensor coupler.
Insert the copper wires to the lead wire coupler.
Turn the ignition switch ON.
Measure the AP sensor output voltage at the wire side coupler between G/Y and B/Br wires.

DATA **AP sensor output voltage: Approx. 4.0 V at 760 mmHg (100 kPa) (⊕G/Y – ⊖B/Br)**

TOOL **09900-25008: Multi circuit tester**

Tester knob indication: Voltage (⎓)

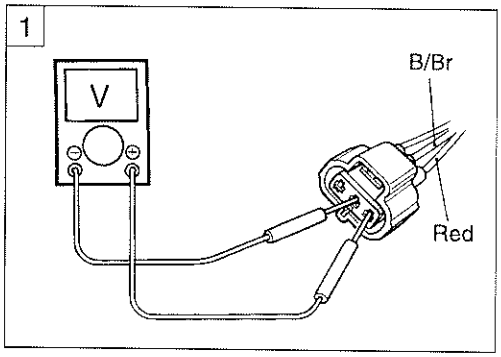

No → Check the air passage for clogging.
Open or short circuit in the G/Y wire.
Replace the AP sensor with a new one.

↓ Yes

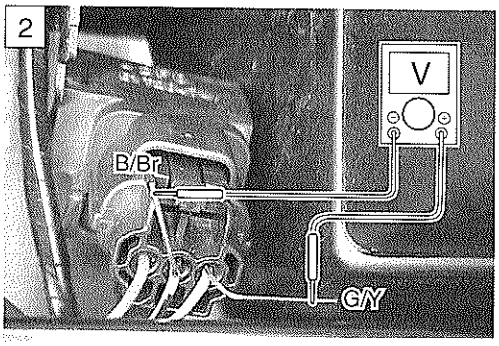

3 Remove the AP sensor.
Connect the vacuum pump gauge to the air passage port of the AP sensor.
Arrange 3 new 1.5 V batteries in series (check that total voltage is 4.5 – 5.0 V) and connect ⊖ terminal to the ground terminal and ⊕ terminal to the Vcc terminal.
Check the voltage between vout and ground. Also, check if voltage reduces when vacuum is applied up to 40 cmHg by using vacuum pump gauge. (See table below.)

09917-47010: Vacuum pump gauge
09900-25008: Multi circuit tester

Tester knob indication: Voltage (⎓)

No → If check result is not satisfactory, replace AP sensor with a new one.

Yes ↓

Red, G/Y or B/Br wire open or shorted to ground, or poor ⑩, ⑰ or ㉞ connection. (☞4-22)
If wire and connection are OK, intermittent trouble or faulty ECM.
Recheck each terminal and wire harness for open circuit and poor connection. (☞4-5)

→ Replace the ECM with a new one, and inspect it again.

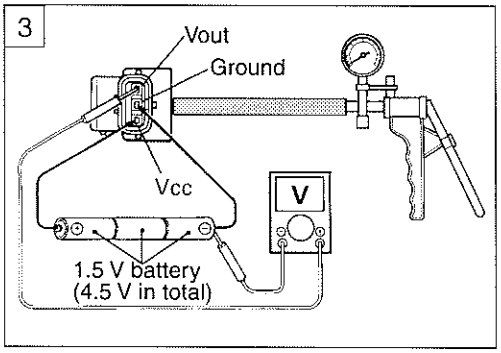

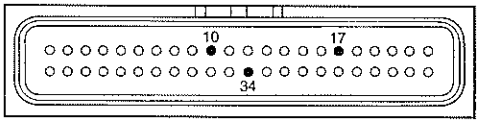

ECM coupler

OUTPUT VOLTAGE (VCC VOLTAGE 4.5 – 5.0 V, AMBIENT TEMP. 20 – 30 °C, 68 – 86 °F)

ALTITUDE (Reference)		ATMOSPHERIC PRESSURE		OUTPUT VOLTAGE
(ft)	(m)	(mmHg)	kPa	(V)
0	0	760	100	3.4 – 4.0
|	|	|	|	
2 000	610	707	94	
2 001	611	707	94	3.0 – 3.7
|	|	|	|	
5 000	1 524	634	85	
5 001	1 525	634	85	2.6 – 3.4
|	|	|	|	
8 000	2 438	567	76	
8 001	2 439	567	76	2.4 – 3.1
|	|	|	|	
10 000	3 048	526	70	

"C23" TO SENSOR CIRCUIT MALFUNCTION

DETECTED CONDITION	POSSIBLE CAUSE
No TO sensor signal for more than 4 seconds, after ignition switch turns ON. Sensor voltage high. (0.2 V ≦ Sensor voltage < 4.6 V without the above range.)	• TO sensor circuit open or short. • TO sensor malfunction. • ECM malfunction.

INSPECTION

- Remove the seat. (☞6-4)

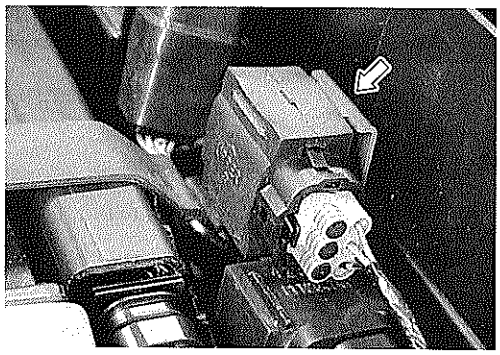

1 Turn the ignition switch OFF.
Check the TO sensor coupler for loose or poor contacts.
If OK, then measure the TO sensor resistance.
Disconnect the TO sensor coupler.
Measure the resistance between Red and B/Br wire terminals.

DATA TO sensor resistance: 19.1 – 19.7 kΩ (Red – B/Br)

TOOL 09900-25008: Multi circuit tester

Tester knob indication: Resistance (Ω)

No → Replace the TO sensor with a new one.

Yes ↓

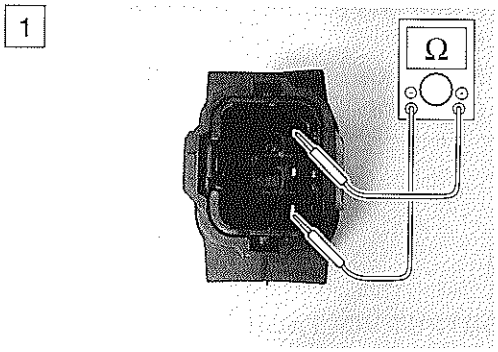

2 Connect the TO sensor coupler.
Insert the copper wires to the lead wire coupler.
Turn the ignition switch ON.
Measure the voltage at the wire side coupler between Br/W and B/Br wires.

DATA TO sensor voltage: 0.4 – 1.4 V (Br/W – B/Br)

Also, measure the voltage when leaning of the motorcycle.
Dismount the TO sensor from its bracket and measure the voltage when it is leaned more than 65°, left and right, from the horizontal level.

DATA TO sensor voltage: 3.7 – 4.4 V (Br/W – B/Br)

TOOL 09900-25008: Multi circuit tester

Tester knob indication: Voltage (⎓)

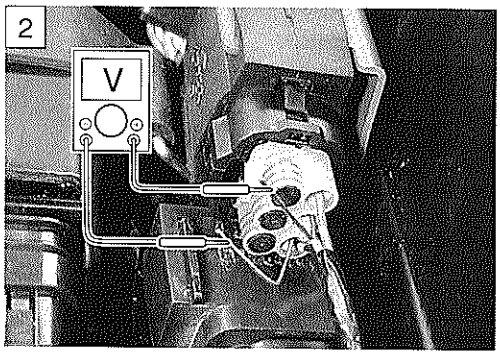

No → Loose or poor contacts on the ECM coupler.
Open or short circuit in the Br/W wire or B/Br wire.
Replace the TO sensor with a new one.

Yes ↓

Red, Br/W or B/Br wire open or shorted to ground, or poor ⑩, ㊶ or ㉞ connection. (☞4-22)
If wire and connection are OK, intermittent trouble or faulty ECM.
Recheck each terminal and wire harness for open circuit and poor connection. (☞4-5)

→ Replace the ECM with a new one, and inspect it again.

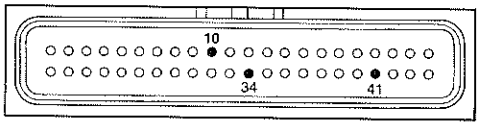

ECM coupler

"C24" or "C25" IGNITION SYSTEM MALFUNCTION

***REFER TO THE IGNITION SYSTEM FOR DETAILS. (☞7-19)**

"C28" STV ACTUATOR CIRCUIT MALFUNCTION

DETECTED CONDITION	POSSIBLE CAUSE
The operation voltage does not reach the STVA. ECM does not receive communication signal from the STVA.	• STVA malfunction. • STVA circuit open or short. • STVA motor malfunction.

INSPECTION

- Remove the fuel tank and air cleaner element. (☞4-52 and 2-5)

1 Turn the ignition switch OFF.
Check the STVA lead wire coupler for loose or poor contacts.
Turn the ignition switch ON to check the STV operation.
STV operating order: Half open → full close → Full open → 75% open → Half open (about 20 seconds later)

No → Loose or poor contacts on the STVA coupler.
Open or short circuit in the Red and Black wires.

Yes ↓

2 Turn the ignition switch OFF.
Check the STVA lead wire coupler for loose or poor contacts.
Disconnect the STVA lead wire coupler.
Check the continuity between Red wire and ground.

DATA STVA continuity: ∞Ω (Infinity)

If OK, then measure the STVA resistance. (between Red and Black wires)

DATA STVA resistance: Approx. 4.8 – 7.2 Ω (⊕ Red – ⊖ Black)

TOOL 09900-25008: Multi circuit tester

Tester knob indication: Resistance (Ω)

No → Replace the STVA with a new one.

Yes ↓

Loose or poor contacts on the STVA coupler, or poor ⑳ or ㉒ connection. (☞4-22)
If wire and connection are OK, intermittent trouble or faulty ECM. Recheck each terminal and wire harness for open circuit and poor connection. (☞4-5)

→ Replace the ECM with a new one, and inspect it again.

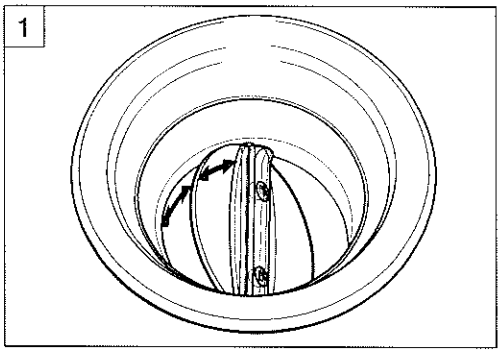

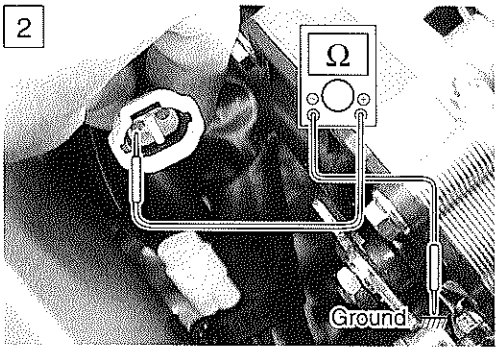

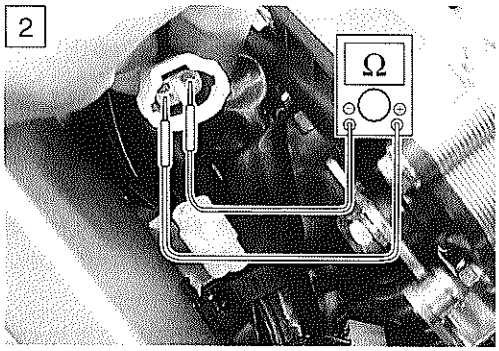

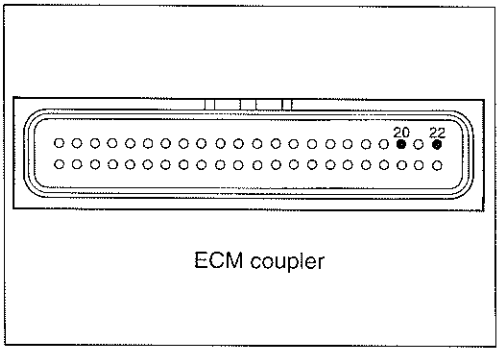

"C29" STP SENSOR CIRCUIT MALFUNCTION

DETECTED CONDITION	POSSIBLE CAUSE
Signal voltage low or high. Difference between actual throttle opening and opening calculated by ECM in larger than specified value. (0.10 V ≦ Sensor voltage < 4.80 V without the above range.)	• STP sensor maladjusted. • STP sensor circuit open or short. • STP sensor malfunction. • ECM malfunction.

INSPECTION

- Remove the fuel tank and air cleaner box. (☞4-52 and -60)

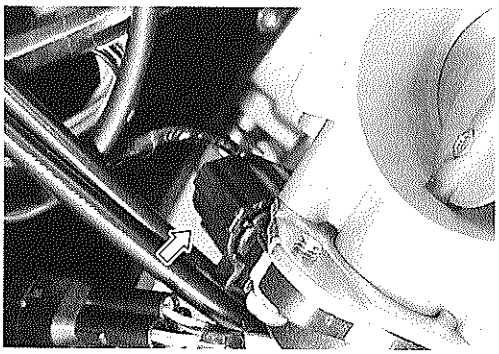

1 Turn the ignition switch OFF.
Check the STP sensor coupler for loose or poor contacts.
If OK, then measure the STP sensor input voltage.
Disconnect the STP sensor coupler.
Turn the ignition switch ON.
Measure the voltage at the Red wire and ground.
If OK, then measure the voltage at the Red wire and B/Br wire.

DATA STP sensor input voltage: 4.5 – 5.5 V
(⊕Red – ⊖Ground / ⊕Red – ⊖B/Br)

TOOL 09900-25008: Multi circuit tester

Tester knob indication: Voltage (⎓)

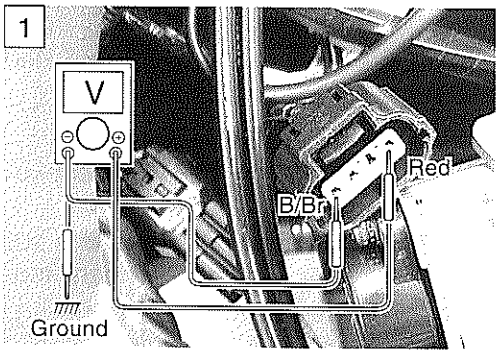

No → Loose or poor contacts on the ECM coupler.
Open or short circuit in the Red wire or B/Br wire.

Yes ↓

2 Turn the ignition switch OFF.
Disconnect the STP sensor coupler.
Check the continuity between T_3 terminal wire and ground.

DATA STP sensor continuity: ∞Ω (Infinity)
(T_3 terminal – Ground)

If OK, then measure the STP sensor resistance at the coupler (between T_3 and T_4 terminals).
Close and open the secondary throttle valve by finger, and measure the valve closing and opening resistance.

DATA STP sensor resistance
Secondary throttle valve is closed : Approx. 1.1 kΩ
Secondary throttle valve is opened: Approx. 4.3 kΩ

TOOL 09900-25008: Multi circuit tester

Tester knob indication: Resistance (Ω)

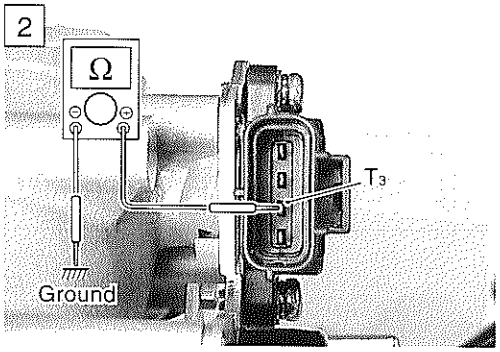

No → Reset the STP sensor position correctly. (☞4-68)
Replace the STP sensor with a new one.

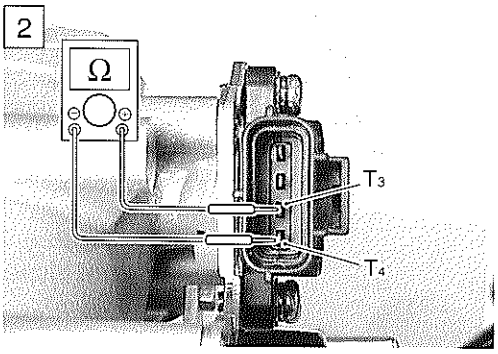

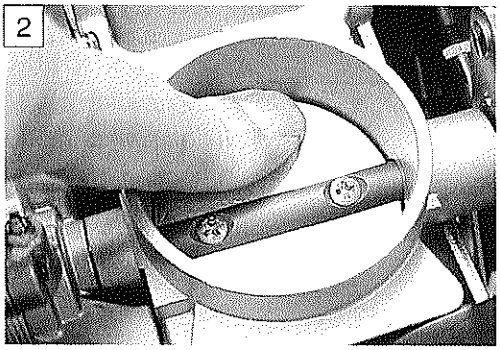

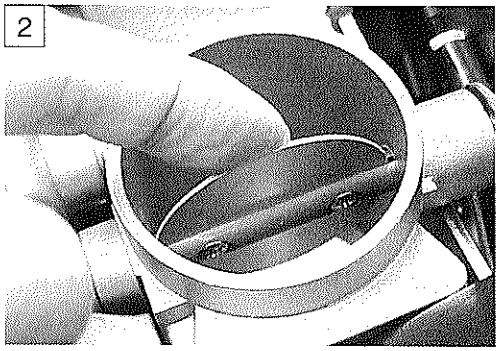

Yes

3 Turn the ignition switch OFF.
Connect the STP sensor coupler.
Insert the copper wires to the lead wire coupler.
Disconnect the STVA lead wire coupler.
Turn the ignition switch ON.
Measure the STP sensor output voltage at the coupler (between Yellow and B/Br wires) by turning the secondary throttle valve (close and open) with a finger.

DATA STP sensor output voltage
Throttle valve is closed: Approx. 1.1 V
Tester knob indication : Approx. 4.3 V

TOOL 09900-25008: Multi circuit tester

Tester knob indication: Voltage (⎓)

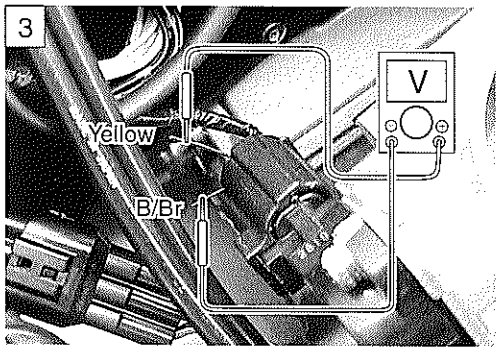

No → If check result is not satisfactory, replace STP sensor with a new one.

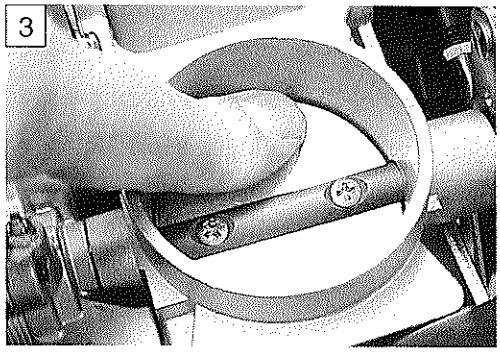

Yes

Red, Yellow or B/Br wire open or shorted to ground, or poor ⑩, ㊹ or ㉞ connection. (☞4-22)
If wire and connection are OK, intermittent trouble or faulty ECM.
Recheck each terminal and wire harness for open circuit and poor connection. (☞4-5)

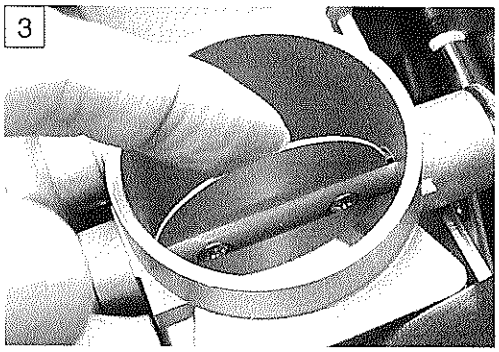

→ Replace the ECM with a new one, and inspect it again.

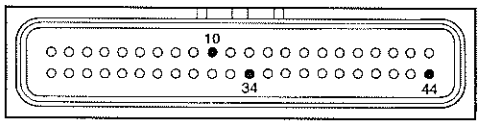

ECM coupler

"C31" GEAR POSITION (GP) SWITCH CIRCUIT MALFUNCTION

DETECTED CONDITION	POSSIBLE CAUSE
No Gear Position switch voltage Switch voltage low. (Switch Voltage > 1.0 V without the above value.)	• Gear Position switch circuit open or short. • Gear Position switch malfunction. • ECM malfunction.

INSPECTION

- Lift and support the fuel tank with its prop stay. (☞4-51)

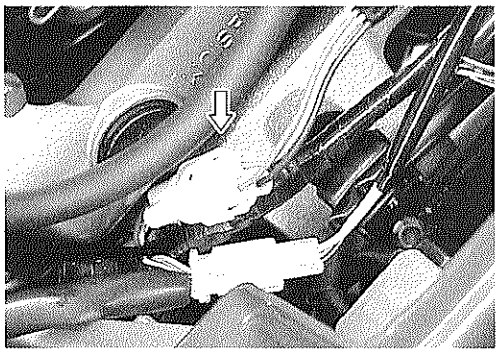

1 Turn the ignition switch OFF.
Check the GP switch coupler for loose or poor contacts.
If OK, then measure the GP switch voltage.
Support the motorcycle with a jack.
Turn the side-stand to up-right position.
Turn the engine stop switch ON.
Insert the copper wire to the lead wire coupler.
Turn the ignition switch ON.
Measure the voltage at the wire side coupler between Pink wire and ground, when shifting the gearshift lever from 1st to Top.

DATA GP switch voltage: More than 1.0 V (Pink – Ground)

TOOL 09900-25008: Multi circuit tester

Tester knob indication: Voltage (⎓)

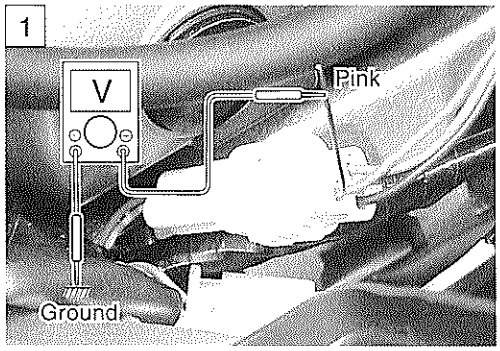

No → Open or short circuit in the Pink wire.
Replace the GP switch with a new one.

Yes ↓

Pink wire open or shorted to ground, or poor ㉛ connection. (☞4-22)
If wire and connection are OK, intermittent trouble or faulty ECM.
Recheck each terminal and wire harness for open circuit and poor connection. (☞4-5)

→ Replace the ECM with a new one, and inspect it again.

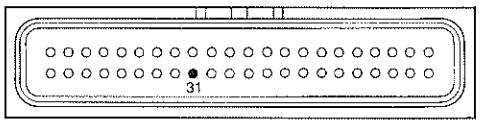

ECM coupler

"C32" or "C33" FUEL INJECTION MALFUNCTION

DETECTED CONDITION	POSSIBLE CAUSE
No injector current.	• Injector circuit open or short. • Injector malfunction. • ECM malfunction.

INSPECTION

- Remove the fuel tank and air cleaner box. (☞4-52 and -60)

1 Turn the ignition switch OFF.
Check the injector coupler for loose or poor contacts.
If OK, then measure the injector resistance.
Disconnect the TP sensor/injector coupler and measure the resistance between lead wires.

DATA Injector resistance: 12 – 18 Ω at 20°C (68°F)
(No.1 : Y/R – Gr/W / No. 2 : Y/R – Gr/B)

If OK, then check the continuity between Y/R wire and ground.

DATA Injector continuity: ∞Ω (Infinity)
(Y/R – Ground)

TOOL 09900-25008: Multi circuit tester

Tester knob indication: Resistance (Ω)

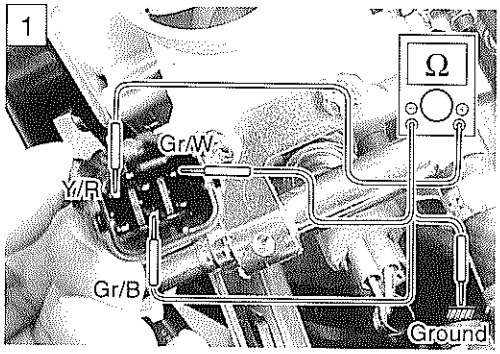

No → Replace the injector with a new one. (☞ 4-67)

Yes ↓

2 Turn the ignition switch ON.
Measure the injector voltage between Y/R wire and ground.

DATA Injector voltage: Battery voltage
(Y/R – Ground)

NOTE:
Injector voltage can be detected only 3 seconds after ignition switch is turned ON.

TOOL 09900-25008: Multi circuit tester

Tester knob indication: Voltage (⎓)

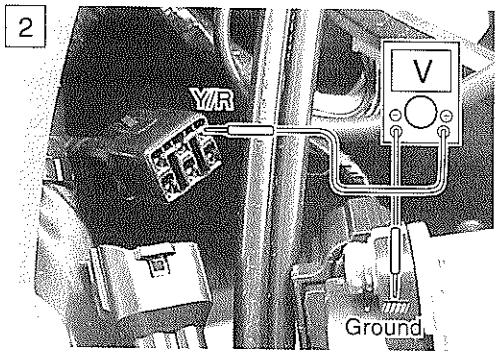

No → Open circuit in the Yellow/Red wire.

Yes ↓

Gr/W, Gr/B or Y/R wire open or shorted to ground, or poor ⑤, ⑥ or ㉘ connection. (☞4-22)
If wire and connection are OK, intermittent trouble or faulty ECM.
Recheck each terminal and wire harness for open circuit and poor connection. (☞4-5)

→ Replace the ECM with a new one, and inspect it again.

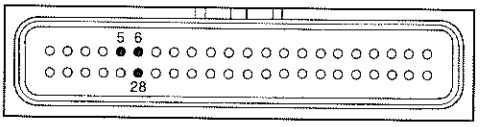

ECM coupler

"C41" FP RELAY CIRCUIT MALFUNCTION

DETECTED CONDITION	POSSIBLE CAUSE
No signal from fuel pump relay.	• Fuel pump relay circuit open or short. • Fuel pump relay malfunction. • ECM malfunction.

INSPECTION

- Remove the seat. (☞6-4)

1 Turn the ignition switch OFF.
Check the FP relay coupler for loose or poor contacts.
If OK, then check the insulation and continuity. Refer to page 4-51 for details.

No → Replace the FP relay with a new one.

Yes ↓

Y/B or O/W wire open or shorted to ground, or poor ㉜ or ㉘ connection. (☞4-22)
If wire and connection are OK, intermittent trouble or faulty ECM.
Recheck each terminal and wire harness for open circuit and poor connection. (☞4-5)

→ Replace the ECM with a new one, and inspect it again.

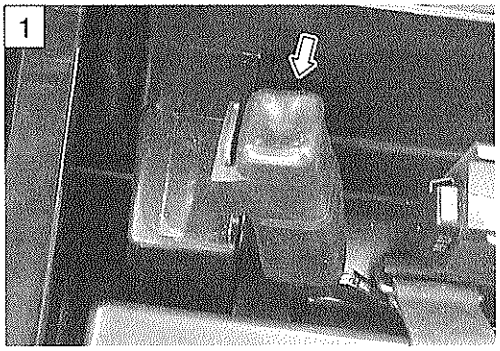

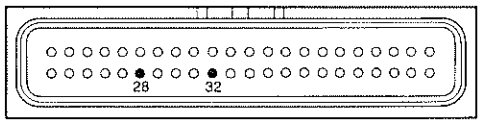

ECM coupler

"C42" IG SWITCH CIRCUIT MALFUNCTION

*** Refer to the IGNITION SWITCH INSPECTION for details.**

- Remove the fuel tank and air cleaner box. (☞4-52 and -60)
- Inspect the ignition switch. (☞7-32)

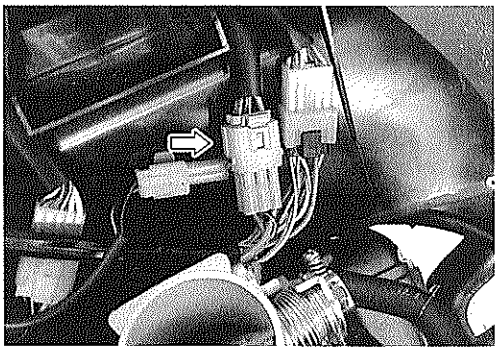

"C44" HO_2 SENSOR (HO_2S) CIRCUIT MALFUNCTION (Except for USA)

DETECTED CONDITION	POSSIBLE CAUSE
Output voltage of HO_2 Sensor higher than the specification or lower than the specification.	• HO_2 sensor or its circuit open or short. • Fuel system malfunction. • ECM malfunction.

INSPECTION

- Remove the engine under cover and seat. (☞3-3 and 6-4)

1 Turn the ignition switch OFF.
Check the HO_2 sensor coupler for loose or poor contacts.
If OK, then check the continuity.
Disconnect the HO_2 sensor coupler and ECM coupler.
Check the continuity between the HO_2 sensor coupler terminal (White/Green) and ECM coupler terminal (White/Green).
Also, check the infinity between the HO_2 sensor coupler terminal and ground.

TOOL 09900-25008: Multi circuit tester

Tester knob indication: Continuity (•)))

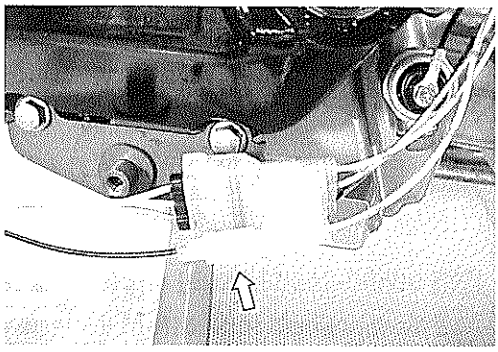

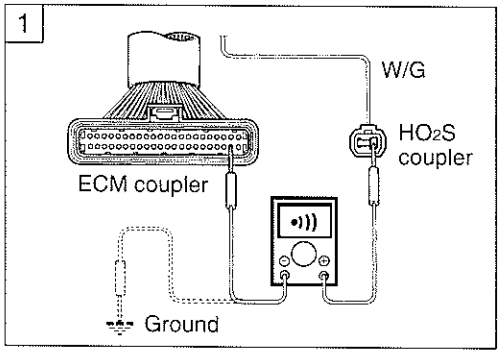

No → Loose or poor contacts on the ECM coupler.
Open or short circuit in the White/Green wire.

Yes ↓

2 Connect the HO_2 sensor coupler and ECM coupler.
Insert the copper wires to the HO_2 sensor lead wire coupler.
Start the engine and warm up the engine up to engine coolant temperature is 80 °C (176 °F).
Measure the HO_2 sensor output voltage at the coupler (between White/Green and Black/Brown wires) when idling condition.
Also, measure the HO_2 sensor output voltage while holding the engine speed at 5 000 r/min.

DATA HO_2 sensor output voltage at idle speed:
less than 0.4 V (⊕ W/G – ⊖ B/Br)
HO_2 sensor output voltage at 5 000 r/min:
more than 0.6 V (⊕ W/G – ⊖ B/Br)

TOOL 09900-25008: Multi circuit tester

Tester knob indication: Voltage (⎓)

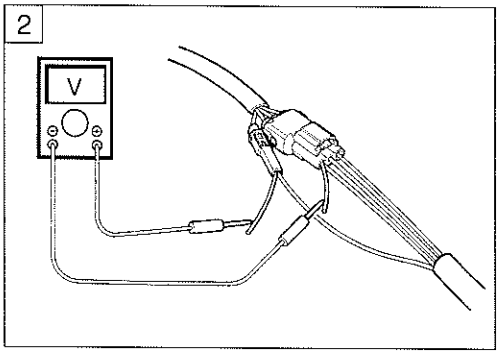

No → Replace the HO_2 sensor with a new one.

Yes

3 Turn the ignition switch OFF.
Insert the copper wire to the ECM lead wire coupler ⑧ terminal (Heater circuit).
Turn the ignition switch ON and measure the heater voltage between ⑧ terminal and ground.
If the tester voltage indicates the battery voltage for few seconds it is good condition.

DATA Heater voltage: Battery voltage (⑧ terminal – Ground)

NOTE:
Battery voltage can be detected only during few seconds after ignition switch is turned ON.

TOOL 09900-25008: Multi circuit tester
Tester knob indication: Voltage (⎓)

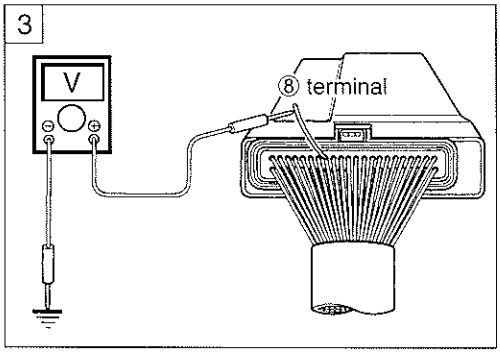

No → Replace the HO_2 sensor with a new one.

Yes

4 Turn the ignition switch OFF.
Disconnect the HO_2 sensor coupler.
Check the resistance between the terminals (White – White) of the HO_2 sensor.

DATA HO_2 sensor resistance: 4 – 5 Ω (at 23 °C/73.4 °F)

NOTE:
* *Temperature of the sensor affects resistance value largely.*
* *Make sure that the sensor heater is at correct temperature.*

TOOL 09900-25008: Multi circuit tester set
Tester knob indication: Resistance (Ω)

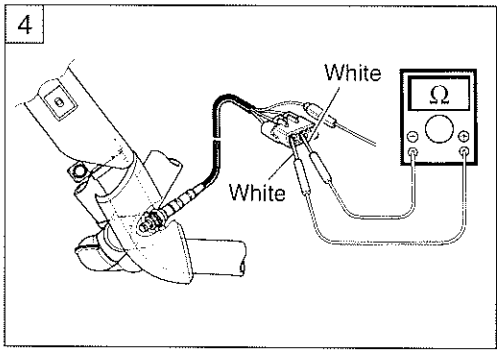

No → Replace the HO_2 sensor with a new one.

Yes

Black, W/Gr, White, W/B, Gray, B/Br or O/W wire open or shorted to ground, or poor ⑧, ⑮, ㉔ or ㉞ connection. (☞4-22)
If wire and connection are OK, intermittent trouble or faulty ECM.
Recheck each terminal and wire harness for open circuit and poor connection. (☞4-5)

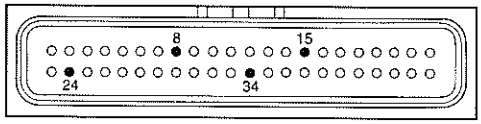

ECM coupler

→ Check the fuel supply system, if the system is OK, replace the ECM with a new one, and inspect it again.

FUEL SYSTEM

FUEL TANK LIFT-UP

- Remove the seat. (☞6-4)
- Remove the fuel tank side covers, left and right.
- Remove the cowling fitting bolts, left and right.

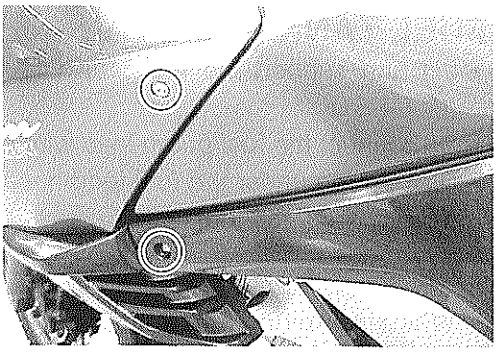

- Remove the fuel tank top cover by removing the bolts and fasteners.

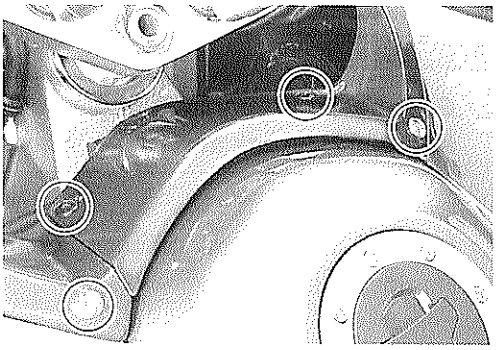

- Remove the fuel tank mounting bolt.

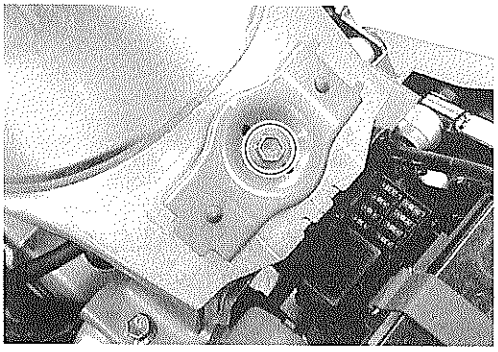

- Lift and support the fuel tank with the fuel tank prop stay.

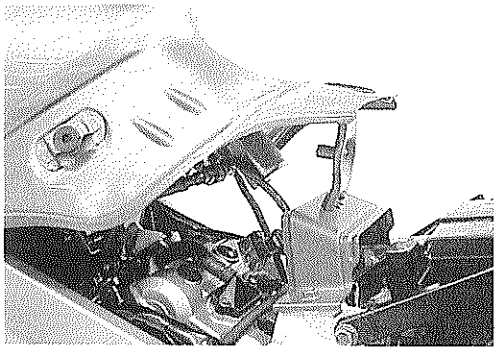

FUEL TANK REMOVAL

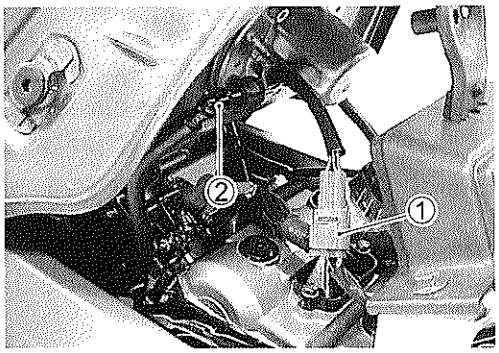

- Lift and support the fuel tank with the fuel tank prop stay. (☞4-51)
- Disconnect the fuel pump lead wire coupler ①.
- Place a rag under the fuel feed hose and disconnect the feed hose ② from the fuel tank.

CAUTION

When removing the fuel tank, do not leave the fuel feed hose ② on the fuel tank side.

⚠ WARNING

Gasoline is highly flammable and explosive.
Keep heat, spark and flame away.

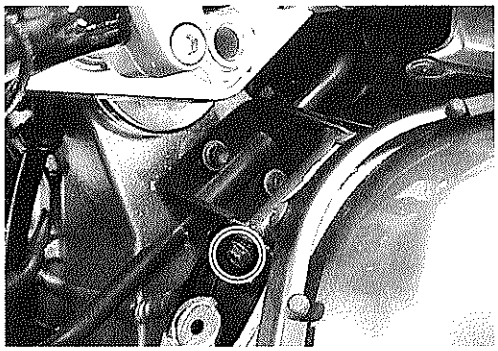

- Remove the fuel tank mounting bolt.
- Remove the fuel tank.

FUEL TANK INSTALLATION

- Installation is in the reverse order of removal.

FUEL PRESSURE INSPECTION

- Lift and support the fuel tank with the fuel tank prop stay. (☞4-51)
- Place a rag under the fuel feed hose. (☞4-52)
- Remove the fuel feed hose and install the special tools between the fuel tank and fuel delivery pipe.

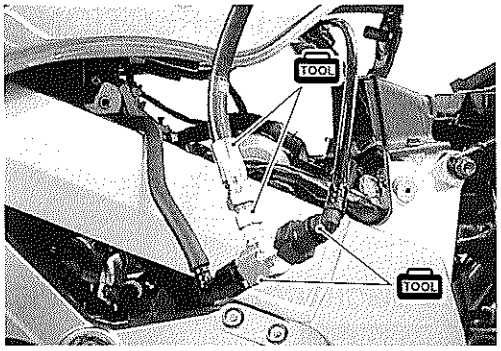

TOOL 09940-40211: Fuel pressure gauge adaptor
09940-40220: Fuel pressure gauge hose attachment
09915-77330: Oil pressure gauge
09915-74520: Oil pressure gauge hose

Turn the ignition switch ON and check the fuel pressure.

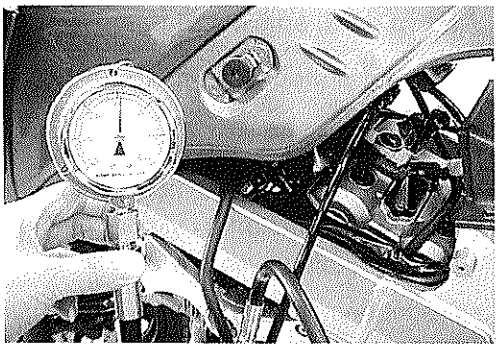

DATA Fuel pressure: Approx. 300 kPa (3.0 kgf/cm², 43 psi)

If the fuel pressure is lower than the specification, inspect the following items:
* Fuel hose leakage
* Clogged fuel filter
* Pressure regulator
* Fuel pump

If the fuel pressure is higher than the specification, inspect the following items:
* Fuel pump check valve
* Pressure regulator

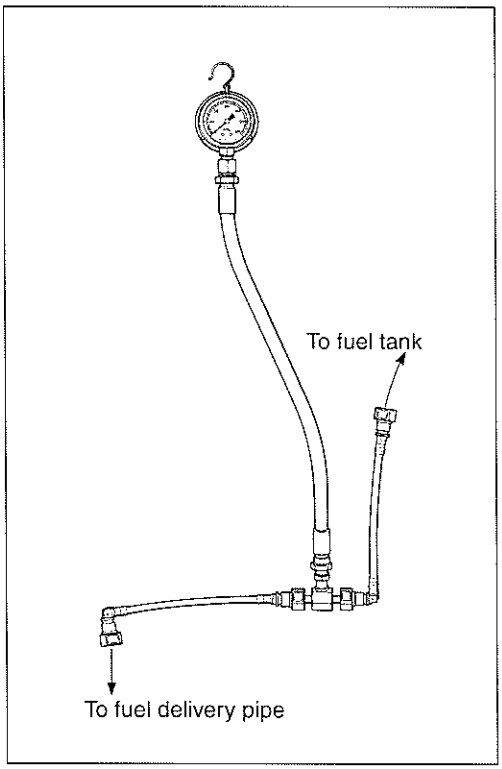

⚠ WARNING

> *** Before removing the special tools, turn the ignition switch to OFF position and release the fuel pressure slowly.**
> *** Gasoline is highly flammable and explosive. Keep heat, sparks and flame away.**

FUEL PUMP INSPECTION

Turn the ignition switch ON and check that the fuel pump operates for few seconds.
If the fuel pump motor does not make operating sound, replace the fuel pump assembly or inspect the fuel pump relay and tip over sensor.

FUEL DISCHARGE AMOUNT INSPECTION

⚠ WARNING

Gasoline is highly flammable and explosive.
Keep heat, spark and flame away.

- Lift and support the fuel tank with the fuel tank prop stay. (☞4-51)
- Disconnect the fuel feed hose from the fuel tank.
- Connect a proper fuel hose to the fuel pump.
- Place the measuring cylinder and insert the fuel hose end into the measuring cylinder.

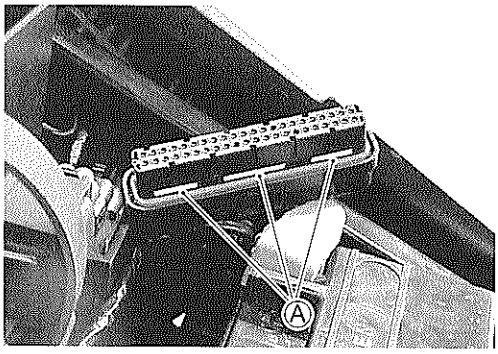

- Disconnect the ECM lead wire coupler.
- Push the lock Ⓐ to pull out the power source lead wire (Yellow with red tracer).

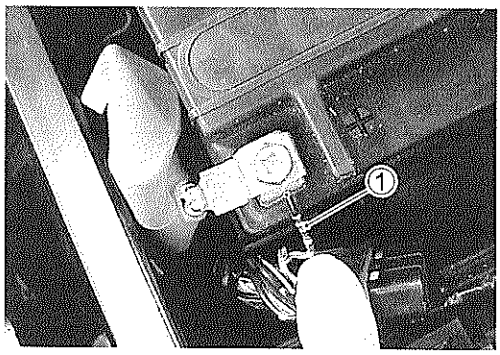

- Apply 12 volts to the fuel pump for 30 seconds and measure the amount of fuel discharged.
  Battery ⊕ terminal —— Power source lead wire ①
  (Yellow with red tracer)

If the pump does not discharge the amount specified, it means that the fuel pump is defective or that the fuel filter is clogged.

DATA Fuel discharge amount: Approx. 1 200 ml/30 sec.
(1.3/1.1 US/Imp oz)/30 sec.

NOTE:
The battery must be in fully charged condition.

FUEL PUMP RELAY INSPECTION

Fuel pump relay is located behind the ECM.

- Remove the seat.
- Remove the fuel pump relay.

First, check the insulation between ① and ② terminals with pocket tester. Then apply 12 volts to ③ and ④ terminals, ⊕ to ③ and ⊖ to ④, and check the continuity between ① and ②.
If there is no continuity, replace it with a new one.

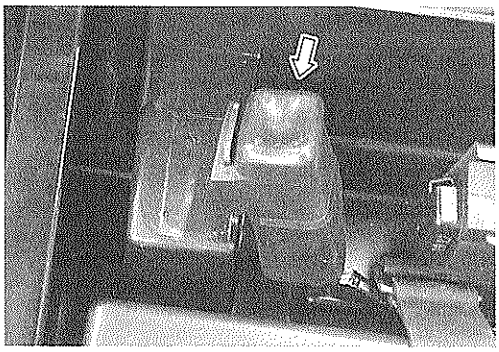

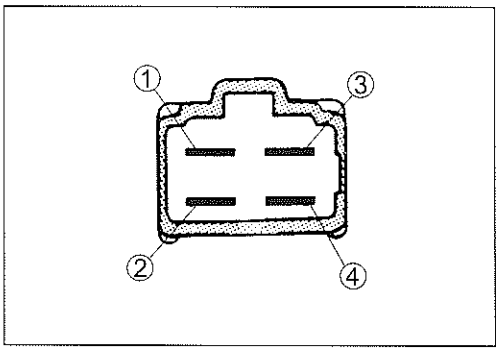

FUEL PUMP AND FUEL FILTER REMOVAL

- Remove the fuel tank. (☞4-52)
- Remove the fuel pump assembly by removing its mounting bolts diagonally.

⚠ WARNING

Gasoline is highly flammable and explosive.
Keep heat, spark and flame away.

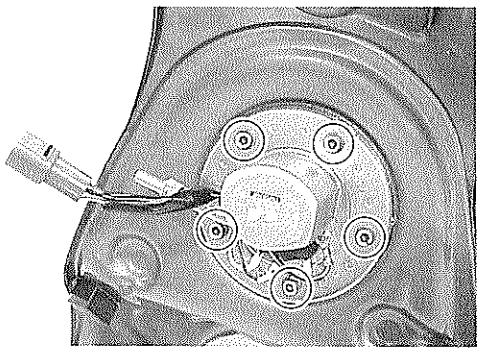

- Remove the fuel level gauge.

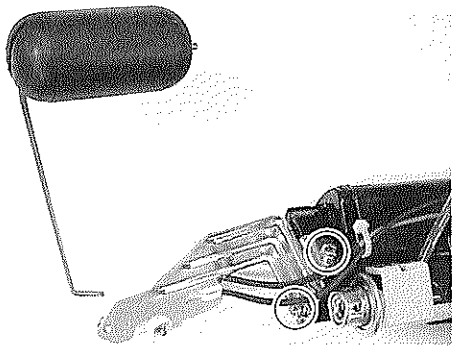

- Remove the nuts.

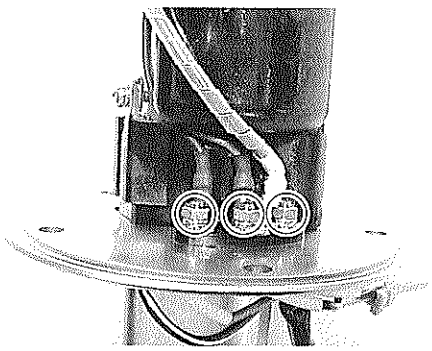

- Remove the screws.

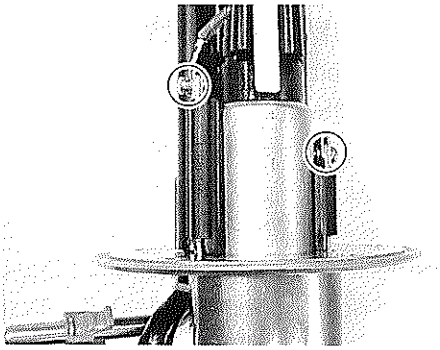

- Remove the fuel pump assy from the fuel pump plate.

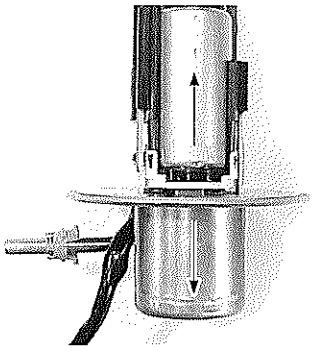

- Remove the fuel pump holder.

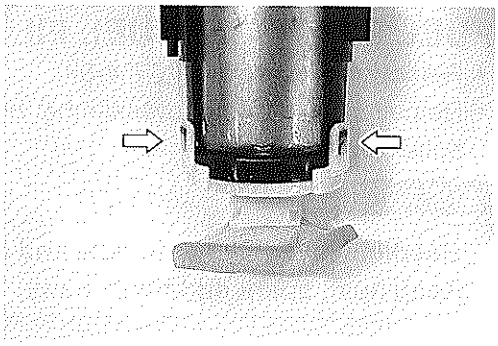

- Remove the fuel mesh filter.

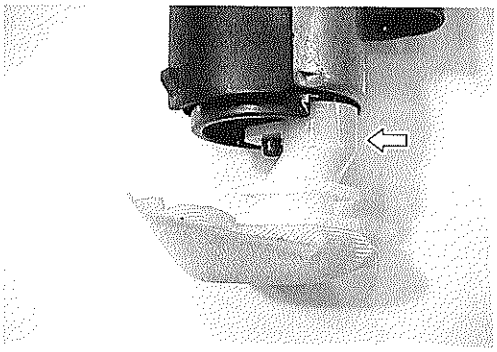

- Remove the fuel pressure regulator holder ① and the fuel pressure regulator ②.

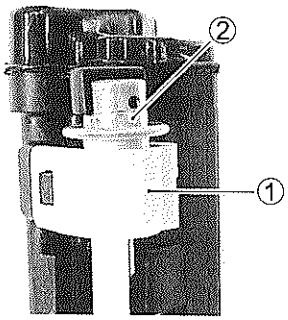

FUEL MESH FILTER INSPECTION AND CLEANING

If the fuel mesh filter is clogged with sediment or rust, fuel will not flow smoothly and loss in engine power may result.
Blow the fuel mesh filter with compressed air.

NOTE:
If the fuel mesh filter is clogged with many sediment or rust, replace the fuel filter cartridge with a new one.

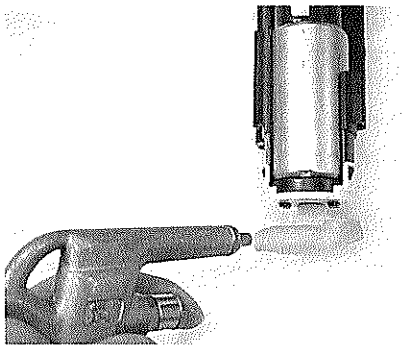

FUEL PUMP AND FUEL MESH FILTER INSTALLATION

Install the fuel pump and fuel mesh filter in the reverse order of removal, and pay attention to the following points:

- Install the new O-rings to the fuel pressure regulator and fuel pipe.
- Apply thin coat of the engine oil to the O-rings.

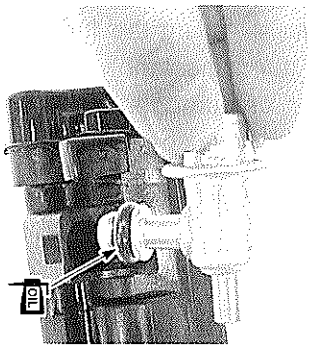

CAUTION

Use the new O-rings to prevent fuel leakage.

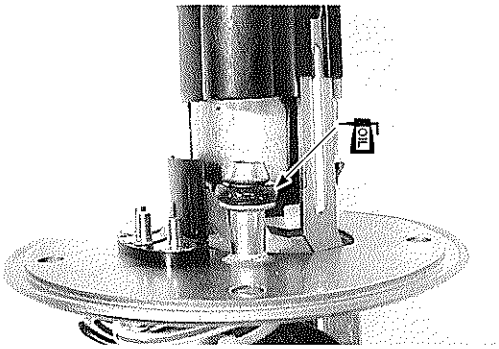

- Tighten the screws together with the lead wire terminals.

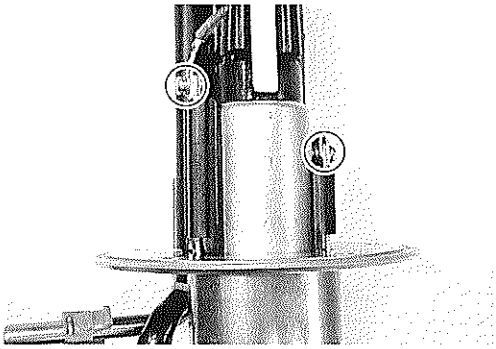

- Tighten the nuts together with the lead wire terminals.
  Ⓐ..... ⊕ terminal for fuel pump
  Ⓑ..... ⊕ terminal for fuel level gauge
  Ⓒ..... ⊖ terminal for fuel level gauge
- Install the fuel level gauge.

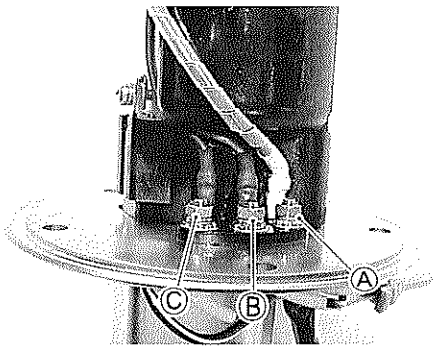

- Install the new O-ring and apply grease to it.

⚠ WARNING

The O-ring must be replaced with a new one to prevent fuel leakage.

99000-25030: SUZUKI SUPER GREASE "A" (USA)
99000-25010: SUZUKI SUPER GREASE "A" (Others)

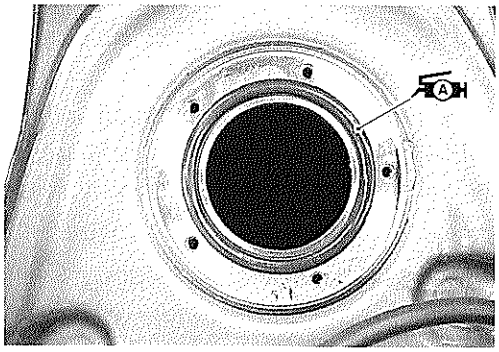

- When installing the fuel pump assembly, first tighten all the fuel pump assembly mounting bolts lightly in the ascending order of numbers, and then tighten them to the specified torque in the above tightening order

Fuel pump mounting bolt: 10 N·m (1.0 kgf-m, 7.3 lb-ft)

NOTE:

Apply a small quantity of the THREAD LOCK "1342" to the thread portion of the fuel pump mounting bolt.

99000-32050: THREAD LOCK "1342"

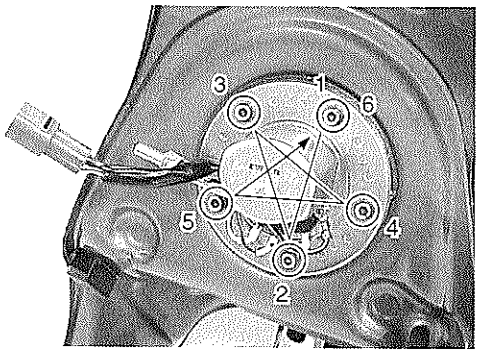

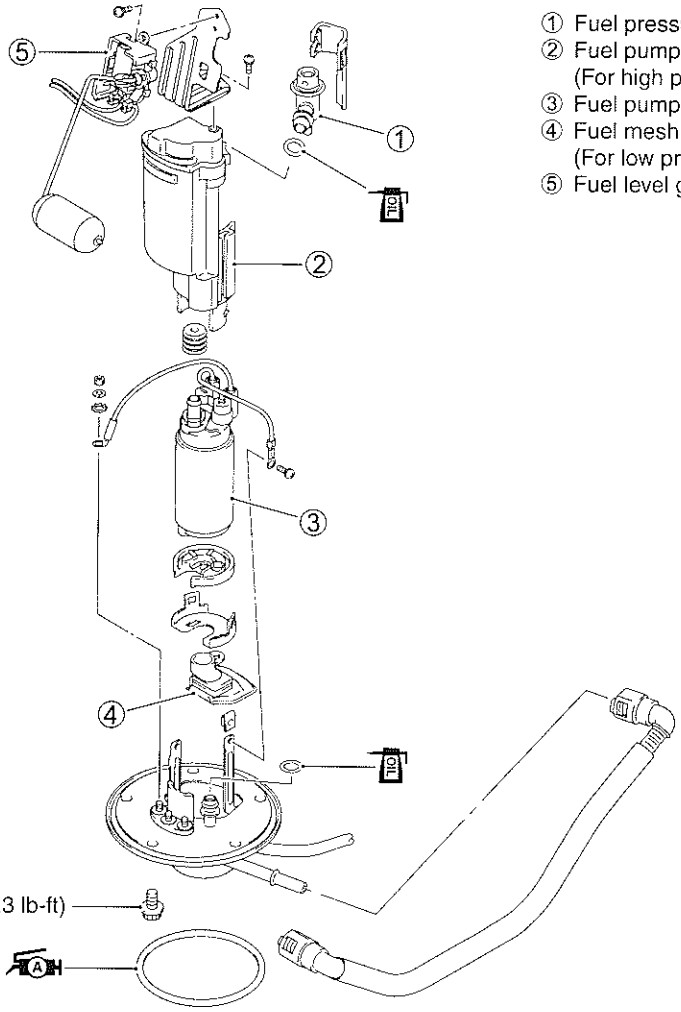

① Fuel pressure regulator
② Fuel pump case/Fuel filter cartridge (For high pressure)
③ Fuel pump
④ Fuel mesh filter (For low pressure)
⑤ Fuel level gauge

THROTTLE BODY AND STV ACTUATOR

CONSTRUCTION

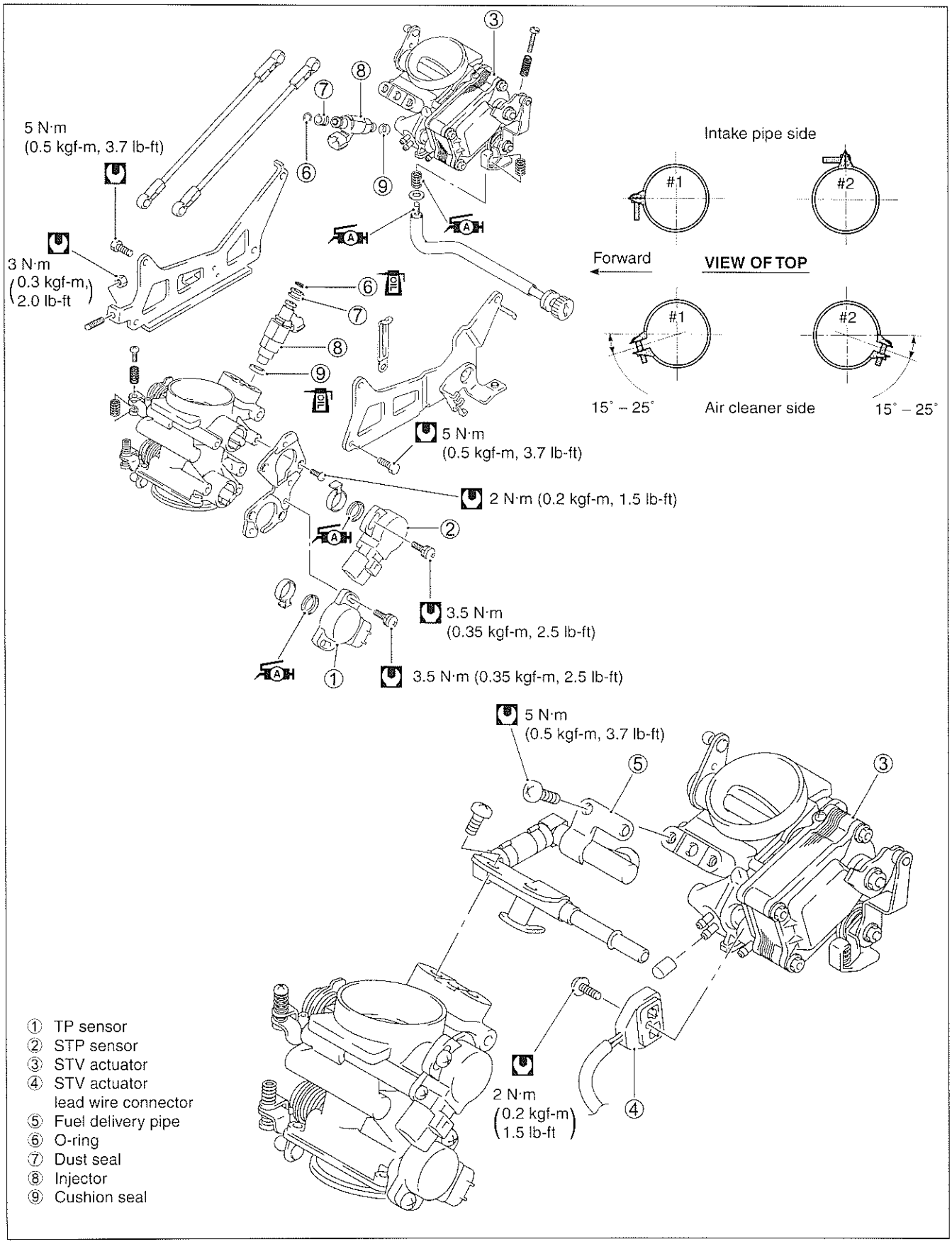

THROTTLE BODY REMOVAL

- Remove the fuel tank. (☞4-52)
- Loosen the respective throttle body clamp screws (air cleaner side).
- Disconnect the *PAIR solenoid valve lead wire coupler, IAP senor coupler and IAT sensor coupler.
- Disconnect the PAIR hoses from the PAIR solenoid valve.
- Remove the air cleaner box.

* For E-24 model is operated by the vacuum.

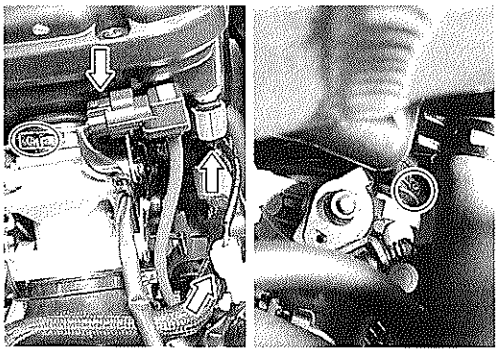

- Loosen the respective throttle body clamp screws (intake pipe side).

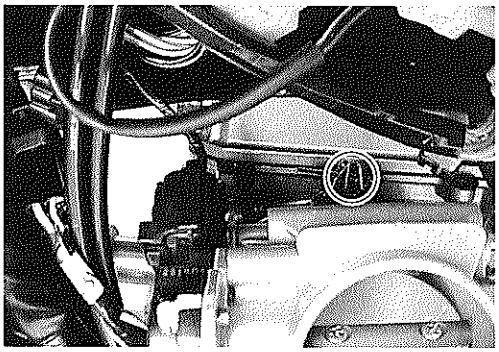

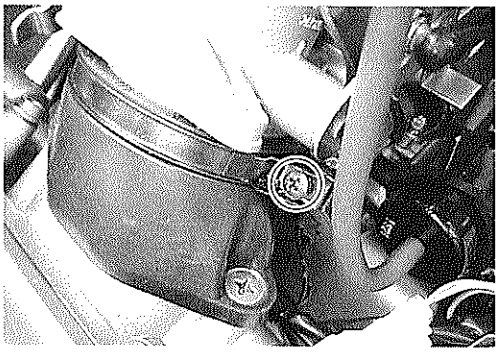

- Disconnect the various lead wire couplers.
  ① STP sensor
  ② TP sensor/Fuel injector
  ③ STVA motor

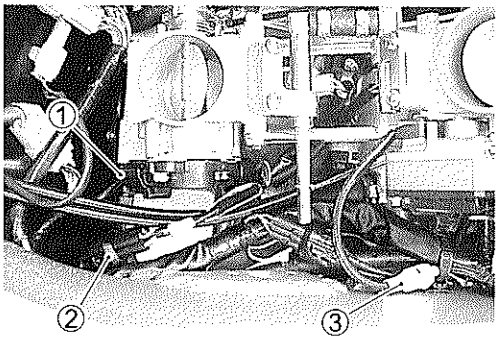

- Disconnect the throttle cables from their drum.
- Dismount the throttle body assembly.

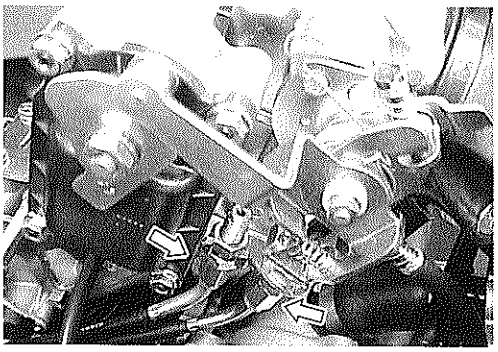

CAUTION

> *** Be careful not to damage the throttle cable bracket and fast idle lever when dismounting or remounting the throttle body assembly.**
> *** After disconnecting the throttle cables, do not snap the throttle valve from full open to full close. It may cause damage to the throttle valve and throttle body.**

THROTTLE BODY DISASSEMBLY

- Remove the IAP sensor vacuum damper and its hose.

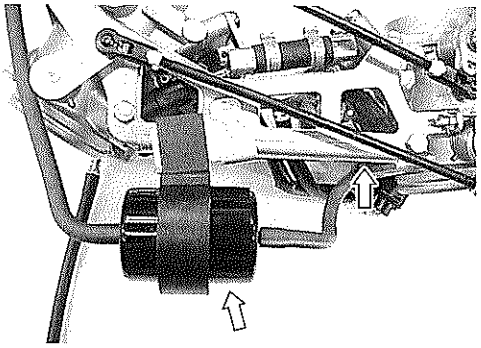

- Remove the throttle link rod ① and secondary throttle link rod ②.

NOTE:
The throttle link rod ① is longer than the secondary throttle link rod ②.

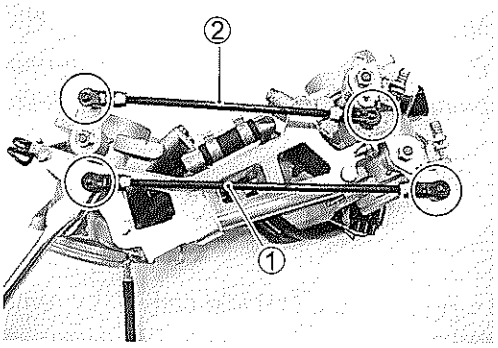

- Remove the fuel delivery pipe.

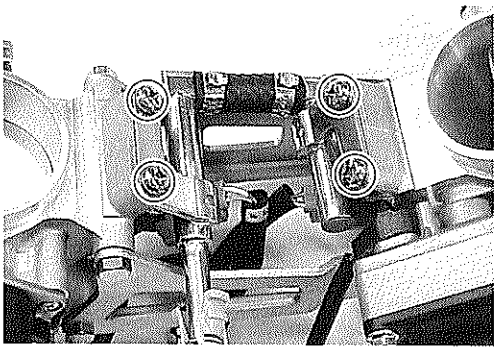

- Remove the fuel injectors.

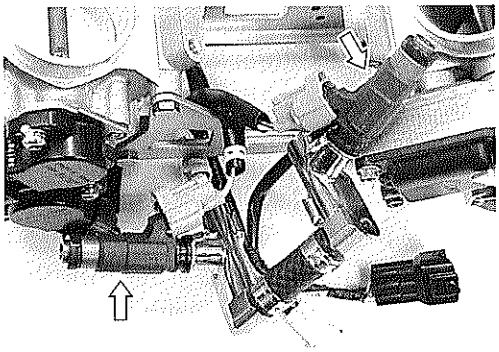

- Disconnect the TPS coupler.

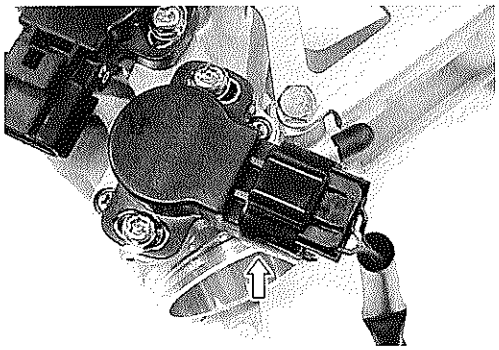

- Remove the TPS and STPS with the special tool.

TOOL 09930-11950: Torx wrench

NOTE:
Prior to disassembly, mark each sensor's original position with a paint or scribe for accurate reinstallation.

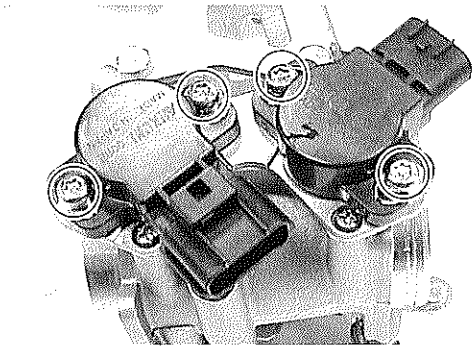

- Remove the fast idle cam ① by removing its mounting nut.

CAUTION

Do not attempt to disassemble the secondary throttle valve actuator assembly. (Except for the cover ②) Actuator is available only as an assembly.

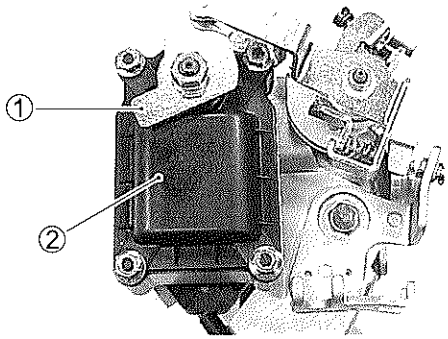

- Remove the STVA motor lead wire connector ③ by removing the screw.

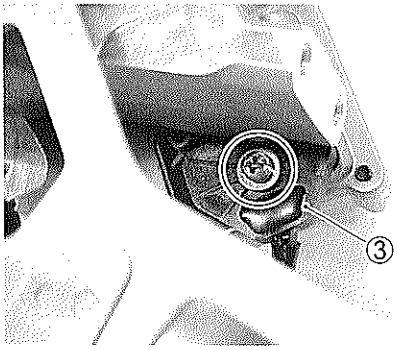

CAUTION

Never remove the STVA motor yoke and motor.

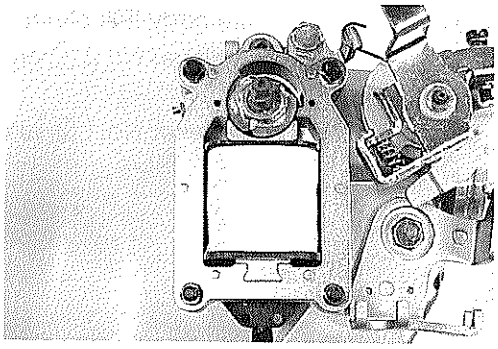

CAUTION

Avoid removing the STV adjuster Ⓐ unless absolutely necessary.

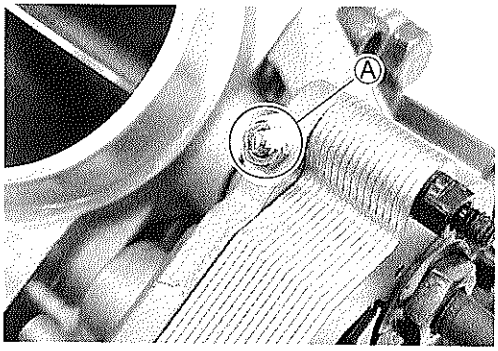

CAUTION

Never remove the throttle valve and secondary throttle valve.

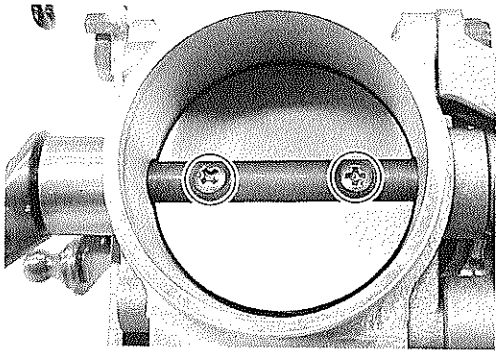

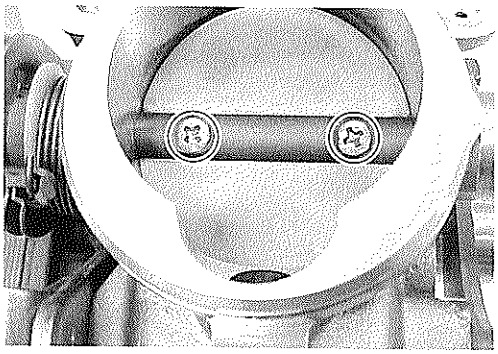

- Remove the throttle body link plates.
- Remove the throttle lever No.2 ① and secondary throttle lever No.2 ②.
- Remove the throttle lever No.1 ③ and secondary throttle lever No.1 ④.

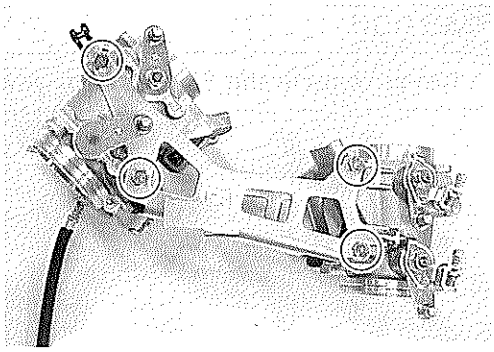

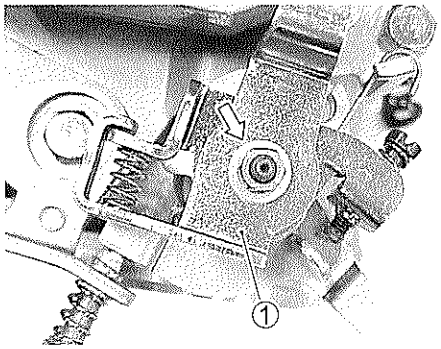

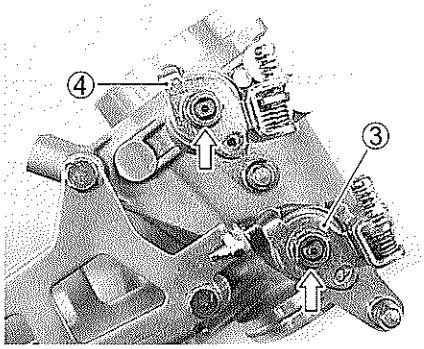

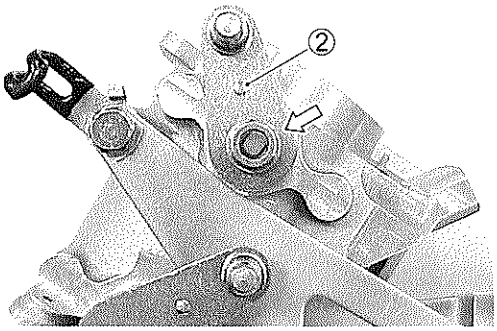

THROTTLE BODY CLEANING

⚠ WARNING

Some carburetor cleaning chemicals, especially dip-type soaking solutions, are very corrosive and must be handled carefully. Always follow the chemical manufacturer's instructions on proper use, handling and storage.

- Clean all passageways with a spray-type carburetor cleaner and blow dry with compressed air.

CAUTION

Do not use wire to clean passageways. Wire can damage passageways. If the components cannot be cleaned with a spray cleaner it may be necessary to use a dip-type cleaning solution and allow them to soak. Always follow the chemical manufacturer's instructions for proper use and cleaning of the throttle body components. Do not apply carburetor cleaning chemicals to the rubber and plastic materials.

INSPECTION

Check following items for any damage or clogging.

* O-ring
* Throttle shaft bushing and seal
* Throttle valve
* Secondary throttle valve
* Fuel injector filter
* Injector cushion seal
* Injector dust seal
* Vacuum hose

THROTTLE BODY REASSEMBLY

Reassemble the throttle body in the reverse order of disassembly.

Pay attention to the following points:

- Be careful not to apply grease to the other parts when applying the grease to the shaft.

Ⓐ 99000-25030: SUZUKI SUPER GREASE "A" (USA)
99000-25010: SUZUKI SUPER GREASE "A" (Others)

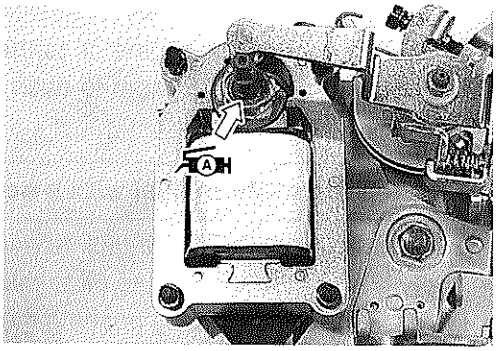

- Install the actuator cover ①.

NOTE:
Before installing the cover ①, apply grease lightly to the dust seal Ⓐ.

Ⓐ 99000-25030: SUZUKI SUPER GREASE "A" (USA)
99000-25010: SUZUKI SUPER GREASE "A" (Others)

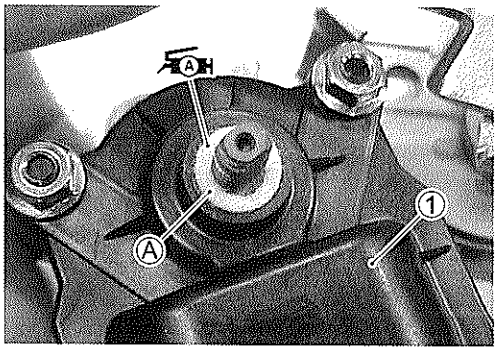

- Apply thread lock "1342" to the actuator cover nuts and tighten them.

1342 99000-32050: THREAD LOCK "1342"

STVA cover nut: 2.0 N·m (0.2 kgf-m, 1.5 lb-ft)

- Install the fast idle cam and tighten its mounting nut.

Fast idle cam mounting nut: 4.0 N·m (0.4 kgf-m, 3.0 lb-ft)

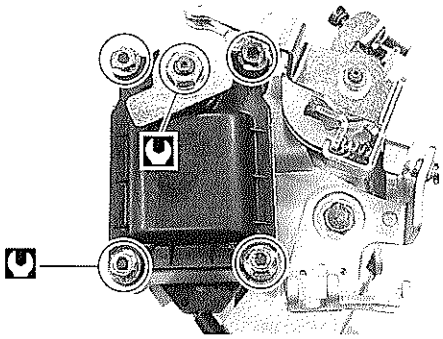

- Tighten the throttle body link plate bolts securely.

Throttle body link plate bolt: 5 N·m (0.5 kgf-m, 3.7 lb-ft)

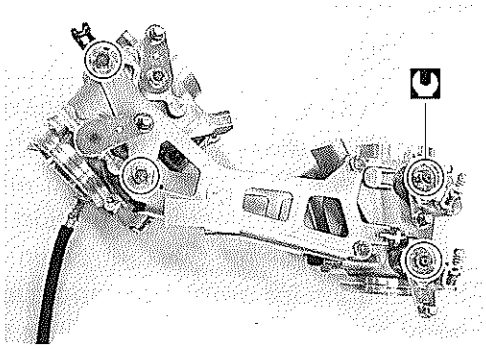

- Position the TV control lever between the TV synchronizing screw Ⓐ and spring as shown.
- Set each TV to the same opening by turning the synchronizing screw Ⓐ.
- Position the STV control lever between the STV balance screw Ⓑ and spring as shown.

NOTE:
Apply grease to the screw end and spring if necessary.

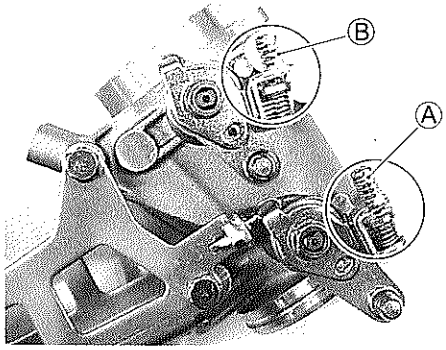

- Apply thin coat of the engine oil to the new fuel injector cushion seals ①, and install them to each fuel injector.

CAUTION

Replace the cushion seal with a new one.

- Install the seal ② and O-ring ③ to each fuel injector.
- Apply thin coat of the engine oil to the new O-rings ③.
- Install the fuel injectors by pushing them straight to each throttle body.

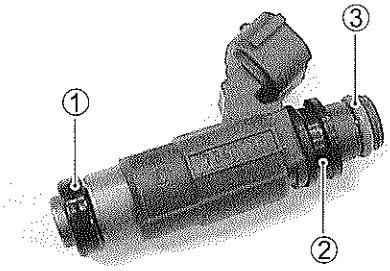

CAUTION

Replace the dust seal and O-ring with the new ones.
Never turn the injector while pushing it.

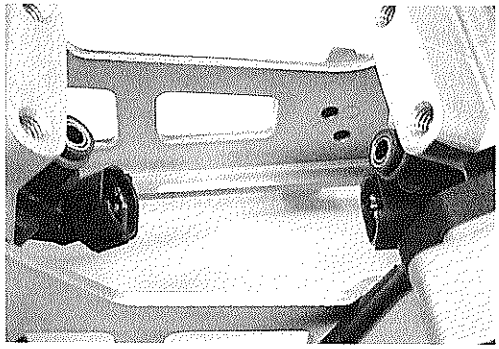

- Connect the fuel injector couplers to the fuel injectors.

NOTE:
The fuel injector coupler No.1 (FRONT) can be distinguished from that of the No.2 (REAR) by the "F" mark.

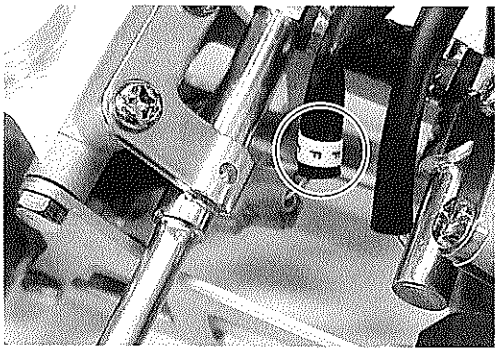

- Install the fuel delivery pipe assembly to the throttle body assembly.

CAUTION

Never turn the fuel injectors while installing them.

- Tighten the fuel delivery pipe mounting screws.

Fuel delivery pipe mounting screw:
5 N·m (0.5 kgf-m, 3.7 lb-ft)

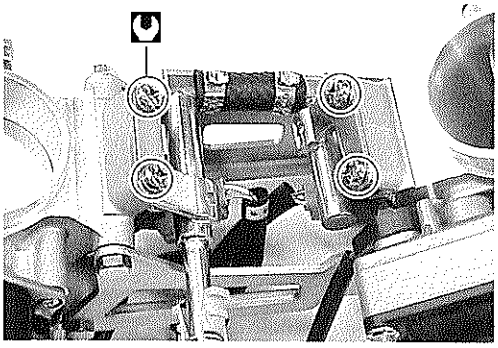

- Install the throttle link rod ① and secondary throttle link rod ②.

NOTE:
The throttle link rod ① is longer than the secondary throttle link rod ②.

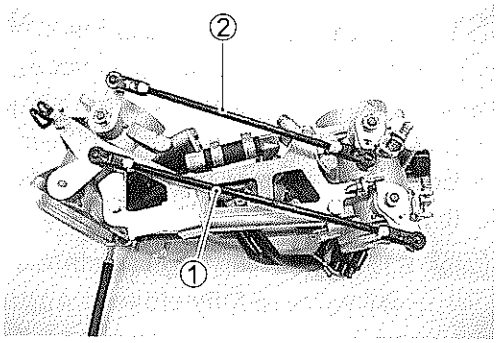

- Apply a small quantity of grease to the shaft ends and seal lips.

99000-25030: SUZUKI SUPER GREASE "A" (USA)
99000-25010: SUZUKI SUPER GREASE "A" (Others)

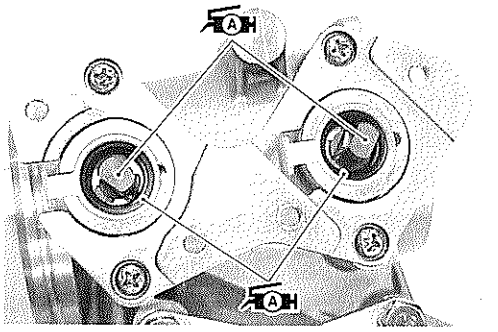

- With the STV fully closed, install the STP sensor.

09930-11950: Torx wrench

STP sensor mounting screw: 3.5 N·m (0.35 kgf-m, 2.5 lb-ft)

NOTE:
STP sensor and TP sensor reassemble each other very closely in external appearance.
Make sure to check the terminal numbers of coupler.
STP sensor: 4-pin TPS sensor: 3-pin

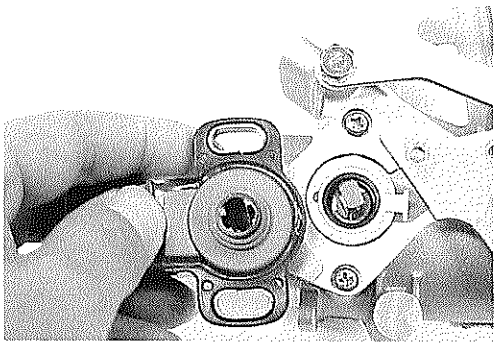

- With the TV fully closed, install the TP sensor.

TOOL 09930-11950: Torx wrench

TP sensor mounting screw: 3.5 N·m (0.35 kgf-m, 2.5 lb-ft)

- Set each STV to the same opening by turning the balance screw ①.

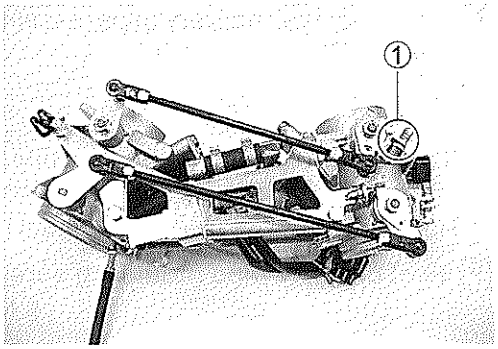

STP SENSOR ADJUSTMENT

If the STP sensor adjustment is necessary, measure the sensor resistance and adjust the STP sensor positioning as follows:

- Disconnect the STP sensor coupler.
- Set the ST valve to fully close position by finger and measure the resistance T_3 and T_4 terminals.

DATA STP sensor setting resistance

ST valve is fully closed: Approx. 1.1 kΩ

(⊕ T_3 – ⊖ T_4)

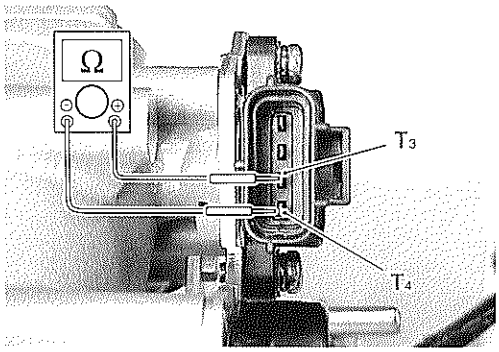

TOOL 09900-25008: Multi circuit tester

Tester knob indication: Resistance (Ω)

- Loosen the STP sensor mounting screws.
- Adjust the STP sensor until resistance is within specification and tighten the STP sensor mounting screws.

TOOL 09930-11950: Torx wrench

STP sensor mounting screw:

3.5 N·m (0.35 kgf-m, 2.5 lb-ft)

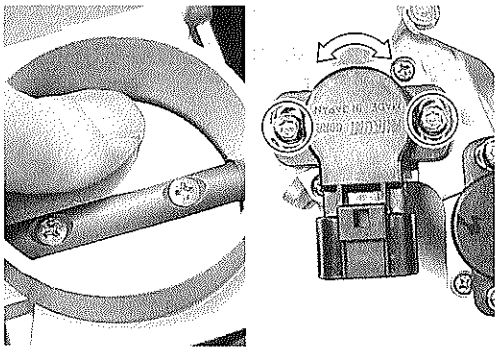

If the measured resistance is not within specification, adjust the STV adjuster Ⓐ as follows:

- Under above condition, turn in or out the STV adjuster Ⓐ until the resistance becomes specified value.
  If the measured resistance is not obtain, replace the STP sensor with a new one, and adjust the STP sensor positioning again.

NOTE:
To adjust the TP sensor, install the throttle body assembly to the engine and after warming up engine. (☞ 4-64)

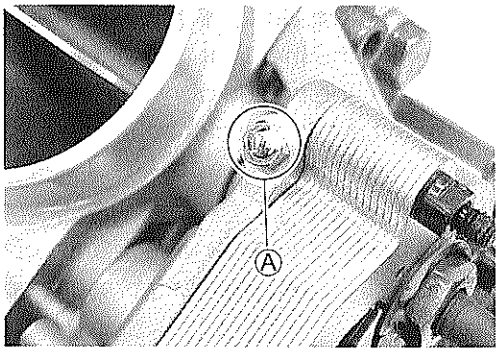

THROTTLE BODY INSTALLATION

Installation is in the reverse order of removal. Pay attention to the following points:

- Connect the throttle pulling cable and throttle returning cable to the throttle cable drum.
- Adjust the throttle cable play with the cable adjusters.
  Refer to page 2-16 for details.

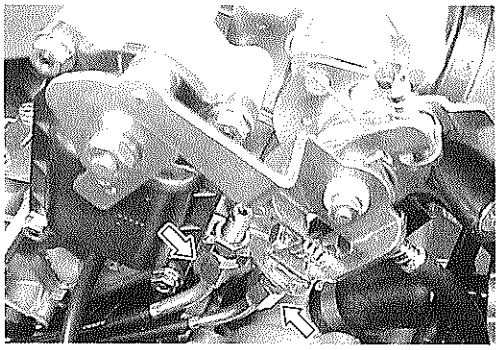

TP SENSOR ADJUSTMENT

- After checking or adjusting the throttle valve synchronization, adjust the TP sensor positioning as follows:
- After warming up engine, adjust the idling speed to 1 200 ± 100 rpm.
- Stop the warmed-up engine and connect the special tool to the dealer mode coupler. (☞ 4-24)

TOOL 09930-82710: Mode select switch

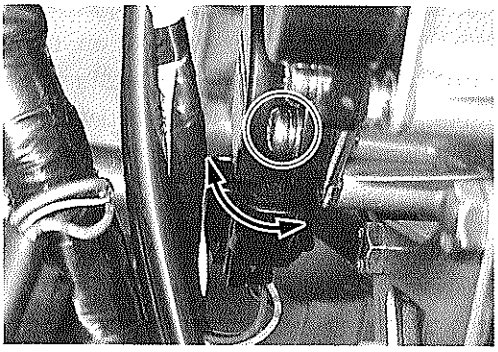

- If the TP sensor adjustment is necessary, loosen the TP sensor mounting screws.
- Turn the TP sensor and bring the line to middle.
- Tighten the TP sensor mounting screws.

TOOL 09930-11950: Torx wrench

TP sensor mounting screw: 3.5 N·m (0.35 kgf-m, 2.5 lb-ft)

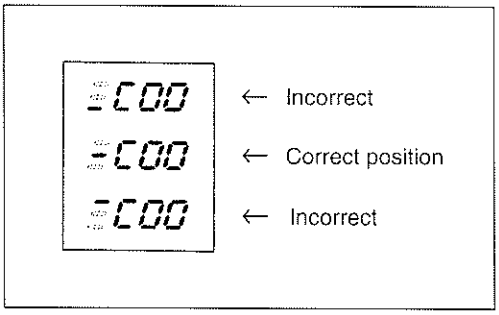

FUEL INJECTOR INSPECTION

The fuel injector can be checked without removing it from the throttle body.
Refer to page 4-47 for details.

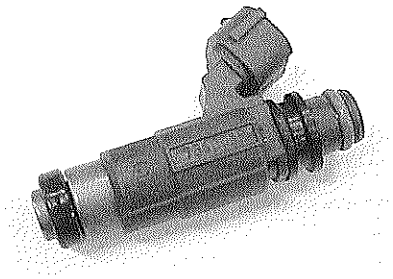

FUEL INJECTOR REMOVAL

- Remove the fuel tank and air cleaner box. (☞4-52 and -60)
- Remove the fuel delivery pipe assembly. (☞4-61)
- Disconnect the injector couplers.
- Remove the fuel injectors No.1 and No.2. (☞4-62)

INSPECTION

Check fuel injector filter for evidence of dirt and contamination. If present, clean and check for presence of dirt in the fuel lines and fuel tank.

FUEL INJECTOR INSTALLATION

- Apply thin coat of the engine oil to new injector cushion seals and O-rings.
- Install the injector by pushing it straight to the throttle body. Never turn the injector while pushing it. (☞4-67)

FAST IDLE INSPECTION

The fast idle system is automatic type.

When the fast idle cam is turned by the secondary throttle valve actuator, the cam pushes the lever on the throttle valve shaft causing the throttle valve to open and raise the engine speed. When the engine has warmed up, depending on the water temperature and ambient temperature as shown in the following table, the fast idle is cancelled allowing the engine to resume idle speed.

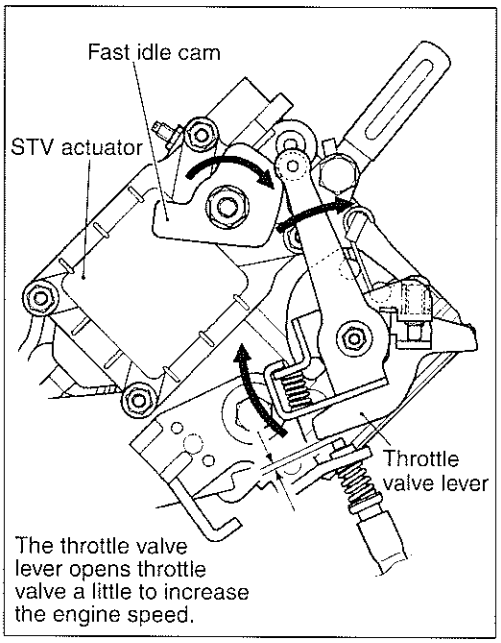

DATA

Ambient Temp.	Fast idle rpm	Fast idle cancelling Water Temp.
– 5 °C (– 23 °F)	1 800 – 2 400 rpm	50 – 60 °C (122 – 140 °F)
15 °C (59 °F)	1 700 – 2 300 rpm	45 – 55 °C (113 – 131 °F)
25 °C (77 °F)	1 500 – 2 100 rpm	45 – 55 °C (113 – 131 °F)

If, under the above conditions, the fast idle cannot be cancelled, the cause may possibly be short-circuit in engine coolant temperature sensor or wiring connections or maladjusted fast idle.

FAST IDLE ADJUTMENT

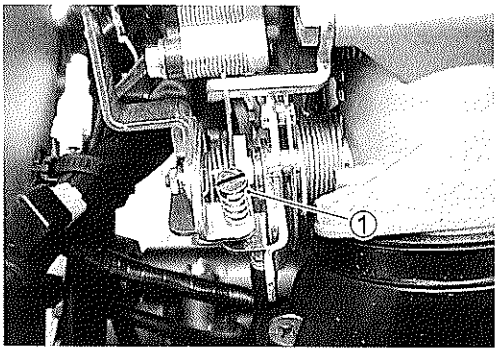

- Remove the fuel tank and air cleaner box. (☞4-52 and -60)
- Disconnect the STVA lead wire coupler and turn the ignition switch ON.
- Open the STV gradually with the finger and just when the STP sensor output voltage has become 3.0 V. With the STV held at this position, measure the output voltage of the TP sensor.
- If the TP sensor output voltage is out of specification, turn the fast idle adjusting screw ① and adjust the output voltage to specification (1.158 V).

DATA TP sensor output voltage: 1.158 V

TOOL 09900-25008: Multi circuit tester

Tester knob indication: Voltage (⎓)

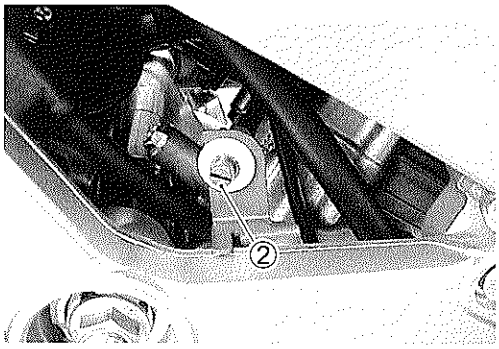

- After adjusting the fast idle speed, set the idle speed to 1 100 – 1 300 rpm by turning the throttle stop screw ②.

THROTTLE VALVE SYNCHRONIZATION

Check and adjust the throttle valve synchronization between two cylinders.

TOOL 09913-13121: Vacuum balancer gauge

NOTE:
Before balancing the throttle valves, calibrate each vacuum balancer gauge.

- Remove the fuel tank and air cleaner box. (☞4-52 and -60)
- Remove the rubber caps ① from the vacuum nipples on the respective throttle bodies and connect the vacuum balancer gauge hoses to each vacuum nipple.

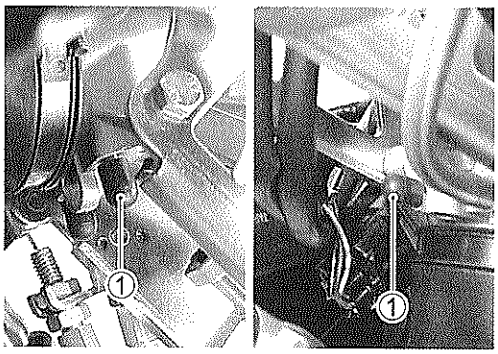

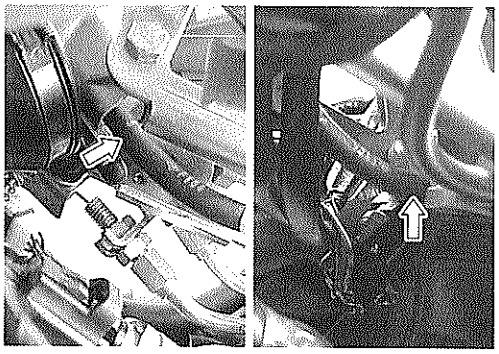

- Connect the removed IAT sensor ② and IAP sensor ③.

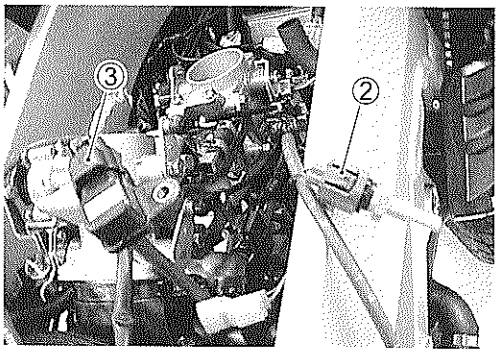

- Connect the fuel tank and fuel delivery pipe with the fuel feed hose (special tool).

TOOL 09940-40220: Fuel pressure gauge hose attachment

- Connect the fuel pump lead wire coupler.

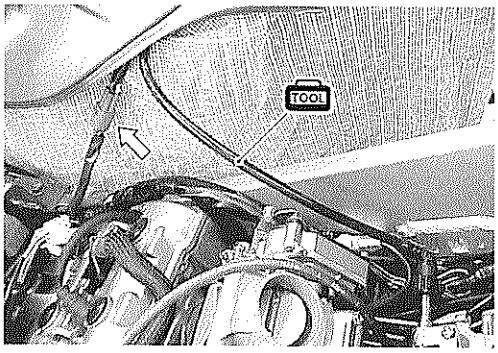

- Start up the engine and run it in idling condition for warming up.
- Stop the warmed-up engine.
- Connect a tachometer and start up the engine.
- Bring the engine rpm to 1 200 rpm by the throttle stop screw.
- Check the vacuum of the two cylinders and balance the two throttle valves with the synchronizing screw. (☞4-66)

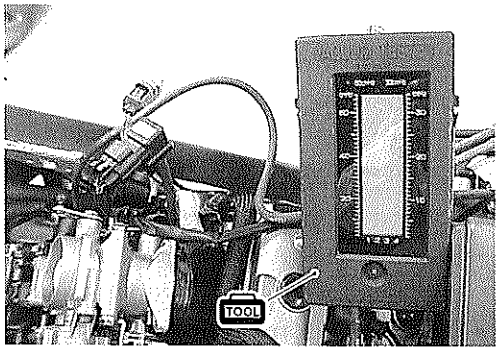

NOTE:

** During balancing the throttle valves, always set the engine rpm at 1 200 rpm, using throttle stop screw.*

** After balancing the two valves, set the idle rpm to 1 200 rpm.*

CAUTION

Avoid drawing dirt into the throttle body while running the engine without air cleaner box. Dirt drawn into the engine will damage the internal engine parts.

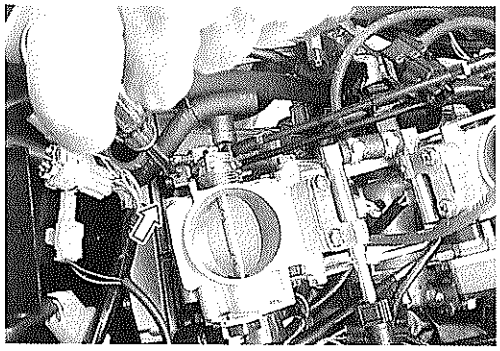

For vacuum balancer gauge (09913-13121)

The vacuum gauge is positioned approx. 30° from the horizontal level, and in this position the two balls should be within one ball dia. If the difference is larger than one ball, turn the synchronizing screw on the throttle body and bring the ball to the same level.

A correctly adjusted throttle valve synchronization has the balls in the No.1 and No.2 at the same level.

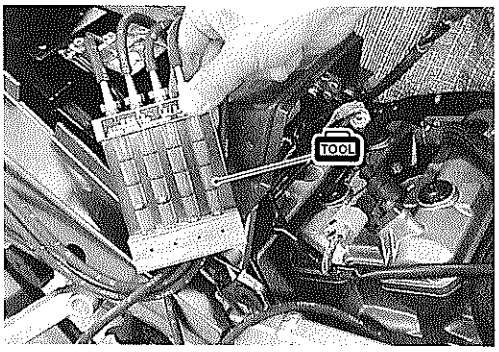

NOTE:

Make sure that the throttle lever should have a gap Ⓐ (between the throttle lever and throttle lever stopper screw) during synchronization.

DATA Throttle lever gap Ⓐ: 0.31 mm (0.012 in)

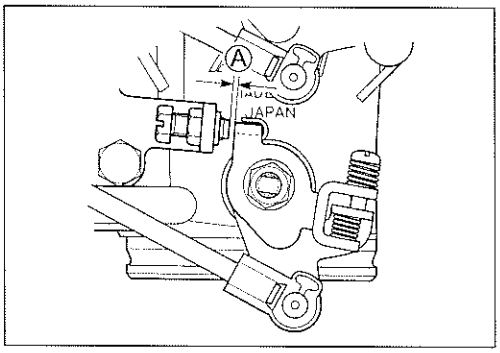

THROTTLE CABLE ADJUSTMENT

NOTE:

Minor adjustment can be made by the throttle grip side adjuster. (☞2-15)

SENSOR

IAP SENSOR INSPECTION

The intake air pressure sensor is located at the rear side of the air cleaner box. (☞4-34)

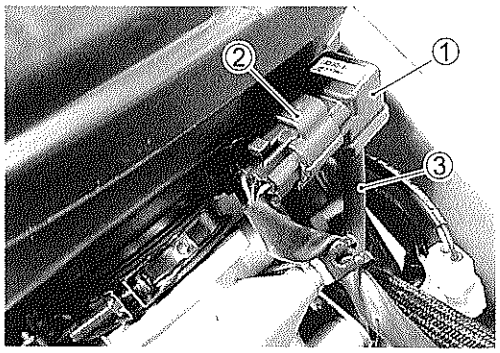

IAP SENSOR REMOVAL/INSTALLATION

- Lift and support the fuel tank. (☞4-51)
- Remove the IAP sensor ① by removing the screw and disconnect the coupler ② and vacuum hose ③.
- Installation is in the reverse order of removal.

TP SENSOR INSPECTION

- The throttle position sensor is installed on the No.1 throttle body. (☞4-36)

TP SENSOR REMOVAL/INSTALLATION

- Remove the fuel tank and air cleaner box. (☞4-52 and -60)
- Remove the TP sensor setting screws ① and disconnect the coupler.
- Install the TP sensor to the No.1 throttle body. Refer to page 4-68 for TP sensor setting procedure.

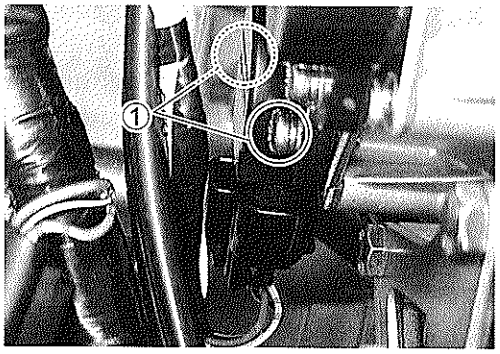

STP SENSOR INSPECTION

The secondary throttle position sensor is installed on the No.1 throttle body. (☞4-44)

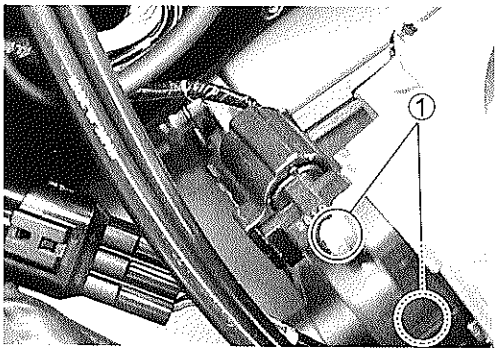

STP SENSOR REMOVAL/INSTALLATION

- Remove the fuel tank and air cleaner box. (☞4-52 and -60)
- Remove the STP sensor setting screws ① and disconnect the coupler.
- Install the STP sensor to the No.1 throttle body. Refer to pages 4-67 and -68 for STP sensor setting procedure.

CKP SENSOR INSPECTION

The signal rotor is mounted on the generator rotor and crankshaft position sensor (Pick-up coil) is installed in the generator cover. (☞4-33)

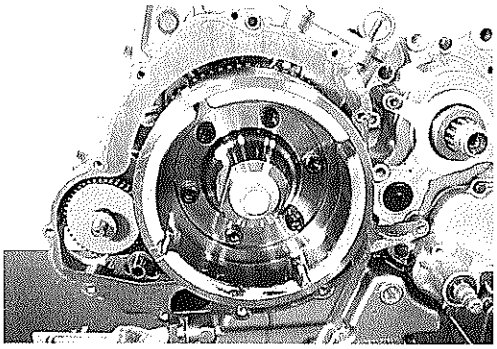

CKP SENSOR REMOVAL/INSTALLATION

(☞3-77)

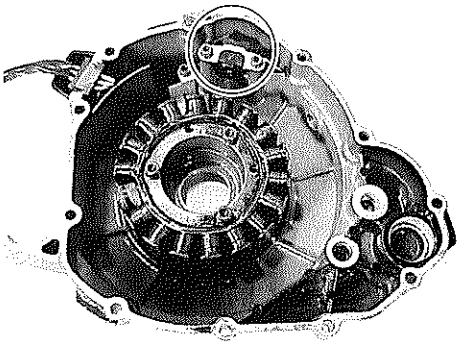

CMP SENSOR INSPECTION

The signal rotor is installed on the No.2 intake camshaft, and the camshaft position sensor (Pick-up coil) is installed on the No.2 cylinder head cover. (☞4-32)

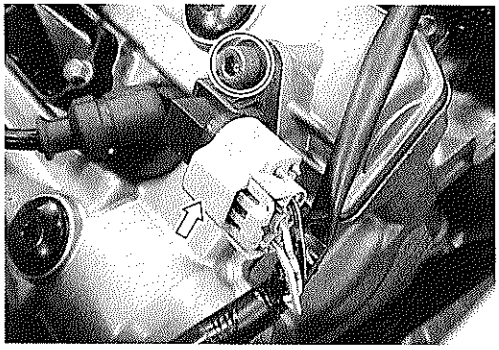

CMP SENSOR REMOVAL/INSTALLATION

- Lift and support the fuel tank. (☞4-51)
- Disconnect the coupler and remove the CMP sensor.
  Installation is in the reverse order of removal. (☞3-34)

IAT SENSOR INSPECTION

The intake air temperature sensor is installed at the rear side of the air cleaner box. (☞4-39)

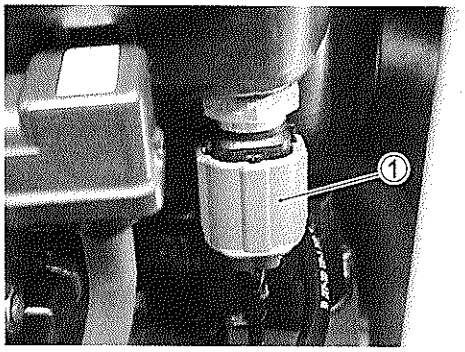

IAT SENSOR REMOVAL/INSTALLATION

- Lift and support the fuel tank. (☞4-51)
- Disconnect the IAT sensor coupler ① and remove the IAT sensor from the air cleaner box.
- Installation is in the reverse order of removal.

IAT sensor: 18 N·m (1.8 kgf-m, 13.0 lb-ft)

ECT SENSOR INSPECTION

The engine coolant temperature sensor is installed on the thermostat case. (☞4-38 and 5-10)

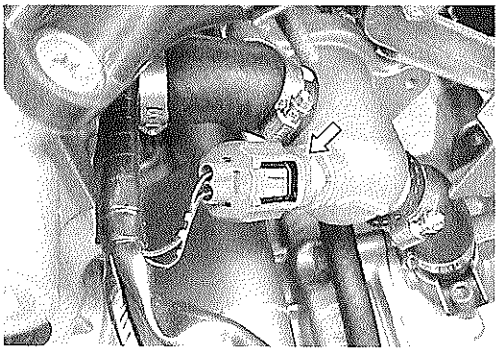

ECT SENSOR REMOVAL/INSTALLATION

(☞5-10)

AP SENSOR INSPECTION

The atmospheric pressure sensor is located under the seat. (☞4-40)

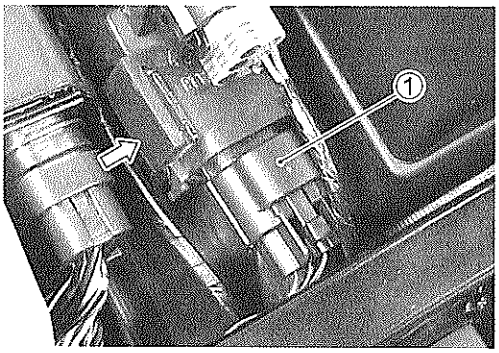

AP SENSOR REMOVAL/INSTALLATION

- Remove the seat. (☞6-4)
- Disconnect the coupler ① and remove the AP sensor.
- Installation is in the reverse order of removal.

TO SENSOR INSPECTION

The tip over sensor is located above the AP sensor. (☞4-42)

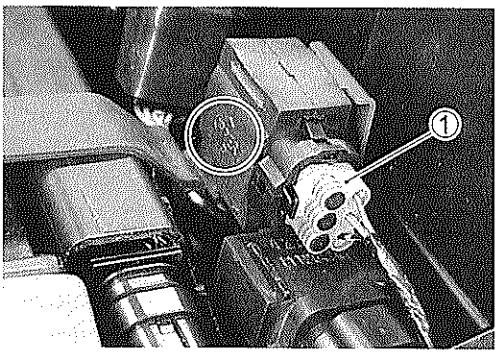

TO SENSOR REMOVAL/INSTALLATION

- Remove the seat. (☞6-4)
- Disconnect the coupler ① and remove the TO sensor.
- Installation is in the reverse order of removal.

NOTE:
When installing the TO sensor, bring the "UPPER" letter on it to the top.

HO_2 SENSOR INSPECTION (Except for USA)

The heated oxygen sensor is installed on the exhaust pipe. (☞4-49)

HO_2 SENSOR REMOVAL/INSTALLATION

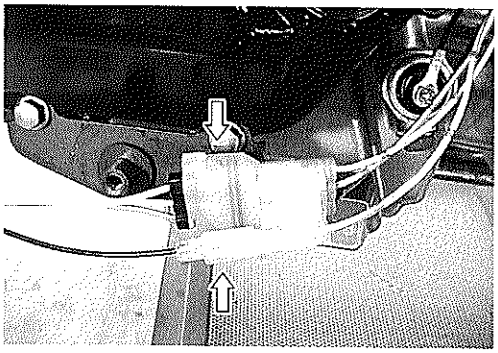

- Remove the engine under cover.
- Disconnect the HO_2 sensor lead wire couplers.
- Remove the HO_2 sensor unit.

⚠ WARNING

Do not remove the HO_2 sensor while it is hot.

CAUTION

Be careful not to expose it to excessive shock.
Do not use an impact wrench while removing or installing the HO_2 sensor unit.
Be careful not to twist or damage the sensor lead wire.

- Installation is in the reverse order of removal.

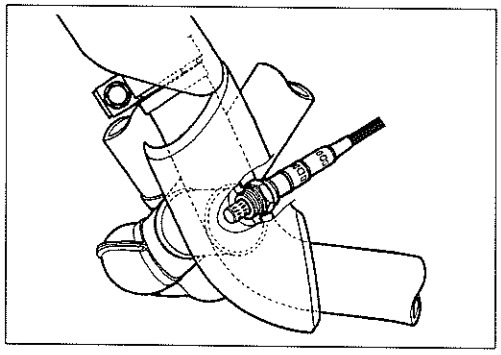

CAUTION

Do not apply oil or other materials to the sensor air hole.

- Tighten the sensor unit to the specified torque.

HO_2 SENSOR: 47.5 N·m (4.75 kgf-m, 34.3 lb-ft)

- Route the HO_2 sensor lead wire into the frame. (☞8-16)
- Connect the HO_2 sensor couplers.

COOLING AND LUBRICATION SYSTEM

CONTENTS

ENGINE COOLANT 5- 2
COOLING CIRCUIT 5- 3
COOLING CIRCUIT INSPECTION 5- 3
RADIATOR 5- 4
REMOVAL 5- 4
INSPECTION AND CLEANING 5- 5
INSTALLATION 5- 6
RADIATOR RESERVOIR TANK 5- 6
REMOVAL/INSTALLATION 5- 6
RADIATOR CAP 5- 6
INSPECTION 5- 6
WATER HOSE 5- 7
INSPECTION 5- 7
COOLING FAN 5- 8
REMOVAL 5- 8
INSPECTION 5- 8
INSTALLATION 5- 8
COOLING FAN THERMO-SWITCH 5- 9
REMOVAL 5- 9
INSPECTION 5- 9
INSTALLATION 5- 9
ENGINE COOLANT TEMPERATURE SENSOR 5-10
REMOVAL 5-10
INSPECTION 5-10
INSTALATION 5-10
THERMOSTAT 5-11
REMOVAL 5-11
INSPECTION 5-11
INSTALLATION 5-12
WATER PUMP 5-13
REMOVAL AND DISASSEMBLY 5-13
INSPECTION 5-15
REASSEMBLY AND INSTALLATION 5-15
LUBRICATION SYSTEM 5-18
OIL PRESSURE 5-18
OIL FILTER 5-18
OIL PRESSURE REGULATOR 5-18
OIL STRAINER 5-18
OIL JET 5-18
OIL PUMP 5-18
OIL PRESSURE SWITCH 5-18
OIL COOLER 5-18
REMOVAL 5-18
INSPECTION AND CLEANING 5-19
INSTALLATION 5-19
ENGINE LUBRICATION FLOW CHART 5-20
ENGINE LUBRICATION CIRCUIT 5-21

ENGINE COOLANT

At the time of manufacture, the cooling system is filled with a 50:50 mixture of distilled water and ethylene glycol anti-freeze. This 50:50 mixture will provide the optimum corrosion protection and excellent heat protection, and will protect the cooling system from freezing at temperatures above –31°C (–24°F).
If the motorcycle is to be exposed to temperatures below –31°C (–24°F), this mixing ratio should be incleased up to 55% or 60% according to the figure.

Anti-freeze density	Freezing point
50%	–31°C (–24°F)
55%	–40°C (–40°F)
60%	–55°C (–67°F)

CAUTION

- **Use a high quality ethylene glycol base anti-freeze, mixed with distilled water. Do not mix an alcohol base anti-freeze and different brands of anti-freeze.**
- **Do not rut in more than 60% anti-freeze or less than 50%. (Refer to Right figure.)**
- **Do not use a radiator anti-leak additive.**

50% Engine coolant including reserve tank capacity

Anti-freeze	1 100 ml (2.3/1.9 US/Imp.pt)
Water	1 100 ml (2.3/1.9 US/Imp.pt)

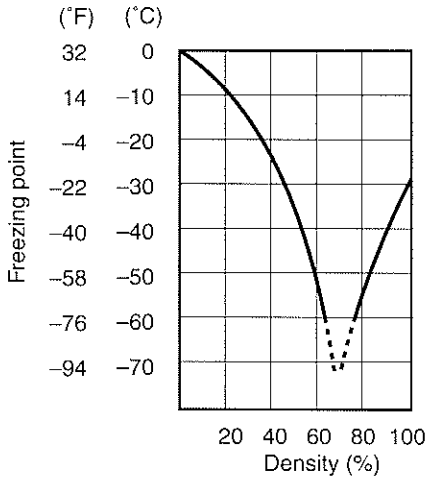

Fig.1 Engine coolant density-freezing point curve.

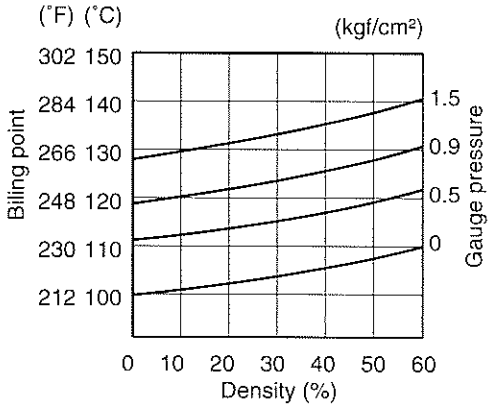

Fig.2 Engine coolant density-boiling point curve.

⚠ WARNING

- **You can be injured by scalding fluid or steam if you open the radiator cap when the engine is hot. After the engine cools, wrap a thick cloth around cap and carefully remove the cap by turning it a quarter turn to allow pressure to escape and then turn the cap all the way off.**
- **The engine must be cool before servicing the cooling system.**
- **Coolant is farmful;**
  - **If the comes in contact with skin or eyes, flush with water.**
  - **If swallowed accidentally, induce vomiting and call physecian immediately.**
  - **Keep it away from chiledren.**

COOLING CIRCUIT

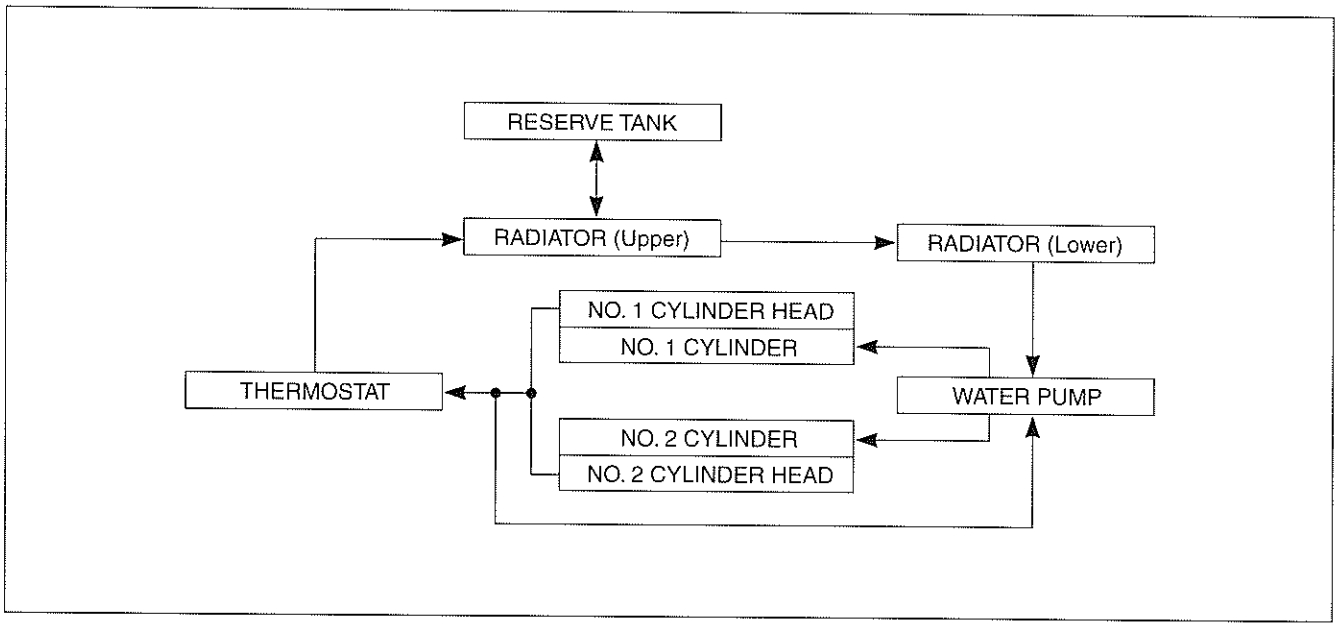

COOLING CIRCUIT INSPECTION

Before removing the radiator and draining the engine coolant, inspect the cooling circuit for tightness.

- Remove the cowling. (☞6-6)
- Remove the radiator cap ① and connect the tester ② to the filler.

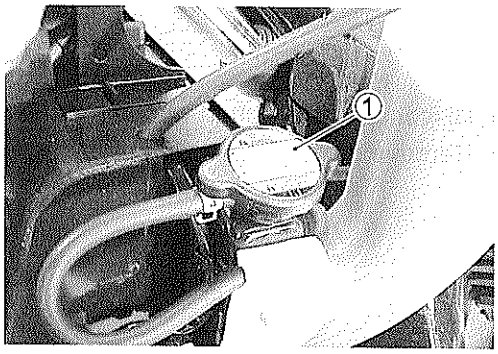

⚠ WARNING

Do not remove the radiator cap when the engine is hot.

- Give a pressure of about 110 kPa (1.1 kgf/cm², 15.6 psi) and see if the system holds this pressure for 10 seconds.
- If the pressure should fall during fhis 10-second interval, it means that there is a leaking point in the system. In such a case, inspect the entire system and replace the leaking component or part.

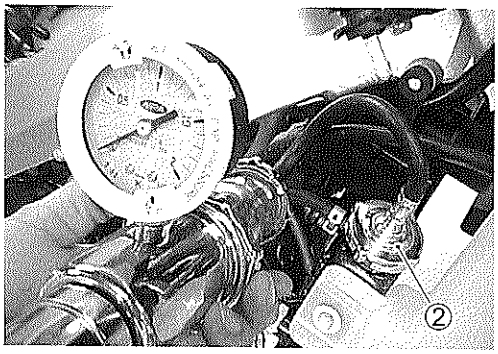

⚠ WARNING

When removing the radiator cap tester, put a rag on the filler to prevent spouting of engine coolant.

CAUTION

Do not allow the pressure to exceed the radiator cap release pressure, or the radiator can be damaged.

RADIATOR

REMOVAL

- Remove the cowling. (☞6-6)
- Drain engine coolant. (☞2-18)
- Disconnect the uper and lower radiator hoses from the radiator.

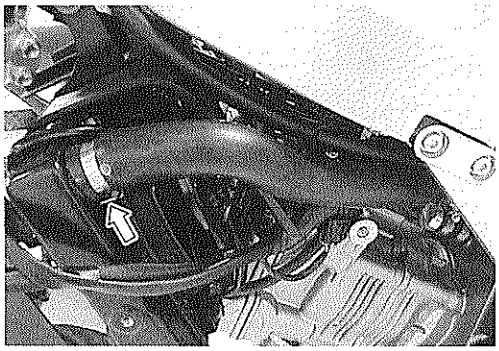

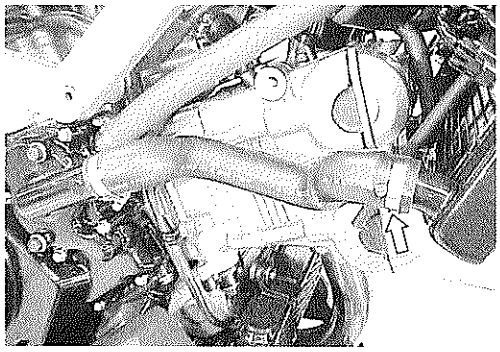

- Disconnect the siphon hose from the radiator.
- Remove the reservoir tank by removing its mounting bolt.

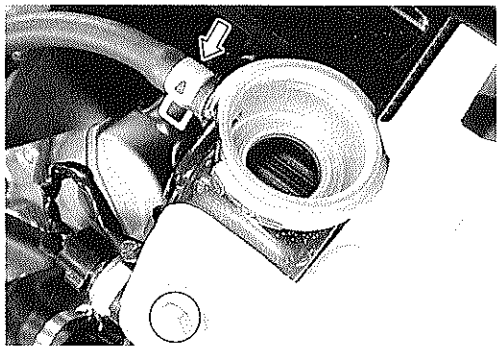

- Disconnect the horn lead wires.

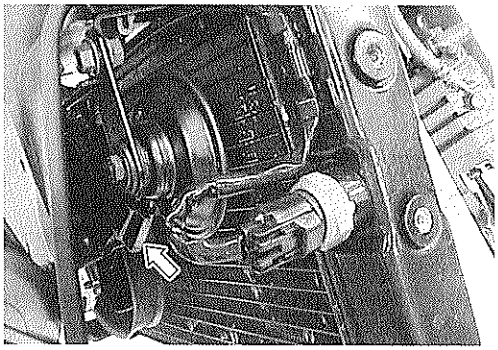

- Disconnect the cooling fan motor and its thermo-switch lead wire coupler ①.
- Remove the radiator by removing its mounting bolts.

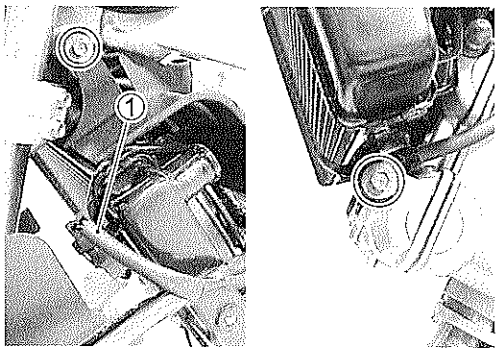

- With the fasteners unlocked, remove the radiator shroud ①.

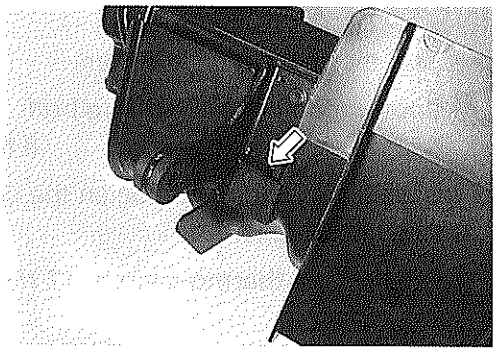

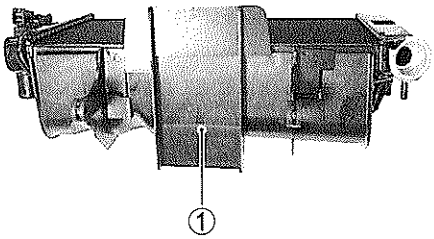

- Remove the cooling fan and horn.
- Remove the cooling fan thermo-switch.

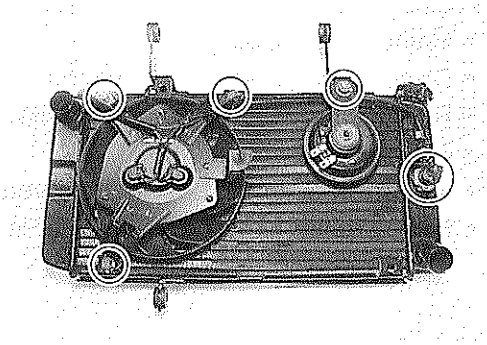

INSPECTION AND CLEANING

- Road dirt or trash stuck to the fins must be removed.
- Use of compressed air is recommended for this cleaning.

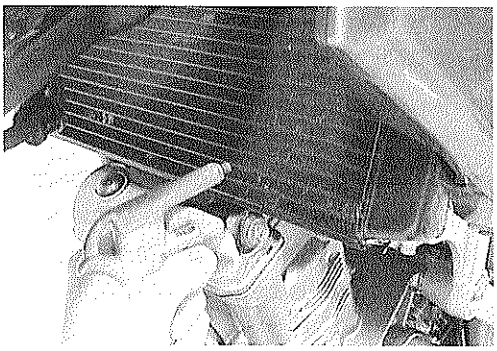

- Fins bent down or dented can be repaired by straightening them with the blade of a small screwdriver.

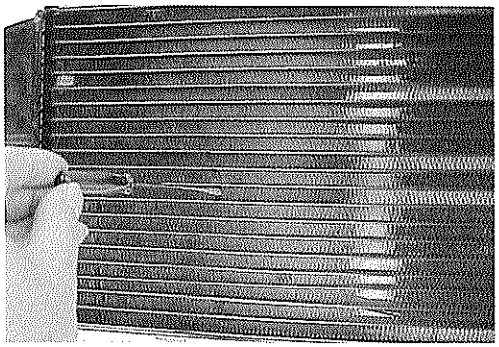

INSTALLATION

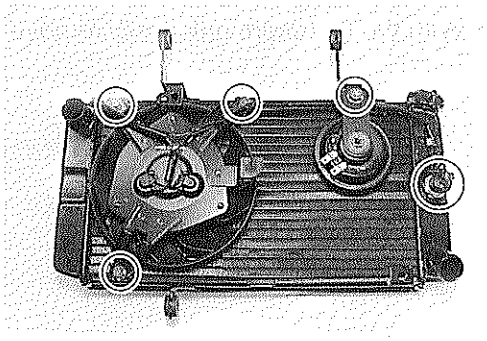

- Install the cooling fan and horn.

Cooling fan/horn mounting bolt:
8 N·m (0.8 kgf-m, 6.0 lb-ft)

- Install a new O-ring and tigten the cooling fan thermo-switch to the specified torque.

Cooling fan thermo-switch: 17 N·m (1.7 kgf-m, 12.5 lb-ft)

- Install the radiator in the reverse order of removal.
- Route the radiator hoses.
- Install the drain plug with a new sealing washer.
- Pour engine coolant. (☞2-18)
- Bleed air from the cooling circuit. (☞2-19)
- Install the cowling.

RADIATOR RESERVOIR TANK

REMOVAL/INSTALLATION

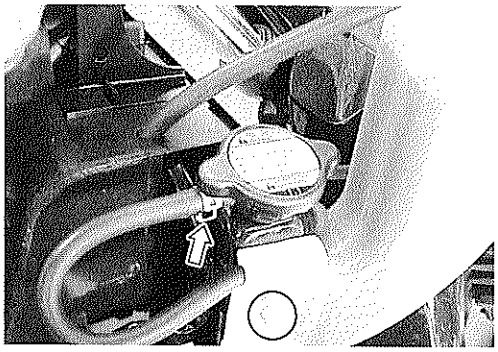

- Remove the cowling.
- Disconnect the siphone hose from the radiator.
- Remove the reservoir tank by removing its mouning bolt.
- Drain engine coolant.
- Install the reservoir tank in the reverse order of removal.
- Fill the reservoir tank to the upper level.

RADIATOR CAP

INSPECTION

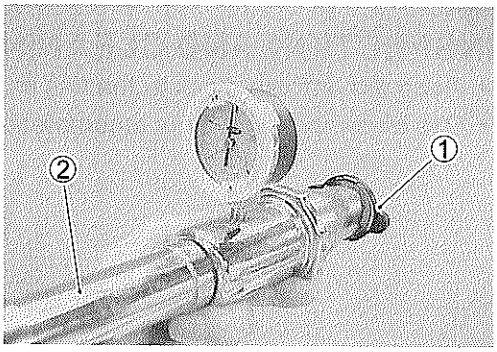

- Remove the cowling.
- Fit the cap ① to the radiator cap tester ②.
- Build up pressure slowly by operating the tester. Make sure that the pressure build-up stops at 95 – 125 kPa (0.95 – 1.25 kgf/cm², 13.5 – 17.8 psi) and that, with the tester held stand-still, the cap is capable of holding that pressure for at least 10 seconds.
- Replace the cap if it is found not to satisfy either of these two requirements.

DATA Radiator cap valve opening pressure
Standard: 95 – 125 kPa
(0.95 – 1.25 kgf/cm², 13.5 – 17.8 psi)

WATER HOSE

INSPECTION

- Remove the cowling. (☞6-6)
- Any water hose found in a cracked condition or flattened or water leaked must be replaced.
- Any leakage from the connecting section should be corrected by proper tightening.

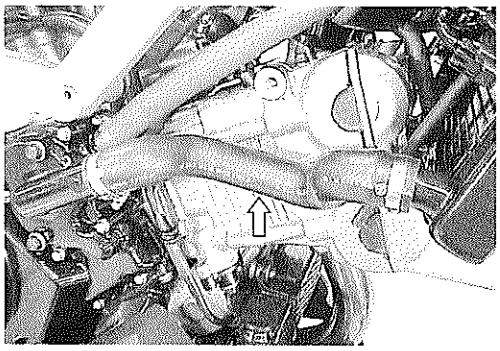

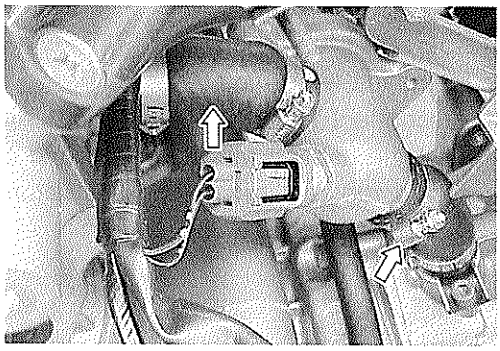

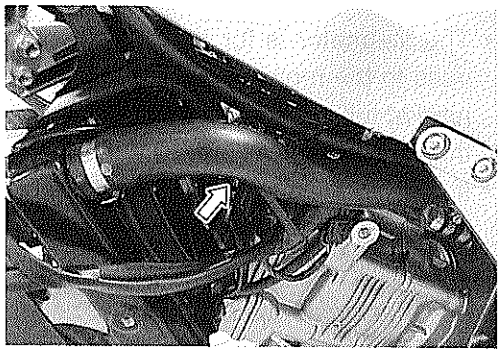

COOLING FAN

REMOVAL

- Remove the cowling. (☞6-6)
- Drain engine coolant. (☞2-18)
- Remove the radiator. (☞5-4)
- Remove the cooling fan.

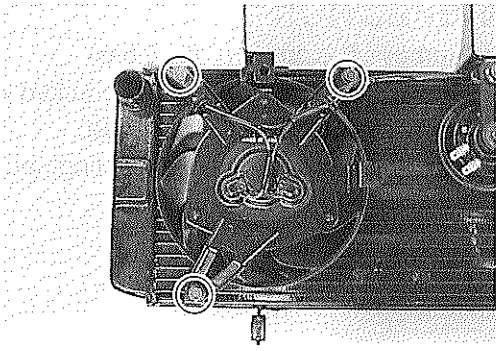

INSPECTION

- Remove the cowling. (☞6-6)
- Disconnect the cooling fan motor lead wire coupler ①.
- Test the cooling fan motor for load current with an ammeter connected as shown in the illustration.

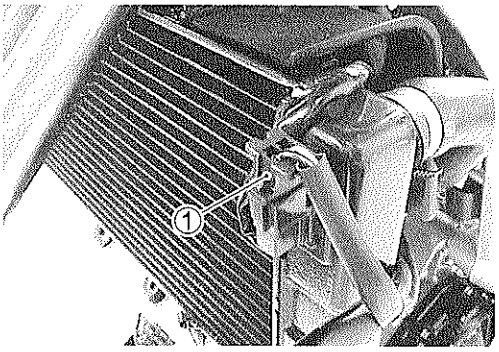

- The voltmeter is for making sure that the battery applies 12 volts to the motor. With the motor with electric motor fan running at full speed, the ammeter should be indicating not more than 5 amperes.
- If the fan motor does not turn, replace the motor assembly with a new one.

NOTE:
When making above test, it is not necessary to remove the cooling fan.

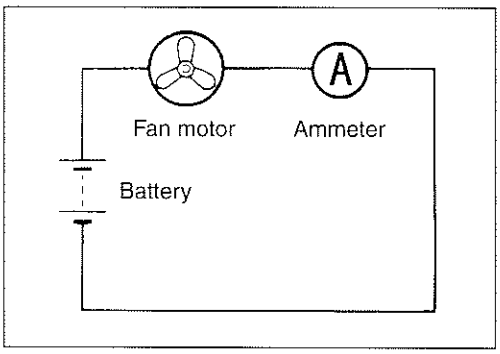

INSTALLATION

- Install the cooling fan.

Cooling fan motor mounting bolt:
8 N·m (0.8 kgf-m, 6.0 lb-ft)

- Install the radiator.
- Route the radiator hoses. (☞8-23)
- Pour engine coolant. (☞2-18)
- Bleed the air from the cooling circuit. (☞2-19)
- Install the cowling. (☞6-6)

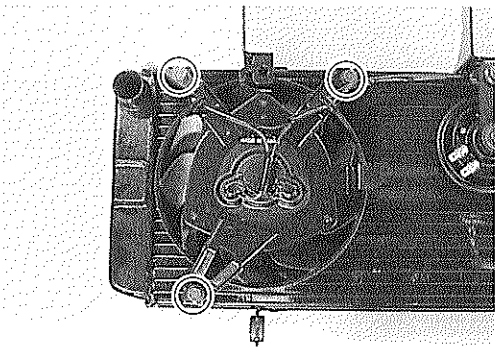

COOLING FAN THERMO-SWITCH

REMOVAL

- Remove the cowling. (☞6-6)
- Drain engine coolant. (☞2-18)
- Disconnect the cooling fan thermo-switch lead wire coupler ①.
- Remove the cooling fan thermo-switch ②.

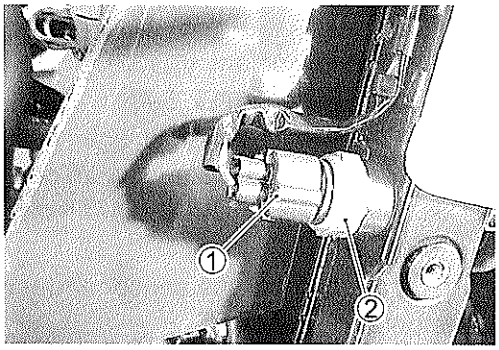

INSPECTION

- Check the thermo-switch closing or opening temperatures by testing it at the bench as shown in the figure. Connect the thermo-switch ① to a circuit tester and place it in the oil contained in a pan, which is placed on a stove.
- Heat the oil to raise its temperature slowly and read the column thermometer ② when the switch closes or opens.

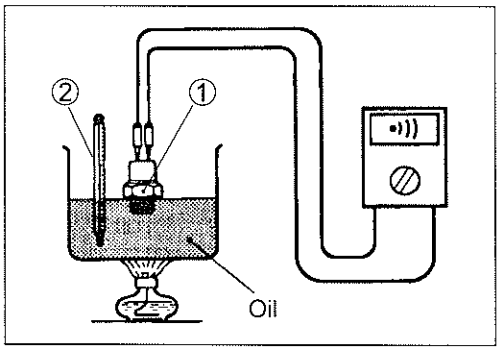

TOOL 09900-25008: Multi circuit tester set

Tester knob indication: Continuity test (•))))

DATA Cooling fan thermo-switch operating temperature
Standard (OFF→ON): Approx. 105°C (221°F)
(ON→OFF): Approx. 100°C (212°F)

CAUTION

> *** Take special care when handling the thermo-switch. It may cause damage if it gets a sharp impact.**
> *** Do not contact the cooling fan thermo-switch ① and the column thermometer ② with a pan.**

INSTALLATION

- Install a new O-ring ①.
- Tighten the cooling fan thermo-switch to the specified torque.

Cooling fan thermo-switch: 17 N·m (1.7 kgf-m, 12.5 lb-ft)

- Pour engine coolant. (☞2-18)
- Install the cowling. (☞6-6)

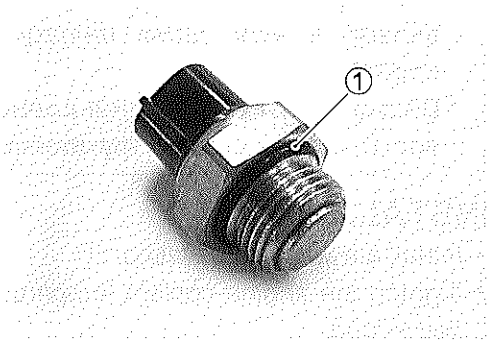

ENGINE COOLANT TEMPERATURE SENSOR

REMOVAL

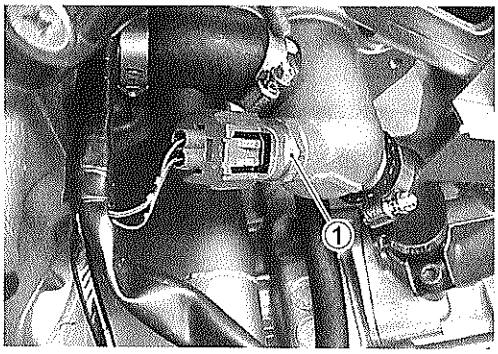

- Drain engine coolant. (☞2-18)
- Remove the seat. (☞6-4)
- Remove the fuel tank right side cover.
- Remove the IAP sensor vacuum damper.
- Disconnect the engine coolant temperature sensor lead wire coupler.
- Place a rag under the sensor and remove the engine coolant temperature sensor ①.

INSPECTION

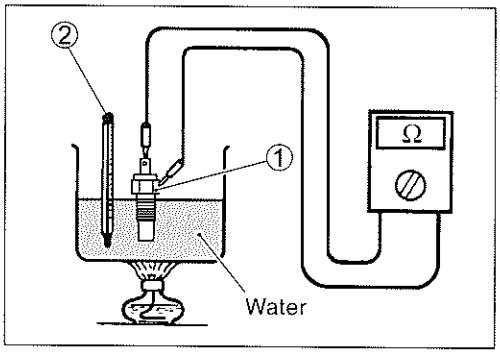

- Check the engine coolant temperature by testing it at the bench as shown in the figure. Connect the temperature sensor ① to a circuit tester and place it in the water contained in a pan, which is placed on a stove.
- Heat the water to raise its temperature slowly and read the column thermometer ② and the ohmmeter.
- If the temperature sensor ohmic valve does not change in the proportion indicated, replace it with a new one.

DATA Temperature sensor specification

Temperature	Standard resistance
20°C (68°F)	Approx. 2.45 kΩ
40°C (104°F)	Approx. 1.148 kΩ
60°C (140°F)	Approx. 0.587 kΩ
80°C (176°F)	Approx. 0.322 kΩ

If the resistance noted to show infinty or too much different resistance value, replace the temperature sensor with a new one.

CAUTION

> *** Take special care when handling the temperature sensor. It may cause damage if it gets a sharp impact.**
> *** Do not contact the engine coolant temperature sensor ① and the column thermometer ② with a pan.**

INSTALATION

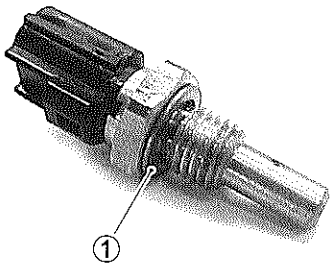

- Install a new sealing washer ①.
- Tighten the engine coolant temperature sensor to the specified torque.

Engine coolant temperature sensor:
18 N·m (1.8 kgf-m, 13.0 lb-ft)

CAUTION

> **Take special care when handling the temperature sensor. It may cause damage if it gets a sharp impact.**

- Pour engine coolant. (☞2-18)
- Install the fuel tank right side cover. (☞6-4)
- Install the seat.

THERMOSTAT

REMOVAL

- Drain engine coolant. (☞2-18)
- Place a rag under the thermostat case.
- Remove the thermostat case.

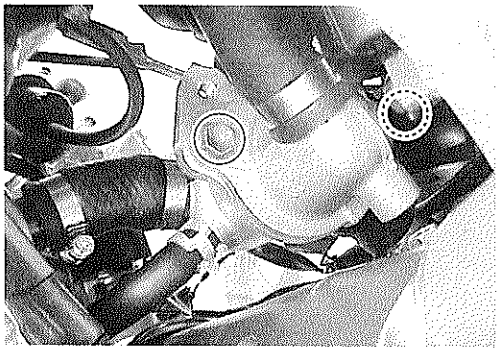

- Remove the thermostat ①.

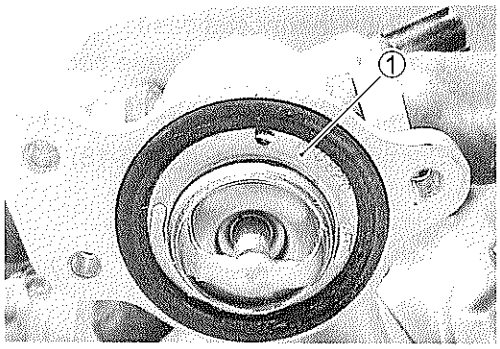

INSPECTION

Inspect the thermostat pellet for signs of cracking.

Test the thermostat at the bench for control action, in the following manner.

- Pass a string between flange, as shown in the photograph.
- Immerse the thermostat in the water contained in a beaker, as shown in the illustration. Note that the immersed thermostat is in suspension. Heat the water by placing the beaker on a stove and observe the rising temperature on a thermometer.

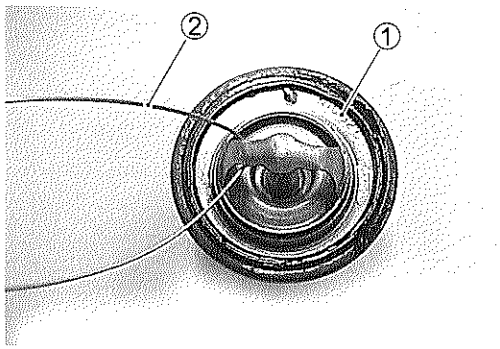

- Read the thermometer just when opening the thermostat. This reading, which is the temperature level at which the thermostat valve begins to open, should be within the standard value.

DATA Thermostat valve opening temperature
Standard: Approx. 88 °C (190 °F)

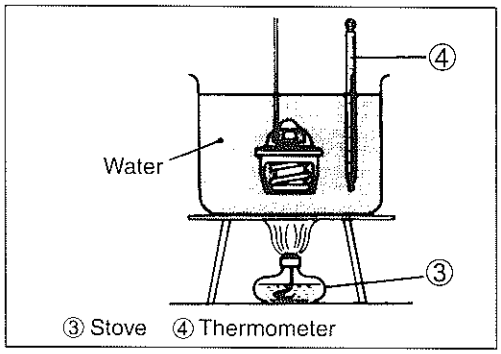

- Keep on heating the water to raise its temperature.
- Just when the water temperature reaches specified value, the thermostat valve should have lifted by at least 8.0 mm (0.31 in).

DATA Thermostat valve lift
Standard: Over 8.0 mm at 100 °C (Over 0.31 in at 212 °F)

- A thermostat failing to satisfy either of the two requirements (start-to-open temperature and valve lift) must be replaced.

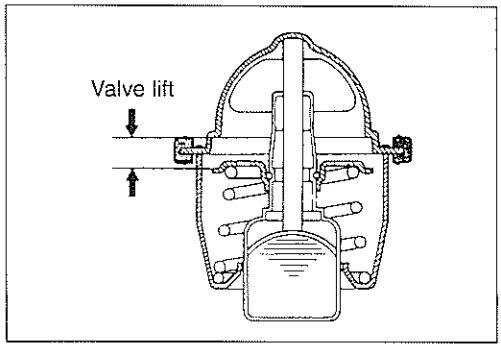

INSTALLATION

- Install the thermostat.

NOTE:
The jiggle valve Ⓐ of the thermostat faces upside.

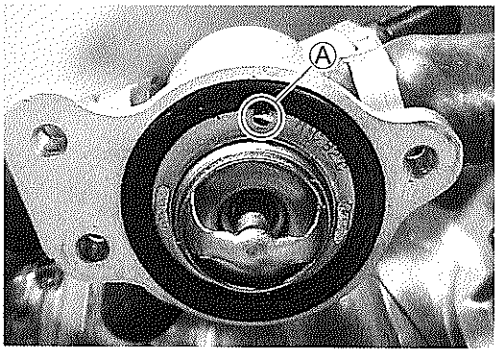

- Install the thermostat case.
- Tighten the thermostat case bolts to the specified torque.

Thermostat case bolt: 10 N·m (1.0 kgf-m, 7.0 lb-ft)

- Pour engine coolant. (☞2-18)

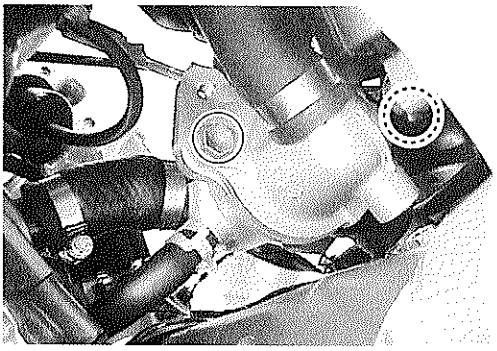

WATER PUMP

REMOVAL AND DISASSEMBLY

- Remove the engine under cover. (☞3-3)
- Drain engine coolant. (☞2-18)
- Drain engine oil. (☞2-13)
- Remove the right footrest.
- Disconnect the water hoses and crankcase breather hose.
- Remove the water pump case and clutch cover. (☞3-26)

NOTE:
Before draining engine oil and engine coolant, inspect engine oil and coolant leakage between the water pump and clutch cover. If engine oil is leaking, visually inspect the oil seal and O-ring. If engine coolant is leaking, visually inspect the mechanical seal and seal ring. (☞5-15)

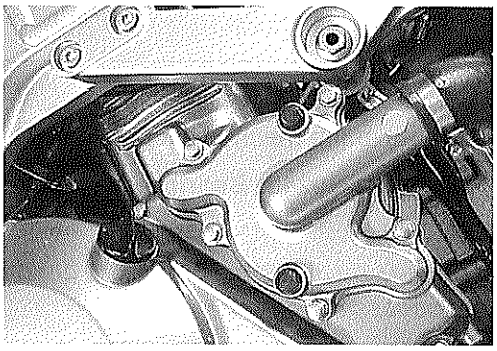

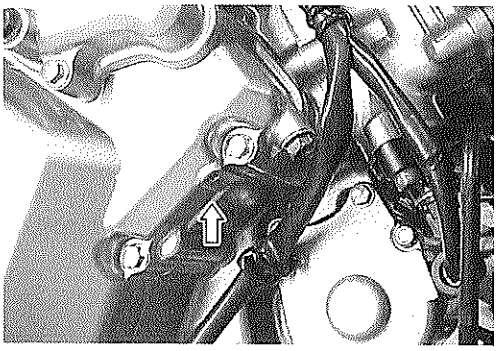

- Remove the snap ring from the impeller shaft.
- Remove the impeller from the other side.

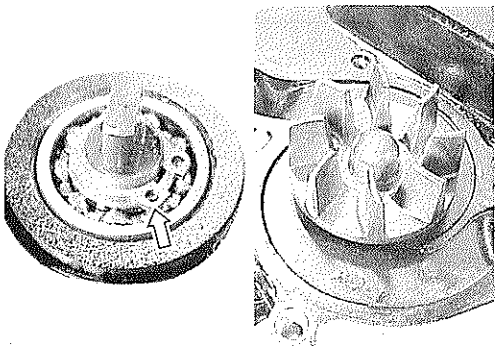

- Remove the mechanical seal ring ① and the rubber seal ② from the impeller.

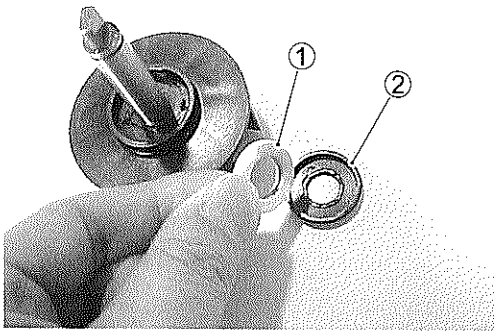

- Remove the bearing using the special tool.

TOOL 09921-20240: Bearing remover set

NOTE:
If there is no abnormal noise, bearing removal is not necessary.

CAUTION

The removed bearing must be replaced with a new one.

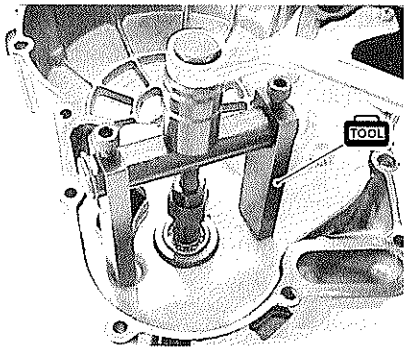

- Remove the mechanical seal using the special tool.

TOOL 09921-20240: Bearing remover set

NOTE:
If there is no abnormal condition, the mechanical seal removal is not necessary.

CAUTION

The removed mechanical seal must be replaced with a new one.

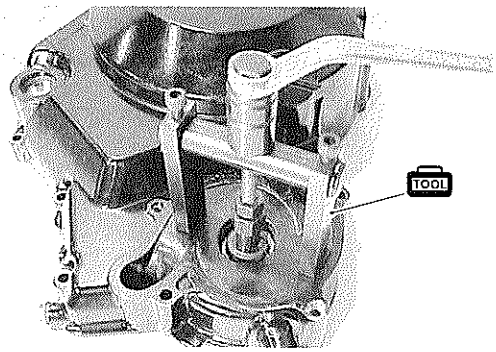

- Remove the oil seal using a suitable bar.

NOTE:
If there is no abnormal condition, the oil seal removal is not necessary.

CAUTION

The removed oil seal must be replaced with a new one.

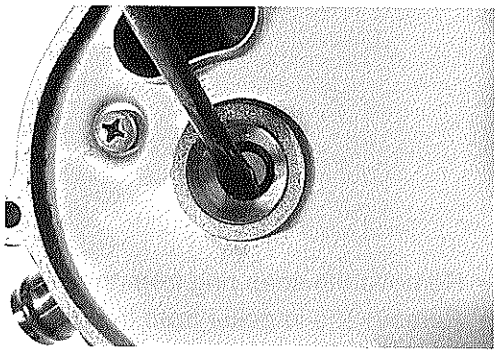

INSPECTION

BEARING

- Inspect the play of the bearing by hand while it is in the water pump case.
- Rotate the inner race by hand to inspect for abnormal noise and smooth rotation.
- Replace the bearing if there is anything unusual.

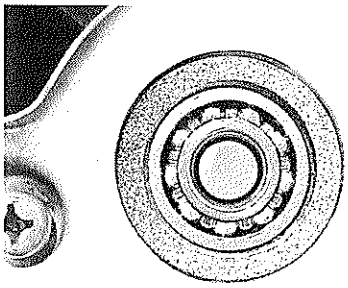

MECHANICAL SEAL

- Visually inspect the mechanical seal for damage, with particular attention given to the sealing face.
- Replace the mechanical seal that shows indications of leakage. Also replace the seal ring if necessary.

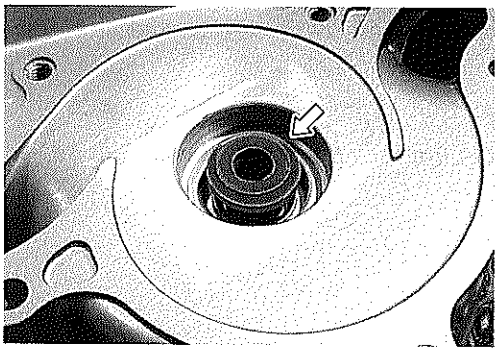

OIL SEAL

- Visually inspect the oil seal for damage, with particular attention given to the lip.
- Replace the oil seal that shows indications of leakage.

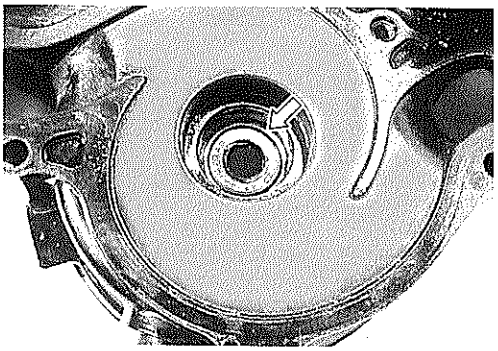

BEARING CASE

- Visually inspect the bearing case for damage.
- Replace the water pump body if necessary.

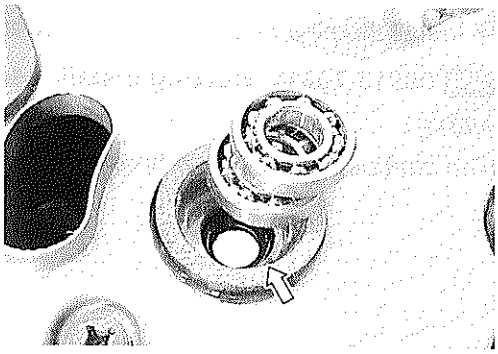

REASSEMBLY AND INSTALLATION

- Install the oil seal using the special tool.

TOOL 09913-70210: Bearing installer set

NOTE:

The stamped mark on the oil seal faces outside.

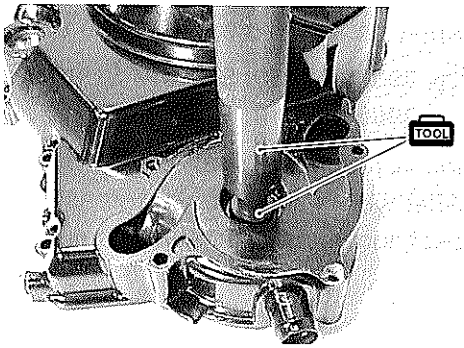

- Apply a small quantity of the SUZUKI SUPER GREASE "A" to the oil seal lip.

99000-25030: SUZUKI SUPER GREASE "A" (USA)
99000-25010: SUZUKI SUPER GREASE "A" (Others)

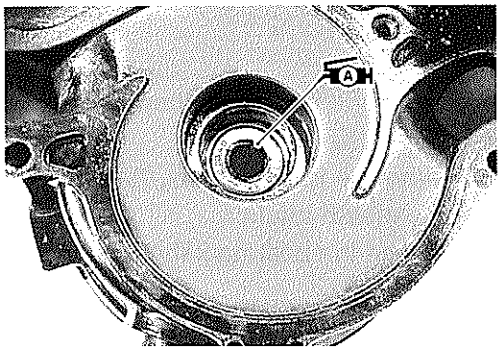

- Install the new mechanical seal using a suitable size socket wrench.

NOTE:
On the new mechanical seal, the sealer Ⓐ has been applied.

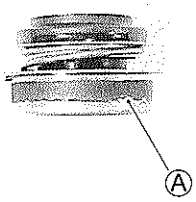

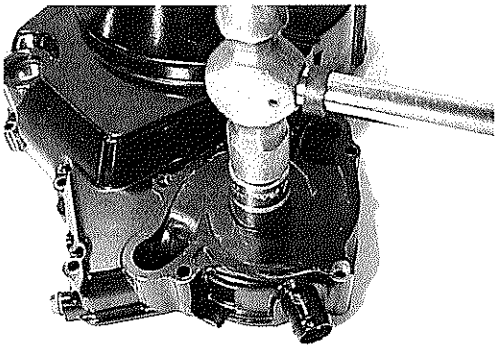

- Install the new bearing using the special tool.

09913-70210: Bearing installer set

NOTE:
The stamped mark on the bearing faces crankcase side.

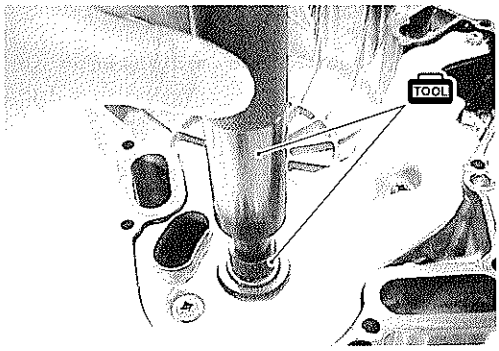

- Apply grease to the impeller shaft.

99000-25030: SUZUKI SUPER GREASE "A" (USA)
99000-25010: SUZUKI SUPER GREASE "A" (Others)

- Install the rubber seal ① into the impeller.
- After wiping off the oily or greasy matter from the mechanical seal ring, install it into the impeller.

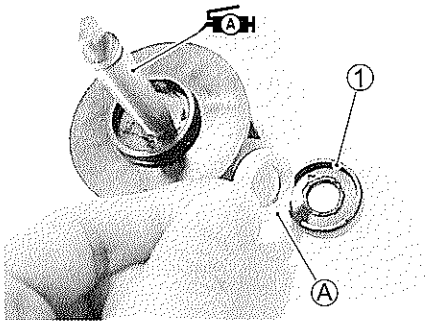

– continued on next page –

NOTE:
The paint marked side Ⓐ of the mechanical seal ring faces the impeller.

- Install the impeller to the water pump body.

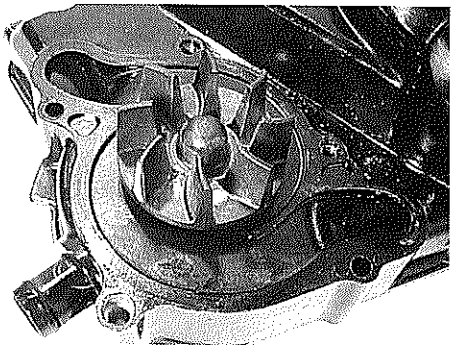

- Fix the impeller shaft with the snap ring securely.

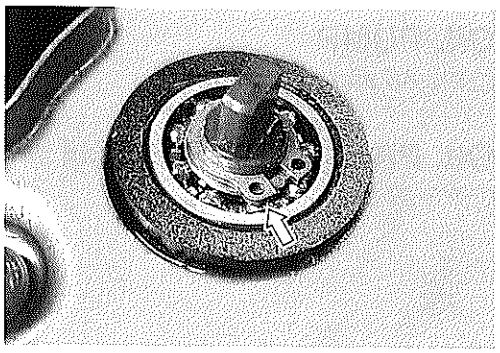

- Install a new O-ring ①.

CAUTION

Use a new O-ring to prevent engine coolant leakage.

NOTE:
Apply engine coolant to the O-ring ①.

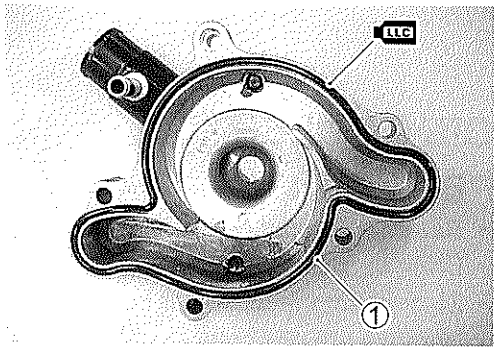

- Set the impeller shaft end to the cam drive idle shaft. (☞3-90)
- Connect the water hoses and crankcase breather hose.
- Install the right footrest.
- Pour engine coolant. (☞2-18)
- Pour engine oil. (☞2-13)
- Install the engine under cover.

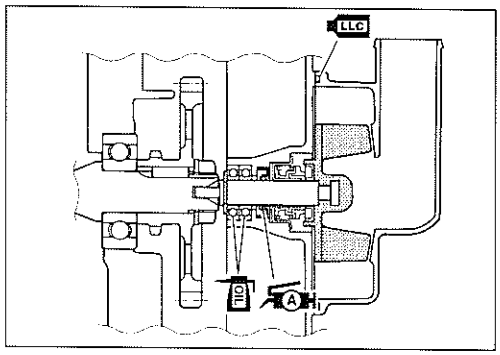

LUBRICATION SYSTEM

OIL PRESSURE

☞2-31

OIL FILTER

☞2-14

OIL PRESSURE REGULATOR

☞3-67

OIL STRAINER

☞3-29 and -85

OIL JET

☞3-67, -68 and -94

OIL PUMP

☞3-66 and -67

OIL PRESSURE SWITCH

☞3-67 and 7-32

OIL COOLER

REMOVAL

- Remove the engine under cover. (☞3-3)
- Drain engine oil. (☞2-13)
- Disconnect the oil cooler hoses.
- Remove the oil cooler.

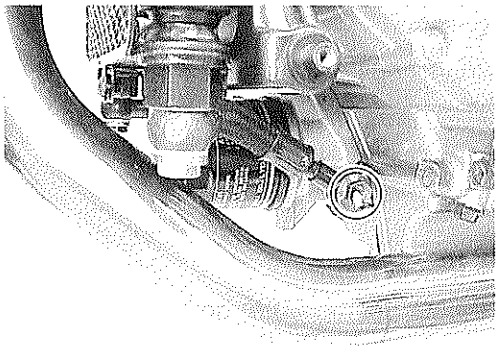

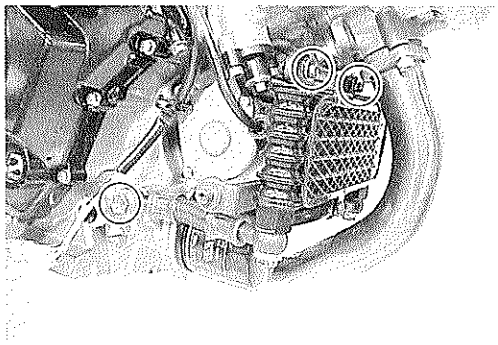

- Remove the oil cooler fin guard net.
- Remove the oil hoses.

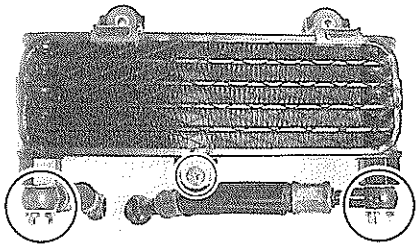

INSPECTION AND CLEANING

- Inspect the oil cooler and hose joints for oil leakage. If any defect are found, replace the oil cooler and oil hoses with the new ones.
- Road dirt or trash stuck to the fins must be removed.
- Use of compressed air is recommended for this cleaning.

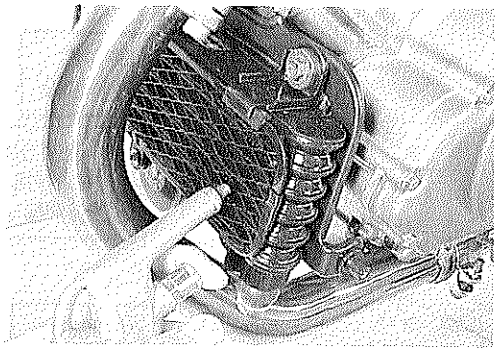

- Fins bent down or dented can be repaired by straightening them with the blade of a small screwdriver.

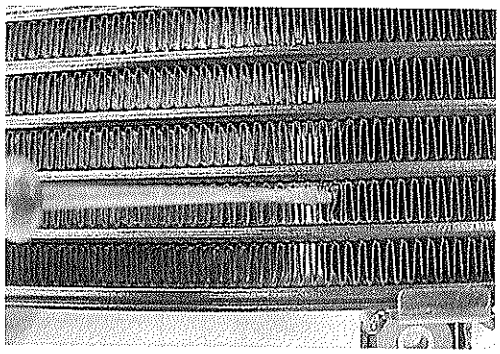

INSTALLATION

- Install a new gasket washer ①.

CAUTION

Use a new gasket washer to prevent engine oil leakage.

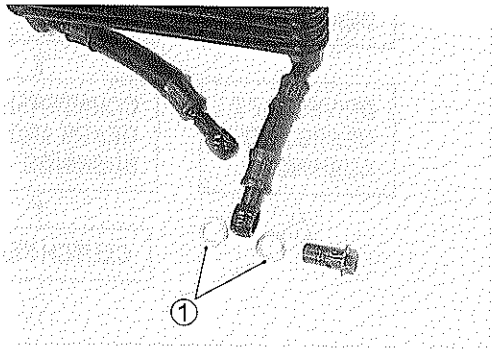

- Install the oil cooler.

Oil cooler mounting bolt: 10 N·m (1.0 kgf-m, 7.3 lb-ft)

- Tighten the oil cooler hose union bolts to the specified torque.

Oil cooler hose union bolt: 23 N·m (2.3 kgf-m, 16.5 lb-ft)

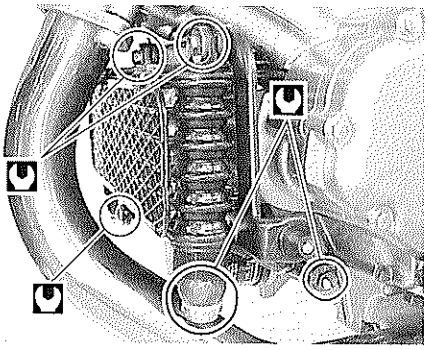

ENGINE LUBRICATION FLOW CHART

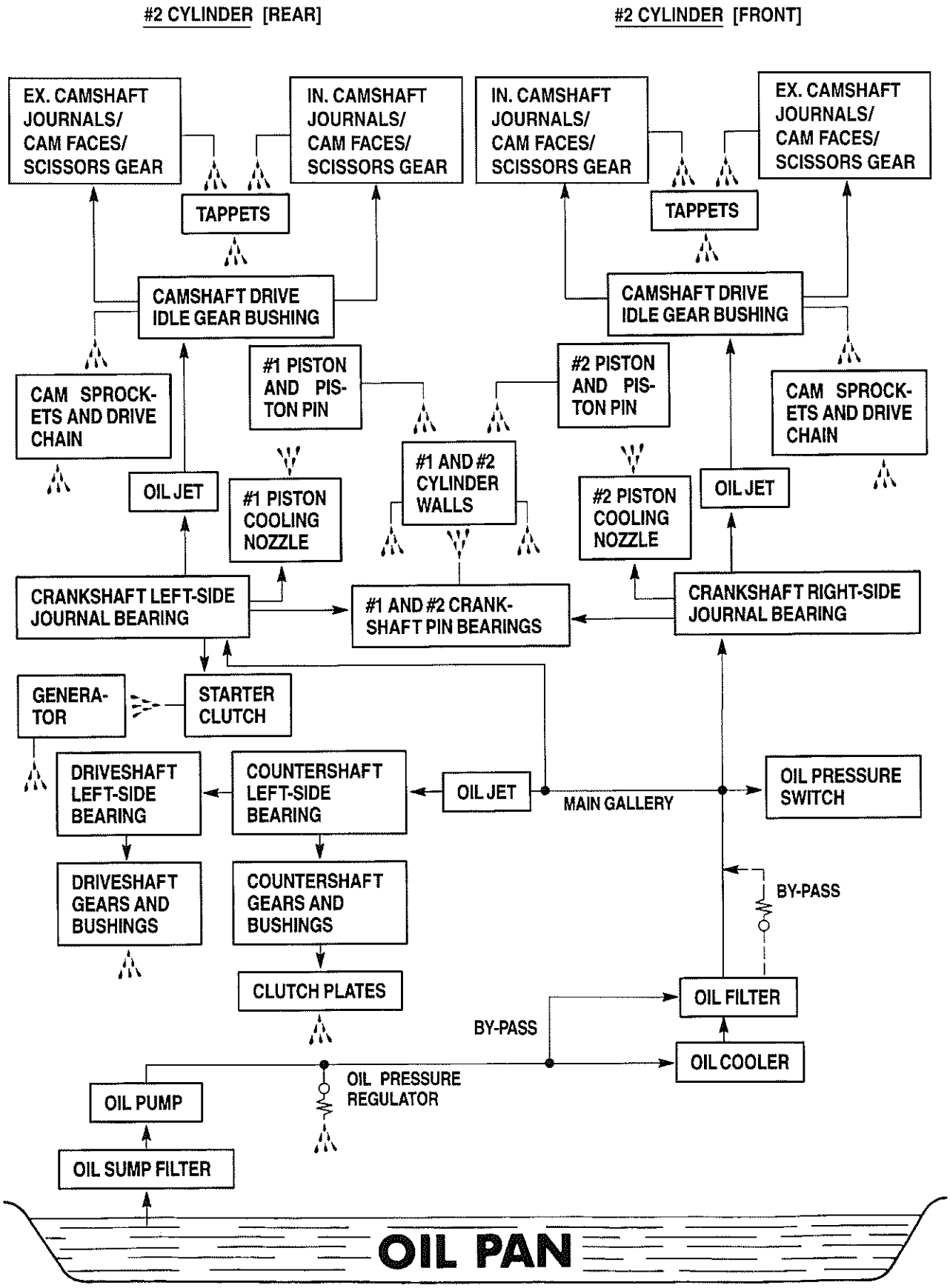

ENGINE LUBRICATION CIRCUIT

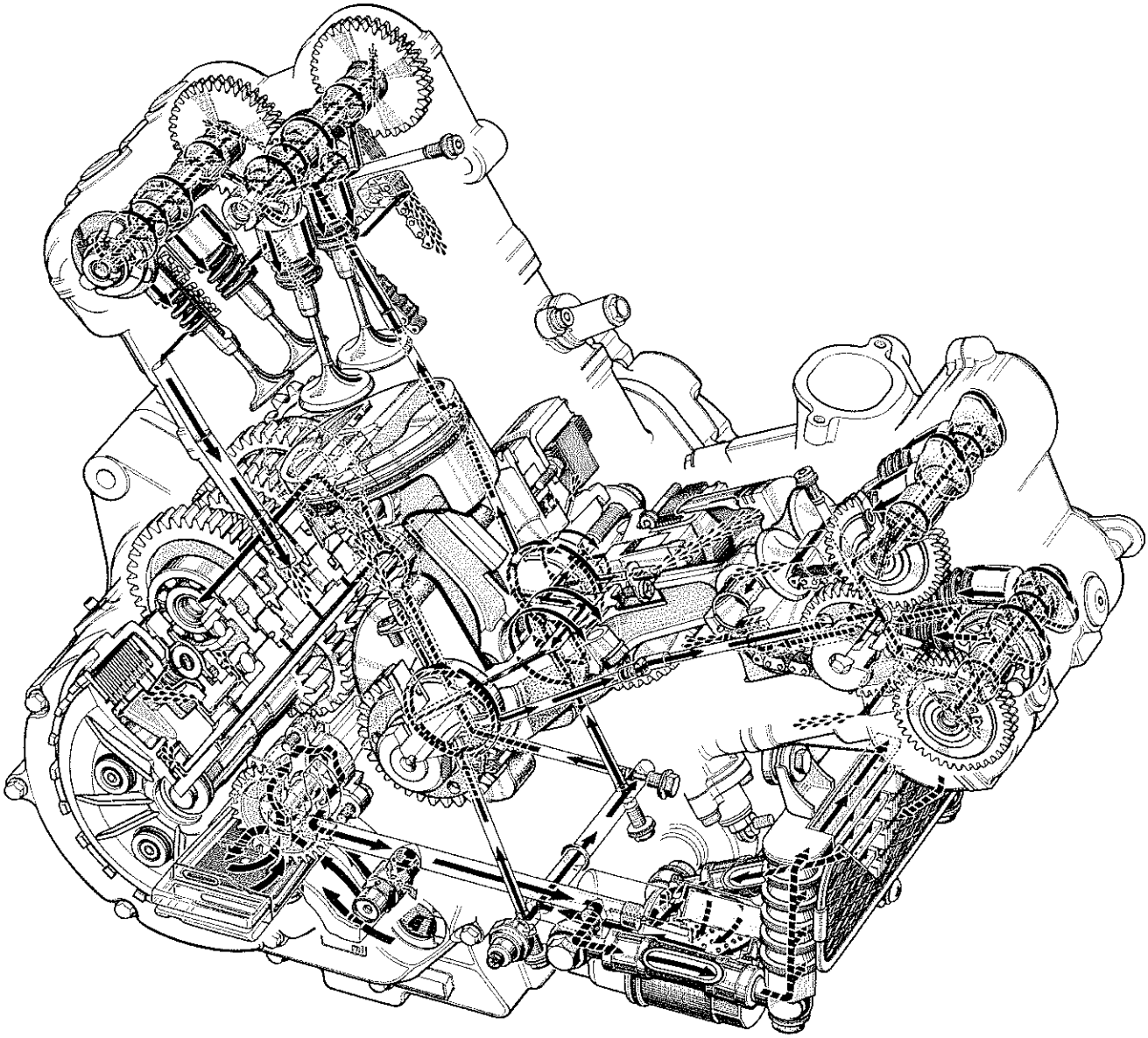

CHASSIS

CONTENTS

EXTERIOR PARTS 6- 2
CONSTRUCTION 6- 2
REMOVAL 6- 4
FRONT WHEEL 6- 8
CONSTRUCTION 6- 8
REMOVAL 6- 9
INSPECTION AND DISASSEMBLY 6- 9
REASSEMBLY AND REMOUNTING 6-11
FRONT FORK 6-14
CONSTRUCTION 6-14
REMOVAL AND DISASSEMBLY 6-15
INSPECTION 6-18
REASSEMBLY AND REMOUNTING 6-19
STEERING AND HANDLEBAR 6-24
CONSTRUCTION 6-24
REMOVAL 6-25
INSPECTION AND DISASSEMBLY 6-28
REASSEMBLY AND REMOUNTING 6-29
STEERING TENSION ADJUSTMENT 6-32
REAR WHEEL 6-33
CONSTRUCTION 6-33
REMOVAL 6-34
INSPECTION AND DISASSEMBLY 6-35
REASSEMBLY AND REMOUNTING 6-38
REAR SHOCK ABSORBER 6-42
CONSTRUCTION 6-42
REMOVAL 6-43
INSPECTION 6-44
REAR SHOCK ABSORBER DISPOSAL 6-44
REMOUNTING 6-45
SUSPENSION SETTING 6-46
REAR SWINGARM 6-47
CONSTRUCTION 6-47
REMOVAL 6-48
INSPECTION AND DISASSEMBLY 6-49
REASSEMBLY 6-52
REMOUNTING 6-54
FINAL INSPECTION AND ADJUSTMENT 6-55
FRONT BRAKE 6-56
CONSTRUCTION 6-56
BRAKE PAD REPLACEMENT 6-57
BRAKE FLUID REPLACEMENT 6-58
CALIPER REMOVAL AND DISASSEMBLY 6-59
CALIPER INSPECTION 6-60
CALIPER REASSEMBLY AND REMOUNTING 6-61
BRAKE DISC INSPECTION 6-62
MASTER CYLINDER REMOVAL AND DISASSEMBLY 6-63
MASTER CYLINDER INSPECTION 6-64
MASTER CYLINDER REASSEMBLY AND REMOUNTING 6-64
REAR BRAKE 6-66
CONSTRUCTION 6-66
BRAKE PAD REPLACEMENT 6-67
BRAKE FLUID REPLACEMENT 6-68
CALIPER REMOVAL AND DISASSEMBLY 6-69
CALIPER INSPECTION 6-70
BRAKE DISC INSPECTION 6-71
CALIPER REASSEMBLY AND REMOUNTING 6-72
MASTER CYLINDER REMOVAL AND DISASSEMBLY 6-73
MASTER CYLINDER INSPECTION 6-74
MASTER CYLINDER REASSEMBLY AND REMOUNTING 6-75
CLUTCH RELEASE CYLINDER AND MASTER CYLINDER 6-77
CONSTRUCTION 6-77
CLUTCH FLUID REPLACEMENT 6-78
CLUTCH RELEASE CYLINDER REMOVAL AND DISASSEMBLY 6-78
CLUTCH RELEASE CYLINDER INSPECTION 6-79
CLUTCH RELEASE CYLINDER REASSEMBLY AND REMOUNTING 6-79
CLUTCH MASTER CYLINDER REMOVAL AND DISASSEMBLY 6-81
CLUTCH MASTER CYLINDER INSPECTION 6-82
CLUTCH MASTER CYLINDER REASSEMBLY AND REMOUNTING 6-82
TIRE AND WHEEL 6-84
TIRE REMOVAL 6-84
INSPECTION 6-84
VALVE INSTALLATION 6-85
TIRE INSTALLATION 6-85

EXTERIOR PARTS
CONSTRUCTION

① Screen
② Cowling brace
③ Fuel tank top cover
④ Combination meter panel
⑤ Cowling body
⑥ Right cowling
⑦ Left cowling
⑧ Left side cowling
⑨ Right side cowling
⑩ Inner cowling
⑪ Engine under cover

Ⓐ Cowling brace mounting bolt

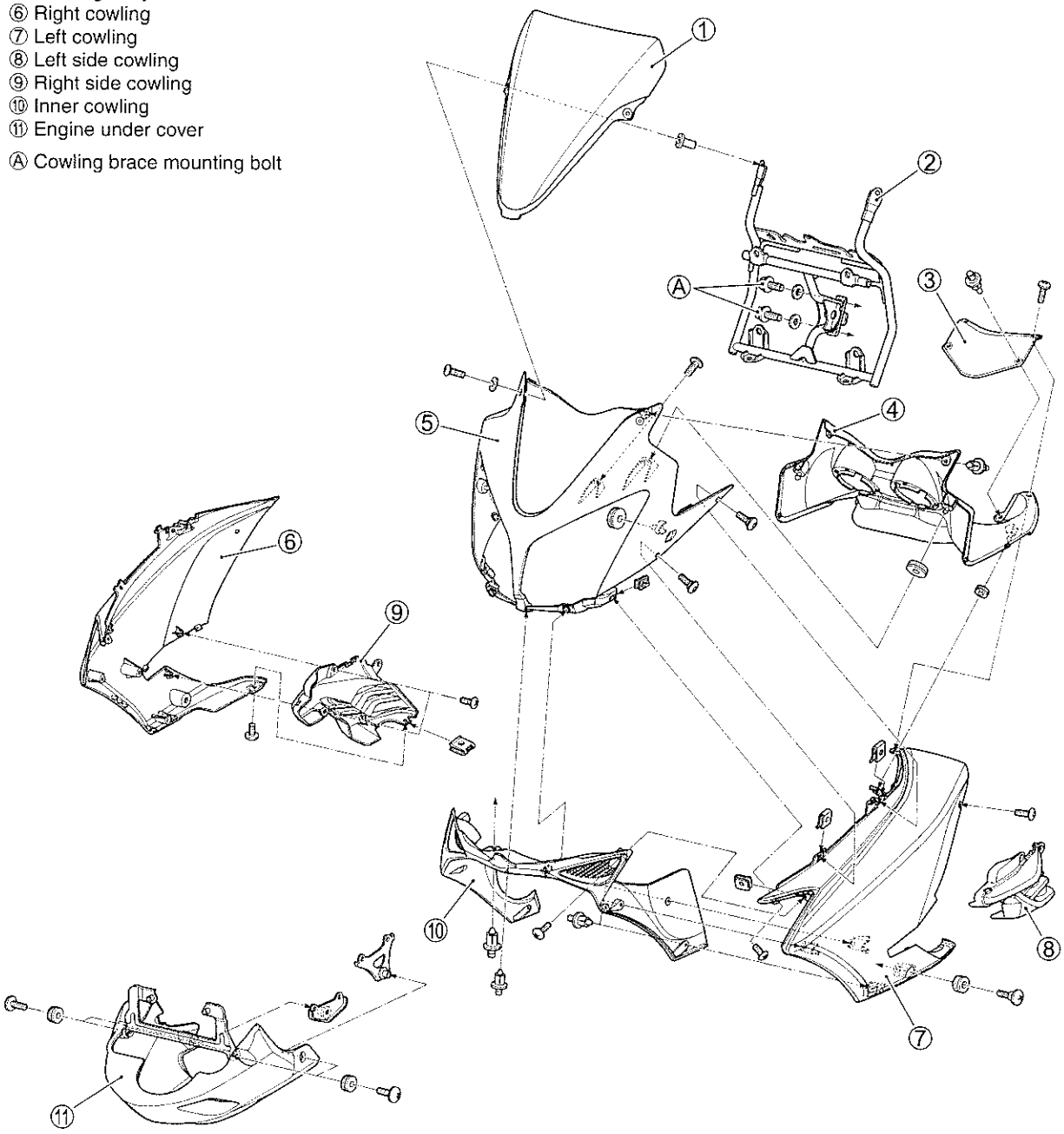

ITEM	N·m	kgf-m	lb-ft
Ⓐ	35	3.5	25.5

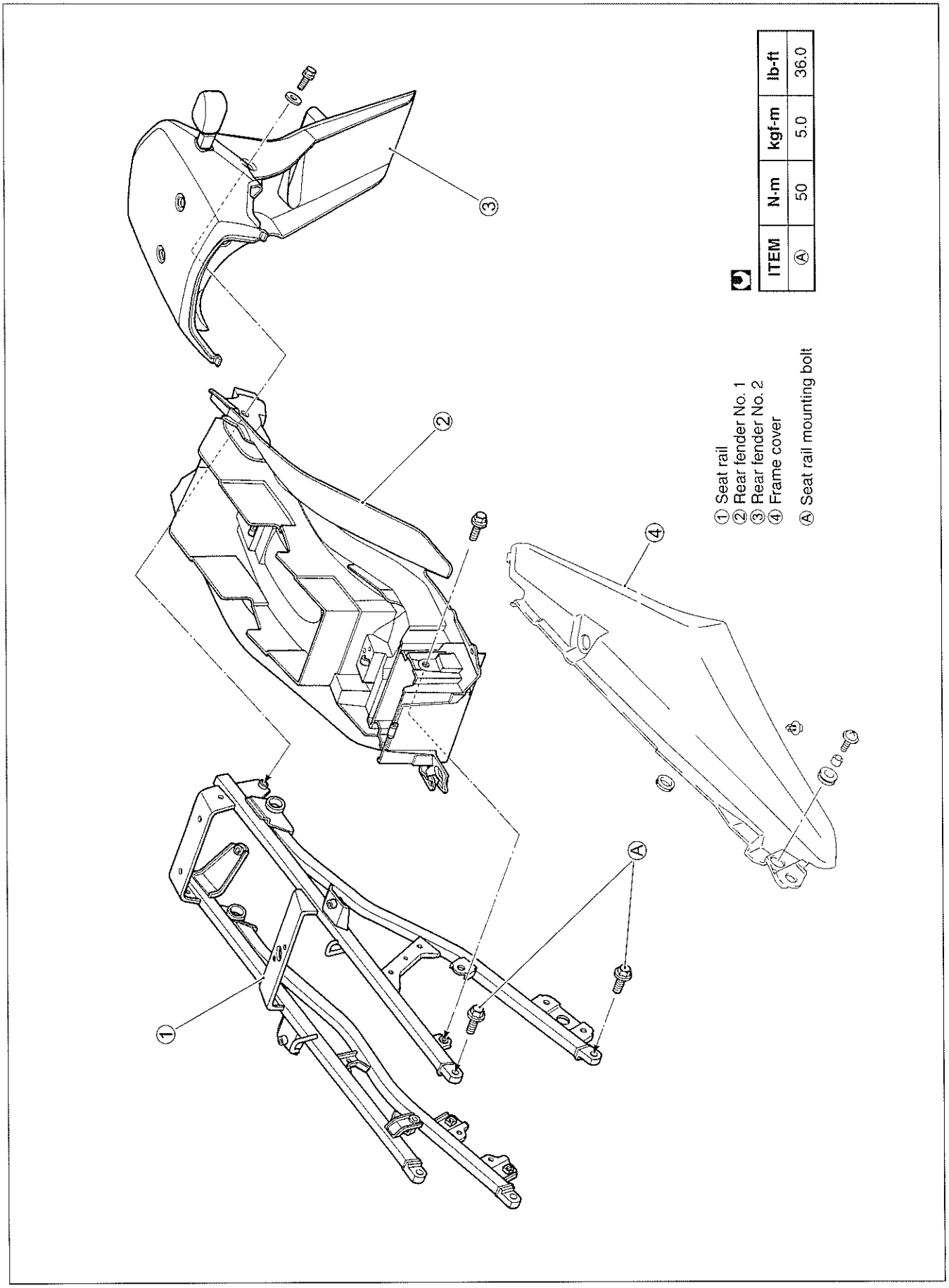

ITEM	N·m	kgf-m	lb-ft
Ⓐ	50	5.0	36.0

REMOVAL

SEAT

- Remove the seat with the ignition key.

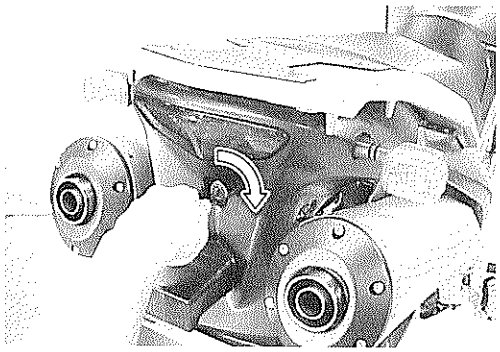

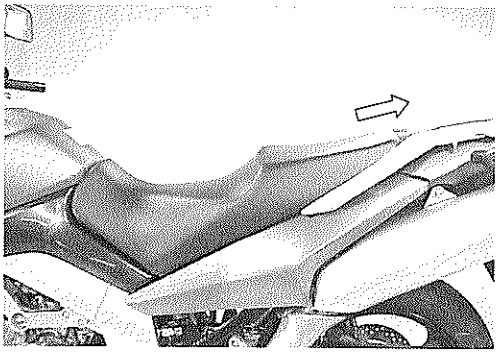

FRONT TANK COVERS

- Remove the seat. (☞Above)
- Remove the fuel tank side cover mounting secrew.
- Remove thefuel tank side cover by pulling on the hooked parts.

☆: hooked part

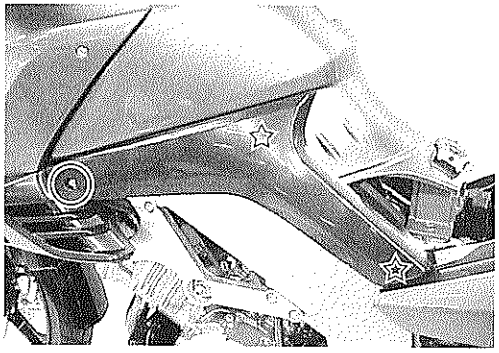

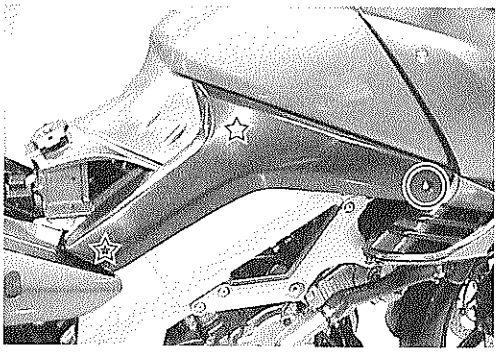

CARRIER

- Remove the seat. (☞Above)
- Remove the carrier.

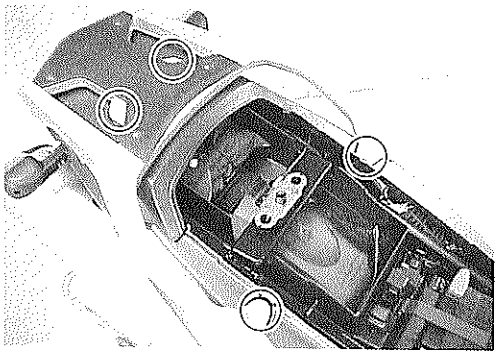

FRAME COVERS

- Remove the seat. (☞6-4)
- Remove the carrier. (☞6-4)
- Remove the fuel tank cover. (☞6-4)
- Remove the screw ① and clip ②.
- Remove the frame cover by pulling on the hooked part.

☆: hooked part

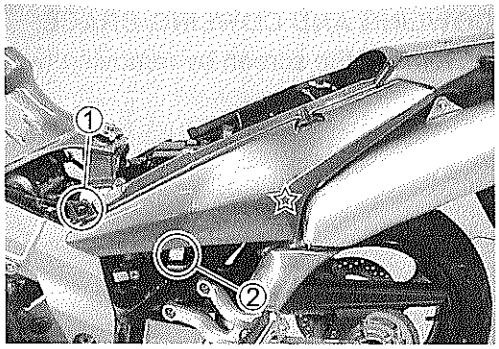

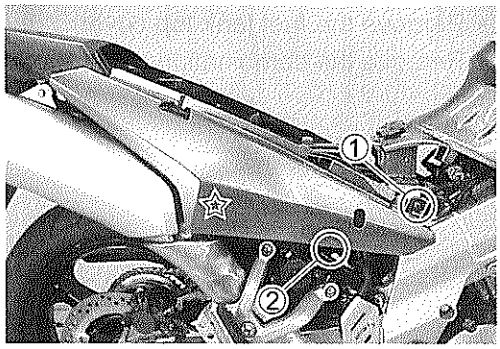

REAR FENDER

- Remove the seat. (☞6-4)
- Remove the carrier. (☞6-4)
- Remove the bolts.

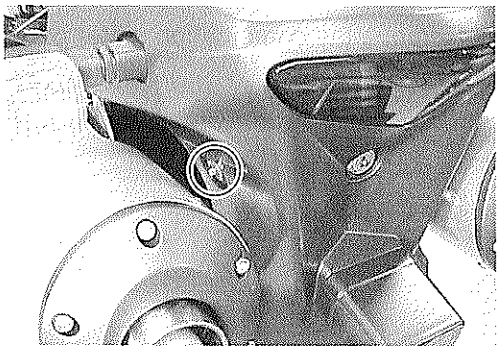

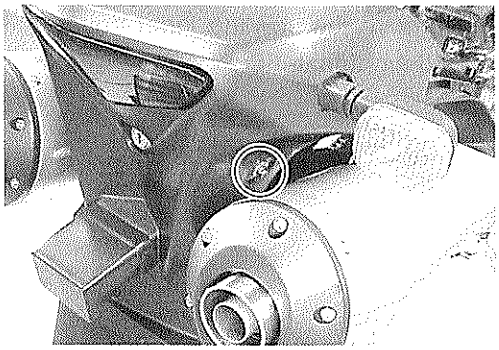

- Disconnect the brake light/taillight lead wire coupler.

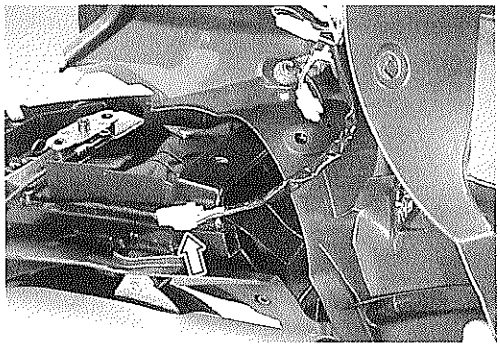

COWLING AND COWLING BRACE

- Remove the screen by removing two screws.

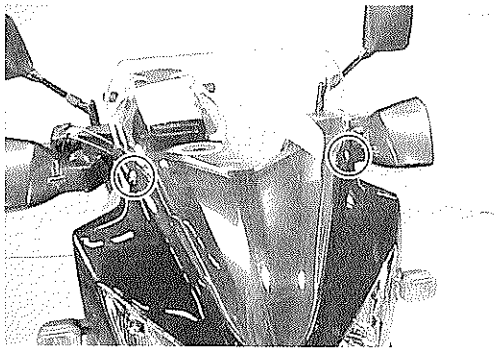

- Remove the fuel tank top cover ① by removing the fasteners.
- Remove the combination cover mounting screws.

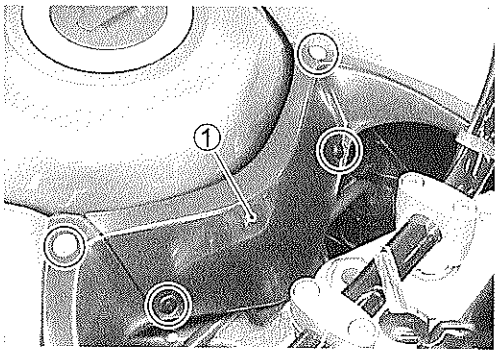

- Remove the combination meter panel ② by removing the fasteners.

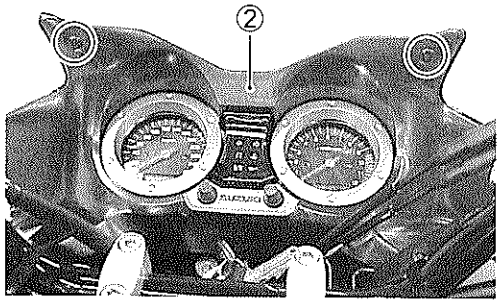

- Remove the cowling inner cover ③ by removing two screws and eight fasteners.

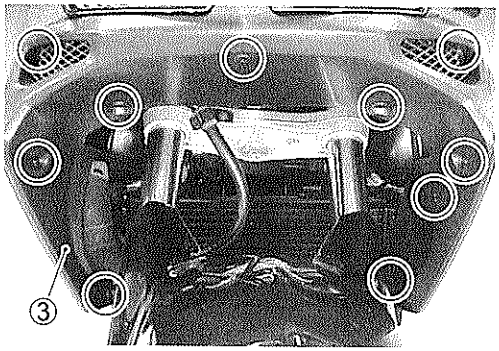

- Remove the left cowling ④.

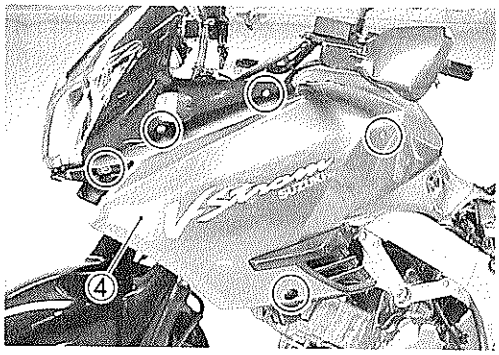

- Remove the right cowling ⑤.

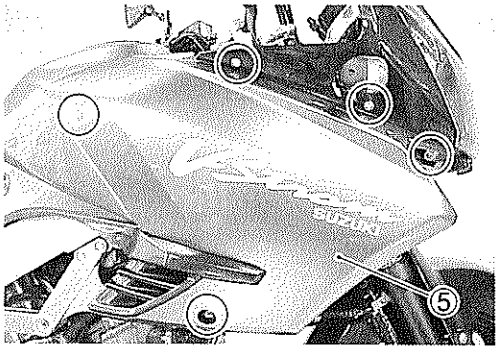

- Remove the turn signals.
- Remove the cowling body ⑥.

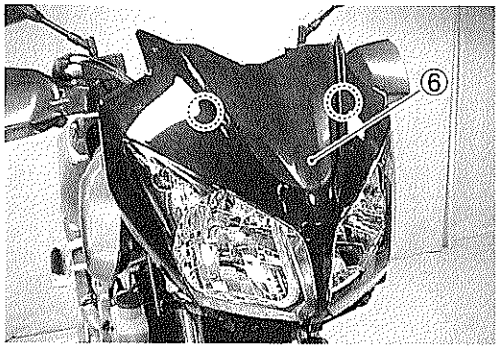

- Disconnect the couplers.

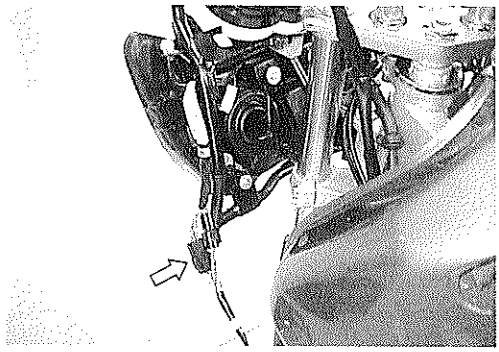

- Remove the cowling blace ⑦.
- Remove the combination meter. (☞7-22)

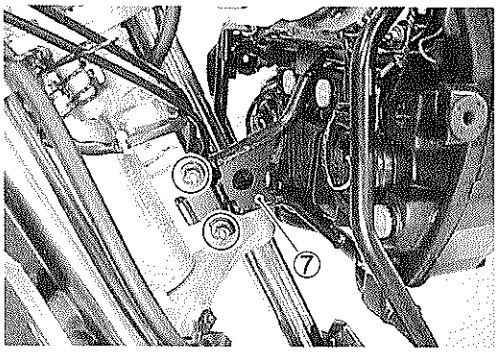

FRONT WHEEL
CONSTRUCTION

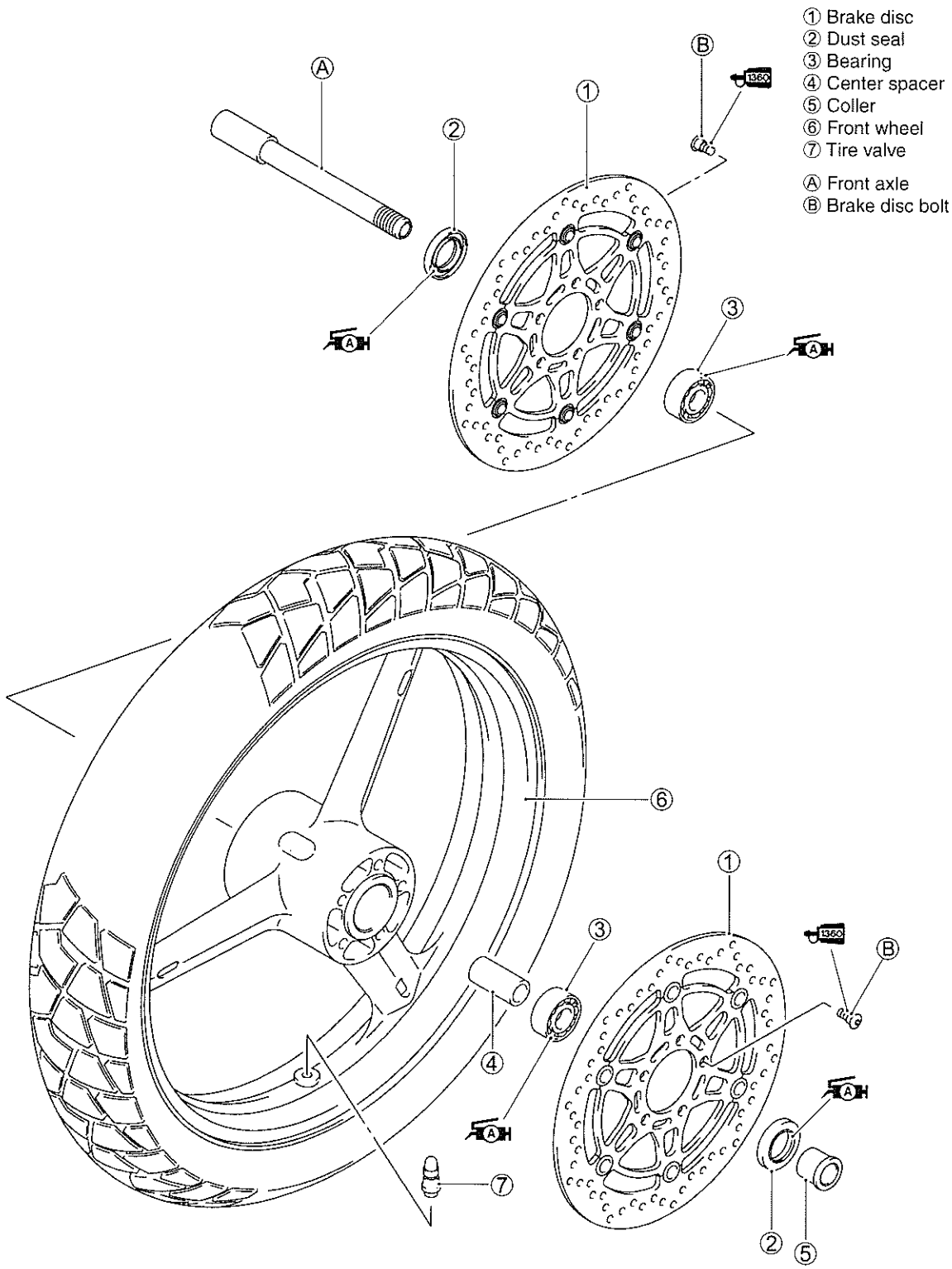

ITEM	N·m	kgf-m	lb-ft
Ⓐ	100	10.0	72.5
Ⓑ	23	2.3	16.5

REMOVAL

- Remove the right and left brake calipers ①.
- Loosen two axle pinch bolts ② on the right front fork leg.

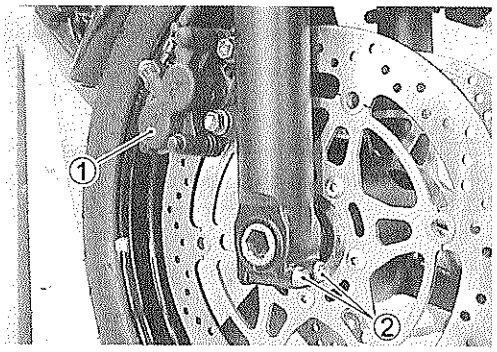

CAUTION

Do not operate the brake lever while removing the calipers.

- Slightly loosen the front axle by using the special tool.

TOOL 09944-28320: Hexagon bit 19 mm

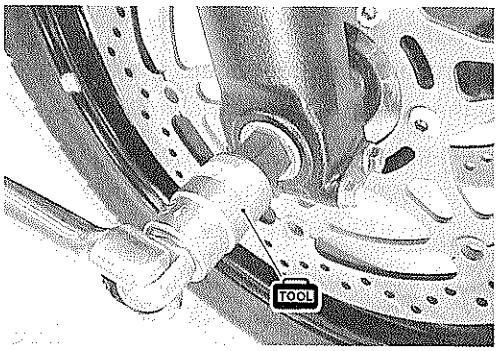

- Raise the front wheel off the ground and support the motorcycle with a jack or a wooden block.
- Remove the front axle and the front wheel.
- Remove the spacer ③.

NOTE:
After removing the front wheel, fit the calipers temporarily to the original positions.

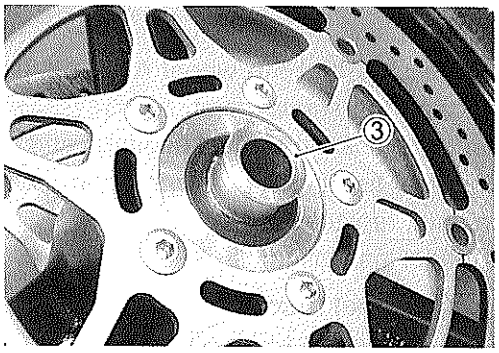

INSPECTION AND DISASSEMBLY

TIRE (☞6-84)
BRAKE DISC (☞6-62)

- Remove the brake discs.

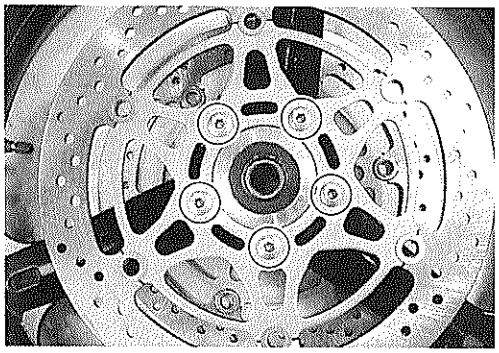

DUST SEAL

- Inspect the dust seals lip for wear or damage. If any damages are found, replace the dust seals with new ones.

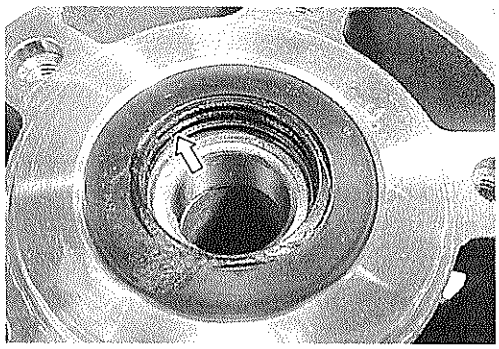

- Remove the dust seal by using the oil seal remover.

TOOL 09913-50121: Oil seal remover

CAUTION

Do not reuse the removed dust seals.

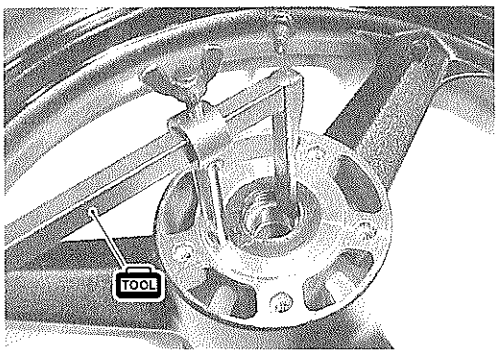

FRONT AXLE

Using a dial gauge, check the front axle for runout and replace it if the runout exceeds the limit.

TOOL 09900-20607: Dial gauge (1/100)
09900-20701: Magnetic stand
09900-21304: V-block set (100 mm)

DATA Axle shaft runout
Service Limit: 0.25 mm (0.010 in)

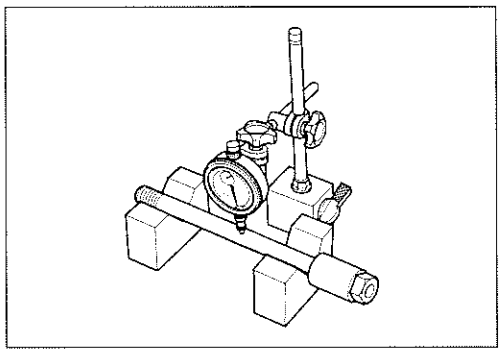

WHEEL

Make sure that the wheel runout checked as shown does not exceed the service limit. An excessive runout is usually due to worn or loosened wheel bearings and can be reduced by replacing the bearings. If bearing replacement fails to reduce the runout, replace the wheel.

(Wheel inspection: ☞6-84)

DATA Wheel runout
Service Limit (Axial and Radial): 2.0 mm (0.08 in)

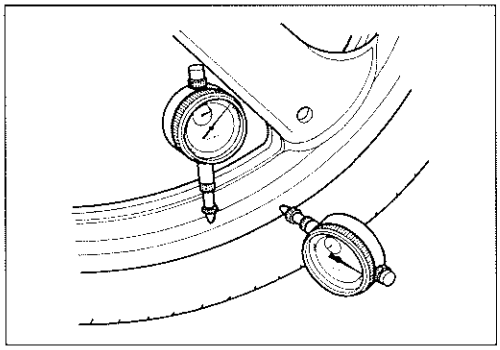

WHEEL BEARING

Inspect the play of the wheel bearings by finger while they are in the wheel. Rotate the inner race by finger to inspect for abnormal noise and smooth rotation.

Replace the bearing in the following procedure if there is anything unusual.

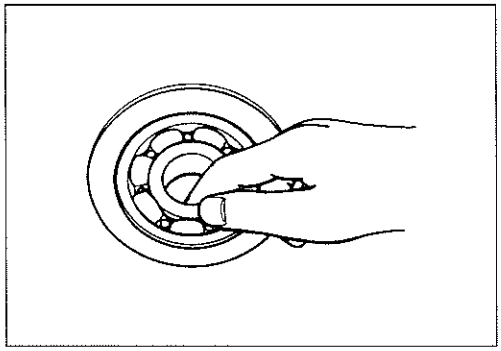

- Remove the wheel bearings by using the special tool.

TOOL 09921-20240: Bearing remover set

CAUTION

Do not reuse the removed bearings.

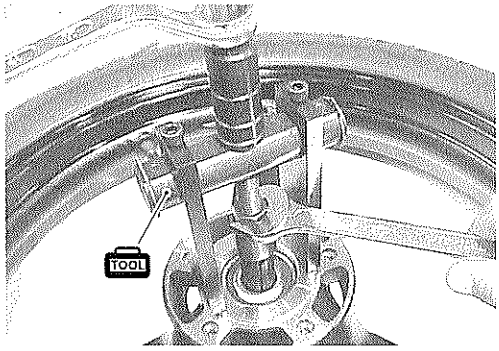

REASSEMBLY AND REMOUNTING

Reassemble and remount the front wheel in the reverse order of removal and disassembly. Pay attention to the following points:

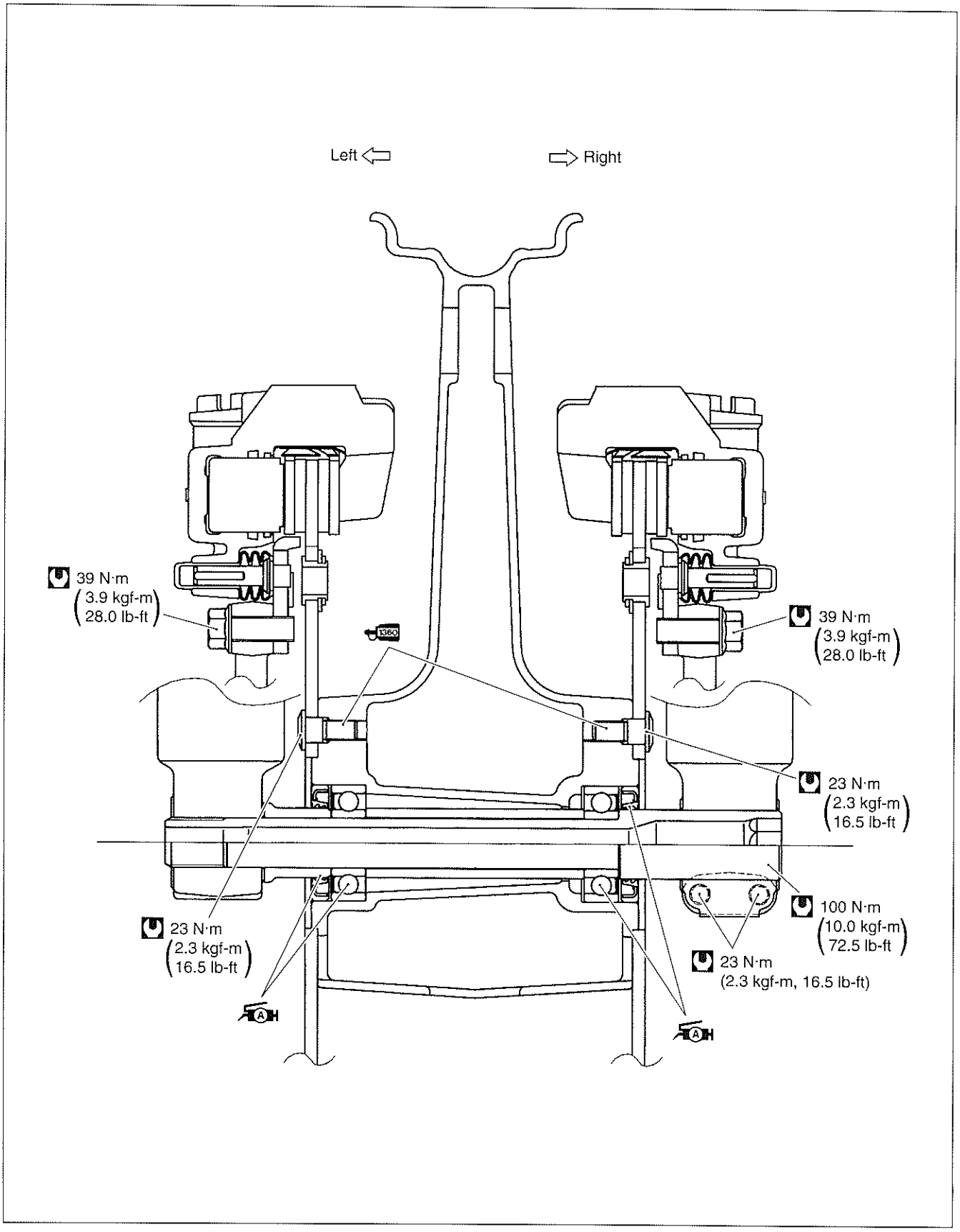

WHEEL BEARING

- Apply grease to the wheel bearings.

99000-25030: SUZUKI SUPER GREASE "A" (USA)
99000-25010: SUZUKI SUPER GREASE "A" (Others)

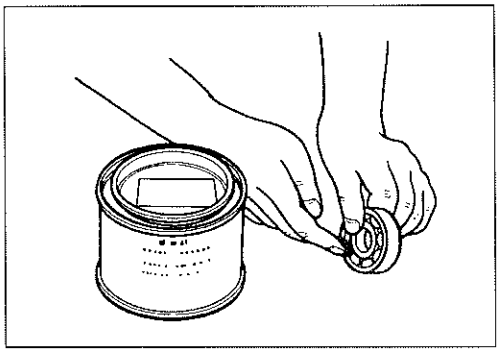

- First install the left wheel bearing, then install the right wheel bearing and spacer by using the special tools.

TOOL 09941-34513: Bearing/Steering race installer set

CAUTION

The sealed cover of the bearing must face outside.

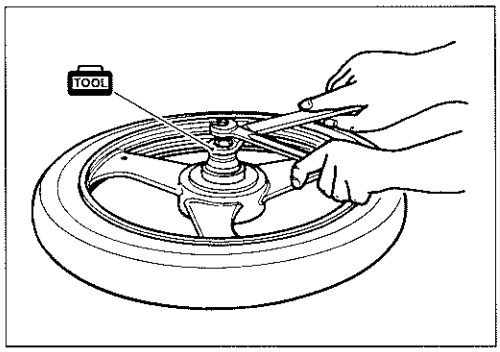

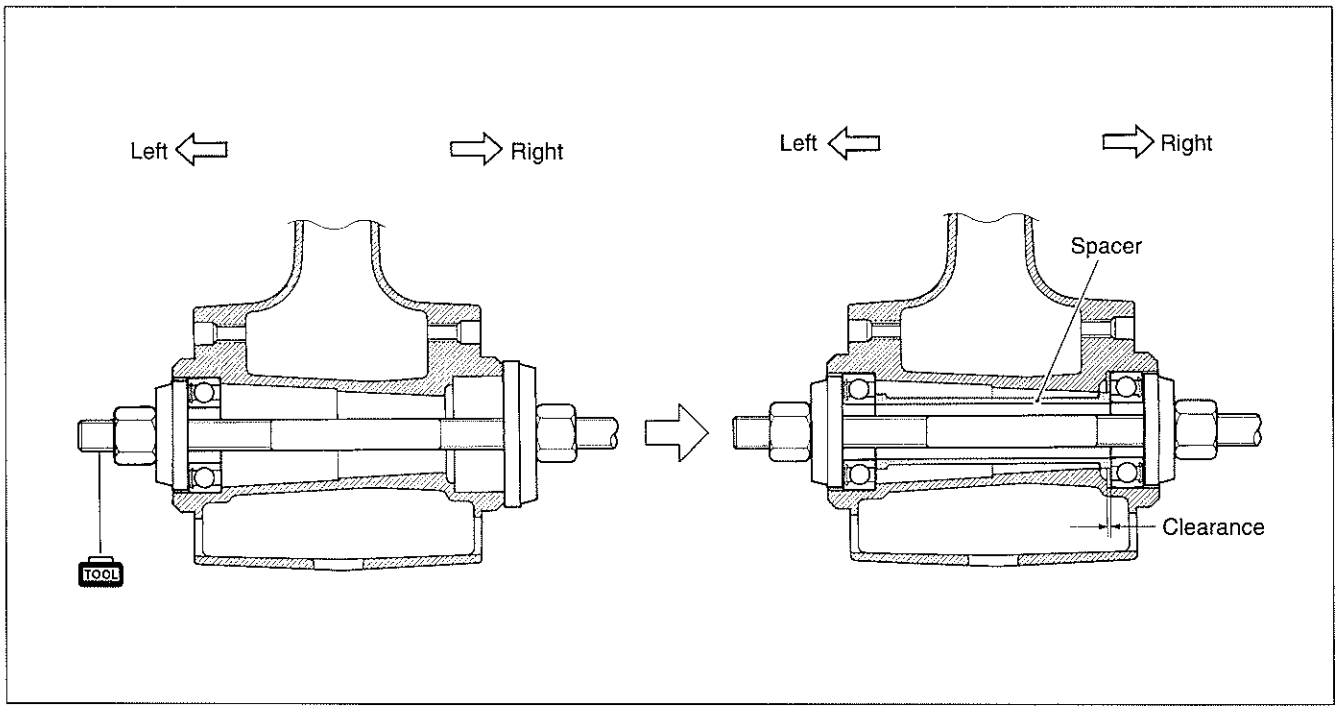

BRAKE DISC

Make sure that the brake disc is clean and free of any greasy matter.

- Apply THREAD LOCK SUPER "1360" to the disc mounting bolts and tighten them to the specified torque.

Brake disc bolt: 23 N·m (2.3 kgf-m, 16.5 lb-ft)

1360 99000-32130: THREAD LOCK SUPER "1360"

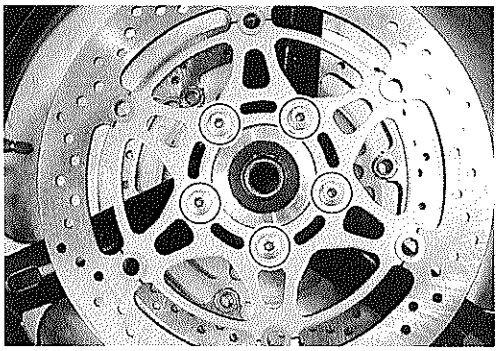

WHEEL

Install the front wheel with the front axle and tighten the front axle temporarily.

⚠ WARNING

The directional arrow on the wheel must point to the wheel rotation, when remounting the wheel.

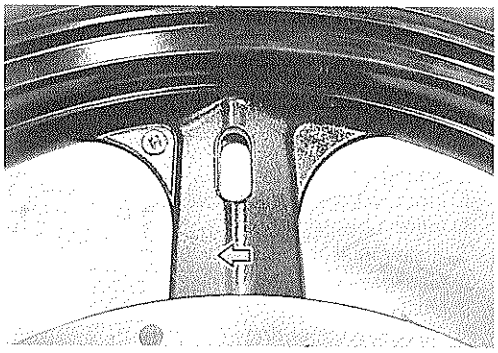

BRAKE CALIPER

- Tighten the brake caliper mounting bolts to the specified torque.

Front brake caliper mounting bolt:
39 N·m (3.9 kgf-m, 28.0 lb-ft)

NOTE:
Push the pistons all the way into the caliper and remount the calipers.

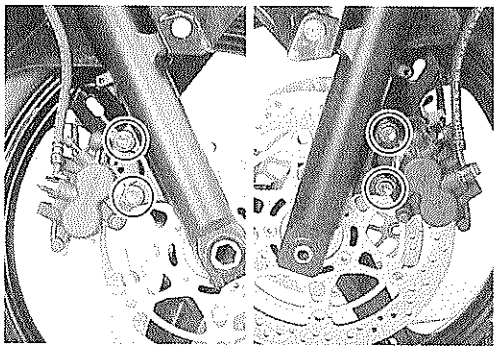

FRONT AXLE

- Tighten the front axle to the specified torque with special tool.

TOOL 09944-28320: Hexagon bit 19 mm

Front axle: 100 N·m (10.0 kgf-m, 72.5 lb-ft)

NOTE:
Before tightening the two axle pinch bolts on the right front fork leg, move the front fork up and down 4 or 5 times without applying front brake.

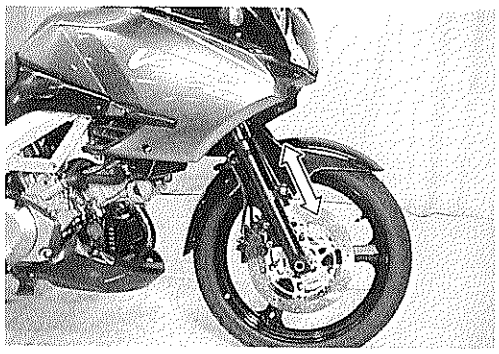

- Tighten two axle pinch bolts on the right front fork leg to the specified torque.

Front axle pinch bolt: 23 N·m (2.3 kgf-m, 16.5 lb-ft)

FRONT FORK
CONSTRUCTION

① O-ring
② Washer
③ Spacer
④ Spring
⑤ Inner rod/damper rod (cartridge)
⑥ Inner tube
⑦ Slide metal
⑧ Gasket
⑨ Dust seal
⑩ Oil seal stopper ring
⑪ Oil seal
⑫ Oil seal retainer
⑬ Guide metal
⑭ Oil lock piece
⑮ Outer tube

Ⓐ Front fork cap bolt
Ⓑ Inner rod lock nut
Ⓒ Front axle pinch bolt
Ⓓ Damper rod bolt

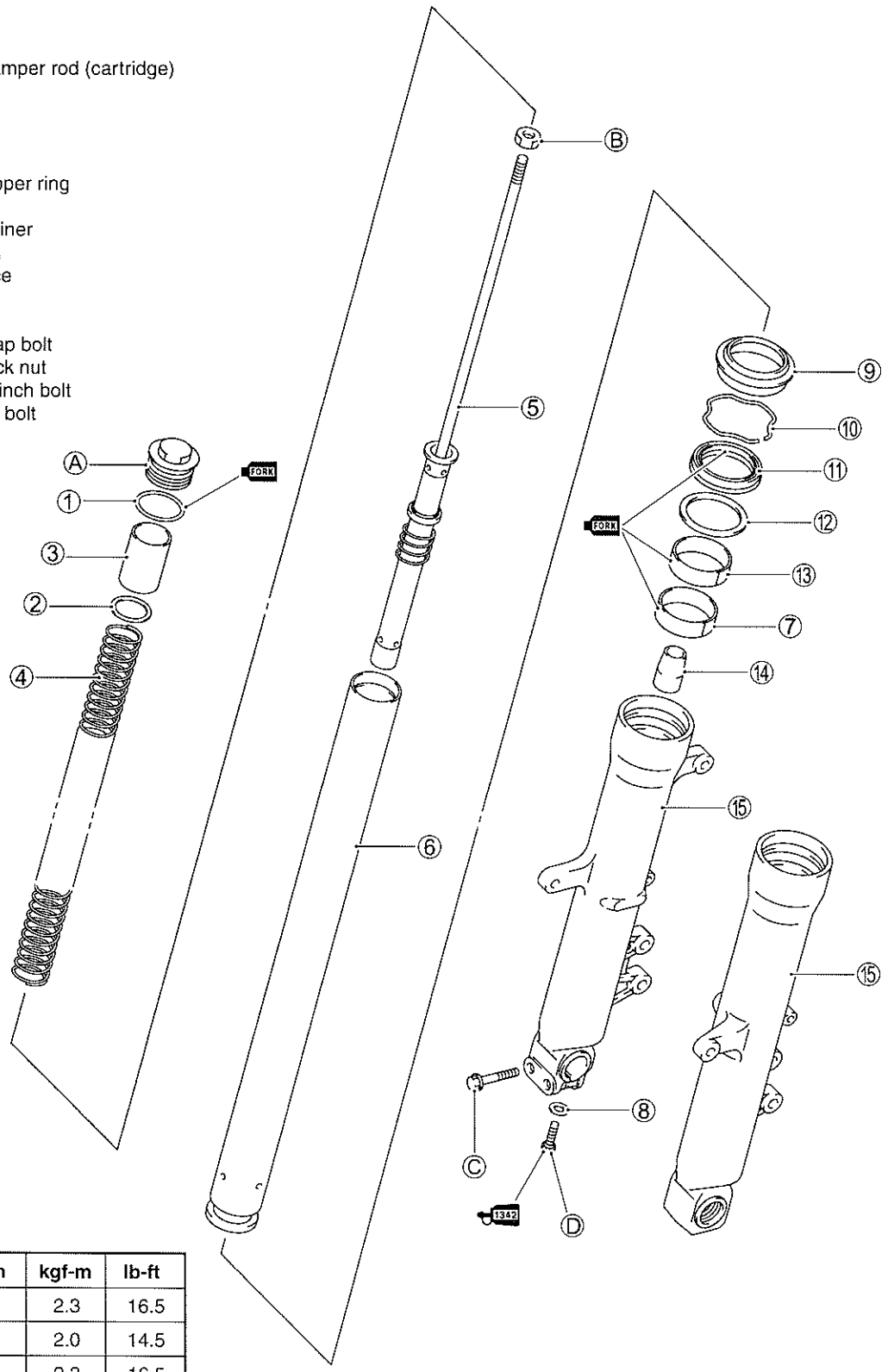

ITEM	N·m	kgf-m	lb-ft
Ⓐ	23	2.3	16.5
Ⓑ	20	2.0	14.5
Ⓒ	23	2.3	16.5
Ⓓ	20	2.0	14.5

REMOVAL AND DISASSEMBLY

- Remove the front wheel. (☞6-9)
- Remove the front fender bolt ① and brake hose bolt ②.

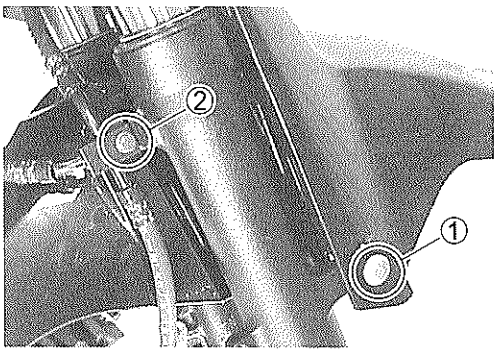

- Loosen the front fork upper clamp bolts ③.

NOTE:
Slightly loosen the front fork cap bolts ④ before loosening the lower clamp bolts to facilitate later disassembly.

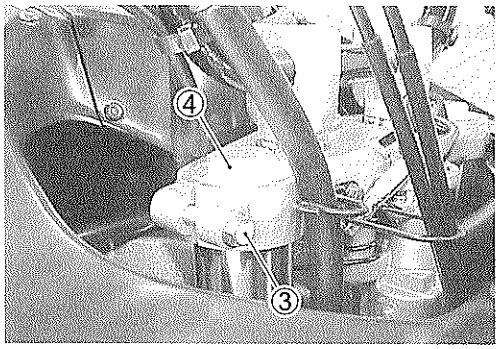

- Loosen the front fork lower clamp bolts.

NOTE:
Hold the front fork by the hand to prevent sliding out of the steering stem.

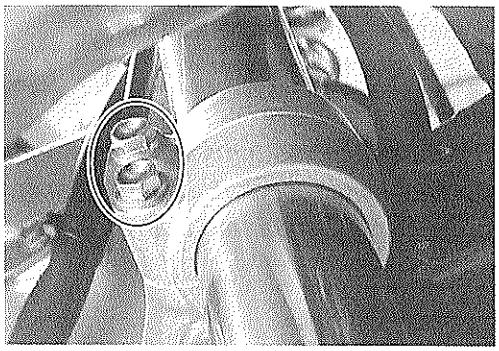

- Loosen and remove the front fork cap bolt.

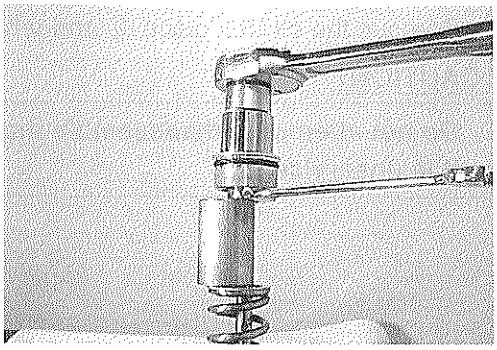

- Remove the spacer ⑤, washer ⑥ and spring ⑦.

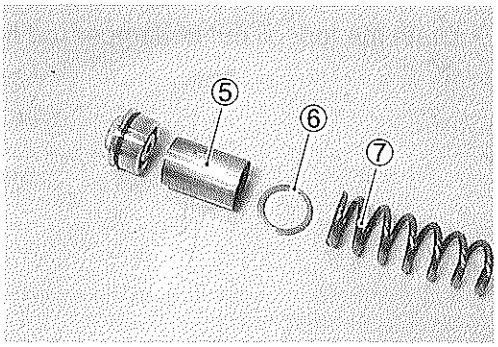

- Invert the fork and drain the fork oil out of the fork by stroking.
- Hold the fork inverted for a few minutes to drain oil.

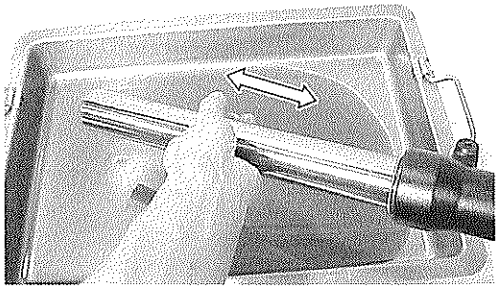

- Remove the front axle pinch bolts.

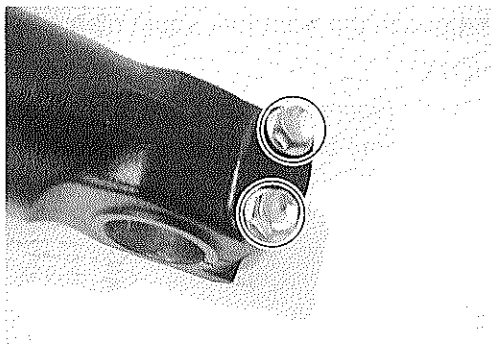

- Remove the damper rod bolt ⑧.
- Remove the damper rod.

NOTE:
If the damper rod turns together with the damper rod bolt, temporarily install the fork spring, spacer, washer and cap bolt to prevent the damper rod from turning.

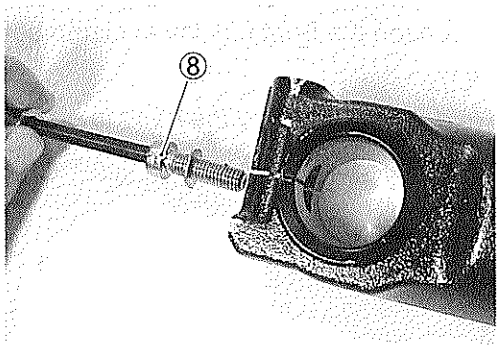

- Remove the oil lock piece ⑨ and rebound spring ⑩.

CAUTION

Do not attempt to disassemble the damper rod.
It is unserviceable.

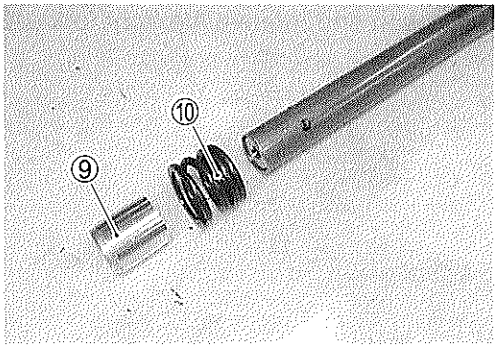

- Drain the fork oil out of damper rod by pumping the rod.

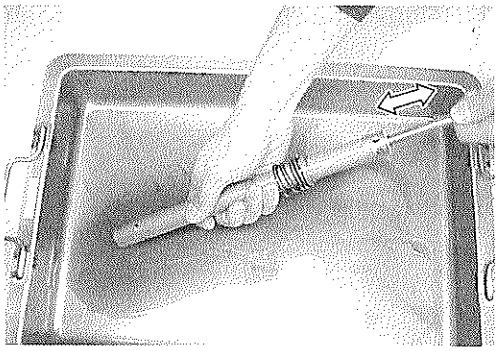

- Remove the dust seal.

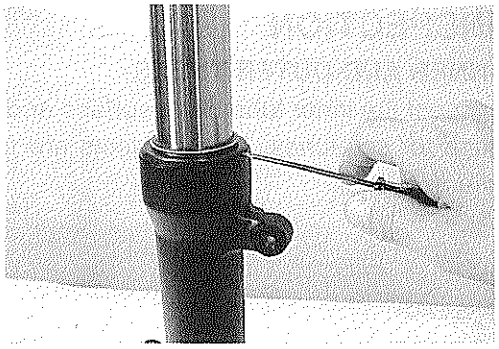

- Remove the oil seal stopper ring.

- Pull the inner tube out of the outer tube.

NOTE:
Be careful not to damage the inner tube.

CAUTION

The slide metals, oil seal and dust seal must be replaced with the new ones when reassembling the front fork.

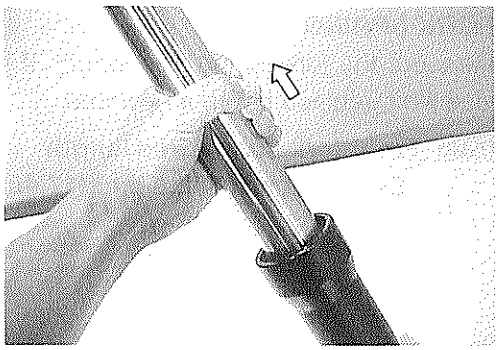

- Remove the following parts.
  - ⑪ Oil seal
  - ⑫ Oil seal retainer
  - ⑬ Guide metal
  - ⑭ Slide metal

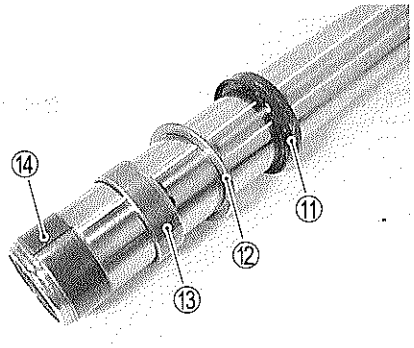

INSPECTION

INNER AND OUTER TUBES

Inspect the inner tube outer surface and the outer tube inner surface for scratches. If any defects are found, replace them with the new ones.

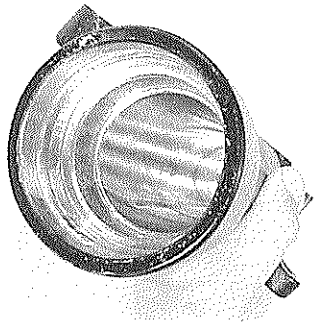

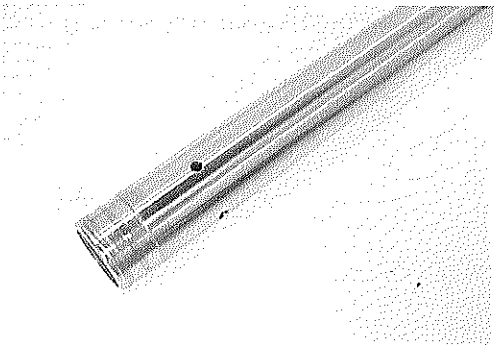

FORK SPRING

Measure the fork spring free length. If it is shorter than the service limit, replace it with a new one.

DATA Front fork spring free length
Service limit: 442.0 mm (17.40 in)

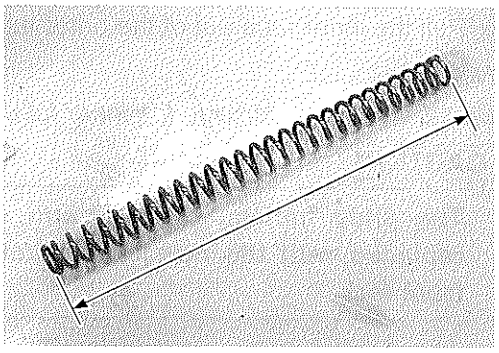

DAMPER ROD

Move the inner rod by hand to examine it for smoothness. If any defects are found, replace the inner/damper rod (cartridge).

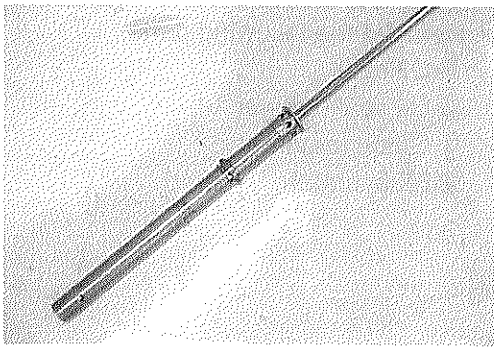

REASSEMBLY AND REMOUNTING

Reassemble and remount the front fork in the reverse order of removal and disassembly. Pay attension to the following points:

TUBE METALS AND SEALS

- Hold the inner tube vertically and clean the metal groove and install the guide metal by hand as shown.

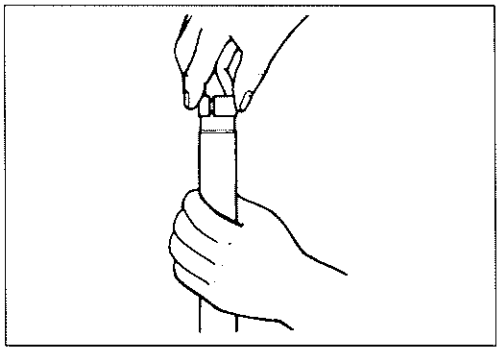

CAUTION

Use special care to prevent damage to the "Teflon" coated surface of the guide metal when mounting it.

- Apply fork oil to the oil seal lip lightly before installing it.
- Assemble the following parts as shown.
  ① Oil seal
  ② Oil seal retainer
  ③ Guide metal
  ④ Dust seal
  ⑤ Oil seal stopper ring
  ⑥ Slide metal

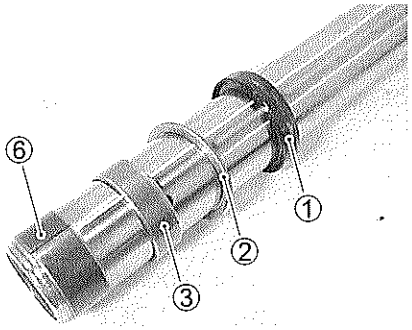

CAUTION

- **When installing the oil seal to outer tube, be careful not to damage the oil seal lip.**
- **Do not use solvents for washing to prevent oil seal damage.**
- **Apply fork oil to the Anti-friction metals and lip of the oil seal.**
- **Make sure that the oil seal stopper ring ⑤ has been fitted securely.**

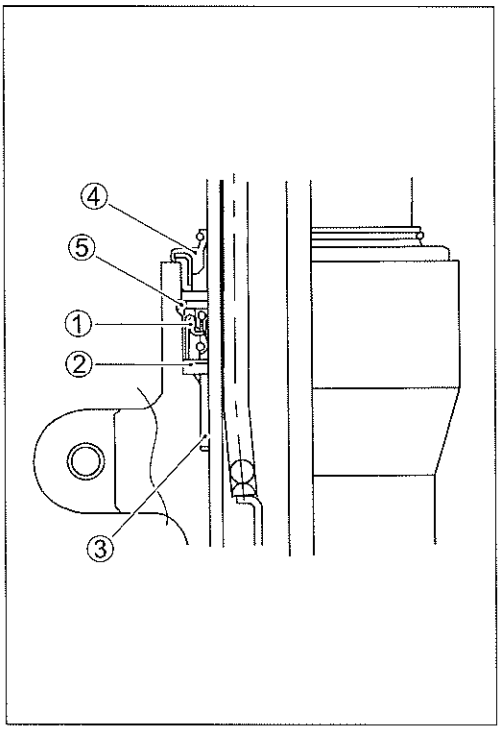

- Insert the inner tube into the outer tube and fit the oil seal and dust seal with the special tool.

TOOL 09940-52861: Front fork oil seal installer

NOTE:
Stamped mark on the oil seal should face outside.

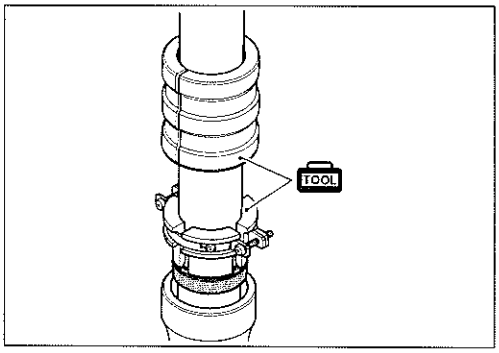

DAMPER ROD BOLT

- Install the rebound spring and oil lock piece to the damper rod.

NOTE:
When installing the rebound spring, the smaller inner diameter of spring must seat the stopper of damper rod.

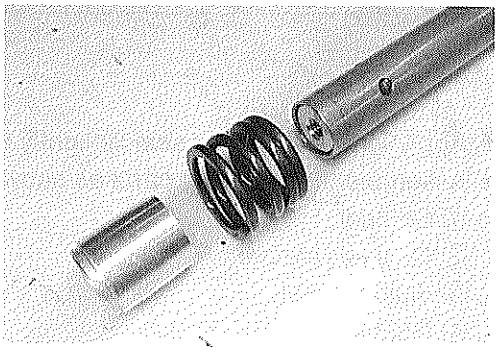

- Insert the inner rod/damper rod (cartridge) into the outer tube.
- Apply THREAD LOCK "1342" to the damper rod bolt and tighten it to the specified torque.

1342 99000-32050: THREAD LOCK "1342"

Damper rod bolt: 20 N·m (2.0 kgf-m, 14.5 lb-ft)

CAUTION

Use a new damper rod bolt gasket ⑦ to prevent oil leakage.

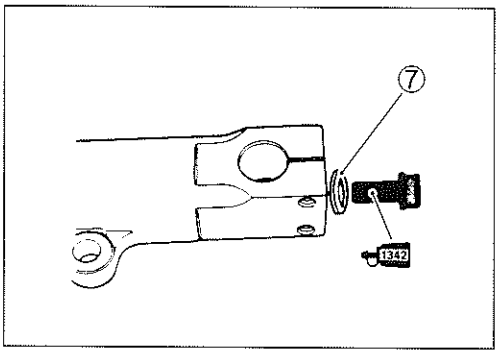

NOTE:
If the damper rod turns together with the damper rod bolt, temporarily install the fork spring, spacer, washer and cap bolt to prevent the damper rod from turning.

FORK OIL

- Place the front fork vertically without spring.
- Compress the front fork fully.
- Pour the specified front fork oil into the front fork up to the top of the inner rod.

FORK 99000-99001-SS8: SUZUKI FORK OIL SS-8

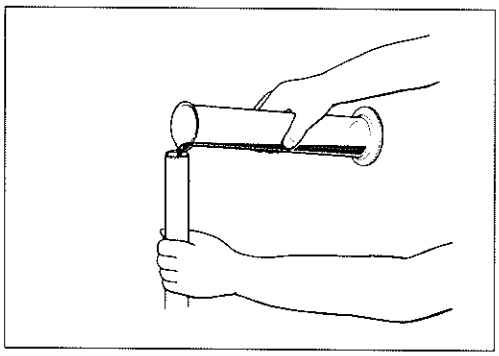

- Move the inner rod slowly more than ten times until no more air bubbles come out from the oil.

TOOL 09940-52841: Inner rod holder

NOTE:
Refill the front fork oil up to the top of the inner tube in oder to find air bubbles while bleeding air.

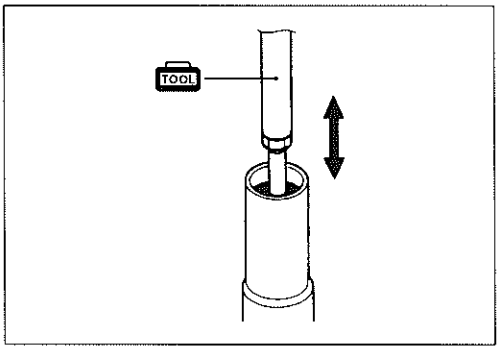

- Move the inner tube up and down several strokes until no more bubbles come out from the oil.
- Keep the front fork vertically and leave it during 5 – 6 minutes.

NOTE:
** Always keep the oil level over the cartridge top end, or air may enter the cartridge during this procedure.*
** Take extream attention to pump out air completely.*

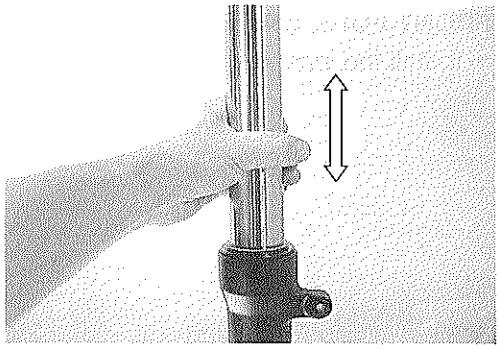

- Hold the front fork vertically and adjust the fork oil level with the special tool.

NOTE:
When adjusting the fork oil level, remove the fork spring and compress the inner tube fully.

TOOL 09943-74111: Front fork oil level gauge

DATA Fork oil level: 133.0 mm (5.24 in)
Capacity (each leg): 505.0 ml (17.07/17.78 US/Imp oz)

FORK 99000-99001-SS8: SUZUKI FORK OIL SS-8

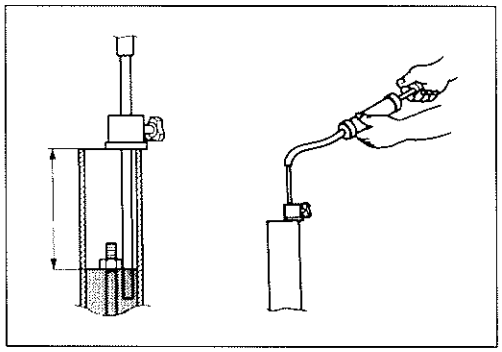

FORK SPRING

- Pull the inner rod up with the inner rod holder.

TOOL 09940-52841: Inner rod holder

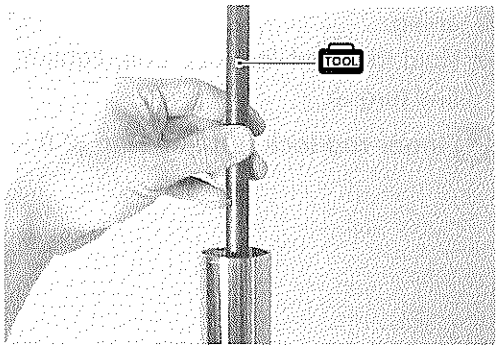

- Install the fork spring.

NOTE:
The smaller end of the fork spring should be at the bottom of the front fork.

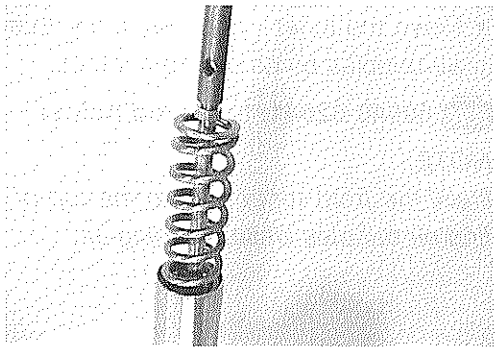

FRONT FORK CAP BOLT

- Install the washer ① and spacer ②.

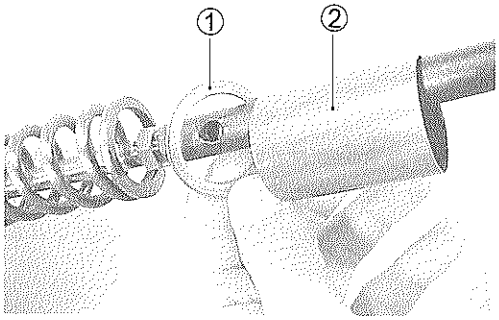

- Adjust the height Ⓐ of the inner rod threads by turning the lock nut ③ as shown.
  Ⓐ: 10.5 mm (0.41 in)

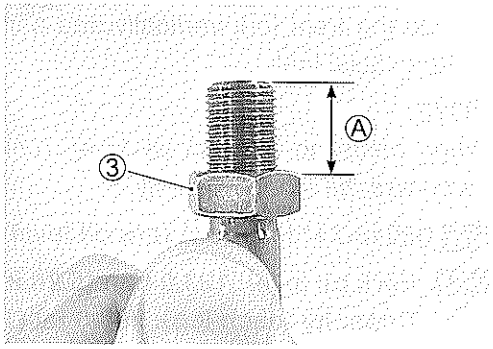

- Tighten the front fork cap bolt to seat at lock nut by hand tightening.
- Hold the front fork cap bolt, tighten the lock nut to the specified torque.

Inner rod lock nut : 20 N·m (2.0 kgf-m, 14.5 lb-ft)

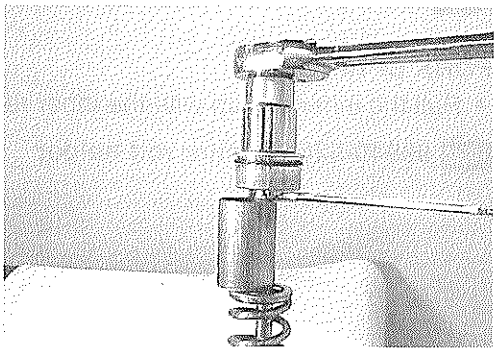

- Apply fork oil lightly to the O-ring.

CAUTION

Use a new O-ring to prevent oil leakage.

- Tighten the front fork cap bolt temporarily.

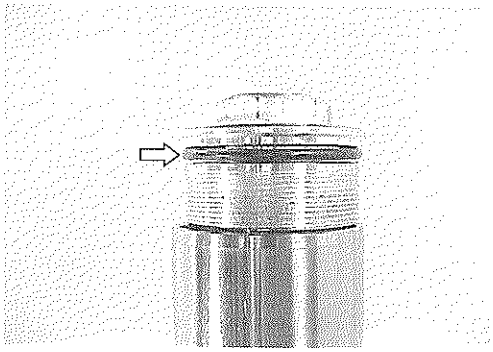

- Set the front fork to the front fork lower bracket temporarily by tightening the lower clamp bolts.
- Tighten the front fork cap bolt ④ to the specified torque.

Front fork cap bolt: 23 N·m (2.3 kgf-m, 16.5 lb-ft)

- Align the top of the inner tube to the upper surface of the steering stem upper bracket.
- Tighten the front fork upper and lower clamp bolts.

Front fork upper clamp bolt: 23 N·m (2.3 kgf-m, 16.5 lb-ft)
Front fork lower clamp bolt: 23 N·m (2.3 kgf-m, 16.5 lb-ft)

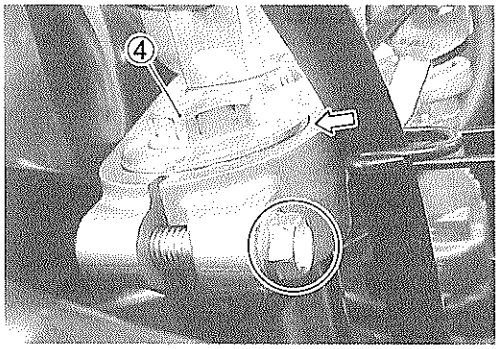

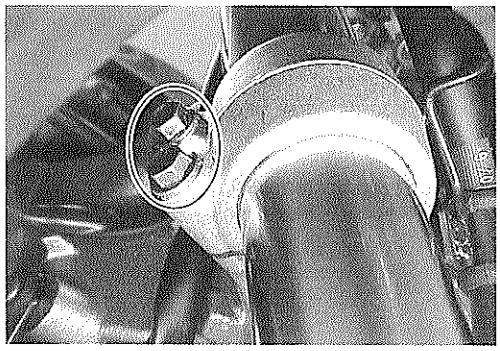

- Install the front wheel. (☞6-13)
- Install the front brake calipers.(☞6-13)

NOTE:
After install the brake calipers, front brake should be efficient by pumping the front brake lever.

STEERING AND HANDLEBAR
CONSTRUCTION

① Handlebars
② Steering stem upper bracket
③ Dust seal
④ Bearing upper
⑤ Bearing lower
⑥ Steering stem lower bracket
⑦ Dust cover
⑧ Steering stem nut
⑨ Handlebar balancer
⑩ Expander
⑪ Spacer
⑫ Washer
⑬ Expander

Ⓐ Handlebar clamp bolt
Ⓑ Steering stem head nut
Ⓒ Handlebar holder nut
Ⓓ Front fork upper clamp bolt
Ⓔ Steering stem lock nut
Ⓕ Front fork lower clamp bolt

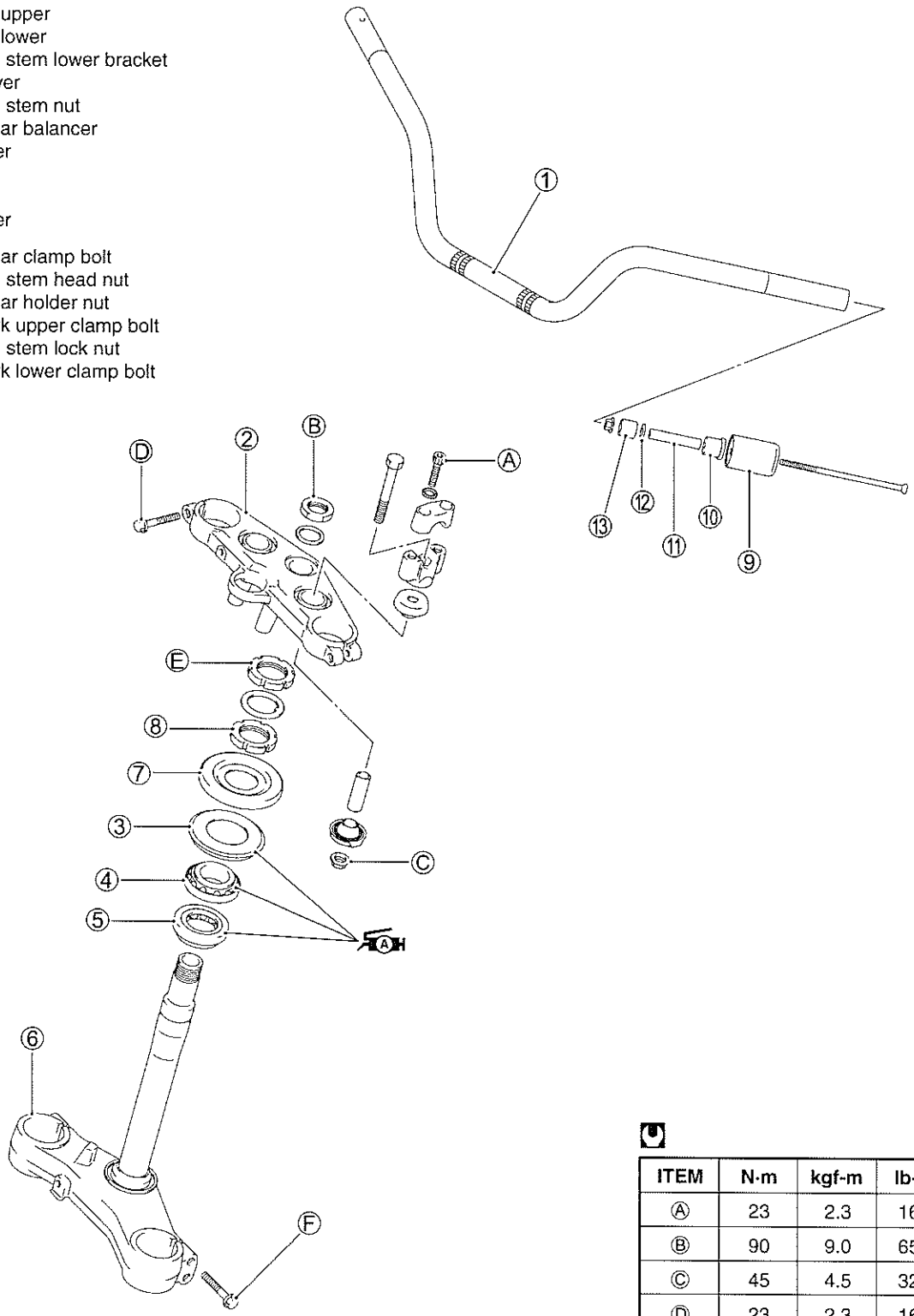

ITEM	N·m	kgf-m	lb-ft
Ⓐ	23	2.3	16.5
Ⓑ	90	9.0	65.0
Ⓒ	45	4.5	32.5
Ⓓ	23	2.3	16.5
Ⓔ	80	8.0	58.0
Ⓕ	23	2.3	16.5

REMOVAL

HANDLEBARS

- Remove the handlebar balancer ①.
- Remove the brake/clutch lever covers ②.

NOTE:

Do not remove the handlebar balancer mounting screw before removing the handlebar balancer. Slightly loosen the mounting screw, and then pull the balancer assembly out of handlebars.

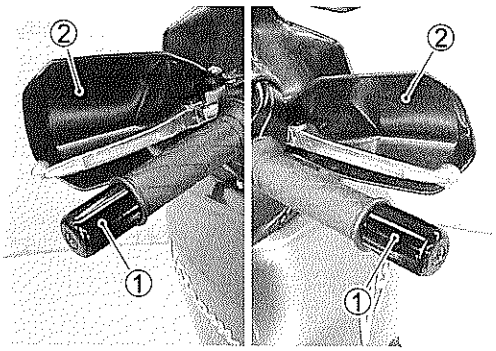

- Remove the rear view mirror ③.
- Disconnect the front brake light switch coupler ④.
- Remove the front brake master cylinder.
- Remove the right handlebar switch box ⑤ and throttle case ⑥.

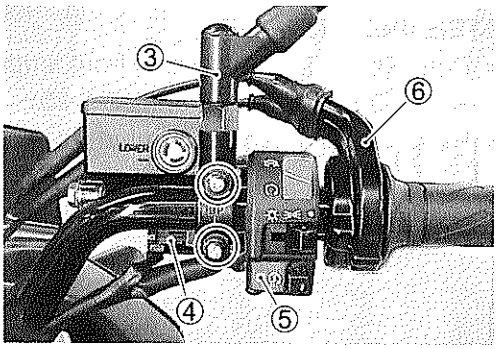

- Disconnect the clutch switch lead wires ⑦.

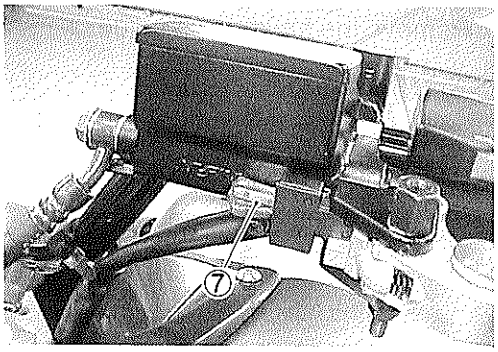

- Remove the left handlebar switch box ⑧.
- Remove the rear view mirror ⑨.
- Remove the clutch master cylinder.

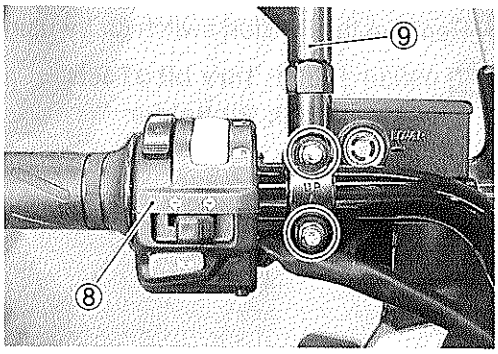

- Remove the handlebars by removing the handlebar clamp bolts.

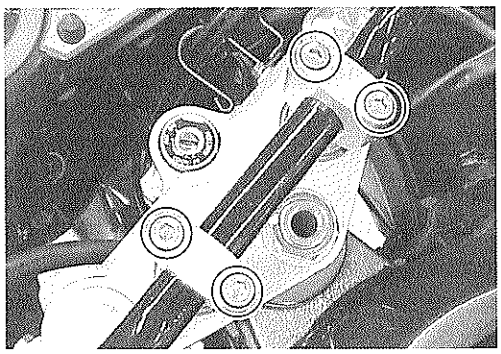

STEERING STEM

- Remove the front forks and front fender. (☞6-15)
- Remove the handlebars. (☞6-25)
- Remove the brake hose guide ①.

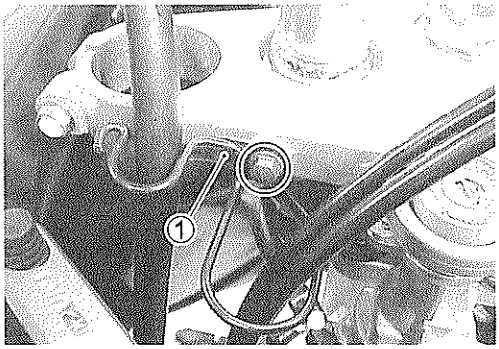

- Remove the brake hose guide ②.

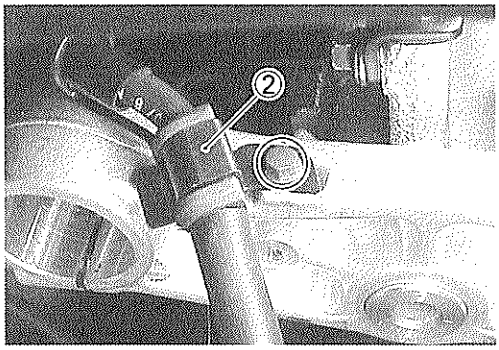

- Remove the ignition switch ③ by using the special tools.

TOOL 09930-11920: Torx bit JT40H
09930-11940: Bit holder

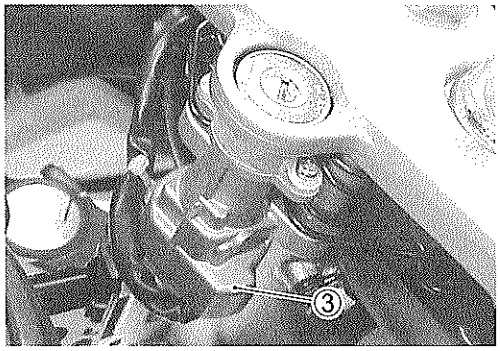

- Remove the steering stem upper bracket by removing the steering stem nut.

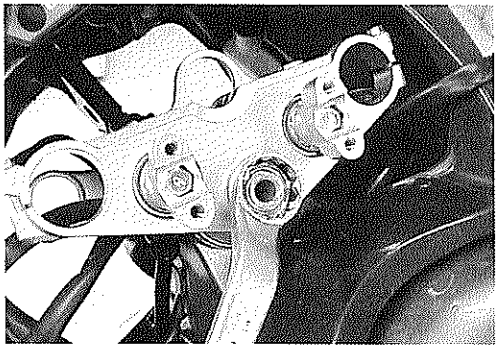

- Remove the handle holder nuts ④ and disassemble the handle holder.

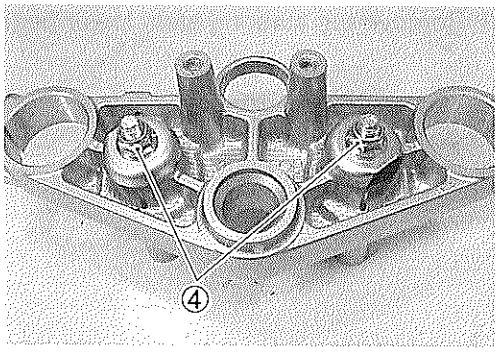

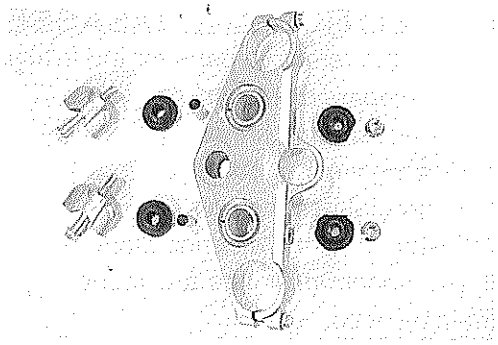

- Remove the steering stem nuts with the special tools.

TOOL 09940-14911: Steering stem nut wrench
09940-14960: Steering stem nut wrench

NOTE:
When loosing the stem nuts, hold the steering stem lower bracket to prevent it from falling.

- Remove the steering stem lower bracket.

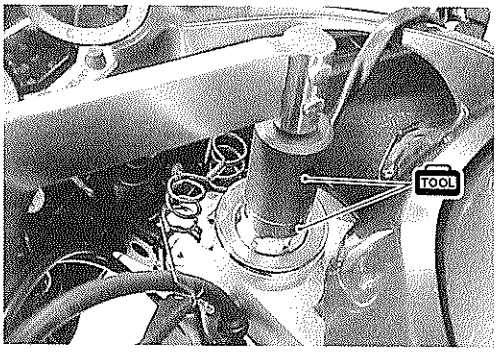

- Remove the dust cover ⑤, the dust seal ⑥.

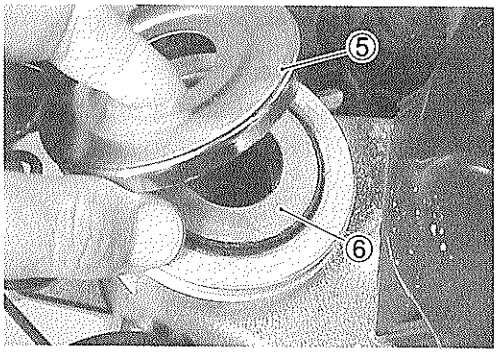

- Remove the steering stem upper bearing ⑦.

- Remove the steering stem lower bearing ⑧.

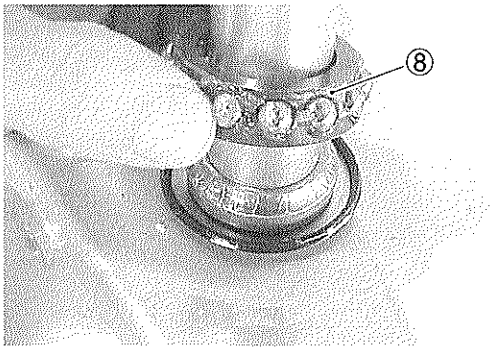

INSPECTION AND DISASSEMBLY

Inspect the removed parts for the following abnormalities.

* Handlebars distriction
* Race wear and brinelling
* Bearing wear or damage
* Abnormal bearing noise
* Distortion of the steering stem

If any abnormal points are found, replace defective parts with the new ones.

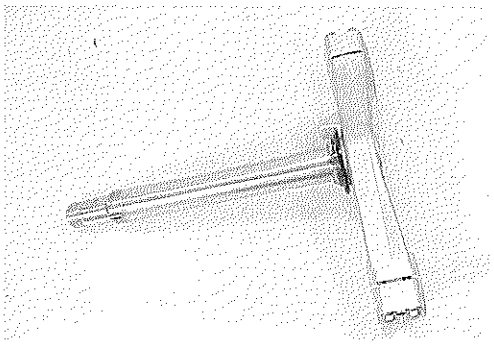

- Remove the steering stem lower bearing inner race using a chisel.

CAUTION

The removed bearing inner race and dust seal must be replaced with the new ones.

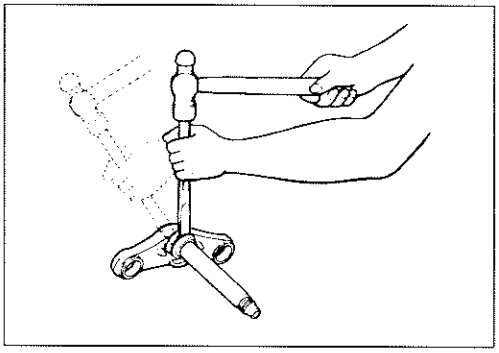

- Drive out the steering stem upper and lower bearing races using the special tools.

TOOL 09941-54911: Bearing outer race remover
09925-18011: Steering bearing installer

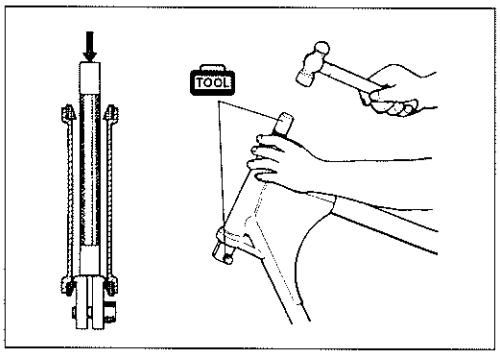

REASSEMBLY AND REMOUNTING

Reassemble and remount the steering stem in the reverse order of removal and disassembly. Pay attention to the following points:

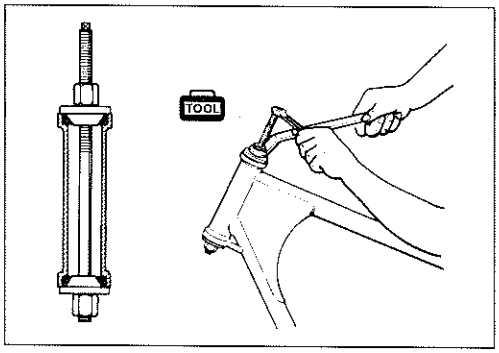

OUTER RACES

- Press in the upper and lower outer races using the special tool.

TOOL 09941-34513: Steering outer race installer
09913-70210: Bearing installer set

BEARINGS

- Press in the dust seal and lower bearing using the special tool.

TOOL 09925-18011: Steering bearing installer

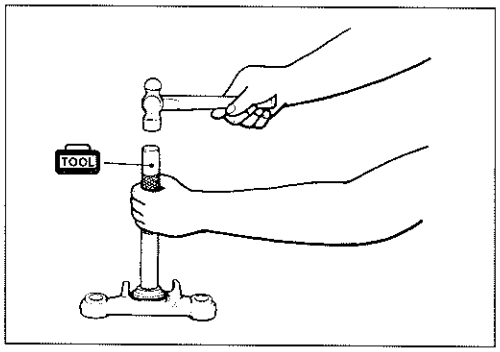

- Apply grease to the bearings and dust seal.
- Install the lower bearing to the steering stem lower bracket.
- Install the upper bearing, bearing inner race, dust seal and dust cover onto the frame.

A H 99000-25030: SUZUKI SUPER GREASE "A" (USA)
99000-25010: SUZUKI SUPER GREASE "A" (Others)

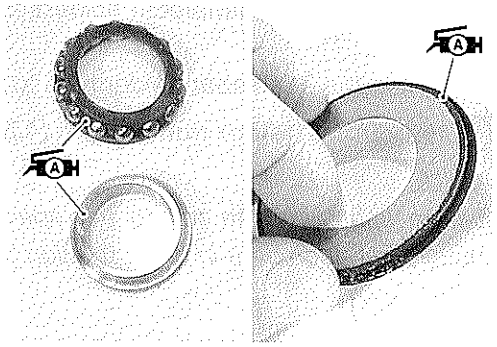

STEERING STEM

- Tighten the steering stem nut to the specified torque with the special tools.

TOOL 09940-14911: Steering stem nut wrench
09940-14960: Steering stem nut wrench socket

Steering stem nut: 45 N·m (4.5 kgf-m, 32.5 lb-ft)

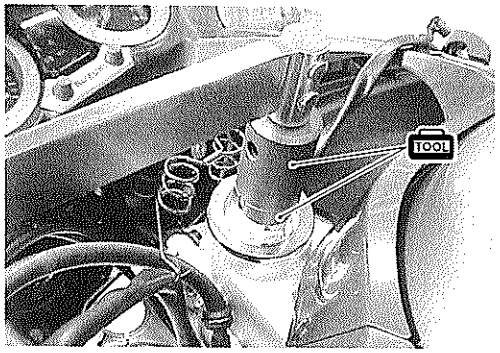

- Turn the steering stem about five or six times to the left and right so that the angular ball bearing will be seated properly.
- Loosen the steering stem nut by ¼ – ½ turn.

NOTE:
This adjustment will vary from motorcycle to motorcycle.

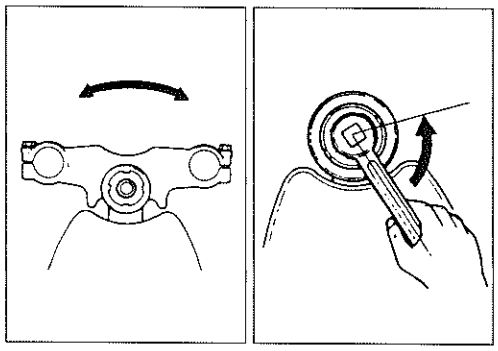

- Install the washer.

NOTE:
When installing the washer, align the stopper lug to the groove of the steering stem.

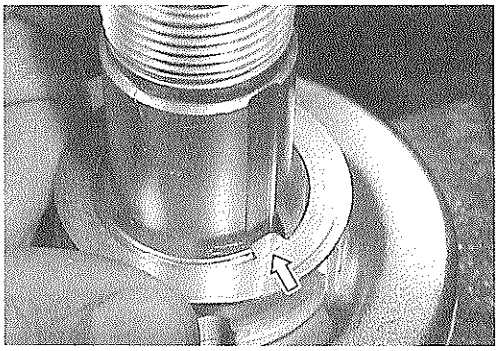

- Install the steering stem lock nut and tighten it to the specified torque with the special tools.

TOOL 09940-14911: Steering stem nut wrench
09940-14960: Steering stem nut wrench socket

Steering stem lock nut: 80 N·m (8.0 kgf-m, 58.0 lb-ft)

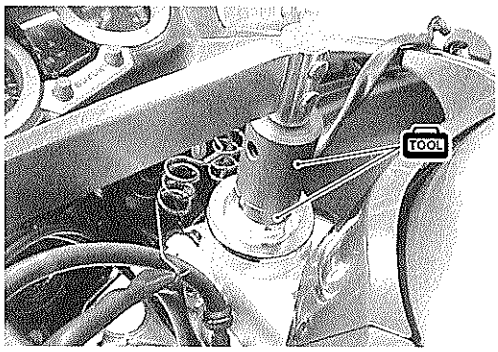

- Reassemble the handlebar holders to the steering stem upper bracket.
- Tighten the handlebar holder nuts to the specified torque.

Handlebar holder nut: 45 N·m (4.5 kgf-m, 32.5 lb-ft)

NOTE:
Before tightening the nut to the specified torque, temporarily install the handlebars in order to align both holders.

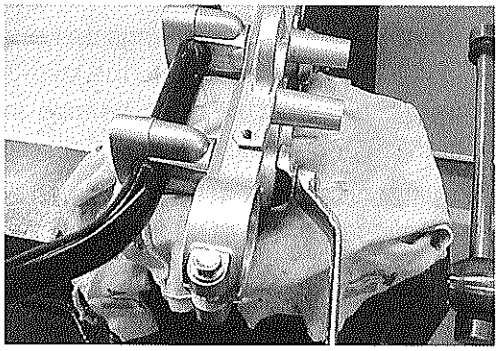

- Install the steering stem upper bracket and tighten the steering stem nut lightly.
- Install the ignition switch ① and harness guide ②. (☞7-31)

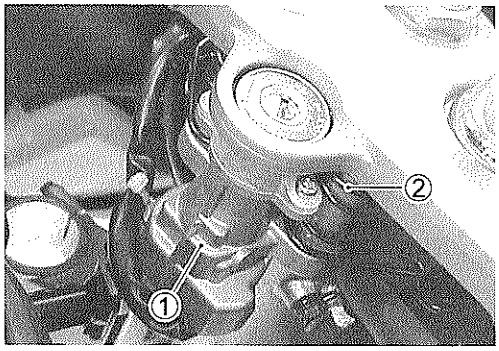

- Install the front fork to the steering stem and tighten the lower clamp bolts temporarily.
- Tighten the steering stem head nut to the specified toupue.

Steering stem head nut: 90 N·m (9.0 kgf-m, 65.0 lb-ft)

- Remount the front forks and the front fender. (☞6-23)

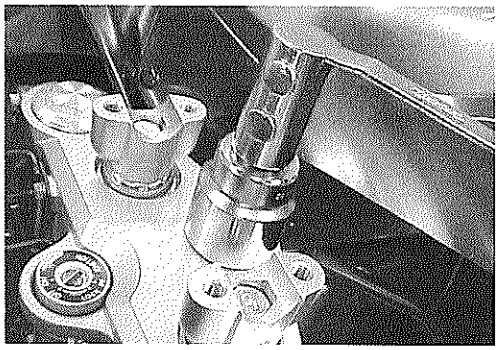

HANDLEBARS

- Install the handlebars with the punch mark Ⓐ aligned with the mating surface Ⓑ of the handlebar holder.

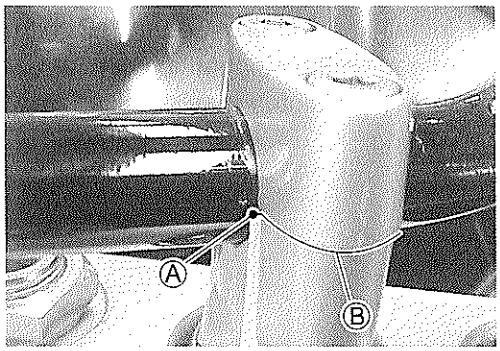

- Set the punch mark Ⓒ on the handlebar clamp forward.
- Tighten the handlebar clamp bolts to the specified torque.

Handlebar clamp bolt: 23 N·m (2.3 kgf-m, 16.5 lb-ft)

NOTE:
When tightening the handlebar clamp bolts, first tighten the bolt ① and then tighten the bolt ②.

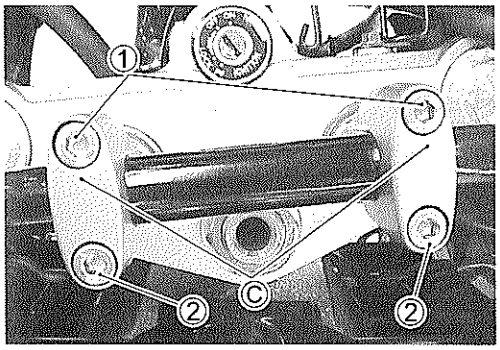

HANDLEBAR SWITCH BOX

- Install the throttle cable case.
- Apply grease to the throttle cables and their holes.

99000-25030: SUZUKI SUPER GREASE "A" (USA)
99000-25010: SUZUKI SUPER GREASE "A" (Others)

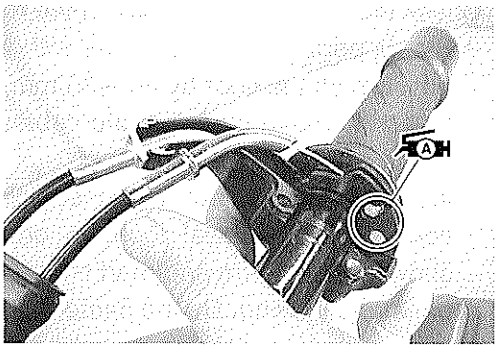

- Align the mating surface Ⓑ of the throttle case with the punch mark Ⓐ on the handlebars.

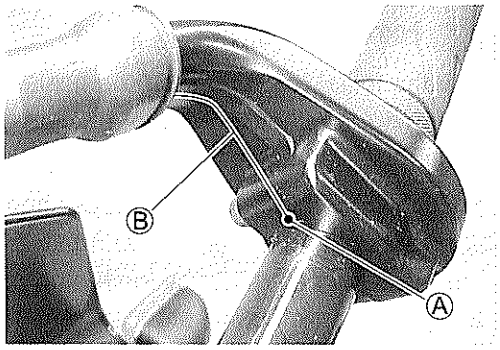

- Install the right handlebar switch box to the handlebars by engaging the stopper ① with the handlebar's hole ②.
- Install the front brake master cylinder. (6-65)

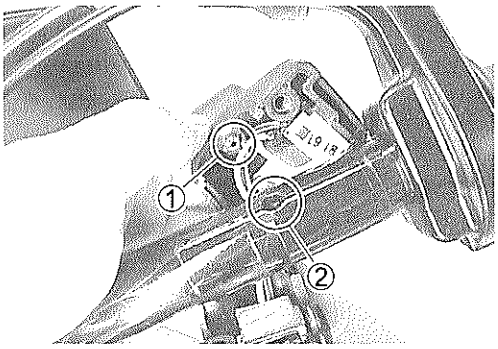

- Install the left handlebar switch box to the handlebars by engaging the stopper ① with the handlebars hole ②.
- Install the clutch master cylinder with the proper clutch hose routing.

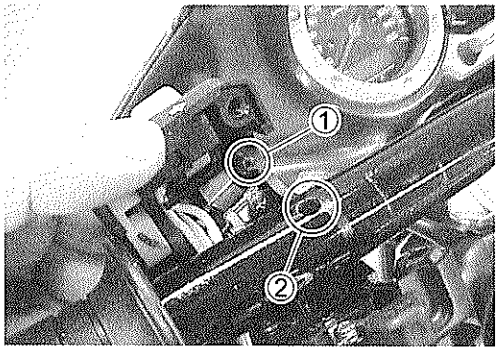

- Install the handlebar balancers and the rear view mirrors. (Handlbar balancer installation: ☞8-31)
- Install the front wheel. (☞6-13)

STEERING TENSION ADJUSTMENT

Check the steering movement in the following procedure.

- By supporting the motorcycle with a jack, lift the front wheel until it is off the floor by 20 – 30 mm (0.8 – 1.2 in).
- Check to make sure that the cables and wire harnesses are properly routed.
- With the front wheel in the straight ahead state, hitch the spring scale (special tool) on one handlebar grip end as shown in the figure and read the graduation when the handlebar starts moving. Do the same on the other grip end.

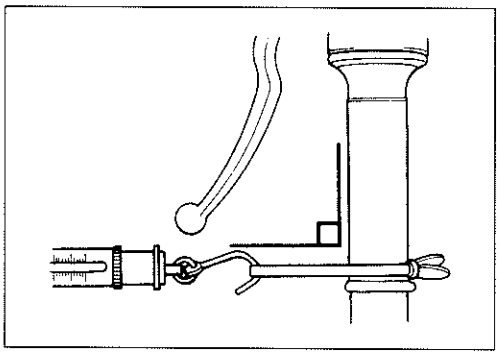

DATA Initial force: 200 – 500 grams

TOOL 09940-92720: Spring scale

- If the initial force read on the scale when the handlebar starts turning is either too heavy or too light, adjust it till it satisfies the specification.

1)First, loosen the front fork upper and lower clamp bolts, steering stem head nut and steering stem lock nut, and then adjust the steering stem nut by loosening or tightening it.
2)Tighten the steering stem lock nut, stem head nut and front fork upper and lower clamp bolts to the specified torque and re-check the initial force with the spring scale according to the previously described procedure.
3)If the initial force is found within the specified range, adjustment has been completed.

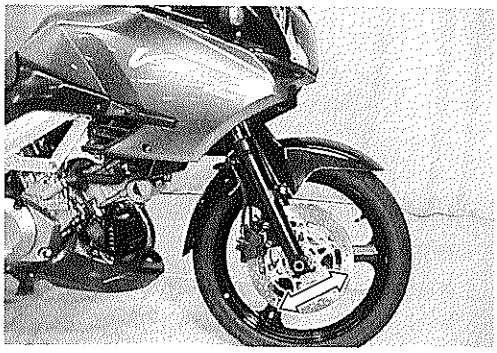

NOTE:
Hold the front fork legs, move them back and forth and make sure that the steering is not loose.

REAR WHEEL
CONSTRUCTION

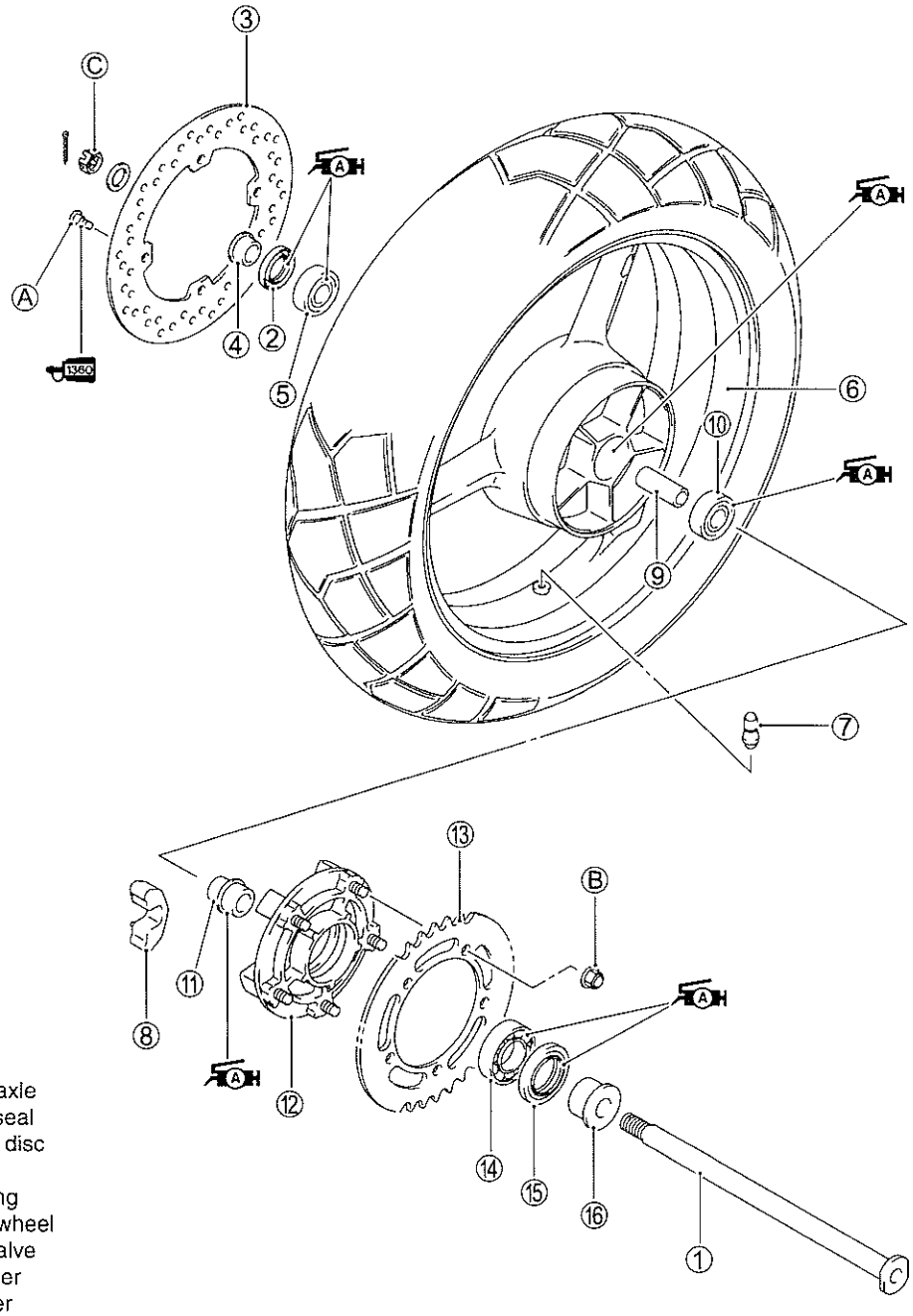

① Rear axle
② Dust seal
③ Brake disc
④ Collar
⑤ Bearing
⑥ Rear wheel
⑦ Tire valve
⑧ Damper
⑨ Spacer
⑩ Bearing
⑪ Retainer
⑫ Sprocket mounting drum
⑬ Rear sprocket
⑭ Bearing
⑮ Dust seal
⑯ Collar

Ⓐ Brake disc bolt
Ⓑ Rear sprocket nut
Ⓒ Rear axle nut

ITEM	N·m	kgf-m	lb-ft
Ⓐ	23	2.3	16.5
Ⓑ	60	6.0	43.5
Ⓒ	100	10.0	72.5

REMOVAL

- Remove the cotter pin. (For E-03, 28, 33)
- Loosen the rear axle nut ①.
- Raise the rear wheel off the ground and support the motorcycle with a jack or wooden block.
- Remove the axle nut and draw out the rear axle.

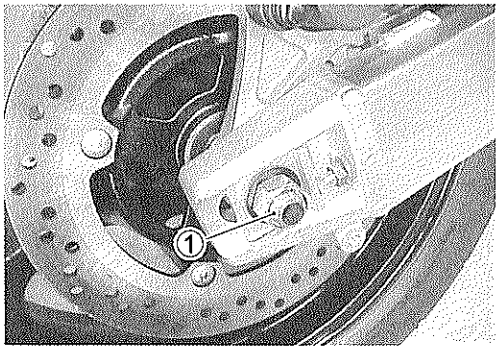

CAUTION

Do not operate the brake pedal while removing the rear wheel.

- Remove the collars ②, ③.

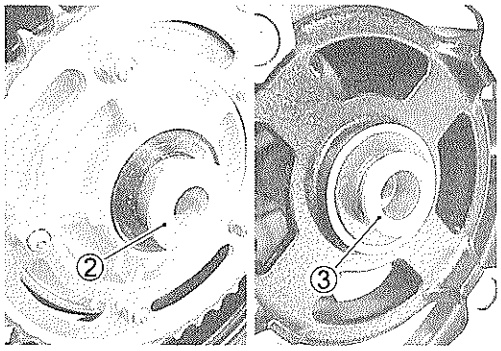

- Remove the rear sprocket mounting drum assembly ④ from the wheel hub.

NOTE:
Before removing the rear sprocket mounting drum, slightly loosen the rear sprocket nuts to facilitate later disassembly.

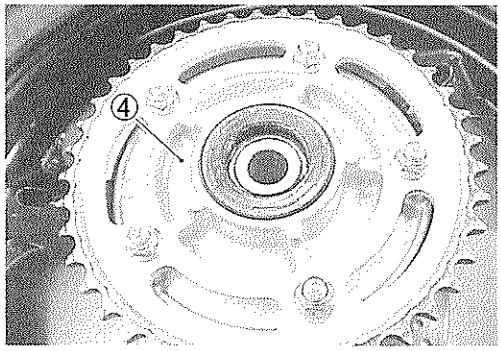

- Remove the rear sprocket mounting drum retainer ⑤.
- Remove the rear sprocket from sprocket mounting drum.

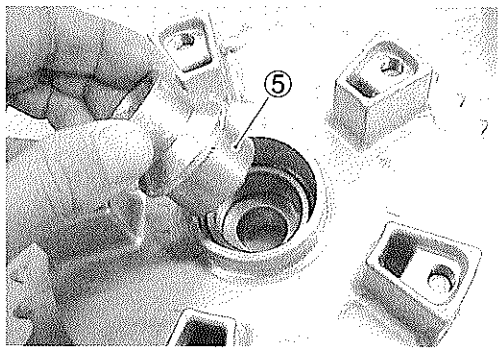

- Remove the brake disc.

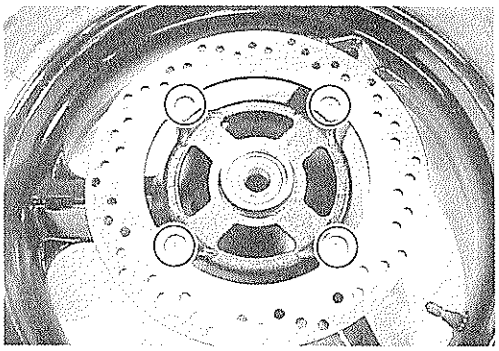

INSPECTION AND DISASSEMBLY

TIRE: (☞6-84)
WHEEL: (☞6-10 and 6-84)

REAR AXLE

Using a dial gauge, check the rear axle for runout.
If the runout exceeds the limit, replace the rear axle.

DATA Axle shaft runout: Service Limit: 0.25 mm (0.010 in)

TOOL 09900-20607: Dial gauge (1/100 mm)
09900-20701: Magnetic stand
09900-21304: V-block set (100 mm)

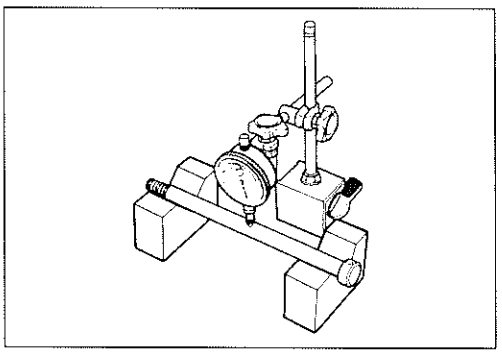

WHEEL DAMPER

Inspect the dampers for wear and damage.
Replace the damper if there is anything unusual.

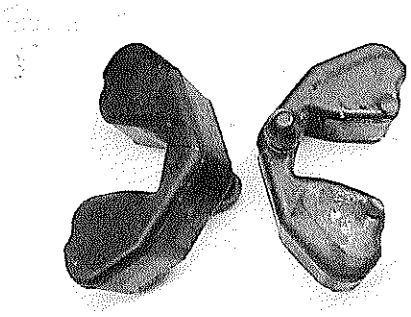

SPROCKET

Inspect the rear sprocket teeth for wear. If they are worn as shown, replace the engine sprocket, rear sprocket and drive chain as a set.

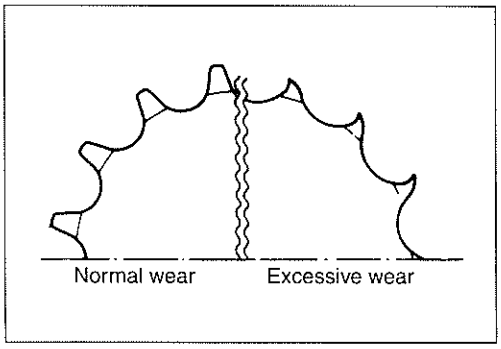

DUST SEAL

- Inspect the wheel dust seal lip and sprocket mounting drum dust seal lips for wear or damage. If any damages are found, replace the dust seal with a new one.

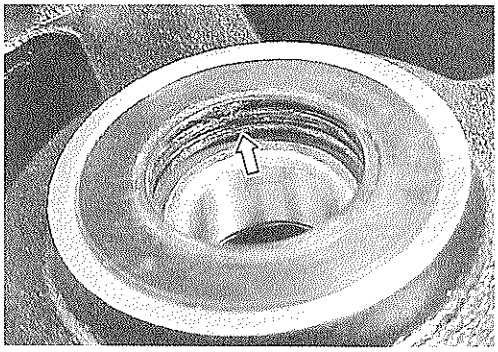

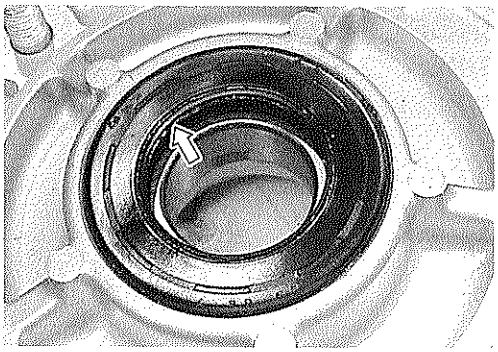

- Remove the dust seal with the special tool.

TOOL 09913-50121: Oil seal remover

CAUTION

Do not reuse the removed dust seal.

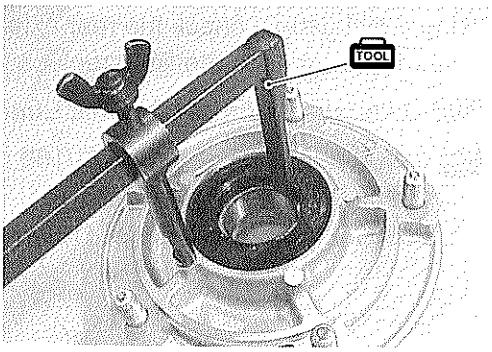

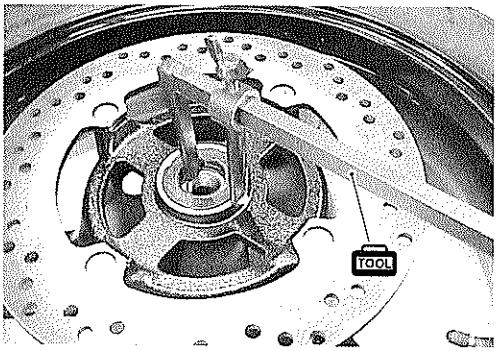

BEARING

Inspect the play of the wheel and sprocket mounting drum bearings by hand while they are in the wheel and drum. Rotate the inner race by hand to inspect for abnormal noise and smooth rotation. Replace the bearing if there is anything unusual.

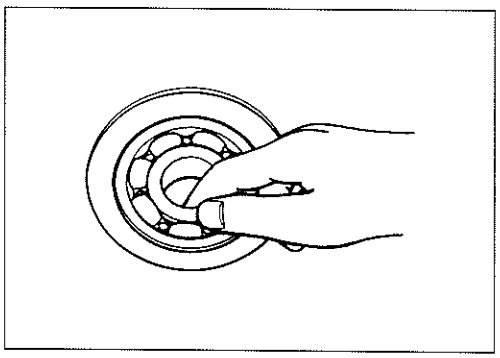

- Remove the sprocket mounting drum bearing and wheel bearings by using the special tool.

TOOL 09921-20240: Bearing remover set

CAUTION

The removed bearings must be replaced with the new ones.

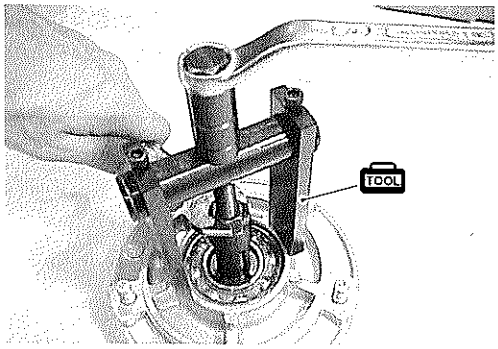

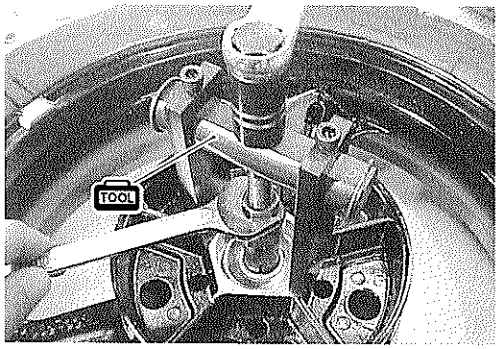

REASSEMBLY AND REMOUNTING

Reassemble and remount the rear wheel in the reverse order of removal and disassembly. Pay attention to the following points:

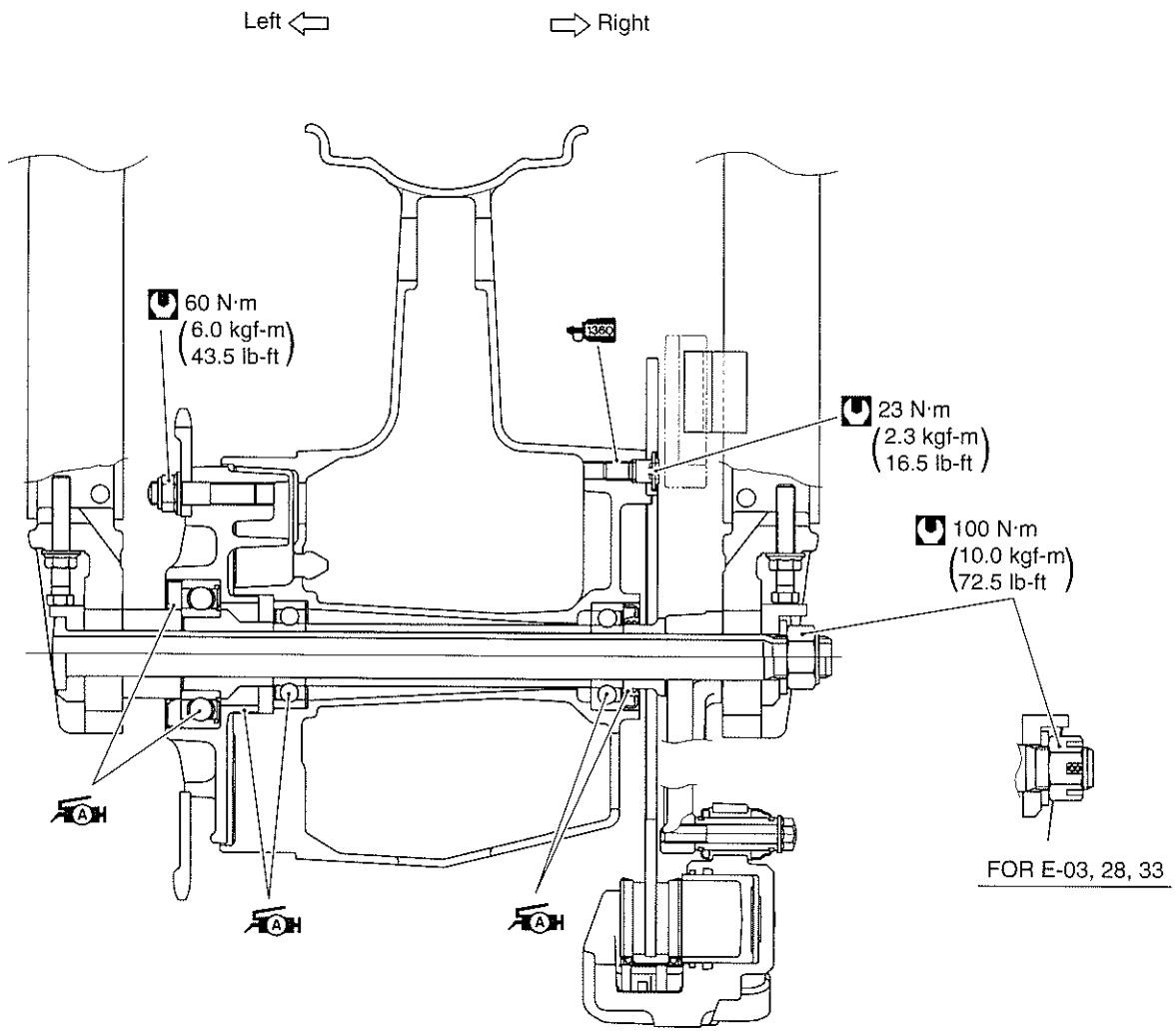

BEARING

- Apply grease to the bearings before installing.

99000-25030: SUZUKI SUPER GREASE "A" (USA)
99000-25010: SUZUKI SUPER GREASE "A" (Others)

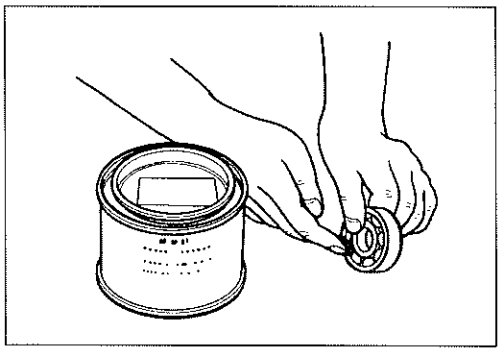

- Install the new bearing to the sprocket mounting drum using the special tool.

09924-84510: Bearing installer set

NOTE:
When installing the bearing, non-sealed side of bearing must face the special tool.

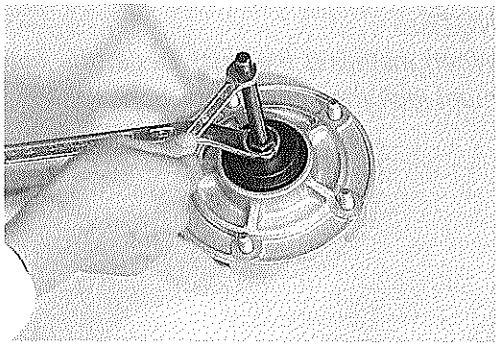

- First install the right wheel bearing, then install the left wheel bearing and spacer using the special tool.

09941-34513: Bearing/Steering race installer set

CAUTION

The sealed cover of the bearing must face outside.

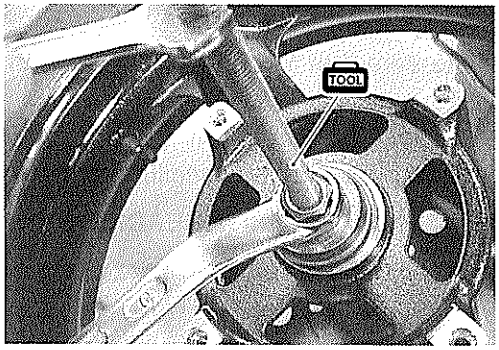

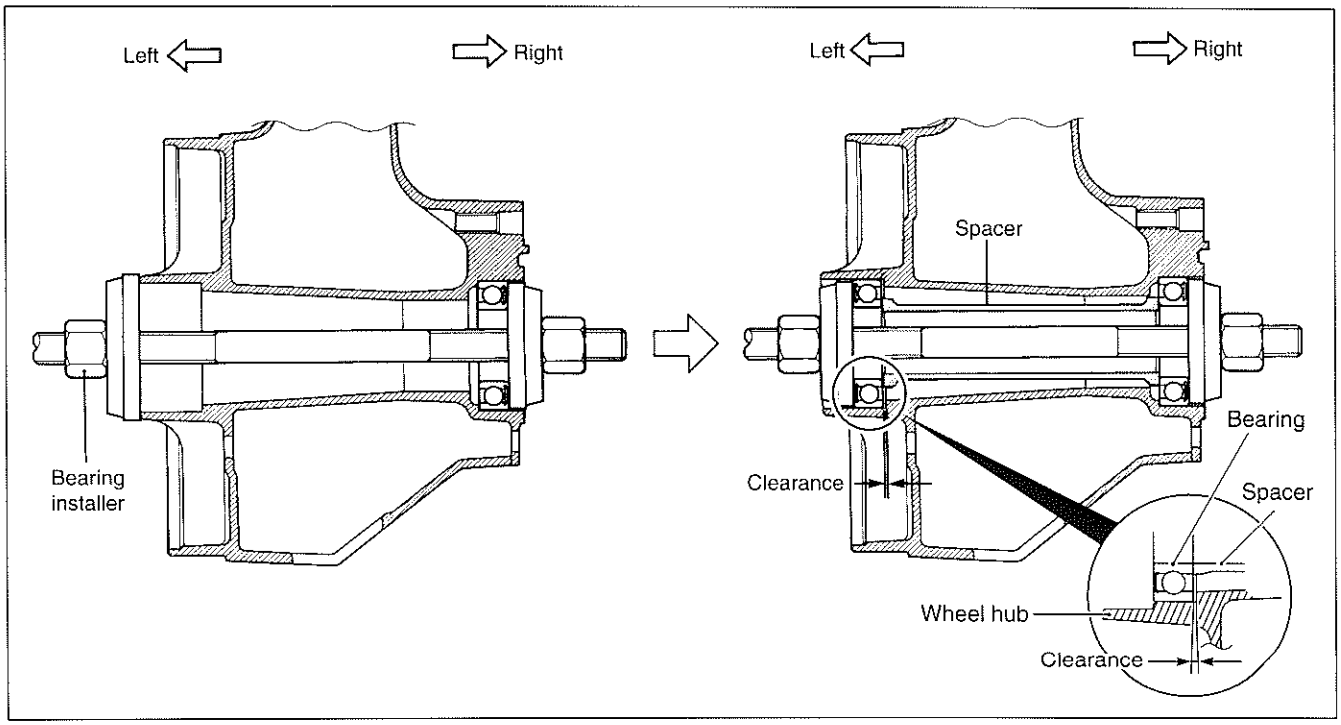

DUST SEAL

- Install the new dust seal using the special tool.

TOOL 09913-70210: Bearing installer set

- Apply SUZUKI SUPER GREASE "A" to the dust seal lips before assembling rear wheel.

A 99000-25030: SUZUKI SUPER GREASE "A" (USA)
99000-25010: SUZUKI SUPER GREASE "A" (Others)

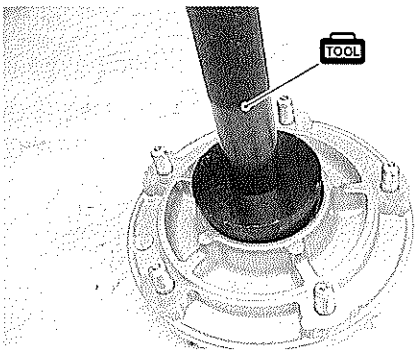

NOTE:
When installing the dust seals, the stamped mark of dust seal must face the special tool.

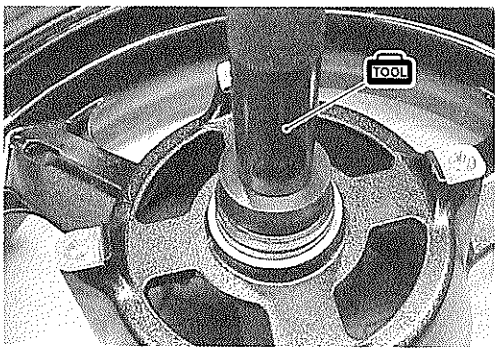

BRAKE DISC

Make sure that the brake disc is clean and free of any greasy matter.

- Apply THREAD LOCK SUPER "1360" to the disc bolts and tighten them to the specified torque.

1360 99000-32130: THREAD LOCK SUPER "1360"

Brake disc bolt: 23 N·m (2.3 kgf-m, 16.5 lb-ft)

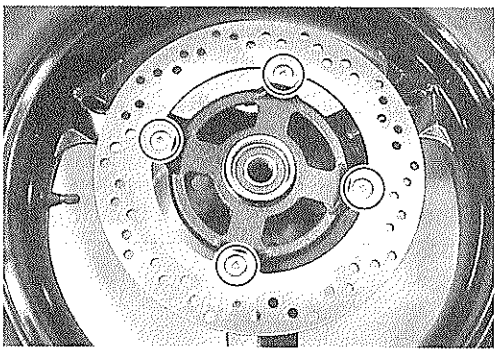

REAR SPROCKET

- Tighten the sprocket mounting nuts to the specified torque.

Rear sprocket nut: 60 N·m (6.0 kgf-m, 43.5 lb-ft)

NOTE:
Stamped mark Ⓐ on the sprocket must face outside.

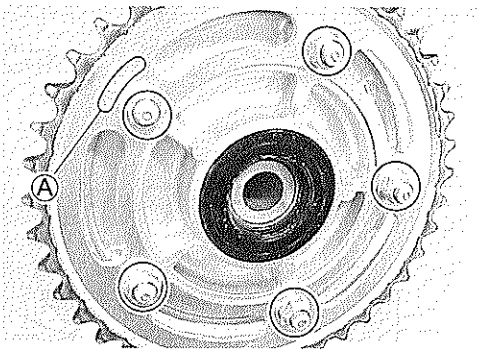

- Apply SUZUKI SUPER GREASE "A" to the rear sprocket mounting retainer.
- Install the rear sprocket mounting drum retainer.
- Apply SUZUKI SUPER GREASE "A" to the contacting surface between the rear wheel and the sprocket drum.

A 99000-25030: SUZUKI SUPER GREASE "A" (USA)
99000-25010: SUZUKI SUPER GREASE "A" (Others)

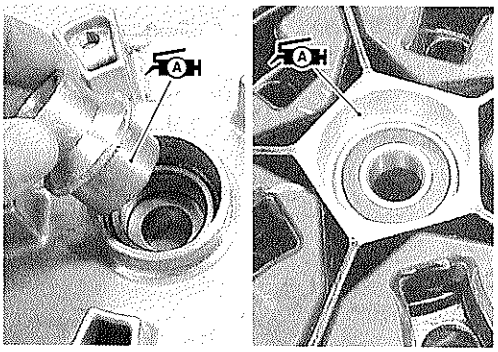

- Install the rear sprocket mounting drum to the rear wheel.
- Install the collar.

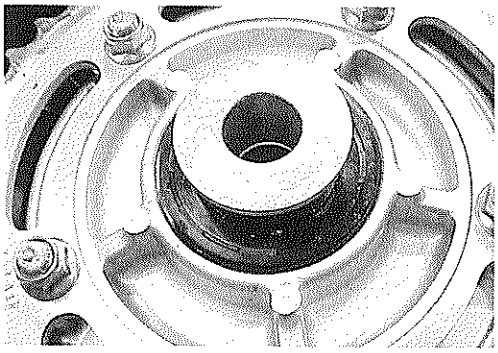

REAR AXLE

- Remount the rear wheel and rear axle, install the washer and rear axle nut.
- Tighten the rear axle nut ① to the specified torque.
- Adjust the chain slack after rear wheel installation. (☞2-21)

Rear axle nut: 100 N·m (10.0 kgf-m, 72.5 lb-ft)

- Install the new cotter pin. (For E-03, 28, 33)

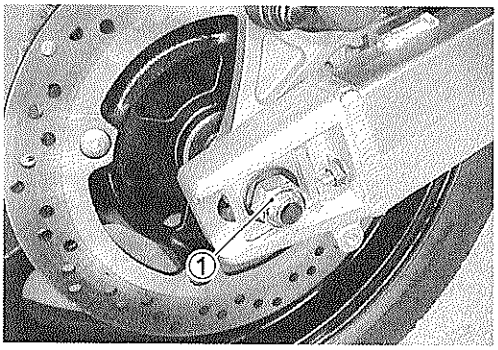

REAR SHOCK ABSORBER
CONSTRUCTION

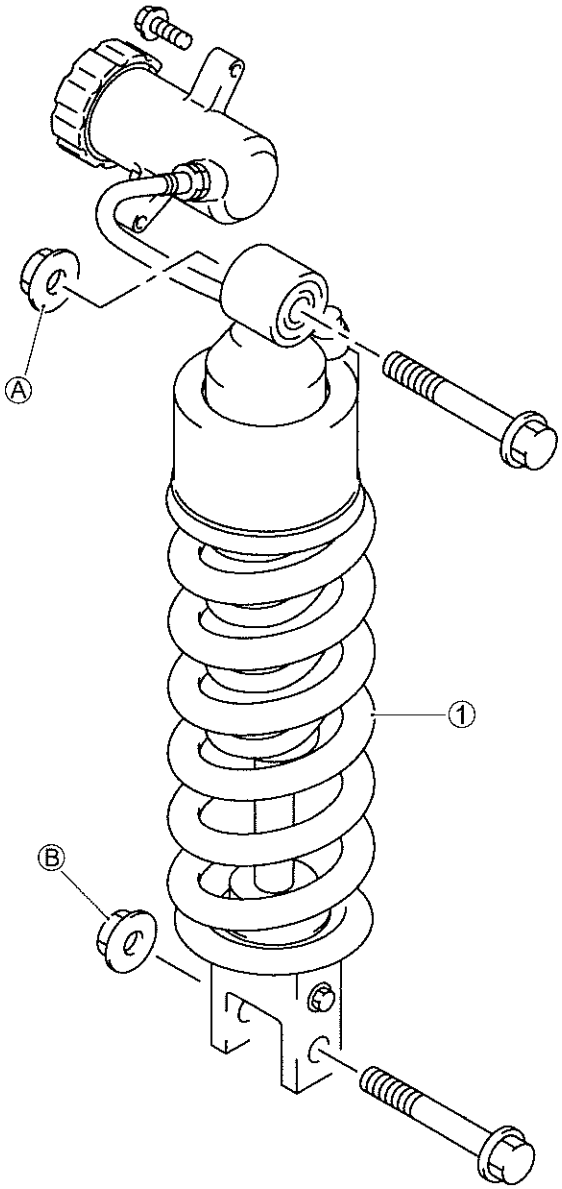

① Rear shock absorber

Ⓐ Rear shock absorber upper mounting nut
Ⓑ Rear shock absorber lower mounting nut

ITEM	N·m	kgf-m	lb-ft
Ⓐ	50	5.0	36.0
Ⓑ	50	5.0	36.0

REMOVAL

- Raise the rear wheel off the ground and support the motorcycle with a jack or wooden block.
- Remove the pre-load adjuster ①.

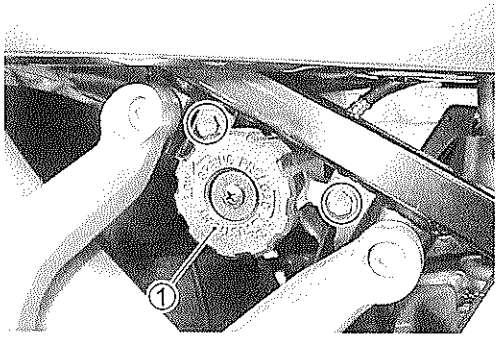

- Remove the cushion lever rod bolts/nuts and the cushion rods ②.

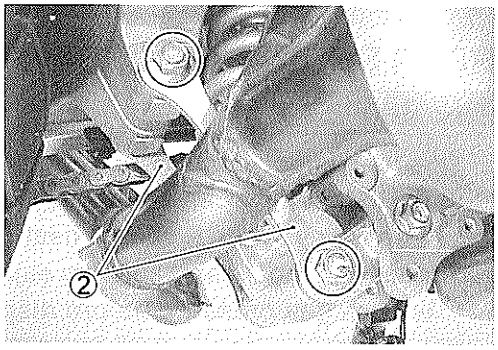

- Remove the rear shock absorber upper mounting bolt.

- Remove the rear shock absorber lower mounting bolt.

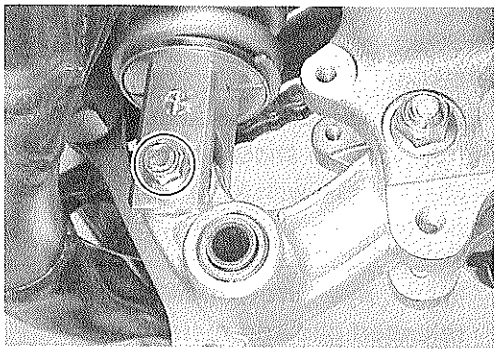

- Remove the rear shock absorber ③.

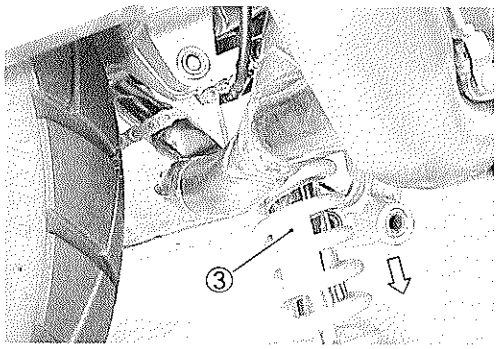

INSPECTION

Inspect the shock absorber body and bushing for damage and oil leakage.

If any defects are found, replace the shock absorber with a new one.

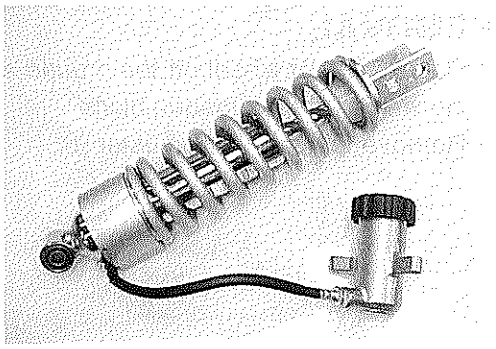

CAUTION

Do not attempt to disassemble the rear shock absorber unit. It is unserviceable.

REAR SHOCK ABSORBER DISPOSAL

WARNING

The rear shock unit contains high-pressure nitrogen gas. Mishandling can cause explosion.
*** Keep away from fire and heat. High gas pressure caused by heat can cause an explosion.**
*** Release gas pressure before disposing.**

GAS PRESSURE RELEASE

- Mark the drill hole at Ⓐ, shown in the illustration, with a center punch.

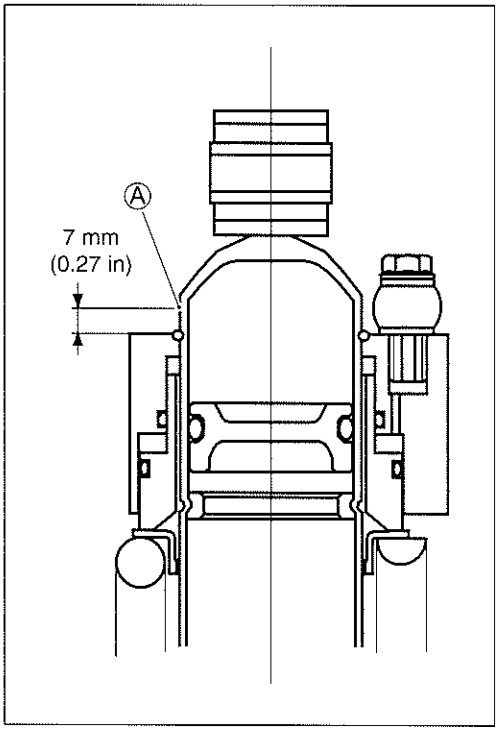

- Cover the rear shock absorber with a transparent vinyl bag ①.
- Hold the rear shock absorber ② with a vice.
- Make a hole with a 3 mm drill.

WARNING

Wear eye protection to protect your eyes from released gas and metal chips.

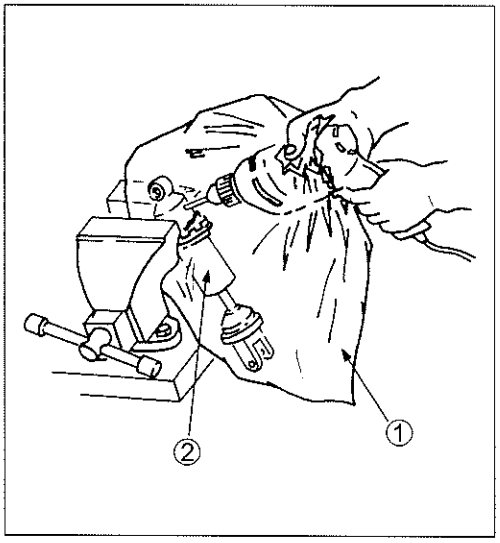

REMOUNTING

Remount the rear shock absorbers in the reverse order of removal. Pay attention to the following points:

- Install the rear shock absorber and tighten the rear shock absorber upper/lower mounting nuts.

Rear shock absorber mounting lower nut:
50 N·m (5.0 kgf-m, 36.0 lb-ft)
Rear shock absober mounting upper nut:
50 N·m (5.0 kgf-m, 36.0 lb-ft)

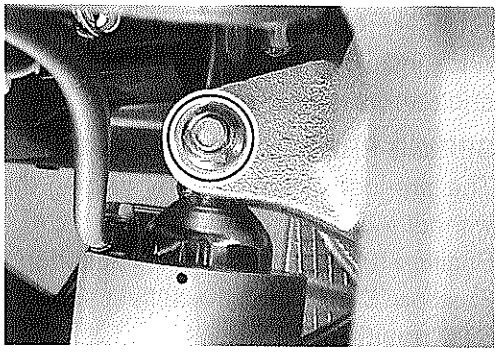

NOTE:
When installing the rear shock absorber, the outlet hose of the prel-load adjuster faces backward.

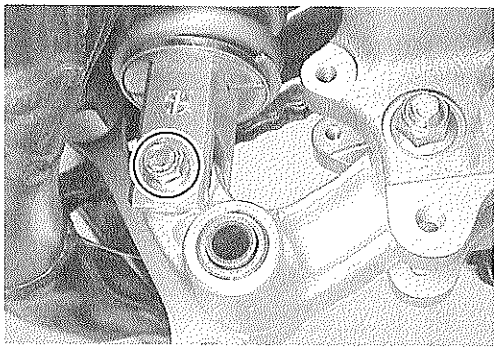

- Clamp the pre-load adjuster hose ①.

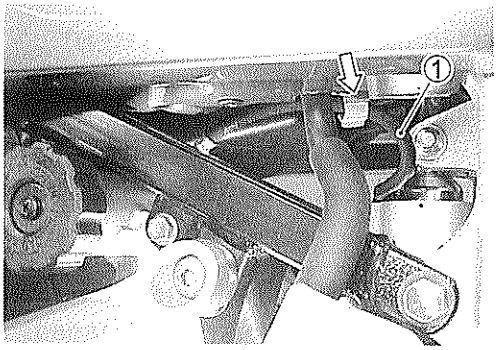

- Install the cushion rod ②.
- Tighten the cushion rod nuts to the specified torque.

Cushion rod nut: 78 N·m (7.8 kgf-m, 56.5 lb-ft)

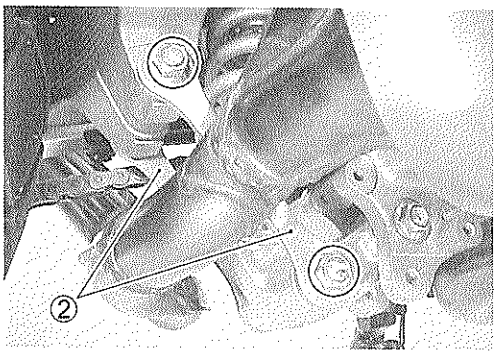

SUSPENSION SETTING

After installing the rear suspension, adjust the spring pre-load and damping force as follows.

SPRING PRE-LOAD ADJUSTMENT

The pre-load is adjusted by turning the pre-load adjuster knob without tool.
Position "0" provides the softest spring pre-load.
Position "5" provides the stiffest spring pre-load.
STD position: "2"

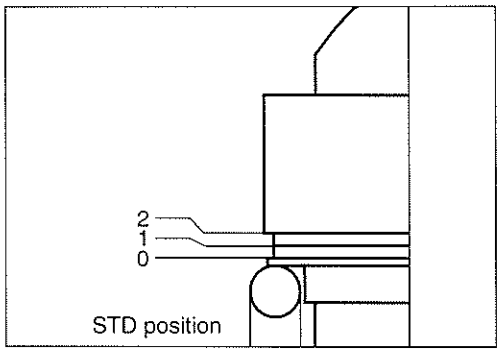

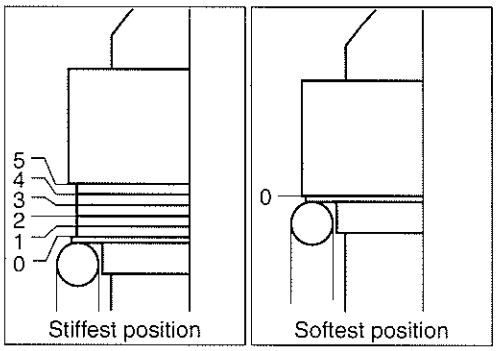

DAMPING FORCE ADJUSTMENT

The rebound damping force is adjusted by turning the adjuster.
Fully turn the damping adjuster ① clockwise. It is at stiffest position and turn it out to standard setting position.
STD position: ⅞ turn out from stiffest position

CAUTION

Do not turn the adjuster more than the given position or the adjuster may be damaged.

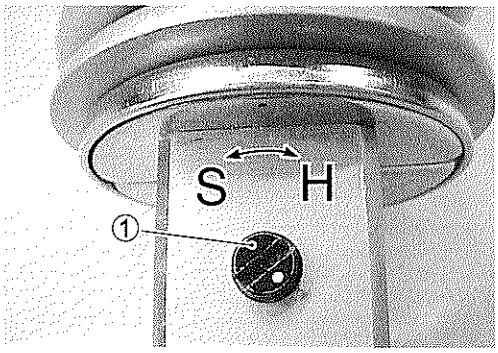

REAR SWINGARM
CONSTRUCTION

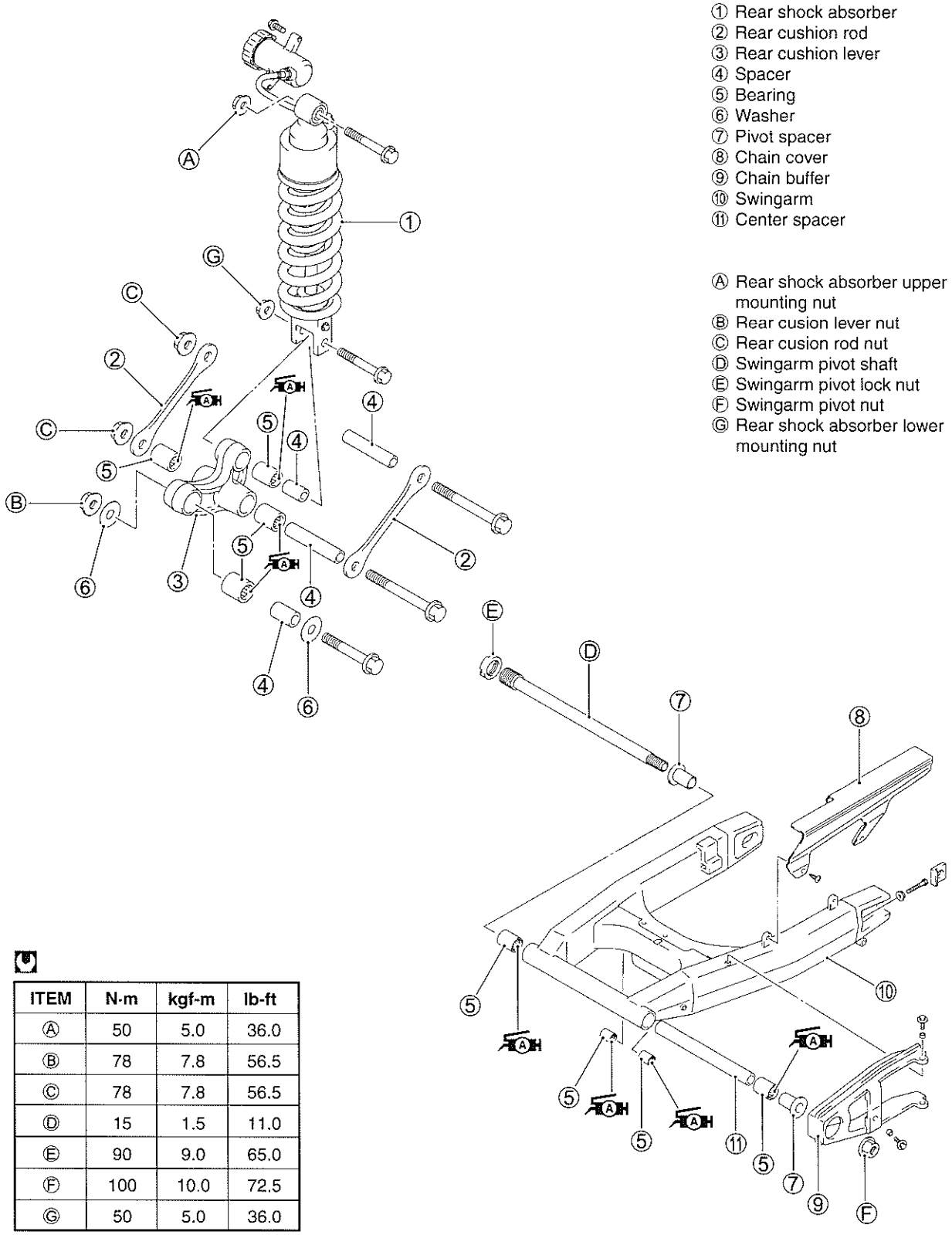

ITEM	N·m	kgf·m	lb·ft
Ⓐ	50	5.0	36.0
Ⓑ	78	7.8	56.5
Ⓒ	78	7.8	56.5
Ⓓ	15	1.5	11.0
Ⓔ	90	9.0	65.0
Ⓕ	100	10.0	72.5
Ⓖ	50	5.0	36.0

REMOVAL

- Remove the exhaust pipe and exhaust muffler. (☞3-7)
- Raise the rear wheel off the ground and support the motorcycle with a jack or wooden block.
- Remove the rear wheel. (☞6-34)
- Remove the rear brake hose guide ①.

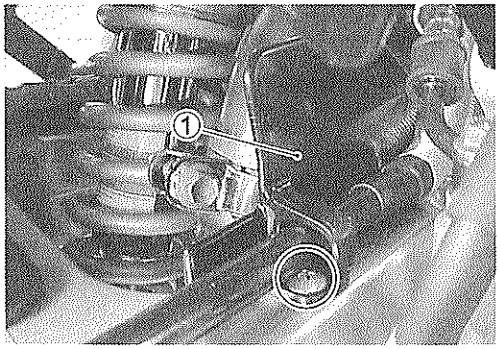

- Remove the cushion rods ②.
- Remove the shock absorber ③.
- Remove the cushion lever ④.

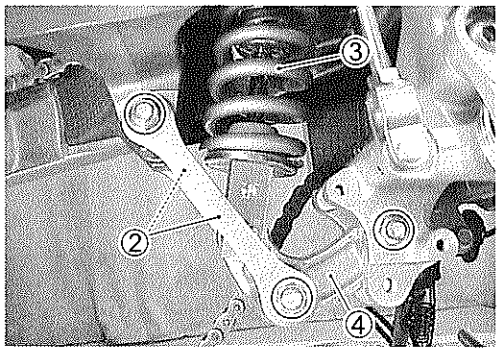

- Remove the swingarm pivot shaft lock nut by using the special tool.

TOOL 09940-14940: Swingarm pivot thrust adjuster socket wrench

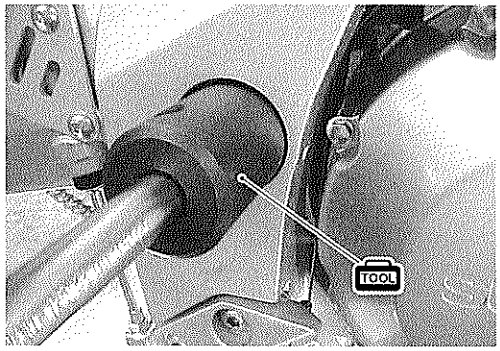

- Hold the swingarm pivot shaft ⑤ and remove the swingarm pivot nut ⑥.
- Remove the swingarm pivot shaft by using the special tool.

TOOL 09944-28320: Hexagon bit 19 mm

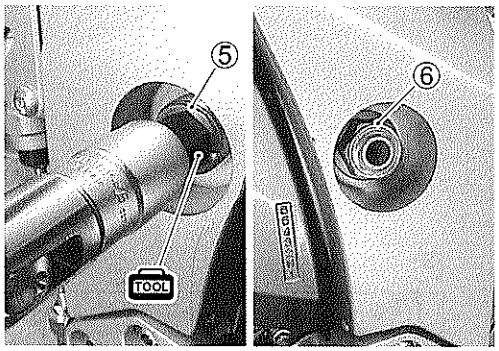

- Remove the chain cover.

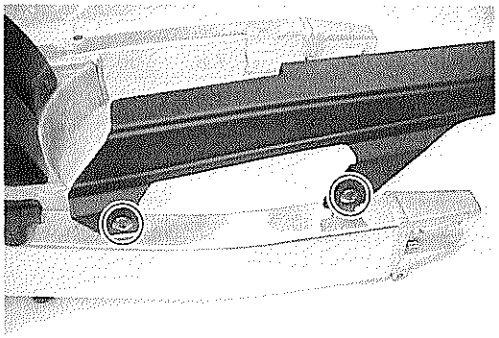

- Remove the mud guard ⑦.
- Remove the brake hose guide ⑧.

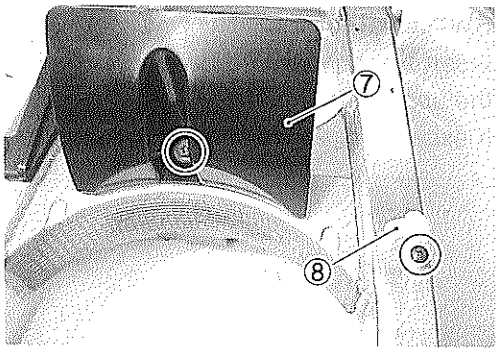

- Remove the chain buffer ⑨.

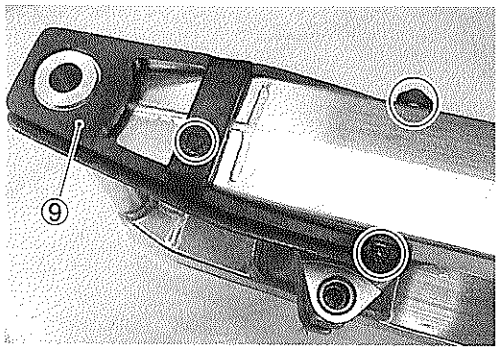

INSPECTION AND DISASSEMBLY

SPACER

- Remove the spacers from swingarm and cushion lever.
- Inspect the spacers for any flaws or other damage. If any defects are found, replace the spacers with the new ones.

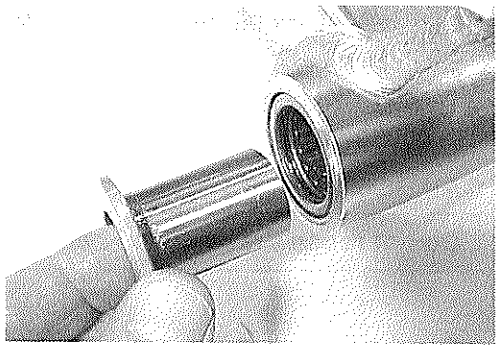

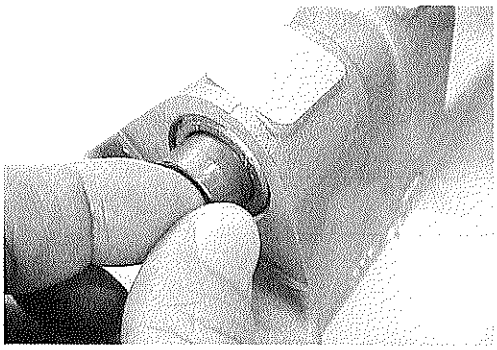

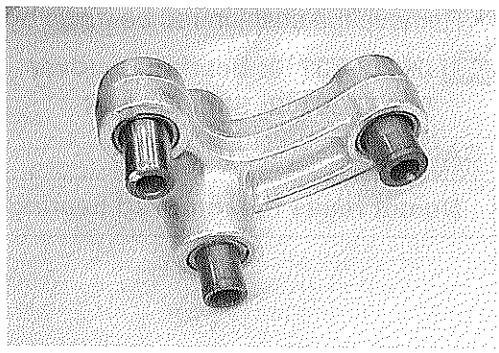

CHAIN BUFFER

Inspect the chain buffer for damage and excessive wear. If any defects are found, replace the chain buffer with a new one.

SWINGARM BEARING

Insert the spacer into bearing and check the play when moving the spacer up and down.
If excessive play is noted, replace the bearing with a new one.

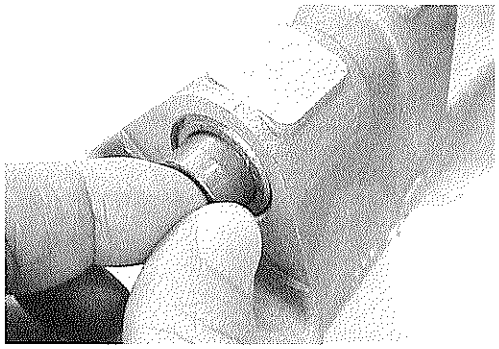

- Remove the swingarm pivot bearing and spacer with the special tools.

TOOL 09923-74511: Bearing remover
09930-30102: Sliding shaft

CAUTION

Do not reuse the removed bearings.

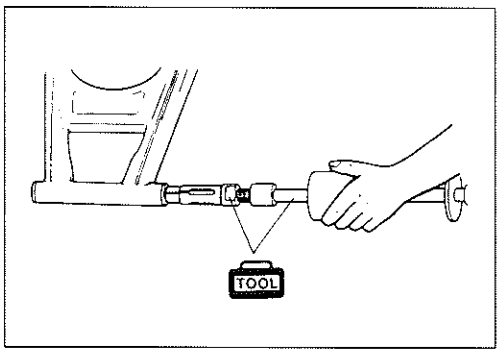

- Remove the cushion rod bearings by using the special tool.

TOOL 09913-73210: Bearing remover
09930-30102: Sliding shaft

CAUTION

Do not reuse the removed bearings.

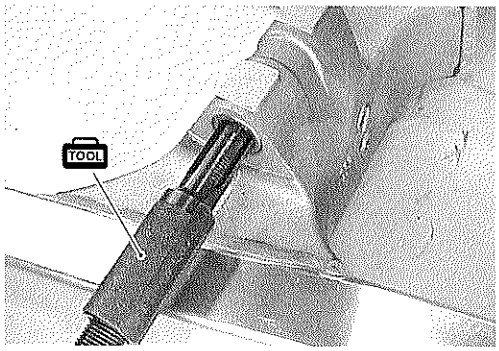

SWINGARM PIVOT SHAFT

Using a dial gauge, check the pivot shaft runout and replace it if the runout exceeds the limit.

TOOL 09900-20607: Dial gauge (1/100 mm, 10 mm)
09900-20701: Magnetic stand
09900-21304: V-block (100 mm)

DATA Swingarm pivot shaft runout:
Service limit: 0.3 mm (0.01 in)

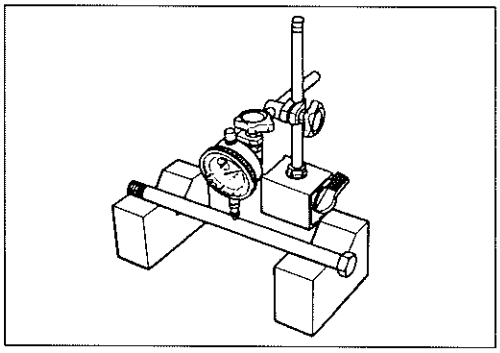

CUSHION LEVER BEARING

Insert the spacer into bearing and check the play when moving the spacer up and down.
If excessive play is noted, replace the bearing with a new one.

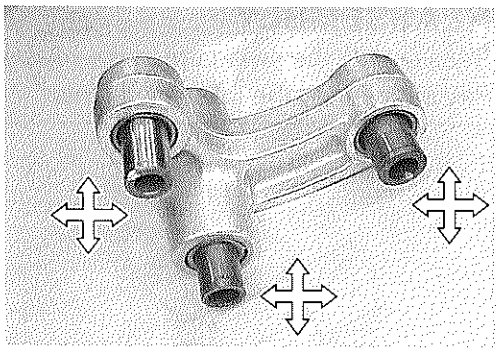

- Draw out the cushion lever bearings with the special tool.

TOOL 09921-20240: Bearing remover set

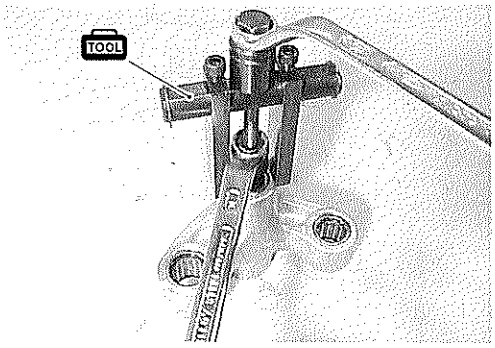

CAUTION

> **The removed bearings must be replaced with new ones.**

CUSHION LEVER RODS

Inspect the cushion lever rods for damage and distortion.

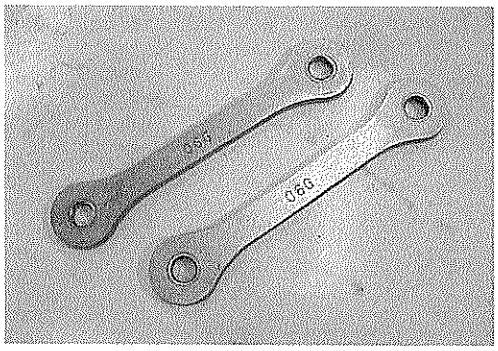

REASSEMBLY

Reassemble the swingarm in the reverse order of disassembly and removal.
Pay attention to the following points:

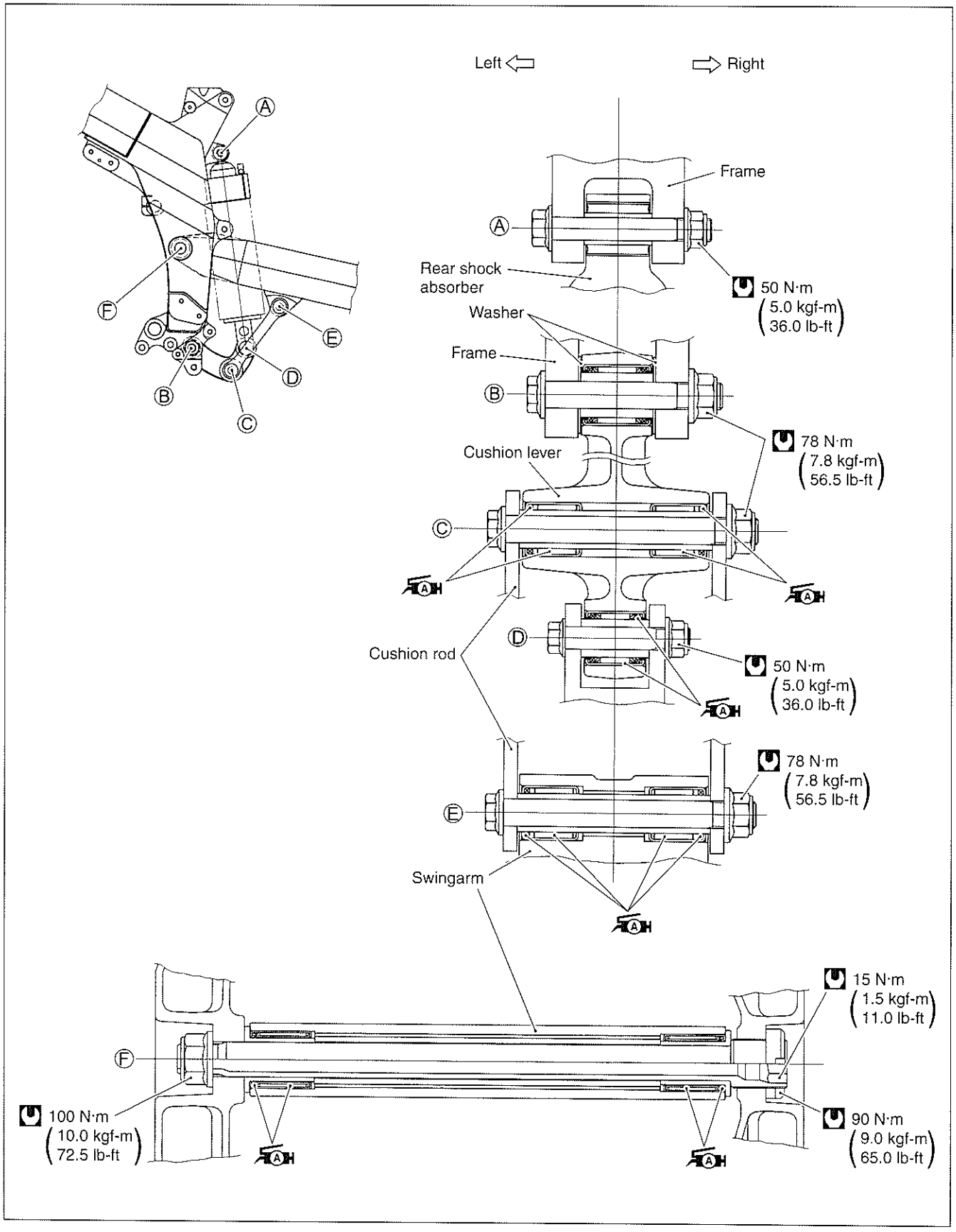

SWINGARM BEARING

- Install the bearings and spacer into the swingarm pivot all together by using the special tool.

TOOL 09941-34513: Steering race installer

NOTE:
When installing the bearing, the stamped mark on the bearing must face the special tool.

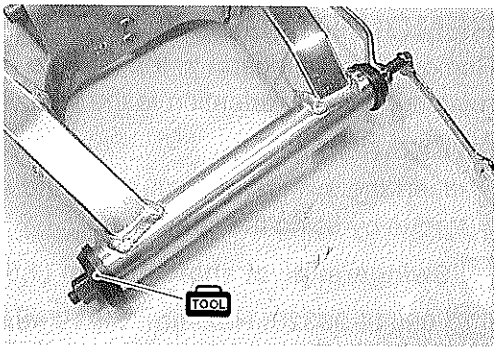

- Install the cushion rod bearing with the special tool.

TOOL 09941-34513: Steering race installer

NOTE:
When installing the bearing, the dust seal that is embedded in the bearing must face outside.

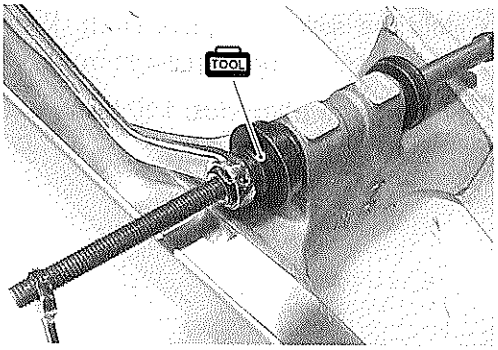

CUSHION LEVER BEARING

- Press the bearings into the cushion lever with the special tool.

TOOL 09941-34513: Steering race installer

NOTE:
When installing the bearing, the dust seal that is embedded in the bearing must face outside.

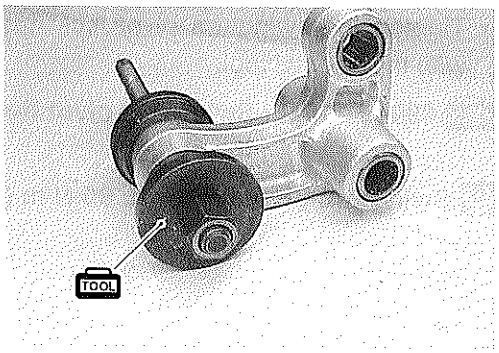

- Apply grease to the bearings and spacers.

A H 99000-25030: SUZUKI SUPER GREASE "A" (USA)
99000-25010: SUZUKI SUPER GREASE "A" (Others)

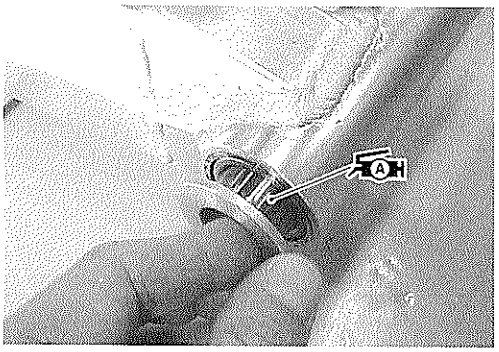

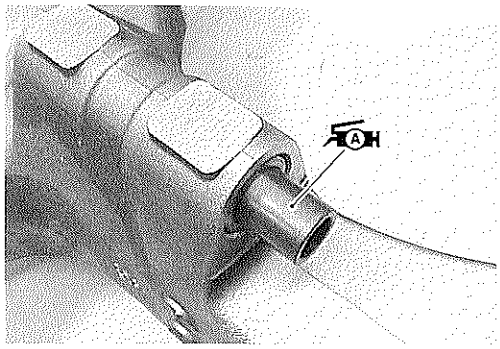

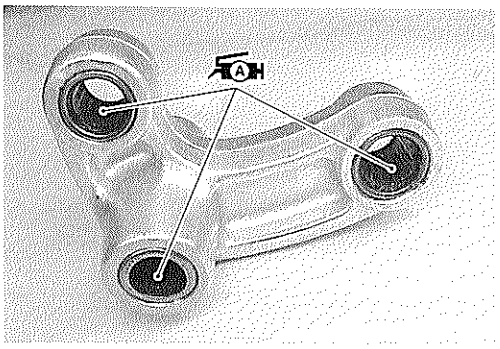

REMOUNTING

Remount the swingarm in the reverse order of disassembly and removal, and pay attention to the following points:

SWINGARM

- Insert the swingarm pivot shaft and tighten it to the specified torque by using the special tool.

Swingarm pivot shaft: 15 N·m (1.5 kgf-m, 11.0 lb-ft)

09944-28320: Hexagon bit 19 mm

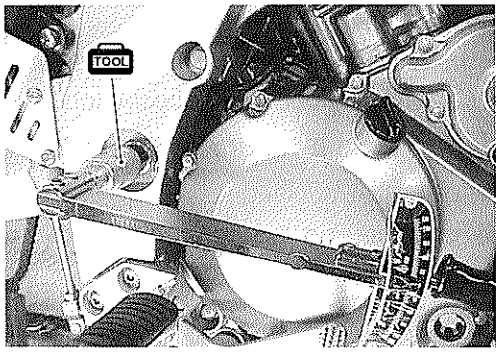

- Hold the swingarm pivot shaft ① and tighten the swingarm pivot nut ② to the specified torque.

Swingarm pivot nut: 100 N·m (10.0 kgf-m, 72.5 lb-ft)

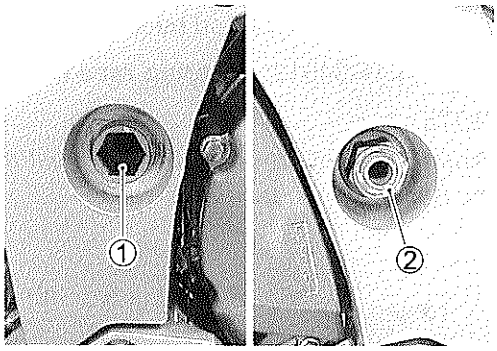

- Tighten the swingarm pivot lock nut to the specified torque with the special tool.

09940-14940: Swingarm pivot thrust adjuster socket wrench

Swingarm pivot lock nut: 90 N·m (9.0 kgf-m, 65.0 lb-ft)

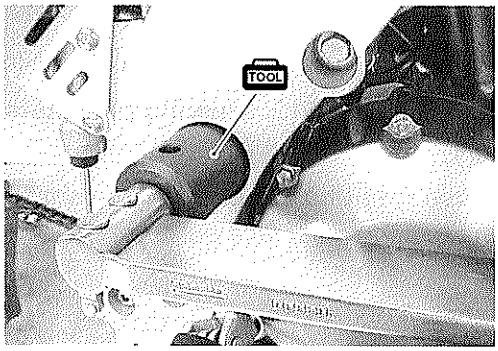

CUSHION LEVER AND CUSHION ROD

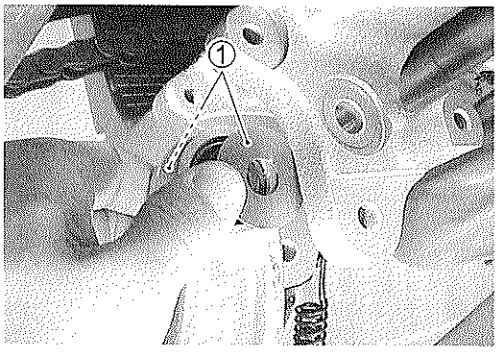

- Install the washers ① and cushion lever.

NOTE:
Insert the cushion lever mounting bolt from the left side.
(☞6-52)

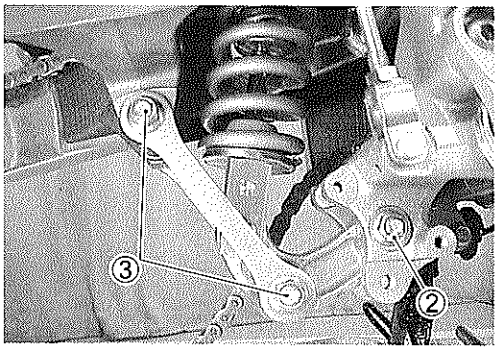

- Install the cushion rod and rear shock absorber.

NOTE:
Insert the cushion rod mounting bolts and rear shock absorber mounting bolts from the left side. (☞6-52)

- Tighten the cushion lever nut ②, cushion rod nut ③ and rear shock absorber nut to the specified torque.

Cushion lever mounting nut:
78 N·m (7.8 kgf-m, 56.5 lb-ft)
Cushion rod nut: 78 N·m (7.8 kgf-m, 56.5 lb-ft)
Rear shock absorber mounting nut:
50 N·m (5.0 kgf-m, 36.0 lb-ft)

- Install the rear brake hose guide.
- Install the rear wheel. (☞6-41)
- Install the exhaust pipe and muffler. (☞3-15)

FINAL INSPECTION AND ADJUSTMENT

After installing the rear suspension and wheel, the following adjustments are required before driving.

* Drive chain: ☞2-21
* Tire pressure: ☞6-86
* Chassis bolts and nuts: ☞2-28

FRONT BRAKE
CONSTRUCTION

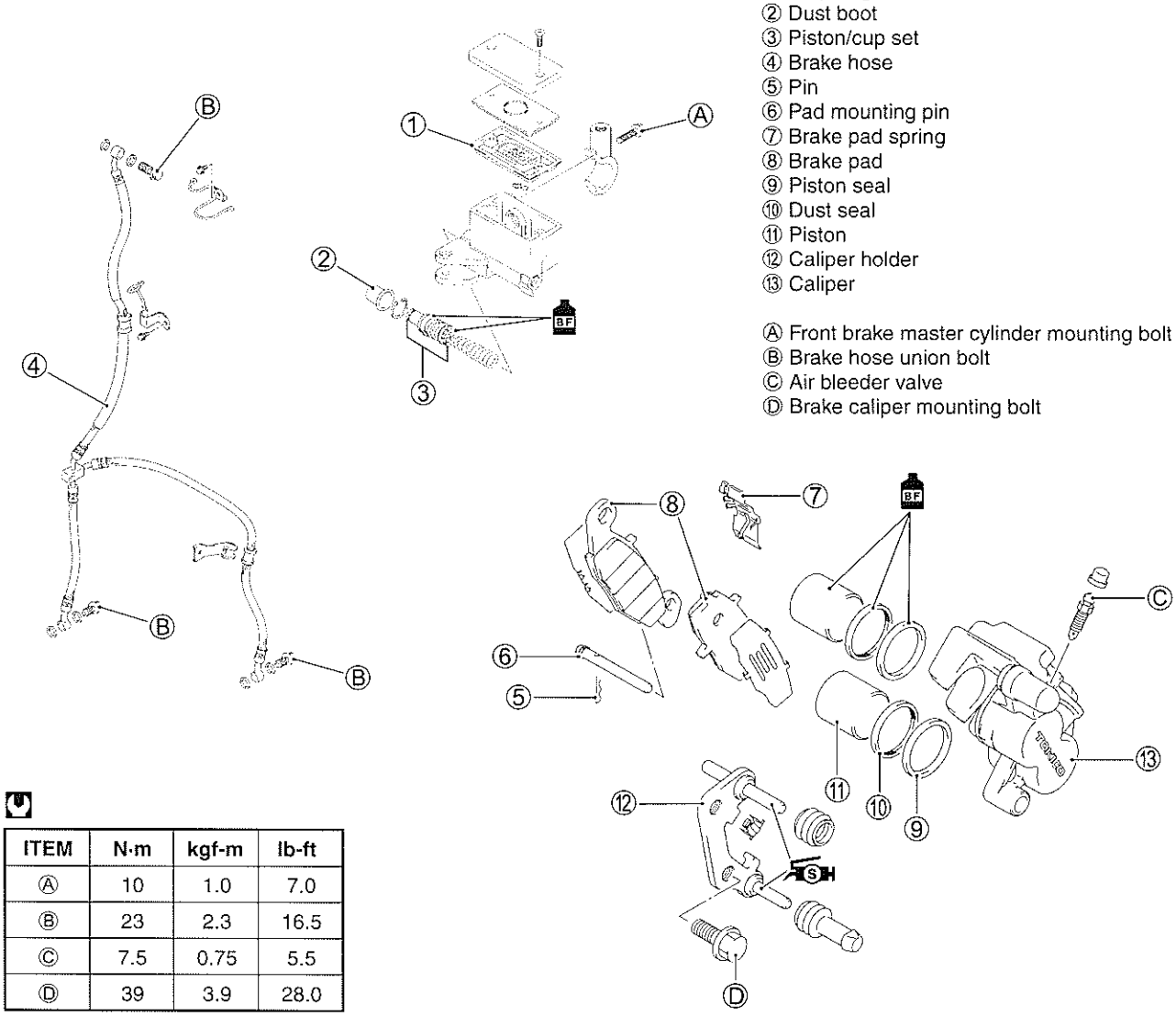

ITEM	N·m	kgf-m	lb-ft
Ⓐ	10	1.0	7.0
Ⓑ	23	2.3	16.5
Ⓒ	7.5	0.75	5.5
Ⓓ	39	3.9	28.0

⚠ WARNING

- **This brake system is filled with an ethylene glycol-based DOT 4 brake fluid. Do not use mix different types of fluid such as silicone-based or petroleum-based.**
- **Do not use any brake fluid taken from old, used or unsealed containers. Never reuse brake fluid left over from the last servicing or stored for long periods.**
- **When storing the brake fluid, seal the container completely and keep away from children.**
- **When replenishing brake fluid, take care not to get dust into fluid.**
- **When washing brake components, use fresh brake fluid. Never use cleaning solvent.**
- **A contaminated brake disc or brake pad reduces braking performance. Discard contaminated pads and clean the disc with high quality brake cleaner or neutral detergent.**

CAUTION

Handle brake fluid with care: the fluid reacts chemically with paint, plastics, rubber materials etc. and will damage then severly.

BRAKE PAD REPLACEMENT

- Remove the caliper.

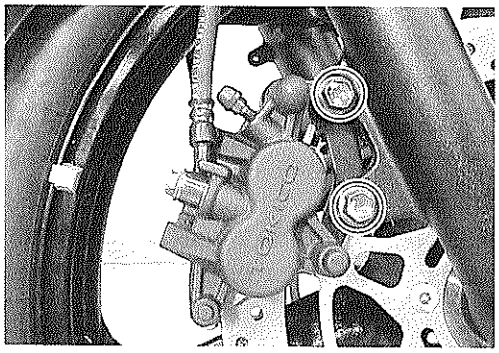

CAUTION

Do not operate the brake lever while removing the caliper.

- Remove the pin ①.
- Remove the brake pads by removing the pad mounting pin ②.
- Clean up the caliper especially around the caliper pistons.

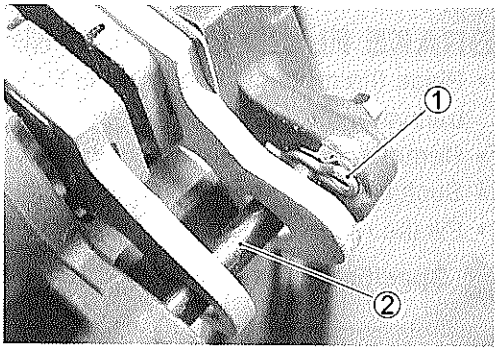

- Install the outer pad with the detent Ⓐ of pad fitted to the detent Ⓑ on the caliper holder.

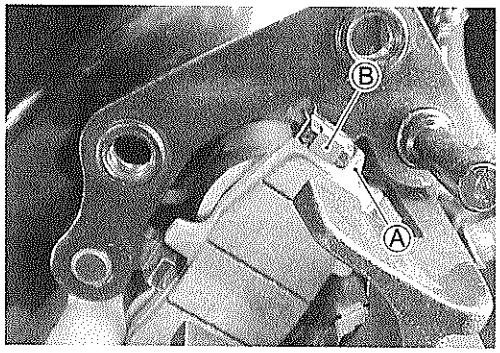

CAUTION

Replace the brake pads as a set, otherwise braking performance will be adversely affected.

- Install the inner pad so that the inner pad will be seated on the hatched part Ⓒ.

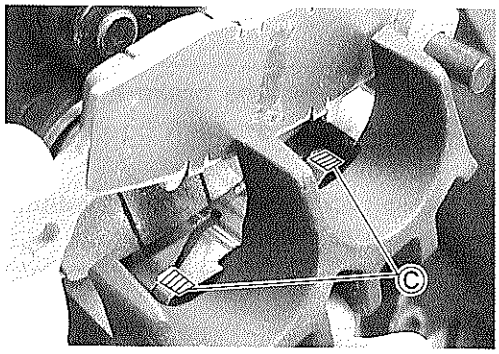

- Install the pad mounting pin ③.
- Install the pin ④ securely.

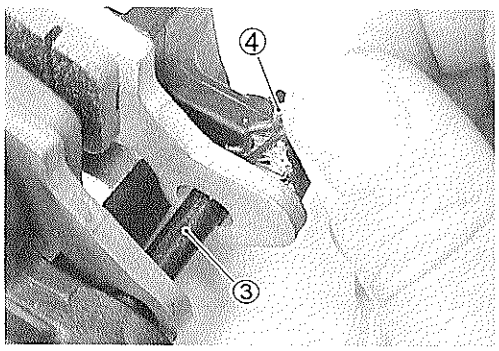

- Remount the caliper.
- Tighten the caliper mounting bolts to the specified torque.

Front brake caliper mounting bolt:
39 N·m (3.9 kgf-m, 28.0 lb-ft)

NOTE:
After replacing the brake pads, pump the brake lever several times to check for proper brake operation and then check the brake fluid level.

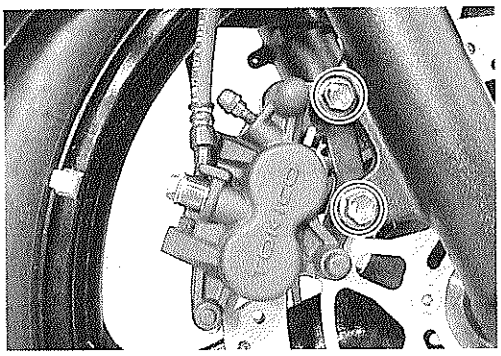

BRAKE FLUID REPLACEMENT

- Place the motorcycle on a level surface and keep the handlebars straight.
- Remove the brake fluid reservoir cap and diaphragm.
- Suck up the old brake fluid as much as possible.
- Fill the reservoir with the new brake fluid.

Specification and Classification: DOT 4

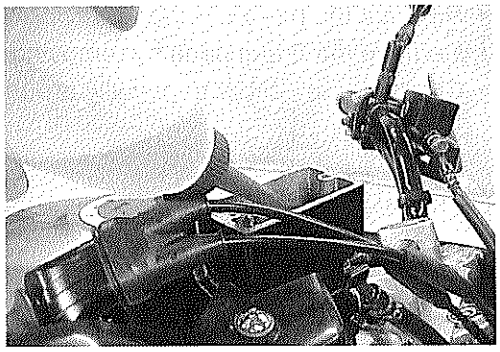

- Connect a clear hose to the caliper air bleeder valve and insert the other end of hose into a receptacle.
- Loosen the air bleeder valve and pump the brake lever until old brake fluid flows out of the bleeder system.
- Close the caliper air bleeder valve and disconnect a clear hose. Fill the reservoir with the new fluid to the upper mark of the reservoir.

Brake air bleeder valve: 7.5 N·m (0.75 kgf-m, 5.5 lb-ft)

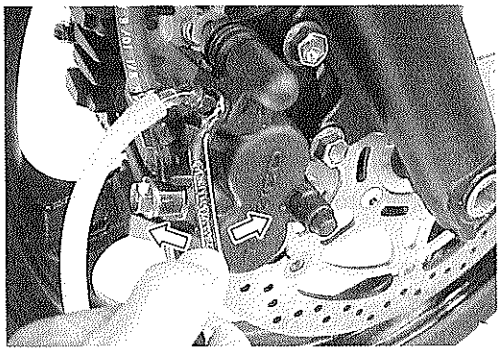

CAUTION

*** Never reuse the brake fluid left over from previous servicing and which has been stored for long periods of time.**
*** Bleed air from the brake system.**
(☞2-25)

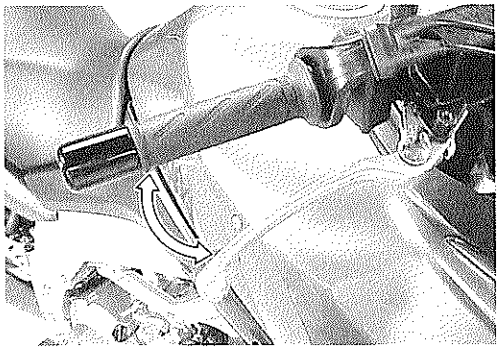

CALIPER REMOVAL AND DISASSEMBLY

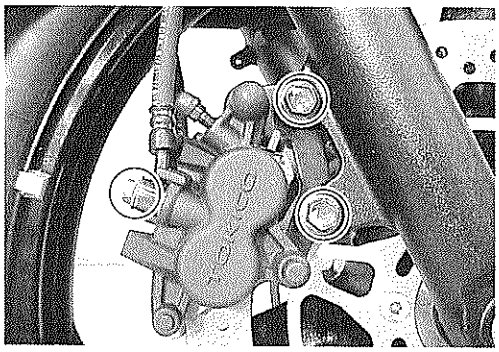

- Drain the brake fluid. (☞6-58)
- Remove the brake pads. (☞6-57)
- Disconnect the brake hoses by removing the brake hose union bolts.

NOTE:
Place a rag underneath the union bolt on the brake caliper to catch any spilt brake fluid.

- Remove the brake calipers by removing the caliper mounting bolts.

CAUTION

Do not reuse the brake fluid left over from previous servicing and stored for long periods of time.

⚠ WARNING

Brake fluid, if it leaks, will interfere with safe running and discolor painted surfaces. Check the brake hose and hose joints for cracks and fluid leakage.

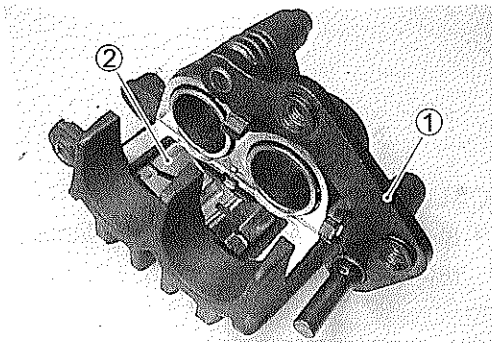

- Remove the caliper holder ①.
- Remove the pad spring ②.

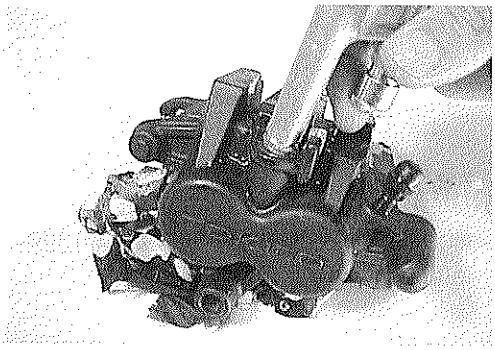

- Place a rag over the pistons to prevent them from popping out and then force out the pistons using compressed air.

CAUTION

Do not use high pressure air to prevent piston damage.

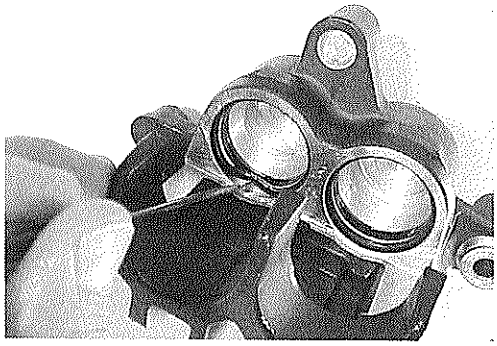

- Remove the dust seals and piston seals.

CAUTION

Do not reuse the removed dust seals and piston seals to prevent fluid leakage.

CALIPER INSPECTION

BRAKE CALIPER

Inspect the brake caliper cylinder wall for nicks, scratches and other damage. If any damage is found, replace the caliper with a new one.

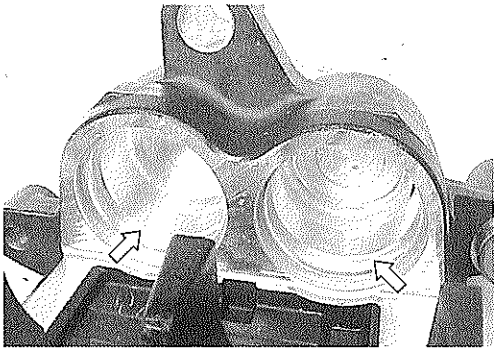

BRAKE CALIPER PISTON

Inspect the brake caliper piston surface for any scratches and other damage. If any damage is found, replace the caliper piston with a new one.

CALIPER HOLDER

- Inspect the caliper holder for damage. If any damage is found, replace it with a new one.

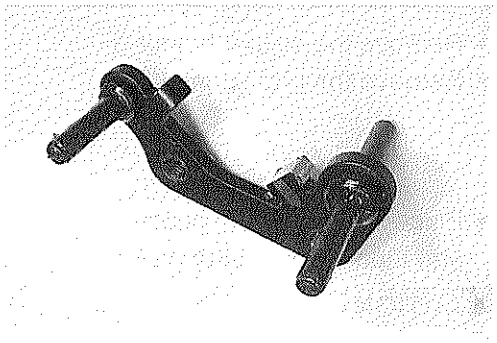

RUBBER PARTS

Inspect the rubber parts for damage. If any damage is found, replace them with the new ones.

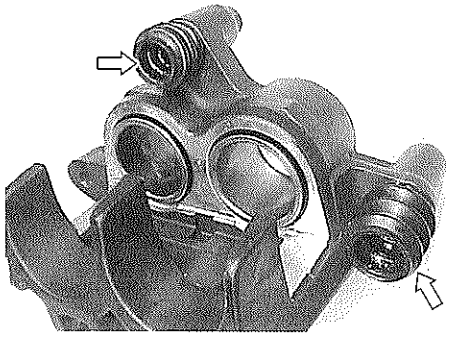

CALIPER REASSEMBLY AND REMOUNTING

Reassemble the caliper in the reverse order of removal and disassembly. Pay attention to the following points:

- Wash the caliper bores and pistons with specified brake fluid. Particularly wash the dust seal grooves and piston seal grooves.

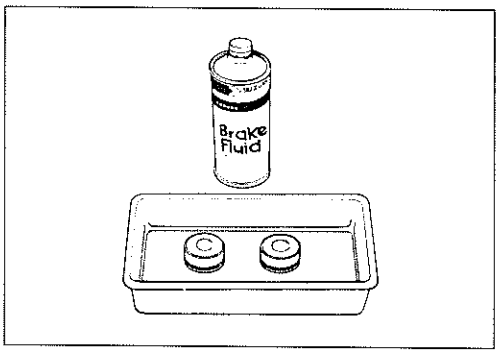

Specification and Classification: DOT 4

CAUTION

- *** Wash the caliper components with fresh brake fluid before reassembly. Never use cleaning solvent or gasoline to wash them.**
- *** Do not wipe the brake fluid off after washing the components with a rag.**
- *** When washing the components, use the specified brake fluid. Never use different types of fluid or cleaning solvent such as gasoline, kerosine or the others.**
- *** Replace the piston seals and dust seals with the new ones when reassembly.**
- *** Apply the brake fluid to both seals when installing them.**

PISTON SEAL

- Install the piston seals as shown in the illustration.
- Install the piston to the caliper.

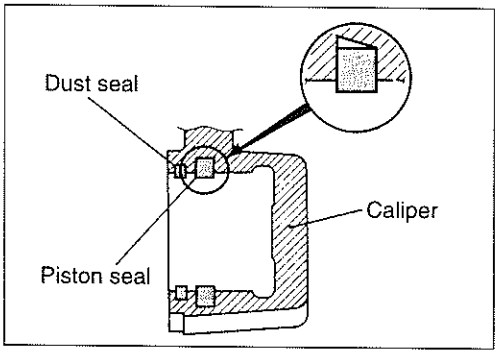

CALIPER HOLDER

- Apply SUZUKI SILICONE GREASE to the caliper holder pin.

99000-25100: SUZUKI SILICONE GREASE

- Install the caliper holder to the caliper.

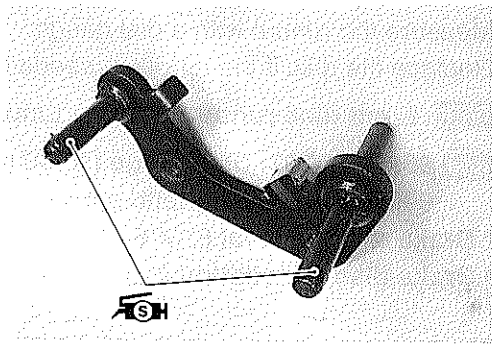

- Install the pad spring ①.
- Install the brake pads. (☞6-57)

NOTE:
Before remounting the caliper, push the piston all the way into the caliper.

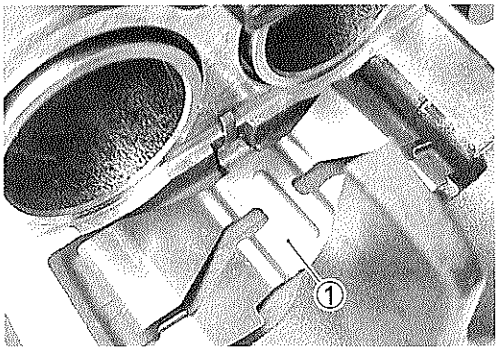

- Remount the brake caliper to the front fork.
- Tighten each bolt to the specified torque.

Front brake caliper mounting bolt ②:
39 N·m (3.9 kgf-m, 28.0 lb-ft)
Front brake hose union bolt ③:
23 N·m (2.3 kgf-m, 16.5 lb-ft)

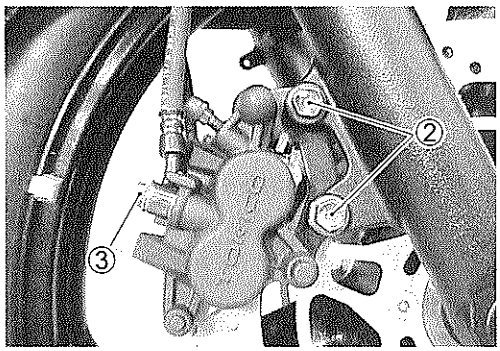

CAUTION

- *** The seal washers should be replaced with the new ones to prevent fluid leakage.**
- *** Bleed air from the system after reassembling the caliper. (☞2-25)**

BRAKE DISC INSPECTION

Visually check the brake disc for damage or cracks.
Measure the thickness with a micrometer.
Replace the disc if the thickness is less than the service limit or if damage is found.

DATA Front disc thickness: Service Limit: 4.5 mm (0.18 in)

TOOL 09900-20205: Micrometer (0 – 25 mm)

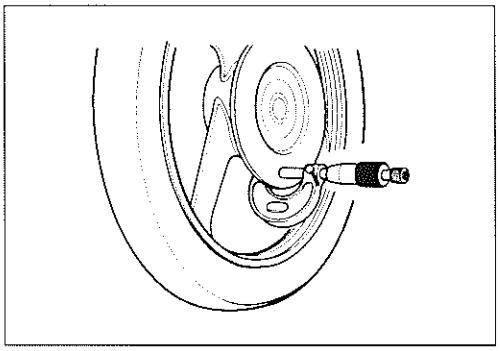

Measure the runout with a dial gauge.
Replace the disc if the runout exceeds the service limit.

DATA Front disc runout: Service Limit: 0.30 mm (0.012 in)

TOOL 09900-20607: Dial gauge (1/100 mm)
09900-20701: Magnetic stand

- *** Brake disc removal (☞6-9)**
- *** Brake disc installation (☞6-12)**

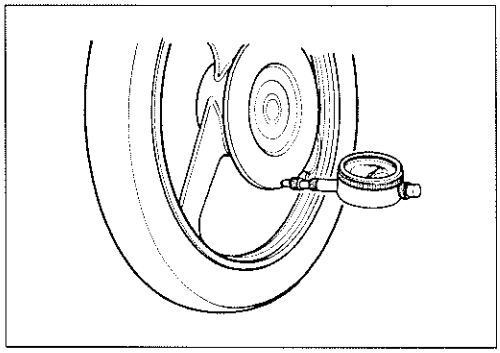

MASTER CYLINDER REMOVAL AND DISASSEMBLY

- Remove the rear view mirror and brake lever cover.
- Drain the brake fluid. (☞6-58)
- Disconnect the front brake light switch coupler ①.

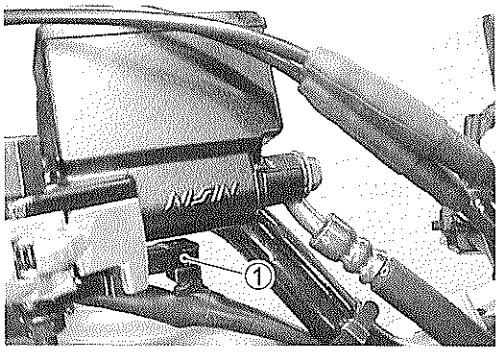

- Place a rag underneath the union bolt on the master cylinder to catch any spilt brake fluid. Remove the brake hose union bolt and disconnect the brake hose.

CAUTION

Immediately and completely wipe off any brake fluid contacting any part of the motorcycle. The fluid reacts chemically with paint, plastics and rubber materials, etc. and will damage them severely.

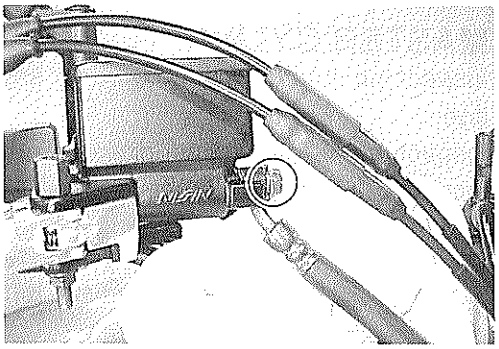

- Remove the master cylinder.

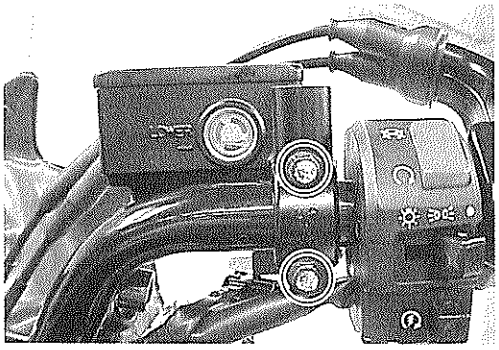

- Remove the brake lever ② and brake switch ③.

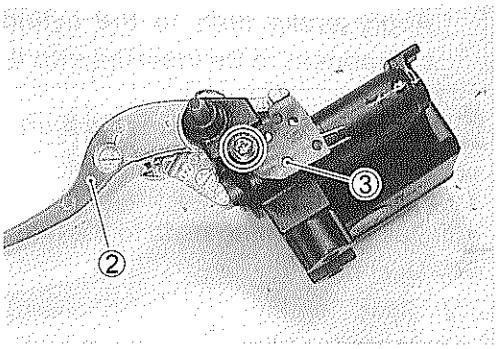

- Pull out the dust boot ④ and remove the snap ring ⑤.

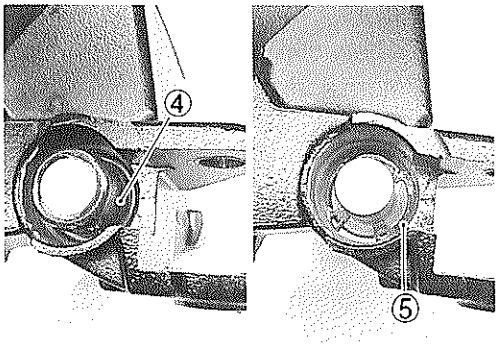

- Remove the piston and return spring.
  ⑥ Piston
  ⑦ Secondary cup
  ⑧ Primary cup
  ⑨ Return spring

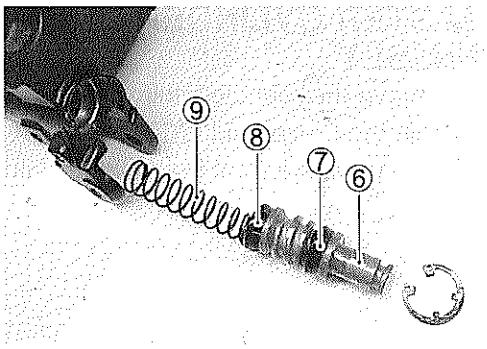

MASTER CYLINDER INSPECTION

Inspect the master cylinder bore for any scratches or other damage.
Inspect the piston surface for any scratches or other damage.
Inspect the primary cup, secondary cup and dust seal for wear or damage.

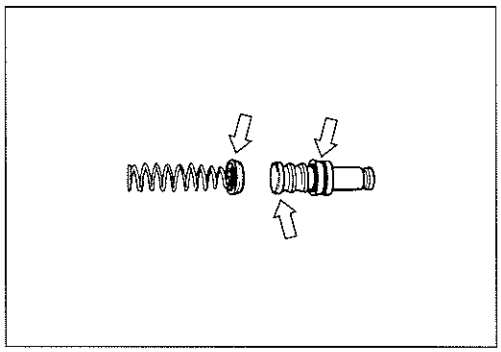

MASTER CYLINDER REASSEMBLY AND REMOUNTING

Reassemble the master cylinder in the reverse order of removal and disassembly. Pay attention to the following points:

CAUTION

- **Wash the master cylinder components with fresh brake fluid before reassembly. Never use cleaning solvent or gasoline to wash them.**
- **Do not wipe the components with a rag.**
- **Apply brake fluid to the cylinder bore and all the component to be inserted into the bore.**

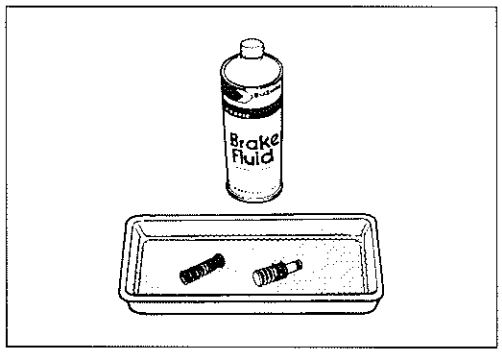

Specification and Classification: DOT 4

- Apply brake fluid to the piston and cups.
- Install the following parts to the master cylinder.
  ① Dust boot
  ② Circlip
  ③ Secondary cup
  ④ Piston
  ⑤ Primary cup
  ⑥ Return spring

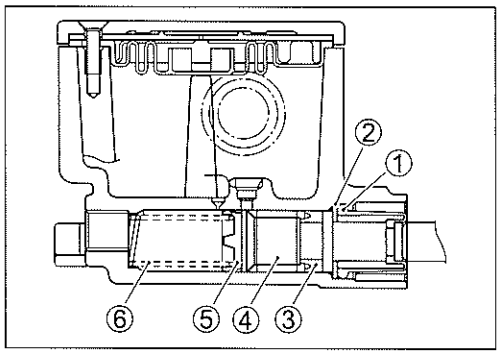

- When remounting the brake master cylinder onto the handlebars, align the master cylinder holder's mating surface Ⓐ with punch mark Ⓑ on the handlebars and tighten the upper clamp bolt first as shown.

Front brake master cylinder mounting bolt:
10 N·m (1.0 kgf-m, 7.0 lb-ft)

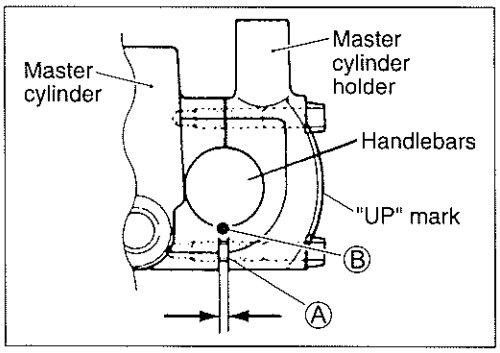

- Tighten the union bolt. (Brake hose routing: ☞8-24)

Brake hose union bolt: 23 N·m (2.3 kgf-m, 16.5 lb-ft)

CAUTION

*** The seal washers should be replaced with the new ones to prevent fluid leakage.**
*** Bleed air from the system after reassembling the master cylinder. (☞2-25)**

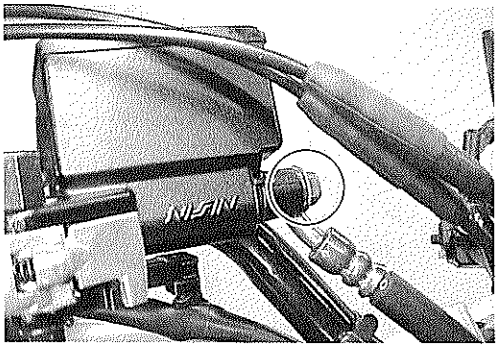

REAR BRAKE
CONSTRUCTION

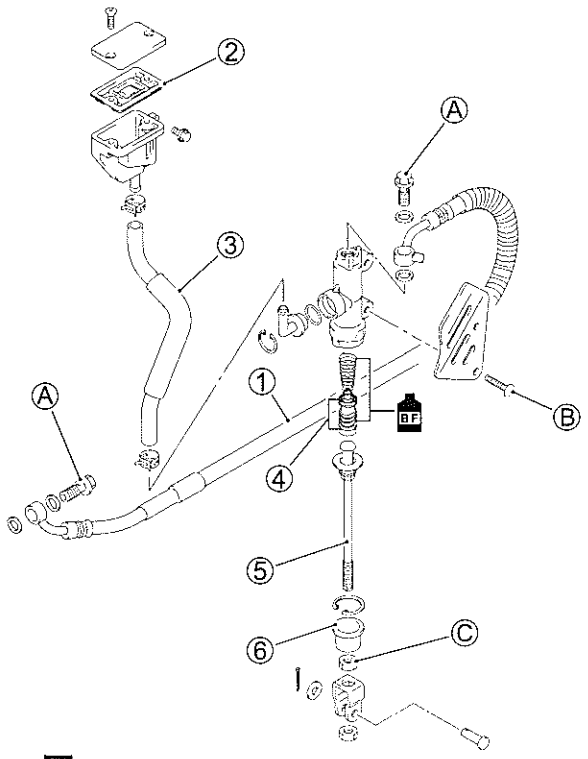

① Brake hose
② Diaphragm
③ Reservoir tank hose
④ Piston/cup set
⑤ Push rod
⑥ Dust boot
⑦ Piston seal
⑧ Dust seal
⑨ Piston
⑩ Pad shim
⑪ Pad insulator
⑫ Brake pad
⑬ Brake pad spring
⑭ Caliper bracket
⑮ Caliper

Ⓐ Brake hose union bolt
Ⓑ Rear brake master cylinder mounting
Ⓒ Rear brake master cylinder rod lock nut
Ⓓ Air bleeder valve
Ⓔ Brake caliper mounting bolt
Ⓕ Pad mounting pin
Ⓖ Brake caliper sliding pin
Ⓗ Plug

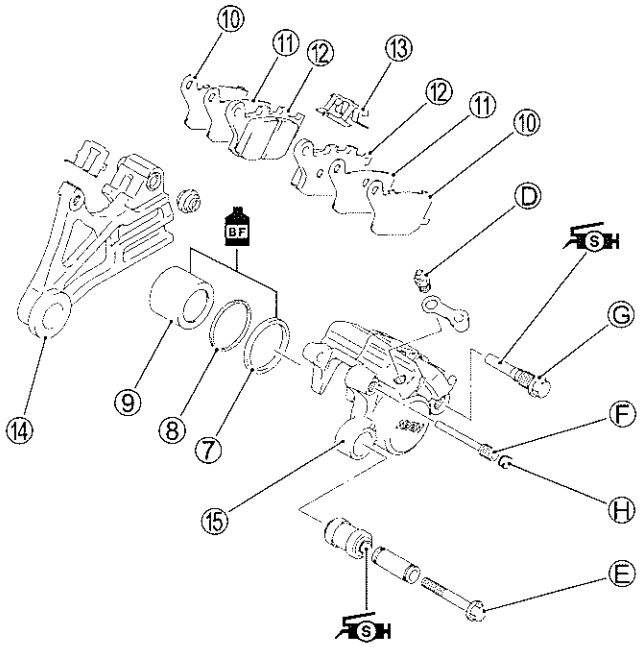

ITEM	N·m	kgf.m	lb-ft
Ⓐ	23	2.3	16.5
Ⓑ	10	1.0	7.0
Ⓒ	18	1.8	13.0
Ⓓ	7.5	0.75	5.5
Ⓔ	23	2.3	16.5
Ⓕ	17	1.7	12.5
Ⓖ	27	2.7	19.5
Ⓗ	2.5	0.25	1.8

⚠ WARNING

* This brake system is filled with an ethylene glycol-based DOT 4 brake fluid. Do not use or mix different types of fluid such as silicone-based or petroleum-based.
* Do not use any brake fluid taken from old, used or unsealed containers. Never reuse brake fluid left over from the last servicing or stored for long periods.
* When storing the brake fluid, seal the container completely and keep away from children.
* When replenishing brake fluid, take care not to get dust into fluid.
* When washing brake components, use fresh brake fluid. Never use cleaning solvent.
* A contaminated brake disc or brake pad reduces braking performance. Discard contaminated pads and clean the disc with high quality brake cleaner or neutral detergent.

CAUTION

Handle brake fluid with care: the fluid reacts chemically with paint, plastics, rubber materials etc. and will damage them severly.

BRAKE PAD REPLACEMENT

- Remove the plug ①.

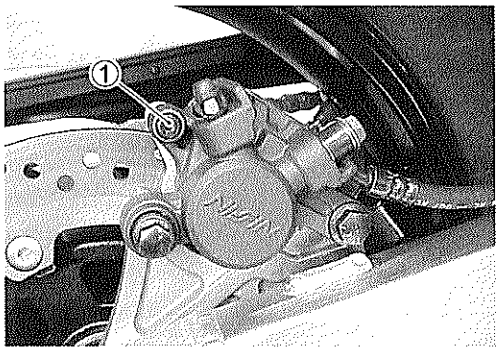

- Loosen the pad mounting pin ②.
- Remove the caliper bracket bolt ③.

CAUTION

> *** Do not operate the brake pedal while dismounting the pads.**
> *** Replace the brake pads as a set, otherwise braking performance will be adversely affected.**

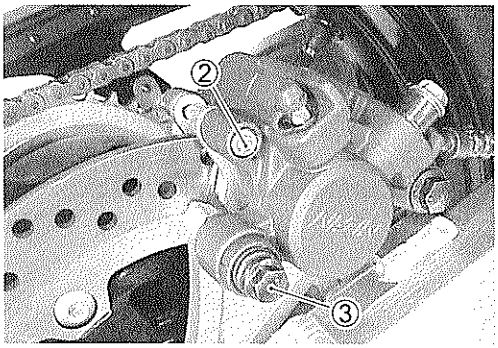

- Remove the pad mounting pin and brake pads with the rear caliper pivoted up.
- Clean up the caliper especially around the caliper pistons.

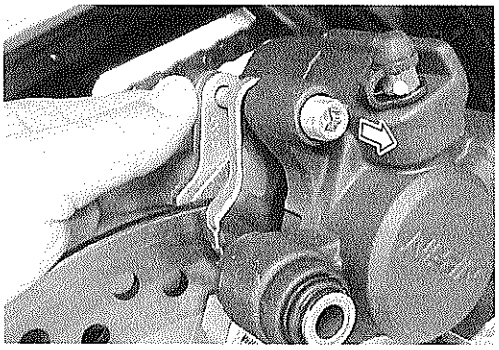

- Assemble the new brake pad ④, insulator ⑤ and shim ⑥.

CAUTION

> **Replace the brake pads as a set, otherwise braking performance will be adversely affected.**

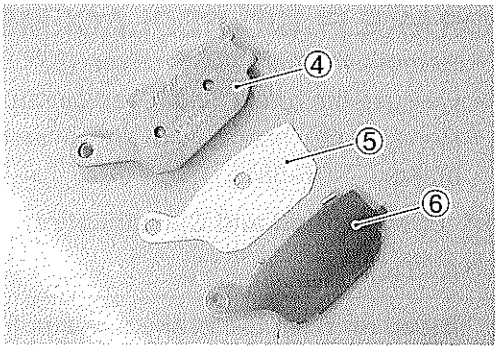

- Install the new brake pads.

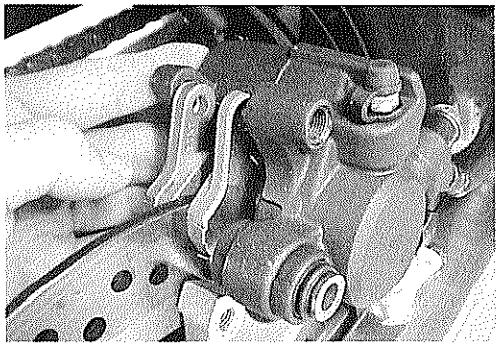

NOTE:
Make sure that the detent of the pad is seated onto the retainer on the caliper bracket.

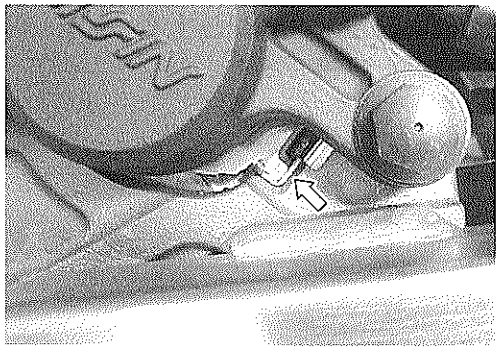

- Tighten the caliper mounting bolt ⑦ and pad mounting pin ⑧ to the specified torque.

Rear brake caliper mounting bolt:
23 N·m (2.3 kgf-m, 16.5 lb-ft)
Rear brake pad mounting pin:
17 N·m (1.7 kgf-m, 12.5 lb-ft)

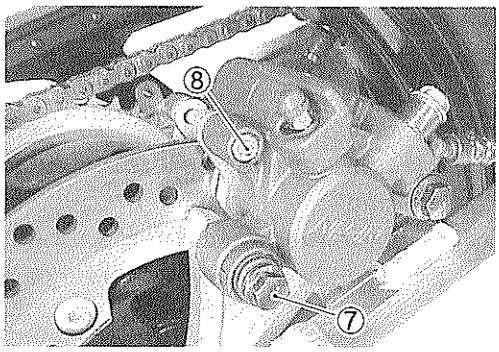

- Install the plug ⑨ to the specified torque.

Pad pin plug: 2.5 N·m (0.25 kgf-m, 1.8 lb-ft)

NOTE:
After replacing the brake pads, pump the brake pedal several times in order to operate the brake correctly and then check the brake fluid level.

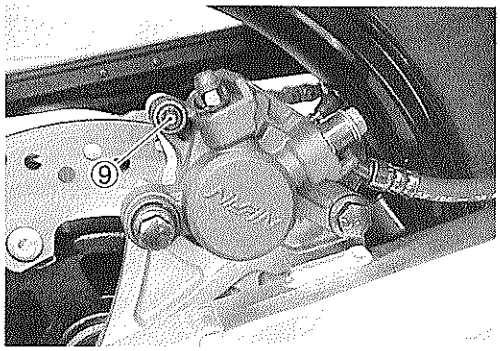

BRAKE FLUID REPLACEMENT

- Remove the right frame cover. (☞6-5)
- Remove the brake fluid reservoir cap.
- Replace the brake fluid in the same manner as the front brake. (☞6-58)

Specification and Classification: DOT 4

CAUTION

Bleed air from the brake system. (☞2-25)

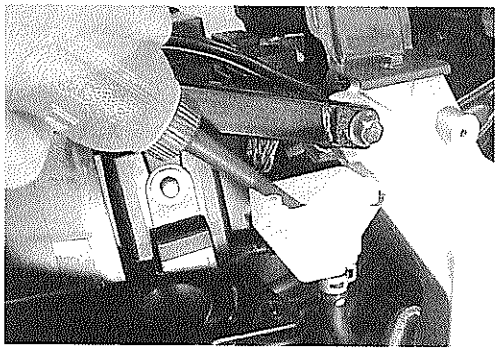

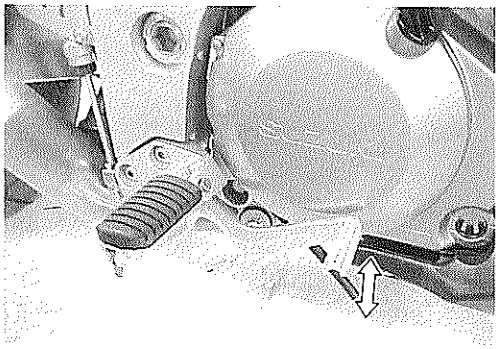

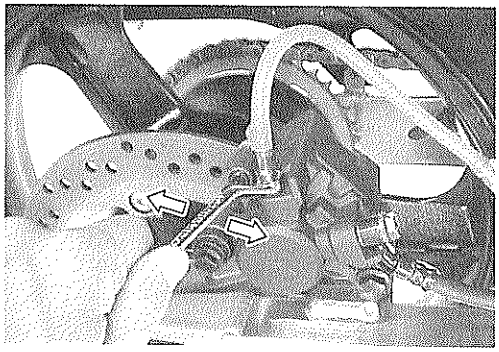

CALIPER REMOVAL AND DISASSEMBLY

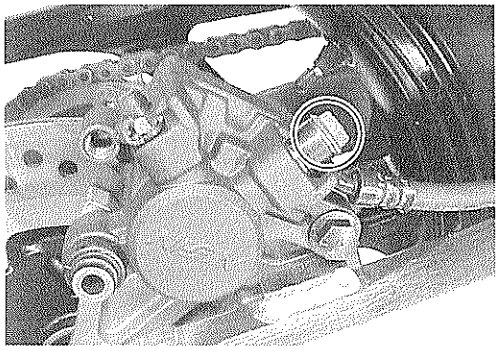

- Drain the brake fluid. (☞6-68)
- Remove the brake pads. (☞6-67)
- Place a rag underneath the union bolt to catch any spilt brake fluid.
- Disconnect the brake hose by removing the brake hose union bolt.

CAUTION

Do not reuse the brake fluid left over from previous servicing and stored for long periods.

⚠ WARNING

Brake fluid, if it leaks, will interfere with safe running and discolor painted surfaces. Check the brake hose and hose joints for cracks and fluid leakage.

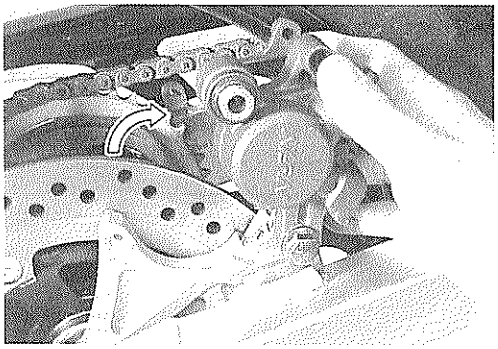

- Pivot the caliper up and remove the caliper from the caliper bracket.

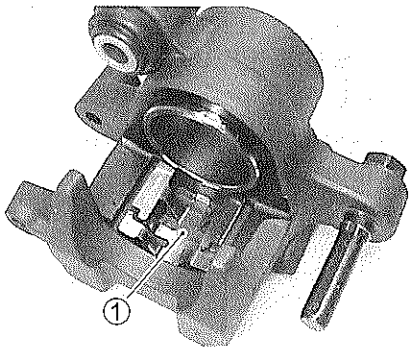

- Remove the pad spring ①.

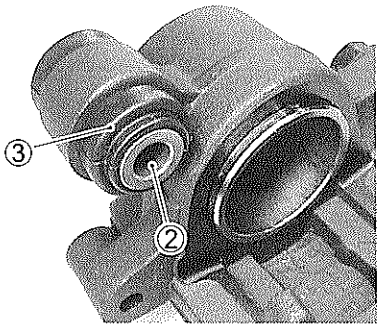

- Remove the spacer ② and boot ③ from the caliper.

- Remove the slide pin ④.

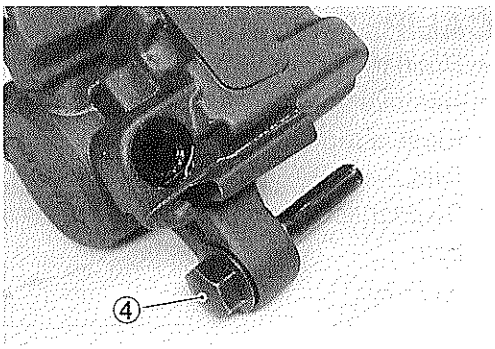

- Place a rag over the piston to prevent it from popping out and then force out the piston using compressed air.

CAUTION

Do not use high pressure air to prevent piston damage.

- Remove the dust seal ⑤ and piston seal ⑥.

CAUTION

Do not reuse the dust seal and piston seal to prevent fluid leakage.

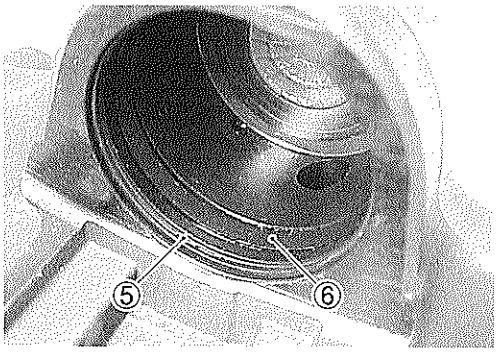

CALIPER INSPECTION

BRAKE CALIPER

Inspect the brake caliper cylinder wall for nicks, scratches and other damage. If any damage is found, replace the caliper with a new one.

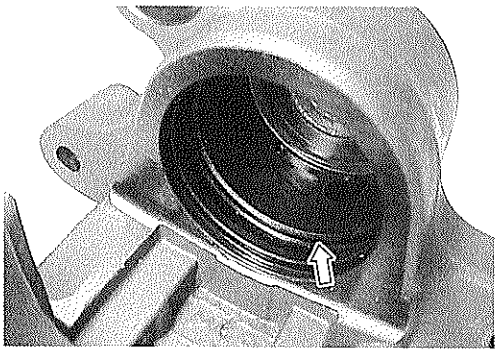

BRAKE CALIPER PISTON

Inspect the brake caliper piston surface for any scratches and other damage. If any damage is found, replace the caliper piston with a new one.

BRAKE CALIPER SLIDING PIN

Inspect the brake caliper sliding pin for wear and other damage. If any damage is found, replace the sliding pin with a new one.

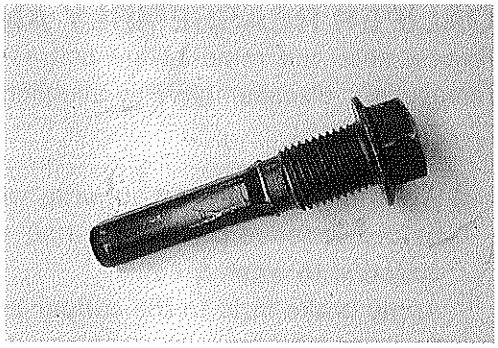

Inspect the boot and spacer for damage and wear. If any damage is found, replace boot and spacer with new ones.

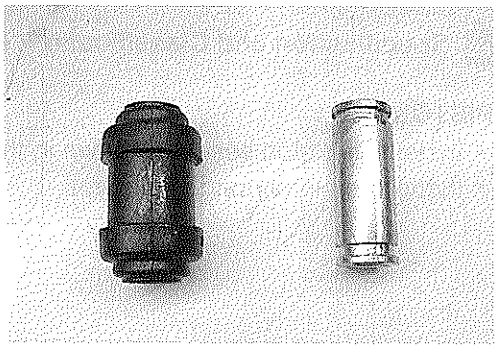

BRAKE DISC INSPECTION

Inspect the rear brake disc in the same manner as the front brake disc. (☞6-52)

DATA Service Limit

Rear disc thickness: 4.5 mm (0.18 in)

Rear disc runout: 0.30 mm (0.012 in)

*** Brake disc removal (☞6-34)**

*** Brake disc installation (☞6-40)**

CALIPER REASSEMBLY AND REMOUNTING

Reassemble and remount the caliper in the reverse order of removal and disassembly. Pay attention to the following points:

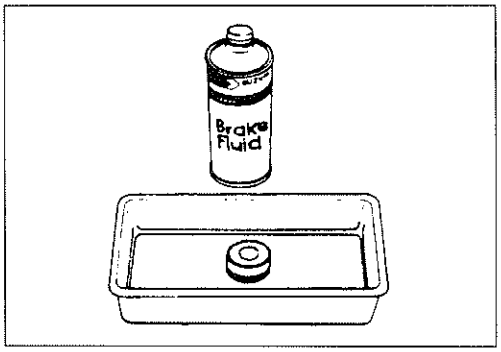

CAUTION

- **Wash the caliper components with fresh brake fluid before reassembly. Never use cleaning solvent or gasoline to wash them.**
- **Apply brake fluid to the caliper bore and piston to be inserted into the bore.**

Specification and Classification: DOT 4

PISTON SEAL

- Install the piston seals as shown in the right illustration.
- Install the piston to the caliper.

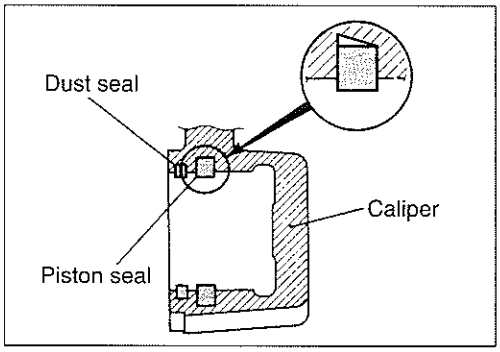

SLIDING PIN

- Install the boot ①.
- Apply SUZUKI SILICONE GREASE to the inside of the boot.

99000-25100: SUZUKI SILICONE GREASE

- Install the spacer ②.

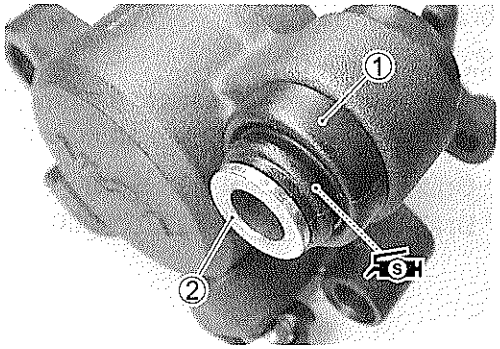

- Tighten the sliding pin ③ to the specified torque.

Brake caliper sliding pin: 27 N·m (2.7 kgf-m, 19.5 lb-ft)

- Apply SUZUKI SILICONE GREASE to the sliding pin.

99000-25100: SUZUKI SILICONE GREASE

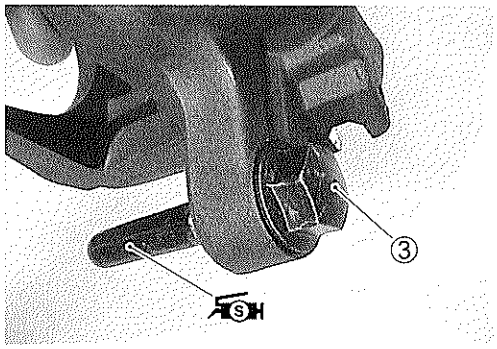

- Install the caliper to the caliper bracket ①.
- Set the boot onto the sliding pin securely.
- Install the brake pad. (☞6-67)

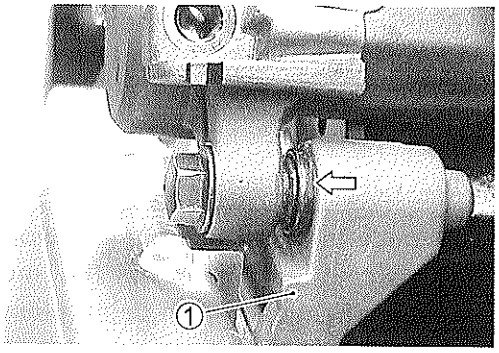

- Tighten the brake hose union bolt with the brake hose union pipe seated in the cutout on the caliper.
  (Rear brake hose routing: ☞8-25)

Brake hose union bolt: 23 N·m (2.3 kgf-m, 16.5 lb-ft)

CAUTION

> *** The seal washers should be replaced with the new ones to prevent fluid leakage.**
> *** Bleed air from the system after reassembling the caliper. (☞2-25)**

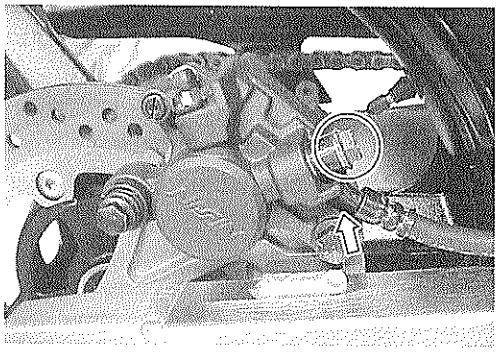

MASTER CYLINDER REMOVAL AND DISASSEMBLY

- Drain the brake fluid. (☞6-68)
- Remove the brake fluid reservoir tank mounting bolt ①.

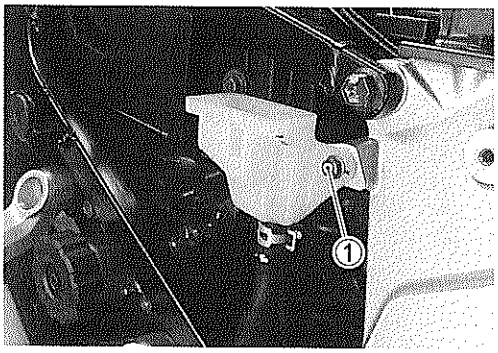

- Loosen the lock nut ②.
- Remove the master cylinder mounting bolts ③.

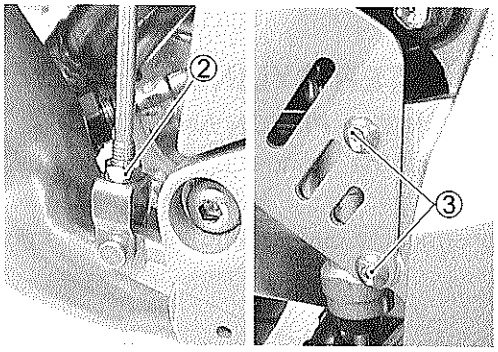

- Place a rag underneath the union bolt on the master cylinder to catch spilled drops of brake fluid. Remove the union bolt ④ and disconnect the brake hose.
- Disconnect the reservoir tank hose.

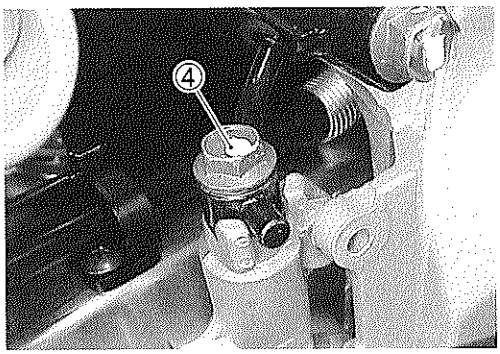

CAUTION

Immediately and completely wipe off any brake fluid contacting any parts of the motorcycle. The fluid reacts chemically with paint, plastic and rubber materials, etc. and will damage them severely.

- Remove the master cylinder by turning the master cylinder rod.

- Disconnect the reservoir hose.
- Remove the connector ⑤ by removing the snap ring ⑥.
- Remove the O-ring ⑦.

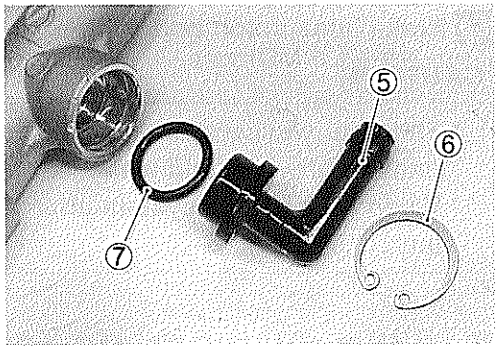

CAUTION

Replace the O-ring with a new one.

- Pull out the dust boot ⑧, then remove the snap ring ⑨.
- Remove the push rod, piston/primary cup and spring.

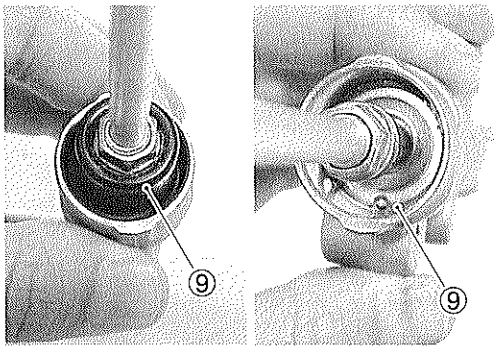

MASTER CYLINDER INSPECTION

CYLINDER, PISTON AND CUP SET

Inspect the cylinder bore wall for any scratches or other damage.

Inspect the cup set and each rubber part for damage.

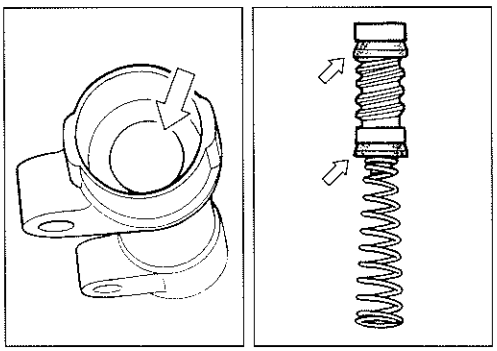

MASTER CYLINDER REASSEMBLY AND REMOUNTING

Reassemble and remount the master cylinder in the reverse order of removal and disassembly. Pay attention to the following points:

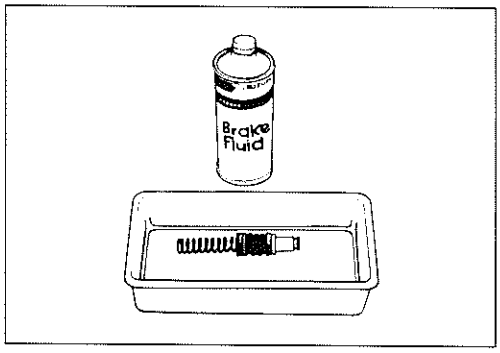

CAUTION

- **Wash the master cylinder components with fresh brake fluid before reassembly. Never use cleaning solvent or gasoline to wash them.**
- **Do not wipe the components with a rag.**
- **Apply brake fluid to the cylinder bore and all the component to be inserted into the bore.**

Specification and Classification: DOT 4

- Apply brake fluid to the piston/cup set.
- Install the following parts.
  ① Spring
  ② Piston/primary cup
  ③ Push rod
  ④ Snap ring
  ⑤ Dust boot
- Apply the SUZUKI MOLY PASTE to the push rod.

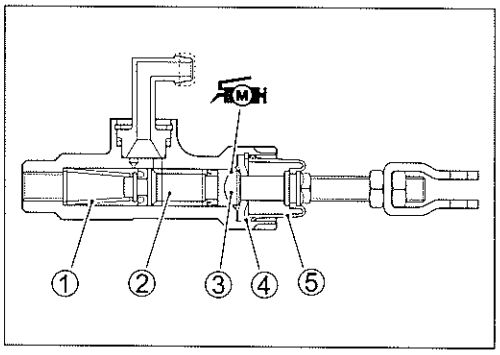

99000-25140: SUZUKI MOLY PASTE

- Install the O-ring ⑥, connector ⑦ and snap ring ⑧ to the master cylinder.

CAUTION

Replace the removed O-ring with a new one.

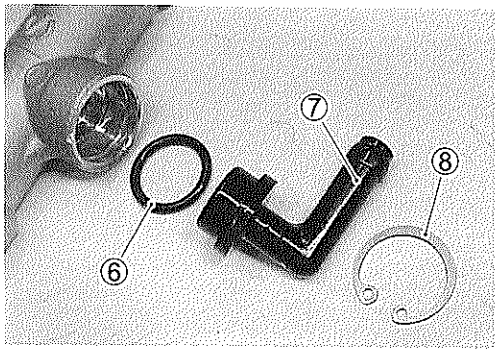

- Install the master cylinder.
- Tighten the lock nut ⑨.

Rear master cylinder rod lock nut:
18 N·m (1.8 kgf-m, 13.0 lb-ft)

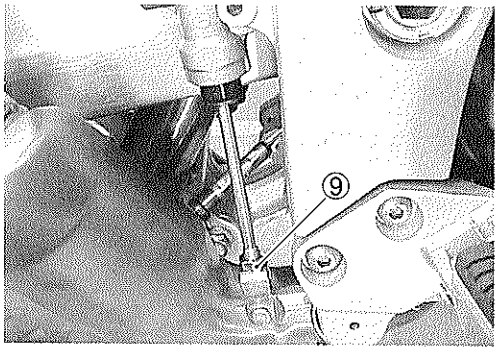

- Install the reservoir tank and reservoir tank hose. (Rear brake hose routing: ☞8-25)
- Temporarily install the master cylinder to the frame.
- Connect the brake hose to the master cylinder. (Rear brake hose routing: ☞8-25)
- Tighten the brake hose union bolt to the specified torque.

Brake hose union bolt: 23 N·m (2.3 kgf-m, 16.5 lb-ft)

CAUTION

> * **The seal washers should be replaced with the new ones to prevent fluid leakage.**
> * **Bleed air from the system after reassembling the master cylinder. (☞2-25)**

- Adjust the brake pedal height. (☞2-24)
- Reinstall the master cylinder.
- Tighten the master cylinder mounting bolts to the specified torque.

Rear master cylinder mounting bolt:
10 N·m (1.0 kgf-m, 7.0 lb-ft)

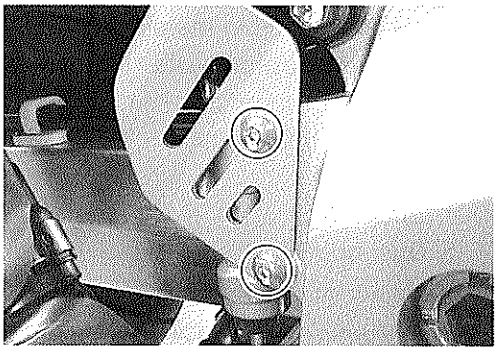

CLUTCH RELEASE CYLINDER AND MASTER CYLINDER

CONSTRUCTION

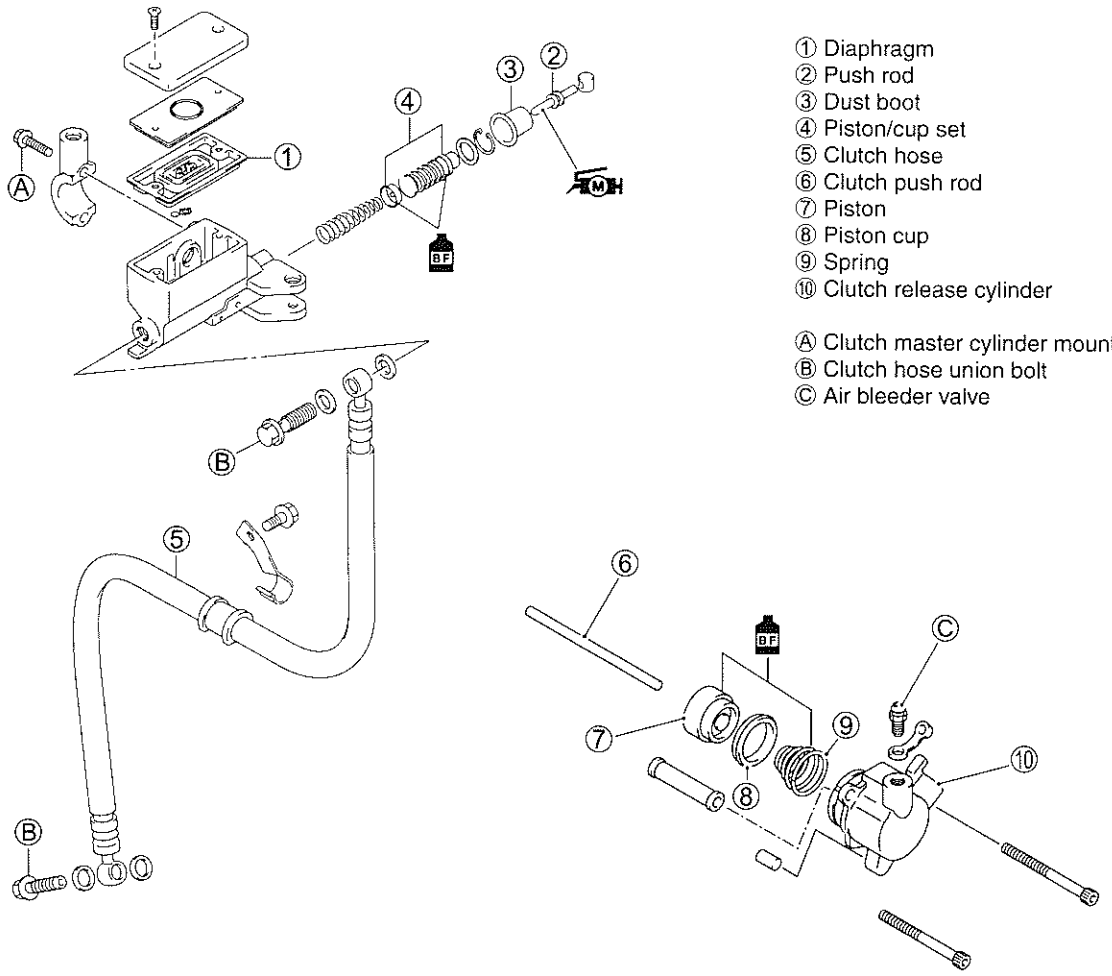

ITEM	N·m	kgf-m	lb-ft
Ⓐ	10	1.0	7.0
Ⓑ	23	2.3	16.5
Ⓒ	7.5	0.75	5.5

⚠ WARNING

* This clutch system is filled with an ethylene glycol-based DOT 4 brake fluid. Do not use or mix different types of fluid such as silicone-based or petroleum-based.
* Do not use any brake fluid taken from old, used or unsealed containers. Never reuse brake fluid left over from the last servicing or stored for long periods.
* When storing the brake fluid, seal the container completely and keep away from children.
* When replenishing brake fluid, take care not to get dust into fluid.
* When washing brake components, use fresh brake fluid. Never use cleaning solvent.

CAUTION

Handle brake fluid with care: the fluid reacts chemically with paint, plastics, rubber materials etc. and will damage them sererly.

CLUTCH FLUID REPLACEMENT

- Place the motorcycle on a level surface and keep the handlebars straight.
- Remove the master cylinder reservoir cap and diaphragm.
- Suck up the old clutch fluid as much as possible from the reservoir tank.
- Fill the reservoir with the new clutch fluid.

Specification and Classification: DOT 4

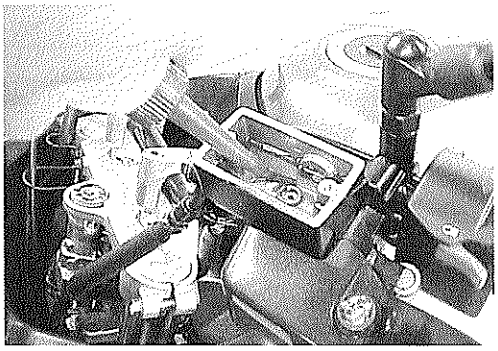

- Connect a clear hose to the clutch release cylinder air bleeder valve and insert the other end of hose into a receptacle.
- Loosen the air bleeder valve and pump the clutch lever until old clutch fluid flows out of the bleeder system.
- Close the clutch release cylinder air bleeder valve, and disconnect a clear hose. Fill the reservoir with fresh brake fluid to the upper level.

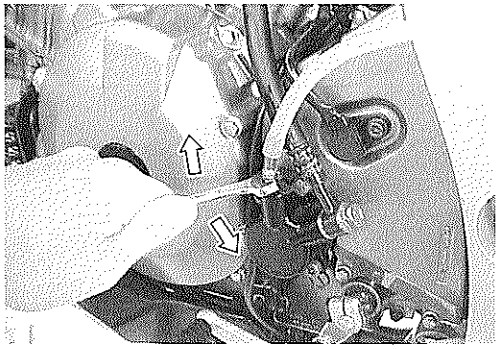

CAUTION

Bleed air in the clutch fluid system. (☞2-17)

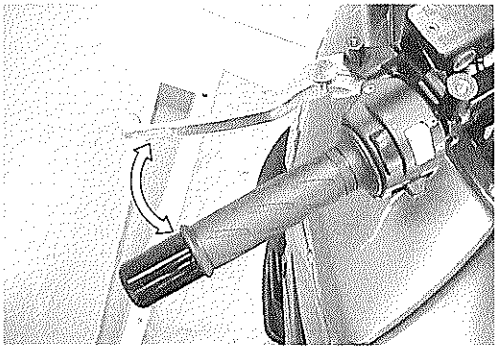

CLUTCH RELEASE CYLINDER REMOVAL AND DISASSEMBLY

- Drain the clutch fluid. (☞above)
- Disconnect the clutch hose by removing the union bolt ①.

NOTE:

Place a rag underneath the union bolt on the release cylinder to catch any split brake fluid.

- Remove the clutch release cylinder ②.

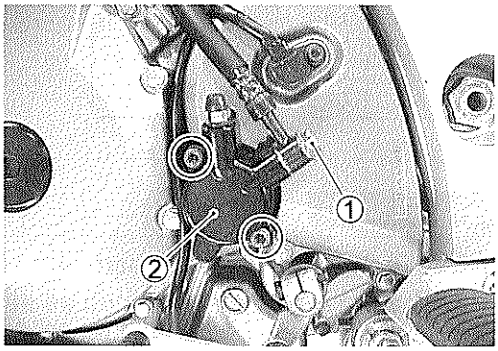

CAUTION

Do not reuse the brake fluid left over from previous servicing and stored for long periods of time.

⚠ WARNING

Brake fluid, if it leaks, will interfere with safe running and discolor painted surfaces. Check the brake hose and hose joints for cracks and fluid leakage.

- Place a rag over the piston to prevent it from popping out.
- Force out the piston by using compressed air.

CAUTION

Do not use high pressure air to prevent piston damage.

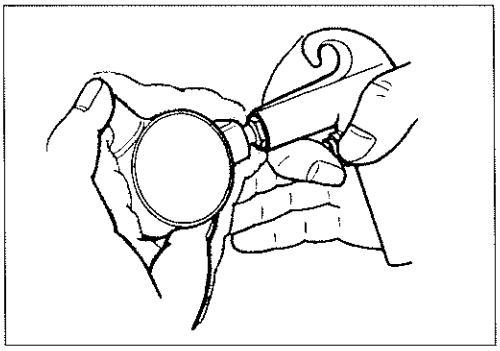

CLUTCH RELEASE CYLINDER INSPECTION

Inspect the clutch release cylinder bore wall for nicks, scratches or other damage. Inspect the oil seal for damage and wear. Inspect the piston surface for any scratches or other damage.

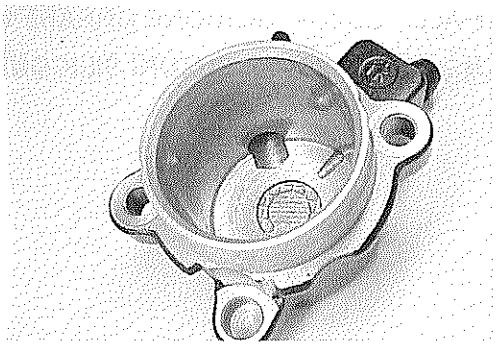

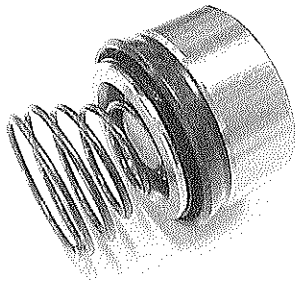

CLUTCH RELEASE CYLINDER REASSEMBLY AND REMOUNTING

Reassemble the clutch release cylinder in the reverse order of disassembly and by taking the following steps:

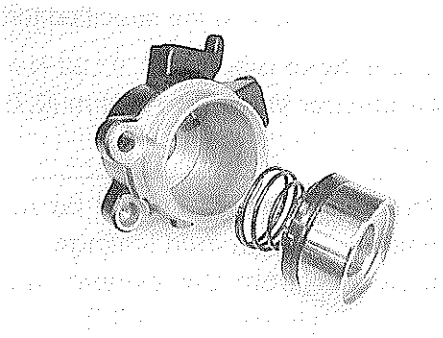

CAUTION

- **Wash the clutch cylinder components with fresh brake fluid before reassembly. Never use cleaning solvent or gasoline to wash them.**
- **Do not wipe the components with a rag.**
- **Apply brake fluid to the cylinder bore and piston to be inserted into the bore.**

Specification and Classification: DOT 4

① Piston
② Piston cup
③ Spring
④ Air bleeder valve
⑤ Bleeder cap
⑥ Clutch ralease cylinder body

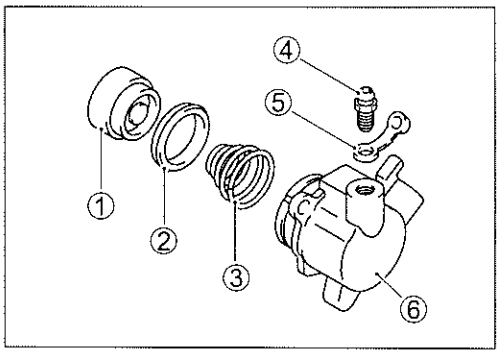

- Apply SUZUKI SILICONE GREASE to the concavity of piston.

99000-25100: SUZUKI SILICONE GREASE

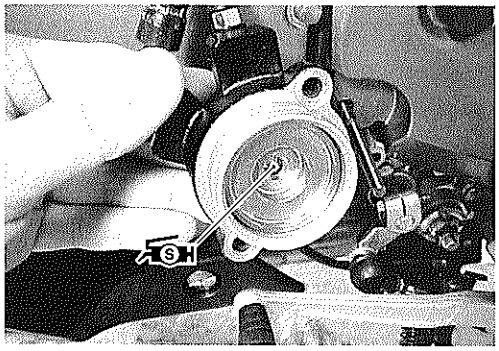

- Install the clutch release cylinder ⑦ and spacer ⑧.

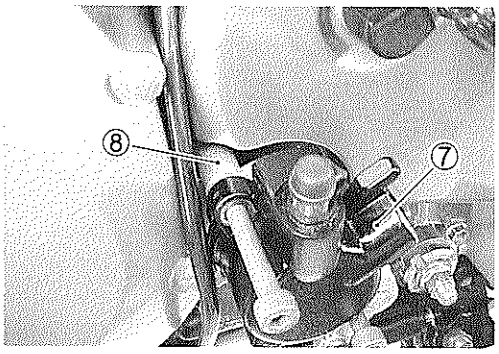

- Tighten each bolt to the specified torque.

Clutch hose union bolt ⑨: 23 N·m (2.3 kgf-m, 16.5 lb-ft)
Air bleeder valve ⑩: 7.5 N·m (0.75 kgf-m, 5.5 lb-ft)

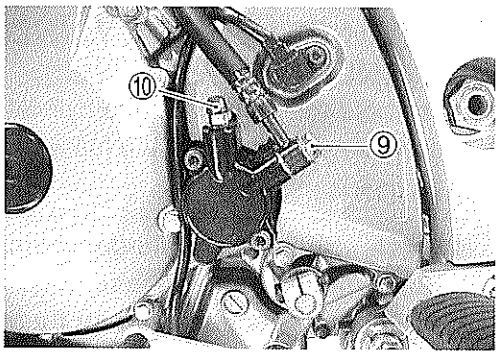

CAUTION

- **The seal washers should be replaced with the new ones to prevent fluid leakage.**
- **Bleed air from the system after reassembling the release cylinder. (☞2-17)**

CLUTCH MASTER CYLINDER REMOVAL AND DISASSEMBLY

- Remove the rear view mirror and clutch lever cover.
- Drain the clutch fluid. (☞6-78)
- Disconnect the clutch lever position switch lead wires.
- Place a rag underneath the union bolt on the master cylinder to catch spilled drops of brake fluid. Remove the union bolt and disconnect the clutch hose from the master cylinder.

- Remove the clutch master cylinder.

CAUTION

Completely wipe off any brake fluid adhering to any parts of motorcycle. The fluid reacts chemically with paint, plastics, rubber materials, etc. and will damage them severely.

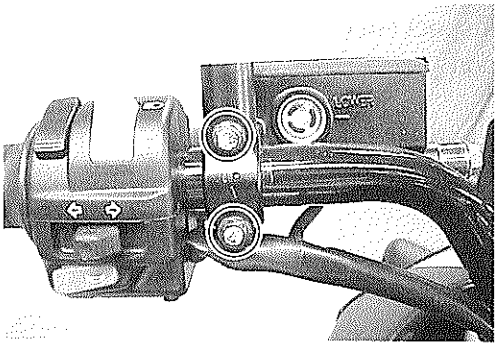

- Remove the clutch lever ① and clutch lever position switch ②.

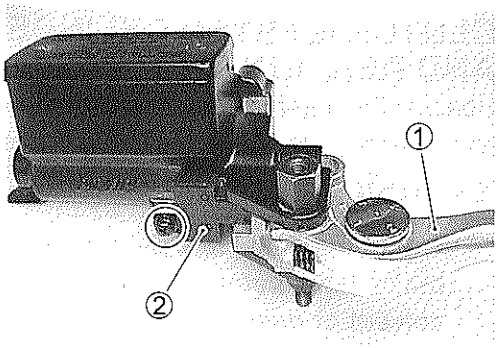

- Remove the boot ③ and push rod ④.
- Remove the snap ring ⑤.

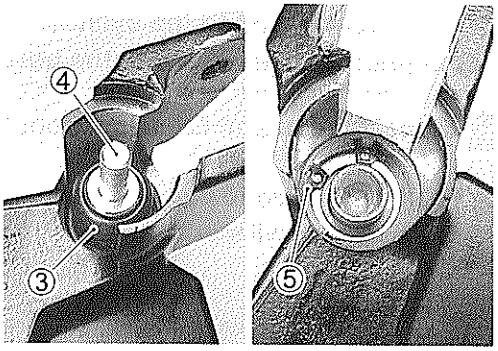

- Remove the piston/cup set
  - ⑥ Secondary cup
  - ⑦ Piston
  - ⑧ Primary cup
  - ⑨ Spring

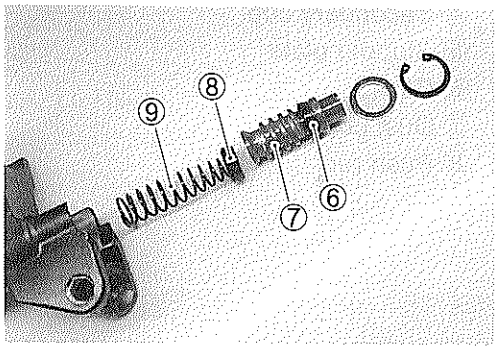

CLUTCH MASTER CYLINDER INSPECTION

Inspect the piston surface for any scratches or other damage.
Inspect the primary cup, secondary cup and dust seal for wear or damage.

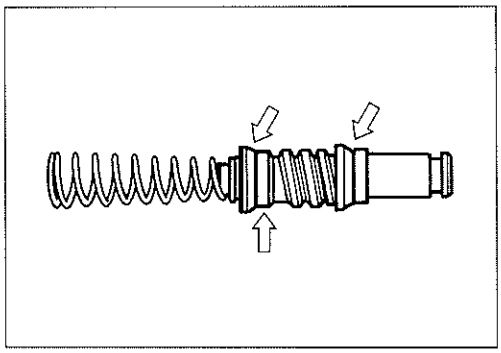

Inspect the master cylinder bore for any scratches or other damage.

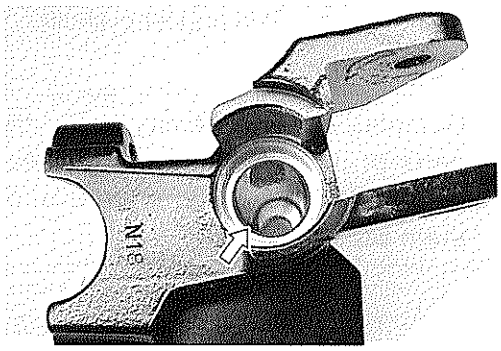

CLUTCH MASTER CYLINDER REASSEMBLY AND REMOUNTING

Reassemble the master cylinder in the reverse order of removal and disassembly. Pay attention to the following points:

CAUTION

- **Wash the master cylinder components with fresh brake fluid before reassembly. Never use cleaning solvent or gasoline to wash them.**
- **Do not wipe the components with a rag.**

Apply brake fluid to the cylinder bore and all the component to be inserted into the bore.

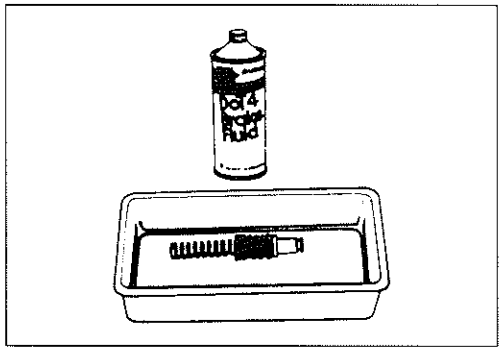

Specification and Classification: DOT 4

- Apply brake fluid to the piston/cup set and install them to the clutch master cylinder.
  ① Spring
  ② Primary cup
  ③ Piston
  ④ Secondary cup
  ⑤ Stopper plate
  ⑥ Circlip
  ⑦ Dust boot
  ⑧ Push rod

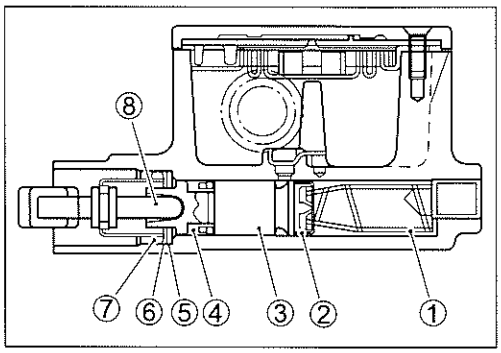

- Apply SUZUKI MOLY PASTE to the push rod.
- Install the push rod and dust boot.

99000-25140: SUZUKI MOLY PASTE

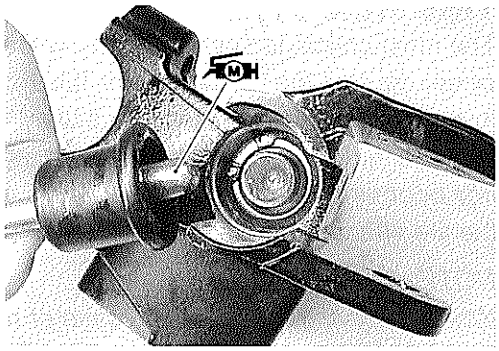

- When remounting the master cylinder on the handlebars, align the master cylinder holder's mating surface Ⓐ with punched mark Ⓑ on the handlebars and tighten the upper clamp bolt first.
- Tighten the clutch master cylinder union bolt to the specified torque.

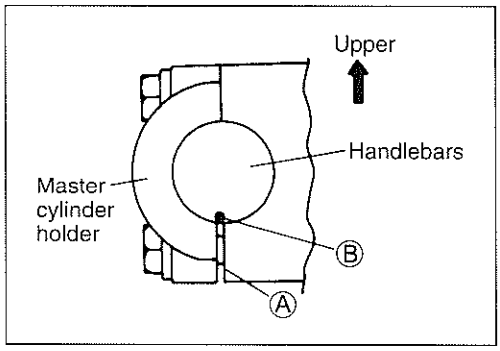

Clutch master cylinder mounting bolt:
10 N·m (1.0 kgf-m, 7.0 lb-ft)
Clutch master cylinder union bolt:
23 N·m (2.3 kgf-m, 16.5 lb-ft)

- Connect the clutch lever position switch lead wire.
  (Clutch hose routing: ☞8-22)

CAUTION

> *** The seal washers should be replaced with the new ones to prevent fluid leakage.**
> *** Bleed air from the system after reassembling the master cylinder. (☞2-17)**

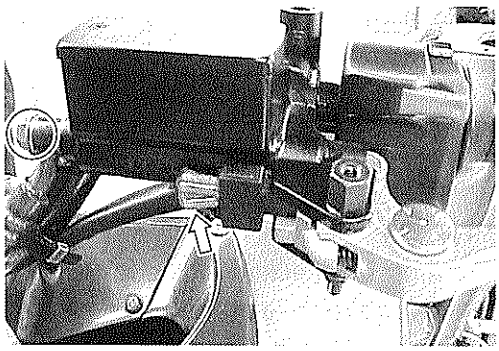

TIRE AND WHEEL

TIRE REMOVAL

The most critical factor of a tubeless tire is the seal between the wheel rim and the tire bead. For this reason, it is recommended to use a tire changer that can satisfy this sealing requirement and can make the operation efficient as well as functional.
For operating procedures, refer to the instructions supplied by the tire changer manufacturer.

NOTE:
When removing the tire in the case of repair or inspection, mark the tire with a chalk to indicate the tire position relative to the valve position.
Even though the tire is refitted to the original position after repairing puncture, the tire may have to be balanced again since such a repair can cause imbalance.

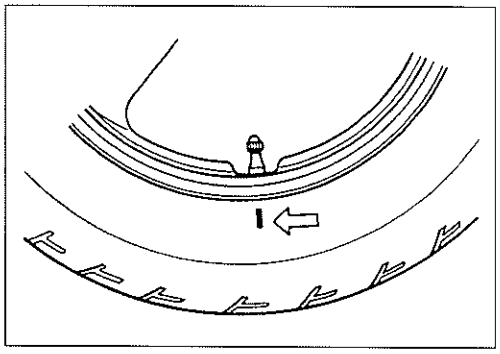

INSPECTION

WHEEL

Wipe the wheel clean and check for the following:
* Distortion and crack
* Any flaws and scratches at the bead seating area.
* Wheel rim runout (☞6-10)

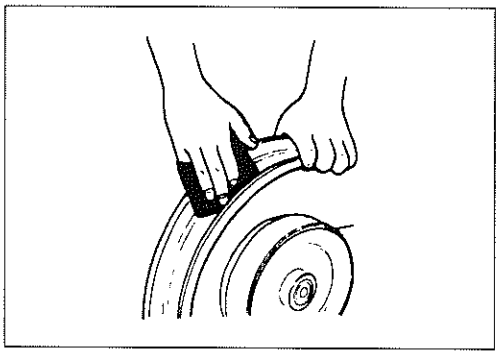

TIRE

Tire must be checked for the following points:
* Nick and rupture on side wall
* Tire tread depth (☞2-26)
* Tread separation
* Abnormal, uneven wear on tread
* Surface damage on bead
* Localized tread wear due to skidding (Flat spot)
* Abnormal condition of inner liner

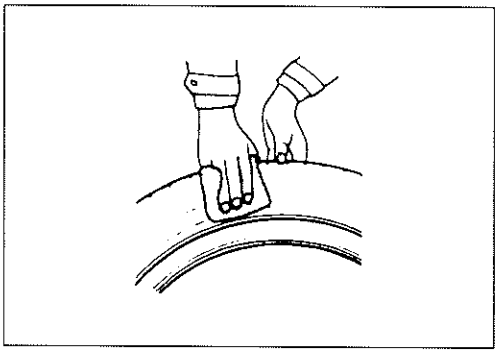

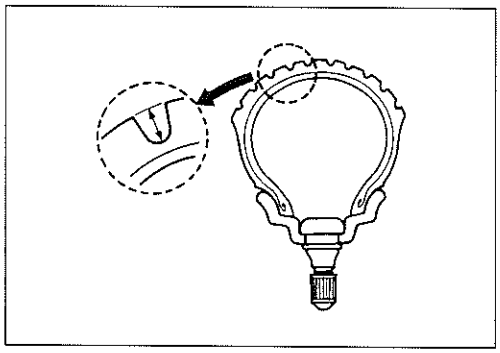

VALVE

- Inspect the valve after the tire is removed from the rim. Replace the valve with a new one if the seal rubber is peeling or has damage.
- Inspect the valve core. If the seal has abnormal deformation, replace the valve with a new one.

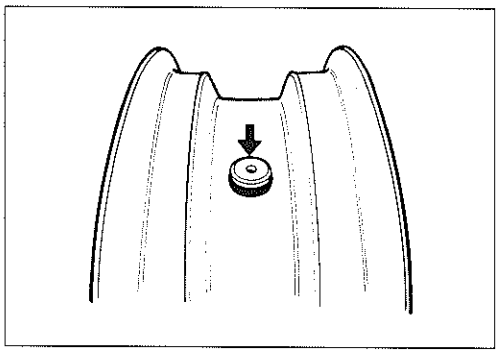

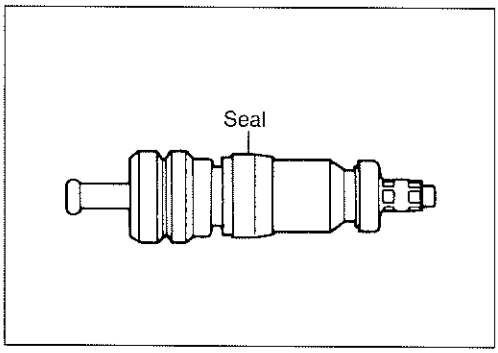

VALVE INSTALLATION

- Any dust or rust around the valve hole must be cleaned off. Then install the valve in the rim.

NOTE:
To properly install the valve into the valve hole, apply a special tire lubricant or neutral soapy liquid to the valve.

CAUTION

Be careful not to damage the lip of valve.

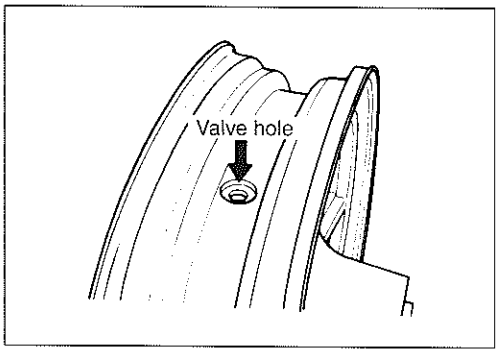

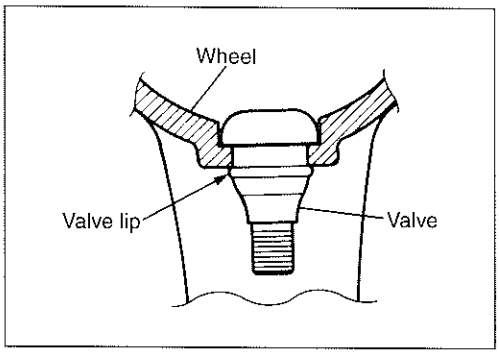

TIRE INSTALLATION

- Apply tire lubricant to the tire bead.
- When installing the tire onto the wheel, observe the following points.

CAUTION

*** Do not reuse the valve which has been once removed.**
*** Do not use oil, grease or gasoline on the tire bead in place of tire lubricant.**

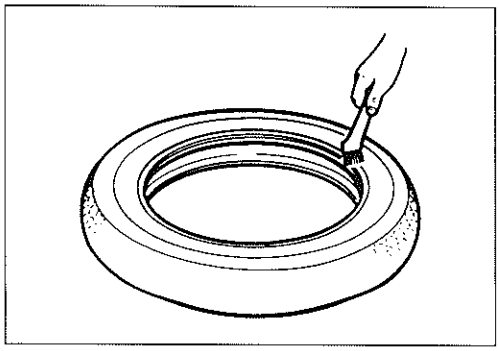

- When installing the tire, the arrow ① on the side wall should point to the direction of wheel rotation.
- Align the chalk mark put on the tire at the time of removal with the valve position.

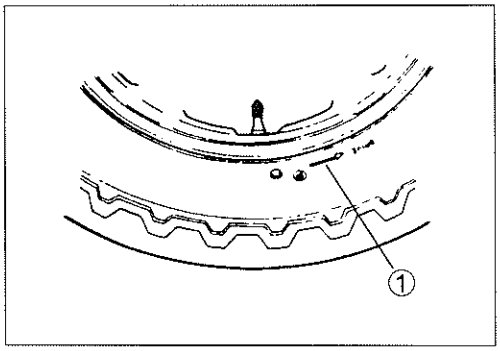

- For installation procedure of tire onto the wheel, follow the instructions given by the tire changer manufacturer.
- Bounce the tire several times while rotating. This makes the tire bead expand outward to contact the wheel, thereby facilitating air inflation.
- Inflate the tire.

⚠ WARNING

*** Do not inflate the tire to more than 400 kPa (4.0kgf/cm²). If inflated beyond this limit, the tire can burst and possibly cause injury. Do not stand directly over the tire while inflating.**
*** In the case of preset pressure air inflator, pay special care for the set pressure adjustment.**

- In this condition, check the "rim line" cast on the tire side walls. The line must be equidistant from the wheel rim all around. If the distance between the rim line and wheel rim varies, this indicates that the bead is not properly seated. If this is the case, deflate the tire completely and unseat the bead for both sides. Coat the bead with lubricant and fit the tire again.
- When the bead has been fitted properly, adjust the pressure to specification.
- As necessary, adjust the tire balance.

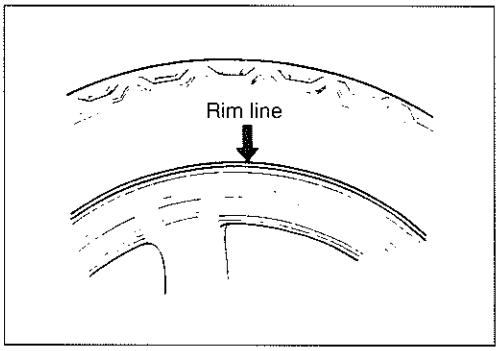

CAUTION

Do not run with a repaired tire at a high speed.

DATA **Tire pressure**

Solo riding: Front: 250 kPa (2.50 kgf/cm², 36 psi)
Rear: 250 kPa (2.50 kgf/cm², 36 psi)
Dual riding: Front: 250 kPa (2.50 kgf/cm², 36 psi)
Rear: 280 kPa (2.80 kgf/cm², 41 psi)

ELECTRICAL SYSTEM

CONTENTS

CAUTIONS IN SERVICING 7- 2
CONNECTOR 7- 2
COUPLER 7- 2
CLAMP 7- 2
FUSE 7- 2
SEMI-CONDUCTOR EQUIPPED PART 7- 2
BATTERY 7- 3
CONNECTING THE BATTERY 7- 3
WIRING PROCEDURE 7- 3
USING THE MULTI CIRCUIT TESTER 7- 3
LOCATION OF ELECTRICAL COMPONENTS 7- 4
CHARGING SYSTEM 7- 6
TROUBLESHOOTING 7- 6
INSPECTION 7- 7
STARTER SYSTEM AND SIDE-STAND/IGNITION INTERLOCK SYSTEM 7-10
TROUBLE SHOOTING 7-10
STARTER MOTOR REMOVAL AND DISASSEMBLY 7-11
STARTER MOTOR INSPECTION 7-12
STARTER MOTOR REASSEMBLY 7-12
STARTER RELAY INSPECTION 7-13
SIDE-STAND/IGNITION INTERLOCK SYSTEM PARTS INSPECTION 7-14
IGNITION SYSTEM 7-17
TROUBLESHOOTING 7-17
INSPECTION 7-19
COMBINATION METER 7-22
REMOVAL AND DISASSEMBLY 7-22
INSPECTION 7-23
ENGINE COOLANT TEMPERATURE METER AND INDICATOR 7-25
LAMPS 7-29
HEADLIGHT, BRAKE LIGHT/TAILLIGHT AND TURN SIGNAL LIGHT 7-29
RELAYS 7-30
TURN SIGNAL/SIDE-STAND RELAY 7-30
STARTER RELAY 7-30
FUEL PUMP RELAY 7-30
SWITCHES 7-31
BATTERY 7-33
SPECIFICATIONS 7-33
INITIAL CHARGING 7-33
SERVICING 7-35
RECHARGING OPERATION 7-35

CAUTIONS IN SERVICING

CONNECTOR

- When connecting a connector, be sure to push it in until a click is felt.
- Inspect the connector for corrosion, contamination and breakage in its cover.

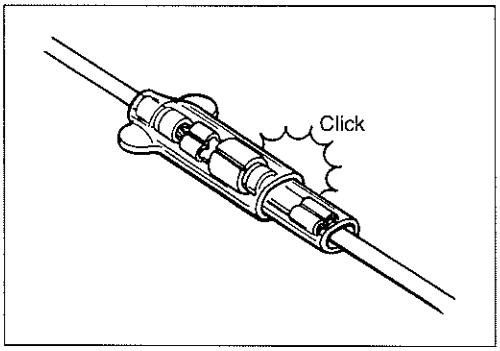

COUPLER

- With a lock type coupler, be sure to release the lock before disconnecting it and push it in fully till the lock works when connecting it.
- When disconnecting the coupler, be sure to hold the coupler itself and do not pull the lead wires.
- Inspect each terminal on the coupler for being loose or bent.
- Inspect each terminal for corrosion and contamination.

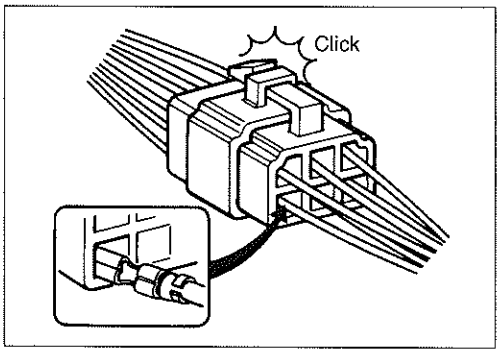

CLAMP

- Clamp the wire harness at such positions as indicated in "WIRE HARNESS ROUTING". (☞8-14 to 8-16)
- Bend the clamp properly so that the wire harness is clamped securely.
- In clamping the wire harness, use care not to allow it to hang down.
- Do not use wire or any other substitute for the band type clamp.

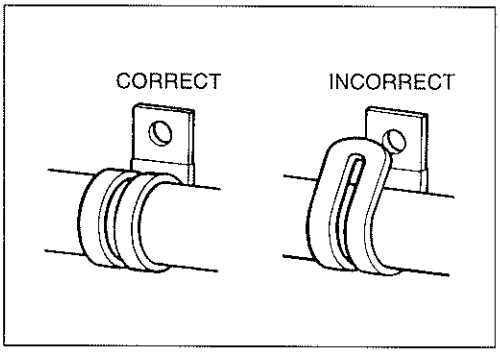

FUSE

- When a fuse blows, always investigate the cause, correct it and then replace the fuse.
- Do not use a fuse of a different capacity.
- Do not use wire or any other substitute for the fuse.

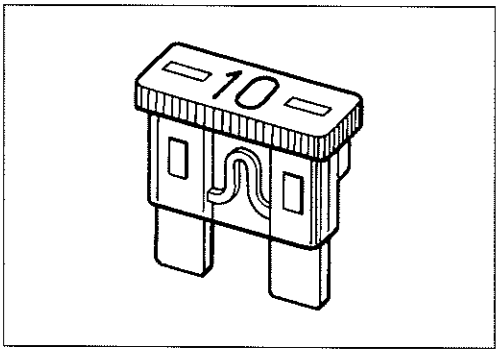

SEMI-CONDUCTOR EQUIPPED PART

- Be careful not to drop the part with a semi-conductor built in such as a ECM.
- When inspecting this part, follow inspection instruction strictly. Neglecting proper procedure may cause damage to this part.

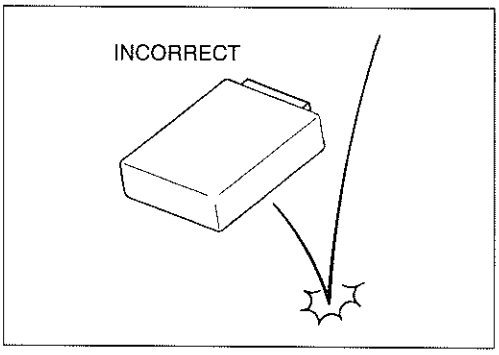

BATTERY

- The MF battery used in this motorcycle does not require maintenance (e.g., electrolyte level inspection, distilled water replenishment).
- During normal charging, no hydrogen gas is produced. However, if the battery is overcharged, hydrogen gas may be produced. Therefore, be sure there are no fire or spark sources (e.g., short circuit) nearby when charging the battery.
- Be sure to recharge the battery in a well-ventilated and open area.
- Note that the charging system for the MF battery is different from that of a conventional battery. Do not replace the MF battery with a conventional battery.

CONNECTING THE BATTERY

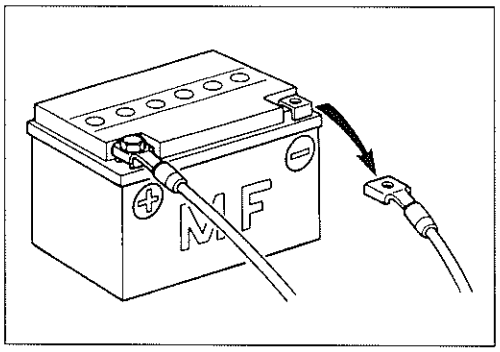

- When disconnecting terminals from the battery for disassembly or servicing, be sure to disconnect the ⊖ battery lead wire, first.
- When connecting the battery lead wires, be sure to connect the ⊕ battery lead wire, first.
- If the terminal is corroded, remove the battery, pour warm water over it and clean it with a wire brush.
- After connecting the battery, apply a light coat of grease to the battery terminals.
- Install the cover over the ⊕ battery terminal.

WIRING PROCEDURE

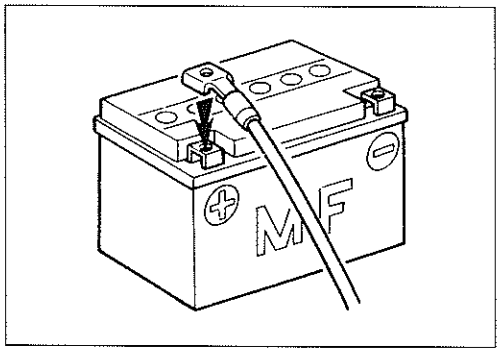

- Properly route the wire harness according to the "WIRE ROUTING" section. (☞8-14 to 8-16)

USING THE MULTI CIRCUIT TESTER

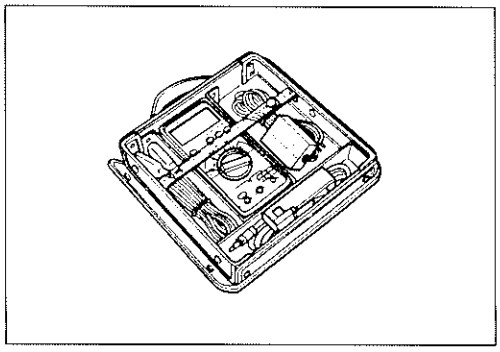

- Properly use the multi circuit tester ⊕ and ⊖ probes. Improper use can cause damage to the motorcycle and tester.
- If the voltage and current values are not known, begin measuring in the highest range.
- When measuring the resistance, make sure that no voltage is applied. If voltage is applied, the tester will be damaged.
- After using the tester, be sure to turn the switch to the OFF position.

CAUTION

Before using the multi circuit tester, read its instruction manual.

LOCATION OF ELECTRICAL COMPONENTS

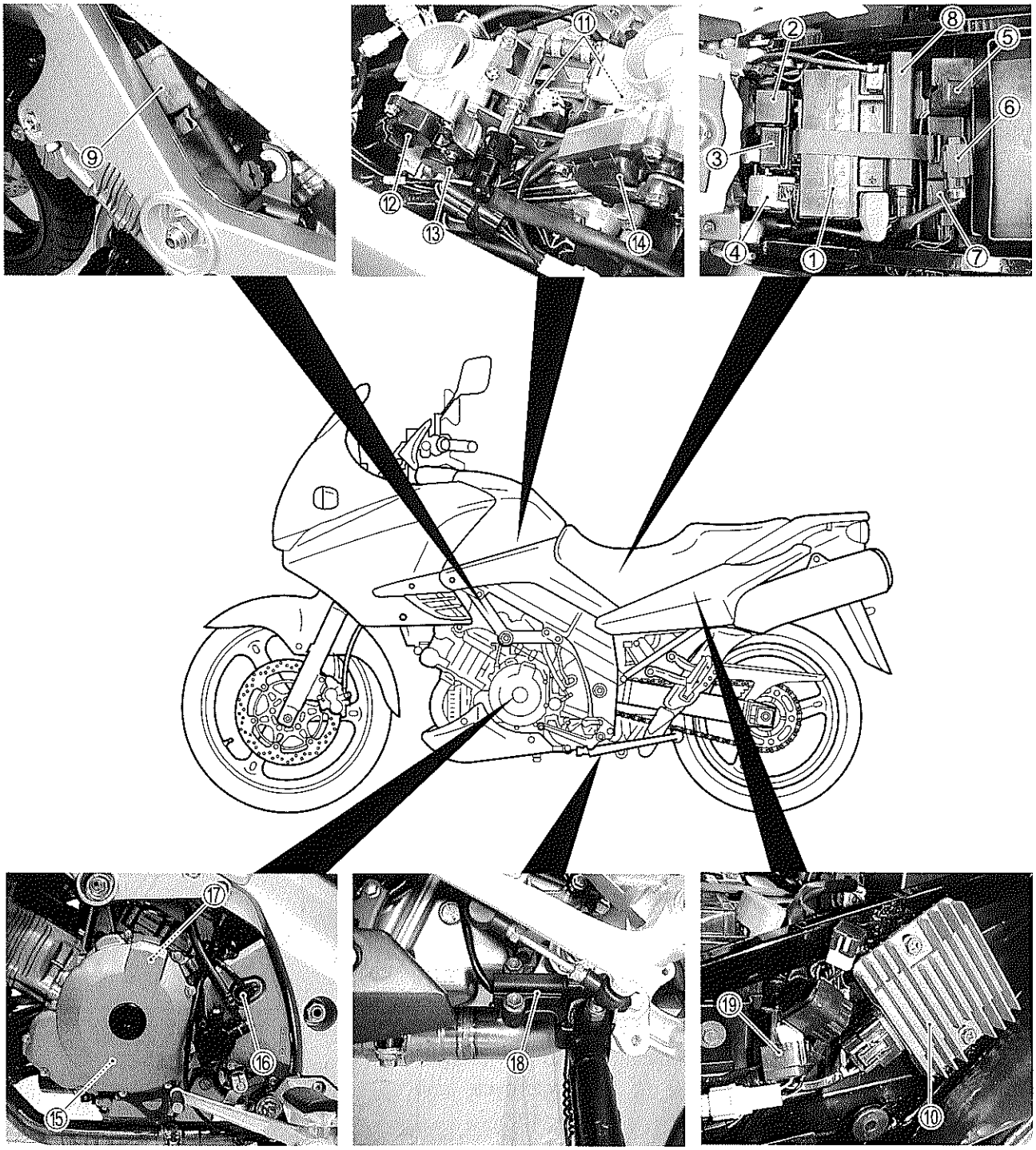

① Battery
② Fuse box
③ Side-stand/turn signal relay
④ Starter relay
⑤ Fuse pump relay
⑥ Tip over sensor (☞4-42)
⑦ AP sensor (☞4-40)
⑧ ECM (Engine Control Module)
⑨ Ignition coil (No.2)
⑩ Regulator/rectifier
⑪ Fuel injector (☞4-47 and 4-70)
⑫ STP sensor (☞4-44)
⑬ TP sensor (☞4-36)
⑭ Secondary throttle valve actuator (☞4-43)
⑮ Generator
⑯ Speedometer sensor
⑰ CKP sensor
⑱ Side stand switch
⑲ Mode selection switch coupler

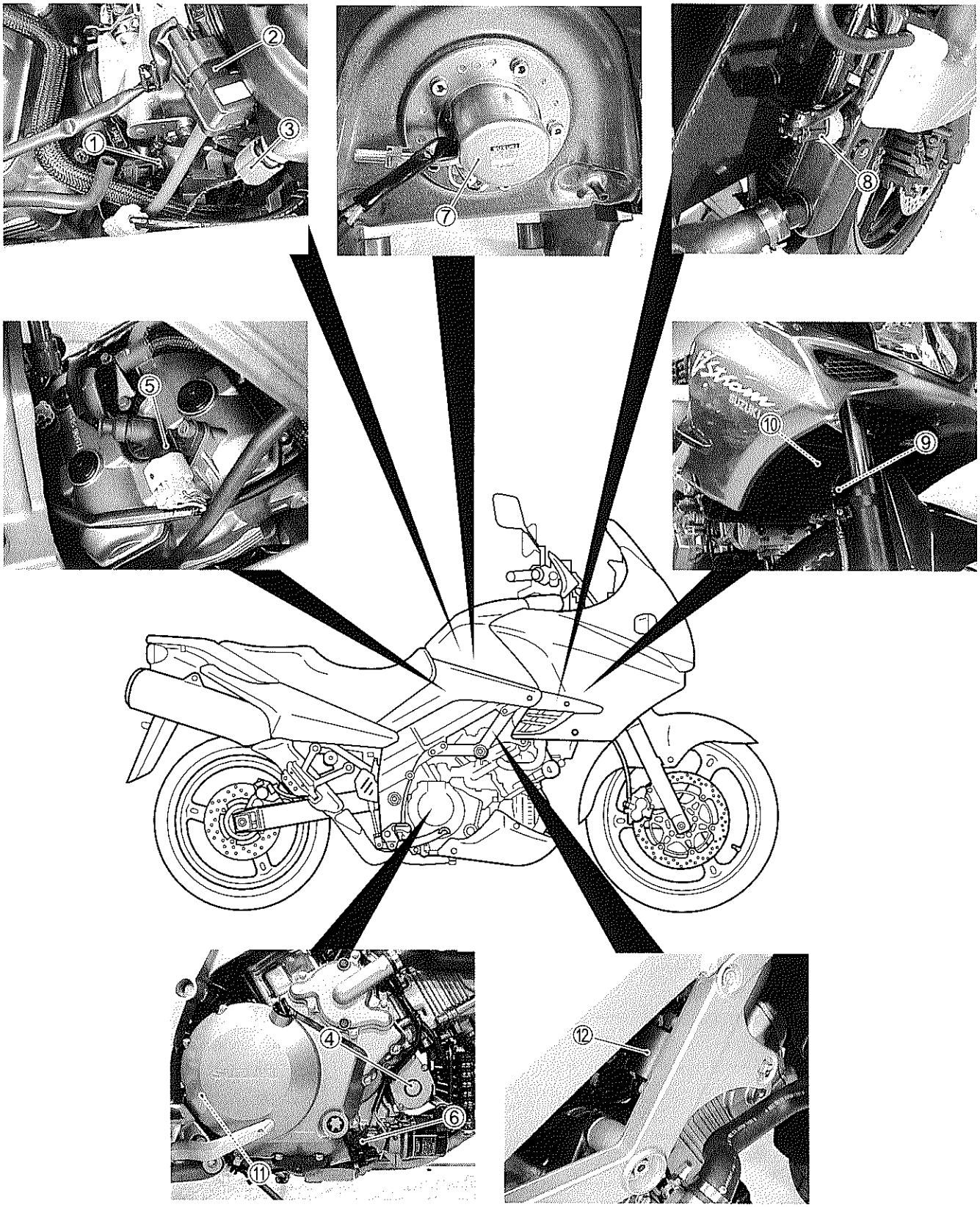

① ECT sensor (☞4-38)
② IAP sensor (☞4-34)
③ IAT sensor (☞4-39)
④ Starter motor
⑤ CMP sensor (☞4-32)
⑥ Oil pressure switch
⑦ Fuel pump (☞4-55)
⑧ Cooling fan motor switch (☞5-9)
⑨ Cooling fan (☞5-8)
⑩ Horn
⑪ Gear position switch
⑫ Ignition coil (No.1)

CHARGING SYSTEM

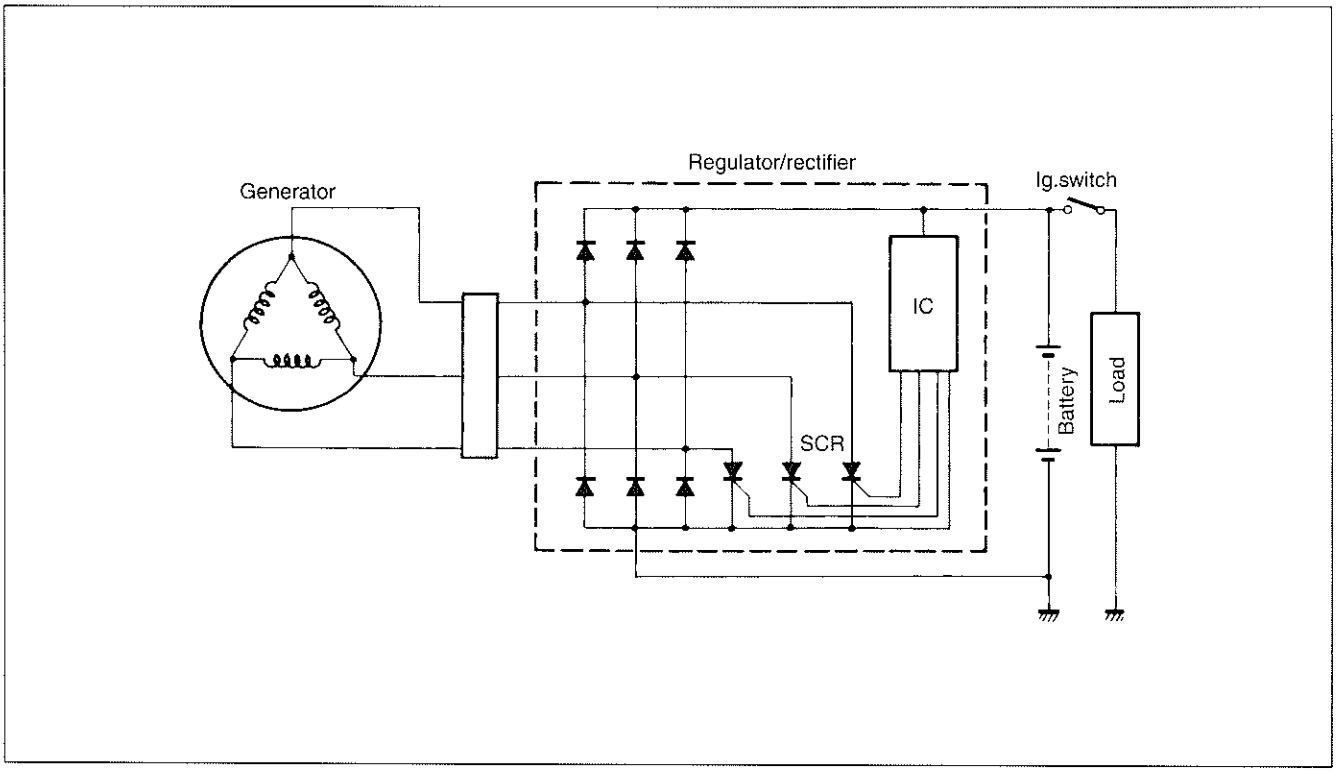

TROUBLESHOOTING

Battery runs down quickly.

↓

Check accessories which use excessive amounts of electricity.
- Accessories are installed → • Remove accessories.

No accessories ↓

Check the battery for current leaks. (☞7-7)
- Current leaks → • Short circuit of wire harness • Faulty electrical equipment

No current leaks ↓

Measure the charging voltage between the battery terminals. (☞7-8)
- Correct → • Faulty battery • Abnormal driving condition

Incorrect ↓

Measure the continuity of the generator coil. (☞7-8)
- No continuity → • Faulty generator coil or disconnected lead wires

Continuity ↓

Continued on next page

Measure the generator no-load voltage. (☞7-9)
- Incorrect → • Faulty generator
- Correct ↓

Inspect the regulator/rectifier. (☞7-9)
- Incorrect → • Faulty regulator/rectifier
- Correct ↓

Inspect wirings.
- Incorrect → • Short circuit of wire harness • Poor contact of couplers
- Correct → • Faulty battery

Others

Battery overcharge	• Faulty regulator/rectifier • Faulty battery • Poor contact of generator lead wire coupler

INSPECTION

BATTERY CURRENT LEAKAGE

- Remove the seat. (☞6-4)
- Turn the ignition switch to the OFF position.
- Disconnect the battery ⊖ lead wire.

Measure the current between ⊖ battery terminal and the ⊖ battery lead wire using the multi circuit tester. If the reading exceeds the specified value, leakage is evident.

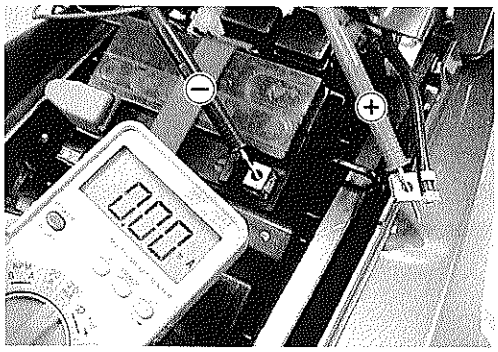

TOOL 09900-25008: Multi circuit tester set

DATA Battery current (leak): Under 3 mA

Tester knob indication: Current (⎓, 20 mA)

CAUTION

- **Because the current leak might be large, turn the tester to high range first to avoid tester damage.**
- **Do not turn the ignition switch to the "ON" position when measuring current.**

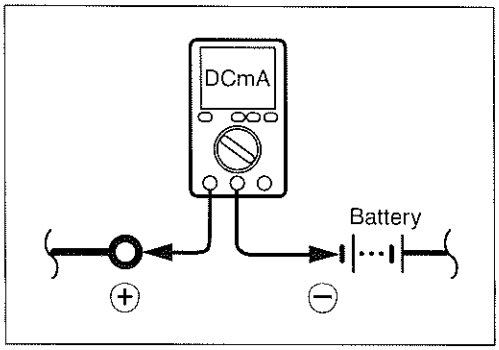

When checking to find the excessive current leakage, remove the couplers and connectors, one by one, checking each part.

REGULATED VOLTAGE

- Remove the seat. (☞6-4).
- Start the engine and keep it running at 5 000 r/min. with lighting switch turned ON (only E02, E19) and dimmer switch turned HI position.

Measure the DC voltage between the ⊕ and ⊖ battery terminals using the multi circuit tester. If the voltage is not within the specified value, inspect the generator and regulator/rectifier. (☞7-8 and 7-9)

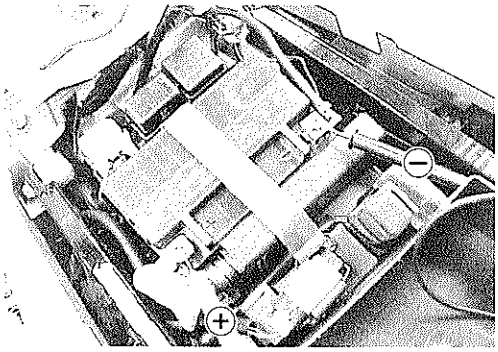

NOTE:
When making this test, be sure that the battery is in fully-charged condition.

TOOL 09900-25008: Multi circuit tester set

Tester knob indication: Voltage (⎓)

DATA Charging output (Regulated voltage):
14.0 – 15.5 V at 5 000 r/min.

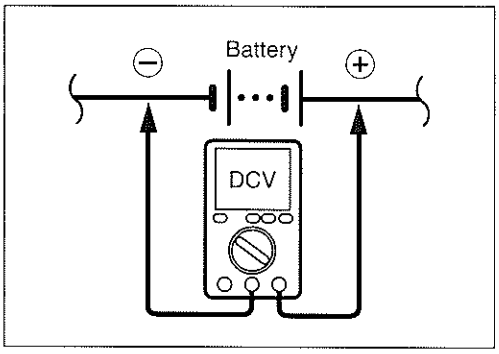

GENERATOR COIL RESISTANCE

- Remove the left frame cover. (☞6-5)
- Disconnect the generator coupler.

Measure the resistance between the three lead wires.
If the resistance is not specified value, replace the stator with a new one. Also, check that the generator core is insulated.

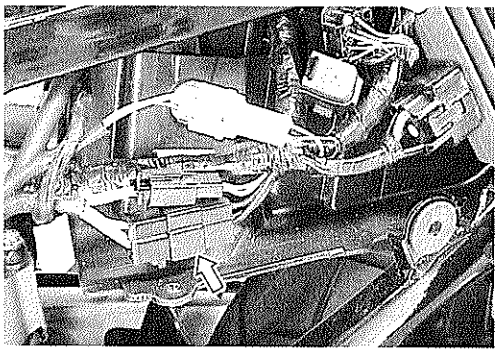

TOOL 09900-25008: Multi circuit tester set

Tester knob indication: Resistance (Ω)

DATA Generator coil resistance: 0.2 – 0.5 Ω (Yellow – Yellow)
∞ Ω (Yellow – Ground)

NOTE:
When making above test, it is not necessary to remove the generator.

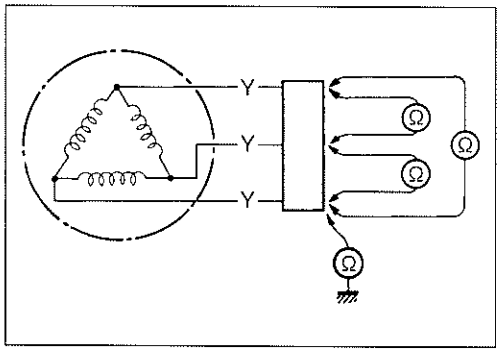

GENERATOR NO-LOAD PERFORMANCE

- Remove the left frame cover. (☞6-5)
- Disconnect the generator coupler.
- Start the engine and keep it running at 5 000 r/min.

Using the multi circuit tester, measure the voltage between three lead wires.
If the tester reads under the specified value, replace the generator with a new one.

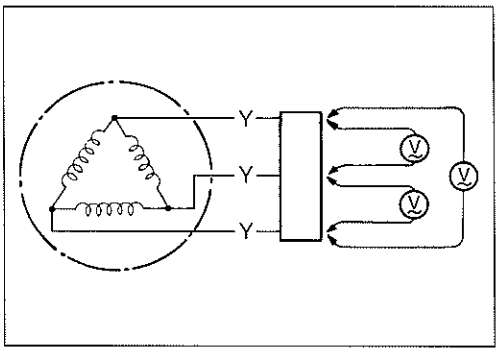

TOOL 09900-25008: Multi circuit tester set

Tester knob indication: Voltage (~)

DATA Generator no-load performance:
More than 75 V at 5 000 r/min (When engine is cold)

REGULATOR/RECTIFIER

- Remove the left frame cover. (☞6-5)
- Remove the regulator/rectifier and diconnect the coupler.

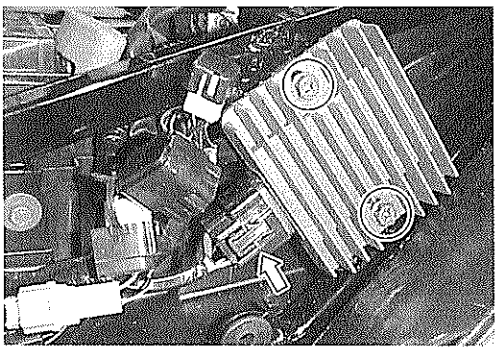

Measure the voltage between the terminals using the multi circuit tester as indicated in the table below. If the voltage is not within the specified value, replace the regulator/rectifier with a new one.

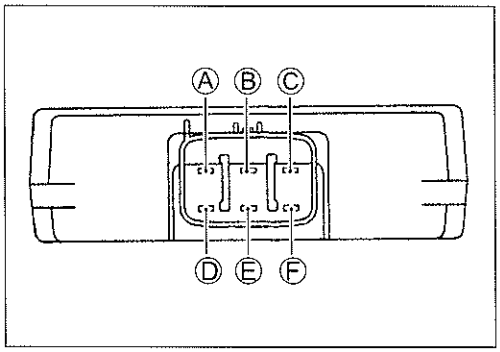

TOOL 09900-25008: Multi circuit tester set

Tester knob indication: Diode test (⊣◀)

Unit: V

Probe of tester to: ⊖	⊕ Probe of tester to: Ⓐ	Ⓑ	Ⓒ	Ⓓ	Ⓔ	Ⓕ
Ⓐ		*	0.4–0.7	0.3–0.6	0.3–0.6	0.3–0.6
Ⓑ	*		*	*	*	*
Ⓒ	*	*		*	*	*
Ⓓ	*	*	0.3–0.6		*	*
Ⓔ	*	*	0.3–0.6	*		*
Ⓕ	*	*	0.3–0.6	*	*	

* More tham 1.4 V (tester's battery voltage)

NOTE:
If the tester reads under 1.4 V when the tester probes are not connected, replace the battery of multi circuit tester.

STARTER SYSTEM AND SIDE-STAND/IGNITION INTERLOCK SYSTEM

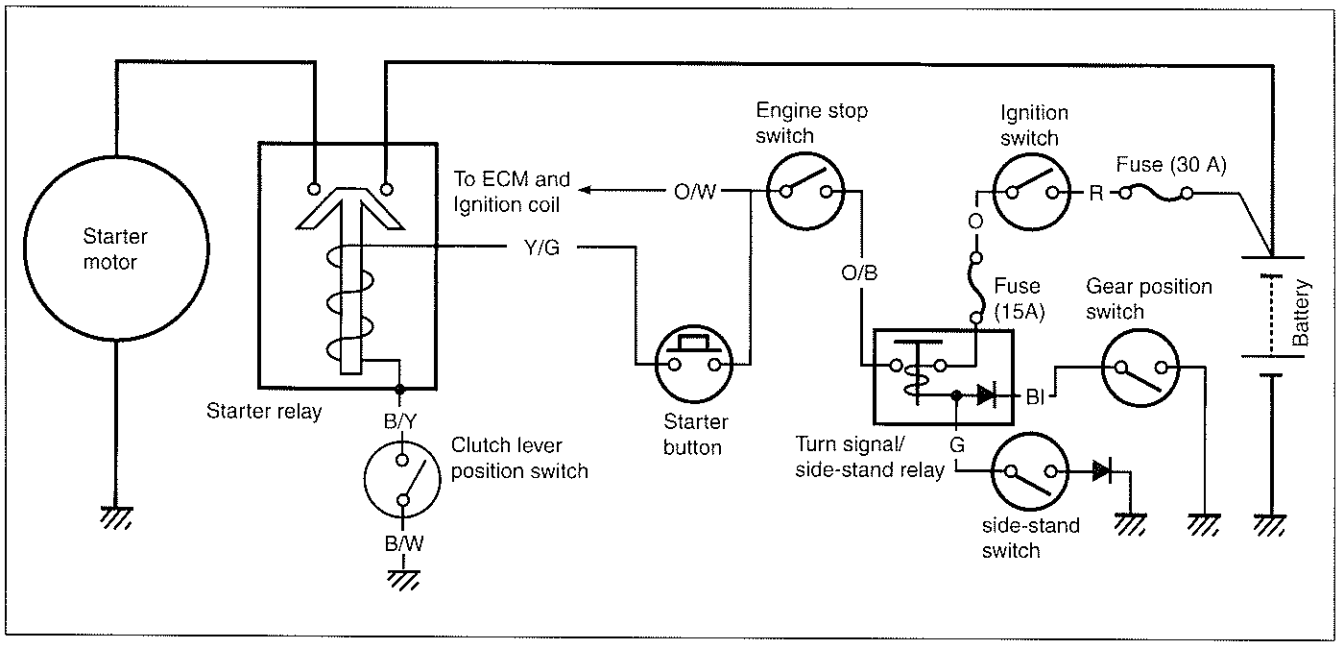

TROUBLE SHOOTING

Starter motor will not run.

The transmission is in neutral. Grasp the clutch lever, turn on the ignition switch with the engine stop switch in the "RUN" position and listen for a click from the starter relay when the starter button is pushed.

- Clicks → Check if the starter motor runs when its terminal is connected to the battery ⊕ terminal (Do not use thin "wire" because a large amount of current flows)
  - Runs → Faulty starter relay; Loose or disconnected starter motor lead wire
  - Does not run → Faulty starter motor
- No click → Measure the starter relay voltage at the starter relay connectors (between Y/G ⊕ and B/Y ⊖) when the starter button is pushed.
  - No voltage → Faulty ignition switch; Faulty engine stop switch; Faulty clutch lever position switch; Faulty gear position switch; Faulty turn signal/side-stand relay; Faulty starter button; Poor contact of connector; Open circuit in wire harness
  - Voltage → Continued on next page

Check the starter relay.
(☞7-13)

Incorrect → • Faulty starter relay

Correct → • Poor contact of the starter relay

The starter motor runs when the transmission is in neutral with the side-stand up or down, but does not run when the transmission is in any position other than neutral with the side-stand down.

Check the side-stand switch.
(☞7-14)

Incorrect → • Faulty side-stand switch

Correct → • Open circuit in wire harness
• Poor contact of connector

Others

Engine does not turn though the starter motor runs.	• Faulty starter torque limiter (☞3-64)

STARTER MOTOR REMOVAL AND DISASSEMBLY

- Remove the engine under cover.
- Remove the starter motor and disconnect the starter motor lead wire ①.

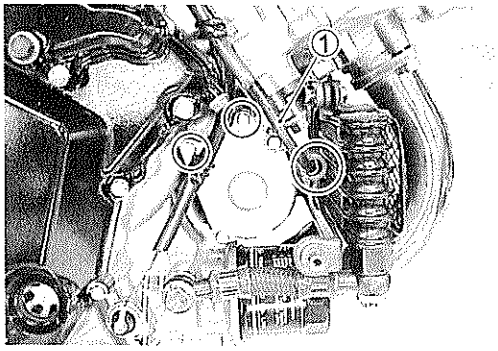

- Disassemble the starter motor as shown in the illustration.

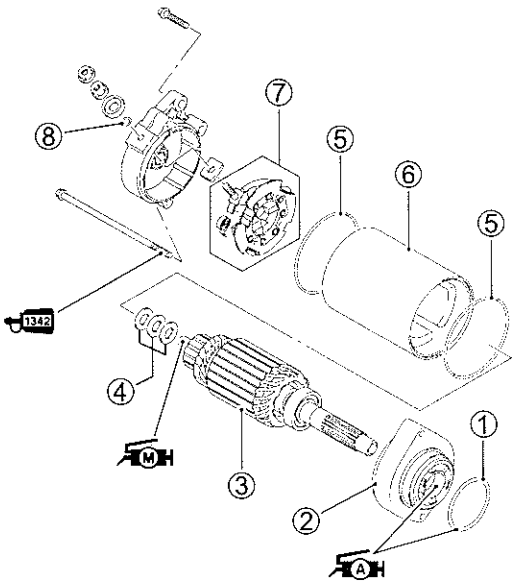

① O-ring
② Housing
③ Armature
④ Washer
⑤ O-ring
⑥ Starter motor case
⑦ Starter brush holder assembly
⑧ O-ring

STARTER MOTOR INSPECTION

CARBON BRUSH

Inspect the brushes for abnormal wear, cracks, or smoothness in the brush holder.

If any damages are found, replace the brush assembly with a new one.

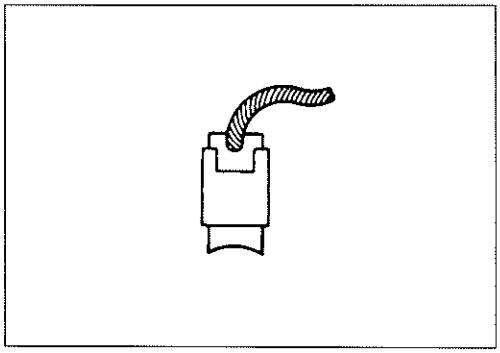

COMMUTATOR

Inspect the commutator for discoloration, abnormal wear or undercut Ⓐ.

If abnormal wear is found, replace the armature with a new one.

If the commutator surface is discolored, polish it with #400 sand paper and wipe it using a clean dry cloth.

If there is no undercut, scrape out the insulator ① with a saw blade.

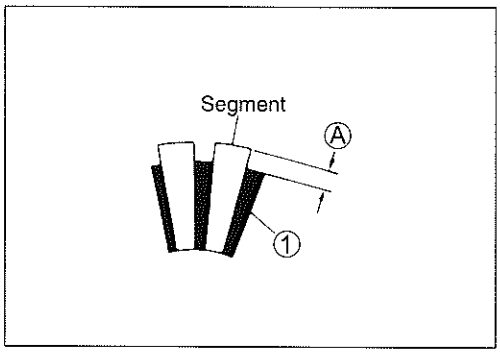

ARMATURE COIL INSPECTION

Check for continuity between each segment and between each segment and the armature shaft using the multi circuit tester.

If there is no continuity between the segments or there is continuity between the segments and shaft, replace the armature with a new one.

TOOL 09900-25008: Multi circuit tester set

Tester knob indication: Continuity test (•)))

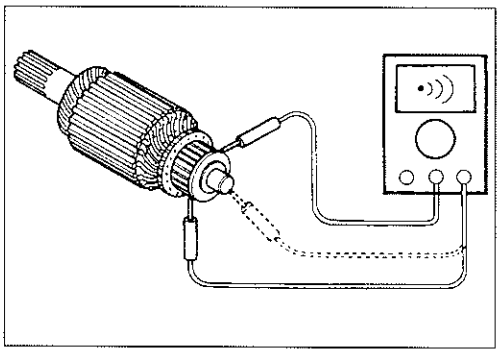

OIL SEAL INSPECTION

Check the oil seal lip for damage or leakage.

If any damage is found, replace the housing end.

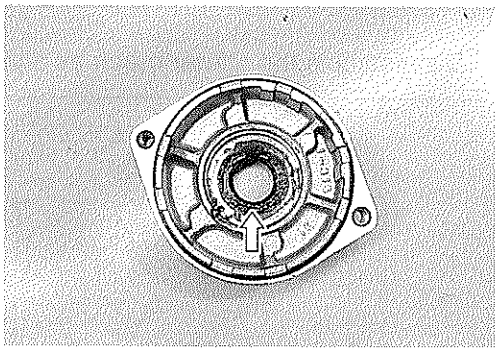

STARTER MOTOR REASSEMBLY

Reassemble the starter motor in the reverse order of disassembly. Pay attention to the following points:

- Apply SUSUKI SUPER GREASE "A" to the lip of the oil seal.

99000-25030: SUZUKI SUPER GREASE "A" (USA)
99000-25010: SUZUKI SUPER GREASE "A" (Others)

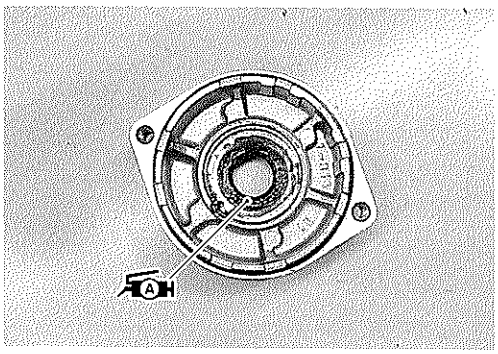

- Apply a small quantity of SUZUKI MOLY PASTE to the armature shaft.

99000-25140: SUZUKI MOLY PASTE

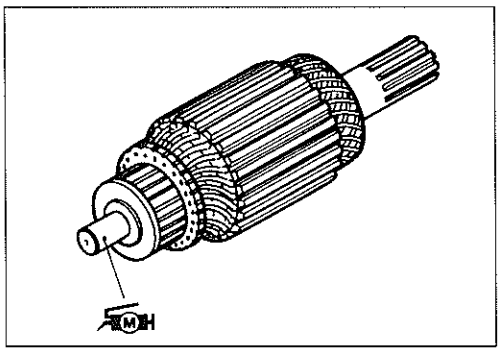

- Apply a small quantity of THREAD LOCK "1342" to the starter motor housing bolts.

99000-32050: THREAD LOCK "1342"

- Apply SUZUKI SUPER GREASE "A" to the O-ring.

99000-25030: SUZUKI SUPER GREASE "A" (USA)
99000-25010: SUZUKI SUPER GREASE "A" (Others)

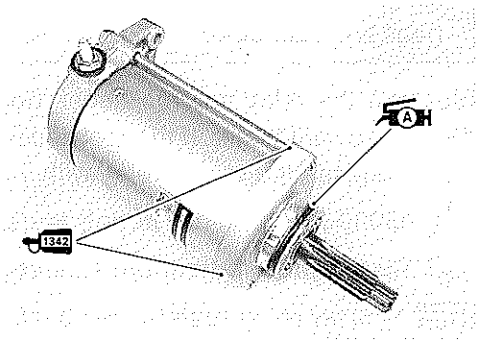

- Tighten the starter motor lead wire nut to the specified torque.

Starter motor lend wire nut: 5 N·m (0.5 Kgf-m, 3.7 lb-ft)

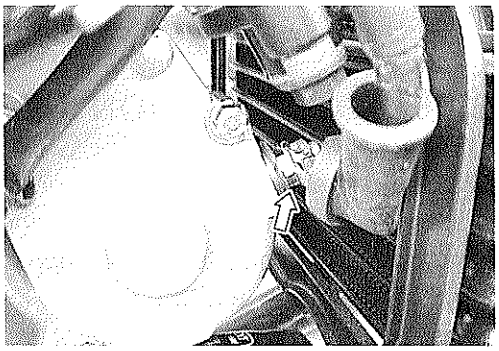

STARTER RELAY INSPECTION

- Remove the seat. (☞6-4)
- Disconnect the battery ⊖ lead wire from the battery.
- Remove the starter relay cover ①.
- Disconnect the starter relay coupler ②.

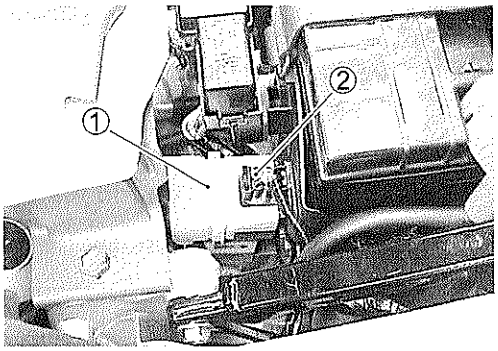

- Disconnect the starter motor lead wire ③, battery lead wire ④.
- Remove the starter relay ⑤.

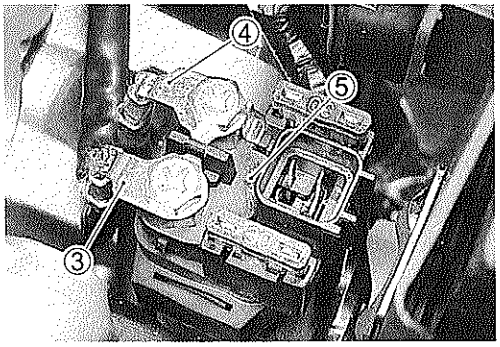

Apply 12 V to Ⓐ and Ⓑ terminals and check for continuity between the positive and negative terminals using the multi circuit tester. If the starter relay clicks and continuity is found, the relay is ok.

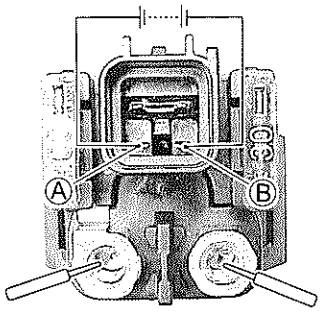

09900-25008: Multi circuit tester set

Tester knob indication: Continuity test (•)))

CAUTION

> **Do not apply a battery voltage to the starter relay for more than five seconds, since the relay coil may overheat and damaged.**

Measure the relay coil resistance between the terminals using the multi circuit tester. If the resistance is not within the specified value, replace the starter relay with a new one.

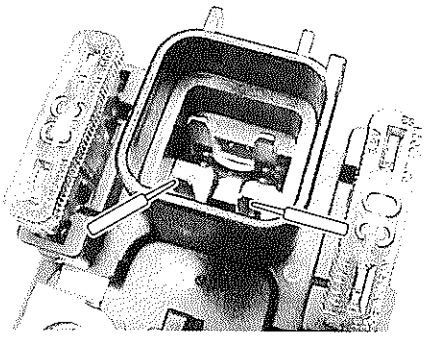

09900-25008: Multi circuit tester set

Tester knob indication: Resistance (Ω)

Starter relay resistance: 3 – 6 Ω

SIDE-STAND/IGNITION INTERLOCK SYSTEM PARTS INSPECTION

Check the interlock system for proper operation. If the interlock system does not operate properly, check each component for damage or abnormalities. If any abnormality is found, replace the component with a new one.

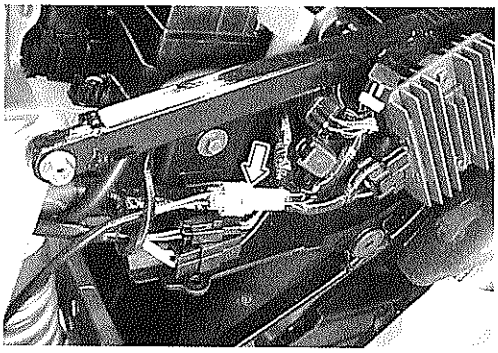

SIDE-STAND SWITCH

- Remove the seat. (☞6-4)
- Remove the left frame cover. (☞6-5)
- Disconnect the side-stand switch coupler and measure the voltage between Green and Black/White lead wires.

09900-25008: Multi circuit tester set

Tester knob indication: Diode test (⊣◀)

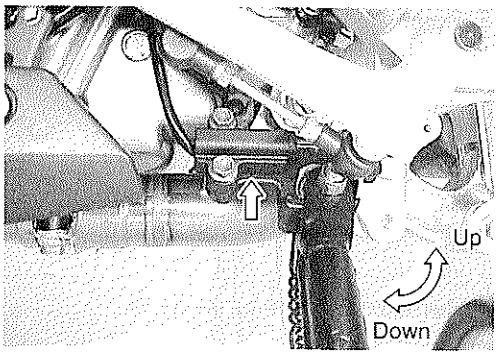

	Green (⊕ Probe)	Black/White (⊖ Probe)
ON (Side-stand up)	0.4 – 0.6 V	
OFF (Side-stand down)	More than 1.4 V (Tester's battery voltage)	

NOTE:

If the tester reads under 1.4 V when the tester probes are not connected, replace its battery.

GEAR POSITION SWITCH

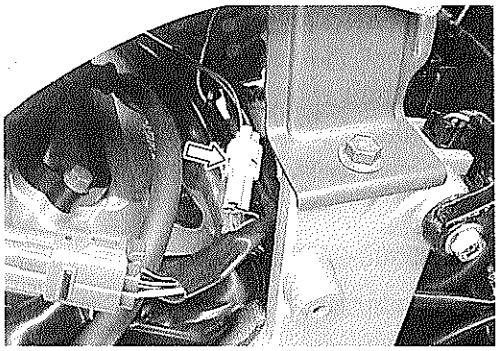

- Remove the seat. (☞6-4)
- Remove the fuel tank front cover.
- Remove the fuel tank side covers.
- Lift and support the fuel tank with the fuel tank prop stay. (☞4-51)
- Disconnect the gear position swtich coupler and check the continuity between Blue and Black with the transmission in "NEUTRAL".

	Blue	Black
ON (Neutral)	○————	————○
OFF (Expect neutral)		

CAUTION

When disconnecting and connecting the gear position switch coupler, make sure to turn OFF the ignition switch, or electronic parts may get damaged.

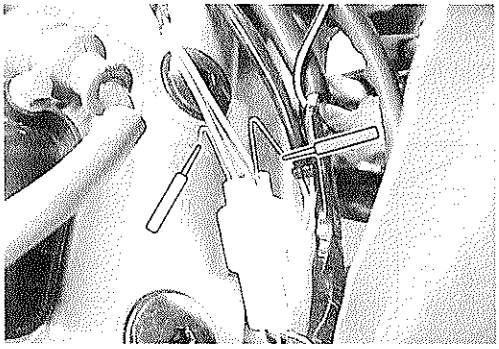

- Connect the gear position switch coupler to the wiring harness.
- Turn the ignition switch to "ON" position and side-stand to upright position.

Measure the voltage between Pink and Black lead wires using the multi circuit tester when shifting the gearshift lever from low to top.

TOOL 09900-25008: Multi circuit tester set

Tester knob indication: Voltage (⎓)

DATA Gear position switch voltage: More than 0.6V
(* Low to top gear position / * Except neutral position) (Pink – Black)

NOTE:

** When connecting the multi circuit tester, use a fine copper wire (O.D is below 0.5 mm) to the back side of the lead wire coupler and connect the probes of tester to them.*

** Use a fine copper wire, the outer diameter being below 0.5 mm, to prevent the rubber of the water proof coupler from damage.*

TURN SIGNAL/SIDE-STAND RELAY

The turn signal/side-stand relay is composed of the turn signal relay, and the side-stand relay and diode.

- Remove the seat. (☞6-4)
- Remove the turn signal/side-stand relay.

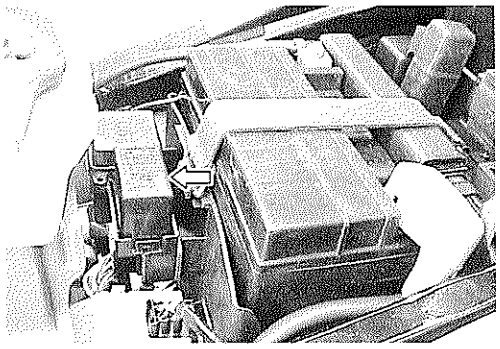

SIDE-STAND RELAY INSPECTION

First check the insulation between Ⓓ and Ⓔ terminals with the tester. Then apply 12 V to terminals Ⓓ and Ⓒ (⊕ to Ⓓ and ⊖ to Ⓒ) and check the continuity between Ⓓ and Ⓔ. If there is no continuity, replace the turn signal/side-stand relay with a new one.

TOOL 09900-25008: Multi circuit tester set

Tester knob indication: Continuity test (•)))

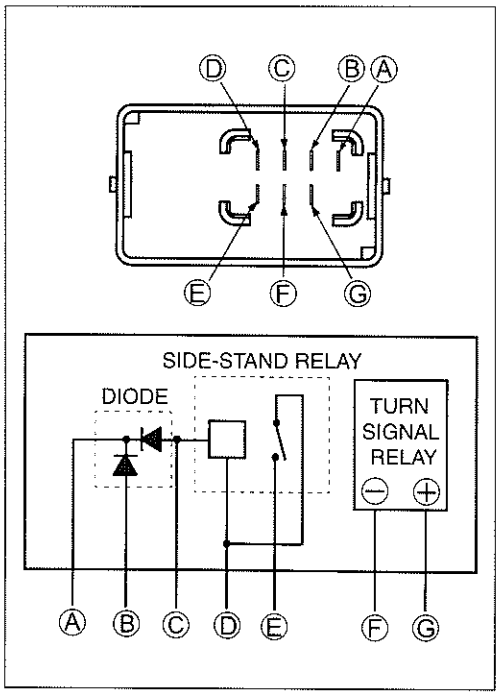

DIODE INSPECTION

Measure the voltage between the terminals using the multi circuit tester. Refer to the following table.

Unit: V

⊖ Probe of tester to:	⊕ Probe of tester to: Ⓒ, Ⓑ	Ⓐ
Ⓒ, Ⓑ		More than 1.4 V (Tester's battery voltage)
Ⓐ	0.4 – 0.6	

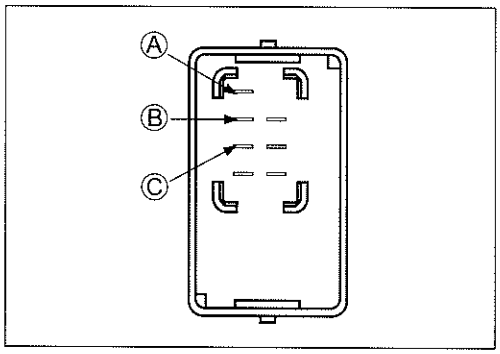

TOOL 09900-25008: Multi circuit tester set

Tester knob indication: Diode test (→|◀)

NOTE:

If the multi circuit tester reads under 1.4 V when the tester probes are not connected, replace its battery.

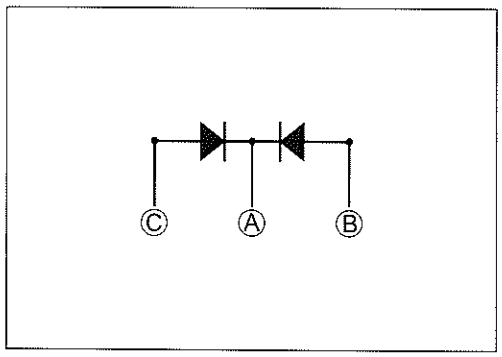

IGNITION SYSTEM

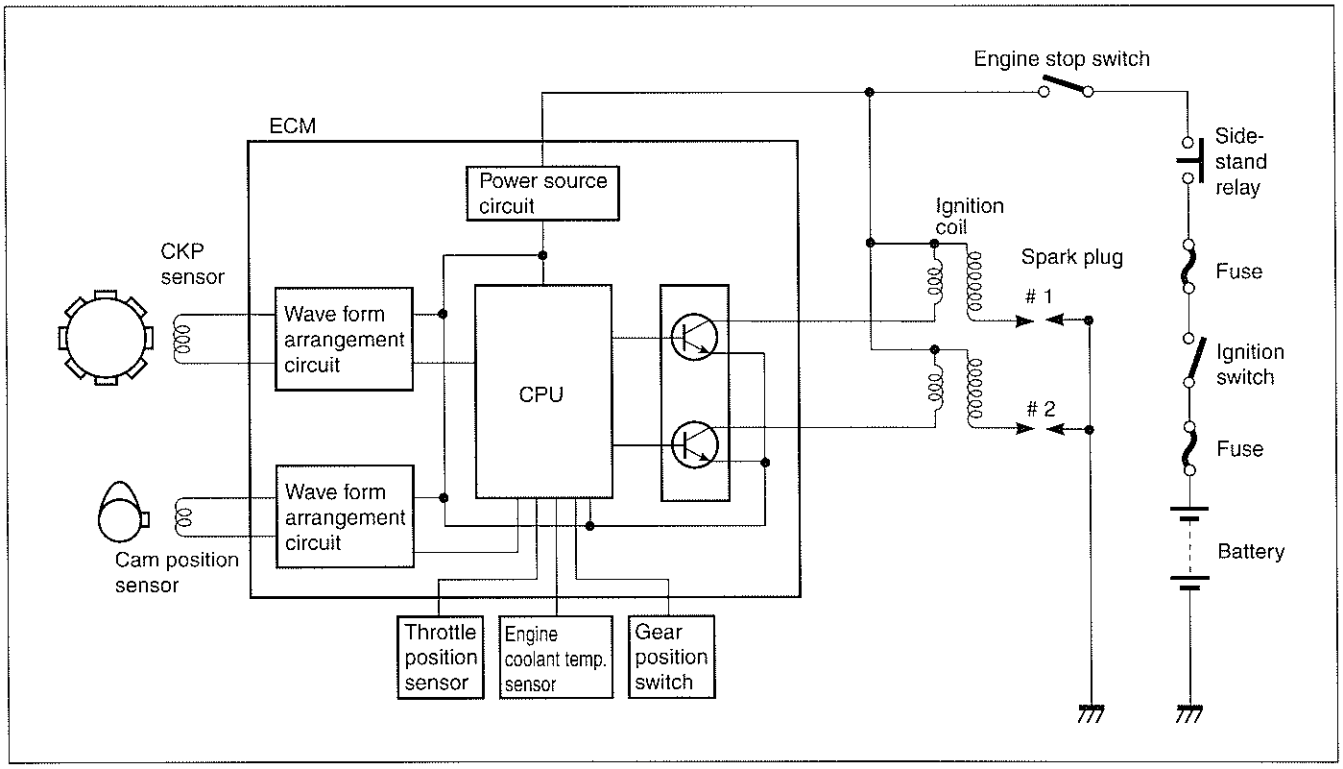

NOTE:
The fuel cut-off circuit is incorporated in this ECM in order to prevent over-running of engine. When engine speed reaches 9 500 r/min, this circuit cuts off fuel at the fuel injector. But under no load, the clutch lever is pulled or the gear position is neutral, this circuit cuts off fuel when engine speed reaches 9 000 r/min.

CAUTION

Under no load, the engine can run over 9 000 r/min, even if the fuel cut-off circuit is effective, and it may cause engine damage. Do not run the engine without load over 9 000 r/min at any-time.

TROUBLESHOOTING

No spark or poor spark

↓

Check the ignition system couplers for poor connections.

Loose → • Poor connection of couplers

Correct

↓

Continued on next page

* Check that the transmission is in neutral and the engine stop switch is in the "RUN" position. Pull the clutch lever. Check that the fuse is not blown and the battery is fully-charged before diagnosing.

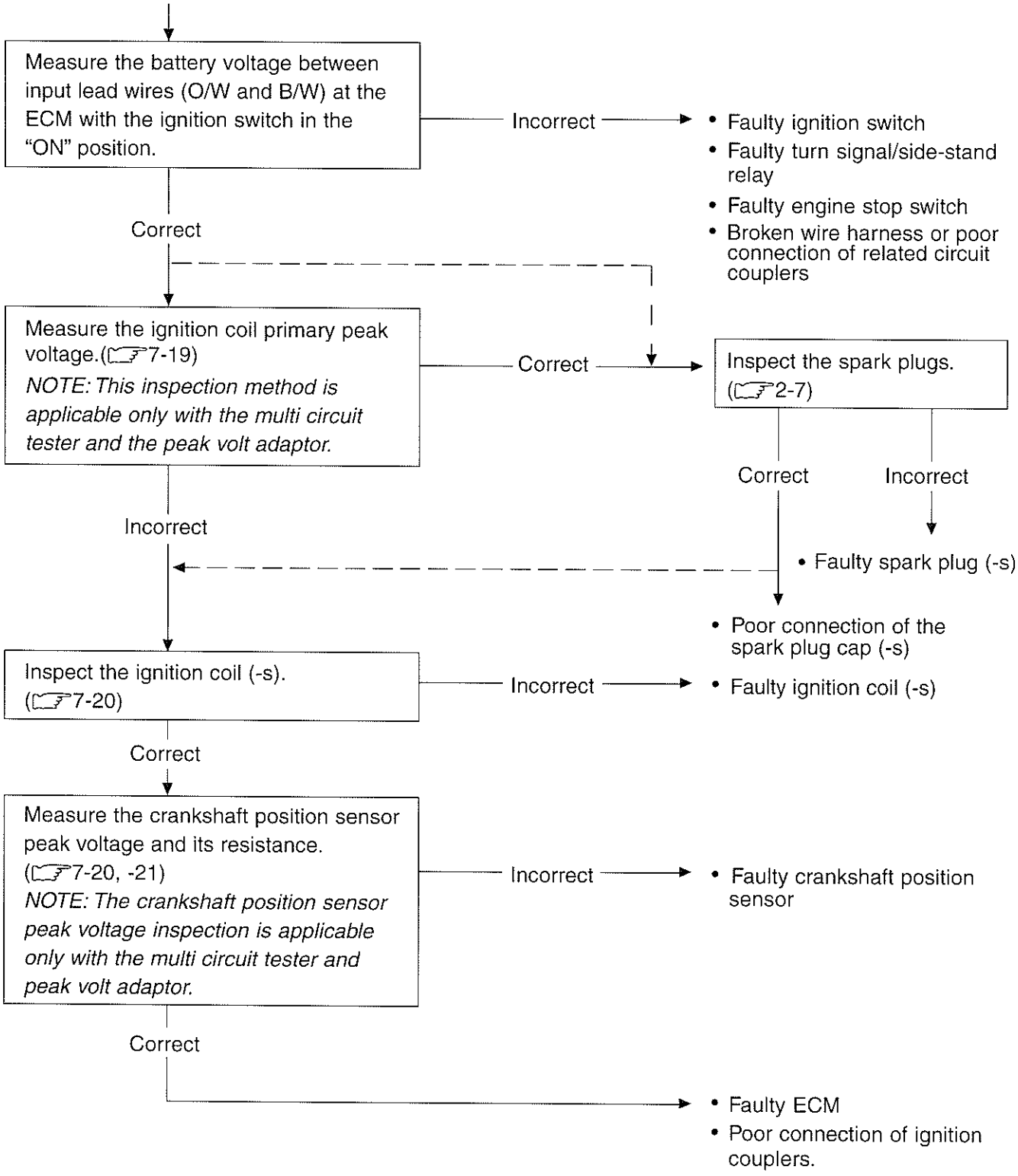
Measure the battery voltage between input lead wires (O/W and B/W) at the ECM with the ignition switch in the "ON" position.
Incorrect
• Faulty ignition switch
• Faulty turn signal/side-stand relay
• Faulty engine stop switch
• Broken wire harness or poor connection of related circuit couplers
Correct
Measure the ignition coil primary peak voltage.(☞7-19)
NOTE: This inspection method is applicable only with the multi circuit tester and the peak volt adaptor.
Correct
Inspect the spark plugs. (☞2-7)
Correct
Incorrect
• Faulty spark plug (-s)
• Poor connection of the spark plug cap (-s)
Incorrect
Inspect the ignition coil (-s). (☞7-20)
Incorrect
• Faulty ignition coil (-s)
Correct
Measure the crankshaft position sensor peak voltage and its resistance. (☞7-20, -21)
NOTE: The crankshaft position sensor peak voltage inspection is applicable only with the multi circuit tester and peak volt adaptor.
Incorrect
• Faulty crankshaft position sensor
Correct
• Faulty ECM
• Poor connection of ignition couplers.

INSPECTION

IGNITION COIL PRIMARY PEAK VOLTAGE

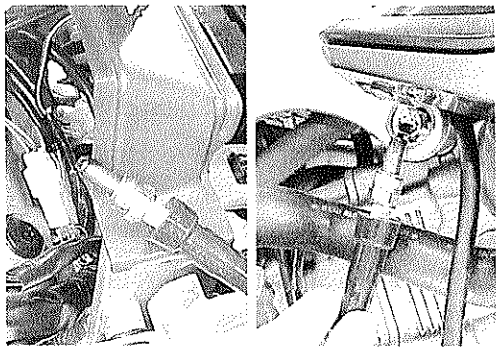

- Lift and support the fuel tank. (☞4-51)
- Disconnect the two spark plug caps.
- Connect new two spark plugs to each spark plug cap and ground them.

NOTE:

Make sure that all couplers and spark plugs are connected properly and the battery used is in fully-charged condition.

CAUTION

Avoid grounding the spark plugs and suppling the electrical shock to the cylinder head cover (magnesium parts) in order to prevent the magnesium material from damage.

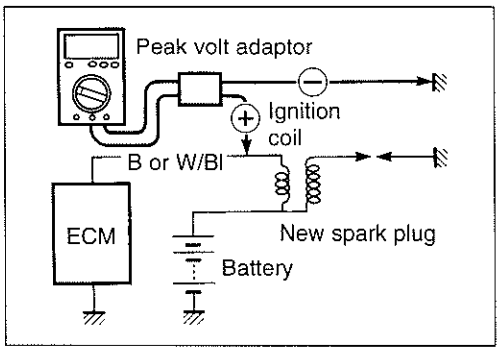

Measure the No.1 and No.2 ignition coils primary peak voltage in the following procedure.

- Connect the multi circuit tester with peak voltage adaptor as follows.

No.1 ignition coil:	⊕ Probe: Black terminal
	⊖ Probe: Ground
No.2 ignition coil:	⊕ Probe: White/Blue terminal
	⊖ Probe: Ground

NOTE:

Do not disconnect the ignition coil primary wire coupler.

TOOL 09900-25008: Multi circuit tester set

CAUTION

Before using the multi circuit tester and peak volt adaptor, be sure to refer to the appropriate instruction manual.

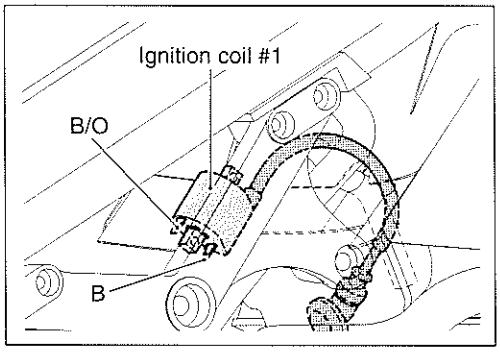

- Shift the transmission into the neutral and then turn the ignition switch to the "ON" position.
- Pull the clutch lever.
- Press the starter button and allow the engine to crank for a few seconds, and then measure the ignition coil primary peak voltage.
- Repeat the above procedure a few times and measure the highest ignition coil primary peak voltage.

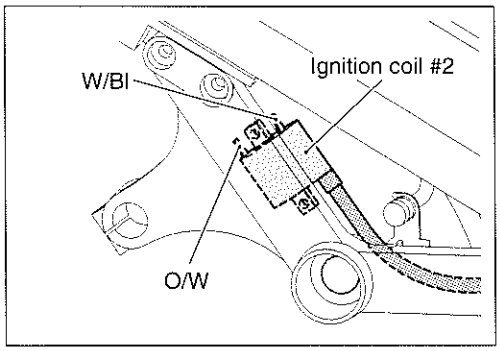

Tester knob indication: Voltage (⎓)

DATA Ignition coil primary peak voltage: More than 150 V

⚠ WARNING

While testing, do not touch the tester probes and spark plugs to prevent receiving an electric shock.

- If the peak voltage is lower than the specified values, inspect the ignition coil. (☞7-20)

IGNITION COIL RESISTANCE

- Remove the fuel tank. (☞4-52)
- Disconnect the spark plug caps and coupler.

Measure the ignition coil resistance in both the primary and secondary windings. If the resistance is not within the standard range, replace the ignition coil with a new one.

TOOL 09900-25008: Multi circuit tester set

Tester knob indication: Resistance (Ω)

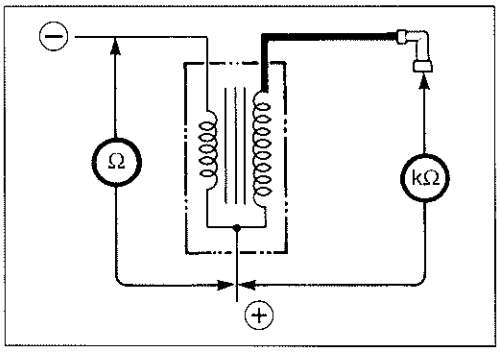

DATA Ignition coil resistance

Primary : 2 – 5 Ω (⊕ terminal – ⊖ terminal)
Secondary : 24 – 37 kΩ (Plug cap – ⊕ terminal)

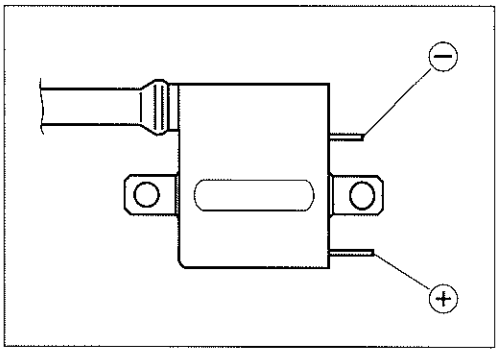

CKP SENSOR PEAK VOLTAGE

- Remove the seat. (☞6-4)
- Disconnect the ECM coupler.

NOTE:
Make sure that all of the couplers are connected properly and the battery used is in fully-charged condition.

Measure the CKP sensor peak voltage in the following procedures.

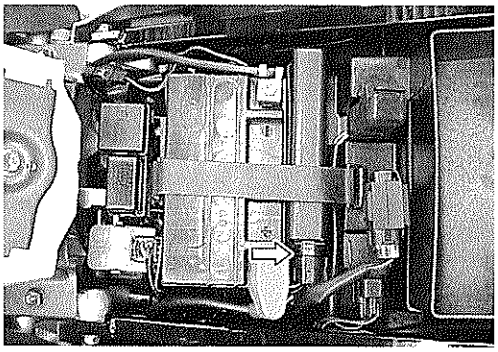

- Connect the multi circuit tester with peak volt adaptor as follows.
  ⊕ Probe: Yellow/Blue lead wire
  ⊖ Probe: White lead wire

TOOL 09900-25008: Multi circuit tester set

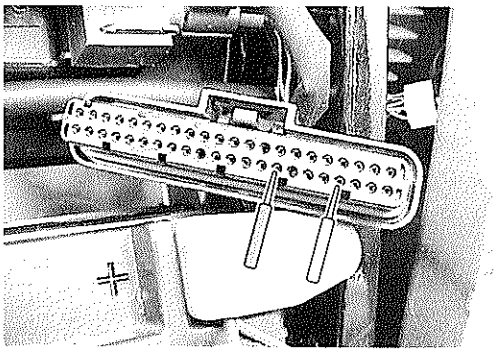

CAUTION

Before using the multi circuit tester and peak volt adaptor, be sure to refer to the appropriate instruction manual.

- Shift the transmission into the neutral, and then turn the ignition switch to the "ON" position.
- Pull the clutch lever.
- Press the starter button and allow the engine to crank for a few seconds, and then measure the CKP sensor peak voltage.
- Repeat the above procedure a few times and measure the highest peak voltage.

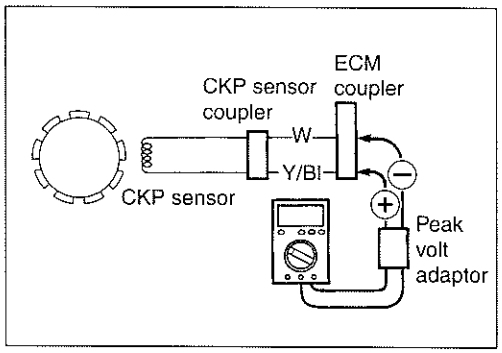

Tester knob indication: Voltage (⎓)

CKP sensor peak voltage: More than 3.7 V

If the peak voltage is lower than the specified values, check the peak voltage at the CKP sensor lead wire coupler.

- Remove the left frame cover. (☞6-5)
- Disconnect the CKP sensor lead wire coupler and connect the multi circuit tester with the peak volt adaptor.
  ⊕ Probe: Green lead wire
  ⊖ Probe: Blue lead wire
- Measure the CKP sensor peak voltage at the CKP sensor lead wire coupler in the same manner as on the ECM coupler.

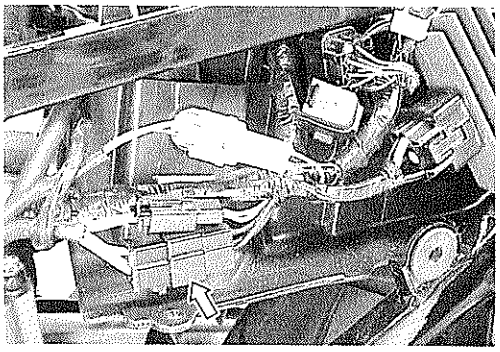

Tester knob indication: Voltage (⎓)

CKP sensor peak voltage: More than 3.7 V

If the peak voltage on the CKP sensor lead wire coupler is ok but on the ECM coupler is out of specification, the wire harness must be replaced. If both peak voltages are out of specification, the CKP sensor must be replaced and re-checked.

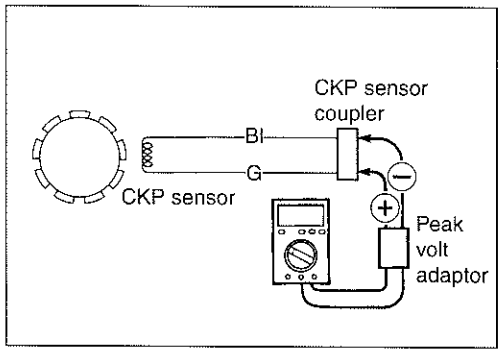

CKP SENSOR RESISTANCE

Measure the resistance between the lead wires and ground. If the resistance is not specified value, the CKP sensor must be replaced.

09900-25008: Multi circuit tester set

Tester knob indication: Resistance (Ω)

CKP sensor resistance: 130 – 240 Ω (Green – Blue)
∞ Ω (Green – Ground)

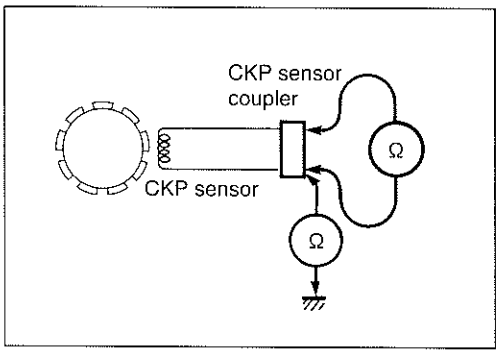

COMBINATION METER

REMOVAL AND DISASSEMBLY

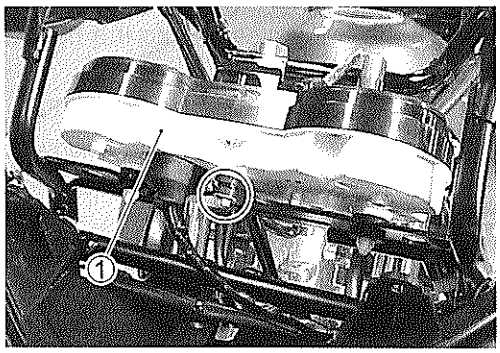

- Remove the combination meter panel. (☞6-6).
- Remove the combination meter ①.

CAUTION

When disconnecting and connecting the combination meter coupler, make sure to turn OFF the ignition switch, or electronic parts may get damaged.

- Disassemble the combination meter as follows.

CAUTION

Do not attempt to disassemble the combination meter unit.

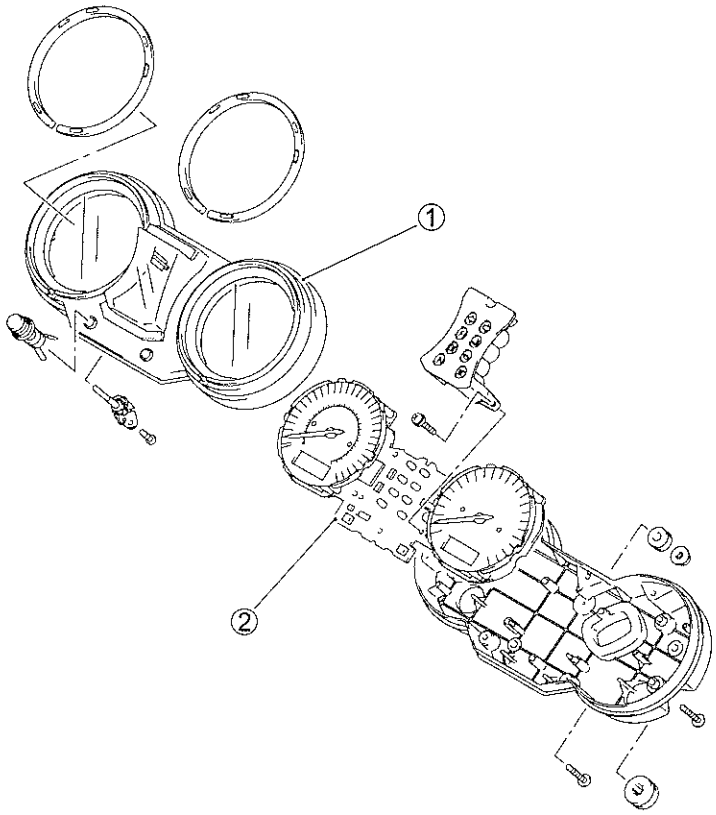

① Combination meter cover
② Combination meter unit

INSPECTION

LED (LIGHT EMITTING DIODE)

Check that the LED lights immediately after turning the ignition switch on.

If the LED fails in operation, replace the combination meter unit with a new one after checking its wire harness/coupler.

STEPPING MOTOR

Check that the pointer calibrates itself immediately after turning the ignition switch on and stops at starting point.

If abnormal condition is found, replace the combination meter unit with a new one after checking its wire harness/coupler.

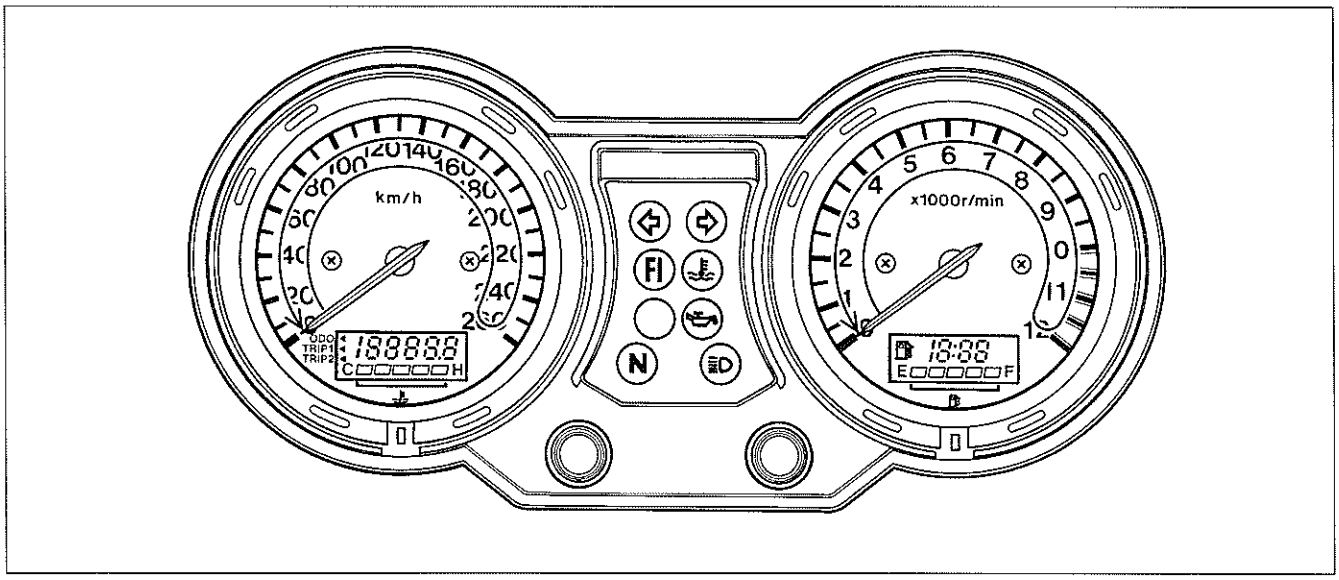

NOTE:

The pointer may not return to the proper position even turning the ignition switch on under low temperature condition. In that case, you can reset the pointer to the proper position by following the instruction below:

1) With the set switch Ⓐ pressed, turn the ignition switch on.

2) Keep pushing the set switch Ⓐ for 3 to 5 seconds.

3) Press the set switch Ⓐ twice (within 1 second). → Reset

** Complete the operation within 10 seconds after the ignition switch has been turned on.*

Time	Ignition switch	Set switch Ⓐ
	OFF	PUSH
0	ON	↓
• •	↓	↓
3 sec • 5 sec	↓	↓ Release
• • • •	↓	Push Push → Reset
10 sec		

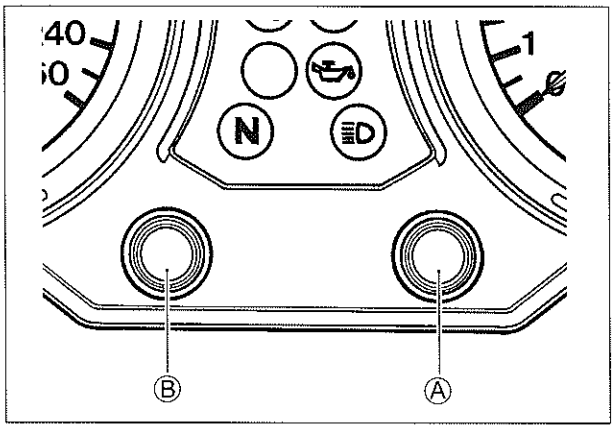

Ⓐ SET SWITCH Ⓑ MODE SWITCH

Pointer will return to the starting point right after the completion of the operation. In the case of the pointer not returning to the proper position after doing above, replace the combination meter unit.

ODOMETER

The odometer indicates "-----" when the odometer is faulty.
Replace the combination meter unit with a new one.

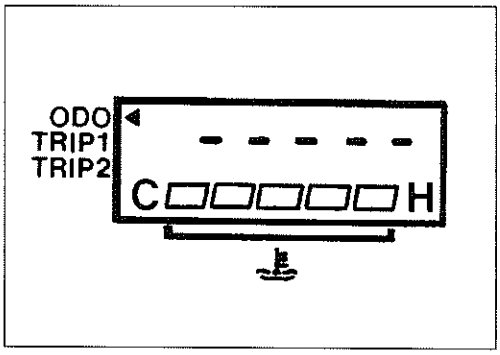

TRIP METER

The trip meter indicates "-----" when the trip meter is faulty.
In case the odometer works normaly, perform the trip meter reset. If the trip meter isn't restored after above reset, replace the combination meter unit with a new one.

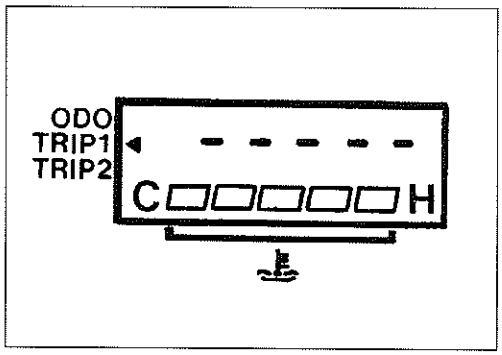

TRIP METER RESET PROCEDURE

1. Turn the ignition "ON".
2. Select the trip meter by pushing the mode switch Ⓐ.
3. Push the set switch Ⓑ for 2 seconds.

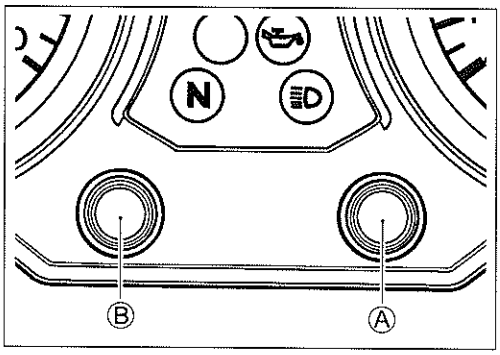

ENGINE COOLANT TEMPERATURE METER AND INDICATOR

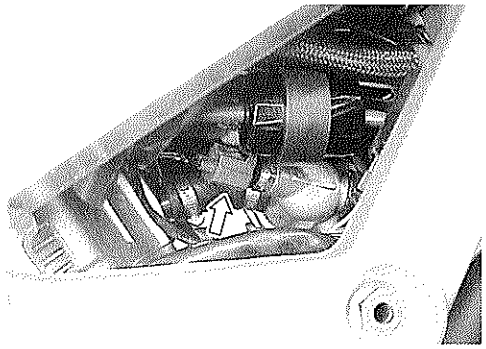

- Disconnect the engine coolant temperature sensor coupler.

CAUTION

When connecting and disconnecting the engine coolant temp. sensor lead wire coupler, make sure to turn OFF the ignition switch, or electronic parts may get damaged.

- Connect the variable resistor Ⓐ between the terminals.
- Turn the ignition switch "ON".
- Check the display of engine coolant temperature meter as shown below. If any abnormality is found, replace the combination meter with a new one.

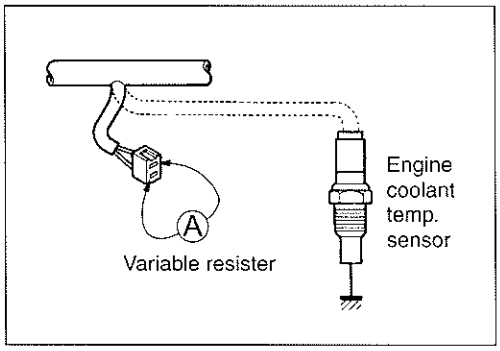

Water temperateure	Under 39 °C	40 – 59 °C	60 – 99 °C	100 – 111 °C
Resistance	More than 1.148 kΩ	1.148 – 0.587 kΩ	0.587 – 0.188 kΩ	0.188 – 0.140 kΩ
Engine coolant temperature meter	C □□□□□ H	C ■□□□□ H	C ■■□□□ H	C ■■■□□ H

Water temperateure	112 – 119 °C	Over 120 °C	Over 122 °C
Resistance	0.140 – 0.116 kΩ	Less than 0.116 kΩ	Less than 0.111 kΩ
Engine coolant temperature meter	C ■■■■□ H	C ■■■■■ H	ON C ■■■■■ H

FUEL LEVEL GAUGE INSPECTION

- Remove the fuel tank. (☞4-52)
- Remove the fuel pump. (☞4-55)

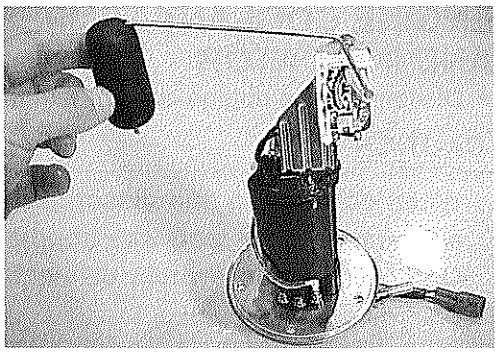

Measure the resistance at each fuel level gauge float position. If the resistance is incorrect, replace the fuel level gauge with a new one.

Float position	Resistance
Ⓐ "F" (Full)	Approx. 4 Ω
Ⓑ "E" (Empty)	Approx. 182 Ω

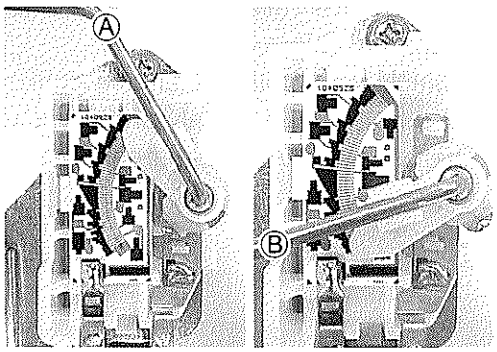

TOOL 09900-25008: Multi circuit tester set

Tester knob indication: Resistance (Ω)

- Remount the fuel pump. (☞4-58)

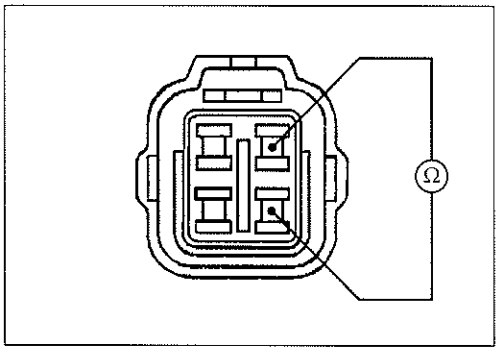

FUEL LEVEL METER

- Lift and support the fuel tank with the fuel tank prop stay. (☞4-51)
- Connect each resistor between the Yellow/Black and Black/White lead wires at the wire harness.
- Turn the ignition switch "ON" position and wait for approx. 13 seconds.

Check the display of fuel meter as shown below, If any abnormality is found, replace the combination meter with a new one.

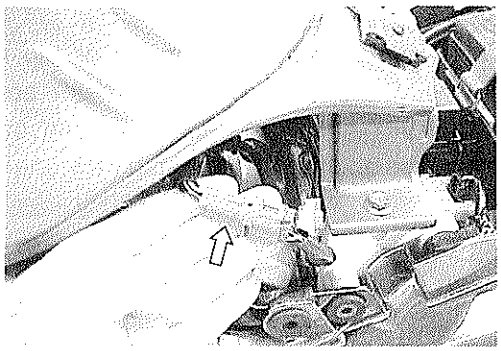

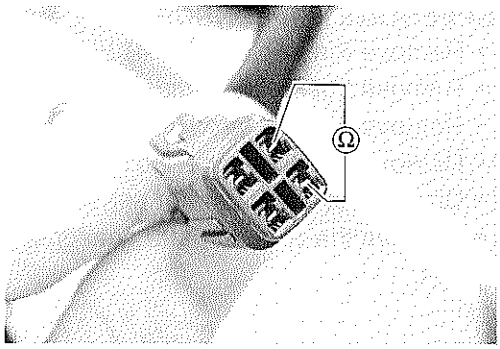

Resistance	More than 167 Ω	115 – 167 Ω	73 – 115 Ω	45 – 73 Ω	22 – 45 Ω	Less than 21 Ω
Fuel level meter	Flicker E Flicker F	Flicker E F	E F	E F	E F	E F

OIL PRESSURE INDICATOR

NOTE:

Before inspecting the oil pressure switch, check the engine oil level. (☞2-14)

- Remove the engine under cover.
- Disconnect the oil pressure switch lead wire from the oil pressure switch.
- Turn the ignition switch "ON" position.

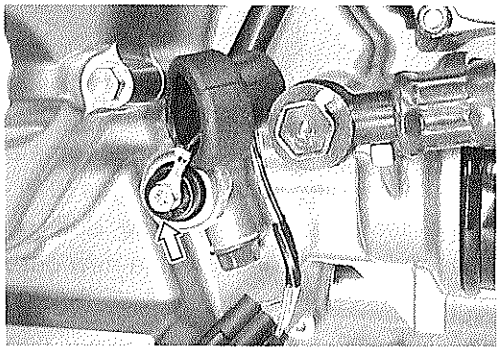

Check if the oil pressure indicator will light, when grounding the lead wire.

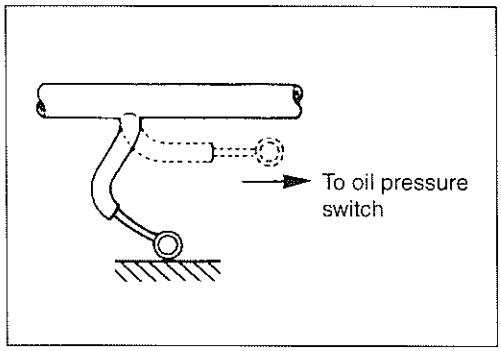

SPEEDOMETER

If the speedometer, odometer or trip meter does not function properly, inspect the speedometer sensor and connection of coupler ①. If the speedometer sensor and connection are all right, replace the meter with a new one.

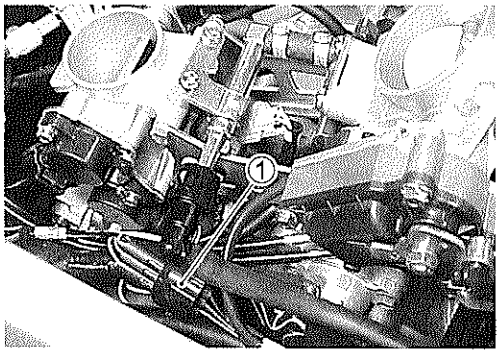

SPEEDOMETER SENSOR

- Remove the seat. (☞6-4)
- Remove the fuel tank side covers. (☞6-5)
- Remove the fuel tank. (☞4-52)
- Remove the air cleaner box.
- Disconnect speedometer sensor coupler.
- Remove the speedometer sensor ② by removing its mounting bolt.

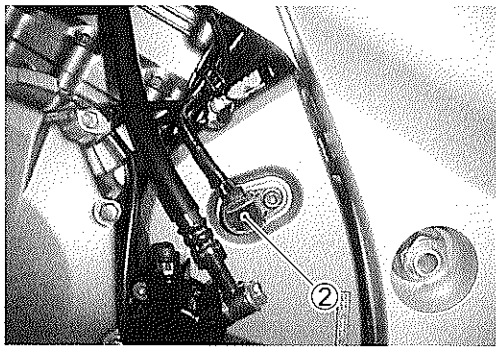

- Connect 12 V battery, 10 kΩ resistor and the multi circuit tester as shown in the right illustration.

B/R: Black with Red tracer
B/W: Black with White tracer
B: Black

TOOL 09900-25008: Multi circuit tester set

Tester knob indication: Voltage (⎓)

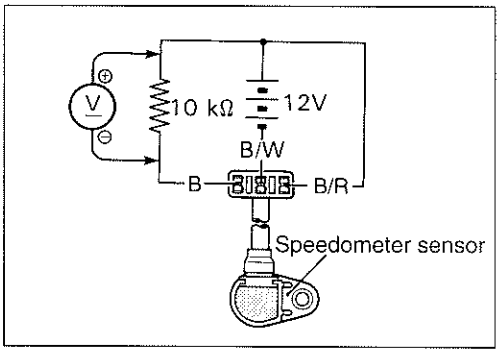

- Under above condition, if a suitable screwdriver touching the pick-up surface of the speedometer sensor is moved, the tester reading voltage changes (0 V → 12 V or 12 V → 0 V). If the tester reading voltage does not change, replace the speedometer sensor with a new one.

NOTE:
The highest voltage reading in this test will be the same as that of battery voltage (12 V).

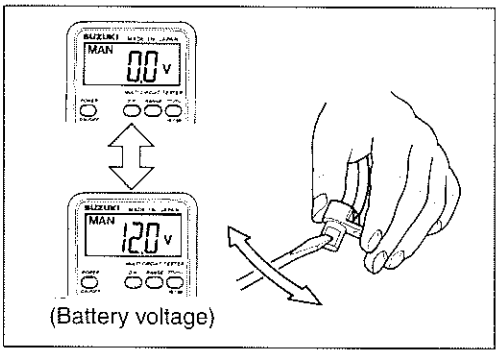

LAMPS

HEADLIGHT, BRAKE LIGHT/TAILLIGHT AND TURN SIGNAL LIGHT

HEADLIGHT
12 V 60/50 W
12 V 60/50 W + 5 W (ONLY E02, E19)

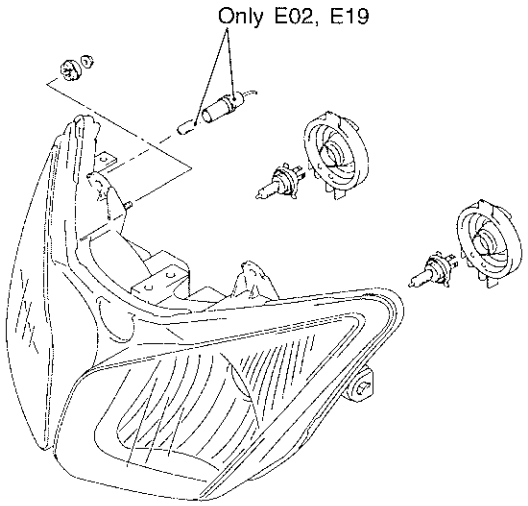

BRAKE LIGHT/TAIL LIGHT
12 V 21/5 W

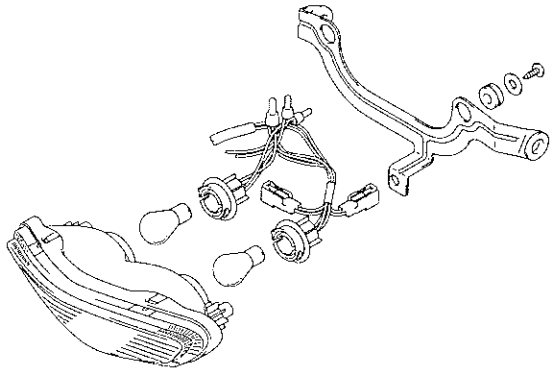

TURN SIGNAL LIGHT
12 V 10 W

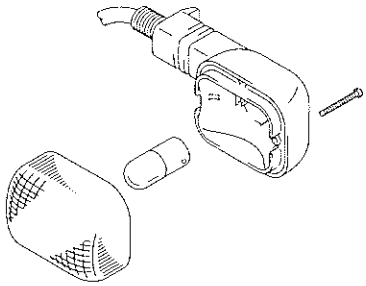

HEADLIGHT BEAM ADJUSTMENT

- Adjust the headlight beam, both vertical and horizontal.
  Ⓐ: Vertical adjuster
  Ⓑ: Horizontal adjuster

NOTE:
To adjust the headlight beam, adjust the beam horizontally first, then adjust the vertically.

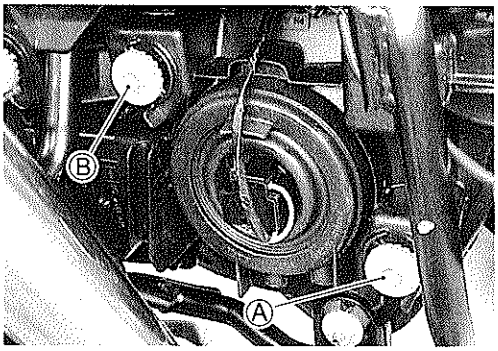

RELAYS

TURN SIGNAL/SIDE-STAND RELAY

The turn signal/side-stand relay is composed of the turn signal relay, side-stand relay and diode.

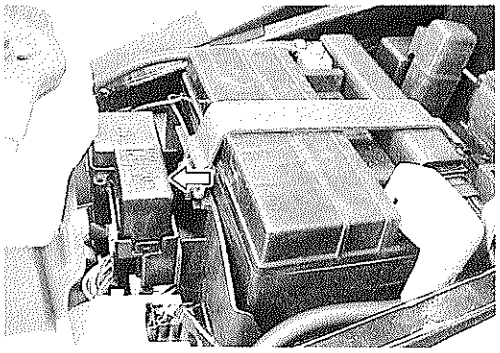

INSPECTION

Before removing the turn signal/side-stand relay, check the operation of the turn signal light.

If the turn signal light does not illuminate, inspect the bulb, turn signal switch and circuit connection.

If the bulb, turn signal switch and circuit connection are OK, the turn signal relay may be faulty; therefore, replace the turn signal/side-stand relay with a new one.

NOTE:

* *Make sure that the battery is fully charged.*
* *Refer to the page 7-16 for the side-stand relay and diode inspection.*

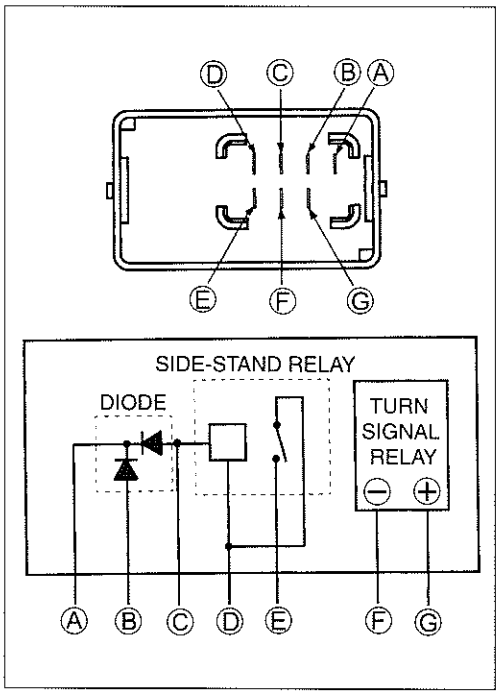

STARTER RELAY

☞7-13

FUEL PUMP RELAY

☞4-55

SWITCHES

IGNITION SWITCH REMOVAL

- Remove the fuel tank. (☞4-52)
- Remove the air cleaner box. (☞4-60)
- Disconnect the ignition switch coupler.

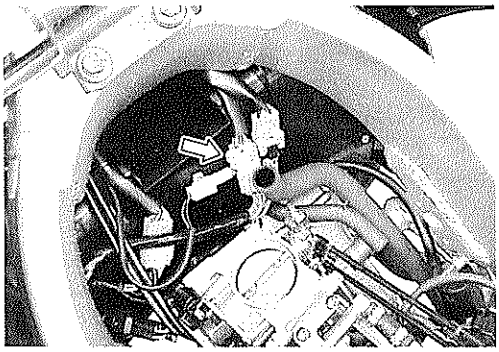

- Remove the ignition switch mounting bolts using the special tools.

TOOL 09930-11920: Torx bit JT40H
09930-11940: Bit holder

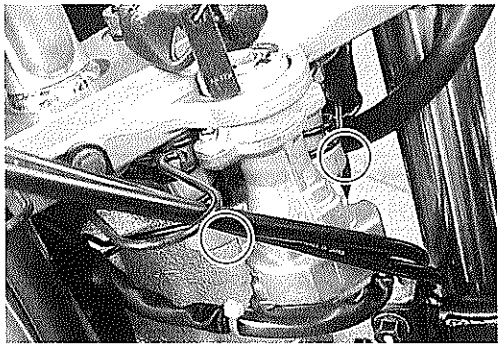

CAUTION

When reusing the ignition switch bolt, clean thread and apply the THREAD LOCK SUPER "1322" or THREAD LOCK "1342".

1342 99000-32050: THREAD LOCK "1342" (USA)

1322 99000-32110: THREAD LOCK SUPER "1322" (Others)

Inspect each switch for continuity with a tester. If any abnormality is found, replace the respective switch assemblies with new ones.

IGNITION SWITCH (For E24)

Position \ Color	R	O	O/Y	B/W
ON	○	○	○	○
OFF				
LOCK				

(For Others)

Position \ Color	R	O	O/Y	B/W	Gr	Br
ON	○	○	○	○	○	○
OFF						
LOCK						
P	○					○

LIGHTING SWITCH (Except for E03, E24, E28, E33)

Position \ Color	O/Bl	Gr	O/R	Y/W
OFF (•)				
S	○	○		
ON	○	○	○	○

DIMMER SWITCH

Position \ Color	W	Y	Y/W
HI		○	○
LO	○		○

TURN SIGNAL SWITCH

Position \ Color	Lg	Lbl	B
L		○	○
PUSH			
R	○	○	

PASSING LIGHT SWITCH (Except for E03, E28, E33)

Position \ Color	O/R	Y
•		
PUSH	○	○

ENGINE STOP SWICH

Position \ Color	O/B	O/W
OFF		
RUN	○	○

STARTER BUTTON

Position \ Color	O/W	Y/G
•		
PUSH	○	○

HORN BUTTON

Position \ Color	B/Bl	B/W
•		
PUSH	○	○

HAZARD (Except for E03, E24, E28, E33)

Position \ Color	Lg	Lbl	B
ON	○	○	○
OFF			

FRONT BRAKE SWITCH

Position \ Color	B/R	B/Bl
OFF		
ON	○	○

REAR BRAKE SWITCH

Position \ Color	O/G	W/B
OFF		
ON	○	○

CLUTCH LEVER POSITION SWITCH

Position \ Color	B/Y	B/Y
OFF		
ON	○	○

OIL PRESSURE SWITCH (For E03, E24, E28, E33)

Position \ Color	G/Y	Ground
ON (engine is stopped)	○	○
OFF (engine is running)		

(For Others)

Position \ Color	B	Ground
ON (engine is stopped)	○	○
OFF (engine is running)		

NOTE:
Before inspecting the oil pressure switch, check the engine oil level.(☞2-14)

WIRE COLOR

B : Black
Br : Brown
Gr : Gray
Lbl : Light blue
Lg : Light green
O : Orange
R : Red
Y : Yellow
W : White
Bl : Blue
G : Green

B/Bl : Black with Blue tracer
B/W : Black with White tracer
B/Y : Black with Yellow tracer
B/R : Black with Red tracer
G/Y : Green with Yellow tracer
O/B : Orange with Black tracer
O/Bl : Orange with Blue tracer
O/G : Orange with Green tracer
O/R : Orange with Red tracer
O/W : Orange with White tracer
O/Y : Orange with Yellow tracer
W/B : White with Black tracer
Y/G : Yellow with Green tracer
Y/W : Yellow with White tracer

BATTERY

SPECIFICATIONS

Type designation	FTX14-BS
Capacity	12 V, 43.2 kC (12 Ah)/10 HR

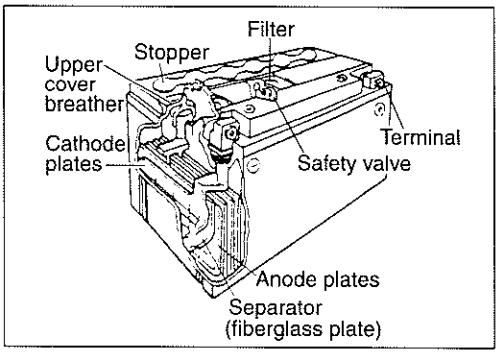

INITIAL CHARGING

Filling electrolyte

- Remove the aluminum tape ① sealing the battery electrolyte filler holes.

NOTE:
When filling electrolyte, the battery must be removed from the vehicle and must be put on the level ground.

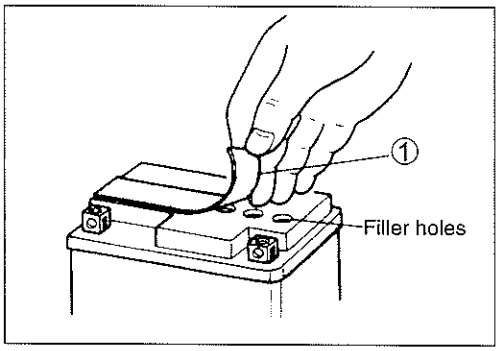

- Remove the caps ②.

NOTE:
** After filling the electrolyte completely, use the removed cap ② as the sealed caps of battery-filler holes.*
** Do not remove or pierce the sealed areas ③ of the electrolyte container.*

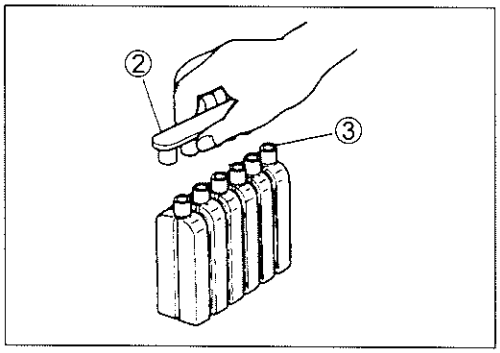

- Insert the nozzles of the electrolyte container into the battery's electrolyte filler holes, holding the container firmly so that it does not fall. Take precaution not to allow any of the fluid to spill.

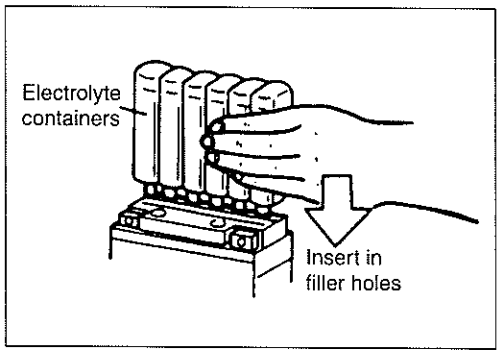

- Make sure air bubbles are coming up each electrolyte container, and leave in this position for about more than 20 minutes.

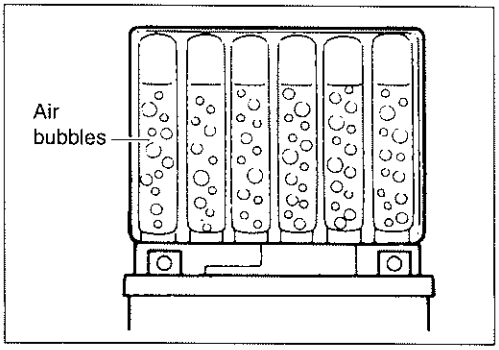

NOTE:
If no air bubbles are coming up from a filler port, tap the bottom of the electrolyte container two or three times.
Never remove the container from the battery.

- After confirming that the electrolyte has entered the battery completely, remove the electrolyte containers from the battery. Wait for about 20 minutes.

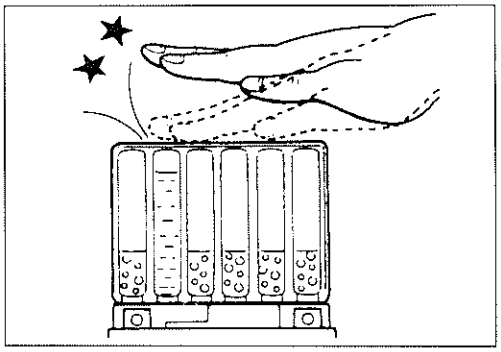

- Insert the caps into the filler holes, pressing in firmly so that the top of the caps do not protrude above the upper surface of the battery's top cover.

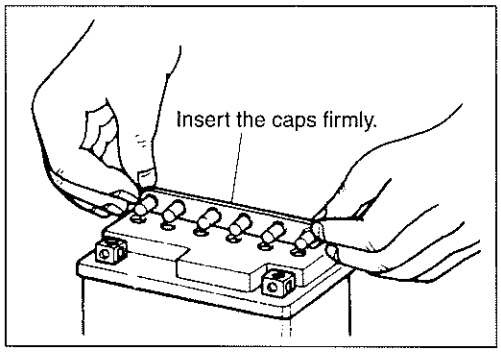

CAUTION

*** Never use anything except the specified battery.**
*** Once install the caps to the battery; do not remove the caps.**
*** Do not tap the caps with a hammer when installing them.**

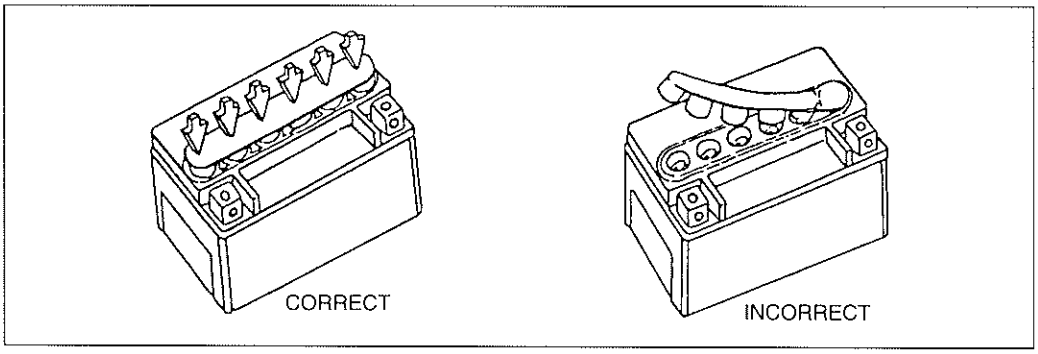

- Using multi circuit tester, measure the battery voltage. The tester should indicate more than 12.5 – 12.6 V (DC) as shown in the Fig. If the battery voltage is lower than the specification, charge the battery with a battery charger. (Refer to the recharging operation)

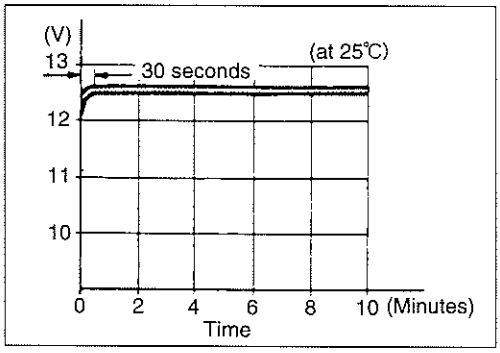

CAUTION

Do not remove the caps on the battery top while charging.

NOTE:
Initial charging for a new battery is recommended if two years have elapsed since the date of manufacture.

SERVICING

Visually inspect the surface of the battery container. If any signs of cracking or electrolyte leakage from the sides of the battery have occurred, replace the battery with a new one. If the battery terminals are found to be coated with rust or an acidic white powdery substance, then this can be cleaned away with sandpaper.

RECHARGING OPERATION

- Using the multi circuit tester, check the battery voltage. If the voltage reading is less than the 12.0 V (DC), recharge the battery with a battery charger.

CAUTION

> *** When recharging the battery, remove the battery from the motorcycle.**
> *** Do not remove the caps on the battery top while recharging.**

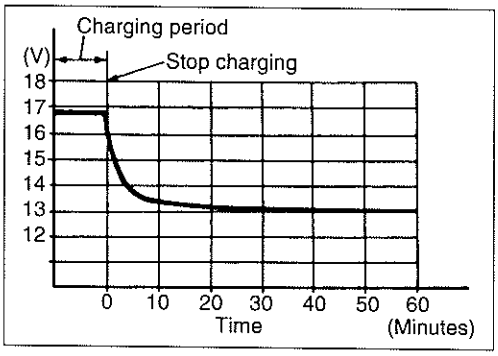

Recharging time: 1.4 A for 5 to 10 hours or 6 A for one hour

CAUTION

> **Be careful not to permit the charging current to exceed 6 A at any time.**

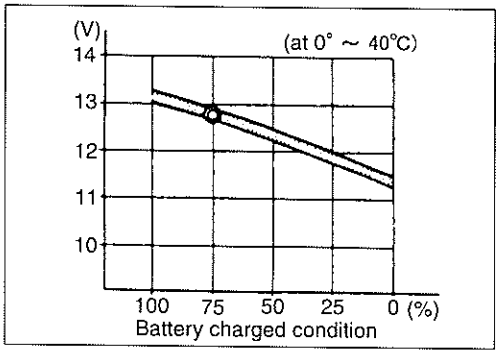

- After recharging, wait for more than 30 minutes and check the battery voltage with a multi circuit tester.
- If the battery voltage is less than the 12.5 V, recharge the battery again.
- If battery voltage is still less than 12.5 V, after recharging, replace the battery with a new one.
- When the motorcycle is not used for a long period, check the battery every 1 month to prevent the battery discharge.

SERVICING INFORMATION

CONTENTS

TROUBLESHOOTING 8- 2
FI SYSTEM MALFUNCTION CODE AND DEFECTIVE CONDITION 8- 2
ENGINE 8- 4
RADIATOR (COOLING SYSTEM) 8- 9
CHASSIS 8-10
BRAKES 8-11
ELECTRICAL 8-12
BATTERY 8-13
WIRE HARNESS, CABLE AND HOSE ROUTING 8-14
WIRE HARNESS ROUTING 8-14
ENGINE ELECTRICAL PARTS SET-UP 8-17
HIGH-TENSION CORD ROUTING 8-18
THROTTLE CABLE ROUTING 8-19
THROTTLE BODY INSTALLATION/HOSE ROUTING 8-20
CRANKCASE BREATHER HOSE ROUTING 8-21
CLUTCH HOSE ROUTING 8-22
COOLING SYSTEM HOSE ROUTING 8-23
FRONT BRAKE HOSE ROUTING 8-24
REAR BRAKE HOSE ROUTING 8-25
FUEL TANK DRAIN HOSE ROUTING 8-26
FUEL TANK INSTALLATION 8-27
PAIR (AIR SUPPLY) SYSTEM HOSE ROUTING 8-28
SEAT LOCK CABLE ROUTING 8-29
SIDE-STAND SET-UP 8-30
BRAKE PEDAL/FOOTREST SET-UP 8-30
FOOTREST SET-UP 8-31
HANDLEBAR BALANCER INSTALLATION 8-31
SPECIAL TOOLS 8-32
TIGHTENING TORQUE 8-35
ENGINE 8-35
FI SYSTEM PARTS 8-36
CHASSIS 8-37
TIGHTENING TORQUE CHART 8-38
SERVICE DATA 8-39

TROUBLESHOOTING

FI SYSTEM MALFUNCTION CODE AND DEFECTIVE CONDITION

MALFUNCTION CODE	DETECTED ITEM	DETECTED FAILURE CONDITION CHECK FOR
C00	NO FAULT	————
C11	Camshaft position sensor	The signal does not reach ECM for more than 3 sec. after receiving the starter signal. The camshaft position sensor wiring and mechanical parts. (Camshaft position sensor, intake cam pin, wiring/coupler connection)
C12	Crankshaft position sensor	The signal does not reach ECM for more than 3 sec. after receiving the starter signal. The crankshaft position sensor wiring and mechanical parts. (Crankshaft position sensor, wiring/coupler connection)
C13	Intake air pressure sensor	The sensor should produce following voltage. (0.10 V ≦ sensor voltage < 4.80 V) Without the above range, C13 is indicated. Intake air pressure sensor, wiring/coupler connection.
C14	Throttle position sensor	The sensor should produce following voltage. (0.10 V ≦ sensor voltage < 4.80 V) Without the above range, C14 is indicated. Throttle position sensor, wiring/coupler connection.
C15	Engine coolant temperature sensor	The sensor voltage should be the following. (0.10 V ≦ sensor voltage < 4.60 V) Without the above range, C15 is indicated. Engine coolant temperature sensor, wiring/coupler connection.
C21	Intake air temperature sensor	The sensor voltage should be the following. (0.10 V ≦ sensor voltage < 4.60 V) Without the above range, C21 is indicated. Intake air temperature sensor, wiring/coupler connection.
C22	Atmospheric pressure sensor	The sensor voltage should be the following. (0.10 V ≦ sensor voltage < 4.80 V) Without the above range, C22 is indicated. Atm. pressure sensor, wiring/coupler connection.
C23	Tip over sensor	The sensor voltage should be less than the following for more than 4 sec. after ignition switch turns ON. (0.20 V ≦ sensor voltage < 4.60 V) Without the above value, C23 is indicated. Tip over sensor, wiring/coupler connection.
C24 or C25	Ignition signal	Crankshaft position sensor (pick-up coil) signal is produced but signal from ignition coil is interrupted continuous by two times or more. In this case, the code C24 or C25 is indicated. Ignition coil, wiring/coupler connection, power supply from the battery.

C28	Secondary throttle valve actuator	When no actuator control signal is supplied from the ECM or communication signal does not reach ECM or operation voltage does not reach STVA motor, C28 is indicated. STVA can not operate. STVA lead wire/coupler.
C29	Secondary throttle position sensor	The sensor should produce following voltage. (0.10 V ≦ sensor voltage < 4.80 V) Without the above range, C29 is indicated. Secondary throttle position sensor, wiring/coupler connection.
C31	Gear position signal	Gear position signal voltage should be higher than the following for more than 4 seconds. (Gear position switch voltage > 1.0 V) Without the above value, C31 is indicated. Gear position sensor, wiring/coupler connection. Gearshift cam etc.
C32 or C33	Fuel injector signal	When fuel injection signal stops, the C32 or C33 is indicated. Injector, wiring/coupler connection, power supply to the injector.
C41	Fuel pump relay signal	When no signal is supplied from fuel pump relay, C41 is indicated. Fuel pump relay, connecting lead, power source to fuel pump relay.
C42	Ignition switch signal	Ignition switch signal is not input in the ECM. Ignition switch, lead wire/coupler.
C44 (Except for USA)	Heated oxygen sensor (HO_2S)	The sensor voltage should be less than the following after warming up condition. (Sensor voltage < 0.4 V) Without the above value, C44 is indicated. Heater operation voltage does not reach in the oxygen heater circuit, C44 in indicated. The Heater can not operate. HO_2S lead wire/coupler connection. Battery voltage supply to the HO_2S.

ENGINE

Complaint	Symptom and possible causes	Remedy
Engine will not start or is hard to start.	**Compression too low**	
	1. Tappet clearance out of adjustment.	Adjust.
	2. Worn valve guides or poor seating of valves.	Repair or replace.
	3. Mistimed valves.	Adjust.
	4. Excessively worn piston rings.	Replace.
	5. Worn-down cylinder bores.	Replace.
	6. Starter motor cranks too slowly.	See electrical section.
	7. Poor seating of spark plugs.	Retighten.
	Plugs not sparking	
	1. Fouled spark plugs.	Clean.
	2. Wet spark plugs.	Clean and dry.
	3. Defective ignition coil or camshaft position sensor.	Replace.
	4. Open or short in high-tension cords.	Replace.
	5. Defective crankshaft position sensor.	Replace.
	6. Defective ECM.	Replace.
	7. Open-circuited wiring connections.	Repair or replace.
	No fuel reaching the intake manifold	
	1. Clogged fuel filter or fuel hose.	Clean or replace.
	2. Defective fuel pump.	Replace.
	3. Defective fuel pressure regulator.	Replace.
	4. Defective fuel injector.	Replace.
	5. Defective fuel pump relay.	Replace.
	6. Defective ECM.	Replace.
	7. Open-circuited wiring connections.	Check and repair.
	Incorrect fuel/air mixture	
	1. Throttle position sensor out of adjustment.	Adjust.
	2. Defective fuel pump.	Replace.
	3. Defective fuel pressure regulator.	Replace.
	4. Defective throttle position sensor.	Replace.
	5. Defective crankshaft position sensor.	Replace.
	6. Defective intake air pressure sensor.	Replace.
	7. Defective atmospheric pressure sensor.	Replace.
	8. Defective ECM.	Replace.
	9. Defective engine coolant temp. sensor.	Replace.
	10. Defective intake air temp. sensor.	Replace.
Engine idles poorly.	1. Tappet clearance out of adjustment.	Adjust.
	2. Poor seating of valves.	Replace or repair.
	3. Defective valve guides.	Replace.
	4. Worn down camshaft.	Replace.
	5. Too wide spark plug gaps.	Adjust or replace.
	6. Defective ignition coil.	Replace.
	7. Defective crankshaft position sensor.	Replace.
	8. Defective ECM.	Replace.
	9. Defective throttle position sensor.	Replace.
	10. Defective fuel pump.	Replace.
	11. Imbalanced throttle valve.	Adjust.
	12. Damaged or cracked vacuum hose.	Replace.

Complaint	Symptom and possible causes	Remedy
Engine stalls often	**Incorrect fuel/air mixture**	
	1. Defective intake air pressure sensor or circuit.	Repair or replace.
	2. Clogged fuel filter.	Clean or replace.
	3. Defective fuel pump.	Replace.
	4. Defective fuel pressure regulator.	Replace.
	5. Damaged or cracked vacuum hose.	Replace.
	6. Defective engine coolant temp. sensor.	Replace.
	7. Defective thermostat.	Replace.
	8. Defective intake air temp. sensor.	Replace.
	Fuel injector improperly operating	
	1. Defective fuel injector.	Replace.
	2. No injection signal from ECM.	Repair or replace.
	3. Open or short circuited wiring connection.	Repair or replace.
	4. Defective battery or low battery voltage.	Replace or recharge.
	Control circuit or sensor improperly operating	
	1. Defective ECM.	Replace.
	2. Defective fuel pressure regulator.	Replace.
	3. Defective throttle position sensor.	Replace.
	4. Defective intake air temp. sensor.	Replace.
	5. Defective camshaft position sensor.	Replace.
	6. Defective crankshaft position sensor.	Replace.
	7. Defective engine coolant temp. sensor.	Replace.
	8. Defective fuel pump relay.	Replace.
	Engine internal parts improperly operating	
	1. Fouled spark plugs.	Clean.
	2. Defective crankshaft position sensor or ECM.	Replace.
	3. Clogged fuel hose.	Clean.
	4. Tappet clearance out of adjustment.	Adjust.

Complaint	Symptom and possible causes	Remedy
Noisy engine.	**Excessive valve chatter**	
	1. Too large tappet clearance.	Adjust.
	2. Weakened or broken valve springs.	Replace.
	3. Worn tappet or cam surface.	Replace.
	4. Worn and burnt camshaft journal.	Replace.
	Noise seems to come from piston	
	1. Worn down pistons or cylinders.	Replace.
	2. Combustion chambers fouled with carbon.	Clean.
	3. Worn piston pins or piston pin bore.	Replace.
	4. Worn piston rings or ring grooves.	Replace.
	Noise seems to come from timing chain	
	1. Stretched chain.	Replace.
	2. Worn sprockets.	Replace.
	3. Tension adjuster not working.	Repair or replace.
	Noise seems to come from clutch	
	1. Worn splines of countershaft or hub.	Replace.
	2. Worn teeth of clutch plates.	Replace.
	3. Distorted clutch plates, driven and drive.	Replace.
	4. Worn clutch release bearing.	Replace.
	5. Weakened clutch dampers.	Replace the primary driven gear.
	Noise seems to come from crankshaft	
	1. Rattling bearings due to wear.	Replace.
	2. Worn and burnt big-end bearings.	Replace.
	3. Worn and burnt journal bearings.	Replace.
	4. Too large thrust clearance.	Replace thrust bearing.
	Noise seems to come from transmission	
	1. Worn or rubbing gears.	Replace.
	2. Worn splines.	Replace.
	3. Worn or rubbing primary gears.	Replace.
	4. Worn bearings.	Replace.
	Noise seems to come from water pump	
	1. Too much play on pump shaft bearing.	Replace.
	2. Worn or damaged impeller shaft.	Replace.
	3. Worn or damaged mechanical seal.	Replace.
	4. Contact between pump case and impeller.	Replace.
Engine runs poorly in high speed range.	**Defective engine internal/electrical parts**	
	1. Weakened valve springs.	Replace.
	2. Worn camshafts.	Replace.
	3. Valve timing out of adjustment.	Adjust.
	4. Too narrow spark plug gaps.	Adjust.
	5. Ignition not advanced sufficiently due to poorly working timing advance circuit.	Replace ECM.
	6. Defective ignition coil.	Replace.
	7. Defective crankshaft position sensor.	Replace.
	8. Defective ECM.	Replace.
	9. Clogged air cleaner element.	Clean.
	10. Clogged fuel hose, resulting in inadequate fuel supply to injector.	Clean and prime.
	11. Defective fuel pump.	Replace.
	12. Defective throttle position sensor.	Replace.
	13. Defective secondary throttle position sensor or its actuator.	Replace.

Complaint	Symptom and possible causes	Remedy
Engine runs poorly in high speed range.	**Defective air flow system**	
	1. Clogged air cleaner element.	Clean or replace.
	2. Defective throttle valve.	Adjust or replace.
	3. Defective secondary throttle valve.	Adjust or replace.
	4. Sucking air from throttle body joint.	Repair or replace.
	5. Defective ECM.	Replace.
	6. Imbalanced throttle valve synchronization.	Adjust.
	Defective control circuit or sensor	
	1. Low fuel pressure.	Repair or replace.
	2. Defective throttle position sensor.	Replace.
	3. Defective intake air temp. sensor.	Replace.
	4. Defective camshaft position sensor.	Replace.
	5. Defective crankshaft position sensor.	Replace.
	6. Defective gear position switch.	Replace.
	7. Defective intake air pressure sensor.	Replace.
	8. Defective atmospheric pressure sensor.	Replace.
	9. Defective ECM.	Replace.
	10. Throttle position sensor out of adjustment.	Adjust.
	11. Defective secondary throttle position sensor and/or secondary throttle valve actuator.	Replace.
Engine lacks power.	**Defective engine internal/electrical parts**	
	1. Loss of tappet clearance.	Adjust.
	2. Weakened valve springs.	Replace.
	3. Valve timing out of adjustment.	Adjust.
	4. Worn piston rings or cylinders.	Replace.
	5. Poor seating of valves.	Repair.
	6. Fouled spark plug.	Clean or replace.
	7. Incorrect spark plug.	Adjust or replace.
	8. Clogged injector.	Clean.
	9. Throttle position sensor out of adjustment.	Adjust.
	10. Clogged air cleaner element.	Clean.
	11. Imbalanced throttle valve synchronization.	Adjust.
	12. Sucking air from throttle valve or vacuum hose.	Retighten or replace.
	13. Too much engine oil.	Drain out excess oil.
	14. Defective fuel pump or ECM.	Replace.
	15. Defective crankshaft position sensor and ignition coil.	Replace.
	Defective control circuit or sensor	
	1. Low fuel pressure.	Repair or replace.
	2. Defective throttle position sensor.	Replace.
	3. Defective intake air temp. sensor.	Replace.
	4. Defective camshaft position sensor.	Replace.
	5. Defective crankshaft position sensor.	Replace.
	6. Defective gear position switch.	Replace.
	7. Defective intake air pressure sensor.	Replace.
	8. Defective atmospheric pressure sensor.	Replace.
	9. Defective ECM.	Replace.
	10. Imbalanced throttle valve synchronization.	Adjust.
	11. Throttle position sensor out of adjustment.	Adjust.
	12. Defective secondary throttle position sensor and/or secondary throttle valve actuator.	Replace.

Complaint	Symptom and possible causes	Remedy
Engine overheats.	**Defective engine internal parts**	
	1. Heavy carbon deposit on piston crowns.	Clean.
	2. Not enough oil in the engine.	Add oil.
	3. Defective oil pump or clogged oil circuit.	Replace or clean.
	4. Sucking air from intake pipes.	Retighten or replace.
	5. Use of incorrect engine oil.	Change.
	6. Defective cooling system.	See radiator section.
	Lean fuel/air mixture	
	1. Short-circuited intake air pressure sensor/lead wire.	Repair or replace.
	2. Short-circuited intake air temp. sensor/lead wire.	Repair or replace.
	3. Sucking air from intake pipe joint.	Repair or replace.
	4. Defective fuel injector.	Replace.
	5. Defective engine coolant temp. sensor.	Replace.
	The other factors	
	1. Ignition timing too advanced due to defective timing advance system (engine coolant temp. sensor, gear position switch, crankshaft position sensor and ECM.)	Replace.
	2. Drive chain too tight.	Adjust.
Dirty or heavy exhaust smoke.	1. Too much engine oil in the engine.	Check with inspection window. Drain excess oil.
	2. Worn piston rings or cylinders.	Replace.
	3. Worn valve guides.	Replace.
	4. Scored or scuffed cylinder walls.	Replace.
	5. Worn valves stems.	Replace.
	6. Defective stem seal.	Replace.
	7. Worn oil ring side rails.	Replace.
Slipping clutch.	1. Weakened clutch springs.	Replace.
	2. Worn or distorted pressure plate.	Replace.
	3. Distorted clutch plates or clutch plate.	Replace.
Dragging clutch.	1. Some clutch spring weakened while others are not.	Replace.
	2. Distorted pressure plate or clutch plate.	Replace.
Transmission will not shift.	1. Broken gearshift cam.	Replace.
	2. Distorted gearshift forks.	Replace.
	3. Worn gearshift pawl.	Replace.
Transmission will not shift back.	1. Broken return spring on shift shaft.	Replace.
	2. Rubbing or sticky shift shaft.	Repair or replace.
	3. Distorted or worn gearshift forks.	Replace.
Transmission jumps out of gear.	1. Worn shifting gears on driveshaft or countershaft.	Replace.
	2. Distorted or worn gearshift forks.	Replace.
	3. Weakened stopper spring on gearshift stopper.	Replace.

RADIATOR (COOLING SYSTEM)

Complaint	Symptom and possible causes	Remedy
Engine overheats.	1. Not enough engine coolant.	Add engine coolant.
	2. Radiator core clogged with dirt or scale.	Clean.
	3. Faulty cooling fan.	Repair or replace.
	4. Defective cooling fan thermo-switch.	Replace.
	5. Clogged water passage.	Clean.
	6. Air trapped in the cooling circuit.	Bleed air.
	7. Defective water pump.	Replace.
	8. Use of incorrect engine coolant.	Replace.
	9. Defective thermostat.	Replace.
Engine overcools.	1. Defective cooling fan thermo-switch.	Replace.
	2. Extremely cold weather.	Put on radiator cover.
	3. Defective thermostat.	Replace.

CHASSIS

Complaint	Symptom and possible causes	Remedy
Heavy steering.	1. Overtightened steering stem nut. 2. Broken bearing in steering stem. 3. Distorted steering stem. 4. Not enough pressure in tires.	Adjust. Replace. Replace. Adjust.
Wobbly handlebars.	1. Loss of balance between right and left front forks. 2. Distorted front fork. 3. Distorted front axle or crooked tire. 4. Loose steering stem nut. 5. Worn or incorrect tire or wrong tire pressure. 6. Worn bearing/race in steering stem.	Replace. Repair or replace. Replace. Adjust. Adjust or replace. Replace.
Wobbly front wheel.	1. Distorted wheel rim. 2. Worn front wheel bearings. 3. Defective or incorrect tire. 4. Loose axle or axle pinch bolt. 5. Incorrect front fork oil level.	Replace. Replace. Replace. Retighten. Adjust.
Front suspension too soft.	1. Weakened springs. 2. Not enough fork oil. 3. Wrong viscous fork oil. 4. Improperly set front fork spring adjuster. 5. Improperly set front fork damping force adjuster.	Replace. Replenish. Replace. Adjust. Adjust.
Front suspension too stiff.	1. Too viscous fork oil. 2. Too much fork oil. 3. Improperly set front fork spring adjuster. 4. Improperly set front fork damping force adjuster. 5. Bent front axle.	Replace. Drain excess oil. Adjust. Adjust. Replace.
Noisy front suspen-sion.	1. Not enough fork oil. 2. Loose bolts on suspension.	Replenish. Retighten.
Wobbly rear wheel.	1. Distorted wheel rim. 2. Worn rear wheel bearing or swingarm bearings. 3. Defective or incorrect tire. 4. Worn swingarm and rear suspensions. 5. Loose nuts or bolts on rear suspensions.	Replace. Replace. Replace. Replace. Retighten.
Rear suspension too soft.	1. Weakened spring of shock absorber. 2. Leakage of oil from shock absorber. 3. Improperly set rear spring unit adjuster. 4. Improperly set damping force adjuster.	Replace. Replace. Adjust. Adjust.
Rear suspension too stiff.	1. Bent shock absorber shaft. 2. Bent swingarm pivot shaft. 3. Worn swingarm and suspension bearings. 4. Improperly set rear suspension adjuster. 5. Improperly set damping force adjuster.	Replace. Replace. Replace. Adjust. Adjust.
Noisy rear suspen-sion.	1. Loose nuts or bolts on rear suspension. 2. Worn swingarm and suspension bearings.	Retighten. Replace.

BRAKES

Complaint	Symptom and possible causes	Remedy
Insufficient brake power.	1. Leakage of brake fluid from hydraulic system. 2. Worn pads. 3. Oil adhesion on friction surface of pads/shoe. 4. Worn disc. 5. Air in hydraulic system. 6. Not enough brake fluid in the reservoir.	Repair or replace. Replace. Clean disc and pads. Replace. Bleed air. Replenish.
Brake squeaking.	1. Carbon adhesion on pad surface. 2. Tilted pad. 3. Damaged wheel bearing. 4. Loose front-wheel axle or rear-wheel axle. 5. Worn pads or disc. 6. Foreign material in brake fluid. 7. Clogged return port of master cylinder.	Repair surface with sandpaper. Correct pad fitting or replace. Replace. Tighten to specified torque. Replace. Replace brake fluid. Disassemble and clean master cylinder.
Excessive brake lever stroke.	1. Air in hydraulic system. 2. Insufficient brake fluid. 3. Improper quality of brake fluid.	Bleed air. Replenish fluid to specified level; bleed air. Replace with correct fluid.
Leakage of brake fluid.	1. Insufficient tightening of connection joints. 2. Cracked hose. 3. Worn piston and/or cup.	Tighten to specified torque. Replace. Replace piston and/or cup.
Brake drags.	1. Rusty part. 2. Insufficient brake lever or brake pedal pivot lubrication.	Clean and lubricate. Lubricate.

ELECTRICAL

Complaint	Symptom and possible causes	Remedy
No sparking or poor sparking.	1. Defective ignition coil or camshaft position sensor. 2. Defective spark plugs. 3. Defective crankshaft position sensor. 4. Defective ECM. 5. Defective tip over sensor. 6. Open-circuited wiring connections.	Replace. Replace. Replace. Replace. Replace. Check and repair.
Spark plugs soon become fouled with carbon.	1. Mixture too rich. 2. Idling speed set too high. 3. Incorrect gasoline. 4. Dirty air cleaner element. 5. Too cold spark plugs.	Consult FI system. Adjust fast idle or throttle stop screw. Change. Clean or replace. Replace with hot type plugs.
Spark plugs become fouled too soon.	1. Worn piston rings. 2. Worn piston or cylinders. 3. Excessive clearance of valve stems in valve guides. 4. Worn stem oil seal.	Replace. Replace. Replace. Replace.
Spark plug electrodes overheat or burn.	1. Too hot spark plugs. 2. Overheated the engine. 3. Loose spark plugs. 4. Too lean mixture.	Replace with cold type plugs. Tune up. Retighten. Consult FI system.
Generator does not charge.	1. Open- or short-circuited lead wires, or loose lead connections. 2. Short-circuited, grounded or open generator coils. 3. Short-circuited or panctured regulator/rectifiers.	Repair or replace or retighten. Replace. Replace.
Generator does charge, but charging rate is below the specification.	1. Lead wires tend to get short- or open-circuited or loosely connected at terminals. 2. Grounded or open-circuited stator coils or generator. 3. Defective regulator/rectifier. 4. Defective cell plates in the battery.	Repair or retighten. Replace. Replace. Replace the battery.
Generator over-charges.	1. Internal short-circuit in the battery. 2. Damaged or defective resistor element in the regulator/rectifier. 3. Poorly grounded regulator/rectifier.	Replace the battery. Replace. Clean and tighten ground connection.
Unstable charging.	1. Lead wire insulation frayed due to vibration, resulting in intermittent short-circuiting. 2. Internally short-circuited generator. 3. Defective regulator/rectifier.	Repair or replace. Replace. Replace.
Starter button is not effective.	1. Run down battery. 2. Defective switch contacts. 3. Brushes not seating properly on starter motor commutator. 4. Defective starter relay/starter interlock switch. 5. Defective main fuse.	Repair or replace. Replace. Repair or replace. Replace. Replace.

BATTERY

Complaint	Symptom and possible causes	Remedy
"Sulfation", acidic white powdery substance or spots on surfaces of cell plates.	1. Cracked battery case. 2. Battery has been left in a run-down condition for a long time.	Replace the battery. Replace the battery.
Battery runs down quickly.	1. Trouble in charging system. 2. Cell plates have lost much of their active material as a result of overcharging. 3. Internal short-circuit in the battery. 4. Too low battery voltage. 5. Too old battery.	Check the generator, regulator/rectifier and circuit connections and make necessary adjustments to obtain specified charging operation. Replace the battery, and correct the charging system. Replace the battery. Recharge the battery fully. Replace the battery.
Battery "sulfation".	1. Incorrect charging rate. (When not in use battery should be checked at least once a month to avoid sulfation.) 2. The battery was left unused in a cold climate for too long.	Replace the battery. Replace the battery if badly sulfated.

WIRE HARNESS, CABLE AND HOSE ROUTING

WIRE HARNESS ROUTING

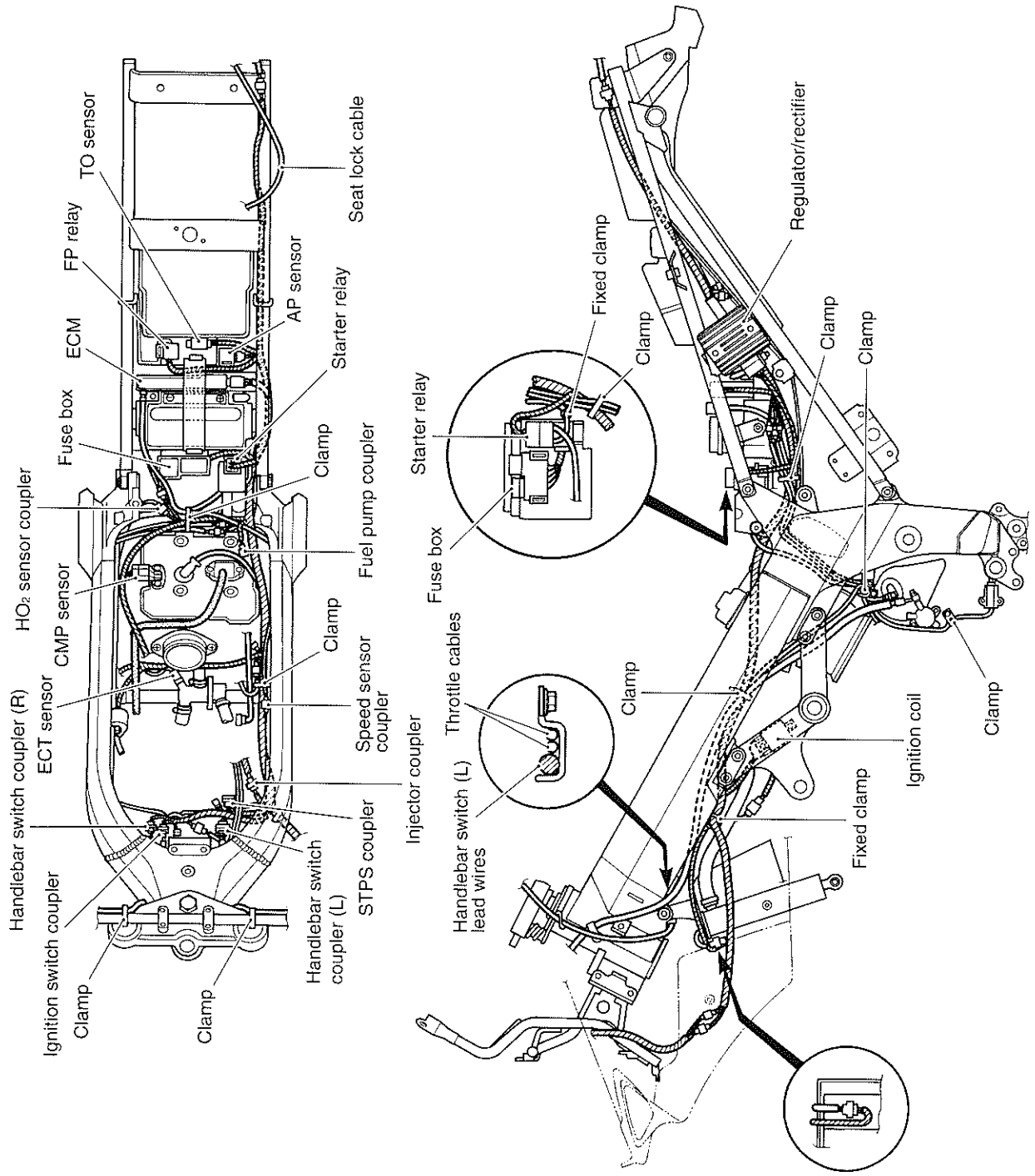

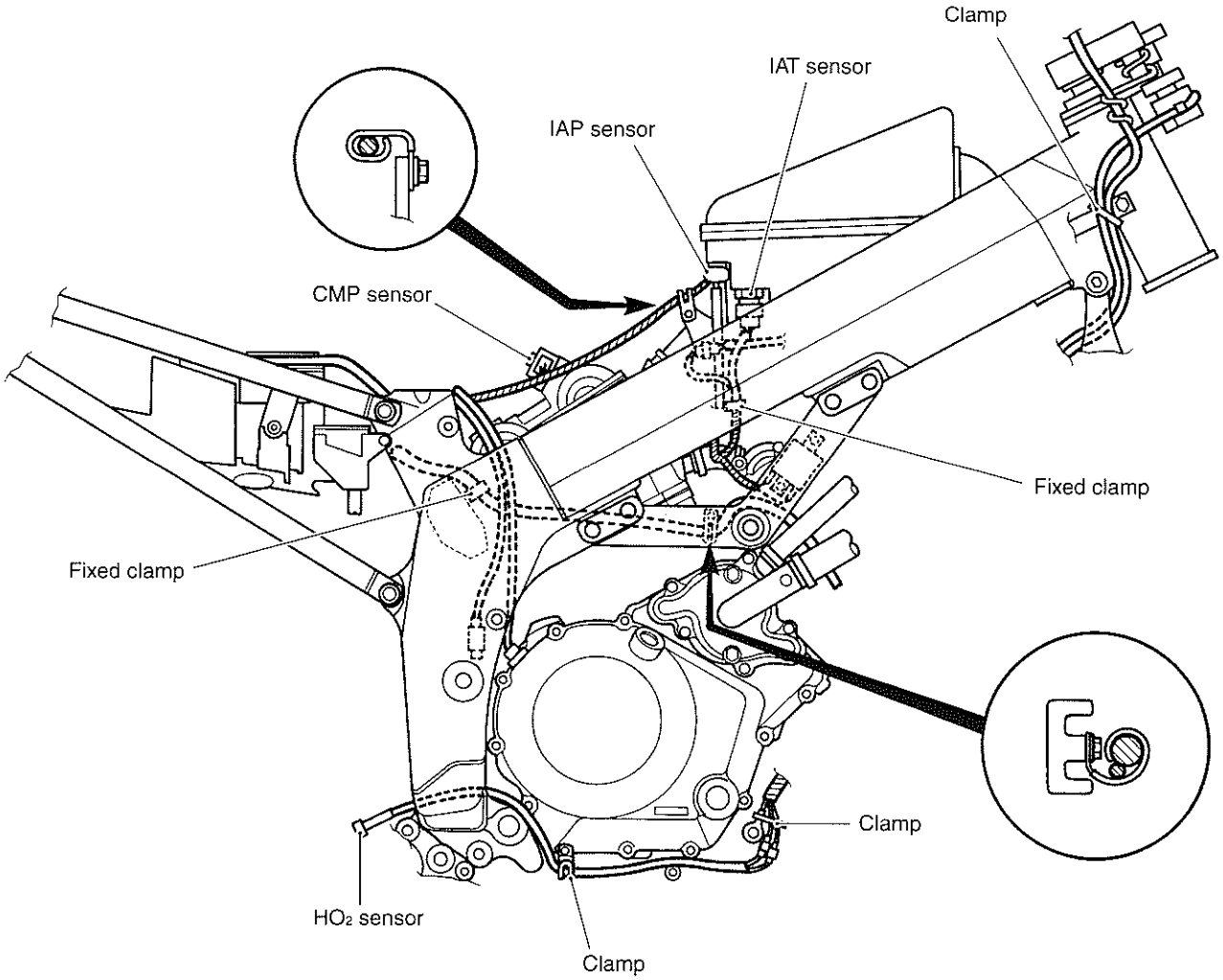
Clamp
IAT sensor
IAP sensor
CMP sensor
Fixed clamp
Fixed clamp
Clamp
HO2 sensor
Clamp

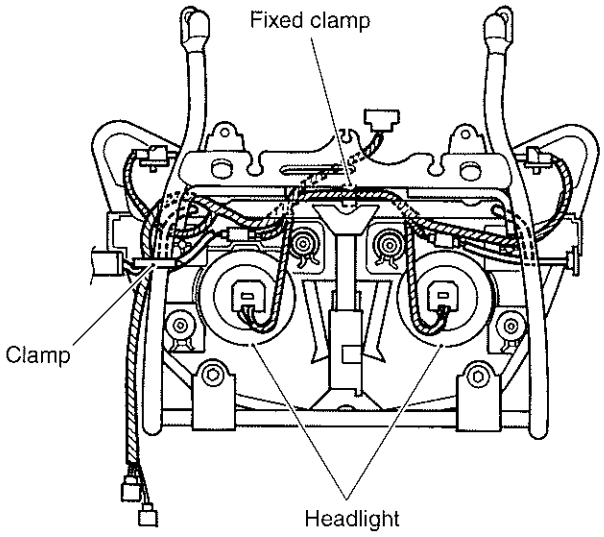
Fixed clamp
Clamp
Headlight

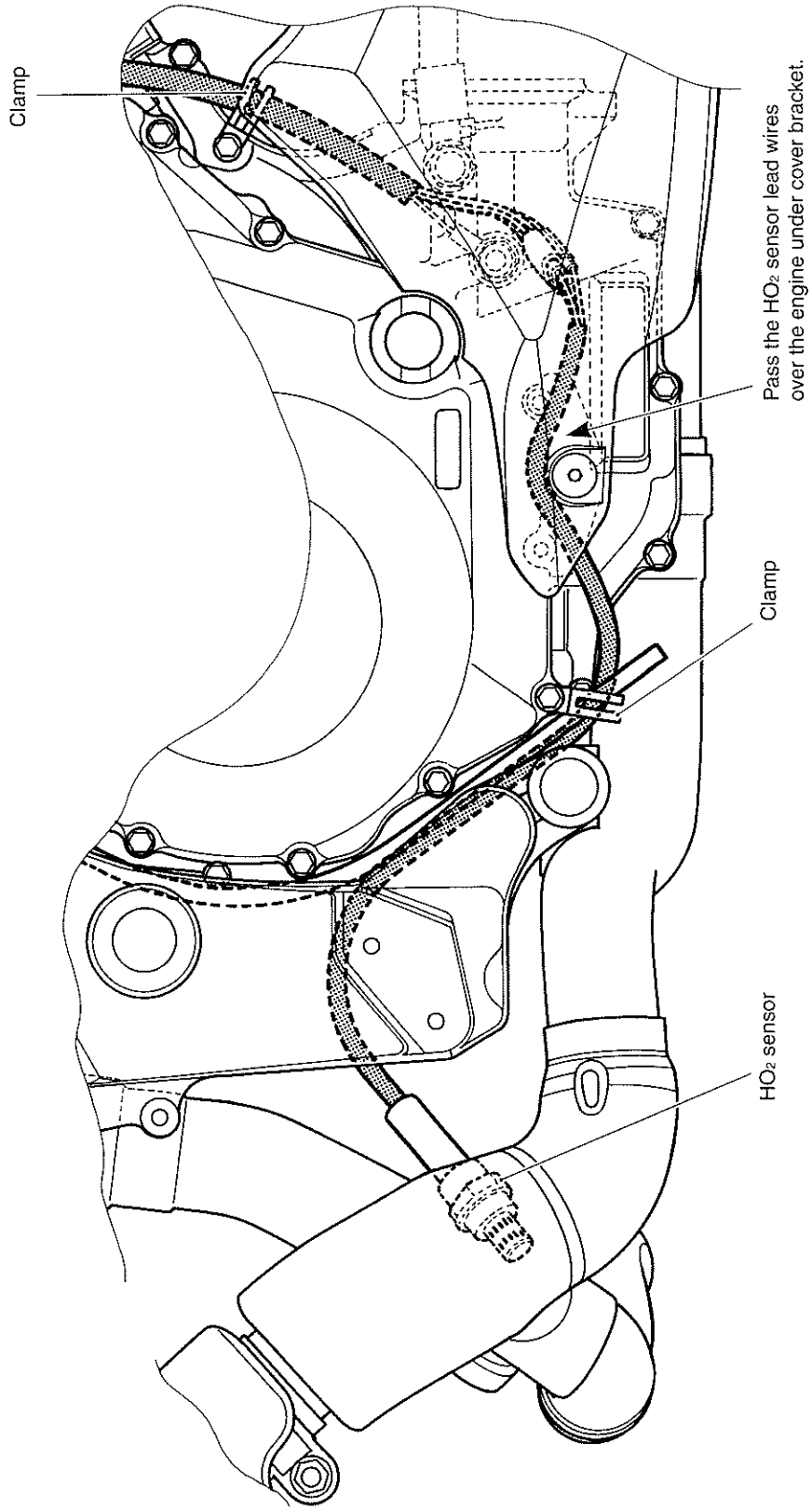
Clamp
Pass the HO2 sensor lead wires over the engine under cover bracket.
Clamp
HO2 sensor

ENGINE ELECTRICAL PARTS SET-UP

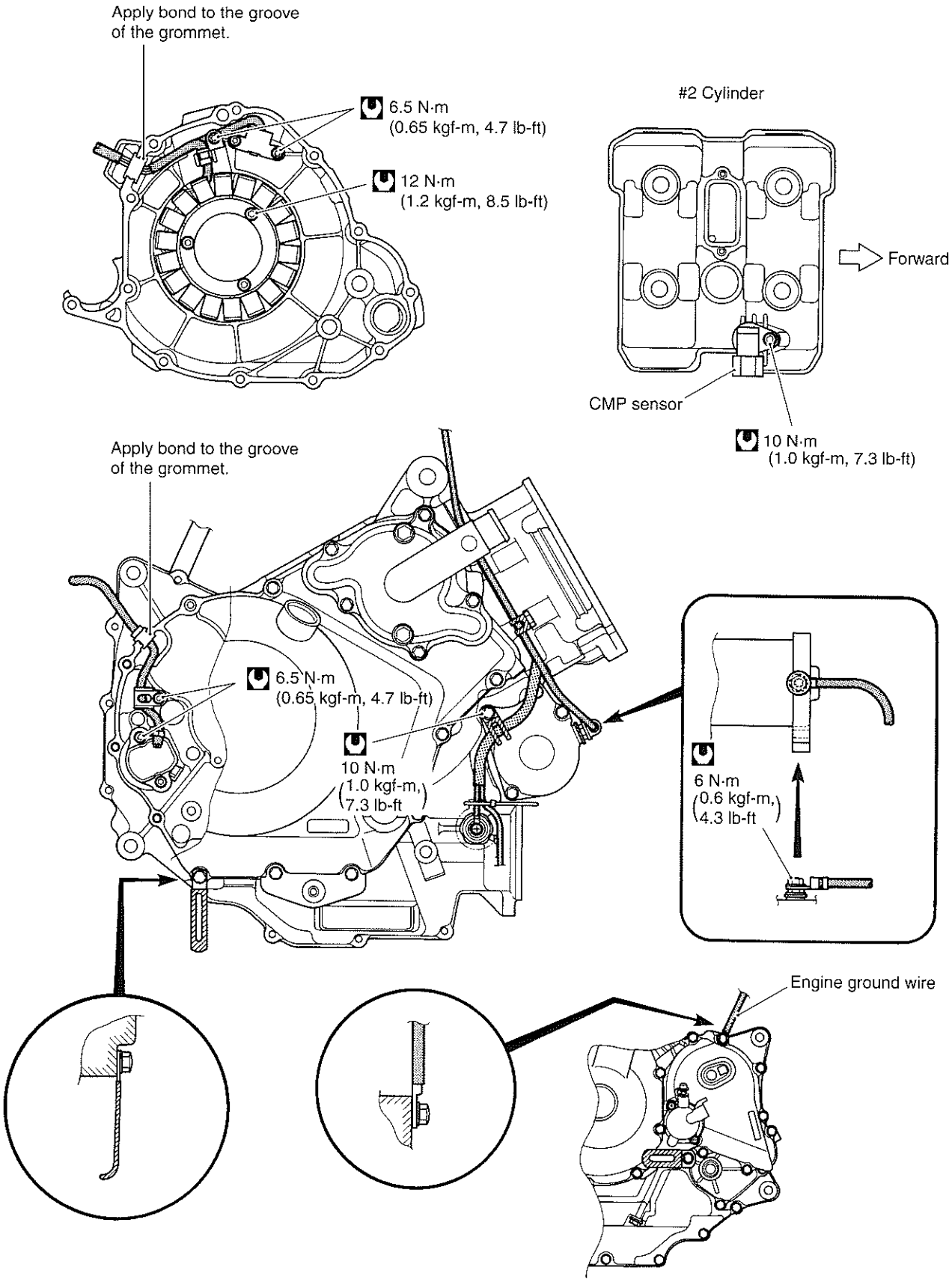

HIGH-TENSION CORD ROUTING

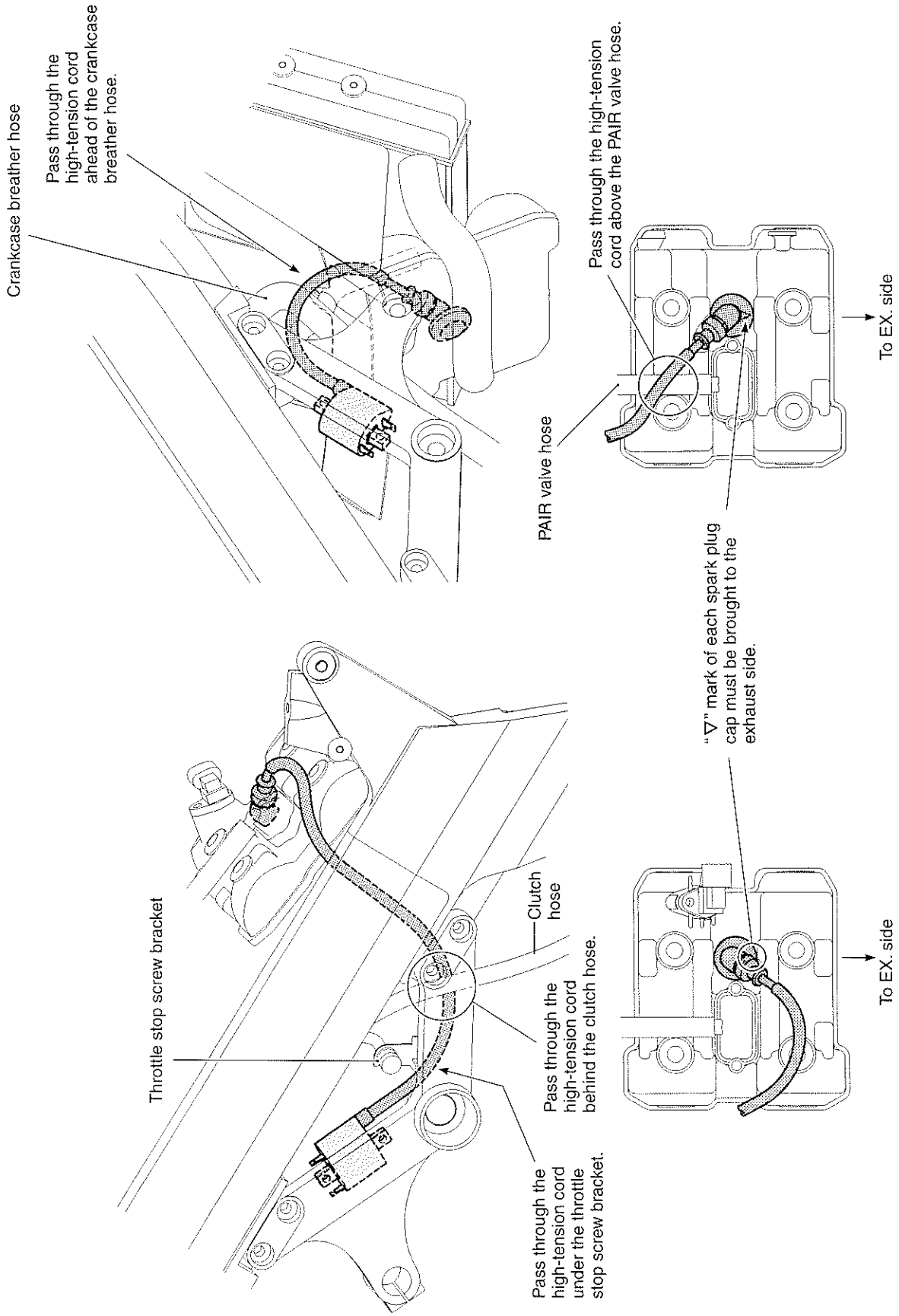

THROTTLE CABLE ROUTING

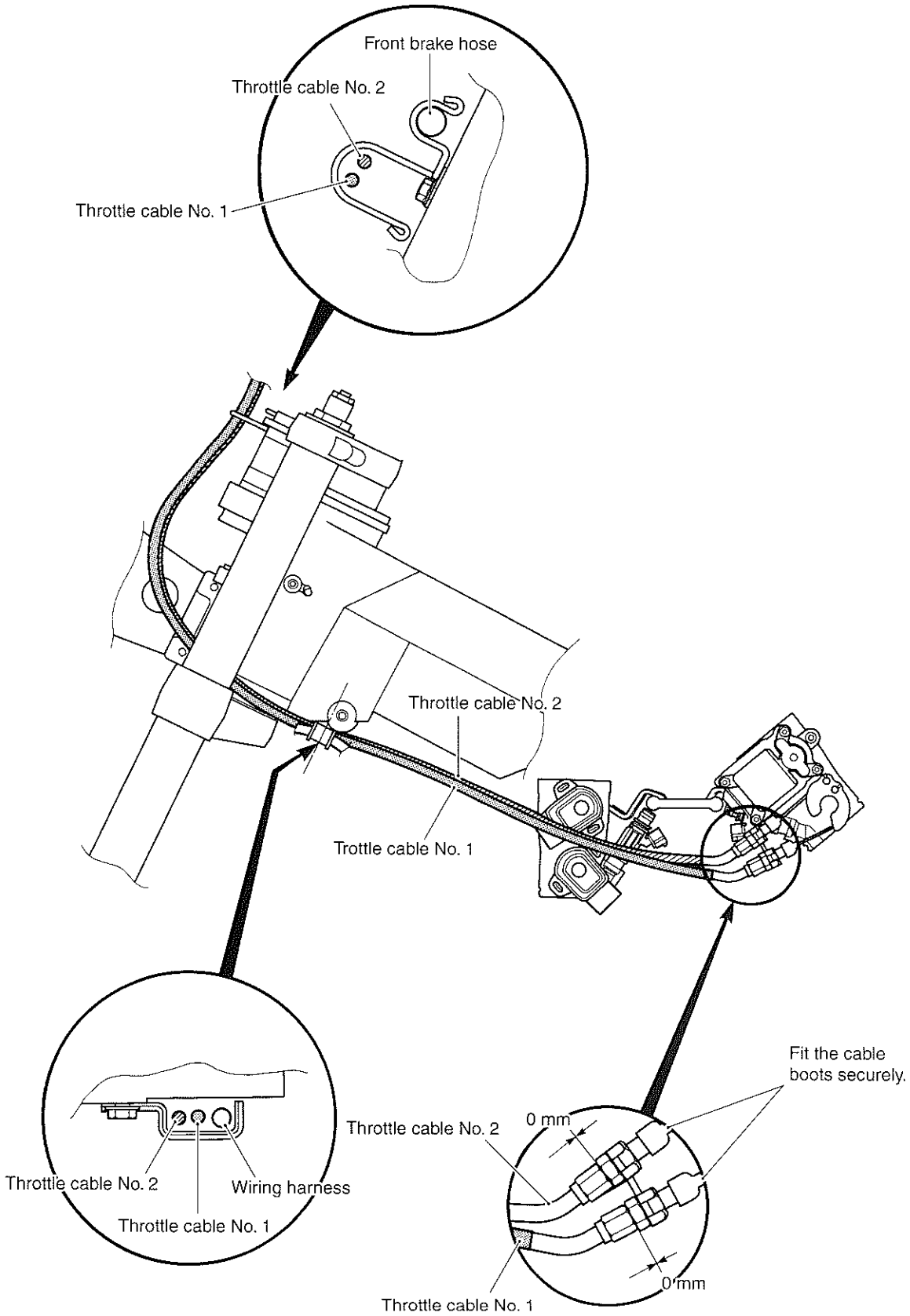

THROTTLE BODY INSTALLATION/HOSE ROUTING

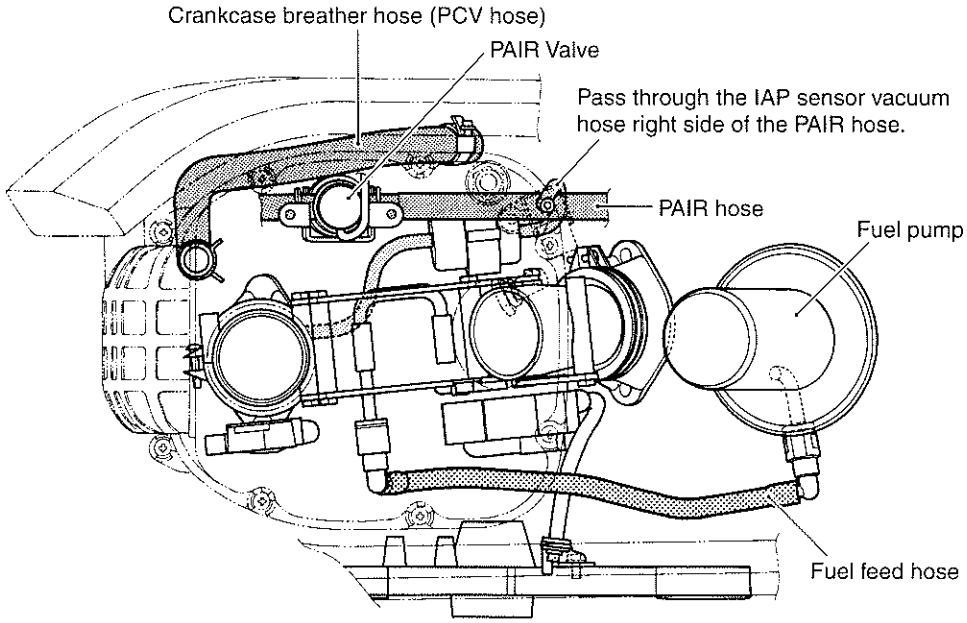

THROTTLE BODY CLAMP POSITION

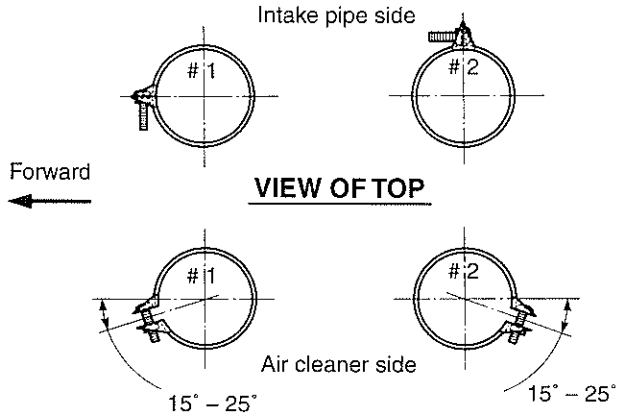

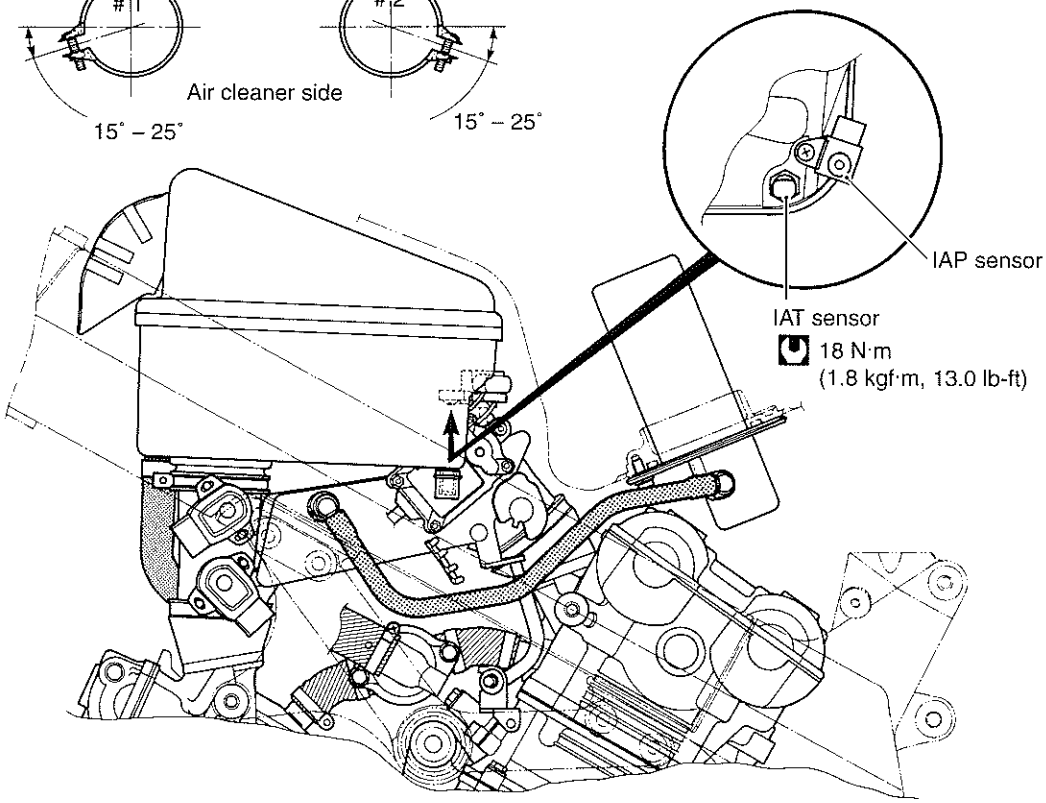

CRANKCASE BREATHER HOSE ROUTING

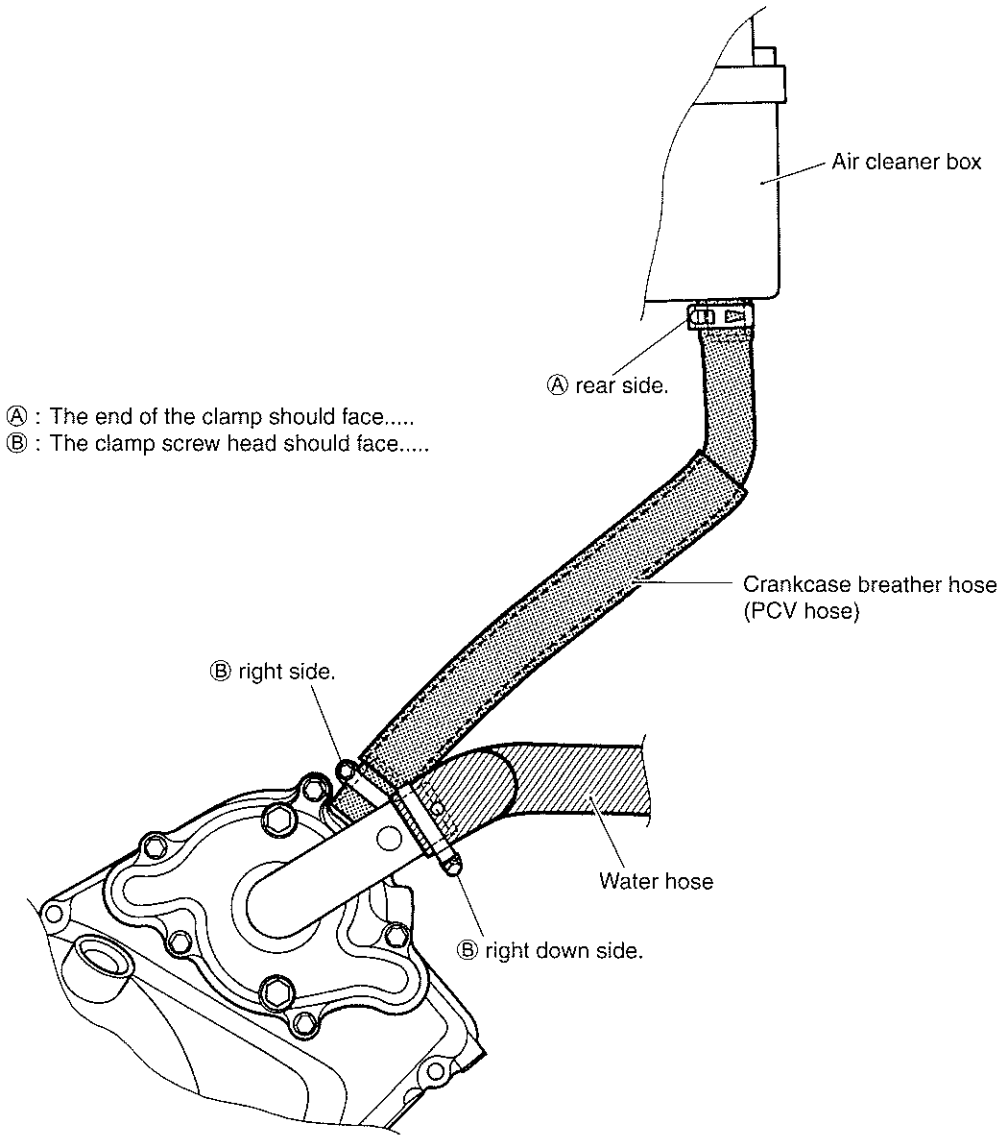

CLUTCH HOSE ROUTING

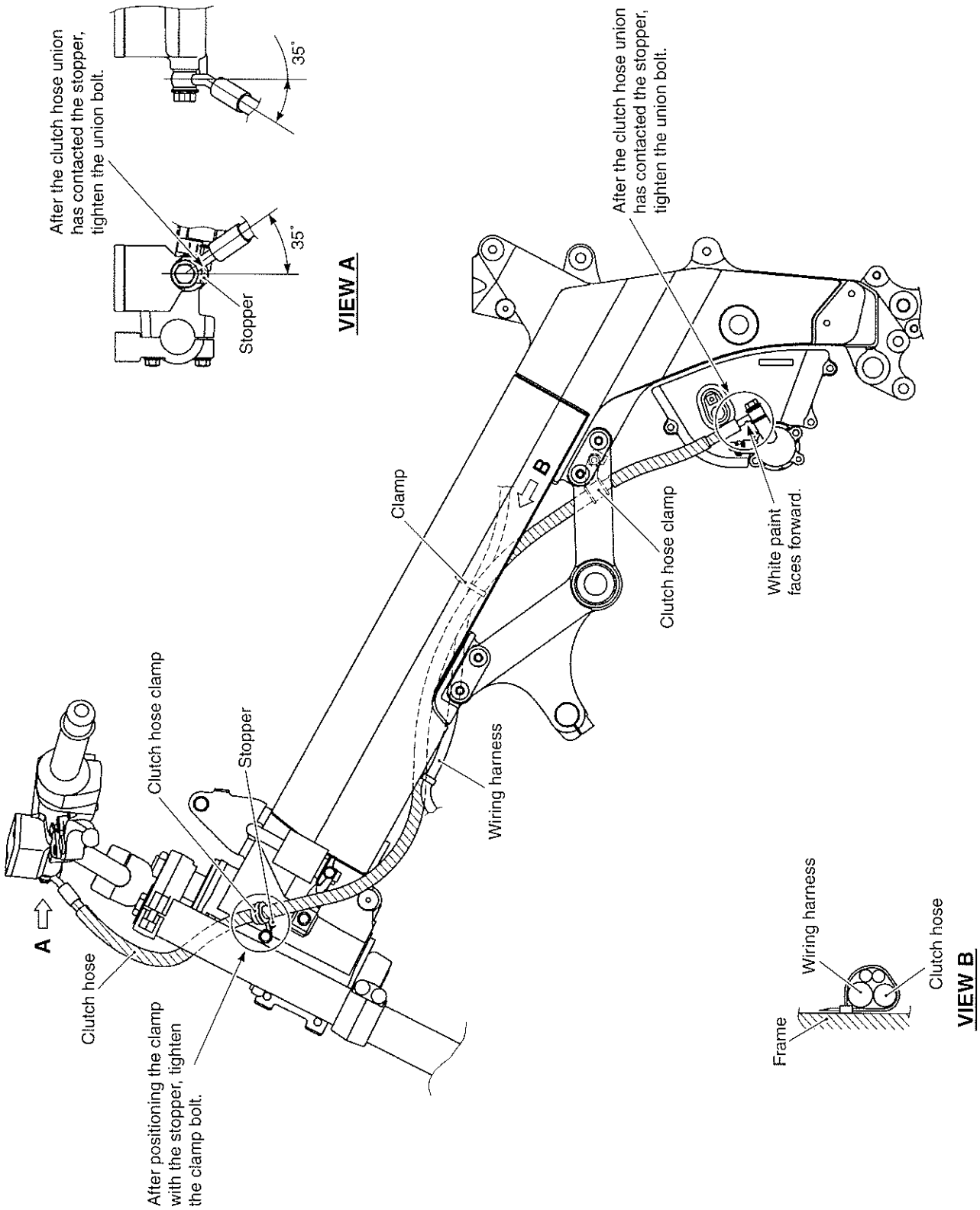

COOLING SYSTEM HOSE ROUTING

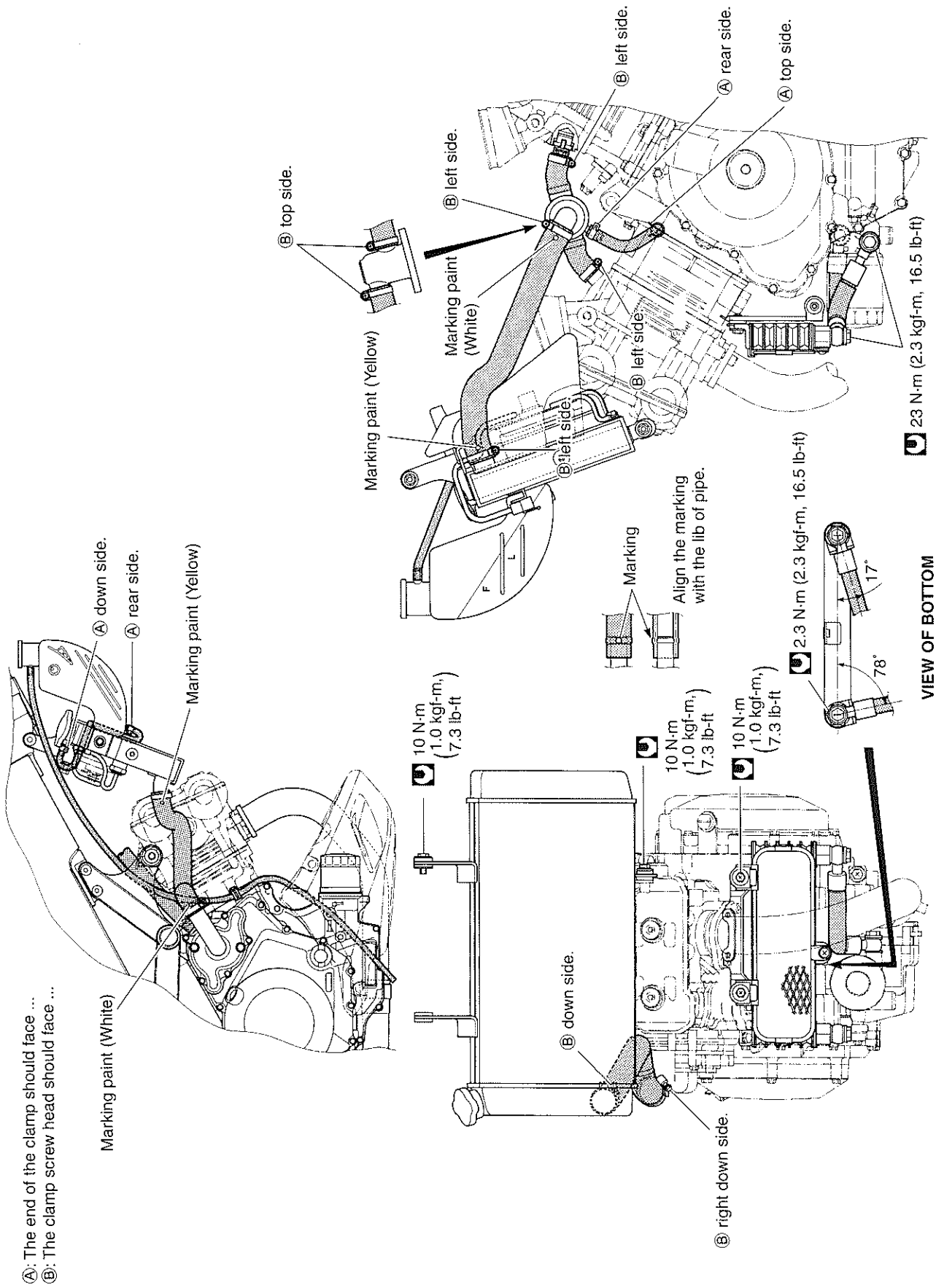

FRONT BRAKE HOSE ROUTING

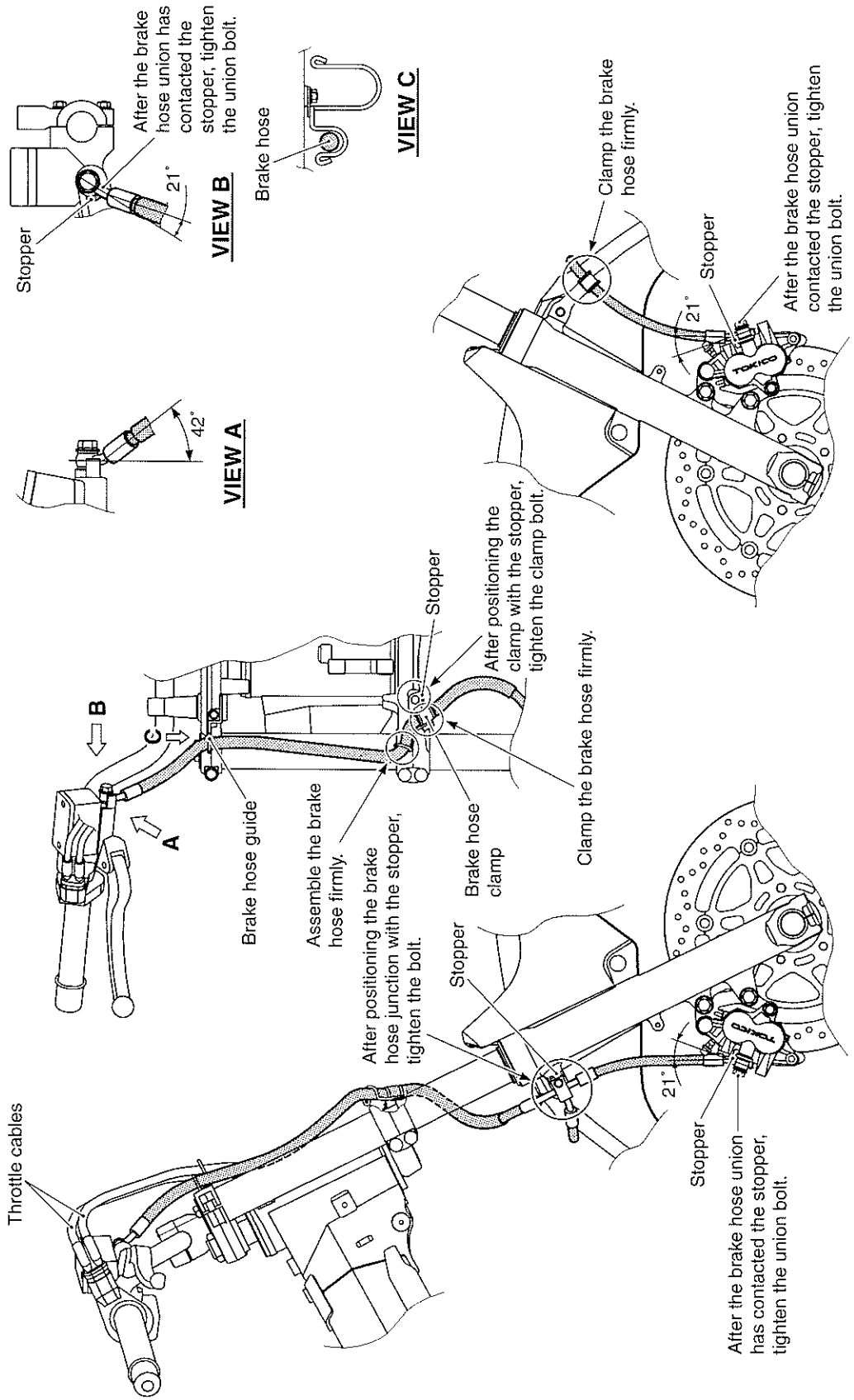

REAR BRAKE HOSE ROUTING

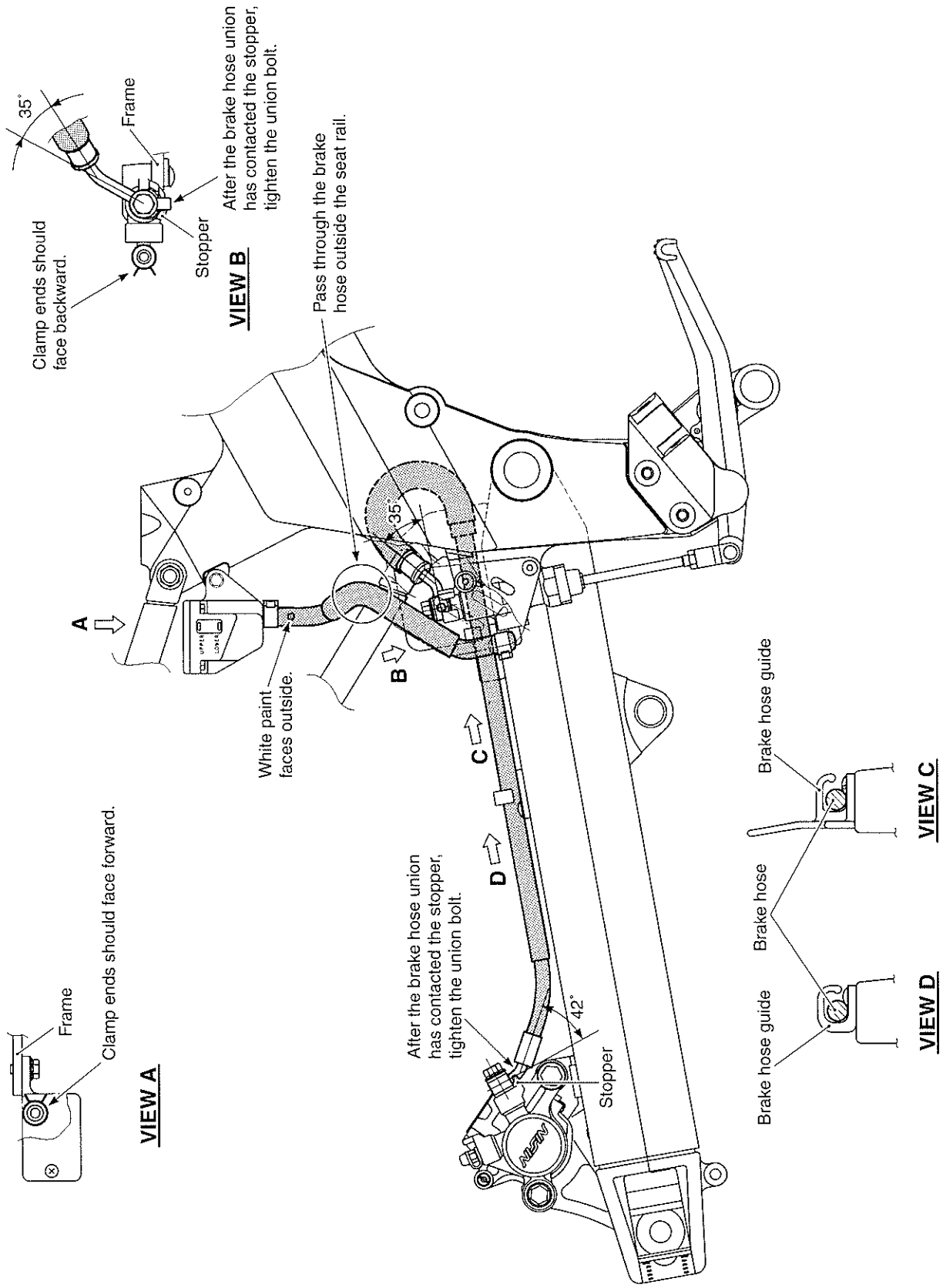

FUEL TANK DRAIN HOSE ROUTING

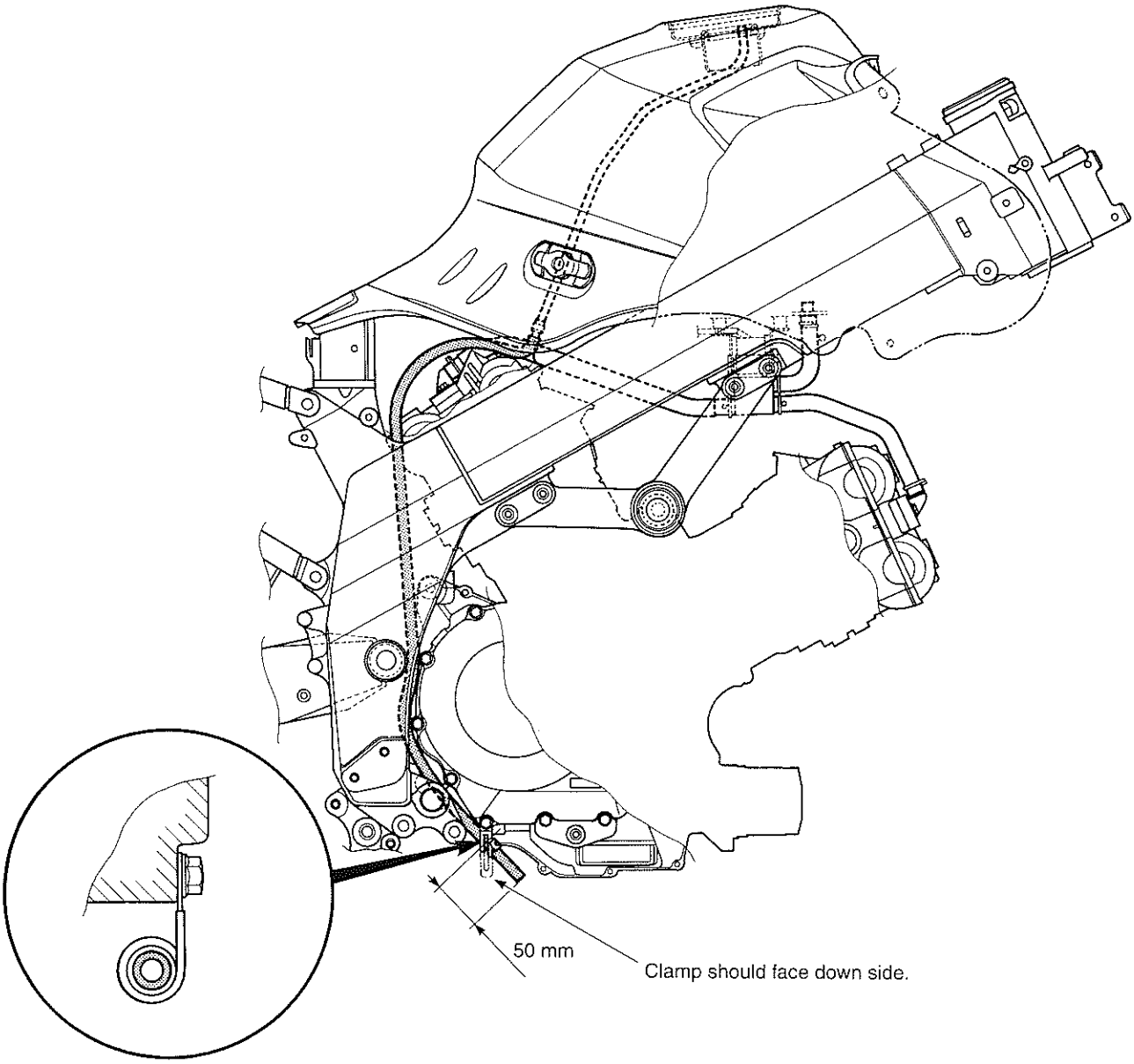

FUEL TANK INSTALLATION

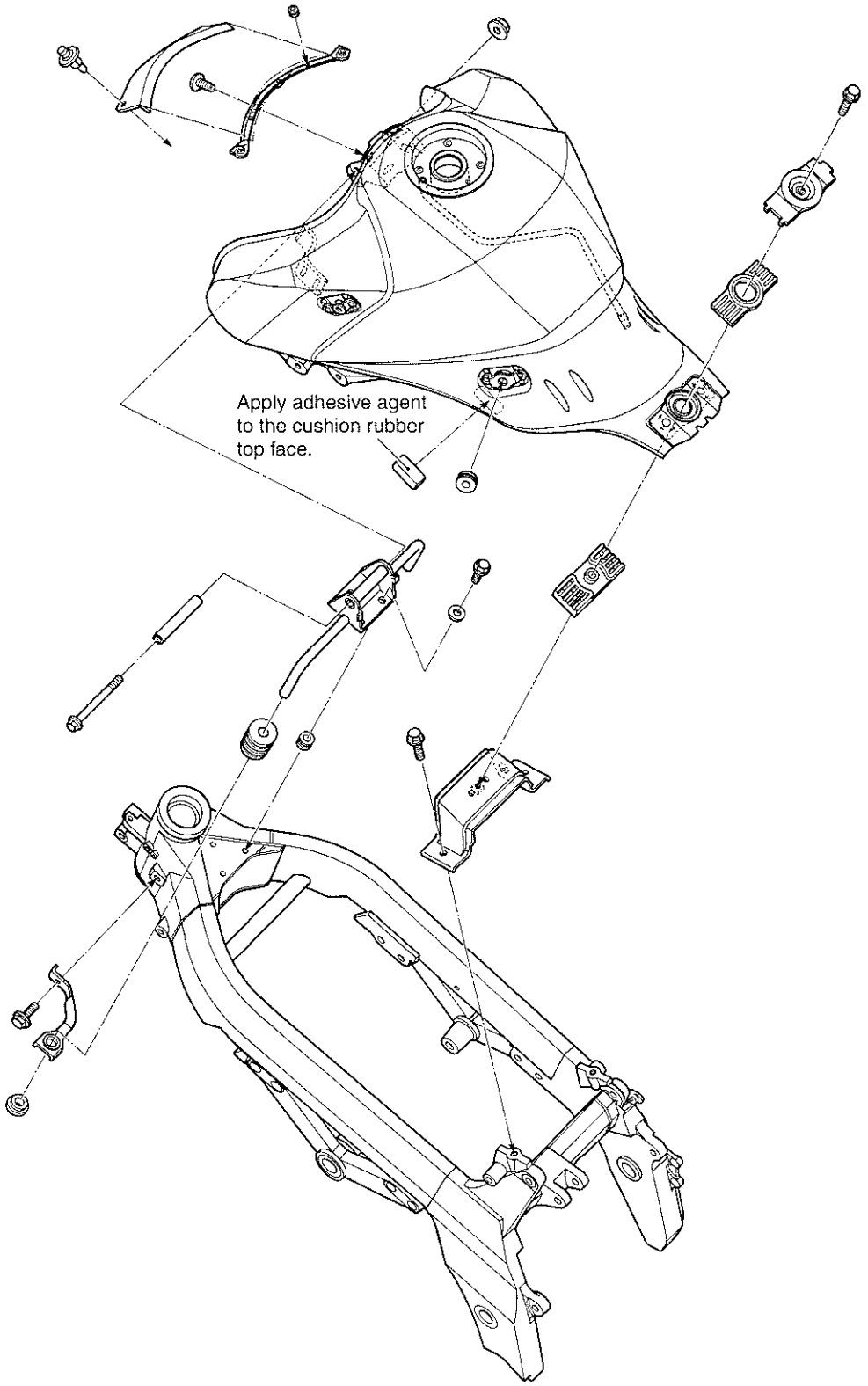

PAIR (AIR SUPPLY) SYSTEM HOSE ROUTING

For USA/CANADA/AUSTRALIA

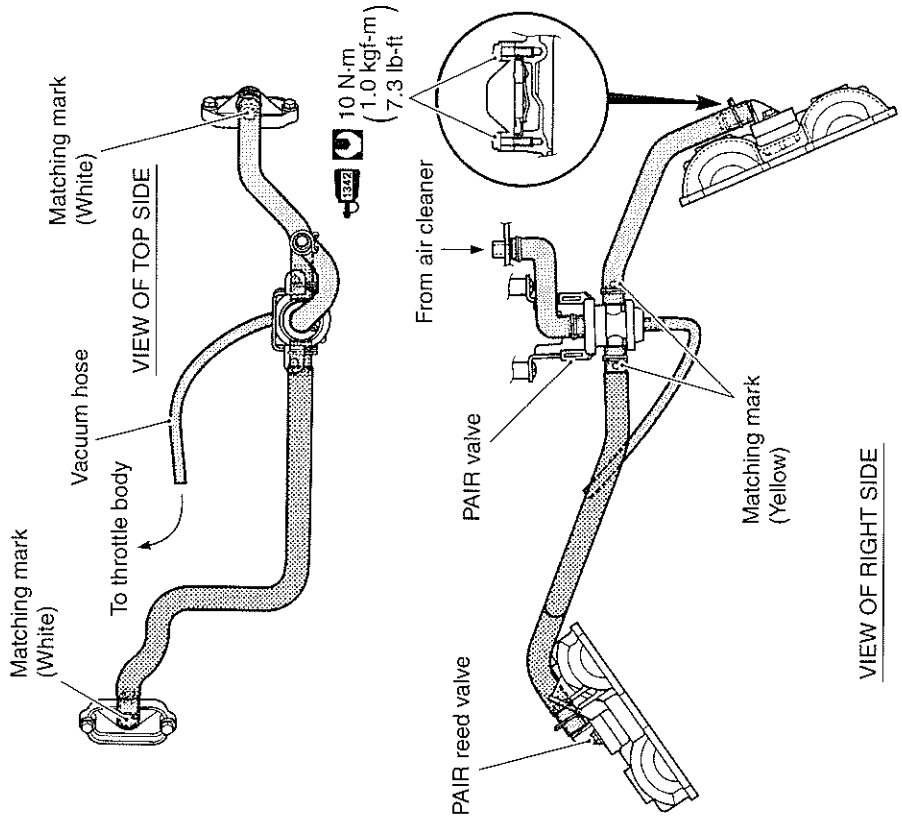

For European markets

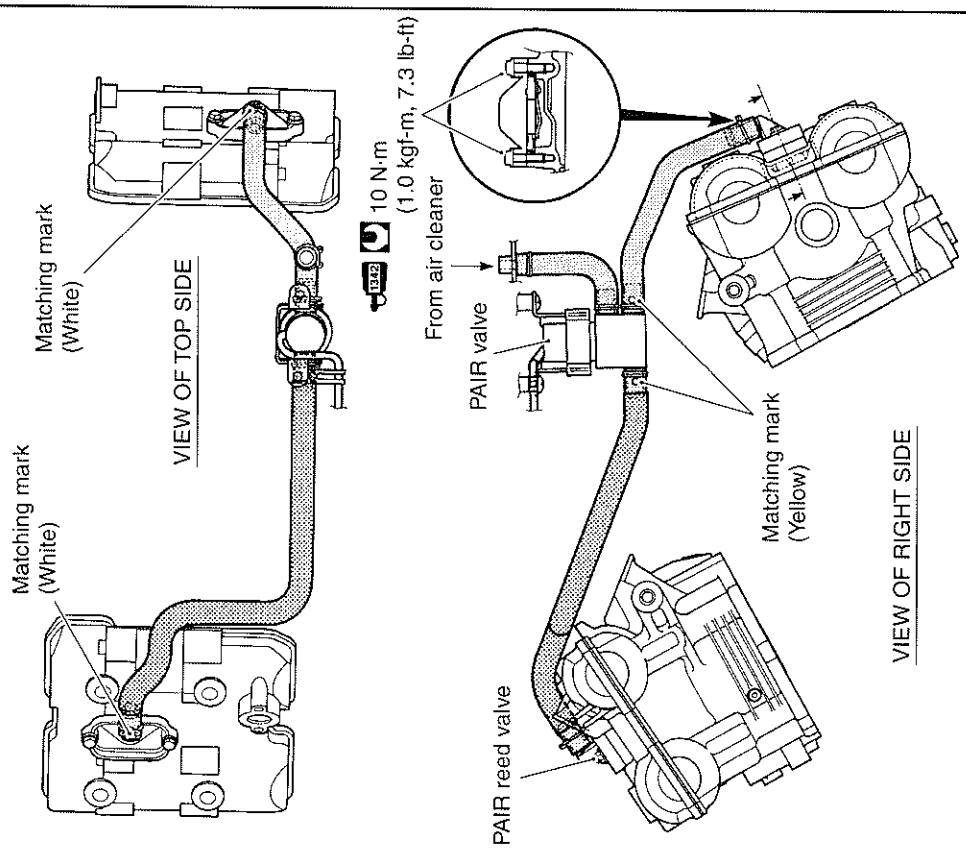

SEAT LOCK CABLE ROUTING

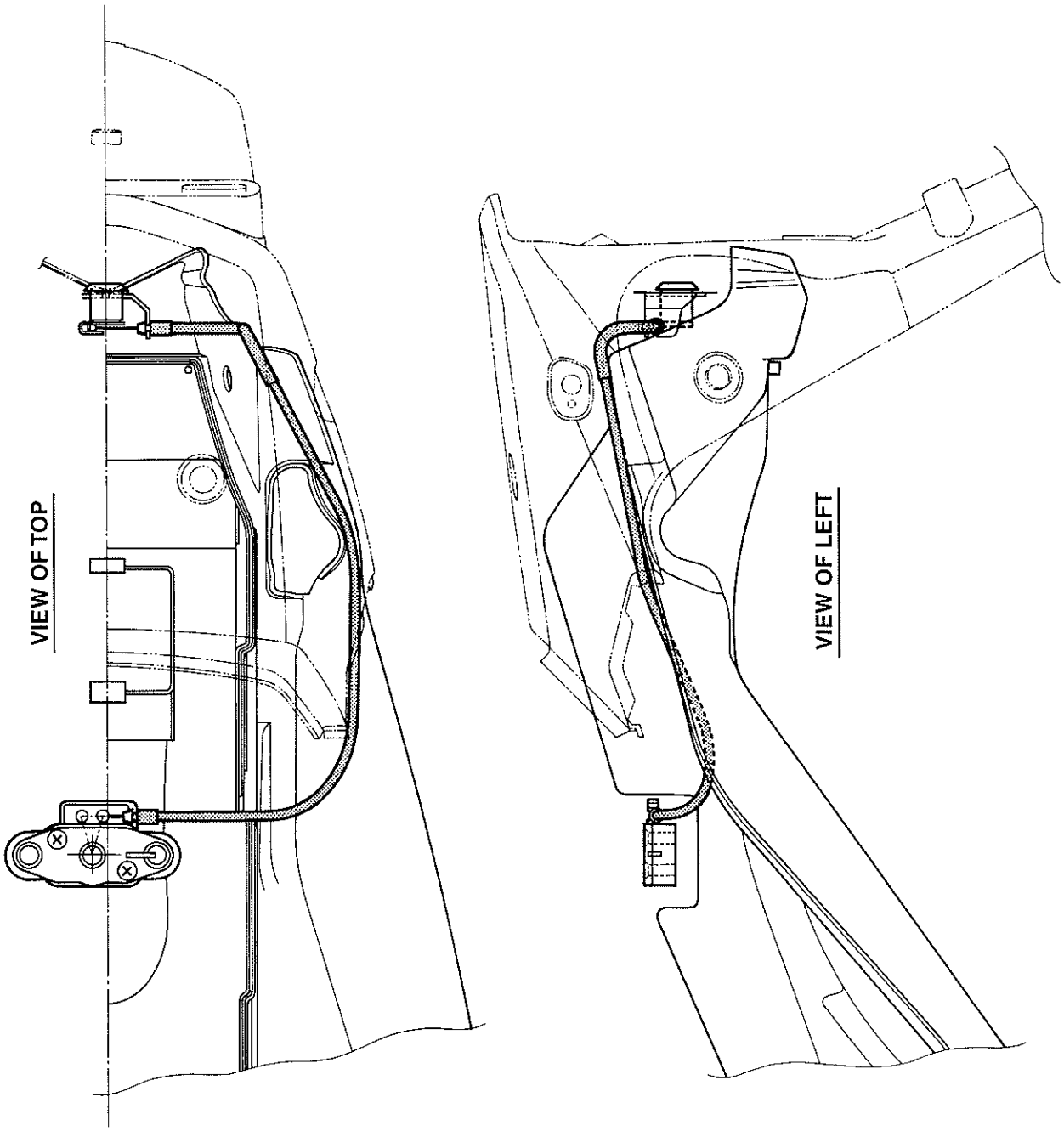

SIDE-STAND SET-UP

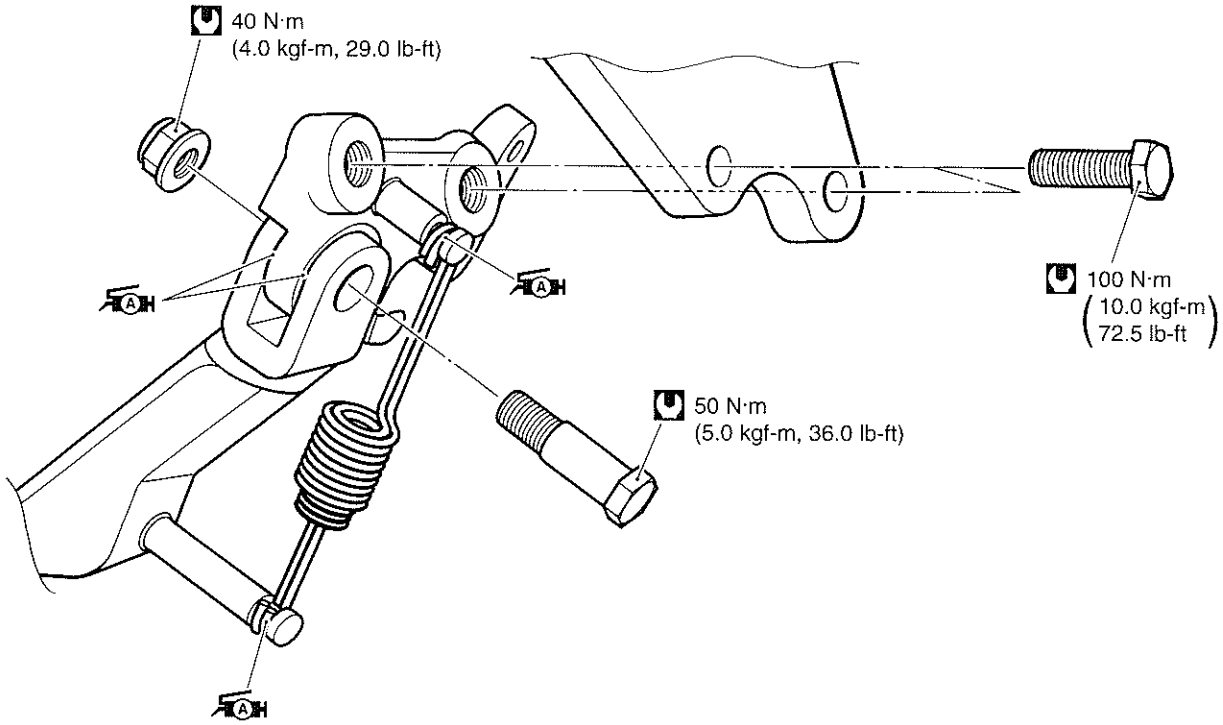

BRAKE PEDAL/FOOTREST SET-UP

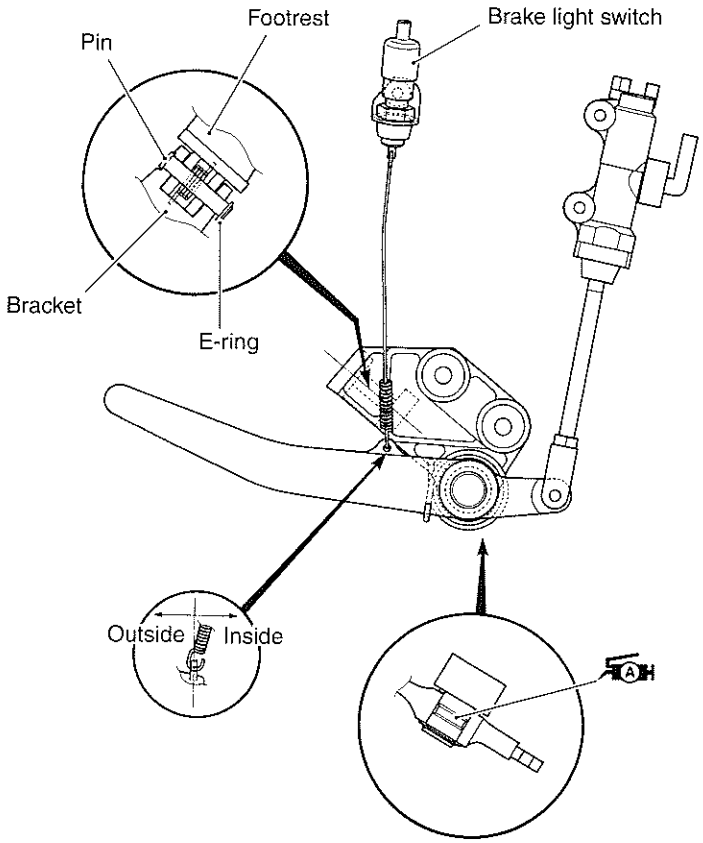

FOOTREST SET-UP

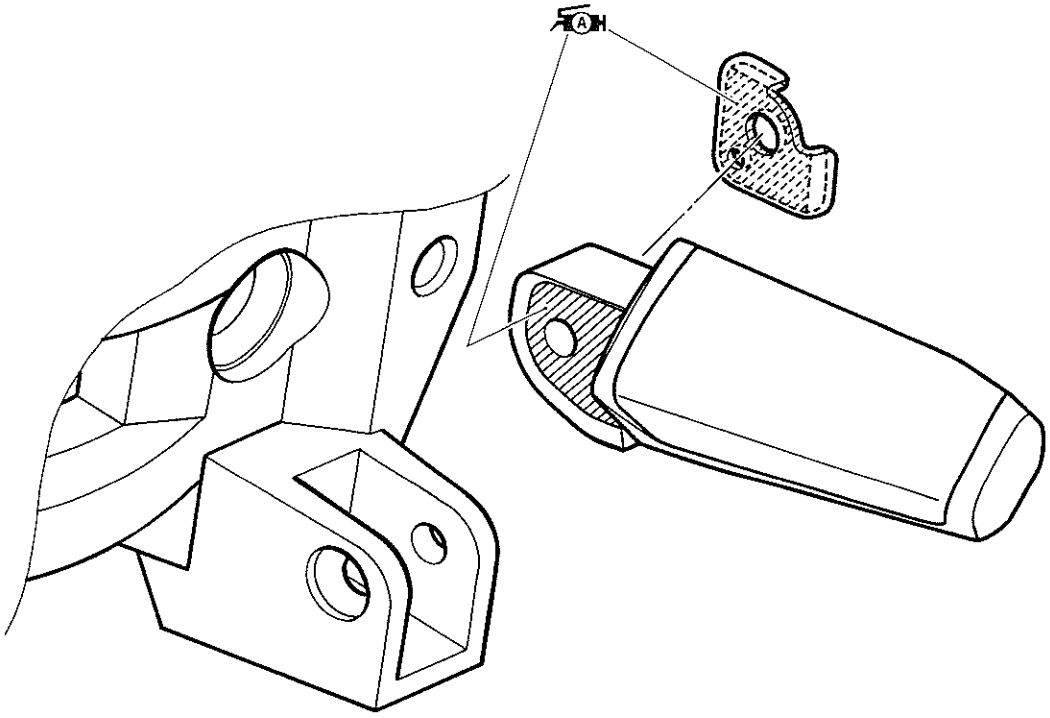

HANDLEBAR BALANCER INSTALLATION

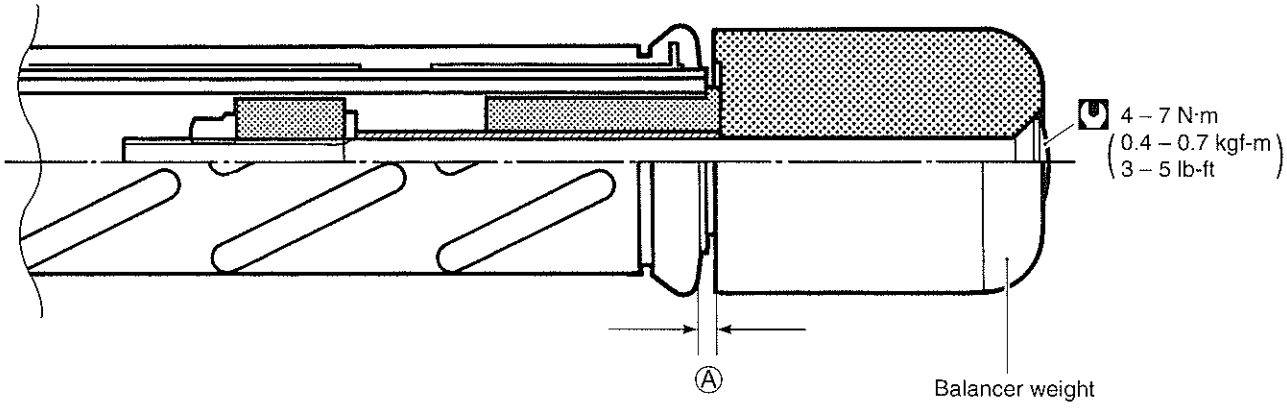

LH clearance Ⓐ is 0 mm.
RH clearance Ⓐ is 0.5 – 1.5 mm.

NOTE:
After installing the RH balancer weight, check that throttle grip rotate smoothly by turning it.

SPECIAL TOOLS

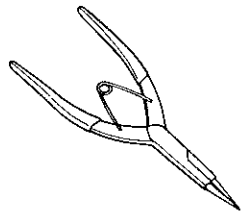 09900-06107 Snap ring pliers	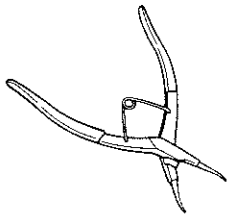 09900-06108 Snap ring pliers	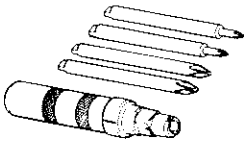 09900-09004 Impact driver set	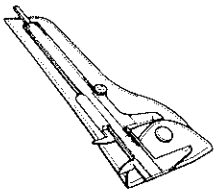 09900-20101 or 09900-20102 Vernier calipers	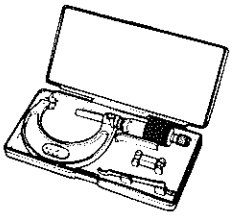 09900-20202 Micrometer (25 – 50 mm)
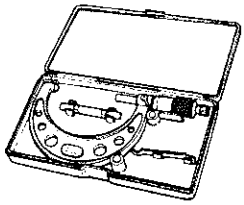 09900-20204 Micrometer (75 – 100 mm)	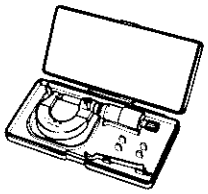 09900-20205 Micrometer (0 – 25 mm)	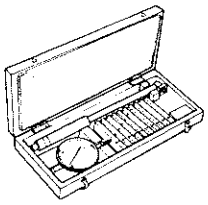 09900-20508 Cylinder gauge set	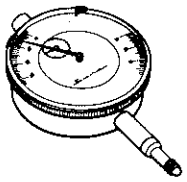 09900-20602 Dial gauge (1/1000 mm, 1 mm)	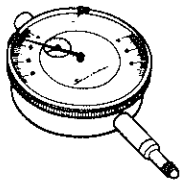 09900-20607 Dial gauge (1/100 mm, 10 mm)
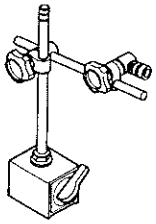 09900-20701 Magnetic stand	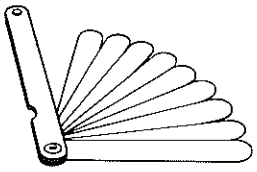 09900-20803 09900-20806 Thickness gauge	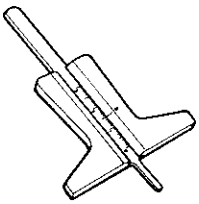 09900-20805 Tire depth gauge	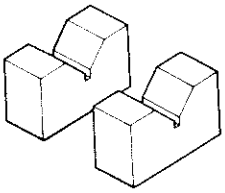 09900-21304 V-block (100 mm)	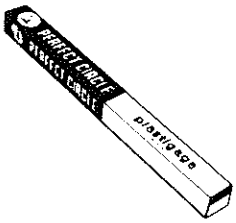 09900-22301 09900-22302 Plastigauge
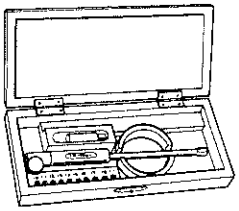 09900-22403 Small bore gauge (18 – 35 mm)	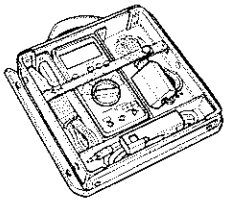 09900-25008 Multi circuit tester set	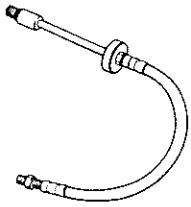 09913-10750 Compression gauge adapter	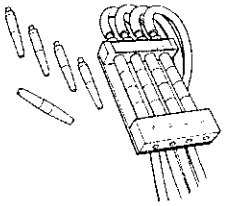 09913-13121 Carburetor balancer set	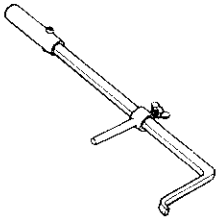 09913-50121 Oil seal remover
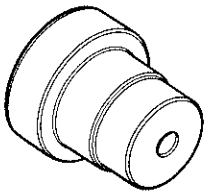 09913-60230 Journal bearing remover/installer	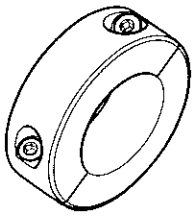 09913-60240 Journal bearing holder	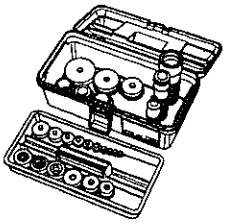 09913-70210 Bearing installer set	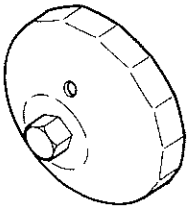 09915-40610 Oil filter wrench	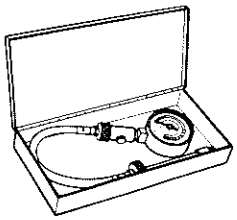 09915-64510 Compression gauge

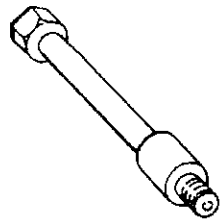 09915-72410 Oil pressure gauge attachment	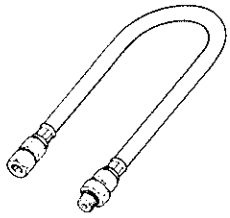 09915-74521 Oil pressure gauge hose	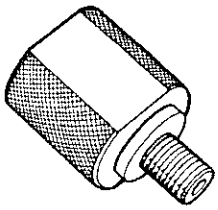 09915-74532 Oil pressure gauge adaptor	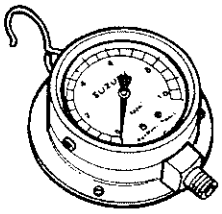 09915-77331 Meter (for high pressure)	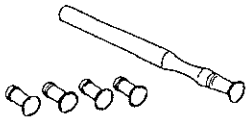 09916-10911 Valve lapper set
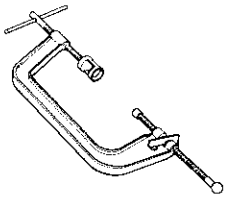 09916-14510 Valve spring compressor	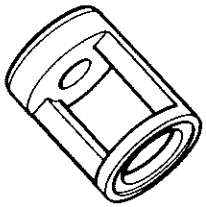 09916-14910 Valve spring compressor attachment	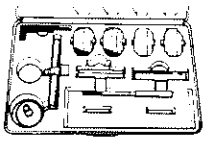 09916-21111 Valve seat cutter set	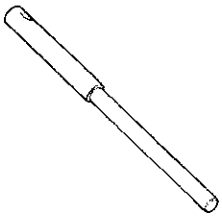 09916-24480 Solid pilot (N-140-5.5)	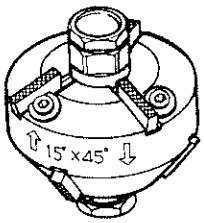 15°×45° Valve seat cutter head See page 3-42.
09916-34542 Reamer handle	09916-34550 Valve guide reamer (5.5 mm)	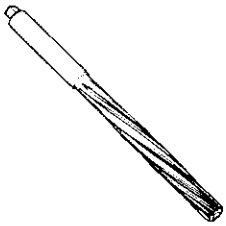 09916-34580 Valve guide reamer (10.8 mm)	09916-44910 Valve guide remover/installer	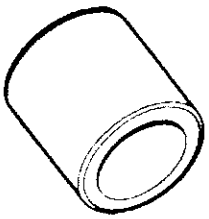 09916-53340 Attachment
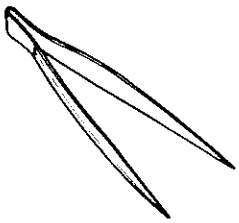 09916-84511 Tweezers	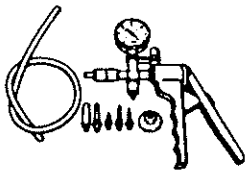 09917-47010 Vacuum pump gauge	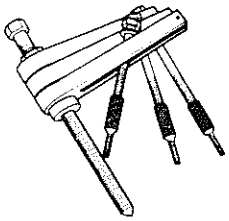 09920-13120 Crankcase separating tool	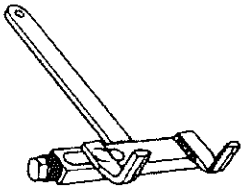 09920-53740 Clutch sleeve hub holder	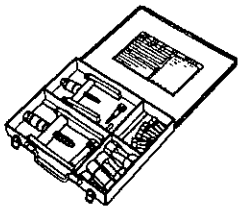 09921-20240 Bearing remover set
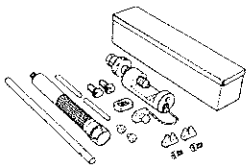 09922-22711 Drive chain cutting and joining tool	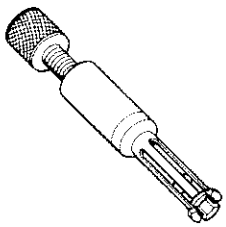 09923-73210 Bearing remover	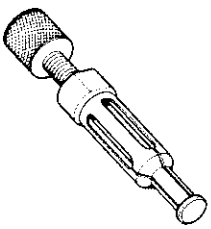 09923-74511 Bearing puller	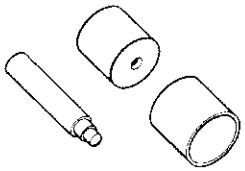 09924-74570 Final drive gear bearing installer/ remover	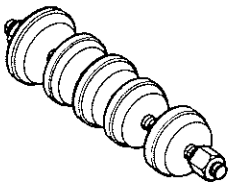 09924-84510 Bearing installer set

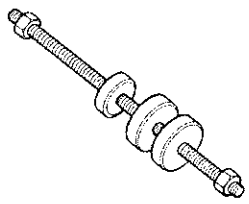 09924-84521 Bearing installer set	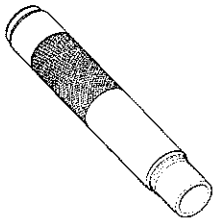 09925-18011 Steering bearing installer	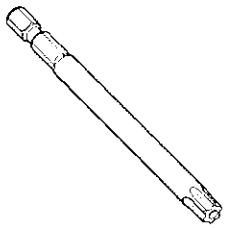 09930-11920 Torx bit JT40H	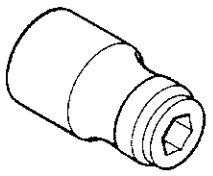 09930-11940 Bit holder	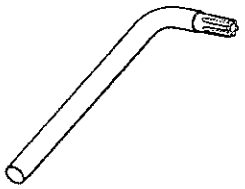 09930-11950 Torx wrench
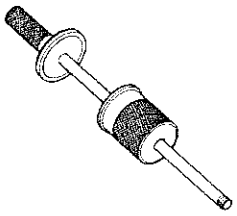 09930-30102 Sliding shaft	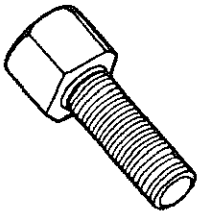 09930-30450 Rotor remover	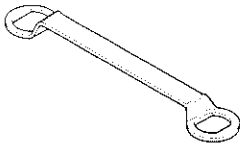 09930-44541 Rotor holder	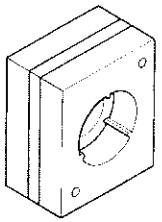 09930-73110 Starter torque limiter holder	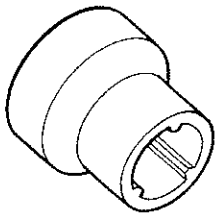 09930-73120 Starter torque limiter socket
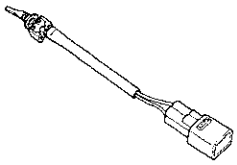 09930-82710 Mode selection switch	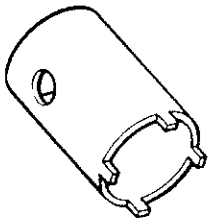 09940-14911 Steering stem nut wrench	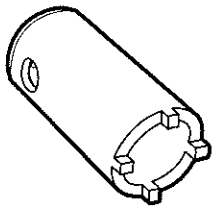 09940-14940 Swingarm pivot thrust adjuster socket wrench	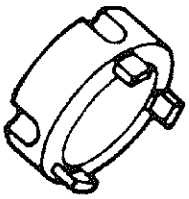 09940-14960 Steering nut wrench socket	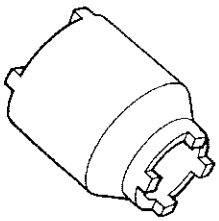 09940-14990 Engine mounting thrust adjuster socket wrench
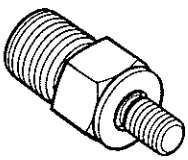 09940-40211 Fuel pressure gauge adapter	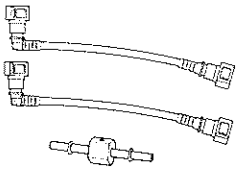 09940-40220 Fuel pressure gauge hose attachment	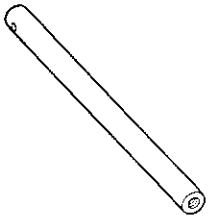 09940-52841 Front fork inner rod holder	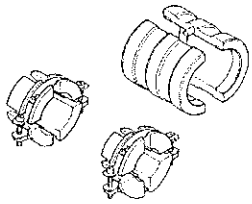 09940-52861 Front fork oil seal installer	099340-92720 Spring scale
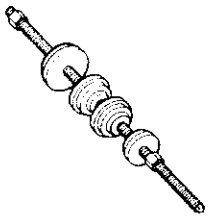 09941-34513 Steering race installer	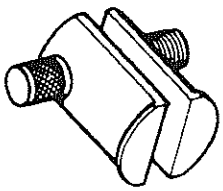 09941-54911 Bearing outer race remover	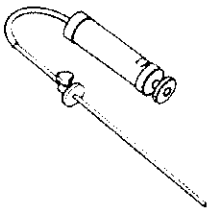 09943-74111 Fork oil level gauge	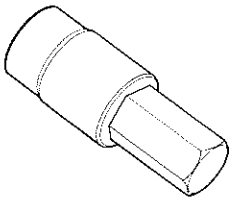 09944-28320 HEXAGON BIT	

NOTE:
When ordering a special tool, please confirm whether it is available or not.

TIGHTENING TORQUE
ENGINE

ITEM		N·m	kgf-m	lb-ft
Cylinder head cover bolt		14	1.4	10.0
Spark plug		11	1.1	8.0
Camshaft journal holder bolt		10	1.0	7.0
Cam chain tension adjuster bolt	[F]	23	2.3	16.5
	[R]	7	0.7	5.0
Cam chain tension adjuster mounting bolt		10	1.0	7.0
Cam drive idle gear/sprocket shaft		40	4.0	29.0
Cam chain tensioner mounting bolt		10	1.0	7.0
Cylinder head nut	[M: 8]	25	2.5	18.0
	[M: 6]	10	1.0	7.0
Cylinder head bolt	[M: 10]	47	4.7	34.0
	[M: 6]	10	1.0	7.0
Cylinder nut	[M: 6]	10	1.0	7.0
Water drain bolt	[M: 6]	5.5	0.55	4.0
	[M: 8]	13	1.3	9.5
Clutch sleeve hub nut		150	15.0	108.5
Clutch spring set bolt		10	1.0	7.0
Cam drive idle gear/sprocket nut		70	7.0	50.5
Primary drive gear nut		115	11.5	83.0
Generator cover plug		15	1.5	11.0
Valve timing inspection plug		23	2.3	16.5
Generator rotor bolt		160	16.0	115.5
Starter clutch bolt		26	2.6	19.0
Generator stator set bolt		10	1.0	7.0
Gearshift cam stopper bolt		10	1.0	7.0
Gearshift cam stopper plate bolt		10	1.0	7.0
Gearshift arm stopper bolt		23	2.3	16.5
Oil pressure switch		14	1.4	10.0
Crankcase bolt	[M: 6]	11	1.1	8.0
	[M: 8]	26	2.6	19.0
Generator cover bolt	[M: 6]	11	1.1	8.0
Clutch cover bolt	[M: 6]	11	1.1	8.0
Gearshift cover bolt	[M: 6]	11	1.1	8.0
Water pump case bolt	[M: 6]	11	1.1	8.0
Oil gallery plug	[M: 16]	35	3.5	25.5
	[M: 8]	18	1.8	13.0
Oil drain plug		23	2.3	16.5
Piston cooling oil nozzle screw		8	0.8	6.0
Oil pump mounting bolt		10	1.0	7.0
Conrod bearing cap bolt	(Initial)	35	3.5	25.5
	(Final)	After tightening to the above torque, tighten 1/4 of a turn (90°).		

ITEM		N·m	kgf-m	lb-ft
Exhaust pipe bolt		23	2.3	16.5
Muffler mounting bolt/nut		23	2.3	16.5
Oil cooler union bolt		23	2.3	16.5
Engine sprocket nut		115	11.5	83.0
Engine mounting pinch bolt		23	2.3	16.5
Engine mounting bolt/nut	[M: 12]	75	7.5	54.0
	[M: 10]	55	5.5	40.0
Engine mounting thrust adjuster		12	1.2	8.5
Engine mounting thrust adjuster lock nut		45	4.5	32.5
Engine mounting bracket pinch bolt		23	2.3	16.5
Engine mounting bracket bolt		23	2.3	16.5
Cooling fan thermo-switch		18	1.8	13.0

FI SYSTEM PARTS

ITEM	N·m	kgf-m	lb-ft
Speed sensor rotor bolt	13	1.3	9.5
ECTS	18	1.8	13.0
IATS	18	1.8	13.0
CMPS mounting bolt	8	0.8	5.7
Fuel delivery pipe mounting screw	5	0.5	3.7
Fuel pump mounting bolt	10	1.0	7.3
Throttle body connecting bolt	5	0.5	3.7
Actuator motor cover nut	2	0.2	1.5
TPS and STPS mounting screw	3.5	0.35	2.5

CHASSIS

ITEM	N·m	kgf-m	lb-ft
Steering stem head nut	90	9.0	65.0
Steering stem lock nut	80	8.0	58.0
Front fork upper clamp bolt	23	2.3	16.5
Front fork lower clamp bolt	23	2.3	16.5
Front fork cap bolt	23	2.3	16.5
Front fork inner rod lock nut	20	2.0	14.5
Front fork damper rod bolt	20	2.0	14.5
Front axle	100	10.0	72.5
Front axle pinch bolt	23	2.3	16.5
Handlebar clamp bolt	23	2.3	16.5
Handlebar holder nut	45	4.5	32.5
Front brake master cylinder mounting bolt	10	1.0	7.0
Front brake caliper mounting bolt	39	3.9	28.0
Brake hose union bolt	23	2.3	16.5
Clutch master cylinder mounting bolt	10	1.0	7.0
Clutch hose union bolt	23	2.3	16.5
Air bleeder valve	7.5	0.75	5.5
Brake disc bolt	23	2.3	16.5
Rear brake caliper mounting bolt	23	2.3	16.5
Rear brake caliper sliding pin	27	2.7	19.5
Rear brake master cylinder mounting bolt	10	1.0	7.0
Rear brake master cylinder rod lock nut	18	1.8	13.0
Rear brake pad mounting pin	17	1.7	12.5
Rear brake pad mounting pin plug	2.5	0.25	1.8
Front footrest bracket mounting bolt	26	2.6	19.0
Swingarm pivot shaft	15	1.5	11.0
Swingarm pivot nut	100	10.0	72.5
Swingarm pivot shaft lock nut	90	9.0	65.0
Rear shock absorber mounting nut (Upper and lower)	50	5.0	36.0
Cushion lever mounting nut (Front)	78	7.8	56.5
Cushion rod mounting nut (Upper and lower)	78	7.8	56.5
Rear axle nut	100	10.0	72.5
Rear sprocket nut	60	6.0	43.5
Seat rail mounting bolt	50	5.0	36.0
Cowling brace mounting bolt/nut	35	3.5	25.5

TIGHTENING TORQUE CHART

For other bolts and nuts listed previously, refer to this chart:

Bolt Diameter Ⓐ (mm)	Conventional or "4" marked bolt			"7" marked bolt		
	N·m	kgf-m	lb-ft	N·m	kgf-m	lb-ft
4	1.5	0.15	1.0	2.3	0.23	1.5
5	3	0.3	2.0	4.5	0.45	3.0
6	5.5	0.55	4.0	10	1.0	7.0
8	13	1.3	9.5	23	2.3	16.5
10	29	2.9	21.0	50	5.0	36.0
12	45	4.5	32.5	85	8.5	61.5
14	65	6.5	47.0	135	13.5	97.5
16	105	10.5	76.0	210	21.0	152.0
18	160	16.0	115.5	240	24.0	173.5

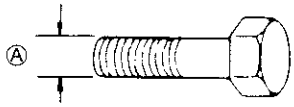

Conventional bolt

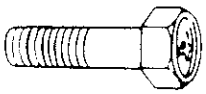

"4" marked bolt

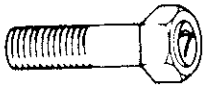

"7" marked bolt

SERVICE DATA

VALVE + GUIDE

Unit: mm (in)

ITEM		STANDARD	LIMIT
Valve diam.	IN.	36 (1.42)	—
	EX.	33 (1.30)	—
Tappet clearance (when cold)	IN.	0.10 – 0.20 (0.004 – 0.008)	—
	EX.	0.20 – 0.30 (0.008 – 0.012)	—
Valve guide to valve stem clearance	IN.	0.010 – 0.037 (0.0004 – 0.0015)	—
	EX.	0.030 – 0.057 (0.0012 – 0.0022)	—
Valve guide I.D.	IN. & EX.	5.500 – 5.512 (0.2165 – 0.2170)	—
Vaive stem O.D.	IN.	5.475 – 5.490 (0.2156 – 0.2161)	—
	EX.	5.455 – 5.470 (0.2148 – 0.2154)	—
Valve stem deflection	IN. & EX.	—	0.35 (0.014)
Valve stem runout	IN. & EX.	—	0.05 (0.002)
Valve head thickness	IN. & EX.	—	0.5 (0.02)
Valve seat width	IN. & EX.	0.9 – 1.1 (0.035 – 0.043)	—
Valve head radial runout	IN. & EX.	—	0.03 (0.001)
Valve spring free length	IN. & EX.	—	39.6 (1.56)
Valve spring tension	IN. & EX.	197 – 227 N (20.1 – 23.1 kgf, 44.3 – 51.0 lbs) at length 35.6 mm (1.40 in)	—

CAMSHAFT + CYLINDER HEAD

Unit: mm (in)

ITEM	STANDARD		LIMIT
Cam height	IN.	36.28 – 36.32 (1.428 – 1.430)	35.98 (1.417)
	EX.	35.68 – 35.72 (1.405 – 1.406)	35.38 (1.393)
Camshaft journal oil clearance	IN. & EX.	0.019 – 0.053 (0.0007 – 0.0021)	0.150 (0.0059)
Camshaft journal holder I.D.	IN. & EX.	22.012 – 22.025 (0.8666 – 0.8671)	—
Camshaft journal O.D.	IN. & EX.	21.972 – 21.993 (0.8650 – 0.8659)	—
Camshaft runout	IN. & EX.	—	0.10 (0.004)
Cam drive idle gear/sprocket thrust clearance	0.15 – 0.29 (0.006 – 0.011)		—
Cylinder head distortion	—		0.05 (0.002)

CYLINDER + PISTON + PISTON RING

Unit: mm (in)

ITEM	STANDARD		LIMIT
Compression pressure (Automatic de-comp. actuated)	1 000 – 1 400 kPa (10 – 14 kgf/cm², 142 – 199 psi)		800 kPa (8 kgf/cm², 114 psi)
Compression pressure difference	—		200 kPa (2 kgf/cm², 28 psi)
Piston to cylinder clearance	0.015 – 0.025 (0.0006 – 0.0010)		0.12 (0.0047)
Cylinder bore	98.000 – 98.015 (3.8583 – 3.8589)		Nicks or Scratches
Piston diam.	97.980 – 97.995 (3.8575 – 3.8581) Measure at 10 mm (0.4 in) from the skirt end.		97.880 (3.8535)
Cylinder distortion	—		0.05 (0.002)
Piston ring free end gap	1st	Approx. 8.8 (0.35)	7.0 (0.28)
	2nd	Approx. 10.1 (0.40)	8.1 (0.32)
Piston ring end gap	1st	0.15 – 0.35 (0.006 – 0.014)	0.5 (0.02)
	2nd	RN 0.30 – 0.45 (0.012 – 0.018)	0.7 (0.03)
Piston ring to groove clearance	1st	—	0.18 (0.0071)
	2nd	—	0.15 (0.0059)

ITEM	STANDARD		LIMIT
Piston ring groove width	1st	0.93 – 0.95 (0.0366 – 0.0374)	—
		1.55 – 1.57 (0.0610 – 0.0618)	—
	2nd	1.01 – 1.03 (0.0398 – 0.0406)	—
	Oil	2.51 – 2.53 (0.0988 – 0.0996)	—
Piston ring thickness	1st	0.86 – 0.91 (0.034 – 0.036)	—
		1.38 – 1.40 (0.054 – 0.055)	—
	2nd	0.97 – 0.99 (0.038 – 0.039)	—
Piston pin bore I.D.	22.002 – 22.008 (0.8662 – 0.8665)		22.030 (0.8673)
Piston pin O.D.	21.992 – 22.000 (0.8658 – 0.8661)		21.980 (0.8654)

CONROD + CRANKSHAFT

Unit: mm (in)

ITEM	STANDARD	LIMIT
Conrod small end I.D.	22.010 – 22.018 (0.8665 – 0.8668)	22.040 (0.8677)
Conrod big end side clearance	0.17 – 0.32 (0.007 – 0.013)	0.50 (0.020)
Conrod big end width	21.95 – 22.00 (0.864 – 0.866)	—
Crank pin width	44.17 – 44.22 (1.739 – 1.741)	—
Conrod big end oil clearance	0.040 – 0.064 (0.0016 – 0.0025)	0.080 (0.0031)
Crank pin O.D.	44.976 – 45.000 (1.7707 – 1.7717)	—
Crankshaft journal oil clearance	0.002 – 0.029 (0.0008 – 0.0011)	0.080 (0.0031)
Crankshaft journal O.D.	47.985 – 48.000 (1.8892 – 1.8898)	—
Crankshaft journal holder width	25.2 – 25.4 (0.99 – 1.00)	—
Crankshaft journal width	25.50 – 25.55 (1.004 – 1.006)	—
Crankshaft runout	—	0.05 (0.004)

OIL PUMP

ITEM	STANDARD	LIMIT
Oil pressure (at 60°C, 140°F)	Above 400 kPa (4.0 kgf/cm², 57 psi) Below 700 kPa (7.0 kgf/cm², 100 psi) at 3 000 r/min.	—

CLUTCH

Unit: mm (in)

ITEM		STANDARD	LIMIT
Drive plate thickness	No.1	2.92 – 3.08 (0.115 – 0.121)	2.62 (0.103)
	No.2 and 3	3.72 – 3.88 (0.146 – 0.153)	3.42 (0.135)
Drive plate claw width	No.1	13.85 – 13.96 (0.545 – 0.550)	13.05 (0.514)
	No.2 and 3	13.90 – 14.00 (0.547 – 0.551)	13.10 (0.516)
Driven plate distortion		—	0.10 (0.004)
Clutch spring free length		61.5 – 62.5 (2.42 – 2.46)	59.4 (2.34)
Clutch master cylinder bore		14.000 – 14.043 (0.5512 – 0.5528)	—
Clutch master cylinder piston diam.		13.957 – 13.984 (0.5495 – 0.5505)	—
Clutch release cylinder bore		35.700 – 35.762 (1.4055 – 1.4079)	—
Clutch release cylinder piston diam.		35.650 – 35.675 (1.4035 – 1.4045)	—

THERMOSTAT + RADIATOR + FAN

ITEM		STANDARD	LIMIT
Thermostat valve opening temperature		86.5 – 89.5 °C (188 – 193 °F)	—
Thermostat valve lift		Over 8 mm (0.31 in) at 100 °C (212 °F)	—
Radiator cap valve opening pressure		110 kPa (1.1 kgf/cm², 15.6 psi)	—
Cooling fan thermoswitch operating temperature	ON→OFF	Approx. 105 °C (221°F)	—
	ON→OFF	Approx. 100 °C (212°F)	—
Engine coolant temperature sensor resistance	20 °C (68 °F)	Approx. 2.45 kΩ	—
	40 °C (104 °F)	Approx. 1.148 kΩ	—
	60 °C (140 °F)	Approx. 0.587 kΩ	—
	80 °C (176 °F)	Approx. 0.322 kΩ	—

DRIVE TRAIN

Unit: mm (in) Expect ratio

ITEM		STANDARD		LIMIT
Primary reduction ratio		1.838 (57/31)		—
Final reduction ratio		2.411 (41/17)		—
Gear ratio	Low	3.000 (36/12)		—
	2nd	1.933 (29/15)		—
	3rd	1.500 (27/18)		—
	4th	1.227 (27/22)		—
	5th	1.086 (25/23)		—
	Top	0.913 (21/23)		—
Shift fork to groove clearance		0.1 – 0.3 (0.004 – 0.012)		0.50 (0.020)
Shift fork groove width		5.0 – 5.1 (0.197 – 0.201)		—
Shift fork thickness		4.8 – 4.9 (0.189 – 0.193)		—
Drive chain		Type	RK525SMOZ7	—
		Links	112 links, ENDLESS	—
		20-pitch length	—	319.4 (12.6)
Drive chain slack		20 – 30 (0.8 – 1.2)		—
Gearshift lever height		25 (1.0)		—

INJECTOR + FUEL PUMP + FUEL PRESSURE REGURATOR

ITEM	SPECIFICATION	NOTE
Injector resistance	12 – 18 Ω at 20 °C (68°F)	
Fuel pump discharge amount	Approx. 1.2 L (1.3/1.1 US/Imp qt) for 30 seconds at 300 kPa (3.0 kgf/cm², 43 psi)	
Fuel pressure regulator operating set pressure	Approx. 300 kPa (3.0 kgf/cm², 43 psi)	

FI-SENSORS

ITEM	SPECIFICATION		NOTE
CMP sensor peak voltage	More than 3.7 V		
CKP sensor resistance	130 – 240 Ω		
CKP sensor peak voltage	More than 3.7 V (When cranking)		
IAP sensor input voltage	4.5 – 5.5 V		
IAP sensor output voltage	Approx. 2.5 V at idle speed		
TP sensor input voltage	4.5 – 5.5 V		
TP sensor resistance	Closed	Approx. 1.1 kΩ	
	Opened	Approx. 4.3 kΩ	
TP sensor output voltage	Closed	Approx. 1.1 V	
	Opened	Approx. 4.3 V	
ECT sensor input voltage	4.5 – 5.5 V		
ECT sensor reisitance	Approx. 2.45 kΩ at 20 °C (68°F)		
IAT sensor input volatage	4.5 – 5.5 V		
IAT sensor resistance	Approx 2.45 kΩ at 20 °C (68°F)		
AP sensor input voltage	4.5 – 5.5 V		
AP sensor output voltage	Approx. 4.0 V at 760 mmHg (100kPa)		
TO sensor resistance	19.1 – 19.7 kΩ		
TO sensor voltage	Approx. 0.4 – 1.4 V		
GP switch voltage	More than 1.0 V (From 1st to top)		
Injector voltage	Battery voltage		
Ignition coil primary peak voltage	More than 150 V (When cranking)		
STP sensor input voltage	4.5 – 5.5 V		
STP sensor resistance	Closed	Approx. 1.1 kΩ	
	Opened	Approx. 4.3 kΩ	
STP sensor output voltage	Closed	Approx. 1.1 V	
	Opened	Approx. 4.3 V	
STV actuator resistance	4.8 – 7.2 Ω		
Heated oxygen sensor output voltage	less than 0.4 V at idle speed (After warming up)		European markets
Heated oxygen sensor resistance	4 – 5 Ω at 23 °C (73.4 °F)		
PAIR solenoid valve resistance	20 – 24 Ω at 20 °C (68 °F)		

THROTTLE BODY

ITEM	SPECIFICATION
ID No.	06G0 (For E-02, 19), 06G1 (For E-33), 06G2 (For E-03, 24, 28)
Bore size	45 mm
Fast idle r/min	1 500 – 2 100 r/min at 25 °C (77 °F)
Idle r/min	1 200 ± 100 r/min/Warmed engine
Throttle cable play	2.0 – 4.0 r/min (0.08 – 0.16 in)

ELECTRICAL

Unit: mm (in)

ITEM			SPECIFICATION		NOTE
Ignition timing			4° B.T.D.C. at 1 200 r/min		
Firing order			1·2		
Spark plug			Type	NGK: CR8EK Denso: U24ETR	
			Gap	0.6 – 0.7 (0.024 – 0.028)	
Spark performance			Over 8 (0.3) at 1 atm.		
Crankshaft position sensor resistance			130 – 240 Ω		Bl – G
Ignition coil resistance			Primary	2 – 5 Ω	⊕ tap – ⊖ tap
			Secondary	24 – 37 kΩ	⊕ tap – Plug cap
Crankshaft position sensor peak voltage			More than 3.7 V		When cranking
Ignition coil primary peak voltage			More than 150 V		When cranking
Generator coil resistance			0.2 – 0.5 Ω		Y – Y
Generator Max. output			Approx. 350 W at 5 000 r/min		
Generator no-load voltage (When engine is cold)			More than 75 V (AC) at 5 000 r/min		
Regulated voltage			14.0 – 15.5 V at 5 000 r/min		
Starter relay resistance			3 – 6 Ω		
Battery	Type designation		FTX14-BS		
	Capacity		12 V 43.2 kC (12 Ah)/10 HR		
Fuze size	Headlight	HI	15 A		
		LO	15 A		
	Turn signal		15 A		
	Ignition		15 A		
	Fan motor		15 A		
	Meter		10 A		
	Main		30 A		

WATTAGE

Unit: W

ITEM		SPECIFICATION	
		E-03, 24, 28, 33	The others
Headlight	HI	60 × 2	←
	LO	55 × 2	←
Position light			5 × 2
Brake light/Taillight		21/5 × 2	←
Turn signal light		10 × 4	←
Speedometer Tachometer light		LED	←
Turn signal indicator light		LED	←
High beam indicator light		LED	←
Neutral indicator light		LED	←
Over drive indicator light		LED	←
Coolant temperature warning light		LED	←
Oil pressure warning light		LED	←
Fuel injection warning light		LED	←
License light		5	←

BRAKE + WHEEL

Unit: mm (in)

ITEM	STANDARD		LIMIT
Rear brake pedal height	20 – 30 (0.8 – 1.2)		—
Brake disc thickness	Front	5.0 ± 0.2 (0.197 ± 0.008)	4.5 (0.18)
	Rear	5.0 ± 0.2 (0.197 ± 0.008)	4.5 (0.18)
Brake disc runout (Front & Rear)	—		0.30 (0.012)
Master cylinder bore	Front	15.870 – 15.913 (0.6248 – 0.6265)	—
	Rear	14.000 – 14.043 (0.5512 – 0.5529)	—
Master cylinder piston diam.	Front	15.827 – 15.854 (0.6231 – 0.6242)	—
	Rear	13.957 – 13.984 (0.5495 – 0.5506)	—
Brake caliper cylinder bore	Front	30.230 – 30.306 (1.1902 – 1.1931)	—
	Rear	38.180 – 38.230 (1.5031 – 1.5051)	—
Brake caliper piston diam.	Front	30.150 – 30.200 (1.1870 – 1.1890)	—
	Rear	38.098 – 38.148 (1.4999 – 1.5019)	—
Wheel rim runout (Front & Rear)	Axial	—	2.0 (0.08)
	Radial	—	2.0 (0.08)

ITEM	STANDARD		LIMIT
Wheel axle runout	Front	—	0.25 (0.010)
	Rear	—	0.25 (0.010)
Wheel rim size	Front	19M/C × MT 2.50	—
	Rear	17M/C × MT 4.00	—
Tire size	Front	110/80R19M/C 59H	—
	Rear	150/70R17M/C 69H	—
Tire type	Front	BRIDGESTONE: TW101 F	—
	Rear	BRIDGESTONE: TW152 F	—
Tire tread depth	Front	—	1.6 (0.06)
	Rear	—	2.0 (0.08)

SUSPENSION

Unit: mm (in)

ITEM	STANDARD		LIMIT
Front fork stroke	160 (6.3)		—
Front fork spring free length	—		442 (17.4)
Front fork oil level (without spring, inner tube fully compressed)	133.0 (5.24)		—
Rear shock absorber spring adjuster	2nd groove from bottom		—
Rear shock absorber damping force adjuster	Rebound	⅞ turn out from stiffest position	—
Rear wheel travel	159 (6.3)		—
Swingarm pivot shaft runput	—		0.3 (0.01)

TIRE PRESSURE

COLD INFLATION TIRE PRESSURE	SOLO RIDING			DUAL RIDING		
	kPa	kgf/cm²	psi	kPa	kgf/cm²	psi
FRONT	250	2.50	36	250	2.50	36
REAR	250	2.50	36	280	2.80	41

FUEL + OIL + ENGINE COOLANT

ITEM	SPECIFICATION		NOTE
Fuel type	Use only unleaded gasoline of at least 87 pump octane ($\frac{R+M}{2}$) or 91 octane or higher rated by the research method. Gasoline containing MTBE (Methyl Tertiary Butyl Ether), less than 10% ethanol, or less than 5% methanol with appropriate cosolvents and corrosion inhibitor is permissible.		E-03, 28, 33
	Gasoline used should be graded 91 octane or higher. An unleaded gasoline is recommended.		The others
Fuel tank	17L (4.5/3.7 US/Imp gal)		
Engine oil type	SAE 10W/40, API SF or SG		
Engine oil capacity	Change	2 700 ml (2.9/2.4 US/Imp qt)	
	Filter change	2 900 ml (3.1/2.6 US/Imp qt)	
	Overhaul	3 300 ml (3.5/2.9 US/Imp qt)	
Front fork oil type	SUZUKI FORK OIL SS-08 or an equivalent fork oil		
Front fork oil capacity (each leg)	505.0 ml (17.07/17.78 US/Imp oz)		
Brake fluid type	DOT 4		
Engine coolant type	Use an anti-freeze/coolant compatible with aluminum radiator, mixed with distilled water only, at the ratio of 50:50.		
Engien coolant	Reserve tank side	Approx. 250 ml (0.3/0.2 US/Imp qt)	
	Engine side	Approx. 1 950 ml (2.1/1.7 US/Imp qt)	

EMISSION CONTROL INFORMATION

CONTENTS

EMISSION CONTROL SYSTEMS 9-2
FUEL INJECTION SYSTEM 9-2
CRANKCASE EMISSION CONTROL SYSTEM 9-3
EXHAUST EMISSION CONTROL SYSTEM (PAIR SYSTEM) 9-4
NOISE EMISSION CONTROL SYSTEM 9-5
EVAPORATIVE EMISSION CONTROL SYSTEM
(Only for E-33) 9-5
PAIR (AIR SUPPLY) SYSTEM INSPECTION 9-6
PAIR (AIR SUPPLY) SYSTEM HOSE ROUTING 9-7
EVAPORATIVE EMISSION CONTROL SYSTEM INSPECTION
(Only for E-33) 9-8
CANISTER HOSE ROUTING (Only for E-33) 9-9

EMISSION CONTROL SYSTEMS

FUEL INJECTION SYSTEM

DL1000 motorcycles are equipped with a fuel injection system for emission level control.

This fuel injection system is precision designed, manufactured and adjusted to comply with the applicable emission limits.

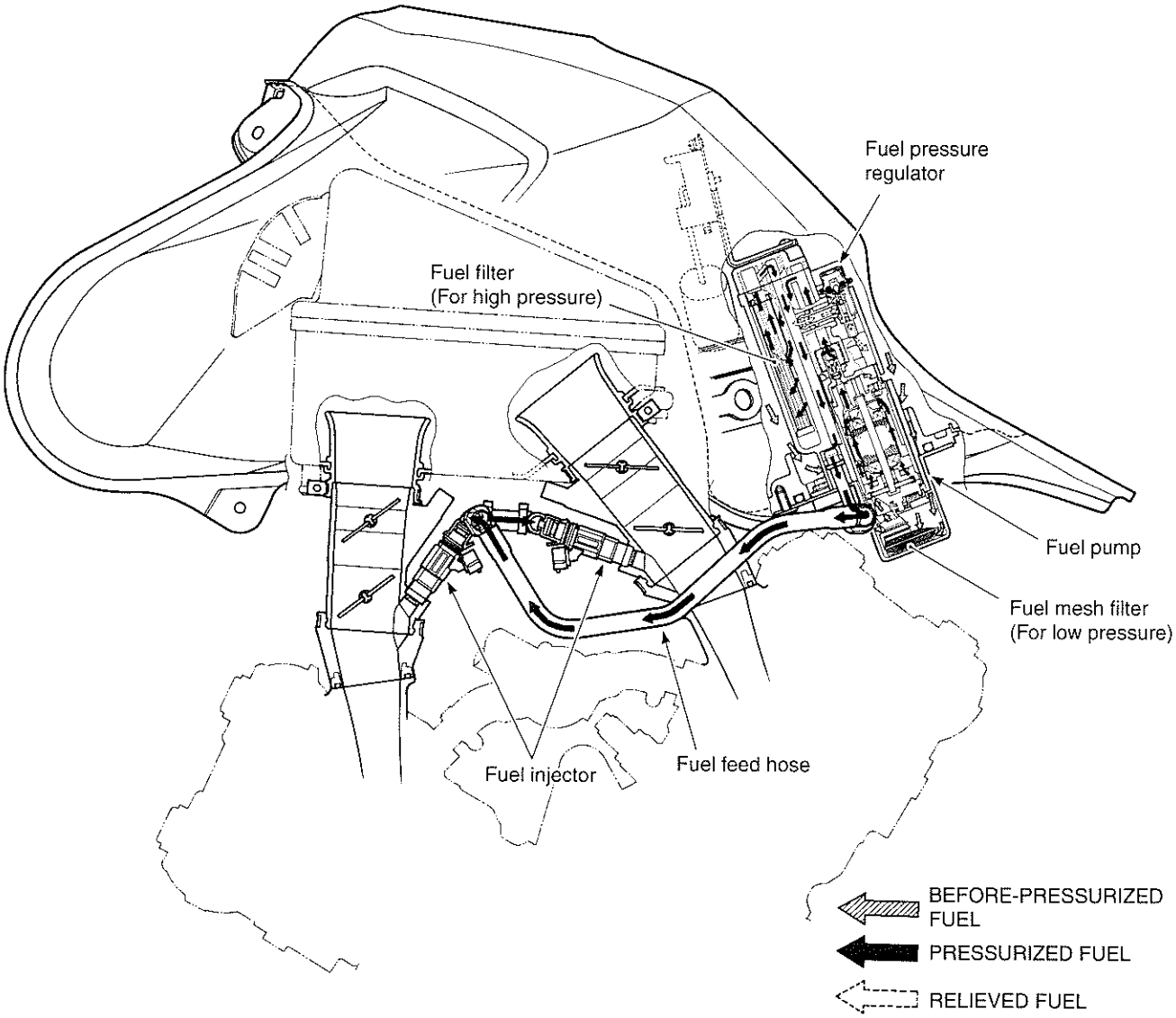

CRANKCASE EMISSION CONTROL SYSTEM

The engine is equipped with a PCV system. Blow-by gas in the engine is constantly drawn into the crankcase, which is returned to the combustion chamber through the breather hose, air cleaner and throttle body.

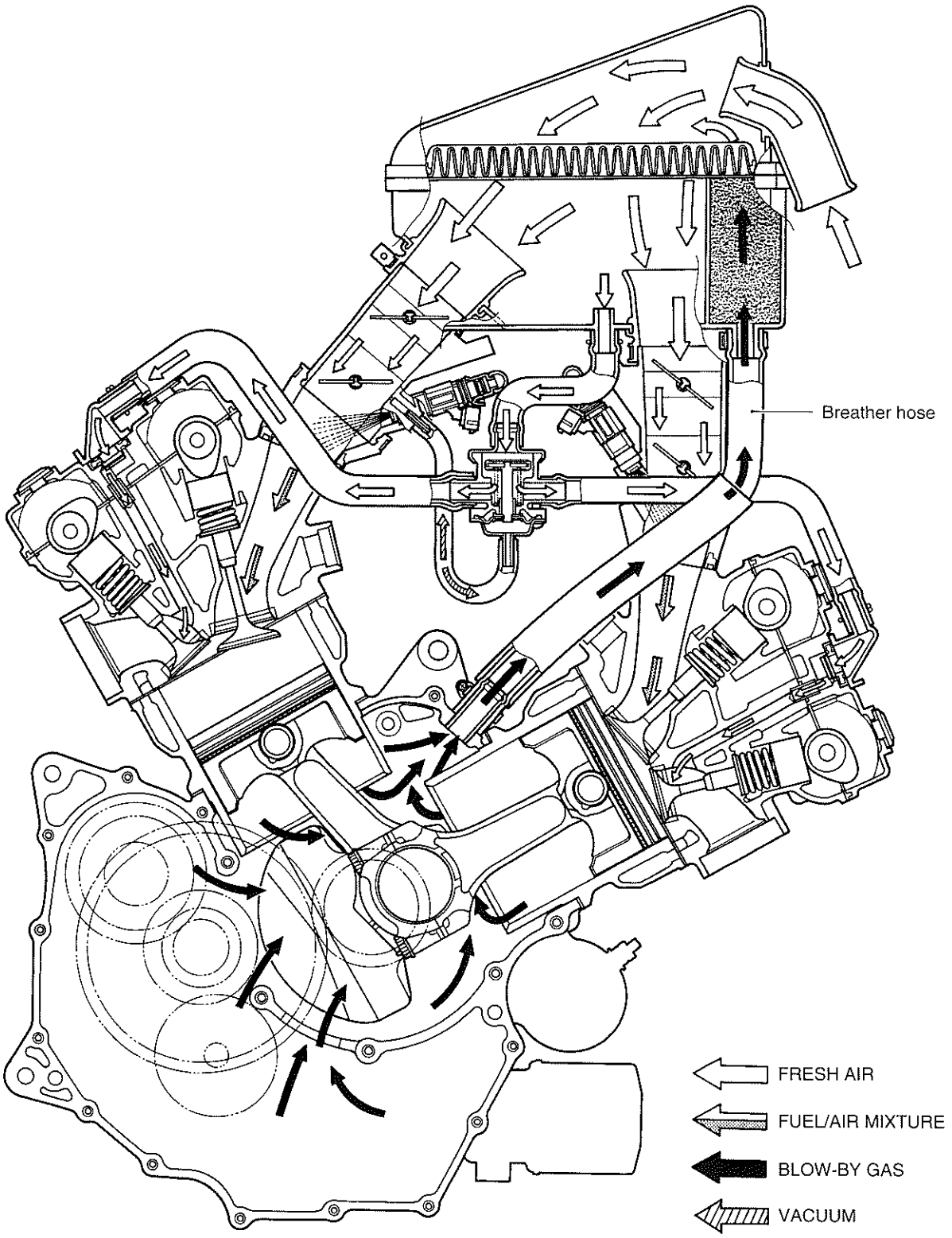

EXHAUST EMISSION CONTROL SYSTEM (PAIR SYSTEM)

The exhaust emission control system is composed of the PAIR system and *THREE-WAY CATALYST system. The fresh air is drawn into the exhaust port with the **PAIR solenoid valve and PAIR reed valve. The PAIR solenoid valve is operated by the ECM, and the fresh air flow is controlled according to the TPS, ECTS, IATS, IAPS and CKPS.

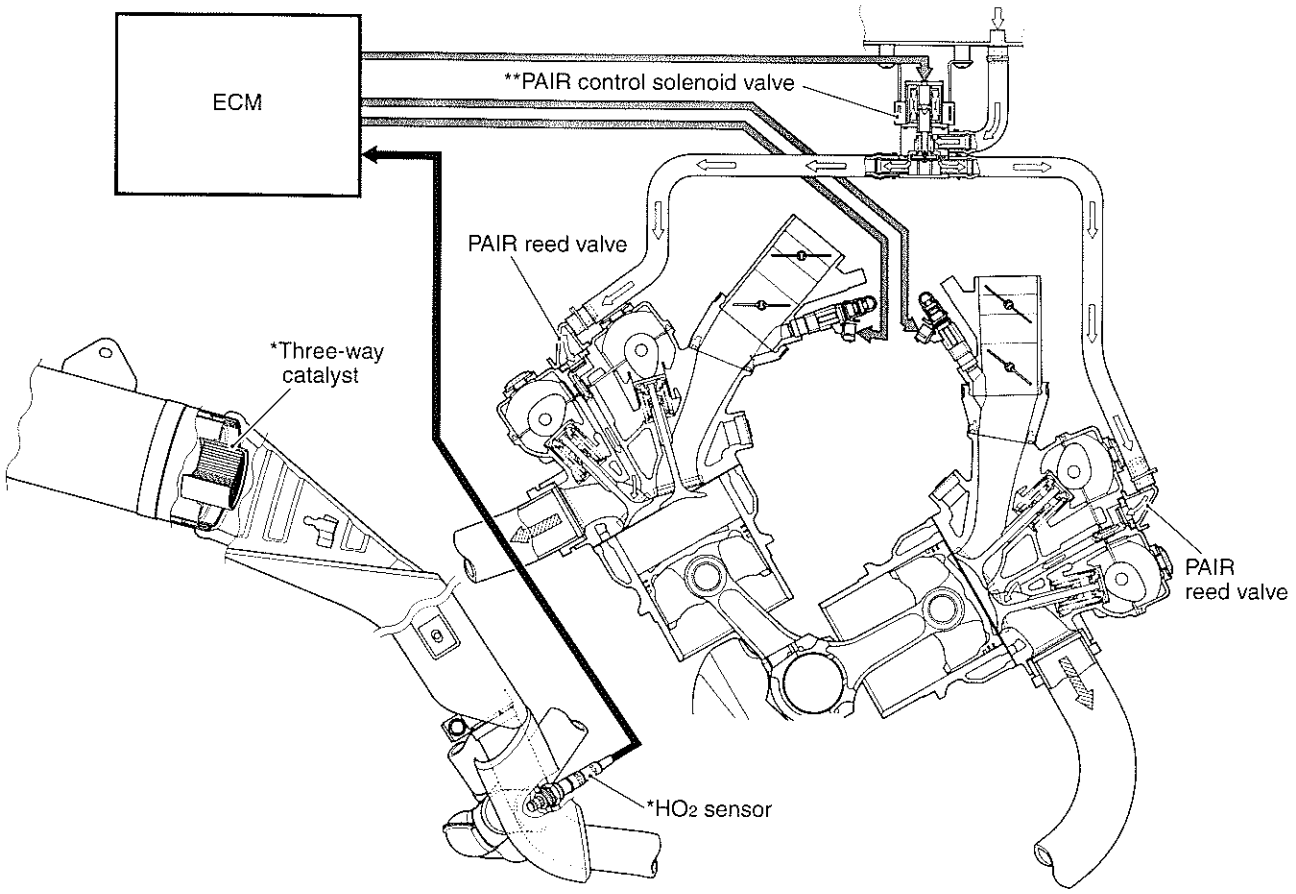

* Except for USA
** For USA model is operated by the vacuum.

FRESH AIR
EXHAUST GAS

NOISE EMISSION CONTROL SYSTEM

TAMPERING WITH THE NOISE CONTROL SYSTEM PROHIBITED: Federal law prohibits the following acts or the causing thereof:

1. The removal or rendering inoperative by any person, other than for purposes of maintenance, repair or replacement, of any device or element of design incorporated into any new vehicle for the purpose of noise control prior to its sale or delivery to the ultimate purchaser or while it is in use, or
2. The use of the vehicle after such device or element of design has been removed or rendered inoperative by any person.

AMONG THOSE ACTS PRESUMED TO CONSTITUTE TAMPERING ARE THE ACTS LISTED BELOW:

- Removing or puncturing the muffler, baffles, header pipes, screen type spark arrester (if equipped) or any other component which conducts exhaust gases.
- Removing or puncturing the air cleaner case, air cleaner cover, baffles or any other component which conducts intake air.
- Replacing the exhaust system or muffler with a system or muffler not marked with the same model specific code as the code listed on the Motorcycle Noise Emission Control Information label.

EVAPORATIVE EMISSION CONTROL SYSTEM (Only for E-33)

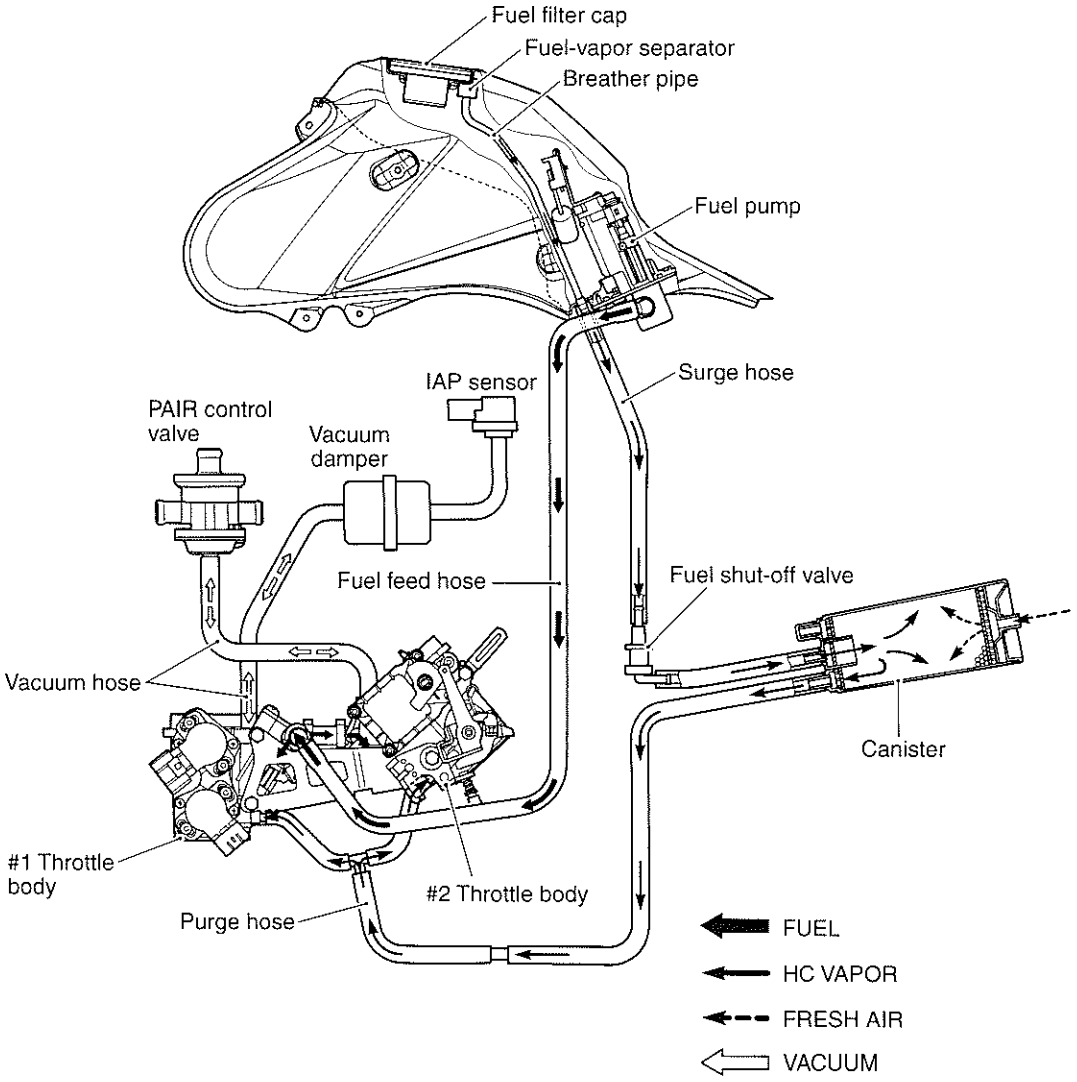

PAIR (AIR SUPPLY) SYSTEM INSPECTION

HOSES

- Inspect the hoses for wear or damage.
- Inspect that the hoses are securely connected.

PAIR REED VAVLE

- Remove the PAIR reed valve cover.
- Inspect the reed valve for the carbon deposit.
- If the carbon deposit is found in the reed valve, replace the PAIR reed valve with a new one

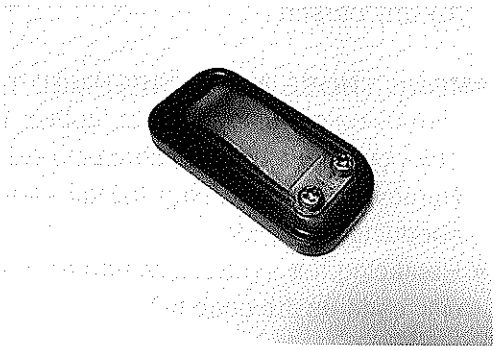

PAIR CONTROL VALVE

- Remove the air cleaner box and PAIR control valve.
- Check that air flows through the PAIR control valve air inlet port to the air outlet ports.
- If air does not flow out, replace the PAIR control valve with a new one.

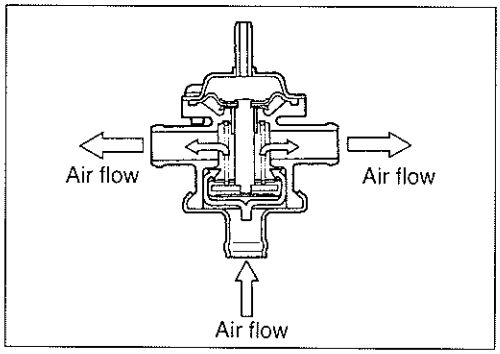

- Connect the vacuum pump gauge to the vacuum port of the control valve as shown in the illustration.
- Apply negative pressure of the specification slowly to the control valve and inspect the air flow.
- If air does not flow to the pump, the control valve is in normal condition.
- If the control valve does not properly function within the specification, replace the control valve with a new one.

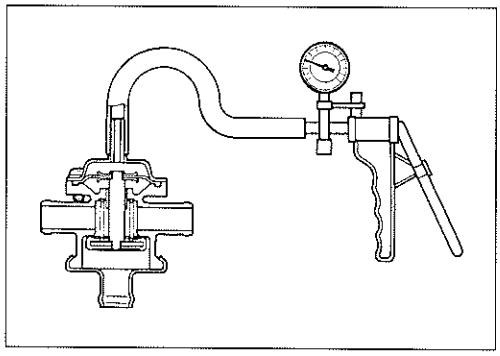

DATA Negative pressure range: –53.3 kPa (–392 mmHg)

TOOL 09917-47010: Vacuum pump gauge

CAUTION

Use a hand operated vacuum pump to prevent the control valve damage.

- Installation is in the reverse order of removal.

PAIR (AIR SUPPLY) SYSTEM HOSE ROUTING

For USA/CANADA/AUSTRALIA

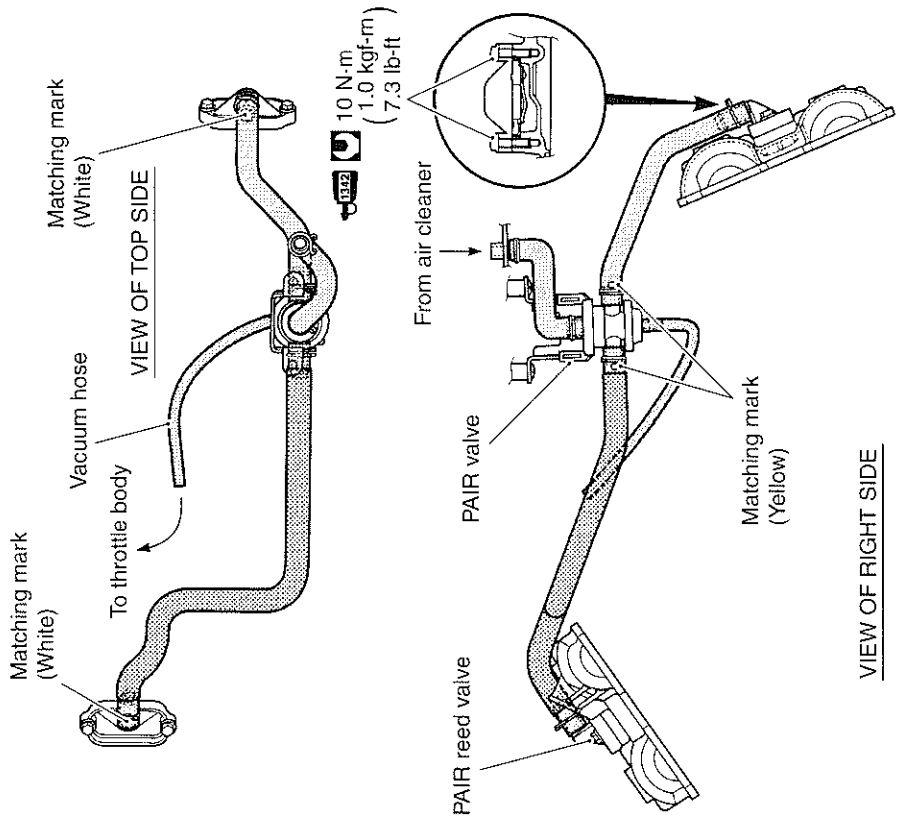

For European markets

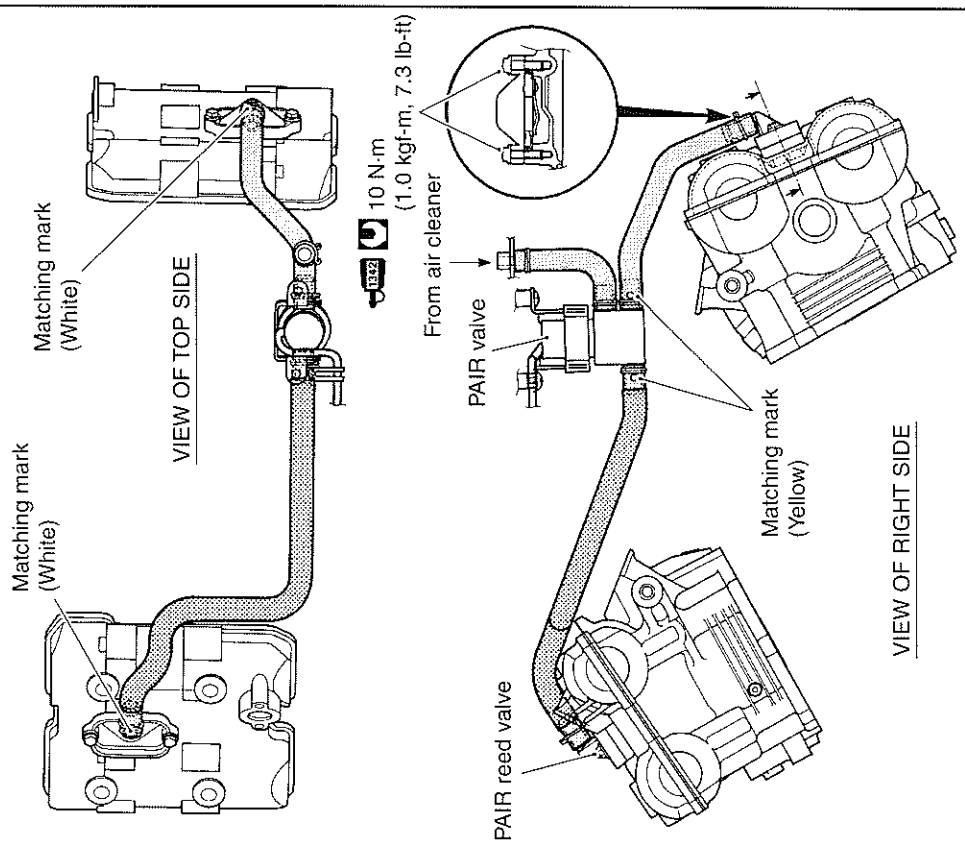

EVAPORATIVE EMISSION CONTROL SYSTEM INSPECTION (Only for E-33)

- Remove the seat and frame cover.
- Remove the fuel tank. (☞4-56)

HOSES

Inspect the hoses for wear or damage.
Make sure that the hoses are securely connected.

CANISTER

Inspect the canister for damage to the body.

CANISTER HOSE ROUTING (Only for E-33)

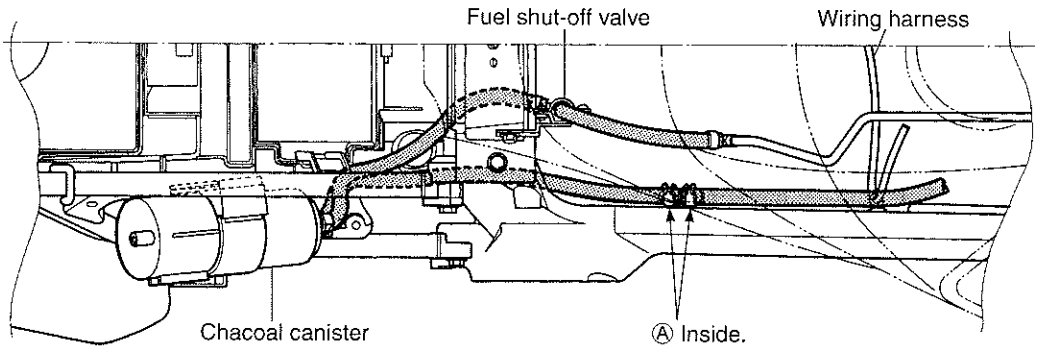

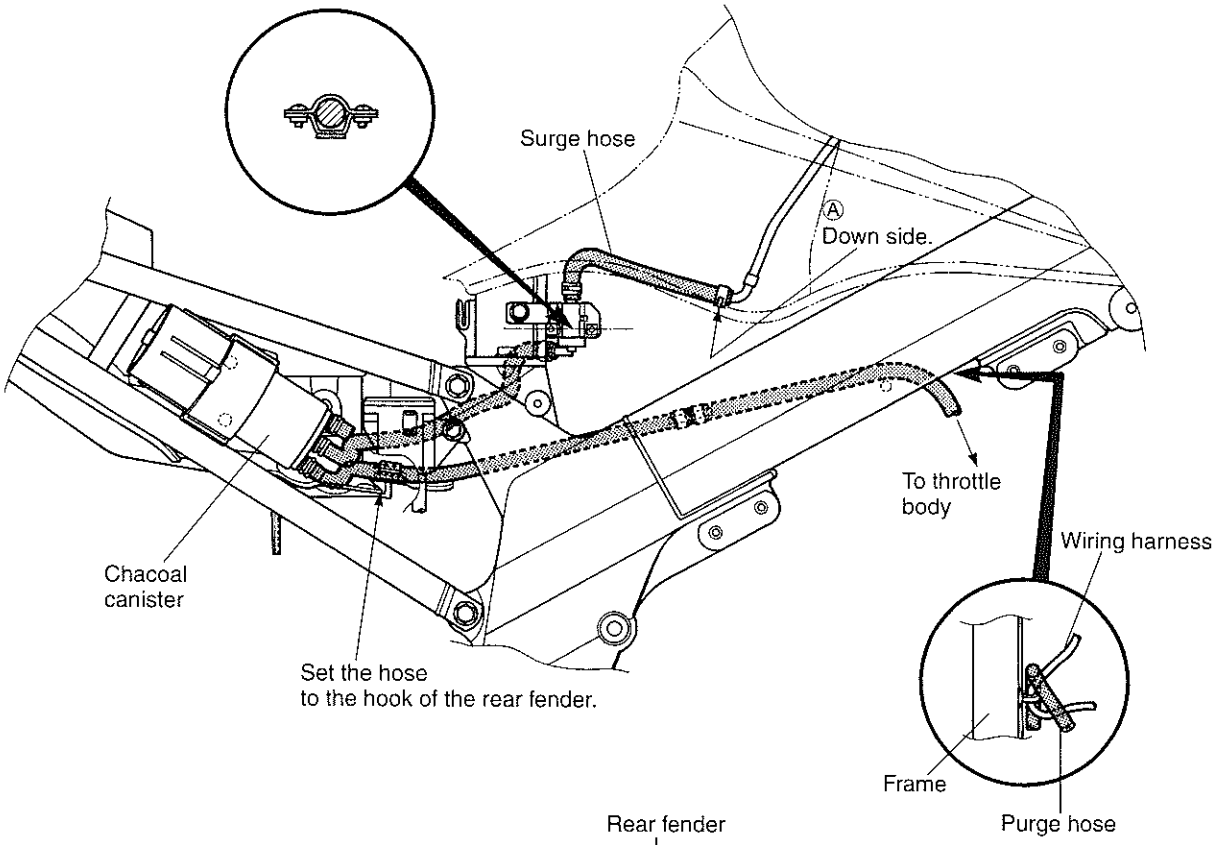

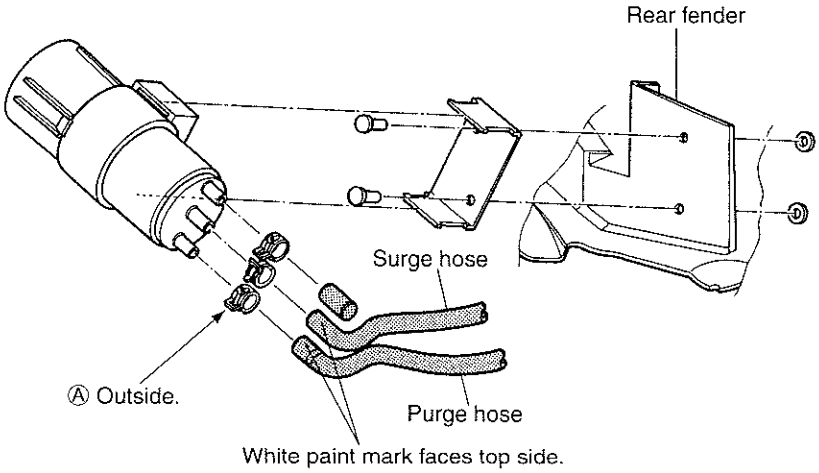

Ⓐ Clamp ends should face..... .

WIRING DIAGRAM
FI SYSTEM WIRING DIAGRAM

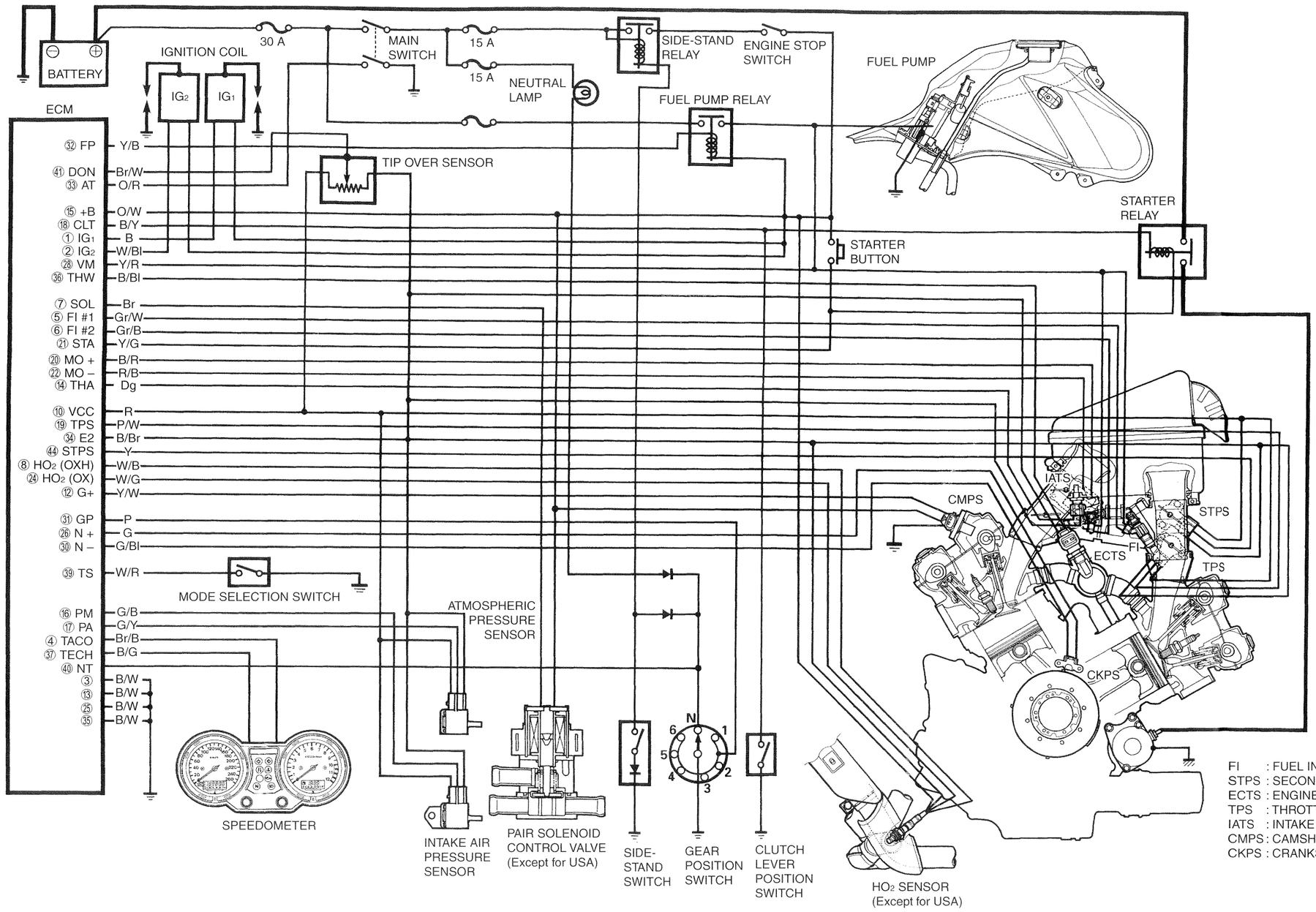

FI : FUEL INJECTOR
STPS : SECONDARY THROTTLE POSITION SENSOR
ECTS : ENGINE COOLANT TEMP. SENSOR
TPS : THROTTLE POSITION SENSOR
IATS : INTAKE AIR TEMP. SENSOR
CMPS : CAMSHAFT POSITION SENSOR
CKPS : CRANKSHAFT POSITION SENSOR

WIRING DIAGRAM

E-02, 19

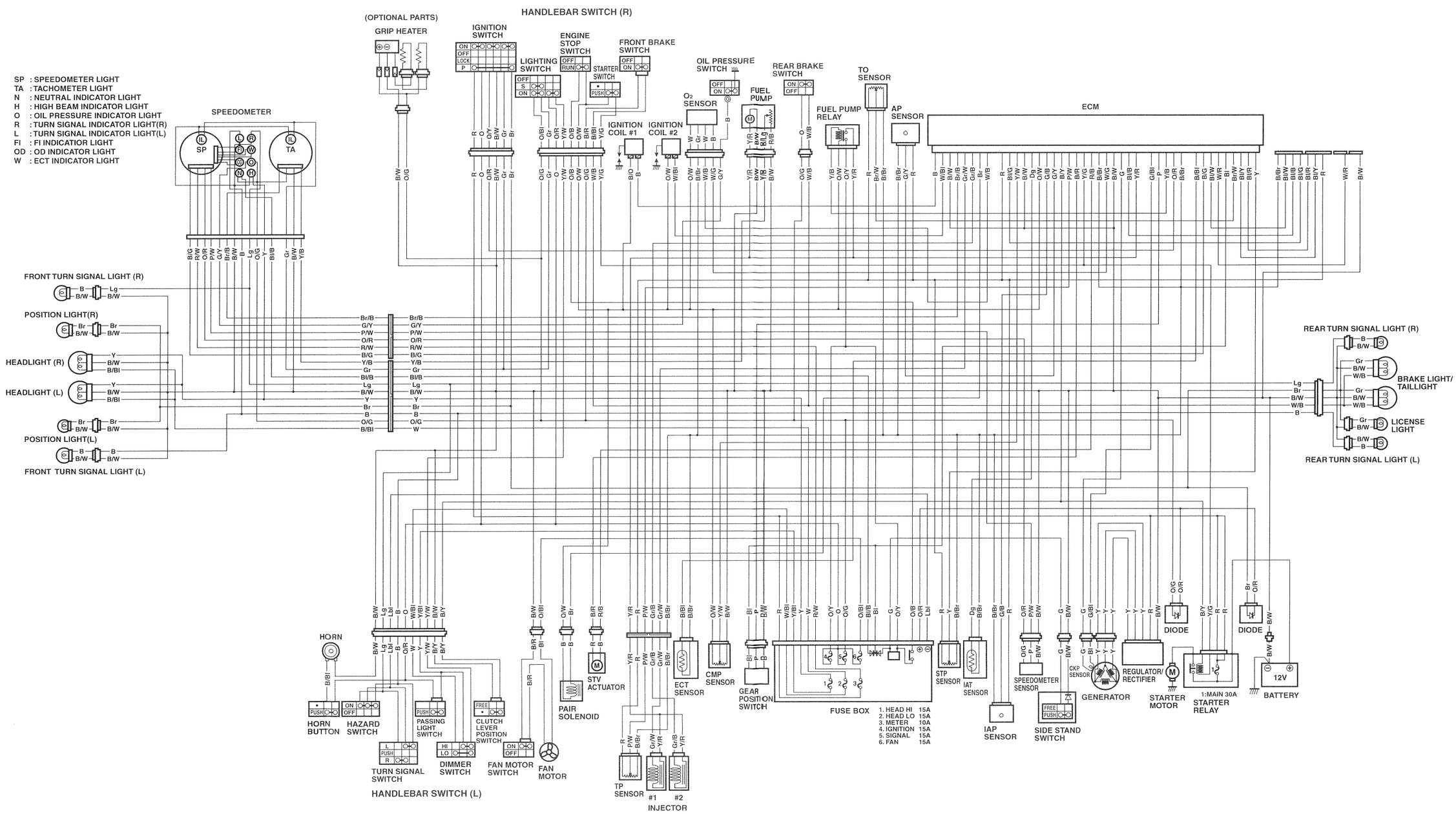

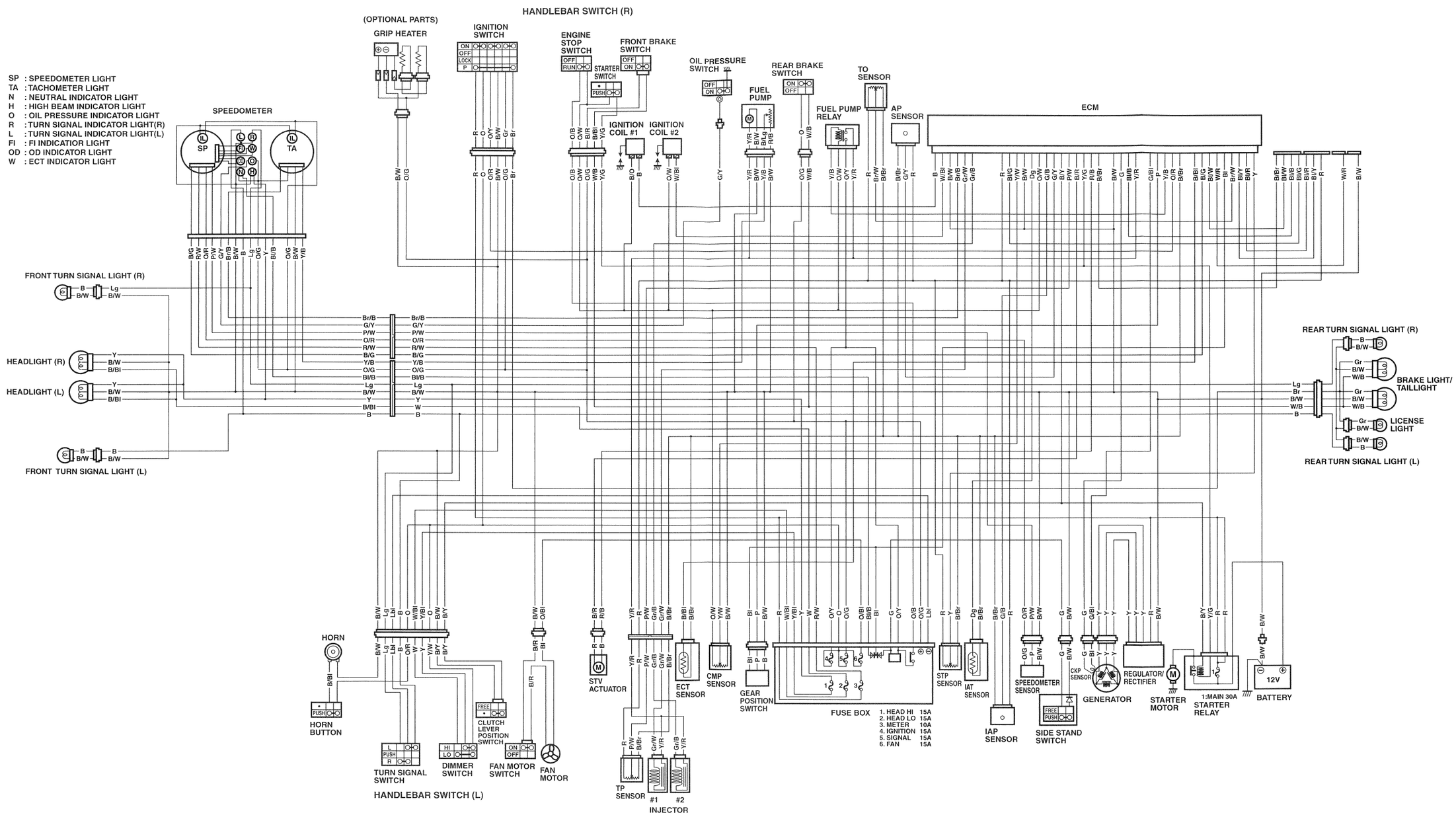
SP : SPEEDOMETER LIGHT
TA : TACHOMETER LIGHT
N : NEUTRAL INDICATOR LIGHT
H : HIGH BEAM INDICATOR LIGHT
O : OIL PRESSURE INDICATOR LIGHT
R : TURN SIGNAL INDICATOR LIGHT(R)
L : TURN SIGNAL INDICATOR LIGHT(L)
FI : FI INDICATIOR LIGHT
OD : OD INDICATOR LIGHT
W : ECT INDICATOR LIGHT
SPEEDOMETER
(OPTIONAL PARTS)
GRIP HEATER
IGNITION SWITCH
HANDLEBAR SWITCH (R)
ENGINE STOP SWITCH
STARTER SWITCH
FRONT BRAKE SWITCH
OIL PRESSURE SWITCH
FUEL PUMP
REAR BRAKE SWITCH
TO SENSOR
FUEL PUMP RELAY
AP SENSOR
ECM
IGNITION COIL #1
IGNITION COIL #2
FRONT TURN SIGNAL LIGHT (R)
HEADLIGHT (R)
HEADLIGHT (L)
FRONT TURN SIGNAL LIGHT (L)
REAR TURN SIGNAL LIGHT (R)
BRAKE LIGHT/ TAILLIGHT
LICENSE LIGHT
REAR TURN SIGNAL LIGHT (L)
HORN
HORN BUTTON
TURN SIGNAL SWITCH
DIMMER SWITCH
CLUTCH LEVER POSITION SWITCH
FAN MOTOR SWITCH
FAN MOTOR
HANDLEBAR SWITCH (L)
STV ACTUATOR
ECT SENSOR
CMP SENSOR
GEAR POSITION SWITCH
FUSE BOX
1. HEAD HI 15A
2. HEAD LO 15A
3. METER 10A
4. IGNITION 15A
5. SIGNAL 15A
6. FAN 15A
STP SENSOR
IAT SENSOR
SPEEDOMETER SENSOR
IAP SENSOR
SIDE STAND SWITCH
CKP SENSOR
GENERATOR
REGULATOR/ RECTIFIER
STARTER MOTOR
1:MAIN 30A
STARTER RELAY
12V
BATTERY
TP SENSOR
#1
#2
INJECTOR

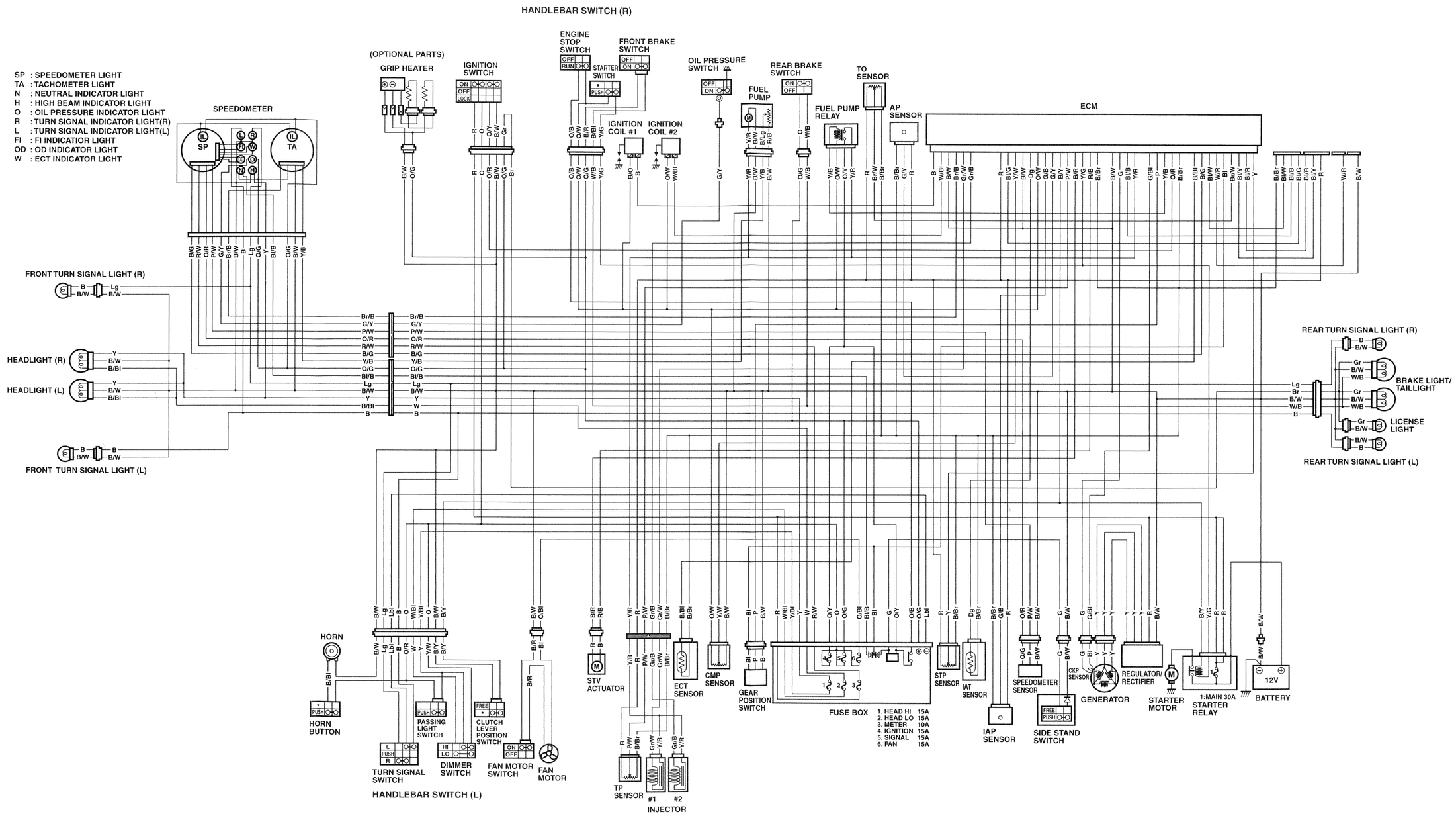
SP : SPEEDOMETER LIGHT
TA : TACHOMETER LIGHT
N : NEUTRAL INDICATOR LIGHT
H : HIGH BEAM INDICATOR LIGHT
O : OIL PRESSURE INDICATOR LIGHT
R : TURN SIGNAL INDICATOR LIGHT(R)
L : TURN SIGNAL INDICATOR LIGHT(L)
FI : FI INDICATIOR LIGHT
OD : OD INDICATOR LIGHT
W : ECT INDICATOR LIGHT
SPEEDOMETER
HANDLEBAR SWITCH (R)
(OPTIONAL PARTS)
GRIP HEATER
IGNITION SWITCH
ENGINE STOP SWITCH
STARTER SWITCH
FRONT BRAKE SWITCH
OIL PRESSURE SWITCH
REAR BRAKE SWITCH
FUEL PUMP
FUEL PUMP RELAY
TO SENSOR
AP SENSOR
ECM
IGNITION COIL #1
IGNITION COIL #2
FRONT TURN SIGNAL LIGHT (R)
HEADLIGHT (R)
HEADLIGHT (L)
FRONT TURN SIGNAL LIGHT (L)
REAR TURN SIGNAL LIGHT (R)
BRAKE LIGHT/ TAILLIGHT
LICENSE LIGHT
REAR TURN SIGNAL LIGHT (L)
HORN
HORN BUTTON
PASSING LIGHT SWITCH
CLUTCH LEVER POSITION SWITCH
TURN SIGNAL SWITCH
DIMMER SWITCH
FAN MOTOR SWITCH
FAN MOTOR
HANDLEBAR SWITCH (L)
STV ACTUATOR
ECT SENSOR
CMP SENSOR
GEAR POSITION SWITCH
FUSE BOX
1. HEAD HI 15A
2. HEAD LO 15A
3. METER 10A
4. IGNITION 15A
5. SIGNAL 15A
6. FAN 15A
STP SENSOR
IAT SENSOR
SPEEDOMETER SENSOR
CKP SENSOR
GENERATOR
REGULATOR/ RECTIFIER
STARTER MOTOR
1:MAIN 30A
STARTER RELAY
BATTERY
12V
IAP SENSOR
SIDE STAND SWITCH
TP SENSOR
#1
#2
INJECTOR