SUZUKI

GSX1300BK

B-KING

SERVICE MANUAL

SAMPLE

99500-39320-01E

FOREWORD

This manual contains an introductory description on the SUZUKI GSX1300BK and procedures for its inspection/service and overhaul of its main components.
Other information considered as generally known is not included.
Read the GENERAL INFORMATION section to familiarize yourself with the motorcycle and its maintenance. Use this section as well as other sections to use as a guide for proper inspection and service.
This manual will help you know the motorcycle better so that you can assure your customers of fast and reliable service.

- *This manual has been prepared on the basis of the latest specifications at the time of publication. If modifications have been made since then, differences may exist between the content of this manual and the actual motorcycle.*
- *Illustrations in this manual are used to show the basic principles of operation and work procedures. They may not represent the actual motorcycle exactly in detail.*
- *This manual is written for persons who have enough knowledge, skills and tools, including special tools, for servicing SUZUKI motorcycles. If you do not have the proper knowledge and tools, ask your authorized SUZUKI motorcycle dealer to help you.*

⚠ WARNING

Inexperienced mechanics or mechanics without the proper tools and equipment may not be able to properly perform the services described in this manual.
Improper repair may result in injury to the mechanic and may render the motorcycle unsafe for the rider and passenger.

SAMPLE

SUZUKI MOTOR CORPORATION

© COPYRIGHT SUZUKI MOTOR CORPORATION 2007

TABLE OF CONTENTS

Precautions 00-i
Precautions 00-1

General Information 0-i
General Information 0A-1
Maintenance and Lubrication 0B-1
Service Data 0C-1

Engine 1-i
Precautions 1-1
Engine General Information and Diagnosis 1A-1
Emission Control Devices 1B-1
Engine Electrical Devices 1C-1
Engine Mechanical 1D-1
Engine Lubrication System 1E-1
Engine Cooling System 1F-1
Fuel System 1G-1
Ignition System 1H-1
Starting System 1I-1
Charging System 1J-1
Exhaust System 1K-1

Suspension 2-i
Precautions 2-1
Suspension General Diagnosis 2A-1
Front Suspension 2B-1
Rear Suspension 2C-1
Wheels and Tires 2D-1

Driveline / Axle 3-i
Precautions 3-1
Drive Chain / Drive Train / Drive Shaft 3A-1

Brake 4-i
Precautions 4-1
Brake Control System and Diagnosis 4A-1
Front Brakes 4B-1
Rear Brakes 4C-1

Transmission / Transaxle 5-i
Precautions 5-1
Manual Transmission 5B-1
Clutch 5C-1

Steering 6-i
Precautions 6-1
Steering General Diagnosis 6A-1
Steering / Handlebar 6B-1

Body and Accessories 9-i
Precautions 9-1
Wiring Systems 9A-1
Lighting Systems 9B-1
Combination Meter / Fuel Meter / Horn 9C-1
Exterior Parts 9D-1
Body Structure 9E-1

SAMPLE

SUZUKI

GSX1300BK

B-KING

SERVICE MANUAL

SAMPLE

99500-39320-01E

FOREWORD

This manual contains an introductory description on the SUZUKI GSX1300BK and procedures for its inspection/service and overhaul of its main components.
Other information considered as generally known is not included.
Read the GENERAL INFORMATION section to familiarize yourself with the motorcycle and its maintenance. Use this section as well as other sections to use as a guide for proper inspection and service.
This manual will help you know the motorcycle better so that you can assure your customers of fast and reliable service.

- *This manual has been prepared on the basis of the latest specifications at the time of publication. If modifications have been made since then, differences may exist between the content of this manual and the actual motorcycle.*
- *Illustrations in this manual are used to show the basic principles of operation and work procedures. They may not represent the actual motorcycle exactly in detail.*
- *This manual is written for persons who have enough knowledge, skills and tools, including special tools, for servicing SUZUKI motorcycles. If you do not have the proper knowledge and tools, ask your authorized SUZUKI motorcycle dealer to help you.*

⚠ WARNING

Inexperienced mechanics or mechanics without the proper tools and equipment may not be able to properly perform the services described in this manual.
Improper repair may result in injury to the mechanic and may render the motorcycle unsafe for the rider and passenger.

SAMPLE

SUZUKI MOTOR CORPORATION

© COPYRIGHT SUZUKI MOTOR CORPORATION 2007

TABLE OF CONTENTS

Precautions 00-i
Precautions 00-1

General Information 0-i
General Information 0A-1
Maintenance and Lubrication 0B-1
Service Data 0C-1

Engine 1-i
Precautions 1-1
Engine General Information and Diagnosis 1A-1
Emission Control Devices 1B-1
Engine Electrical Devices 1C-1
Engine Mechanical 1D-1
Engine Lubrication System 1E-1
Engine Cooling System 1F-1
Fuel System 1G-1
Ignition System 1H-1
Starting System 1I-1
Charging System 1J-1
Exhaust System 1K-1

Suspension 2-i
Precautions 2-1
Suspension General Diagnosis 2A-1
Front Suspension 2B-1
Rear Suspension 2C-1
Wheels and Tires 2D-1

Driveline / Axle 3-i
Precautions 3-1
Drive Chain / Drive Train / Drive Shaft 3A-1

Brake 4-i
Precautions 4-1
Brake Control System and Diagnosis 4A-1
Front Brakes 4B-1
Rear Brakes 4C-1

Transmission / Transaxle 5-i
Precautions 5-1
Manual Transmission 5B-1
Clutch 5C-1

Steering 6-i
Precautions 6-1
Steering General Diagnosis 6A-1
Steering / Handlebar 6B-1

Body and Accessories 9-i
Precautions 9-1
Wiring Systems 9A-1
Lighting Systems 9B-1
Combination Meter / Fuel Meter / Horn 9C-1
Exterior Parts 9D-1
Body Structure 9E-1

SAMPLE

SAMPLE

Section 00

Precautions

CONTENTS

Precautions 00-1
Precautions 00-1
Warning / Caution / Note 00-1
General Precautions 00-1
Precautions for Electrical Circuit Service 00-2

SAMPLE

Precautions

Precautions

Warning / Caution / Note

B823H10000001

Please read this manual and follow its instructions carefully. To emphasize special information, the symbol and the words WARNING, CAUTION and NOTE have special meanings. Pay special attention to the messages highlighted by these signal words.

⚠ WARNING

Indicates a potential hazard that could result in death or injury.

⚠ CAUTION

Indicates a potential hazard that could result in motorcycle damage.

NOTE

Indicates special information to make maintenance easier or instructions clearer.

Please note, however, that the warnings and cautions contained in this manual cannot possibly cover all potential hazards relating to the servicing, or lack of servicing, of the motorcycle. In addition to the WARNINGS and CAUTIONS stated, you must use good judgement and basic mechanical safety principles. If you are unsure about how to perform a particular service operation, ask a more experienced mechanic for advice.

General Precautions

B823H10000002

⚠ WARNING

- **Proper service and repair procedures are important for the safety of the service mechanic and the safety and reliability of the motorcycle.**
- **When 2 or more persons work together, pay attention to the safety of each other.**
- **When it is necessary to run the engine indoors, make sure that exhaust gas is forced outdoors.**
- **When working with toxic or flammable materials, make sure that the area you work in is well ventilated and that you follow all of the material manufacturer's instructions.**
- **Never use gasoline as a cleaning solvent.**
- **To avoid getting burned, do not touch the engine, engine oil, radiator and exhaust system until they have cooled.**
- **After servicing the fuel, oil, water, exhaust or brake systems, check all lines and fittings related to the system for leaks.**

⚠ CAUTION

- **If parts replacement is necessary, replace the parts with Suzuki Genuine Parts or their equivalent.**
- **When removing parts that are to be reused, keep them arranged in an orderly manner so that they may be reinstalled in the proper order and orientation.**
- **Be sure to use special tools when instructed.**
- **Make sure that all parts used in reassembly are clean. Lubricate them when specified.**
- **Use the specified lubricant, bond or sealant.**
- **When removing the battery, disconnect the negative (–) cable first and then the positive (+) cable.**
- **When reconnecting the battery, connect the positive (+) cable first and then the negative (–) cable, and replace the terminal cover on the positive (+) terminal.**
- **When performing service to electrical parts, if the service procedures do not require use of battery power, disconnect the negative (–) cable the battery.**
- **When tightening the cylinder head or case bolts and nuts, tighten the larger sizes first. Always tighten the bolts and nuts diagonally from the inside toward outside and to the specified tightening torque.**
- **Whenever you remove oil seals, gaskets, packing, O-rings, locking washers, self-locking nuts, cotter pins, circlips and certain other parts as specified, be sure to replace them with new ones. Also, before installing these new parts, be sure to remove any left over material from the mating surfaces.**

SAMPLE

- **Never reuse a circlip. When installing a new circlip, take care not to expand the end gap larger than required to slip the circlip over the shaft. After installing a circlip, always ensure that it is completely seated in its groove and securely fitted.**
- **Use a torque wrench to tighten fasteners to the specified torque. Wipe off grease and oil if a thread is smeared with them.**
- **After reassembling, check parts for tightness and proper operation.**
- **To protect the environment, do not unlawfully dispose of used motor oil, engine coolant and other fluids: batteries, and tires.**
- **To protect Earth's natural resources, properly dispose of used motorcycle and parts.**

Precautions for Electrical Circuit Service

B823H10000003

When handling the electrical parts or servicing the FI and ABS systems, observe the following points for the safety of the systems.

Electrical Parts

Connector / Coupler

- When connecting a connector, be sure to push it in until a click is felt.

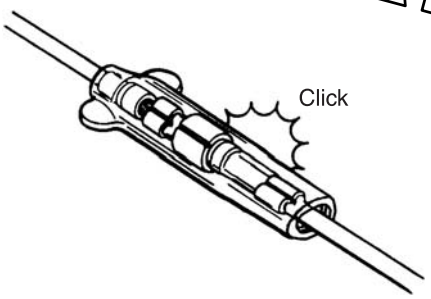

I823H1000002-01

- With a lock type coupler, be sure to release the lock when disconnecting, and push it in fully to engage the lock when connecting.
- When disconnecting the coupler, be sure to hold the coupler body and do not pull the lead wires.
- Inspect each terminal on the connector/coupler for looseness or bending.
- Push in the coupler straightly. An angled or skewed insertion may cause the terminal to be deformed, possibly resulting in poor electrical contact.
- Inspect each terminal for corrosion and contamination. The terminals must be clean and free of any foreign material which could impede proper terminal contact.
- Before refitting the sealed coupler, make sure its seal rubber is positioned properly. The seal rubber may possibly come off the position during disconnecting work and if the coupler is refitted with the seal rubber improperly positioned, it may result in poor water sealing.

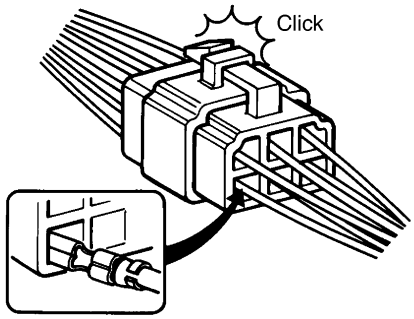

I310G1000002-01

- Inspect each lead wire circuit for poor connection by shaking it by hand lightly. If any abnormal condition is found, repair or replace.

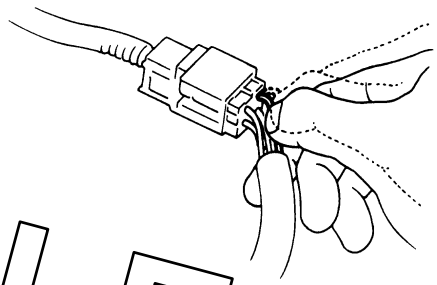

I310G1000003-02

- When taking measurements at electrical connectors using a tester probe, be sure to insert the probe from the wire harness side (rear) of the connector/coupler.

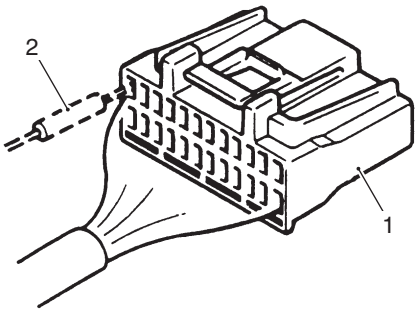

I649G1000013-02

1. Coupler	2. Probe

- When connecting meter probe from the terminal side of the coupler (where connection from harness side not being possible), use extra care not to force and cause the male terminal to bend or the female terminal to open. Connect the probe as shown to avoid opening of female terminal. Never push in the probe where male terminal is supposed to fit.

SAMPLE

- Check the male connector for bend and female connector for excessive opening. Also check the coupler for locking (looseness), corrosion, dust, etc.

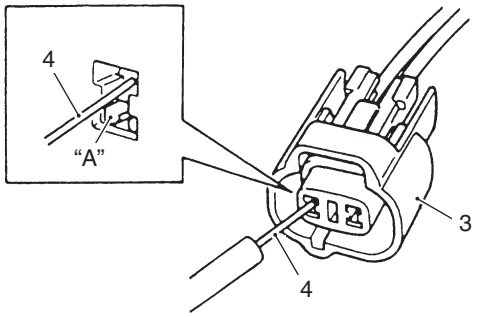

I649G1000030-02

3. Coupler	4. Probe	"A": Where male terminal fits

Clamp

- Clamp the wire harness at such positions as indicated in "Wiring Harness Routing Diagram in Section 9A (Page 9A-5)".
- Bend the clamp properly so that the wire harness is clamped securely.
- In clamping the wire harness, use care not to allow it to hang down.
- Do not use wire or any other substitute for the band type clamp.

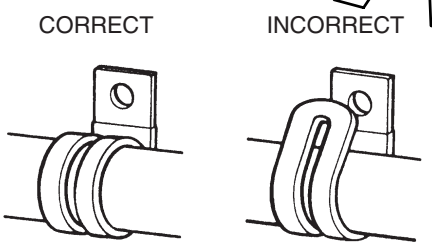

I718H1000001-02

Fuse

- When a fuse is blown, always investigate the cause to correct it and then replace the fuse.
- Do not use a fuse of different capacity.
- Do not use wire or any other substitute for the fuse.

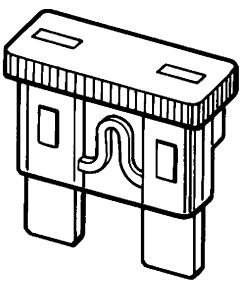

I649G1000001-02

Switch

Never apply grease material to switch contact points to prevent damage.

ECM / Various sensors

- Since each component is a high-precision part, great care should be taken not to apply any severe impacts during removal and installation.

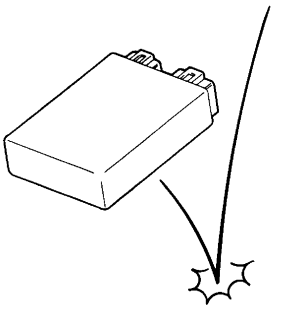

I310G1000007-01

- Be careful not to touch the electrical terminals of the electronic parts (ECM, etc.). The static electricity from your body may damage them.

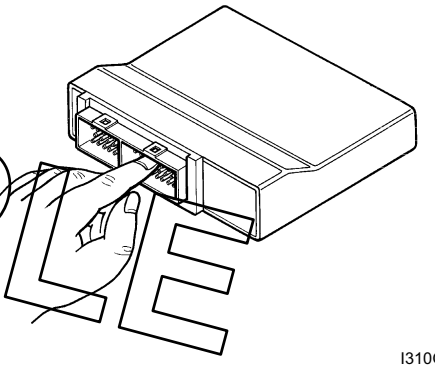

I310G1000008-01

- When disconnecting and connecting the coupler, make sure to turn OFF the ignition switch, or electronic parts may get damaged.

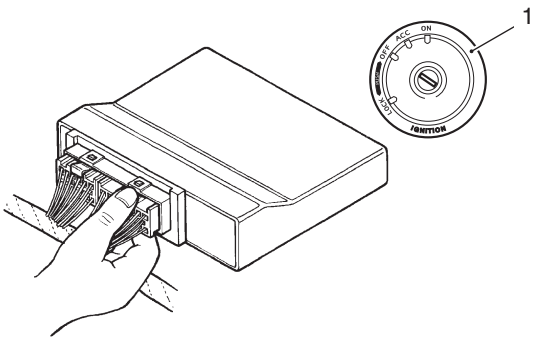

I823H1000001-02

1. Ignition switch

SAMPLE

Battery

- Battery connection in reverse polarity is strictly prohibited. Such a wrong connection will damage the components of the FI and ABS systems instantly when reverse power is applied.

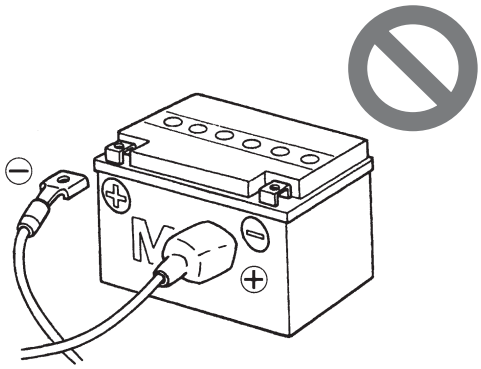

I718H1000004-01

- Removing any battery terminal of a running engine is strictly prohibited. The moment such removal is made, damaging counter electromotive force will be applied to the electronic unit which may result in serious damage.

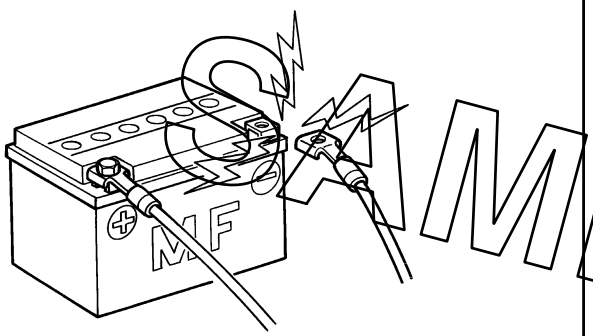

I310G1000011-01

- Before measuring voltage at each terminal, check to make sure that battery voltage is 11 V or higher. Terminal voltage check with a low battery voltage will lead to erroneous diagnosis.

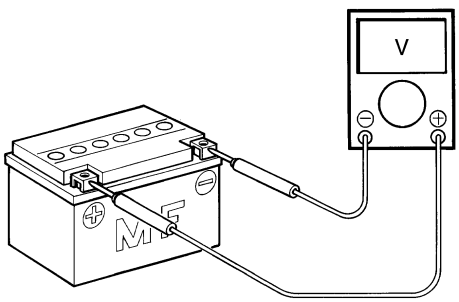

I310G1000012-02

- Never connect any tester (voltmeter, ohmmeter, or whatever) to the electronic unit when its coupler is disconnected. Otherwise, damage to electronic unit may result.
- Never connect an ohmmeter to the electronic unit with its coupler connected. If attempted, damage to ECM or sensors may result.
- Be sure to use a specified voltmeter/ohmmeter. Otherwise, accurate measurements may not be obtained and personal injury may result.

Electrical Circuit Inspection Procedure

While there are various methods for electrical circuit inspection, described here is a general method to check for open and short circuit using an ohmmeter and a voltmeter.

Open circuit check

Possible causes for the open circuit are as follows. As the cause can exist in the connector/coupler or terminal, they need to be checked carefully.

- Loose connection of connector/coupler
- Poor contact of terminal (due to dirt, corrosion or rust, poor contact tension, entry of foreign object etc.)
- Wire harness being open.
- Poor terminal-to-wire connection.

When checking system circuits including an electronic control unit such as ECM, ABS control unit/HU, etc., it is important to perform careful check, starting with items which are easier to check.

1) Disconnect the negative (–) cable from the battery.
2) Check each connector/coupler at both ends of the circuit being checked for loose connection. Also check for condition of the coupler lock if equipped.

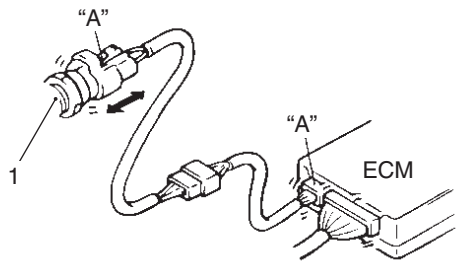

I718H1000005-02

1. Sensor	"A": Check for loose connection

SAMPLE

3) Using a test male terminal, check the female terminals of the circuit being checked for contact tension.
   Check each terminal visually for poor contact (possibly caused by dirt, corrosion, rust, entry of foreign object, etc.). At the same time, check to make sure that each terminal is fully inserted in the coupler and locked.
   If contact tension is not enough, rectify the contact to increase tension or replace. The terminals must be clean and free of any foreign material which could impede proper terminal contact.

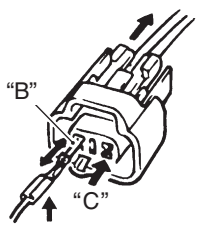

I649G1000027-02

"B":	Check contact tension by inserting and removing.
"C":	Check each terminal for bend and proper alignment.

4) Using continuity inspect or voltage check procedure as described below, inspect the wire harness terminals for open circuit and poor connection. Locate abnormality, if any.

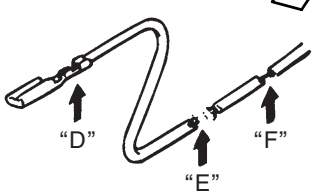

I649G1000028-02

"D":	Looseness of crimping
"E":	Open
"F":	Thin wire (A few strands left)

Continuity check

1) Measure resistance across coupler "B" (between "A" and "C" in figure).
   If no continuity is indicated (infinity or over limit), the circuit is open between terminals "A" and "C".

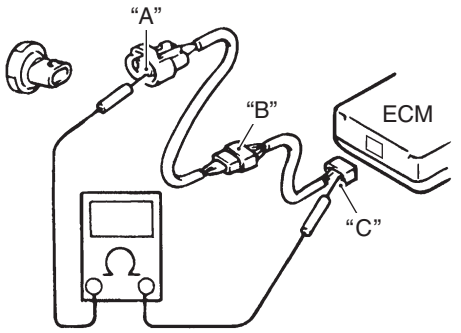

I705H1000006-02

2) Disconnect the coupler "B" and measure resistance between couplers "A" and "B-1".
   If no continuity is indicated, the circuit is open between couplers "A" and "B-1". If continuity is indicated, there is an open circuit between couplers "B-2" and "C" or an abnormality in coupler "B-2" or coupler "C".

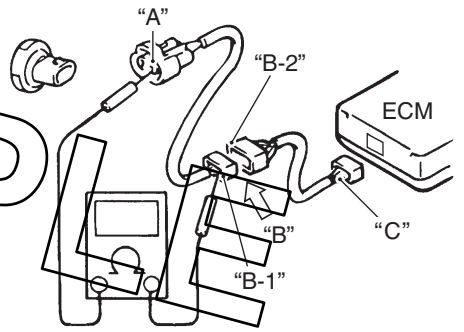

I705H1000010-02

Voltage check

If voltage is supplied to the circuit being checked, voltage check can be used as circuit check.

1) With all connectors/couplers connected and voltage applied to the circuit being checked, measure voltage between each terminal and body ground.
2) If measurements were taken as shown in the figure and results were listed in the following, it means that the circuit is open between terminals "A" and "B".

   <u>Voltage between</u>
   "A" and body ground: Approx. 5 V
   "B" and body ground: Approx. 5 V
   "C" and body ground: 0 V

SAMPLE

3) Also, if measured values are as listed following, a resistance (abnormality) exists which causes the voltage drop in the circuit between terminals “A” and “B”.

Voltage between
“A” and body ground: Approx. 5 V
“B” and body ground: Approx. 5 V – 2 V voltage drop
“C” and body ground: 3 V – 2 V voltage drop

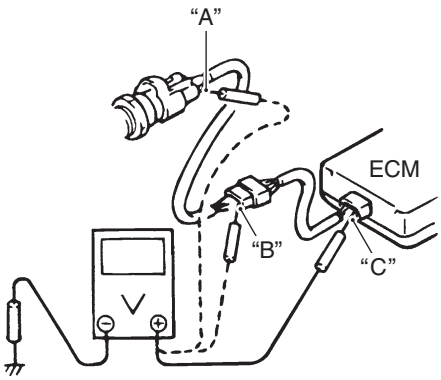

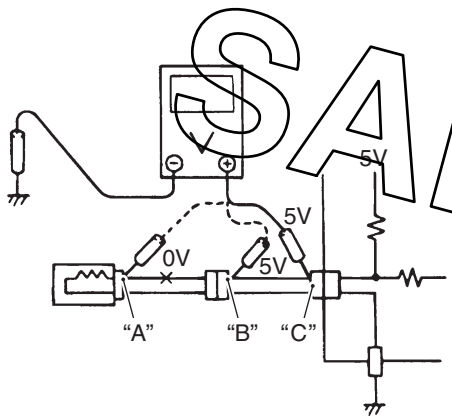

I705H1000007-01

Short circuit check (Wire harness to ground)

1) Disconnect the negative (–) cable from the battery.
2) Disconnect the connectors/couplers at both ends of the circuit to be checked.

NOTE

If the circuit to be checked branches to other parts as shown, disconnect all connectors/ couplers of those parts. Otherwise, diagnosis will be wrong.

3) Measure resistance between terminal at one end of circuit (“A” terminal in figure) and body ground. If continuity is indicated, there is a short circuit to ground between terminals “A” and “C”.

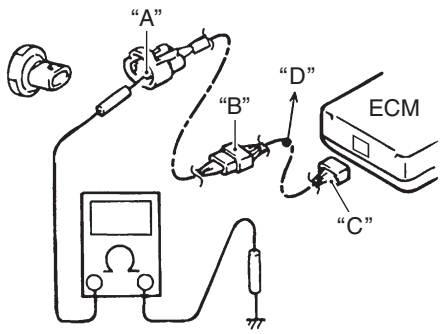

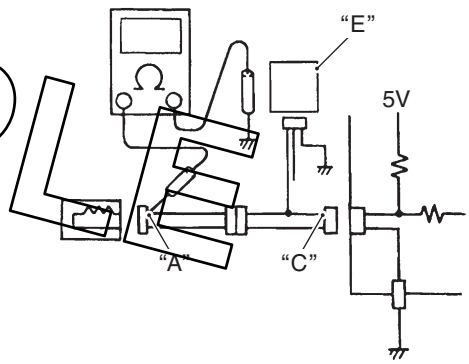

I705H1000008-01

“D”: To other parts	“E”: Other parts

SAMPLE

4) Disconnect the connector/coupler included in circuit (coupler “B”) and measure resistance between terminal “A” and body ground. If continuity is indicated, the circuit is shorted to the ground between terminals “A” and “B”.

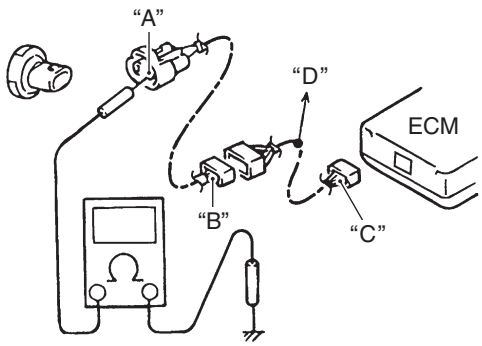

I705H1000009-02

“D”: To other parts

Using The Multi-Circuit Testers

- Use the Suzuki multi-circuit tester set.
- Use well-charged batteries in the tester.
- Be sure to set the tester to the correct testing range.

Special tool

TOOL (A): 09900–25008 (Multi-circuit tester set)

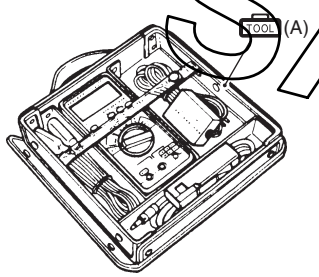

I649G1000024-03

Using the testers

- Incorrectly connecting the (+) and (–) probes may cause the inside of the tester to be burned.
- If the voltage and current are not known, make measurements using the highest range.
- When measuring the resistance with the multi-circuit tester (1), ∞ will be shown as 10.00 MΩ and “1” flashes in the display.
- Check that no voltage is applied before making the measurement. If voltage is applied the tester may be damaged.
- After using the tester, turn the power off.

Special tool

TOOL : 09900–25008 (Multi-circuit tester set)

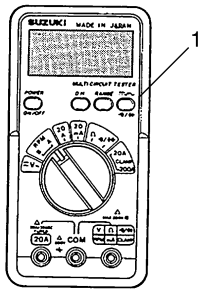

I649G1000002-02

NOTE

- **When connecting the multi-circuit tester, use the needle pointed probe to the back side of the lead wire coupler and connect the probes of tester to them.**
- **Use the needle pointed probe to prevent the rubber of the water proof coupler from damage.**
- **When using the multi-circuit tester, do not strongly touch the terminal of the ECM coupler with a needle pointed tester probe to prevent the terminal damage or terminal bend.**

Special tool

TOOL (A): 09900–25009 (Needle pointed probe set)

I649G1000025-03

SAMPLE

Section 0

General Information

0

CONTENTS

General Information 0A-1
- **General Description 0A-1**
  - Symbols 0A-1
  - Abbreviations 0A-1
  - Vehicle Side View 0A-2
  - Vehicle Identification Number 0A-3
  - Fuel and Oil Recommendation 0A-3
  - Engine Coolant Recommendation 0A-4
  - BREAK-IN Procedures 0A-4
  - Cylinder Identification 0A-4
  - Country and Area Codes 0A-5
  - Wire Color Symbols 0A-5
  - Warning, Caution and Information Labels Location 0A-6
- **Component Location 0A-7**
  - Electrical Components Location 0A-7
- **Specifications 0A-9**
  - Specifications 0A-9
- **Special Tools and Equipment 0A-11**
  - Special Tool 0A-11

Maintenance and Lubrication 0B-1
- **Precautions 0B-1**
  - Precautions for Maintenance 0B-1
- **General Description 0B-1**
  - Recommended Fluids and Lubricants 0B-1
- **Scheduled Maintenance 0B-1**
  - Periodic Maintenance Schedule Chart 0B-1
  - Lubrication Points 0B-2
- **Repair Instructions 0B-3**
  - Air Cleaner Element Replacement 0B-3
  - Air Cleaner Element Inspection 0B-3
  - Exhaust Pipe Bolt and Muffler Bolt Inspection 0B-3
  - Exhaust Control Valve Inspection 0B-4
  - Valve Clearance Inspection and Adjustment 0B-4
  - Spark Plug Replacement 0B-9
  - Spark Plug Inspection and Cleaning 0B-9
  - Fuel Line Inspection 0B-10
  - Engine Oil and Filter Replacement 0B-10
  - Throttle Cable Play Inspection and Adjustment 0B-12
  - Throttle Valve Synchronization 0B-12
  - Evaporative Emission Control System Inspection (E-33 only) 0B-13
  - PAIR System Inspection 0B-13
  - Cooling System Inspection 0B-13
  - Clutch System Inspection 0B-14
  - Clutch Hose Replacement 0B-15
  - Clutch Fluid Replacement 0B-15
  - Drive Chain Inspection and Adjustment 0B-15
  - Drive Chain Cleaning and Lubricating 0B-17
  - Brake System Inspection 0B-17
  - Tire Inspection 0B-19
  - Steering System Inspection 0B-20
  - Front Fork Inspection 0B-20
  - Rear Suspension Inspection 0B-20
  - Chassis Bolt and Nut Inspection 0B-21
  - Compression Pressure Check 0B-22
  - Oil Pressure Check 0B-22
  - SDS check 0B-22
- **Specifications 0B-23**
  - Tightening Torque Specifications 0B-23
- **Special Tools and Equipment 0B-23**
  - Recommended Service Material 0B-23
  - Special Tool 0B-23

Service Data 0C-1
- **Specifications 0C-1**
  - Service Data 0C-1
  - Tightening Torque List 0C-9

SAMPLE

General Information

General Description

Symbols

B823H10101001

Listed in the table below are the symbols indicating instructions and other information necessary for servicing. The meaning of each symbol is also included in the table.

Symbol	Definition
	Torque control required. Data beside it indicate specified torque.
OIL	Apply oil. Use engine oil unless otherwise specified.
MOLY	Apply molybdenum oil solution. (Mixture of engine oil and SUZUKI MOLY PASTE in a ratio of 1:1).
A	Apply SUZUKI SUPER GREASE “A” or equivalent. 99000-25010
M	Apply SUZUKI MOLY PASTE or equivalent. 99000-25140
S	Apply SUZUKI SILICONE GREASE or equivalent. 99000-25100
1207B	Apply SUZUKI BOND “1207B” or equivalent. 99000-31140
1303	Apply THREAD LOCK SUPER “1303” or equivalent. 99000-32030
1322	Apply THREAD LOCK SUPER “1322” or equivalent. 99000-32110
1360	Apply THREAD LOCK SUPER “1360” or equivalent. 99000-32130
LLC	Use engine coolant or equivalent. 99000-99032-11X
FORK	Use fork oil or equivalent. 99000-99044-L01
SEAL	Apply MUFFLER SEAL LOCTITE “5920” (commercially available) or equivalent.
BF	Apply or use brake fluid.
TOOL	Use special tool.
	Do not reuse.
	Note on reassembly.

SAMPLE

Abbreviations

B823H10101002

A:
ABDC: After Bottom Dead Center
AC: Alternating Current
ACL: Air Cleaner, Air Cleaner Box
API: American Petroleum Institute
ATDC: After Top Dead Center
ATM Pressure: Atmospheric Pressure, Atmospheric Pressure Sensor (APS, AP Sensor)
A/F: Air Fuel Mixture
B:
BBDC: Before Bottom Dead Center
BTDC: Before Top Dead Center
B+: Battery Positive Voltage
BARO: Barometric pressure (Atmospheric pressure)
C:
CKP Sensor: Crankshaft Position Sensor (CKPS)
CKT: Circuit
CLP Switch: Clutch Lever Position Switch (Clutch Switch)
CMP Sensor: Camshaft Position Sensor (CMPS)
CO: Carbon Monoxide
CPU: Central Processing Unit
D:
DC: Direct Current
DMC: Dealer Mode Coupler
DOHC: Double Over Head Camshaft
DRL: Daytime Running Light
DTC: Diagnostic Trouble code
E:
ECM: Engine Control Module Engine Control Unit (ECU) (FI Control Unit)
ECT Sensor: Engine Coolant Temperature Sensor (ECTS)
Water Temp. Sensor (WTS)
EVAP: Evaporative Emission
EXC System: Exhaust Control System (EXCS)

EXC Valve: Exhaust Control Valve (EXCV)
EXCV Actuator: Exhaust Control Valve Actuator (EXCVA)
F:
FI: Fuel Injection, Fuel Injector
FP: Fuel pump
FPR: Fuel Pressure Regulator
FP Relay: Fuel Pump Relay
G:
GEN: Generator
GND: Ground
GP Switch: Gear Position Switch
H:
HC: Hydrocarbons
HO2 sensor: Heated Oxygen Sensor (HO2S)
I:
IAP Sensor: Intake Air Pressure Sensor (IAPS)
IAT Sensor: Intake Air Temperature Sensor (IATS)
IG: Ignition
ISC Valve: Idle Speed Control Valve (ISCV)
J:
JASO: Japanese Automobile Standards Organization
L:
LCD: Liquid Crystal Display
LED: Light Emitting Diode (Malfunction Indicator Lamp)
LH: Left Hand
M:
MAL-CODE: Malfunction Code (Diagnostic Code)
Max: Maximum
MIL: Malfunction Indicator Lamp (LED)
Min: Minimum
N:
NOx: Nitrogen Oxides
O:
OHC: Over Head Camshaft
OPS: Oil Pressure Switch
P:
PAIR: Pulsed Secondary Air Injection
PCM: Power Control Module
PCV: Positive Crankcase Ventilation (Crankcase Breather)
R:
RH: Right Hand
ROM: Read Only Memory
S:
SAE: Society of Automotive Engineers
SDS: Suzuki Diagnosis System
STC System: Secondary Throttle Control System (STCS)
STP Sensor: Secondary Throttle Position Sensor (STPS)
ST Valve: Secondary Throttle Valve (STV)
STV Actuator: Secondary Throttle Valve Actuator (STVA)
T:
TO Sensor: Tip-over Sensor (TOS)
TP Sensor: Throttle Position Sensor (TPS)
TPC Valve: Tank Pressure Control Valve (TPCV)

Vehicle Side View

B823H10101004

NOTE

Difference between illustrations and actual motorcycles may exist depending on the markets.

SUZUKI GSX1300BK (2008-model)

Right Side

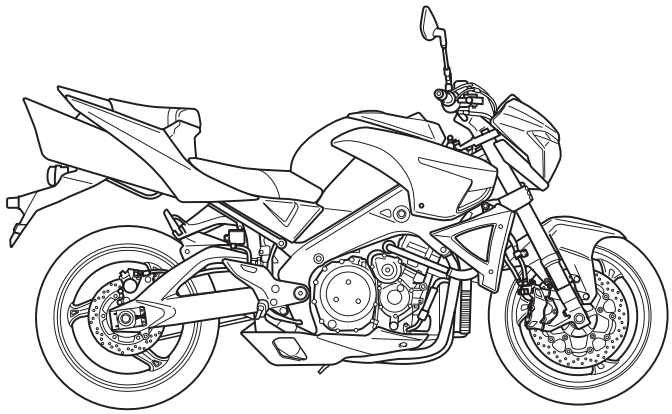

I823H1010006-04

Left Side

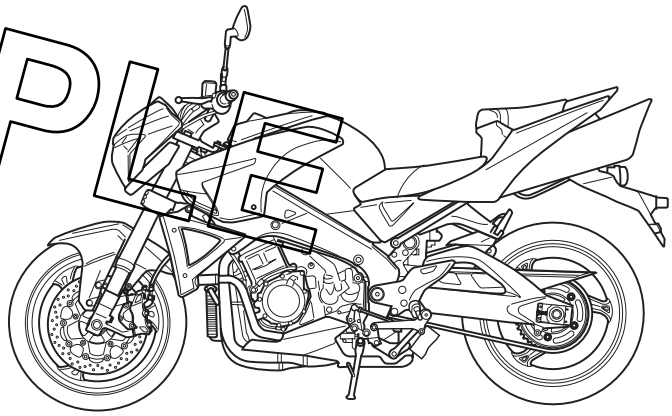

I823H1010007-05

SAMPLE

Vehicle Identification Number

B823H10101005

The frame serial number or V.I.N. (Vehicle Identification Number) “A” is stamped on the right side of the steering head pipe. The engine serial number “B” is located on the upper crankcase. These numbers are required especially for registering the machine and ordering spare parts.

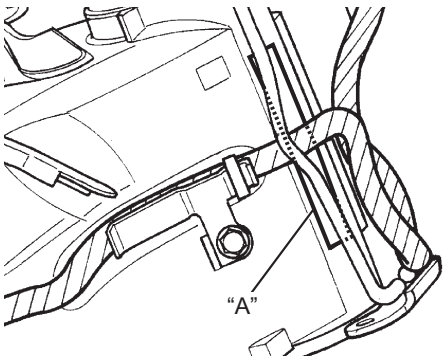

I823H1010008-08

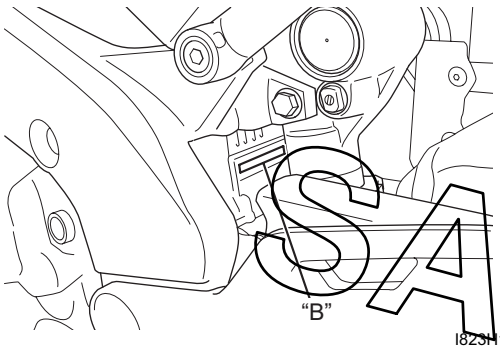

I823H1010009-03

Fuel and Oil Recommendation

B823H10101006

Fuel (For USA and Canada)

Use only unleaded gasoline of at least 90 pump octane (R/2 + M/2).

Gasoline containing MTBE (Meltyl Tertiary Butyl Ether), less than 10% ethanol, or less than 5% methanol with appropriate cosolvents and corrosion inhibitor is permissible.

Fuel (For Other Countries)

Gasoline used should be graded 95 octane (Research Method) or higher. Unleaded gasoline is recommended.

Engine Oil (For USA)

Oil quality is a major contributor to your engine’s performance and life. Always select good quality engine oil.

Suzuki recommends the use of SUZUKI PERFORMANCE 4 MOTOR OIL or equivalent engine oil. Use of SF/SG or SH/SJ in API with MA in JASO.

Suzuki recommends the use of SAE 10W-40 engine oil. If SAE 10W-40 engine oil is not available, select and alternative according to the chart.

Engine Oil (For Other Countries)

Oil quality is a major contributor to your engine’s performance and life. Always select good quality engine oil. Use of SF/SG or SH/SJ in API with MA in JASO.

Suzuki recommends the use of SAE 10W-40 engine oil. If SAE 10W-40 engine oil is not available, select an alternative according to the chart.

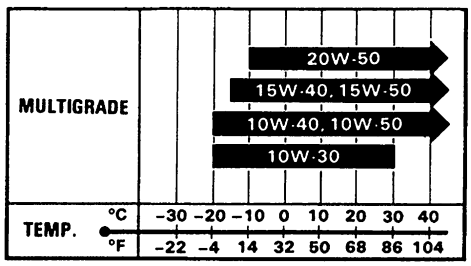

I310G1010005-01

Brake Fluid

Specification and classification: DOT 4

⚠ WARNING

Since the brake system of this motorcycle is filled with a glycol-based brake fluid by the manufacturer, do not use or mix different types of fluid such as silicone-based and petroleum-based fluid for refilling the system, otherwise serious damage will result.

Do not use any brake fluid taken from old or used or unsealed containers.

Never reuse brake fluid left over from a previous servicing, which has been stored for a long period.

Front Fork Oil

Use fork oil L01 or equivalent fork oil.

SAMPLE

Engine Coolant Recommendation

B823H10101007

Engine Coolant
Use an anti-freeze/engine coolant compatible with an aluminum radiator, mixed with distilled water only.

Water for mixing
Use distilled water only. Water other than distilled water can corrode and clog the aluminum radiator.

Anti-freeze/Engine coolant
The engine coolant perform as a corrosion and rust inhibitor as well as anti-freeze. Therefore, the engine coolant should be used at all times even though the atmospheric temperature in your area does not go down to freezing point.
Suzuki recommends the use of SUZUKI COOLANT anti-freeze/engine coolant. If this is not available, use an equivalent which is compatible with an aluminum radiator.

Liquid amount of water/Engine coolant

Solution capacity (total)
2 900 ml (3.1/2.6 US/Imp qt)

For engine coolant mixture information, refer to “Engine Coolant Description in Section 1F (Page 1F-1)”.

⚠ CAUTION

Mixing of anti-freeze/engine coolant should be limited to 60%. Mixing beyond it would reduce its efficiency. If the anti-freeze/engine coolant mixing ratio is below 50%, rust inhabiting performance is greatly reduced. Be sure to mix it above 50% even though the atmospheric temperature does not go down to the freezing point.

SAMPLE

BREAK-IN Procedures

B823H10101008

During manufacture only the best possible materials are used and all machined parts are finished to a very high standard but it is still necessary to allow the moving parts to “BREAK-IN” before subjecting the engine to maximum stresses. The future performance and reliability of the engine depends on the care and restraint exercised during its early life. The general rules are as follows.

1) Keep to these break-in engine speed limits:

   Speed limits
   Initial 800 km (500 miles): Below 5 000 r/min
   Up to 1 600 km (1 000 miles): Below 7 500 r/min
   Over 1 600 km (1 000 miles): Below 10 500 r/min

2) Upon reaching an odometer reading of 1 600 km (1 000 miles) you can subject the motorcycle to full throttle operation. However, do not exceed 10 500 r/min at any time.

Cylinder Identification

B823H10101009

The four cylinders of this engine are identified as #1, 2, 3 and #4 cylinder, as counted from left to right (as viewed by the rider on the seat).

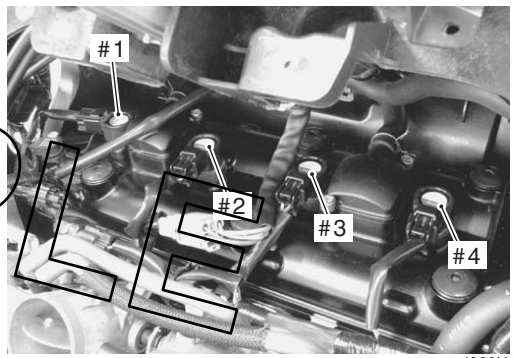

I823H1010005-02

Country and Area Codes

B823H10101010

The following codes stand for the applicable country(-ies) and area(-s).

Code	Country or Area	Effective Frame No.
GSX1300BK K8 (E-02)	U.K.	JS1CR111100100001 –
GSX1300BK K8 (E-19)	E.U.	JS1CR111100100001 –
GSX1300BKUF K8 (E-19)	E.U.	JS1CR211100100001 –
GSX1300BK K8 (E-03)	U.S.A (Except for California)	JS1GX71A 82100001 –
GSX1300BK K8 (E-24)	Australia	JS1CR111200100001 –
GSX1300BK K8 (E-28)	Canada	JS1GX71A 82100001 –
GSX1300BK K8 (E-33)	California (U.S.A)	JS1GX71A 82100001 –

Wire Color Symbols

B823H10101011

Symbol	Wire Color	Symbol	Wire Color
B	Black	Bl/Y	Blue with Yellow tracer
Bl	Blue	Br/B	Brown with Black tracer
Br	Brown	G/B	Green with Black tracer
Dbr	Dark brown	G/Y	Green with Yellow tracer
Dg	Dark green	Gr/B	Gray with Black tracer
G	Green	Gr/R	Gray with Red tracer
Gr	Gray	Gr/W	Gray with White tracer
Lbl	Light blue	Gr/Y	Gray with Yellow tracer
Lg	Light green	O/G	Orange with Green tracer
O	Orange	O/R	Orange with Red tracer
P	Pink	O/W	Orange with White tracer
R	Red	O/Y	Orange with Yellow tracer
W	White	P/B	Pink with Black tracer
Y	Yellow	P/W	Pink with White tracer
B/Bl	Black with Blue tracer	R/B	Red with Black tracer
B/Br	Black with Brown tracer	R/Bl	Red with Blue tracer
B/G	Black with Green tracer	W/B	White with Black tracer
B/Lg	Black with Light green tracer	W/Bl	White with Blue tracer
B/O	Black with Orange tracer	W/G	White with Green tracer
B/R	Black with Red tracer	W/R	White with Red tracer
B/W	Black with White tracer	W/Y	White with Yellow tracer
B/Y	Black with Yellow tracer	Y/B	Yellow with Black tracer
Bl/B	Blue with Black tracer	Y/Bl	Yellow with Blue tracer
Bl/G	Blue with Green tracer	Y/R	Yellow with Red tracer
Bl/W	Blue with White tracer	Y/W	Yellow with White tracer

SAMPLE

Warning, Caution and Information Labels Location

B823H10101012

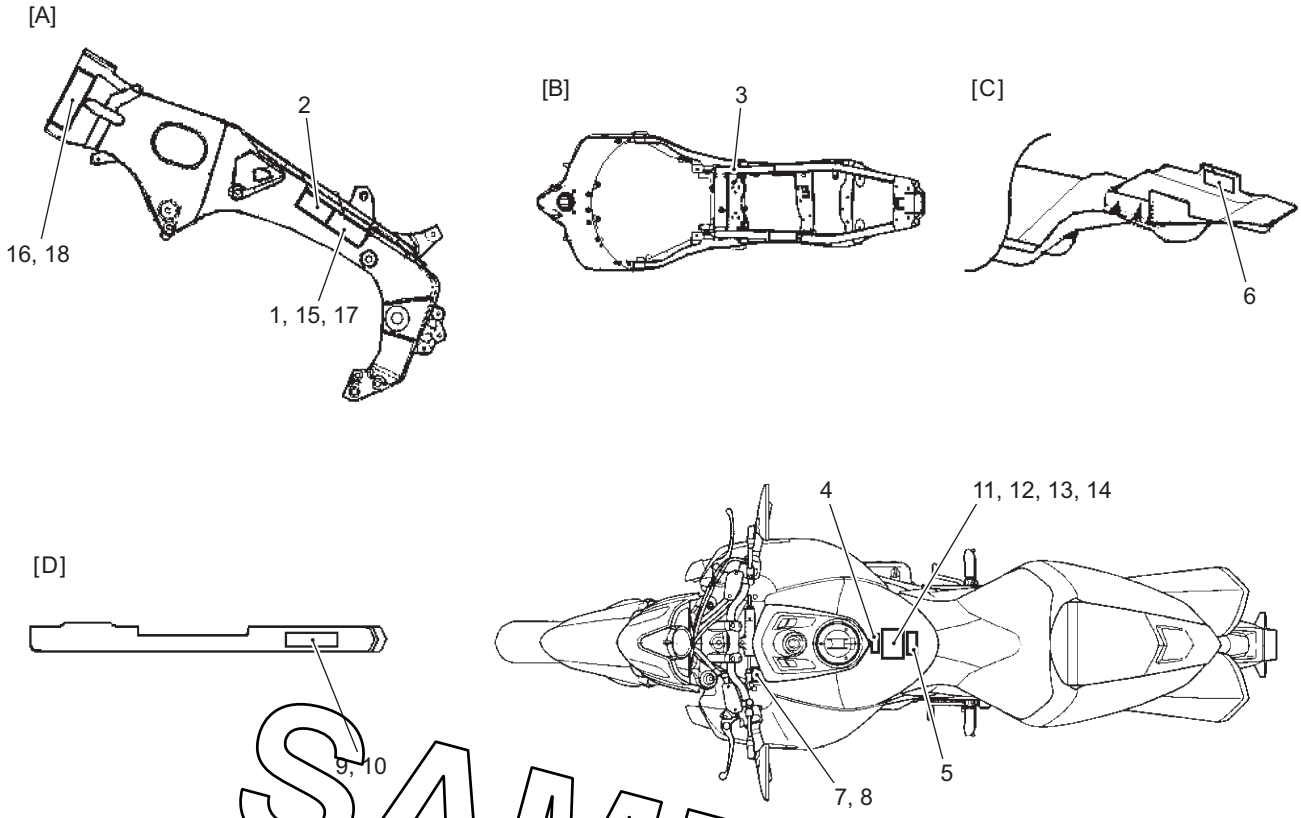

I823H1010013-01

SAMPLE

1. Noise label (For E-03, 24, 33)	12. General warning label (French) (For GSX1300BKUF, E-19)
2. Information label (For E-03, 28, 33)	13. General warning label (English/French) (For E-28)
3. Vacuum hose routing label (For E-33)	14. General warning label (French/German/Italian/Swedish) (For E-19)
4. Fuel caution label (For E-02, 24)	15. ICES Canada label (For E-28)
5. Fuel information label	16. I.D. plate (For E-02, 19, 24)
6. Manual notice label (For E-03, 33)	17. I.D. label (For GSX1300BKUF, E-19)
7. Steering warning label (English) (For E-03, 33)	18. Safety plate (For E-03, 28, 33)
8. Steering warning label (French/German/English) (For E-02, 19, 24, 28)	[A]: Frame
9. Tire information label (English) (For E-03, 33)	[B]: Seat rail
10. Tire information label (French/German/English) (For E-02, 19, 24, 28)	[C]: Rear fender
11. General warning label (English) (For E-02, 03, 24, 33)	[D]: Chain cover

Component Location

Electrical Components Location

B823H10103001

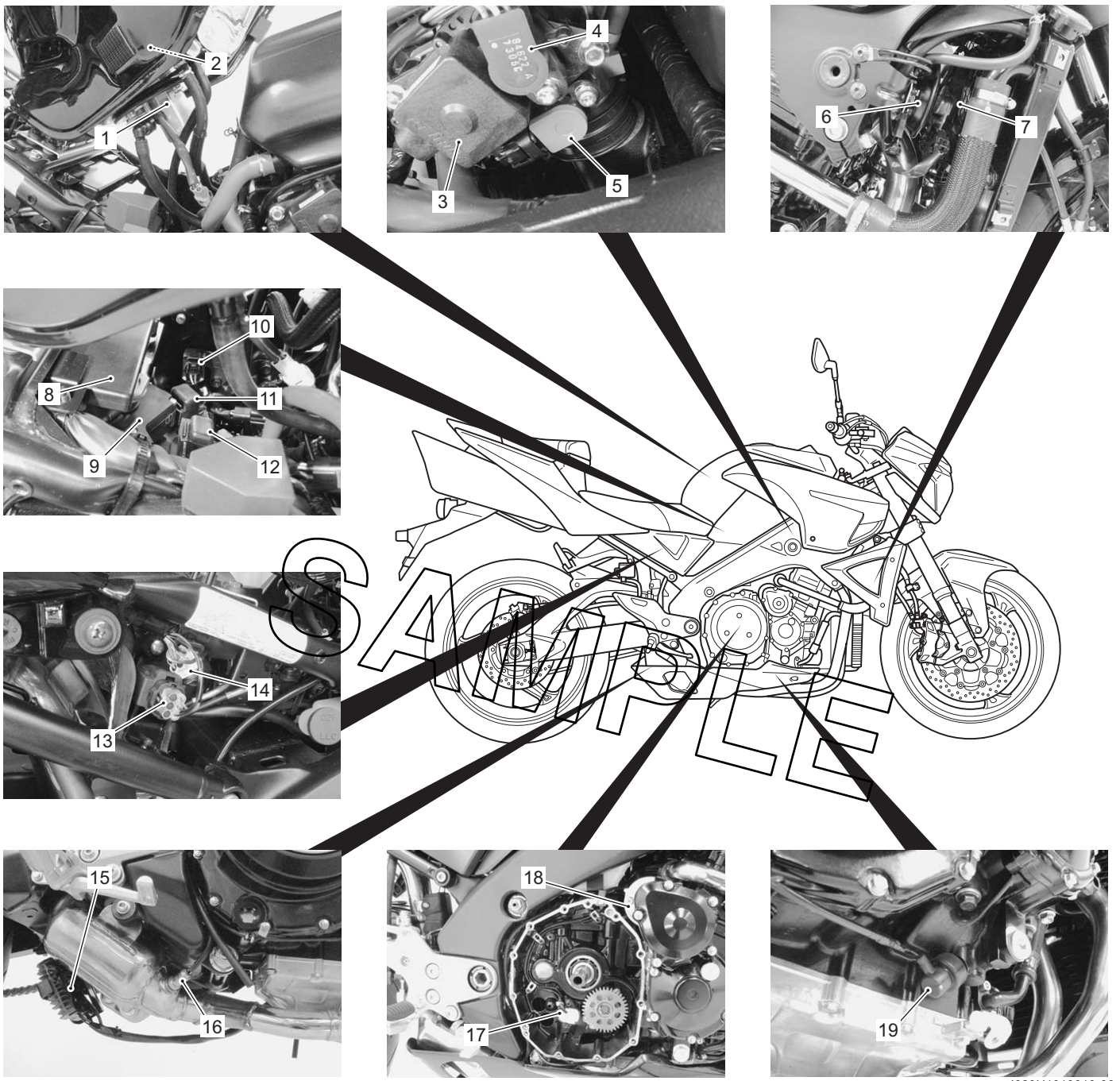

SAMPLE

I823H1010010-06

1. Fuel pump	8. ECM	15. Regulator/Rectifier
2. Fuel level gauge	9. EXCV actuator	16. HO2 sensor
3. STV actuator	10. EVAP system purge control solenoid valve (E-33 only)	17. GP switch
4. STP sensor	11. Cooling fan relay	18. Starter motor
5. TP sensor	12. Fuel pump relay	19. Oil pressure switch
6. Horn	13. TO sensor	
7. Cooling fan (RH)	14. Mode select switch coupler	

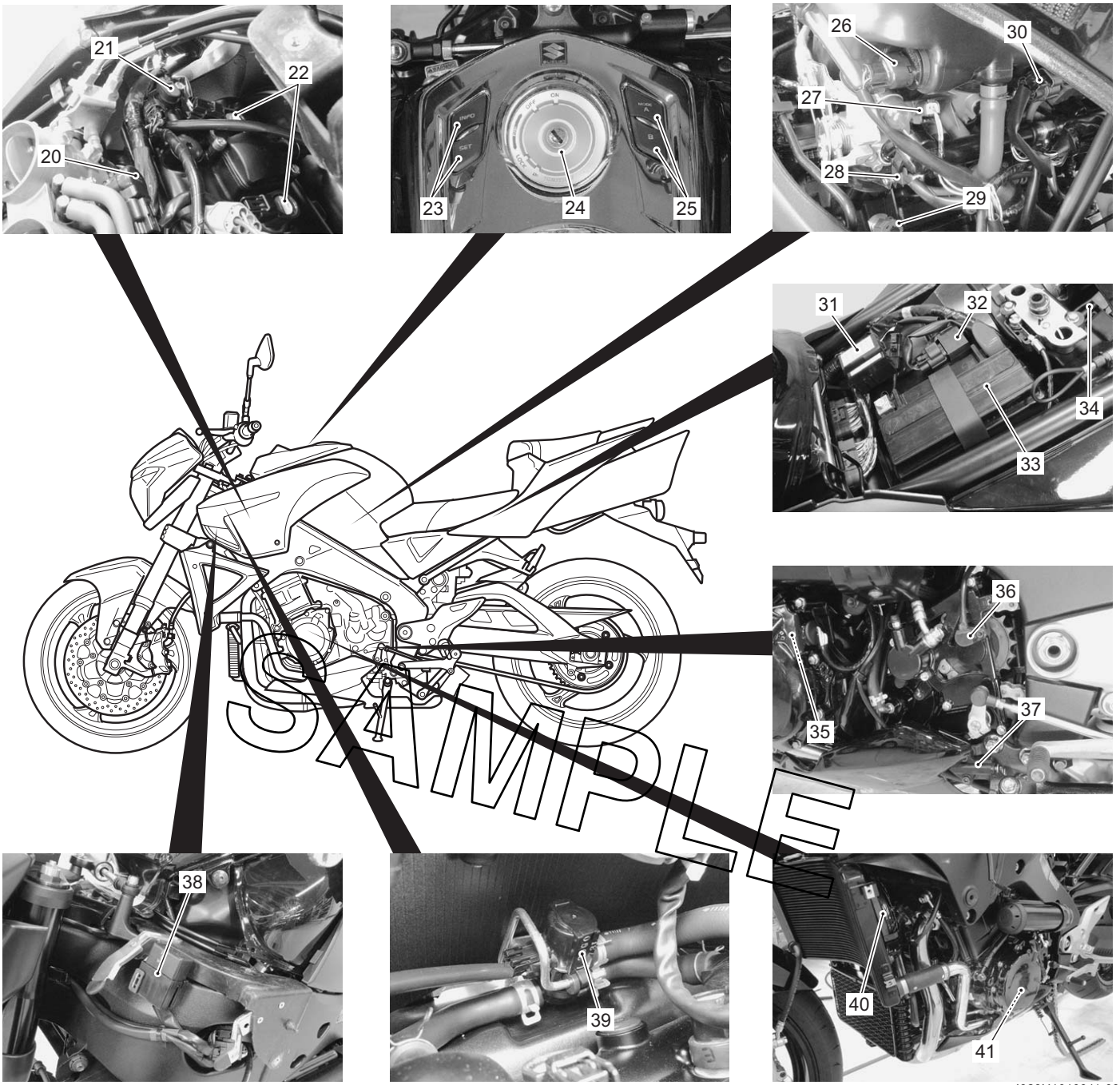

I823H1010011-03

20. ISC valve	28. Primary fuel injector	36. Speed sensor
21. CMP sensor	29. ECT sensor	37. Side-stand switch
22. Ignition coil	30. IAP sensor	38. Turn signal/Side-stand relay
23. Information display switch	31. Fuse box	39. PAIR control solenoid valve
24. Ignition switch	32. AP sensor	40. Cooling fan (LH)
25. Drive mode selector	33. Battery	41. Generator
26. IAT sensor	34. Starter relay/Main fuse	
27. Secondary fuel injector	35. CKP sensor	

Specifications

Specifications

B823H10107001

NOTE

These specifications are subject to change without notice.

Dimensions and dry mass

Item	Specification	Remark
Overall length	2 245 mm (88.4 in)	E-03, 28, 33
	2 220 mm (87.4 in)	Others
Overall width	800 mm (31.5 in)	
Overall height	1 085 mm (42.7 in)	
Wheelbase	1 525 mm (60.0 in)	
Ground clearance	120 mm (4.7 in)	
Seat height	805 mm (31.7 in)	
Dry mass	236 kg (520 lbs)	E-33
	235 kg (518 lbs)	Others

Engine

Item	Specification	Remark
Type	4-stroke, Liquid-cooled, DOHC	
Number of cylinders	4	
Bore	81.0 mm (3.189 in)	
Stroke	65.0 mm (2.559 in)	
Displacement	1 340 cm^3 (81.8 cu. in)	
Compression ratio	12.5 : 1	
Fuel system	Fuel injection system	
Air cleaner	Paper element	
Starter system	Electric	
Lubrication system	Wet sump	
Idle speed	1 150 ± 100 r/min	

Drive train

Item		Specification	Remark
Clutch		Wet multi-plate type	
Transmission		6-speed constant mesh	
Gearshift pattern		1-down, 5-up	
Primary reduction ratio		1.596 (83/52)	
Gear ratios	Low	2.615 (34/13)	
	2nd	1.937 (31/16)	
	3rd	1.526 (29/19)	
	4th	1.285 (27/21)	
	5th	1.136 (25/22)	
	Top	1.043 (24/23)	
Final reduction ratio		2.388 (43/18)	
Drive chain		RK GB50GSV Z4, 118 links	

SAMPLE

Chassis

Item	Specification	Remark
Front suspension	Inverted telescopic, coil spring, oil damped	
Rear suspension	Link type, coil spring, oil damped	
Front suspension stroke	120 mm (4.7 in)	
Rear wheel travel	137 mm (5.4 in)	
Caster	25° 30’	
Tail	107 mm (4.21 in)	
Steering angle	33° (right & left)	
Turning radius	3.0 m (9.8 ft)	
Front brake	Disc brake, twin	
Rear brake	Disc brake	
Front tire size	120/70ZR17M/C (58W), tubeless	
Rear tire size	200/50ZR17M/C (75W), tubeless	

Electrical

Item	Specification	Remark
Ignition type	Electronic ignition (Transistorized)	
Ignition timing	3° B.T.D.C. at 1 150 r/min	
Spark plug	NGK CR9EIA-9 or DENSO IU27D	
Battery	12 V 36 kC (10 Ah)/10 HR	
Generator	Three-phase A.C. generator	
Main fuse	30 A	
Fuse	15/15/10/10/10/10/10 A	
Headlight	12 V 60/55 W (H4)	
Position light	12 V 5 W x 2	
Brake light/Taillight	LED	
License plate light	12 V 5 W	
Turn signal light	12 V 21 W	
Speedometer light	LED	
Tachometer light	LED	
Turn signal indicator light	LED	
Neutral indicator light	LED	
High beam indicator light	LED	
Engine coolant temperature indicator light	LED	
Oil pressure indicator light	LED	
FI indicator light	LED	
Immobilizer indicator light	LED	E-02, 19, 24

SAMPLE

Capacities

Item		Specification	Remark
Fuel tank		16.0 L (4.2/3.5 US/Imp gal)	E-33
		16.5 L (4.4/3.6 US/Imp gal)	Others
Engine oil	Oil change	3 100 ml (3.3/2.7 US/Imp qt)	
	With filter change	3 300 ml (3.5/2.9 US/Imp qt)	
	Overhaul	4 000 ml (4.2/3.5 US/Imp qt)	
Engine coolant		2.9 L (3.1/2.6 US/Imp qt)	

Special Tools and Equipment

Special Tool

B823H10108002

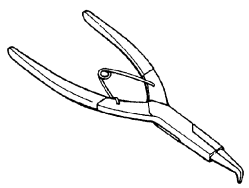 **09900–06104** Snap ring pliers	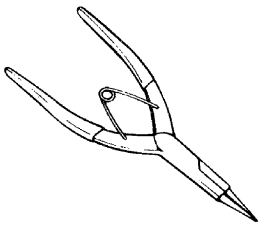 **09900–06107** Snap ring pliers	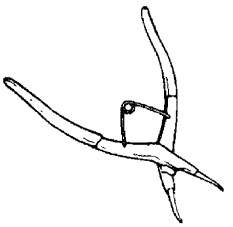 **09900–06108** Snap ring pliers	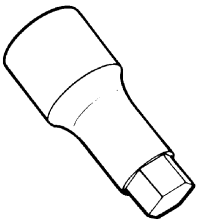 **09900–18740** Hexagon socket (24 mm)	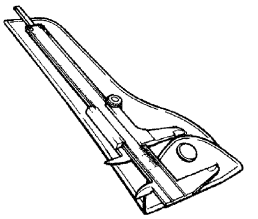 **09900–20102** Vernier calipers (1/20 mm, 200 mm)
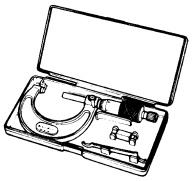 **09900–20202** Micrometer (1/100 mm, 25 – 50 mm)	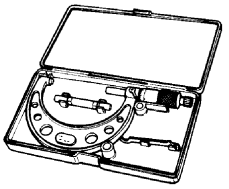 **09900–20204** Micrometer (75 – 100 mm)	**09900–20205** Micrometer (0 – 25 mm)	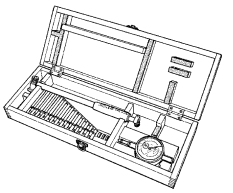 **09900–20530** Cylinder gauge set	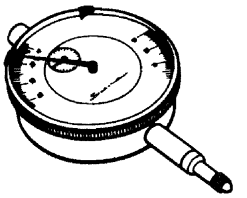 **09900–20602** Dial gauge (1/1000 mm, 1 mm)
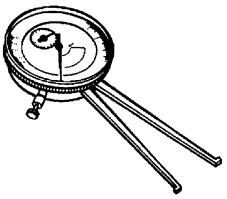 **09900–20605** Dial calipers (1/100 mm, 10 – 34 mm)	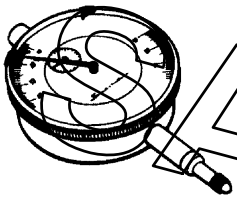 **09900–20607** Dial gauge (1/100 mm, 10 mm)	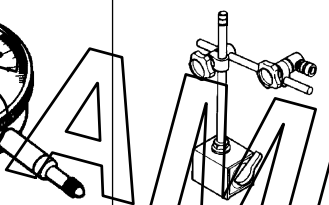 **09900–20701** Magnetic stand	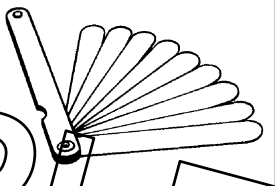 **09900–20803** Thickness gauge	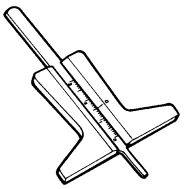 **09900–20805** Tire depth gauge
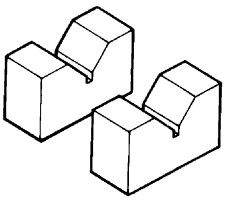 **09900–21304** V-block (100 mm)	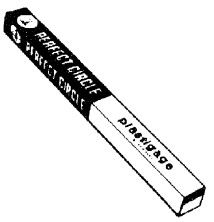 **09900–22301** Plastigauge (0.025 – 0.076 mm)	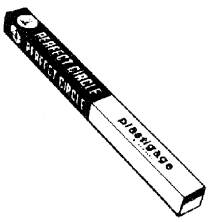 **09900–22302** Plastigauge (0.051 – 0.152 mm)	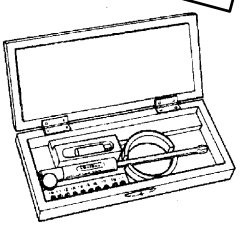 **09900–22403** Small bore gauge (18 – 35 mm)	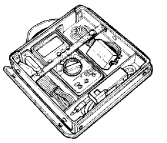 **09900–25008** Multi-circuit tester set
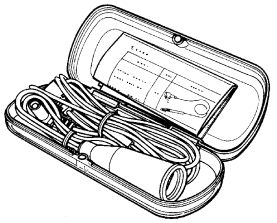 **09900–25009** Needle pointed probe set	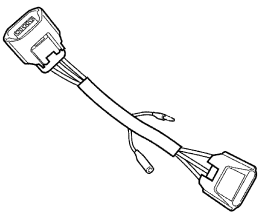 **09900–28630** TPS test wire harness	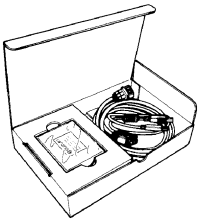 **09904–41010** SDS set	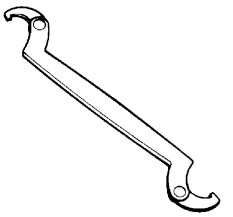 **09910–60611** Universal clamp wrench	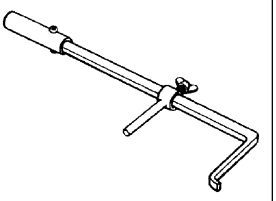 **09913–50121** Oil seal remover

SAMPLE

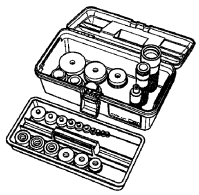 **09913–70210** Bearing installer set	**09915–40610** Oil filter wrench	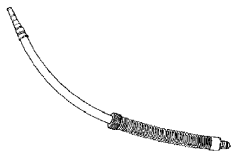 **09915–63311** Compression gauge attachment	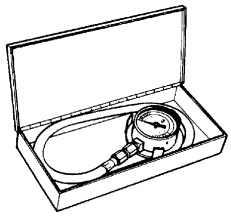 **09915–64512** Compression gauge	**09915–74521** Oil pressure gauge hose
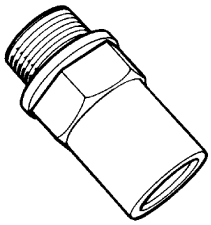 **09915–74540** Oil pressure gauge attachment	**09915–77331** Meter (for high pressure)	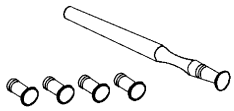 **09916–10911** Valve lapper set	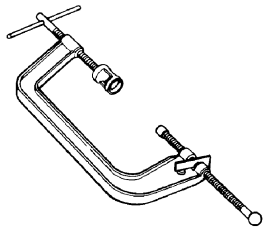 **09916–14510** Valve spring compressor	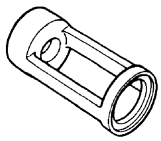 **09916–14522** Valve spring compressor attachment
09916–34542 Reamer handle	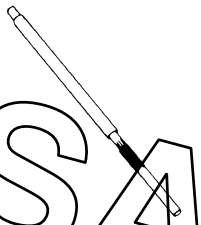 **09916–34570** Valve guide reamer (5.0 mm)	**09916–34580** Valve guide reamer (10.8 mm)	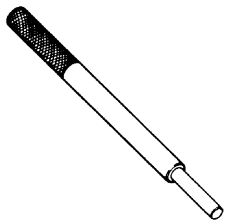 **09916–44310** Valve guide remover/ installer	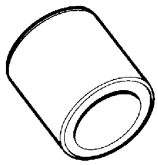 **09916–53350** Attachment
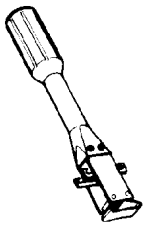 **09916–74521** Holder body	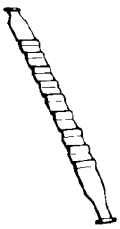 **09916–74550** Band (Piston diam.: 73 – 85 mm)	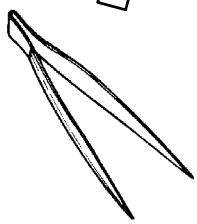 **09916–84511** Valve adjuster driver	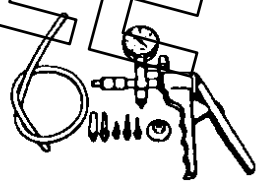 **09917–47011** Vacuum pump gauge	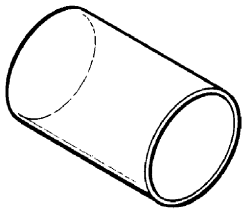 **09919–28620** Sleeve protector
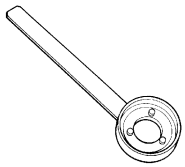 **09920–34830** Starter clutch holder	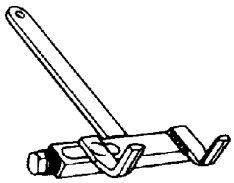 **09920–53740** Clutch sleeve hub holder	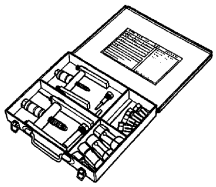 **09921–20240** Bearing remover set	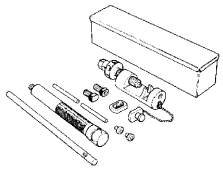 **09922–22711** Drive chain cutting and joining tool	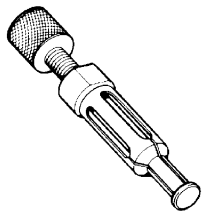 **09923–74511** Bearing remover

SAMPLE

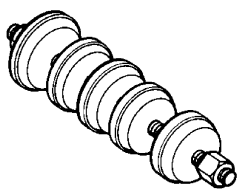 **09924–84510** Bearing installer set	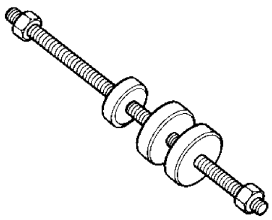 **09924–84521** Bearing installer set	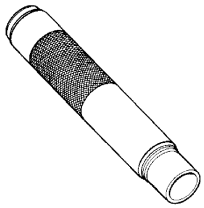 **09925–18011** Steering bearing installer	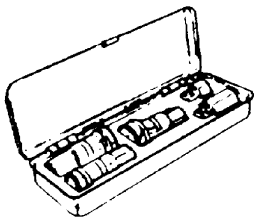 **09930–10121** Spark plug wrench set	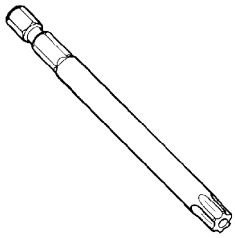 **09930–11920** Torx bit (JT40H)
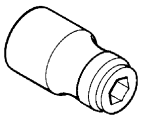 **09930–11940** Bit holder	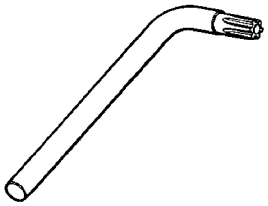 **09930–11950** Torx wrench	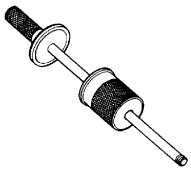 **09930–30104** Rotor remover slide shaft	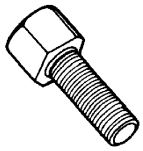 **09930–30450** Rotor remover bolt	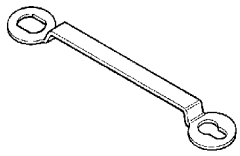 **09930–44530** Rotor holder
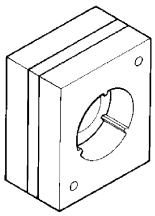 **09930–73130** Starter torque limiter holder	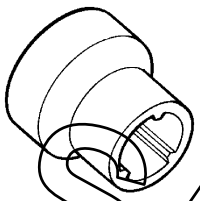 **09930–73140** Starter torque limiter socket	**09930–82720** Mode select switch	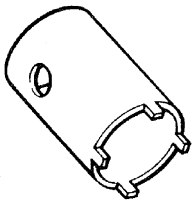 **09940–14911** Steering stem nut wrench	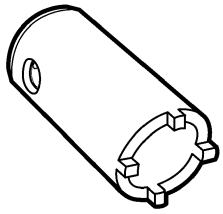 **09940–14940** Swingarm pivot thrust adjuster socket wrench
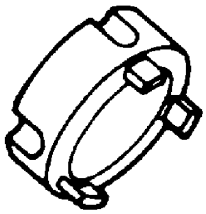 **09940–14960** Steering nut wrench socket	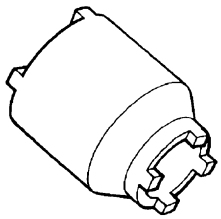 **09940–14990** Engine mounting thrust adjuster socket wrench	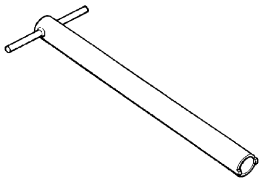 **09940–30221** Front fork assembling tool	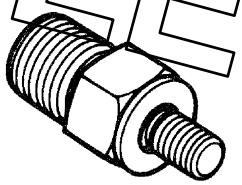 **09940–40211** Fuel pressure gauge adapter	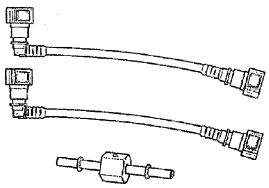 **09940–40220** Fuel pressure gauge hose attachment
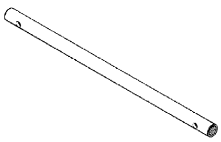 **09940–52841** Inner rod holder	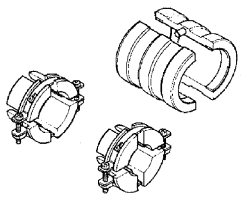 **09940–52861** Front fork oil seal installer	**09940–92720** Spring scale	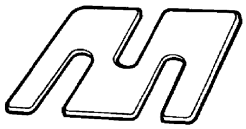 **09940–94922** Front fork spring stopper plate	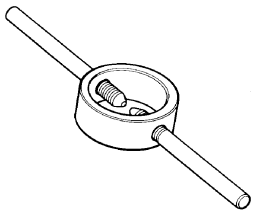 **09940–94930** Front fork spacer holder

SAMPLE

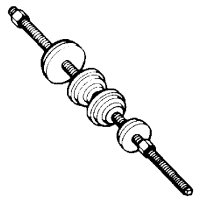 **09941–34513** Steering race installer	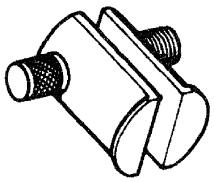 **09941–54911** Bearing outer race remover	**09941–74911** Steering bearing installer	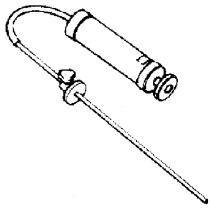 **09943–74111** Fork oil level gauge	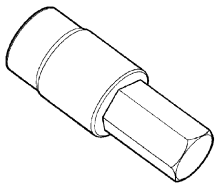 **09944–28320** Hexagon socket (19 mm)
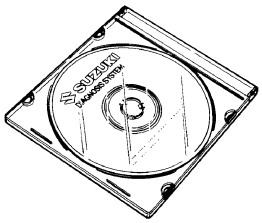 **99565–01010–012** CD-ROM Ver.12				

SAMPLE

Maintenance and Lubrication

Precautions

Precautions for Maintenance

B823H10200001

The “Periodic Maintenance Schedule Chart” lists the recommended intervals for all the required periodic service work necessary to keep the motorcycle operating at peak performance and economy. Maintenance intervals are expressed in terms of kilometers, miles and months for your convenience.

NOTE

More frequent servicing may be required on motorcycles that are used under severe conditions.

General Description

Recommended Fluids and Lubricants

B823H10201001

Refer to “Fuel and Oil Recommendation in Section 0A (Page 0A-3)”. and “Engine Coolant Recommendation in Section 0A (Page 0A-4)”.

Scheduled Maintenance

Periodic Maintenance Schedule Chart

B823H10205001

NOTE

I = Inspect and clean, adjust, replace or lubricate as necessary.
R = Replace.
T = Tighten.

SAMPLE

Item	Interval				
	km	1 000	6 000	12 000	18 000	24 000
	miles	600	4 000	7 500	11 000	14 500
	months	2	12	24	36	48
Air cleaner element		—	I	I	R	I
Exhaust pipe bolts and muffler bolts		T	—	T	—	T
Exhaust control valve		I	—	I	—	I
Valve clearance		—	—	—	—	I
Spark plugs		—	I	R	I	R
Fuel line		—	I	I	I	I
Engine oil		R	R	R	R	R
Engine oil filter		R	—	—	R	—
Throttle cable play		I	I	I	I	I
Throttle valve synchronization		I (E-33 only)	—	I	—	I
Evaporative emission control system (E-33 only)		—	—	I	—	I
PAIR (air supply) system		—	—	I	—	I
Engine coolant		Replace every 2 years.				
Radiator hoses		—	I	I	I	I
Clutch fluid		—	I	I	I	I
		Replace every 2 years.				
Clutch hose		—	I	I	I	I
		Replace every 4 years.				
Drive chain		I	I	I	I	I
		Clean and lubricate every 1 000 km (600 miles).				
Brakes		I	I	I	I	I

Item	Interval					
	km	1 000	6 000	12 000	18 000	24 000
	miles	600	4 000	7 500	11 000	14 500
	months	2	12	24	36	48
Brake fluid		—	I	I	I	I
		Replace every 2 years.				
Brake hoses		—	I	I	I	I
		Replace every 4 years.				
Tires		—	I	I	I	I
Steering		I	—	I	—	I
Front forks		—	—	I	—	I
Rear suspension		—	—	I	—	I
Chassis bolts and nuts		T	T	T	T	T

Lubrication Points

B823H10205002

Proper lubrication is important for smooth operation and long life of each working part of the motorcycle. Major lubrication points are indicated as follows.

NOTE

- **Before lubricating each part, clean off any rusty spots and wipe off any grease, oil, dirt or grime.**
- **Lubricate exposed parts which are subject to rust, with a rust preventative spray whenever the motorcycle has been operated under wet or rainy conditions.**

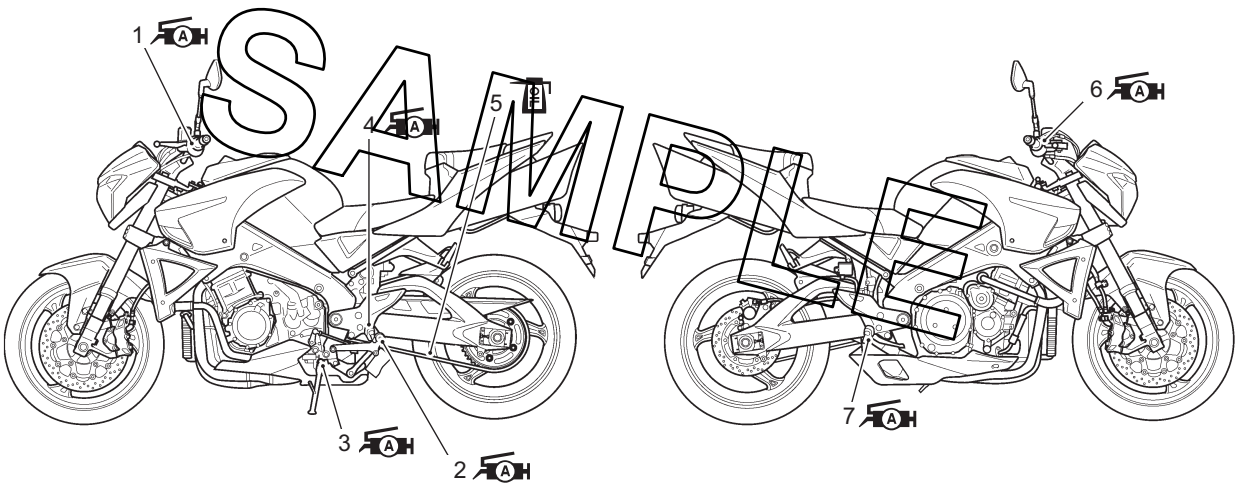

I823H1020001-04

1. Clutch lever holder	6. Brake lever holder
2. Gearshift lever pivot	7. Brake pedal pivot and footrest pivot
3. Side-stand pivot and spring hook	: Apply oil.
4. Footrest pivot	: Apply grease.
5. Drive chain	

Repair Instructions

Air Cleaner Element Replacement

B823H10206001

Replace air cleaner element
Every 18 000 km (11 000 miles, 36 months)

Refer to “Air Cleaner Element Removal and Installation in Section 1D (Page 1D-6)”.

Air Cleaner Element Inspection

B823H10206002

Inspect air cleaner element
Every 6 000 km (4 000 miles, 12 months)

Inspection

1) Remove the air cleaner element. Refer to “Air Cleaner Element Removal and Installation in Section 1D (Page 1D-6)”.
2) Inspect the air cleaner element for clogging. If it is clogged with dirt, replace it with a new one.

⚠ CAUTION

Do not blow the air cleaner element with compressed air.

NOTE

If driving under dusty conditions, replace the air cleaner element more frequently. Make sure that the air cleaner is in good condition at all times. The life of the engine depends largely on this component.

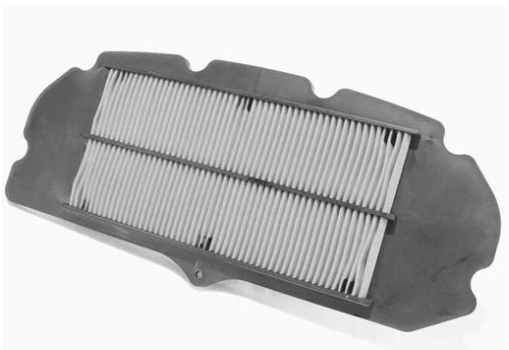

I823H1020002-01

3) After finishing the air cleaner element inspection, reinstall the removed parts.
4) Drain water from the air cleaner box by removing the drain plug (1).

I823H1020003-01

5) Reinstall the drain plug.

Exhaust Pipe Bolt and Muffler Bolt Inspection

B823H10206003

Tighten exhaust pipe bolts and muffler bolts
Initially at 1 000 km (600 miles, 2 months) and every 12 000 km (7 500 miles, 24 months) thereafter

Check the exhaust pipe bolts and muffler bolts to the specified torque.

Tightening torque
Exhaust pipe bolt (a): 23 N·m (2.3 kgf-m, 16.5 lb-ft)
Exhaust pipe mounting bolt (b): 25 N·m (2.5 kgf-m, 18.0 lb-ft)
Muffler connecting bolt (c): 23 N·m (2.3 kgf-m, 16.5 lb-ft)
Muffler joint mounting bolt (d): 23 N·m (2.3 kgf-m, 16.5 lb-ft)
Muffler mounting bolt (Front) (e): 23 N·m (2.3 kgf-m, 16.5 lb-ft)
Muffler mounting bolt (Rear) (f): 25 N·m (2.5 kgf-m, 18.0 lb-ft)

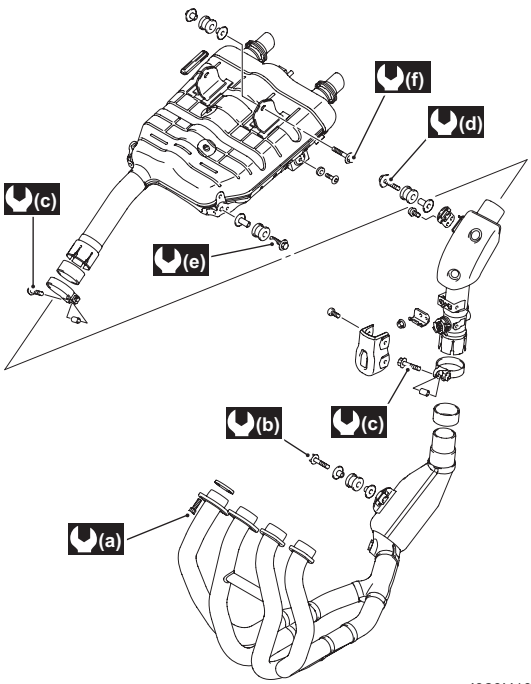

I823H1020068-01

SAMPLE

Exhaust Control Valve Inspection

B823H10206028

Inspect exhaust control valve

Initially at 1 000 km (600 miles, 2 months) and every 12 000 km (7 500 miles, 24 months) thereafter

Inspect exhaust control valve as follows:

1) Lift and support the fuel tank. Refer to “Fuel Tank Removal and Installation in Section 1G (Page 1G-10)”.
2) Check the exhaust control valve actuator (1) for its smooth movement when the ignition switch is turned on. If the exhaust valve actuator does not move smoothly, check exhaust valve actuator electrical circuit and exhaust valve carbon sticking. Refer to “EXCV Inspection in Section 1K (Page 1K-15)”.

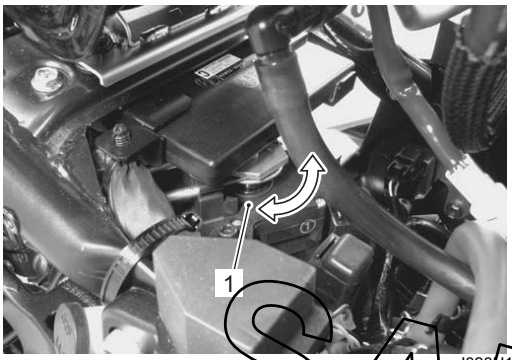

I823H1020066-01

3) Remove the EXCV cover. Refer to “EXCV Cable Removal and Installation in Section 1K (Page 1K-5)”.
4) Check the lock-nuts (2) for tightness. If the lock-nuts (2) are loose, tighten them after adjusting the cable length. Refer to “EXCV Cable Removal and Installation in Section 1K (Page 1K-5)”.

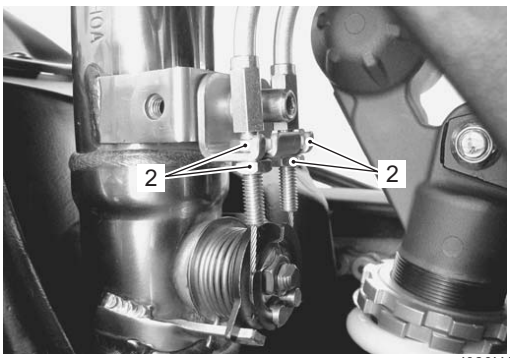

I823H1020067-01

Valve Clearance Inspection and Adjustment

B823H10206006

Inspect valve clearance

Initially every 24 000 km (14 500 miles, 48 months)

Inspection

Valve clearance adjustment must be checked and adjusted, a) at the time of periodic inspection, b) when the valve mechanism is serviced, and c) when the camshafts are removed for servicing.

1) Lift and support the fuel tank. Refer to “Fuel Tank Removal and Installation in Section 1G (Page 1G-10)”.
2) Remove the air cleaner box. Refer to “Air Cleaner Box Removal and Installation in Section 1D (Page 1D-6)”.
3) Remove the ignition coil/caps (1) and spark plugs. Refer to “Ignition Coil / Plug Cap and Spark Plug Removal and Installation in Section 1H (Page 1H-6)”.
4) Remove the PAIR control solenoid valve (2) and PAIR hoses. Refer to “PAIR Control Solenoid Valve Removal and Installation in Section 1B (Page 1B-11)” and “PAIR Reed Valve Removal and Installation in Section 1B (Page 1B-10)”.
5) Disconnect the CMP sensor coupler (3) and ignition switch lead wire coupler (4).

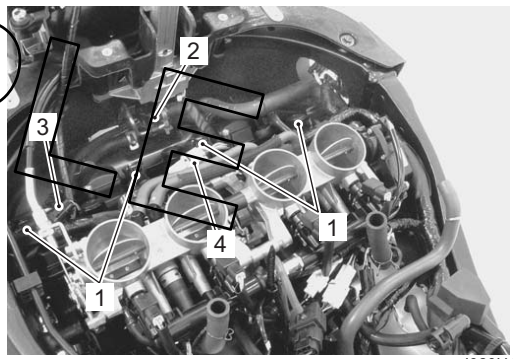

I823H1020004-04

6) Move the radiator forward. Refer to “Radiator Inspection and Cleaning in Section 1F (Page 1F-5)”.
7) Remove the radiator heat shield. Refer to “Engine Assembly Removal in Section 1D (Page 1D-19)”.

SAMPLE

8) Remove the cylinder head cover. Refer to “Engine Top Side Disassembly in Section 1D (Page 1D-28)”.

NOTE

The valve clearance specification is different for both intake and exhaust valves.

Valve clearance (When cold)
IN.: 0.08 – 0.18 mm (0.003 – 0.007 in)
EX.: 0.18 – 0.28 mm (0.007 – 0.011 in)

9) Remove the valve timing inspection cap (5) and starter clutch cover cap (6).

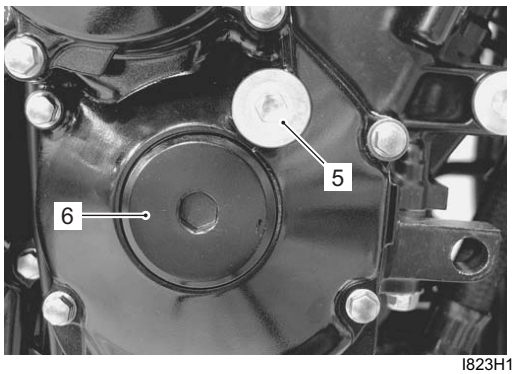

I823H1020006-02

NOTE

- **The cam must be at positions, “A” or “B”, when checking or adjusting the valve clearance. Clearance readings should not be taken with the cam in any other position than these two positions.**
- **The valve clearance should be taken when each cylinder is at Top Dead Center (TDC) of compression stroke.**
- **The clearance specification is for COLD state.**
- **To turn the crankshaft for valve clearance checking, be sure to use a wrench, and rotate in the normal running direction.**

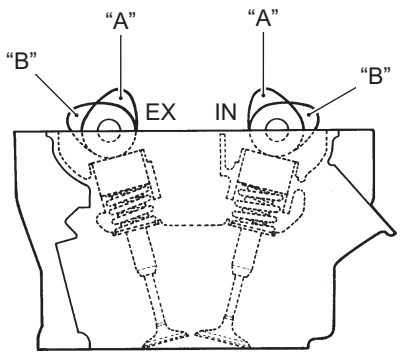

I823H1020007-01

10) Turn the crankshaft clockwise to bring the line “C” on the starter clutch to the slit “D” of valve timing inspection hole and also to bring the notches “E” on the left end of both camshafts (EX and IN) to the positions as shown in the figure.

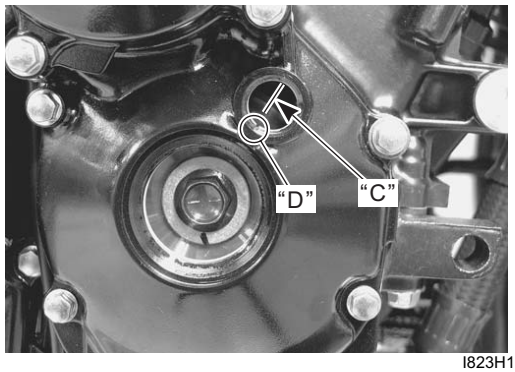

I823H1020008-02

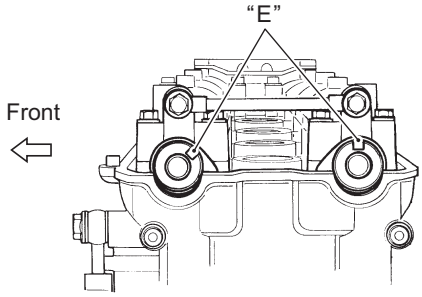

I823H1020009-01

11) Measure the clearance of valves “F”. If the clearance is out of specification, adjust it to the specified range.

Special tool
TOOL (A): 09900–20803 (Thickness gauge)

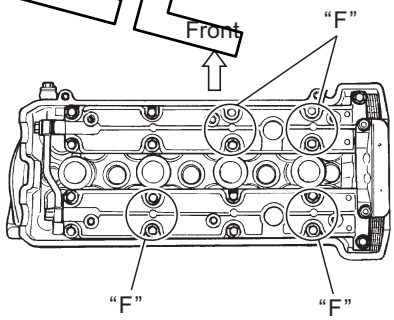

I823H1020010-01

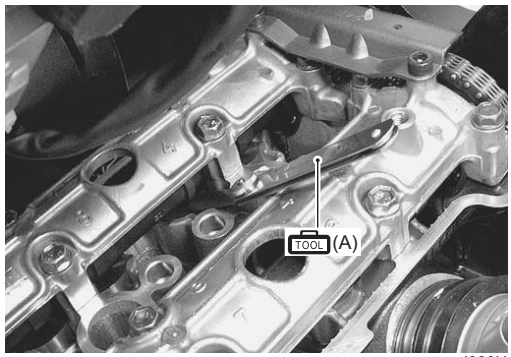

I823H1020011-01

SAMPLE

12) Turn the crankshaft clockwise 360° (one full rotation) and position the notches “E” on the left end of both camshafts to the positions as shown in the figure.

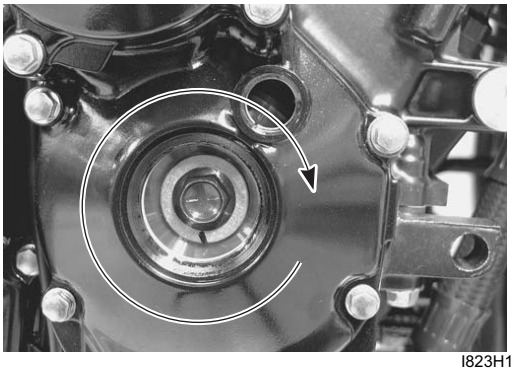

I823H1020012-02

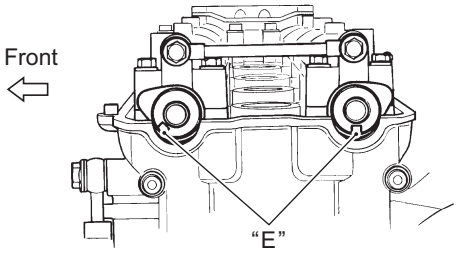

I823H1020014-01

13) Measure the clearances of the remaining valves “G” and adjust them if necessary.

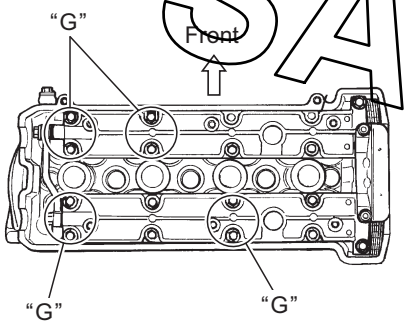

I823H1020013-01

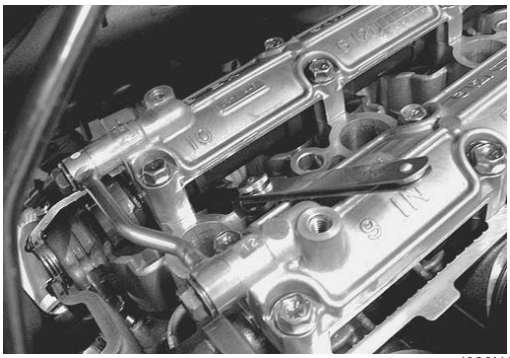

I823H1020015-01

Measuring position	Notch “E” position	
	Exhaust camshaft	Intake camshaft
“F”	← Front	← Front
“G”	← Front	← Front

I823H1020016-03

Adjustment

The clearance is adjusted by replacing the existing tappet shim with a thicker or thinner shim.

1) Remove the intake or exhaust camshaft. Refer to “Engine Top Side Disassembly in Section 1D (Page 1D-28)”.
2) Remove the tappet (1) and shim (2) by fingers or magnetic hand.

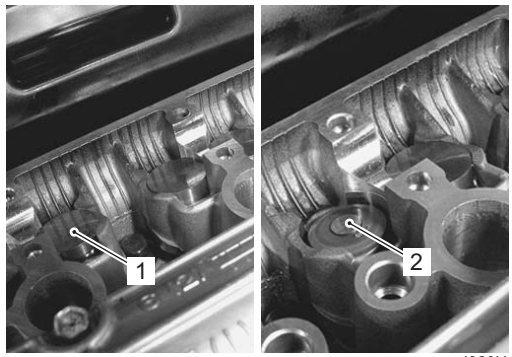

I823H1020017-01

3) Check the figures printed on the shim. These figures indicate the thickness of the shim, as illustrated.

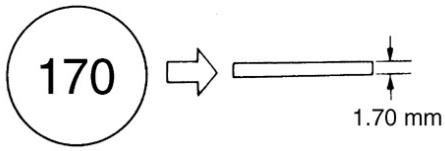

I310G1020023-01

4) Select a replacement shim that will provide a clearance within the specified range. For the purpose of this adjustment, a total of 21 sizes of tappet shim are available ranging from 1.20 to 2.20 mm in steps of 0.05 mm.
5) Fit the selected shim (2) to the valve stem end, with numbers toward tappet. Be sure to check shim size with micrometer to ensure its size.

NOTE

- **Be sure to apply engine oil to tappet shim top and bottom faces.**
- **When seating the tappet shim, be sure the figure printed surface faces the tappet.**

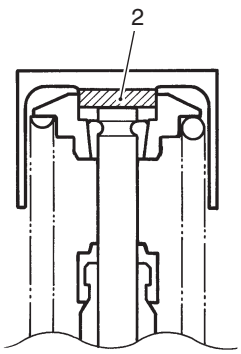

I718H1020002-02

SAMPLE

TAPPET SHIM SELECTION TABLE [INTAKE]
TAPPET SHIM NO. (12892-05C00-XXX)

TAPPET SHIM SET (12800-05830)

(INTAKE SIDE)

MEASURED VALVE CLEARANCE (mm) / SUFFIX NO.	120	125	130	135	140	145	150	155	160	165	170	175	180	185	190	195	200	205	210	215	220
PRESENT SHIM SIZE (mm)	1.20	1.25	1.30	1.35	1.40	1.45	1.50	1.55	1.60	1.65	1.70	1.75	1.80	1.85	1.90	1.95	2.00	2.05	2.10	2.15	2.20
0.00 – 0.02			1.20	1.25	1.30	1.35	1.40	1.45	1.50	1.55	1.60	1.65	1.70	1.75	1.80	1.85	1.90	1.95	2.00	2.05	2.10
0.03 – 0.07		1.20	1.25	1.30	1.35	1.40	1.45	1.50	1.55	1.60	1.65	1.70	1.75	1.80	1.85	1.90	1.95	2.00	2.05	2.10	2.15
0.08 – 0.18	SPECIFIED CLEARANCE/NO ADJUSTMENT REQUIRED																				
0.19 – 0.28	1.30	1.35	1.40	1.45	1.50	1.55	1.60	1.65	1.70	1.75	1.80	1.85	1.90	1.95	2.00	2.05	2.10	2.15	2.20	2.20	
0.29 – 0.33	1.35	1.40	1.45	1.50	1.55	1.60	1.65	1.70	1.75	1.80	1.85	1.90	1.95	2.00	2.05	2.10	2.15	2.20			
0.34 – 0.38	1.40	1.45	1.50	1.55	1.60	1.65	1.70	1.75	1.80	1.85	1.90	1.95	2.00	2.05	2.10	2.15	2.20				
0.39 – 0.43	1.45	1.50	1.55	1.60	1.65	1.70	1.75	1.80	1.85	1.90	1.95	2.00	2.05	2.10	2.15	2.20					
0.44 – 0.48	1.50	1.55	1.60	1.65	1.70	1.75	1.80	1.85	1.90	1.95	2.00	2.05	2.10	2.15	2.20						
0.49 – 0.53	1.55	1.60	1.65	1.70	1.75	1.80	1.85	1.90	1.95	2.00	2.05	2.10	2.15	2.20							
0.54 – 0.58	1.60	1.65	1.70	1.75	1.80	1.85	1.90	1.95	2.00	2.05	2.10	2.15	2.20								
0.59 – 0.63	1.65	1.70	1.75	1.80	1.85	1.90	1.95	2.00	2.05	2.10	2.15	2.20									
0.64 – 0.68	1.70	1.75	1.80	1.85	1.90	1.95	2.00	2.05	2.10	2.15	2.20										
0.69 – 0.73	1.75	1.80	1.85	1.90	1.95	2.00	2.05	2.10	2.15	2.20											
0.74 – 0.78	1.80	1.85	1.90	1.95	2.00	2.05	2.10	2.15	2.20												
0.79 – 0.83	1.85	1.90	1.95	2.00	2.05	2.10	2.15	2.20													
0.84 – 0.88	1.90	1.95	2.00	2.05	2.10	2.15	2.20														
0.89 – 0.93	1.95	2.00	2.05	2.10	2.15	2.20															
0.94 – 0.98	2.00	2.05	2.10	2.15	2.20																
0.99 – 1.03	2.05	2.10	2.15	2.20																	
1.04 – 1.08	2.10	2.15	2.20																		
1.09 – 1.13	2.15	2.20																			
1.14 – 1.18	2.20																				

SAMPLE

HOW TO USE THIS CHART:

I. Measure valve clearance. “ENGINE IS COLD”
II. Measure present shim size.
III. Match clearance in vertical column with present shim size in horizontal column.

EXAMPLE

Valve clearance is	0.23 mm
Present shim size	1.70 mm
Shim size to be used	1.80 mm

(EXHAUST SIDE)

TAPPET SHIM SELECTION TABLE [EXHAUST]
TAPPET SHIM NO. (12892-05C00-XXX)

TAPPET SHIM SET (12800-05830)

MEASURED VALVE CLEARANCE (mm) / SUFFIX NO.	120	125	130	135	140	145	150	155	160	165	170	175	180	185	190	195	200	205	210	215	220
PRESENT SHIM SIZE (mm)	1.20	1.25	1.30	1.35	1.40	1.45	1.50	1.55	1.60	1.65	1.70	1.75	1.80	1.85	1.90	1.95	2.00	2.05	2.10	2.15	2.20
0.03 – 0.07				1.20	1.25	1.30	1.35	1.40	1.45	1.50	1.55	1.60	1.65	1.70	1.75	1.80	1.85	1.90	1.95	2.00	2.05
0.08 – 0.12			1.20	1.25	1.30	1.35	1.40	1.45	1.50	1.55	1.60	1.65	1.70	1.75	1.80	1.85	1.90	1.95	2.00	2.05	2.10
0.13 – 0.17		1.20	1.25	1.30	1.35	1.40	1.45	1.50	1.55	1.60	1.65	1.70	1.75	1.80	1.85	1.90	1.95	2.00	2.05	2.10	2.15
0.18 – 0.28	SPECIFIED CLEARANCE/NO ADJUSTMENT REQUIRED																				
0.29 – 0.38	1.30	1.35	1.40	1.45	1.50	1.55	1.60	1.65	1.70	1.75	1.80	1.85	1.90	1.95	2.00	2.05	2.10	2.15	2.20	2.20	
0.39 – 0.43	1.35	1.40	1.45	1.50	1.55	1.60	1.65	1.70	1.75	1.80	1.85	1.90	1.95	2.00	2.05	2.10	2.15	2.20			
0.44 – 0.48	1.40	1.45	1.50	1.55	1.60	1.65	1.70	1.75	1.80	1.85	1.90	1.95	2.00	2.05	2.10	2.15	2.20				
0.49 – 0.53	1.45	1.50	1.55	1.60	1.65	1.70	1.75	1.80	1.85	1.90	1.95	2.00	2.05	2.10	2.15	2.20					
0.54 – 0.58	1.50	1.55	1.60	1.65	1.70	1.75	1.80	1.85	1.90	1.95	2.00	2.05	2.10	2.15	2.20						
0.59 – 0.63	1.55	1.60	1.65	1.70	1.75	1.80	1.85	1.90	1.95	2.00	2.05	2.10	2.15	2.20							
0.64 – 0.68	1.60	1.65	1.70	1.75	1.80	1.85	1.90	1.95	2.00	2.05	2.10	2.15	2.20								
0.69 – 0.73	1.65	1.70	1.75	1.80	1.85	1.90	1.95	2.00	2.05	2.10	2.15	2.20									
0.74 – 0.78	1.70	1.75	1.80	1.85	1.90	1.95	2.00	2.05	2.10	2.15	2.20										
0.79 – 0.83	1.75	1.80	1.85	1.90	1.95	2.00	2.05	2.10	2.15	2.20											
0.84 – 0.88	1.80	1.85	1.90	1.95	2.00	2.05	2.10	2.15	2.20												
0.89 – 0.93	1.85	1.90	1.95	2.00	2.05	2.10	2.15	2.20													
0.94 – 0.98	1.90	1.95	2.00	2.05	2.10	2.15	2.20														
0.99 – 1.03	1.95	2.00	2.05	2.10	2.15	2.20															
1.04 – 1.08	2.00	2.05	2.10	2.15	2.20																
1.09 – 1.13	2.05	2.10	2.15	2.20																	
1.14 – 1.18	2.10	2.15	2.20																		
1.19 – 1.23	2.15	2.20																			
1.24 – 1.28	2.20																				

SAMPLE

HOW TO USE THIS CHART:

I. Measure valve clearance. “ENGINE IS COLD”
II. Measure present shim size.
III. Match clearance in vertical column with present shim size in horizontal column.

EXAMPLE

Valve clearance is	0.33 mm
Present shim size	1.70 mm
Shim size to be used	1.80 mm

6) Install the camshafts and cam chain tension adjuster. Refer to “Engine Top Side Assembly in Section 1D (Page 1D-32)”.
7) Rotate the engine so that the tappet is depressed fully. This will squeeze out oil trapped between the shim and the tappet that could cause an incorrect measurement, then check the clearance again to confirm that it is within the specified range.
8) After finishing the tappet clearance adjustment, reinstall the removed parts. Refer to “Engine Top Side Assembly in Section 1D (Page 1D-32)”.

Spark Plug Replacement

B823H10206004

Replace spark plug
Every 12 000 km (7 500 miles, 24 months)

Refer to “Ignition Coil / Plug Cap and Spark Plug Removal and Installation in Section 1H (Page 1H-6)”.

Spark Plug Inspection and Cleaning

B823H10206005

Inspect spark plug
Every 6 000 km (4 000 miles, 12 months)

Heat Range

1) Remove the spark plugs. Refer to “Ignition Coil / Plug Cap and Spark Plug Removal and Installation in Section 1H (Page 1H-6)”.
2) Check spark plug heat range by observing electrode color. If the electrode of the spark plug is wet appearing or dark color, replace the spark plug with hotter type one. If it is white or glazed appearing, replace the spark plug with colder type one.

Heat range

	Hot type	Standard	Cold type
NGK	CR8EIA-9	CR9EIA-9	CR10EIA-9
ND	IU24D	IU27D	IU31D

3) After finishing the spark plug inspection, reinstall the removed parts.

Tightening torque
Spark plug: 11 N·m (1.1 kgf-m, 8.0 lb-ft)

Spark Plug Gap

1) Remove the spark plugs. Refer to “Ignition Coil / Plug Cap and Spark Plug Removal and Installation in Section 1H (Page 1H-6)”.
2) Measure the spark plug gap using a wire gauge. If it is not within the specification, replace the spark plug.

⚠ CAUTION

- **To prevent the damage of iridium center electrode, use a wire gauge to check the gap.**
- **Never adjust the spark plug gap.**

Spark plug gap
0.8 – 0.9 mm (0.031 – 0.035 in)

I823H1020005-01

3) After finishing the spark plug inspection, reinstall the removed parts.

Tightening torque
Spark plug: 11 N·m (1.1 kgf-m, 8.0 lb-ft)

Electrodes Condition

1) Remove the spark plugs. Refer to “Ignition Coil / Plug Cap and Spark Plug Removal and Installation in Section 1H (Page 1H-6)”.
2) Check the worn or burnt condition of the electrodes. If it is extremely worn or burnt, replace the spark plug. And also replace the spark plug if it has a broken insulator, or damaged thread.

⚠ CAUTION

Confirm the thread size and reach when replacing the plug. If the reach is too short, carbon will be deposited on the screw portion of the plug hole and engine damage may result.

3) After finishing the spark plug inspection, reinstall the removed parts.

Tightening torque
Spark plug: 11 N·m (1.1 kgf-m, 8.0 lb-ft)

SAMPLE

Fuel Line Inspection

B823H10206007

Inspect fuel line
Every 6 000 km (4 000 miles, 12 months)

Inspect the fuel line in the following procedures:

1) Lift and support the fuel tank. Refer to “Fuel Tank Removal and Installation in Section 1G (Page 1G-10)”.
2) Inspect the fuel feed hose (1) for damage and fuel leakage. If any defects are found, the fuel feed hose must be replaced.

⚠ WARNING

When disconnecting the fuel feed hose from California model, drain fuel from the fuel tank first to prevent fuel leakage.

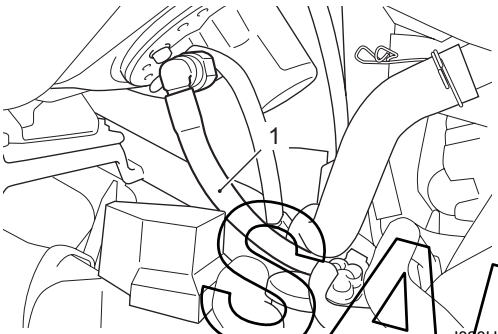

I823H1020020-02

3) After finishing the fuel feed hose inspection, reinstall the removed parts.

Engine Oil and Filter Replacement

B823H10206009

Replace engine oil
Initially at 1 000 km (600 miles, 2 months) and every 6 000 km (4 000 miles, 12 months) thereafter

Replace oil filter
Initially at 1 000 km (600 miles, 2 months) and every 18 000 km (11 000 miles, 36 months) thereafter

Oil should be changed while the engine is warm. Oil filter replacement at the above intervals, should be done together with the engine oil change.

Engine Oil Replacement

1) Place the motorcycle on the side-stand.
2) Place an oil pan below the engine, and drain engine oil by removing the oil drain plug (1) and filler cap (2).

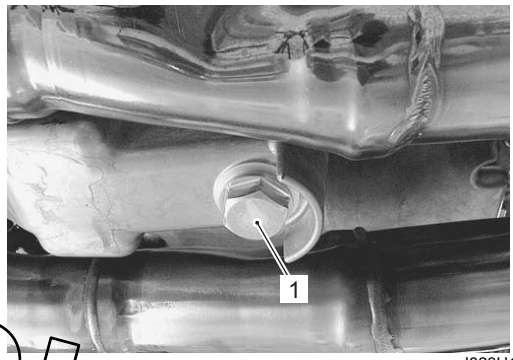

I823H1020021-01

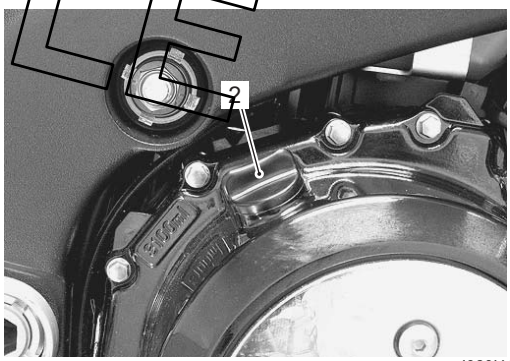

I823H1020022-01

SAMPLE

3) Tighten the oil drain plug (1) to the specified torque.

⚠ CAUTION

Replace the gasket washer with a new one.

Tightening torque
Oil drain plug (a): 23 N·m (2.3 kgf-m, 16.5 lb-ft)

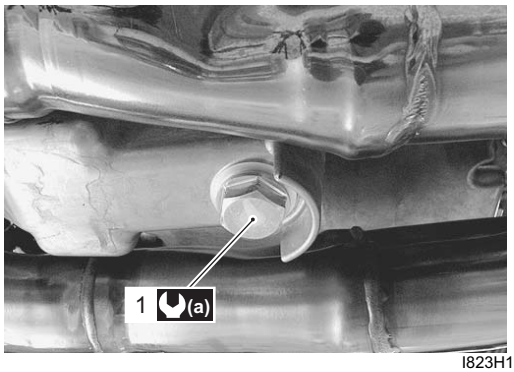

I823H1020023-02

4) Pour new oil through the oil filler. When performing an oil change (without oil filter replacement), the engine will hold about 3.1 L (3.3/2.7 US/Imp qt) of oil. Use of SF/SG or SH/SJ in API with MA in JASO.
5) Start up the engine and allow it to run for several minutes at idling speed.
6) Turn off the engine and wait about three minutes.
7) Hold the motorcycle vertically and check the oil level through the inspection window (3). If the oil level is below the "L" mark, add oil to the "F" mark. If the level is above the "F" mark, drain the oil until the level reaches the "F" mark.

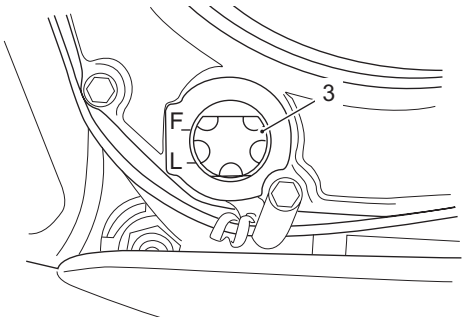

I823H1020024-02

Oil Level Inspection

1) Place the motorcycle on the side-stand.
2) Start up the engine and allow it to run for several minutes at idle speed.
3) Turn off the engine and wait about three minutes.
4) Hold the motorcycle vertically and check the oil level through the inspection window (1). If the level is below mark "L", add oil to "F" level. If the level is above mark "F", drain oil to "F" level.

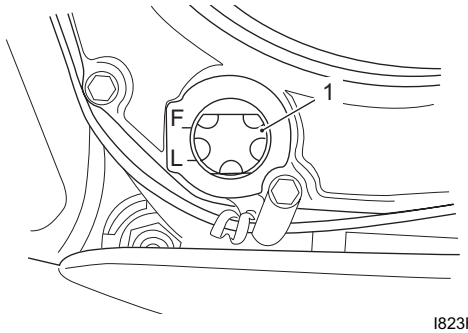

I823H1020026-02

Oil Filter Replacement

1) Drain engine oil as described in the engine oil replacement procedure.
2) Remove the bolt (1). Pull the under cover downward.

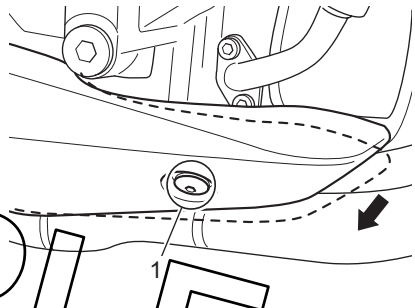

I823H1020027-02

3) Remove the oil filter (2) using the special tool.

Special tool
TOOL (A): 09915–40610 (Oil filter wrench)

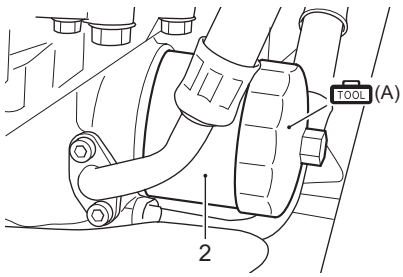

I823H1020028-01

4) Apply engine oil lightly to the O-ring of new oil filter, before installation.

⚠ CAUTION

ONLY USE A GENUINE SUZUKI MOTORCYCLE OIL FILTER.
Other manufacturer's oil filters may differ in thread specifications (thread diameter and pitch), filtering performance and durability which may lead to engine damage or oil leaks. Also, do not use a genuine Suzuki automobile oil filter on this motorcycle.

SAMPLE

5) Install the new oil filter. Turn it by hand until you feel that the oil filter O-ring contacts the oil filter mounting surface. Then, tighten the oil filter two full turns (or to specified torque) using the special tool.

NOTE

To properly tighten the oil filter, use the special tool. Never tighten the oil filter by hand only.

Special tool
TOOL (A): 09915–40610 (Oil filter wrench)

Tightening torque
Oil filter (a): 20 N·m (2.0 kgf-m, 14.5 lb-ft)

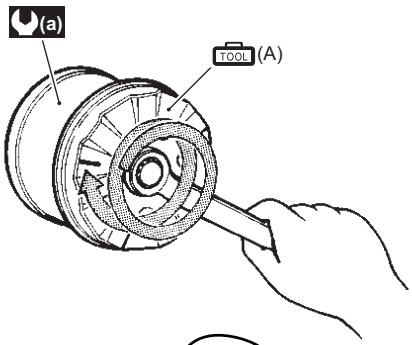

I823H1020041-01

6) Add new engine oil and check the oil level is as described in the engine oil replacement procedure.

Necessary amount of engine oil
Oil change: 3 100 ml (3.3/2.7 US/Imp qt)
Oil and filter change: 3 300 ml (3.5/2.9 US/Imp qt)
Engine overhaul: 4 000 ml (4.2/3.5 US/Imp qt)

Throttle Cable Play Inspection and Adjustment

B823H10206010

Inspect throttle cable play
Initially at 1 000 km (600 miles, 2 months) and every 6 000 km (4 000 miles, 12 months) thereafter

Inspect and adjust the throttle cable play “a” as follows:

Throttle cable play “a”
2.0 – 4.0 mm (0.08 – 0.16 in)

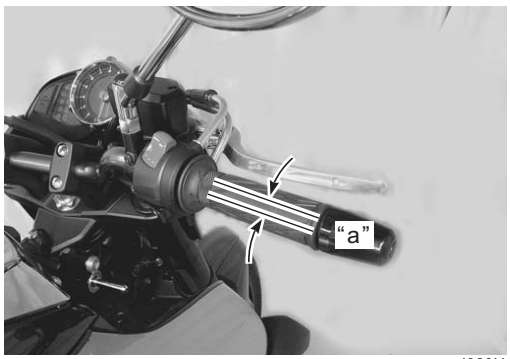

I823H1020025-02

1) Loosen the lock-nut (1) of the throttle pulling cable (2).
2) Turn the adjuster (3) in or out until the throttle cable play “a” (at the throttle grip) is between 2 – 4 mm (0.08 – 0.16 in).
3) Tighten the lock-nut (1) while holding the adjuster (3).

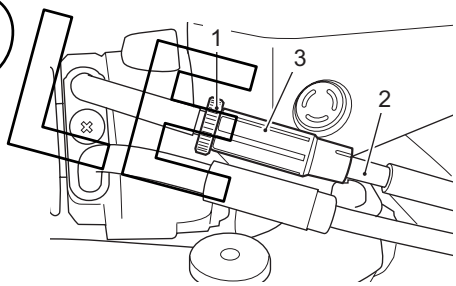

I823H1020029-02

⚠ WARNING

After the adjustment is completed, check that handlebar movement does not raise the engine idle speed and that the throttle grip returns smoothly and automatically.

Throttle Valve Synchronization

B823H10206011

Inspect throttle valve synchronization
Initially at 1 000 km (600 miles, 2 months) (E-33 only) and every 12 000 km (7 500 miles, 24 months)

Inspect the throttle valve synchronization periodically. Refer to “Throttle Valve Synchronization in Section 1D (Page 1D-16)”.

SAMPLE

Evaporative Emission Control System Inspection (E-33 only)

B823H10206008

Inspect evaporative emission control system
Every 12 000 km (7 500 miles, 24 months)

Inspect the evaporative emission control system periodically (E-33 only).

PAIR System Inspection

B823H10206012

Inspect PAIR system
Every 12 000 km (7 500 miles, 24 months)

Inspect the PAIR (air supply) system periodically. Refer to “PAIR System Inspection in Section 1B (Page 1B-11)”.

Cooling System Inspection

B823H10206013

Inspect cooling system
Every 6 000 km (4 000 miles, 6 months)

Replace engine coolant
Every 2 years

Engine Coolant Level Inspection

1) Hold the motorcycle vertically.
2) Check the engine coolant level by observing the full and lower lines on the engine coolant reservoir tank. If the level is below the lower line, add engine coolant to the full line from the engine coolant reservoir tank filler (1) behind the right frame side cover. Refer to “Exterior Parts Removal and Installation in Section 9D (Page 9D-14)”.

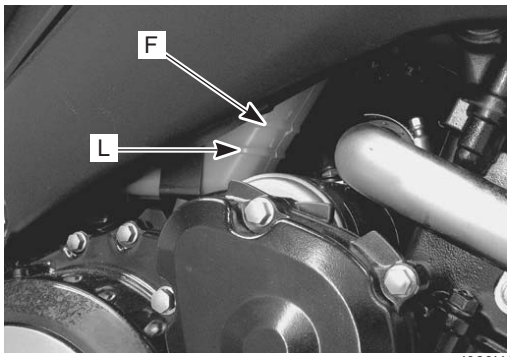

I823H1020031-02

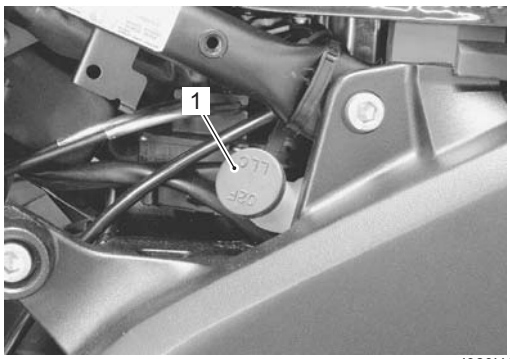

I823H1020063-01

Engine Coolant Change

Refer to “Engine Coolant Description in Section 1F (Page 1F-1)”.

⚠ WARNING

Do not open the radiator cap when the engine is hot, as you may be injured by escaping hot liquid or vapor. Engine coolant may be harmful if swallowed or if it comes in contact with skin or eyes. If engine coolant gets into the eyes or in contact with the skin, flush thoroughly with plenty of water. If swallowed, induce vomiting and call physician immediately.

1) Remove the right frame body cover. Refer to “Cooling Circuit Inspection in Section 1F (Page 1F-4)”.
2) Remove the radiator cap (1).

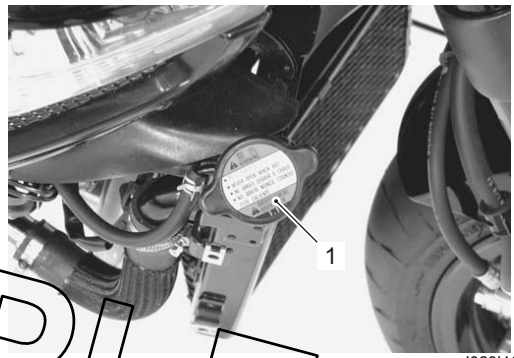

I823H1020043-01

3) Remove the under cowling. Refer to “Exterior Parts Removal and Installation in Section 9D (Page 9D-14)”.
4) Drain engine coolant by disconnecting the water pump inlet hose (2).

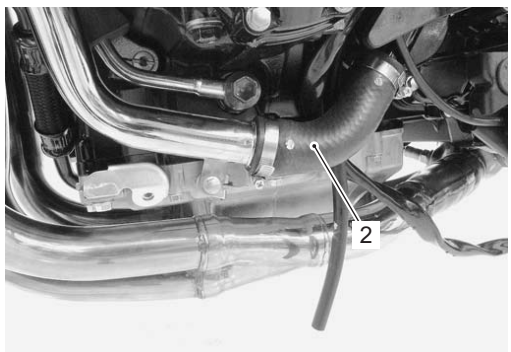

I823H1020044-01

5) Flush the radiator with fresh water if necessary.
6) Reconnect the water pump inlet hose.
7) Pour the specified engine coolant up to the radiator inlet.

   Engine coolant capacity (excluding reservoir)
   2 650 ml (2.8/2.3 US/Imp qt)

8) Bleed air from the cooling circuit.

SAMPLE

9) After changing engine coolant, reinstall the removed parts.

Air Bleeding From the Cooling Circuit

1) Add engine coolant up to the radiator inlet.
2) Support the motorcycle upright.
3) Slowly swing the motorcycle, right and left, to bleed the air trapped in the cooling circuit.
4) Add engine coolant up to the radiator inlet.
5) Start up the engine and bleed air from the radiator inlet completely.
6) Add engine coolant up to the radiator inlet.
7) Repeat the procedures 5) to 6) until no air bleeds from the radiator inlet.
8) Lift and support the fuel tank. Refer to “Fuel Tank Removal and Installation in Section 1G (Page 1G-10)”.
9) Loosen the air bleeder bolt (1) and check the engine coolant flows out.

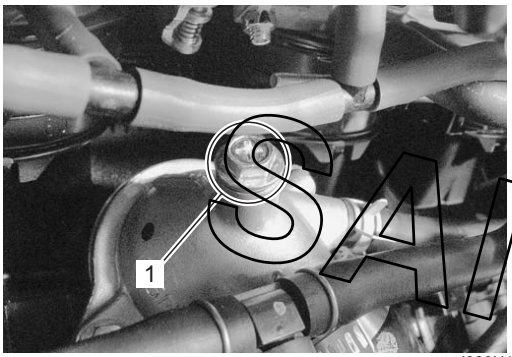

I823H1020045-01

10) Tighten the air bleeder bolt securely.
11) Close the radiator cap securely.
12) After warming up and cooling down the engine several times, add the engine coolant up to the full level of the reservoir.

⚠ CAUTION

Make sure that the radiator is filled with engine coolant up to the reservoir full level.

13) Reinstall the removed parts.

Radiator Hose Inspection

Check the radiator hoses for crack, damage or engine coolant leakage. Refer to “Water Hose Inspection in Section 1F (Page 1F-7)”.

Clutch System Inspection

B823H10206014

Inspect clutch hose and clutch fluid
Every 6 000 km (4 000 miles, 12 months)

⚠ WARNING

The clutch system of this motorcycle is filled with a glycol-based brake fluid. Do not use or mix different types of fluid such as silicone-based or petroleum-based. Do not use any brake fluid taken from old, used or unsealed containers. Never reuse brake fluid left over from the last servicing or stored for a long period of mine. Check the clutch hose and hose joints for cracks and fluid leakage.

Clutch Fluid Level Check

1) Keep the motorcycle upright and place the handlebars straight.
2) Check the clutch fluid level by observing the lower limit line on the clutch fluid reservoir.
   When the clutch fluid level is below the lower limit line, replenish with clutch fluid that meets the following specification.

BF: Brake fluid (DOT 4)

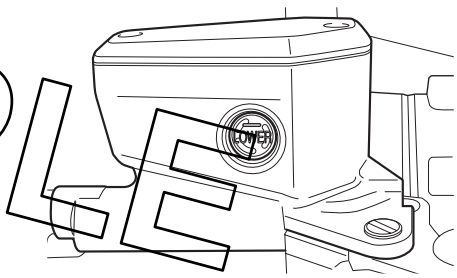

I823H1020030-01

Clutch Hose Inspection

1) Remove the engine sprocket outer cover. Refer to “Engine Sprocket Removal and Installation in Section 3A (Page 3A-2)”.
2) Lift and support the fuel tank. Refer to “Fuel Tank Removal and Installation in Section 1G (Page 1G-10)”.

SAMPLE

3) Inspect the clutch hose for crack, damage or clutch fluid leakage. If it is damaged, replace the clutch hose with a new one.

I823H1020062-02

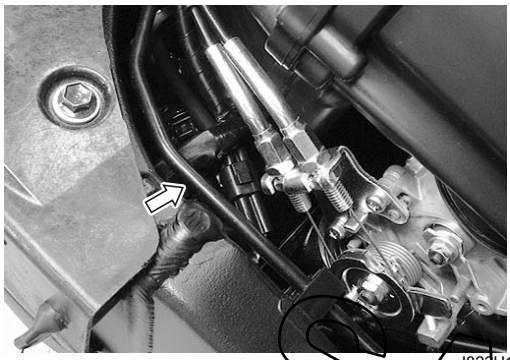

I823H1020065-01

4) After finishing the clutch hose inspection, reinstall the removed parts.

Clutch Hose Replacement

B823H10206015

Replace clutch hose
Every 4 years

Refer to “Clutch Hose Removal and Installation in Section 5C (Page 5C-6)”.

Clutch Fluid Replacement

B823H10206016

Replace clutch fluid
Every 2 years

Refer to “Clutch Fluid Replacement in Section 5C (Page 5C-5)”.

Air Bleeding from Clutch Fluid Circuit
Refer to “Air Bleeding from Clutch Fluid Circuit in Section 5C (Page 5C-5)”.

Drive Chain Inspection and Adjustment

B823H10206017

Inspect drive chain
Initially at 1 000 km (600 miles, 2 months) and every 6 000 km (4 000 miles, 12 months) thereafter

Drive Chain Visual Check

1) With the transmission in neutral, support the motorcycle using a jack and turn the rear wheel slowly by hand.
2) Remove the engine sprocket inner cover. Refer to “Engine Sprocket Removal and Installation in Section 3A (Page 3A-2)”.
3) Visually check the drive chain for the possible defects listed as follows. If any defects are found, the drive chain must be replaced. Refer to “Drive Chain Replacement in Section 3A (Page 3A-7)”.
   - Loose pins
   - Damaged rollers
   - Dry or rusted links
   - Kinked or binding links
   - Excessive wear
   - Improper chain adjustment
   - Missing O-ring seals

NOTE

When replacing the drive chain, replace the drive chain and sprockets as a set.

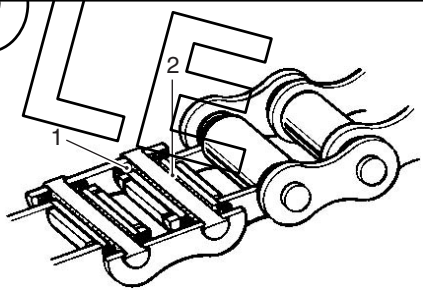

I649G1020032-02

1. O-ring seal	2. Grease

4) Inspect the sprocket cover protector (3). If any defects are found, replace the protector.

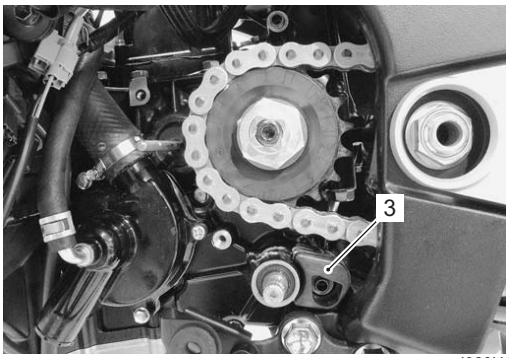

I823H1020046-01

5) Install the removed parts.

SAMPLE

Drive Chain Length Inspection

1) Loosen the axle nut (1).
2) Loosen the chain adjuster lock-nuts (2).
3) Give tension to the drive chain fully by turning both chain adjuster bolts (3).

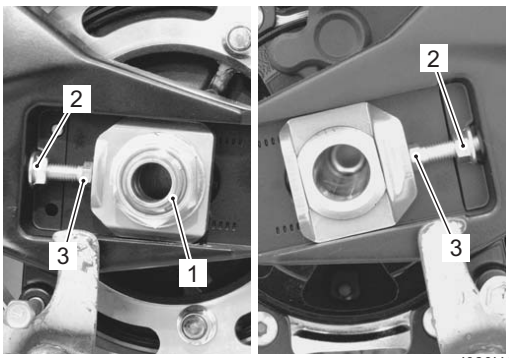

I823H1020032-01

4) Count out 21 pins (20 pitches) on the chain and measure the distance between the two points. If the distance exceeds the service limit, the chain must be replaced.

Drive chain 20-pitch length
Service limit: 319.4 mm (12.57 in)

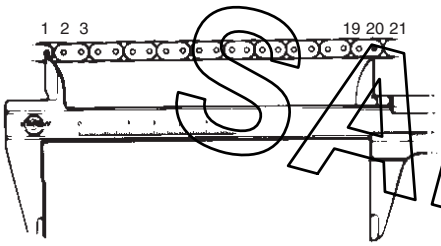

I649G1020034-02

5) After finishing the drive chain length inspection, adjust the drive chain slack.

Drive Chain Slack Adjustment

1) Support the motorcycle with a jack.
2) Loosen the axle nut (1).
3) Loosen the chain adjuster lock-nuts (2).
4) Loosen or tighten both chain adjuster bolts (3) until there is 20 – 30 mm (0.8 – 1.2 in) of slack “a” at the middle of the chain between the engine and rear sprockets as shown in the figure.

⚠ CAUTION

The reference marks “A” on both sides of the swingarm and the edge of each chain adjuster must be aligned to ensure that the front and rear wheels are correctly aligned.

Drive chain slack “a”
Standard 20 – 30 mm (0.8 – 1.2 in)

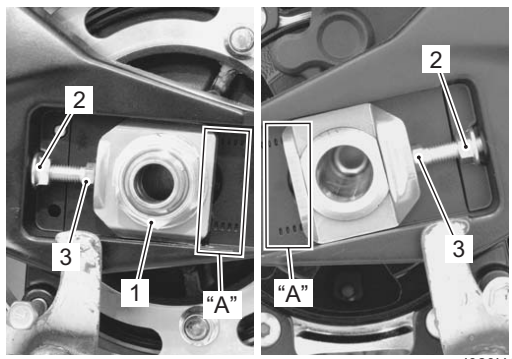

I823H1020033-02

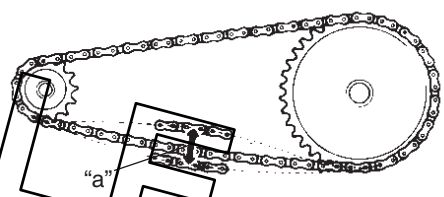

I649G1020036-02

5) After adjusting the drive chain, tighten the axle nut (1) to the specified torque.

Tightening torque
Rear axle nut: 100 N·m (10.0 kgf-m, 72.5 lb-ft)

6) Tighten both chain adjuster lock-nuts (2) securely.
7) Recheck the drive chain slack after tightening the axle nut.

SAMPLE

Drive Chain Cleaning and Lubricating

B823H10206018

Clean and lubricate drive chain
Every 1 000 km (600 miles)

Clean and lubricate the drive chain in the following procedures:

1) Clean the drive chain with kerosine. If the drive chain tends to rust quickly, the intervals must be shortened.

⚠ CAUTION

Do not use trichloroethylene, gasoline or any similar solvent.
These fluids have too great a dissolving power for this chain and they can damage the O-rings. Use only kerosine to clean the drive chain.

2) After cleaning and drying the chain, oil it with a heavyweight motor oil.

⚠ CAUTION

- **Do not use any oil sold commercially as "drive chain oil". Such oil can damage the O-rings.**
- **The standard drive chain is a RK GB50GSVZ4. SUZUKI recommends to use this standard drive chain as a replacement.**

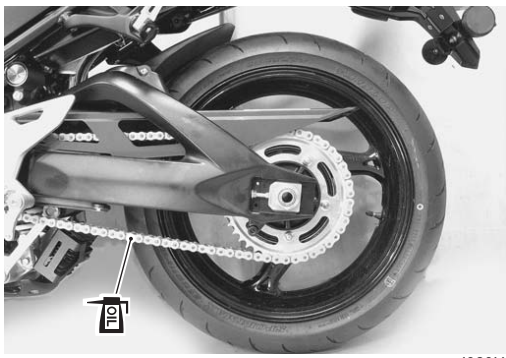

I823H1020034-02

Brake System Inspection

B823H10206019

Inspect brake system
Initially at 1 000 km (600 miles, 2 months) and every 6 000 km (4 000 miles, 12 months) thereafter

Inspect brake hose and brake fluid
Every 6 000 km (4 000 miles, 12 months)

⚠ WARNING

- **The brake system of this motorcycle is filled with a glycol-based brake fluid. Do not use or mix different types of fluid such as silicone-based and petroleum-based fluids. Do not use any brake fluid taken from old, used or unsealed containers. Never reuse brake fluid left over from the last servicing or stored for a long period of time.**
- **Brake fluid, if it leaks, will interfere with safe running and immediately discolor painted surfaces. Check the brake hoses and hose joints for cracks and oil leakage before riding.**

Brake Fluid Level Check

1) Keep the motorcycle upright and place the handlebars straight.
2) Check the brake fluid level by observing the lower limit lines on the front and rear brake fluid reservoirs. When the brake fluid level is below the lower limit line, replenish with brake fluid that meets the following specification.

BF: Brake fluid (DOT 4)

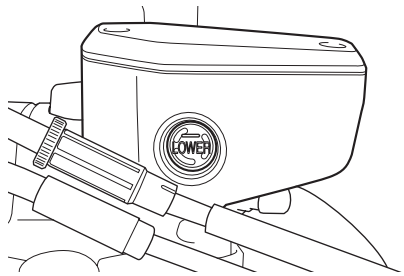

I823H1020035-01

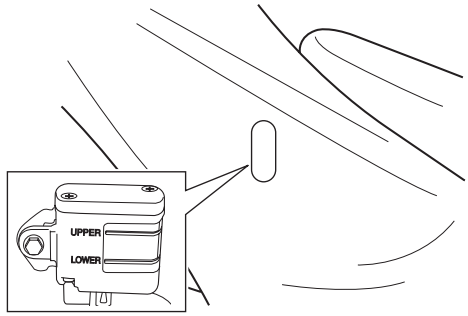

I823H1020036-02

SAMPLE

Brake Pads Check

The extent of brake pad wear can be checked by observing the grooved limit line “A” on the pad. When the wear exceeds the grooved limit line, replace the pads with new ones. Refer to “Front Brake Pad Replacement in Section 4B (Page 4B-2)” and “Rear Brake Pad Replacement in Section 4C (Page 4C-2)”.

⚠ CAUTION

Replace the brake pad as a set, otherwise braking performance will be adversely affected.

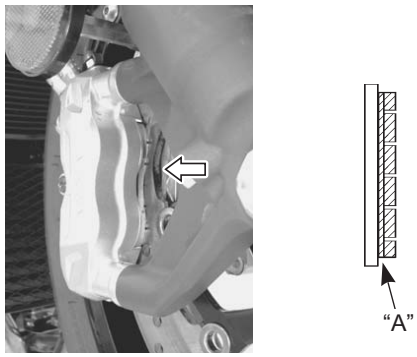

I823H1420001-02

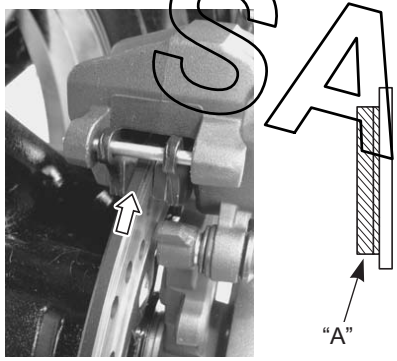

I823H1430001-03

SAMPLE

Front and Rear Brake Hose Inspection

Inspect the brake hoses and hose joints for crack, damage or brake oil leakage. If any defects are found, replace the brake hose with a new one. Refer to “Front Brake Hose Removal and Installation in Section 4A (Page 4A-8)” and “Rear Brake Hose Removal and Installation in Section 4A (Page 4A-8)”.

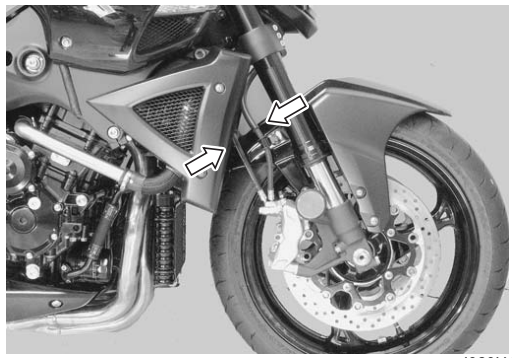

I823H1020047-01

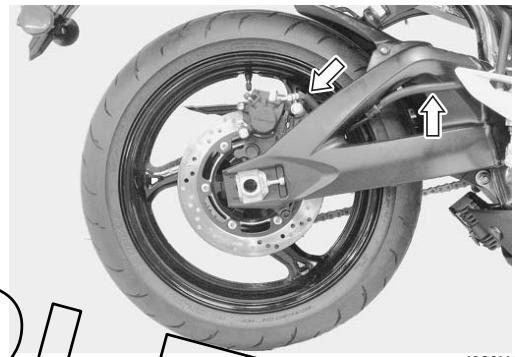

I823H1020048-02

Brake Pedal Height Inspection and Adjustment

1) Inspect the brake pedal height “a” between the pedal top face and footrest.
   Adjust the brake pedal height if necessary.

   Brake pedal height “a”
   Standard: 55 – 65 mm (2.2 – 2.6 in)

2) Loosen the lock-nut (1).
3) Turn the push rod (2) until the brake pedal becomes 55 – 65 mm (2.2 – 2.6 in) “a” below the top of the footrest.
4) Tighten the lock-nut (1) securely.

   Tightening torque
   Rear master cylinder rod lock-nut (a): 18 N·m (1.8 kgf-m, 13.0 lb-ft)

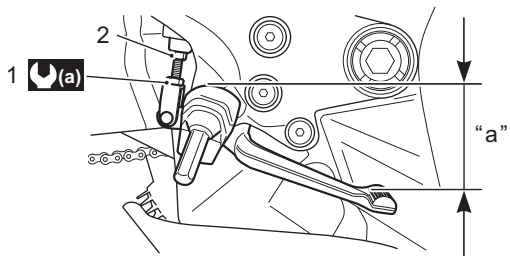

I823H1020037-02

Brake Hose Replacement

Replace brake hose
Every 4 years

Refer to “Front Brake Hose Removal and Installation in Section 4A (Page 4A-8)” and “Rear Brake Hose Removal and Installation in Section 4A (Page 4A-8)”.

Brake Fluid Replacement

Replace brake fluid
Every 2 years

Refer to “Brake Fluid Replacement in Section 4A (Page 4A-6)”.

Air Bleeding from Brake Fluid Circuit

Refer to “Air Bleeding from Brake Fluid Circuit in Section 4A (Page 4A-4)”.

Rear Brake Light Switch Adjustment

Refer to “Rear Brake Light Switch Inspection and Adjustment in Section 4A (Page 4A-4)”.

Tire Inspection

B823H10206020

Inspect tire
Every 6 000 km (4 000 miles, 12 months)

Tire Tread Condition

Operating the motorcycle with excessively worn tires will decrease riding stability and consequently invite a dangerous situation. It is highly recommended to replace a tire when the remaining depth of tire tread reaches the following specification.

Special tool
TOOL : 09900–20805 (Tire depth gauge)

Tire tread depth (Service limit)
Front: 1.6 mm (0.06 in.)
Rear: 2.0 mm (0.08 in.)

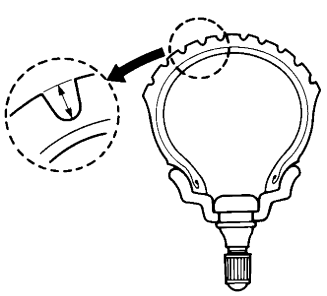

I310G1020068-02

Tire Pressure

If the tire pressure is too high or too low, steering will be adversely affected and tire wear increased. Therefore, maintain the correct tire pressure for good roadability or shorter tire life will result. Cold inflation tire pressure is as follows.

Cold inflation tire pressure

	Solo riding			Dual riding		
	kPa	kgf/cm²	psi	kPa	kgf/cm²	psi
Front	250	2.50	36	250	2.50	36
Rear	290	2.90	42	290	2.90	42

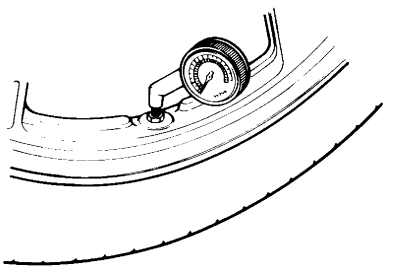

I310G1020069-02

⚠ CAUTION

The standard tire fitted on this motorcycle is 120/70 ZR17 M/C (58W) for front and 200/50 ZR17 M/C (75W) for rear. The use of tires other than those specified may cause instability. It is highly recommended to use the specified tires.

Tire type
DUNLOP

- **Front: Qualifier MT**
- **Rear: Qualifier NK**

SAMPLE

Steering System Inspection

B823H10206021

Inspect steering system
Initially at 1 000 km (600 miles, 2 months) and every 12 000 km (7 500 miles, 24 months) thereafter

Steering should be adjusted properly for smooth turning of handlebars and safe running. Overtighten steering prevents smooth turning of the handlebars and too loose steering will cause poor stability.

1) Check that there is no play in the front fork.
2) Support the motorcycle so that the front wheel is off the ground, with the wheel facing straight ahead, grasp the lower fork tubes near the axle and pull forward.
   If play is found, readjust the steering. Refer to “Steering Tension Adjustment in Section 6B (Page 6B-11)”.

I823H1020038-03

Front Fork Inspection

B823H10206022

Inspect front fork
Every 12 000 km (7 500 miles, 24 months)

Inspect the front forks for oil leakage, scoring or scratches on the outer surface of the inner tubes. Replace any defective parts, if necessary. Refer to “Front Fork Disassembly and Assembly in Section 2B (Page 2B-5)”.

I823H1020039-01

Rear Suspension Inspection

B823H10206023

Inspect rear suspension
Every 12 000 km (7 500 miles, 24 months)

Inspect the rear shock absorber for oil leakage and check that there is no play in the swingarm.
Replace any defective parts, if necessary. Refer to “Rear Shock Absorber Removal and Installation in Section 2C (Page 2C-3)”, “Cushion Lever Removal and Installation in Section 2C (Page 2C-6)” and “Swingarm / Cushion Rod Removal and Installation in Section 2C (Page 2C-8)”.

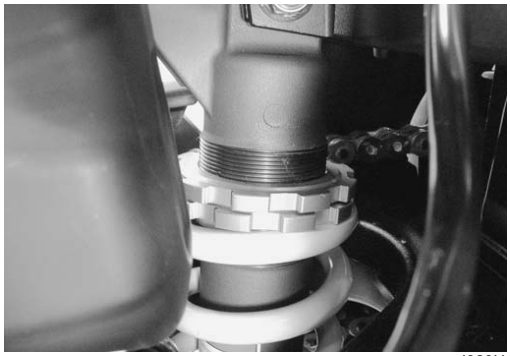

I823H1020049-01

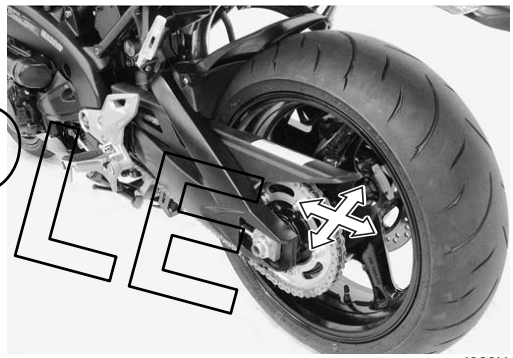

I823H1020064-01

SAMPLE

Chassis Bolt and Nut Inspection

B823H10206024

Tighten chassis bolt and nut

Initially at 1 000 km (600 miles, 2 months) and every 6 000 km (4 000 miles, 12 months) thereafter

Check that all chassis bolts and nuts are tightened to their specified torque.

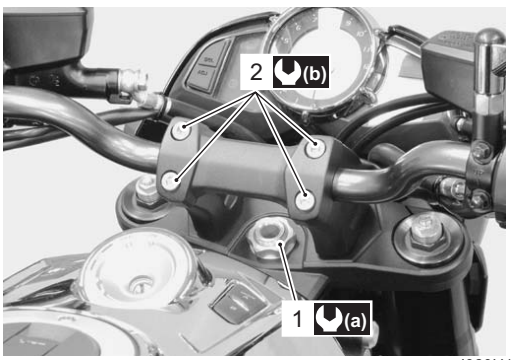

I823H1020050-03

1	(a)	Steering stem head nut 80 N·m (8.0 kgf-m, 47.0 lb-ft)
2	(b)	Handlebar holder bolt 23 N·m (2.3 kgf-m, 16.5 lb-ft)

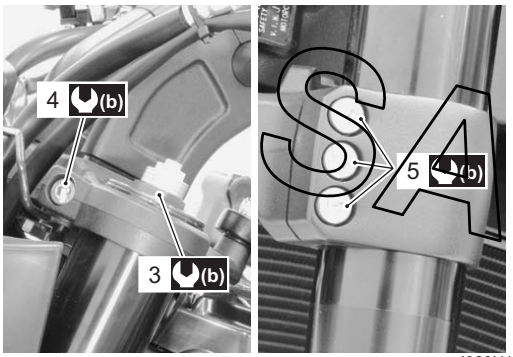

I823H1020051-03

3	(b)	Front fork cap bolt 23 N·m (2.3 kgf-m, 16.5 lb-ft)
4	(b)	Front fork upper clamp bolt 23 N·m (2.3 kgf-m, 16.5 lb-ft)
5	(b)	Front fork lower clamp bolt 23 N·m (2.3 kgf-m, 16.5 lb-ft)

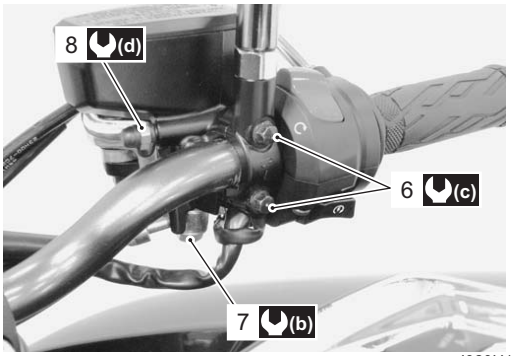

I823H1020052-02

6	(c)	Front brake master cylinder mounting bolt 10 N·m (1.0 kgf-m, 7.0 lb-ft)
7	(b)	Union bolt (Front brake) 23 N·m (2.3 kgf-m, 16.5 lb-ft)
8	(d)	Air bleeder valve (Front brake) 6 N·m (0.6 kgf-m, 4.5 lb-ft)

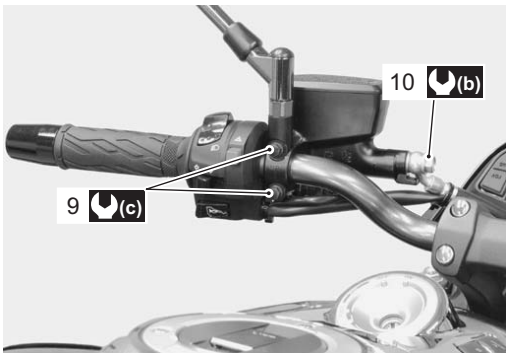

I823H1020053-01

9	(c)	Clutch master cylinder mounting bolt 10 N·m (1.0 kgf-m, 7.0 lb-ft)
10	(b)	Union bolt (Clutch) 23 N·m (2.3 kgf-m, 16.5 lb-ft)

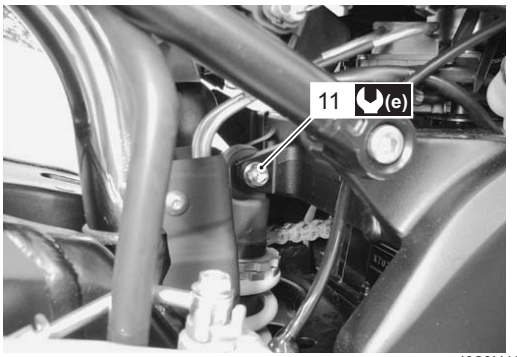

I823H1020054-01

11	(e)	Rear shock absorber mounting nut (Upper) 50 N·m (5.0 kgf-m, 36.0 lb-ft)

SAMPLE

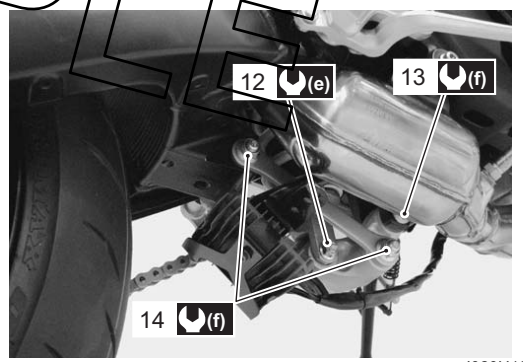

I823H1020055-01

12	(e)	Rear shock absorber mounting nut (Lower) 50 N·m (5.0 kgf-m, 36.0 lb-ft)
13	(f)	Cushion lever mounting nut 78 N·m (7.8 kgf-m, 56.5 lb-ft)
14	(f)	Cushion rod nut 78 N·m (7.8 kgf-m, 56.5 lb-ft)

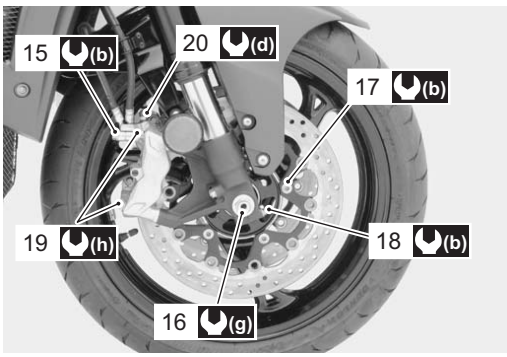

I823H1020056-01

15	(b)	Union bolt (Front brake) 23 N·m (2.3 kgf-m, 16.5 lb-ft)
16	(g)	Front axle bolt 100 N·m (10.0 kgf-m, 72.5 lb-ft)
17	(b)	Brake disc bolt (Front) 23 N·m (2.3 kgf-m, 16.5 lb-ft)
18	(b)	Front axle pinch bolt 23 N·m (2.3 kgf-m, 16.5 lb-ft)
19	(h)	Front brake caliper mounting bolt 39 N·m (3.9 kgf-m, 28.0 lb-ft)
20	(d)	Air bleeder valve (Front brake) 6.0 N·m (0.6 kgf-m, 4.5 lb-ft)

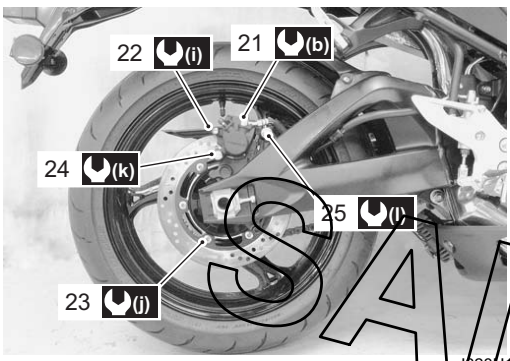

I823H1020057-01

21	(b)	Union bolt (Rear brake) 23 N·m (2.3 kgf-m, 16.5 lb-ft)
22	(i)	Air bleeder valve (Rear brake) 7.5 N·m (0.75 kgf-m, 5.5 lb-ft)
23	(j)	Brake disc bolt (Rear) 35 N·m (3.5 kgf-m, 25.5 lb-ft)
24	(k)	Front brake caliper mounting bolt 17 N·m (1.7 kgf-m, 12.5 lb-ft)
25	(l)	Front brake caliper sliding pin 33 N·m (3.3 kgf-m, 24.0 lb-ft)

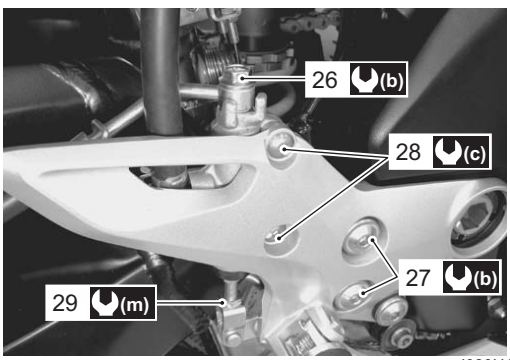

I823H1020058-01

26	(b)	Union bolt 23 N·m (2.3 kgf-m, 16.5 lb-ft)
27	(b)	Front footrest bolt 23 N·m (2.3 kgf-m, 16.5 lb-ft)
28	(c)	Rear brake master cylinder mounting bolt 10 N·m (1.0 kgf-m, 7.0 lb-ft)
29	(m)	Rear brake master cylinder rod lock-nut 18 N·m (1.8 kgf-m, 13.0 lb-ft)

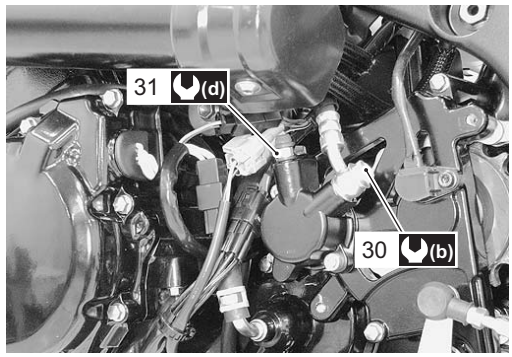

I823H1020059-01

30	(b)	Union bolt (clutch) 23 N·m (2.3 kgf-m, 16.5 lb-ft)
31	(d)	Air bleeder valve (clutch) 6 N·m (0.6 kgf-m, 4.5 lb-ft)

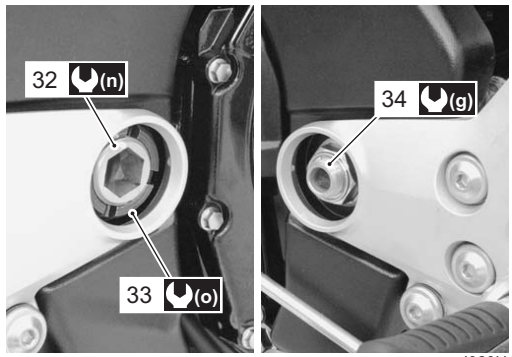

I823H1020060-02

32	(n)	Swingarm pivot shaft 15 N·m (1.5 kgf-m, 11.0 lb-ft)
33	(o)	Swingarm pivot lock-nut 90 N·m (9.0 kgf-m, 65.0 lb-ft)
34	(g)	Swingarm pivot nut 100 N·m (10.0 kgf-m, 72.5 lb-ft)

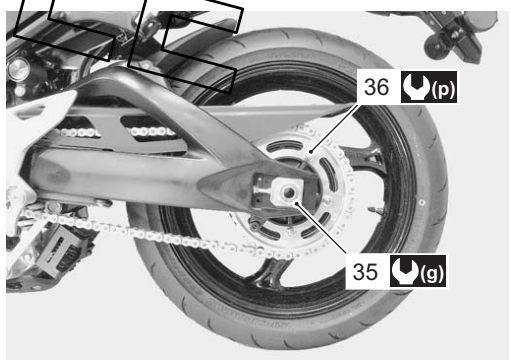

I823H1020061-01

35	(g)	Rear axle nut 100 N·m (10.0 kgf-m, 72.5 lb-ft)
36	(p)	Rear sprocket nut 60 N·m (6.0 kgf-m, 43.5 lb-ft)

Compression Pressure Check

B823H10206025

Refer to “Compression Pressure Check in Section 1D (Page 1D-3)”.

Oil Pressure Check

B823H10206026

Refer to “Oil Pressure Check in Section 1E (Page 1E-5)”.

SDS check

B823H10206027

Refer to “SDS Check in Section 1A (Page 1A-17)”.

SAMPLE

Specifications

Tightening Torque Specifications

B823H10207001

Fastening part	Tightening torque			Note
	N·m	kgf-m	lb-ft	
Exhaust pipe bolt	23	2.3	16.5	☞(Page 0B-3)
Exhaust pipe mounting bolt	25	2.5	18.0	☞(Page 0B-3)
Muffler connecting bolt	23	2.3	16.5	☞(Page 0B-3)
Muffler joint mounting bolt	23	2.3	16.5	☞(Page 0B-3)
Muffler mounting bolt (Front)	23	2.3	16.5	☞(Page 0B-3)
Muffler mounting bolt (Rear)	25	2.5	18.0	☞(Page 0B-3)
Spark plug	11	1.1	8.0	☞(Page 0B-9) / ☞(Page 0B-9) / ☞(Page 0B-9)
Oil drain plug	23	2.3	16.5	☞(Page 0B-11)
Oil filter	20	2.0	14.5	☞(Page 0B-12)
Rear axle nut	100	10.0	72.5	☞(Page 0B-16)
Rear master cylinder rod lock-nut	18	1.8	13.0	☞(Page 0B-18)

NOTE

The specified tightening torque is also described in the following.
“Chassis Bolt and Nut Inspection (Page 0B-21)”

Reference:
For the tightening torque of fastener not specified in this section, refer to “Tightening Torque List in Section 0C (Page 0C-9)”.

SAMPLE

Special Tools and Equipment

Recommended Service Material

B823H10208001

Material	SUZUKI recommended product or Specification		Note
Brake fluid	DOT 4	—	☞(Page 0B-14) / ☞(Page 0B-17)

NOTE

Required service material is also described in the following.
“Lubrication Points (Page 0B-2)”

Special Tool

B823H10208002

09900–20803 Thickness gauge ☞(Page 0B-5) 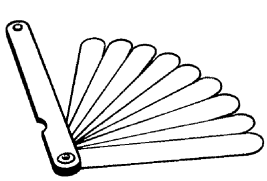	09900–20805 Tire depth gauge ☞(Page 0B-19) 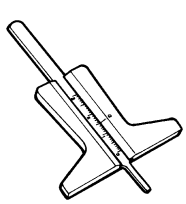
09915–40610 Oil filter wrench ☞(Page 0B-11) / ☞(Page 0B-12) 	

Service Data

Specifications

Service Data

B823H10307001

Valve + Guide

Unit: mm (in)

Item		Standard	Limit
Valve diam.	IN.	33 (1.30)	—
	EX.	27.5 (1.08)	—
Valve clearance (when cold)	IN.	0.08 – 0.18 (0.003 – 0.007)	—
	EX.	0.18 – 0.28 (0.007 – 0.011)	—
Valve guide to valve stem clearance	IN.	0.010 – 0.037 (0.0004 – 0.0015)	—
	EX.	0.030 – 0.057 (0.0012 – 0.0022)	—
Valve guide I.D.	IN. & EX.	5.000 – 5.012 (0.1969 – 0.1973)	—
Valve stem O.D.	IN.	4.975 – 4.990 (0.1959 – 0.1965)	—
	EX.	4.955 – 4.970 (0.1951 – 0.1957)	—
Valve stem deflection	IN. & EX.	—	0.25 (0.010)
Valve stem runout	IN. & EX.	—	0.05 (0.002)
Valve seat width	IN. & EX.	0.9 – 1.1 (0.035 – 0.043)	—
Valve head radial runout	IN. & EX.	—	0.03 (0.001)
Valve spring free length	IN. & EX.	—	42.3 (1.67)
Valve spring tension	IN. & EX.	Approx. 137 N (14.0 kgf, 30.8 lbs) at length 36.6 mm (1.44 in)	—

Camshaft + Cylinder Head

Unit: mm (in)

Item		Standard	Limit
Cam height	IN.	36.98 – 37.02 (1.456 – 1.457)	36.68 (1.444)
	EX.	36.58 – 36.62 (1.440 – 1.442)	36.28 (1.428)
Camshaft journal oil clearance	IN. & EX.	0.032 – 0.066 (0.0013 – 0.0026)	0.150 (0.0059)
Camshaft journal holder I.D.	IN. & EX.	24.012 – 24.025 (0.9454 – 0.9459)	—
Camshaft journal O.D.	IN. & EX.	23.959 – 23.980 (0.9433 – 0.9441)	—
Camshaft runout		—	0.10 (0.004)
Cam chain pin (at arrow “3”)		15th pin	—
Cylinder head distortion		—	0.20 (0.008)

SAMPLE

Cylinder + Piston + Piston Ring
Unit: mm (in)

Item	Standard			Limit
Compression pressure	1 400 – 1 800 kPa (14 – 18 kgf/cm^2, 199 – 256 psi)			1 000 kPa (10 kgf/cm^2, 142 psi)
Compression pressure difference	—			200 kPa (2 kgf/cm^2, 28 psi)
Piston-to-cylinder clearance	0.035 – 0.045 (0.0014 – 0.0018)			0.120 (0.0047)
Cylinder bore	81.000 – 81.015 (3.1890 – 3.1896)			No nicks or Scratches
Piston diam.	80.960 – 80.975 (3.1874 – 3.1880) Measure 15 mm (0.6 in) from the skirt end.			80.880 (3.1842)
Cylinder distortion	—			0.20 (0.008)
Piston ring free end gap	1st	—	Approx. 6.5 (0.26)	5.2 (0.20)
	2nd	2T	Approx. 9.0 (0.35)	7.2 (0.28)
Piston ring end gap	1st	—	0.06 – 0.18 (0.002 – 0.007)	0.50 (0.020)
	2nd	2T		
Piston ring-to-groove clearance	1st		—	0.180 (0.0071)
	2nd		—	0.150 (0.0059)
Piston ring groove width	1st		0.83 – 0.85 (0.0327 – 0.0335) 1.30 – 1.32 (0.0512 – 0.0520)	—
	2nd		1.01 – 1.03 (0.0398 – 0.0406)	—
	Oil		2.01 – 2.03 (0.0791 – 0.0799)	—
Piston ring thickness	1st		0.76 – 0.81 (0.0299 – 0.0319) 1.08 – 1.10 (0.0425 – 0.0433)	—
	2nd		0.97 – 0.99 (0.0382 – 0.0390)	—
Piston pin bore	18.002 – 18.008 (0.7087 – 0.7090)			18.030 (0.7098)
Piston pin O.D.	17.996 – 18.000 (0.7085 – 0.7087)			17.980 (0.7079)

SAMPLE

Conrod + Crankshaft
Unit: mm (in)

Item	Standard		Limit
Conrod small end I.D.	18.010 – 18.018 (0.7091 – 0.7094)		18.040 (0.7102)
Conrod big end side clearance	0.10 – 0.20 (0.004 – 0.008)		0.3 (0.012)
Conrod big end width	20.95 – 21.00 (0.825 – 0.827)		—
Crank pin width	21.10 – 21.15 (0.831 – 0.833)		—
Conrod big end oil clearance	0.032 – 0.056 (0.0013 – 0.0022)		0.080 (0.0031)
Crank pin O.D.	37.976 – 38.000 (1.4951 – 1.4960)		—
Crankshaft journal oil clearance	0.010 – 0.028 (0.0004 – 0.0011)		0.080 (0.0031)
Crankshaft journal O.D.	39.982 – 40.000 (1.5741 – 1.5748)		—
Crankshaft thrust bearing thickness	Right side	2.425 – 2.450 (0.0955 – 0.0965)	—
	Left side	2.350 – 2.500 (0.0925 – 0.0984)	—
Crankshaft thrust clearance	0.055 – 0.110 (0.0022 – 0.0043)		—
Crankshaft runout	—		0.05 (0.002)

Oil Pump

Item	Standard	Limit
Oil pressure (at 60 °C, 140 °F)	200 – 500 kPa (2.0 – 5.0 kgf/cm², 28.4 – 71.1 psi) at 3 000 r/min	—

Clutch

Unit: mm (in)

Item	Standard		Limit
Clutch drive plate thickness	No. 1	2.92 – 3.08 (0.115 – 0.121)	2.62 (0.103)
	No. 2 & 3	3.72 – 3.88 (0.146 – 0.153)	3.42 (0.135)
Clutch drive plate claw width	No. 1	13.85 – 13.96 (0.542 – 0.550)	13.05 (0.514)
	No. 2 & 3	13.90 – 14.00 (0.547 – 0.551)	13.10 (0.516)
Clutch driven plate distortion	—		0.10 (0.004)
Clutch spring free length	37.13 (1.462)		35.3 (1.39)
Clutch master cylinder bore	14.000 – 14.043 (0.5512 – 0.5529)		—
Clutch master cylinder piston diam.	13.957 – 13.984 (0.5495 – 0.5506)		—
Clutch release cylinder bore	33.600 – 33.662 (1.3228 – 1.3253)		—
Clutch release cylinder piston diam.	33.550 – 33.575 (1.3209 – 1.3218)		—
Clutch fluid type	Brake fluid DOT 4		—

Drive Train

Unit: mm (in) Except ratio

Item		Standard		Limit
Primary reduction ratio		1.596 (83/52)		—
Final reduction ratio		2.388 (43/18)		—
Gear ratios	Low	2.615 (34/13)		—
	2nd	1.937 (31/16)		—
	3rd	1.526 (29/19)		—
	4th	1.285 (27/21)		—
	5th	1.136 (25/22)		—
	Top	1.043 (24/23)		—
Shift fork to groove clearance		0.1 – 0.3 (0.004 – 0.012)		0.5 (0.02)
Shift fork groove width		5.0 – 5.1 (0.197 – 0.201)		—
Shift fork thickness		4.8 – 4.9 (0.189 – 0.193)		—
Drive chain	Type	RK GB50GSVZ4		—
	Links	118 links		—
	20-pitch length	—		319.4 (12.57)
Drive chain slack (on side-stand)		20 – 30 (0.79 – 1.18)		—
Gearshift lever height		55 – 65 (2.2 – 2.6)		—

SAMPLE

Thermostat + Radiator + Fan + Coolant

Item	Standard/Specification		Note
Thermostat valve opening temperature	Approx. 82 °C (180 °F)		—
Thermostat valve lift	Over 8 mm (0.31 in) and at 95 °C (203 °F)		—
ECT sensor resistance	20 °C (68 °F)	Approx. 2.45 kΩ	—
	50 °C (122 °F)	Approx. 0.811 kΩ	—
	80 °C (176 °F)	Approx. 0.318 kΩ	—
	110 °C (230 °F)	Approx. 0.142 kΩ	—
Radiator cap valve opening pressure	93 – 123 kPa (0.93 – 1.23 kgf/cm^2, 13.2 – 17.5 psi)		—
Cooling fan thermo-switch operating temperature	OFF → ON	Approx. 105 °C (221 °F)	—
	ON → OFF	Approx. 100 °C (212 °F)	—
Engine coolant type	Use an anti-freeze/coolant compatible with aluminum radiator, mixed with distilled water only, at the ratio of 50:50.		—
Engine coolant including reserve	Reserve tank side	Approx. 250 ml (0.3/0.2 US/Imp qt)	—
	Engine side	Approx. 2 650 ml (2.8/2.3 US/Imp qt)	—

Injector + Fuel Pump + Fuel Pressure Regulator

Item	Specification	Note
Injector resistance	11 – 13 Ω at 20 °C (68 °F)	
Fuel pump discharge amount	220 ml (7.4/7.7 US/Imp oz) and more/10 sec.	
Fuel pressure regulator operating set pressure	Approx. 300 kPa (3.0 kgf/cm^2, 43 psi)	

SAMPLE

FI Sensors

Item	Standard/Specification		Note
CKP sensor resistance	180 – 280 Ω		
CKP sensor peak voltage	3.0 V and more		When cranking
IAP sensor input voltage	4.5 – 5.5 V		
IAP sensor output voltage	Approx. 2.7 V at idle speed		
TP sensor input voltage	4.5 – 5.5 V		
TP sensor output voltage	Closed	Approx. 1.1 V	
	Opened	Approx. 4.3 V	
ECT sensor input voltage	4.5 – 5.5 V		
ECT sensor output voltage	0.15 – 4.85 V		
ECT sensor resistance	Approx. 2.45 kΩ at 20 °C (68 °F)		
IAT sensor input voltage	4.5 – 5.5 V		
IAT sensor output voltage	0.15 – 4.85 V		
IAT sensor resistance	Approx. 2.45 kΩ at 20 °C (68 °F)		
AP sensor input voltage	4.5 – 5.5 V		
AP sensor output voltage	Approx. 3.6 V at 100 kPa (760 mmHg)		
TO sensor resistance	16.5 – 22.3 kΩ		
TO sensor voltage	Normal	0.4 – 1.4 V	
	Leaning	3.7 – 4.4 V	When leaning 65°
GP switch voltage	0.6 V and more		From 1st to Top
Injector voltage	Battery voltage		
Ignition coil primary peak voltage	80 V and more		When cranking
HO2 sensor output voltage	0.3 V and less at idle speed		
	0.6 V and more at 3 000 r/min		
HO2 sensor heater resistance	Approx. 8 Ω at 23 °C (73 °F)		
PAIR control solenoid valve resistance	20 – 24 Ω at 20 – 30 °C (68 – 86 °F)		
STP sensor input voltage	4.5 – 5.5 V		
STP sensor output voltage	Closed	Approx. 0.5 V	
	Opened	Approx. 3.9 V	
STVA resistance	Approx. 6.5 Ω		
EXCVA position sensor input voltage	4.5 – 5.5 V		
EXCVA position sensor output voltage	Closed	0.45 – 1.4 V	
	Opened	3.6 – 4.55 V	
EXCVA position sensor resistance	Approx. 3.1 kΩ		At adjustment position
EVAP system purge control solenoid valve resistance	Approx. 32 Ω at 20 °C (68 °F)		E-33 only
ISC valve resistance	Approx. 80 Ω at 20 °C (68 °F)		

SAMPLE

Throttle Body

Item	Specification
Bore size	44 mm (1.73 in)
I.D. No.	23H1 (For E-33), 23H0 (For the others)
Idle r/min	1 150 ± 100 r/min
Throttle cable play	2.0 – 4.0 mm (0.08 – 0.16 in)

Electrical

Unit: mm

Item			Specification		Note
Firing order			1 · 2 · 4 · 3		
Spark plug			Type	NGK: CR9EIA-9 DENSO: IU27D	
			Gap	0.8 – 0.9 (0.031 – 0.035)	
Spark performance			Over 8 (0.3) at 1 atm.		
CKP sensor resistance			180 – 280 Ω		
CKP sensor peak voltage			3.0 V and more		When cranking
Ignition coil resistance			Primary	1.0 – 1.9 Ω	Terminal – Terminal
			Secondary	10.0 – 16.2 kΩ	Plug cap – Terminal
Ignition coil primary peak voltage			80 V and more		When cranking
Generator coil resistance			0.2 – 0.7 Ω		
Generator maximum output			Approx. 400 W at 5 000 r/min		
Generator no-load voltage (When engine is cold)			70 V (AC) and more at 5 000 r/min		
Regulated voltage			13.5 – 15.5 V at 5 000 r/min		
Starter motor brush length			Standard	12.0 (0.47)	
			Limit	8.5 (0.33)	
Starter torque limiter slip torque			Standard	33.3 – 52.0 N·m (3.3 – 5.2 kgf-m, 24.0 – 37.5 lb-ft)	
Starter relay resistance			3 – 5 Ω		
Battery	Type designation		YTX12-BS		
	Capacity		12 V 36 kC (10 Ah) 10 HR		
	Standard electrolyte S.G.		1.320 at 20 °C (68 °F)		
Fuse size	Headlight	HI	10 A		
		LO	10 A		
	Signal		10 A		
	Ignition		10 A		
	Fuel		10 A		
	Fan (LH)		15 A		
	Fan (RH)				
	Main		30 A		

SAMPLE

Wattage
Unit: W

Item		Specification	
		E-02, 19, 24	The other countries
Headlight	HI	60	←
	LO	55	←
Parking or position light		5 x 2	←
Brake light/Taillight		LED	←
Turn signal light		21 x 4	←
License plate light		5	←
Tachometer light		LED	←
Speedometer light		LED	←
Turn signal indicator light		LED	←
High beam indicator light		LED	←
Neutral position indicator light		LED	←
Oil pressure indicator light		LED	←
FI indicator light		LED	←
Engine coolant temp. indicator light		LED	←
Immobilizer indicator light		LED	—

Brake + Wheel
Unit: mm (in)

Item			Standard	Limit
Rear brake pedal height			55 – 65 (2.2 – 2.6)	—
Brake disc thickness	Front		5.3 – 5.7 (0.21 – 0.22)	5.0 (0.20)
	Rear			
Brake disc runout			—	0.30 (0.012)
Master cylinder bore	Front		19.050 – 19.093 (0.7500 – 0.7517)	—
	Rear		12.700 – 12.743 (0.5000 – 0.5017)	—
Master cylinder piston diam.	Front		19.018 – 19.034 (0.7487 – 0.7494)	—
	Rear		12.657 – 12.684 (0.4983 – 0.4994)	—
Brake caliper cylinder bore	Front	Leading	30.230 – 30.280 (1.1902 – 1.1921)	—
		Trailing	33.960 – 34.010 (1.3370 – 1.3390)	—
	Rear		38.180 – 38.256 (1.5031 – 1.5061)	—
Brake caliper piston diam.	Front	Leading	30.148 – 30.198 (1.1869 – 1.1889)	—
		Trailing	33.878 – 33.928 (1.3338 – 1.3357)	—
	Rear		38.098 – 38.148 (1.4999 – 1.5019)	—
Brake fluid type			DOT 4	—
Wheel rim runout	Axial		—	2.0 (0.08)
	Radial			
Wheel rim size	Front		17 M/C x MT 3.50	—
	Rear		17 M/C x MT 6.00	—
Wheel axle runout	Front		—	0.25 (0.010)
	Rear			

Tire

Item		Standard	Limit
Cold inflation tire pressure (Solo riding)	Front	250 kPa (2.50 kgf/cm^2, 36 psi)	—
	Rear	290 kPa (2.90 kgf/cm^2, 42 psi)	—
Cold inflation tire pressure (Dual riding)	Front	250 kPa (2.50 kgf/cm^2, 36 psi)	—
	Rear	290 kPa (2.90 kgf/cm^2, 42 psi)	—
Tire size	Front	120/70 ZR17 M/C (58 W)	—
	Rear	200/50 ZR17 M/C (75 W)	—
Tire type	Front	DUNLOP: Qualifier MT	—
	Rear	DUNLOP: Qualifier NK	—
Tire tread depth (Recommended depth)	Front	—	1.6 mm (0.06 in)
	Rear	—	2.0 mm (0.08 in)

SAMPLE

Suspension

Unit: mm (in)

Item	Standard		Limit
Front fork stroke	120 (4.7)		—
Front fork spring free length	257.2 (10.13)		252 (9.9)
Front fork oil level (Without spring, outer tube fully compressed)	100 (3.9)		—
Front fork oil type	SUZUKI FORK OIL L01 or an equivalent fork oil		—
Front fork oil capacity (Each leg)	527 ml (17.8/18.6 US/Imp oz)		—
Front fork inner tube O.D.	43 (1.7)		—
Front fork spring adjuster	3rd groove from top		—
Front fork damping force adjuster	Rebound	9 clicks out from stiffest position	—
	Compression	8 clicks out from stiffest position	—
Rear shock absorber spring pre-set length	182 (7.2)		—
Rear shock absorber damping force adjuster	Rebound	2 turns out from stiffed position	—
	Compression		
Rear wheel travel	137 (5.4)		—
Swingarm pivot shaft runout	—		0.3 (0.01)

Fuel + Oil

Item	Specification		Note
Fuel type	Use only unleaded gasoline of at least 90 pump octane (R/2 + M/2). Gasoline containing MTBE (Methyl Tertiary Butyl Ether), less than 10% ethanol, or less than 5% methanol with appropriate cosolvents and corrosion inhibitor is permissible.		E-03, 28, 33
	Gasoline used should be graded 95 octane or higher. An unleaded gasoline type is recommended.		Others
Fuel tank capacity	Including reserve	16.0 L (4.2/3.5 US/Imp gal)	E-33
		16.5 L (4.4/3.6 US/Imp gal)	Others
Engine oil type	SAE 10W-40, API SF/SG or SH/SJ with JASO MA		
Engine oil capacity	Change	3 100 ml (3.3/2.7 US/Imp qt)	
	Filter change	3 300 ml (3.5/2.9 US/Imp qt)	
	Overhaul	4 000 ml (4.2/3.5 US/Imp qt)	

SAMPLE

Tightening Torque List

B823H10307002

Engine

Item			N·m	kgf-m	lb-ft
Exhaust pipe bolt			23	2.3	16.5
Exhaust pipe mounting bolt			23	2.3	16.5
Muffler mounting bolt (Front)			23	2.3	16.5
Muffler mounting bolt (Rear)			25	2.5	18.0
Muffler joint mounting bolt			23	2.3	16.5
Muffler connecting bolt			23	2.3	16.5
Speed sensor rotor bolt			28	2.8	20.0
Engine sprocket nut			145	14.5	105.0
Speed sensor bolt			6.5	0.65	4.7
Engine mounting bolt			55	5.5	40.0
Engine mounting nut			75	7.5	54.0
Engine mounting thrust adjuster			10	1.0	7.0
Engine mounting thrust adjuster lock-nut			45	4.5	32.5
Engine mounting pinch bolt			35	3.5	25.5
Cylinder head cover bolt			14	1.4	10.0
Spark plug			11	1.1	8.0
Cam chain guide No. 2 bolt			10	1.0	7.0
Camshaft journal holder bolt			10	1.0	7.0
Cam chain tension adjuster mounting bolt			10	1.0	7.0
Cylinder head side bolt			14	1.4	10.0
Cam chain tensioner bolt			23	2.3	16.5
Cylinder head bolt	[M6]		10	1.0	7.0
	[M10]	Initial	25	2.5	18.0
		Final	52	5.2	37.5
Cylinder nut	[M6]		10	1.0	7.0
Water inlet connector bolt			10	1.0	7.0
Oil hose union bolt			18	1.8	13.0
Clutch cover bolt			10	1.0	7.0
Clutch sleeve hub nut			150	15.0	108.5
Clutch spring set bolt			10	1.0	7.0
Clutch spring support bolt			23	2.3	16.5
Starter clutch cover bolt			10	1.0	7.0
Starter torque limiter cover bolt			10	1.0	7.0
Starter clutch cover cap			11	1.1	8.0
Valve timing inspection cap			23	2.3	16.5
Starter clutch bolt			55	5.5	40.0
Generator cover bolt			10	1.0	7.0
Generator rotor bolt			120	12.0	87.0
Generator stator set bolt			11	1.1	8.0
Gearshift cover bolt			10	1.0	7.0
Gearshift cam stopper bolt			10	1.0	7.0
Gearshift cam stopper plate bolt			13	1.3	9.5
Gearshift arm stopper bolt			19	1.9	13.5
Oil pressure switch			14	1.4	10.0
Crankcase bolt	[M6]		11	1.1	8.0
	[M8]		26	2.6	19.0
	[M10]		50	5.0	36.0
Oil gallery plug	[M6] and [M8]		10	1.0	7.0
	[M10]		18	1.8	13.0
	[M14]		23	2.3	16.5
	[M16]		35	3.5	25.5
Oil drain plug			23	2.3	16.5
Piston cooling oil jet bolt			10	1.0	7.0
Oil jet (For generator)			5	0.5	3.5
Oil pump mounting bolt			10	1.0	7.0

SAMPLE

Item			N·m	kgf-m	lb-ft
Conrod bearing cap bolt	Initial		21	2.1	15.0
	Final		90°		
Bearing retainer screw			8	0.8	6.0
Cam chain guide retainer screw			8	0.8	6.0
Balancer shaft arm bolt			10	1.0	7.0
Balancer cover bolt			10	1.0	7.0
Balancer pipe bolt			10	1.0	7.0
Oil strainer bolt			10	1.0	7.0
Oil pan bolt			10	1.0	7.0
Oil pipe bolt (Camshaft housing)			10	1.0	7.0
Oil pipe bolt	[M6]		10	1.0	7.0
Oil pipe union bolt	[M14]		28	2.8	20.5
Exhaust pipe mounting bolt			25	2.5	18.0
Muffler connecting bolt			23	2.3	16.5
Muffler mounting bolt			23	2.3	16.5
Oil filter			20	2.0	14.5
PAIR reed valve cover bolt			11	1.1	8.0
Starter clutch cover cap			11	1.1	8.0
Cylinder head cover bolt			14	1.4	10.0
Cam chain tension adjuster service cap			23	2.3	16.5
Water jacket plug			11	1.1	8.0
Crankshaft journal bolt	[M9]	Initial	18	1.8	13.0
Crankshaft journal bolt	[M9]	Final	32	3.2	23.0
Balancer shaft mounting bolt			10	1.0	7.0
PCV cover bolt			10	1.0	7.0
PCV reed valve cover bolt			10	1.0	7.0
Conrod cap bolt			21 N·m (2.1 kgf-m, 15.0 lb-ft) then turn in 1/4 (90°) turn		
Crankcase journal bolt	Initial		18	1.8	13.0
Crankcase journal bolt	Final		32	3.2	23.0
Main oil gallery plug	[M6]		35	3.5	25.5
Oil pressure switch lead wire bolt			1.5	0.15	1.1
Speed sensor mounting bolt			6.5	0.65	4.7

SAMPLE

FI System

Item	N·m	kgf-m	lb-ft
CKP sensor mounting bolt	6.5	0.65	4.7
HO2 sensor	25	2.5	18.0
CMP sensor bolt	10	1.0	7.0
TP sensor mounting screw	3.5	0.35	2.5
STP sensor mounting screw	3.5	0.35	2.5
ISC valve mounting screw	2	0.2	1.5
Fuel delivery pipe mounting screw	3.5	0.35	2.5
GP switch mounting bolt	6.5	0.65	4.7
Fuel pump mounting bolt	10	1.0	7.0
EXCVA mounting bolt	10	1.0	7.0
Crankshaft position sensor set bolt	5.5	0.55	4.0

Cooling System

Item	N·m	kgf-m	lb-ft
Impeller securing bolt	8	0.8	6.0
Water pump case screw	6	0.6	4.5
Water pump mounting bolt	10	1.0	7.0
Cooling fan thermo-switch	17	1.7	12.5
Engine coolant temperature sensor	18	1.8	13.0
Thermostat cover bolt	10	1.0	7.0
Oil cooler hose bolt	10	1.0	7.0
ECT sensor	18	1.8	13.0

Chassis

Item	N·m	kgf-m	lb-ft
Steering stem head nut	90	9.0	65.0
Steering stem lock-nut	80	8.0	58.0
Steering damper bolt	23	2.3	16.5
Front fork upper clamp bolt	23	2.3	16.5
Front fork lower clamp bolt	23	2.3	16.5
Front fork cap bolt	23	2.3	16.5
Front fork inner rod lock-nut	15	1.5	11.0
Front fork damper rod bolt	23	2.3	16.5
Front axle bolt	100	10.0	72.5
Front axle pinch bolt	23	2.3	16.5
Handlebar holder set nut	45	4.5	32.5
Handlebar holder bolt	23	2.3	16.5
Master cylinder holder bolt (Upper and Lower)	10	1.0	7.0
Front brake caliper mounting bolt	39	3.9	28.0
Front brake caliper housing bolt	27	2.7	19.5
Front brake pad mounting pin	17	1.7	12.5
Pad pin plug	2.5	0.25	1.8
Brake hose union bolt	23	2.3	16.5
Clutch master cylinder mounting bolt	10	1.0	7.0
Clutch hose union bolt	23	2.3	16.5
Air bleeder valve (Front)	6	0.6	4.5
Air bleeder valve (Rear)	7.5	0.75	5.5
Air bleeder valve (Master cylinder)	6	0.6	4.5
Brake disc bolt (Front)	23	2.3	16.5
Brake disc bolt (Rear)	35	3.5	25.5
Rear brake caliper mounting bolt	17	1.7	12.5
Rear brake pad mounting pin	15	1.5	11.0
Rear brake master cylinder mounting bolt	10	1.0	7.0
Rear brake master cylinder rod lock-nut	18	1.8	13.0
Rear brake caliper sliding pin	33	3.3	24.0
Brake lever pivot bolt	1	0.1	0.7
Brake lever pivot bolt lock-nut	6	0.6	4.5
Swingarm pivot shaft	15	1.5	11.0
Swingarm pivot nut	100	10.0	72.5
Swingarm pivot lock-nut	90	9.0	65.0
Cushion lever mounting nut	78	7.8	56.5
Cushion rod mounting nut	78	7.8	56.5
Rear shock absorber mounting nut	50	5.0	36.0
Rear axle nut	100	10.0	72.5
Rear sprocket nut	60	6.0	43.5
Rear master cylinder rod lock-nut	18	1.8	13.0
Air bleeder valve (Clutch)	6	0.6	4.5
Clutch master cylinder holder bolt	10	1.0	7.0
Clutch lever pivot bolt	1.0	0.1	0.7
Clutch lever pivot bolt lock-nut	6.0	0.6	4.5
Clutch release mounting bolt	10	1.0	7.0

SAMPLE

Tightening Torque Chart

For other bolts and nuts not listed in the preceding page, refer to this chart:

Bolt Diameter "a" (mm)	Conventional or "4" marked bolt			"7" marked bolt		
	N·m	kgf-m	lb-ft	N·m	kgf-m	lb-ft
4	1.5	0.15	1.0	2.3	0.23	1.5
5	3	0.3	2.0	4.5	0.45	3.0
6	5.5	0.55	4.0	10	1.0	7.0
8	13	1.3	9.5	23	2.3	16.5
10	29	2.9	21.0	50	5.0	36.0
12	45	4.5	32.5	85	8.5	61.5
14	65	6.5	47.0	135	13.5	97.5
16	105	10.5	76.0	210	21.0	152.0
18	160	16.0	115.5	240	24.0	173.5

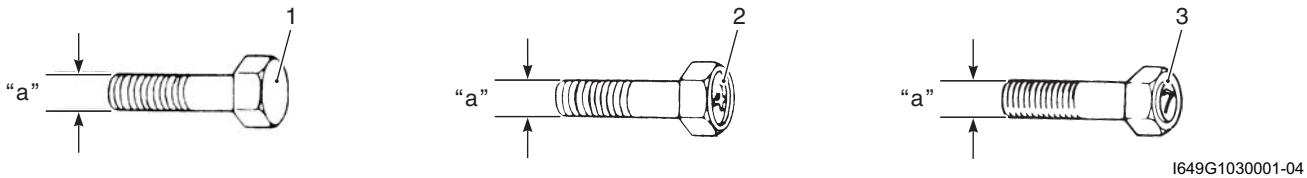

1. Conventional bolt	2. "4" marked bolt	3. "7" marked bolt

SAMPLE

Section 1

Engine

CONTENTS

Precautions 1-1
Precautions 1-1
Precautions for Engine 1-1

Engine General Information and Diagnosis 1A-1
General Description 1A-1
Injection Timing Description 1A-1
Self-Diagnosis Function 1A-2
Schematic and Routing Diagram 1A-3
FI System Wiring Diagram 1A-3
Terminal Alignment of ECM Coupler 1A-5
Component Location 1A-6
FI System Parts Location 1A-6
Diagnostic Information and Procedures 1A-8
Engine Symptom Diagnosis 1A-8
Self-Diagnostic Procedures 1A-12
Use of SDS Diagnosis Reset Procedures 1A-14
Show Data When Trouble (Displaying Data at the Time of DTC) 1A-15
SDS Check 1A-17
DTC Table 1A-20
Fail-Safe Function Table 1A-22
FI System Troubleshooting 1A-24
Malfunction Code and Defective Condition Table 1A-25
DTC “C11” (P0340) CMP Sensor Circuit Malfunction 1A-29
DTC “C12” (P0335): CKP Sensor Circuit Malfunction 1A-31
DTC “C13” (P0105-H/L): IAP Sensor Circuit Malfunction 1A-34
DTC “C14” (P0120-H/L): TP Sensor Circuit Malfunction 1A-41
DTC “C15” (P0115-H/L): ECT Sensor Circuit Malfunction 1A-48
DTC “C21” (P0110-H/L): IAT Sensor Circuit Malfunction 1A-53
DTC “C22” (P01450-H/L): AP Sensor Circuit Malfunction 1A-58
DTC “C23” (P1651-H/L): TO Sensor Circuit Malfunction 1A-65
DTC “C24” (P0351), “C25” (P0352), “C26” (P0353) or “C27” (P0354): Ignition System Malfunction 1A-72
DTC “C28” (P1655): Secondary Throttle Valve Actuator (STVA) Malfunction 1A-72
DTC “C29” (P1654-H/L): Secondary Throttle Position Sensor (STPS) Circuit Malfunction 1A-76
DTC “C31” (P0705): GP Switch Circuit Malfunction 1A-84
DTC “C32” (P0201), “C33” (P0202), “C34” (P0203) or “C35” (P0204): Primary Fuel Injector Circuit Malfunction 1A-86
DTC “C36” (P1764), “C37” (P1765), “C38” (P1766) or “C39” (P1767): Secondary Fuel Injector Circuit Malfunction 1A-90
DTC “C40” (P0505 / P0506 / P0507): ISC Valve Circuit Malfunction 1A-94
DTC “C41” (P0230-H/L): FP Relay Circuit Malfunction 1A-99
DTC “C41” (P2505): ECM Power Input Signal Malfunction 1A-102
DTC “C42” (P1650): IG Switch Circuit Malfunction 1A-104
DTC “C44” (P0130/P0135): HO2 Sensor (HO2S) Circuit Malfunction 1A-104
DTC “C46” (P1657-H/L or P1658): EXCV Actuator Circuit Malfunction 1A-110
DTC “C49” (P1656): PAIR Control Solenoid Valve Circuit Malfunction 1A-123
DTC “C60” (P0480): Cooling Fan Relay Circuit Malfunction 1A-127
DTC “C62” (P0443): EVAP System Purge Control Solenoid Valve Circuit Malfunction (E-33 only) 1A-130
Specifications 1A-134
Service Data 1A-134
Special Tools and Equipment 1A-135
Special Tool 1A-135

Emission Control Devices 1B-1
Precautions 1B-1
Precautions for Emission Control Devices 1B-1
General Description 1B-1
Fuel Injection System Description 1B-1

SAMPLE

Crankcase Emission Control System Description 1B-2
Exhaust Emission Control System Description 1B-3
Noise Emission Control System Description 1B-6
Evaporative Emission Control System Diagram (Only for E-33) 1B-7
Schematic and Routing Diagram 1B-8
EVAP Canister Hose Routing Diagram (Only for E-33) 1B-8
Repair Instructions 1B-9
Heated Oxygen Sensor (HO2S) Construction 1B-9
Heated Oxygen Sensor (HO2S) Removal and Installation 1B-9
Heated Oxygen Sensor (HO2S) Inspection 1B-10
PAIR Reed Valve Removal and Installation 1B-10
PAIR Control Solenoid Valve Removal and Installation 1B-11
PAIR System Inspection 1B-11
Crankcase Breather (PCV) Hose Inspection 1B-12
Crankcase Breather (PCV) Hose / Reed Valve / Cover Removal and Installation 1B-13
Crankcase Breather (PCV) Cover Inspection 1B-14
Evaporative Emission Control System Removal and Installation (Only for E-33) 1B-14
Evaporative Emission Control System Inspection (For E-33 only) 1B-16
Specifications 1B-18
Service Data 1B-18
Tightening Torque Specifications 1B-18
Special Tools and Equipment 1B-18
Recommended Service Material 1B-18
Special Tool 1B-18

Engine Electrical Devices 1C-1

Precautions 1C-1
Precautions for Engine Electrical Device 1C-1
Component Location 1C-1
Engine Electrical Components Location 1C-1
Diagnostic Information and Procedures 1C-1
Engine Symptom Diagnosis 1C-1
Repair Instructions 1C-1
ECM Cushion Rubber Attachment Construction 1C-1
ECM Removal and Installation 1C-2
CMP Sensor Inspection 1C-2
CMP Sensor Removal and Installation 1C-2
CKP Sensor Inspection 1C-3
CKP Sensor Removal and Installation 1C-3
IAP Sensor Inspection 1C-3
IAP Sensor Removal and Installation 1C-3
TP Sensor Inspection 1C-3
TP Sensor Removal and Installation 1C-3
TP Sensor Adjustment 1C-4
ECT Sensor Removal and Installation 1C-5
ECT Sensor Inspection 1C-5
IAT Sensor Removal and Installation 1C-6
IAT Sensor Inspection 1C-6
AP Sensor Inspection 1C-6
AP Sensor Removal and Installation 1C-6
TO Sensor Inspection 1C-6
TO Sensor Removal and Installation 1C-6
STP Sensor Inspection 1C-7
STP Sensor Adjustment 1C-7
STP Sensor Removal and Installation 1C-8
STV Actuator Inspection 1C-8
STV Actuator Removal and Installation 1C-9
ISC Valve Inspection 1C-9
ISC Valve Removal and Installation 1C-9
ISC Valve Preset and Opening Initialization 1C-9
HO2 Sensor Inspection 1C-10
HO2 Sensor Removal and Installation 1C-10
GP Switch Inspection 1C-10
GP Switch Removal and Installation 1C-10
Specifications 1C-10
Service Data 1C-10
Tightening Torque Specifications 1C-11
Special Tools and Equipment 1C-11
Recommended Service Material 1C-11
Special Tool 1C-11

Engine Mechanical 1D-1

Schematic and Routing Diagram 1D-1
Camshaft and Sprocket Assembly Diagram 1D-1
Throttle Cable Routing Diagram 1D-2
Diagnostic Information and Procedures 1D-3
Engine Mechanical Symptom Diagnosis 1D-3
Compression Pressure Check 1D-3
Repair Instructions 1D-4
Engine Components Removable with the Engine in Place 1D-4
Air Cleaner Element Removal and Installation 1D-6
Air Cleaner Box Removal and Installation 1D-6
Air Cleaner Element Inspection and Cleaning 1D-7
Throttle Cable Removal and Installation 1D-7
Throttle Cable Inspection 1D-7
Throttle Cable Play Inspection and Adjustment 1D-7
Throttle Body Components 1D-8
Throttle Body Construction 1D-9
Throttle Body Removal and Installation 1D-10
Throttle Body Disassembly and Assembly 1D-12
Throttle Body Inspection and Cleaning 1D-16
ISC Valve Visual Inspection 1D-16
Throttle Valve Synchronization 1D-16
ISC Valve Reset 1D-18
Engine Assembly Removal 1D-19
Engine Assembly Installation 1D-25
Engine Top Side Disassembly 1D-28
Engine Top Side Assembly 1D-32
Camshaft Inspection 1D-43
Camshaft Sprocket / Bearing Inspection 1D-45
Cam Chain Tension Adjuster Inspection 1D-46
Cam Chain Guide Removal and Installation 1D-47
Cam Chain Guide Inspection 1D-47
Cam Chain Tensioner Inspection 1D-47
Cylinder Head Disassembly and Assembly 1D-48
Cylinder Head Related Parts Inspection 1D-53

SAMPLE

Valve Guide Replacement 1D-57
Valve Seat Repair 1D-58
Cylinder Disassembly and Assembly 1D-59
Cylinder Inspection 1D-60
Piston Ring Removal and Installation 1D-61
Piston and Piston Ring Inspection 1D-62
Engine Bottom Side Disassembly 1D-64
Engine Bottom Side Assembly 1D-72
Crank Balancer Disassembly and Assembly 1D-89
Crank Balancer Inspection 1D-90
Conrod Removal and Installation 1D-90
Conrod and Crankshaft Inspection 1D-92
Conrod Crank Pin Bearing Inspection and Selection 1D-93
Crankshaft Journal Bearing Inspection and Selection 1D-95
Crankshaft Thrust Clearance Inspection and Selection 1D-97
Specifications 1D-99
Service Data 1D-99
Tightening Torque Specifications 1D-101
Special Tools and Equipment 1D-102
Recommended Service Material 1D-102
Special Tool 1D-103

Engine Lubrication System 1E-1

Precautions 1E-1
Precautions for Engine Oil 1E-1
Schematic and Routing Diagram 1E-1
Engine Lubrication System Chart Diagram 1E-1
Engine Lubrication Circuit Diagram 1E-3
Diagnostic Information and Procedures 1E-5
Engine Lubrication Symptom Diagnosis 1E-5
Oil Pressure Check 1E-5
Repair Instructions 1E-6
Engine Oil and Filter Replacement 1E-6
Engine Oil Level Inspection 1E-6
Oil Pan / Oil Strainer / Oil Pressure Regulator Removal and Installation 1E-6
Oil Pressure Regulator / Oil Strainer Inspection 1E-8
Oil Cooler / Oil Cooler Hose Inspection and Cleaning 1E-8
Oil Cooler / Oil Cooler Hose Removal and Installation 1E-9
Oil Pressure Switch Removal and Installation 1E-10
Oil Pressure Switch Inspection 1E-11
Oil Jet / Oil Gallery Jet Removal and Installation 1E-11
Oil Jet / Oil Gallery Jet Inspection 1E-13
Oil Pump Removal and Installation 1E-13
Oil Pump Inspection 1E-14
Specifications 1E-15
Service Data 1E-15
Tightening Torque Specifications 1E-15
Special Tools and Equipment 1E-16
Recommended Service Material 1E-16
Special Tool 1E-16

Engine Cooling System 1F-1

Precautions 1F-1
Precautions for Engine Cooling System 1F-1
Precautions for Engine Coolant 1F-1
General Description 1F-1
Engine Coolant Description 1F-1
Schematic and Routing Diagram 1F-2
Cooling Circuit Diagram 1F-2
Water Hose Routing Diagram 1F-3
Diagnostic Information and Procedures 1F-4
Engine Cooling Symptom Diagnosis 1F-4
Repair Instructions 1F-4
Cooling Circuit Inspection 1F-4
Radiator Cap Inspection 1F-5
Radiator Inspection and Cleaning 1F-5
Radiator / Cooling Fan Motor Removal and Installation 1F-6
Water Hose Inspection 1F-7
Water Hose Removal and Installation 1F-8
Radiator Reservoir Tank Removal and Installation 1F-8
Radiator Reservoir Tank Inspection 1F-9
Cooling Fan Inspection 1F-9
Cooling Fan Relay Inspection 1F-10
ECT Sensor Removal and Installation 1F-10
ECT Sensor Inspection 1F-10
Thermostat Cover / Thermostat Removal and Installation 1F-10
Thermostat Inspection 1F-11
Water pump Components 1F-12
Water Pump Construction 1F-13
Water Pump Removal and Installation 1F-13
Water Pump Disassembly and Assembly 1F-14
Water Pump Related Parts Inspection 1F-17
Specifications 1F-18
Service Data 1F-18
Tightening Torque Specifications 1F-19
Special Tools and Equipment 1F-19
Recommended Service Material 1F-19
Special Tool 1F-19

Fuel System 1G-1

Precautions 1G-1
Precautions for Fuel System 1G-1
General Description 1G-2
Fuel Injection System Description 1G-2
Schematic and Routing Diagram 1G-3
Fuel Tank Drain Hose and Breather Hose Routing Diagram 1G-3
Diagnostic Information and Procedures 1G-4
Fuel System Diagnosis 1G-4
Repair Instructions 1G-5
Fuel Pressure Inspection 1G-5
Fuel Pump Inspection 1G-6
Fuel Discharge Amount Inspection 1G-6
Fuel Pump Relay Inspection 1G-7
Fuel Hose Inspection 1G-7
Fuel Level Gauge Inspection 1G-7

SAMPLE

Fuel Tank Construction 1G-8
Fuel Tank Heat Shield Construction 1G-9
Fuel Tank Removal and Installation 1G-10
Fuel Pump Components 1G-12
Fuel Pump Disassembly and Assembly 1G-13
Fuel Mesh Filter Inspection and Cleaning 1G-15
Fuel Injector / Fuel Delivery Pipe / T-joint Removal and Installation 1G-15
Fuel Injector Inspection and Cleaning 1G-15
Specifications 1G-16
Service Data 1G-16
Tightening Torque Specifications 1G-16
Special Tools and Equipment 1G-17
Recommended Service Material 1G-17
Special Tool 1G-17

Ignition System 1H-1

General Description 1H-1
Immobilizer Description (For E-02, 19, 24) 1H-1
Drive Mode Selector Description 1H-2
Schematic and Routing Diagram 1H-3
Ignition System Diagram 1H-3
Ignition System Components Location 1H-3
Diagnostic Information and Procedures 1H-4
Ignition System Symptom Diagnosis 1H-4
No Spark or Poor Spark 1H-5
Repair Instructions 1H-6
Ignition Coil / Plug Cap and Spark Plug Removal and Installation 1H-6
Spark Plug Inspection and Cleaning 1H-7
Ignition Coil / Plug Cap Inspection 1H-7
CKP Sensor Inspection 1H-10
CKP Sensor Removal and Installation 1H-11
Engine Stop Switch Inspection 1H-11
Ignition Switch Inspection 1H-12
Ignition Switch Removal and Installation 1H-12
Drive Mode Selector Inspection 1H-14
Immobilizer Antenna Removal and Installation (For E-02, 19, 24) 1H-15
Specifications 1H-15
Service Data 1H-15
Tightening Torque Specifications 1H-15
Special Tools and Equipment 1H-16
Special Tool 1H-16

Starting System 1I-1

Schematic and Routing Diagram 1I-1
Starting System Diagram 1I-1
Component Location 1I-1
Starting System Components Location 1I-1
Diagnostic Information and Procedures 1I-1
Starting System Symptom Diagnosis 1I-1
Starter Motor Will Not Run 1I-2
Starter Motor Runs But Does Not Crank The Engine 1I-2
Repair Instructions 1I-3
Starter Motor Components 1I-3
Starter Motor Removal and Installation 1I-4
Starter Motor Disassembly and Assembly 1I-4
Starter Motor Inspection 1I-5
Starter Relay Removal and Installation 1I-6
Starter Relay Inspection 1I-7
Turn Signal / Side-stand Relay Removal and Installation 1I-7
Side-stand / Ignition Interlock System Parts Inspection 1I-8
Starter Torque Limiter / Starter Clutch Removal and Installation 1I-10
Starter Torque Limiter Inspection 1I-12
Starter Clutch Inspection 1I-12
Starter Button Inspection 1I-13
Specifications 1I-13
Service Data 1I-13
Tightening Torque Specifications 1I-13
Special Tools and Equipment 1I-14
Recommended Service Material 1I-14
Special Tool 1I-14

Charging System 1J-1

Schematic and Routing Diagram 1J-1
Charging System Diagram 1J-1
Component Location 1J-1
Charging System Components Location 1J-1
Diagnostic Information and Procedures 1J-1
Charging System Symptom Diagnosis 1J-1
Battery Runs Down Quickly 1J-2
Repair Instructions 1J-3
Battery Cushion Rubber Attachment Construction 1J-3
Battery Current Leakage Inspection 1J-4
Regulated Voltage Inspection 1J-4
Generator Inspection 1J-5
Generator Removal and Installation 1J-6
Regulator / Rectifier Construction 1J-9
Regulator / Rectifier Removal and Installation 1J-9
Regulator / Rectifier Inspection 1J-10
Battery Components 1J-11
Battery Charging 1J-11
Battery Removal and Installation 1J-14
Battery Visual Inspection 1J-14
Specifications 1J-15
Service Data 1J-15
Tightening Torque Specifications 1J-15
Special Tools and Equipment 1J-16
Recommended Service Material 1J-16
Special Tool 1J-16

Exhaust System 1K-1

Precautions 1K-1
Precautions for Exhaust System 1K-1
General Description 1K-1
Exhaust Control System Description 1K-1
Exhaust Control System Operation 1K-2
Repair Instructions 1K-3
Exhaust Control System Construction 1K-3
Exhaust System Components 1K-4
EXCV Cable Removal and Installation 1K-5
EXCVA Removal and Installation 1K-7

SAMPLE

EXCVA Inspection 1K-9
EXCVA Pulley Inspection 1K-9
EXCVA Adjustment 1K-9
Muffler / Muffler Joint / Exhaust Pipe Removal and Installation 1K-12
Exhaust System Inspection 1K-15
EXCV Inspection 1K-15

Specifications 1K-15
Service Data 1K-15
Tightening Torque Specifications 1K-15

Special Tools and Equipment 1K-16
Recommended Service Material 1K-16
Special Tool 1K-16

SAMPLE

Precautions

Precautions

Precautions for Engine

B823H11000001

Refer to “General Precautions in Section 00 (Page 00-1)” and “Precautions for Electrical Circuit Service in Section 00 (Page 00-2)”.

SAMPLE

Engine General Information and Diagnosis

General Description

Injection Timing Description

B823H11101001

Injection Time (Injection Volume)

The factors to determine the injection time include the basic fuel injection time, which is calculated on the basis of the intake air pressure, engine speed and throttle opening angle, and various compensations. These compensations are determined according to the signals from various sensors that detect the engine and driving conditions.

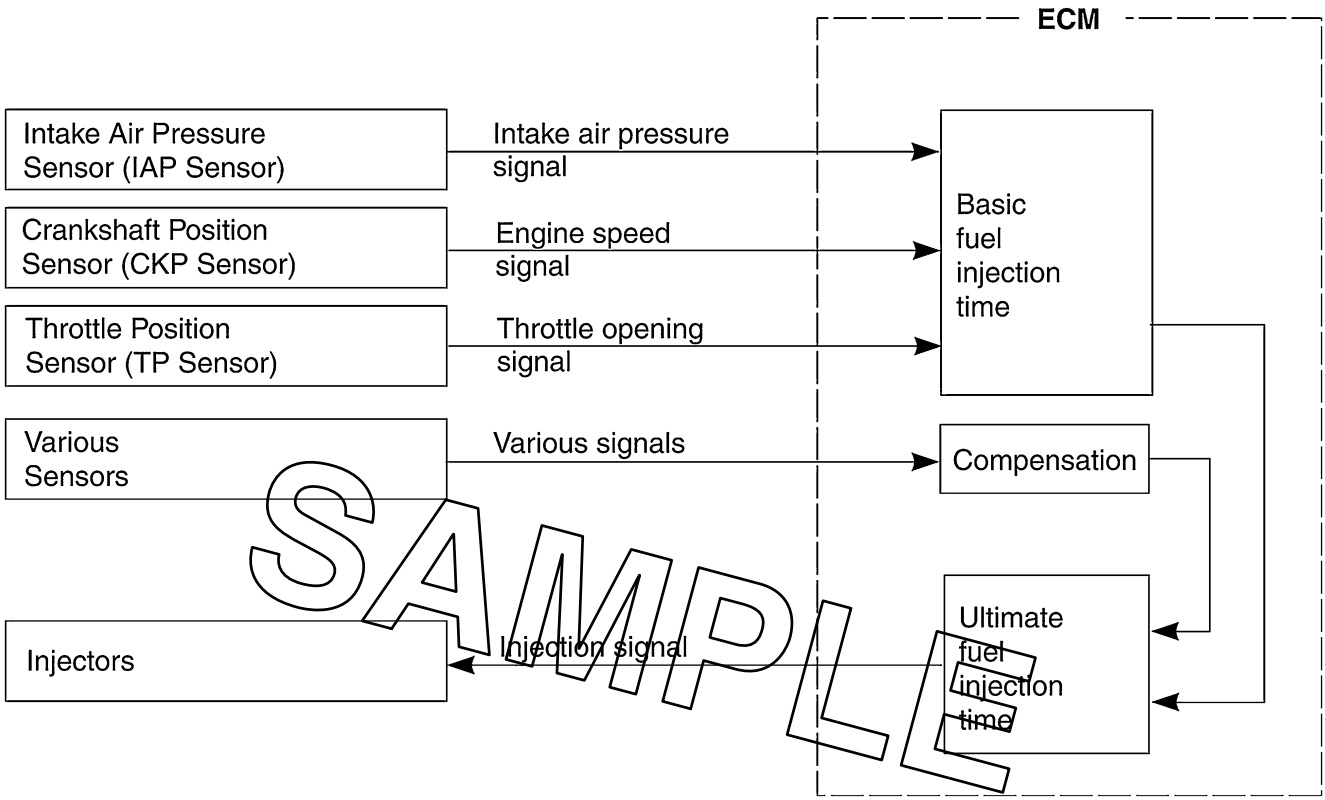

SAMPLE

I718H1110268-03

Compensation of Injection Time (Volume)

The following different signals are output from the respective sensors for compensation of the fuel injection time (volume).

Signal	Descriptions
ATMOSPHERIC PRESSURE SENSOR SIGNAL	When atmospheric pressure is low, the sensor sends the signal to the ECM and reduce the injection time (volume).
ENGINE COOLANT TEMPERATURE SENSOR SIGNAL	When engine coolant temperature is low, injection time (volume) is increased.
INTAKE AIR TEMPERATURE SENSOR SIGNAL	When intake air temperature is low, injection time (volume) is increased.
HEATED OXYGEN SENSOR SIGNAL	Air/fuel ratio is compensated to the theoretical ratio from density of oxygen in exhaust gasses. The compensation occurs in such a way that more fuel is supplied if detected air/fuel ratio is lean and less fuel is supplied if it is rich.
BATTERY VOLTAGE SIGNAL	ECM operates on the battery voltage and at the same time, it monitors the voltage signal for compensation of the fuel injection time (volume). A longer injection time is needed to adjust injection volume in the case of low voltage.
STARTING SIGNAL	When starting engine, additional fuel is injected during cranking engine.
ACCELERATION SIGNAL/ DECELERATION SIGNAL	During acceleration, the fuel injection time (volume) is increased, in accordance with the throttle opening speed and engine rpm. During deceleration, the fuel injection time (volume) is decreased.

Injection Stop Control

Signal	Descriptions
TIP-OVER SENSOR SIGNAL (FUEL SHUT-OFF)	When the motorcycle tips over, the tip-over sensor sends a signal to the ECM. Then, this signal cuts OFF current supplied to the fuel pump, fuel injectors and ignition coils.
OVER-REV. LIMITER SIGNAL	The fuel injector stops operation when engine rpm reaches rev. limit rpm.

SAMPLE

Self-Diagnosis Function

B823H11101002

The self-diagnosis function is incorporated in the ECM. The function has two modes, “User mode” and “Dealer mode”. The user can only be notified by the LCD (DISPLAY) panel and LED (FI indicator light). To check the function of the individual FI system devices, the dealer mode is provided. In this check, the special tool is necessary to read the code of the malfunction items.

User Mode

Malfunction		LCD (display) indication “A”	FI indicator light indication “B”	Indication mode
“NO”		Odometer *1	—	—
“YES”	Engine can start	Odometer (*1) and “FI” letters *2	FI indicator light turns ON.	Each 2 sec. Odometer (*1) and “FI” is indicated alternately.
	Engine can not start	“FI” letters *3	FI indicator light turns ON and blinks.	“FI” is indicated continuously.

***1**

Current letter displayed any one of the odometer, tripmeter 1 or tripmeter 2.

***2**

When one of the signals is not received by ECM, the fail-safe circuit works and injection is not stopped. In this case, “FI” and odometer (*1) are indicated in the LCD panel and motorcycle can run.

***3**

The injection signal is stopped, when the crankshaft position sensor signal, tip-over sensor signal, ignition signal, #1, #2, #3 and #4 injector signals, fuel pump relay signal or ignition switch signal is not sent to ECM. In this case, “FI” is indicated in the LCD panel. Motorcycle does not run.

“CHEC”:

The LCD panel indicates “CHEC” when no communication signal from the ECM is received for 5 seconds and more.

For Example:
The ignition switch is turned ON, and the engine stop switch is turned OFF. In this case, the speedometer does not receive any signal from the ECM, and the panel indicates “CHEC”.
If CHEC is indicated, the LCD does not indicate the trouble code. It is necessary to check the wiring harness between ECM and speedometer couplers.
The possible cause of this indication is as follows:
Engine stop switch is in OFF position. Side-Stand/ignition inter-lock system is not working. Ignition fuse is burnt.

NOTE

The FI light “B” turns ON about 3 seconds after turning the ignition switch is turned ON.

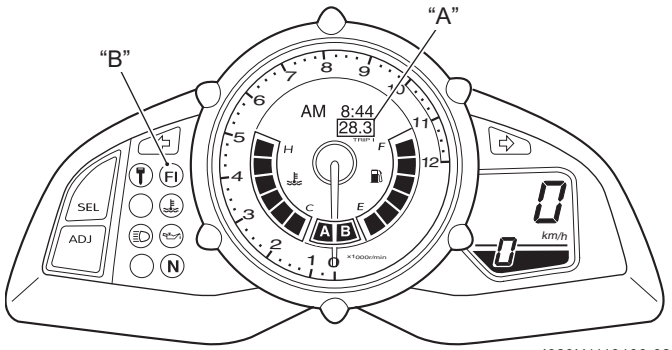

I823H1110106-02

Dealer Mode
The defective function is memorized in the computer. Use the special tool’s coupler to connect to the mode select switch. The memorized malfunction code is displayed on LCD (DISPLAY) panel. Malfunction means that the ECM does not receive signal from the devices. These affected devices are indicated in the code form.

SAMPLE

⚠ CAUTION

Before checking the malfunction code, do not disconnect the ECM coupler.
If the coupler from the ECM is disconnected, the malfunction code memory is erased and the malfunction code can not be checked.

Special tool
TOOL (A): 09930–82720 (Mode select switch)

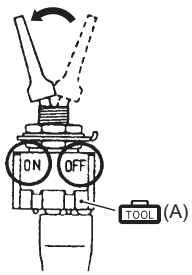

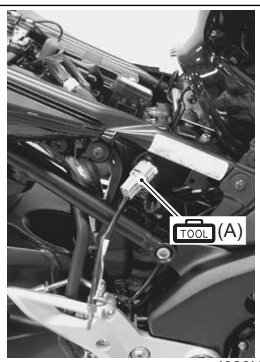

I823H1110107-01

I823H1110186-02

Malfunction	LCD (display) indication	FI light indication	Indication mode
“NO”	C00	FI indicator light turns OFF.	—
“YES”	C** code is indicated from small numeral to large one.		For each 2 sec., code is indicated.

Schematic and Routing Diagram

FI System Wiring Diagram

B823H11102001

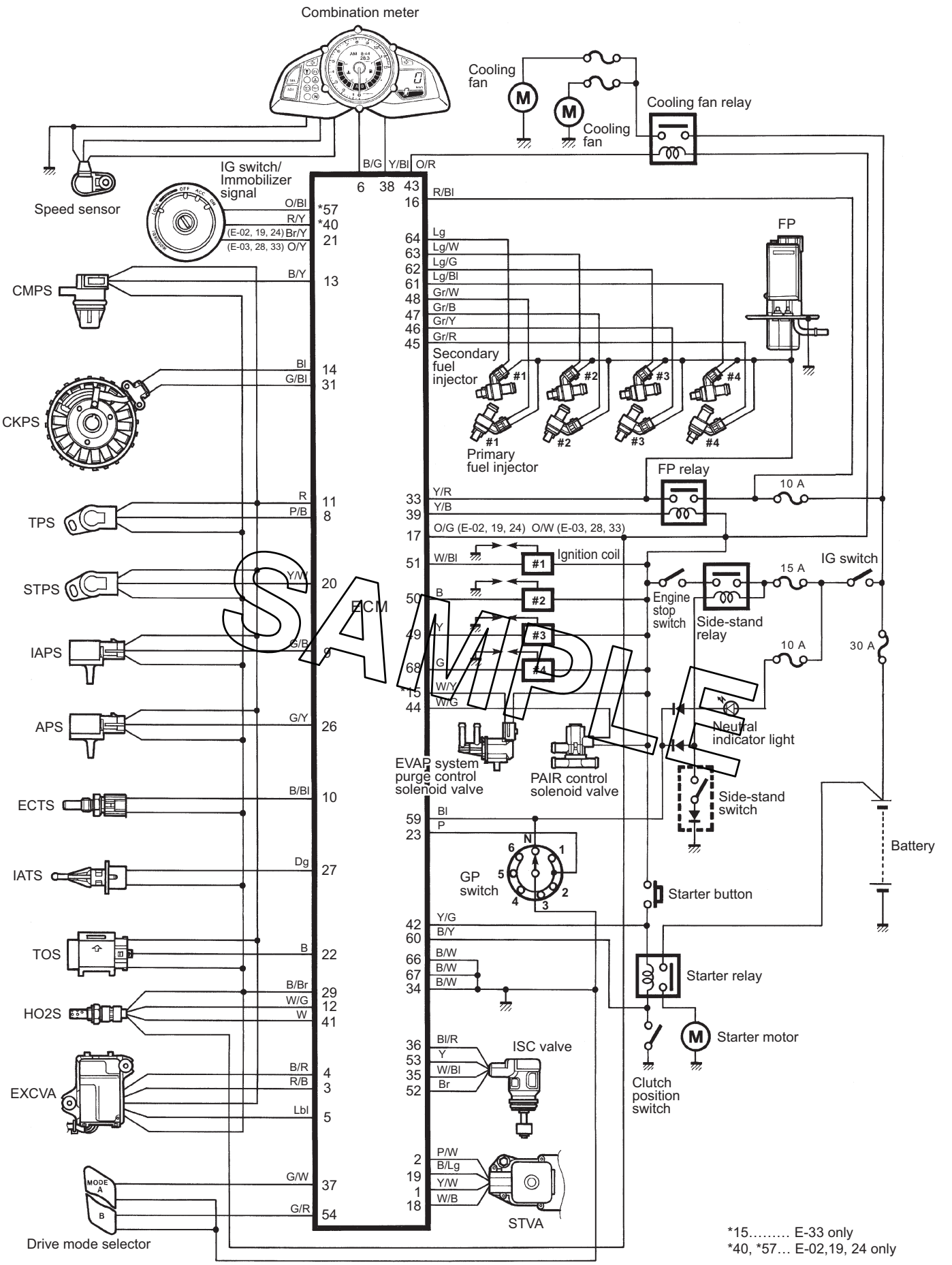
Combination meter
Cooling fan
Cooling fan
Cooling fan relay
Speed sensor
IG switch/ Immobilizer signal
B/G Y/Bl O/R
6 38 43
16
R/Bl
O/Bl *57
R/Y *40
(E-02, 19, 24) Br/Y 21
(E-03, 28, 33) O/Y
CMPS
B/Y 13
CKPS
Bl 14
G/Bl 31
TPS
R 11
P/B 8
STPS
Y/W 20
IAPS
G/B 9
APS
G/Y 26
ECTS
B/Bl 10
IATS
Dg 27
TOS
B 22
HO2S
B/Br 29
W/G 12
W 41
EXCVA
B/R 4
R/B 3
Lbl 5
Drive mode selector
MODE A
B
G/W 37
G/R 54
ECM
64 Lg
63 Lg/W
62 Lg/G
61 Lg/Bl
48 Gr/W
47 Gr/B
46 Gr/Y
45 Gr/R
Secondary fuel injector
#1
#2
#3
#4
Primary fuel injector
FP
FP relay
10 A
33 Y/R
39 Y/B
17 O/G (E-02, 19, 24) O/W (E-03, 28, 33)
51 W/Bl
50 B
49 Y
68 G
*15 W/Y
44 W/G
Ignition coil
IG switch
15 A
Engine stop switch
Side-stand relay
10 A
30 A
Neutral indicator light
EVAP system purge control solenoid valve
PAIR control solenoid valve
Side-stand switch
Battery
59 Bl
23 P
GP switch
N
Starter button
42 Y/G
60 B/Y
66 B/W
67 B/W
34 B/W
Starter relay
Starter motor
36 Bl/R
53 Y
35 W/Bl
52 Br
ISC valve
Clutch position switch
2 P/W
19 B/Lg
1 Y/W
18 W/B
STVA
*15…… E-33 only
*40, *57… E-02,19, 24 only
I823H1110181-05
SAMPLE

Terminal Alignment of ECM Coupler

B823H11102002

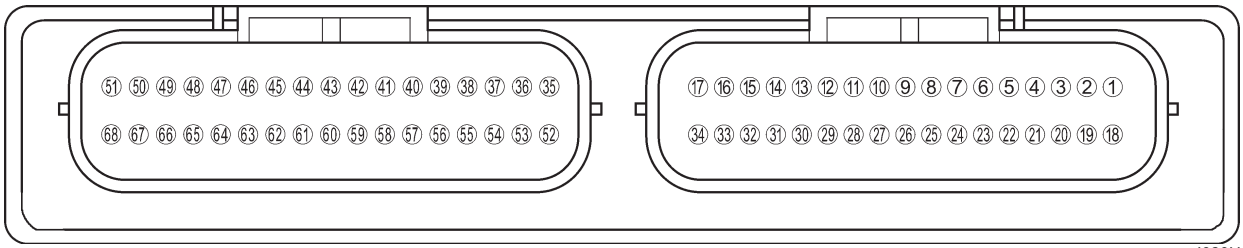

I823H1110002-01

TERMINAL NO.	CIRCUIT	TERMINAL NO.	CIRCUIT
1	STVA signal (STVA, 2A)	35	ISC valve signal (ISC, 2A)
2	STVA signal (STVA, 1A)	36	ISC valve signal (ISC, 1A)
3	EXCVA power (EXCVA–)	37	Drive mode selector (DMS 1)
4	EXCVA power (EXCVA+)	38	Tachometer
5	EXCVA position sensor signal (EXCVAS)	39	Fuel pump relay (FP relay)
6	Serial data for speedometer	40	Immobilizer communication (For E-02, 19, 24)
7	—	41	HO2 sensor heater (HO2SH)
8	TP sensor signal (TPS)	42	Starter relay
9	IAP sensor signal (IAPS)	43	Cooling fan relay
10	ECT sensor signal (ECTS)	44	PAIR control solenoid valve (PAIR)
11	Power source for sensors (VCC)	45	Primary fuel injector #4 (#41)
12	HO2 sensor signal (HO2S)	46	Primary fuel injector #3 (#31)
13	CMP sensor signal (CMPS+)	47	Primary fuel injector #2 (#21)
14	CKP sensor signal (CKPS+)	48	Primary fuel injector #1 (#11)
15	EVAP system purge control solenoid valve (EVAP) (E-33 only)	49	Ignition coil #3
16	Power source for back-up	50	Ignition coil #2
17	Power source	51	Ignition coil #1
18	STVA signal (STVA, 2B)	52	ISC valve signal (ISC, 2B)
19	STVA signal (STVA, 1B)	53	ISC valve signal (ISC, 1B)
20	STP sensor (STPS)	54	Drive mode selector (DMS 2)
21	Immobilizer indicator (For E-02, 19, 24) /Ignition switch signal (For E-03, 28, 33)	55	—
22	TO sensor signal (TOS)	56	—
23	GP switch signal (GP)	57	Immobilizer communication (For E-02, 19, 24)
24	—	58	—
25	—	59	Neutral signal
26	AP sensor signal (APS)	60	Clutch lever switch
27	IAT sensor signal (IATS)	61	Secondary fuel injector #4 (#42)
28	—	62	Secondary fuel injector #3 (#32)
29	Sensor ground (E2)	63	Secondary fuel injector #2 (#22)
30	—	64	Secondary fuel injector #1 (#12)
31	CKP sensor signal (CKPS–)	65	Mode select switch
32	Serial data for self-diagnosis	66	General power ground (E-01)
33	Power source for fuel injectors	67	Ignition system ground (E-03)
34	ECM ground	68	Ignition coil #4

SAMPLE

Component Location

FI System Parts Location

B823H11103001

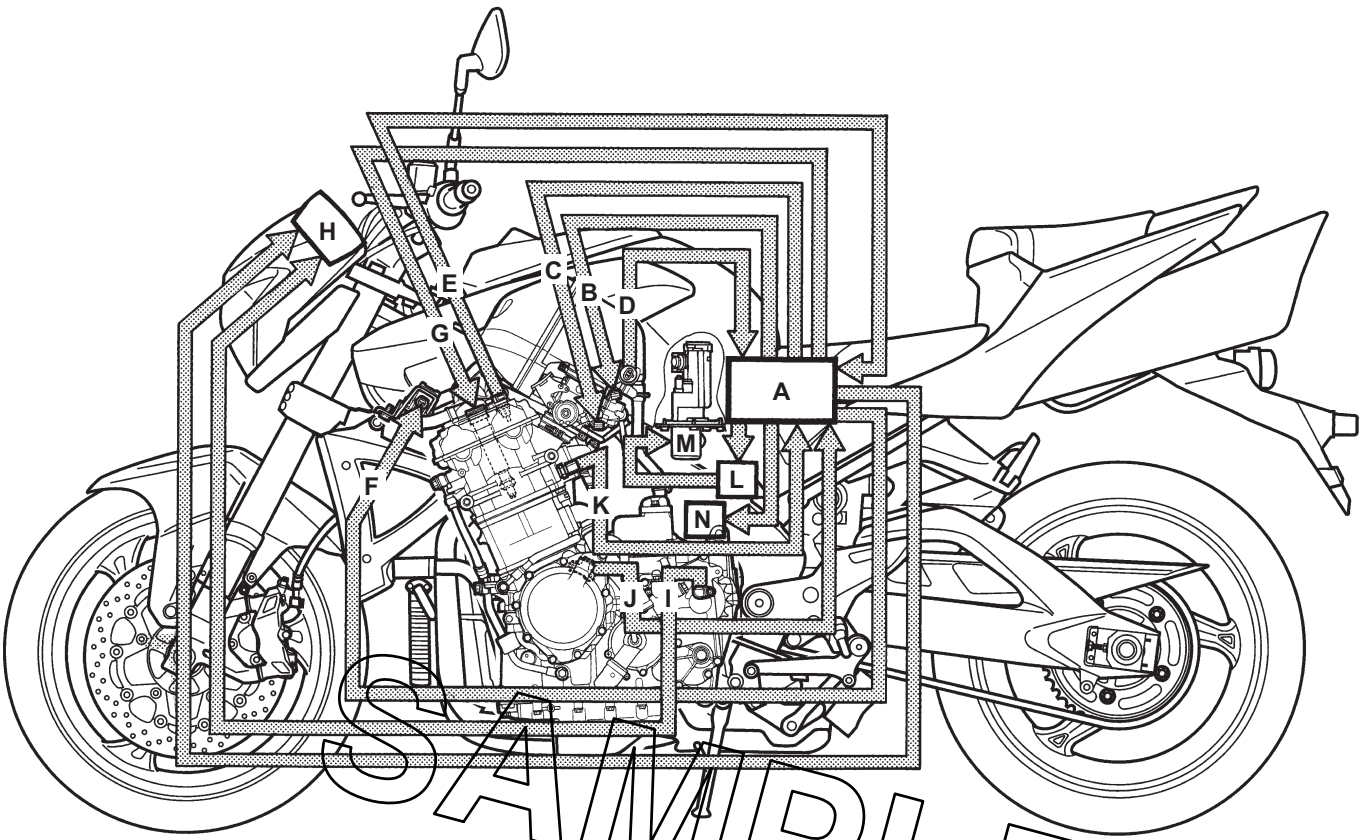

I823H1110182-01

“A”: ECM	“F”: PAIR control solenoid valve (PAIR valve)	“K”: Engine coolant temperature sensor (ECTS)
“B”: Secondary fuel injector	“G”: Ignition coil (IG coil)	“L”: Fuel pump relay (FP relay)
“C”: Primary fuel injector	“H”: Speedometer	“M”: Fuel pump
“D”: Intake air temperature sensor (IATS)	“I”: Speed sensor	“N”: EVAP system purge control valve (For E-33)
“E”: Camshaft position sensor (CMPS)	“J”: Crankshaft position sensor (CKPS)	

SAMPLE

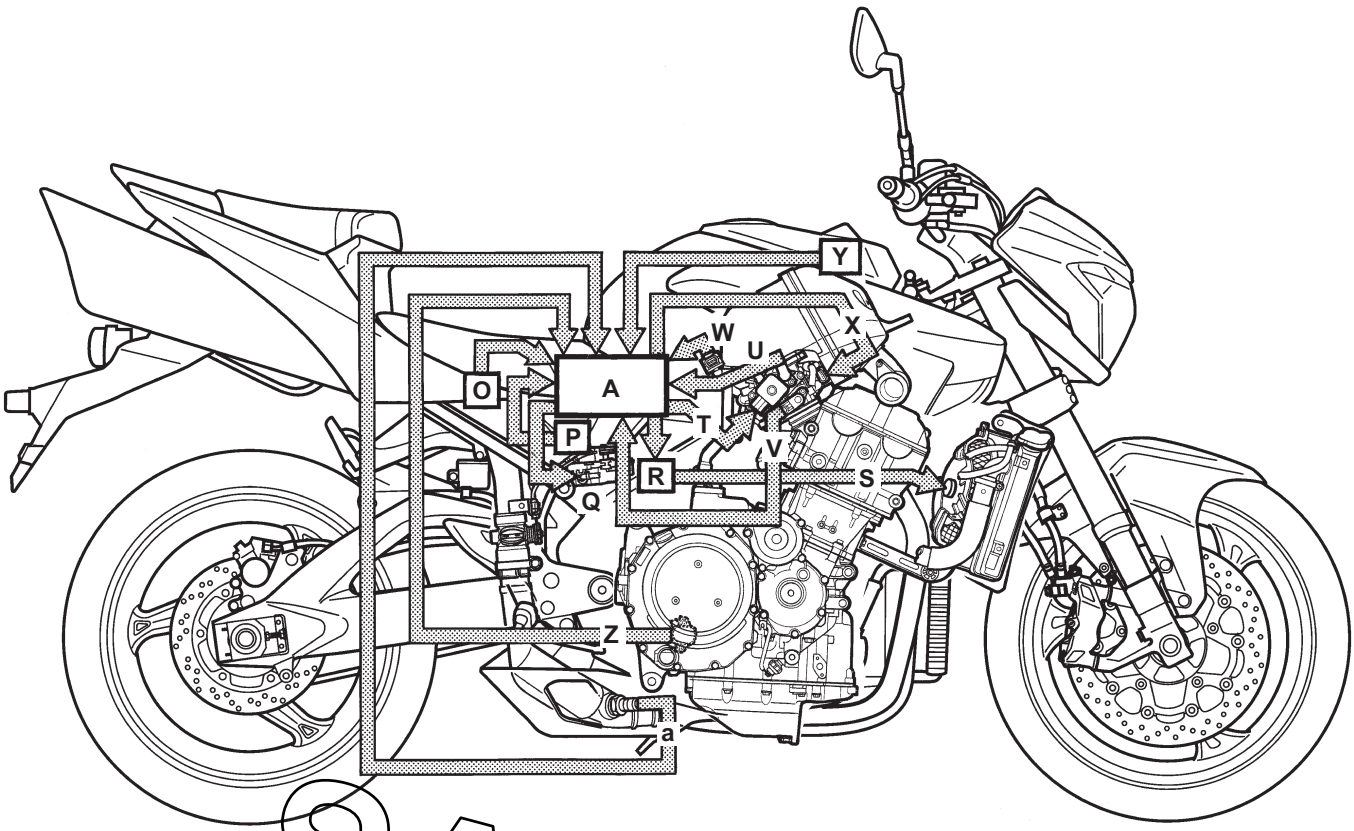

I823H1110183-01

“A”: ECM	“U”: Secondary throttle position sensor (STPS)
“O”: Atmospheric pressure sensor (APS)	“V”: Throttle position sensor (TPS)
“P”: Tip-over sensor (TOS)	“W”: Intake air pressure sensor (IAPS)
“Q”: Exhaust control valve actuator (EXCVA)	“X”: Idle speed control valve (ISC valve)
“R”: Cooling fan relay	“Y”: Driving mode selection switch (DMSS)
“S”: Cooling fan	“Z”: Gear position switch (GP switch)
“T”: Secondary throttle valve actuator (STVA)	“a”: Heated oxygen sensor (HO2S)

SAMPLE

Diagnostic Information and Procedures

Engine Symptom Diagnosis

B823H11104001

Condition	Possible cause	Correction / Reference Item
Engine will not start or is hard to start (Compression too low)	Valve clearance out of adjustment.	*Adjust.*
	Worn valve guide or poor seating of valve.	*Repair or replace.*
	Mistimed valve.	*Adjust.*
	Excessively worn piston ring.	*Replace.*
	Worn-down cylinder bore.	*Replace.*
	Too slow Starter motor cranking.	*Refer to "Starting System Diagram in Section 1I (Page 1I-1)".*
	Poor seating of spark plug.	*Retighten.*
Engine will not start or is hard to start (Plug not sparking)	Fouled spark plug.	*Clean.*
	Wet spark plug.	*Clean and dry.*
	Defective ignition coil.	*Replace.*
	Defective CKP sensor.	*Replace.*
	Defective ECM.	*Replace.*
	Open-circuited wiring connection.	*Repair or replace.*
Engine will not start or is hard to start (No fuel reaching the intake manifold)	Clogged fuel filter or fuel hose.	*Clean or replace.*
	Defective fuel pump.	*Replace.*
	Defective fuel pressure regulator.	*Replace.*
	Defective fuel injector.	*Replace.*
	Defective fuel pump relay.	*Replace.*
	Defective ECM.	*Replace.*
	Open-circuited wiring connection.	*Check and repair.*
Engine will not start or is hard to start (Incorrect fuel/air mixture)	TP sensor out of adjustment.	*Adjust.*
	Defective fuel pump.	*Replace.*
	Defective fuel pressure regulator.	*Replace.*
	Defective TP sensor.	*Replace.*
	Defective CKP sensor.	*Replace.*
	Defective IAP sensor.	*Replace.*
	Defective ECM.	*Replace.*
	Defective ECT sensor.	*Replace.*
	Defective IAT sensor.	*Replace.*
	Defective AP sensor.	*Replace.*
	Clogged ISC valve air passage way.	*Repair or replace.*
Engine idles poorly	Valve clearance out of adjustment.	*Adjust.*
	Poor seating of valve.	*Replace or repair.*
	Defective valve guide.	*Replace.*
	Worn down camshaft.	*Replace.*
	Too wide spark plug gap.	*Adjust or replace.*
	Defective ignition coil/plug cap.	*Replace.*
	Defective CKP sensor.	*Replace.*
	Defective ECM.	*Replace.*
	Defective TP sensor.	*Replace.*
	Defective fuel pump.	*Replace.*
	Imbalanced throttle valve.	*Adjust.*
	Damaged or cranked vacuum hose.	*Replace.*
	Damaged or clogged ISC valve.	*Repair or replace.*
	ISC incorrect leaning.	*Reset learned value.*

SAMPLE

Condition	Possible cause	Correction / Reference Item
Engine stalls often (Incorrect fuel/air mixture)	Defective IAP sensor or circuit.	*Repair or replace.*
	Clogged fuel filter.	*Clean or replace.*
	Defective fuel pump.	*Replace.*
	Defective fuel pressure regulator.	*Replace.*
	Defective ECT sensor.	*Replace.*
	Defective thermostat.	*Replace.*
	Defective IAT sensors.	*Replace.*
	Damaged or cracked vacuum hose.	*Replace.*
	Damaged or cogged ISC valve.	*Replace or repair.*
Engine stalls often (Fuel injector improperly operating)	Defective fuel injector.	*Replace.*
	No injection signal from ECM.	*Repair or replace.*
	Open or short circuited wiring connection.	*Repair or replace.*
	Defective battery or low battery voltage.	*Replace or recharge.*
Engine stalls often (Control circuit or sensor improperly operating)	Defective ECM.	*Replace.*
	Defective fuel pressure regulator.	*Replace.*
	Defective TP sensor.	*Replace.*
	Defective IAT sensors.	*Replace.*
	Defective CMP sensors.	*Replace.*
	Defective CKP sensor.	*Replace.*
	Defective ECT sensor.	*Replace.*
	Defective fuel pump relay.	*Replace.*
	Defective ISC valve.	*Replace.*
	ISC inconnect learning.	*Reset learned value.*
Engine stalls often (Engine internal parts improperly operating)	Fouled spark plug.	*Clean.*
	Defective CKP sensor or ECM.	*Replace.*
	Clogged fuel hose.	*Clean.*
	Out of valve clearance adjustment.	*Adjust.*
Noisy engine (Excessive valve chatter)	Too large valve clearance.	*Adjust.*
	Weakened or broken valve spring.	*Replace.*
	Worn tappet or cam surface.	*Replace.*
	Worn or burnt camshaft journal.	*Replace.*
Noisy engine (Noise seems to come from piston)	Worn down piston or cylinder.	*Replace.*
	Combustion chamber fouled with carbon.	*Clean.*
	Worn piston pin or piston pin bore.	*Replace.*
	Worn piston ring or ring groove.	*Replace.*
Noisy engine (Noise seems to come from cam chain)	Stretched cam chain.	*Replace.*
	Worn sprocket.	*Replace.*
	Cam chain tension adjuster not working.	*Repair or replace.*
Noisy engine (Noise seems to come from clutch)	Worn splines of countershaft or hub.	*Replace.*
	Worn teeth of clutch plate.	*Replace.*
	Distorted clutch plate.	*Replace.*
	Worn clutch release bearing.	*Replace.*
	Weakened clutch damper.	*Replace the primary driven gear.*
Noisy engine (Noise seems to come from crankshaft)	Rattling bearing due to wear.	*Replace.*
	Worn or burnt big-end bearing.	*Replace.*
	Worn or burnt journal bearing.	*Replace.*
	Too large thrust clearance.	*Replace thrust bearing.*
Noisy engine (Noise seems to come from balancer)	Worn or burnt journal bearing.	*Replace.*
Noisy engine (Noise seems to come from transmission)	Worn or rubbing gear.	*Replace.*
	Worn spline.	*Replace.*
	Worn or rubbing primary gear.	*Replace.*
	Worn bearing.	*Replace.*

SAMPLE

Condition	Possible cause	Correction / Reference Item
Noisy engine (Noise seems to come from water pump)	Too much play on pump shaft bearing.	*Replace.*
	Worn or damaged impeller shaft.	*Replace.*
	Worn or damaged mechanical seal.	*Replace.*
	Contact between pump case and impeller.	*Replace.*
Engine runs poorly in high speed range (Defective engine internal/ electrical parts)	Weakened valve spring.	*Replace.*
	Worn camshaft.	*Replace.*
	Valve timing out of adjustment.	*Adjust.*
	Too narrow spark plug gap.	*Adjust.*
	Ignition not advanced sufficiently due to poorly. working timing advance circuit.	*Replace ECM.*
	Defective ignition coil.	*Replace.*
	Defective CKP sensor.	*Replace.*
	Defective ECM.	*Replace.*
	Clogged air cleaner element.	*Clean.*
	Clogged fuel hose, resulting in inadequate fuel. supply to injector.	*Clean and prime.*
	Defective fuel pump.	*Replace.*
	Defective TP sensor.	*Replace.*
	Defective STP sensor or STVA.	*Replace.*
Engine runs poorly in high speed range (Defective air flow system)	Clogged air cleaner element.	*Clean or replace.*
	Defective throttle valve.	*Adjust or replace.*
	Defective secondary throttle valve.	*Adjust or replace.*
	Sucking air from throttle body joint.	*Repair or replace.*
	Defective ECM.	*Replace.*
	Imbalancing throttle valve synchronization.	*Adjust.*
	Defective STP sensor or STVA.	*Replace.*
Engine runs poorly in high speed range (Defective control circuit or sensor)	Low fuel pressure.	*Repair or replace.*
	Defective TP sensor.	*Replace.*
	Defective IAT sensors.	*Replace.*
	Defective CMP sensor.	*Replace.*
	Defective CKP sensor.	*Replace.*
	Defective GP sensor.	*Replace.*
	Defective IAP sensor.	*Replace.*
	Defective ECM.	*Replace.*
	TP sensor out of adjustment.	*Adjust.*
	Defective STP sensor and/or STVA.	*Replace.*
	Defective EXCVA or STVA.	*Replace.*
Engine lacks power (Defective engine internal/ electrical parts)	Loss of valve clearance.	*Adjust.*
	Weakened valve spring.	*Replace.*
	Valve timing out of adjustment.	*Adjust.*
	Worn piston ring or cylinder.	*Replace.*
	Poor seating of valve.	*Repair.*
	Fouled spark plug.	*Clean or replace.*
	Incorrect spark plug.	*Adjust or replace.*
	Clogged fuel injector.	*Replace.*
	Defective secondary fuel injector.	*Replace.*
	TP sensor out of adjustment.	*Adjust.*
	Clogged air cleaner element.	*Replace.*
	Imbalancing throttle valve synchronization.	*Adjust.*
	Sucking air from throttle valve or vacuum hose.	*Retighten or replace.*
	Too much engine oil.	*Drain out excess oil.*
	Defective fuel pump or ECM.	*Replace.*
	Defective CKP sensor and ignition coil.	*Replace.*
	Defective STP sensor or STVA.	*Replace.*

SAMPLE

Condition	Possible cause	Correction / Reference Item
Engine lacks power (Defective control circuit or sensor)	Low fuel pressure.	*Repair or replace.*
	Defective TP sensor.	*Replace.*
	Defective IAT sensor.	*Replace.*
	Defective CKP sensor.	*Replace.*
	Defective GP switch.	*Replace.*
	Defective IAP sensor.	*Replace.*
	Defective AP sensor.	*Replace.*
	TP sensor out of adjustment.	*Adjust.*
	Defective STP sensor and/or STVA.	*Replace.*
	Defective EXCVA or EXCV.	*Replace.*
Engine overheats (Defective engine internal parts)	Heavy carbon deposit on piston crown.	*Clean.*
	Not enough oil in the engine.	*Add oil.*
	Defective oil pump or clogged oil circuit.	*Replace or clean.*
	Sucking air from intake pipe.	*Retighten or replace.*
	Use of incorrect engine oil.	*Change.*
	Defective cooling system.	*See radiator section.*
	Defective EXCVA or EXCV.	*Replace.*
Engine overheats (Lean fuel/air mixture)	Short-circuited IAP sensor/lead wire.	*Repair or replace.*
	Short-circuited IAT sensor/lead wire.	*Repair or replace.*
	Sucking air from intake pipe joint.	*Repair or replace.*
	Defective fuel injector.	*Replace.*
	Defective ECT sensor.	*Replace.*
Engine overheats (Other factors)	Ignition timing is too advanced due to defective timing advance system (ECT sensor, GP switch, CKP sensor or ECM).	*Replace.*
	Too tight Drive chain.	*Adjust.*
	ISC inconnect learning.	*Reset learned value.*
Dirty or heavy exhaust smoke	Too much engine oil.	*Check with inspection window, drain out excess oil.*
	Worn piston ring or cylinder.	*Replace.*
	Worn valve guide.	*Replace.*
	Scored or scuffed cylinder wall.	*Replace.*
	Worn valve stem.	*Replace.*
	Defective stem seal.	*Replace.*
	Worn oil ring side rail.	*Replace.*

SAMPLE

Self-Diagnostic Procedures

B823H11104002

Use of Mode Select Switch

NOTE

- **Do not disconnect the coupler from ECM, battery cable from battery, ECM ground wire from engine or main fuse before confirming DTC (Diagnostic Trouble Code) stored in memory. Such disconnection will erase memorized information in ECM memory.**
- **DTC stored in ECM memory can be checked by the special tool.**
- **Before checking DTC, read self-diagnosis function "User mode and dealer mode" (Refer to "Self-Diagnosis Function (Page 1A-2)".) carefully to have good understanding as to what functions are available and how to use it.**
- **Be sure to read "Precautions for Electrical Circuit Service" (Refer to "Precautions for Electrical Circuit Service in Section 00 (Page 00-2)".) before inspection and observe what is written there.**

1) Remove the right frame side cover. Refer to "Exterior Parts Removal and Installation in Section 9D (Page 9D-14)".
2) Connect the special tool to the mode select switch coupler at the wiring harness.

Special tool
TOOL (A): 09930–82720 (Mode select switch)

I823H1110187-01

3) Start the engine or crank the engine for more than 4 seconds.
4) Turn the special tool's switch ON.
5) Check the DTC to determine the malfunction part. Refer to "DTC Table (Page 1A-20)".

Special tool
TOOL (A): 09930–82720 (Mode select switch)

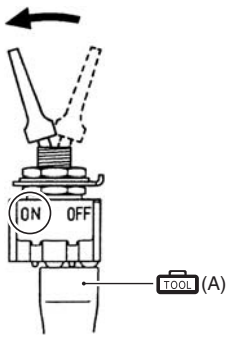

I718H1110006-04

I823H1110186-02

6) After repairing the trouble, turn OFF the ignition switch and turn ON again. If DTC is indicated (C00), the malfunction is cleared.

NOTE

- **Even though DTC (C00) is indicated, the previous malfunction history DTC still remains stored in the ECM. Therefore, erase the history DTC memorized in the ECM using SDS.**
- **DTC is memorized in the ECM also when the lead wire coupler of any sensor is disconnected. Therefore, when a lead wire coupler has been disconnected at the time of diagnosis, erase the stored history DTC using SDS. Refer to "Use of SDS Diagnosis Reset Procedures (Page 1A-14)".**

7) Turn the ignition switch OFF and disconnect the special tool from the mode select switch coupler.
8) Reinstall the right frame side cover.

SAMPLE

Use of SDS

NOTE

- **Do not disconnect the coupler from ECM, battery cable from battery, ECM ground wire from the engine or main fuse before confirming DTC (Diagnostic Trouble Code) stored in memory. Such disconnection will erase the memorized information in ECM memory.**
- **DTC stored in ECM memory can be checked by SDS.**
- **Be sure to read "Precautions for Electrical Circuit Service in Section 00 (Page 00-2)" before inspection and observe what is written there.**

1) Remove the right frame side cover. Refer to "Exterior Parts Removal and Installation in Section 9D (Page 9D-14)".

2) Set up the SDS tools. (Refer to the SDS operation manual for further details.)

Special tool
TOOL (A): 09904–41010 (SDS Set)
TOOL (B): 99565–01010–012 (CD-ROM Ver.12)

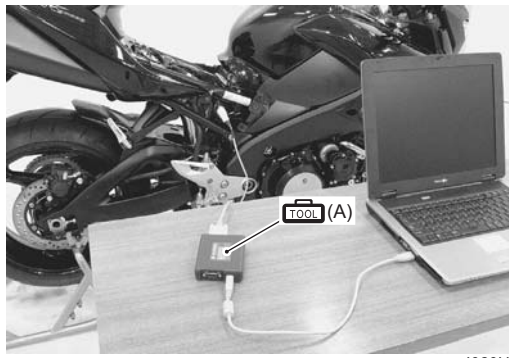

I823H1110190-01

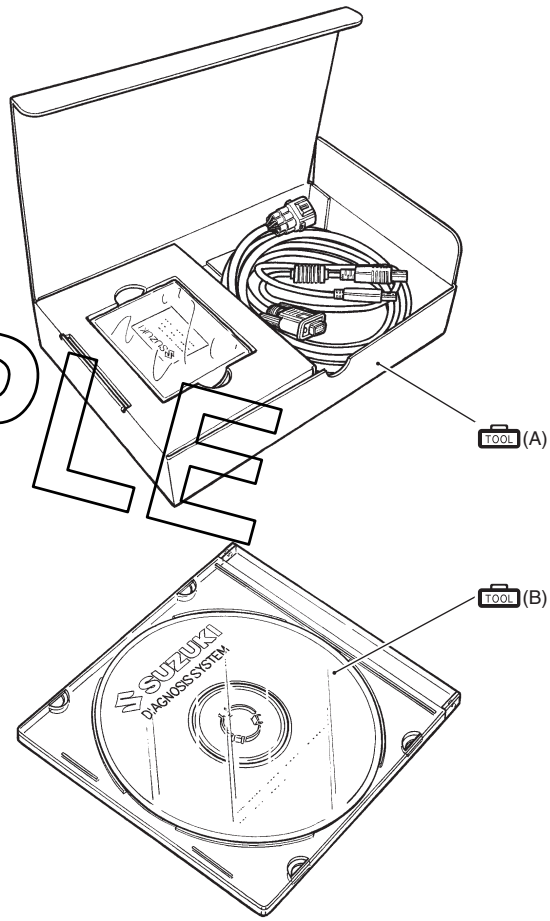

I705H1110116-03

SAMPLE

3) Click the DTC inspection button (1).

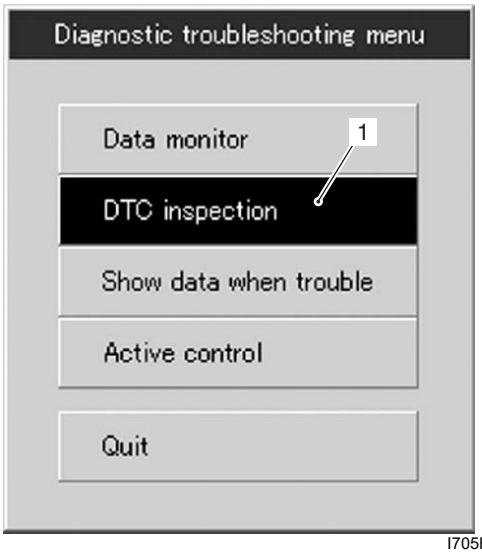

I705H1110003-01

4) Start the engine or crank the engine for more than 4 seconds.
5) Check the DTC to determine the malfunction part. Refer to “DTC Table (Page 1A-20)”.

NOTE

- **Read the DTC (Diagnostic Trouble Code) and show data when trouble (displaying data at the time of DTC) according to instructions displayed on SDS.**
- **Not only SDS is used for detecting Diagnostic Trouble Codes but also for reproducing and checking on screen the failure condition as described by customers using the trigger. (Refer to “Show Data When Trouble (Displaying Data at the Time of DTC) (Page 1A-15)”.)**
- **How to use trigger. (Refer to the SDS operation manual for further details.)**

6) After repairing the trouble, clear to delete history code (Past DTC). Refer to “Use of SDS Diagnosis Reset Procedures (Page 1A-14)”.
7) Close the SDS tool and turn the ignition switch OFF.
8) Disconnect the SDS tool and install the right frame cover.

Use of SDS Diagnosis Reset Procedures

B823H11104003

NOTE

The malfunction code is memorized in the ECM also when the lead wire coupler of any sensor is disconnected. Therefore, when a lead wire coupler has been disconnected at the time of diagnosis, erase the stored malfunction history code using SDS.

1) After repairing the trouble, turn OFF the ignition switch and turn ON again.
2) Click the DTC inspection button (1).

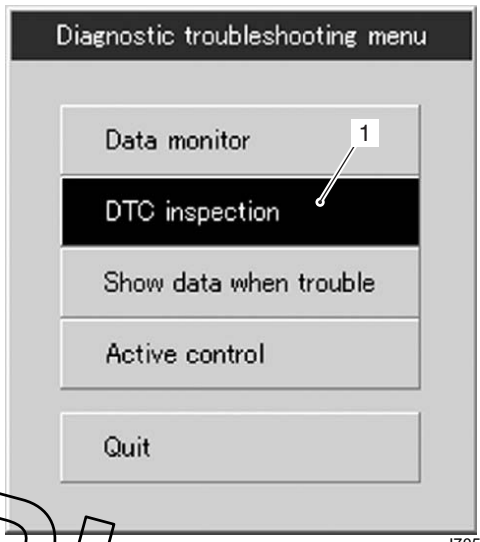

I705H1110003-01

3) Check the DTC.
4) The previous malfunction history code (Past DTC) still remains stored in the ECM. Therefore, erase the history code memorized in the ECM using SDS tool.
5) Click “Clear” (2) to delete history code (Past DTC).

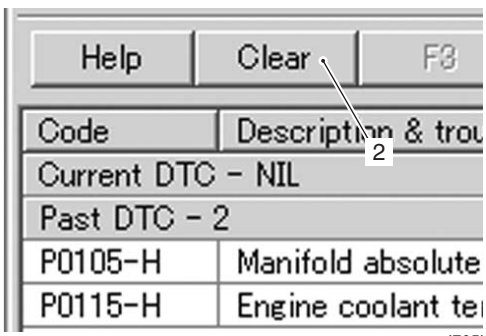

I705H1110005-01

SAMPLE

6) Follow the displayed instructions.

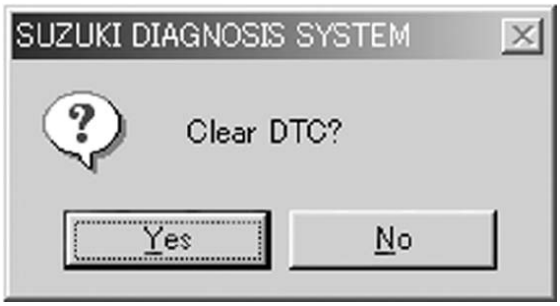

I705H1110006-01

I705H1110009-01

7) Check that both “Current DTC” (3) and “Past DTC” (4) are deleted (NIL).

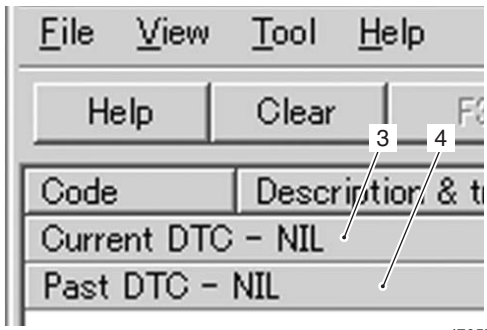

I705H1110008-01

8) Close the SDS tool and turn the ignition switch OFF.
9) Disconnect the SDS tool and install the right frame cover.

Show Data When Trouble (Displaying Data at the Time of DTC)

B823H11104004

Use of SDS

ECM stores the engine and driving conditions (in the form of data as shown in the figure) at the moment of the detection of a malfunction in its memory. This data is called “Show data when trouble”.
Therefore, it is possible to know engine and driving conditions (e.g., whether the engine was warm or not, where the motorcycle was running or stopped) when a malfunction was detected by checking the show data when trouble. This show data when trouble function can record the maximum of two Diagnostic Trouble Codes in the ECM.
Also, ECM has a function to store each show data when trouble for two different malfunctions in the order of occurrence as the malfunction is detected. Utilizing this function, it is possible to know the order of malfunctions that have been detected. Its use is helpful when rechecking or diagnosing a trouble.

SAMPLE

Failure #1

P0105-H Manifold absolute pressure circuit malfunction 1

Item	Pre-detect	Detect poi...	Post-dete...
Engine speed	0	0	0
Throttle position	28.9	28.9	28.9
Manifold absolute pressure 1	135.2	144.3	145.6
Engine coolant / oil temperature	24.0	24.0	24.0
Gear position	N	N	N
Secondary throttle actuator position sensor	96.1	96.1	98.4

I705H1110010-01

1) Click “Show data when trouble” (1) to display the data.

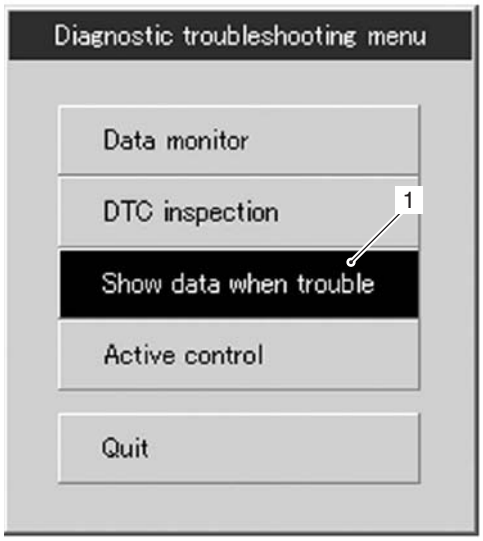

I718H1110269-02

2) Click the drop down button (2), either “Failure #1” or “Failure #2” can be selected.

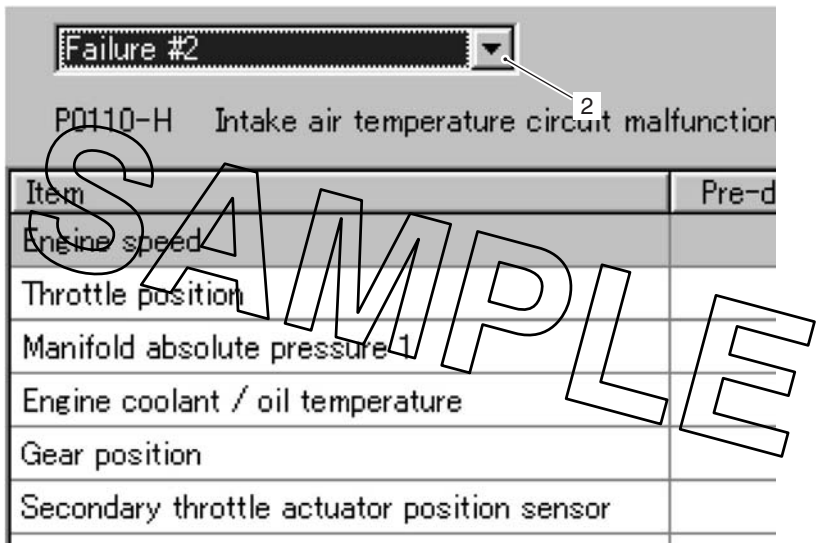

I718H1110270-01

SDS Check

B823H11104005

Using SDS, sample the data at the time of new and periodic vehicle inspections.
After saving the sampled data in the computer, file them by model and by user.
The periodically filed data help improve the accuracy of troubleshooting since they can indicate the condition of vehicle functions that has changed with time.
For example, when a vehicle is brought in for service but the troubleshooting of a failure is not easy, comparing the current data value to past filed data value at time of normal condition can allow the specific engine failure to be determined.
Also, in the case of a customer vehicle which is not periodically brought in for service with no past data value having been saved, if the data value of a good vehicle condition have been already saved as a master (STD), comparison between the same models helps to facilitate the troubleshooting.

1) Remove the right frame cover. Refer to “Exterior Parts Removal and Installation in Section 9D (Page 9D-14)”.
2) Set up the SDS tool. (Refer to the SDS operation manual for further details.)

Special tool
TOOL : 09904–41010 (SDS set)
TOOL : 99565–01010–012 (CD-ROM Ver.12)

NOTE

- **Before taking the sample of data, check and clear the Past DTC.**
- **A number of different data under a fixed condition as shown should be saved or filed as sample.**

Sample
Data sampled from cold starting through warm-up

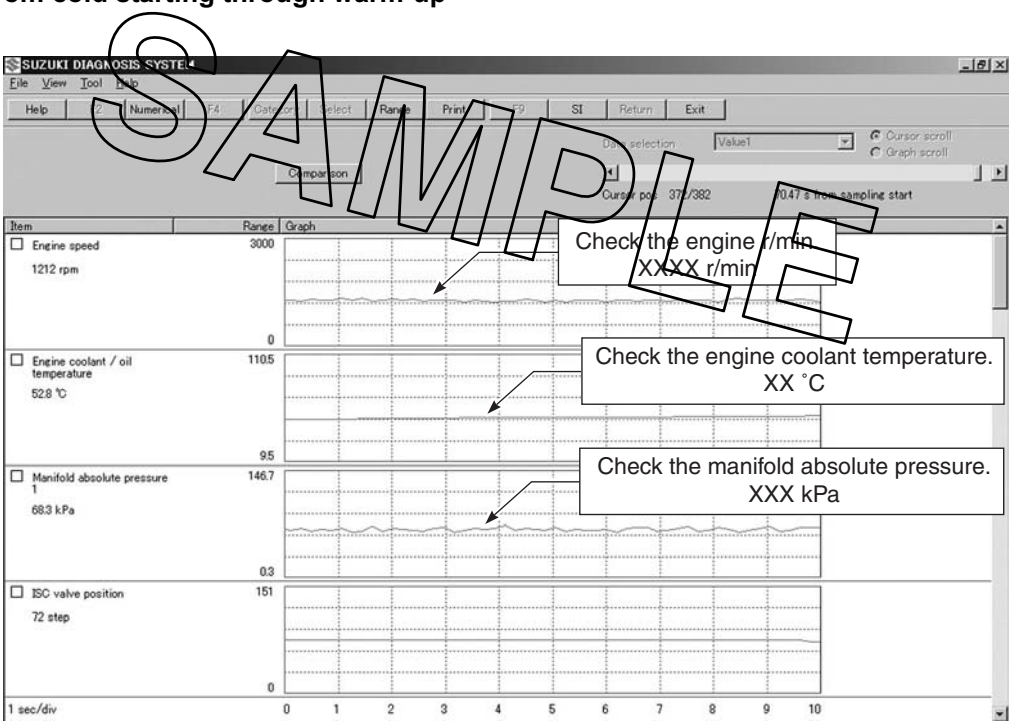

I823H1110208-02

Data at 3 000 r/min under no load

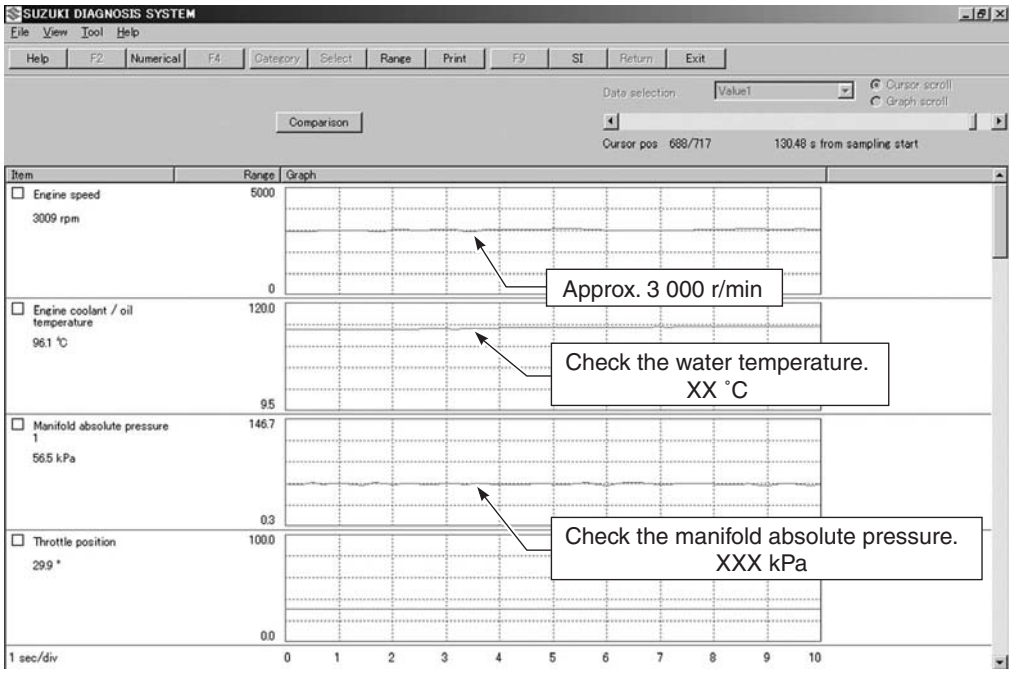

I823H1110209-02

Data at the time of racing

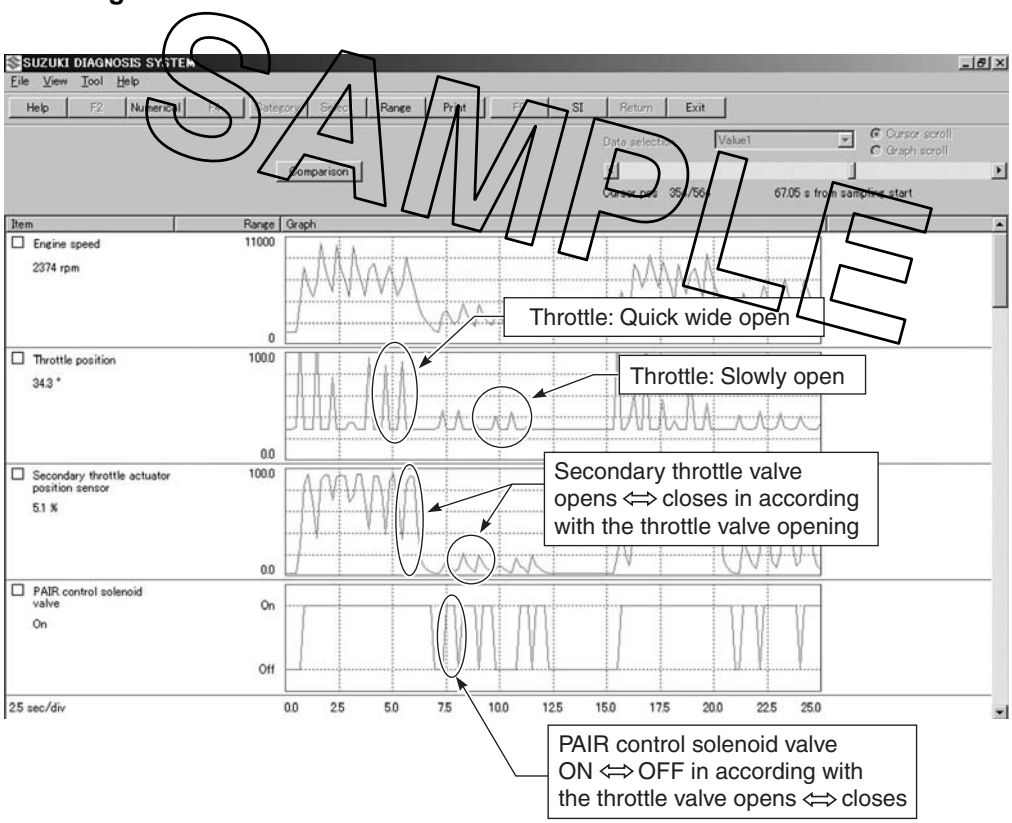

I823H1110210-02

Data of intake negative pressure during idling (100 °C)

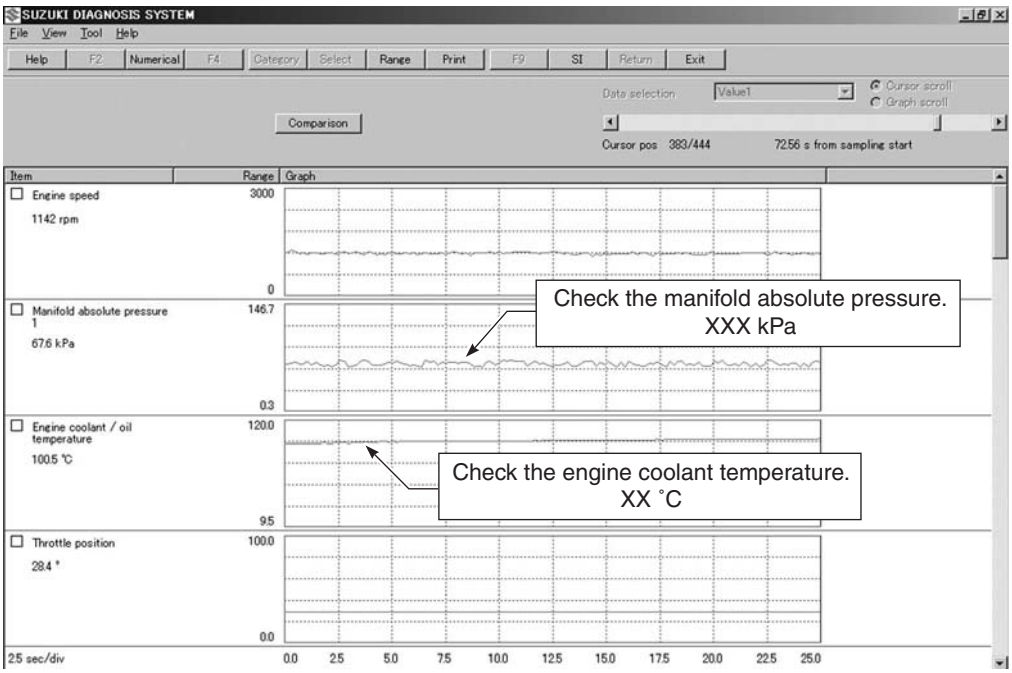

I823H1110211-01

Data of manifold absolute pressure operation at the time of starting

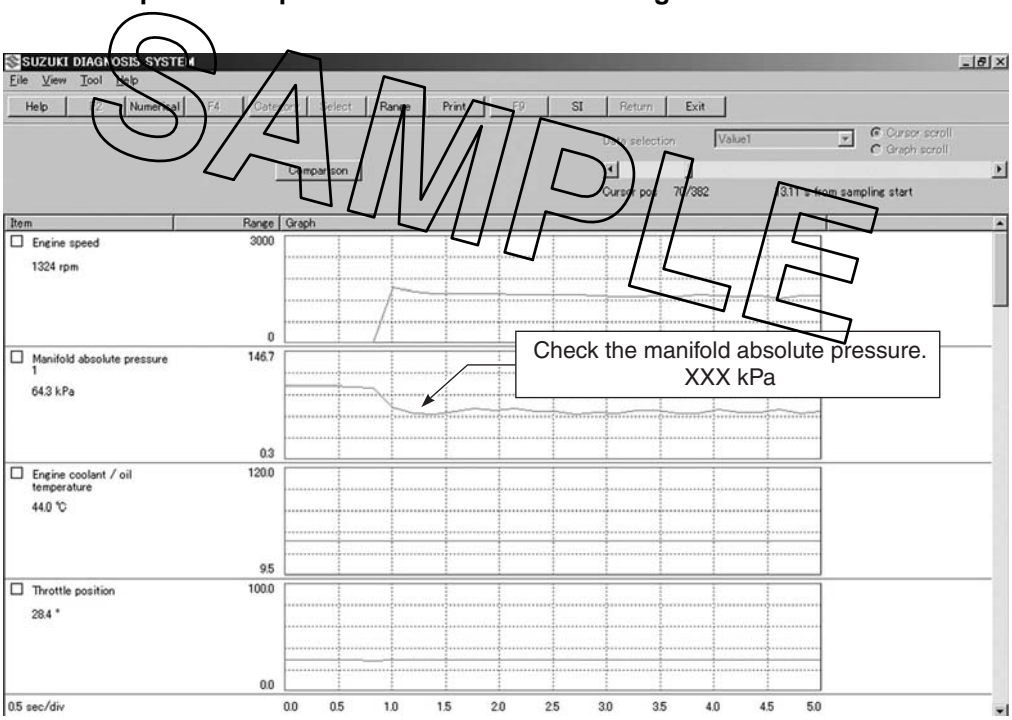

I823H1110212-02

Example of Trouble

Three data; value 1 (current data 1), value 2 (past data 2) and value 3 (past data 3); can be made in comparison by showing them in the graph. Read the change of value by comparing the current data to the past data that have been saved under the same condition, then you may determine how changes have occurred with the passing of time and identify what problem is currently occurring.

NOTE

With DTC not output, if the engine idling speed and ISC valve stepping position are found to be abnormal than the data saved previously, the possible cause may probably lie in the hardware side such as ISC valve air inlet hose crumple, bend, etc.

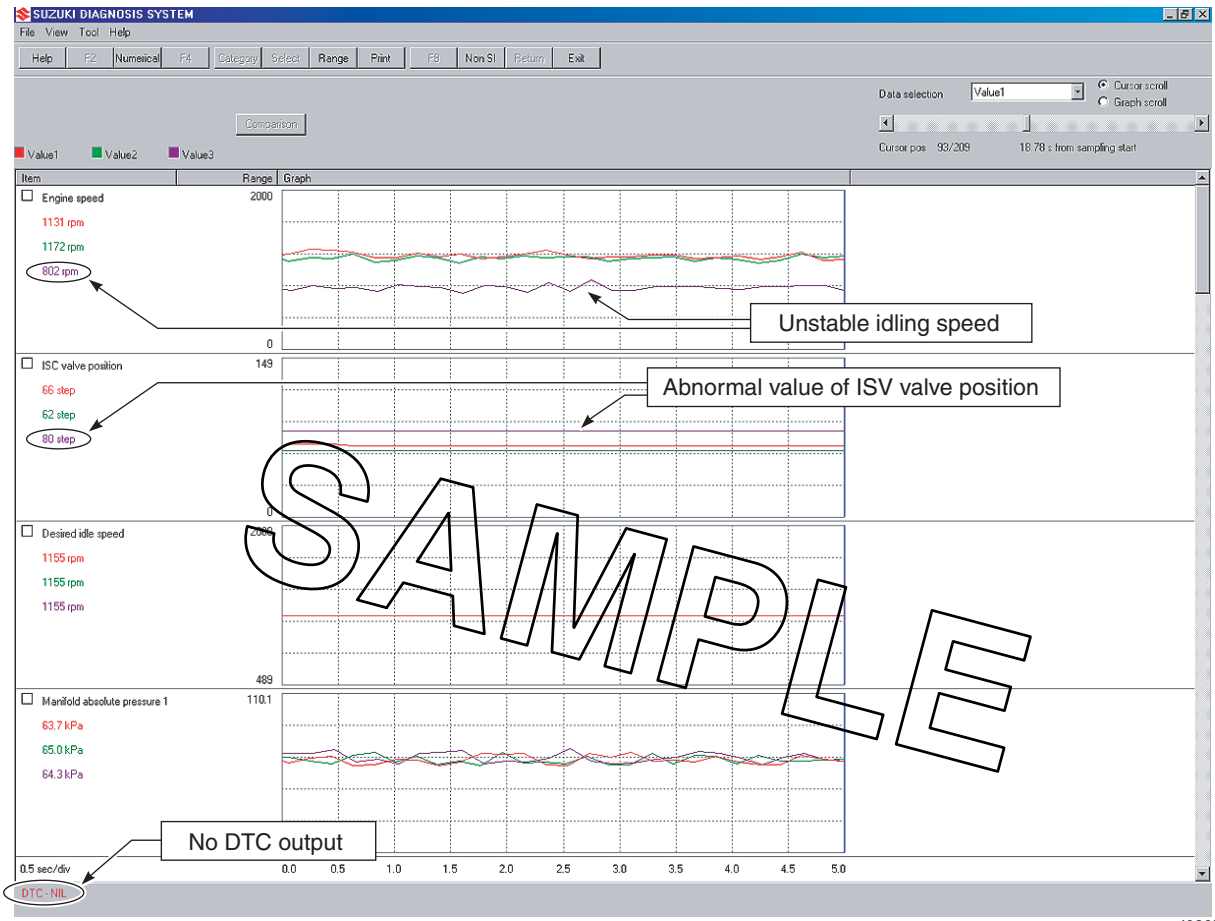

I823H1110220-01

DTC Table

B823H11104006

Code	Malfunction Part	Remarks
C00	None	No defective part
C11 (P0340) ☞(Page 1A-29)	Camshaft position sensor (CMPS)	
C12 (P0335) ☞(Page 1A-31)	Crankshaft position sensor (CKPS)	Pick-up coil signal, signal generator
C13 (P0105-H/L) ☞(Page 1A-34)	Intake air pressure sensor (IAPS)	
C14 (P0120-H/L) ☞(Page 1A-41)	Throttle position sensor (TPS)	*1
C15 (P0115-H/L) ☞(Page 1A-48)	Engine coolant temperature sensor (ECTS)	
C21(P0110-H/L) ☞(Page 1A-53)	Intake air temperature sensor (IATS)	
C22(P1450-H/L) ☞(Page 1A-58)	Atmospheric pressure sensor (APS)	

Code	Malfunction Part	Remarks
C23 (P1651-H/L) ☞(Page 1A-65)	Tip-over sensor (TOS)	
C24 (P0351) ☞(Page 1A-72)	Ignition signal #1 (IG coil #1)	For #1 cylinder
C25 (P0352) ☞(Page 1A-72)	Ignition signal #2 (IG coil #2)	For #2 cylinder
C26 (P0353) ☞(Page 1A-72)	Ignition signal #3 (IG coil #3)	For #3 cylinder
C27 (P0354) ☞(Page 1A-72)	Ignition signal #4 (IG coil #4)	For #4 cylinder
C28 (P1655) ☞(Page 1A-72)	Secondary throttle valve actuator (STVA)	
C29 (P1654-H/L) ☞(Page 1A-76)	Secondary throttle position sensor (STPS)	
C31 (P0705) ☞(Page 1A-84)	Gear position signal (GP switch)	
C32 (P0201) ☞(Page 1A-86)	Primary Injector signal #1	For #1 cylinder
C33 (P0202) ☞(Page 1A-86)	Primary Injector signal #2	For #2 cylinder
C34 (P0203) ☞(Page 1A-86)	Primary Injector signal #3	For #3 cylinder
C35 (P0204) ☞(Page 1A-86)	Primary Injector signal #4	For #4 cylinder
C36 (P1764) ☞(Page 1A-90)	Secondary Injector signal #1	For #1 cylinder
C37 (P1765) ☞(Page 1A-90)	Secondary Injector signal #2	For #2 cylinder
C38 (P1766) ☞(Page 1A-90)	Secondary Injector signal #3	For #3 cylinder
C39 (P1767) ☞(Page 1A-90)	Secondary Injector signal #4	For #4 cylinder
C40 (P0505/P0506/ P0507) ☞(Page 1A-94)	Idle speed control valve (ISC valve)	
C41 (P0230-H/L, P2505) ☞(Page 1A-99) / ☞(Page 1A-102)	Fuel pump control system (FP control system), ECM/PCM power input signal	Fuel pump, fuel pump relay
C42 (P1650) ☞(Page 1A-104)	Ignition switch signal (Ignition switch for E-03, 28, 33/immobilizer for E-02, 19, 24)	Anti-theft
C44 (P0130, P0135) ☞(Page 1A-104)	Heated oxygen sensor (HO2S)	
C46 (P1657-H/L, P1658) ☞(Page 1A-110)	Exhaust control valve actuator (EXCVA)	
C49 (P1656) ☞(Page 1A-123)	PAIR control solenoid valve	
C60 (P0480) ☞(Page 1A-127)	Cooling fan control system	Cooling fan relay
C62 (P0443) ☞(Page 1A-130)	EVAP system purge control solenoid valve (E-33 only)	

SAMPLE

In the LCD (DISPLAY) panel, the malfunction code is indicated from small code to large code.
*1 To get the proper signal from the throttle position sensor, the sensor basic position is indicated in the LCD (DISPLAY) panel. The malfunction code is indicated in three digits. In front of the three digits, a line appears in any of the three positions, upper, middle or lower line. If the indication is upper or lower line when engine rpm is 1 150 r/min, slightly turn the throttle position sensor and bring the line to the middle.

Fail-Safe Function Table

B823H11104007

FI system is provided with fail-safe function to allow the engine to start and the motorcycle to run in a minimum performance necessary even under malfunction condition.

Item	Fail-Safe Mode	Starting Ability	Running Ability
CMP sensor	When camshaft position signal has failed during running, the ECM determines the cylinder positions as # to be the same as before occurrence of such a failure.	"NO"	"YES"
		Mortorcycle can run, but once engine stops, engine can not start.	
IAP sensor	Intake air pressure value is fixed to 101 KPa (760 mmHg).	"YES"	"YES"
TP sensor	The throttle opening is fixed to full open position. Ignition timing is also fixed.	"YES"	"YES"
ECT sensor	Engine coolant temperature value is fixed to 80 °C (176 °F). Cooling fan is fixed on position.	"YES"	"YES"
IAT sensor	Intake air temperature value is fixed to 40 °C (104 °F).	"YES"	"YES"
AP sensor	Atmospheric pressure is fixed to 101 kPa (760 mmHg).	"YES"	"YES"
Ignition signal	#1 fuel-cut (primary side and secondary side)	"YES"	"YES"
		#2, #3 & #4 cylinders can run.	
	#2 fuel-cut (primary side and secondary side)	"YES"	"YES"
		#1, #3 & #4 cylinders can run.	
	#3 fuel-cut (primary side and secondary side)	"YES"	"YES"
		#1, #2 & #4 cylinders can run.	
	#4 fuel-cut (primary side and secondary side)	"YES"	"YES"
		#1, #2 & #3 cylinders can run.	
Primary injection signal	—	"YES"	"YES"
		#2, #3 & #4 cylinders can run.	
	—	"YES"	"YES"
		#1, #3 & #4 cylinders can run.	
	—	"YES"	"YES"
		#1, #2 & #4 cylinders can run.	
	—	"YES"	"YES"
		#1, #2 & #3 cylinders can run.	
Secondary injection signal	—	—	"YES"
		#2, #3 & #4 cylinders can run.	
	—	—	"YES"
		#1, #3 & #4 cylinders can run.	
	—	—	"YES"
		#1, #2 & #4 cylinders can run.	
	—	—	"YES"
		#1, #2 & #3 cylinders can run.	
STV actuator	Secondary throttle valve is fixed to full close position. When motor disconnection or lock occurs, power from ECM is shut off.	"YES"	"YES"
STP sensor	Secondary throttle valve is fixed to full close position.	"YES"	"YES"
Gear position signal	Gear position signal is fixed to 6th gear.	"YES"	"YES"
HO2 sensor	Feedback compensation is inhibited. (Air/fuel ratio is fixed to normal.)	"YES"	"YES"
EXCV actuator	EXCV actuator is fixed to full open position. When motor disconnection or lock occurs, power from ECM is shut off.	"YES"	"YES"
PAIR control solenoid valve	ECM stops controlling PAIR control solenoid valve.	"YES"	"YES"
ISC valve	When motor disconnection or lock occurs, power from ECM is shut off.	"YES"	"YES"

SAMPLE

Item	Fail-Safe Mode	Starting Ability	Running Ability
EVAP system purge control solenoid valve (E-33 only)	ECM stops controlling EVAP system purge control solenoid valve.	“YES”	“YES”

The engine can start and can run even if the signal in the table is not received from each sensor. But, the engine running condition is not complete, providing only emergency help (by fail-safe circuit). In this case, it is necessary to bring the motorcycle to the workshop for complete repair.
When two ignition signals or two injector signals are not received by ECM, the fail-safe circuit can not work and ignition or injection is stopped.

SAMPLE

FI System Troubleshooting

B823H11104008

Customer Complaint Analysis

Record details of the problem (failure, complaint) and how it occurred as described by the customer. For this purpose, use of such an inspection form such as following will facilitate collecting information to the point required for proper analysis and diagnosis.

NOTE

This form is a standard sample. The form should be modified according to conditions and characteristic of each market.

EXAMPLE: CUSTOMER PROBLEM INSPECTION FORM

User name:	**Model:**	**VIN:**	
Date of issue:	**Date Reg.:**	**Date of problem:**	**Mileage:**

Malfunction indicator light condition (LED)	**☐ Always ON / ☐ Sometimes ON / ☐ Always OFF / ☐ Good condition**
Malfunction display/code (LCD)	**User mode: ☐ No display / ☐ Malfunction display ( )**
	Dealer mode: ☐ No code / ☐ Malfunction code ( )

PROBLEM SYMPTOMS	
☐ Difficult Starting **☐ No cranking** **☐ No initial combustion** **☐ No combustion** **☐ Poor starting at** **(☐ cold / ☐ warm / ☐ always)** **☐ Other**	**☐ Poor Driveability** **☐ Hesitation on acceleration** **☐ Back fire / ☐ After fire** **☐ Lack of power** **☐ Surging** **☐ Abnormal knocking** **☐ Engine rpm jumps briefly** **☐ Other**
☐ Poor Idling **☐ Poor fast Idle** **☐ Abnormal idling speed** **(☐ High / ☐ Low) (r/min)** **☐ Unstable** **☐ Hunting (r/min to r/min)** **☐ Other**	**☐ Engine Stall when** **☐ Immediately after start** **☐ Throttle valve is opened** **☐ Throttle valve is closed** **☐ Load is applied** **☐ Other**
☐ OTHERS:	

SAMPLE

MOTORCYCLE/ENVIRONMENTAL CONDITION WHEN PROBLEM OCCURS	
Environmental condition	
Weather	**☐ Fair / ☐ Cloudy / ☐ Rain / ☐ Snow / ☐ Always / ☐ Other**
Temperature	**☐ Hot / ☐ Warm / ☐ Cool / ☐ Cold (°C / °F) / ☐ Always**
Frequency	**☐ Always / ☐ Sometimes (times / day, month) / ☐ Only once** **☐ Under certain condition**
Road	**☐ Urban / ☐ Suburb / ☐ Highway / ☐ Mountainous (☐ Uphill / ☐ Downhill)** **☐ Tarmacadam / ☐ Gravel / ☐ Other**
Motorcycle condition	
Engine condition	**☐ Cold / ☐ Warming up phase / ☐ Warmed up / ☐ Always / ☐ Other at starting** **☐ Immediately after start / ☐ Racing without load / ☐ Engine speed (r/min)**
Motorcycle condition	**During driving: ☐ Constant speed / ☐ Accelerating / ☐ Decelerating** **☐ Right hand corner / ☐ Left hand corner** **☐ At stop / ☐ Motorcycle speed when problem occurs (km/h, mile/h)** **☐ Other:**

Visual Inspection

Prior to diagnosis using the mode select switch or SDS, perform the following visual inspections. The reason for visual inspection is that mechanical failures (such as oil leakage) cannot be displayed on the screen with the use of mode select switch or SDS.

- Engine oil level and leakage. Refer to “Engine Oil and Filter Replacement in Section 0B (Page 0B-10)”.
- Engine coolant level and leakage. Refer to “Cooling Circuit Inspection in Section 1F (Page 1F-4)”.
- Fuel level and leakage. Refer to “Fuel Line Inspection in Section 0B (Page 0B-10)”.
- Clogged air cleaner element. Refer to “Air Cleaner Element Inspection in Section 0B (Page 0B-3)”.
- Battery condition.
- Throttle cable play. Refer to “Throttle Cable Play Inspection and Adjustment in Section 0B (Page 0B-12)”.
- Vacuum hose looseness, bend and disconnection.
- Broken fuse.
- FI indicator light operation. Refer to “Combination Meter Inspection in Section 9C (Page 9C-3)”.
- Each warning indicator light operation. Refer to “Combination Meter Inspection in Section 9C (Page 9C-3)”.
- Speedometer operation. Refer to “Speedometer Inspection in Section 9C (Page 9C-7)”.
- Exhaust gas leakage and noise. Refer to “Exhaust System Inspection in Section 1K (Page 1K-15)”.
- Each coupler disconnection.
- Clogged radiator fins. Refer to “Radiator Inspection and Cleaning in Section 1F (Page 1F-5)”.

Malfunction Code and Defective Condition Table

B823H11104009

Malfunction Code		Detected Item	Detected Failure Condition	Check For
C00		NO FAULT	—	—
C11 P0340		CMP sensor	The signal does not reach ECM for 4 sec. or more, after receiving the starter signal.	CMP sensor wiring and mechanical parts CMP sensor, intake cam pin, wiring/coupler connection
C12 P0335		CKP sensor	The signal does not reach ECM for 4 sec. or more, after receiving the starter signal.	CKP sensor wiring and mechanical parts CKP sensor, lead wire/coupler connection
C13		IAP sensor	The sensor should produce following voltage. 0.5 V ≤ Sensor voltage < 4.85 V In other than the above range, C13 (P0105) is indicated.	IAP sensor, lead wire/coupler connection
P0105	H		Sensor voltage is higher than specified value.	IAP sensor circuit shorted to VCC or ground circuit open
	L		Sensor voltage is lower than specified value.	IAP sensor circuit open or shorted to ground or VCC circuit open
C14		TP sensor	The sensor should produce following voltage. 0.2 V ≤ Sensor voltage < 4.8 V In other than the above range, C14 (P0120) is indicated.	TP sensor, lead wire/coupler connection
P0120	H		Sensor voltage is higher than specified value.	TP sensor circuit shorted to VCC or ground circuit open
	L		Sensor voltage is lower than specified value.	TP sensor circuit open or shorted to the ground or VCC circuit open

SAMPLE

Malfunction Code		Detected Item	Detected Failure Condition	Check For
C15		ECT sensor	The sensor voltage should be the following. 0.15 V ≤ Sensor voltage < 4.85 V In other than the above range, C15 (P0115) is indicated.	ECT sensor, lead wire/coupler connection
P0115	H		Sensor voltage is higher than specified value.	ECT sensor circuit open or ground circuit open
	L		Sensor voltage is lower than specified value.	ECT sensor circuit shorted to the ground
C21		IAT sensor	The sensor voltage should be the following. 0.15 V ≤ Sensor voltage < 4.85 V In other than the above range, C21 (P0110) is indicated.	IAT sensor, lead wire/coupler connection
P0110	H		Sensor voltage is higher than specified value.	IAT sensor circuit open or ground circuit open
	L		Sensor voltage is lower than specified value.	IAT sensor circuit shorted to the ground
C22		AP sensor	The sensor voltage should be the following. 0.5 V ≤ Sensor voltage < 4.85 V In other than the above range, C22 (P1450) is indicated.	AP sensor, lead wire/coupler connection
P1450	H		Sensor voltage is higher than specified value.	AP sensor circuit shorted to VCC or ground circuit open
	L		Sensor voltage is lower than specified value.	AP sensor circuit open or shorted to ground or VCC circuit open
C23		TO sensor	The sensor voltage should be the following for 2 sec. and more, after ignition switch is turned ON. 0.2 V ≤ Sensor voltage < 4.8 V In other than the above value, C23 (P1651) is indicated.	TO sensor, lead wire/coupler connection
P1651	H		Sensor voltage is higher than specified value.	TO sensor circuit shorted to VCC or ground circuit open
	L		Sensor voltage is lower than specified value.	TO sensor circuit open or shorted to the ground or VCC circuit open
C24/C25 C26/C27		Ignition signal	CKP sensor (pick-up coil) signal is produced, but signal from ignition coil is interrupted 8 times or more continuously. In this case, the code C24 (P0351), C25 (P0352), C26 (P0353) or C27 (P0354) is indicated.	Ignition coil, wiring/coupler connection, power supply from the battery
P0351/P0352 P0353/P0354				
C28		STV actuator	When no actuator control signal is supplied from the ECM, communication signal does not reach ECM or operation voltage does not reach STVA motor, C28 (P1655) is indicated. STVA can not operate properly.	STVA motor, STVA lead wire/ coupler connection
P1655				
C29		STP sensor	The sensor should produce following voltage. 0.15 V ≤ Sensor voltage < 4.85 V In other than the above range, C29 (P1654) is indicated.	STP sensor, lead wire/coupler connection
P1654	H		Sensor voltage is higher than specified value.	STP sensor circuit shorted to VCC or ground circuit open
	L		Sensor voltage is lower than specified value.	STP sensor circuit open or shorted to the ground or VCC circuit open

SAMPLE

Malfunction Code	Detected Item	Detected Failure Condition	Check For
C31 P0705	Gear position signal	Gear position signal voltage should be higher than the following for 3 seconds and more. Gear position sensor voltage ≥ 0.6 V If lower than the above value, C31 (P0705) is indicated.	GP switch, wiring/coupler connection, gearshift cam, etc.
C32/C33 C34/C35 P0201/P0202 P0203/P0204	Primary fuel injector	CKP sensor (pickup coil) signal is produced, but fuel injector signal is interrupted 4 times or more continuously. In this case, the code C32 (P0201), C33 (P0202), C34 (P0203) or C35 (P0204) is indicated.	Primary fuel injector, wiring/ coupler connection, power supply to the injector
C36/C37 C38/C39 P1764/P1765 P1766/P1767	Secondary fuel injector	Some failure exists in the fuel injector signal in a high load, high revolution condition. In this case, the code C36 (P1764), C37 (P1765), C38 (P1766) or C39 (P1767) is indicated.	Secondary fuel injector, wiring/ coupler connection, power supply to the injector
C40/P0505	ISC valve	The circuit voltage of motor drive is unusual.	ISC valve circuit open or shorted to the ground Power source circuit open
C40/P0506		Idle speed is lower than the desired idle speed.	Air passage clogged ISC valve is fixed ISC valve preset position is incorrect
C40/P0507		Idle speed is higher than the desired idle speed.	ISC valve hose connection ISC valve is fixed ISC valve preset position is incorrect
C41	FP relay	No voltage is applied to the fuel pump, although fuel pump relay is turned ON, or voltage is applied to fuel pump although fuel pump relay is turned OFF.	Fuel pump relay, lead wire/ coupler connection, power source to fuel pump relay and fuel injectors
P0230 H		Voltage is applied to fuel pump although fuel pump relay is turned OFF.	Fuel pump relay switch circuit shorted to power source Fuel pump relay (switch side)
P0230 L		No voltage is applied to the fuel pump, although fuel pump relay is turned ON.	Fuel pump relay circuit open or short Fuel pump relay (coil side)
C41/P2505	ECM/PCM power input signal	No voltage is applied to the ECM.	Lead wire/coupler connection of ECM terminal to fuel fuse
C42 P1650	Ignition switch	Ignition switch signal is not input to the ECM. * When the I.D. agreement is not verified. * ECM does not receive communication signal from the immobilizer antenna.	Ignition switch, lead wire/ coupler, etc. * Immobilizer/anti-theft system
C44/P0130	HO2 sensor	HO2 sensor output voltage is not input to ECM during engine operation and running condition. (Sensor voltage > 1.0 V) C44 (P0130) is indicated.	HO2 sensor is circuit open or shorted to the power source
C44/P0135		The Heater can not operate so that heater operation voltage is not supply to the oxygen heater circuit, C44 (P0135) is indicated.	Heated circuit open or shorted to the ground Battery voltage supply to the HO2 sensor

SAMPLE

Malfunction Code		Detected Item	Detected Failure Condition	Check For
C46		EXCV actuator	EXCVA position sensor produces following voltage. 0.1 V ≤ sensor voltage < 4.9 V in other than the above range, C46 (P1675) is indicated. When no actuator control signal is supplied from the ECM, communication signal does not reach ECM or operation voltage does not reach EXCVA motor, C46 (P1658) is indicated. EXCVA can not operate properly.	EXCVA, EXCVA lead wire/ coupler
P1657	H		EXCVA position sensor voltage is higher than specified value.	EXCVA position sensor circuit shorted to VCC or ground circuit open
	L		EXCVA position sensor voltage is lower than specified value.	EXCVA position sensor circuit open or shorted to ground or VCC circuit open
P1658			When no actuator control signal is supplied from the ECM, communication signal does not reach ECM or operation voltage does not reach EXCVA motor, C46 (P1658) is indicated. EXCVA motor can not operate properly.	EXCVA, EXCVA motor lead wire/coupler
C49		PAIR control solenoid valve	PAIR control solenoid valve voltage is not input to ECM.	PAIR control solenoid valve, lead wire/coupler connection
P1656				
C60		Cooling fan relay	Cooling fan relay signal is not input to ECM.	Cooling fan relay, lead wire/ coupler connection
P0480				
C62		EVAP system purge control solenoid valve (E-33 only)	EVAP system purge control solenoid valve voltage is not input to ECM.	EVAP system purge control solenoid valve, lead wire/ coupler connection
P0443				

* : Immobilizer system equipped model only. (E-02, 19, 24)

SAMPLE

DTC “C11” (P0340) CMP Sensor Circuit Malfunction

B823H11104029

Detected Condition and Possible Cause

Detected Condition	Possible Cause
The signal does not reach ECM for 4 sec. or more, after receiving the starter signal.	• CMP sensor circuit open or short. • CMP sensor malfunction. • ECM malfunction.

Wiring Diagram

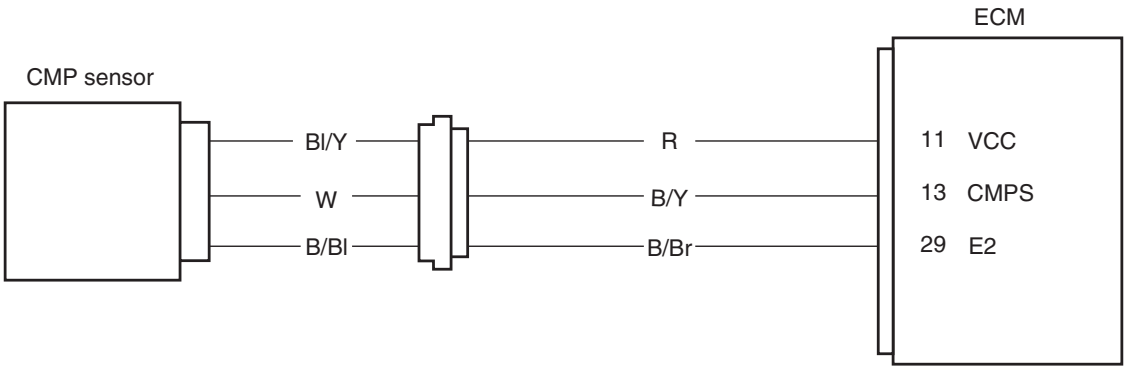

I823H1110003-07

ECM coupler (Harness side)

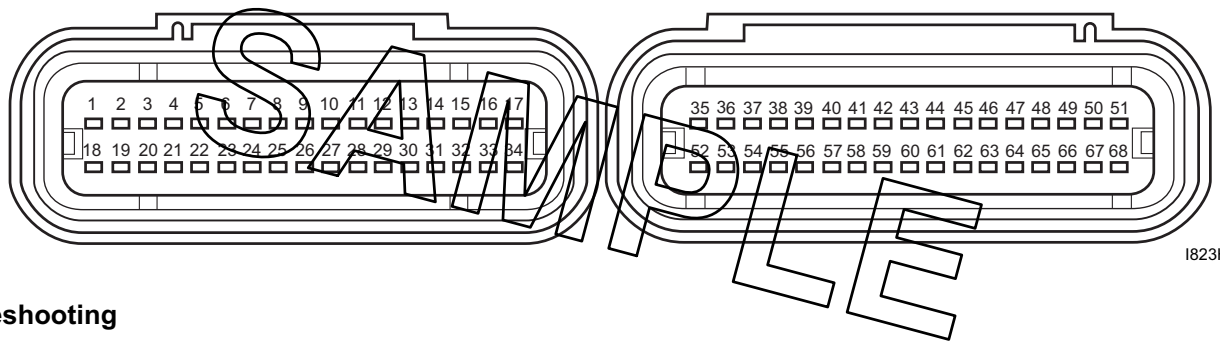

I823H1110004-01

SAMPLE

Troubleshooting

⚠ CAUTION

When using the multi-circuit tester, do not strongly touch the terminal of the ECM coupler with a needle pointed tester probe to prevent the terminal damage or terminal bend.

NOTE

After repairing the trouble, clear the DTC using SDS tool. Refer to “Use of SDS Diagnosis Reset Procedures (Page 1A-14)”.

Step	Action	Yes	No
1	1) Turn the ignition switch OFF. 2) Lift and support the fuel tank. Refer to “Fuel Tank Removal and Installation in Section 1G (Page 1G-10)”. 3) Check the CMP sensor coupler (1) for loose or poor contacts. If OK, remove the CMP sensor. Refer to “CMP Sensor Removal and Installation in Section 1C (Page 1C-2)”. 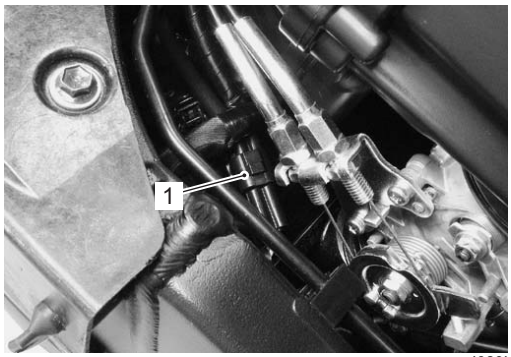 I823H1110184-01 4) Connect 3 new 1.5 V batteries in series, 1 kΩ resistor and the multi-circuit tester as shown in the figure. **Special tool** **TOOL 09900–25008 (Multi-circuit tester set)** **Tester knob indication** **Voltage (⎓)** 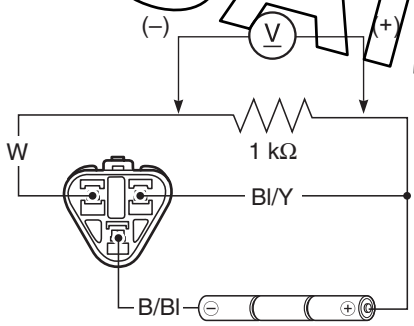 I823H1110005-04 5) Under this condition, if a suitable screwdriver touching the pick-up surface of the CMP sensor is moved, the tester reading voltage changes (0.8 V and less ↔ 4.3 V and more). 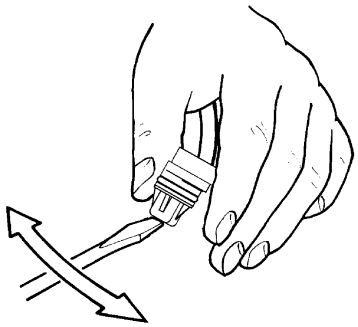 I823H1110007-01 *Is the voltage OK?*	• B/Y, R or B/Br wire open or shorted to the ground. • Loose or poor contacts on the CMP sensor coupler or ECM coupler (Terminal “11”, “13” or “29”). • If wires and connection are OK, intermittent trouble or faulty ECM. • Recheck each terminal and wire harness for open circuit and poor connection. • Replace the ECM with a known good one, and inspect it again.	• Inspect that metal particles or foreign material stuck on the CMP sensor and camshaft tip. • If there are no metal particles and foreign material, then replace the CMP sensor with a new one.

SAMPLE

DTC “C12” (P0335): CKP Sensor Circuit Malfunction

B823H11104010

Detected Condition and Possible Cause

Detected Condition	Possible Cause
The signal does not reach ECM for 4 sec. or more, after receiving the starter signal.	• Metal particles or foreign material being stuck on the CKP sensor and rotor tip. • CKP sensor circuit open or short. • CKP sensor malfunction. • ECM malfunction.

Wiring Diagram

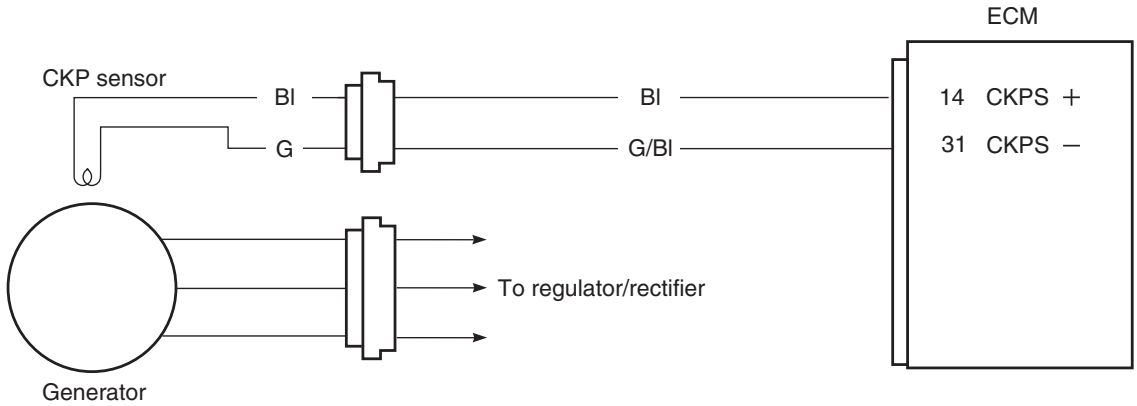

I823H1110008-05

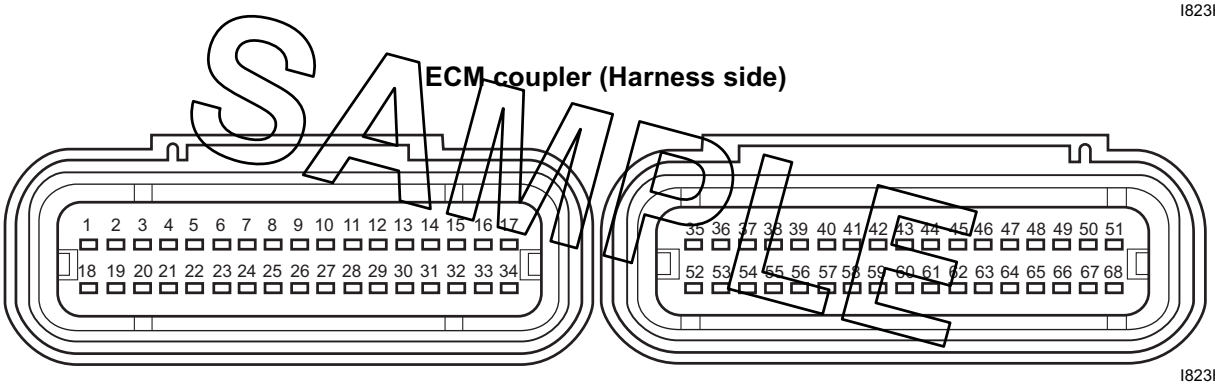

SAMPLE

I823H1110004-01

Troubleshooting

NOTE

After repairing the trouble, clear the DTC using SDS tool. Refer to “Use of SDS Diagnosis Reset Procedures (Page 1A-14)”.

Step	Action	Yes	No
1	1) Turn the ignition switch OFF. 2) Remove the engine sprocket outer cover. Refer to “Engine Sprocket Removal and Installation in Section 3A (Page 3A-2)”. 3) Check the CKP sensor coupler (1) for loose or poor contacts. If OK, then measure the CKP sensor resistance. 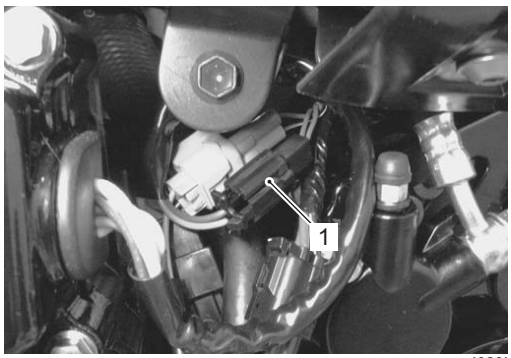 I823H1110109-01 4) Disconnect the CKP sensor coupler and measure the CKP sensor resistance. **Special tool** **TOOL (A): 09900–25008 (Multi-circuit tester set)** **Tester knob indication** **Resistance (Ω)** **CKP sensor resistance** **180 – 280 Ω (Bl – G)** 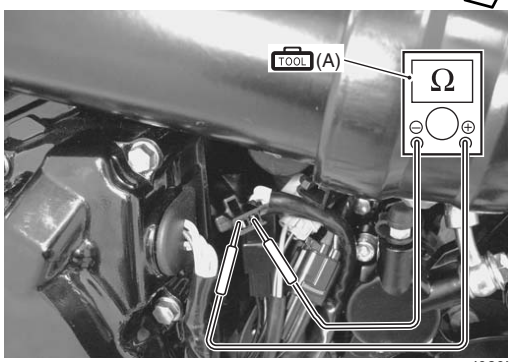 I823H1110110-01	Go to Step 2.	Replace the CKP sensor with a new one.

SAMPLE

Step	Action	Yes	No
1	5) If OK, then check the continuity between each terminal and ground. **Special tool** **TOOL (A): 09900–25008 (Multi-circuit tester set)** **CKP sensor continuity** **∞ Ω (Infinity) (Bl – Ground, G – Ground)** 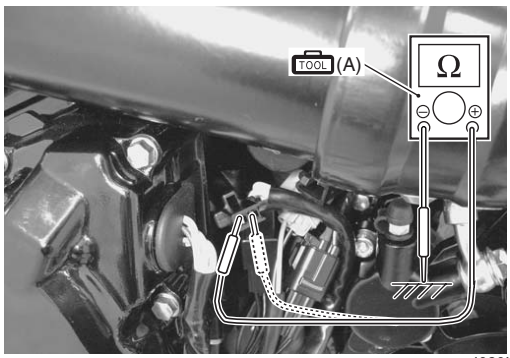 I823H1110111-01 *Are the resistance and continuity OK?*	Go to Step 2.	Replace the CKP sensor with a new one.
2	1) Crank the engine several seconds with the starter motor, and measure the CKP sensor peak voltage at the coupler. **Special tool** **TOOL (A): 09900–25008 (Multi-circuit tester set)** **Tester knob indication** **Voltage (⎓)** **CKP sensor peak voltage** **3.0 V and more** **((+) terminal: Bl – (–) terminal: G)** 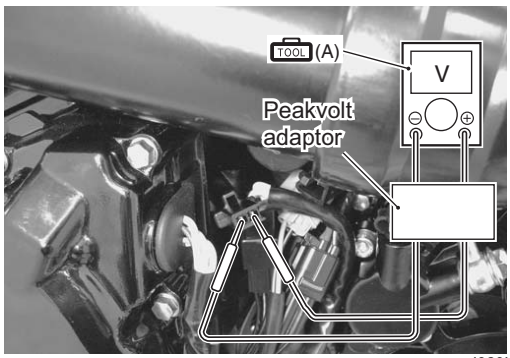 I823H1110112-02 2) Repeat the 1) test procedures several times and measure the highest peak voltage. *Is the voltage OK?*	• Bl or G/Bl wire of the harness side open or shorted to the ground. • Loose or poor contacts on the CKP sensor coupler or ECM coupler (Terminal “14” or “31”). • If the wires and connection are OK, intermittent trouble or faulty ECM. • Recheck each terminal and wire harness for open circuit and poor connection. • Replace the ECM with a known good one, and inspect it again. Refer to “ECM Removal and Installation in Section 1C (Page 1C-2)”.	• Inspect that metal particles or foreign material stuck on the CKP sensor and rotor tip. • If there are no metal particles and foreign material, then replace the CKP sensor with a new one. Refer to “CMP Sensor Removal and Installation in Section 1C (Page 1C-2)”.

SAMPLE

DTC “C13” (P0105-H/L): IAP Sensor Circuit Malfunction

B823H11104011

Detected Condition and Possible Cause

Detected Condition			Possible Cause
C13		IAP sensor voltage is not within the following range. 0.5 V ≤ Sensor voltage < 4.85 V **NOTE** **Note that atmospheric pressure varies depending on weather conditions as well as altitude. Take that into consideration when inspecting voltage.**	• Clogged vacuum passage between throttle body and IAP sensor. • Air being drawn from vacuum passage between throttle body and IAP sensor. • IAP sensor circuit open or shorted to the ground. • IAP sensor malfunction. • ECM malfunction.
P0105	H	Sensor voltage is higher than specified value.	• IAP sensor circuit is open or shorted to VCC or ground circuit open. • IAP sensor circuit is shorted to the ground or VCC circuit open.
	L	Sensor voltage is lower than specified value.	

Wiring Diagram

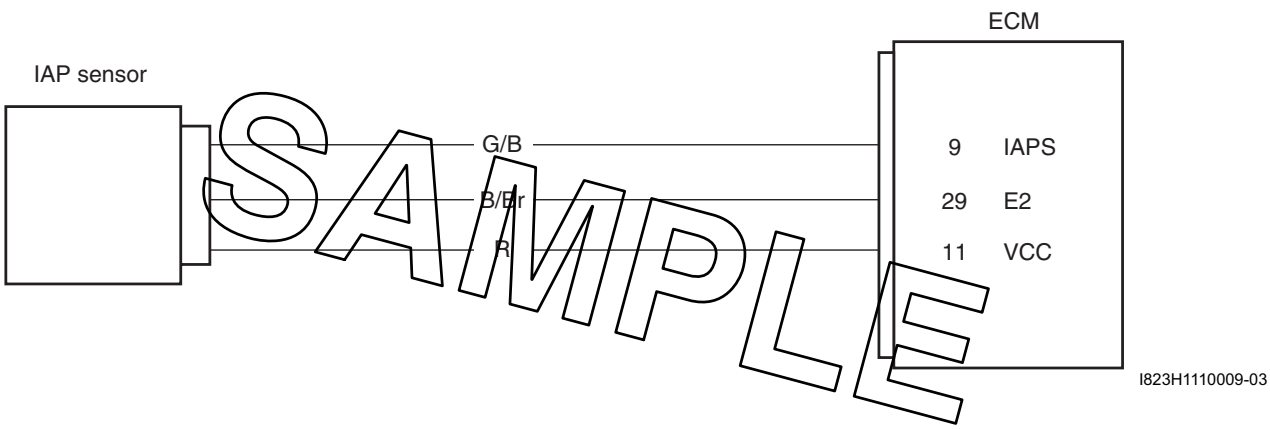

ECM coupler (Harness side)

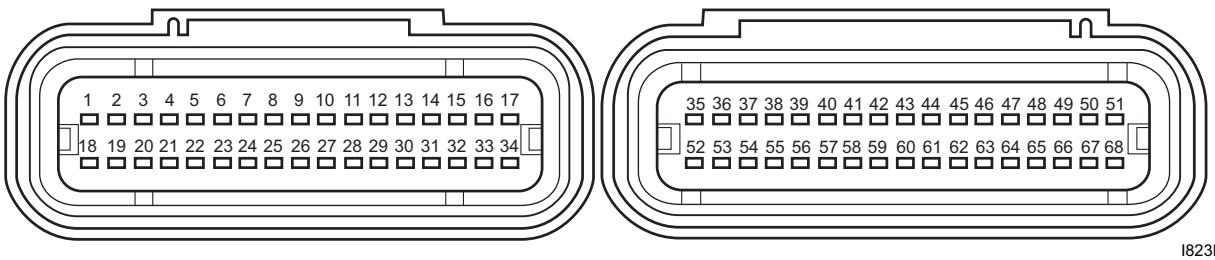

Troubleshooting

⚠ CAUTION

When using the multi-circuit tester, do not strongly touch the terminal of the ECM coupler with a needle pointed tester probe to prevent the terminal damage or terminal bend.

NOTE

After repairing the trouble, clear the DTC using SDS tool. Refer to “Use of SDS Diagnosis Reset Procedures (Page 1A-14)”.

C13 (Use of mode select switch)

Step	Action	Yes	No
1	1) Turn the ignition switch OFF. 2) Lift and support the fuel tank. Refer to “Fuel Tank Removal and Installation in Section 1G (Page 1G-10)”. 3) Check the IAP sensor coupler (1) for loose or poor contacts. If OK, then measure the IAP sensor input voltage. 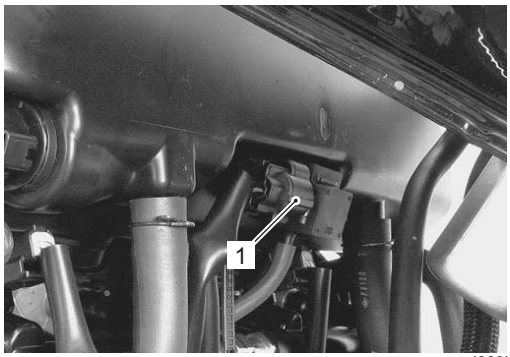 I823H1110113-01 4) Disconnect the IAP sensor coupler. 5) Turn the ignition switch ON. 6) Measure the input voltage between the R wire and ground. If OK, then measure the voltage between the R wire and B/Br wire. **Special tool** **TOOL (A): 09900–25008 (Multi-circuit tester set)** **<u>Tester knob indication</u>** **Voltage (⎓)** **<u>IAP sensor input voltage</u>** **4.5 – 5.5 V** **((+) terminal: R – (–) terminal: Ground, (+) terminal: R – (–) terminal: B/Br)** 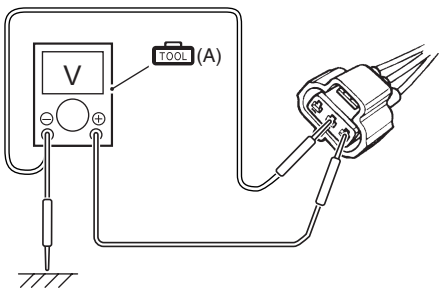 I823H1110016-05 *Is the voltage OK?*	Go to Step 2.	• Loose or poor contacts on the ECM coupler. • Open or short circuit in the R or B/Br wire.

SAMPLE

P0105-H for IAP sensor (Use of SDS)

Step	Action	Yes	No
1	1) Turn the ignition switch OFF. 2) Lift and support the fuel tank. Refer to “Fuel Tank Removal and Installation in Section 1G (Page 1G-10)”. 3) Check the IAP sensor coupler (1) for loose or poor contacts. If OK, then check the IAP sensor lead wire continuity. 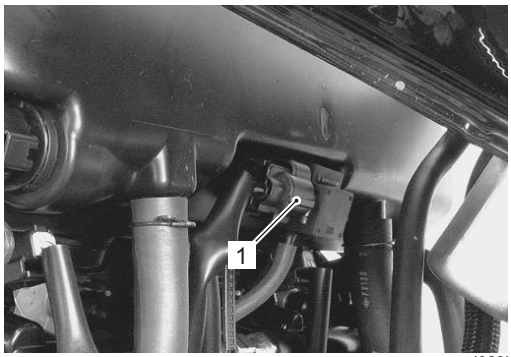 I823H1110113-01 4) Disconnect the IAP sensor coupler. 5) Check the continuity between the R wire and G/B wire. If the sound is not heard from the tester, the circuit condition is OK. **Special tool** **TOOL (A): 09900–25008 (Multi-circuit tester set)** **Tester knob indication** **Continuity (•))))** 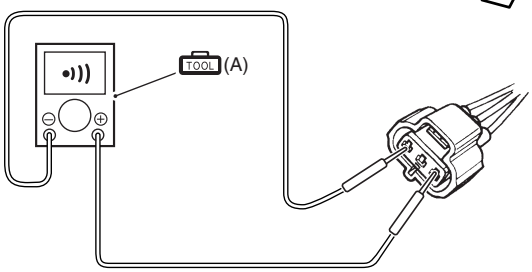 I823H1110017-05	Go to Step 3.	G/B wire shorted to VCC, or B/Br wire open.

SAMPLE

Step	Action	Yes	No
1	6) Disconnect the ECM coupler. Refer to “ECM Removal and Installation in Section 1C (Page 1C-2)”. 7) Insert the needle pointed probes to the lead wire coupler. 8) Check the continuity between the G/B wire and terminal “9”. If OK, then check the continuity between the B/Br wire and terminal “29”. **Special tool** **(A): 09900–25008 (Multi-circuit tester set)** **(B): 09900–25009 (Needle pointed probe set)** **Tester knob indication** **Continuity test (•))))** **ECM couplers (Harness side)** 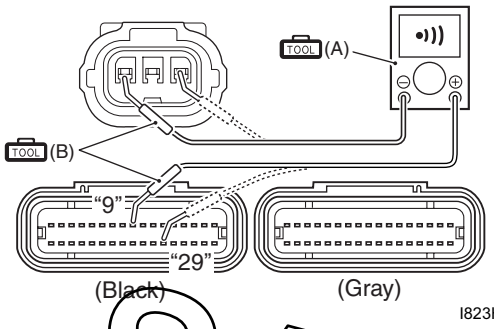 *Is the continuity OK?*	Go to Step 3.	G/B wire shorted to VCC, or B/Br wire open.

SAMPLE

P0105-L for IAP sensor (Use of SDS)

Step	Action	Yes	No
1	1) Turn the ignition switch OFF. 2) Lift and support the fuel tank. Refer to “Fuel Tank Removal and Installation in Section 1G (Page 1G-10)”. 3) Check the IAP sensor coupler (1) for loose or poor contacts. If OK, then check the IAP sensor lead wire continuity. 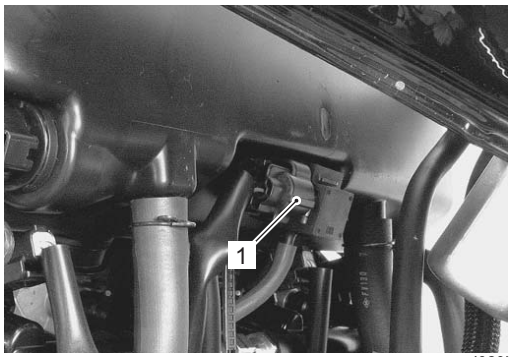 I823H1110113-01 4) Disconnect the IAP sensor coupler. 5) Check the continuity between the G/B wire and ground. Also, check the continuity between the G/B wire and B/Br wire. If the sound is not heard from the tester, the circuit condition is OK. **Special tool** **(A): 09900–25008 (Multi-circuit tester set)** **<u>Tester knob indication</u>** **Continuity (•))))** 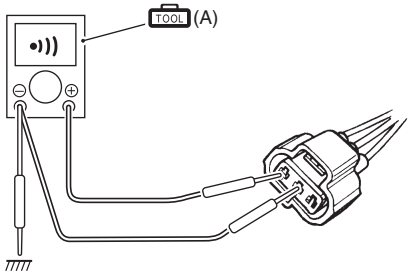 I823H1110019-02	Go to Step 2.	R and G/B wire open, G/B wire shorted to the ground.

SAMPLE

Step	Action	Yes	No
1	6) Disconnect the ECM coupler. Refer to “ECM Removal and Installation in Section 1C (Page 1C-2)”. 7) Insert the needle pointed probes to the lead wire coupler. 8) Check the continuity between the R wire and terminal “11”. Also, check the continuity between the G/B wire and terminal “9”. **Special tool** **TOOL (A): 09900–25008 (Multi-circuit tester set)** **TOOL (B): 09900–25009 (Needle pointed probe set)** **Tester knob indication** **Continuity (•))))** **ECM couplers (Harness side)** 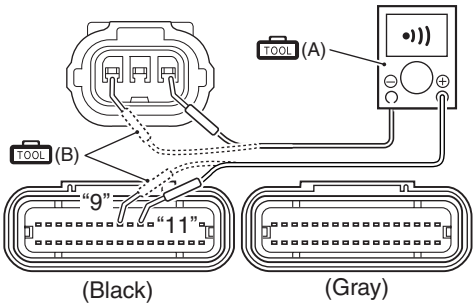 I823H1110020-05 *Is the continuity OK?*	Go to Step 2.	R and G/B wire open, G/B wire shorted to the ground.
2	1) Turn the ignition switch OFF. 2) Connect the ECM coupler and IAP sensor coupler. 3) Insert the needle pointed probes to the lead wire coupler. 4) Run the engine at idle speed and measure the IAP sensor output voltage between the G/B wire and B/Br wire. **Special tool** **TOOL (A): 09900–25008 (Multi-circuit tester set)** **TOOL (B): 09900–25009 (Needle pointed probe set)** **Tester knob indication** **Voltage (⎓)** **IAP sensor output voltage** **Approx. 2.7 V at idle speed** **((+) terminal: G/B – (–) terminal: B/Br)** 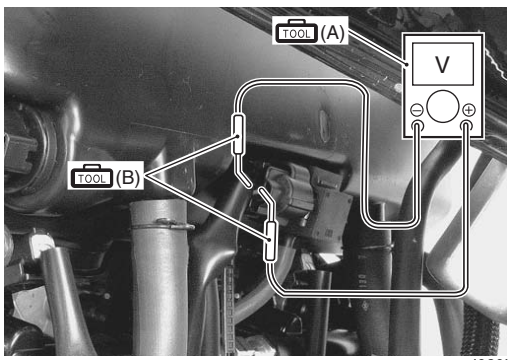 I823H1110114-01 *Is the voltage OK?*	Go to Step 3.	• Check the vacuum hose for crack or damage. • Open or short circuit in the G/B wire. • If vacuum hose and wire are OK, replace the IAP sensor with a new one. Refer to “IAP Sensor Removal and Installation in Section 1C (Page 1C-3)”.

SAMPLE

Step	Action	Yes	No
3	1) Turn the ignition switch OFF. 2) Remove the IAP sensor. Refer to “IAP Sensor Removal and Installation in Section 1C (Page 1C-3)”. 3) Connect the vacuum pump gauge to the vacuum port of the IAP sensor. 4) Arrange 3 new 1.5 V batteries in series (1) (check that total voltage is 4.5 – 5.0 V) and connect (–) terminal to the ground terminal “B” and (+) terminal to the VCC terminal “A”. 5) Check the voltage between Vout terminal “C” and ground. Also, check if voltage reduces when vacuum is applied by using vacuum pump gauge. **Special tool** **TOOL (A): 09917–47011 (Vacuum pump gauge)** **TOOL (B): 09900–25008 (Multi-circuit tester set)** **Tester knob indication** **Voltage (⎓)** 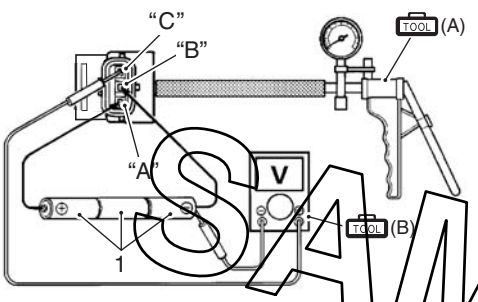 I7W8H1110030-02 ALTITUDE (Reference) / ATOMOSPHERIC PRESSURE / OUTPUT VOLTAGE m / ft / kPa / mmHg / V 0 – 610 / 0 – 2 000 / 100 – 94 / 760 – 707 / 3.1 – 3.6 611 – 1 524 / 2 001 – 5 000 / 94 – 85 / 707 – 634 / 2.8 – 3.4 1 525 – 2 438 / 5 001 – 8 000 / 85 – 76 / 634 – 567 / 2.6 – 3.1 2 439 – 3 048 / 8 001 – 10 000 / 76 – 70 / 567 – 526 / 2.4 – 2.9 I823H1110023-02 *Is the voltage OK?*	• G/B, R or B/Br wire open or shorted to the ground, or poor “9”, “11” or “29” connection. • If wire and connection are OK, intermittent trouble or faulty ECM. • Recheck each terminal and wire harness for open circuit and poor connection. • Replace the ECM with a known good one, and inspect it again. Refer to “ECM Removal and Installation in Section 1C (Page 1C-2)”.	If check result is not satisfactory, replace the IAP sensor with a new one. Refer to “IAP Sensor Removal and Installation in Section 1C (Page 1C-3)”.

SAMPLE

DTC “C14” (P0120-H/L): TP Sensor Circuit Malfunction

B823H11104012

Detected Condition and Possible Cause

Detected Condition			Possible Cause
C14		Output voltage is not within the following range. Difference between actual throttle opening and opening calculated by ECM is larger than specified value. 0.2 V ≤ Sensor voltage < 4.8 V	• TP sensor maladjusted. • TP sensor circuit open or short. • TP sensor malfunction. • ECM malfunction.
P0120	H	Sensor voltage is higher than specified value.	• TP sensor circuit is shorted to VCC or ground circuit is open. • TP sensor circuit is open or shorted to the ground or VCC circuit is open.
	L	Sensor voltage is lower than specified value.	

Wiring Diagram

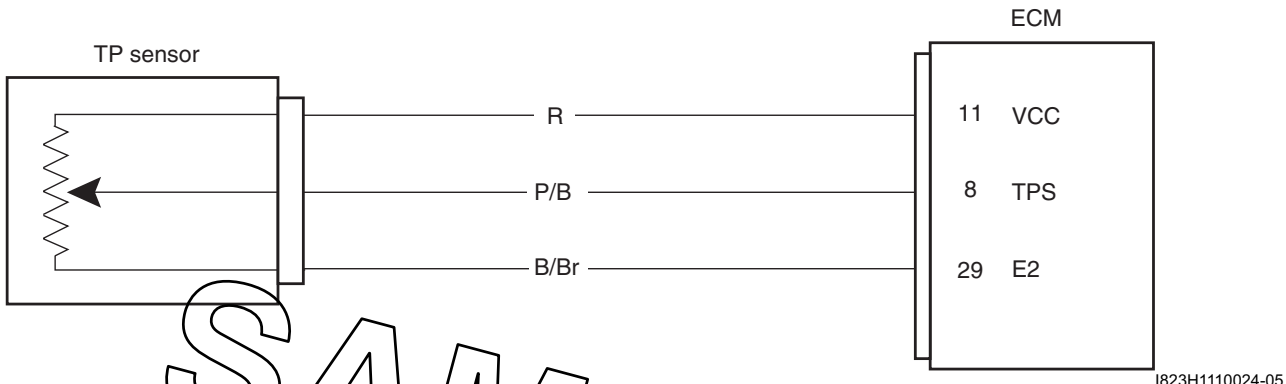

I823H1110024-05

SAMPLE

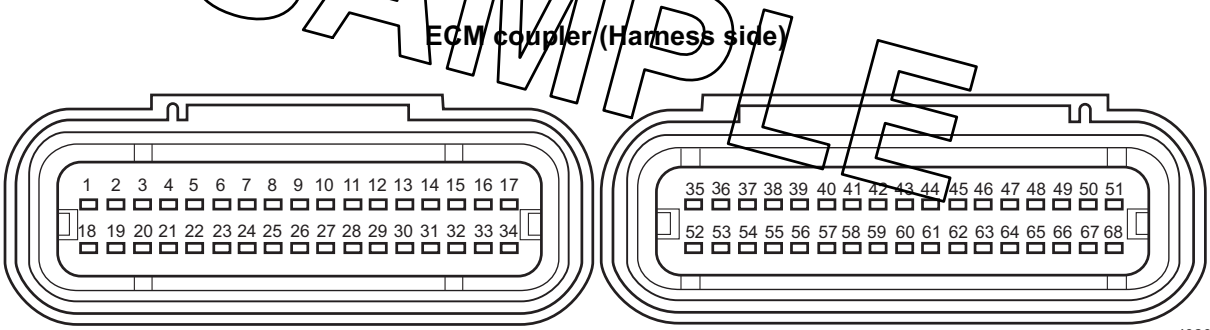

I823H1110004-01

Troubleshooting

⚠ CAUTION

When using the multi-circuit tester, do not strongly touch the terminal of the ECM coupler with a needle pointed tester probe to prevent the terminal damage or terminal bend.

NOTE

After repairing the trouble, clear the DTC using SDS tool. Refer to “Use of SDS Diagnosis Reset Procedures (Page 1A-14)”.

C14 (Use of mode select switch)

Step	Action	Yes	No
1	1) Turn the ignition switch OFF. 2) Lift and support the fuel tank. Refer to “Fuel Tank Removal and Installation in Section 1G (Page 1G-10)”. 3) Check the TP sensor coupler (1) for loose or poor contacts. If OK, then measure the TP sensor input voltage. 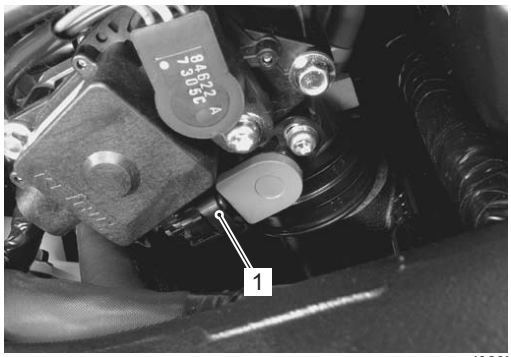 I823H1110115-01 4) Disconnect the TP sensor coupler. 5) Turn the ignition switch ON. 6) Measure the input voltage between the R wire and ground. If OK, then measure the input voltage between the R wire and B/Br wire. **Special tool** **(A): 09900–25008 (Multi-circuit tester set)** **<u>Tester knob indication</u>** **Voltage (⎓)** **<u>TP sensor input voltage</u>** **4.5 – 5.5 V** **((+) terminal: R – (–) terminal: Ground, (+) terminal: R – (–) terminal: B/Br)** 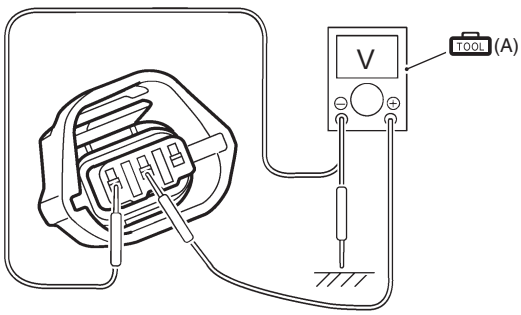 I823H1110026-04 *Is the voltage OK?*	Go to Step 3.	• Loose or poor contacts on the ECM coupler. • Open or short circuit in the R or B/Br wire.

SAMPLE

P0120-H (Use of SDS)

Step	Action	Yes	No
1	1) Turn the ignition switch OFF. 2) Lift and support the fuel tank. Refer to “Fuel Tank Removal and Installation in Section 1G (Page 1G-10)”. 3) Check the TP sensor coupler (1) for loose or poor contacts. If OK, then check the TP sensor lead wire continuity. 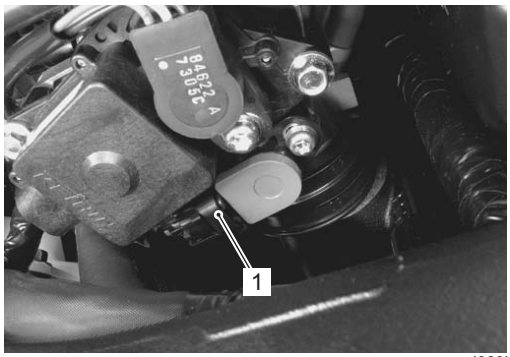 I823H1110115-01 4) Disconnect the TP sensor coupler. 5) Check the continuity between the P/B wire and R wire. If the sound is not heard from the tester, the circuit condition is OK. **Special tool** **TOOL (A): 09900–25008 (Multi-circuit tester set)** **Tester knob indication** **Continuity (•))))** 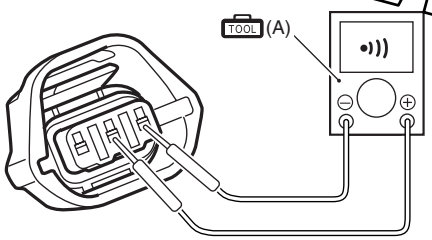 I823H1110027-02 6) Disconnect the ECM coupler. Refer to “ECM Removal and Installation in Section 1C (Page 1C-2)”.	Go to Step 3.	P/B wire shorted to VCC, or B/Br wire open.

SAMPLE

Step	Action	Yes	No
1	7) Check the continuity between the P/B wire and terminal “8”. Also, check the continuity between the B/Br wire and terminal “29”. **Special tool** **(A): 09900–25008 (Multi-circuit tester set)** **(B): 09900–25009 (Needle pointed probe set)** **Tester knob indication** **Continuity (•))))** **ECM coupler (Harness side)** 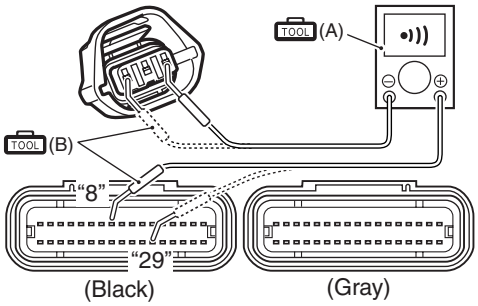 I823H1110028-04 *Is the continuity OK?*	Go to Step 3.	P/B wire shorted to VCC, or B/Br wire open.

SAMPLE

P0120-L (Use of SDS)

Step	Action	Yes	No
1	1) Turn the ignition switch OFF. 2) Lift and support the fuel tank. Refer to “Fuel Tank Removal and Installation in Section 1G (Page 1G-10)”. 3) Check the TP sensor coupler (1) for loose or poor contacts. If OK, then check the TP sensor lead wire continuity. 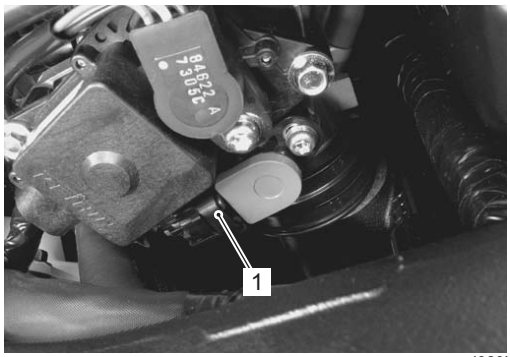 I823H1110115-01 4) Disconnect the TP sensor coupler. 5) Check the continuity between the P/B wire and ground. Also, check the continuity between the P/B wire and B/Br wire. If the sound is not heard from the tester, the circuit condition is OK. **Special tool** **TOOL (A): 09900–25008 (Multi-circuit tester set)** **Tester knob indication** **Continuity test (•))))** 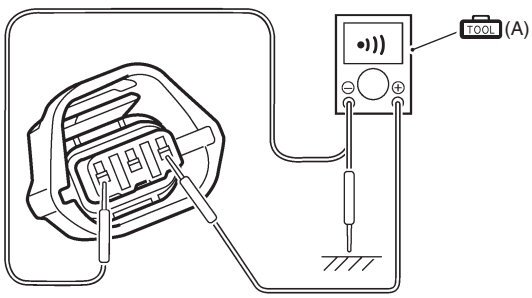 I823H1110029-03	Go to Step 2.	R and P/B wire open, or P/B wire shorted to the ground.

SAMPLE

Step	Action	Yes	No
1	6) Disconnect the ECM coupler. Refer to “ECM Removal and Installation in Section 1C (Page 1C-2)”. 7) Check the continuity between the P/B wire and terminal “8”. Also, check the continuity between the R wire and terminal “11”. **Special tool** **TOOL (A): 09900–25008 (Multi-circuit tester set)** **TOOL (B): 09900–25009 (Needle pointed probe set)** **Tester knob indication** **Continuity test (•))))** **ECM coupler (Harness side)** 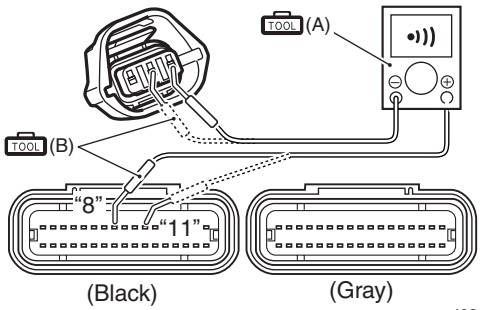 I823H1110030-05 *Is the continuity OK?*	Go to Step 2.	R and P/B wire open, or P/B wire shorted to the ground.
2	1) Connect the ECM coupler. 2) Turn the ignition switch ON. 3) Measure the input voltage between the R wire and ground. If OK, the measure the input voltage between the R wire and B/Br wire. **Special tool** **TOOL (A): 09900–25008 (Multi-circuit tester set)** **Tester knob indication** **Voltage (⎓)** **TP sensor input voltage** **4.5 – 5.5 V** **((+) terminal: R – (–) terminal: Ground, (+) terminal: R – (–) terminal: B/Br)** 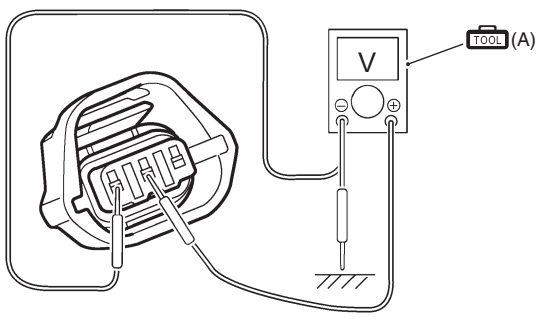 I823H1110031-04 *Is the voltage OK?*	Go to Step 3.	Open or short circuit in the R or B/Br wire.

SAMPLE

Step	Action	Yes	No
3	1) Turn the ignition switch OFF. 2) Connect the special tool between the TP sensor and its coupler. 3) Turn the ignition switch ON. 4) Measure the TP sensor output voltage between the P/B wire terminal (+) and B/Br wire terminal (–) with turning the throttle grip open and close. **Special tool** **TOOL (A): 09900–28630 (TPS test wire harness)** **TOOL : 09900–25008 (Multi-circuit tester set)** **<u>Tester knob indication</u>** **Voltage (⎓)** **<u>TP sensor output voltage</u>** **Throttle valve is closed: Approx. 1.1 V** **Throttle valve is opened: Approx. 4.3 V** **((+) terminal: P/B – (–) terminal: B/Br)** 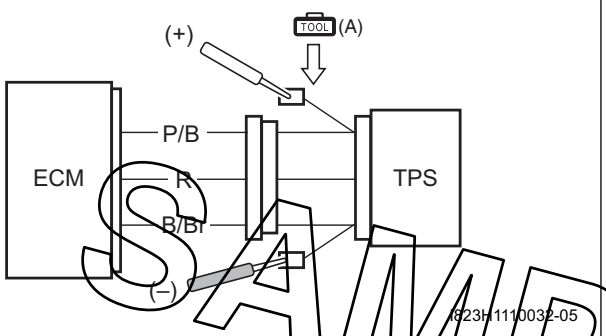 *Is the voltage OK?*	• P/B, R or B/Br wire open or shorted to the ground, or poor “8”, “11” or “29” connection. • If wire and connection are OK, intermittent trouble or faulty ECM. • Recheck each terminal and wire harness for open circuit and poor connection. • Replace the ECM with a known good one, and inspect it again. Refer to “ECM Removal and Installation in Section 1C (Page 1C-2)”.	If check result is not satisfactory, replace TP sensor with a new one. Refer to “Throttle Body Disassembly and Assembly in Section 1D (Page 1D-12)”.

SAMPLE

DTC “C15” (P0115-H/L): ECT Sensor Circuit Malfunction

B823H11104013

Detected Condition and Possible Cause

Detected Condition			Possible Cause
C15		Output voltage is not with in the following range. 0.15 V ≤ Sensor voltage < 4.85 V	• ECT sensor circuit open or short. • ECT sensor malfunction. • ECM malfunction.
P0115	H	Sensor voltage is higher than specified value.	• ECT sensor circuit is open or ground circuit open.
	L	Sensor voltage is lower than specified value.	• ECT sensor circuit shorted to the ground.

Wiring Diagram

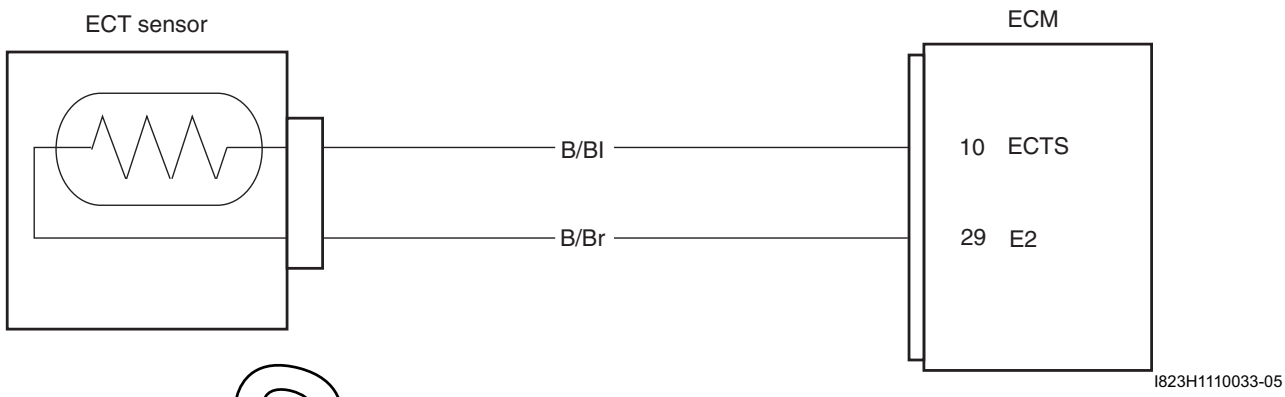

I823H1110033-05

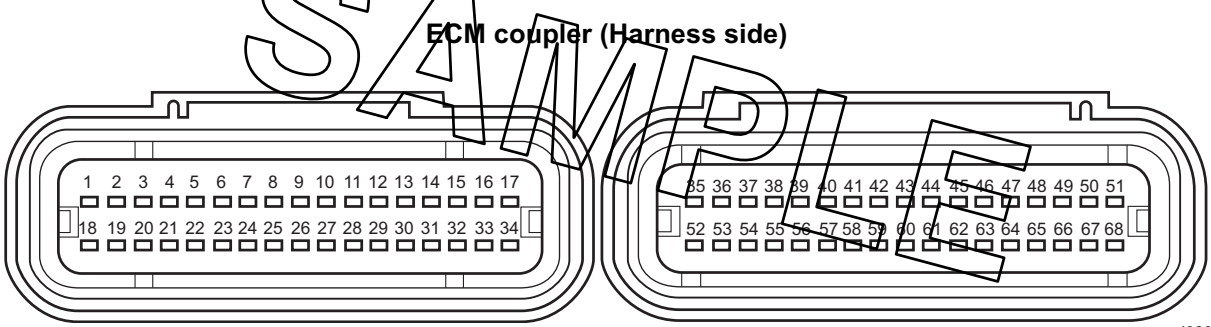

SAMPLE

I823H1110004-01

Troubleshooting

⚠ CAUTION

When using the multi-circuit tester, do not strongly touch the terminal of the ECM coupler with a needle pointed tester probe to prevent the terminal damage or terminal bend.

NOTE

After repairing the trouble, clear the DTC using SDS tool. Refer to “Use of SDS Diagnosis Reset Procedures (Page 1A-14)”.

C15 (Use of mode select switch)

Step	Action	Yes	No
1	1) Turn the ignition switch OFF. 2) Lift and support the fuel tank. Refer to “Fuel Tank Removal and Installation in Section 1G (Page 1G-10)”. 3) Check the ECT sensor coupler (1) for loose or poor contacts. If OK, then measure the ECT sensor input voltage. 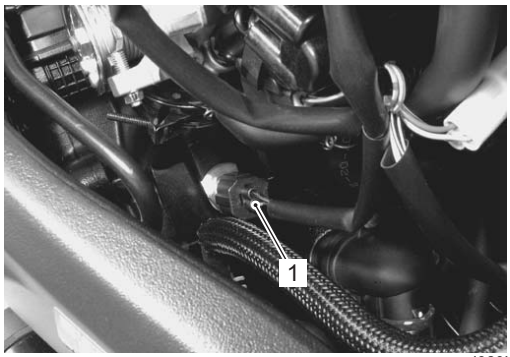 I823H1110116-01 4) Disconnect the ECT coupler and turn the ignition switch ON. 5) Measure the input voltage between the B/Bl wire and ground. If OK, then measure the input voltage between the B/Bl wire and B/Br wire. **Special tool** **TOOL (A): 09900–25008 (Multi-circuit tester set)** **Tester knob indication** **Voltage (⎓)** **ECT sensor input voltage** **4.5 – 5.5 V** **((+) terminal: B/Bl – (–) terminal: Ground, (+) terminal: B/Bl – (–) terminal: B/Br)** 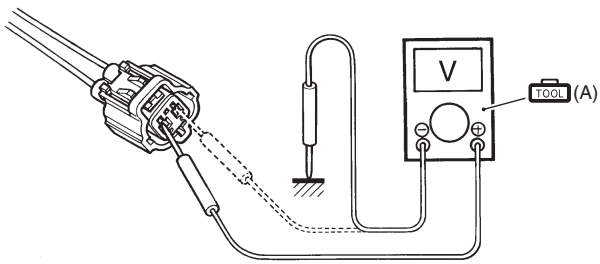 I718H1110048-03 *Is the voltage OK?*	Go to Step 2.	• Loose or poor contacts on the ECM coupler. • Open or short circuit in the B/Bl or B/Br wire.

SAMPLE

P0115-H (Use of SDS)

Step	Action	Yes	No
1	1) Turn the ignition switch OFF. 2) Lift and support the fuel tank. Refer to “Fuel Tank Removal and Installation in Section 1G (Page 1G-10)”. 3) Check the ECT sensor coupler (1) for loose or poor contacts. If OK, then check the ECT sensor lead wire continuity. 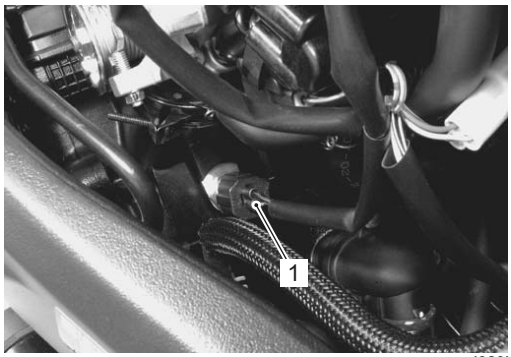 I823H1110116-01 4) Disconnect the ECT sensor coupler. 5) Disconnect the ECM coupler. Refer to “ECM Removal and Installation in Section 1C (Page 1C-2)”. 6) Insert the needle pointed probes to the lead wire coupler. 7) Check the continuity between the B/Bl wire and terminal “10”. Also, check the continuity between the B/Br wire and terminal “29”. **Special tool** **TOOL (A): 09900–25008 (Multi-circuit tester set)** **TOOL (B): 09900–25009 (Needle pointed probe set)** **Tester knob indication** **Continuity test (•))))** **ECM couplers (Harness side)** 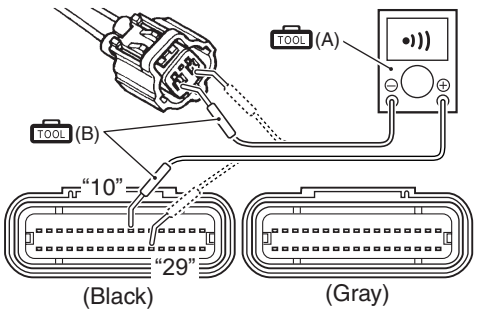 I823H1110036-05 *Is the continuity and voltage OK?*	Go to Step 2.	B/Bl or B/Br wire open.

SAMPLE

P0115-L (Use of SDS)

Step	Action	Yes	No
1	1) Turn the ignition switch OFF. 2) Lift and support the fuel tank. Refer to “Fuel Tank Removal and Installation in Section 1G (Page 1G-10)”. 3) Check the ECT sensor coupler (1) for loose or poor contacts. If OK, then check the ECT sensor lead wire continuity. 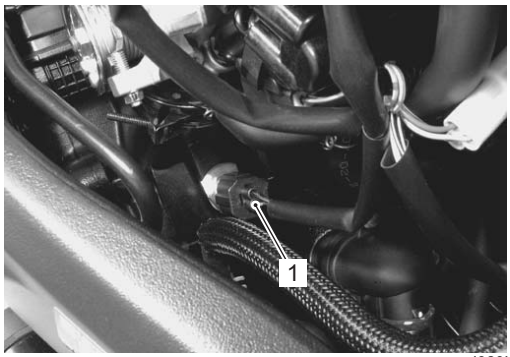 I823H1110116-01 4) Disconnect the ECT sensor coupler. 5) Check the continuity between the B/Bl wire and ground. If the sound is not heard from the tester, the circuit condition is OK. **Special tool** **TOOL (A): 09900–25008 (Multi-circuit tester set)** **<u>Tester knob indication</u>** **Continuity test (•))))** 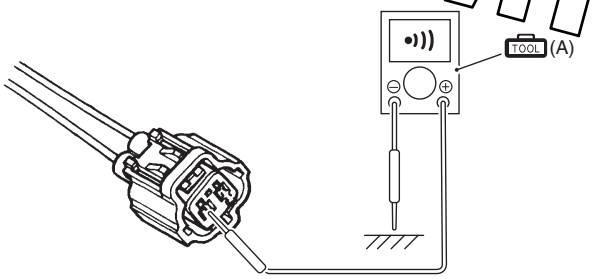 I718H1110054-03 6) Connect the ECT sensor coupler. 7) Insert the needle pointed probes to the lead wire coupler. 8) Turn the ignition switch ON.	Go to Step 2.	• B/Bl wire shorted to the ground. • If wire is OK, go to Step 2.

SAMPLE

Step	Action	Yes	No
1	9) Measure the output voltage between the B/Bl wire and ground. **Special tool** **TOOL (A): 09900–25008 (Multi-circuit tester set)** **TOOL (B): 09900–25009 (Needle pointed probe set)** **Tester knob indication** **Voltage (⎓)** **ECT sensor output voltage** **0.15 – 4.85 V** **((+) terminal: B/Bl – (–) terminal: Ground)** 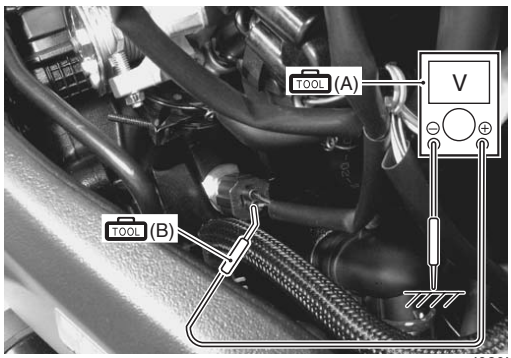 I823H1110117-01 *Are the continuity and voltage OK?*	Go to Step 2.	• B/Bl wire shorted to the ground. • If wire is OK, go to Step 2.
2	1) Turn the ignition switch OFF. 2) Disconnect the ECT sensor coupler. 3) Measure the ECT sensor resistance. **Special tool** **TOOL (A): 09900–25008 (Multi-circuit tester set)** **Tester knob indication** **Resistance (Ω)** **ECT sensor resistance** **Approx. 2.45 kΩ at 20 °C (68 °F)** **(Terminal – Terminal)** 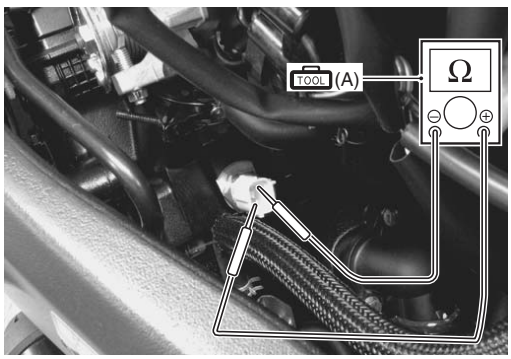 I823H1110118-01 **NOTE** **Refer to "ECT Sensor Inspection in Section 1C (Page 1C-5)" for details.** *Is the resistance OK?*	• B/Bl or B/Br wire open or shorted to the ground, or poor "10" or "29" connection. • If wire and connection are OK, intermittent trouble or faulty ECM. • Recheck each terminal and wire harness for open circuit and poor connection. • Replace the ECM with a known good one, and inspect it again. Refer to "ECM Removal and Installation in Section 1C (Page 1C-2)".	Replace the ECT sensor with a new one. Refer to "ECT Sensor Removal and Installation in Section 1C (Page 1C-5)".

SAMPLE

DTC “C21” (P0110-H/L): IAT Sensor Circuit Malfunction

B823H11104015

Detected Condition and Possible Cause

Detected Condition			Possible Cause
C21		Output voltage is not with in the following range. 0.15 V ≤ Sensor voltage < 4.85 V	• IAT sensor circuit open or short. • IAT sensor malfunction. • ECM malfunction.
P0110	H	Sensor voltage is higher than specified value.	• IAT sensor circuit open or ground circuit open.
	L	Sensor voltage is lower than specified value.	• IAT sensor circuit shorted to the ground.

Wiring Diagram

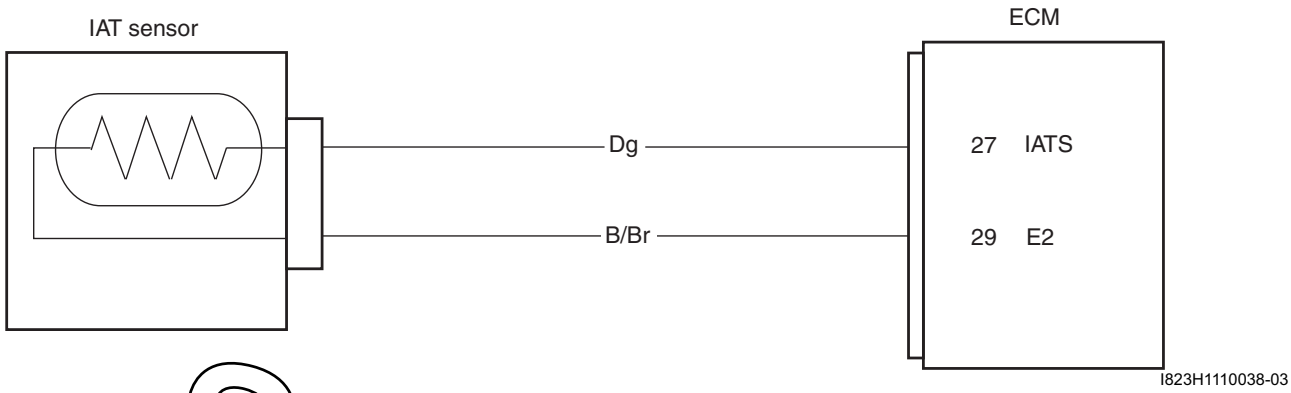

I823H1110038-03

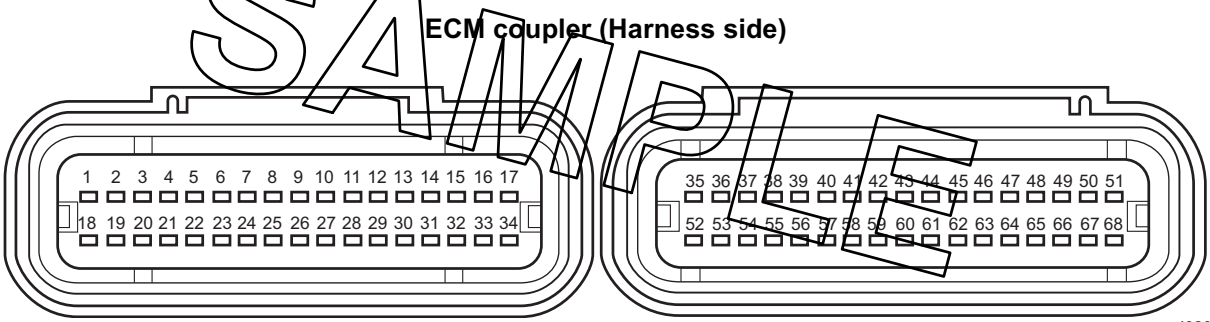

SAMPLE

I823H1110004-01

Troubleshooting

⚠ CAUTION

When using the multi-circuit tester, do not strongly touch the terminal of the ECM coupler with a needle pointed tester probe to prevent the terminal damage or terminal bend.

NOTE

After repairing the trouble, clear the DTC using SDS tool. Refer to “Use of SDS Diagnosis Reset Procedures (Page 1A-14)”.

C21 (Use of mode select switch)

Step	Action	Yes	No
1	1) Turn the ignition switch OFF. 2) Lift and support the fuel tank. Refer to “Fuel Tank Removal and Installation in Section 1G (Page 1G-10)”. 3) Check the IAT sensor coupler (1) for loose or poor contacts. If OK, then measure the IAT sensor input voltage. 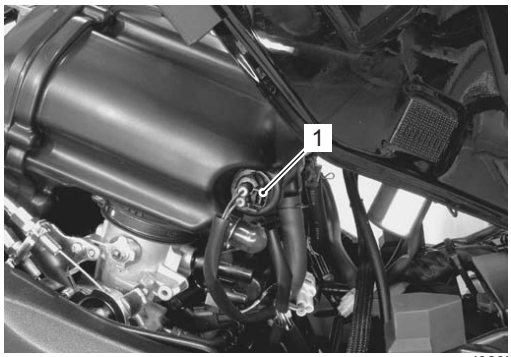 I823H1110119-01 4) Disconnect the IAT sensor coupler and turn the ignition switch ON. 5) Measure the input voltage between the Dg wire terminal and ground. If OK, then measure the input voltage between the Dg wire terminal and B/Br wire terminal. **Special tool** **TOOL (A): 09900–25008 (Multi-circuit tester set)** **Tester knob indication** **Voltage (⎓)** **IAT sensor input voltage** **4.5 – 5.5 V** **((+) terminal: Dg – (–) terminal: Ground, (+) terminal: Dg – (–) terminal: B/Br)** 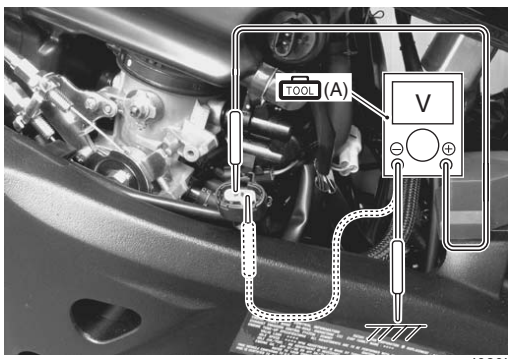 I823H1110120-03 *Is the voltage OK?*	Go to Step 2.	• Loose or poor contacts on the ECM coupler. • Open or short circuit in the Dg or B/Br wire.

SAMPLE

P0110-H (Use of SDS)

Step	Action	Yes	No
1	1) Turn the ignition switch OFF. 2) Lift and support the fuel tank. Refer to “Fuel Tank Removal and Installation in Section 1G (Page 1G-10)”. 3) Check the IAT sensor coupler (1) for loose or poor contacts. If OK, then check the IAT sensor lead wire continuity. 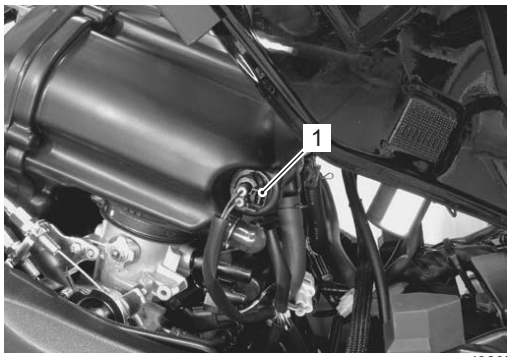 I823H1110119-01 4) Disconnect the IAT sensor coupler. 5) Disconnect the ECM coupler. Refer to “ECM Removal and Installation in Section 1C (Page 1C-2)”. 6) Insert the needle pointed probes to the lead wire coupler. 7) Check the continuity between the Dg wire and terminal “27”. Also, check the continuity between the B/Br wire and terminal “29”. **Special tool** **(A): 09900–25008 (Multi-circuit tester set)** **(B): 09900–25009 (Needle pointed probe set)** **Tester knob indication** **Continuity test (•))))** **ECM couplers (Harness side)** 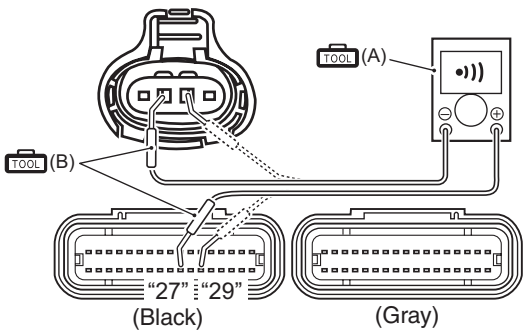 I823H1110108-02 *Is the continuity OK?*	Connect the ECM coupler and go to Step 2.	Dg or B/Br wire open.

SAMPLE

P0110-L (Use of SDS)

Step	Action	Yes	No
1	1) Turn the ignition switch OFF. 2) Lift and support the fuel tank. Refer to “Fuel Tank Removal and Installation in Section 1G (Page 1G-10)”. 3) Check the IAT sensor coupler (1) for loose or poor contacts. If OK, then check the IAT sensor lead wire continuity. 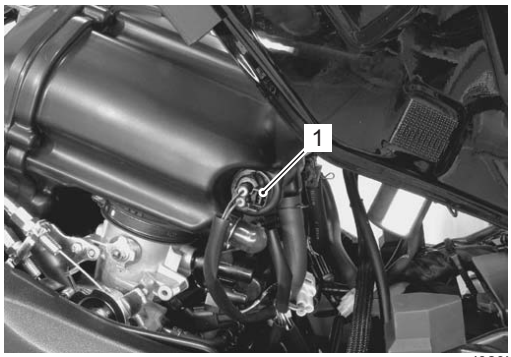 I823H1110119-01 4) Disconnect the IAT sensor coupler. 5) Check the continuity between the Dg wire and ground. If the sound is not heard from the tester, the circuit condition is OK. **Special tool** **TOOL (A): 09900–25008 (Multi-circuit tester set)** **Tester knob indication** **Continuity test (•))))** 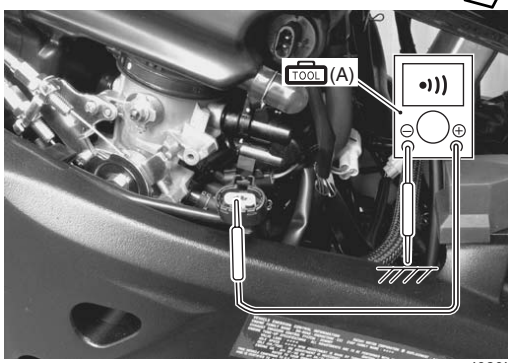 I823H1110121-01 6) Connect the IAT sensor coupler. 7) Turn the ignition switch ON. 8) Insert the needle pointed probes to the lead wire coupler.	Go to Step 2.	• Dg wire shorted to the ground. • If wire is OK, go to Step 2.

SAMPLE

Step	Action	Yes	No
1	9) Measure the output voltage between the Dg wire and ground. **Special tool** **TOOL (A): 09900–25008 (Multi-circuit tester set)** **TOOL (B): 09900–25009 (Needle pointed probe set)** **Tester knob indication** **Voltage (⎓)** **IAT sensor output voltage** **0.15 – 4.85 V** **((+) terminal: Dg – (–) terminal: Ground)** 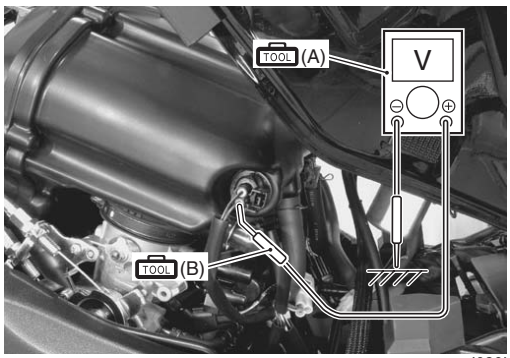 I823H1110122-01 *Are the continuity and voltage OK?*	Go to Step 2.	• Dg wire shorted to the ground. • If wire is OK, go to Step 2.
2	1) Turn the ignition switch OFF. 2) Disconnect the IAT sensor coupler. 3) Measure the IAT sensor resistance. **Special tool** **TOOL (A): 09900–25008 (Multi-circuit tester set)** **Tester knob indication** **Resistance (Ω)** **IAT sensor resistance** **Approx. 2.45 kΩ at 20 °C (68 °F)** **(Terminal – Terminal)** 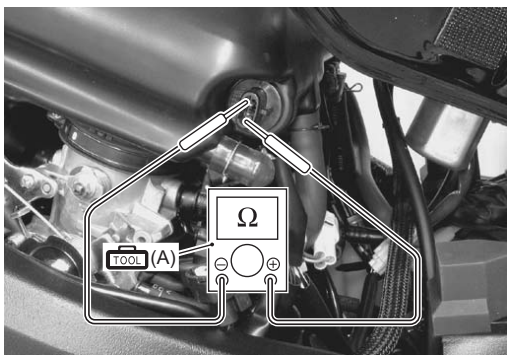 I823H1110123-01 **NOTE** **IAT sensor resistance measurement method is the same way as that of the ECT sensor. Refer to "ECT Sensor Inspection in Section 1C (Page 1C-5)".** *Is the resistance OK?*	• Dg or B/Br wire open or shorted to the ground, or poor "27" or "29" connection. • If wire and connection are OK, intermittent trouble or faulty ECM. • Recheck each terminal and wire harness for open circuit and poor connection. • Replace the ECM with a known good one, and inspect it again. Refer to "ECM Removal and Installation in Section 1C (Page 1C-2)".	Replace the IAT sensor with a new one. Refer to "IAP Sensor Removal and Installation in Section 1C (Page 1C-3)".

SAMPLE

DTC “C22” (P01450-H/L): AP Sensor Circuit Malfunction

B823H11104031

Detected Condition and Possible Cause

Detected Condition			Possible Cause
C22		AP sensor voltage is not within the following range. 0.5 V ≤ Sensor voltage < 4.85 V **NOTE** **Note that atmospheric pressure varies depending on weather conditions as well as altitude. Take that into consideration when inspecting voltage.**	• Clogged vacuum passage with dust. • AP sensor circuit open or shorted to the ground. • AP sensor malfunction. • ECM malfunction.
P1450	H	Sensor voltage is higher than specified value.	• AP sensor circuit is open or shorted to VCC or ground circuit open.
	L	Sensor voltage is lower than specified value.	• AP sensor circuit is shorted to the ground or VCC circuit open.

Wiring Diagram

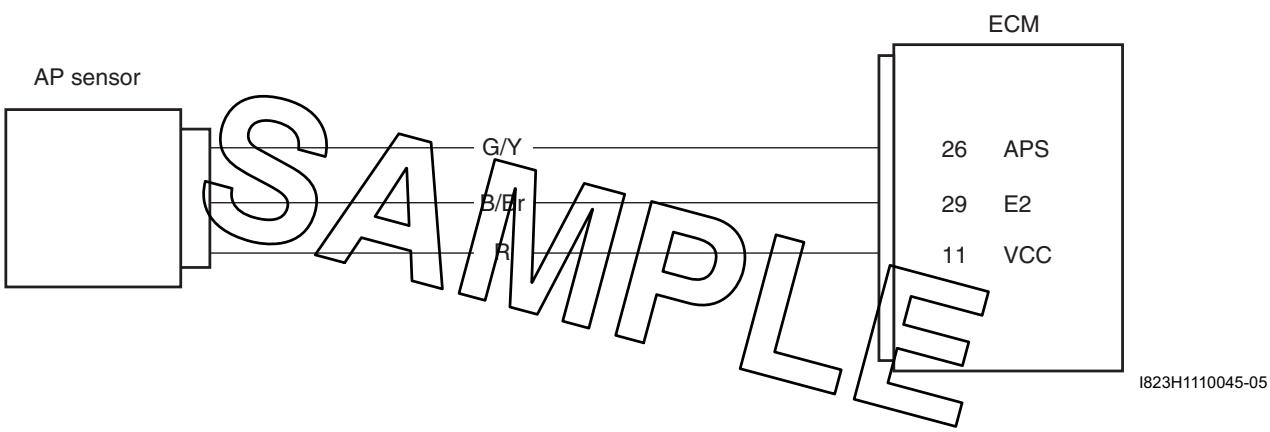

ECM coupler (Harness side)

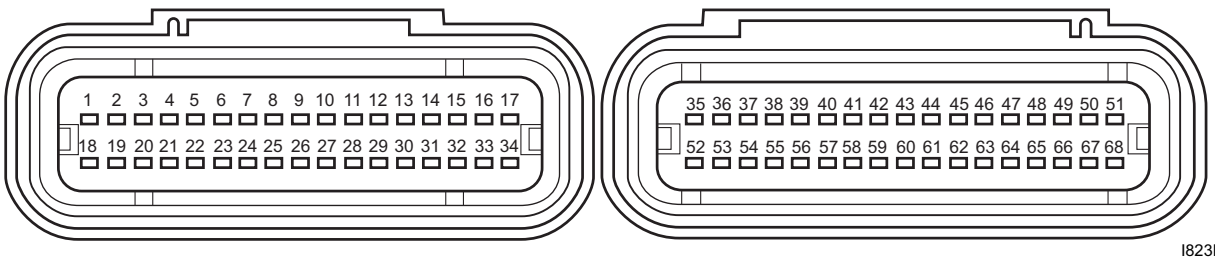

Troubleshooting

⚠ CAUTION

When using the multi-circuit tester, do not strongly touch the terminal of the ECM coupler with a needle pointed tester probe to prevent the terminal damage or terminal bend.

NOTE

After repairing the trouble, clear the DTC using SDS tool. Refer to “Use of SDS Diagnosis Reset Procedures (Page 1A-14)”.

C22 (Use of mode select switch)

Step	Action	Yes	No
1	1) Turn the ignition switch OFF. 2) Remove the front seat. Refer to “Exterior Parts Removal and Installation in Section 9D (Page 9D-14)”. 3) Check the AP sensor coupler (1) for loose or poor contacts. If OK, then measure the AP sensor input voltage. 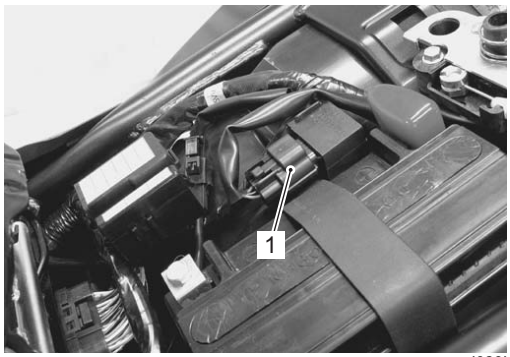 I823H1110124-01 4) Disconnect the AP sensor coupler. 5) Turn the ignition switch ON. 6) Measure the input voltage between the R wire and ground. If OK, then measure the voltage between the R wire and B/Br wire. **Special tool** **TOOL (A): 09900-25008 (Multi-circuit tester set)** **<u>Tester knob indication</u>** **Voltage (⎓)** **<u>AP sensor input voltage</u>** **4.5 – 5.5 V** **((+) terminal: R – (–) terminal: Ground, (+) terminal: R – (–) terminal: B/Br)** 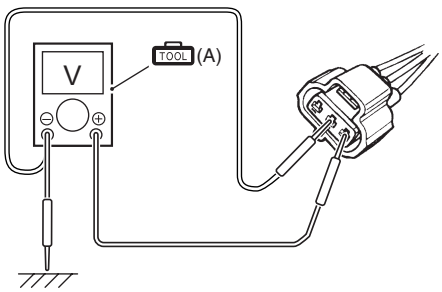 I823H1110016-05 *Is the voltage OK?*	Go to Step 2.	• Loose or poor contacts on the ECM coupler. • Open or short circuit in the R or B/Br wire.

SAMPLE

P1450-H (Use of SDS)

Step	Action	Yes	No
1	1) Turn the ignition switch OFF. 2) Remove the front seat. Refer to “Exterior Parts Removal and Installation in Section 9D (Page 9D-14)”. 3) Check the AP sensor coupler (1) for loose or poor contacts. If OK, then check the AP sensor lead wire continuity. 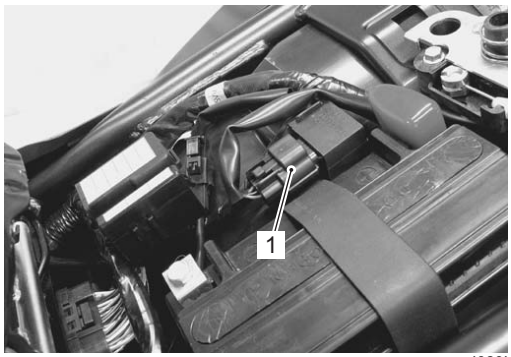 I823H1110124-01 4) Disconnect the AP sensor coupler. 5) Check the continuity between the R wire and G/Y wire. If the sound is not heard from the tester, the circuit condition is OK. **Special tool** **TOOL (A): 09900–25008 (Multi-circuit tester set)** **Tester knob indication** **Continuity (•))))** 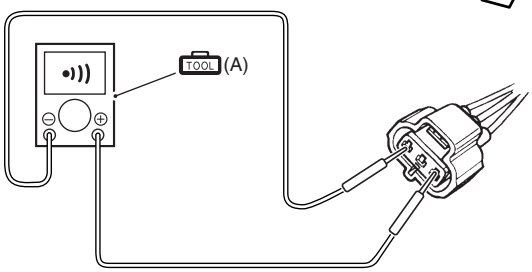 I823H1110017-05	Go to Step 2.	G/Y wire shorted to VCC, or B/Br wire open.

SAMPLE

Step	Action	Yes	No
1	6) Disconnect the ECM coupler. Refer to “ECM Removal and Installation in Section 1C (Page 1C-2)”. 7) Insert the needle pointed probes to the lead wire coupler. 8) Check the continuity between the G/Y wire and terminal “26”. If OK, then check the continuity between the B/Br wire and terminal “29”. **Special tool** **TOOL (A): 09900–25008 (Multi-circuit tester set)** **TOOL (B): 09900–25009 (Needle pointed probe set)** **Tester knob indication** **Continuity test (•))))** **ECM coupler (Harness side)** 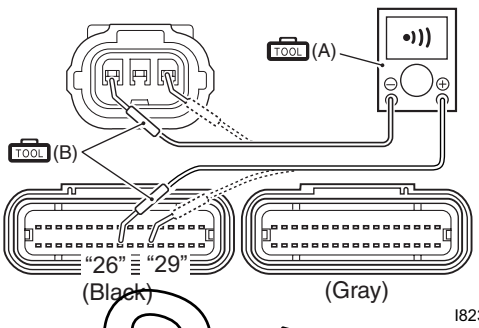 *Is the continuity OK?*	Go to Step 2.	G/Y wire shorted to VCC, or B/Br wire open.

SAMPLE

P01450-L (Use of SDS)

Step	Action	Yes	No
1	1) Turn the ignition switch OFF. 2) Remove the front seat. Refer to “Exterior Parts Removal and Installation in Section 9D (Page 9D-14)”. 3) Check the AP sensor coupler (1) for loose or poor contacts. If OK, then check the AP sensor lead wire continuity. 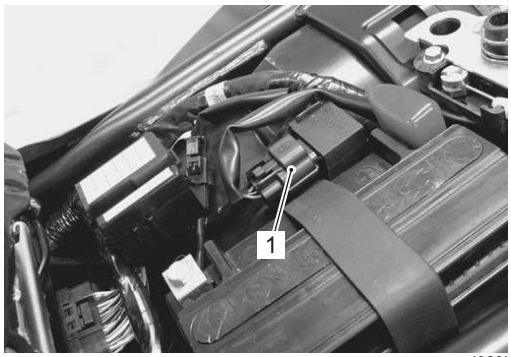 I823H1110124-01 4) Disconnect the AP sensor coupler. 5) Check the continuity between the G/Y wire and ground. Also, check the continuity between the G/Y wire and B/Br wire. If the sound is not heard from the tester, the circuit condition is OK. **Special tool** **(A): 09900–25008 (Multi-circuit tester set)** **Tester knob indication** **Continuity (•))))** 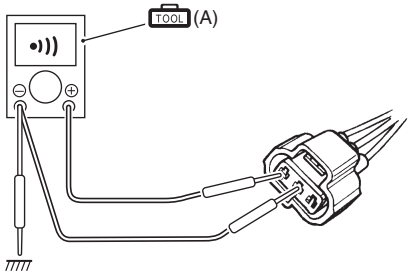 I823H1110019-02	Go to Step 2.	R and G/Y wire open, G/Y wire shorted to the ground.

SAMPLE

Step	Action	Yes	No
1	6) Disconnect the ECM coupler. Refer to “ECM Removal and Installation in Section 1C (Page 1C-2)”. 7) Insert the needle pointed probes to the lead wire coupler. 8) Check the continuity between the R wire and terminal “11”. Also, check the continuity between the G/Y wire and terminal “26”. **Special tool** **(A): 09900–25008 (Multi-circuit tester set)** **(B): 09900–25009 (Needle pointed probe set)** **Tester knob indication** **Continuity (•))))** **ECM coupler (Harness side)** 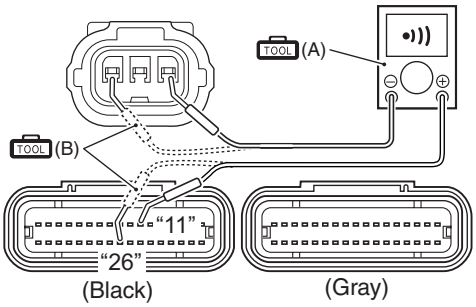 I823H1110048-05 *Is the continuity OK?*	Go to Step 2.	R and G/Y wire open, G/Y wire shorted to the ground.
2	1) Turn the ignition switch OFF. 2) Connect the ECM coupler and AP sensor coupler. 3) Insert the needle pointed probes to the lead wire coupler. 4) Run the engine at idle speed and measure the AP sensor output voltage between the G/Y wire and B/Br wire. **Special tool** **(A): 09900–25008 (Multi-circuit tester set)** **(B): 09900–25009 (Needle pointed probe set)** **Tester knob indication** **Voltage (⎓)** **AP sensor output voltage** **Approx. 3.6 V at 100 kPa (760 mmHg)** **((+) terminal: G/Y – (–) terminal: B/Br)** 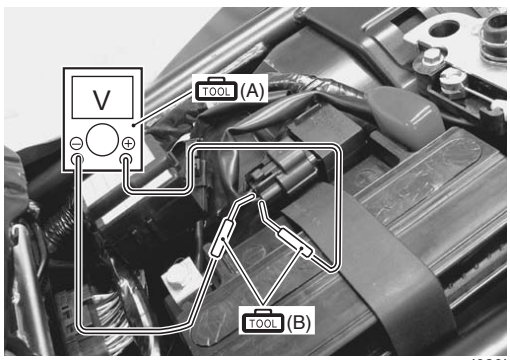 I823H1110125-01 *Is the voltage OK?*	Go to Step 3.	• Check the vacuum port for crack or damage. • Open or short circuit in the G/Y wire. • If vacuum hose and wire are OK, replace the AP sensor with a new one. Refer to “IAP Sensor Removal and Installation in Section 1C (Page 1C-3)”.

SAMPLE

Step	Action	Yes	No
3	1) Turn the ignition switch OFF. 2) Remove the AP sensor. Refer to “IAP Sensor Removal and Installation in Section 1C (Page 1C-3)”. 3) Connect the vacuum pump gauge to the vacuum port of the AP sensor. 4) Arrange 3 new 1.5 V batteries in series (1) (check that total voltage is 4.5 – 5.0 V) and connect (–) terminal to the ground terminal “B” and (+) terminal to the VCC terminal “A”. 5) Check the voltage between Vout terminal “C” and ground. Also, check if voltage reduces when vacuum is applied up to 53 kPa (400 mmHg) by using vacuum pump gauge. **Special tool** **TOOL (A): 09917–47011 (Vacuum pump gauge)** **TOOL (B): 09900–25008 (Multi-circuit tester set)** **Tester knob indication** **Voltage (⎓)** 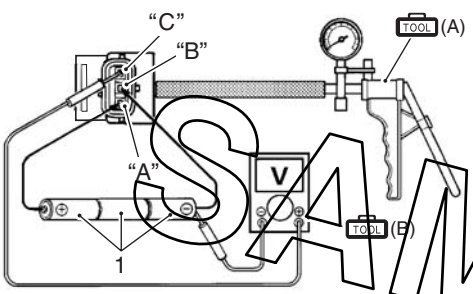 I716H1110030-02 ALTITUDE (Reference) / ATOMOSPHERIC PRESSURE / OUTPUT VOLTAGE m / ft / kPa / mmHg / V 0 – 610 / 0 – 2 000 / 100 – 94 / 760 – 707 / 3.1 – 3.6 611 – 1 524 / 2 001 – 5 000 / 94 – 85 / 707 – 634 / 2.8 – 3.4 1 525 – 2 438 / 5 001 – 8 000 / 85 – 76 / 634 – 567 / 2.6 – 3.1 2 439 – 3 048 / 8 001 – 10 000 / 76 – 70 / 567 – 526 / 2.4 – 2.9 I823H1110023-02 *Is the voltage OK?*	• G/Y, R or B/Br wire open or shorted to the ground, or poor “26”, “11” or “29” connection. • If wire and connection are OK, intermittent trouble or faulty ECM. • Recheck each terminal and wire harness for open circuit and poor connection. • Replace the ECM with a known good one, and inspect it again. Refer to “ECM Removal and Installation in Section 1C (Page 1C-2)”.	If check result is not satisfactory, replace the AP sensor with a new one. Refer to “IAP Sensor Removal and Installation in Section 1C (Page 1C-3)”.

SAMPLE

DTC “C23” (P1651-H/L): TO Sensor Circuit Malfunction

B823H11104016

Detected Condition and Possible Cause

Detected Condition			Possible Cause
C23		The sensor voltage should be the following for 2 sec. and more, after ignition switch is turned ON. 0.2 V ≤ Sensor voltage < 4.8 V	• TO sensor circuit open or short. • TO sensor malfunction. • ECM malfunction.
P1651	H	Sensor voltage is higher than specified value.	• TO sensor circuit is open or ground circuit open.
	L	Sensor voltage is lower than specified value.	• TO sensor circuit is open or shorted to the ground or VCC circuit open.

Wiring Diagram

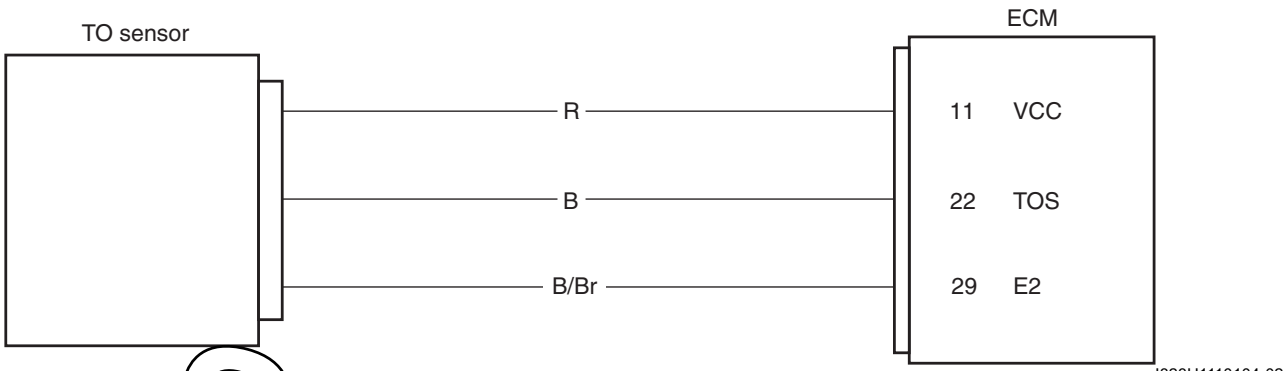

I823H1110104-02

SAMPLE

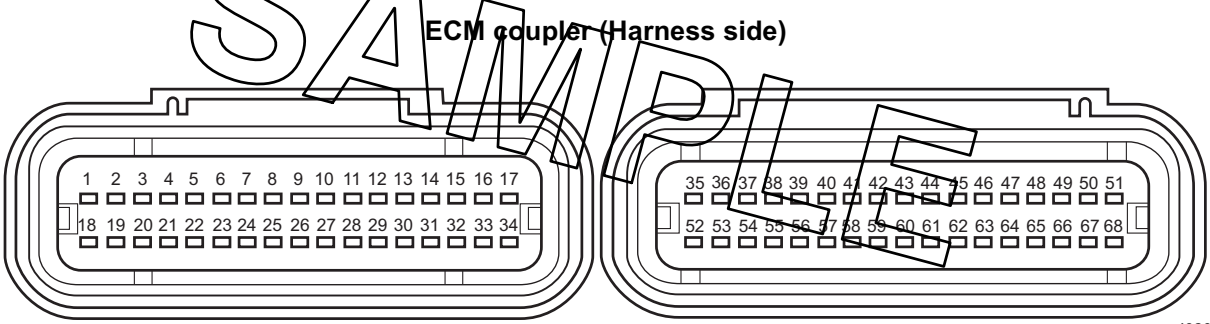

I823H1110004-01

Troubleshooting

⚠ CAUTION

When using the multi-circuit tester, do not strongly touch the terminal of the ECM coupler with a needle pointed tester probe to prevent the terminal damage or terminal bend.

NOTE

After repairing the trouble, clear the DTC using SDS tool. Refer to “Use of SDS Diagnosis Reset Procedures (Page 1A-14)”.

C23 (Use of mode select switch)

Step	Action	Yes	No
1	1) Turn the ignition switch OFF. 2) Remove the right frame cover. Refer to “Exterior Parts Removal and Installation in Section 9D (Page 9D-14)”. 3) Check the TO sensor coupler (1) for loose or poor contacts. If OK, then measure the TO sensor resistance. 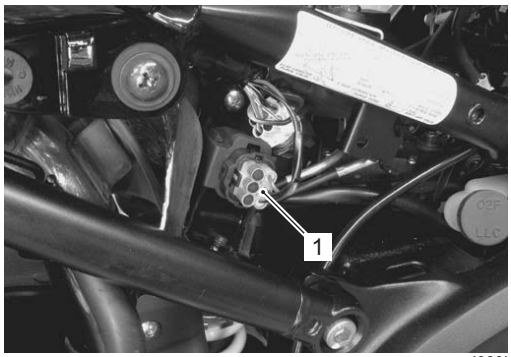 I823H1110126-03 4) Remove the TO sensor. Refer to “TO Sensor Removal and Installation in Section 1C (Page 1C-6)”. 5) Measure the resistance between terminal “A” and terminal “C”. **Special tool** **TOOL (A): 09900–25008 (Multi-circuit tester set)** **Tester knob indication** **Resistance (Ω)** **TO sensor resistance** **16.5 – 22.3 kΩ** **(Terminal “A” – Terminal “C”)** 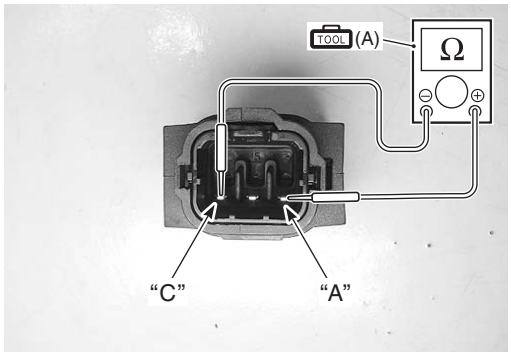 I718H1110188-02 *Is the resistance OK?*	Go to Step 2.	Replace the TO sensor with a new one. Refer to “TO Sensor Removal and Installation in Section 1C (Page 1C-6)”.

SAMPLE

P1651-H (Use of SDS)

Step	Action	Yes	No
1	1) Turn the ignition switch OFF. 2) Lift and support the fuel tank. Refer to “Fuel Tank Removal and Installation in Section 1G (Page 1G-10)”. 3) Check the TO sensor coupler (1) for loose or poor contacts. If OK, then check the TO sensor lead wire continuity. 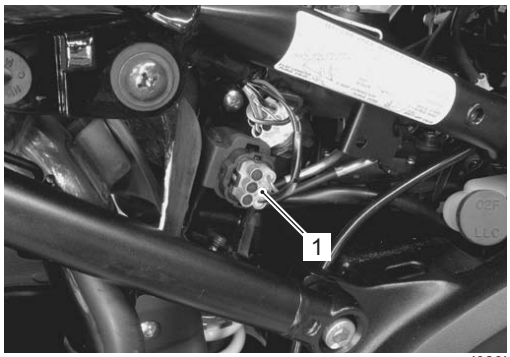 I823H1110126-03 4) Disconnect the TO sensor coupler. 5) Check the continuity between the R wire and B wire. If the sound is not heard from the tester, the circuit condition is OK. **Special tool** **TOOL (A): 09900–25008 (Multi-circuit tester set)** **Tester knob indication** **Continuity test (•))))** 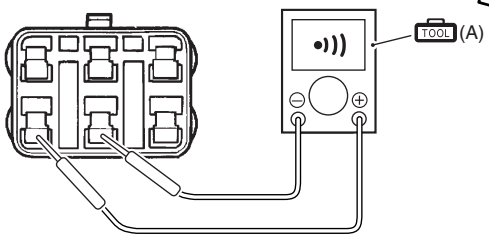 I823H1110051-01	Go to Step 2.	B wire shorted to VCC, or B/Br wire open.

SAMPLE

Step	Action	Yes	No
1	6) Disconnect the ECM coupler. Refer to “ECM Removal and Installation in Section 1C (Page 1C-2)”. 7) Insert the needle pointed probes to the lead wire coupler. 8) Check the continuity between the B wire and terminal “22”. Also, check the continuity between B/Br wire and terminal “29”. **Special tool** **TOOL (A): 09900–25008 (Multi-circuit tester set)** **TOOL (B): 09900–25009 (Needle pointed probe set)** **Tester knob indication** **Continuity test (•))))** **ECM coupler (Harness side)** 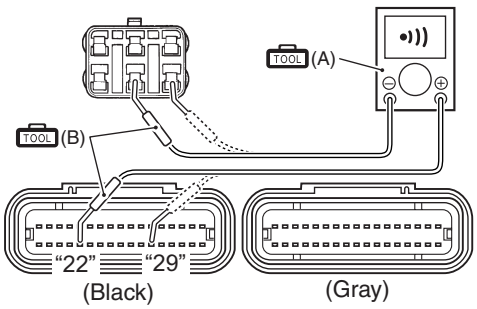 I823H1110052-04 *Is the continuity OK?*	Go to Step 2.	B wire shorted to VCC, or B/Br wire open.

SAMPLE

P1651-L (Use of SDS)

Step	Action	Yes	No
1	1) Turn the ignition switch OFF. 2) Lift and support the fuel tank. Refer to “Fuel Tank Removal and Installation in Section 1G (Page 1G-10)”. 3) Check the TO sensor coupler (1) for loose or poor contacts. If OK, then check the TO sensor lead wire continuity. 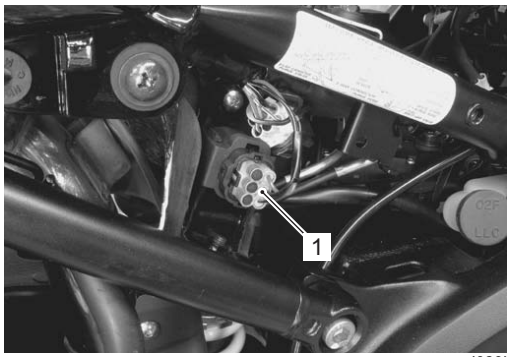 I823H1110126-03 4) Disconnect the TO sensor coupler. 5) Check the continuity between the B wire and ground. Also, check the continuity between the B wire and B/Br wire. If the sound is not heard from the tester, the circuit condition is OK. **Special tool** **TOOL (A): 09900–25008 (Multi-circuit tester set)** **Tester knob indication** **Continuity test (•))))** 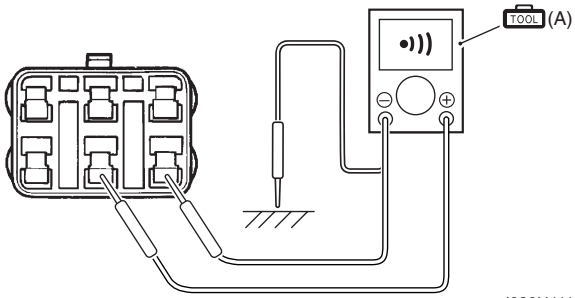 I823H1110053-02	Go to Step 2.	R or B wire open, or B wire shorted to the ground.

SAMPLE

Step	Action	Yes	No
1	6) Disconnect the ECM coupler. Refer to “ECM Removal and Installation in Section 1C (Page 1C-2)”. 7) Insert the needle pointed probes to the lead wire coupler. 8) Check the continuity between the R wire and terminal “11”. Also, then check the continuity between B wire and terminal “22”. **Special tool** **TOOL (A): 09900–25008 (Multi-circuit tester set)** **TOOL (B): 09900–25009 (Needle pointed probe set)** **Tester knob indication** **Continuity test (•))))** **ECM coupler (Harness side)** 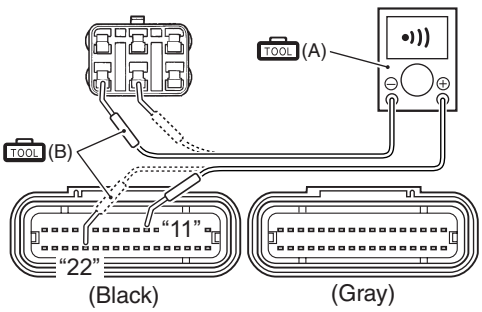 I823H1110054-04 *Is the continuity OK?*	Go to Step 2.	R or B wire open, or B wire shorted to the ground.

SAMPLE

Step	Action	Yes	No
2	1) Connect the ECM coupler and TO sensor coupler. 2) Remove the TO sensor. Refer to “TO Sensor Removal and Installation in Section 1C (Page 1C-6)”. 3) Insert the needle pointed probes to the lead wire coupler. 4) Turn the ignition switch ON. 5) Measure the voltage at the wire side coupler between B wire and B/Br wire. **Special tool** **TOOL (A): 09900–25008 (Multi-circuit tester set)** **TOOL (B): 09900–25009 (Needle pointed probe set)** **Tester knob indication** **Voltage (⎓)** **TO sensor voltage (Normal)** **0.4 – 1.4 V** **((+) terminal: B – (–) terminal: B/Br)** 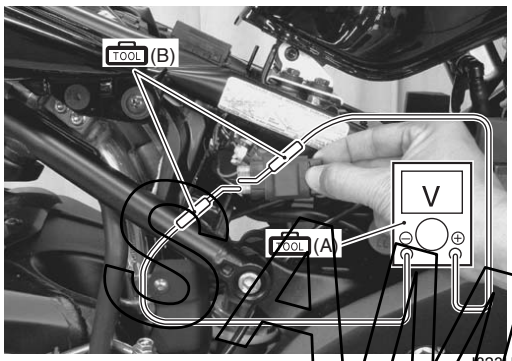 I823H1110127-04 6) Measure the voltage when it is leaned 65° and more to left and right, from the horizontal level. **TO sensor voltage (Leaning)** **3.7 – 4.4 V** **((+) terminal: B – (–) terminal: B/Br)** 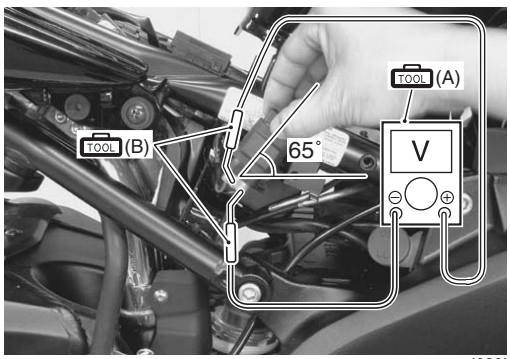 I823H1110128-03 *Is the voltage OK?*	• R, B or B/Br wire open or shorted to the ground, or poor “11”, “22” or “29” connection. • If wire and connection are OK, intermittent trouble or faulty ECM. • Recheck each terminal and wire harness for open circuit and poor connection. • Replace the ECM with a known good one, and inspect it again. Refer to “ECM Removal and Installation in Section 1C (Page 1C-2)”.	• Loosen or poor contacts on the ECM coupler. • Open or short circuit. • Replace the TO sensor with a new one. Refer to “TO Sensor Removal and Installation in Section 1C (Page 1C-6)”.

SAMPLE

DTC “C24” (P0351), “C25” (P0352), “C26” (P0353) or “C27” (P0354): Ignition System Malfunction

B823H11104017

NOTE

Refer to “No Spark or Poor Spark in Section 1H (Page 1H-5)” for details.

DTC “C28” (P1655): Secondary Throttle Valve Actuator (STVA) Malfunction

B823H11104018

Detected Condition and Possible Cause

Detected Condition	Possible Cause
The operation voltage does not reach the STVA. ECM does not receive communication signal from the STVA. STVA can not operate properly.	• STVA malfunction. • STVA circuit open or short. • STVA motor malfunction.

Wiring Diagram

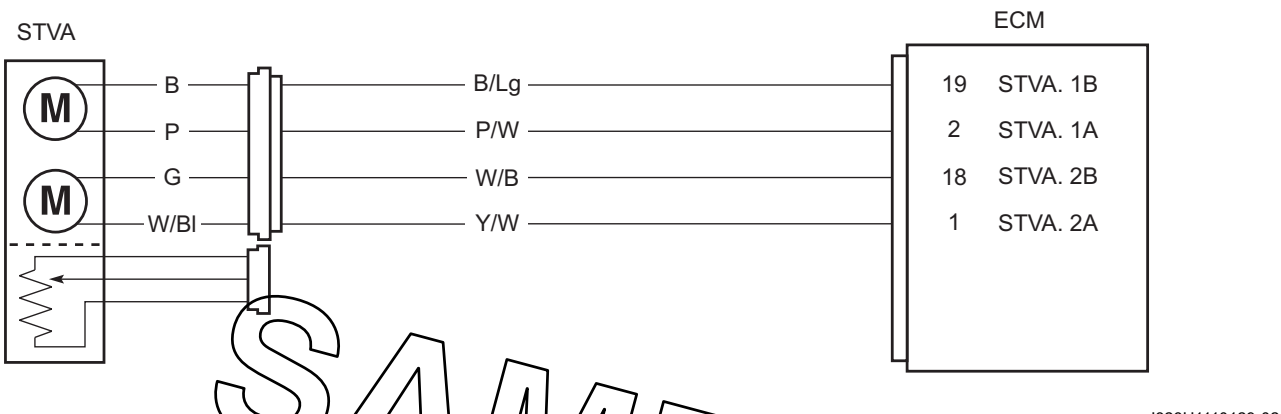

I823H1110129-02

SAMPLE

ECM coupler (Harness side)

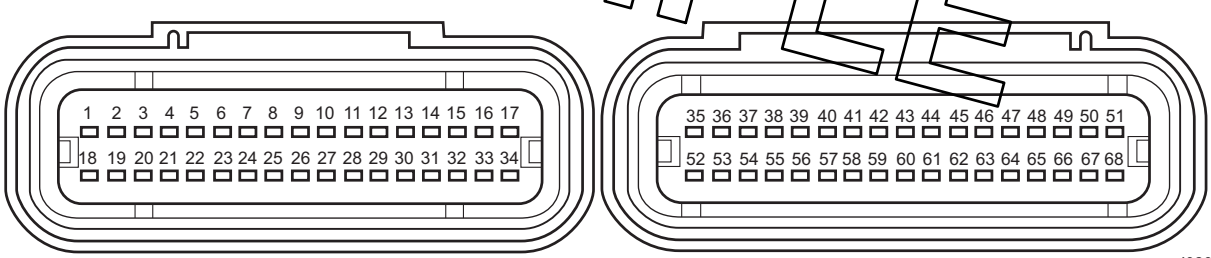

I823H1110004-01

Troubleshooting

⚠ CAUTION

When using the multi-circuit tester, do not strongly touch the terminal of the ECM coupler with a needle pointed tester probe to prevent the terminal damage or terminal bend.

NOTE

After repairing the trouble, clear the DTC using SDS tool. Refer to "Use of SDS Diagnosis Reset Procedures (Page 1A-14)".

Step	Action	Yes	No
1	1) Lift and support the fuel tank. Refer to "Fuel Tank Removal and Installation in Section 1G (Page 1G-10)". 2) Remove the air cleaner box. Refer to "Air Cleaner Box Removal and Installation in Section 1D (Page 1D-6)". 3) Check the STVA lead wire coupler (1) for loose or poor contacts. I623H1110130-01 4) Start the engine to check the STV operation. (STVA operating order: Open → Close) 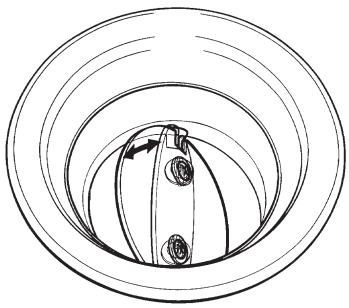 I705H1110063-01 *Is the operation OK?*	Go to Step 2.	• Loose or poor contacts on the coupler. • Open or short circuit in the B/Lg, P/W, W/B or Y/W wire. • If wire and connection are OK, go to Step 2.

SAMPLE

Step	Action	Yes	No
2	1) Turn the ignition switch OFF. 2) Disconnect the STVA lead wire coupler. 3) Check the continuity between each terminal and ground. **Special tool** **TOOL (A): 09900–25008 (Multi-circuit tester set)** **Tester knob indication** **Resistance (Ω)** **STVA continuity** **∞ Ω (Infinity)** **(Terminal – Ground)** 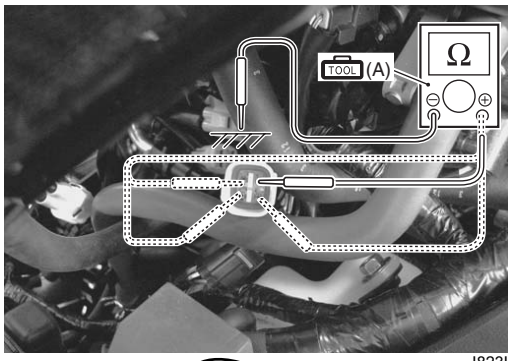 I823H1110131-01 4) If OK, then measure the STVA resistance (between the B wire “A” and P wire “B”) and (between the G wire “C” and W/Bl wire “D”). **STVA resistance** **Approx. 6.5 Ω** **(Terminal “A” – Terminal “B”, Terminal “C” – Terminal “D”)** 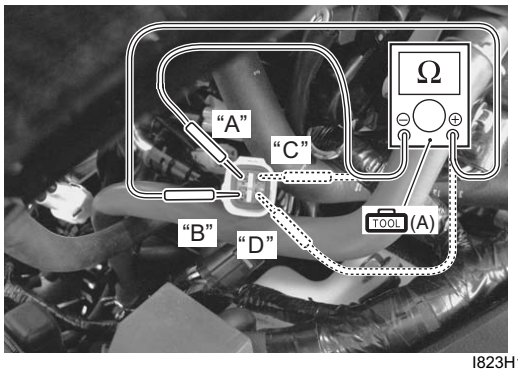 I823H1110132-01 *Is the resistance OK?*	• B/Lg, P/W, W/B and Y/W wire open or shorted to the ground, or poor “19”, “2”, “18” and “1” connection. • If wire and connection are OK, intermittent trouble or faulty ECM. • Recheck each terminal and wire harness for open circuit and poor connection. • Replace the ECM with a known good one, and inspect it again. Refer to “ECM Removal and Installation in Section 1C (Page 1C-2)”.	• Loose or poor contacts on the ECM coupler. • Replace the throttle body assembly with a new one. Refer to “Throttle Body Disassembly and Assembly in Section 1D (Page 1D-12)”.

SAMPLE

Active Control Inspection

1) Set up the SDS tool. (Refer to the SDS operation manual for further details.)
2) Turn the ignition switch ON.
3) Click “Secondary throttle operating control” (1).

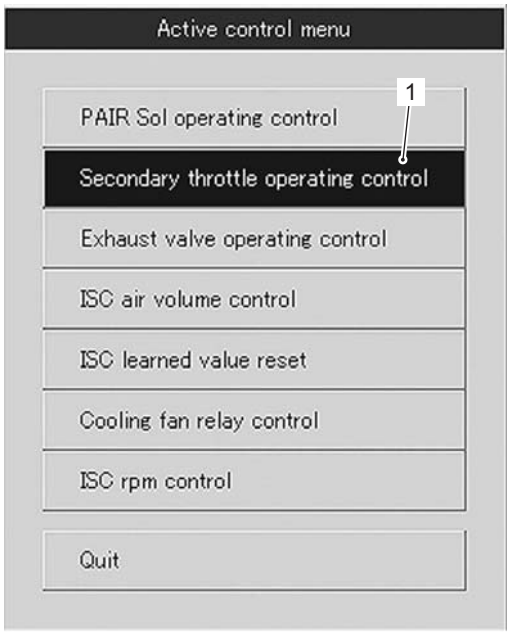

I823H1110200-02

4) Click each button (2).
At this time, if an operation sound is heard from the STVA, the function is normal.

SAMPLE

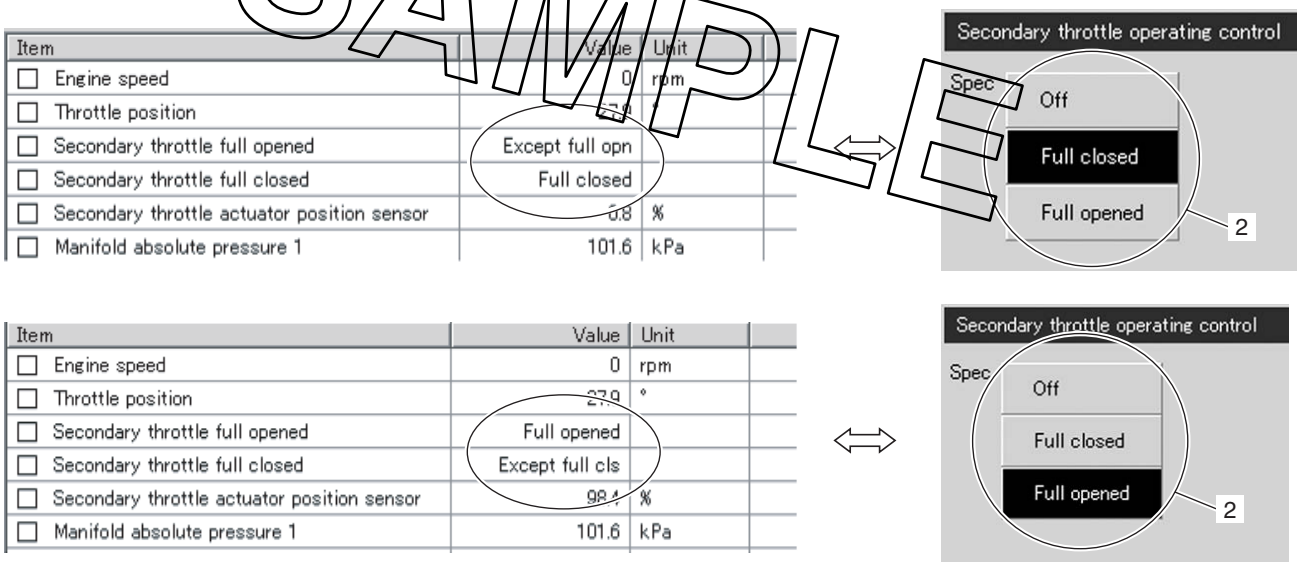

I823H1110201-02

DTC “C29” (P1654-H/L): Secondary Throttle Position Sensor (STPS) Circuit Malfunction

B823H11104019

Detected Condition and Possible Cause

Detected Condition			Possible Cause
C29		Output voltage is not within the following range. Difference between actual throttle opening and opening calculated by ECM is larger than specified value. 0.15 V ≤ Sensor voltage < 4.85 V	• STP sensor maladjusted. • STP sensor circuit open or short. • STP sensor malfunction. • ECM malfunction.
P1654	H	Sensor voltage is higher than specified value.	• STP sensor circuit shorted to VCC or ground circuit open.
	L	Sensor voltage is lower than specified value.	• STP sensor circuit open or shorted to the ground or VCC circuit open.

Wiring Diagram

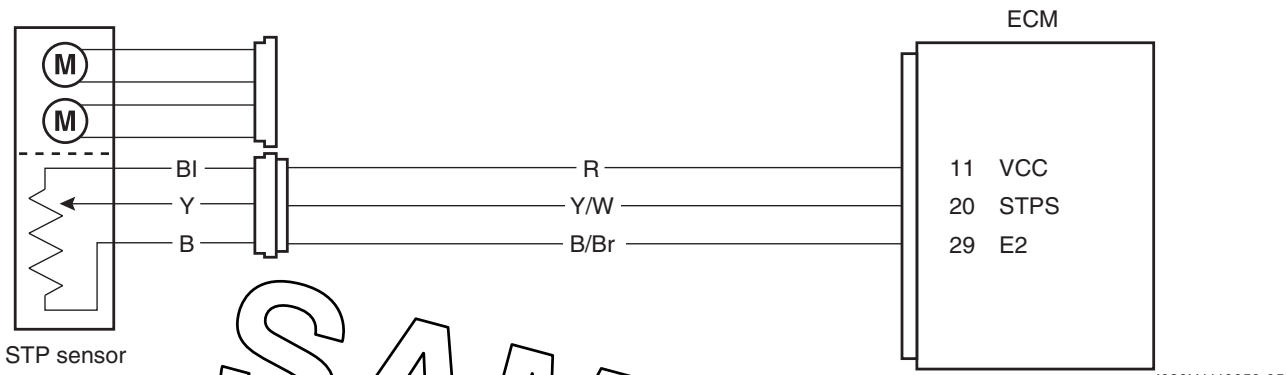

SAMPLE

ECM coupler (Harness side)

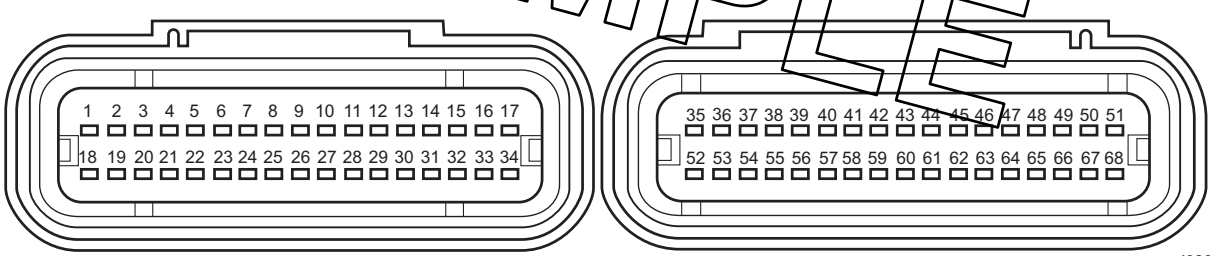

Troubleshooting

⚠ CAUTION

When using the multi-circuit tester, do not strongly touch the terminal of the ECM coupler with a needle pointed tester probe to prevent the terminal damage or terminal bend.

NOTE

After repairing the trouble, clear the DTC using SDS tool. Refer to “Use of SDS Diagnosis Reset Procedures (Page 1A-14)”.

C29 (Use of mode select switch)

Step	Action	Yes	No
1	1) Turn the ignition switch OFF. 2) Lift and support the fuel tank. Refer to “Fuel Tank Removal and Installation in Section 1G (Page 1G-10)”. 3) Check the STP sensor coupler (1) for loose or poor contacts. If OK, then measure the STP sensor input voltage. 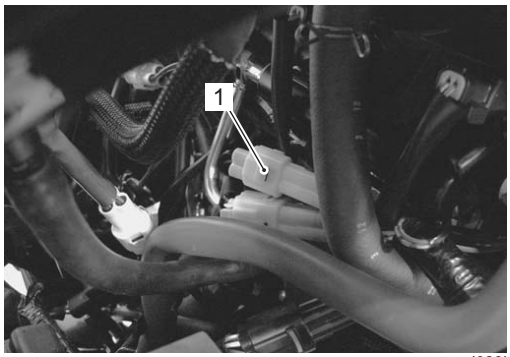 I823H1110133-01 4) Disconnect the STP sensor coupler. 5) Turn the ignition switch ON. 6) Measure the input voltage between the R wire and ground. Also, measure the voltage between the R wire and B/Br wire. **Special tool** **TOOL (A): 09900–25008 (Multi-circuit tester set)** **<u>Tester knob indication</u>** **Voltage (⎓)** **<u>STP sensor input voltage</u>** **4.5 – 5.5 V** **((+) terminal: R – (–) terminal: Ground, (+) terminal: R – (–) terminal: B/Br)** 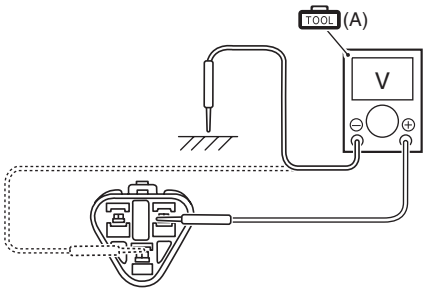 I823H1110062-02	Go to Step 3.	• Loose or poor contacts on the ECM coupler. • Open or short circuit in the R wire or B/Br wire.

SAMPLE

P1654-H (Use of SDS)

Step	Action	Yes	No
1	7) Check the continuity between the Y/W wire and R wire. If the sound is not heard from the tester, the circuit condition is OK. **Special tool** **(A): 09900–25008 (Multi-circuit tester set)** **Tester knob indication** **Continuity (•))))** 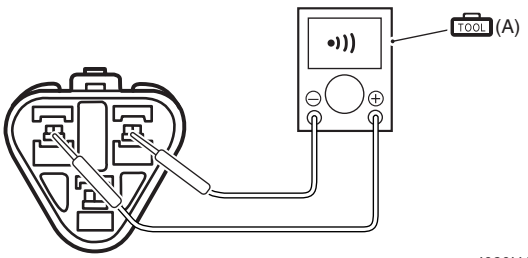 I823H1110064-03 8) Disconnect the ECM coupler. Refer to “ECM Removal and Installation in Section 1C (Page 1C-2)”. *Is the continuity OK?*	Go to Step 3.	Y/W wire shorted to VCC, or B/Br wire open.

SAMPLE

Step	Action	Yes	No
2	1) Turn the ignition switch OFF. 2) Lift and support the fuel tank. Refer to “Fuel Tank Removal and Installation in Section 1G (Page 1G-10)”. 3) Check the STP sensor coupler (1) for loose or poor contacts. If OK, then check the STP sensor lead wire continuity. 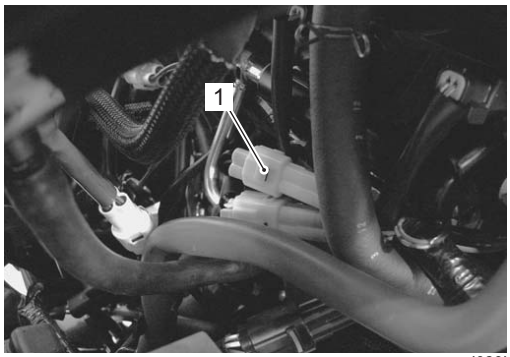 I823H1110133-01 4) Disconnect the STP sensor coupler. 5) Check the continuity between the Y/W wire and R wire. If the sound is not heard from the tester, the circuit condition is OK. **Special tool** **TOOL (A): 09900-25008 (Multi-circuit tester set)** **Tester knob indication** **Continuity (•))))** 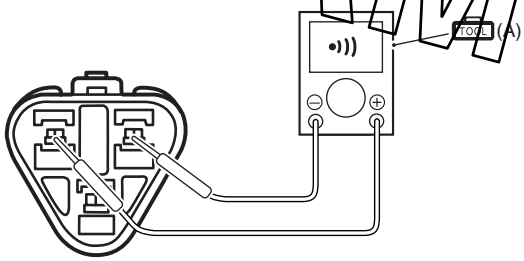 I823H1110064-03	Go to Step 3.	Y/W wire shorted to VCC, or B/Br wire open.

SAMPLE

Step	Action	Yes	No
2	6) Disconnect the ECM coupler. Refer to “ECM Removal and Installation in Section 1C (Page 1C-2)”. 7) Check the continuity between the Y/W wire and terminal “20”. Also, check the continuity between the B/Br wire and terminal “29”. **Special tool** **TOOL (A): 09900–25008 (Multi-circuit tester set)** **TOOL (B): 09900–25009 (Needle pointed probe set)** **Tester knob indication** **Continuity test (•))))** **ECM couplers (Harness side)** 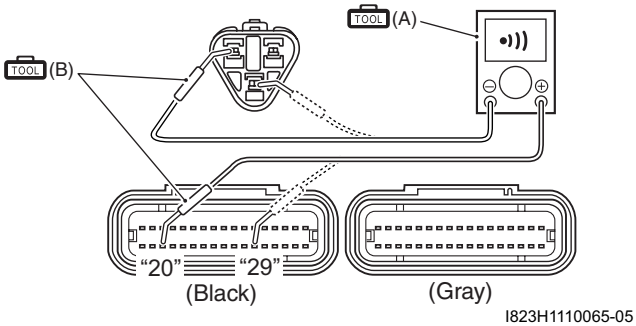 *Is the continuity OK?*	Go to Step 3.	Y/W wire shorted to VCC, or B/Br wire open.

SAMPLE

P1654-L (Use of SDS)

Step	Action	Yes	No
1	1) Turn the ignition switch OFF. 2) Lift and support the fuel tank. Refer to “Fuel Tank Removal and Installation in Section 1G (Page 1G-10)”. 3) Check the STP sensor coupler (1) for loose or poor contacts. If OK, then check the STP sensor lead wire continuity. 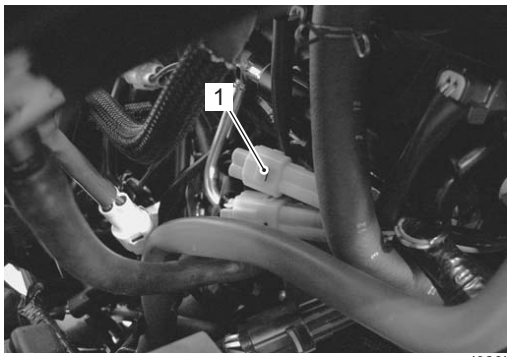 I823H1110133-01 4) Disconnect the STP sensor coupler. 5) Check the continuity between the Y/W wire and ground. Also, check the continuity between the Y/W wire and B/Br wire. If the sound is not heard from the tester, the circuit condition is OK. **Special tool** **TOOL (A): 09900–25008 (Multi-circuit tester set)** **Tester knob indication** **Continuity test (•))))** 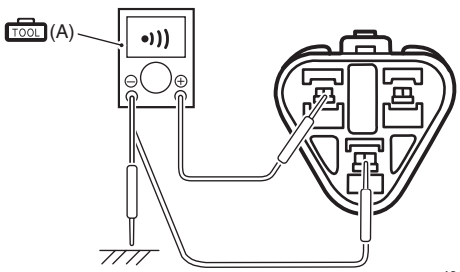 I823H1110067-03 6) Disconnect the ECM coupler. Refer to “ECM Removal and Installation in Section 1C (Page 1C-2)”.	Go to Step 2.	R or Y/W wire open, or Y/W wire shorted to the ground.

SAMPLE

Step	Action	Yes	No
1	7) Check the continuity between the Y/W wire and terminal “20”. Also, check the continuity between the R wire and terminal “11”. **Special tool** **TOOL (A): 09900–25008 (Multi-circuit tester set)** **TOOL (B): 09900–25009 (Needle pointed probe set)** **Tester knob indication** **Continuity test (•))))** **ECM couplers (Harness side)** 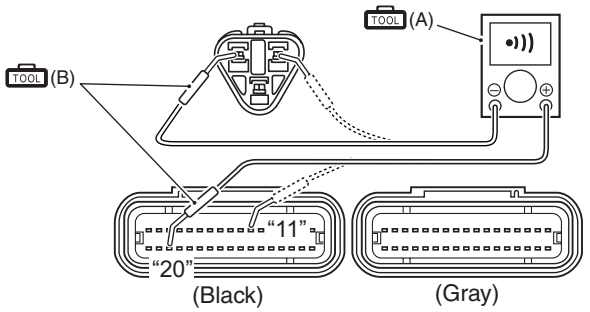 I823H1110068-04 *Is the continuity OK?*	Go to Step 2.	R or Y/W wire open, or Y/W wire shorted to the ground.
2	1) Connect the ECM coupler. 2) Turn the ignition switch ON. 3) Measure the input voltage between the R wire and ground. Also, measure the input voltage between the R wire and B/Br wire. **Special tool** **TOOL (A): 09900–25008 (Multi-circuit tester set)** **Tester knob indication** **Voltage (⎓)** **STP sensor input voltage** **4.5 – 5.5 V** **((+) terminal: R – (–) terminal: Ground, (+) terminal: R – (–) terminal: B/Br)** 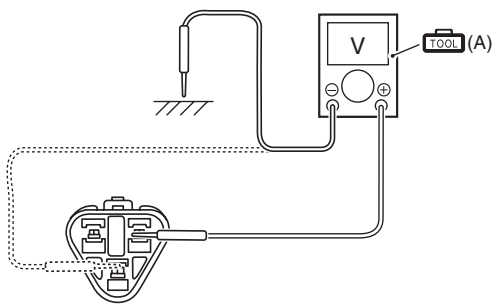 I823H1110069-05 *Is the voltage OK?*	Go to Step 3.	Open or short circuit in the R or B/Br wire.

SAMPLE

Step	Action	Yes	No
3	1) Turn the ignition switch OFF. 2) Connect the ECM coupler and STP sensor coupler. 3) Disconnect the STVA lead wire coupler. Refer to “DTC “C28” (P1655): Secondary Throttle Valve Actuator (STVA) Malfunction (Page 1A-72)”. 4) Insert the needle point probes to the lead wire coupler. 5) Turn the ignition switch ON. 6) Measure the STP sensor output voltage at the coupler (between the Y wire (+) and B wire (–)) by turning the secondary throttle valve (close and open) with your finger. **Special tool** **TOOL (A): 09900–25008 (Multi-circuit tester set)** **TOOL (B): 09900–25009 (Needle pointed probe set)** **<u>Tester knob indication</u>** **Voltage (⎓)** **<u>STP sensor output voltage</u>** **Secondary throttle valve is closed: Approx. 0.5 V** **Secondary throttle valve is opened: Approx. 3.9 V** **((+) terminal: Y – (–) terminal: B)** 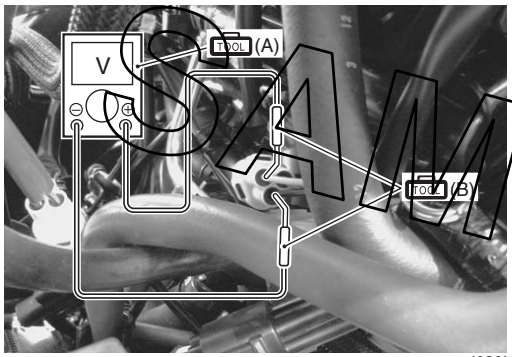 I823H1110134-01 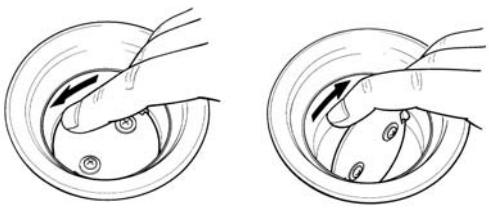 I705H1110071-01 *Is the voltage OK?*	• R, Y/W or B/Br wire open or shorted to the ground, or poor “11”, “20” or “29” connection. • If wire and connection are OK, intermittent trouble or faulty ECM. • Recheck each terminal and wire harness for open circuit and poor connection. • Replace the ECM with a known good one, and inspect it again. Refer to “ECM Removal and Installation in Section 1C (Page 1C-2)”.	If check result is not satisfactory, replace the STP sensor with a new one. Refer to “STP Sensor Removal and Installation in Section 1C (Page 1C-8)”.

SAMPLE

DTC “C31” (P0705): GP Switch Circuit Malfunction

B823H11104020

Detected Condition and Possible Cause

Detected Condition	Possible Cause
No Gear Position switch voltage GP switch voltage is not within the following range. GP switch voltage ≥ 0.6 V	• GP switch circuit open or short. • GP switch malfunction. • ECM malfunction.

Wiring Diagram

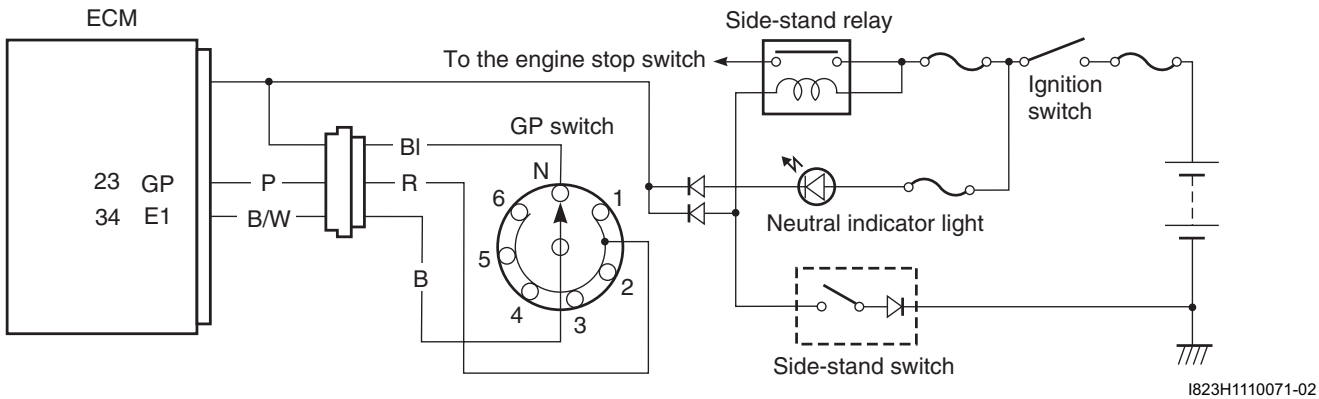

ECM coupler (Harness side)

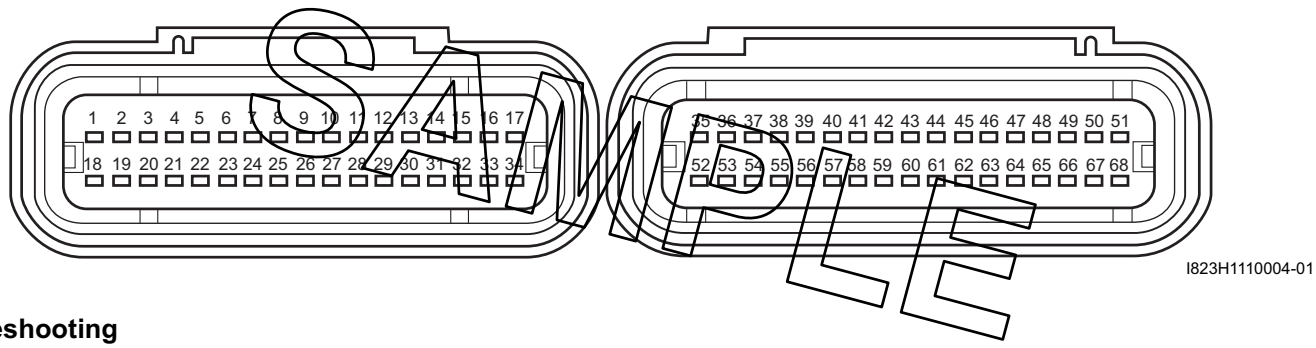

SAMPLE

Troubleshooting

⚠ CAUTION

When using the multi-circuit tester, do not strongly touch the terminal of the ECM coupler with a needle pointed tester probe to prevent the terminal damage or terminal bend.

NOTE

After repairing the trouble, clear the DTC using SDS tool. Refer to “Use of SDS Diagnosis Reset Procedures (Page 1A-14)”.

Step	Action	Yes	No
1	1) Turn the ignition switch OFF. 2) Lift and support the fuel tank. Refer to “Fuel Tank Removal and Installation in Section 1G (Page 1G-10)”. 3) Check the GP switch coupler (1) for loose or poor contacts. If OK, then measure the GP switch voltage. 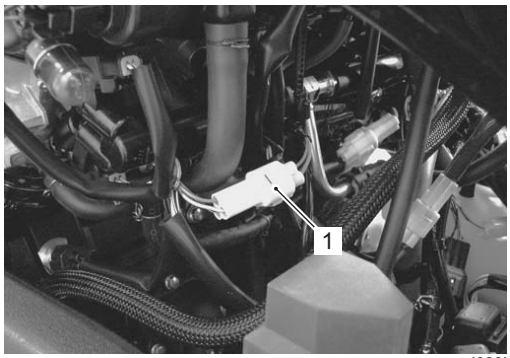 I823H1110135-01 4) Support the motorcycle with a jack. 5) Fold the side-stand to up position. 6) Make sure the engine stop switch is in the “RUN” position. 7) Insert the needle pointed probe to the lead wire coupler. 8) Turn the ignition switch ON. 9) Measure the voltage between the R and B wire, when shifting the gearshift lever from 1st to Top. **Special tool** **(A): 09900–25008 (Multi-circuit tester set)** **(B): 09900–25009 (Needle pointed probe set)** **Tester knob indication** **Voltage (⎓)** **GP switch voltage** **0.6 V and more** **((+) terminal: R – (–) terminal: B)** 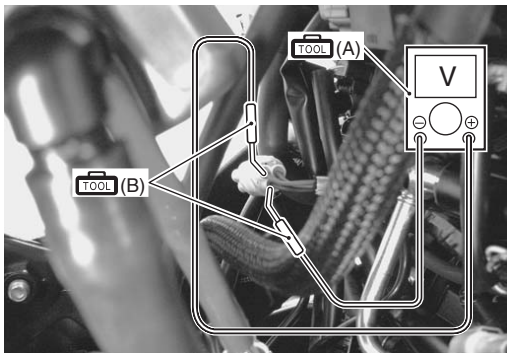 I823H1110136-01 *Is the voltage OK?*	• P wire open or shorted to the ground. • If wire and connection are OK, intermittent trouble or faulty ECM. • Recheck each terminal and wire harness for open circuit and poor connection. • Replace the ECM with a known good one, and inspect it again. Refer to “ECM Removal and Installation in Section 1C (Page 1C-2)”.	• R or B wire open, or R wire shorted to the ground. • Loose or poor contacts on the ECM coupler. • If wire and connection are OK, replace the GP switch with a new one. Refer to “Gear Position (GP) Switch Removal and Installation in Section 5B (Page 5B-11)”.

SAMPLE

DTC “C32” (P0201), “C33” (P0202), “C34” (P0203) or “C35” (P0204): Primary Fuel Injector Circuit Malfunction

B823H11104021

Detected Condition and Possible Cause

Detected Condition	Possible Cause
CKP signal is produced but fuel injector signal is interrupted by 4 times or more continuity.	• Injector circuit open or short. • Injector malfunction. • ECM malfunction.

Wiring Diagram

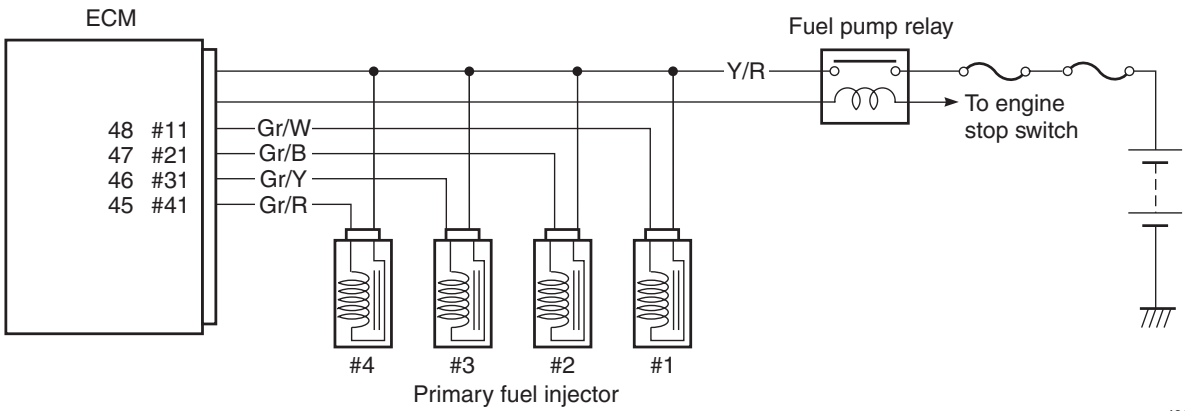

I823H1110074-02

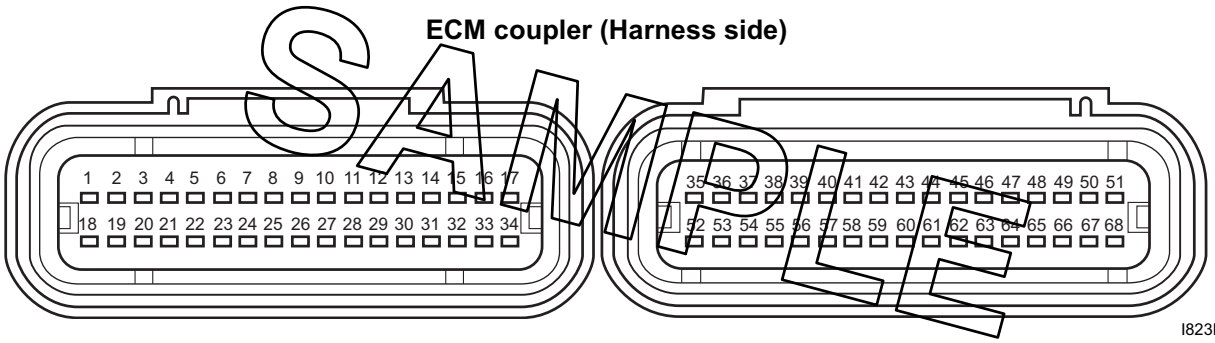

I823H1110004-01

Troubleshooting

⚠ CAUTION

When using the multi-circuit tester, do not strongly touch the terminal of the ECM coupler with a needle pointed tester probe to prevent the terminal damage or terminal bend.

NOTE

After repairing the trouble, clear the DTC using SDS tool. Refer to “Use of SDS Diagnosis Reset Procedures (Page 1A-14)”.

Step	Action	Yes	No
1	1) Turn the ignition switch OFF. 2) Lift and support the fuel tank. Refer to “Fuel Tank Removal and Installation in Section 1G (Page 1G-10)”. 3) Check the primary fuel injector coupler for loose or poor contacts. If OK, then measure the injector resistance. 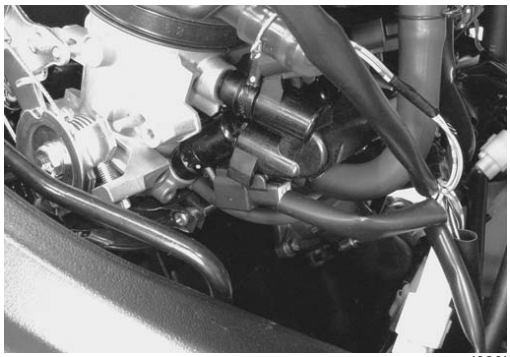 I823H1110137-01 4) Disconnect the injector coupler and measure the resistance between terminals. **Special tool** **TOOL (A): 09900–25008 (Multi-circuit tester set)** **Tester knob indication** **Resistance (Ω)** **Injector resistance** **11 – 13 Ω at 20 °C (68 °F)** **(Terminal – Terminal)** 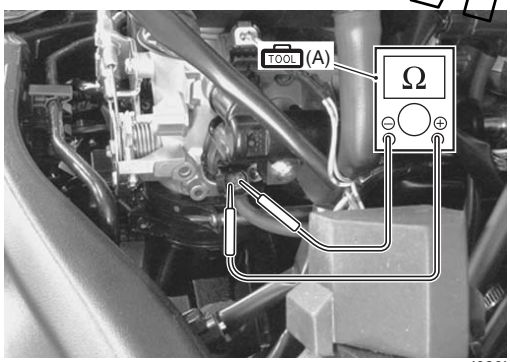 I823H1110138-01	Go to Step 2.	Replace the injector with a new one. Refer to “Throttle Body Disassembly and Assembly in Section 1D (Page 1D-12)”.

SAMPLE

Step	Action	Yes	No
1	5) If OK, then check the continuity between each terminal and ground. **Special tool** **TOOL (A): 09900–25008 (Multi-circuit tester set)** **Injector continuity** ∞ Ω **(Infinity)** 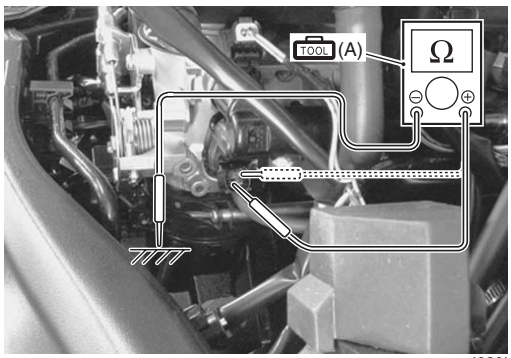 I823H1110139-01 *Are the resistance and continuity OK?*	Go to Step 2.	Replace the injector with a new one. Refer to “Throttle Body Disassembly and Assembly in Section 1D (Page 1D-12)”.

SAMPLE

Step	Action	Yes	No
2	1) Turn the ignition switch ON. 2) Measure the injector voltage between the Y/R wire and ground. **NOTE** **Injector voltage can be detected only for 3 seconds after ignition switch is turned ON.** **Special tool** **(A): 09900–25008 (Multi-circuit tester set)** **Tester knob indication** **Voltage (⎓)** **Injector voltage** **Battery voltage** **((+) terminal: Y/R – (–) terminal: Ground)** *Is the voltage OK?*	• Gr/W wire open or shorted to the ground, or poor “48” connection (#1 cylinder side). • Gr/B wire open or shorted to the ground, or poor “47” connection (#2 cylinder side). • Gr/Y wire open or shorted to the ground, or poor “46” connection (#3 cylinder side). • Gr/R wire open or shorted to the ground, or poor “45” connection (#4 cylinder side). • If wire and connection are OK, intermittent trouble or faulty ECM. • Recheck each terminal and wire harness for open circuit and poor connection. • Replace the ECM with a known good one, and inspect it again. Refer to “ECM Removal and Installation in Section 1C (Page 1C-2)”.	Open circuit in the Y/R wire.

SAMPLE

DTC “C36” (P1764), “C37” (P1765), “C38” (P1766) or “C39” (P1767): Secondary Fuel Injector Circuit Malfunction

B823H11104032

Detected Condition and Possible Cause

Detected Condition	Possible Cause
Some failure exists in the fuel injector signal in a high load, high revolution condition.	• Injector circuit open or short. • Injector malfunction. • ECM malfunction.

Wiring Diagram

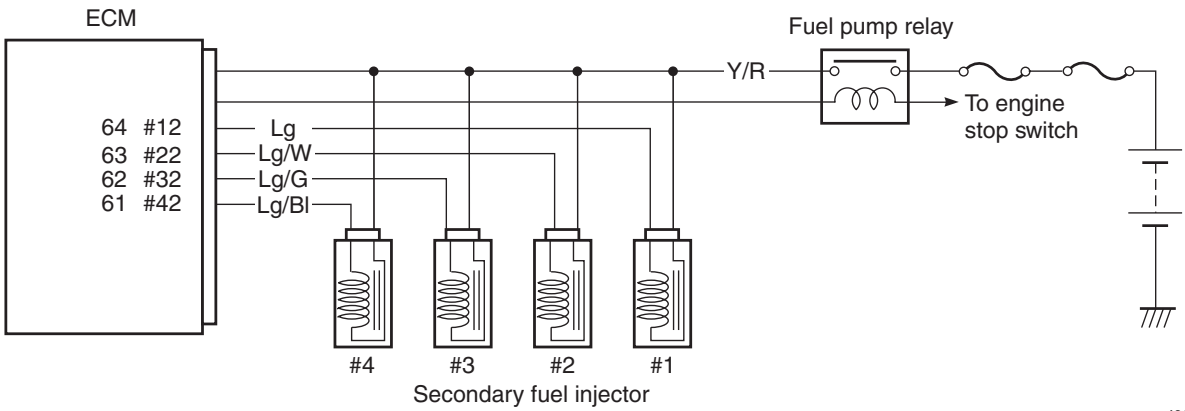

I823H1110079-03

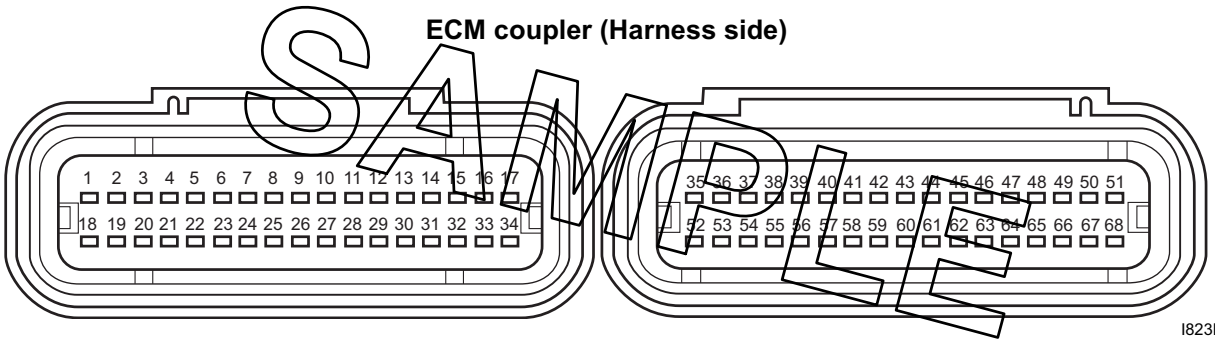

I823H1110004-01

Troubleshooting

⚠ CAUTION

When using the multi-circuit tester, do not strongly touch the terminal of the ECM coupler with a needle pointed tester probe to prevent the terminal damage or terminal bend.

NOTE

After repairing the trouble, clear the DTC using SDS tool. Refer to “Use of SDS Diagnosis Reset Procedures (Page 1A-14)”.

Step	Action	Yes	No
1	1) Turn the ignition switch OFF. 2) Lift and support the fuel tank. Refer to “Fuel Tank Removal and Installation in Section 1G (Page 1G-10)”. 3) Check the secondary fuel injector coupler for loose or poor contacts. If OK, then measure the injector resistance. I823H1110141-01 4) Disconnect the injector coupler and measure the resistance between terminals. **Special tool** **TOOL (A): 09900–25008 (Multi-circuit tester set)** **Tester knob indication** **Resistance (Ω)** **Injector resistance** **11 – 13 Ω at 20 °C (68 °F)** **(Terminal – Terminal)** 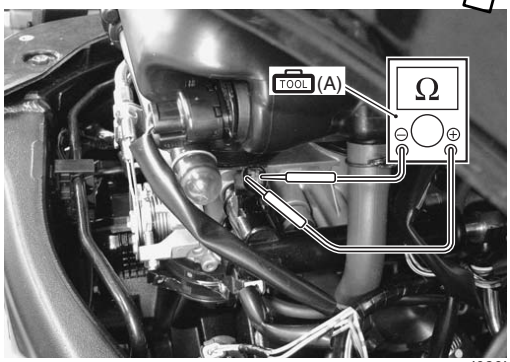 I823H1110142-01	Go to Step 2.	Replace the injector with a new one. Refer to “Throttle Body Disassembly and Assembly in Section 1D (Page 1D-12)”.

SAMPLE

Step	Action	Yes	No
1	5) If OK, then check the continuity between each terminal and ground. **Special tool** **TOOL (A): 09900–25008 (Multi-circuit tester set)** **Injector continuity** ∞ Ω **(Infinity)** 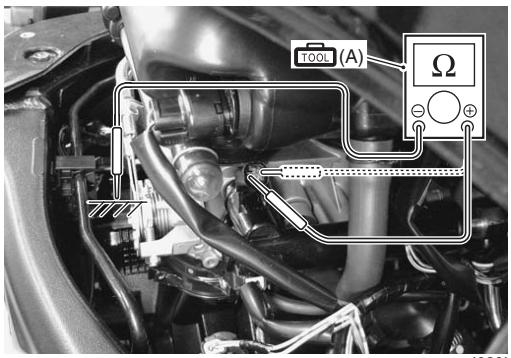 I823H1110143-01 *Are the resistance and continuity OK?*	Go to Step 2.	Replace the injector with a new one. Refer to “Throttle Body Disassembly and Assembly in Section 1D (Page 1D-12)”.

SAMPLE

Step	Action	Yes	No
2	1) Turn the ignition switch ON. 2) Measure the injector voltage between the Y/R wire and ground. **NOTE** **Injector voltage can be detected only for 3 seconds after ignition switch is turned ON.** **Special tool** **(A): 09900–25008 (Multi-circuit tester set)** **Tester knob indication** **Voltage (⎓)** **Injector voltage** **Battery voltage** **((+) terminal: Y/R – (–) terminal: Ground)** *Is the voltage OK?*	• Lg wire open or shorted to the ground, or poor “64” connection (#1 cylinder side). • Lg/W wire open or shorted to the ground, or poor “63” connection (#2 cylinder side). • Lg/G wire open or shorted to the ground, or poor “62” connection (#3 cylinder side). • Lg/Bl wire open or shorted to the ground, or poor “61” connection (#4 cylinder side). • If wire and connection are OK, intermittent trouble or faulty ECM. • Recheck each terminal and wire harness for open circuit and poor connection. • Replace the ECM with a known good one, and inspect it again. Refer to “ECM Removal and Installation in Section 1C (Page 1C-2)”.	Open circuit in the Y/R wire.

SAMPLE

DTC “C40” (P0505 / P0506 / P0507): ISC Valve Circuit Malfunction

B823H11104022

Detected Condition and Possible Cause

Detected Condition		Possible Cause
C40/P0505	The circuit voltage of motor drive is unusual.	• ISC valve circuit open or shorted to the ground.
C40/P0506	Idle speed is lower than the desired idle speed.	• Air passage clogged. • ISC valve is fixed. • ISC valve preset position is incorrect.
C40/P0507	Idle speed is high than the desired idle speed.	• Disconnect ISC valve hose. • ISC valve is fixed. • ISC valve preset position is incorrect.

Wiring Diagram

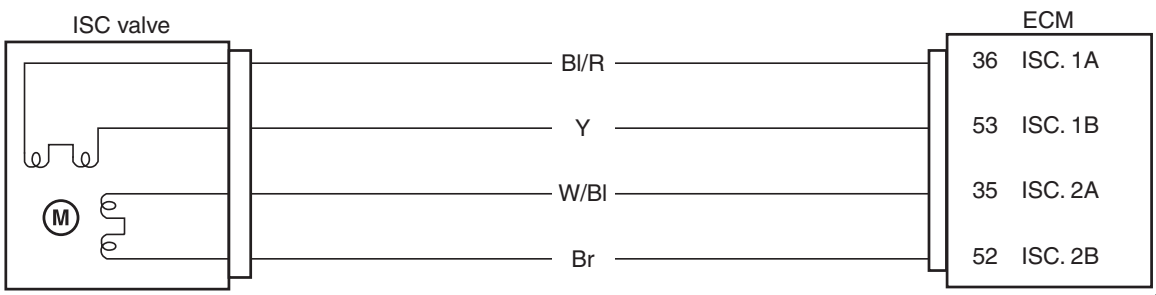

I823H1110145-01

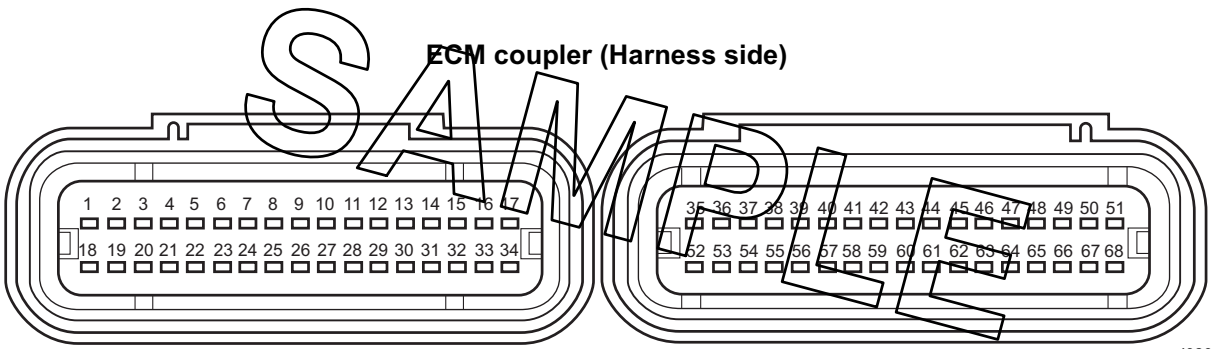

SAMPLE

I823H1110004-01

Troubleshooting

⚠ CAUTION

- **Be careful not to disconnect the ISC valve coupler at least 5 seconds after ignition switch is turned to OFF.**
  If the ECM coupler is disconnected within 5 seconds after ignition switch is turned to OFF, there is a possibility of an usual valve being written in ECM and causing an error of ISC valve operation.
- **When using the multi-circuit tester, do not strongly touch the terminal of the ECM coupler with a needle pointed tester probe to prevent the terminal damage or terminal bend.**

NOTE

After repairing the trouble, clear the DTC using SDS tool. Refer to “Use of SDS Diagnosis Reset Procedures (Page 1A-14)”.

Step	Action	Yes	No
1	1) Turn the ignition switch OFF. 2) Remove the air cleaner box. Refer to “Air Cleaner Box Removal and Installation in Section 1D (Page 1D-6)”. 3) Check the ISC valve coupler (1) for loose or poor contacts. If OK, then check the ISC valve lead wire continuity. 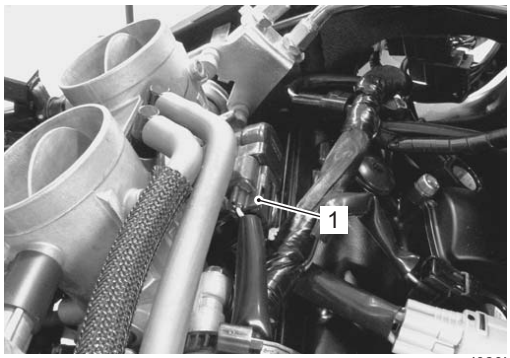 I823H1110146-01 4) Disconnect the ISC valve coupler and ECM coupler. Refer to “ECM Removal and Installation in Section 1C (Page 1C-2)”. 5) Check the continuity between terminal “A” and terminal “36”, terminal “B” and terminal “53”, terminal “C” and terminal “35”, terminal “D” and terminal “52”. **Special tool** **TOOL (A): 09900–25008 (Multi-circuit tester set)** **TOOL (B): 09900–25009 (Needle pointed probe set)** **Tester knob indication** **Continuity test (•))))** **ECM couplers (Harness side)** 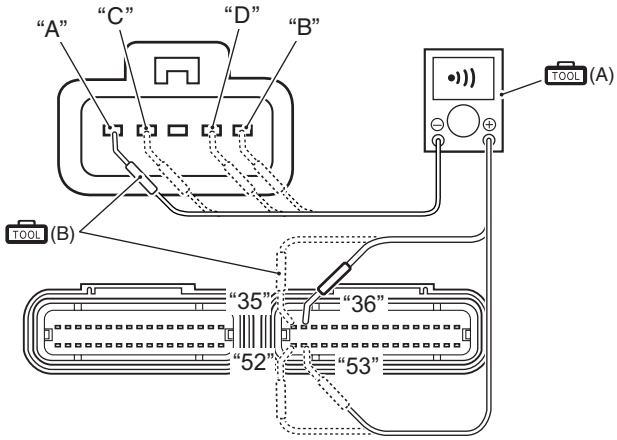 I823H1110085-05 *Is the continuity OK?*	Go to Step 2.	BI/R, Y, W/BI or Br wire open.

SAMPLE

Step	Action	Yes	No
2	1) Check the continuity between each ISC valve terminal and ground. **Special tool** **TOOL (A): 09900–25008 (Multi-circuit tester set)** **Tester knob indication** **Resistance (Ω)** **ISC valve continuity** **∞ Ω (Infinity)** **(Terminal – Ground)** 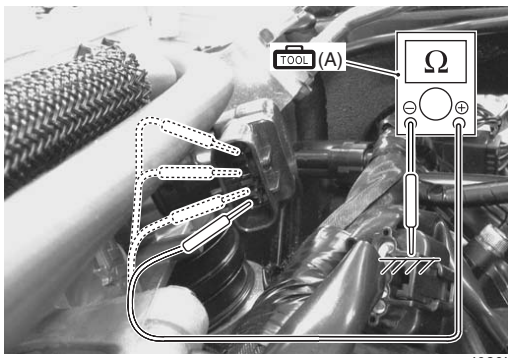 I823H1110147-01 2) If OK, then measure the resistance (between the Bl/R wire terminal “A” and Y wire terminal “B”) and (between the W/Bl wire terminal “C” and Br wire terminal “D”). **ISC valve resistance** **Approx. 80 Ω at 20 °C (68 °F)** **(Terminal: “A” – Terminal: “B”, Terminal: “C” – Terminal: “D”)** 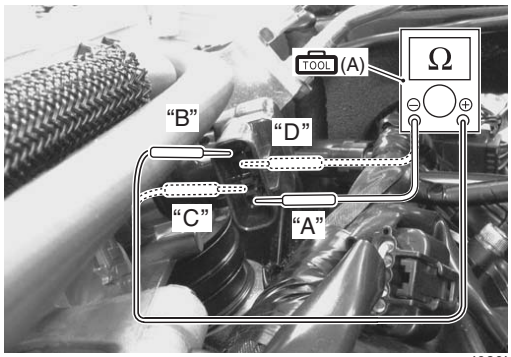 I823H1110148-01 *Is the resistance OK?*	If wire is OK, intermittent trouble or faulty ECM.	Replace the ISC valve with a new one. Refer to “Throttle Body Disassembly and Assembly in Section 1D (Page 1D-12)”.

SAMPLE

ACTIVE CONTROL INSPECTION (ISC RPM CONTROL)

Check 1

1) Set up the SDS tool. (Refer to the SDS operation manual for further details.)
2) Check that the engine is running.
3) Click the “Active control”.
4) Click the “ISC rpm control” (1).

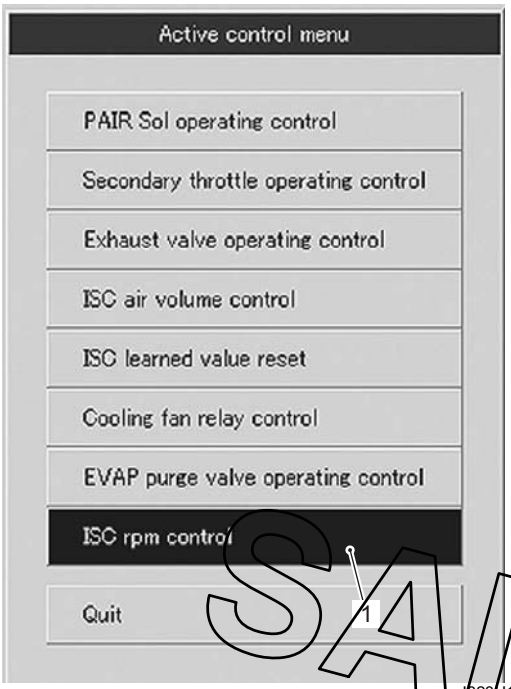

I823H1110191-02

5) Check that the “Spec” (2) is idle speed 1 150 ± 100 rpm.
6) Check that the “Desired idle speed” (3) is within the specified idle rpm.

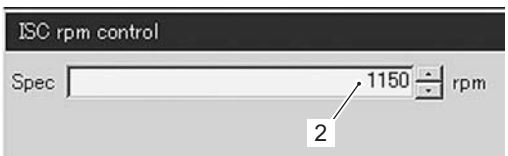

I823H1110192-02

Item	Value	Unit	
Engine speed	1178	rpm	
Desired idle speed	1155	rpm	
ISC valve position	58	step	
Throttle position	28.4	°	

3

I823H1110193-03

Check 2

1) Click the button (4) and decrease the “Spec” (2) to 1 050 rpm slowly.
2) Check that the “Desired idle speed” (3) is nearly equal to the “Spec” (2). At the same time, check that the number of steps (5) in the ISC valve position decreases.
3) Click the button (6) and increase the “Spec” (2) slowly.
4) Check that the “Desired idle speed” (3) is nearly equal to the “Spec” (2). Also, check that the number of steps (5) in the ISC valve position increases.

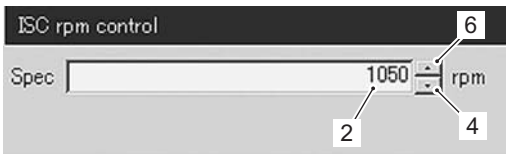

I823H1110194-03

Item	Value	Unit	
Engine speed	1059	rpm	
Desired idle speed	1054	rpm	
ISC valve position	48	step	
Throttle position	28.4	°	

3

5

I823H1110196-03

SAMPLE

Check 3

1) Click the button (6) and increase the “Spec” (2) to 1 500 rpm slowly.
2) Check that the “Desired idle speed” (3) is nearly equal to the “Spec” (2). Also, check that the number of steps (5) in the ISC valve position increases.

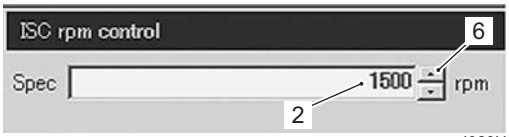

I823H1110197-03

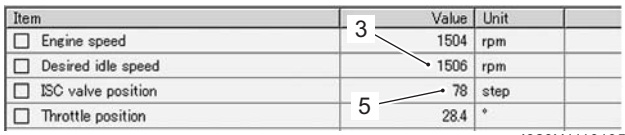

I823H1110195-03

Check 4

1) Click the button (6) and increase the “Spec” (2) to 1 900 rpm.
2) Check that the “Desired idle speed” (3) is approx. 1 900 rpm.
3) Check that the “Engine speed” (7) is close to 1 900 rpm.

NOTE

Be careful not to increase the “Spec” to 2 000 rpm, or the “Engine speed” may reach the upper limit.

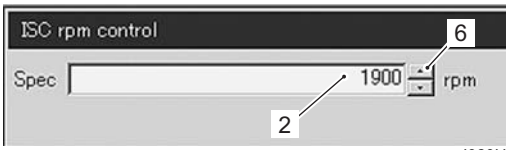

I823H1110198-02

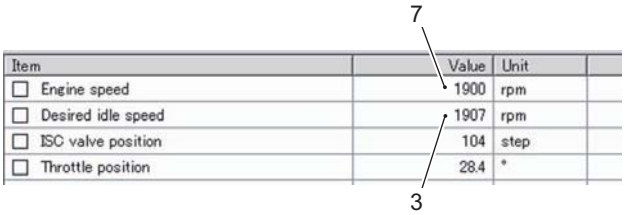

I823H1110199-02

If the ISC valve does not function properly, inspect the ISC valve or replace the ISC valve. Refer to “DTC “C40” (P0505 / P0506 / P0507): ISC Valve Circuit Malfunction (Page 1A-94)” or “Throttle Body Disassembly and Assembly in Section 1D (Page 1D-12)”.

SAMPLE

DTC “C41” (P0230-H/L): FP Relay Circuit Malfunction

B823H11104023

Detected Condition and Possible Cause

Detected Condition			Possible Cause
C41		No voltage is applied to fuel pump.	• Fuel pump relay circuit open or short. • Fuel pump relay malfunction. • Fuel pump relay switch circuit is shorted to power source. • Faulty pump relay (switch side). • Fuel pump relay coil circuit open or short. • Faulty pump relay (coil side).
P0230	H	Voltage is applied to fuel pump although fuel pump relay is turned OFF.	
	L	No voltage is applied to fuel pump although fuel pump relay is turned ON.	

Wiring Diagram

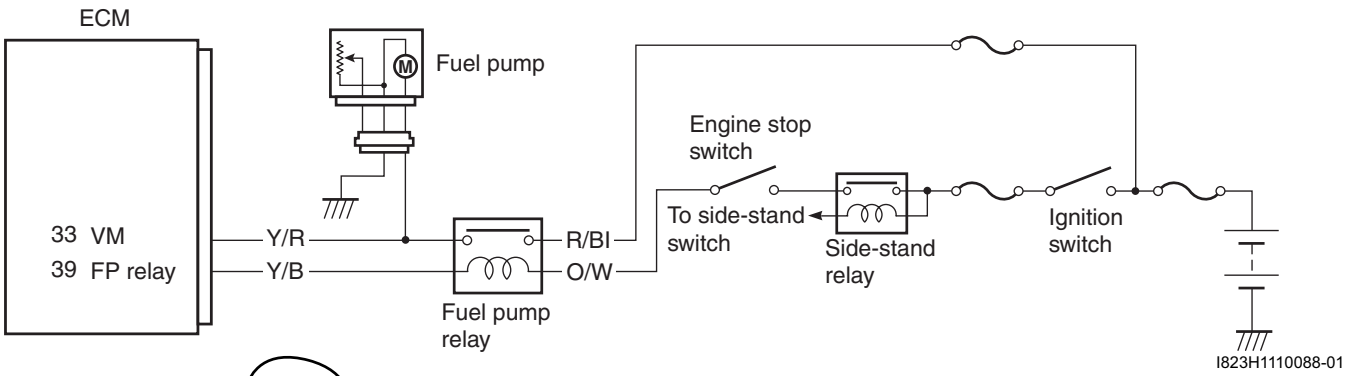

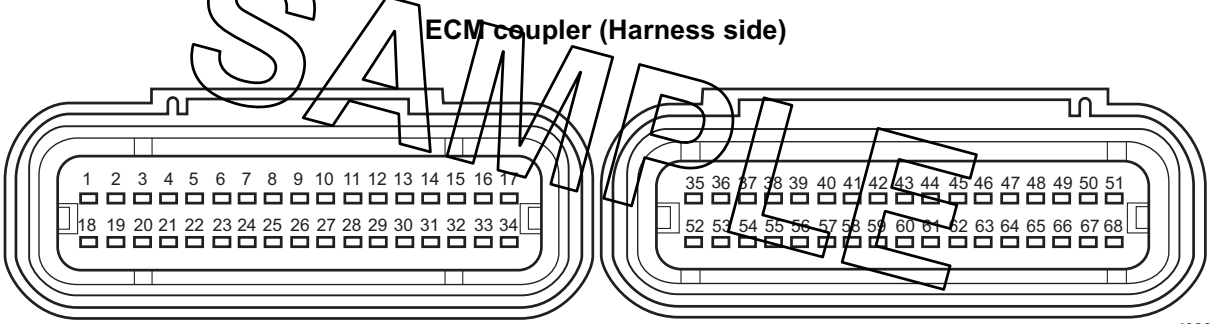

SAMPLE

Troubleshooting

⚠ CAUTION

When using the multi-circuit tester, do not strongly touch the terminal of the ECM coupler with a needle pointed tester probe to prevent the terminal damage or terminal bend.

NOTE

After repairing the trouble, clear the DTC using SDS tool. Refer to “Use of SDS Diagnosis Reset Procedures (Page 1A-14)”.

C41 (Use of mode select switch)

Step	Action	Yes	No
1	1) Turn the ignition switch OFF. 2) Lift and support the fuel tank. Refer to “Fuel Tank Removal and Installation in Section 1G (Page 1G-10)”. 3) Check the FP relay coupler (1) for loose or poor contacts. If OK, then check the FP relay. Refer to “Fuel Pump Relay Inspection in Section 1G (Page 1G-7)”. 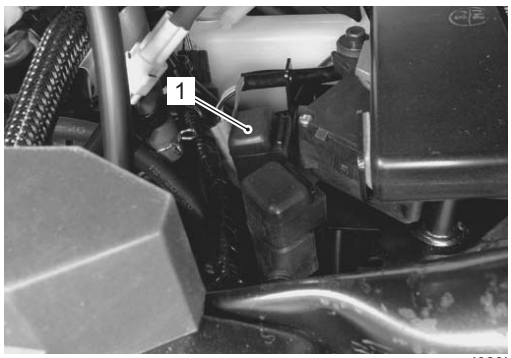 I823H1110149-01 *Is the FP relay OK?*	• ECM power input signal malfunction. Refer to “DTC “C41” (P2505): ECM Power Input Signal Malfunction (Page 1A-102)”. • Y/B or O/W wire open or short or poor “39” connection. • Y/R or R/Bl wire open, shorted or poor “33” connection. • If wire and connection are OK, intermittent trouble or faulty ECM. • Recheck each terminal and wire harness for open circuit and poor connection. • Replace the ECM with a known good one, and inspect it again. Refer to “ECM Removal and Installation in Section 1C (Page 1C-2)”.	Replace the FP relay with a new one.

SAMPLE

P0230-H (Use of SDS)

Step	Action	Yes	No
1	1) Turn the ignition switch OFF. 2) Lift and support the fuel tank. Refer to “Fuel Tank Removal and Installation in Section 1G (Page 1G-10)”. 3) Check the FP relay coupler (1) for loose or poor contacts. If OK, then check the FP relay. Refer to “Fuel Pump Relay Inspection in Section 1G (Page 1G-7)”. 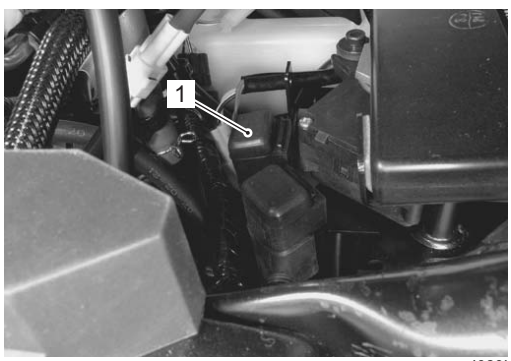 I823H1110149-01 *Is the FP relay OK?*	• Y/B wire shorted to power source. • Y/B wire shorted to the ground. • If wire and connection are OK, intermittent trouble or faulty ECM. • Recheck each terminal and wire harness for open circuit and poor connection. • Replace the ECM with a known good one, and inspect it again. Refer to “ECM Removal and Installation in Section 1C (Page 1C-2)”.	Replace the FP relay with a new one.

P0230-L (Use of SDS)

Step	Action	Yes	No
1	1) Turn the ignition switch OFF. 2) Lift and support the fuel tank. Refer to “Fuel Tank Removal and Installation in Section 1G (Page 1G-10)”. 3) Check the FP relay coupler (1) for loose or poor contacts. If OK, then check the FP relay. Refer to “Fuel Pump Relay Inspection in Section 1G (Page 1G-7)”. 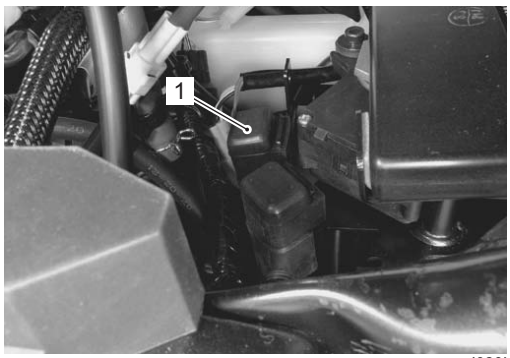 I823H1110149-01 *Is the FP relay OK?*	• Y/B wire open or poor “39” connection. • O/W wire open or shorted to the ground. • R/Bl or Y/R wire open or shorted to the ground, or poor “33” connection. • If wire and connection are OK, intermittent trouble of faulty ECM. • Recheck each terminal and wire harness for open circuit and poor connection. • Replace the ECM with a known good one, and inspect it again. Refer to “ECM Removal and Installation in Section 1C (Page 1C-2)”.	Replace the FP relay with a new one.

SAMPLE

DTC “C41” (P2505): ECM Power Input Signal Malfunction

B823H11104024

Detected Condition and Possible Cause

Detected Condition		Possible Cause
C41/P2505	No voltage is applied to the ECM.	• Lead wire/coupler connection of ECM terminal to fuel fuse. • Fuel fuse.

Wiring Diagram

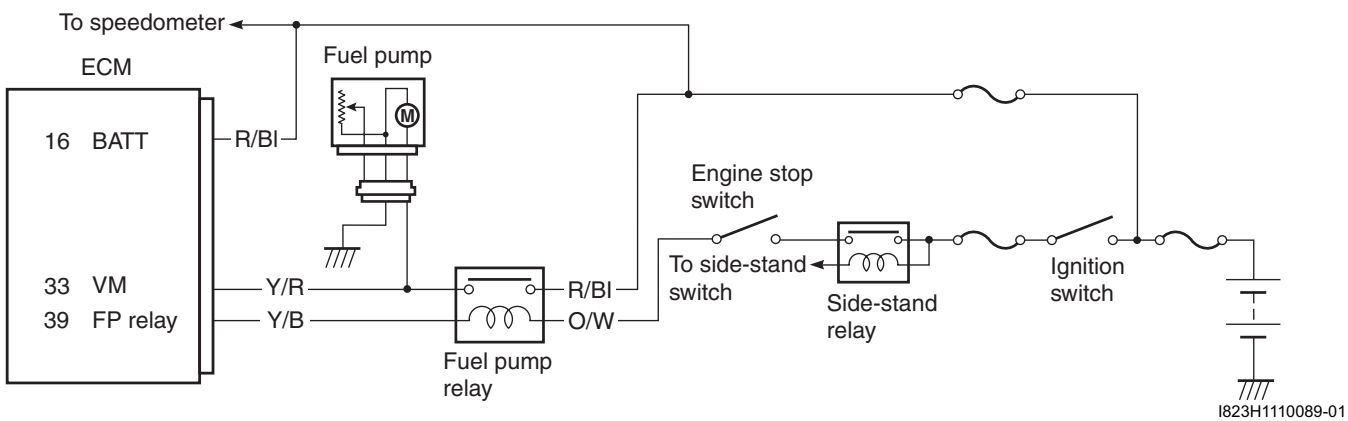

ECM coupler (Harness side)

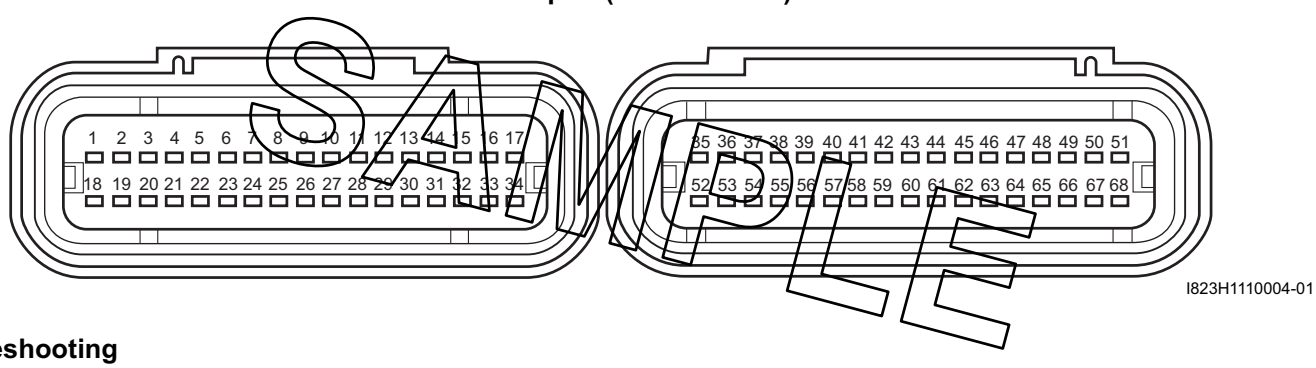

Troubleshooting

⚠ CAUTION

When using the multi-circuit tester, do not strongly touch the terminal of the ECM coupler with a needle pointed tester probe to prevent the terminal damage or terminal bend.

NOTE

After repairing the trouble, clear the DTC using SDS tool. Refer to “Use of SDS Diagnosis Reset Procedures (Page 1A-14)”.

Step	Action	Yes	No
1	1) Turn the ignition switch OFF. 2) Remove the front seat. Refer to “Exterior Parts Removal and Installation in Section 9D (Page 9D-14)”. 3) Check the ECM coupler for loose or poor contacts. If OK, then measure the ECM input voltage. I823H1110150-01 4) Disconnect the ECM coupler. 5) Insert the needle pointed probe to ECM coupler. 6) Measure the voltage between terminal “16” and ground. **Special tool** **TOOL (A): 09900–25008 (Multi-circuit tester set)** **TOOL (B): 09900–25009 (Needle pointed probe set)** **Tester knob indication** **Voltage (⎓)** **ECM input voltage** **Battery voltage** **((+) terminal: “16” – (–) terminal: Ground)** **ECM couplers (Harness side)** 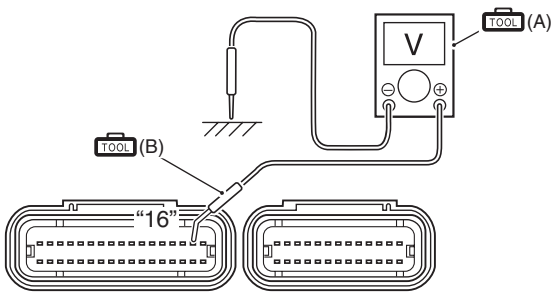 I718H1110250-01 *Is the voltage OK?*	• Fuel pump relay circuit malfunction. Refer to “DTC “C41” (P0230-H/L): FP Relay Circuit Malfunction (Page 1A-99)”. • R/Bl wire open or short or poor “16” connection. • Power source of speedometer shorted to the grand or open. • If wire and connection are OK, intermittent trouble or faulty ECM. • Recheck each terminal and wire harness for open circuit and poor connection. • Replace the ECM with a known good one, and inspect it again. Refer to “ECM Removal and Installation in Section 1C (Page 1C-2)”.	Open or short circuit in the R/Bl wire.

SAMPLE

DTC “C42” (P1650): IG Switch Circuit Malfunction

B823H11104025

Detected Condition and Possible Cause

Detected Condition	Possible Cause
Ignition switch signal is not input to the ECM.	• Ignition system circuit open or short. • ECM malfunction.
When the ID agreement is not verified. ECM does not receive communication signal from the immobilizer antenna. (For E-02, 19, 24)	• Immobilizer system malfunction. (For E-02, 19, 24)

Troubleshooting

NOTE

- **Refer to “Ignition Switch Inspection in Section 9C (Page 9C-9)” for details.**
- **After repairing the trouble, clear the DTC using SDS tool. Refer to “Use of SDS Diagnosis Reset Procedures (Page 1A-14)”.**

DTC “C44” (P0130/P0135): HO2 Sensor (HO2S) Circuit Malfunction

B823H11104026

Detected Condition and Possible Cause

Detected Condition		Possible Cause
C44/P0130	HO2 sensor output voltage is not input to ECM during engine operation and running condition. Sensor voltage > 1.0 V	• HO2 sensor circuit is open or shorted to the power source.
C44/P0135	The heater can not operate so that heater operation voltage is not supplied to the oxygen heater circuit.	• Heated circuit is open or shorted to the ground. • Battery voltage is not supply to the HO2 sensor.

SAMPLE

Wiring Diagram

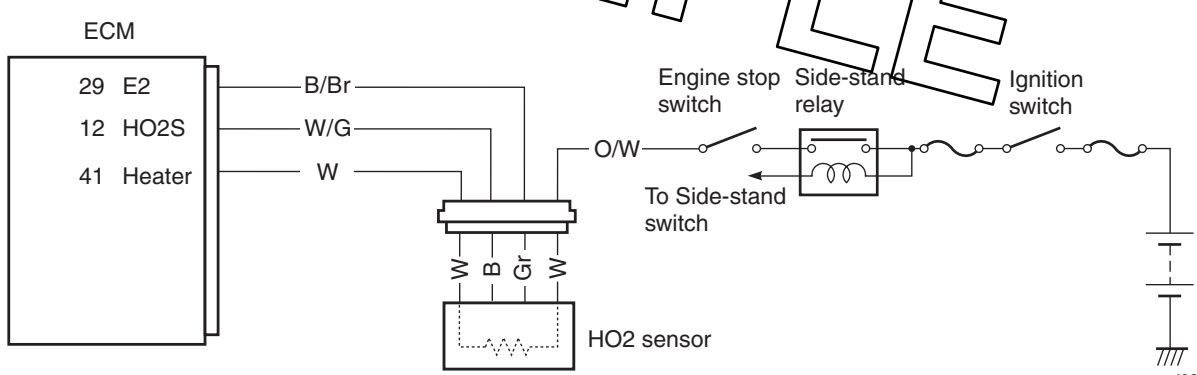

I823H1110151-02

ECM coupler (Harness side)

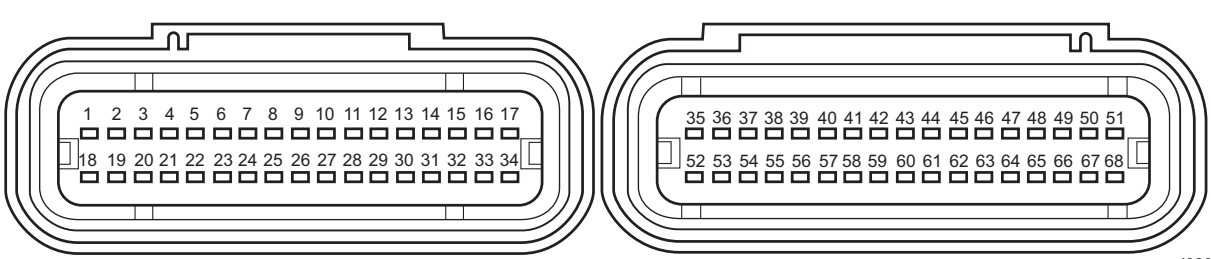

I823H1110004-01

Troubleshooting (When Indicating C44/P0130:)

⚠ CAUTION

When using the multi-circuit tester, do not strongly touch the terminal of the ECM coupler with a needle pointed tester probe to prevent the terminal damage or terminal bend.

NOTE

After repairing the trouble, clear the DTC using SDS tool. Refer to "Use of SDS Diagnosis Reset Procedures (Page 1A-14)".

Step	Action	Yes	No
1	1) Turn the ignition switch OFF. 2) Lift and support the fuel tank. Refer to "Fuel Tank Removal and Installation in Section 1G (Page 1G-10)". 3) Check the HO2 sensor coupler (1) for loose or poor contacts. If OK, then check the HO2 sensor lead wire continuity. I823H1110152-01 4) Disconnect the HO2 sensor coupler. 5) Check the continuity between the W/G wire and O/W wire. If the sound is not heard from the tester, the circuit condition is OK. **Special tool** **TOOL (A): 09900–25008 (Multi-circuit tester set)** **Tester knob indication** **Continuity test (•))))** 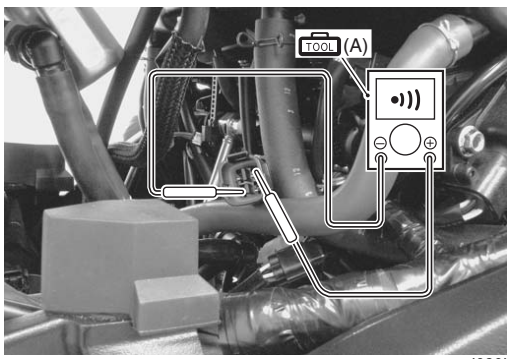 I823H1110153-01 6) Disconnect the ECM coupler. Refer to "ECM Removal and Installation in Section 1C (Page 1C-2)".	Go to Step 2.	W/G wire shorted to the power source, or W/G or B/Br wire open.

SAMPLE

Step	Action	Yes	No
1	7) Check the continuity between the W/G wire terminal “A” and terminal “12”. Also, check the continuity between the B/Br wire terminal “B” and terminal “29”. **Special tool** **TOOL (A): 09900–25008 (Multi-circuit tester set)** **TOOL (B): 09900–25009 (Needle pointed probe set)** **Tester knob indication** **Continuity (•))))** **ECM couplers (Harness side)** 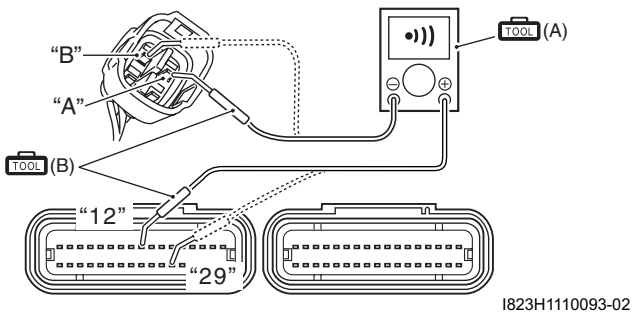 *Is the continuity OK?*	Go to Step 2.	W/G wire shorted to the power source, or W/G or B/Br wire open.

SAMPLE

Step	Action	Yes	No
2	1) Connect the ECM coupler and HO2 sensor coupler. 2) Warm up the engine enough. 3) Insert the needle pointed probes to the lead wire coupler. 4) Measure the HO2 sensor output voltage between the W/G wire and B/Br wire, in idling condition. **Special tool** **(A): 09900–25008 (Multi-circuit tester set)** **(B): 09900–25009 (Needle pointed probe set)** **Tester knob indication** **Voltage (⎓)** **HO2 sensor output voltage at idle speed** **0.3 V and less** **((+) terminal: W/G – (–) terminal: B/Br)** 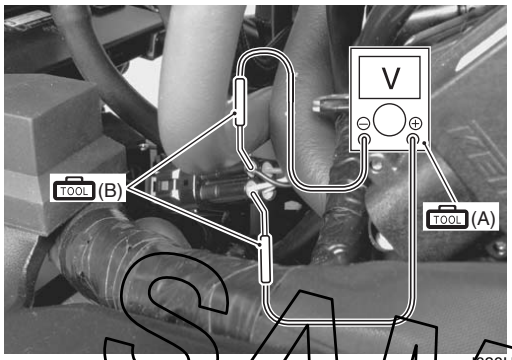 I823H1110154-01 5) If OK, then pinch the PAIR hose (1) with a proper hose clamp. 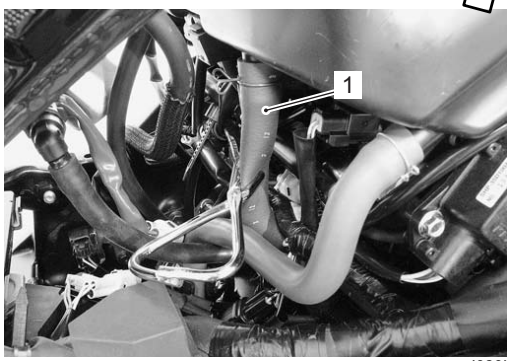 I823H1110214-01 6) Measure the HO2 sensor output voltage while holding the engine speed at 3 000 r/min. **HO2 sensor output voltage at 3 000 r/min** **0.6 V and more** **((+) terminal: W/G – (–) terminal: B/Br)** *Is the voltage OK?*	• W/G or B/Br wire open or shorted to the power source, or poor “12” or “29” connection. • If wire and connection are OK, intermittent trouble or faulty ECM. • Recheck each terminal and wire harness for open circuit and poor connection. • Replace the ECM with a known good one, and inspection it again. Refer to “ECM Removal and Installation in Section 1C (Page 1C-2)”.	Replace the HO2 sensor with a new one. Refer to “Heated Oxygen Sensor (HO2S) Removal and Installation in Section 1B (Page 1B-9)”.

SAMPLE

Troubleshooting (When Indicating C44/P0135:)

NOTE

After repairing the trouble, clear the DTC using SDS tool. Refer to "Use of SDS Diagnosis Reset Procedures (Page 1A-14)".

Step	Action	Yes	No
1	1) Turn the ignition switch OFF. 2) Lift and support the fuel tank. Refer to "Fuel Tank Removal and Installation in Section 1G (Page 1G-10)". 3) Check the HO2 sensor coupler (1) for loose or poor contacts. If OK, then measure the HO2 sensor resistance. 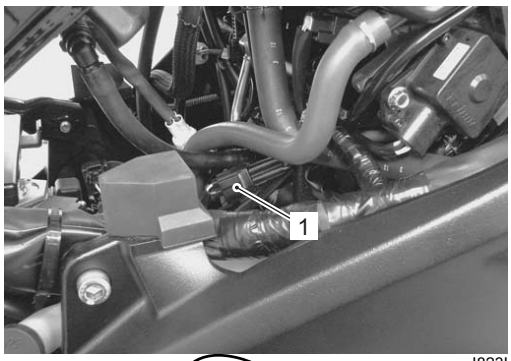 I823H1110152-01 4) Disconnect the HO2 sensor coupler and measure the resistance between terminals. **⚠ CAUTION** • **Temperature of the sensor affects resistance value largely.** • **Make sure that the sensor heater is in correct temperature.** **Special tool** **TOOL (A): 09900–25008 (Multi-circuit tester set)** **Tester knob indication** **Resistance (Ω)** **HO2 sensor heater resistance** **Approx. 8 Ω at 23 °C (73 °F)** **(W – W)** 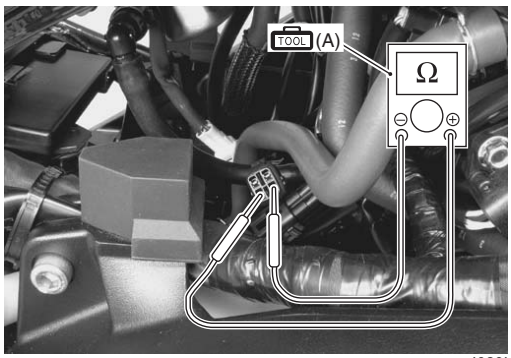 I823H1110155-01 *Is the resistance OK?*	Go to Step 2.	Replace the HO2 sensor with a new one. Refer to "HO2 Sensor Removal and Installation in Section 1C (Page 1C-10)".

SAMPLE

Step	Action	Yes	No
2	1) Connect the HO2 sensor coupler. 2) Insert the needle pointed probes to the lead wire coupler. 3) Turn the ignition switch ON and measure the heater voltage between the W wire (harness side) and ground. If the tester voltage indicates the battery voltage, it is good condition. **NOTE** **Battery voltage can be detected only before starting the engine.** **Special tool** **(A): 09900–25008 (Multi-circuit tester set)** **(B): 09900–25009 (Needle pointed probe set)** **Tester knob indication** **Voltage (⎓)** **Heater voltage** **Battery voltage** **((+) terminal: W – (–) terminal: Ground)** 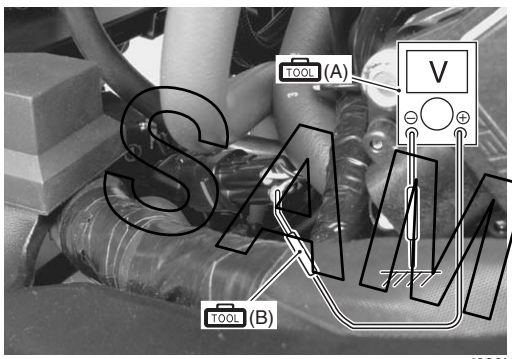 I823H1110156-01 *Is the voltage OK?*	• O/W or W wire open or shorted to the ground, or poor “41” connection. • Recheck each terminal and wire harness for open circuit and poor connection. • If wire and connection are OK, intermittent trouble or faulty ECM. • Replace the ECM with a known good one, and inspect it again. Refer to “ECM Removal and Installation in Section 1C (Page 1C-2)”.	• Open or short circuit in the W wire or O/W wire. • Loose or poor contacts on the ECM coupler or HO2 sensor coupler.

SAMPLE

DTC “C46” (P1657-H/L or P1658): EXCV Actuator Circuit Malfunction

B823H11104033

Detected Condition			Possible Cause
C46		The operation signal does not reach the EXCV actuator. EXCVA position sensor voltage low or high 0.1 V ≤ Sensor voltage < 4.9 V (without the above range) EXCVA can not operate properly.	• EXCVA maladjusted. • EXCVA circuit open or short. • EXCVA motor malfunction. • EXCVA position sensor malfunction. • EXCVA position sensor circuit shorted to VCC or ground circuit open. • EXCVA position sensor circuit open or shorted to ground or VCC circuit open. • EXCVA motor circuit open or short. • EXCVA motor malfunction.
P1657	H	Sensor voltage is higher than specified value.	
	L	Sensor voltage is lower than specified value.	
P1658		The operation signal does not reach the EXCVA motor. ECM does not receive communication signal from the EXCVA motor. EXCVA can not operate properly.	

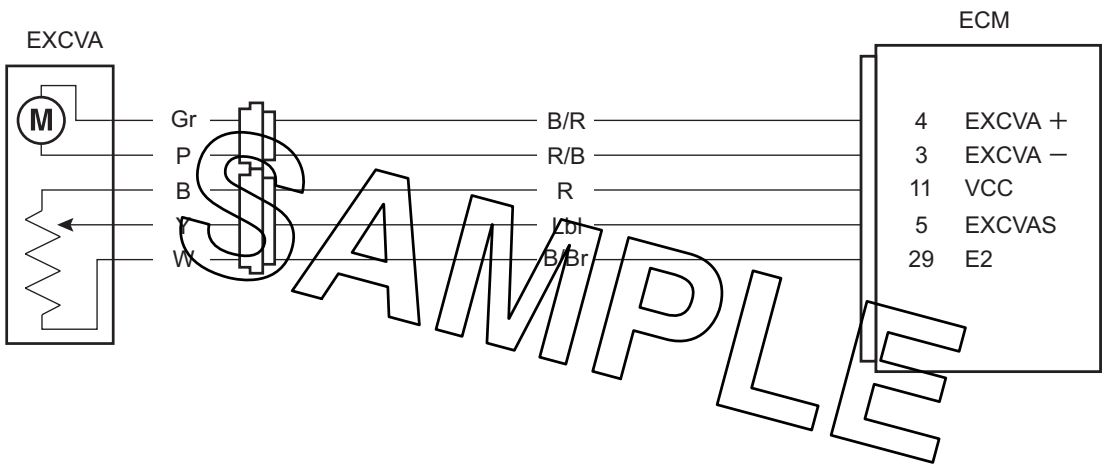

I823H1110157-05

Troubleshooting

⚠ CAUTION

When using the multi-circuit taster, do not strongly touch the terminal of the ECM coupler with a needle pointed tester probe to prevent the terminal damage or terminal bend.

NOTE

After repairing the trouble, clear the DTC using SDS tool. Refer to “Use of SDS Diagnosis Reset Procedures (Page 1A-14)”.

C46 (Use of mode select switch)

Step	Action	Yes	No
1	1) Turn the ignition switch OFF. 2) Lift and support the fuel tank. Refer to “Fuel Tank Removal and Installation in Section 1G (Page 1G-10)”. 3) Check the EXCVA position sensor coupler (1) and EXCVA motor coupler (2) for loose or poor contacts. 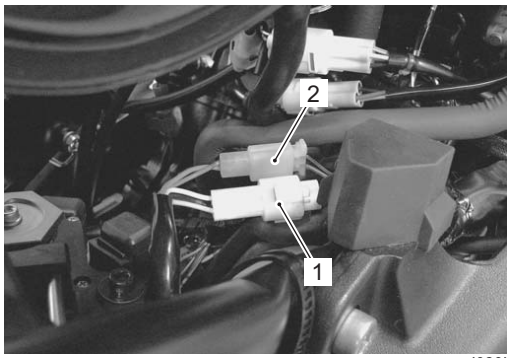 I823H1110158-01 4) Turn the ignition switch ON. 5) Check the operation of the EXCVA. (EXCVA operation order: Full close → Full open → Approx. 40% open) 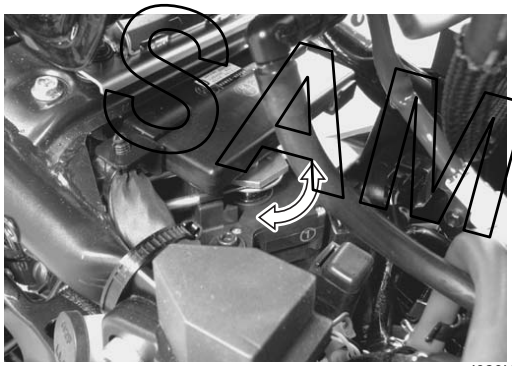 I823H1110159-01 *Is the operation OK?*	Go to Step 2.	Go to Step 6.

SAMPLE

P1657-H (Use of SDS)

Step	Action	Yes	No
1	1) Turn the ignition switch OFF. 2) Lift and support the fuel tank. Refer to “Fuel Tank Removal and Installation in Section 1G (Page 1G-10)”. 3) Check the EXCVA position sensor coupler (1) for loose or poor contacts. If OK, then check the EXCVA position sensor lead wire continuity. 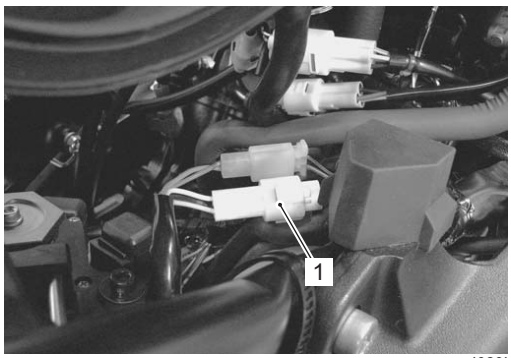 I823H1110160-01 4) Disconnect the EXCVA position sensor coupler. 5) Check the continuity between R wire and Lbl wire. If the sound is not heard from the tester, the circuit condition is OK. **Special tool** **TOOL (A): 09900–25008 (Multi-circuit tester set)** **Tester knob indication** **Continuity (•))))** 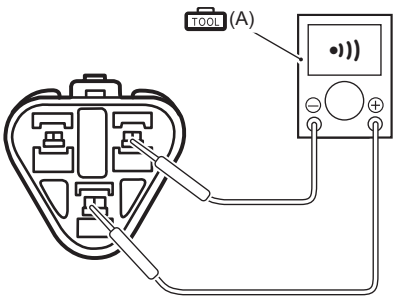 I823H1110170-01 6) Disconnect the ECM coupler. 7) Check the continuity between Lbl wire and terminal “5”.	Go to Step 4.	Y wire shorted to VCC, or B/Br wire open.

SAMPLE

Step	Action	Yes	No
1	8) Check the continuity between Lbl wire and terminal “5”. 9) Also, check the continuity between B/Br wire and terminal “29”. **Special tool** **TOOL : 09900–25008 (Multi-circuit tester set)** **TOOL : 09900–25009 (Needle pointed probe set)** **Tester knob indication** **Continuity (•))))** **EXCVA lead wire continuity** **Continuity (•))))** **ECM couplers (Harness side)** 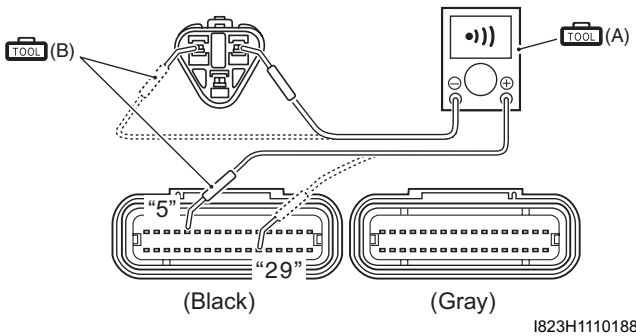 *Is the continuity OK?*	Go to Step 4.	Lbl wire shorted to VCC, or B/Br wire open.

SAMPLE

P1657-L (Use of SDS)

Step	Action	Yes	No
1	1) Turn the ignition switch OFF. 2) Lift and support the fuel tank. Refer to “Fuel Tank Removal and Installation in Section 1G (Page 1G-10)”. 3) Check the EXCVA position sensor coupler (1) for loose or poor contacts. If OK, then check the EXCVA position sensor lead wire continuity. 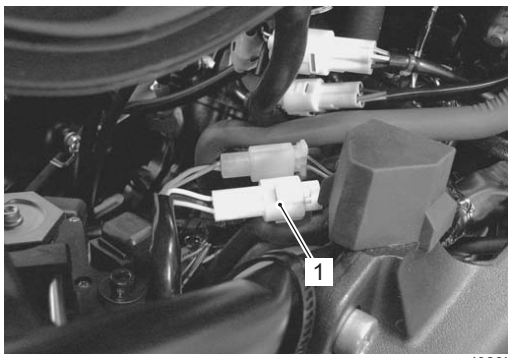 I823H1110160-01 4) Disconnect the EXCVA position sensor coupler. 5) Check the continuity between Lbl wire and ground. 6) Also, check the continuity between Lbl wire and B/Br wire. If the sound is not heard from the tester, the circuit condition is OK. **Special tool** **(A): 09900–25008 (Multi-circuit tester set)** **Tester knob indication** **Voltage (•))))** 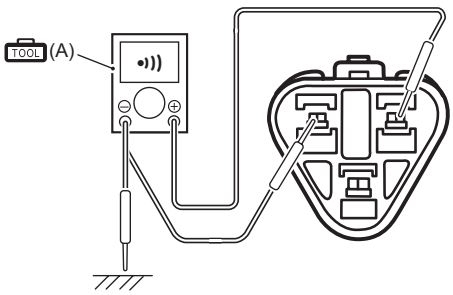 I823H1110171-02 7) Disconnect the ECM coupler. 8) Check the continuity between Lbl wire and terminal “5”.	Go to Step 2 and go to Step 4.	R or Lbl wire open, or Lbl wire shorted to ground.

SAMPLE

Step	Action	Yes	No
1	9) Also, check the continuity between R wire and terminal "11". **Special tool** **(A): 09900–25008 (Multi-circuit tester set)** **(B): 09900–25009 (Needle pointed probe set)** **Tester knob indication** **Continuity (•))))** **EXCVA lead wire continuity** **Continuity (•))))** **ECM couplers (Harness side)** 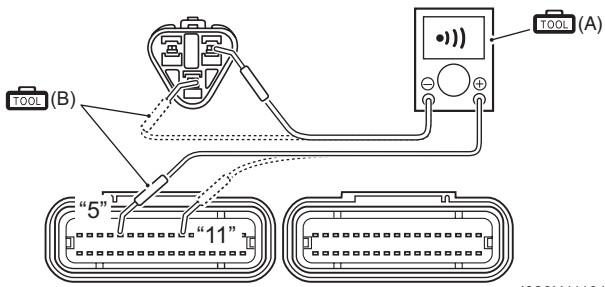 I823H1110189-01 *Is the continuity OK?*	Go to Step 2 and go to Step 4.	R or Y wire open, or Y wire shorted to ground.

P1658 (Use of SDS)

Step	Action	Yes	No
1	1) Turn the ignition switch OFF. 2) Lift and support the fuel tank. Refer to "Fuel Tank Removal and Installation in Section 1G (Page 1G-10)". 3) Check the EXCVA motor coupler (1) for loose or poor contacts. 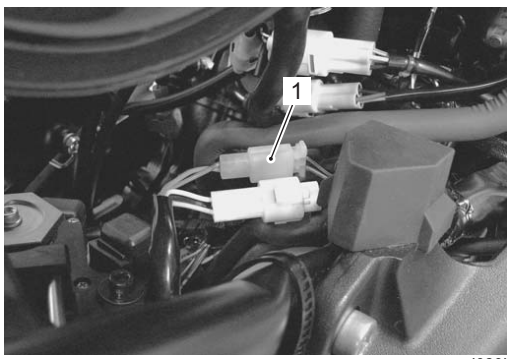 I823H1110168-01 *Is the contacting OK?*	Go to Step 6.	Loose or poor contacts on the EXCV motor coupler.

SAMPLE

Step	Action	Yes	No
2	1) Disconnect the EXCVA position sensor coupler (1). 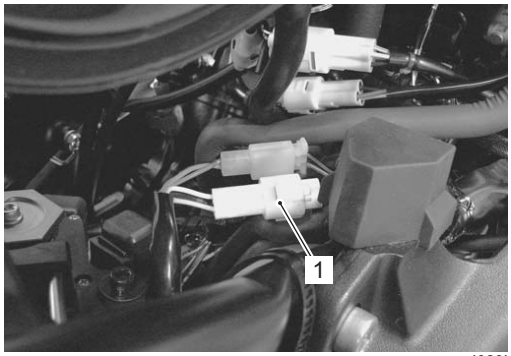 I823H1110160-01 2) Turn the ignition switch ON. 3) Measure the voltage between the R wire and ground. 4) If OK, then measure the voltage between the R wire and B/Br wire. **Special tool** **TOOL (A): 09900–25008 (Multi-circuit tester set)** **Tester knob indication** **Voltage (⎓)** **EXCVA position sensor input voltage** **4.5 – 5.5 V** **((+) terminal: R – (–) terminal: Ground)** **((+) terminal: R – (–) terminal: B/Br)** 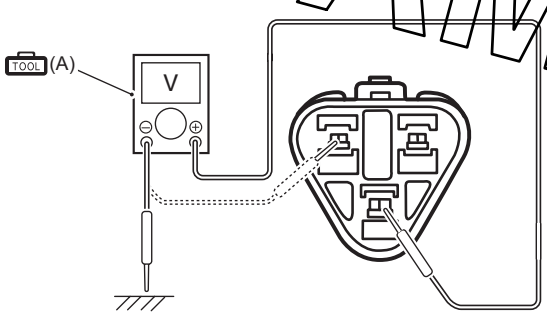 I823H1110161-02 *Is the voltage OK?*	Go to Step 3.	• Loose or poor contacts on the ECM coupler (terminal “11” or “29”). • Open or short circuit in the R or B/Br wire.

SAMPLE

Step	Action	Yes	No
3	1) Turn the ignition switch OFF. 2) Check the continuity between Y wire and ground. **<u>EXCVA position sensor continuity</u>** ∞ Ω **(Infinity)** 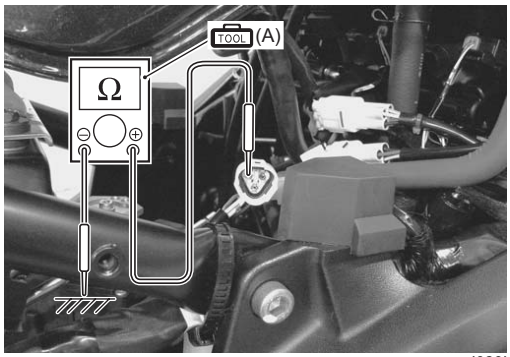 I823H1110162-01 3) If OK, then measure the EXCVA position sensor resistance. 4) Connect the EXCVA position sensor coupler and set the EXCVA to adjustment position. Refer to “EXCV Cable Removal and Installation in Section 1K (Page 1K-5)”. 5) Disconnect the EXCVA position sensor coupler and measure the resistance (between Y and W wires). **Special tool** **TOOL (A): 09900–25008 (Multi-circuit tester set)** **<u>Tester knob indication</u>** **Resistance (Ω)** **<u>EXCVA position sensor resistance at adjustment position</u>** **Approx. 3.1 kΩ** **((+) Y – (–) W)** 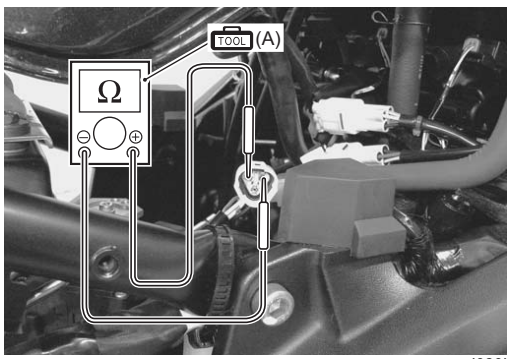 I823H1110163-01 *Is the resistance OK?*	Go to Step 4.	Replace the EXCVA with a new one.

SAMPLE

Step	Action	Yes	No
4	1) Turn the ignition switch OFF. 2) Connect the EXCVA position sensor coupler (1). 3) Disconnect the EXCVA motor coupler (2). 4) Measure the EXCVA position sensor output voltage at EXCV fully closed position and fully opened position. To set the EXCV to fully closed position, apply 12 V to the terminals as follows. Positive wire – P wire terminal Negative wire – Gr wire terminal 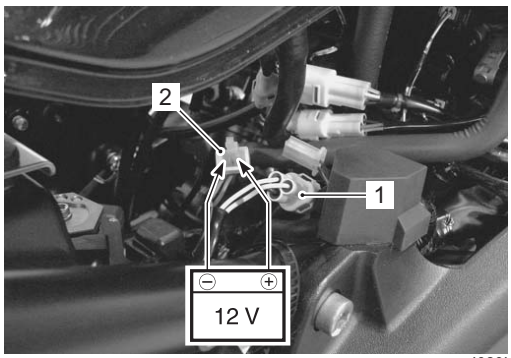 I823H1110164-01 5) Insert the needle pointed probes to the back side of the EXCVA position sensor coupler ((+) Y – (–) W). 6) Turn the ignition switch ON. 7) Measure the EXCVA position sensor output voltage at EXCV fully closed position. **Special tool** **TOOL (A): 09900–25008 (Multi-circuit tester set)** **TOOL (B): 09900–25009 (Needle pointed probe set)** **<u>Tester knob indication</u>** **Voltage (⎓)** **<u>EXCVA position sensor output voltage</u>** **EXCV is fully closed: 0.45 – 1.4 V** **((+) Y – (–) W)** 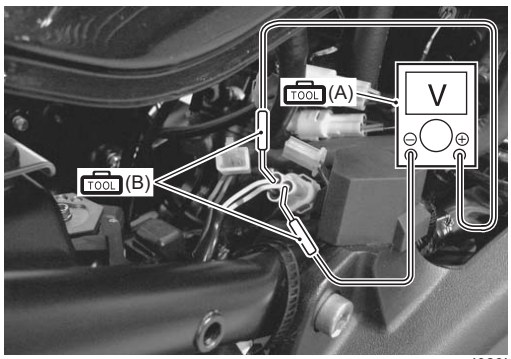 I823H1110165-02	Replace the ECM with a known good one, and inspect it again.	Go to Step 5.

SAMPLE

Step	Action	Yes	No
4	8) Then, to set the EXCV to fully opened position, apply 12 V to the terminals oppositely. Positive wire – Gr wire terminal Negative wire – P wire terminal 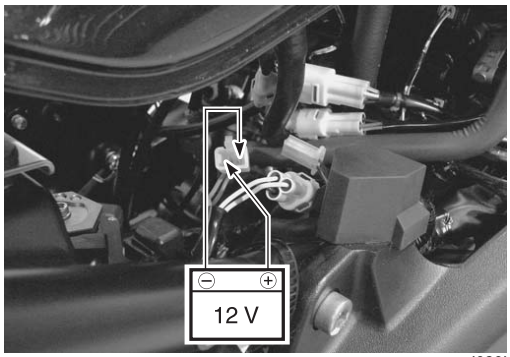 I823H1110166-01 9) Measure the EXCVA position sensor output voltage at EXCV fully opened position. **Special tool** **TOOL (A): 09900–25008 (Multi-circuit tester set)** **TOOL (B): 09900–25009 (Needle pointed probe set)** **Tester knob indication** **Voltage (⎓)** **EXCVA position sensor output voltage** **EXCV is fully opened: 3.6 – 4.55 V** **((+) Y – (–) W)** 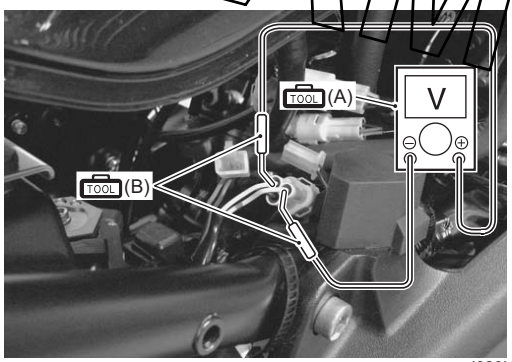 I823H1110165-02 *Is the voltage OK?*	Replace the ECM with a known good one, and inspect it again.	Go to Step 5.

SAMPLE

Step	Action	Yes	No
5	1) If the EXCVA position sensor output voltage is 0.45 V and less at EXCV fully closed position, adjust the output voltage to the specified value by adjusting the length of EXCV cable No. 1. Refer to “EXCV Cable Removal and Installation in Section 1K (Page 1K-5)”. 2) Repeat the procedure in Step 4 until the output voltage is set within the specified value. (If C46/P1657 code is indicated after adjusting the voltage, increase the voltage to 0.4 V). **⚠ CAUTION** • **Adjusting the cable with the EXCV fully opened or fully closed can damage the EXCVA. Be sure to adjust the cable with the EXCV set in the adjustment position. Refer to “EXCV Cable Removal and Installation in Section 1K (Page 1K-5)”.** • **Do not turn the EXCVA pulley using the wrench.** 3) If the EXCVA position sensor output voltage is 4.55 V and more at EXCV fully opened position, adjust the output voltage to the specified value by adjusting the EXCV cable No. 2. Refer to “EXCV Cable Removal and Installation in Section 1K (Page 1K-5)”. Repeat the procedure in Step 4 until the output voltage is set within the specified value. **EXCVA position sensor output voltage** **EXCV is fully closed: 0.45 ≤ Output voltage ≤ 1.4** **EXCV is fully opened: 3.6 ≤ Output voltage ≤ 4.55** *Is the voltage OK?*	Replace the ECM with a known good one, and inspect it again.	Replace the EXCVA with a new one.

SAMPLE

Step	Action	Yes	No
6	1) Turn the ignition switch OFF. 2) Disconnect the EXCVA motor coupler (1). 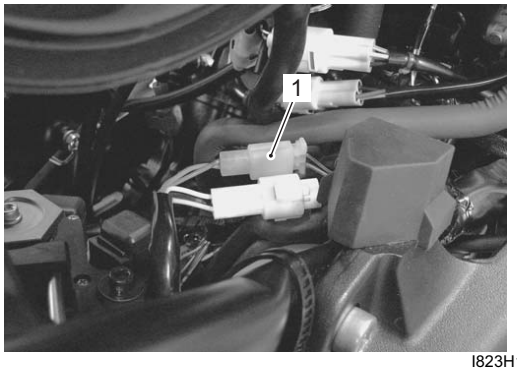 I823H1110168-01 3) Apply 12 V to the terminals and check the operation of EXCVA. I823H1110169-01 4) Then, switch the wires supplied 12 V and check the operation of EXCVA. (Check the operation of EXCVA in both way.) 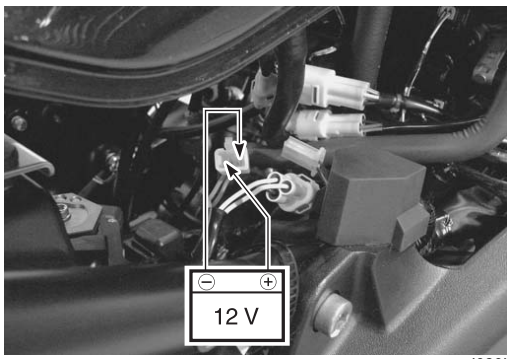 I823H1110166-01 *Is the voltage OK?*	• Loose or poor contacts on the EXCVA or ECM coupler (terminal “4” or “3”). • Open or short circuit in the B/R wire or R/B wire. • If wire and connection are OK, intermittent trouble or faulty ECM. • Recheck each terminal and wire harness for open circuit and poor connection. • Replace the ECM with a known good one, and inspect it again.	• Replace the EXCVA with a new one. • Inspect that the EXCV and two cables move smoothly.

SAMPLE

Active Control Inspection

1) Set up the SDS tool. (Refer to the SDS operation manual for further details.)
2) Turn the ignition switch ON.
3) Click ”EXhaust valve operating control” (1).

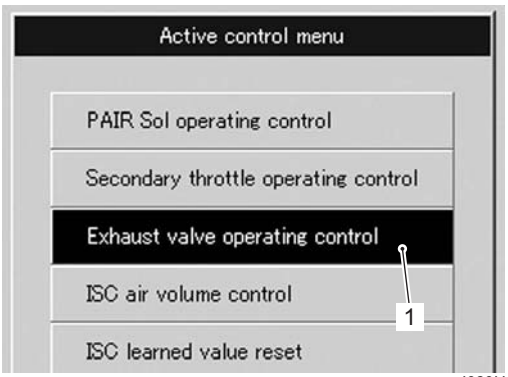

I823H1110202-02

4) Click each button (2).
   At this time, if an operation sound is heard from the EXCVA, the function is normal.

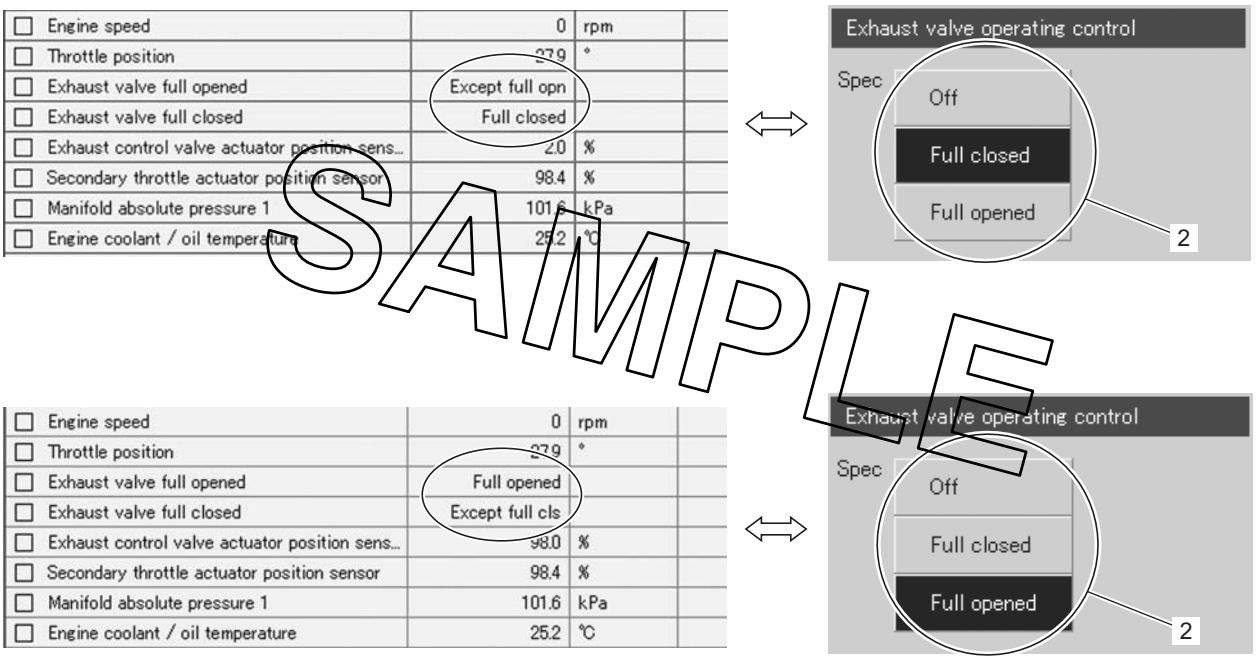

SAMPLE

I823H1110203-03

DTC “C49” (P1656): PAIR Control Solenoid Valve Circuit Malfunction

B823H11104027

Detected Condition and Possible Cause

Detected Condition	Possible Cause
PAIR control solenoid valve voltage is not input to ECM.	• PAIR control solenoid valve circuit open or short. • PAIR control solenoid valve malfunction. • ECM malfunction.

Wiring Diagram

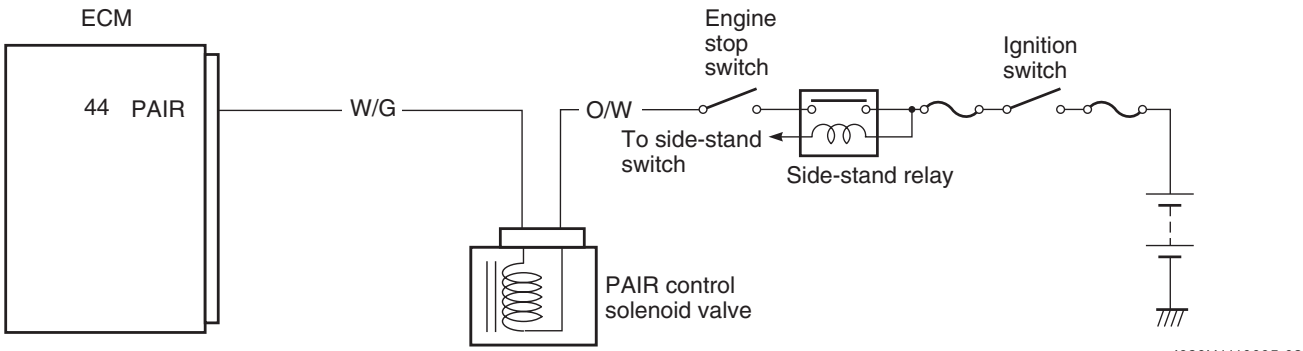

I823H1110095-02

ECM coupler (Harness side)

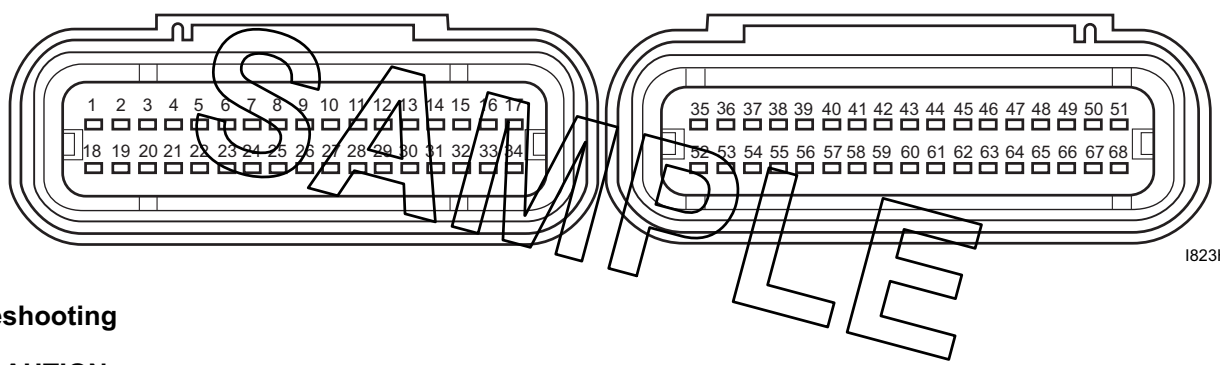

I823H1110004-01

SAMPLE

Troubleshooting

⚠ CAUTION

When using the multi-circuit tester, do not strongly touch the terminal of the ECM coupler with a needle pointed tester probe to prevent the terminal damage or terminal bend.

NOTE

After repairing the trouble, clear the DTC using SDS tool. Refer to “Use of SDS Diagnosis Reset Procedures (Page 1A-14)”.

Step	Action	Yes	No
1	1) Turn the ignition switch OFF. 2) Remove the air cleaner box. Refer to “Air Cleaner Box Removal and Installation in Section 1D (Page 1D-6)”. 3) Check the PAIR control solenoid valve coupler (1) for loose or poor contacts. If OK, then measure the PAIR control solenoid valve resistance. 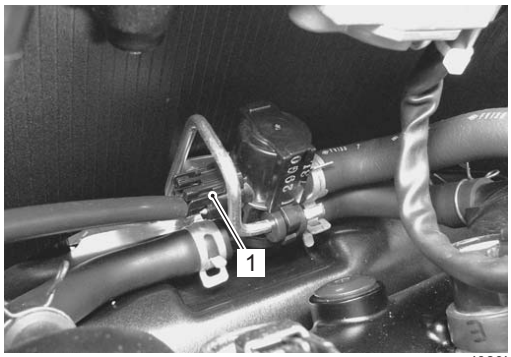 I823H1110174-01 4) Disconnect the PAIR control solenoid valve coupler. 5) Measure the resistance between terminals. **Special tool** **TOOL (A): 09900–25008 (Multi-circuit tester set)** **Tester knob indication** **Resistance (Ω)** **PAIR control solenoid valve resistance** **20 – 24 Ω at 20 – 30 °C (68 – 86 °F)** **(Terminal – Terminal)** 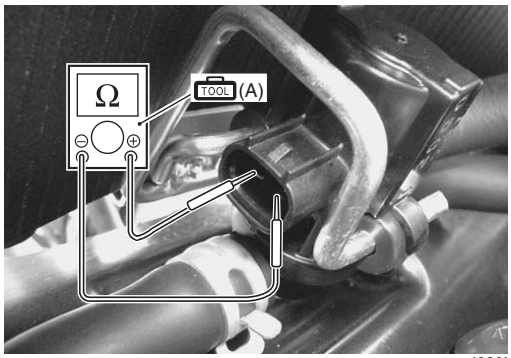 I823H1110175-01 *Is the resistance OK?*	Go to Step 2.	Replace the PAIR control solenoid with a new one. Refer to “PAIR Control Solenoid Valve Removal and Installation in Section 1B (Page 1B-11)”.

SAMPLE

Step	Action	Yes	No
2	1) Turn the ignition switch ON. 2) Measure the voltage between the O/W wire and ground. **Special tool** **TOOL (A): 09900–25008 (Multi-circuit tester set)** **Tester knob indication** **Voltage (⎓)** **PAIR control solenoid valve voltage** **Battery voltage** **((+) terminal: O/W – (–) terminal: Ground)** 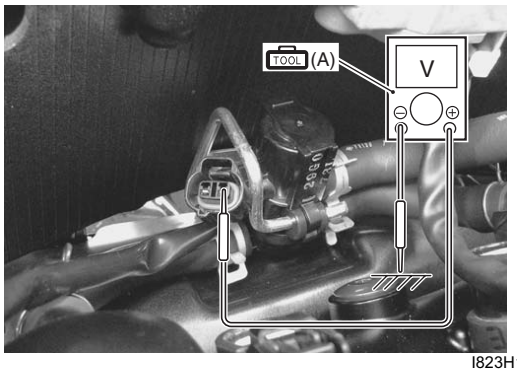 I823H1110176-01 *Is the voltage OK?*	• W/G wire open or shorted to the ground, or poor “44” connection failure. • If wire and connection are OK, intermittent trouble or faulty ECM. • Recheck each terminal and wire harness for open circuit and poor connection. • Replace the ECM with a known good one, and inspect it again. Refer to “ECM Removal and Installation in Section 1C (Page 1C-2)”.	Open or short circuit in the O/W wire.

SAMPLE

Active Control Inspection

1) Set up the SDS tool. (Refer to SDS operation manual for further details.)
2) Turn the ignition switch ON.
3) Click “PAIR Sol operating control” (1).

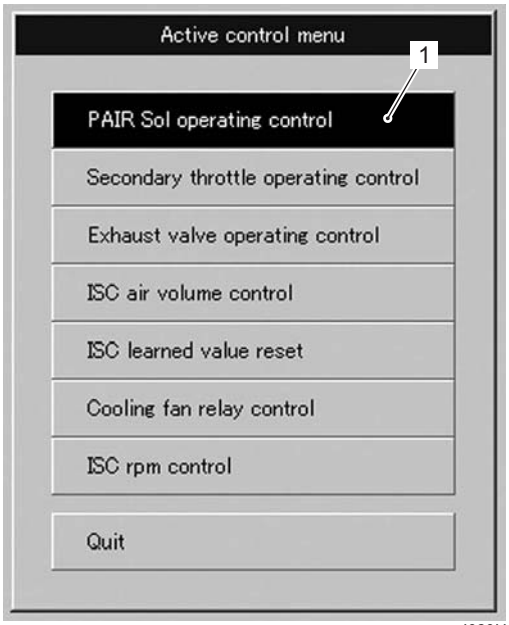

I823H1110215-01

4) Click each button (2). At this time, if an operating sound is heard from the PAIR control solenoid valve, the function is normal.

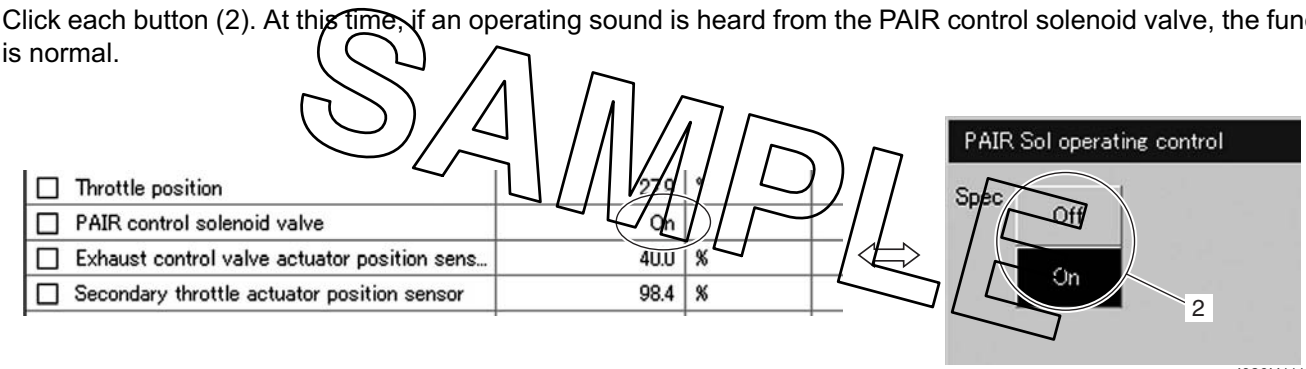

I823H1110216-01

SAMPLE

DTC “C60” (P0480): Cooling Fan Relay Circuit Malfunction

B823H11104028

Detected Condition and Possible Cause

Detected Condition	Possible Cause
Cooling fan relay signal is not input to ECM.	• Cooling fan relay circuit open or short. • ECM malfunction.

Wiring Diagram

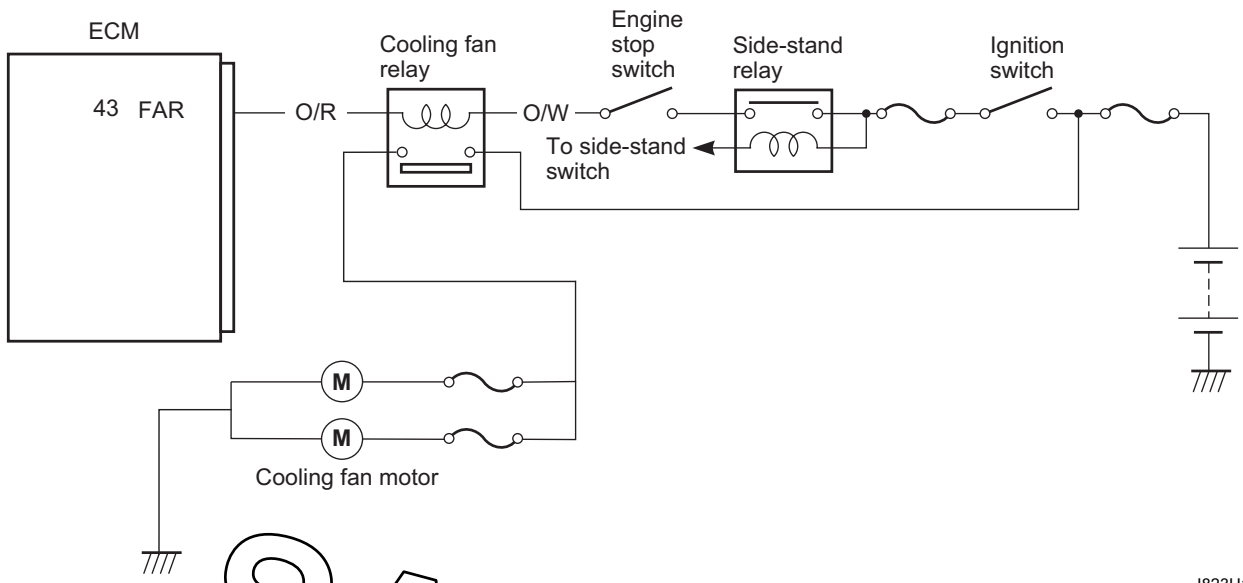

I823H1110099-05

SAMPLE

ECM coupler (Harness side)

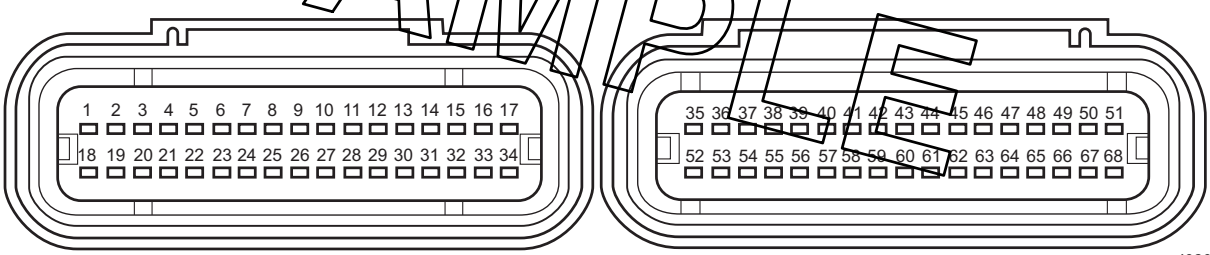

I823H1110004-01

Troubleshooting

⚠ CAUTION

When using the multi-circuit tester, do not strongly touch the terminal of the ECM coupler with a needle pointed tester probe to prevent the terminal damage or terminal bend.

NOTE

After repairing the trouble, clear the DTC using SDS tool. Refer to "Use of SDS Diagnosis Reset Procedures (Page 1A-14)".

Step	Action	Yes	No
1	1) Turn the ignition switch OFF. 2) Lift and support the fuel tank. Refer to "Fuel Tank Removal and Installation in Section 1G (Page 1G-10)". 3) Check the cooling fan relay (1) coupler for loose or poor contacts. If OK, then inspection the cooling fan relay. Refer to "Cooling Fan Inspection in Section 1F (Page 1F-9)". I823H1110177-01 *Is the cooling fan relay OK?*	• O/W and O/R wire open or shorted to the ground, or poor "43" connection. • If wire and connection are OK, intermittent trouble or faulty ECM. • Recheck each terminal and wire harness for open circuit and poor connection. • Replace the ECM with a known good one, and inspect it again. Refer to "ECM Removal and Installation in Section 1C (Page 1C-2)".	Replace the cooling fan relay with a new one.

SAMPLE

Active Control Inspection

1) Set up the SDS tool. (Refer to SDS operation manual for further details.)
2) Start the engine and run it in idling condition.
3) Click “Cooling fan relay control” (1).

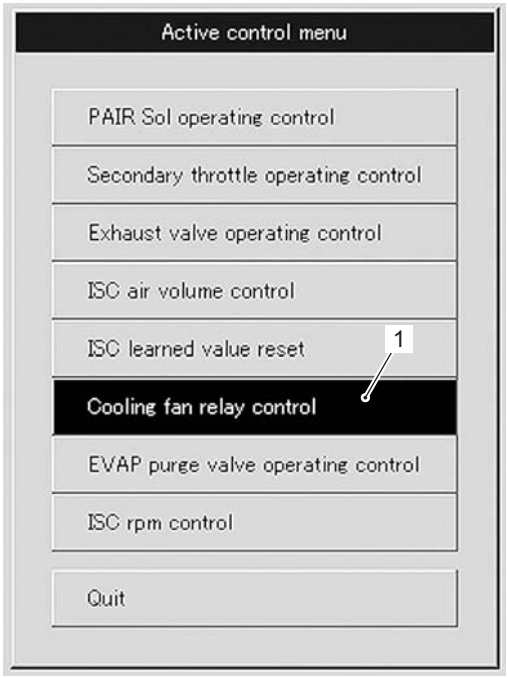

I823H1110217-01

SAMPLE

4) Click the “Operate” (2).
At this time, if an operation sound is heard from the cooling fan relay and cooling fan motors are operated, the function is normal.

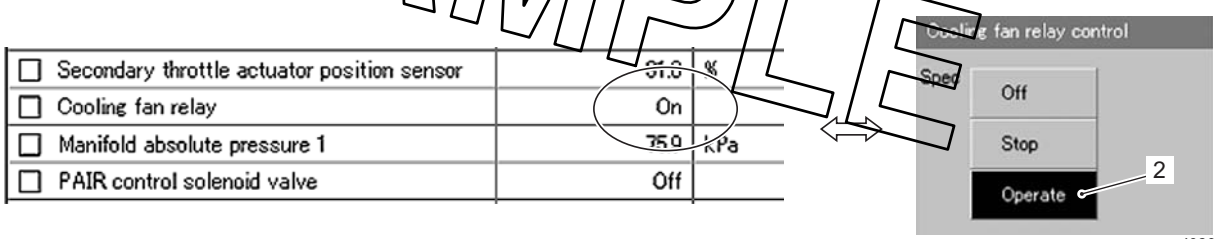

I823H1110205-03

5) Click the “Stop” (3) to check the operation properly.

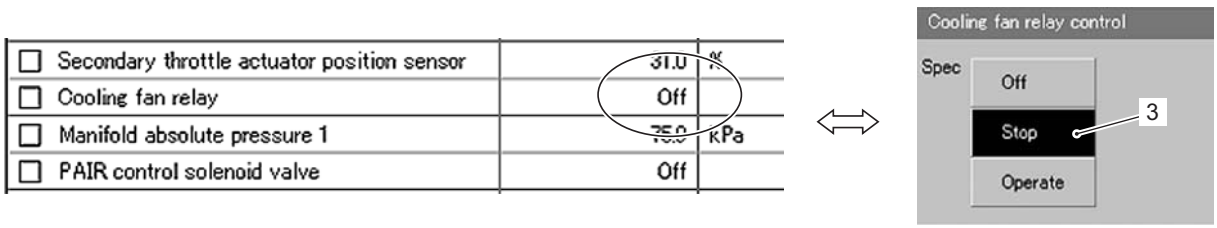

I823H1110206-03

DTC “C62” (P0443): EVAP System Purge Control Solenoid Valve Circuit Malfunction (E-33 only)

B823H11104030

Detected Condition and Possible Cause

Detected Condition	Possible Cause
EVAP system purge control valve voltage is not input to ECM.	• EVAP system purge control valve circuit open or short. • EVAP system purge control valve malfunction. • ECM malfunction.

Wiring Diagram

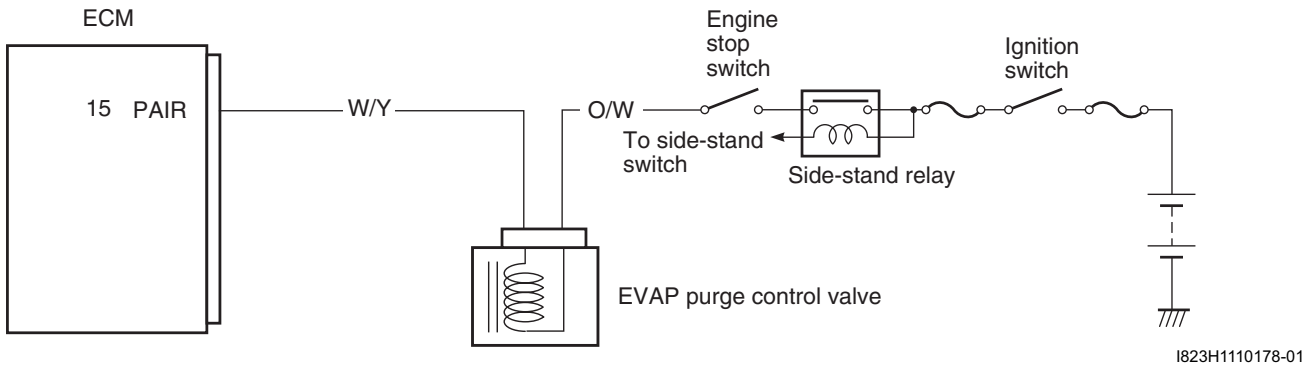

ECM coupler (Harness side)

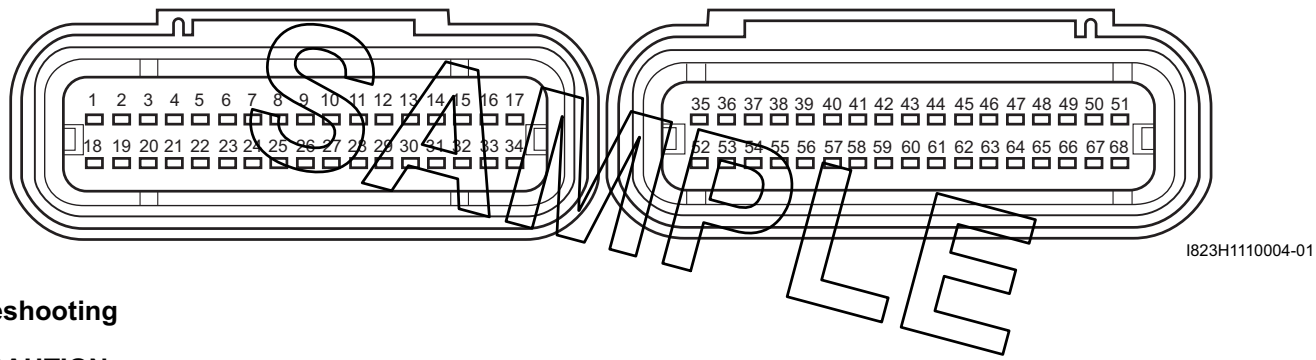

SAMPLE

Troubleshooting

⚠ CAUTION

When using the multi-circuit tester, do not strongly touch the terminal of the ECM coupler with a needle pointed tester probe to prevent the terminal damage or terminal bend.

NOTE

After repairing the trouble, clear the DTC using SDS tool. Refer to “Use of SDS Diagnosis Reset Procedures (Page 1A-14)”.

Step	Action	Yes	No
1	1) Turn the ignition switch OFF. 2) Lift and support the fuel tank. Refer to “Fuel Tank Removal and Installation in Section 1G (Page 1G-10)”. 3) Check the EVAP system purge control valve coupler (1) for loose or poor contacts. If OK, then measure the EVAP system purge control valve resistance. 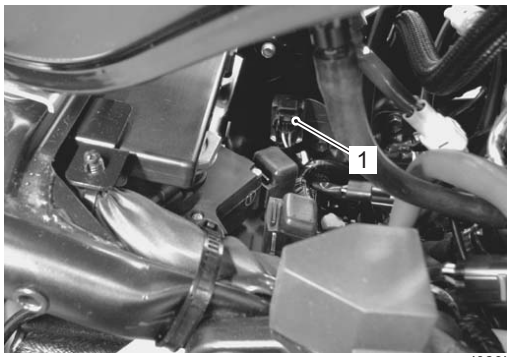 I823H1110179-01 4) Disconnect the EVAP system purge control valve coupler. 5) Measure the resistance between terminals. **Special tool** **TOOL (A): 09900-25008 (Multi-circuit tester set)** **<u>Tester knob indication</u>** **Resistance (Ω)** **<u>EVAP system purge control valve resistance</u>** **Approx. 32 Ω at 20 °C (68 °F)** **(Terminal – Terminal)** 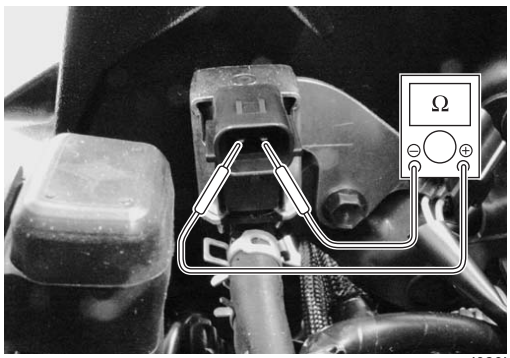 I823H1110185-01 *Is the resistance OK?*	Go to Step 2.	Replace the EVAP system purge control with a new one. Refer to “Evaporative Emission Control System Removal and Installation (Only for E-33) in Section 1B (Page 1B-14)”.

SAMPLE

Step	Action	Yes	No
2	1) Turn the ignition switch ON. 2) Measure the voltage between the O/W wire and ground. **Special tool** **TOOL (A): 09900–25008 (Multi-circuit tester set)** **Tester knob indication** **Voltage (⎓)** **EVAP system purge control valve voltage** **Battery voltage** **((+) terminal: O/W – (–) terminal: Ground)** 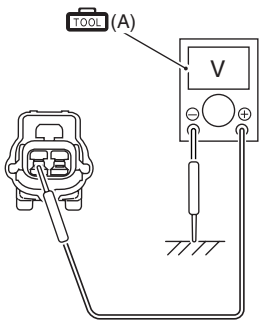 I718H2110003-01 *Is the voltage OK?*	• W/Y wire open or shorted to the ground, or poor “15” connection failure. • If wire and connection are OK, intermittent trouble or faulty ECM. • Recheck each terminal and wire harness for open circuit and poor connection. • Replace the ECM with a known good one, and inspect it again. Refer to “ECM Removal and Installation in Section 1C (Page 1C-2)”.	Open or short circuit in the O/W wire.

SAMPLE

Active Control Inspection

1) Set up the SDS tool. (Refer to SDS operation manual for further details.)
2) Turn the ignition switch ON.
3) Click “EVAP purge operating control” (1).

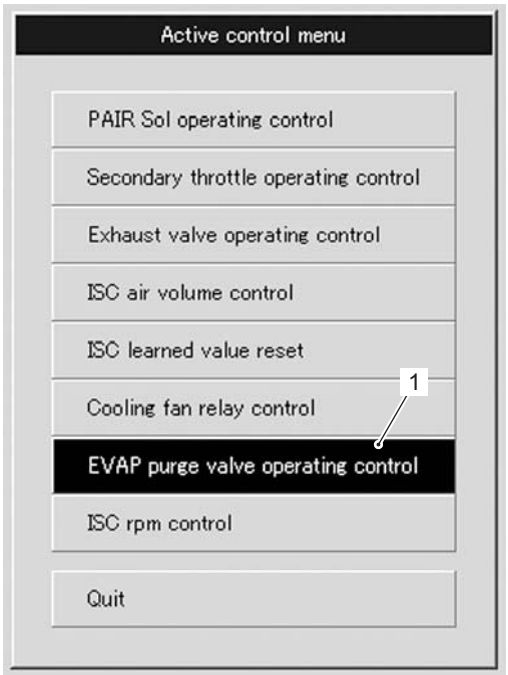

I823H1110218-01

4) Click each button (2). At this time, if an operating sound is heard from the EVAP system purge control valve, the function is normal.

SAMPLE

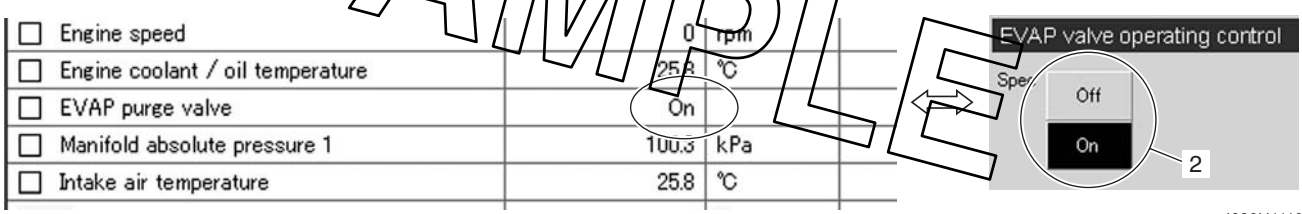

I823H1110219-01

Specifications

Service Data

B823H11107001

Injector + Fuel Pump + Fuel Pressure Regulator

Item	Specification	Note
Injector resistance	11 – 13 Ω at 20 °C (68 °F)	

FI Sensors

Item	Standard/Specification		Note
CKP sensor resistance	180 – 280 Ω		
CKP sensor peak voltage	3.0 V and more		When cranking
IAP sensor input voltage	4.5 – 5.5 V		
IAP sensor output voltage	Approx. 2.7 V at idle speed		
TP sensor input voltage	4.5 – 5.5 V		
TP sensor output voltage	Closed	Approx. 1.1 V	
	Opened	Approx. 4.3 V	
ECT sensor input voltage	4.5 – 5.5 V		
ECT sensor output voltage	0.15 – 4.85 V		
ECT sensor resistance	Approx. 2.45 kΩ at 20 °C (68 °F)		
IAT sensor input voltage	4.5 – 5.5 V		
IAT sensor output voltage	0.15 – 4.85 V		
IAT sensor resistance	Approx. 2.45 kΩ at 20 °C (68 °F)		
AP sensor input voltage	4.5 – 5.5 V		
AP sensor output voltage	Approx. 3.6 V at 100 kPa (760 mmHg)		
TO sensor resistance	16.5 – 22.3 kΩ		
TO sensor voltage	Normal	0.4 – 1.4 V	
	Leaning	3.7 – 4.4 V	When leaning 65°
GP switch voltage	0.6 V and more		From 1st to Top
Injector voltage	Battery voltage		
Ignition coil primary peak voltage	80 V and more		When cranking
HO2 sensor output voltage	0.3 V and less at idle speed		
	0.6 V and more at 3 000 r/min		
HO2 sensor heater resistance	Approx. 8 Ω at 23 °C (73 °F)		
PAIR control solenoid valve resistance	20 – 24 Ω at 20 – 30 °C (68 – 86 °F)		
STP sensor input voltage	4.5 – 5.5 V		
STP sensor output voltage	Closed	Approx. 0.5 V	
	Opened	Approx. 3.9 V	
STVA resistance	Approx. 6.5 Ω		
EXCVA position sensor input voltage	4.5 – 5.5 V		
EXCVA position sensor output voltage	Closed	0.45 – 1.4 V	
	Opened	3.6 – 4.55 V	
EXCVA position sensor resistance	Approx. 3.1 kΩ		At adjustment position
EVAP system purge control solenoid valve resistance	Approx. 32 Ω at 20 °C (68 °F)		E-33 only
ISC valve resistance	Approx. 80 Ω at 20 °C (68 °F)		

SAMPLE

Special Tools and Equipment

Special Tool

B823H11108001

09900–25008 Multi-circuit tester set ☞(Page 1A-30) / ☞(Page 1A-32) / ☞(Page 1A-33) / ☞(Page 1A-112) / ☞(Page 1A-113) / ☞(Page 1A-114) / ☞(Page 1A-115) / ☞(Page 1A-116) / ☞(Page 1A-117) / ☞(Page 1A-118) / ☞(Page 1A-33) / ☞(Page 1A-119) / ☞(Page 1A-124) / ☞(Page 1A-125) / ☞(Page 1A-131) / ☞(Page 1A-132) / ☞(Page 1A-35) / ☞(Page 1A-36) / ☞(Page 1A-37) / ☞(Page 1A-38) / ☞(Page 1A-39) / ☞(Page 1A-39) / ☞(Page 1A-40) / ☞(Page 1A-42) / ☞(Page 1A-43) / ☞(Page 1A-44) / ☞(Page 1A-45) / ☞(Page 1A-46) / ☞(Page 1A-46) / ☞(Page 1A-47) / ☞(Page 1A-49) / ☞(Page 1A-50) / ☞(Page 1A-51) / ☞(Page 1A-52) / ☞(Page 1A-52) / ☞(Page 1A-54) / ☞(Page 1A-55) / ☞(Page 1A-56) / ☞(Page 1A-57) / ☞(Page 1A-57) / ☞(Page 1A-59) / ☞(Page 1A-60) / ☞(Page 1A-61) / ☞(Page 1A-62) / ☞(Page 1A-63) / ☞(Page 1A-63) / ☞(Page 1A-64) / ☞(Page 1A-66) / ☞(Page 1A-67) / ☞(Page 1A-68) / ☞(Page 1A-69)	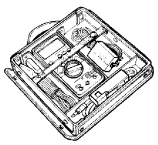 ☞(Page 1A-70) / ☞(Page 1A-71) / ☞(Page 1A-74) / ☞(Page 1A-77) / ☞(Page 1A-78) / ☞(Page 1A-79) / ☞(Page 1A-80) / ☞(Page 1A-81) / ☞(Page 1A-82) / ☞(Page 1A-82) / ☞(Page 1A-83) / ☞(Page 1A-85) / ☞(Page 1A-87) / ☞(Page 1A-88) / ☞(Page 1A-89) / ☞(Page 1A-91) / ☞(Page 1A-92) / ☞(Page 1A-93) / ☞(Page 1A-95) / ☞(Page 1A-96) / ☞(Page 1A-103) / ☞(Page 1A-105) / ☞(Page 1A-106) / ☞(Page 1A-107) / ☞(Page 1A-108) / ☞(Page 1A-109)
09900–25009 Needle pointed probe set ☞(Page 1A-113) / ☞(Page 1A-115) / ☞(Page 1A-118) / ☞(Page 1A-119) / ☞(Page 1A-37) / ☞(Page 1A-39) / ☞(Page 1A-39) / ☞(Page 1A-44) / ☞(Page 1A-46) / ☞(Page 1A-50) / ☞(Page 1A-52) / ☞(Page 1A-55) / ☞(Page 1A-57) / ☞(Page 1A-61) / ☞(Page 1A-63) / ☞(Page 1A-63) / ☞(Page 1A-68) / ☞(Page 1A-70) / ☞(Page 1A-71) / ☞(Page 1A-80) / ☞(Page 1A-82) / ☞(Page 1A-83) / ☞(Page 1A-85) / ☞(Page 1A-95) / ☞(Page 1A-103) / ☞(Page 1A-106) / ☞(Page 1A-107) / ☞(Page 1A-109)	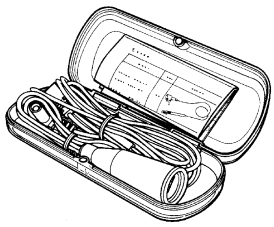

SAMPLE

09900–28630 TPS test wire harness ☞(Page 1A-47) 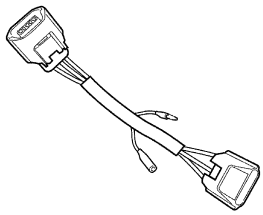	09904–41010 SDS set ☞(Page 1A-13) / ☞(Page 1A-17) 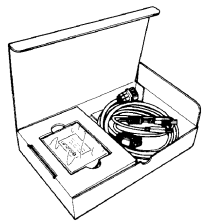
09917–47011 Vacuum pump gauge ☞(Page 1A-40) / ☞(Page 1A-64) 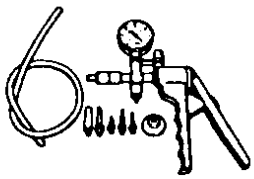	09930–82720 Mode select switch ☞(Page 1A-3) / ☞(Page 1A-12) / ☞(Page 1A-12)
99565–01010–012 CD-ROM Ver.12 ☞(Page 1A-13) / ☞(Page 1A-17) 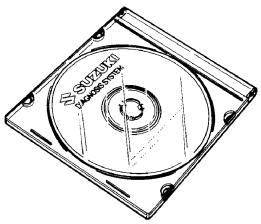	

SAMPLE

Emission Control Devices

Precautions

Precautions for Emission Control Devices

B823H11200001

Refer to “General Precautions in Section 00 (Page 00-1)”.

General Description

Fuel Injection System Description

B823H11201001

GSX1300BK motorcycles are equipped with a fuel injection system for emission level control. This fuel injection system is precision designed, manufactured and adjusted to comply with the applicable emission limits. With varying engine conditions, all of the fuel injection volumes are precisely controlled by the programmed injection maps in the ECM to reduce CO, NOX and HC. Adjusting, interfering with, improper replacement, or resetting of any of the fuel injection components may adversely affect injection performance and cause the motorcycle to exceed the exhaust emission level limits.

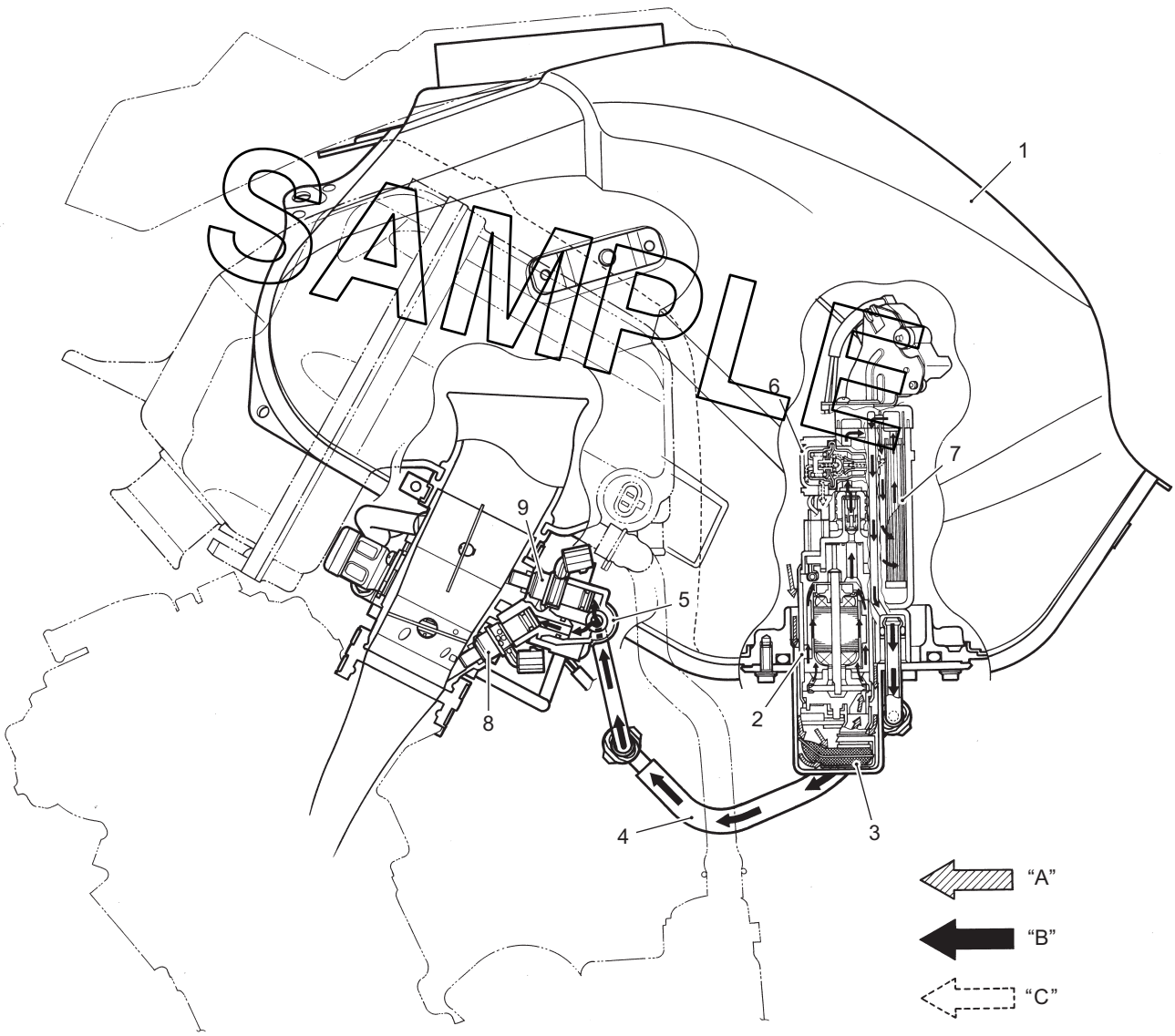

SAMPLE

I823H1120001-03

1. Fuel tank	5. Fuel delivery pipe	9. Secondary fuel injector
2. Fuel pump	6. Fuel pressure regulator	“A”: Before-pressurized fuel
3. Fuel mesh filter (For low pressure)	7. Fuel filter (For high pressure)	“B”: Pressurized fuel
4. Fuel feed hose	8. Primary fuel injector	“C”: Relieved fuel

Crankcase Emission Control System Description

B823H11201002

The engine is equipped with a PCV system to prevent discharging crankcase emissions into the atmosphere. Blow-by gas in the engine is constantly drawn into the crankcase, which is returned to the combustion chamber through the PCV (breather) hose, air cleaner and throttle body.

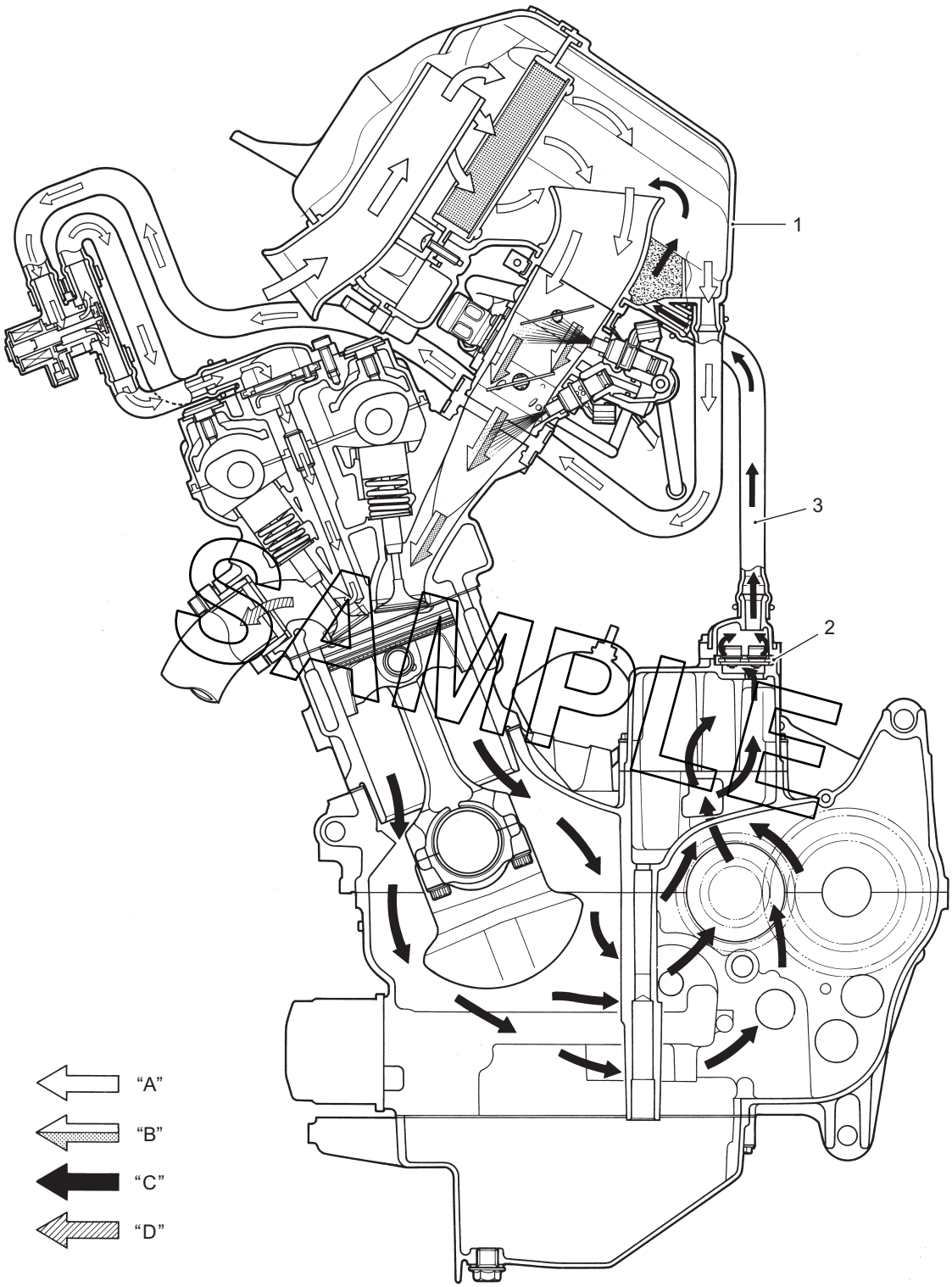

I823H1120002-03

1. Air cleaner box	3. PCV (breather) hose	"B": Fuel/Air mixture	"D": Exhaust gas
2. PCV (breather) reed valve	"A": Fresh air	"C": Blow-by gas	

Exhaust Emission Control System Description

B823H11201003

The exhaust emission control system is composed of the PAIR system, exhaust control system, HO2 sensor, three-way catalyst system and ISC system. The fresh air is drawn into the exhaust port through the PAIR control solenoid valve and PAIR reed valve. The PAIR control solenoid valve is operated by the ECM, which is controlled according to the signals from TPS, ECTS, IATS, IAPS and CKPS. The exhaust gas flow is performed by the exhaust control valve actuator which is controlled by the ECM by changing the exhaust control valve angle. ISC valve adjusts the bypass air volume of the throttle body to control engine idling speed with various sensor signals by varying engine running conditions and the idling control contributes to reduce exhaust emission level.

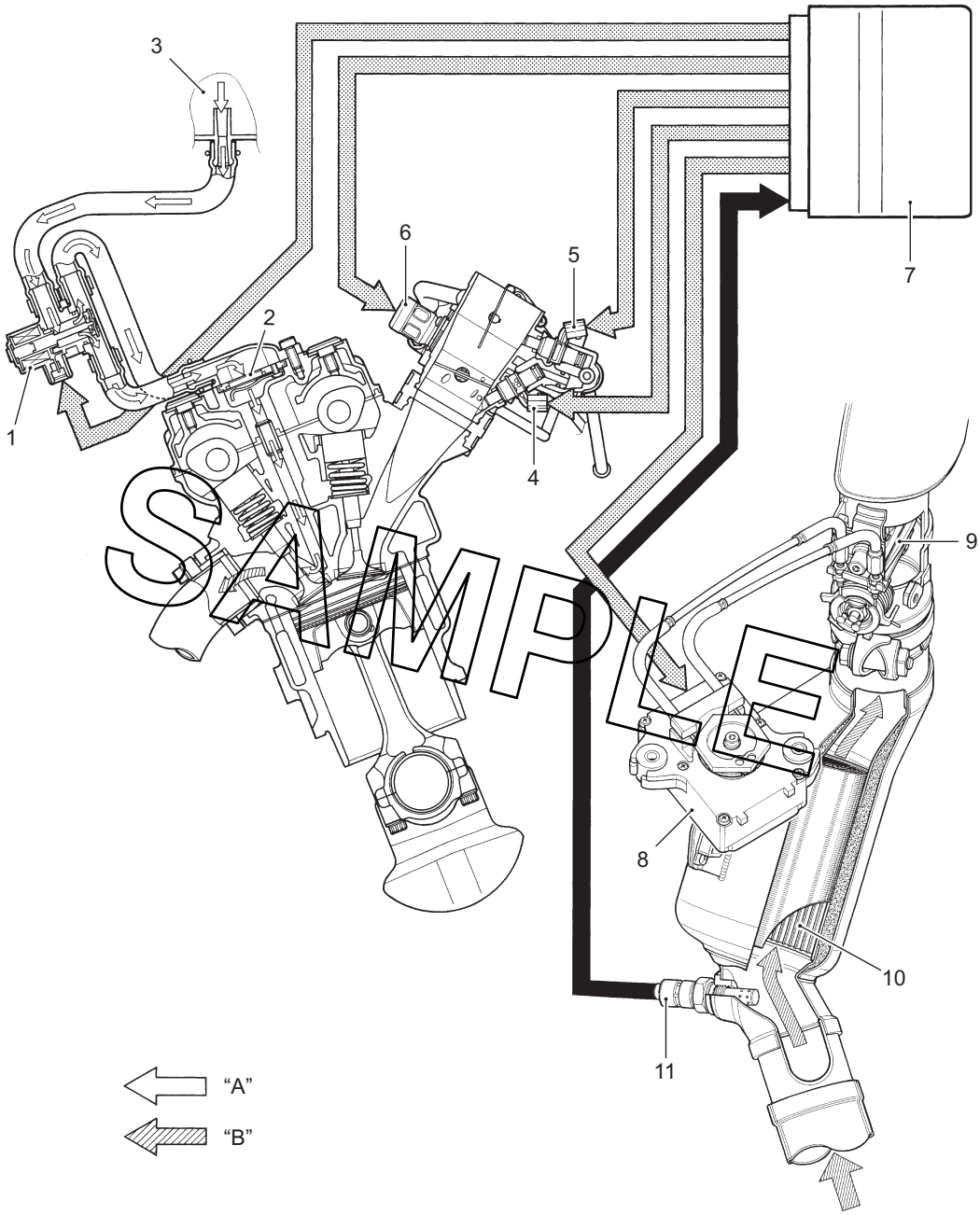

SAMPLE

I823H1120003-04

1. PAIR control solenoid valve	6. ISC valve	11. HO2 sensor
2. PAIR reed valve	7. ECM	"A": Fresh air
3. Air cleaner box	8. Exhaust control valve actuator	"B": Exhaust gas
4. Primary fuel injector	9. Exhaust control valve	
5. Secondary fuel injector	10. Three-way catalyst	

PAIR System Diagram

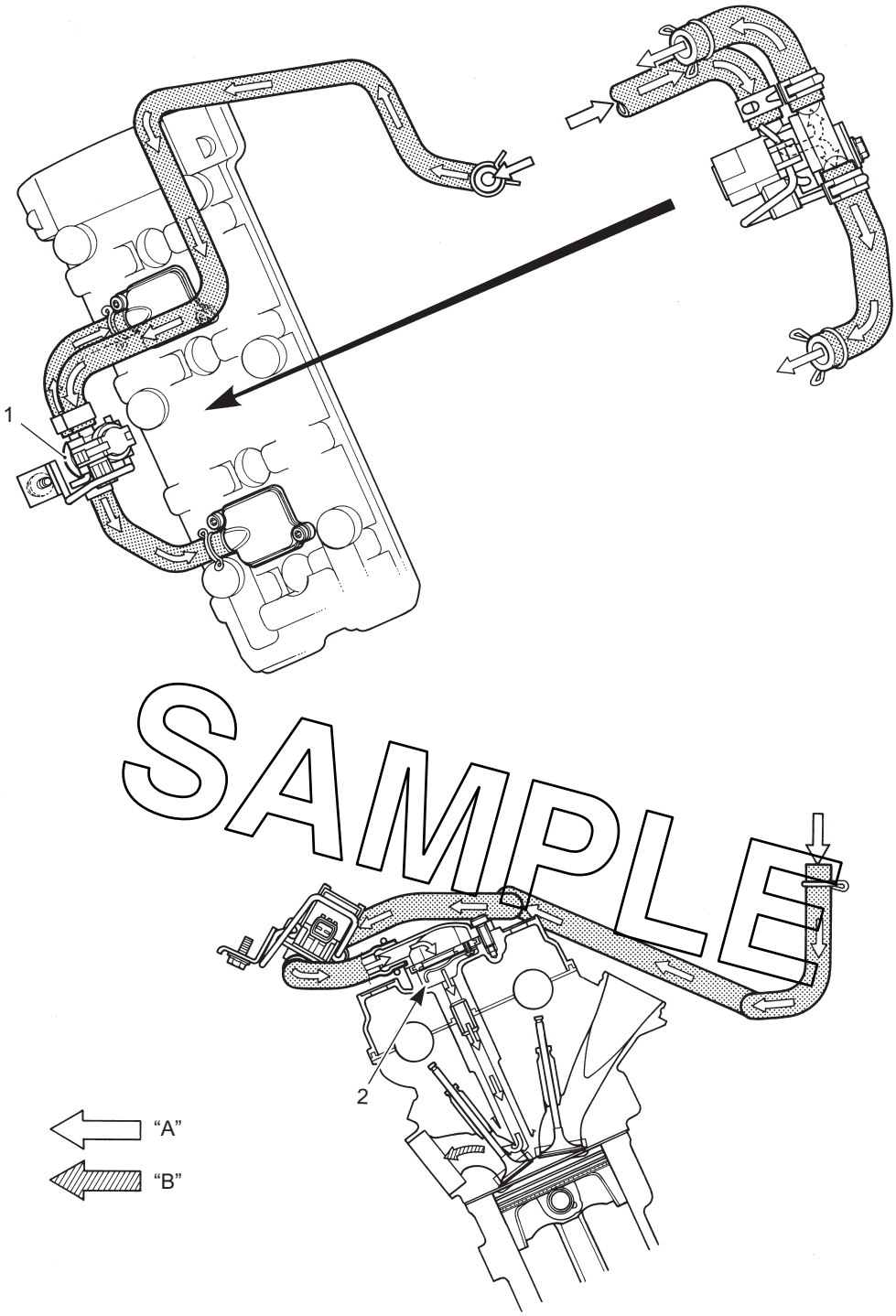

SAMPLE

I823H1120004-01

1. PAIR control solenoid valve	2. PAIR reed valve	"A": Fresh air	"B": Exhaust gas

Pair System Hose Routing Diagram

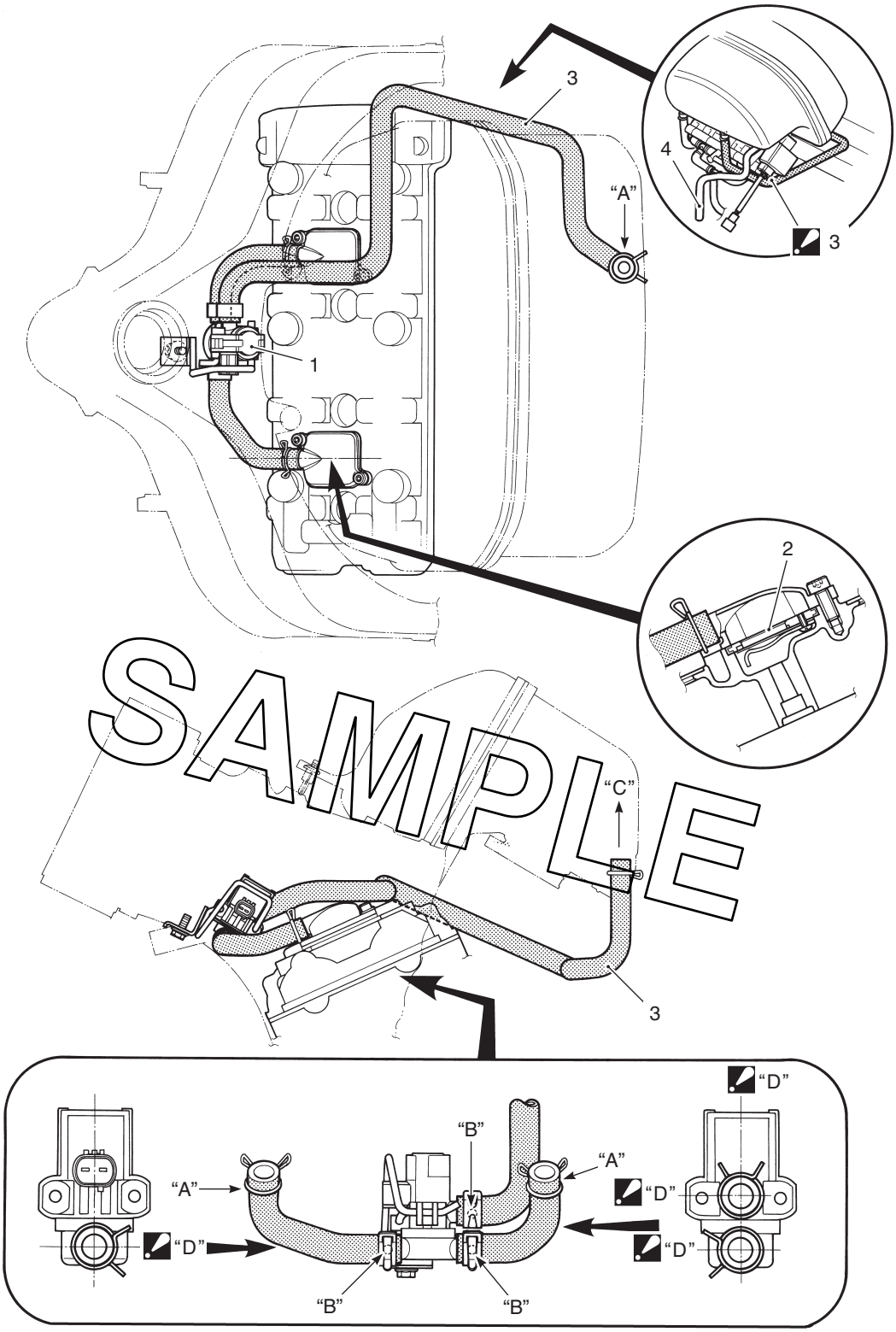

SAMPLE

I823H1120039-01

1.	PAIR control solenoid valve
2.	PAIR reed valve
3.	PAIR hose (Air inlet) : Pass the PAIR hose through under the wire harness and front of the PCV hose.
4.	PCV hose
"A":	Marking (White)
"B":	Marking (Yellow)
"C":	To the air cleaner box
"D":	The ends of clamp should face each direction as shown in the figure.

Noise Emission Control System Description

B823H11201004

TAMPERING WITH THE NOISE CONTROL SYSTEM PROHIBITED: Local law or federal law prohibits the following acts or the causing thereof:

- The removal or rendering inoperative by any person, other than for purposes of maintenance, repair or replacement, of any device or element of design incorporated into any new vehicle for the purpose of noise control prior to its sale or delivery to the ultimate purchaser or while it is in use, or
- The use of the vehicle after such device or element of design has been removed or rendered inoperative by any person.

Among Those Acts Presumed to Constitute Tampering are the Acts Listed Below:

- Removing or puncturing the muffler, baffles, header pipes, screen type spark arrester (if equipped) or any other component which conducts exhaust gases.
- Removing or puncturing the air cleaner case, air cleaner cover, baffles or any other component which conducts intake air.
- Replacing the exhaust system or muffler with a system or muffler not marked with the same model specific code as the code listed on the Motorcycle Noise Emission Control Information label.

SAMPLE

Evaporative Emission Control System Diagram (Only for E-33)

B823H11201005

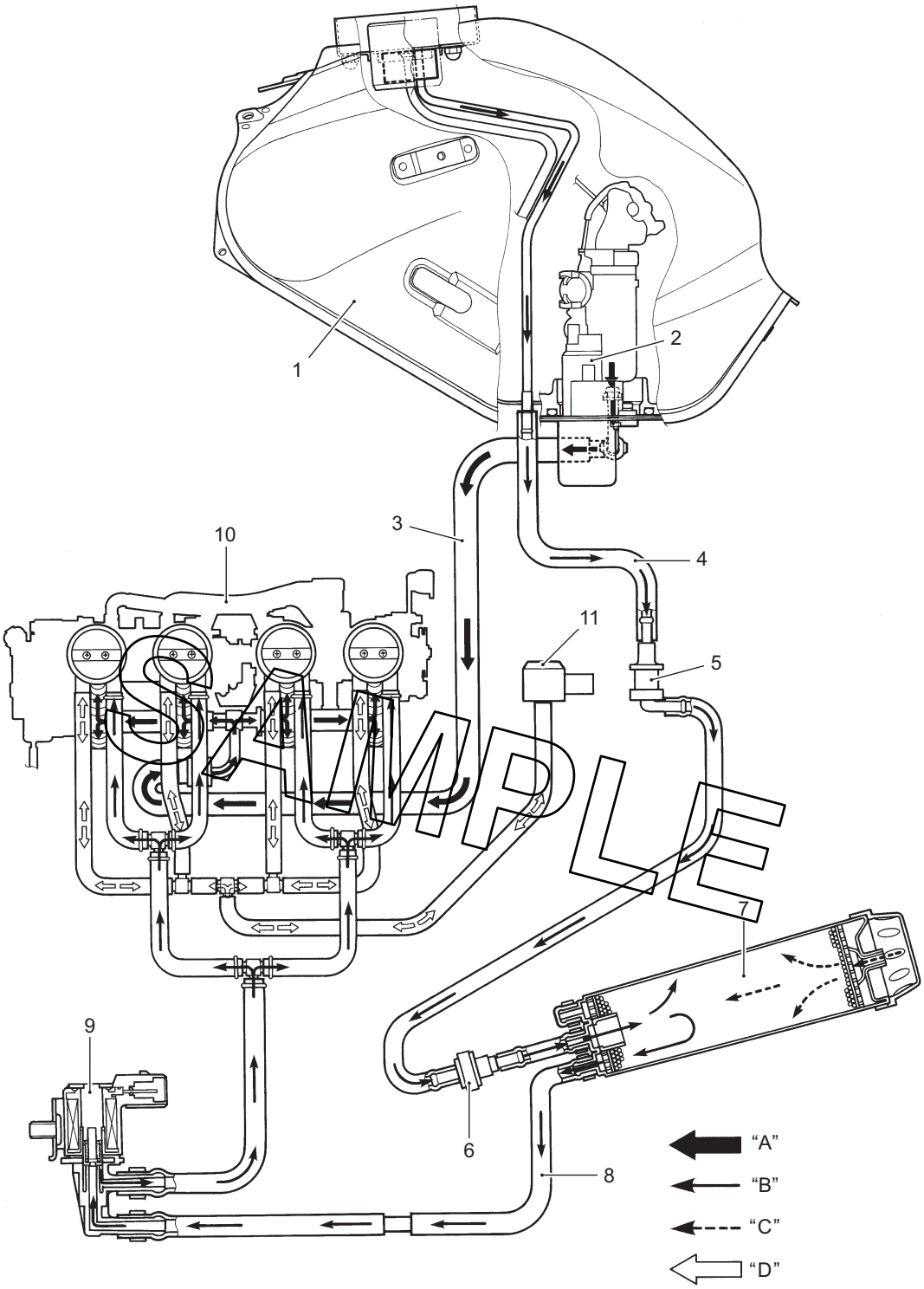

I823H1120033-04

1. Fuel tank	6. Fuel tank pressure control valve	11. IAP sensor
2. Fuel pump	7. EVAP canister	"A": Fuel
3. Fuel feed hose	8. Purge hose	"B": HC vapor
4. Surge hose	9. EVAP purge control valve	"C": Fresh air
5. Fuel shut-off valve	10. Throttle body	"D": Vacuum

Schematic and Routing Diagram

EVAP Canister Hose Routing Diagram (Only for E-33)

B823H11202001

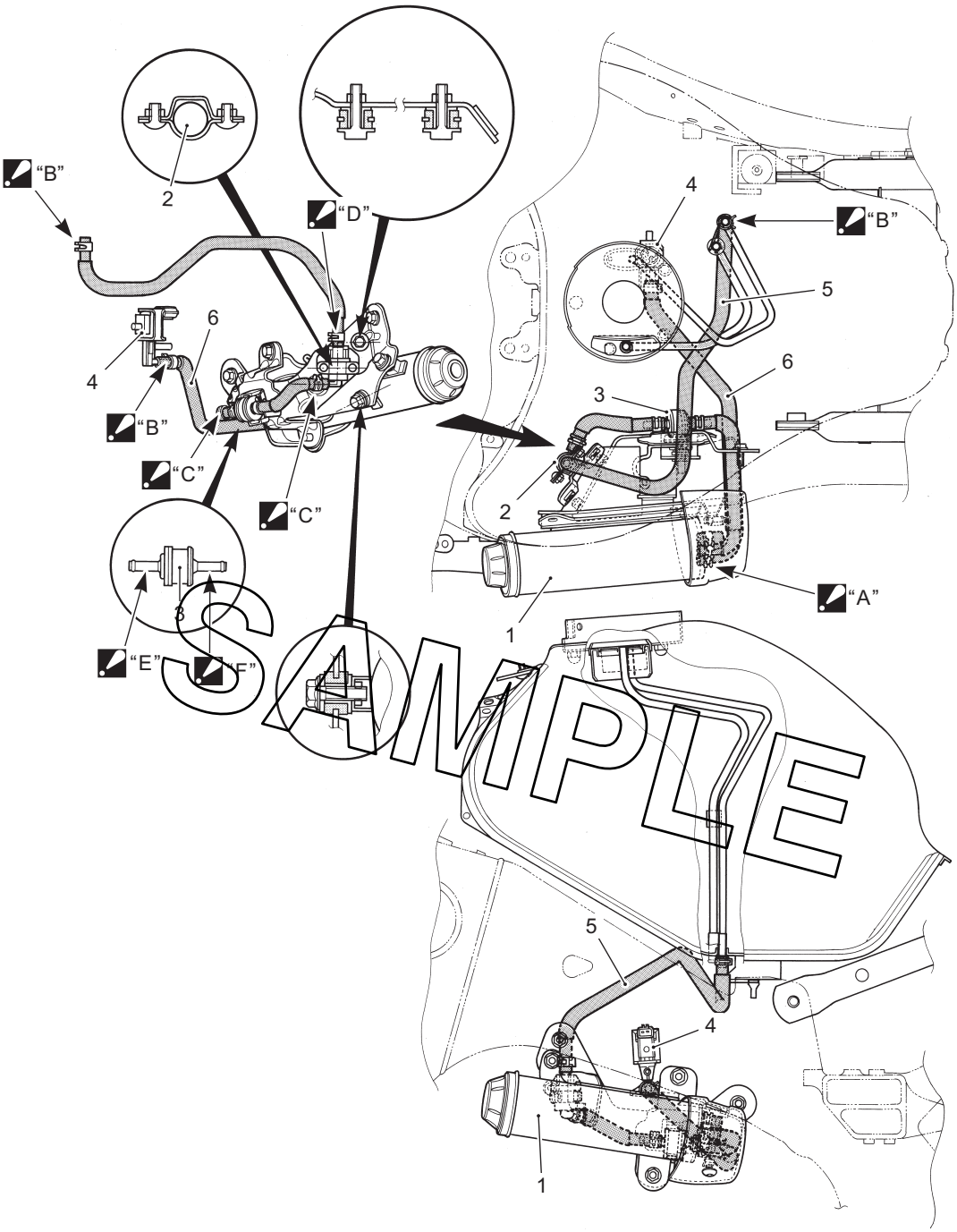

I823H1120005-03

1. EVAP canister	"A": The ends of the clamp should face outside.
2. Fuel shut-off valve	"B": The ends of the clamp should face backward.
3. Fuel tank pressure control valve	"C": The white paint side faces upside and ends of the clamp should face upside.
4. EVAP system purge control solenoid valve	"D": The white paint side faces forward and ends of the clamp should face inside.
5. Surge hose	"E": The orange color side faces EVAP canister.
6. Purge hose	"F": The black color side faces fuel shut-off valve.

Repair Instructions

Heated Oxygen Sensor (HO2S) Construction

B823H11206011

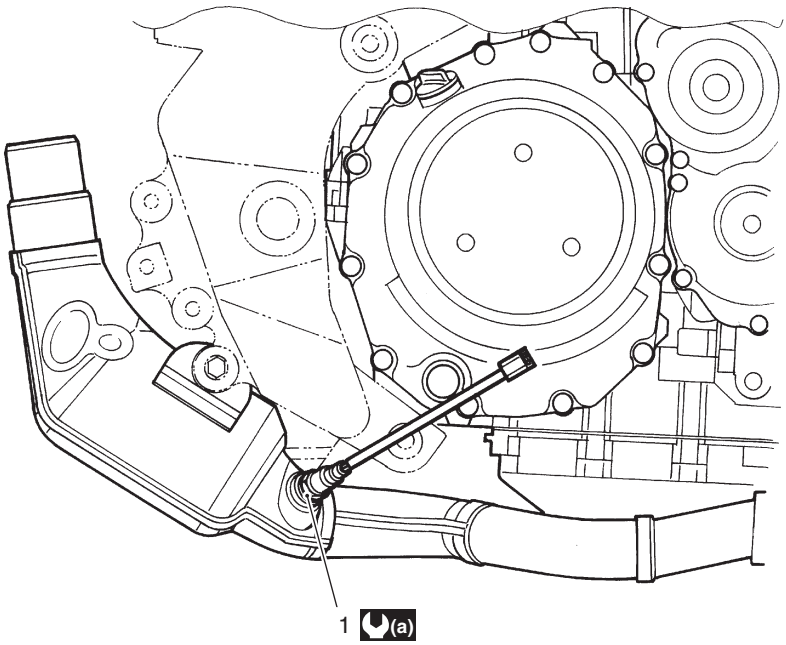

I823H1120040-04

1	HO2 sensor	(a) : 25 N·m (2.5 kgf-m, 18.0 lb-ft)

SAMPLE

Heated Oxygen Sensor (HO2S) Removal and Installation

B823H11206001

Removal

⚠ WARNING

Do not remove the HO2 sensor while it is hot.

⚠ CAUTION

- **Be careful not to expose the HO2 sensor to excessive shock.**
- **Do not use an impact wrench when removing or installing the HO2 sensor.**
- **Be careful not to twist or damage the sensor lead wires.**

1) Remove the under cowling. Refer to “Exterior Parts Removal and Installation in Section 9D (Page 9D-14)”.
2) Lift and support the fuel tank. Refer to “Fuel Tank Removal and Installation in Section 1G (Page 1G-10)”.
3) Disconnect the HO2 sensor coupler (1).

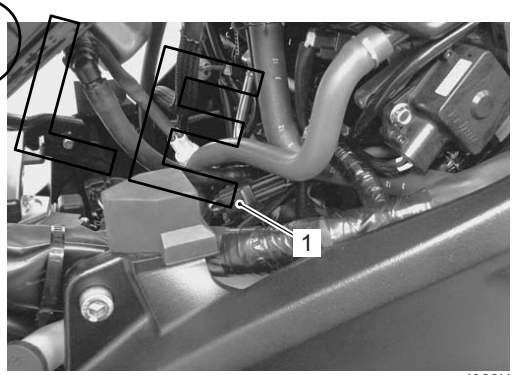

I823H1110152-01

4) Remove the HO2 sensor (2).

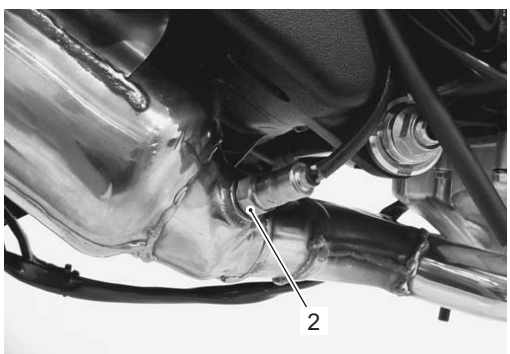

I823H1120006-01

Installation
Install the HO2 sensor in the reverse order of removal. Pay attention to the following points:

> ⚠ **CAUTION**
>
> **Do not apply oil or other materials to the sensor air hole.**

- Tighten the HO2 sensor (1) to the specified torque.

  Tightening torque
  HO2 sensor (a): 25 N·m (2.5 kgf-m, 18.0 lb-ft)

I823H1120007-03

- Route the HO2 sensor lead wire properly. Refer to "Wiring Harness Routing Diagram in Section 9A (Page 9A-5)".

Heated Oxygen Sensor (HO2S) Inspection

B823H11206002

Refer to "DTC "C44" (P0130/P0135): HO2 Sensor (HO2S) Circuit Malfunction in Section 1A (Page 1A-104)".

PAIR Reed Valve Removal and Installation

B823H11206003

Removal

1) Lift and support the fuel tank. Refer to "Fuel Tank Removal and Installation in Section 1G (Page 1G-10)".
2) Remove the air cleaner box. Refer to "Air Cleaner Box Removal and Installation in Section 1D (Page 1D-6)".
3) Disconnect the PAIR hoses (1) and remove the PAIR reed valve covers (2).

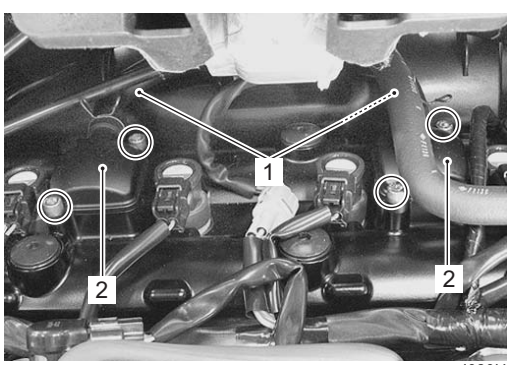

I823H1120008-07

4) Remove the PAIR reed valves (3).

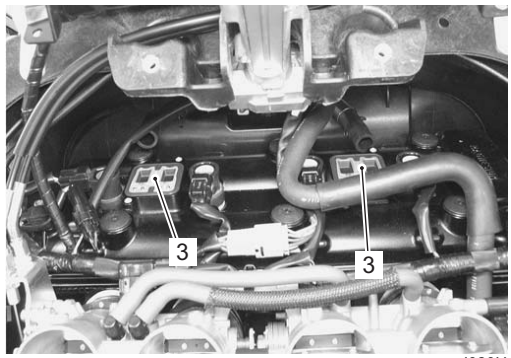

I823H1120009-02

Installation
Install the PAIR reed valve in the reverse order of removal. Pay attention to the following points:

- Apply thread lock to the bolts and tighten them to the specified torque.

  1322 : Thread lock cement 99000–32110 (THREAD LOCK CEMENT SUPER 1322 or equivalent)

  Tightening torque
  PAIR reed valve cover bolt (a): 11 N·m (1.1 kgf-m, 8.0 lb-ft)

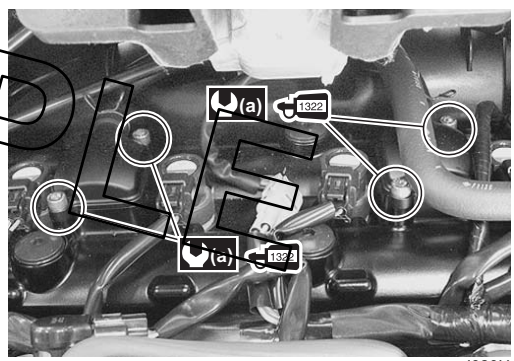

I823H1120010-01

SAMPLE

PAIR Control Solenoid Valve Removal and Installation

B823H11206004

Removal

1) Lift and support the fuel tank. Refer to “Fuel Tank Removal and Installation in Section 1G (Page 1G-10)”.
2) Remove the air cleaner box. Refer to “Air Cleaner Box Removal and Installation in Section 1D (Page 1D-6)”.
3) Disconnect the PAIR control solenoid valve coupler (1) and PAIR hoses (2).
4) Remove the PAIR control solenoid valve (3).

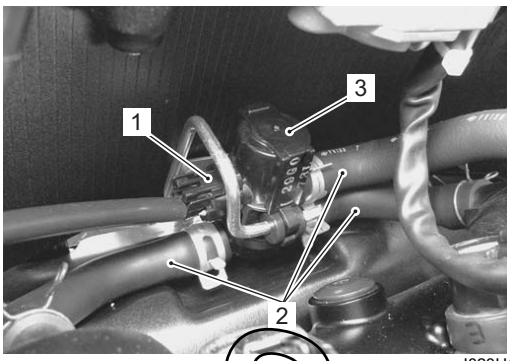

I823H1120011-01

Installation

Install the PAIR control solenoid valve in the reverse order of removal. Pay attention to the following point:

- Connect the PAIR control solenoid valve coupler and PAIR hoses securely. Refer to “Exhaust Emission Control System Description (Page 1B-3)”.

SAMPLE

PAIR System Inspection

B823H11206005

PAIR Hose

1) Lift and support the fuel tank. Refer to “Fuel Tank Removal and Installation in Section 1G (Page 1G-10)”.
2) Remove the air cleaner box. Refer to “Air Cleaner Box Removal and Installation in Section 1D (Page 1D-6)”.
3) Inspect the PAIR hoses (1) for wear or damage. If it is worn or damaged, replace the PAIR hose with a new one. Refer to “Exhaust Emission Control System Description (Page 1B-3)”.

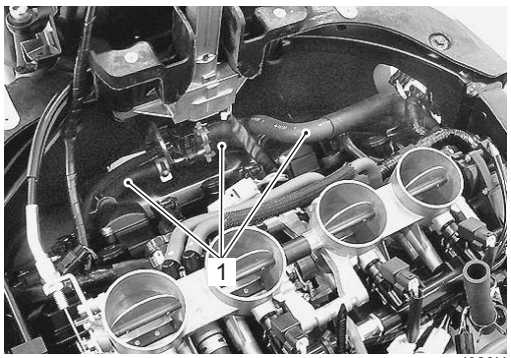

I823H1120012-01

4) Reinstall the removed parts.

PAIR Reed Valve

NOTE

PAIR control solenoid valve can be checked without removing it from the motorcycle. Refer to “DTC “C49” (P1656): PAIR Control Solenoid Valve Circuit Malfunction in Section 1A (Page 1A-123)”.

1) Remove the PAIR reed valves. Refer to “PAIR Reed Valve Removal and Installation (Page 1B-10)”.
2) Inspect the reed valves for the carbon deposit. If the carbon deposit is found in the reed valve, replace the PAIR reed valve with a new one.

I823H1120013-01

3) Reinstall the PAIR reed valves. Refer to “PAIR Reed Valve Removal and Installation (Page 1B-10)”.

PAIR Control Solenoid Valve

1) Remove the PAIR control solenoid valve. Refer to “PAIR Control Solenoid Valve Removal and Installation (Page 1B-11)”.
2) Check that air flows through the air inlet port to the air outlet port. If air does not flow out, replace the PAIR control solenoid valve with a new one.

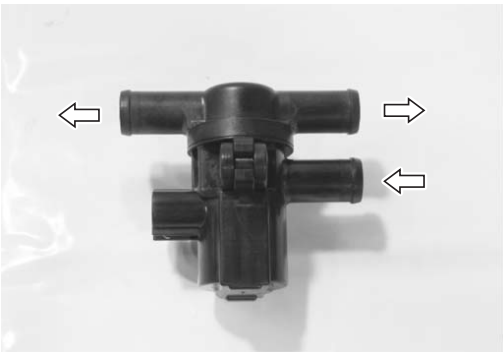

I823H1120014-01

3) Connect the 12 V battery to the PAIR control solenoid valve terminals and check the air flow. If air does not flow out, the solenoid valve is in normal condition.

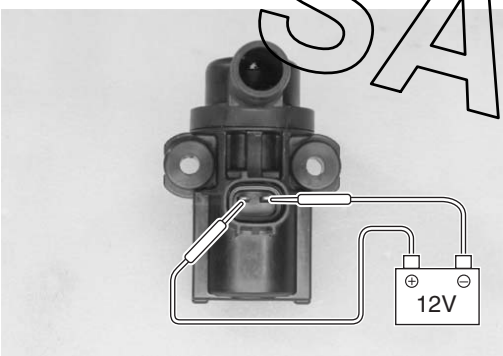

I823H1120015-01

4) Check the resistance between the terminals of the PAIR control solenoid valve.

Special tool
TOOL : 09900–25008 (Multi-circuit tester set)

Tester knob indication
Resistance (Ω)

PAIR control solenoid valve resistance
20 – 24 Ω at 20 – 30 °C (68 – 86 °F)

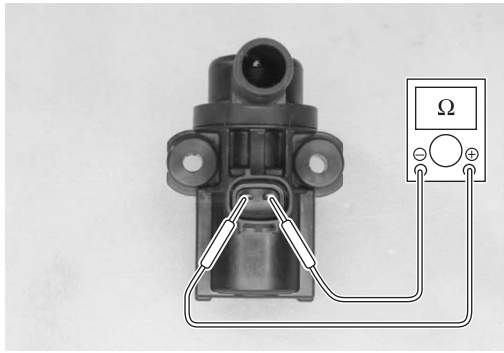

I823H1120016-01

5) Reinstall the PAIR control solenoid valve. Refer to “PAIR Control Solenoid Valve Removal and Installation (Page 1B-11)”.

Crankcase Breather (PCV) Hose Inspection

B823H11206006

Inspect the crankcase breather (PCV) hose in the following procedures:

1) Lift and support the fuel tank. Refer to “Fuel Tank Removal and Installation in Section 1G (Page 1G-10)”.
2) Inspect the PCV hose (1) for wear and damage. If it is worn or damaged, replace the PCV hose with a new one.
3) Check that the PCV hose (1) is securely connected.
4) Install the removed parts.

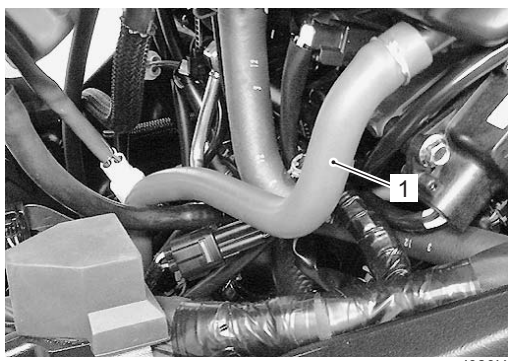

I823H1120017-02

SAMPLE

Crankcase Breather (PCV) Hose / Reed Valve / Cover Removal and Installation

B823H11206007

Removal

1) Lift and support the fuel tank. Refer to “Fuel Tank Removal and Installation in Section 1G (Page 1G-10)”.
2) Remove the PCV hose (1).

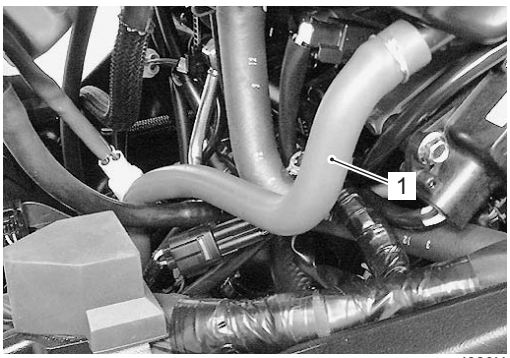

I823H1120017-02

3) Remove the PCV reed valve cover (2).

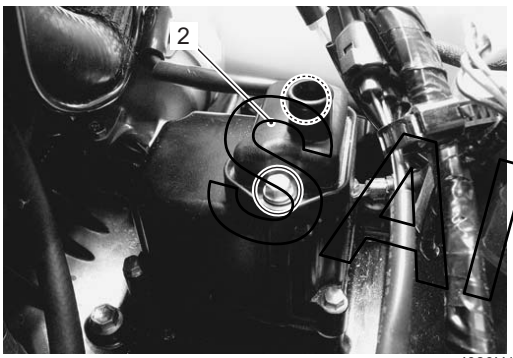

I823H1120018-01

4) Remove the PCV reed valve (3).

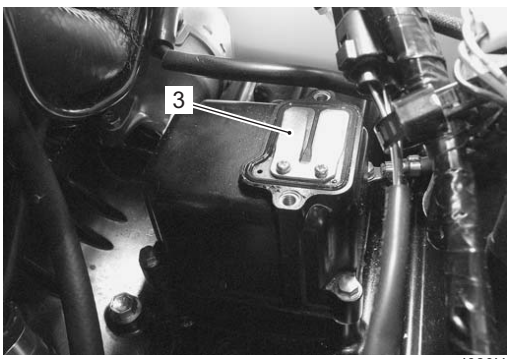

I823H1120019-01

5) Remove the PCV cover (4).

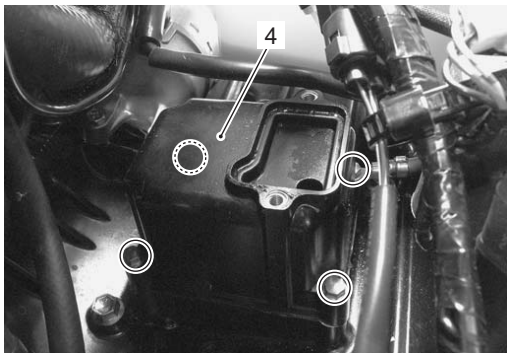

I823H1120020-03

Installation

Installation is in the reverse order of removal.
Pay attention to the following points:

- Apply bond to the mating surface of the PCV cover.

  1207B : Sealant 99000–31140 (SUZUKI BOND No.1207B or equivalent)

  NOTE

  - **Make surfaces free from moisture, oil, dust and other foreign materials.**
  - **Spread the sealant on surfaced thinly to form an even layer, and assembly the crankcases within a few minutes.**

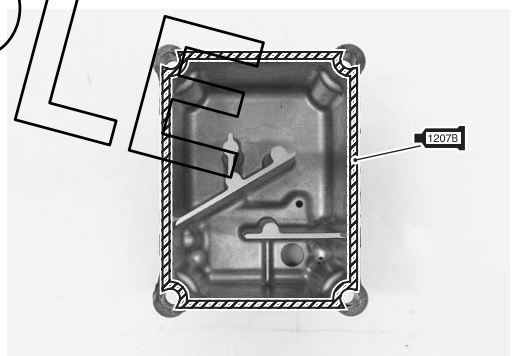

I823H1120021-02

- Fit the engine ground lead wire (1) and tighten the bolts.

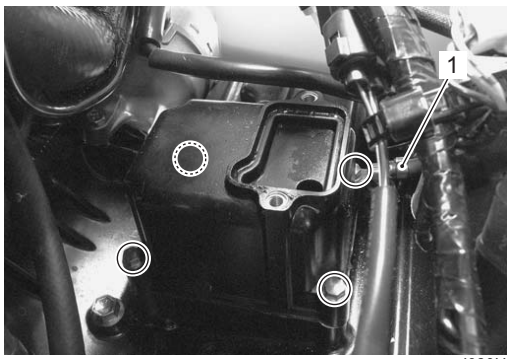

I823H1120022-03

- Install the PCV reed valve.
- Connect the PCV hose securely.

SAMPLE

Crankcase Breather (PCV) Cover Inspection

B823H11206008

Inspect the crankcase breather (PCV) cover in the following procedures:

1) Remove the PCV cover. Refer to “Crankcase Breather (PCV) Hose / Reed Valve / Cover Removal and Installation (Page 1B-13)”.
2) Inspect the PCV cover in the carbon deposit. If the carbon deposit is found in the PCV cover, remove the carbon.

I823H1120024-01

3) Reinstall the PCV cover. Refer to “Crankcase Breather (PCV) Hose / Reed Valve / Cover Removal and Installation (Page 1B-13)”.

Crankcase Breather (PCV) Inspection

1) Remove the PCV reed valve. Refer to “Crankcase Breather (PCV) Hose / Reed Valve / Cover Removal and Installation (Page 1B-13)”.
2) Inspect the PCV reed valve for the carbon deposit. If the carbon deposit is found in the reed valve, replace the PAIR reed valve with a new one.

I823H1120025-01

3) Reinstall the PAIR reed valve. Refer to “Crankcase Breather (PCV) Hose / Reed Valve / Cover Removal and Installation (Page 1B-13)”.

Evaporative Emission Control System Removal and Installation (Only for E-33)

B823H11206009

Hose

Removal

1) Lift and support the fuel tank. refer to “Fuel Tank Removal and Installation in Section 1G (Page 1G-10)”.
2) Remove the EVAP hose as shown in the EVAP canister hose routing diagram. Refer to “EVAP Canister Hose Routing Diagram (Only for E-33) (Page 1B-8)”.

Installation

1) Install the EVAP hose as shown in the EVAP canister hose routing diagram. Refer to “EVAP Canister Hose Routing Diagram (Only for E-33) (Page 1B-8)”.
2) Reinstall the removed parts.

EVAP Canister

Removal

1) Remove the cap (1).

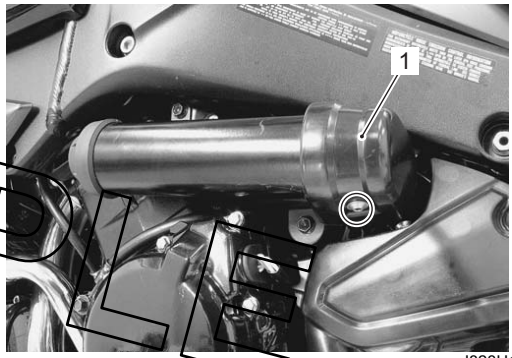

I823H1120026-01

2) Disconnect the surge hose (2) and purge hose (3).
3) Remove the EVAP canister (4).

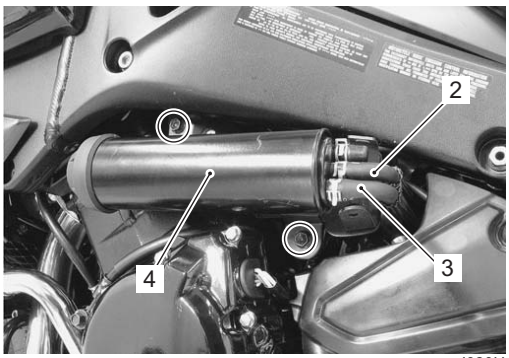

I823H1120027-01

Installation

Install the EVAP canister in the reverse order of removal.

SAMPLE

EVAP System Purge Control Solenoid Valve
Removal

1) Lift and support the fuel tank. Refer to “Fuel Tank Removal and Installation in Section 1G (Page 1G-10)”.
2) Disconnect the coupler (1) and purge hoses (2).
3) Remove the EVAP system purge control solenoid valve (3).

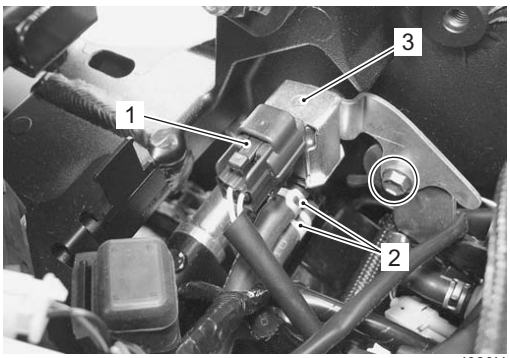

I823H1120028-01

Installation

1) Install the EVAP system purge control solenoid valve as shown in the EVAP canister hose routing diagram. Refer to “EVAP Canister Hose Routing Diagram (Only for E-33) (Page 1B-8)”.
2) Reinstall the removed parts.

Tank Pressure Control Valve
Removal

1) Lift and support the fuel tank. Refer to “Fuel Tank Removal and Installation in Section 1G (Page 1G-10)”.
2) Disconnect the surge hoses (1).
3) Remove the tank pressure control valve (2).

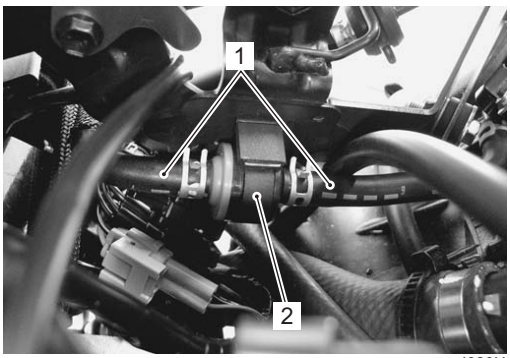

I823H1120029-02

Installation

1) Install the tank pressure control valve as shown in the EVAP canister hose routing diagram. Refer to “EVAP Canister Hose Routing Diagram (Only for E-33) (Page 1B-8)”.
2) Reinstall the removed parts.

Fuel Shut-off Valve
Removal

1) Lift and support the fuel tank. Refer to “Fuel Tank Removal and Installation in Section 1G (Page 1G-10)”.
2) Remove the EVAP canister. Refer to “Evaporative Emission Control System Removal and Installation (Only for E-33) (Page 1B-14)”.
3) Remove the TPC valve/Fuel shut-off valve bracket (1) from the frame.

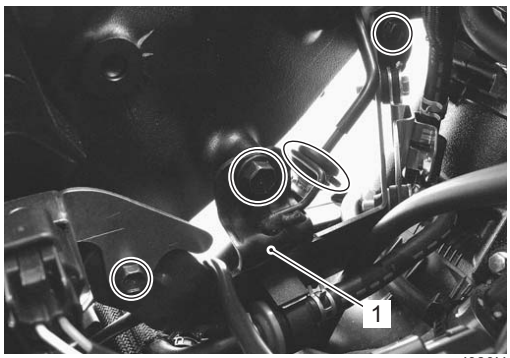

I823H1120030-01

4) Disconnect the surge hoses (2).
5) Remove the fuel shut-off valve (3).

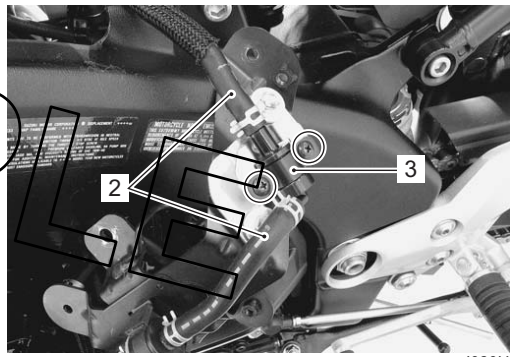

I823H1120031-01

Installation

1) Install the fuel shut-off valve as shown in the EVAP canister hose routing diagram. Refer to “EVAP Canister Hose Routing Diagram (Only for E-33) (Page 1B-8)”.
2) Reinstall the removed parts.

SAMPLE

Evaporative Emission Control System Inspection (For E-33 only)

B823H11206010

Refer to “Evaporative Emission Control System Inspection (For E-33 only) (Page 1B-16)”.

Hose

Inspect the hoses for wear or damage. If it is worn or damage, replace the hose with a new one.

NOTE

Make sure that the hoses are securely connected.

EVAP Canister

Inspect the EVAP canister body for damage to the body. If any defect is found, replace the EVAP canister with a new one.

I823H1120032-02

EVAP System Purge Control Solenoid Valve

NOTE

EVAP system purge control solenoid valve can be checked without removing it from the motorcycle. Refer to “DTC “C62” (P0443): EVAP System Purge Control Solenoid Valve Circuit Malfunction (E-33 only) in Section 1A (Page 1A-130)”.

1) Check that no air flows through both of the air inlet and outlet ports. If air flows out, replace the EVAP system purge control solenoid valve with a new one.

I718H2120003-03

2) Connect the 12 V battery to the terminals of the EVAP system purge control solenoid valve and check the air flow. If air flows out, the solenoid valve is in normal condition.

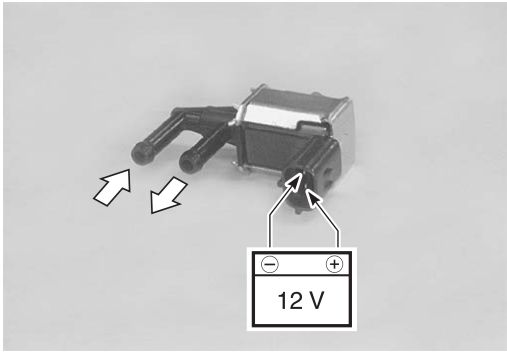

I718H2120004-01

3) Check the resistance between the terminals of the EVAP system purge control solenoid valve. If the resistance is not within the standard range, replace the EVAP system purge control solenoid valve with a new one.

Special tool
TOOL (A): 09900–25008 (Multi-circuit tester set)

Tester knob indication
Resistance (Ω)

EVAP system purge control solenoid valve resistance
Approx. 32 Ω at 20 °C (68 °F)

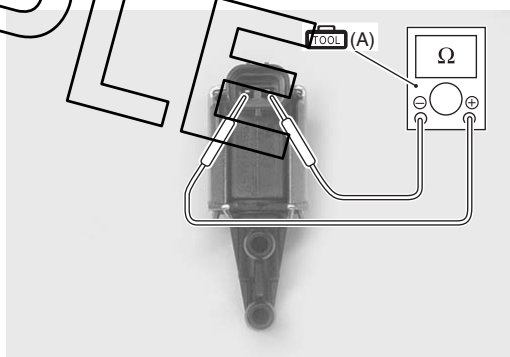

I718H2120005-02

SAMPLE

Tank Pressure Control Valve

Inspect the tank pressure control valve body for damage. Inspect the tank pressure control valve operation in the following procedures:

1) When air pressure is applied lightly to the tank pressure control valve from the side “A” (orange color), air should flow out through the valve smoothly.
2) When air pressure is applied lightly to the tank pressure control valve from the side “B” (Black color), air should flow out through the valve difficulty.

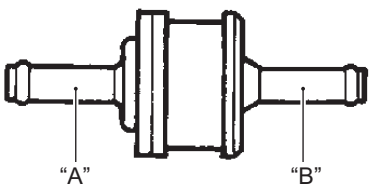

I823H1120036-04

3) If the tank pressure control valve operates otherwise, it must be replaced.

⚠ WARNING

Gasoline and gasoline vapor is toxic. A small amount of fuel remains in the tank pressure control valve when checking it. Do not swallow the fuel when blowing the tank pressure control valve.

NOTE

When connecting the tank pressure control valve to the hose, the side “B” should face toward the fuel shut-off valve side, and the side “A” should face toward the canister side.

Fuel Shut-Off Valve

Inspect the fuel shut-off valve body for damage.Inspect the fuel shut-off valve operation in the following procedures:

1) When air is blown into the fuel shut-off valve with its side “A” positioned upward, the air can pass through to the canister side.

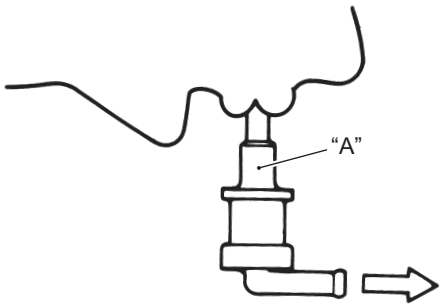

I823H1120037-01

2) When air is blown into the fuel shut-off valve with its side “A” positioned sideways, the air cannot pass through to the canister side. If the fuel shut-off valve operates otherwise, it must be replaced.

⚠ WARNING

Gasoline and gasoline vapor is toxic. A small amount of fuel remains in the fuel shut-off valve when checking it. Do not swallow the fuel when blowing the fuel shut-off valve.

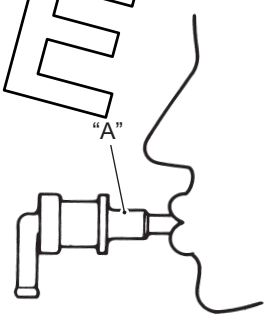

I823H1120038-02

SAMPLE

Specifications

Service Data

B823H11207001

FI sensors

Item	Specification	Note
HO2 sensor heater resistance	Approx. 8 Ω at 23 °C (73 F°)	
HO2 sensor output voltage	0.3 V and less at idle speed	
	0.6 V and more at 3 000 r/min	
PAIR control solenoid valve resistance	20 – 24 Ω at 20 – 30 °C (68 – 86 °F)	
EVAP system purge control solenoid valve resistance	Approx. 32 Ω at 20 °C (68 °F)	E-33 only

Tightening Torque Specifications

B823H11207002

Fastening part	Tightening torque			Note
	N·m	kgf-m	lb-ft	
HO2 sensor	25	2.5	18.0	☞(Page 1B-10)
PAIR reed valve cover bolt	11	1.1	8.0	☞(Page 1B-10)

NOTE

The specified tightening torque is also described in the following.
“Heated Oxygen Sensor (HO2S) Construction (Page 1B-9)”

Reference:
For the tightening torque of fastener not specified in this section, refer to “Tightening Torque List in Section 0C (Page 0C-9)”.

SAMPLE

Special Tools and Equipment

Recommended Service Material

B823H11208001

Material	SUZUKI recommended product or Specification		Note
Sealant	SUZUKI BOND No.1207B or equivalent	P/No.: 99000–31140	☞(Page 1B-13)
Thread lock cement	THREAD LOCK CEMENT SUPER 1322 or equivalent	P/No.: 99000–32110	☞(Page 1B-10)

Special Tool

B823H11208002

09900–25008 Multi-circuit tester set ☞(Page 1B-12) / ☞(Page 1B-16) 	

Engine Electrical Devices

Precautions

Precautions for Engine Electrical Device

B823H11300001

Refer to “General Precautions in Section 00 (Page 00-1)” and “Precautions for Electrical Circuit Service in Section 00 (Page 00-2)”.

Component Location

Engine Electrical Components Location

B823H11303001

Refer to “Electrical Components Location in Section 0A (Page 0A-7)”.

Diagnostic Information and Procedures

Engine Symptom Diagnosis

B823H11304001

Refer to “Engine Symptom Diagnosis in Section 1A (Page 1A-8)”.

Repair Instructions

ECM Cushion Rubber Attachment Construction

B823H11306032

SAMPLE

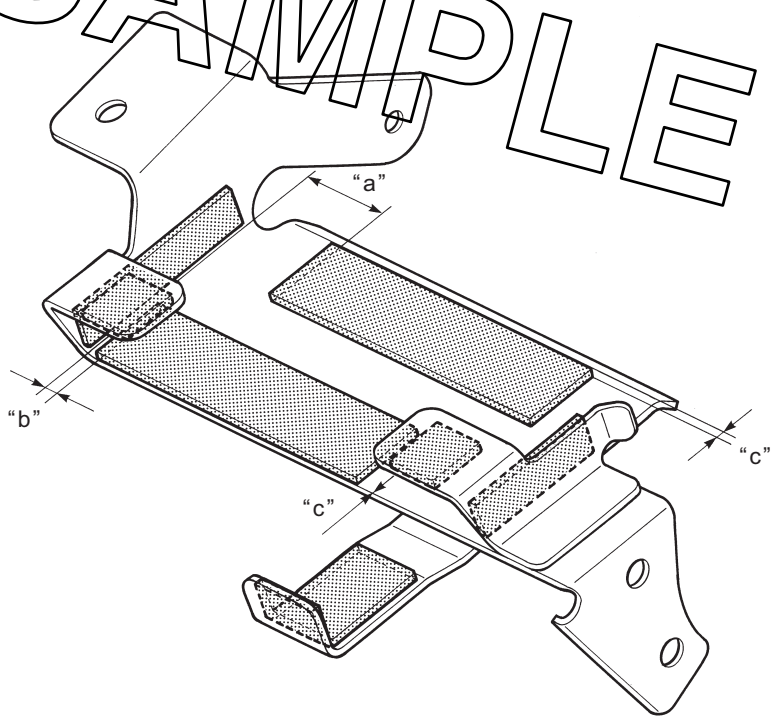

I823H1130024-02

“a”: 20 – 30 mm (0.8 – 1.2 in)	“b”: 10 mm (0.4 in)	“c”: 5 mm (0.2 in)

ECM Removal and Installation

B823H11306001

Removal

1) Remove the front seat and frame side covers. Refer to “Exterior Parts Removal and Installation in Section 9D (Page 9D-14)”.
2) Remove the battery and fuse box (1).

I823H1130001-01

3) Remove the tool box (2).

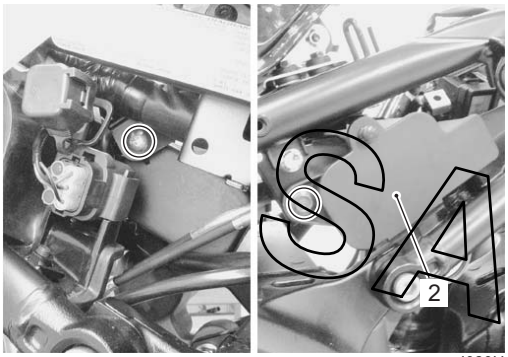

I823H1130002-02

4) Disconnect the couplers and remove the ECM (3).

I823H1130003-01

Installation

Install the ECM in the reverse order of removal.

CMP Sensor Inspection

B823H11306002

Refer to “DTC “C11” (P0340) CMP Sensor Circuit Malfunction in Section 1A (Page 1A-29)”.

CMP Sensor Removal and Installation

B823H11306003

Removal

1) Remove the air cleaner box. Refer to “Air Cleaner Box Removal and Installation in Section 1D (Page 1D-6)”.
2) Disconnect the coupler (1) and remove the CMP sensor (2).

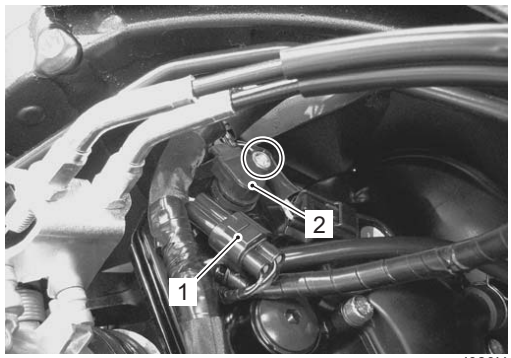

I823H1130004-01

Installation

Install the CMP sensor in the reverse order of removal. Pay attention to the following points:

⚠ CAUTION

When installing the CMP sensor, make sure to clean the sensor surface.

- Tighten the CMP sensor bolt (1) to the specified torque.

  Tightening torque
  CMP sensor bolt (a): 10 N·m (1.0 kgf-m, 7.0 lb-ft)

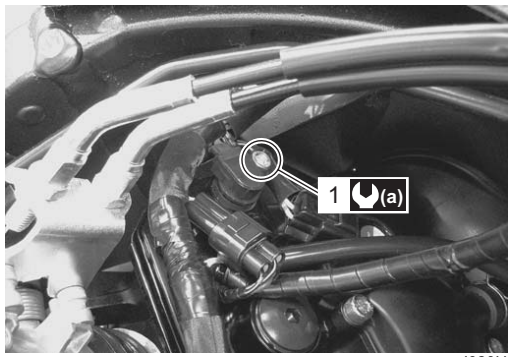

I823H1130023-01

SAMPLE

CKP Sensor Inspection

B823H11306024

Refer to “CKP Sensor Inspection in Section 1H (Page 1H-10)”.

CKP Sensor Removal and Installation

B823H11306025

Removal

1) Remove the generator cover. Refer to “Generator Removal and Installation in Section 1J (Page 1J-6)”.
2) Remove the CKP sensor (1) along with generator stator (2).

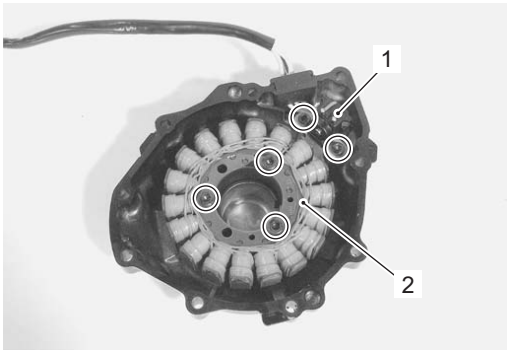

I823H1130005-01

Installation

Install the CKP sensor in the reverse order of removal. Refer to “Generator Removal and Installation in Section 1J (Page 1J-6)”.

IAP Sensor Inspection

B823H11306004

Refer to “DTC “C13” (P0105-H/L): IAP Sensor Circuit Malfunction in Section 1A (Page 1A-34)”.

IAP Sensor Removal and Installation

B823H11306005

Removal

1) Lift and support the fuel tank. Refer to “Fuel Tank Removal and Installation in Section 1G (Page 1G-10)”.
2) Disconnect the coupler (1) and vacuum hose (2).
3) Remove the IAP sensor (3) from the air cleaner box.

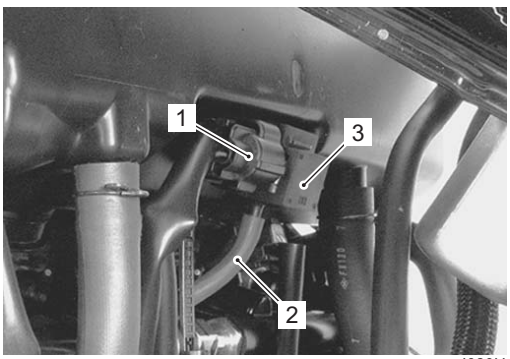

I823H1130019-03

Installation

Install the IAP sensor in the reverse order of removal.

TP Sensor Inspection

B823H11306006

Refer to “DTC “C14” (P0120-H/L): TP Sensor Circuit Malfunction in Section 1A (Page 1A-41)”.

TP Sensor Removal and Installation

B823H11306007

Refer to “Throttle Body Disassembly and Assembly in Section 1D (Page 1D-12)”.

Removal

1) Remove the throttle body. Refer to “Throttle Body Removal and Installation in Section 1D (Page 1D-10)”.
2) Remove the TP sensor (1) with the special tool.

Special tool

TOOL : 09930–11950 (Torx wrench)

NOTE

Prior to disassembly, mark the TP sensor’s original position with a paint or scribe for accurate reinstallation.

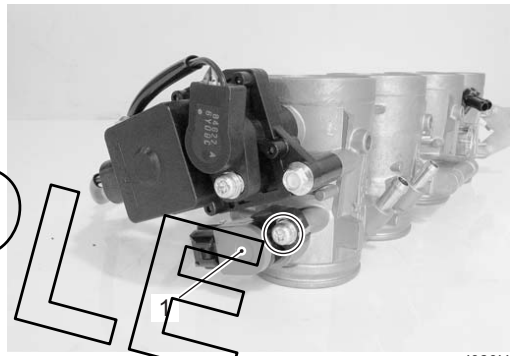

I823H1130018-02

SAMPLE

Installation

Install the TP sensor in the reverse order of removal. Pay attention to the following points:

- With the throttle valves fully closed, install the TP sensor (1) and tighten the TP sensor mounting screw to the specified torque.

NOTE

- **Apply thin coat of engine oil to the O-ring.**
- **Align the throttle shaft end "A" with the groove "B" of the TP sensor.**
- **Apply grease to the throttle shaft end "A" if necessary.**

: Grease 99000–25010 (SUZUKI SUPER GREASE A or equivalent)

Special tool
TOOL : 09930–11950 (Torx wrench)

Tightening torque
TP sensor mounting screw: 3.5 N·m (0.35 kgf-m, 2.5 lb-ft)

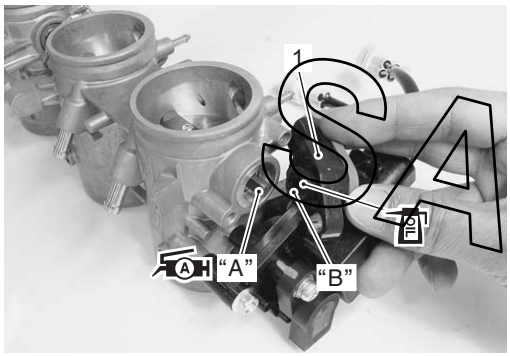

I823H1130020-01

NOTE

- **Make sure the throttle valves smoothly open and close.**
- **For TP sensor setting procedure, refer to "TP Sensor Adjustment (Page 1C-4)".**

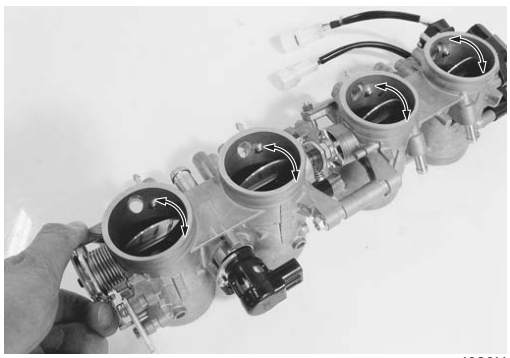

I823H1140025-01

TP Sensor Adjustment

B823H11306026

Inspect the TP sensor setting position and adjust it if necessary in the following procedures:

1) Connect the special tool (Mode select switch) to the dealer mode coupler. Refer to "Self-Diagnostic Procedures in Section 1A (Page 1A-12)".

   Special tool
   TOOL : 09930–82720 (Mode select switch)

2) Warn up the engine and keep it running in idling speed.
3) Turn the mode select switch ON.
4) Check the position of the bar in the left of C code displayed on the LCD panel.

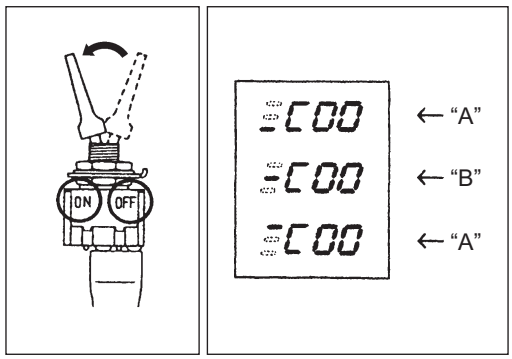

I823H1130022-01

"A": Incorrect position	"B": Correct position

5) If the TP sensor adjustment is necessary, lift and support the fuel tank. Refer to "Fuel Tank Removal and Installation in Section 1G (Page 1G-10)".
6) Loosen the TP sensor mounting screw using the special tool and turn the TP sensor to bring the bar to the correct position.

   Special tool
   TOOL : 09930–11950 (Torx wrench)

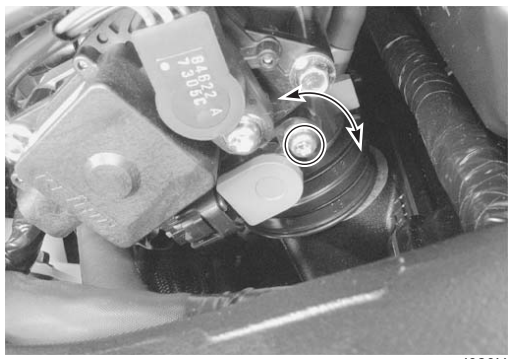

I823H1130006-02

7) Tighten the TP sensor mounting screw to the specified torque.

   Tightening torque
   TP sensor mounting screw: 3.5 N·m (0.35 kgf-m, 2.5 lb-ft)

8) Turn off the engine and place back the fuel tank.

SAMPLE

ECT Sensor Removal and Installation

B823H11306008

Removal

1) Lift and support the fuel tank. Refer to “Fuel Tank Removal and Installation in Section 1G (Page 1G-10)”.
2) Drain engine coolant. Refer to “Cooling System Inspection in Section 0B (Page 0B-13)”.
3) Disconnect the coupler and remove the ECT sensor (1).

⚠ CAUTION

Take special care when handling the ECT sensor. It may cause damage if it gets an excessive impact.

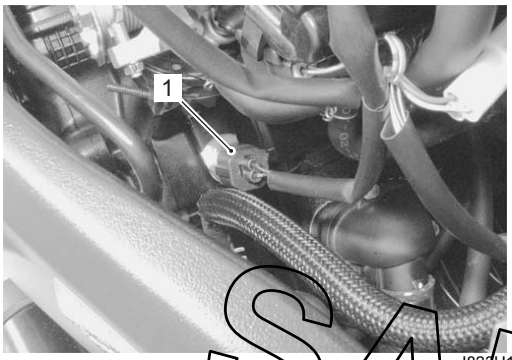

I823H1130010-01

SAMPLE

Installation

Install the ECT sensor in the reverse order of removal.
Pay attention to the following points:

- Tighten the ECT sensor (1) to the specified torque.

⚠ CAUTION

Use new gasket washer to prevent engine coolant leakage.

Tightening torque
ECT sensor (a): 18 N·m (1.8 kgf-m, 13.0 lb-ft)

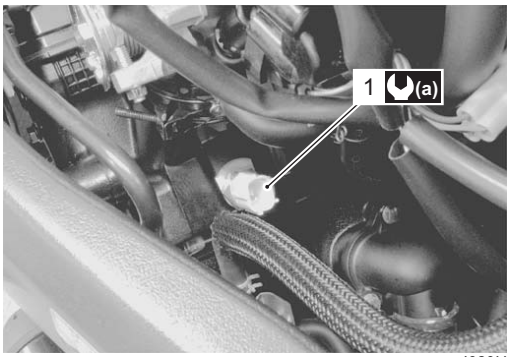

I823H1130011-02

- Pour engine coolant. Refer to “Cooling System Inspection in Section 0B (Page 0B-13)”.

ECT Sensor Inspection

B823H11306009

Refer to “DTC “C15” (P0115-H/L): ECT Sensor Circuit Malfunction in Section 1A (Page 1A-48)”.
Inspect the ECT sensor in the following procedures:

1) Remove the ECT sensor. Refer to “ECT Sensor Removal and Installation (Page 1C-5)”.
2) Connect the ECT sensor (1) to the circuit tester and place it in the oil (2) contained in a pan, which is placed on a stove.
3) Heat the oil to raise its temperature slowly and read the column thermometer (3) and ohmmeter.
   If the ECT sensor ohmic value does not change in the proportion indicated, replace it with a new one.

⚠ CAUTION

- **Take special care when handling the ECT sensor. It may cause damage if it gets an excessive sharp impact.**
- **Do not contact the ECT sensor and column thermometer with a pan.**

Special tool
TOOL (A): 09900–25008 (Multi-circuit tester set)

Tester knob indication
Resistance (Ω)

ECT sensor specification

Temperature	Standard resistance
20 °C (68 °F)	Approx. 2.45 kΩ
50 °C (122 °F)	Approx. 0.811 kΩ
80 °C (176 °F)	Approx. 0.318 kΩ
110 °C (230 °F)	Approx. 0.142 kΩ

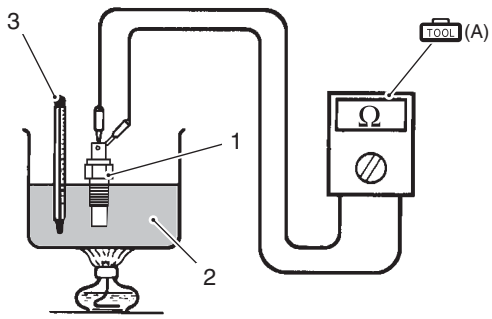

I718H1130014-01

4) Install the ECT sensor. Refer to “ECT Sensor Removal and Installation (Page 1C-5)”.

IAT Sensor Removal and Installation

B823H11306029

Removal

1) Lift and support the fuel tank. Refer to “Fuel Tank Removal and Installation in Section 1G (Page 1G-10)”.
2) Disconnect the coupler and remove the IAT sensor (1) from the air cleaner box.

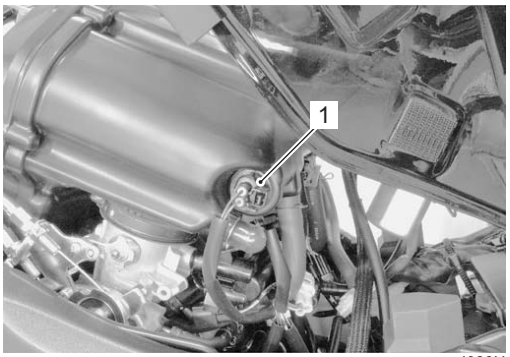

I823H1130012-01

Installation

Install the IAT sensor in the reverse order of removal.

IAT Sensor Inspection

B823H11306028

Refer to “DTC “C21” (P0110-H/L): IAT Sensor Circuit Malfunction in Section 1A (Page 1A-53)”.
Inspect the IAT sensor.

NOTE

IAT sensor resistance measurement method is the same way as that of the ECT sensor. Refer to “ECT Sensor Inspection (Page 1C-5)”.

⚠ CAUTION

- **The IAT sensor operative temperature range is –30 – 120 °C (–22 – 248 °F).**
- **Do not heat the oil up to 120 °C (248 °F) or more for this inspection.**

IAT sensor specification

Temperature	Standard resistance
20 °C (68 °F)	Approx. 2.45 kΩ
80 °C (176 °F)	Approx. 0.322 kΩ
120 °C (248 °F)	Approx. 0.117 kΩ

AP Sensor Inspection

B823H11306030

Refer to “DTC “C22” (P01450-H/L): AP Sensor Circuit Malfunction in Section 1A (Page 1A-58)”.

AP Sensor Removal and Installation

B823H11306031

Removal

1) Remove the front seat. Refer to “Exterior Parts Removal and Installation in Section 9D (Page 9D-14)”.
2) Disconnect the coupler and remove the AP sensor (1).

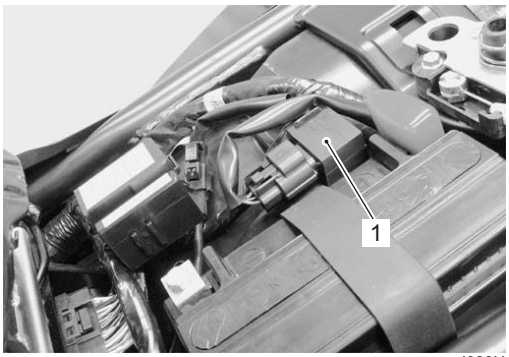

I823H1130013-01

Installation

Install the AP sensor in the reverse order of removal.

TO Sensor Inspection

B823H11306011

Refer to “DTC “C23” (P1651-H/L): TO Sensor Circuit Malfunction in Section 1A (Page 1A-65)”.

TO Sensor Removal and Installation

B823H11306010

Removal

1) Remove the right frame side cover. Refer to “Exterior Parts Removal and Installation in Section 9D (Page 9D-14)”.
2) Disconnect the coupler and remove the TO sensor (1).

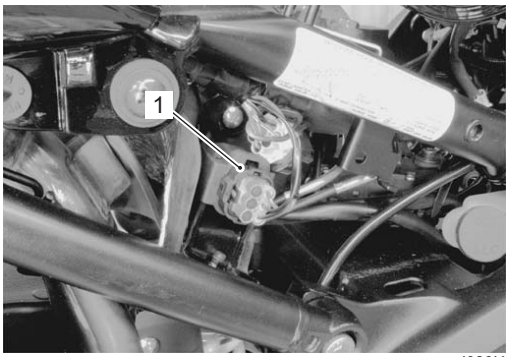

I823H1130014-01

SAMPLE

Installation
Install the TO sensor in the reverse order of removal. Pay attention to the following point:

- When installing the TO sensor, bring the “UP” letters upward.

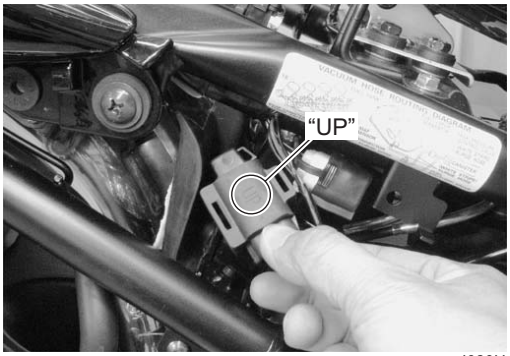

I823H1130015-01

STP Sensor Inspection

B823H11306012

Refer to “DTC “C29” (P1654-H/L): Secondary Throttle Position Sensor (STPS) Circuit Malfunction in Section 1A (Page 1A-76)”.

STP Sensor Adjustment

B823H11306013

Adjust the STP sensor in the following procedures:

1) Remove the air cleaner box. Refer to “Air Cleaner Box Removal and Installation in Section 1D (Page 1D-6)”.
2) Disconnect the STVA lead wire coupler (1).
3) Insert the needle pointed probes to the STP sensor coupler (2) (between Y and B wires).

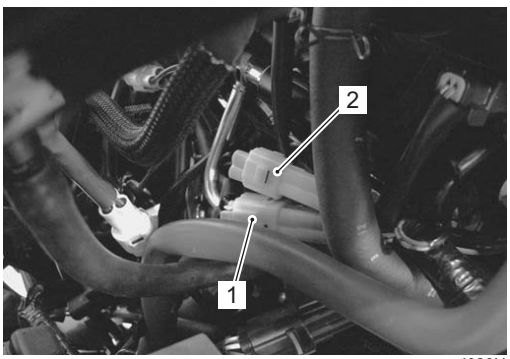

I823H1130021-01

4) Turn the ignition switch ON.

5) Close the secondary throttle valve by finger and measure the STP sensor output voltage.

Special tool
TOOL (A): 09900–25008 (Multi-circuit tester set)
TOOL (B): 09900–25009 (Needle pointed probe set)

Tester knob indication
Voltage (⎓)

STP sensor output voltage
ST valve is fully closed: Approx. 0.5 V ((+): Y – (–): B)

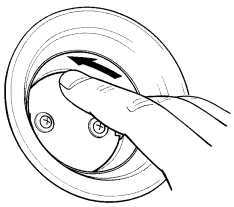

I718H1130017-01

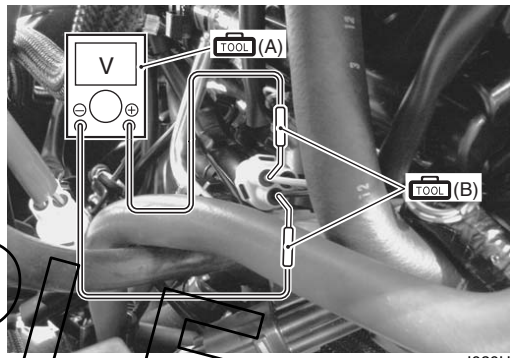

I823H1110134-01

6) Loosen the STP sensor mounting screw using the special tool and adjust the STP sensor (2) until the output voltage comes within the specified value.

Special tool
TOOL : 09930–11950 (Torx wrench)

7) Tighten the STP sensor mounting screw to the specified torque.

Tightening torque
STP sensor mounting screw: 3.5 N·m (0.35 kgf-m, 2.5 lb-ft)

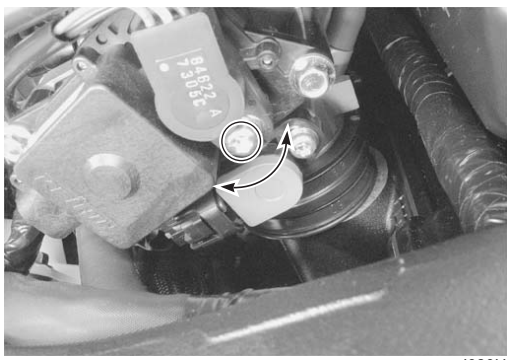

I823H1130026-01

8) Reinstall the removed parts.

SAMPLE

STP Sensor Removal and Installation

B823H11306014

Removal

1) Remove the throttle body. Refer to “Throttle Body Removal and Installation in Section 1D (Page 1D-10)”.
2) Remove the STP sensor (1) with the special tool.

Special tool
TOOL : 09930–11950 (Torx wrench)

NOTE

Prior to disassembly, mark the STP sensor’s original position with a paint or scribe for accurate reinstallation.

I823H1130017-01

Installation

Install the STP sensor in the reverse order of removal. Pay attention to the following point:

- With the secondary throttle valves fully opened, install the STP sensor (1) and tighten the STP sensor mounting screw to the specified torque.

NOTE

- **Apply thin coat of engine oil to the O-ring.**
- **Align the secondary throttle shaft end “A” with the groove “B” of the STP sensor.**
- **Apply grease to the secondary throttle shaft end “A” if necessary.**

A : Grease 99000–25010 (SUZUKI SUPER GREASE A or equivalent)

Special tool
TOOL : 09930–11950 (Torx wrench)

Tightening torque
STP sensor mounting screw: 3.5 N·m (0.35 kgf-m, 2.5 lb-ft)

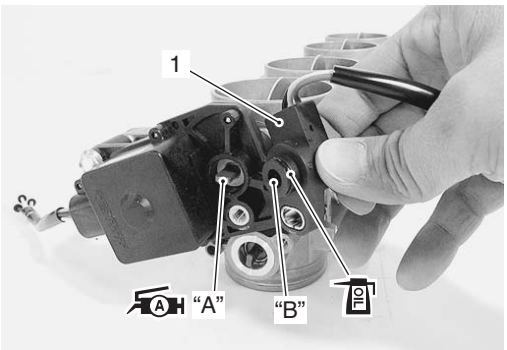

I823H1140022-02

NOTE

- **Make sure the secondary throttle valves smoothly open and close.**
- **If the STP sensor adjustment is necessary, refer to “STP Sensor Inspection (Page 1C-7)” for STP sensor setting procedure.**

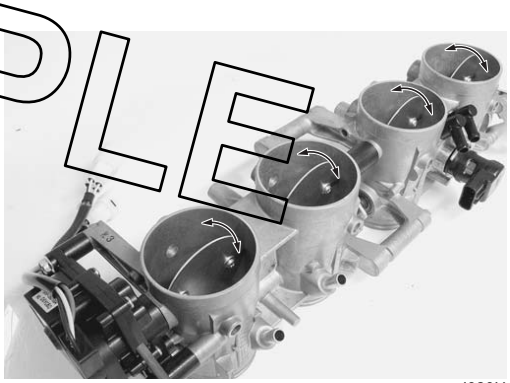

I823H1140023-01

STV Actuator Inspection

B823H11306015

Refer to “DTC “C28” (P1655): Secondary Throttle Valve Actuator (STVA) Malfunction in Section 1A (Page 1A-72)”.

SAMPLE

STV Actuator Removal and Installation

B823H11306016

Refer to “Throttle Body Disassembly and Assembly in Section 1D (Page 1D-12)”.

⚠ CAUTION

Never remove the STVA from the throttle body.

ISC Valve Inspection

B823H11306017

Refer to “DTC “C40” (P0505 / P0506 / P0507): ISC Valve Circuit Malfunction in Section 1A (Page 1A-94)”.

ISC Valve Removal and Installation

B823H11306018

Refer to “Throttle Body Disassembly and Assembly in Section 1D (Page 1D-12)”.

⚠ CAUTION

- **Be careful not to disconnect the ISC valve coupler at least 5 seconds after ignition switch is turned to OFF. If the ECM coupler or ISC valve coupler is disconnected within 5 seconds after ignition switch is turned to OFF, there is a possibility of an unusual valve position being written in ECM and causing an error of ISC valve operation.**
- **When the throttle body assembly is replaced with a new one, the ISC valve must be set present position. Refer to “ISC Valve Preset and Opening Initialization (Page 1C-9)”.**

ISC Valve Preset and Opening Initialization

B823H11306019

When removing or replacing the ISC valve, set the ISC valve to the following procedures:

1) Turn the ignition switch ON.
2) Set up the SDS tool. (Refer to the SDS operation manual for further details.)
3) Click the “Active control”.
4) Click the “ISC learned value reset” (1).

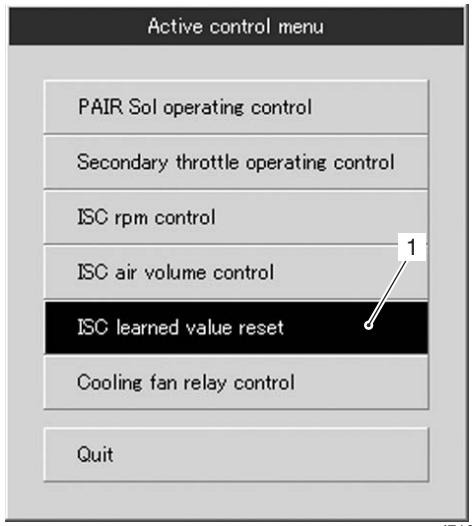

I718H1130018-01

5) Click the “Reset” button to clear the ISC leaned value.

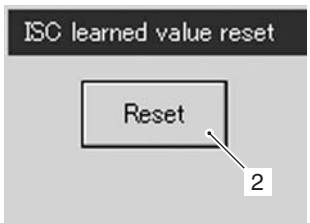

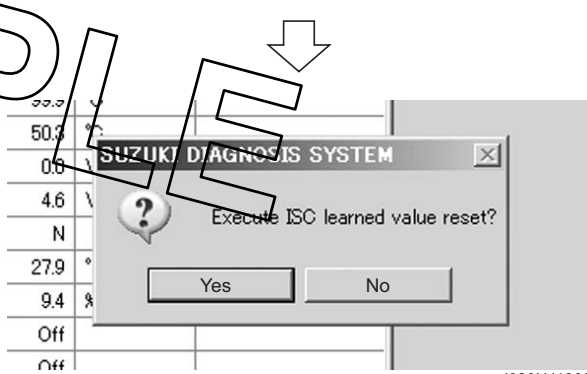

I823H1130025-01

NOTE

The leaned value of the ISC valve is set at Preset position.

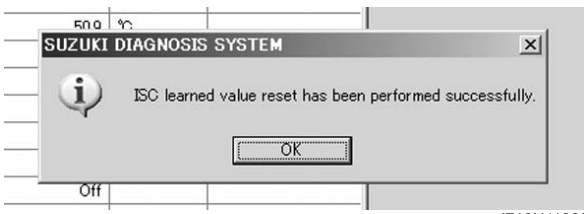

I718H1130019-01

SAMPLE

6) Close the SDS tool and turn the ignition switch OFF.

NOTE

The ISC valve opening initialization is automatically started after the ignition switch is turned OFF position.

HO2 Sensor Inspection

B823H11306020

Refer to “DTC “C44” (P0130/P0135): HO2 Sensor (HO2S) Circuit Malfunction in Section 1A (Page 1A-104)”.

HO2 Sensor Removal and Installation

B823H11306021

Refer to “Heated Oxygen Sensor (HO2S) Removal and Installation in Section 1B (Page 1B-9)”.

GP Switch Inspection

B823H11306022

Refer to “Side-stand / Ignition Interlock System Parts Inspection in Section 1I (Page 1I-8)”.

GP Switch Removal and Installation

B823H11306023

Refer to “Gear Position (GP) Switch Removal and Installation in Section 5B (Page 5B-11)”.

Specifications

Service Data

B823H11307001

FI Sensors

Item	Standard/Specification		Note
CKP sensor resistance	180 – 280 Ω		
CKP sensor peak voltage	3.0 V and more		When cranking
IAP sensor input voltage	4.5 – 5.5 V		
IAP sensor output voltage	Approx. 2.7 V at idle speed		
TP sensor input voltage	4.5 – 5.5 V		
TP sensor output voltage	Closed	Approx. 1.1 V	
	Opened	Approx. 4.3 V	
ECT sensor input voltage	4.5 – 5.5 V		
ECT sensor output voltage	0.15 – 4.85 V		
ECT sensor resistance	Approx. 2.45 kΩ at 20 °C (68 °F)		
IAT sensor input voltage	4.5 – 5.5 V		
IAT sensor output voltage	0.15 – 4.85 V		
IAT sensor resistance	Approx. 2.45 kΩ at 20 °C (68 °F)		
AP sensor input voltage	4.5 – 5.5 V		
AP sensor output voltage	Approx. 3.6 V at 100 kPa (760 mmHg)		
TO sensor resistance	16.5 – 22.3 kΩ		
TO sensor voltage	Normal	0.4 – 1.4 V	
	Leaning	3.7 – 4.4 V	When leaning 65°
GP switch voltage	0.6 V and more		From 1st to Top
Injector voltage	Battery voltage		
Ignition coil primary peak voltage	80 V and more		When cranking
HO2 sensor output voltage	0.3 V and less at idle speed		
	0.6 V and more at 3 000 r/min		
HO2 sensor heater resistance	Approx. 8 Ω at 23 °C (73 °F)		
PAIR control solenoid valve resistance	20 – 24 Ω at 20 – 30 °C (68 – 86 °F)		
STP sensor input voltage	4.5 – 5.5 V		
STP sensor output voltage	Closed	Approx. 0.5 V	
	Opened	Approx. 3.9 V	
STV actuator resistance	Approx. 6.5 Ω		
EXCVA position sensor input voltage	4.5 – 5.5 V		
EXCVA position sensor output voltage	Closed	0.45 – 1.4 V	
	Opened	3.6 – 4.55 V	
EXCVA position sensor resistance	Approx. 3.1 kΩ		At adjustment position
EVAP system purge control solenoid valve resistance	Approx. 32 kΩ at 20 °C (68 °F)		E-33 only
ISC valve resistance	Approx. 80 Ω at 25 °C (77 °F)		

SAMPLE

Tightening Torque Specifications

B823H11307002

Fastening part	Tightening torque			Note
	N·m	kgf-m	lb-ft	
CMP sensor bolt	10	1.0	7.0	☞(Page 1C-2)
TP sensor mounting screw	3.5	0.35	2.5	☞(Page 1C-4) / ☞(Page 1C-4)
ECT sensor	18	1.8	13.0	☞(Page 1C-5)
STP sensor mounting screw	3.5	0.35	2.5	☞(Page 1C-7) / ☞(Page 1C-8)

Reference:
For the tightening torque of fastener not specified in this section, refer to “Tightening Torque List in Section 0C (Page 0C-9)”.

Special Tools and Equipment

Recommended Service Material

B823H11308001

Material	SUZUKI recommended product or Specification		Note
Grease	SUZUKI SUPER GREASE A or equivalent	P/No.: 99000–25010	☞(Page 1C-4) / ☞(Page 1C-8)

Special Tool

B823H11308002

09900–25008 Multi-circuit tester set ☞(Page 1C-5) / ☞(Page 1C-7) 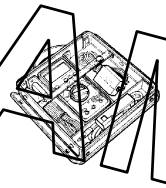	09900–25009 Needle pointed probe set ☞(Page 1C-7) 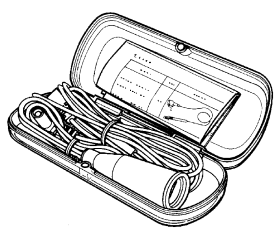
09930–11950 Torx wrench ☞(Page 1C-3) / ☞(Page 1C-4) / ☞(Page 1C-4) / ☞(Page 1C-7) / ☞(Page 1C-8) / ☞(Page 1C-8) 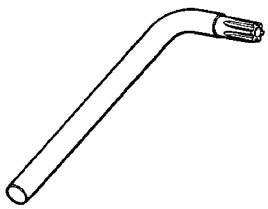	09930–82720 Mode select switch ☞(Page 1C-4)

SAMPLE

Engine Mechanical

Schematic and Routing Diagram

Camshaft and Sprocket Assembly Diagram

B823H11402001

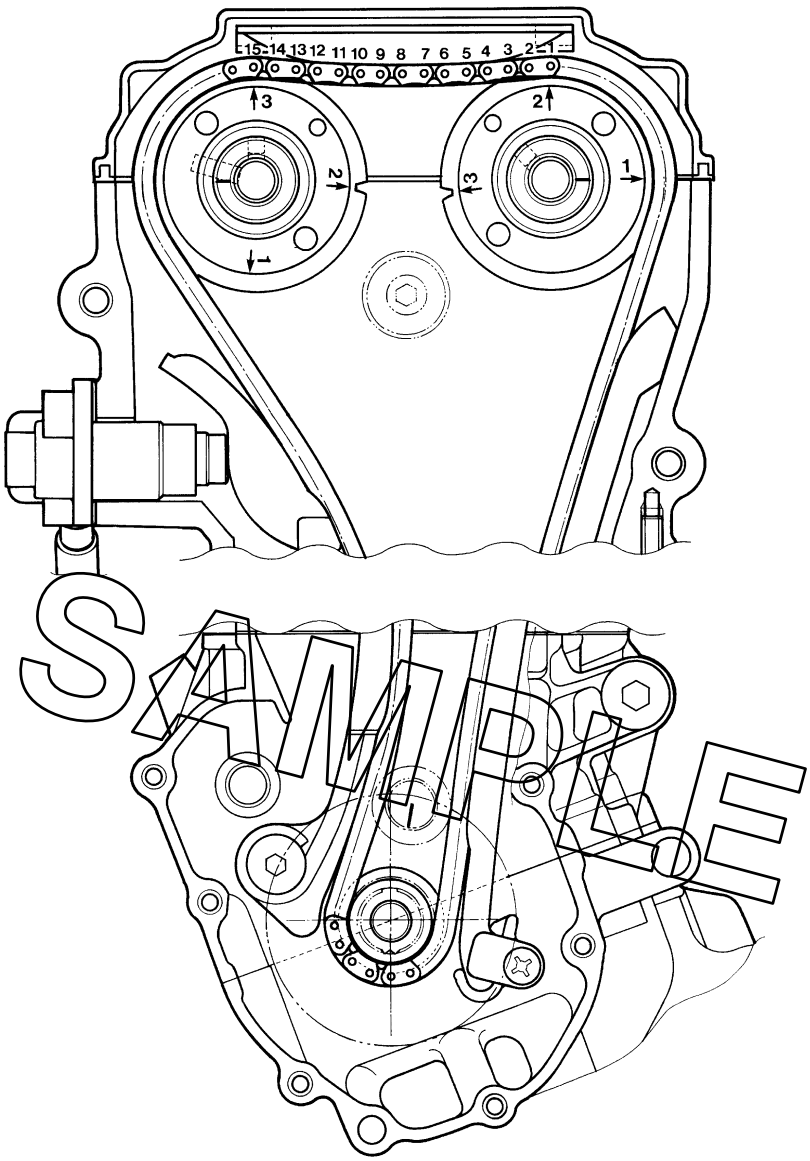

I823H1140001-01

Throttle Cable Routing Diagram

B823H11402002

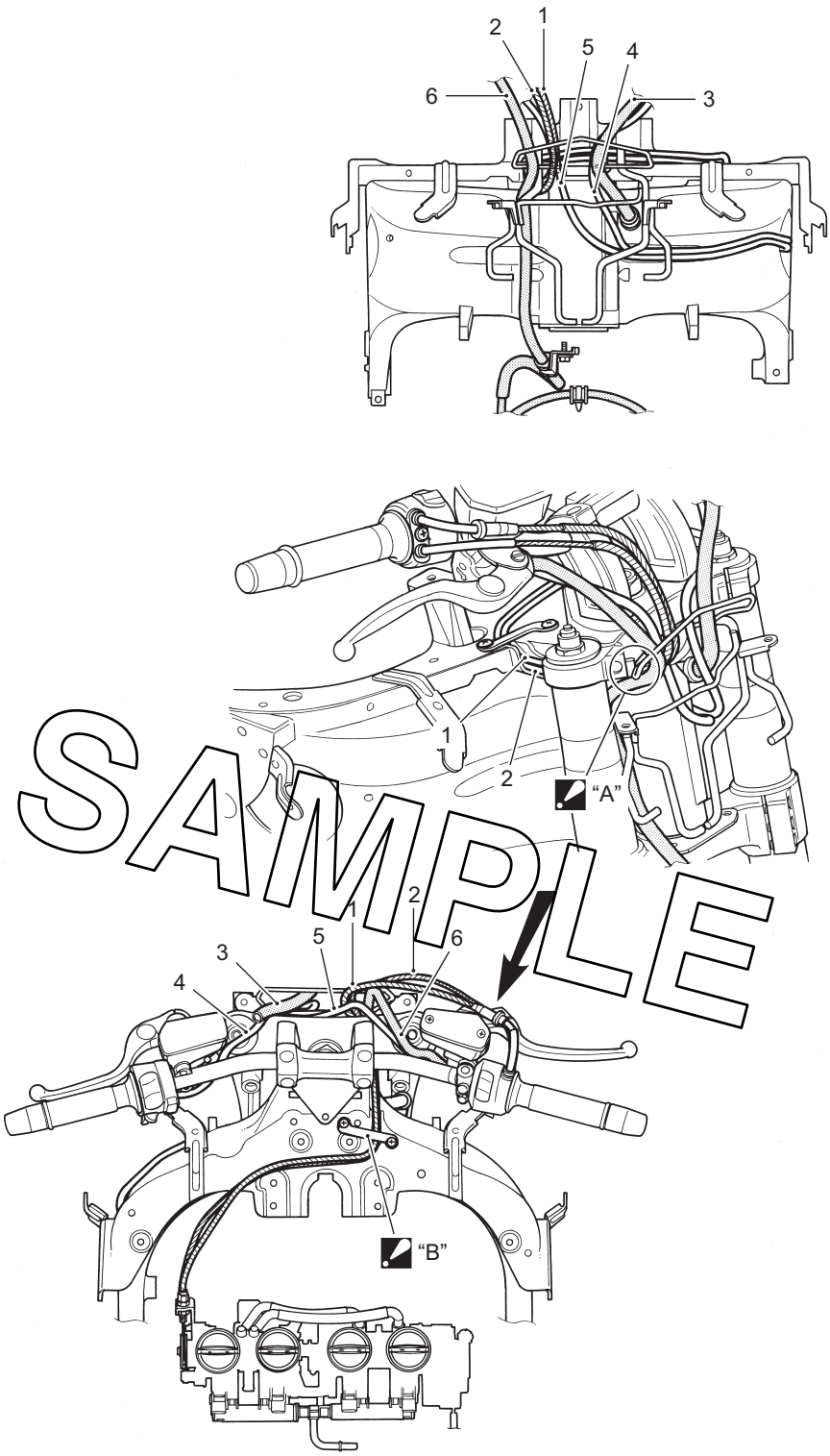

SAMPLE

I823H1140572-02

1. Throttle cable No. 1	5. Right handlebar switch harness
2. Throttle cable No. 2	6. Front brake hose
3. Clutch hose	"A": Pass the throttle cables to inside of the headlight brace.
4. Left handlebar switch harness	"B": Pass the throttle cable No. 1 above the throttle cable No. 2.

Diagnostic Information and Procedures

Engine Mechanical Symptom Diagnosis

B823H11404001

Refer to “Engine Symptom Diagnosis in Section 1A (Page 1A-8)”.

Compression Pressure Check

B823H11404002

The compression pressure reading of a cylinder is a good indicator of its internal condition.
The decision to overhaul the cylinder is often based on the results of a compression test. Periodic maintenance records kept at your dealership should include compression readings for each maintenance service.

NOTE

- **Before checking the engine for compression pressure, make sure that the cylinder head nuts are tightened to the specified torque values and the valves are properly adjusted.**
- **Make sure that the battery is in fully-charged condition.**

1) Warm up the engine.
2) Lift and support the fuel tank. Refer to “Fuel Tank Removal and Installation in Section 1G (Page 1G-10)”.
3) Remove the air cleaner box. Refer to “Air Cleaner Box Removal and Installation (Page 1D-6)”.
4) Remove all the spark plugs. Refer to “Ignition Coil / Plug Cap and Spark Plug Removal and Installation in Section 1H (Page 1H-6)”.
5) Install the compression gauge and adaptor in the spark plug hole. Make sure that the connection is tight.

Special tool
TOOL (A): 09915–64512 (Compression gauge)
TOOL (B): 09915–63311 (Compression gauge attachment)

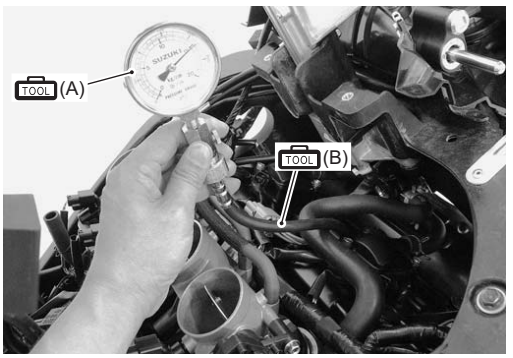

I823H1140582-01

6) Keep the throttle grip in the fully-opened position.

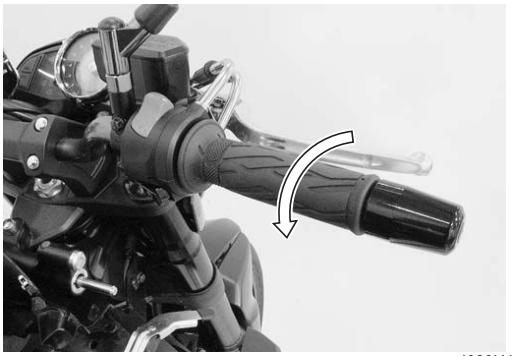

I823H1140583-01

7) Press the starter button and crank the engine for a few seconds. Record the maximum gauge reading as the cylinder compression.
8) Repeat this procedure with the other cylinders.

Compression pressure specification

Standard	Limit	Difference
1 400 – 1 800 kPa (14 – 18 kgf/cm^2, 199 – 256 psi)	**1 000 kPa (10 kgf/cm^2, 142 psi)**	**200 kPa (2 kgf/cm^2, 28 psi)**

Low compression pressure can indicate any of the following conditions:

- Excessively worn cylinder walls
- Worn piston or piston rings
- Piston rings stuck in grooves
- Poor valve seating
- Ruptured or otherwise defective cylinder head gasket

Overhaul the engine in the following cases:

- Compression pressure in one of the cylinders is 1 000 kPa (10 kgf/cm^2, 142 psi) and less.
- The difference in compression pressure between any two cylinders is 200 kPa (2 kgf/cm^2, 28 psi) and more.
- All compression pressure readings are below 1 400 kPa (14 kgf/cm^2, 199 psi) even when they measure 1 000 kPa (10 kgf/cm^2, 142 psi) and more.

9) After checking the compression pressure, reinstall the removed parts.

SAMPLE

Repair Instructions

Engine Components Removable with the Engine in Place

B823H11406001

Engine components which can be removed while the engine is installed on the frame are as follows. For the installing and removing procedures, refer to respective paragraphs describing each component.

Center of Engine

Item	Removal	Inspection	Installation
Air cleaner element	Refer to “Air Cleaner Element Removal and Installation (Page 1D-6)”.	Refer to “Air Cleaner Element Inspection in Section 0B (Page 0B-3)”.	Refer to “Air Cleaner Element Removal and Installation (Page 1D-6)”.
Exhaust pipes/Muffler	Refer to “Muffler / Muffler Joint / Exhaust Pipe Removal and Installation in Section 1K (Page 1K-12)”.	Refer to “Exhaust System Inspection in Section 1K (Page 1K-15)”.	Refer to “Muffler / Muffler Joint / Exhaust Pipe Removal and Installation in Section 1K (Page 1K-12)”.
Oil filter	Refer to “Engine Oil and Filter Replacement in Section 0B (Page 0B-10)”.	—	Refer to “Engine Oil and Filter Replacement in Section 0B (Page 0B-10)”.
Oil cooler	Refer to “Oil Cooler / Oil Cooler Hose Removal and Installation in Section 1E (Page 1E-9)”.	—	Refer to “Oil Cooler / Oil Cooler Hose Removal and Installation in Section 1E (Page 1E-9)”.
Oil pan	Refer to “Oil Pan / Oil Strainer / Oil Pressure Regulator Removal and Installation in Section 1E (Page 1E-6)”.	—	Refer to “Oil Pan / Oil Strainer / Oil Pressure Regulator Removal and Installation in Section 1E (Page 1E-6)”.
Throttle body	Refer to “Throttle Body Removal and Installation (Page 1D-10)”.	Refer to “Throttle Body Inspection and Cleaning (Page 1D-16)”.	Refer to “Throttle Body Removal and Installation (Page 1D-10)”.
Cam chain tension adjuster	Refer to “Engine Top Side Disassembly (Page 1D-28)”.	Refer to “Cam Chain Tension Adjuster Inspection (Page 1D-46)”.	Refer to “Engine Top Side Assembly (Page 1D-32)”.
Cylinder head cover	Refer to “Engine Top Side Disassembly (Page 1D-28)”.	—	Refer to “Engine Top Side Assembly (Page 1D-32)”.
Camshafts	Refer to “Engine Top Side Disassembly (Page 1D-28)”.	Refer to “Camshaft Inspection (Page 1D-43)”.	Refer to “Engine Top Side Assembly (Page 1D-32)”.
Starter motor	Refer to “Starter Motor Removal and Installation in Section 1I (Page 1I-4)”.	Refer to “Starter Motor Inspection in Section 1I (Page 1I-5)”.	Refer to “Starter Motor Removal and Installation in Section 1I (Page 1I-4)”.
Crank balancer	Refer to “Engine Bottom Side Disassembly (Page 1D-64)”.	Refer to “Crank Balancer Inspection (Page 1D-90)”.	Refer to “Engine Bottom Side Assembly (Page 1D-72)”.

SAMPLE

Engine Right Side

Item	Removal	Inspection	Installation
Clutch cover	Refer to “Clutch Removal in Section 5C (Page 5C-15)”.	—	Refer to “Clutch Installation in Section 5C (Page 5C-17)”.
Clutch plates	Refer to “Clutch Removal in Section 5C (Page 5C-15)”.	Refer to “Clutch Parts Inspection in Section 5C (Page 5C-21)”.	Refer to “Clutch Installation in Section 5C (Page 5C-17)”.
Clutch sleeve hub	Refer to “Clutch Removal in Section 5C (Page 5C-15)”.	—	Refer to “Clutch Installation in Section 5C (Page 5C-17)”.
Primary driven gear	Refer to “Clutch Removal in Section 5C (Page 5C-15)”.	Refer to “Clutch Parts Inspection in Section 5C (Page 5C-21)”.	Refer to “Clutch Installation in Section 5C (Page 5C-17)”.
Oil pump drive gear	Refer to “Oil Pump Removal and Installation in Section 1E (Page 1E-13)”.	—	Refer to “Oil Pump Removal and Installation in Section 1E (Page 1E-13)”.
Oil pump	Refer to “Oil Pump Removal and Installation in Section 1E (Page 1E-13)”.	Refer to “Oil Pump Inspection in Section 1E (Page 1E-14)”.	Refer to “Oil Pump Removal and Installation in Section 1E (Page 1E-13)”.
Oil pressure switch	Refer to “Oil Pressure Switch Removal and Installation in Section 1E (Page 1E-10)”.	Refer to “Oil Pressure Indicator Inspection in Section 9C (Page 9C-8)”.	Refer to “Oil Pressure Switch Removal and Installation in Section 1E (Page 1E-10)”.

Engine Left Side

Item	Removal	Inspection	Installation
Generator	Refer to “Generator Removal and Installation in Section 1J (Page 1J-6)”.	Refer to “Generator Inspection in Section 1J (Page 1J-5)”.	Refer to “Generator Removal and Installation in Section 1J (Page 1J-6)”.
Engine sprocket	Refer to “Engine Sprocket Removal and Installation in Section 3A (Page 3A-2)”.	Refer to “Drive Chain Related Parts Inspection in Section 3A (Page 3A-5)”.	Refer to “Engine Sprocket Removal and Installation in Section 3A (Page 3A-2)”.
Driven chain	Refer to “Drive Chain Replacement in Section 3A (Page 3A-7)”.	Refer to “Drive Chain Inspection and Adjustment in Section 0B (Page 0B-15)”.	Refer to “Drive Chain Replacement in Section 3A (Page 3A-7)”.
Gear position switch	Refer to “Gear Position (GP) Switch Removal and Installation in Section 5B (Page 5B-11)”.	Refer to “Gear Position (GP) Switch Inspection in Section 5B (Page 5B-11)”.	Refer to “Gear Position (GP) Switch Removal and Installation in Section 5B (Page 5B-11)”.
Starter idle gear	Refer to “Starter Torque Limiter / Starter Clutch Removal and Installation in Section 1I (Page 1I-10)”.	—	Refer to “Starter Torque Limiter / Starter Clutch Removal and Installation in Section 1I (Page 1I-10)”.
Starter clutch	Refer to “Starter Torque Limiter / Starter Clutch Removal and Installation in Section 1I (Page 1I-10)”.	Refer to “Starter Clutch Inspection in Section 1I (Page 1I-12)”.	Refer to “Starter Torque Limiter / Starter Clutch Removal and Installation in Section 1I (Page 1I-10)”.
CKP sensor	Refer to “Generator Removal and Installation in Section 1J (Page 1J-6)”.	Refer to “CKP Sensor Inspection in Section 1H (Page 1H-10)”.	Refer to “Generator Removal and Installation in Section 1J (Page 1J-6)”.
Water pump	Refer to “Water Pump Removal and Installation in Section 1F (Page 1F-13)”.	Refer to “Water Pump Related Parts Inspection in Section 1F (Page 1F-17)”.	Refer to “Water Pump Removal and Installation in Section 1F (Page 1F-13)”.

SAMPLE

Air Cleaner Element Removal and Installation

B823H11406002

Removal

1) Remove the air cleaner box. Refer to “Air Cleaner Box Removal and Installation (Page 1D-6)”.
2) Remove the air cleaner box cover (1).

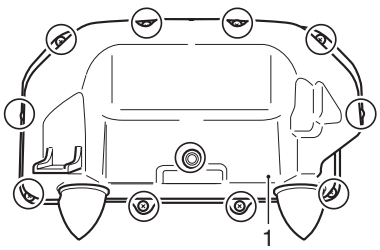

I823H1140002-01

3) Remove the air cleaner element (2).

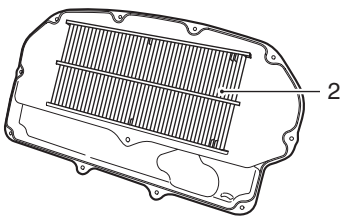

I823H1140003-01

Installation

Install the air cleaner element in the reverse order of removal.

Air Cleaner Box Removal and Installation

B823H11406004

Removal

1) Lift and support the fuel tank. Refer to “Fuel Tank Removal and Installation in Section 1G (Page 1G-10)”.
2) Remove the IAT sensor (1) and IAP sensor (2) from the air cleaner box.
3) Disconnect the ISC hose (3).

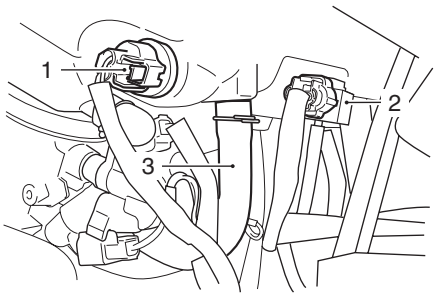

I823H1140004-01

4) Disconnect the PCV hose (4) and PAIR hose (5).

I823H1140005-02

5) Remove the fastener.

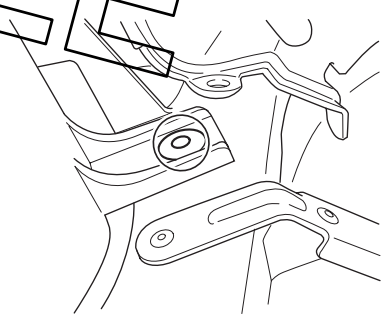

I823H1140006-01

SAMPLE

6) Loosen the clamp screws (LH & RH) and remove the air cleaner box.

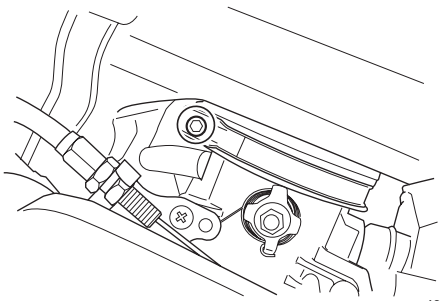

I823H1140007-02

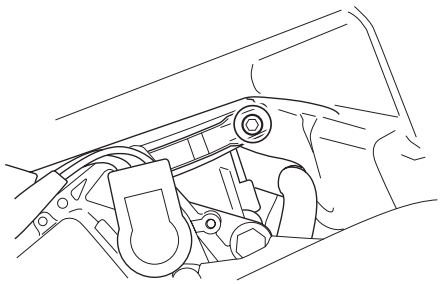

I823H1140008-02

Installation

Install the air cleaner box in the reverse order of removal. Pay attention to the following point:

- Route the hoses properly. Refer to "Throttle Body Construction (Page 1D-9)".

Air Cleaner Element Inspection and Cleaning

B823H11406003

Refer to "Air Cleaner Element Inspection in Section 0B (Page 0B-3)".

Throttle Cable Removal and Installation

B823H11406005

Removal

1) Remove the air cleaner box. Refer to "Air Cleaner Box Removal and Installation (Page 1D-6)".
2) Remove the right handlebar switch box. Refer to "Handlebar Removal and Installation in Section 6B (Page 6B-3)".
3) Remove the throttle cables as shown in the cable routing diagram. Refer to "Throttle Cable Routing Diagram (Page 1D-2)".

Installation

Install the throttle cables in the reverse order of removal. Pay attention to the following points:

- Install the throttle cables as shown in the cable routing diagram. Refer to "Throttle Cable Routing Diagram (Page 1D-2)".
- Check the throttle cable play and proper operation. Refer to "Throttle Cable Play Inspection and Adjustment in Section 0B (Page 0B-12)".

Throttle Cable Inspection

B823H11406006

Check that the throttle grip moves smoothly from full open to full close. If it does not move smoothly, lubricate the throttle cables.

Throttle Cable Play Inspection and Adjustment

B823H11406007

Refer to "Throttle Cable Play Inspection and Adjustment in Section 0B (Page 0B-12)".

SAMPLE

Throttle Body Components

B823H11406008

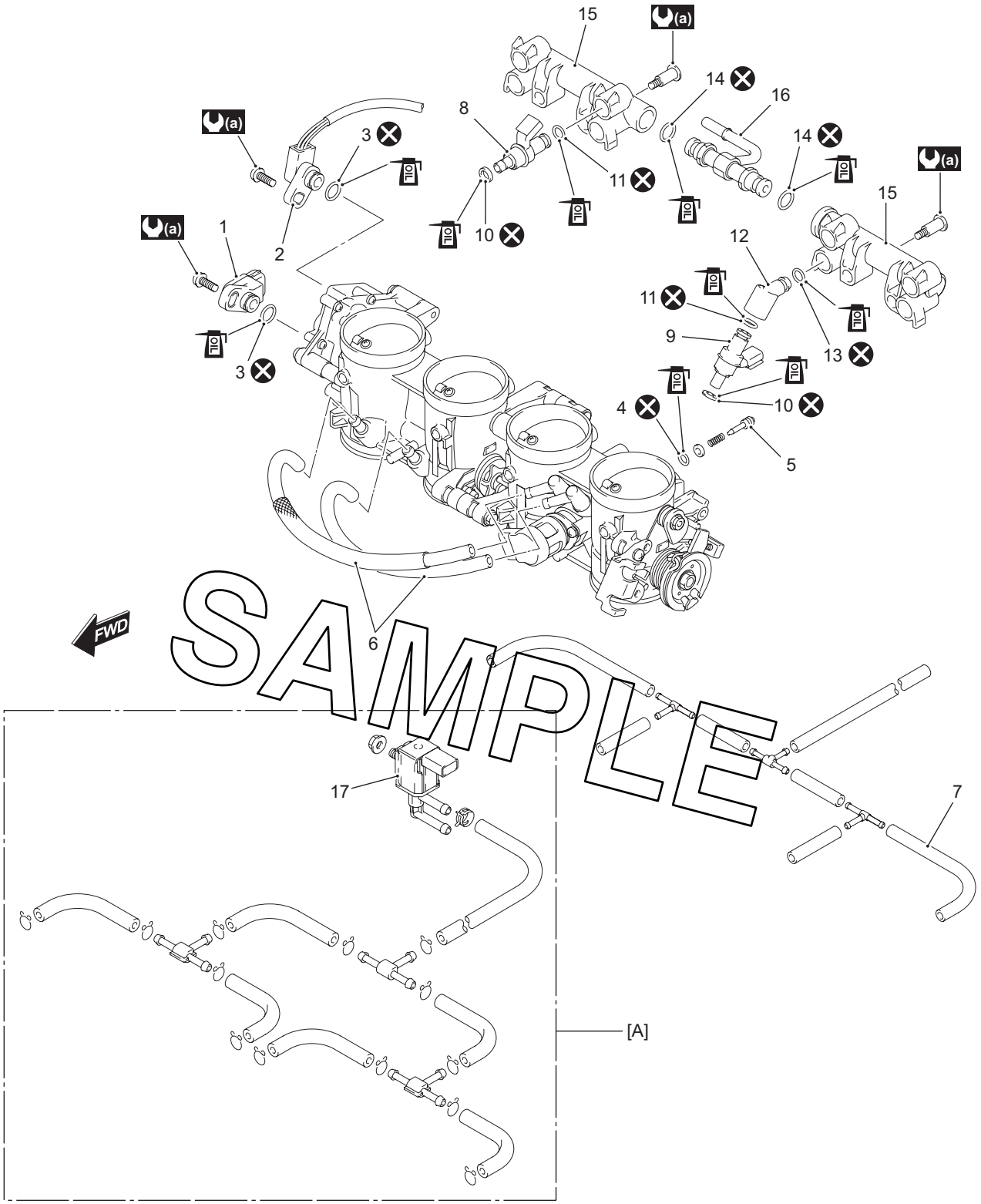

SAMPLE

I823H1140584-03

1. TP sensor	8. Secondary fuel injector	15. Fuel delivery pipe
2. STP sensor	9. Primary fuel injector	16. Fuel delivery pipe T-joint
3. O-ring	10. Cushion seal	17. EVAP system purge control solenoid valve
4. O-ring	11. O-ring	[A]: For E-33 only
5. Air screw	12. Fuel pipe	(a) : 3.5 Nm (0.35 kgf-m, 2.5 lb-ft)
6. ISC valve hose	13. O-ring	OIL : Apply engine oil.
7. Vacuum hose	14. O-ring	⊗ : Do not reuse.

Throttle Body Construction

B823H11406009

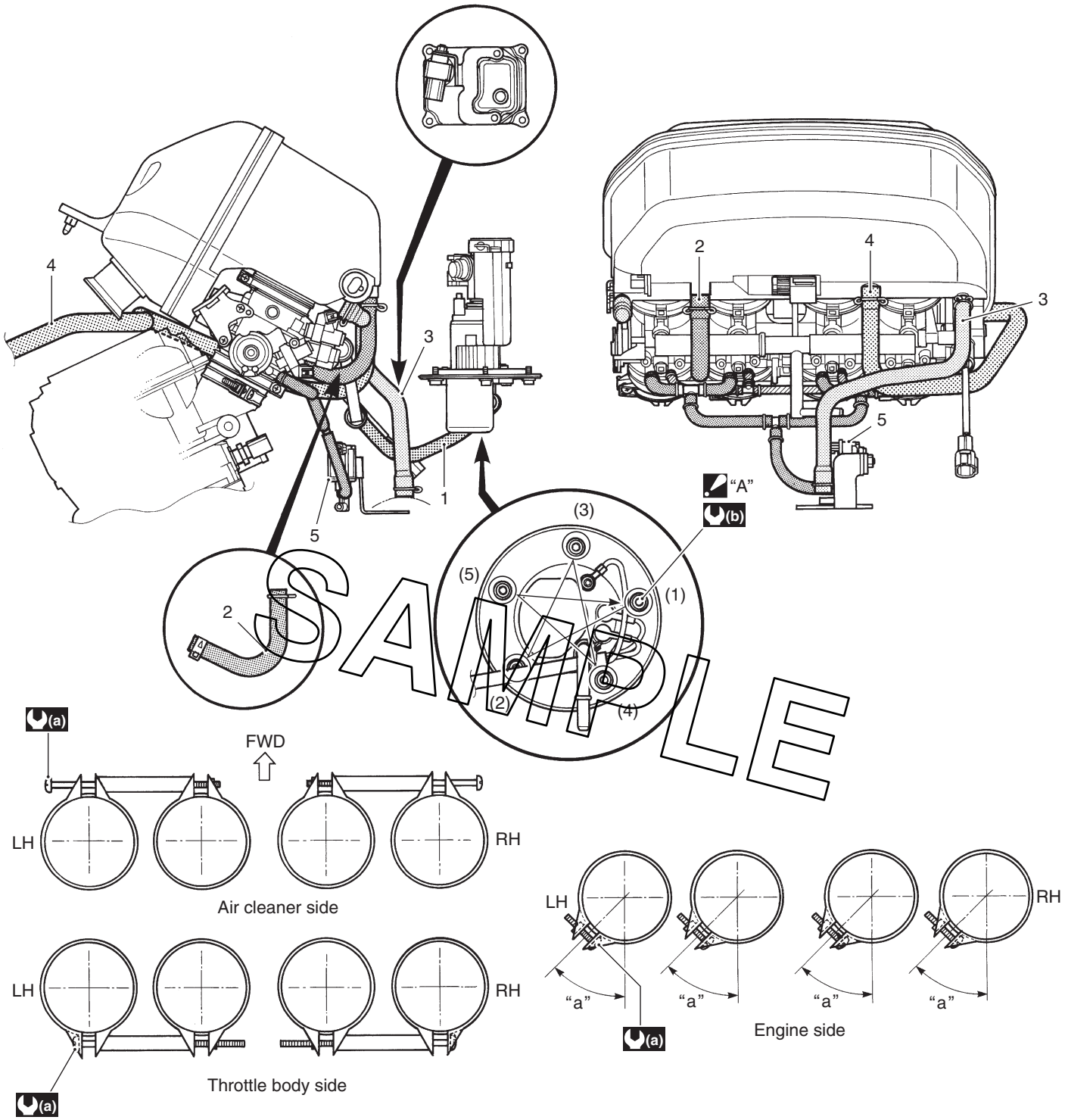

SAMPLE

I823H1140579-06

1. Fuel feed hose	"a": 45°
2. ISC valve hose	"A": First, tighten all the fuel pump mounting bolts lightly and then to the specified torque in the ascending order of numbers.
3. PCV hose	(a) : 1.5 N·m (0.15 kgf-m, 1.0 lb-ft)
4. PAIR hose	(b) : 10 N·m (1.0 kgf-m, 7.0 lb-ft)
5. EVAP purge control solenoid valve (E-33 only)	

Throttle Body Removal and Installation

B823H11406010

Removal

1) Remove the air cleaner box. Refer to “Air Cleaner Box Removal and Installation (Page 1D-6)”.
2) Disconnect the throttle cables from their drum.

⚠ CAUTION

After disconnecting the throttle cables, do not snap the throttle valves from full open to full close. It may cause damage to the throttle valves and throttle body.

I823H1140517-01

3) Place a rag under the fuel feed hose (1) and disconnect the fuel feed hose from the fuel pump.

⚠ WARNING

For California models, drain fuel from the fuel tank before disconnect the fuel feed hose to prevent fuel leakage.

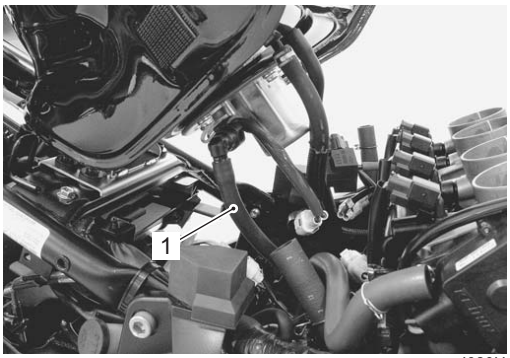

I823H1140518-01

4) Disconnect the TP sensor lead wire coupler (2), STP sensor lead wire coupler (3) and STVA lead wire coupler (4).
5) Remove the clamp (5).

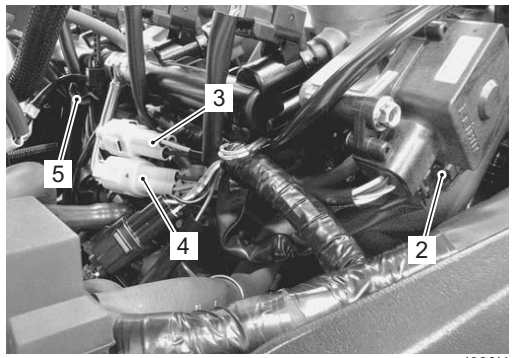

I823H1140519-01

6) Disconnect secondary fuel injector lead wire couplers (6) and primary fuel injector lead wire couplers (7).

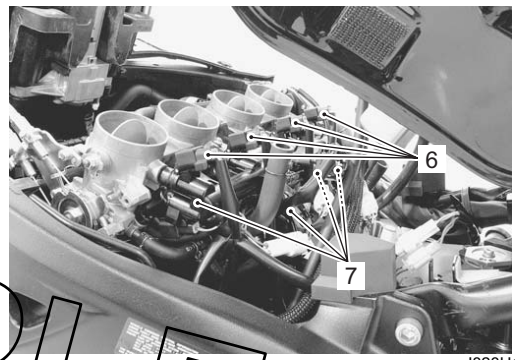

I823H1140520-01

7) Disconnect the ISC valve lead wire coupler (8).
8) Remove the clamp (9).

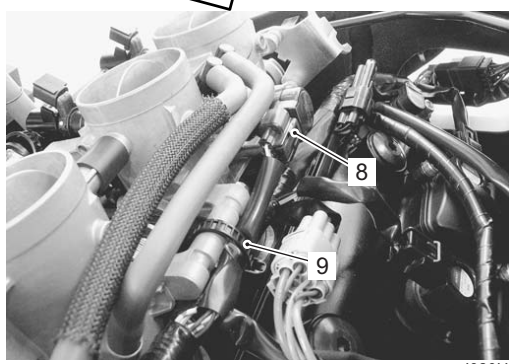

I823H1140521-01

SAMPLE

9) Disconnect the vacuum hose (10) from the IAP sensor.
10) Disconnect the purge hose (11). (E-33 only)

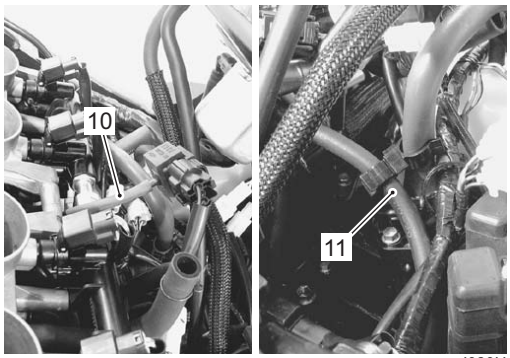

I823H1140522-01

11) Loosen the throttle body clamp screws at the intake pipe side.
12) Remove the throttle body assembly.

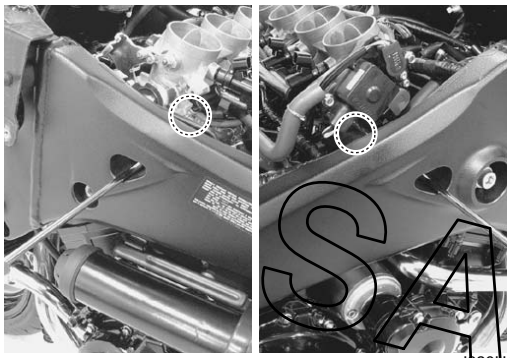
I823H1140571-01

Installation

Installs in the reverse order of removal. Pay attention to the following points:

- Connect the primary injector couplers (1) and secondary infector couplers (2) to the respective fuel injectors. Make sure that each coupler is installed in the correct position. The color on each lead wire refers to the appropriate fuel injector.

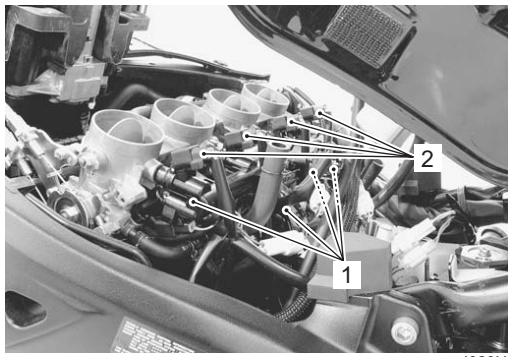

I823H1140523-01

	Primary injector	Secondary injector
#1	Y/R and Gr/W	Y/R and Lg
#2	Y/R and Gr/B	Y/R and Lg/W
#3	Y/R and Gr/Y	Y/R and Lg/G
#4	Y/R and Gr/R	Y/R and Lg/Bl

- Connect the throttle pulling cable (3) and throttle returning cable (4) to the throttle cable drum.

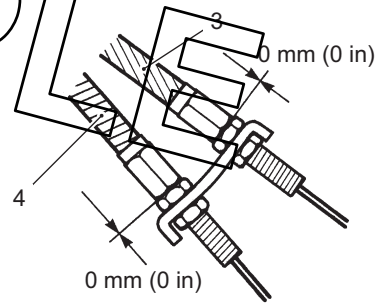

I823H1140524-01

- Loosen each throttle cable lock-nut.
- Turn in each throttle cable adjuster fully and locate each outer cable so that the clearance “a” is 0 mm (0 in).
- Tighten each lock-nut.
- Adjust the throttle cable play. Refer to “Throttle Cable Play Inspection and Adjustment in Section 0B (Page 0B-12)”.

SAMPLE

Throttle Body Disassembly and Assembly

B823H11406011

Refer to “Throttle Body Removal and Installation (Page 1D-10)”.

Disassembly

⚠ CAUTION

Identify the position of each removed part. Organize the parts in their respective groups so that they can be reinstalled in their original positions.

1) Disconnect the fuel feed hose (1), vacuum hoses (2) and ISC valve hose (3).

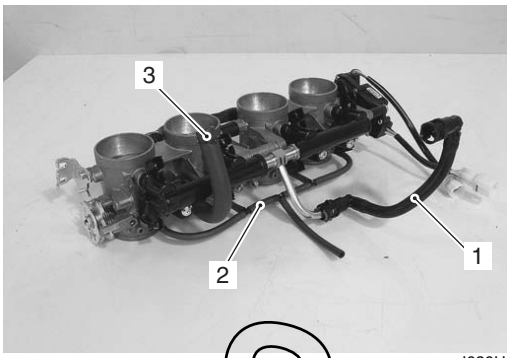

I823H1140009-01

2) Remove the fuel delivery pipe assembly (4).

⚠ CAUTION

Be careful not to twist the fuel delivery pipe T-joint when removing the fuel delivery pipes, or joint part “A” of the fuel delivery pipe get damage.

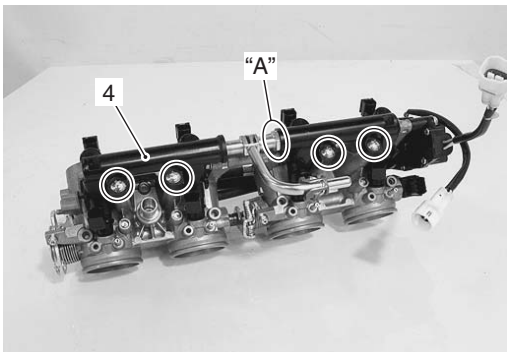

I823H1140010-02

3) Remove the primary fuel injectors (5) and secondary fuel injectors (6) from the fuel delivery pipe.

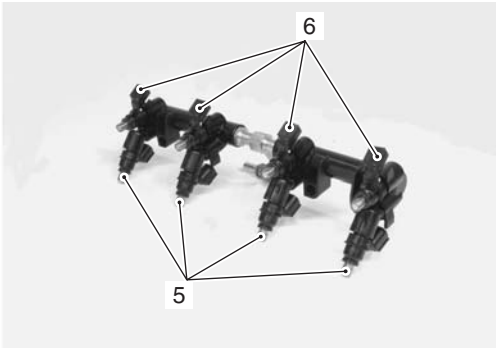

I823H1140011-01

4) Remove the fuel pipe (7) from the primary fuel injector.

I823H1140012-01

5) Remove the T-joint (8) from the fuel delivery pipes.

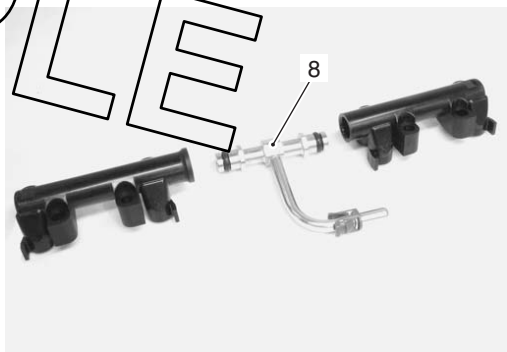

I823H1140014-01

6) Remove the ISC valve hoses (9) and ISC valve (10).

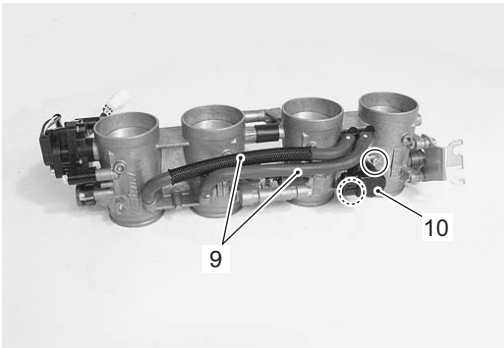

I823H1140013-02

SAMPLE

7) Remove the TP sensor (11) and STP sensor (12) with the special tool.

Special tool
TOOL : 09930–11950 (Torx wrench)

NOTE

Prior to disassembly, mark the each sensor's original position with a paint or scribe for accurate reinstallation.

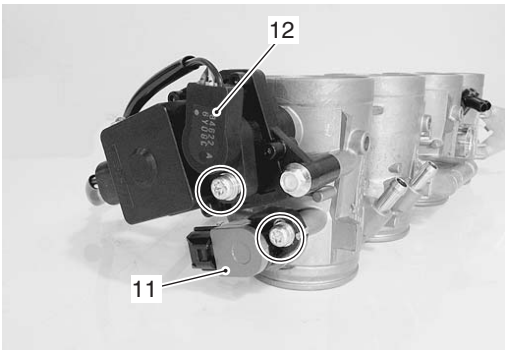

I823H1140015-02

⚠ CAUTION

Never remove the STVA (13) from the throttle body.

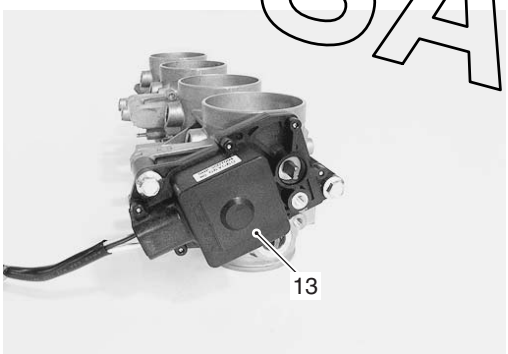

I823H1140016-02

⚠ CAUTION

Never remove the throttle valves (14) and secondary throttle valves (15).

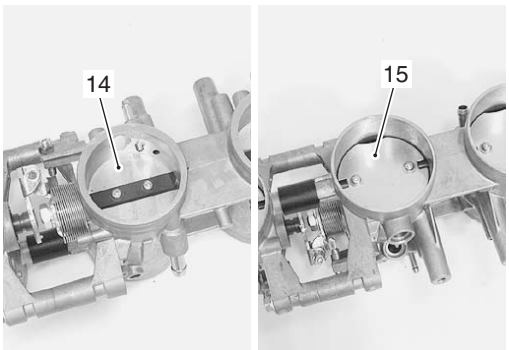

I823H1140017-02

⚠ CAUTION

These adjusting screws (16), (17) and (18) are factory-adjusted at the time of delivery and do not turn or remove them.

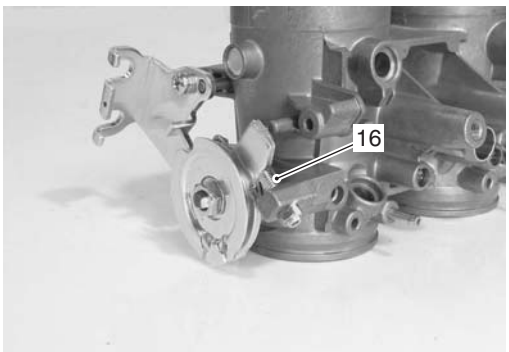

I823H1140018-03

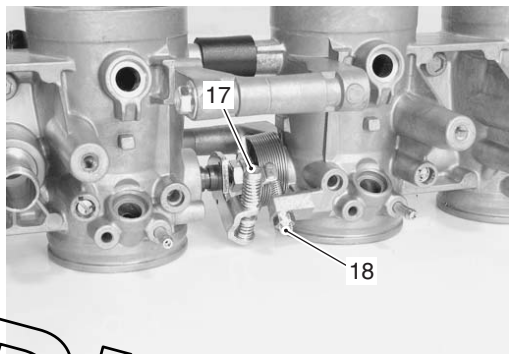

I823H1140019-02

⚠ CAUTION

Do not separate the throttle body.

I823H1140020-01

SAMPLE

Assembly

Reassemble the throttle body in the reverse order of disassembly. Pay attention to the following points:

- With the secondary throttle valves fully opened, install the STP sensor (1) and tighten the STP sensor mounting screw to the specified torque.

NOTE

- **Apply thin coat of engine oil to the O-ring.**
- **Align the secondary throttle shaft end "A" with the groove "B" of the STP sensor.**
- **Apply grease to the secondary throttle shaft end "A" if necessary.**

: Grease 99000–25010 (SUZUKI SUPER GREASE A or equivalent)

Special tool

TOOL : 09930–11950 (Torx wrench)

Tightening torque

STP sensor mounting screw: 3.5 N·m (0.35 kgf-m, 2.5 lb-ft)

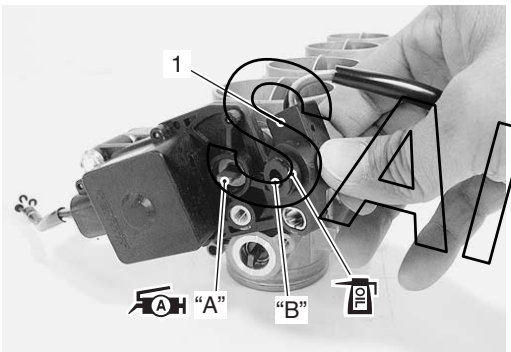

I823H1140022-02

NOTE

- **Make sure the secondary throttle valves smoothly open and close.**
- **If the STP sensor adjustment is necessary, refer to "STP Sensor Adjustment in Section 1C (Page 1C-7)" for STP sensor setting procedure.**

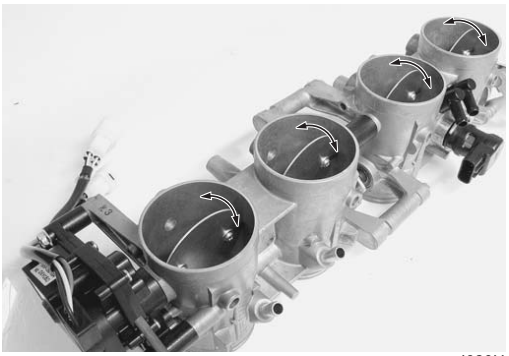

I823H1140023-01

- Apply a thin coat of engine oil to the O-ring and install the ISC valve to the throttle body.

Tightening torque

ISC valve mounting screw (a): 2 N·m (0.2 kgf-m, 1.5 lb-ft)

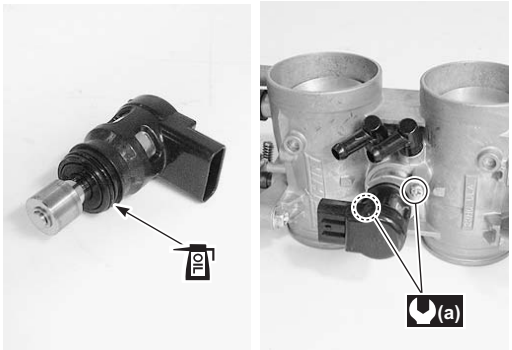

I823H1140593-01

- With the throttle valves fully closed, install the TP sensor (2) and tighten the TP sensor mounting screw to the specified torque.

⚠ CAUTION

- **Apply thin coat of engine oil to the O-ring.**
- **Align the throttle shaft end "C" with the groove "D" of the TP sensor.**
- **Apply grease to the throttle shaft end "C" if necessary.**

: Grease 99000–25010 (SUZUKI SUPER GREASE A or equivalent)

Special tool

TOOL : 09930–11950 (Torx wrench)

Tightening torque

TP sensor mounting screw: 3.5 N·m (0.35 kgf-m, 2.5 lb-ft)

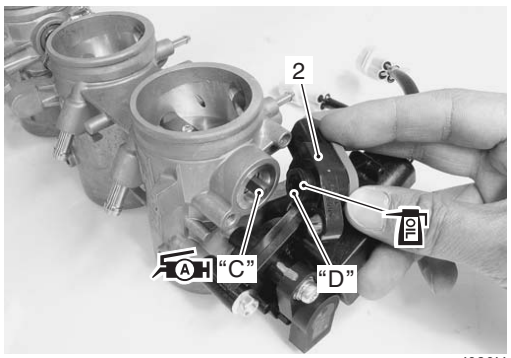

I823H1140024-01

SAMPLE

NOTE

- **Make sure the throttle valves smoothly open and close.**
- **For TP sensor setting procedure, refer to "TP Sensor Adjustment in Section 1C (Page 1C-4)".**

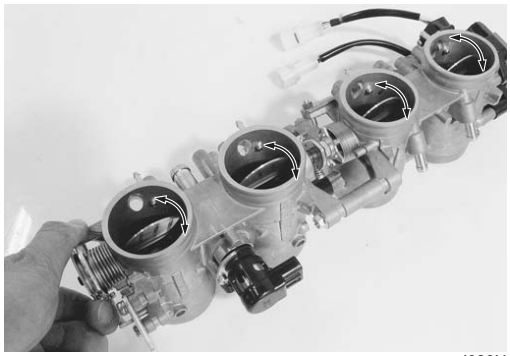

I823H1140025-01

- Apply thin coat of engine oil to the new O-rings (3) and cushion seals (4).

⚠ CAUTION

Replace the O-rings and cushion seals with new ones.

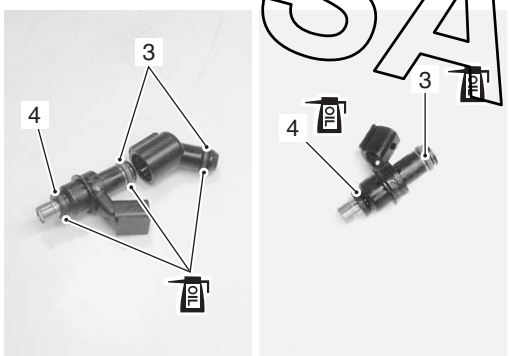

I823H1140026-01

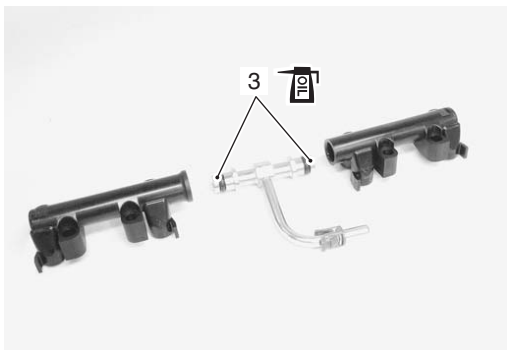

I823H1140027-01

- Assemble the fuel delivery pipes as shown in the figure.

⚠ CAUTION

Be careful not to twist the fuel delivery pipe T-joint when installing the fuel delivery pipes, or joint part "E" of the fuel delivery pipe may get damage.

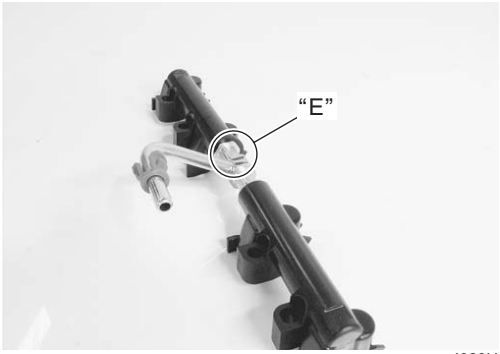

I823H1140028-01

- Install each fuel injector by pushing it straight to the delivery pipe.

⚠ CAUTION

Never turn the injector while pushing it.

- Install the fuel delivery pipe assembly to the throttle body.
- Tighten the fuel delivery pipe mounting screws (5) to the specified torque.

Tightening torque
Fuel delivery pipe mounting screw (b): 3.5 N·m (0.35 kgf-m, 2.5 lb-ft)

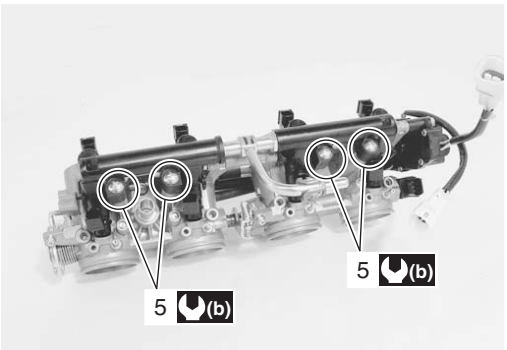

I823H1140029-04

SAMPLE

Throttle Body Inspection and Cleaning

B823H11406012

Refer to “Throttle Body Disassembly and Assembly (Page 1D-12)”.

Cleaning

⚠ WARNING

Some carburetor cleaning chemicals, especially dip-type soaking solutions, are very corrosive and must be handled carefully. Always follow the chemical manufacturer’s instructions on proper use, handling and storage.

- Clean passageways with a spray-type carburetor cleaner and blow dry with compressed air.

⚠ CAUTION

Never clean the throttle body main bore. Do not use wire to clean passageways. Wire can damage passageways. If the components cannot be cleaned with a spray cleaner it may be necessary to use a dip-type cleaning solution and allow them to soak. Always follow the chemical manufacturer’s instructions for proper use and cleaning of the throttle body components. Do not apply carburetor cleaning chemicals to the rubber and plastic materials.

Inspection

Check following items for any defects or clogging. Replace the damaged part if necessary.

- O-rings
- Throttle valves
- Secondary throttle valves
- Vacuum hoses
- ISC valve hoses
- Fuel delivery pipes
- Cushion seals
- Fuel injectors

ISC Valve Visual Inspection

B823H11406045

Visually inspect the ISC valve if necessary.

- Inspect the ISC valve for any carbon deposition defects. Clean or replace the ISC valve if necessary.

I823H1140594-01

Throttle Valve Synchronization

B823H11406013

Use of SDS Tool

Check and adjust the throttle valve synchronization among four cylinders.

1) Lift and support the fuel tank. Refer to “Fuel Tank Removal and Installation in Section 1G (Page 1G-10)”.
2) Disconnect the respective vacuum hoses (1) from each vacuum nipple on the throttle body.

I823H1140585-01

3) Disconnect the IAP sensor coupler (2).

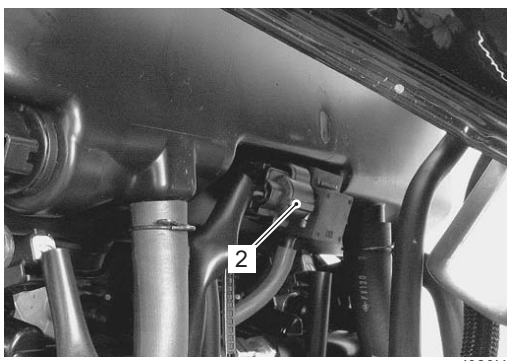

I823H1140525-01

SAMPLE

4) Connect the respective vacuum tester hoses to each vacuum nipple.

I823H1140526-02

5) Set up the SDS tool. (Refer to the SDS operation manual for further details.)
6) Start the engine.
7) Click “Date monitor”.
8) Warm up the engine (Engine coolant temp. more than 80° (176 °F)).

Cooling fan relay	Off	
Secondary throttle actuator position sensor	10.2	%
Engine coolant / oil temperature	87.3	°C
Engine speed	1171	rpm
PAIR control solenoid valve	Off	
Intake air temperature	22.1	°C

I718H1140382-01

9) Click “Active control”.
10) Click “ISC air volume control” (3).

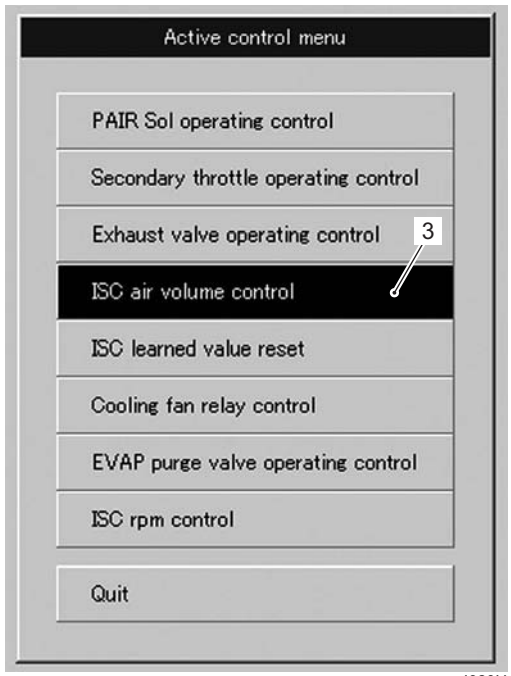

I823H1140586-02

11) Click “ON” button (4) to fix the ISC air volume of four cylinders.

NOTE

When making this synchronization, be sure that the water temperature is within 80 – 100 °C (176 – 212 °F).

SAMPLE

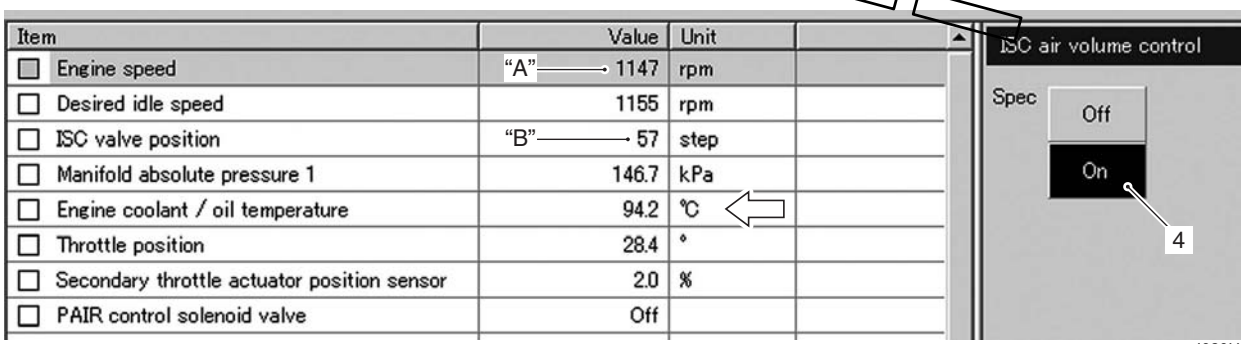

I823H1140589-02

“A”: Engine speed: Approx 1 150 rpm	“B”: ISC valve position: Approx. 57 step

12) Check for the synchronization of vacuum from #1 to #4 cylinders.

I823H1140587-01

13) Equalize the vacuum of the cylinders by turning each air screw (5) and keep it running at idling speed.

NOTE

Always set the engine rpm at idle rpm.

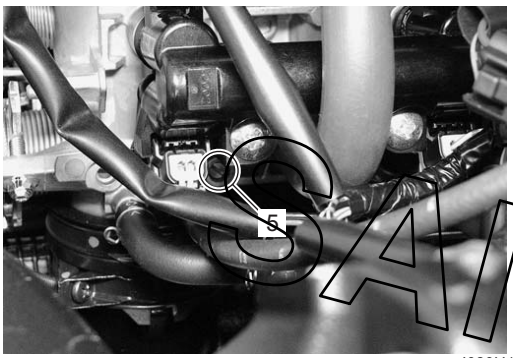

I823H1140588-01

14) If the adjustment is not yet correct, remove each air screw and clean them with a spray-type carburetor cleaner and blow dry with a compressed air. Also, clean the air screw passageways.

NOTE

- **Slowly turn the air screw clockwise and count the number of turns until the screw is lightly seated.**
- **Make a note of how many turns were made so the screw can be reset correctly after cleaning.**

15) Repeat the procedures from 6) to 13).
16) Close the SDS tool and turn the ignition switch OFF.
17) Disconnect the vacuum tester and reinstall the removed parts.
18) After compleating the throttle valve synchronization, clear the DTC and reset the ISC learned value using SDS tool. Refer to “ISC Valve Preset and Opening Initialization in Section 1C (Page 1C-9)”.

ISC Valve Reset

B823H11406044

When removing or replacing the throttle body assembly, reset the ISC valve learned value in the following procedures:

1) Turn the ignition switch ON position.
2) Set up the SDS tools. (Refer to the SDS operation manual for further details.)
3) Click “Active control”.
4) Click “ISC learned value reset” (1).

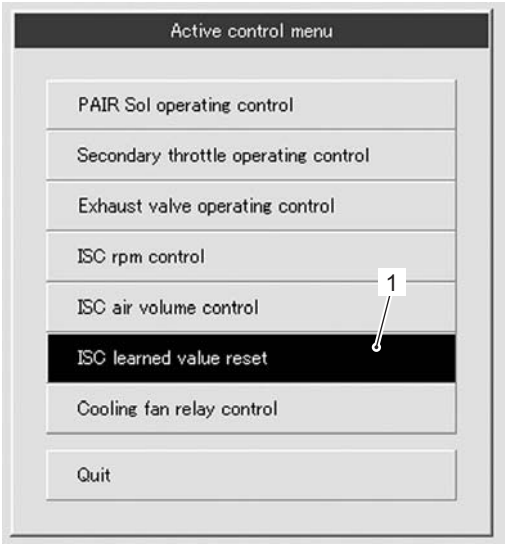

I823H1140529-03

5) Click “Reset” button (2) to clear the ISC learned value.

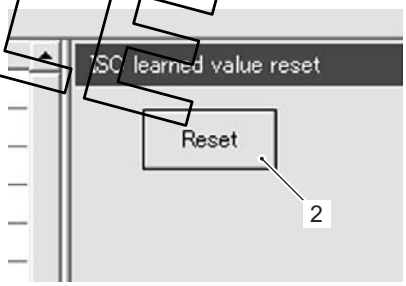

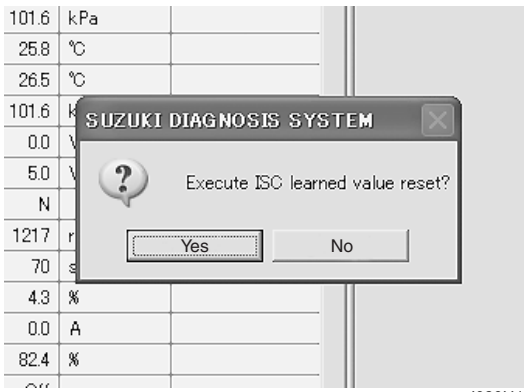

I823H1140530-05

SAMPLE

NOTE

The learned value of the ISC valve is set at RESET position.

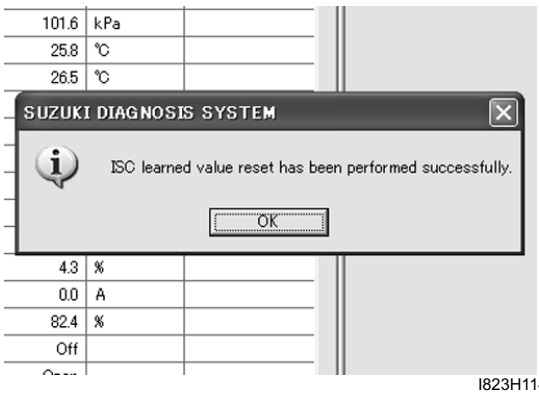

I823H1140531-03

6) Close the SDS tool.
7) Turn the ignition switch OFF position.

NOTE

The ISC valve opening initialization is automatically started after the ignition switch is turned OFF.

Engine Assembly Removal

B823H11406014

Before taking the engine out of the frame, wash the engine using a steam cleaner. Engine removal is sequentially explained in the following steps:

1) Drain engine oil. Refer to “Engine Oil and Filter Replacement in Section 0B (Page 0B-10)”.
2) Drain engine coolant. Refer to “Engine Oil and Filter Replacement in Section 0B (Page 0B-10)”.
3) Lift and support the fuel tank. Refer to “Fuel Tank Removal and Installation in Section 1G (Page 1G-10)”.
4) Remove the air cleaner box. Refer to “Air Cleaner Box Removal and Installation (Page 1D-6)”.
5) Remove the throttle body assembly. Refer to “Throttle Body Removal and Installation (Page 1D-10)”.
6) Disconnect the battery (–) lead wire.

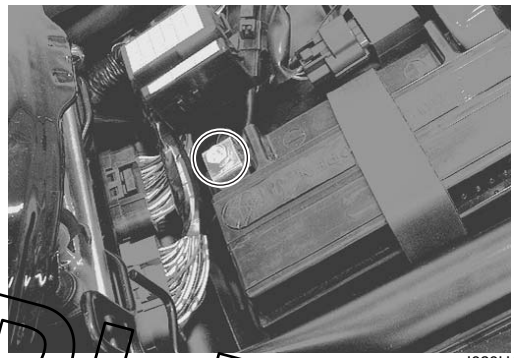

I823H1140528-01

7) Remove the frame body covers. Refer to “Exterior Parts Removal and Installation in Section 9D (Page 9D-14)”.
8) Remove the horn (1) with its bracket.

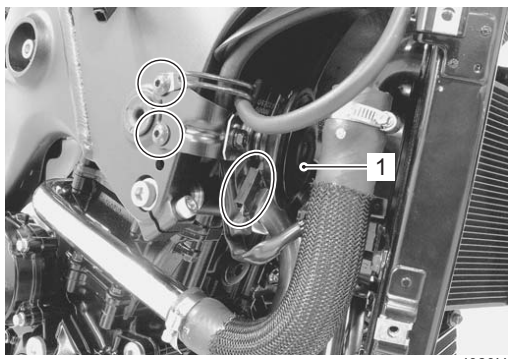

I823H1140532-01

SAMPLE

9) Remove the oil hoses (2) and (3).

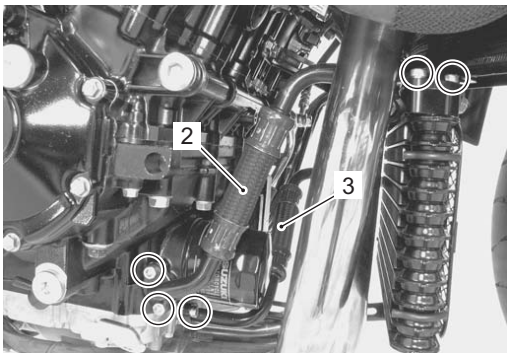

I823H1140533-02

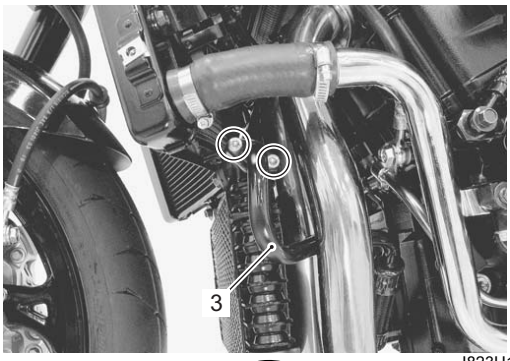

I823H1140534-01

10) Disconnect the water/air bleed hose (4) and cylinder head outlet hose (5).

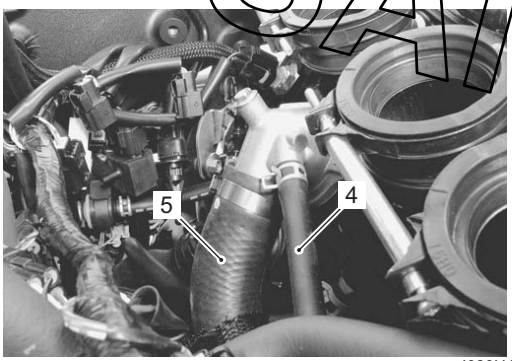

I823H1140535-01

11) Remove the radiator inlet pipe bolts.

12) Disconnect the reservoir inlet hose (6) and right cooling fan lead wire coupler (7).

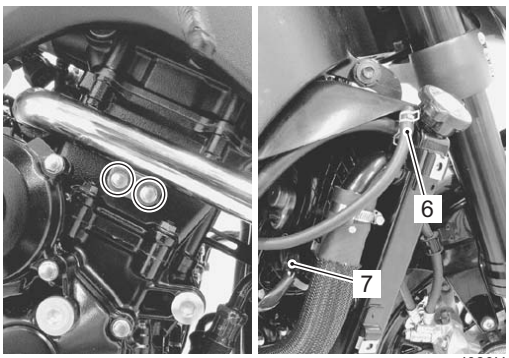

I823H1140536-01

13) Remove the radiator outlet pipe bolts.

14) Disconnect the left cooling fan lead wire coupler (8).

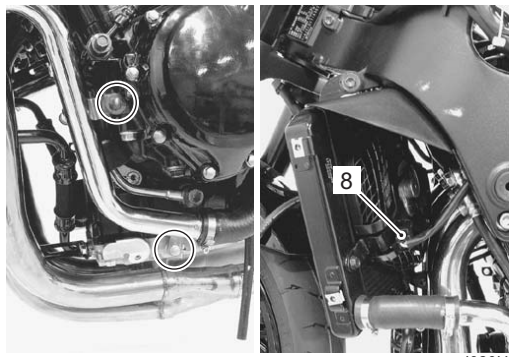

I823H1140537-02

15) Remove the radiator with oil cooler by removing their mounting bolts.

⚠ CAUTION

Be careful not to bend the radiator and oil cooler fins.

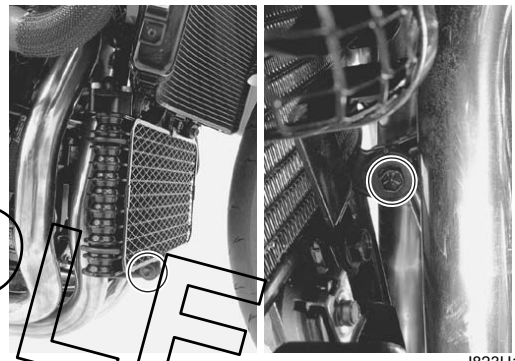

I823H1140538-01

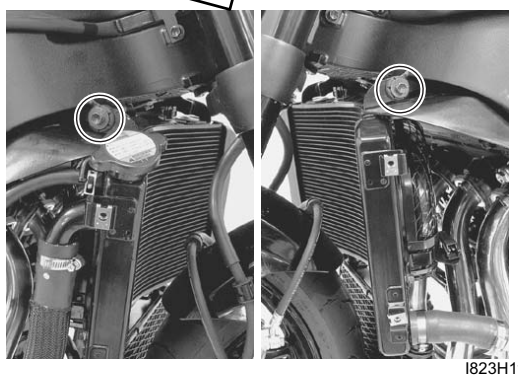

I823H1140539-02

SAMPLE

16) Remove the radiator heat shield (9).

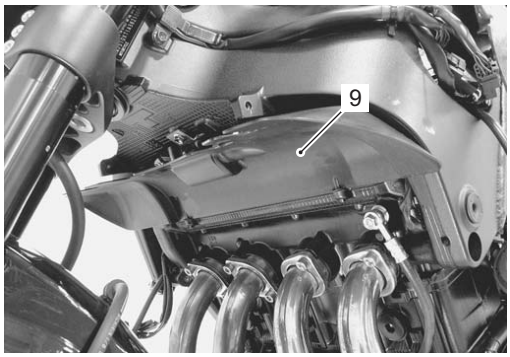

I823H1140540-01

17) Disconnect the HO2 sensor lead wire coupler (10).

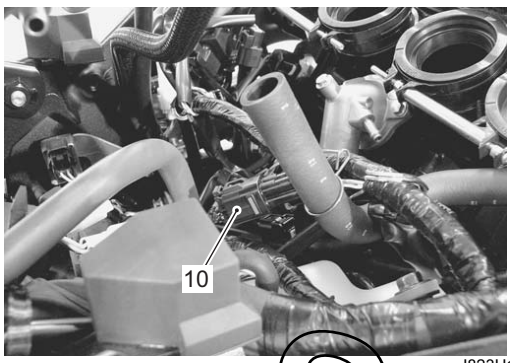

I823H1140541-01

18) Loosen the muffler joint connecting bolt (11).

19) Remove the exhaust pipe mounting bolt (12).

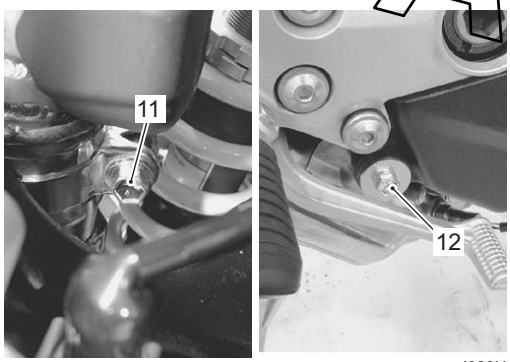

I823H1140542-01

20) Remove the exhaust pipe assembly.

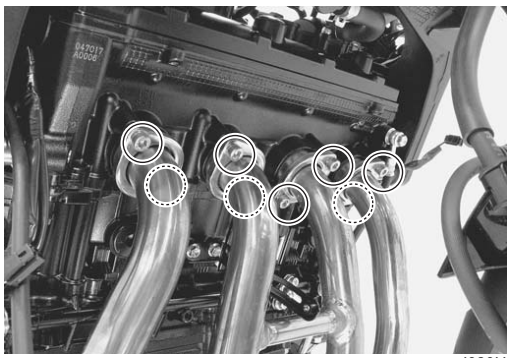

I823H1140543-01

21) Remove the exhaust pipe gaskets (13).

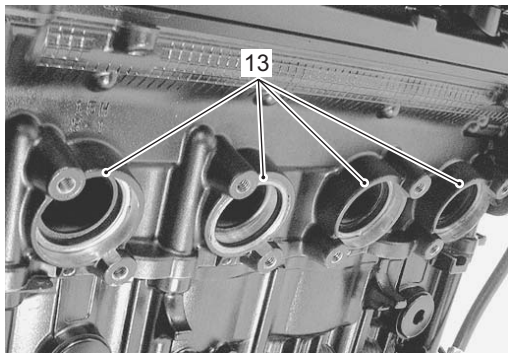

I823H1140544-01

22) Remove the radiator bracket (14) and oil cooler bracket (15).

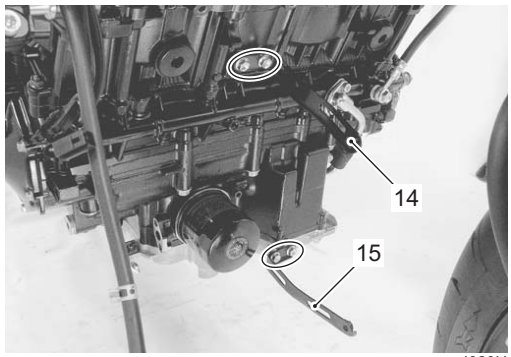

I823H1140545-01

23) Disconnect the oil pressure switch lead wire (16).

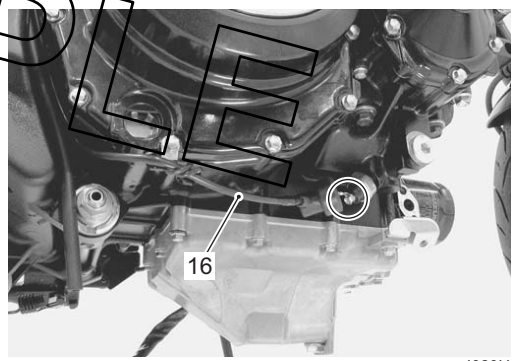

I823H1140546-01

SAMPLE

24) Disconnect the starter motor lead wire (17).

I823H1140547-01

25) Disconnect the engine ground lead wire (18).

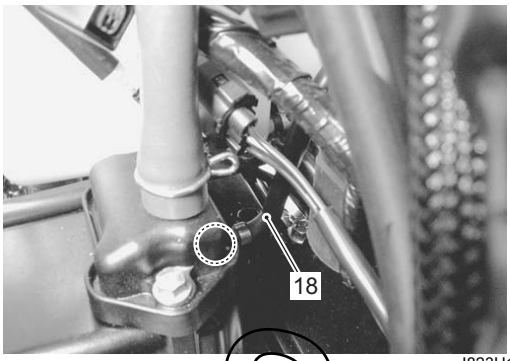

I823H1140548-01

26) Disconnect the ECT sensor lead wire coupler (19) and GP switch lead wire coupler (20).

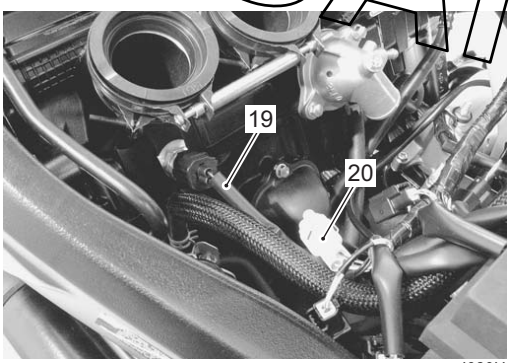

I823H1140549-01

27) Remove the engine sprocket outer cover. Refer to “Engine Sprocket Removal and Installation in Section 3A (Page 3A-2)”.

28) Disconnect the CKP sensor lead wire coupler (21), generator lead wire coupler (22) and side-stand lead wire coupler (23).

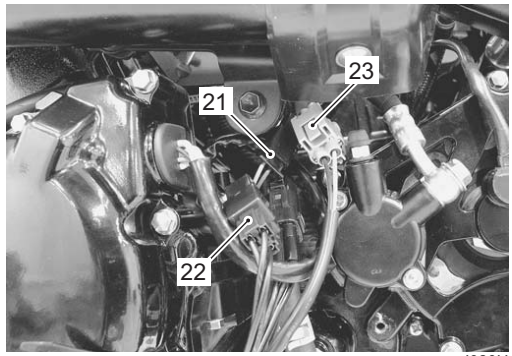

I823H1140550-01

29) Disconnect the CMP sensor lead wire coupler (24), ignition coil/plug cap lead wire couplers (25) and PAIR hoses (26) from the cylinder head cover.

⚠ CAUTION

Do not remove the ignition coil/plug cap before disconnecting its coupler.

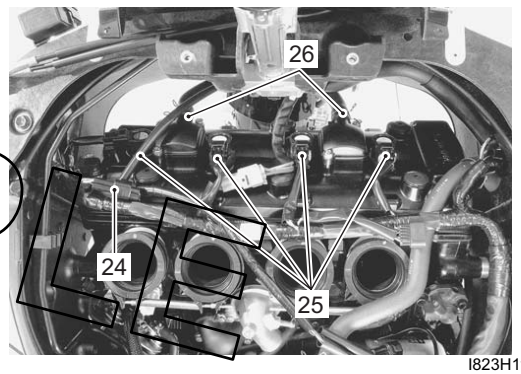

I823H1140551-02

30) Remove the ignition coil/plug caps (27).

⚠ CAUTION

- **Do not pry up the ignition coil/plug cap with a screwdriver or a bar to avoid its damage.**
- **Be careful not to drop the ignition coil/plug cap to prevent its short or open circuit.**

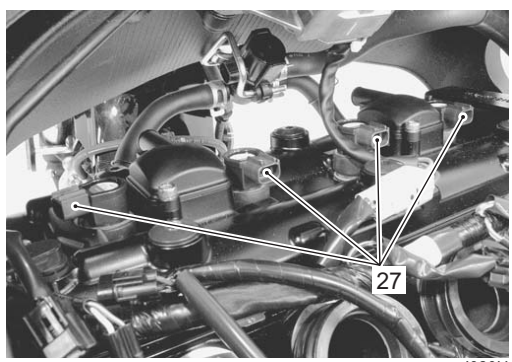

I823H1140552-01

SAMPLE

31) Remove the engine sprocket inner cover. Refer to “Engine Sprocket Removal and Installation in Section 3A (Page 3A-2)”.
32) Remove the clutch push rod (28), sprocket cover protector (29) and dowel pins.

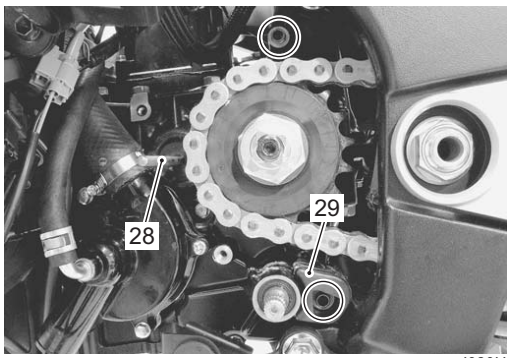

I823H1140553-02

33) Jack up the motorcycle and fix it for safety.
34) Remove the side-stand (30) with its bracket.
35) Remove the engine sprocket (31). Refer to “Engine Sprocket Removal and Installation in Section 3A (Page 3A-2)”.

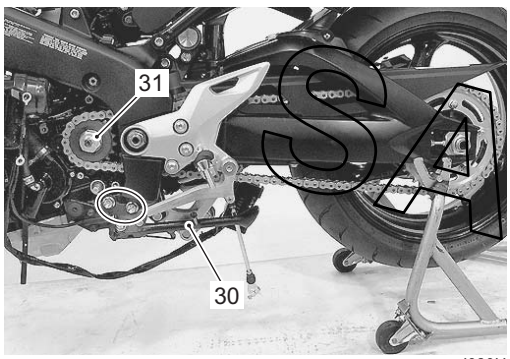

I823H1140554-01

36) Support the engine using and engine jack.

I823H1140555-01

37) Remove the engine mounting bolts (32) and (33).

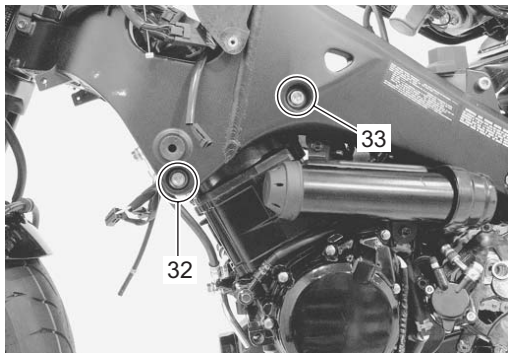

I823H1140556-01

38) Loosen the engine mounting pinch bolt (34).
39) Remove the engine mounting bolts (35) and (36).

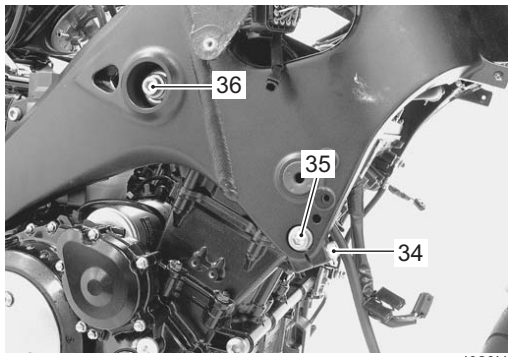

I823H1140557-01

SAMPLE

40) Loosen the engine mounting thrust adjuster lock-nut (37) with the special tool.

41) Loosen the engine mounting thrust adjuster (38) fully.

Special tool
TOOL (A): 09940–14990 (Engine mounting thrust adjuster socket wrench)

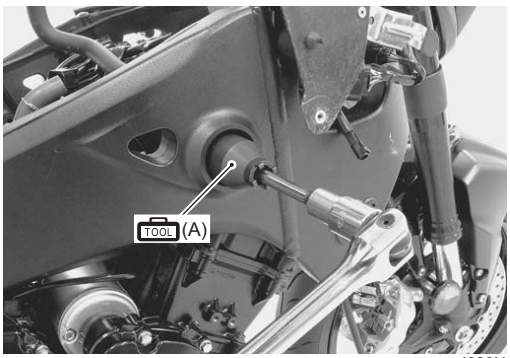

I823H1140558-01

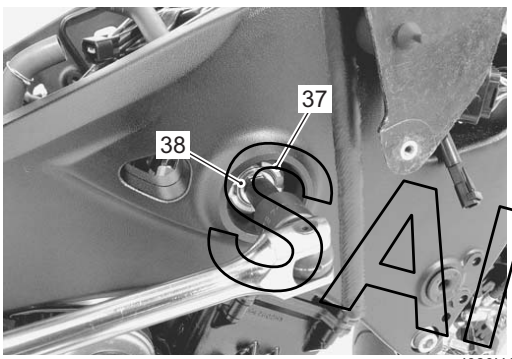

I823H1140559-01

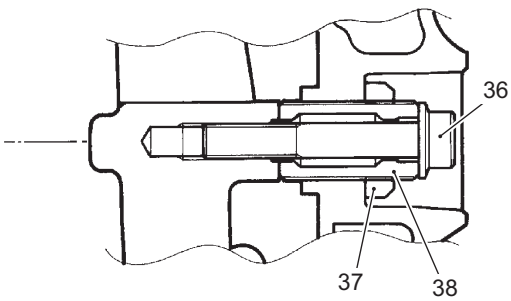

I823H1140560-01

42) Remove the engine mounting nuts (39) and (40).

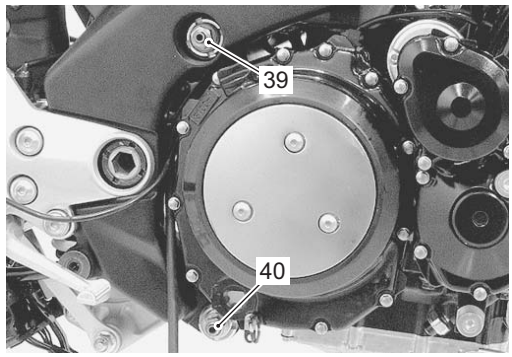

I823H1140561-01

43) Loosen the engine mounting thrust adjuster lock-nuts (41) and (42) with the special tool.

44) Loosen the engine mounting thrust adjusters (43) and (44) fully.

Special tool
TOOL (A): 09940–14990 (Engine mounting thrust adjuster socket wrench)

NOTE

Do not remove the engine mounting bolts at this stage.

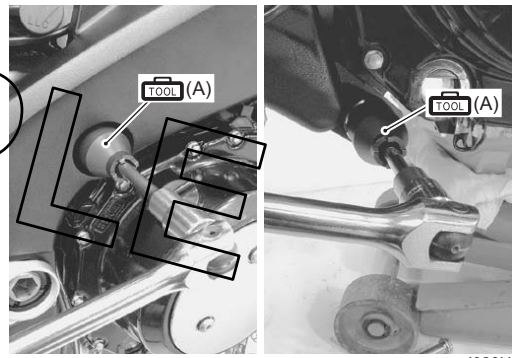

I823H1140562-01

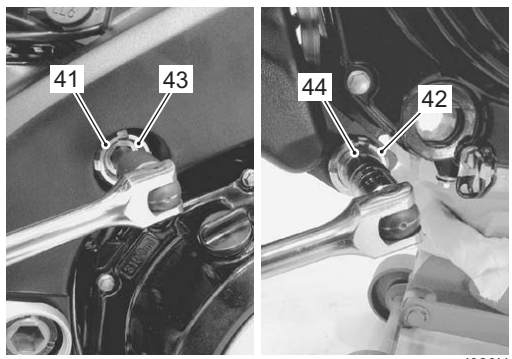

I823H1140563-01

45) Remove the engine mounting bolts and gradually lower the front side of the engine. Then, take off the driven chain from the driveshaft.

46) Remove the engine assembly.

SAMPLE

Engine Assembly Installation

B823H11406015

Install the engine in the reverse order of engine removal. Pay attention to the following points:

- Gradually raise the rear side of the engine assembly, and then put the drive chain on the driveshaft.

⚠ CAUTION

Be careful not to catch the wiring harness between the frame and the engine.

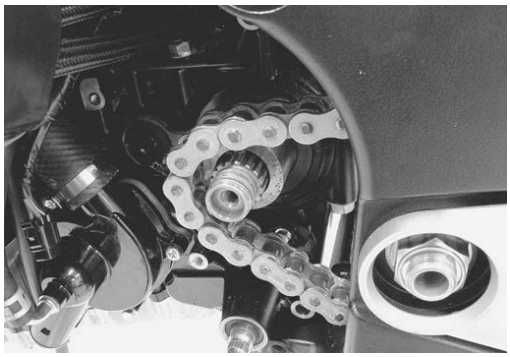

I823H1140564-01

- Install all engine mounting bolts and spacers, then tighten them temporarily.

- Tighten the engine mounting thrust adjusters (1) to the specified torque with the special tool.

Tightening torque
Engine mounting thrust adjuster (a): 10 N·m (1.0 kgf-m, 7.0 lb-ft)

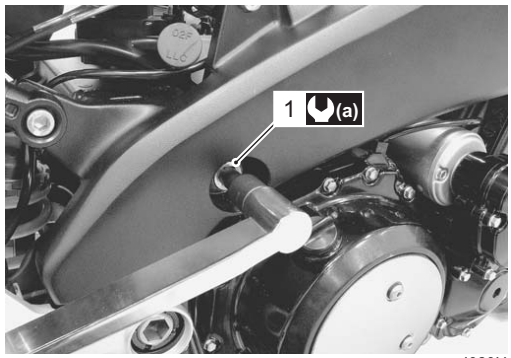

I823H1140565-02

I823H1140566-02

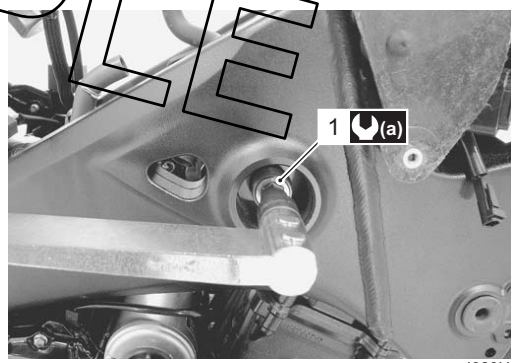

I823H1140567-02

SAMPLE

- Tighten the engine mounting thrust adjuster lock-nuts (2) to the specified torque withe the special tool.

  Tightening torque
  Engine mounting thrust adjuster lock-nut (b): 45 N·m (4.5 kgf-m, 32.5 lb-ft)

  Special tool
  TOOL (A): 09940–14990 (Engine mounting thrust adjuster socket wrench)

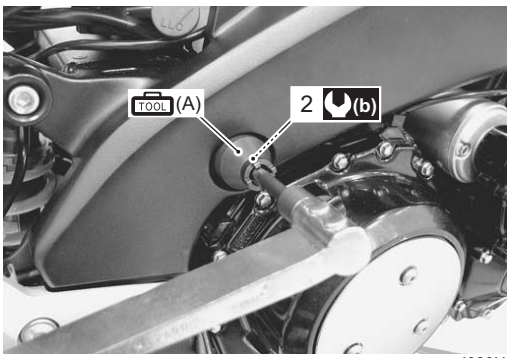

I823H1140568-03

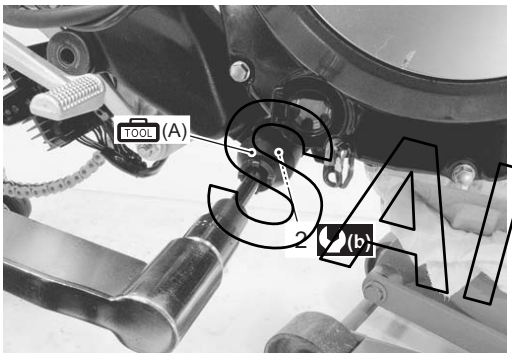

I823H1140569-03

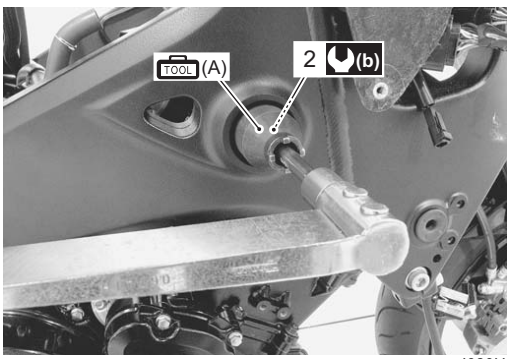

I823H1140570-03

- Tighten all engine mounting bolts and nuts to the specified torque.

  NOTE

  The engine mounting nuts are self-locking. Once the nuts have been removed, they are no longer of any use.

- Tighten the engine mounting pinch bolt to the specified torque.

SAMPLE

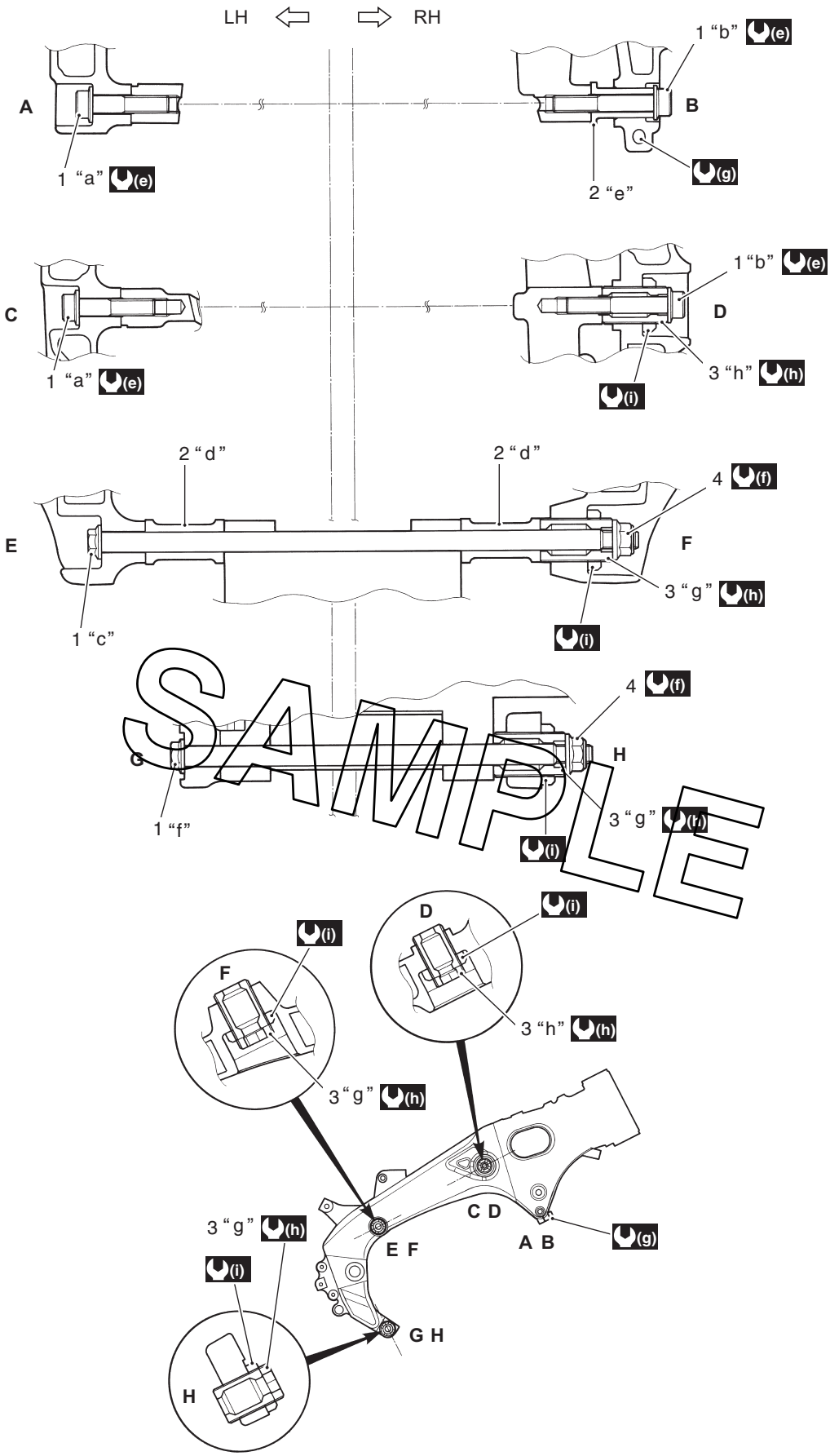

SAMPLE

I823H1140301-03

1. Bolt	(f) : 75 N·m (7.5 kgf-m, 54.0 lb-ft)	“b”: 60 mm (2.36 in)	“g”: 43 mm (1.69 in)
2. Spacer	(g) : 23 N·m (2.3 kgf-m, 16.5 lb-ft)	“c”: 320 mm (12.6 in)	“h”: 39 mm (1.54 in)
3. Adjuster	(h) : 10 N·m (1.0 kgf-m, 7.0 lb-ft)	“d”: 47 mm (1.85 in)	

4. Nut	(i) : 45 N·m (4.5 kgf-m, 32.5 lb-ft)	"e": 37.5 mm (1.48 in)	
(e) : 55 N·m (5.5 kgf-m, 40.0 lb-ft)	"a": 45 mm (1.77 in)	"f": 243 mm (9.56 in)	

- Install the engine sprocket. Refer to "Engine Sprocket Removal and Installation in Section 3A (Page 3A-2)".
- Install the exhaust pipe assembly and muffler. Refer to "Muffler / Muffler Joint / Exhaust Pipe Removal and Installation in Section 1K (Page 1K-12)".
- Install the radiator. Refer to "Radiator / Cooling Fan Motor Removal and Installation in Section 1F (Page 1F-6)".
- Install the throttle body. Refer to "Throttle Body Removal and Installation (Page 1D-10)".
- Install the air cleaner box. Refer to "Air Cleaner Box Removal and Installation (Page 1D-6)".
- After remounting the engine, route the wiring harness, cable and hoses properly. Refer to "Wiring Harness Routing Diagram in Section 9A (Page 9A-5)", "Throttle Cable Routing Diagram (Page 1D-2)" and "Water Hose Routing Diagram in Section 1F (Page 1F-3)".
- Pour engine coolant and engine oil. Refer to "Cooling System Inspection in Section 0B (Page 0B-13)" and "Engine Oil and Filter Replacement in Section 0B (Page 0B-10)".
- Pour engine oil. Refer to "Engine Oil and Filter Replacement in Section 0B (Page 0B-10)".
- After finishing the engine installation, check the following items.
  - Throttle cable play
    Refer to "Throttle Cable Play Inspection and Adjustment in Section 0B (Page 0B-12)".
  - Throttle valve synchronization
    Refer to "Throttle Valve Synchronization (Page 1D-16)".
  - Drive chain slack
    Refer to "Drive Chain Inspection and Adjustment in Section 0B (Page 0B-15)".
  - Engine oil and coolant leakage
    Refer to "Cooling Circuit Inspection in Section 1F (Page 1F-4)".

SAMPLE

Engine Top Side Disassembly

B823H11406016

It is unnecessary to remove the engine assembly from the frame when servicing the cylinder head cover and camshafts.

NOTE

Before servicing the engine top side components (until camshafts removal) with the engine inplace, remove the following parts:

- **Air cleaner box**
- **Throttle body**

Except for these "Engine Top Side Components" can not be serviced with the engine installed in the frame. Refer to "Engine Assembly Removal (Page 1D-19)" and "Engine Assembly Installation (Page 1D-25)" .

⚠ CAUTION

Identify the position of each removed part. Organize the parts in their respective groups (e.g., intake, exhaust) so that they can be reinstalled in their original positions.

Cylinder Head Cover

Remove the cylinder head cover (1) and its gaskets.

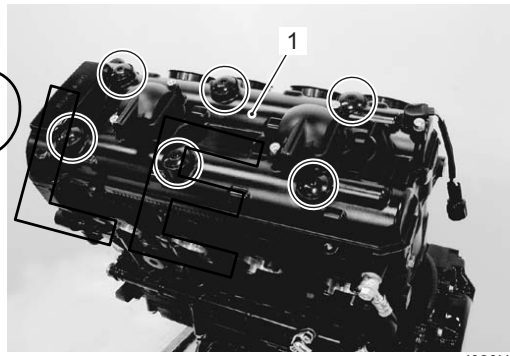

I823H1140312-01

Camshafts

1) Remove the spark plugs. Refer to "Ignition Coil / Plug Cap and Spark Plug Removal and Installation in Section 1H (Page 1H-6)".
2) Remove the valve timing inspection cap (1) and starter clutch cover cap (2).

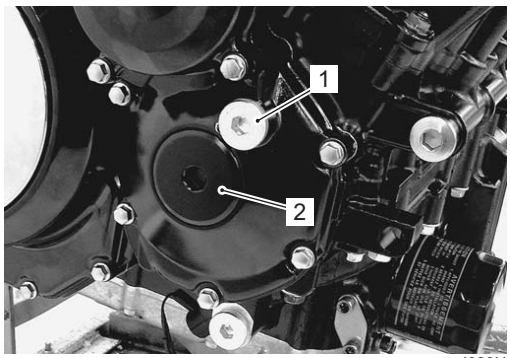

I823H1140313-01

3) Turn the crankshaft to bring the line “A” on the starter clutch to the slit “B” of the valve timing inspection hole and also to bring the cams to the position as shown in the figure.

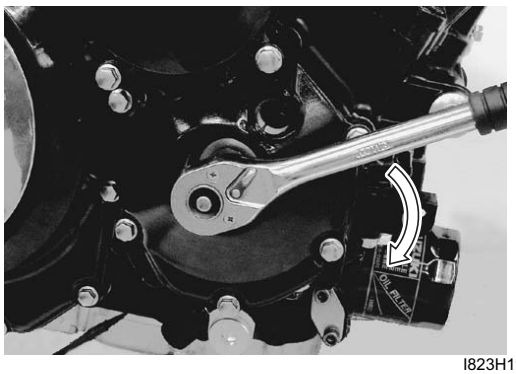

I823H1140314-01

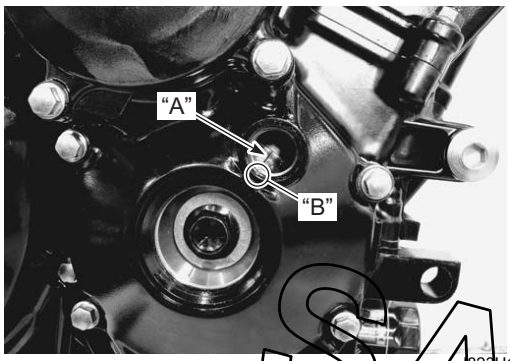

I823H1140315-01

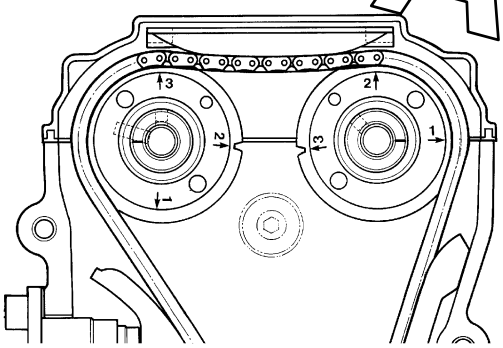

I823H1140034-01

4) Remove the cam chain tension adjuster (3).

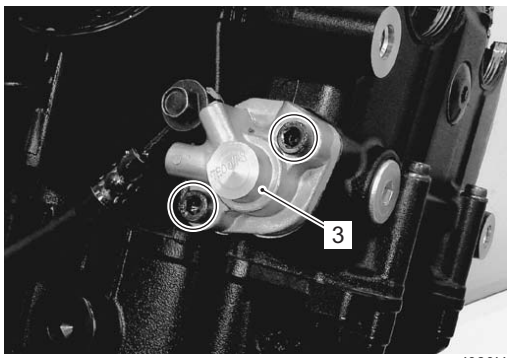

I823H1140316-01

5) Remove the gasket (4).

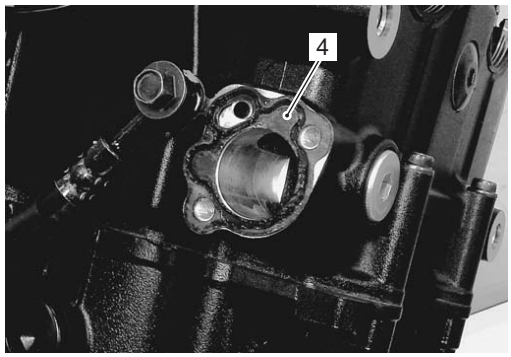

I823H1140317-01

6) Remove the oil pipe (5) and cam chain guide No. 2 (6).

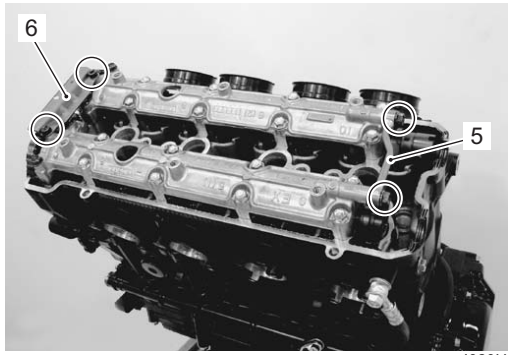

I823H1140318-01

7) Remove the intake camshaft journal holder (7) and exhaust camshaft journal holder (8).

⚠ CAUTION

Be sure to loosen the camshaft journal holder bolts evenly by shifting the wrench in the descending order of numbers.

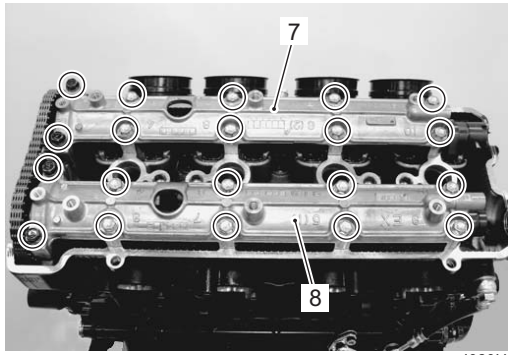

I823H1140319-01

SAMPLE

8) Remove the dowel pins.
9) Remove the intake camshaft (9) and exhaust camshaft (10).

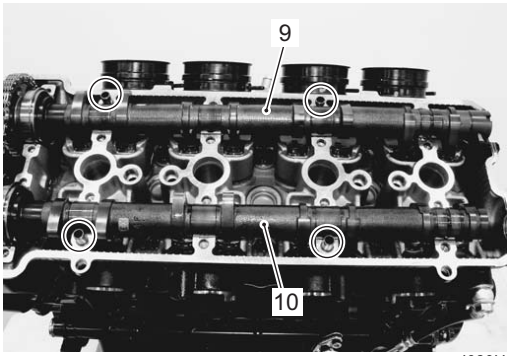

I823H1140320-01

Cylinder Head

NOTE

The cylinder head can not be serviced with the engine installed in the frame.

1) Remove the water hose (1).

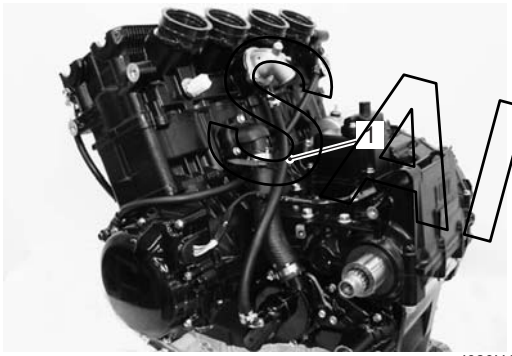

I823H1140321-02

2) Remove the oil hoses (2) and (3).

I823H1140322-01

I823H1140323-01

3) Remove the cylinder head side bolt (4) and its gasket (5).

⚠ CAUTION

When removing the cylinder head side bolt (4), pull the cam chain upward, or the chain will be caught between the cylinder head and the side bolt (4).

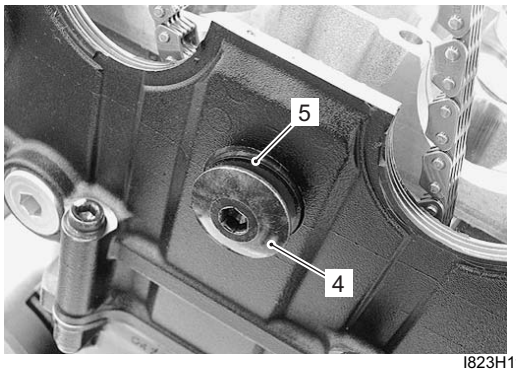

I823H1140590-03

SAMPLE

4) Remove the cylinder head bolts (M6) (6).
5) Remove the cylinder head bolt (M6) (7).
6) Loosen the cylinder nuts (8).

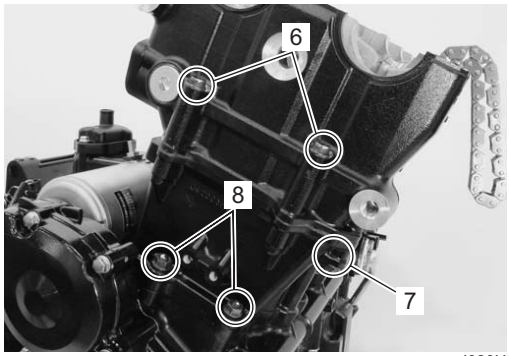

I823H1140324-01

7) Remove the cylinder head bolts and washers.

NOTE

When loosening the cylinder head bolts, loosen each bolt little by little diagonally.

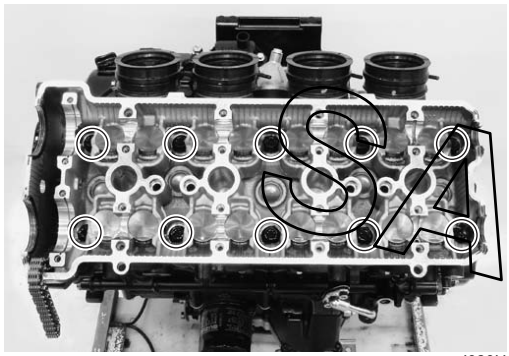
I823H1140325-01

8) Remove the cylinder head.
9) Remove the dowel pins and cylinder head gasket (9).

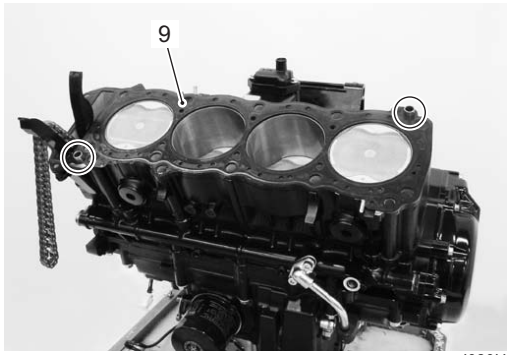

I823H1140326-01

Cam Chain Guide No. 1

NOTE

The cam chain guide can not be serviced with the engine installed in the frame.

Remove the cam chain guide No. 1 (1).

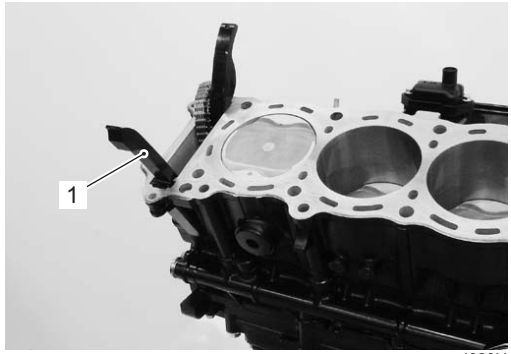

I823H1140327-01

Cylinder

NOTE

The cylinder can not be serviced with the engine installed in the frame.

1) Remove the water hose (1).

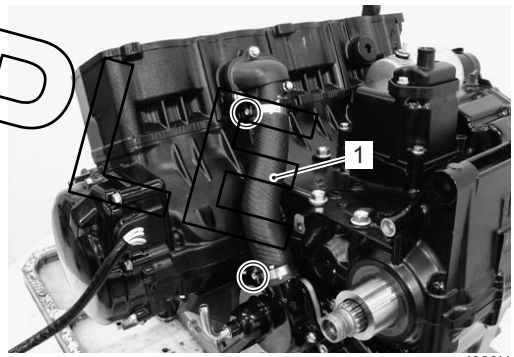

I823H1140328-03

2) Remove the cylinder nuts (2).
3) Remove the cylinder.

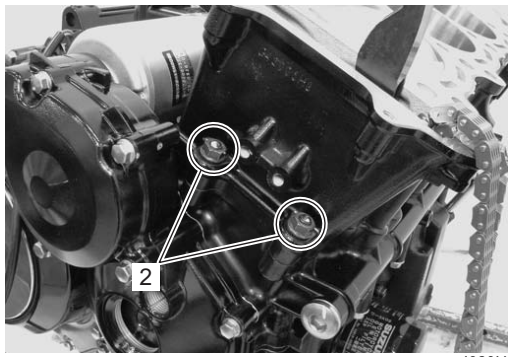

I823H1140329-01

SAMPLE

4) Remove the dowel pins and cylinder base gasket (3).

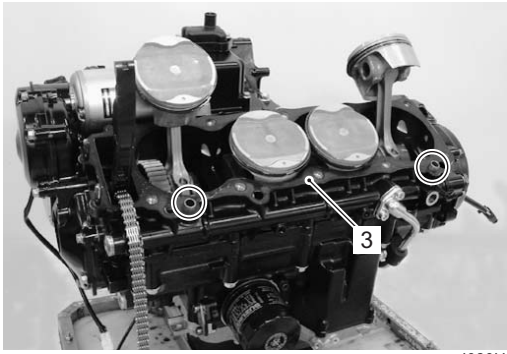

I823H1140330-01

Piston

NOTE

The piston can not be serviced with the engine installed in the frame.

1) Place a clean rag over the cylinder base so as not to drop the piston pin circlips into the crankcase.
2) Remove each piston pin circlip (1).

I823H1140331-01

3) Draw out each piston pin (2) and remove the piston (3).

NOTE

Scribe the cylinder number on the piston head.

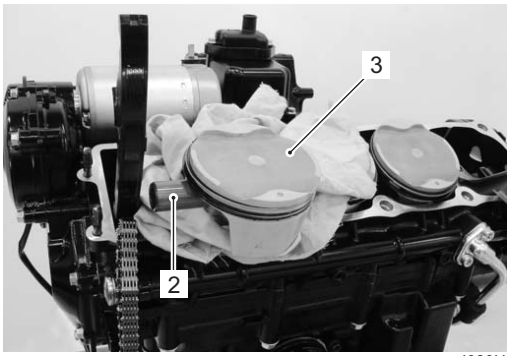

I823H1140332-01

Engine Top Side Assembly

B823H11406017

Assemble the engine top side in the reverse order of disassembly. Pay attention to the following points:

Piston

- When installing the pistons, apply molybdenum oil solution onto each piston pin.

  M/O: Molybdenum oil (MOLYBDENUM OIL SOLUTION)

- Install the pistons and piston pins.

NOTE

- **Be sure to install the pistons in the cylinders from which they were removed in disassembly, refer to the cylinder numbers, #1 through #4, scribed on the piston.**
- **When installing the pistons, the indent "A" on the piston head must be faced to exhaust side.**

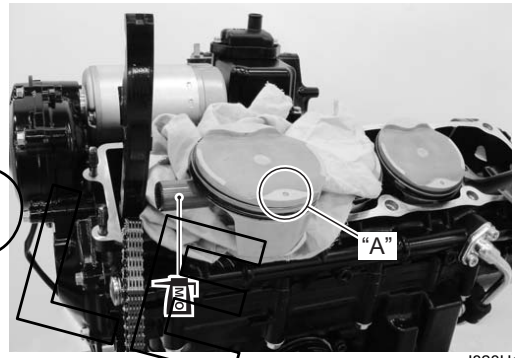

I823H1140333-01

- Place a clean rag over the cylinder base so as not to drop the piston pin circlips (1) into the crankcase.
- Install the piston pin circlips (1).

⚠ CAUTION

Use new piston pin circlips (1) to prevent circlip failure which will occur when it is bent.

SAMPLE

NOTE

End gap of the circlip "B" should not be aligned with the cutaway in the piston pin bore.

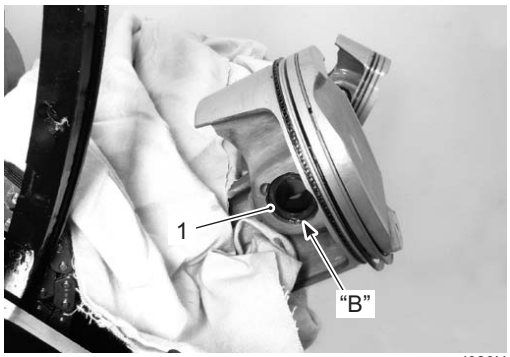

I823H1140334-02

⚠ CAUTION

When turning the crankshaft, pull the cam chain upward, or the chain will be caught between the crankcase and the cam drive sprocket.

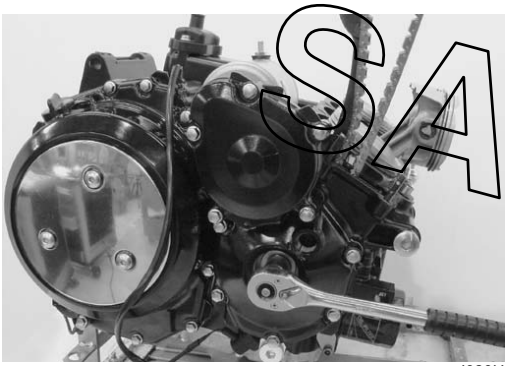

I823H1140335-01

- Position the gaps of the three rings and side rails as shown in the figure. Before inserting piston into the cylinder, check that the gaps are so located.

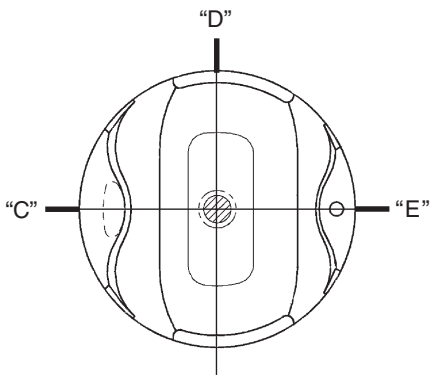

I823H1140573-02

"C":	1st ring and upper side rail
"D":	Spacer
"E":	2nd ring and lower side rail

Cylinder

- Fit the dowel pins and a new gasket (1) to the crankcase.

⚠ CAUTION

Use a new gasket to prevent oil leakage.

- Apply engine oil to the sliding surface of the pistons.

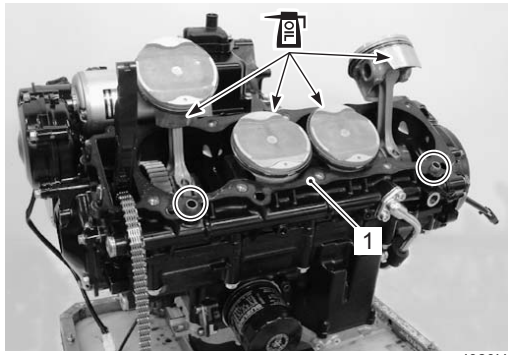

I823H1140336-01

- Install special tools to the No. 2 and No. 3 pistons.

Special tool
(A): 09916–74521 (Holder body)
(B): 09916–74550 (Band (Piston diam.: 73 – 85 mm))

NOTE

Do not overtighten the bands, or the piston installation into the cylinders will be difficult.

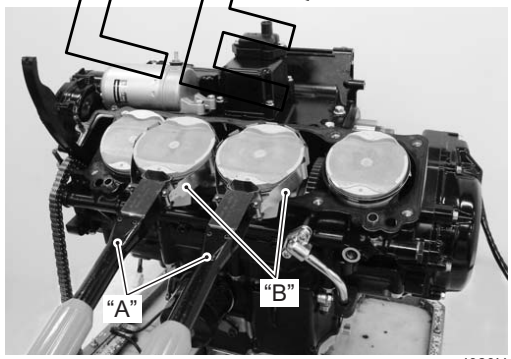

I823H1140337-01

SAMPLE

- Insert the No. 2 and No. 3 pistons into the cylinder.

NOTE

Some light resistance must be overcome to lower the cylinder.

- After inserting the No. 2 and No. 3 pistons in place, insert the No. 1 and No. 4 pistons in the same manner of the No. 2 and No. 3 pistons.

NOTE

When installing the cylinder block, keep the cam chain taut. The cam chain must not be caught between cam drive sprocket and crankcase when turning the crankshaft.

- Tighten the cylinder nuts (M6) temporarily.

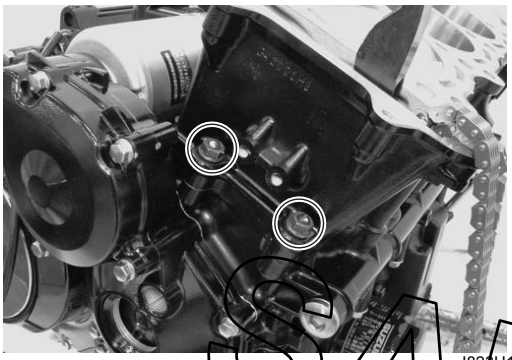

I823H1140338-01

- Install the water hose (2).

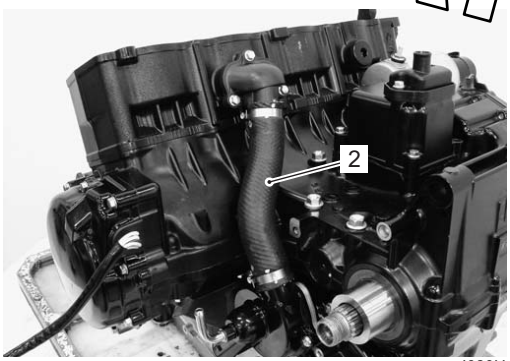

I823H1140339-01

Cylinder Head

- Pull the cam chain out of the cylinder and install the cam chain guide No. 1 (1).

⚠ CAUTION

- **There is the guide holder "A" for the bottom end of the cam chain guide No. 1 (1) cast in the crankcase.**
- **Be sure that the cam chain guide No. 1 (1) is installed properly.**

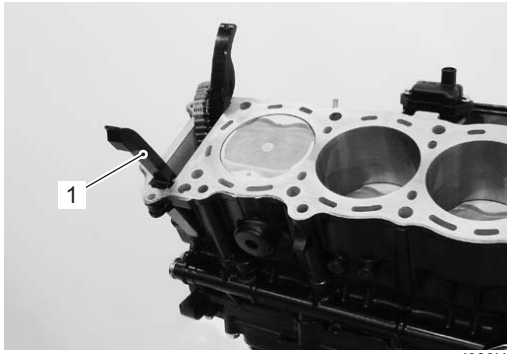

I823H1140340-01

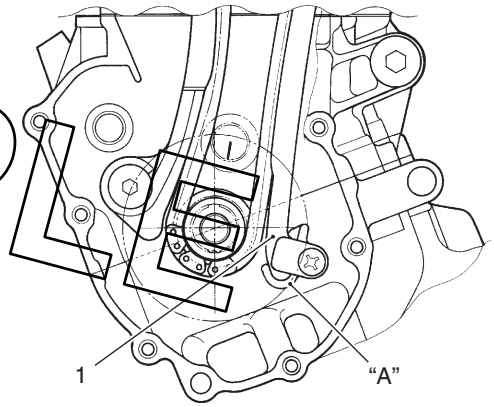

I823H1140061-01

- Fit the dowel pins and a new cylinder head gasket (2) to the cylinder.

⚠ CAUTION

Use a new gasket to prevent gas leakage.

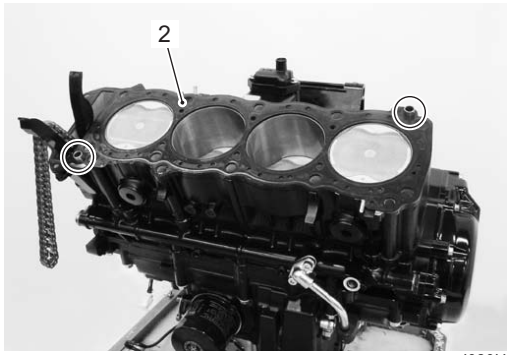

I823H1140341-01

SAMPLE

- Place the cylinder head on the cylinder.

NOTE

- **When installing the cylinder head, keep the cam chain taut.**
- **Apply engine oil to the washers and thread portion of the bolts before installing the cylinder head bolts.**

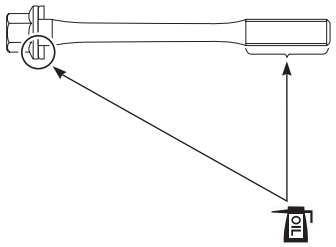

I823H1140063-01

- Tighten the cylinder head bolts (M10) to the specified two-step torque with a torque wrench sequentially and diagonally.

Tightening torque
Cylinder head bolt (M10) (Initial): 25 N·m (2.5 kgf-m, 18.0 lb-ft)
Cylinder head bolt (M10) (Final): 52 N·m (5.2 kgf-m, 37.5 lb-ft)

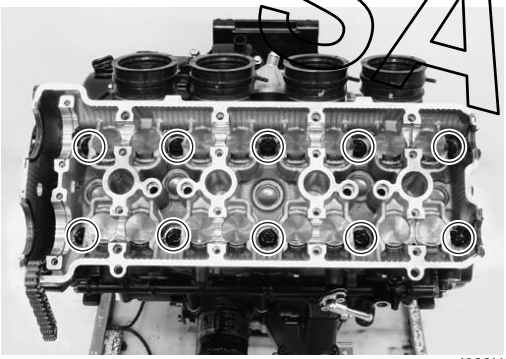

I823H1140342-01

- After firmly tightening the cylinder head bolts (M10), install the cylinder head bolts (M6) (3).
- Tighten the cylinder head bolts (3) and the cylinder nuts (4) to the specified torque.

Tightening torque
Cylinder head bolt (M6) (a): 10 N·m (1.0 kgf-m, 7.0 lb-ft)
Cylinder nut (M6) (b): 10 N·m (1.0 kgf-m, 7.0 lb-ft)

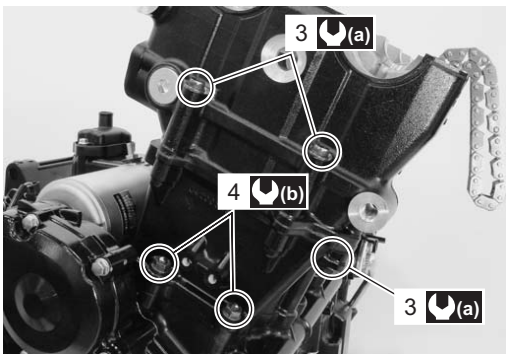

I823H1140343-01

- Install the gasket (5) and cylinder head side bolt (6). Tighten the bolt to the specified torque.

Tightening torque
Cylinder head side bolt (c): 14 N·m (1.4 kgf-m, 10.0 lb-ft)

NOTE

- **The metal side "B" of the gasket (5) should faces outside.**
- **Install the cylinder head side bolt between the cam chain.**

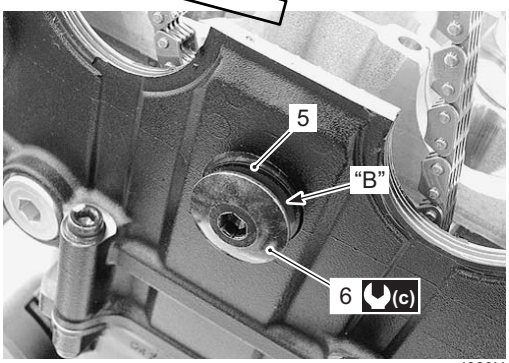

I823H1140591-03

- Install the oil hose (7).

⚠ CAUTION

Use new gasket washers to prevent oil leakage.

SAMPLE

- With the oil hose union contacted to the stopper “C”, tighten the bolts to the specified torque.

  Tightening torque
  Oil hose union bolt (d): 18 N·m (1.8 kgf-m, 13.0 lb-ft)

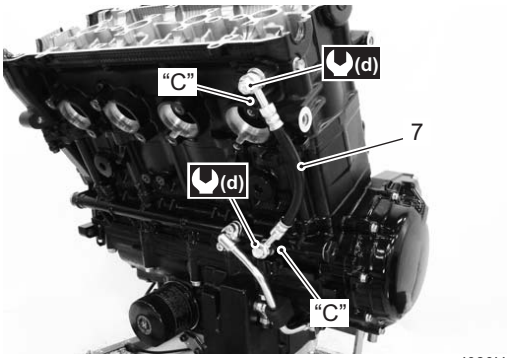

I823H1140344-02

- Install the oil hose (8).
- Bind the hoses and generator lead wires with a clamp (9).

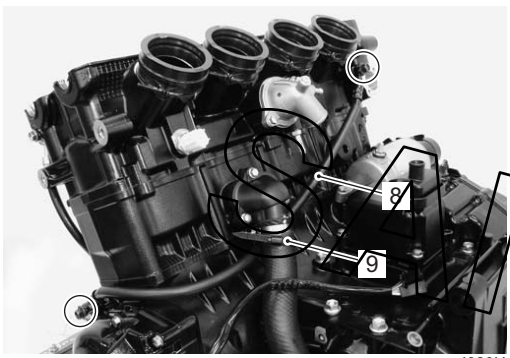

I823H1140345-02

Camshaft

- The cam shafts are identified by the embossed letters.
  IN: Intake camshaft
  EX: Exhaust camshaft
- Before placing the camshafts on the cylinder head, apply molybdenum oil solution to their journals.

  M/O: Molybdenum oil (MOLYBDENUM OIL SOLUTION)

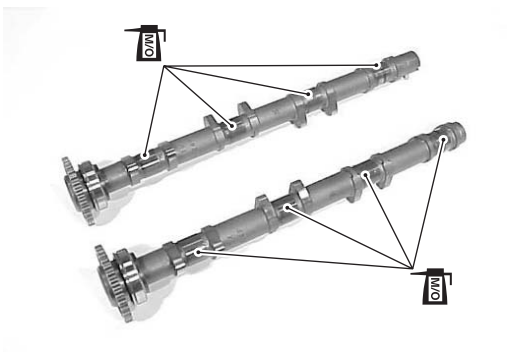

I823H1140069-02

- Turn the crankshaft clockwise and align the line “A” on the starter clutch with the index mark “B” of the valve timing inspection hole while keeping the cam chain pulled upward.

⚠ CAUTION

- **Pull the cam chain upward, or the chain will be caught between crankcase and cam drive sprocket.**
- **To adjust the camshaft timing correctly, be sure to align the line “A” with the index mark “B” and hold this position when installing the camshafts.**

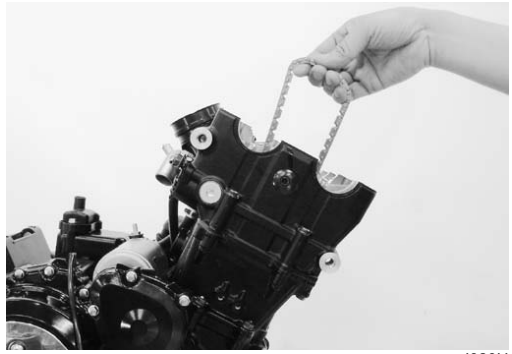

I823H1140346-01

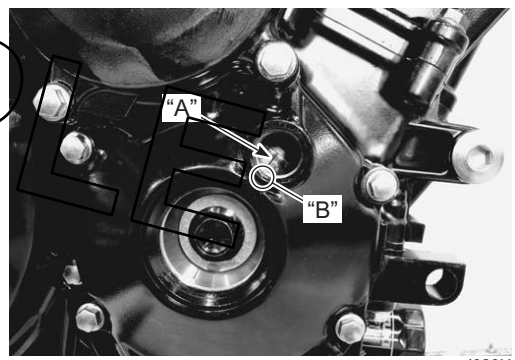

I823H1140347-01

SAMPLE

- Pull the cam chain lightly.
- Turn the exhaust camshaft so that the arrow is aligned with the gasket surface of the cylinder head.
  (The exhaust camshaft sprocket has an arrow marked “1” “C”.)
- Engage the cam chain with the exhaust camshaft sprocket.

NOTE

- **Before installing the camshaft, check that the tappets are installed correctly.**
- **Align the C-ring (1) of the exhaust camshaft bearing with the groove “D”.**

- Bind the cam chain and the sprocket with a proper clamp (2) to prevent the cam chain disengagement while installing the camshaft journal holders.
- The other arrow marked “2” “E” should now be pointing straight up. Starting from the roller pin that is directly above the arrow marked “2” “E”, count out 15 roller pins (from the exhaust camshaft side going towards the intake camshaft side).
- Engage the 15th roller pin “F” on the cam chain with the arrow marked “3” on the intake sprocket.

NOTE

- **Before installing the camshaft, check that the tappets are installed correctly.**
- **Align the C-ring (3) of the intake camshaft bearing with the groove “G”.**

SAMPLE

- Bind the cam chain and the sprocket with a proper clamp (4) to prevent the cam chain disengagement while installing the camshaft journal holders.

NOTE

The cam chain should now be on all three sprockets. Be careful not to move the crankshaft until the camshaft journal holders and cam chain tension adjuster are secured.

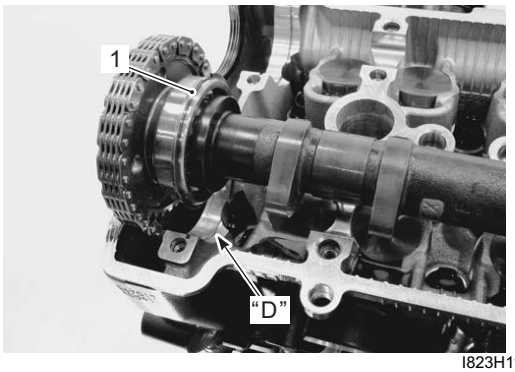

I823H1140348-01

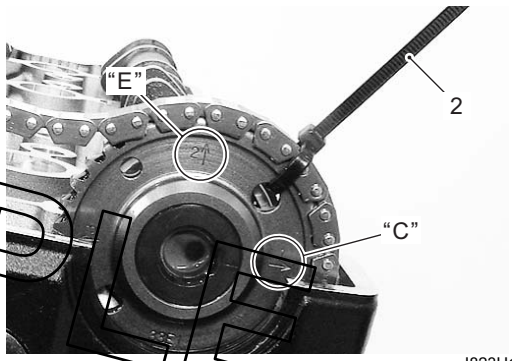

I823H1140349-02

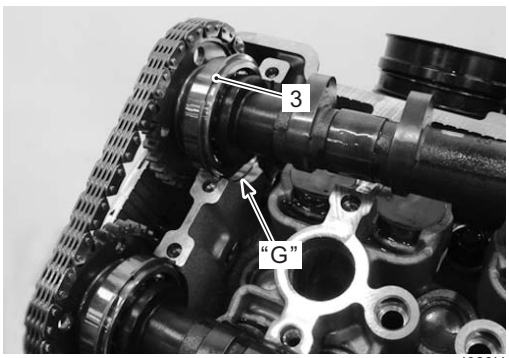

I823H1140350-01

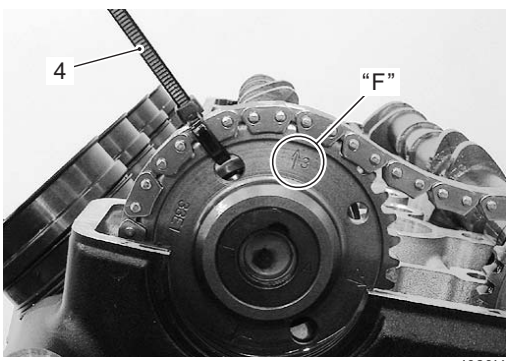

I823H1140351-01

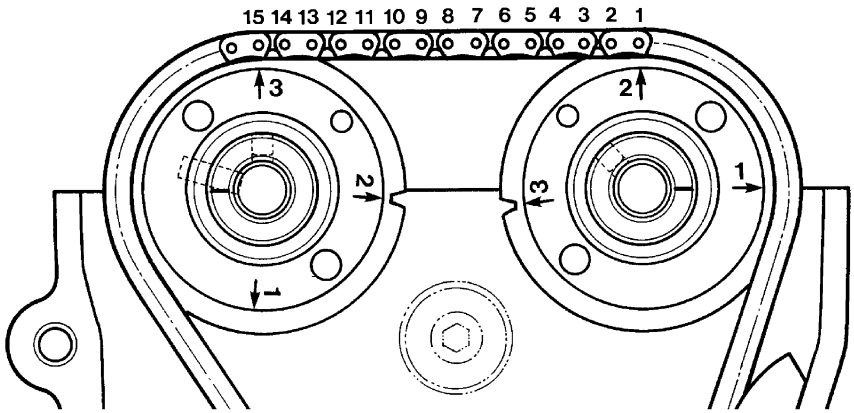

I823H1140077-02

- Install the dowel pins.
- Install the camshaft journal holders.

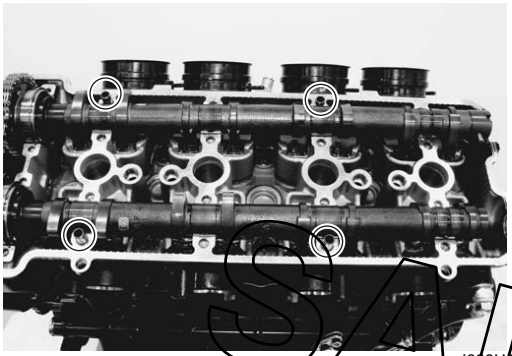

I823H1140352-01

- Have the camshaft journal holders evenly by tightening the camshaft journal holder bolts lightly, in the ascending order of numbers.

NOTE

- **Damage to head or camshaft journal holder thrust surfaces may result if the camshaft journal holders are not drawn down evenly.**
- **Each camshaft journal holder is identified with a cast-on letters “IN” and “EX”.**
- **The ascending order of numbers are indicated on the camshaft journal holders.**

- Tighten the camshaft journal holder bolts in ascending order of numbers to the specified torque.

Tightening torque
Camshaft journal holder bolt: 10 N·m (1.0 kgf-m, 7.0 lb-ft)

⚠ CAUTION

The camshaft journal holder bolts are made of a special material and much superior in strength, compared with other types of high strength bolts.
Take special care not to use other types of bolts instead of these special bolts.

SAMPLE

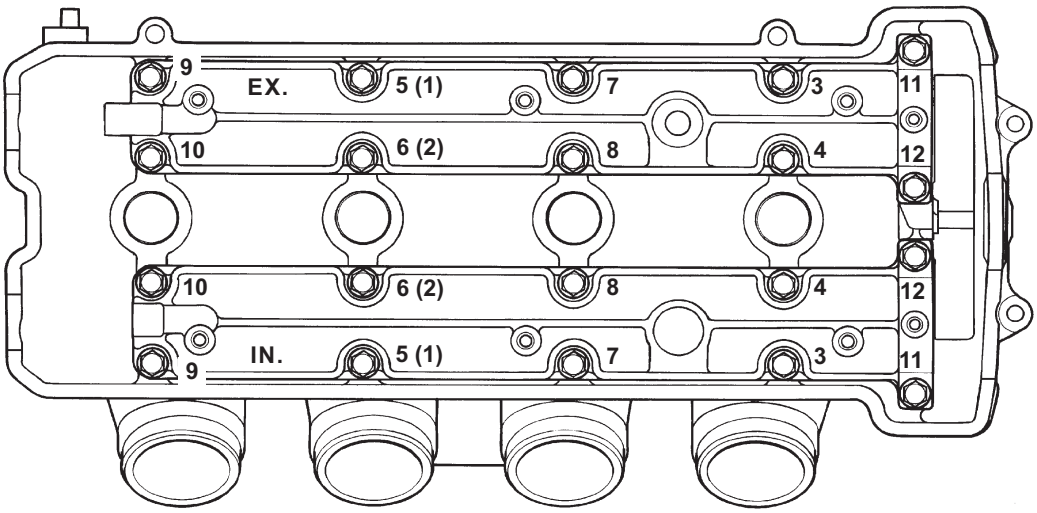

I823H1140079-03

- Install the oil pipe (4) and tighten oil pipe bolts to the specified torque.

NOTE

- **Install the washer (5) between each bolt and oil pipe.**
- **The exhaust side oil pipe bolt (6) is longer than the intake side one (7).**

Tightening torque
Oil pipe bolt (Camshaft housing): 10 N·m (1.0 kgf-m, 7.0 lb-ft)

I823H1140353-01

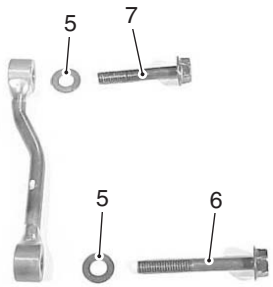

I823H1140081-01

- Install the cam chain guide No. 2 (8).

Tightening torque
Cam chain guide No. 2 bolt: 10 N·m (1.0 kgf-m, 7.0 lb-ft)

- Remove the clamps.

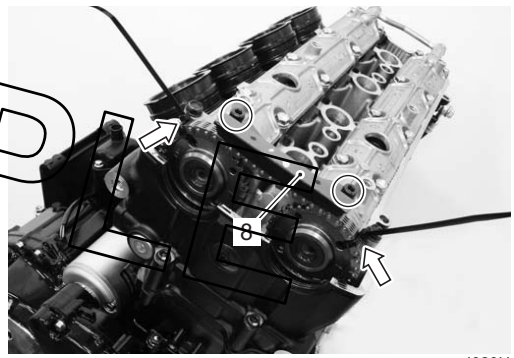

I823H1140354-01

Cam Chain Tension Adjuster

- Holding the cam chain tension adjuster as shown in the figure, compress the plunger by turning the adjuster body until the outer circlip “A” reaches the groove “B”.
- Hook the outer circlip “A” into the groove “B”, then turn the plunger head clockwise more than 90° to make a little play at the inner thread mechanism.

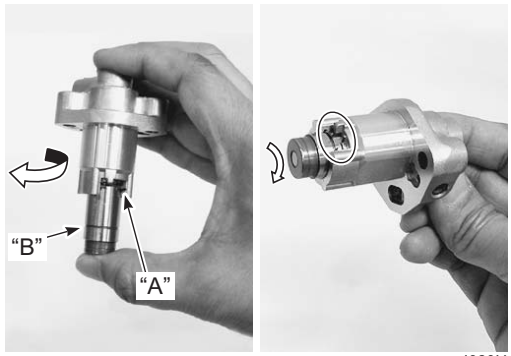

I823H1140355-01

SAMPLE

- Fit a new gasket (1).

⚠ CAUTION

Use a new gasket to prevent oil leakage.

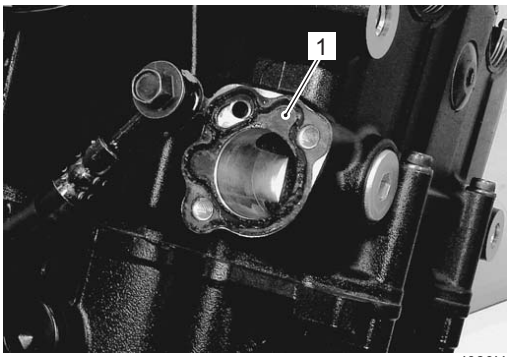

I823H1140356-01

- Install the cam chain tension adjuster (2).

Tightening torque
Cam chain tension adjuster mounting bolt (a): 10 N·m (1.0 kgf-m, 7.0 lb-ft)

- Remove the cam chain tension adjuster service cap (3).

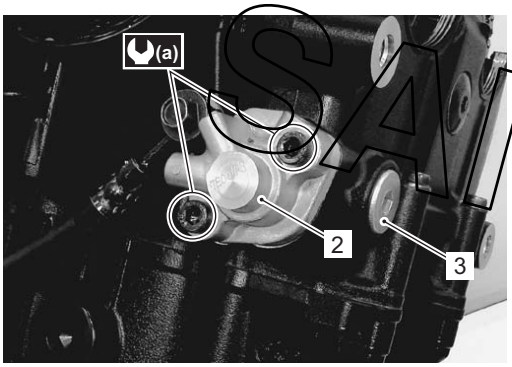

I823H1140357-01

- Unhook the outer circlip “A” from its groove by pushing in the stepped part (4) of the plunger head with a (–) screwdriver.
- Rotate the crankshaft (some turns), and recheck the valve timing.

⚠ CAUTION

Make sure that the adjuster works properly by checking no slack at point “B”.

Tightening torque
Cam chain tension adjuster service cap: 23 N·m (2.3 kgf-m, 16.5 lb-ft)

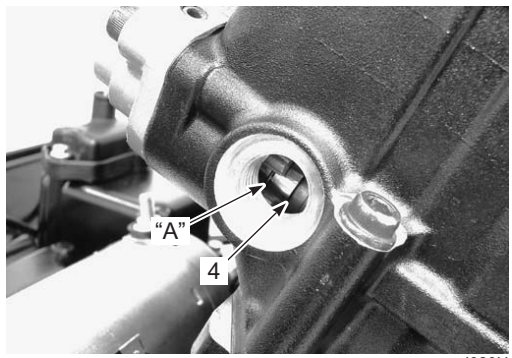

I823H1140358-05

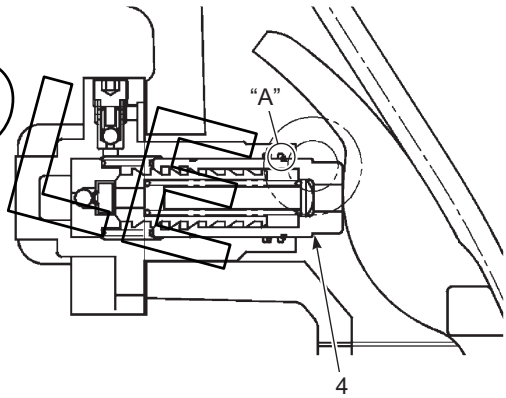

I823H1140086-04

SAMPLE

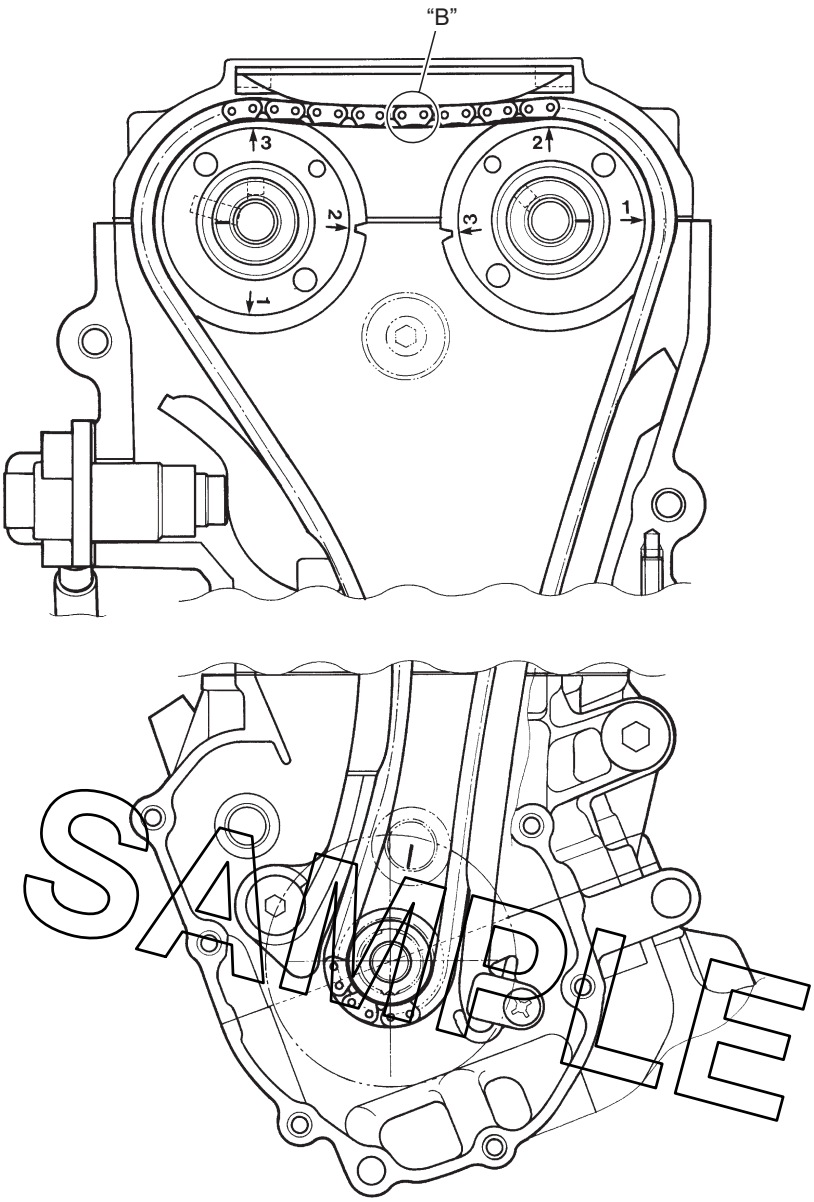

I823H1140577-02

NOTE

The cam chain tension adjuster can be serviced with the engine installed in the frame.

- After installing the cam chain tension adjuster, turn the crankshaft approx. 180° counterclockwise to make the plunger come out from the adjuster against the cam chain, via chain tensioner.

NOTE

When slight pushing force is applied to the plunger head, the plunger is automatically out from the adjuster body.

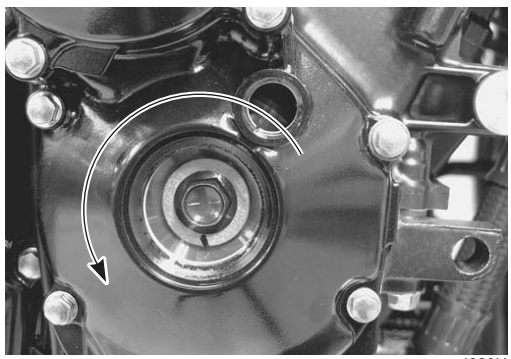

I823H1140574-02

⚠ **CAUTION**

Make sure that the adjuster works properly by checking no slack at point "B".

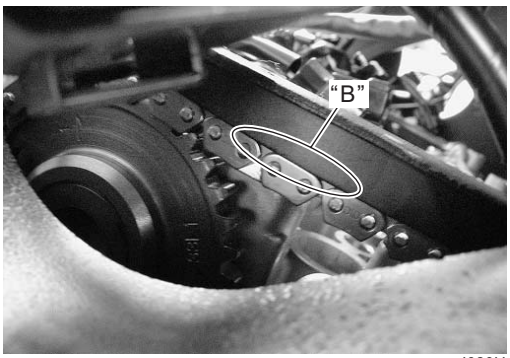

I823H1140575-03

- Tighten the valve timing inspection cap (5) and starter clutch cover cap (6) to the specified torque.

Tightening torque
Valve timing inspection cap (b): 23 N·m (2.3 kgf-m, 16.5 lb-ft)
Starter clutch cover cap (c): 11 N·m (1.1 kgf-m, 8.0 lb-ft)

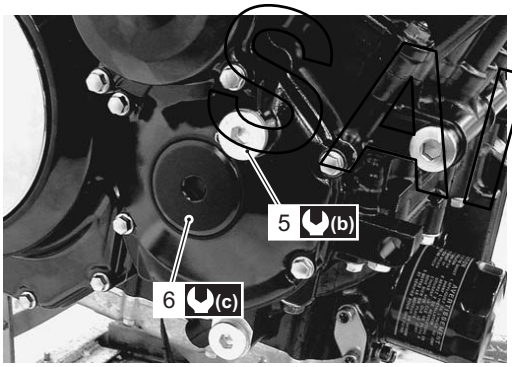

I823H1140359-02

Cylinder Head Cover

- Check and adjust the valve clearance. Refer to "Valve Clearance Inspection and Adjustment in Section 0B (Page 0B-4)".
- Pour engine oil in each oil pocket in the cylinder head.

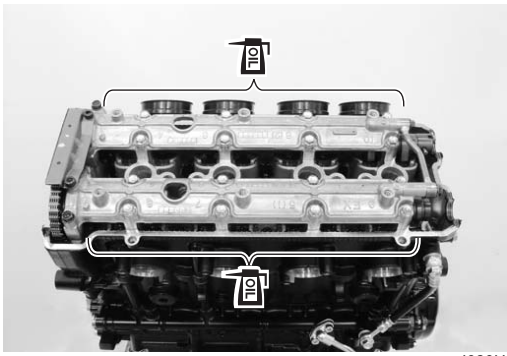

I823H1140360-01

- Install the dowel pins and new gaskets to the cylinder head cover.
- Apply bond to the cam end caps of the gasket as shown in the figure.

1207B : Sealant 99000–31140 (SUZUKI BOND No.1207B or equivalent)

⚠ **CAUTION**

Use new gaskets to prevent oil leakage.

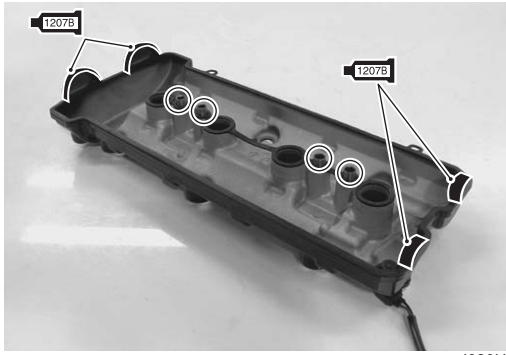

I823H1140089-04

- Place the cylinder head cover on the cylinder head.
- Fit new gaskets to each head cover bolt.

⚠ **CAUTION**

Use new gaskets to prevent oil leakage.

- Apply engine oil to both sides of the gaskets.

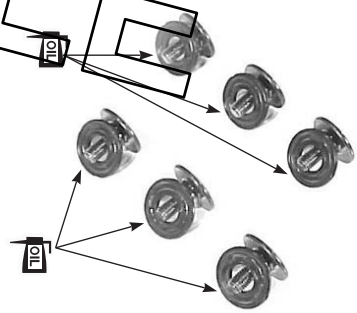

I823H1140090-01

SAMPLE

- Tighten the head cover bolts (1) to the specified torque.

  Tightening torque
  Head cover bolt (a): 14 N·m (1.4 kgf-m, 10.0 lb-ft)

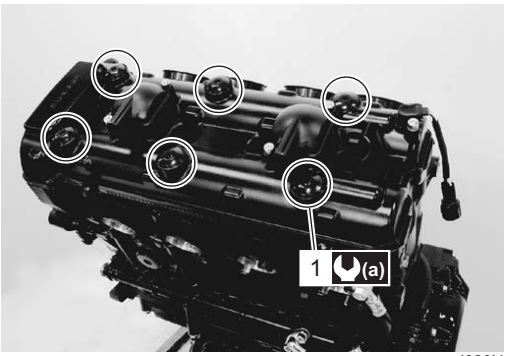

I823H1140361-01

- Install the spark plugs. Refer to “Ignition Coil / Plug Cap and Spark Plug Removal and Installation in Section 1H (Page 1H-6)”.
- Install the following parts:
  – Air cleaner box
    (Refer to “Air Cleaner Box Removal and Installation (Page 1D-6)”.)
  – Throttle body
    (Refer to “Throttle Body Removal and Installation (Page 1D-10)”.)

Camshaft Inspection

B823H11406019

Refer to “Engine Top Side Disassembly (Page 1D-28)”.
Refer to “Engine Top Side Assembly (Page 1D-32)”.

Camshaft Identification
The exhaust camshaft has the embossed letters “EX” and the intake camshaft has the embossed letters “IN”.

I823H1140092-01

Cam Wear
Check the camshaft for wear or damage.
Measure the cam height “a” with a micrometer.
Replace a camshaft if the cams are worn to the service limit.

Special tool
TOOL : 09900–20202 (Micrometer (1/100 mm, 25 – 50 mm))

Cam height “a”
Service limit (IN.): 36.68 mm (1.444 in)
Service limit (EX.): 36.28 mm (1.428 in)

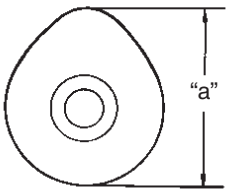

I649G1140199-02

Camshaft Runout
Measure the runout using the dial gauge. Replace the camshaft if the runout exceeds the limit.

Special tool
TOOL (A): 09900–20607 (Dial gauge (1/100 mm, 10 mm))
TOOL (B): 09900–20701 (Magnetic stand)
TOOL (C): 09900–21304 (V-block (100 mm))

Camshaft runout (IN. & EX.)
Service limit: 0.10 mm (0.004 in)

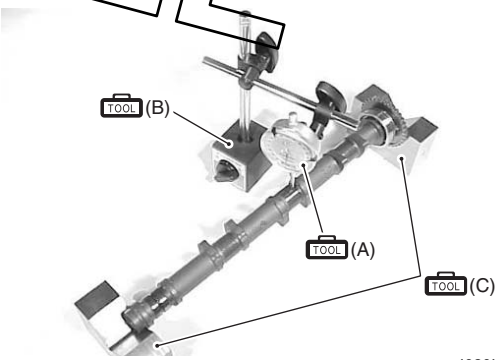

I823H1140093-01

SAMPLE

Camshaft Journal Wear

Inspect the camshaft journal wear in the following procedures:

1) Remove the water bypass union. Refer to “Cylinder Head Disassembly and Assembly (Page 1D-48)”.
2) Determine whether or not each journal is worn down to the limit by measuring the oil clearance with the camshaft installed in place.
3) Use the plastigauge to read the clearance at the widest portion, which is specified as follows.

   Special tool
   TOOL (A): 09900–22301 (Plastigauge (0.025 – 0.076 mm))
   TOOL (B): 09900–22302 (Plastigauge (0.051 – 0.152 mm))

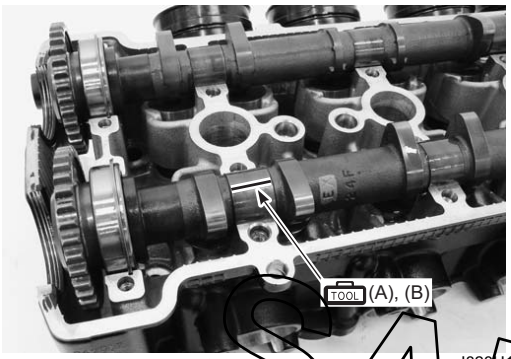

I823H1140362-02

4) Install each camshaft journal holder to its original position. Refer to “Engine Top Side Assembly (Page 1D-32)”.
5) Tighten the camshaft journal holder bolts in ascending order of numbers to the specified torque. Refer to “Engine Top Side Assembly (Page 1D-32)”.

NOTE

Do not rotate the camshafts with the plastigauge in place.

Tightening torque
Camshaft journal holder bolt: 10 N·m (1.0 kgf-m, 7.0 lb-ft)

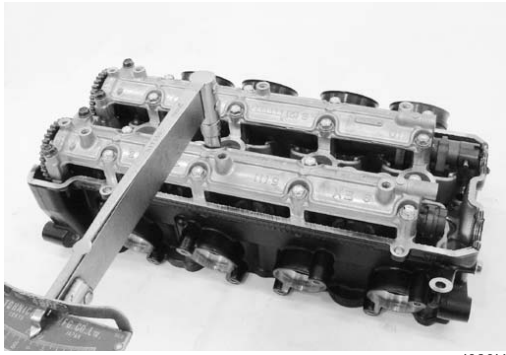

I823H1140363-01

6) Remove the camshaft journal holders and measure the width of the compressed plastigauge using the envelope scale.
7) This measurement should be taken at the widest part of the compressed plastigauge.

   Camshaft journal oil clearance (IN. & EX.)
   Service limit: 0.150 mm (0.0059 in)

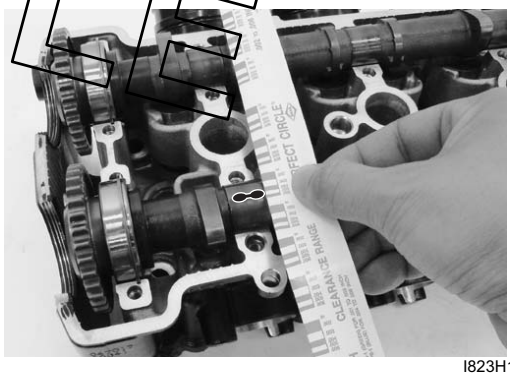

I823H1140364-01

SAMPLE

8) If the camshaft journal oil clearance exceeds the limit, measure the inside diameter of the camshaft journal holder and the outside diameter of the camshaft journal. Replace the camshaft or the cylinder head depending upon which one exceeds the specification.

Special tool
(C): 09900–20602 (Dial gauge (1/1000 mm, 1 mm))
(D): 09900–22403 (Small bore gauge (18 – 35 mm))
(E): 09900–20205 (Micrometer (0 – 25 mm))

Camshaft journal holder I.D. (IN. & EX.)
Standard: 24.012 – 24.025 mm (0.9454 – 0.9459 in)

Camshaft journal O.D. (IN. & EX.)
Standard: 23.959 – 23.980 mm (0.9433 – 0.9441 in)

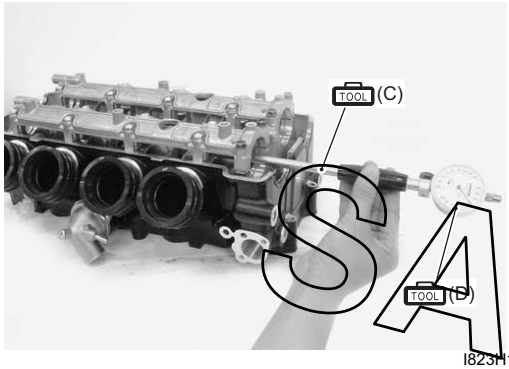

I823H1140576-01

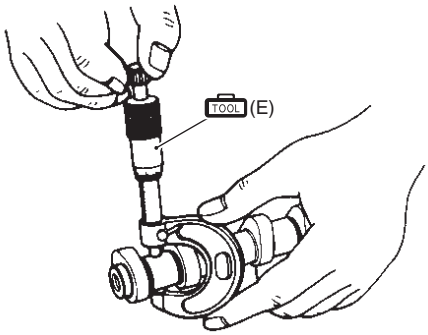

I649G1140204-03

Camshaft Sprocket / Bearing Inspection

B823H11406020

Inspect the camshaft sprockets/bearings in the following procedures:

1) Remove the intake and exhaust camshafts. Refer to “Engine Top Side Disassembly (Page 1D-28)”.
2) Inspect the teeth of each camshaft sprocket for wear or damage.
   If they are worn or damaged, replace the sprocket/ camshaft assembly and cam chain as a set.

I823H1140098-01

3) Inspect the bearings for abnormal play, noise and smooth rotation.
   If it is unusual, replace the sprocket/camshaft assembly with a new one.

⚠ CAUTION

Do not attempt to disassemble the cam sprocket or right side bearing. They are unserviceable.

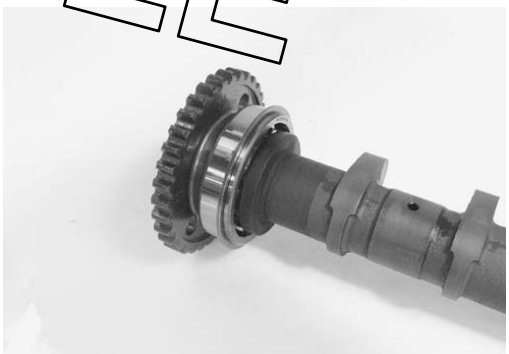
I823H1140099-01

4) Install the camshafts. Refer to “Engine Top Side Assembly (Page 1D-32)”.

SAMPLE

Cam Chain Tension Adjuster Inspection

B823H11406043

The cam chain tension adjuster is maintained at the proper tension by an automatically adjusted.

1) Remove the cam chain tension adjuster. Refer to “Engine Top Side Disassembly (Page 1D-28)”.
2) Holding the cam chain tension adjuster as shown in the figure, compress the plunger by turning the adjuster body until the outer circlip “A” reaches the groove “B”.
3) Hook the outer circlip “A” into the groove “B”, then turn the plunger head clockwise more than 90° to make a little play at the inner thread mechanism.

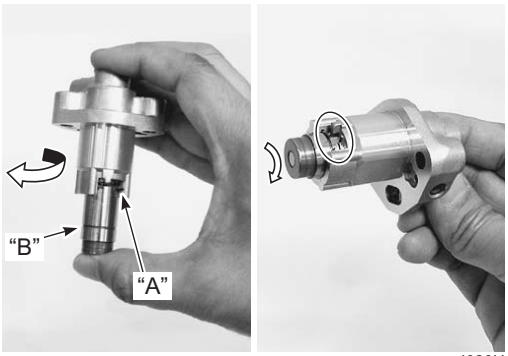

I823H1140355-01

NOTE

If it is difficult to compress the plunger because of internal engine oil, disassemble the adjuster by releasing the inner circlip “C” and spill out the oil.

⚠ CAUTION

Do not turn the adjuster body until the outer circlip “A” passes over the groove “B”.
If the inner circlip “C” hooks into the groove “B”, plunger may not be automatically out from the adjuster body even pushing force is applied on the head.
In such case, it needs to be disassembled.

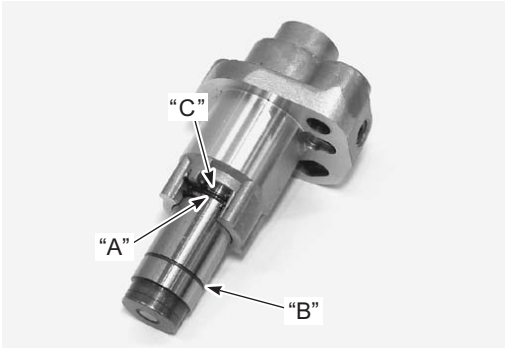

I823H1140365-01

I823H1140366-01

4) Check that the plunger is automatically out when tapping its head “D”. If it does not work smoothly, replace the cam chain tension adjuster with a new one.

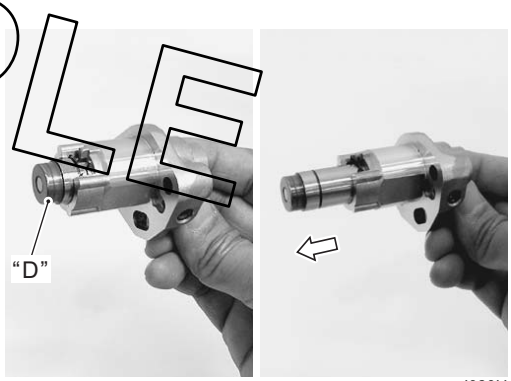

I823H1140367-01

5) Install the cam chain tension adjuster. Refer to “Engine Top Side Assembly (Page 1D-32)”.

SAMPLE

Cam Chain Guide Removal and Installation

B823H11406023

Removal

1) Remove the cylinder head cover. Refer to “Engine Top Side Disassembly (Page 1D-28)”.
2) Remove the cam chain guide No. 2 (1).

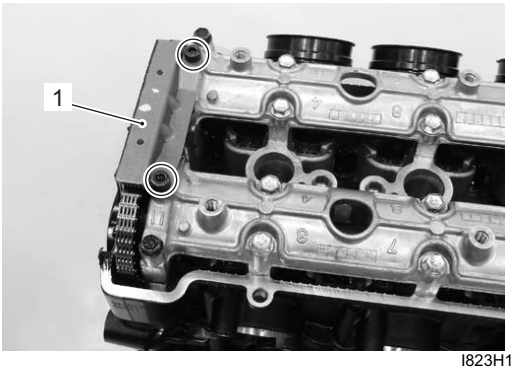

I823H1140368-01

3) Remove the cylinder head. Refer to “Engine Top Side Disassembly (Page 1D-28)” and “Engine Bottom Side Disassembly (Page 1D-64)”.
4) Remove the cam chain guide No. 1 (2).

I823H1140369-01

Installation

Install the cam chain guides in the reverse order of removal.

Cam Chain Guide Inspection

B823H11406024

Inspect the cam chain guide in the following procedures:

1) Remove the cam chain guides. Refer to “Cam Chain Guide Removal and Installation (Page 1D-47)”.
2) Check the contacting surface of the cam chain guides. If it is worn or damaged, replace it with a new one.

I823H1140106-01

3) Install the cam chain guides. Refer to “Cam Chain Guide Removal and Installation (Page 1D-47)”.

Cam Chain Tensioner Inspection

B823H11406025

Inspect the cam chain tensioner in the following procedures:

1) Remove the cylinder. Refer to “Engine Top Side Disassembly (Page 1D-28)”.
2) Remove the starter clutch. Refer to “Starter Torque Limiter / Starter Clutch Removal and Installation in Section 1I (Page 1I-10)”.
3) Remove the cam chain tensioner (1).

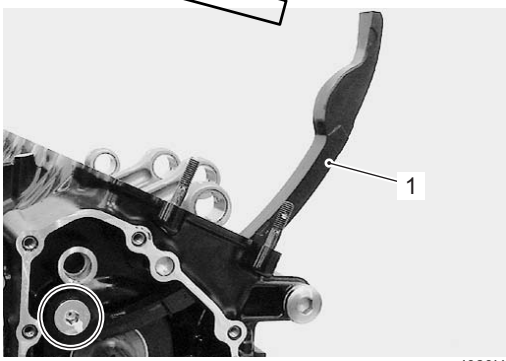

I823H1140370-02

SAMPLE

4) Check the contacting surface of the cam chain tensioner. If it is worn or damaged, replace it with a new one.

I823H1140108-01

5) Install the cam chain tensioner.
6) Reinstall the starter clutch. Refer to “Starter Torque Limiter / Starter Clutch Removal and Installation in Section 1I (Page 1I-10)”.
7) Install the cylinder. Refer to “Engine Top Side Disassembly (Page 1D-28)”.

Cylinder Head Disassembly and Assembly

B823H11406026

Refer to “Engine Top Side Disassembly (Page 1D-28)”.
Refer to “Engine Top Side Assembly (Page 1D-32)”.

⚠ CAUTION

Identify the position of each removed part. Organize the parts in their respective groups (i.e., intake, exhaust, No. 1 or No. 2) so that they can be installed in their original locations.

Disassembly

1) Remove the tappet (1) and shim (2) by fingers or magnetic hand.

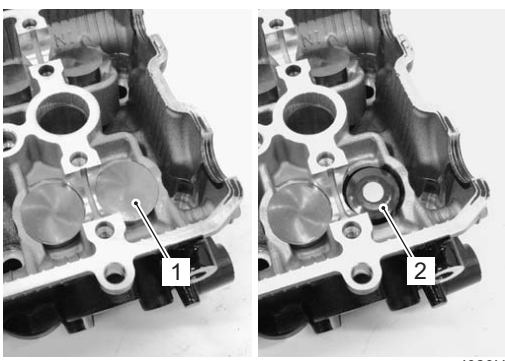

I823H1140371-02

2) Insert the special tool (A) between the valve spring and cylinder head.
3) Using the special tools, compress the valve spring and remove the two cotter halves (3) from the valve stem.

⚠ CAUTION

To prevent damage of the tappet sliding surface with the special tool, use the protector.

Special tool
TOOL (A): 09919–28620 (Sleeve protector)
TOOL (B): 09916–14522 (Valve spring compressor attachment)
TOOL (C): 09916–14510 (Valve spring compressor)
TOOL : 09916–84511 (Tweezers)

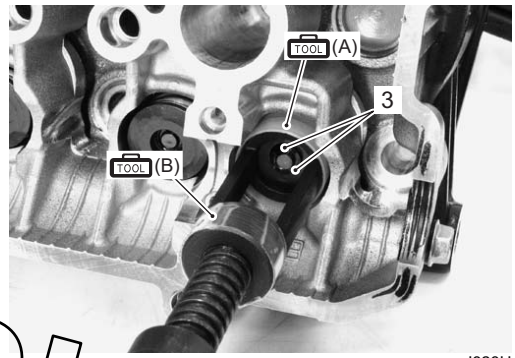

I823H1140373-01

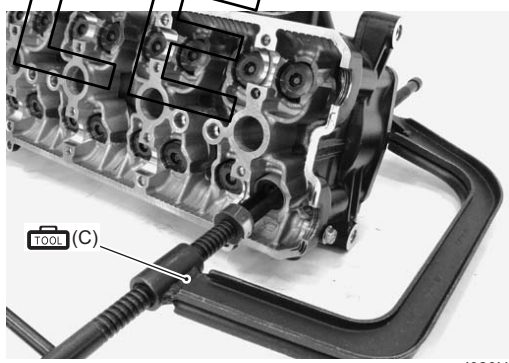

I823H1140372-01

SAMPLE

4) Remove the valve spring retainer (4) and valve spring (5).
5) Pull out the valve (6) from the combustion chamber side.

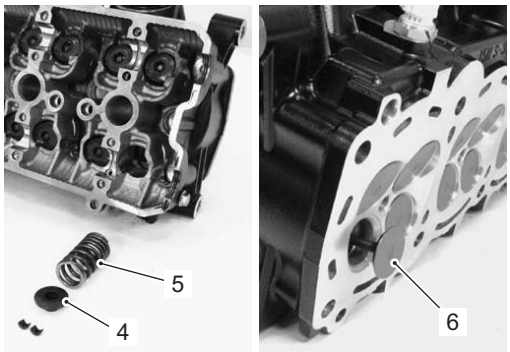

I823H1140374-01

6) Remove the oil seal (7) and spring seat (8).
7) Remove the other valves in the same manner as described previously.

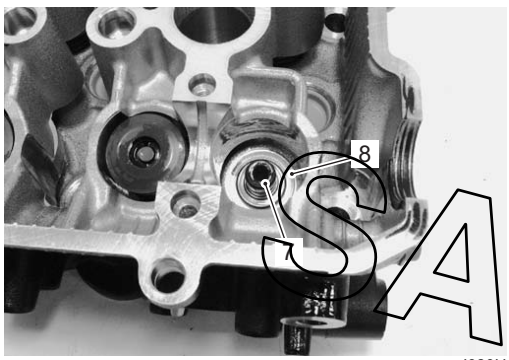

I823H1140375-01

8) Remove the ECT sensor (9).

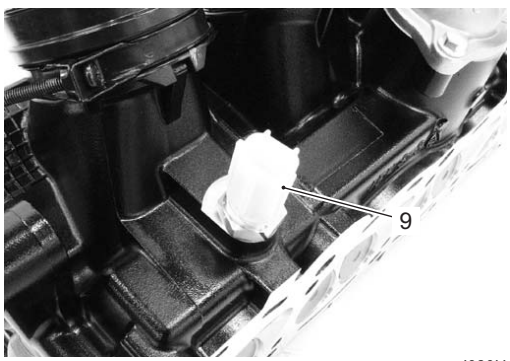

I823H1140376-01

9) Remove the thermostat cover (10).
10) Remove the thermostat (11).

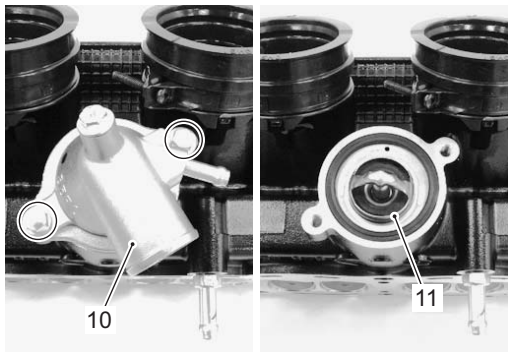

I823H1140377-01

11) Remove the intake pipes (12).

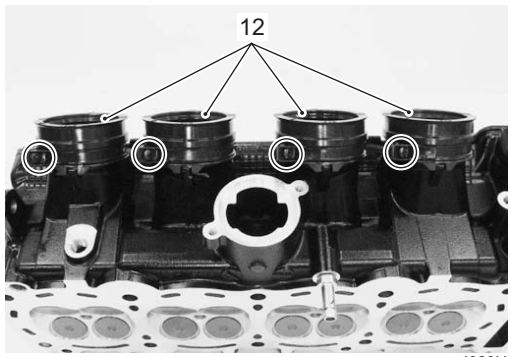

I823H1140378-01

12) Remove the water bypass union (13).

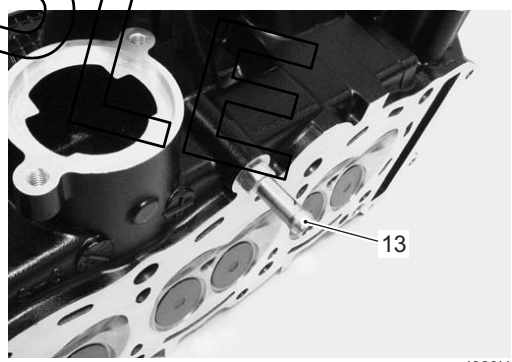

I823H1140379-01

13) Remove the oil gallery plug (14).
14) Remove the cylinder head plug (15).

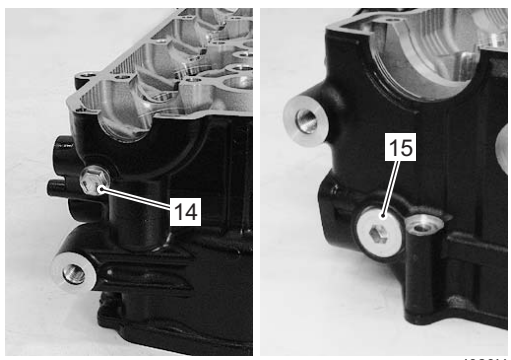

I823H1140380-01

SAMPLE

Assembly

Assembly is in the reverse order of disassembly. Pay attention to the following points:

- Tighten the cam chain tension adjuster service cap (1) and oil gallery plug (2) to the specified torque.

⚠ CAUTION

Replace the gaskets with new ones.

Tightening torque
Cam chain tension adjuster service cap (a): 23 N·m (2.3 kgf-m, 16.5 lb-ft)
Oil gallery plug (Cylinder head) (b): 10 N·m (1.0 kgf-m, 7.0 lb-ft)

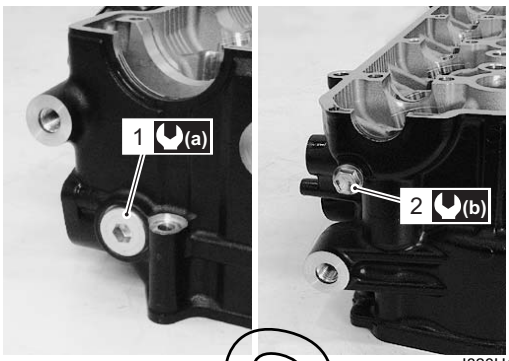

I823H1140381-02

- Apply bond to the thread part of the water bypass union (3) and tighten it to the specified torque.

1207B : Sealant 99000–31140 (SUZUKI BOND No.1207B or equivalent)

Tightening torque
Water bypass union (c): 14 N·m (1.4 kgf-m, 10.0 lb-ft)

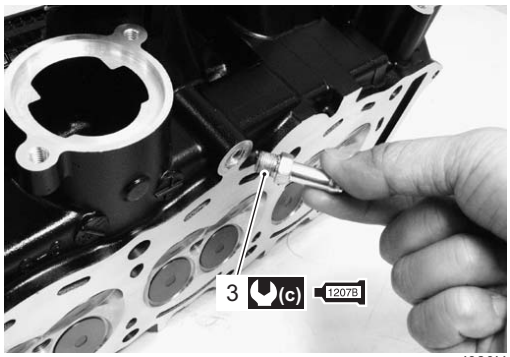

I823H1140382-01

- After aligning the boss “A” on the cylinder head with the slit on the intake pipe, install the intake pipes.

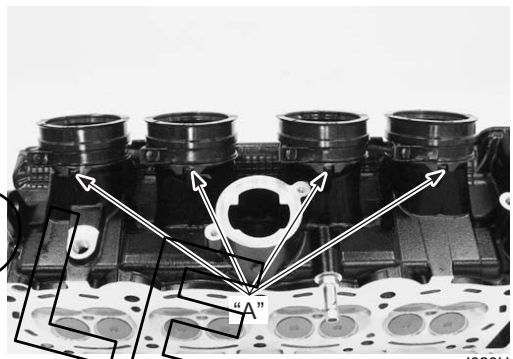

I823H1140383-01

SAMPLE

- Set the clamp screws as shown in the figure.

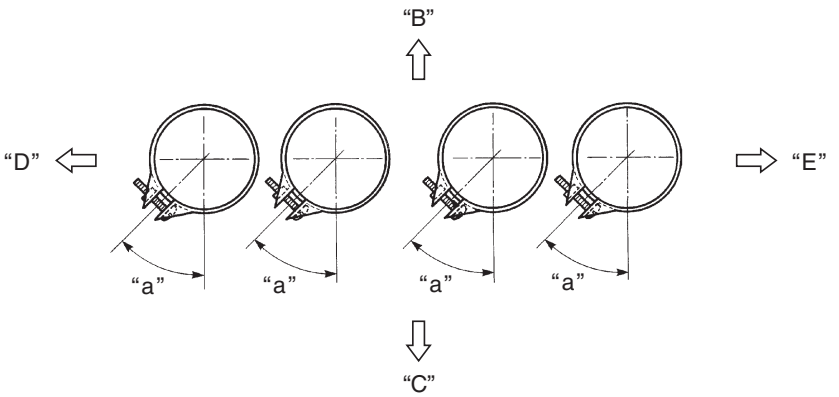

I823H1140121-03

"B": Upper	"C": Lower	"D": Left	"E": Right	"a": 45°

- Install the thermostat.

NOTE

The jiggle valve "F" of the thermostat faces upside.

- Tighten the thermostat cover bolts (4) to the specified torque.

Tightening torque
Thermostat cover bolt (d): 10 N·m (1.0 kgf-m, 7.0 lb-ft)

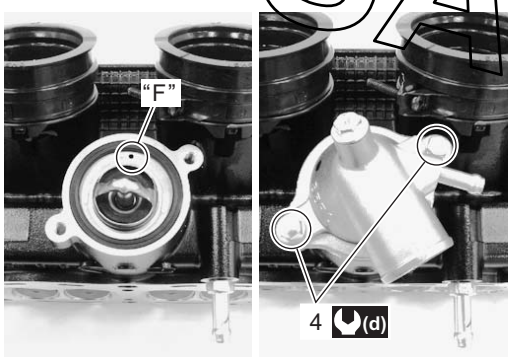

I823H1140384-01

- Tighten the ECT sensor (5) to the specified torque.

Tightening torque
Engine coolant temperature sensor (e): 18 N·m (1.8 kgf-m, 13.0 lb-ft)

⚠ CAUTION

- **Take special care when handling the temperature sensor. It may cause damage if it gets a sharp impact.**
- **Replace a gasket with a new one.**

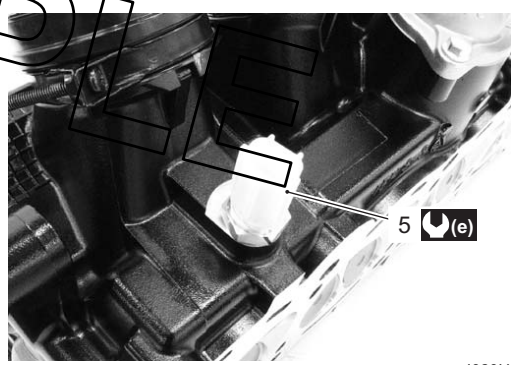

I823H1140385-01

SAMPLE

- Install the valve spring seat.
- Apply engine oil to the oil seal (6), and press-fit it into the position.

⚠ CAUTION

Do not reuse the removed oil seal.

I823H1140386-01

- Insert the valve, with its stem coated with molybdenum oil solution all around and along the full stem length without any break.

⚠ CAUTION

When inserting the valve, take care not to damage the lip of the oil seal.

M/O: Molybdenum oil (MOLYBDENUM OIL SOLUTION)

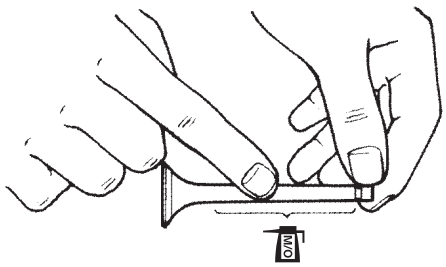

I705H1140165-01

- Install the valve spring with the small-pitch portion “G” facing cylinder head.

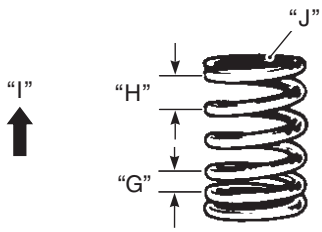

I823H1140304-02

“G”: Small-pitch portion	“I”: Upward
H”: Large-pitch portion	“J”: Paint

- Put on the valve spring retainer (7), and using the special tools, press down the spring, fit the cotter halves to the stem end, and release the lifter to allow the cotter halves to wedge in between retainer and stem.

⚠ CAUTION

- **Be sure to restore each spring and valve to their original positions.**
- **Be careful not to damage the valve and valve stem when handling them.**
- **Be careful to damage of the tappet sliding surface with the special tool.**

Special tool
TOOL (A): 09916–14510 (Valve spring compressor)
TOOL (B): 09916–14522 (Valve spring compressor attachment)
TOOL (C): 09919–28620 (Sleeve protector)
TOOL : 09916–84511 (Tweezers)

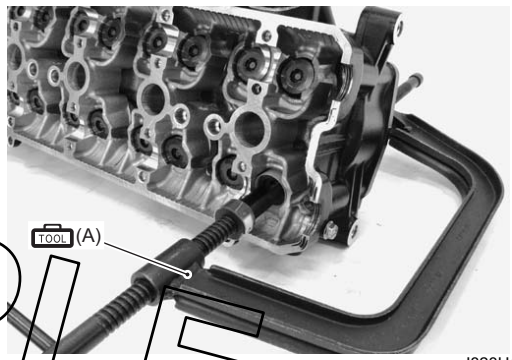

I823H1140387-01

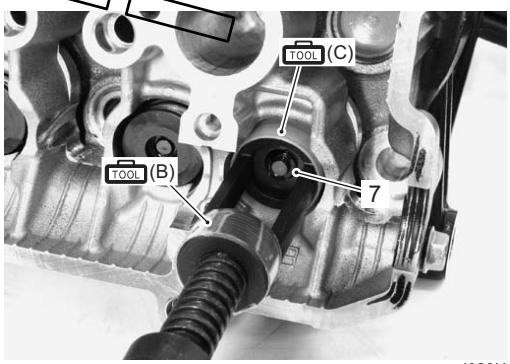

I823H1140388-02

SAMPLE

- Be sure that the rounded lip “K” of the cotter fits snugly into the groove “L” in the stem end.

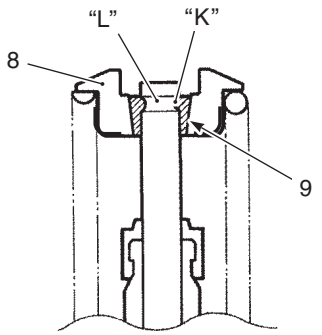

I823H1140127-04

8. Valve spring retainer	9. Cotter

- Install the other valves and springs in the same manner as described previously.
- Install the tappet shims and the tappets to their original positions.

NOTE

- **Apply engine oil to the stem end, shim and tappet before fitting them.**
- **When seating the tappet shim, be sure the figure printed surface faces the tappet.**

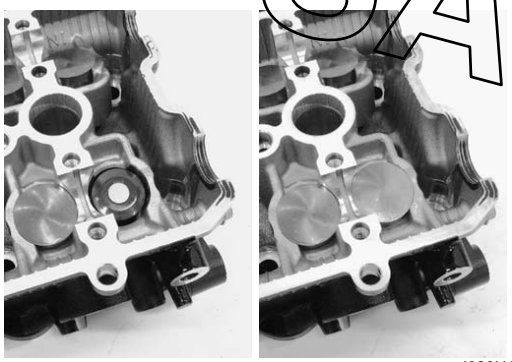

I823H1140389-01

Cylinder Head Related Parts Inspection

B823H11406027

Refer to “Cylinder Head Disassembly and Assembly (Page 1D-48)”.

Cylinder Head Distortion

1) Decarbonize the combustion chambers.
2) Check the gasket surface of the cylinder head for distortion. Use a straightedge and thickness gauge. Take clearance readings at several places. If readings exceed the service limit, replace the cylinder head.

Special tool
TOOL : 09900–20803 (Thickness gauge)

Cylinder head distortion
Service limit: 0.20 mm (0.008 in)

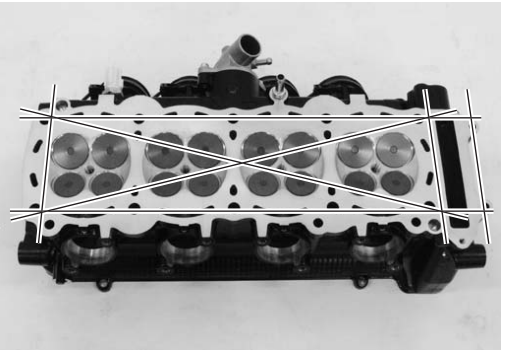

I823H1140390-01

Valve Stem Runout

Support the valve using V-blocks, as shown in the figure, and check its runout using the dial gauge. If the runout exceeds the service limit, replace the valve.

Special tool
TOOL (A): 09900–20607 (Dial gauge (1/100 mm, 10 mm))
TOOL (B): 09900–20701 (Magnetic stand)
TOOL (C): 09900–21304 (V-block (100 mm))

Valve stem runout (IN. & EX.)
Service limit: 0.05 mm (0.002 in)

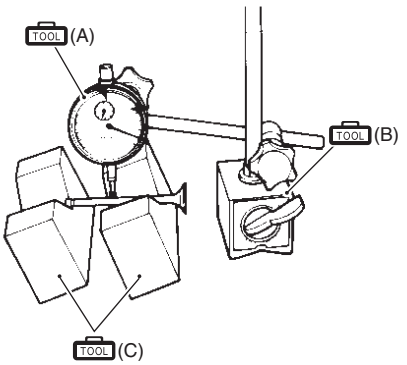

I649G1140231-03

SAMPLE

Valve Head Radial Runout

Place the dial gauge at a right angle to the valve head face and measure the valve head radial runout. If it measures more than the service limit, replace the valve.

Special tool

(A): 09900–20607 (Dial gauge (1/100 mm, 10 mm))
(B): 09900–20701 (Magnetic stand)
(C): 09900–21304 (V-block (100 mm))

Valve head radial runout (IN. & EX.)
Service limit: 0.03 mm (0.001 in)

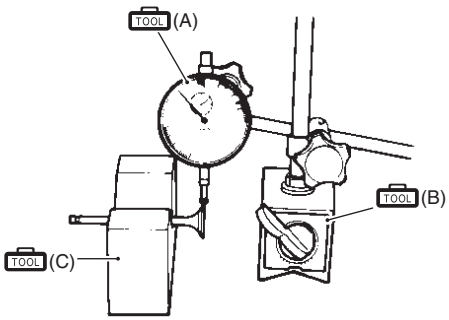

I649G1140232-03

Valve Stem and Valve Face Wear Condition

- Visually inspect each valve stem and valve face for wear and pitting. If it is worn or damaged, replace the valve with a new one.

I823H1140130-01

Valve Stem Deflection

Lift the valve about 10 mm (0.39 in) from the valve seat. Measure the valve stem deflection in two directions, “X” and “Y”, perpendicular to each other. Position the dial gauge as shown. If the deflection exceeds the service limit, then determine whether the valve or the guide should be replaced with a new one.

Special tool

(A): 09900–20607 (Dial gauge (1/100 mm, 10 mm))
(B): 09900–20701 (Magnetic stand)

Valve stem deflection (IN. & EX.)
Service limit: 0.25 mm (0.010 in)

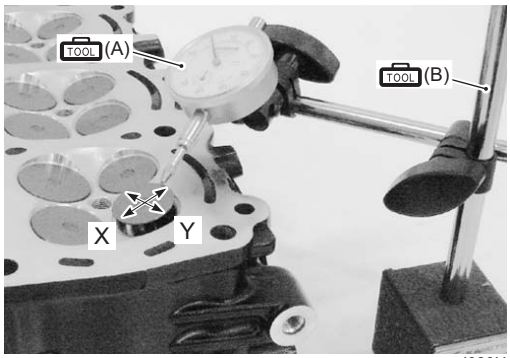

I823H1140516-03

SAMPLE

Valve Stem Wear

Measure the valve stem O.D. using the micrometer. If it is out of specification, replace the valve with a new one. If the valve stem O.D. is within specification but the valve stem deflection is not, replace the valve guide. After replacing the valve or valve guide, recheck the deflection.

Special tool

TOOL (A): 09900–20205 (Micrometer (0 – 25 mm))

Valve stem O.D.

Standard (IN.): 4.975 – 4.990 mm (0.1959 – 0.1965 in)
Standard (EX.): 4.955 – 4.970 mm (0.1951 – 0.1957 in)

NOTE

If valve guides have to be removed for replacement after inspecting related parts, carry out the steps shown in valve guide replacement. Refer to "Valve Guide Replacement (Page 1D-57)".

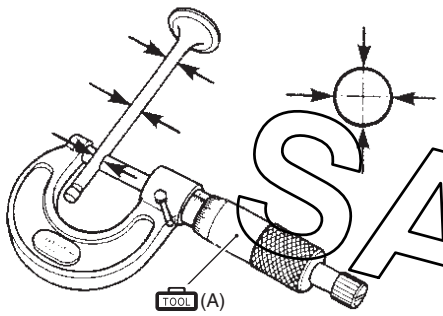

I718H1140122-01

Valve Spring

The force of the coil spring keeps the valve seat tight. A weakened spring results in reduced engine power output and often accounts for the chattering noise coming from the valve mechanism.
Check the valve springs for proper strength by measuring their free length and also by the force required to compress them. If the spring length is less than the service limit or if the force required to compress the spring does not fall within the specified range, replace the valve spring.

Special tool

TOOL (A): 09900–20102 (Vernier calipers (1/20 mm, 200 mm))

Valve spring free length (IN. & EX.)

Service limit: 42.3 mm (1.67 in)

Valve spring tension (IN. & EX.)

Standard: Approx. 137 N (14.0 kgf, 30.8 lbs)/36.6 mm (1.44 in)

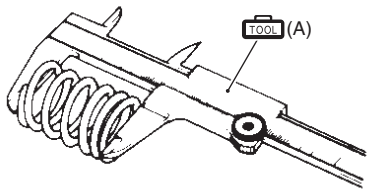

I649G1140237-03

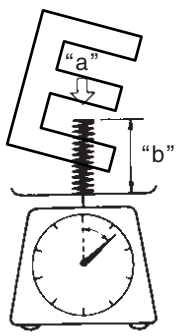

I649G1140238-03

Tension "a"	Length "b"
Approx. 137 N (14.0 kgf, 30.8 lbs)	36.6 mm (1.44 in)

SAMPLE

Valve Seat Width

1) Visually check for valve seat width on each valve face. If the valve face has worn abnormally, replace the valve.
2) Coat the valve seat with a red lead (Prussian Blue) and set the valve in place.

⚠ CAUTION

Do not use lapping compound.

3) Rotate the valve with light pressure.

Special tool
TOOL (A): 09916–10911 (Valve lapper set)

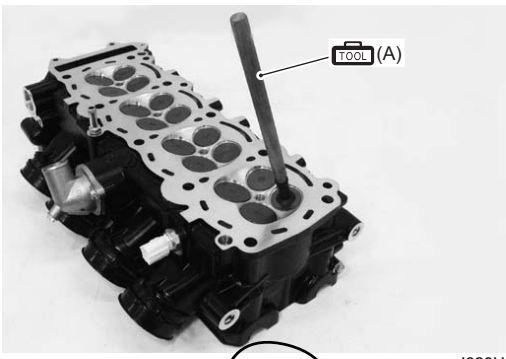

I823H1140391-01

4) Check that the transferred red lead (blue) on the valve face is uniform all around and in center of the valve face.
If the seat width “a” measured exceeds the standard value, or seat width is not uniform reface the seat using the seat cutter. Refer to “Valve Seat Repair (Page 1D-58)”.

Valve seat width “a” (IN. & EX.)
Standard: 0.9 – 1.1 mm (0.035 – 0.043 in)

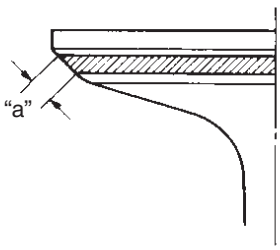

I649G1140246-02

Valve Seat Sealing Condition

1) Clean and assemble the cylinder head and valve components.
2) Fill the intake and exhaust ports with gasoline to check for leaks. If any leaks occur, inspect the valve seat and face for burrs or other things that could prevent the valve from sealing. Refer to “Valve Seat Repair (Page 1D-58)”.

⚠ WARNING

Always use extreme caution when handling gasoline.

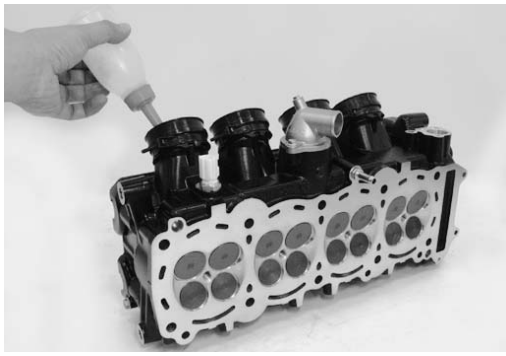

I823H1140392-01

NOTE

After servicing the valve seats, be sure to check the valve clearance after the cylinder head has been reinstalled. Refer to “Valve Clearance Inspection and Adjustment in Section 0B (Page 0B-4)”.

SAMPLE

Valve Guide Replacement

B823H11406028

1) Remove the cylinder head. Refer to “Engine Top Side Disassembly (Page 1D-28)”.
2) Remove the valves. Refer to “Cylinder Head Disassembly and Assembly (Page 1D-48)”.
3) Using the valve guide remover, drive the valve guide out toward the intake or exhaust camshaft side.

Special tool
TOOL (A): 09916–44310 (Valve guide remover/ installer)

NOTE

- **Discard the removed valve guide sub-assemblies.**
- **Only oversized valve guides are available as replacement parts. (Part No. 11115-15H70)**

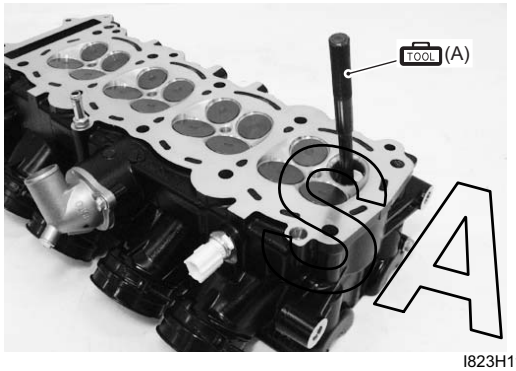

I823H1140393-01

4) Refinish the valve guide holes in the cylinder head using the reamer and handle.

⚠ CAUTION

When refinishing or removing the reamer from the valve guide hole, always turn it clockwise.

Special tool
TOOL (B): 09916–34580 (Valve guide reamer (10.8 mm))
TOOL (C): 09916–34542 (Reamer handle)

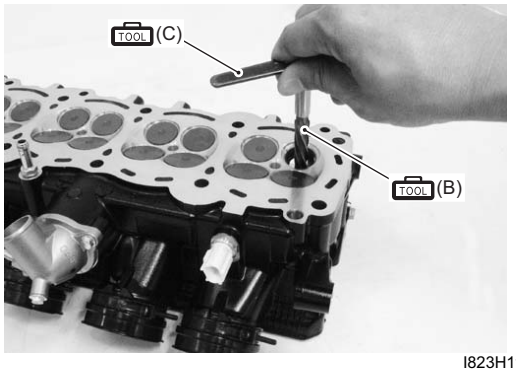

I823H1140394-01

5) Cool down the new valve guides in a freezer for about one hour and heat the cylinder head to 100 – 150 °C (212 – 302 °F) with a hot plate.

⚠ CAUTION

Do not use a burner to heat the valve guide hole to prevent cylinder head distortion.

6) Apply engine oil to each valve guide and valve guide hole.
7) Drive the guide into the guide hole using the valve guide installer.

⚠ CAUTION

Failure to oil the valve guide hole before driving the new guide into place may result in a damaged guide or head.

Special tool
TOOL (A): 09916–44310 (Valve guide remover/ installer)
TOOL (D): 09916–53350 (Attachment)

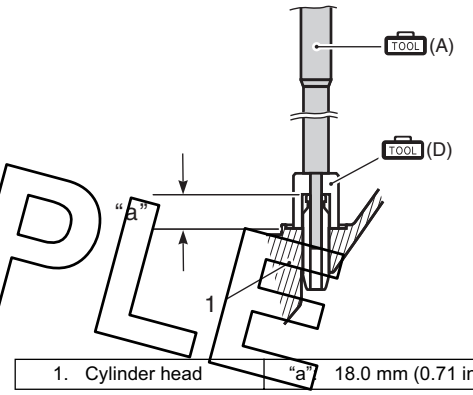

I718H1140127-01

1. Cylinder head	“a”	18.0 mm (0.71 in)

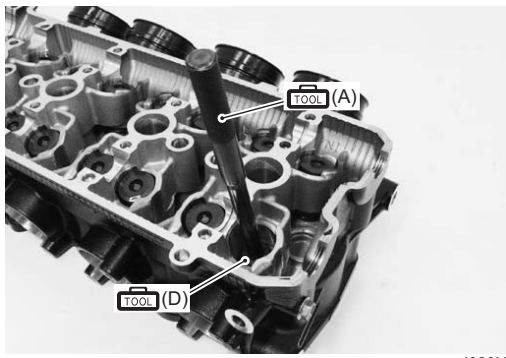

I823H1140395-01

SAMPLE

8) After installing the valve guides, refinish their guiding bores using the reamer. Be sure to clean and oil the guides after reaming.

NOTE

- **Be sure to cool down the cylinder head to ambient air temperature.**
- **Insert the reamer from the combustion chamber and always turn the reamer handle clockwise.**

Special tool
TOOL (C): 09916–34542 (Reamer handle)
TOOL (E): 09916–34570 (Valve guide reamer (5.0 mm))

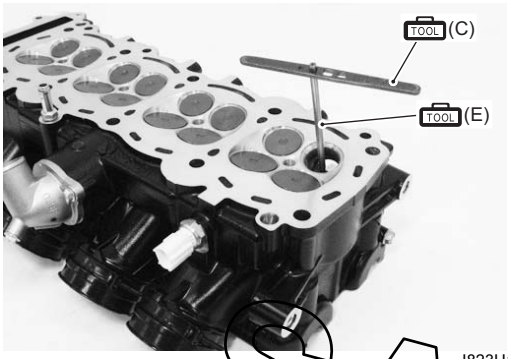

I823H1140396-01

9) Reassemble the cylinder head. Refer to “Cylinder Head Disassembly and Assembly (Page 1D-48)”.
10) Install the cylinder head assembly. Refer to “Engine Top Side Assembly (Page 1D-32)”.

Valve Seat Repair

B823H11406029

The valve seats (1) for both the intake and exhaust valves are machined to three different angles. The seat contact surface is cut at 45°.

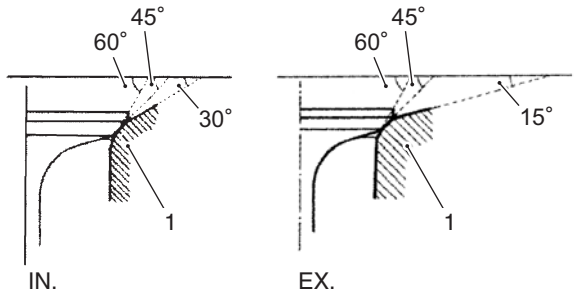

I823H1140138-01

	Intake	Exhaust
Seat angle	30°/45°/60°	15°/45°/60°
Seat width	0.9 – 1.1 mm (0.035 – 0.043 in)	←
Valve diameter	33 mm (1.30 in)	27.5 mm (1.08 in)
Valve guide I.D.	5.000 – 5.012 mm (0.1969 – 0.1973 in)	←

⚠ CAUTION

- **The valve seat contact area must be inspected after each cut.**
- **Do not use lapping compound after the final cut is made. The finished valve seat should have a velvety smooth finish but not a highly polished or shiny finish. This will provide a soft surface for the final seating of the valve which will occur during the first few seconds of engine operation.**
- **The titanium valves are coated with an oxidized membrane treatment to resist wear but the membrane tend to removed if lapped after valve seat servicing.**

NOTE

After servicing the valve seats, be sure to check the valve clearance after the cylinder head has been reinstalled. Refer to “Valve Clearance Inspection and Adjustment in Section 0B (Page 0B-4)”.

SAMPLE

Cylinder Disassembly and Assembly

B823H11406030

Refer to “Engine Top Side Disassembly (Page 1D-28)”.
Refer to “Engine Top Side Assembly (Page 1D-32)”.

Disassembly

1) Remove the water inlet connector (1).

I823H1140397-01

2) Remove the water jacket plugs (2).

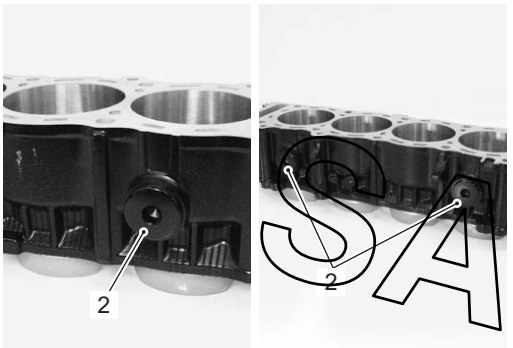

I823H1140398-01

Assembly

Assembly is in the reverse order of disassembly. Pay attention to the following points:

- Apply engine coolant to O-rings of water jacket plugs.

⚠ CAUTION

Replace the O-rings with new ones.

- Tighten the water jacket plugs (1) to the specified torque.

Tightening torque
Water jacket plug (a): 11 N·m (1.1 kgf-m, 8.0 lb-ft)

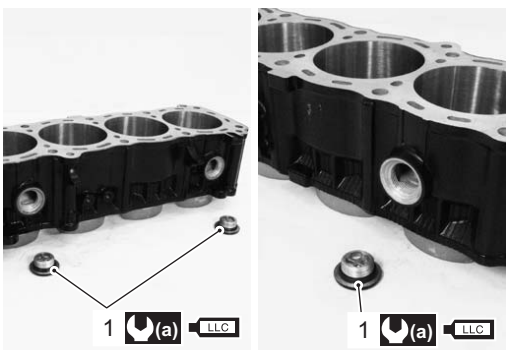

I823H1140399-01

- Apply engine coolant to O-ring of water inlet connector.

⚠ CAUTION

Replace the O-ring with a new one.

I823H1140400-01

- Tighten the water inlet connector bolts (2) to the specified torque.

Tightening torque
Water inlet connector bolt (b): 10 N·m (1.0 kgf-m, 7.0 lb-ft)

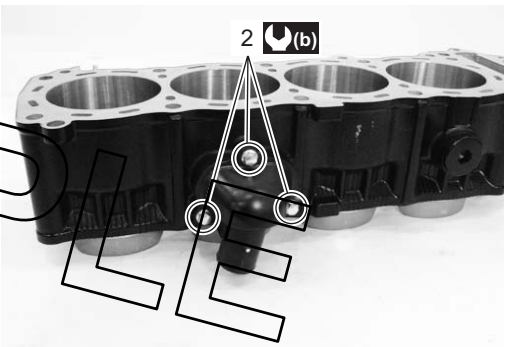

I823H1140401-01

SAMPLE

Cylinder Inspection

B823H11406031

Refer to “Engine Top Side Disassembly (Page 1D-28)”.
Refer to “Engine Top Side Assembly (Page 1D-32)”.

Cylinder Distortion

Check the gasket surface of the cylinder for distortion. Use a straightedge and thickness gauge. Take clearance readings at several places. If any reading exceeds the service limit, replace the cylinder.

Special tool

TOOL : 09900–20803 (Thickness gauge)

Cylinder distortion

Service limit: 0.20 mm (0.008 in)

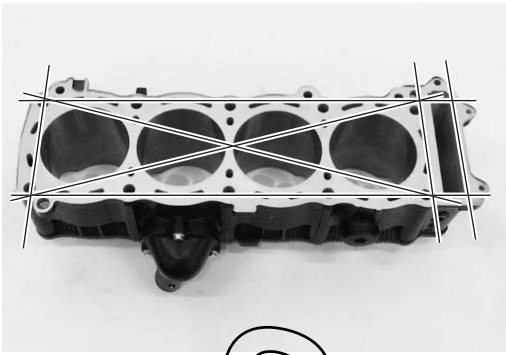

I823H1140402-01

Cylinder Bore

Measure the cylinder bore diameter at six places. If any one of the measurements exceed the limit, overhaul the cylinder and replace the piston with an oversize piston. The remaining cylinders must also be rebored accordingly; otherwise, the imbalance might cause excessive vibration.

Special tool

TOOL (A): 09900–20530 (Cylinder gauge set)

Cylinder bore

Standard: 81.000 – 81.015 mm (3.1890 – 3.1896 in)

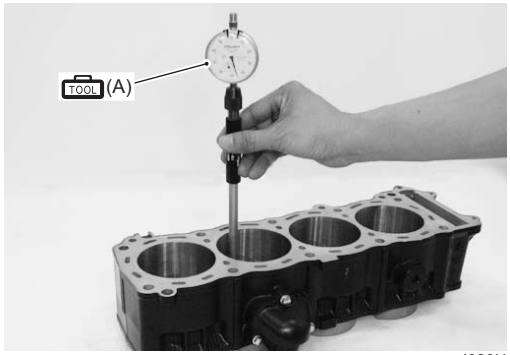

I823H1140403-01

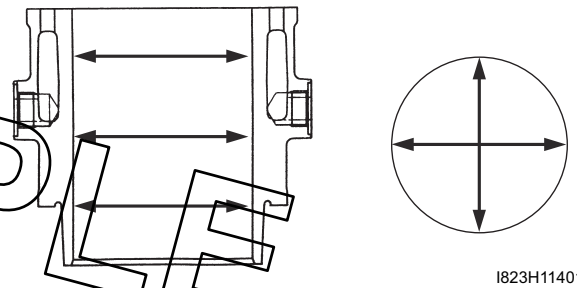

I823H1140146-02

SAMPLE

Piston-to-cylinder Clearance

Refer to “Piston and Piston Ring Inspection (Page 1D-62)”.

Piston Ring Removal and Installation

B823H11406032

Removal

1) Draw out the piston pin and remove the piston. Refer to “Engine Top Side Disassembly (Page 1D-28)”.
2) Carefully spread the ring opening with your thumbs and then push up the opposite side of the 1st ring to remove it.

NOTE

Do not expand the piston ring excessively since it is apt to be broken down.

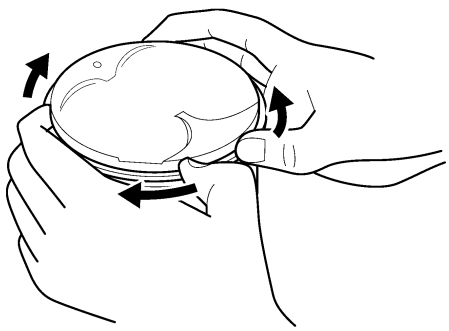

I823H1140303-01

3) Remove the 2nd ring and oil ring in the same manner.

Installation

NOTE

- **When installing the piston ring, be careful not to damage the piston.**
- **Do not expand the piston ring excessively since it is apt to be broken down.**

1) Install the piston rings in the order of the oil ring, second ring and top ring.
   a) The first member to go into the oil ring groove is the spacer (1).
   After placing the spacer, fit the two side rails (2).

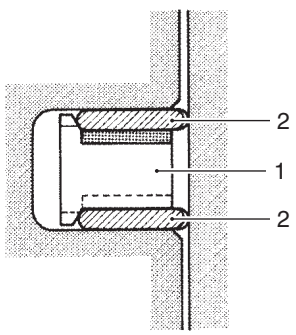

I718H1140143-02

⚠ CAUTION

When installing the spacer, be careful not to allow its two ends to overlap in the groove.

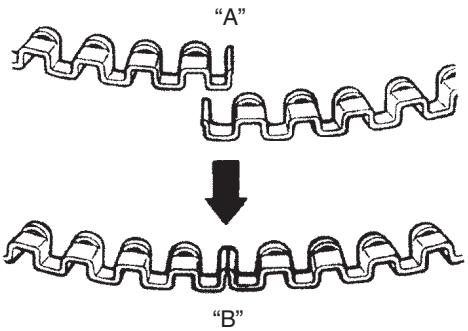

I705H1140170-02

“A”: INCORRECT	“B”: CORRECT

b) Install the 2nd ring (3) and 1st ring (4) to piston.

NOTE

1st ring (4) and 2nd ring (3) differ in shape.

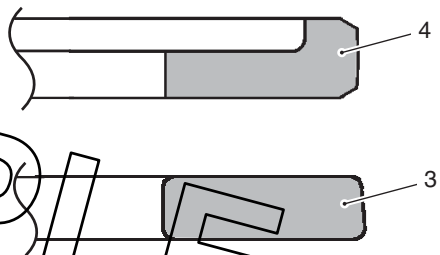

I823H1140147-01

NOTE

Face the side with the stamped mark upward when assembling.

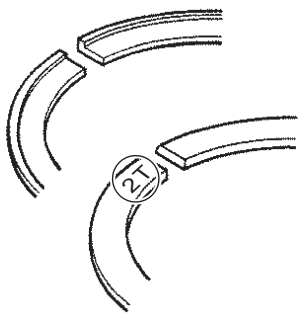

I823H1140148-03

SAMPLE

2) Position the gaps of the three rings and side rails as shown. Before inserting piston into the cylinder, check that the gaps are so located.

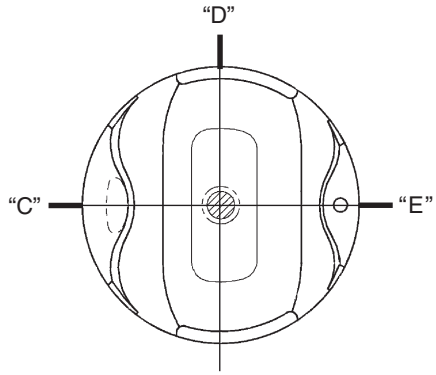

I823H1140573-02

"C":	1st ring and upper side rail
"D":	Spacer
"E":	2nd ring and lower side rail

3) Install each piston and piston pin. Refer to "Engine Top Side Assembly (Page 1D-32)".

Piston and Piston Ring Inspection

B823H11406033

Refer to "Piston Ring Removal and Installation (Page 1D-61)".

SAMPLE

Piston Diameter

Measure the piston diameter using the micrometer at 15 mm (0.6 in) "a" from the skirt end. If the piston diameter is less than the service limit, replace the piston.

Special tool

TOOL (A): 09900–20204 (Micrometer (75 – 100 mm))

Piston diameter

Service limit: 80.880 mm (3.1842 in)

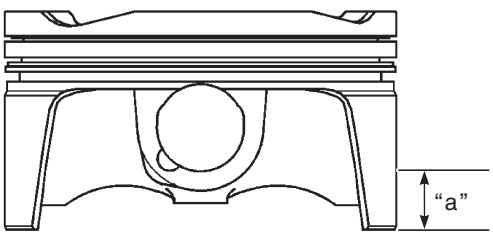

I823H1140149-01

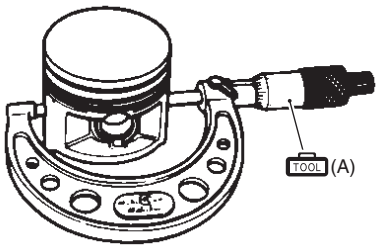

I649G1140262-03

Piston-to-cylinder Clearance

Subtract the piston diameter from the cylinder bore diameter. If the piston-to-cylinder clearance exceeds the service limit, replace both the cylinder and the piston.

Piston-to-cylinder clearance

Service limit: 0.120 mm (0.0047 in)

Piston Ring-to-groove Clearance

Measure the side clearances of the 1st and 2nd piston rings using the thickness gauge. If any of the clearances exceed the limit, replace both the piston and piston rings.

Special tool

TOOL (A): 09900–20803 (Thickness gauge)

TOOL (B): 09900–20205 (Micrometer (0 – 25 mm))

Piston ring-to-groove clearance

Service limit (1st): 0.180 mm (0.0071 in)

Service limit (2nd): 0.150 mm (0.0059 in)

Piston ring groove width

"a": Standard (1st): 0.83 – 0.85 mm (0.0327 – 0.0335 in)

"b": Standard (1st): 1.30 – 1.32 mm (0.0512 – 0.0520 in)

Standard (2nd): 1.01 – 1.03 mm (0.0398 – 0.0406 in)

Standard (Oil): 2.01 – 2.03 mm (0.0791 – 0.0799 in)

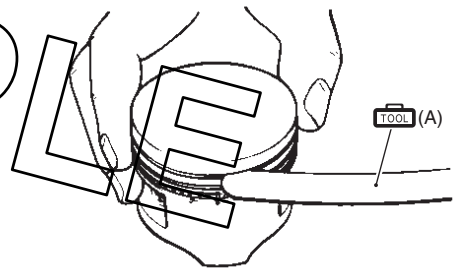

I649G1140263-03

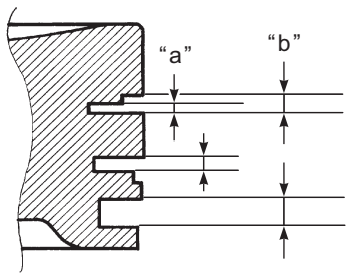

I823H1140580-02

Piston ring thickness
Standard (1st): 0.76 – 0.81 mm (0.0299 – 0.0319 in)
Standard (1st): 1.08 – 1.10 mm (0.0425 – 0.0433 in)
Standard (2nd): 0.97 – 0.99 mm (0.0382 – 0.0390 in)

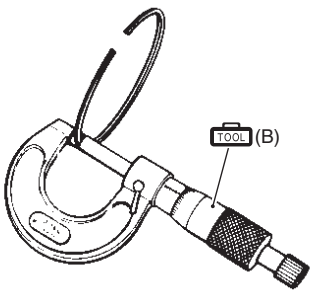

I649G1140264-03

Piston Ring Free End Gap and Piston Ring End Gap
Measure the piston ring free end gap using vernier calipers. Next, fit the piston ring squarely into the cylinder and measure the piston ring end gap using the thickness gauge. If any of the measurements exceed the service limit, replace the piston ring with a new one.

Special tool
TOOL (A): 09900–20102 (Vernier calipers (1/20 mm, 200 mm))

Piston ring free end gap
Service limit (1st): 5.2 mm (0.20 in)
Service limit (2nd): 7.2 mm (0.28 in)

Special tool
TOOL (B): 09900–20803 (Thickness gauge)

Piston ring end gap
Service limit (1st): 0.50 mm (0.020 in)
Service limit (2nd): 0.50 mm (0.020 in)

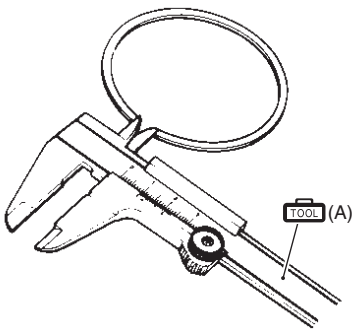

I649G1140265-03

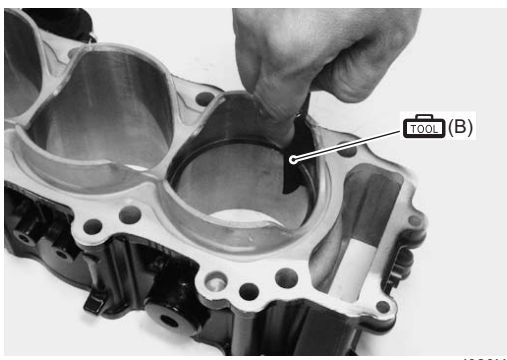

I823H1140404-01

Piston Pin and Pin Bore
Measure the piston pin bore inside diameter using the small bore gauge. If either is out of specification or the difference between these measurements surpass limits, replace the piston.

Special tool
TOOL (A): 09900–20602 (Dial gauge (1/1000 mm, 1 mm))
TOOL (B): 09900–22403 (Small bore gauge (18 – 35 mm))

Piston pin bore
Service limit: 18.030 mm (0.7098 in)

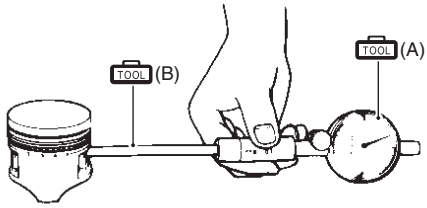

I649G1140267-03

Measure the piston pin outside diameter at three positions using the micrometer. If any of the measurements are out of specification, replace the piston pin.

Special tool
TOOL (C): 09900–20205 (Micrometer (0 – 25 mm))

Piston pin O.D.
Service limit: 17.980 mm (0.7079 in)

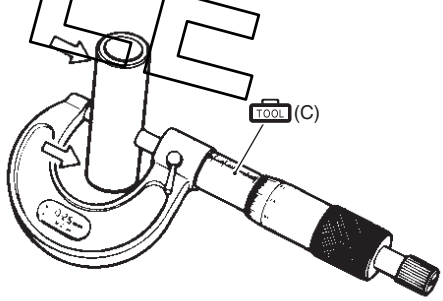

I649G1140268-03

SAMPLE

Engine Bottom Side Disassembly

B823H11406034

NOTE

The crankcase must be separated to service the crankshaft and conrod.

1) Remove the engine assembly from the frame. Refer to “Engine Assembly Removal (Page 1D-19)”.
2) Remove the engine top side. Refer to “Engine Top Side Disassembly (Page 1D-28)”.

Crankcase Breather (PCV) Hose

Disconnect the crankcase breather (PCV) hose (1).

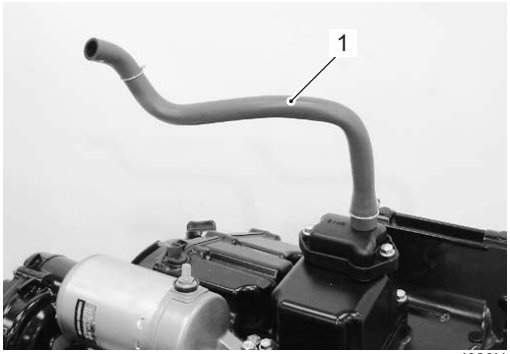

I823H1140405-01

Crankcase Breather (PCV) Hose Cover

1) Remove the reed valve cover (1).

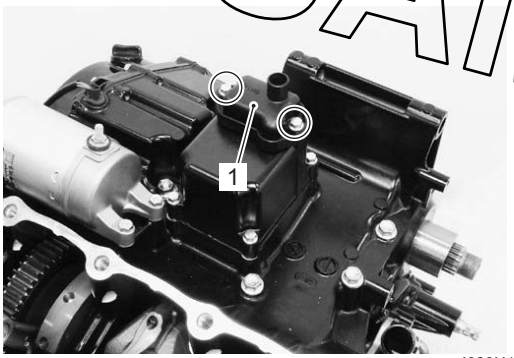

I823H1140406-01

2) Remove the reed valve (2).

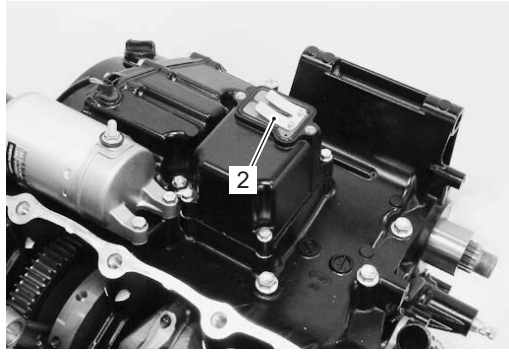

I823H1140407-01

3) Remove the crankcase breather (PCV) cover (3).

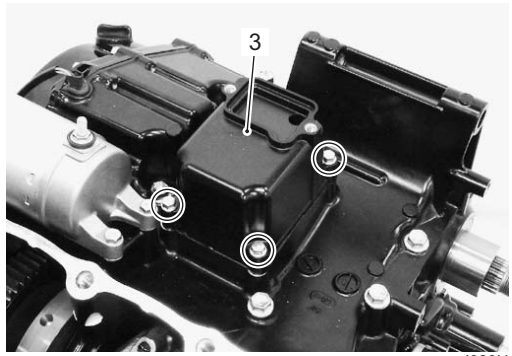

I823H1140408-01

Starter Motor

Remove the starter motor (1).

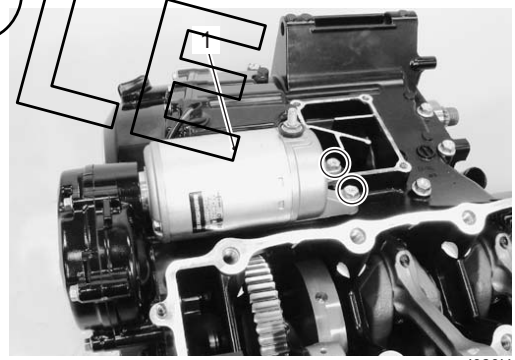

I823H1140409-01

SAMPLE

Starter Torque Limiter

Remove the starter torque limiter (1) and starter idle gear (2). Refer to “Starter Torque Limiter / Starter Clutch Removal and Installation in Section 1I (Page 1I-10)”.

NOTE

Do not remove the starter clutch for clutch disassembly.

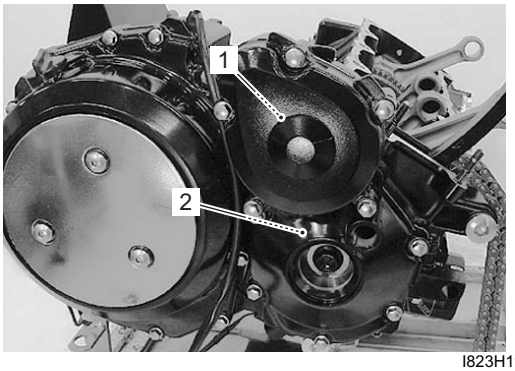

I823H1140410-02

Clutch

Remove the clutch component parts (1). Refer to “Clutch Removal in Section 5C (Page 5C-15)”.

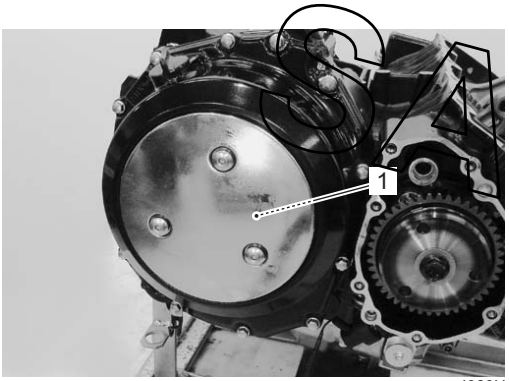

I823H1140411-01

Oil Pump

1) Remove the snap ring (1).
2) Remove the oil pump driven gear (2).

NOTE

Take care not to drop the snap ring (1), pin (3) or washer (4) into the crankcase.

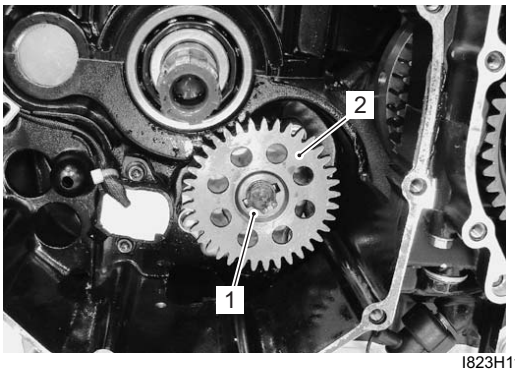

I823H1140412-01

3) Remove the pin (3) and washer (4).

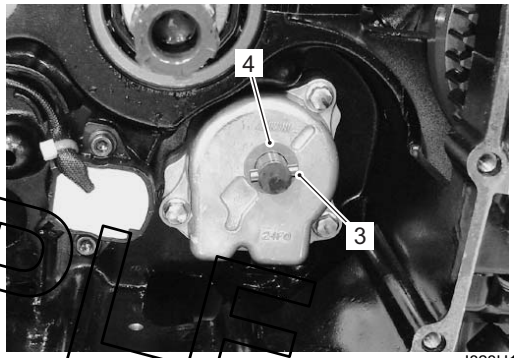

I823H1140413-01

4) Remove the oil pump (5).

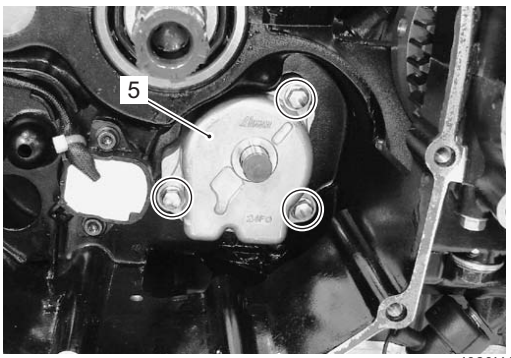

I823H1140414-01

SAMPLE

Gear Position Switch

1) Remove the gear position switch lead wire clamps.
2) Remove the gear position switch (1).

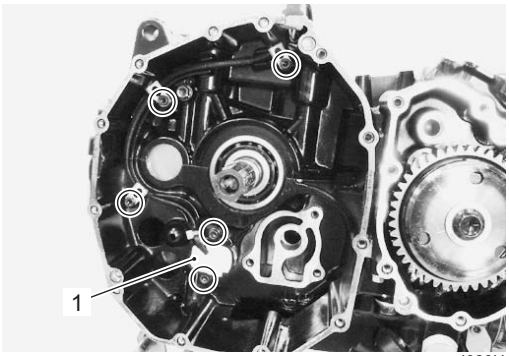

I823H1140415-02

Starter Clutch

Remove the starter clutch (1). Refer to “Starter Torque Limiter / Starter Clutch Removal and Installation in Section 1I (Page 1I-10)”.

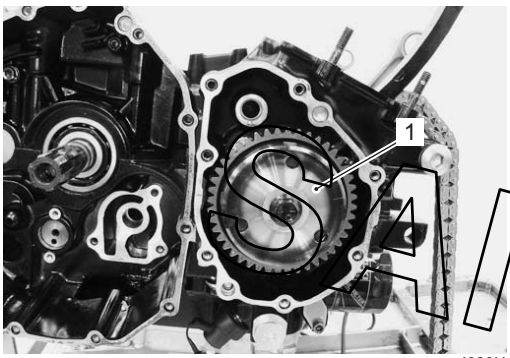

I823H1140416-01

Cam Chain

Remove the cam chain (1) and cam chain drive sprocket (2).

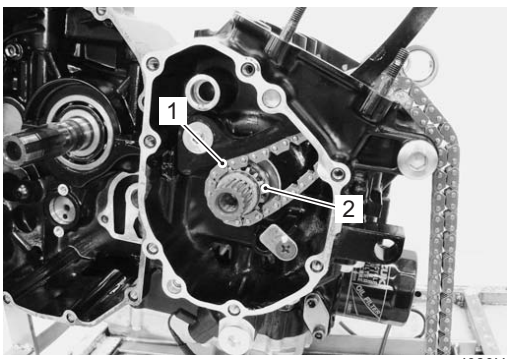

I823H1140417-01

Cam Chain Tensioner

Remove the cam chain tensioner (1).

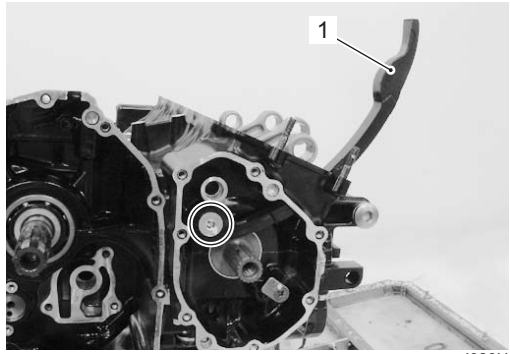

I823H1140418-01

Generator

Remove the generator component parts (1). Refer to “Generator Removal and Installation in Section 1J (Page 1J-6)”.

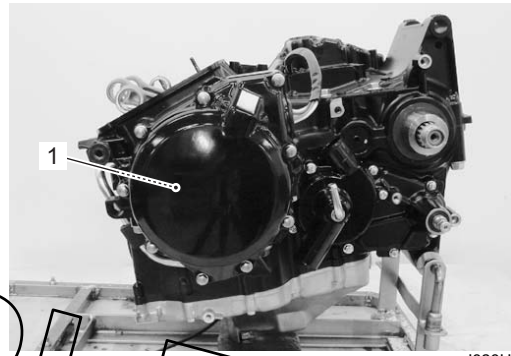

I823H1140419-01

Water Pump

Remove the water pump (1).

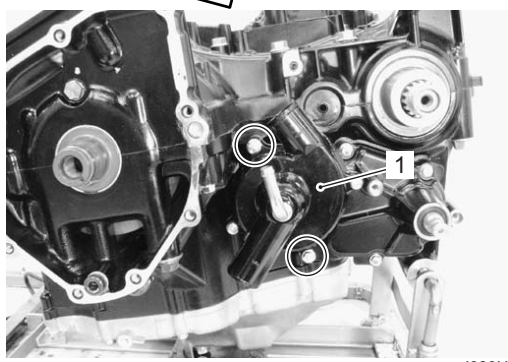

I823H1140420-01

SAMPLE

Gearshift System

1) Remove the gearshift cover (1).

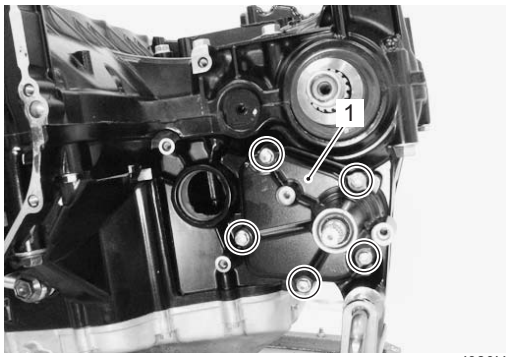

I823H1140421-01

2) Remove the gasket (2) and dowel pins.

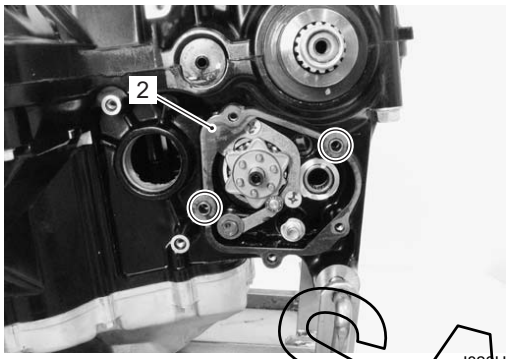

I823H1140422-01

3) Remove the gearshift shaft assembly (3) with the washers (4).

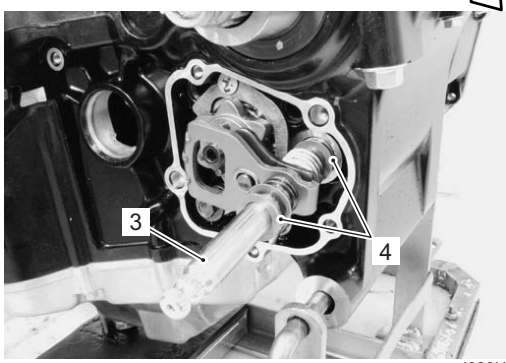

I823H1140423-01

4) Remove the gearshift cam plate bolt (5).

5) Remove the gearshift cam plate (6).

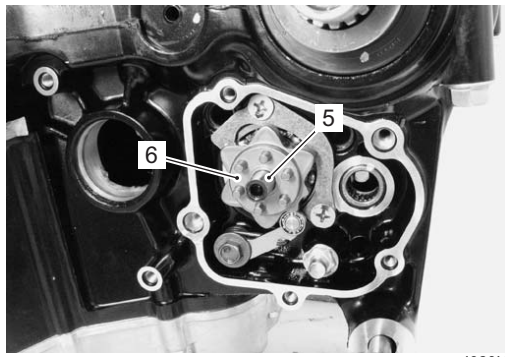

I823H1140424-01

6) Remove the gearshift cam stopper (7) and gearshift arm stopper (8).

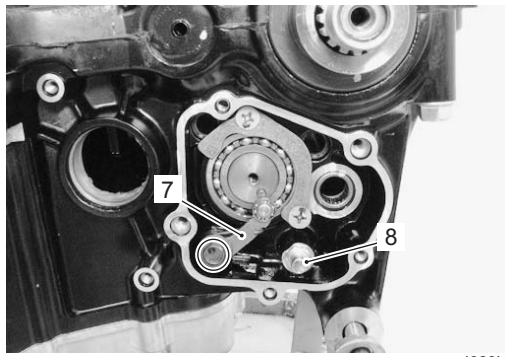

I823H1140425-01

Oil Filter

Remove the oil filter (1) using the special tool.

Special tool

TOOL (A): 09915–40610 (Oil filter wrench)

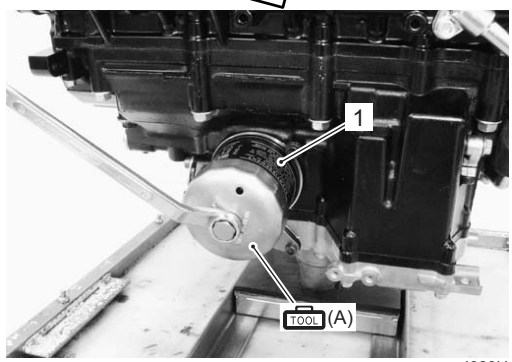

I823H1140426-02

SAMPLE

Oil Pipe

1) Remove the oil pipe (1).
2) Remove the cushion (2).

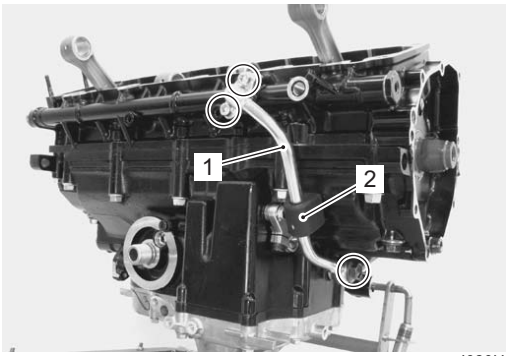

I823H1140427-01

Oil Pressure Switch

Remove the oil pressure switch (1).

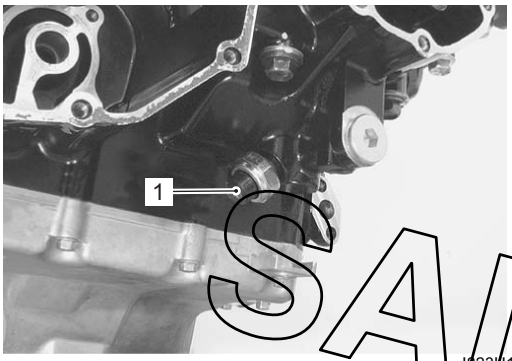

I823H1140428-01

Oil Pan

1) Remove the oil pan (1).

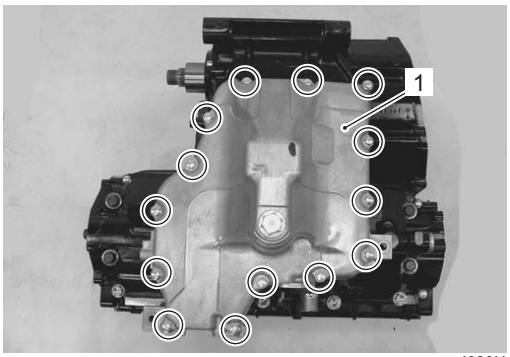

I823H1140429-01

2) Remove the gasket (2).

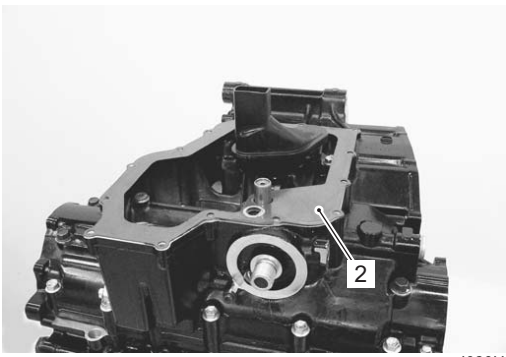

I823H1140430-01

Oil Pressure Regulator

Remove the oil pressure regulator (1).

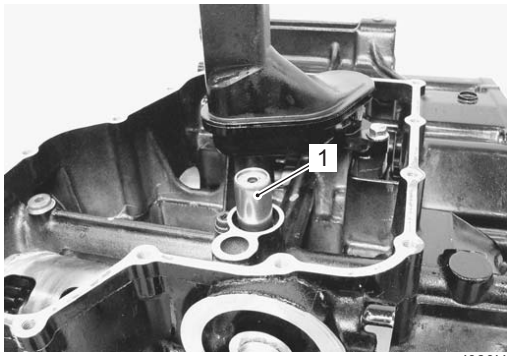

I823H1140431-01

Oil Strainer

1) Remove the oil strainer (1).

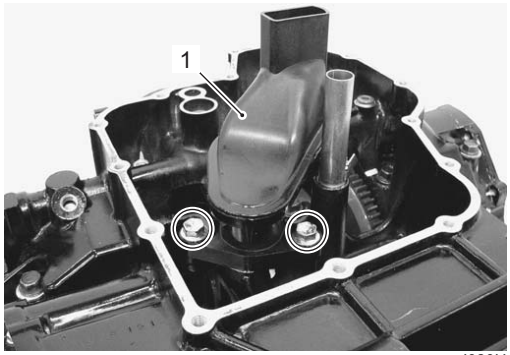

I823H1140432-01

2) Remove the O-ring (2).

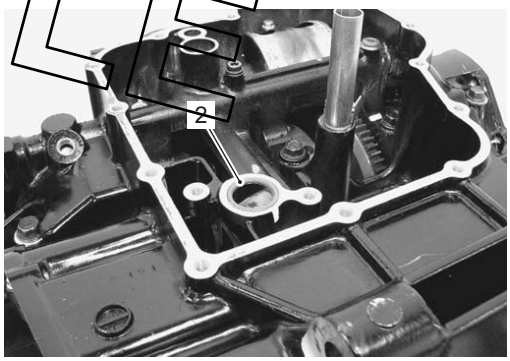

I823H1140433-01

Breather Pipe

Remove the breather pipe (1).

I823H1140434-01

SAMPLE

Crank Balancer

1) Remove the oil separator (1).

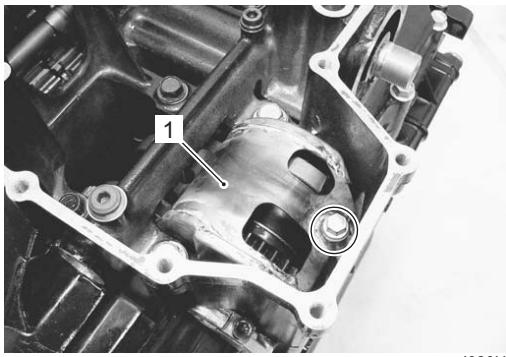

I823H1140435-01

2) Remove the balancer shaft arm (2).

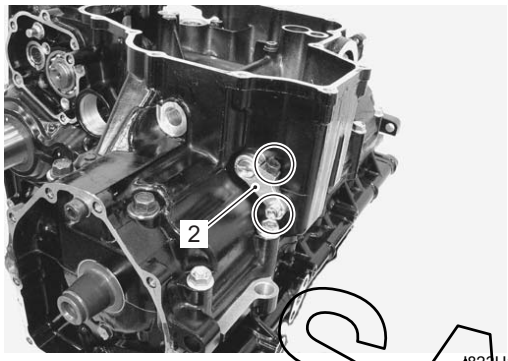

I823H1140436-01

3) Remove the balancer shaft (3).

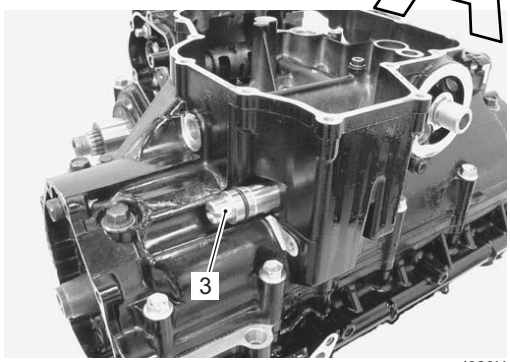

I823H1140437-02

4) Remove the crank balancer assembly (4) with the washers (5).

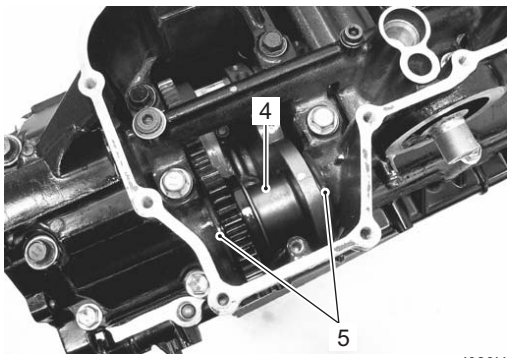

I823H1140438-02

Crankcase

1) Remove the crankcase bolts.

NOTE

Loosen the crankcase bolts diagonally and the smaller sizes first.

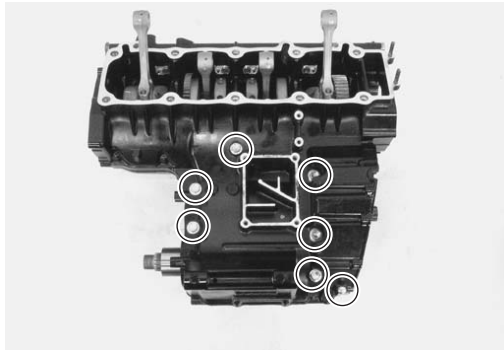

I823H1140439-01

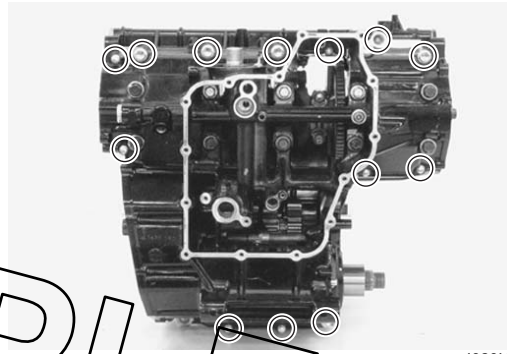

I823H1140440-02

2) Remove the crankshaft journal bolts.

NOTE

Loosen the crankshaft journal bolts in the descending order of the numbers on the crankcase.

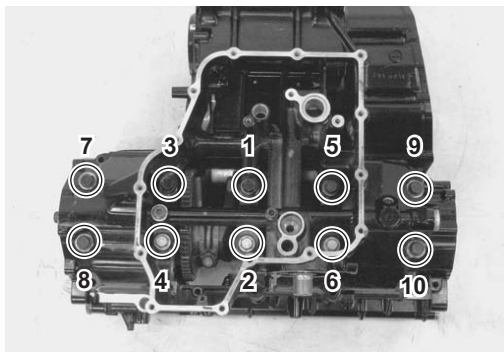

I823H1140512-01

SAMPLE

3) Make sure that all of the bolts are removed. Then, tap the sides of the lower crankcase using a plastic hammer to separate the upper and lower crankcase halves and then lift the lower crankcase off of the upper crankcase.
4) Remove the dowel pins.

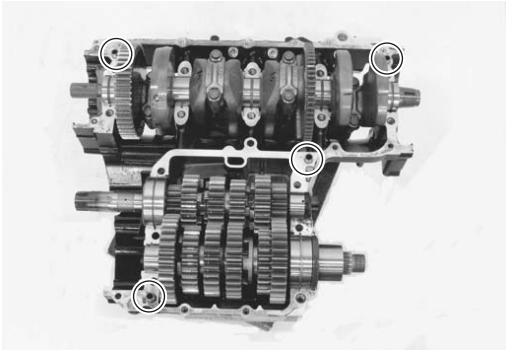

I823H1140441-01

Crankshaft / Conrod

1) Remove the crankshaft assembly (1) from the upper crankcase.
2) Remove the thrust bearings (2).

NOTE

Remove the conrod if necessary. Refer to "Conrod Removal and Installation (Page 1D-90)".

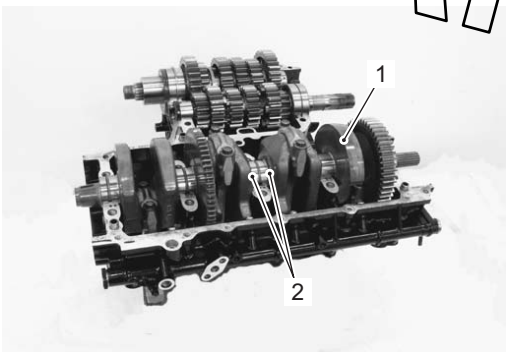

I823H1140442-01

Transmission

Remove the transmission component. Refer to "Transmission Removal in Section 5B (Page 5B-3)".

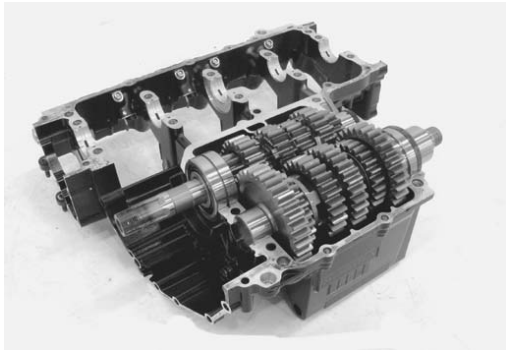

I823H1140443-01

Oil Jet

1) Remove the piston cooling oil jets (1) from the upper crankcase.

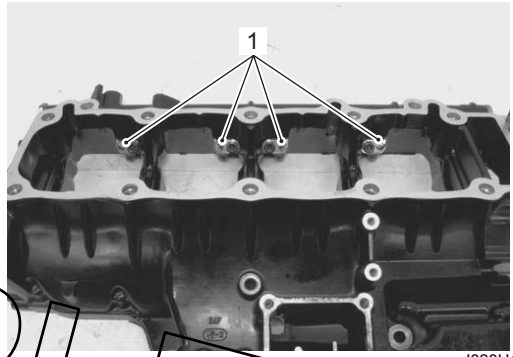

I823H1140444-02

2) Remove the oil jet (2) (for transmission oil spray) from the upper crankcase.

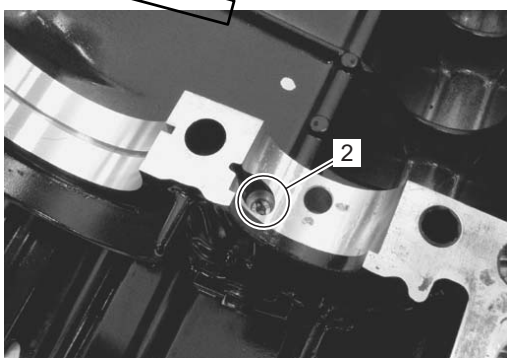

I823H1140445-01

SAMPLE

3) Remove the oil jet (3) (for generator) from the upper crankcase.

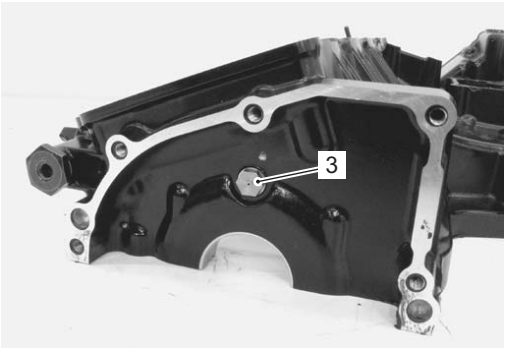

I823H1140446-01

4) Remove the oil jet (4) (for transmission) from the lower crankcase.

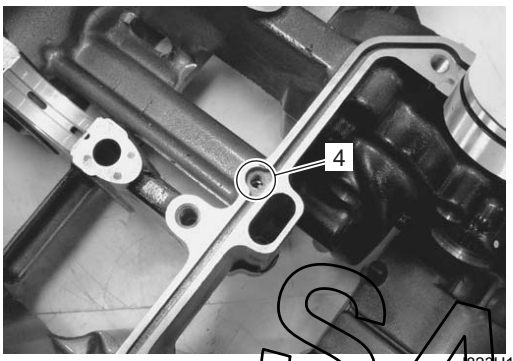

I823H1140447-01

5) Remove the oil gallery jet (5) from the lower crankcase.

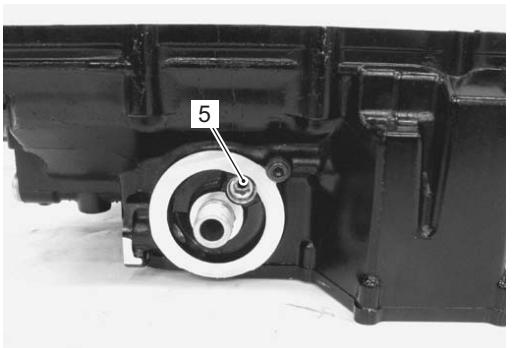

I823H1140448-01

Crankshaft Journal Bearing

Remove the crankshaft journal bearings, upper and lower.

⚠ CAUTION

- **When removing the crankshaft journal bearings, be careful not to scratch the crankcase and the crankshaft journal bearings.**
- **Do not touch the bearing surfaces with your hands. Grasp the bearings by their edges.**

NOTE

- **Do not remove the crankshaft journal bearings unless absolutely necessary.**
- **Make a note of where the crankshaft journal bearings are removed from so that they can be reinstalled in their original positions.**

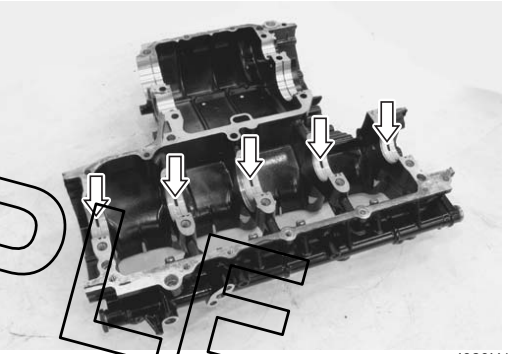

I823H1140449-01

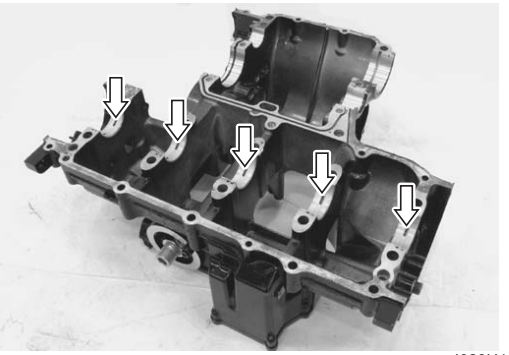

I823H1140450-01

SAMPLE

Oil Gallery Plug

1) Remove the oil gallery plug (M6) (1), (M14) (2), (M14) (3) and (M6) (4) from the upper crankcase.

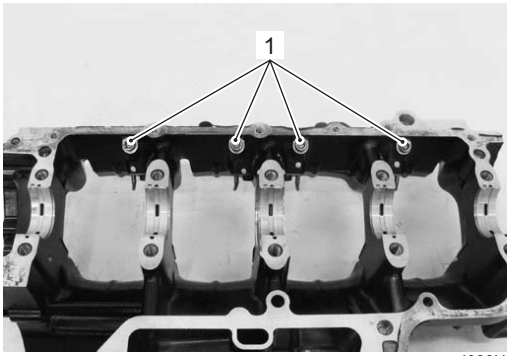

I823H1140451-01

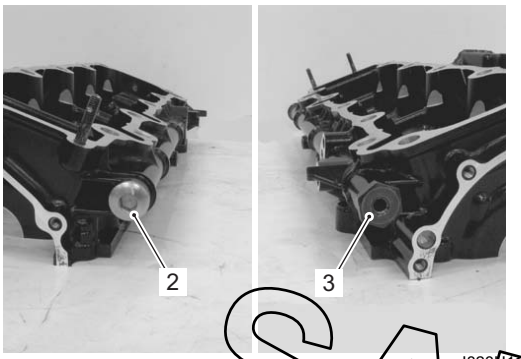

I823H1140452-01

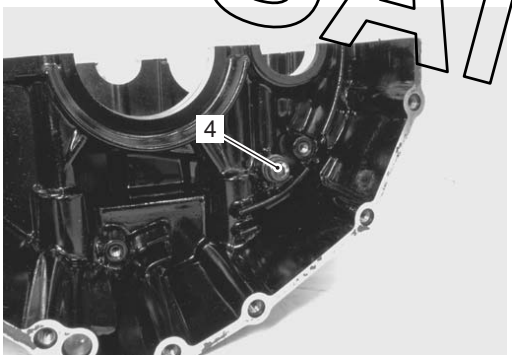

I823H1140453-01

2) Remove the oil gallery plugs (M6) (5), (M8) (6), (M10) (7), (M6) (8) and (M16) (9) from the lower crankcase.

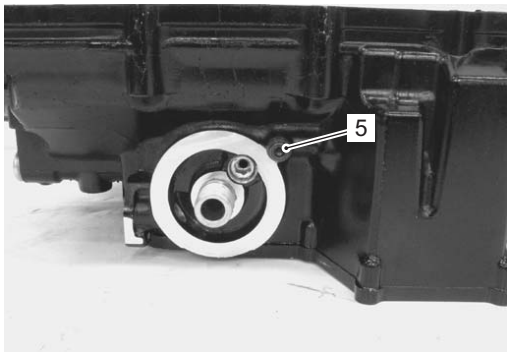

I823H1140454-01

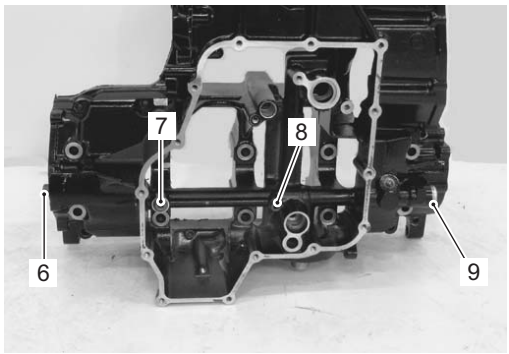

I823H1140455-01

SAMPLE

Bearing

Remove the bearings if necessary. Refer to “Gearshift Shaft Oil Seal / Bearing Removal and Installation in Section 5B (Page 5B-17)”.

Engine Bottom Side Assembly

B823H11406035

Assemble the engine bottom side in the reverse order of disassembly. Pay attention to the following points:

NOTE

Apply engine oil to each running and sliding part before reassembling.

Oil Seal / Bearing

- Install the oil bearings. Refer to “Gearshift Shaft Oil Seal / Bearing Removal and Installation in Section 5B (Page 5B-17)”.

Oil Gallery Plug

- Tighten each plug to the specified torque.

⚠ CAUTION

Replace the gaskets with new ones.

Tightening torque
Oil gallery plug (M6) and (M8) (a): 10 N·m (1.0 kgf-m, 7.0 lb-ft)
Oil gallery plug (M10) (b): 18 N·m (1.8 kgf-m, 13.0 lb-ft)
Oil gallery plug (M14) (c): 23 N·m (2.3 kgf-m, 16.5 lb-ft)
Oil gallery plug (M16) (d): 35 N·m (3.5 kgf-m, 25.5 lb-ft)

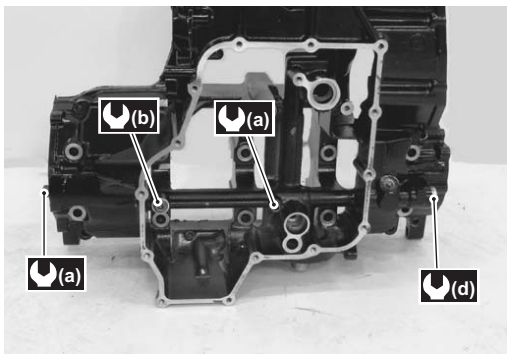

I823H1140456-02

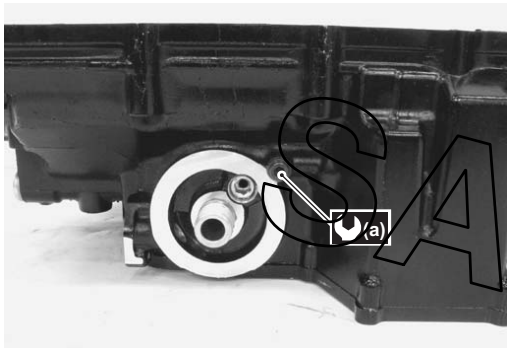

I823H1140457-02

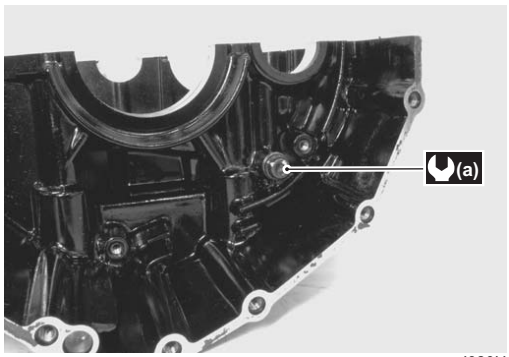

I823H1140458-01

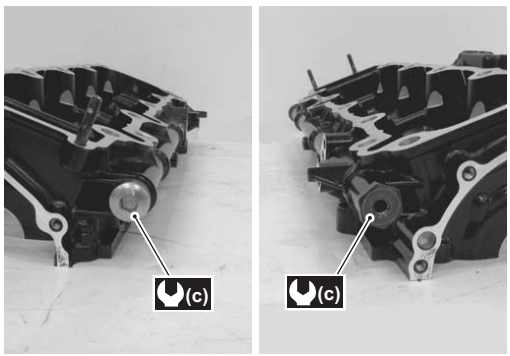

I823H1140459-01

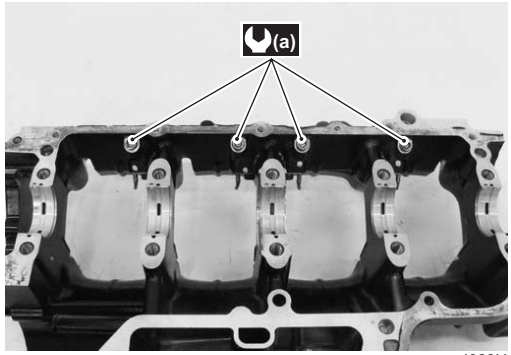

I823H1140460-01

Crankshaft Journal Bearing

- When fitting the crankshaft journal bearings to the upper and lower crankcases, be sure to fix the stopper part “A” first and press the other end.

⚠ CAUTION

Do not touch the bearing surfaces with your hands. Grasp by the edge of the bearing shell.

NOTE

Inspect and select the crankshaft journal bearing if necessary. Refer to “Crankshaft Journal Bearing Inspection and Selection (Page 1D-95)”.

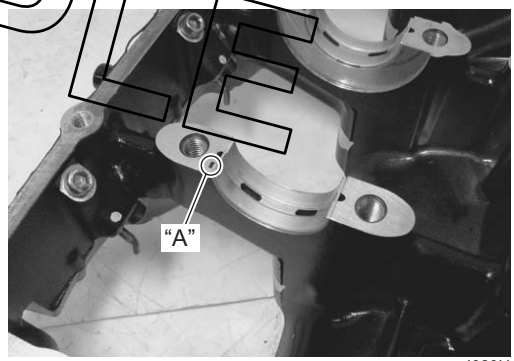

I823H1140461-01

SAMPLE

Oil Jet

- Fit the new O-rings (1) to each piston cooling oil jet and apply engine oil to them.

⚠ CAUTION

Use the new O-rings to prevent oil pressure leakage.

NOTE

Be sure to face the oil hole "A" of each piston cooling oil jet to the top when installing them.

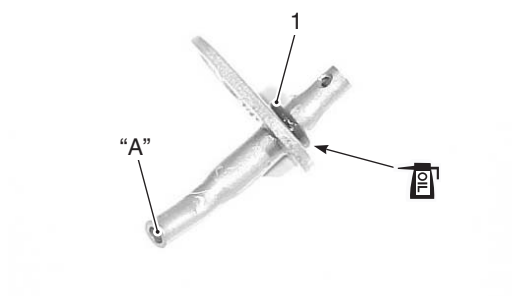

I823H1140209-01

- Install each piston cooling oil jet.

NOTE

Apply a small quantity of thread lock to the bolts and tighten them to the specified torque.

• 1322 : Thread lock cement 99000–32110 (THREAD LOCK CEMENT SUPER 1322 or equivalent)

Tightening torque
Piston cooling oil jet bolt (a): 10 N·m (1.0 kgf-m, 7.0 lb-ft)

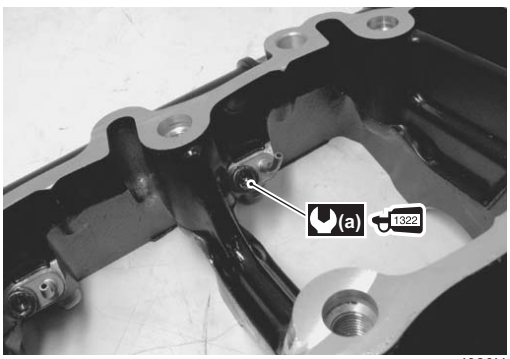

I823H1140462-01

- Install the oil jets (for transmission (2) and oil spray (3)).

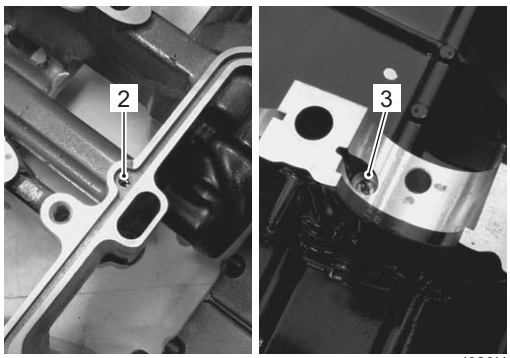

I823H1140463-01

- Install the oil jets (for generator (4)) onto the upper crankcase and tighten it to the specified torque.

Tightening torque
Oil jet (For generator) (b): 5 N·m (0.5 kgf-m, 3.5 lb-ft)

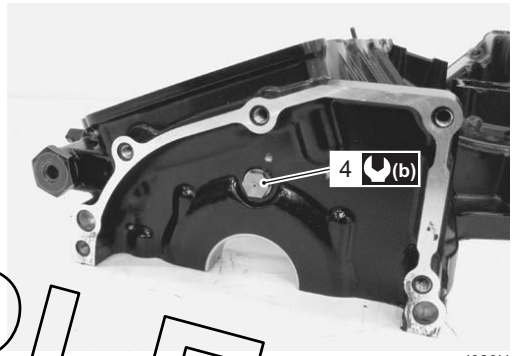

I823H1140464-01

Transmission

- Install the transmission. Refer to "Transmission Installation in Section 5B (Page 5B-4)".

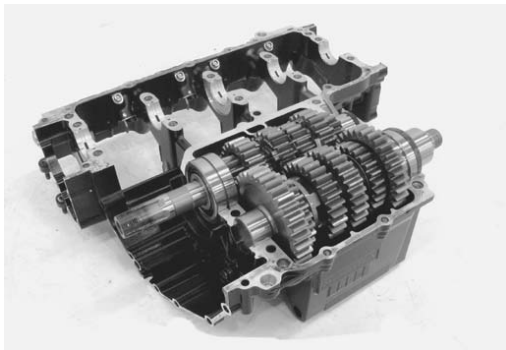

I823H1140465-01

SAMPLE

Crankshaft

- Before installing the crankshaft assembly, apply engine oil to each crankshaft journal bearing.
- Install the crankshaft assembly to the upper crankcase.

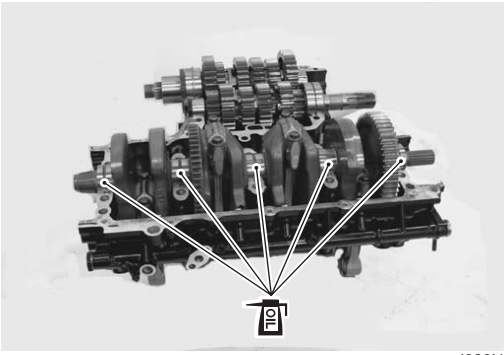

I823H1140466-01

- Insert the right and left-thrust bearings with the oil grooves “A” facing towards the crankshaft web.

NOTE

- **Right-thrust bearing has green painting.**
- **Inspect and select the crankshaft thrust clearance if necessary. Refer to “Crankshaft Thrust Clearance Inspection and Selection (Page 1D-97)”.**

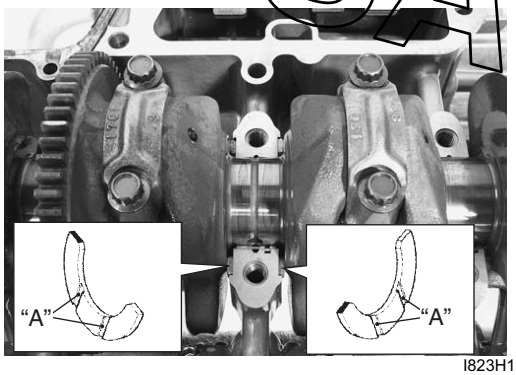

I823H1140214-02

Crankcase

- Install the dowel pins to the upper crankcase.

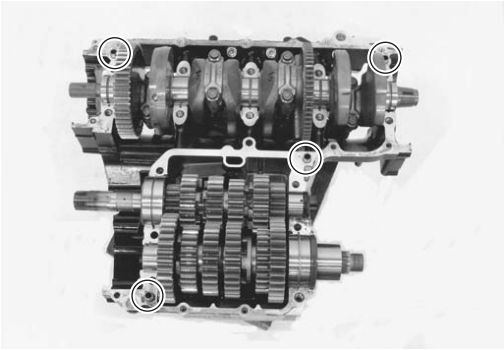

I823H1140467-01

- Apply bond to the mating surface of the lower crankcase as follows.

NOTE

- **Make surfaces free from moisture, oil, dust and other foreign materials.**
- **Spread the sealant on surfaces thinly to form an even layer, and assemble the crankcases within a few minutes.**
- **Take extreme care not to apply sealant to any oil hole, oil groove and bearing.**
- **Apply sealant to distorted surfaces as it forms a comparatively thick film.**
- **Apply sealant to both mating surface of crankcases at hatched parts.**

▪1207B : Sealant 99000–31140 (SUZUKI BOND No.1207B or equivalent)

SAMPLE

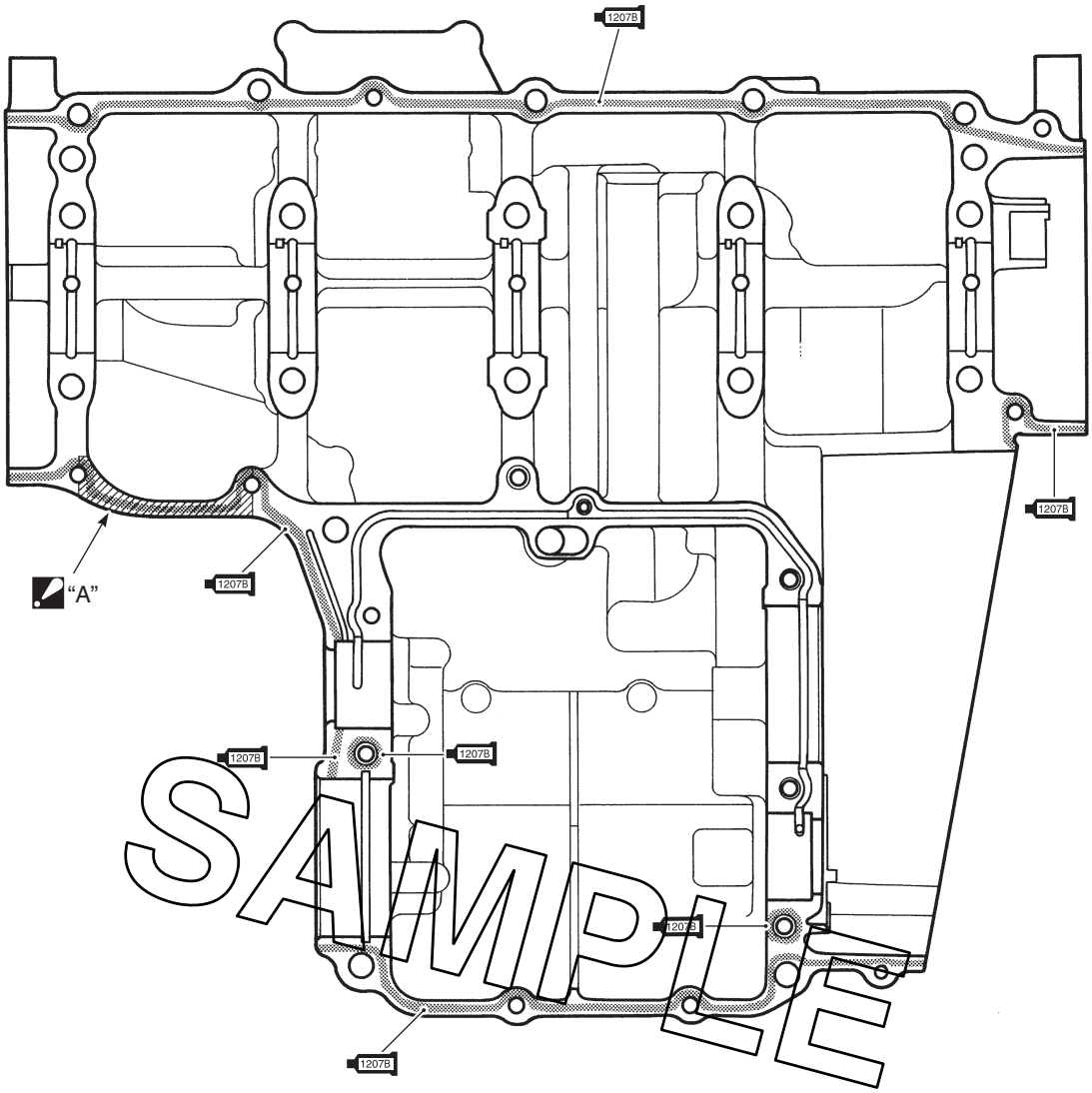

SAMPLE

I823H1140306-01

"A": Apply bond to both surfaces of the upper and lower cases.	1207B : Apply bond.

- Match the upper and lower crankcases.

NOTE

Align the gearshift forks with each gearshift groove.

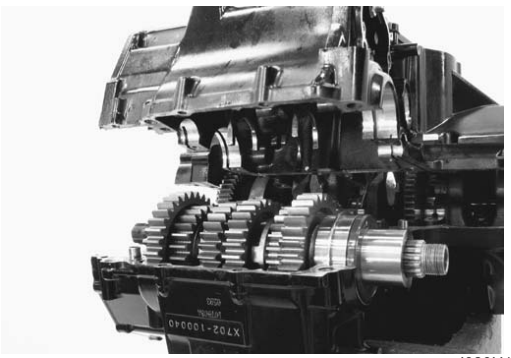

I823H1140468-01

- Tighten the crankshaft journal bolts (M9) in ascending order of numbers assigned to these bolts. Tighten each bolt a little at a time to equalize the pressure in the following two steps.

⚠ CAUTION

Fit the new copper washers to the bolts (“7”, “8”, “9” and “10”) to prevent oil leakage.

Tightening torque
Crankshaft journal bolt (M9) (Initial): 18 N·m (1.8 kgf-m, 13.0 lb-ft)
Crankshaft journal bolt (M9) (Final): 32 N·m (3.2 kgf-m, 23.0 lb-ft)

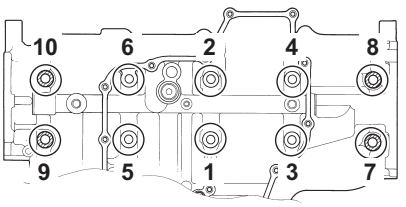

I823H1140309-02

- Tighten the other crankcase bolts a little at a time to equalize the pressure.

⚠ CAUTION

Fit the new copper washers to the bolts “B”.

Tightening torque
Crankcase bolt (M6): 11 N·m (1.1 kgf-m, 8.0 lb-ft)
Crankcase bolt (M8): 26 N·m (2.6 kgf-m, 19.0 lb-ft)
Crankcase bolt (M10): 50 N·m (5.0 kgf-m, 36.0 lb-ft)

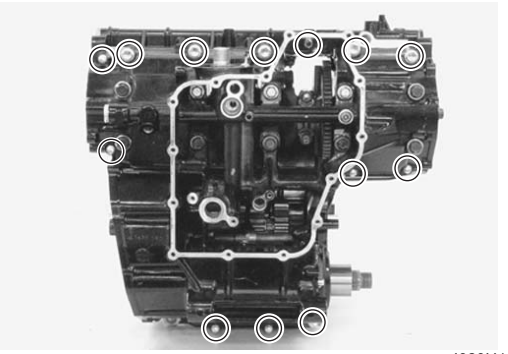

I823H1140469-01

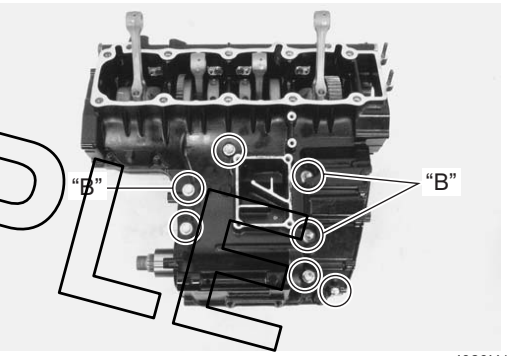

I823H1140470-02

SAMPLE

- After the crankshaft journal bolts and crankcase bolts have been tightened, check that the crankshaft rotates smoothly.
- Also check that the driveshaft and countershaft rotate smoothly.

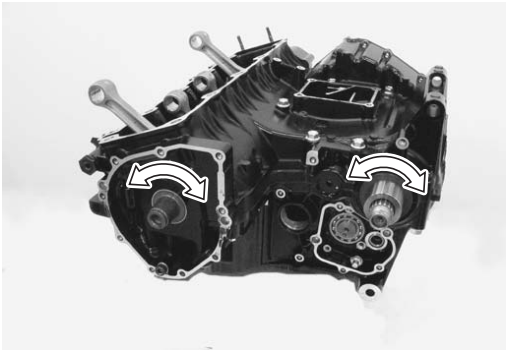

I823H1140471-01

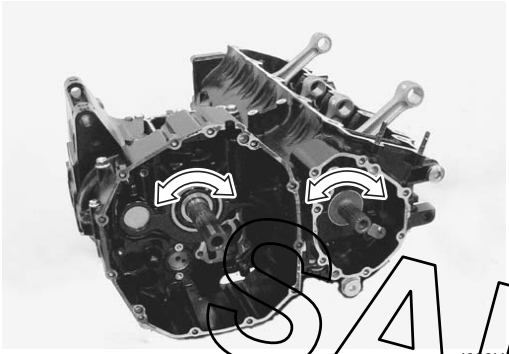

I823H1140472-01

Crank Balancer

- Temporarily, install the cam chain drive sprocket, starter clutch and starter clutch cover. Refer to “Starter Torque Limiter / Starter Clutch Removal and Installation in Section 1I (Page 1I-10)”.

NOTE

Before installing the starter clutch cover, install the dowel pins.

- Turn the crankshaft to bring the line “A” on starter clutch to the slit “B” of the valve timing inspection hole.

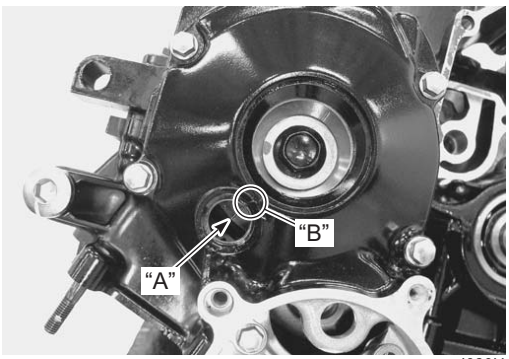

I823H1140473-01

- Hold the crankshaft and install the crank balancer assembly.

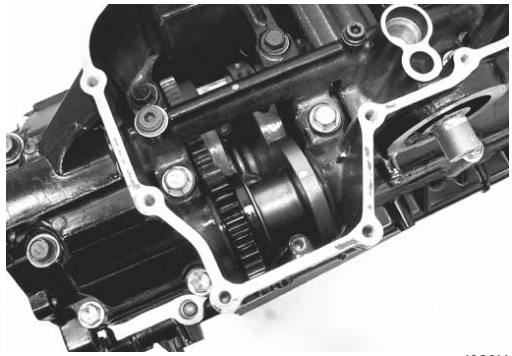

I823H1140474-01

NOTE

Align the engraved line “C” on the crank balancer, punch mark “D” on the balancer gear and triangle mark “E” on the crankcase in line.

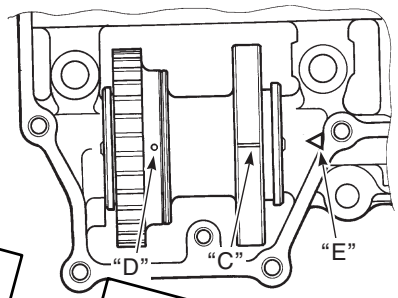

I823H1140222-01

- Apply molybdenum oil solution to the balancer shaft.

M/O: Molybdenum oil (MOLYBDENUM OIL SOLUTION)

⚠ CAUTION

Replace the O-ring (1) with a new one.

- Install the balancer shaft.

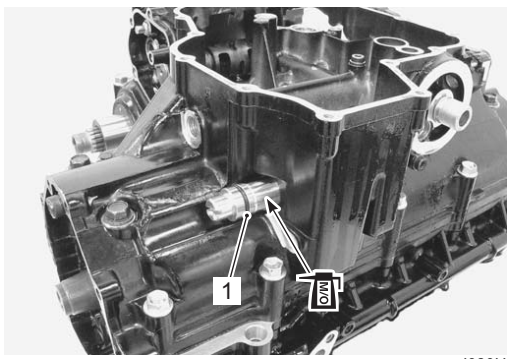

I823H1140475-02

SAMPLE

- Install the balancer shaft arm.

NOTE

Apply a small quantity of thread lock to the balancer shaft arm bolt and tighten it to the specified torque.

1322 : Thread lock cement 99000–32110 (THREAD LOCK CEMENT SUPER 1322 or equivalent)

Tightening torque
Balancer shaft arm bolt (a): 10 N·m (1.0 kgf-m, 7.0 lb-ft)

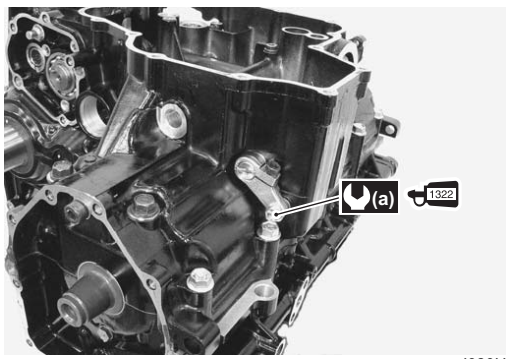

I823H1140476-01

- Slowly turn the balancer shaft (2) clockwise until it stops (position “F”) with a (–) screwdriver.
- From this position, turn the balancer shaft (2) counterclockwise by 1.5 – 2 graduations “G” and tighten the bolt (3).
  From “F” to “G”: 1.5 – 2 graduations

Tightening torque
Balancer shaft mounting bolt (b): 10 N·m (1.0 kgf-m, 7.0 lb-ft)

NOTE

If the balancer gear is noisy after starting the engine, turn in or out the balancer shaft within 1 graduation from standard setting to reduce the gear noise.

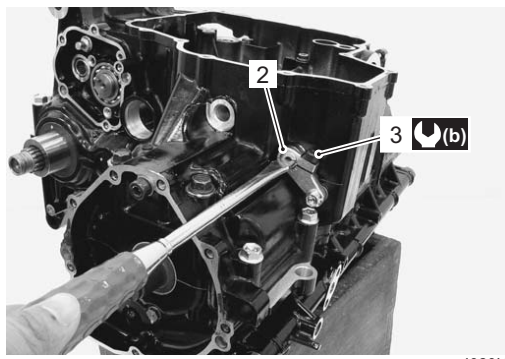

I823H1140477-02

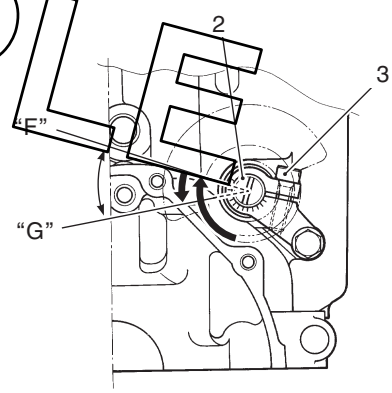

I823H1140226-01

SAMPLE

- Install the balancer cover.

NOTE

Apply a small quantity of thread lock to the balancer cover bolt and tighten it to the specified torque.

1322 : Thread lock cement 99000–32110 (THREAD LOCK CEMENT SUPER 1322 or equivalent)

Tightening torque
Balancer cover bolt (c): 10 N·m (1.0 kgf-m, 7.0 lb-ft)

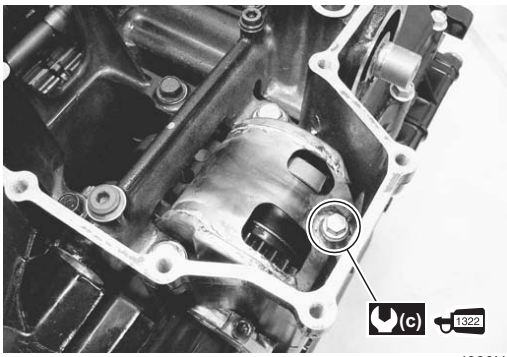

I823H1140478-02

- Remove the starter clutch cover, starter clutch and cam chain drive sprocket.

Breather Pipe

- Install the breather pipe to the crankcase.

NOTE

Apply a small quantity of thread lock to the breather pipe bolt and tighten it to the specified torque.

1322 : Thread lock cement 99000–32110 (THREAD LOCK CEMENT SUPER 1322 or equivalent)

Tightening torque
Breather pipe bolt (a): 10 N·m (1.0 kgf-m, 7.0 lb-ft)

I823H1140479-01

Oil Strainer

- Install a new O-ring.

NOTE

Apply grease to the O-ring.

A : Grease 99000–25010 (SUZUKI SUPER GREASE A or equivalent)

⚠ CAUTION

Use the new O-ring to prevent oil leakage.

I823H1140307-01

- Install the oil strainer.

NOTE

Apply a small quantity of thread lock to the strainer bolts and tighten it to the specified torque.

1322 : Thread lock cement 99000–32110 (THREAD LOCK CEMENT SUPER 1322 or equivalent)

Tightening torque
Oil strainer bolt (a): 10 N·m (1.0 kgf-m, 7.0 lb-ft)

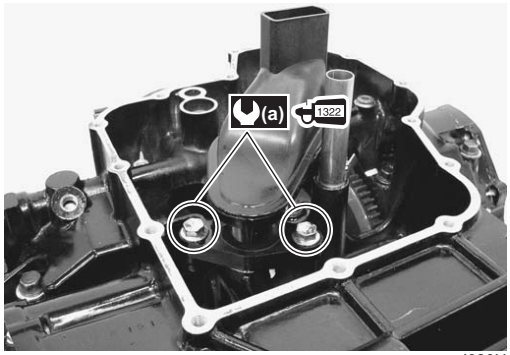

I823H1140480-01

SAMPLE

Oil Pressure Regulator

- Apply grease to the new O-ring and press in the oil pressure regulator to the crankcase.

: Grease 99000–25010 (SUZUKI SUPER GREASE A or equivalent)

⚠ CAUTION

Use the new O-ring to prevent oil leakage.

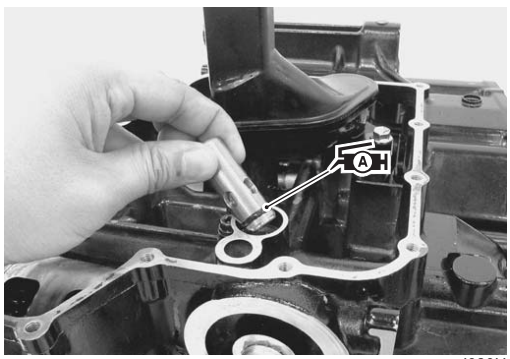

I823H1140481-01

Oil Pan

- Install a new gasket (1).

⚠ CAUTION

Use the new gasket to prevent oil leakage.

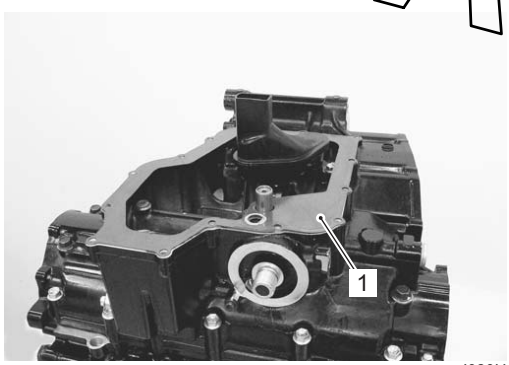

I823H1140482-01

- Install the oil pan and tighten the bolts diagonally.

NOTE

Fit the new gasket washer to the oil pan bolt (2).

Tightening torque
Oil pan bolt (a): 10 N·m (1.0 kgf-m, 7.0 lb-ft)

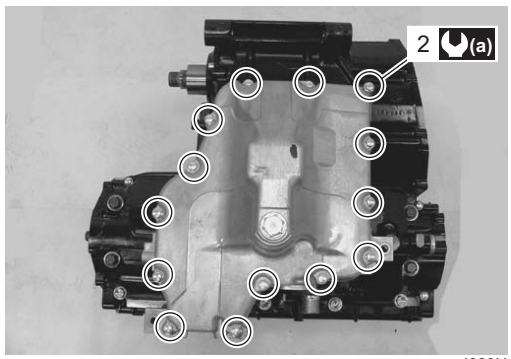

I823H1140483-01

Oil Pressure Switch

- Apply bond to the thread part of oil pressure switch and tighten oil pressure switch to the specified torque.

NOTE

Be careful not to apply bond to the hole of thread end.

: Sealant 99000–31140 (SUZUKI BOND No.1207B or equivalent)

Tightening torque
Oil pressure switch: 14 N·m (1.4 kgf-m, 10.0 lb-ft)

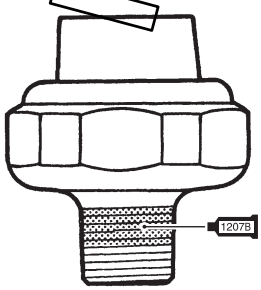

I718H1140233-01

SAMPLE

Oil Pipe

- Install the new O-ring to the oil pipe and apply grease to it.

⚠ CAUTION

Use a new O-ring to prevent oil leakage.

A H : Grease 99000–25010 (SUZUKI SUPER GREASE A or equivalent)

I823H1140484-01

- Install the new gasket washers (1).

⚠ CAUTION

Use the new washers to prevent oil leakage.

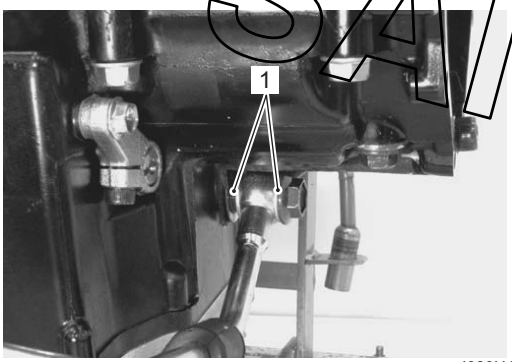

I823H1140485-01

- Install the cushion (2).

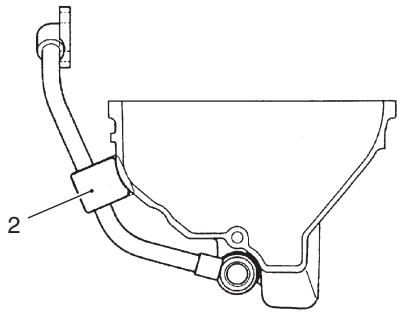

I823H1140236-05

- Tighten the oil pipe bolts (3) and oil pipe union bolt (4) to the specified torque.

NOTE

Apply a small quantity of thread lock to the oil pipe bolts (3).

1322 : Thread lock cement 99000–32110 (THREAD LOCK CEMENT SUPER 1322 or equivalent)

Tightening torque
Oil pipe bolt (M6) (a): 10 N·m (1.0 kgf-m, 7.0 lb-ft)
Oil pipe union bolt (M14) (b): 28 N·m (2.8 kgf-m, 20.5 lb-ft)

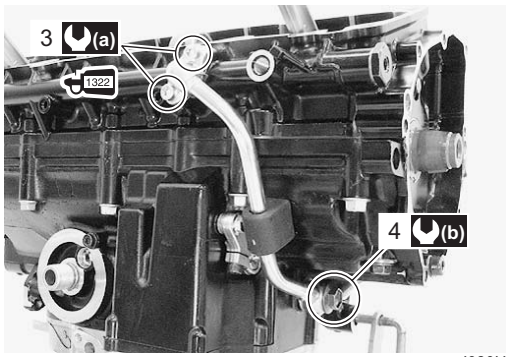

I823H1140486-03

Oil Filter

- Install the oil filter with the special tool. Refer to "Engine Oil and Filter Replacement in Section 0B (Page 0B-10)".

Special tool
TOOL (A): 09915–40610 (Oil filter wrench)

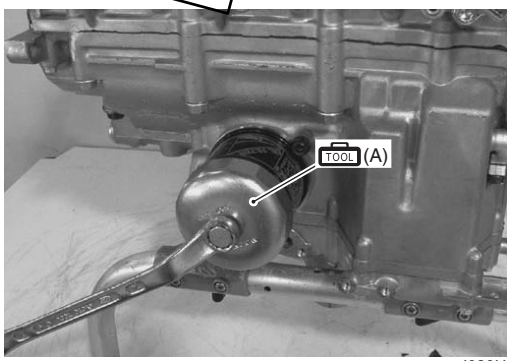

I823H1140238-01

SAMPLE

Gearshift System

- Install the gearshift cam stopper (1), bolt (2), washer (3) and return spring (4).
- Apply a small quantity of thread lock to the gearshift cam stopper bolt (2) and tighten it to the specified torque.

1303 : Thread lock cement 99000–32030 (THREAD LOCK CEMENT SUPER 1303 or equivalent)

NOTE

Hook the return spring end "A" to the stopper (1).

Tightening torque
Gearshift cam stopper bolt (a): 10 N·m (1.0 kgf-m, 7.0 lb-ft)

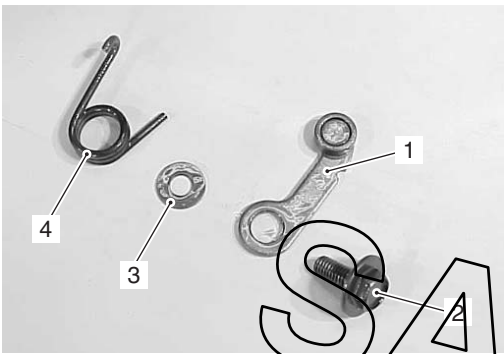

I823H1140239-02

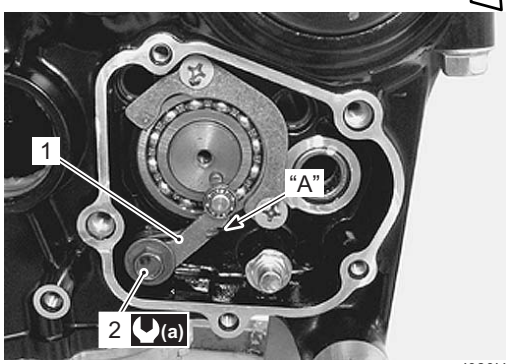

I823H1140487-03

- Check the gearshift cam stopper moves smoothly.
- Locate the gearshift cam in the neutral position.

- Install the gearshift cam stopper plate (5).

NOTE

Align the gearshift cam pin "B" with the gearshift cam stopper plate hole "C".

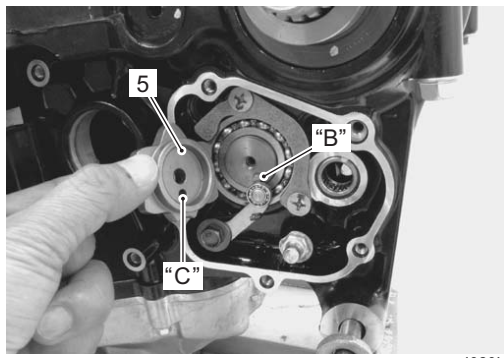

I823H1140488-02

- Apply a small quantity of thread lock to the gearshift cam stopper plate bolt (6) and tighten it to the specified torque.

1322 : Thread lock cement 99000–32110 (THREAD LOCK CEMENT SUPER 1322 or equivalent)

Tightening torque
Gearshift cam stopper plate bolt (b): 13 N·m (1.3 kgf-m, 9.5 lb-ft)

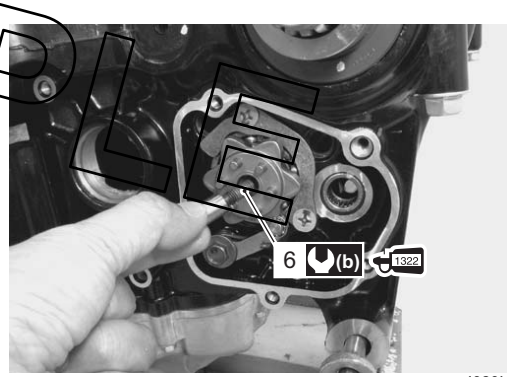

I823H1140489-04

- Install the gearshift shaft assembly (7) and washers (8) as shown in the figure.

NOTE

Pinch the gearshift arm stopper with return spring ends.

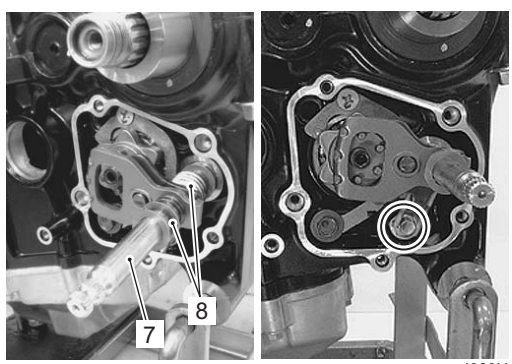

I823H1140490-04

SAMPLE

- Install a new gasket (9) and the dowel pins.

⚠ CAUTION

Use a new gasket to prevent oil leakage.

- Apply grease to the lip of the gearshift cover oil seal.

: Grease 99000–25010 (SUZUKI SUPER GREASE A or equivalent)

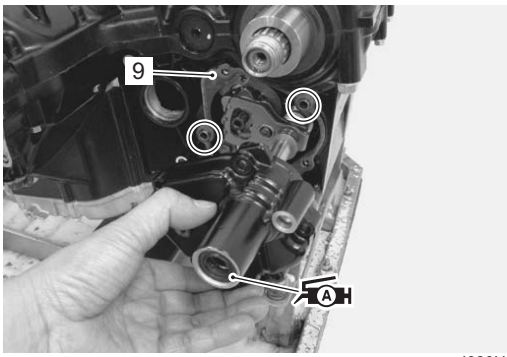

I823H1140491-03

- Tighten the gearshift cover bolts (10) to the specified torque.

Tightening torque
Gearshift cover bolt (c): 10 N·m (1.0 kgf-m, 7.0 lb-ft)

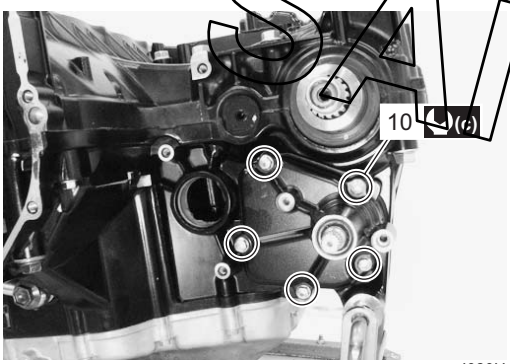

I823H1140492-04

Water Pump

- Apply grease to new O-ring (1).

⚠ CAUTION

Use the new O-ring to prevent oil leakage.

: Grease 99000–25010 (SUZUKI SUPER GREASE A or equivalent)

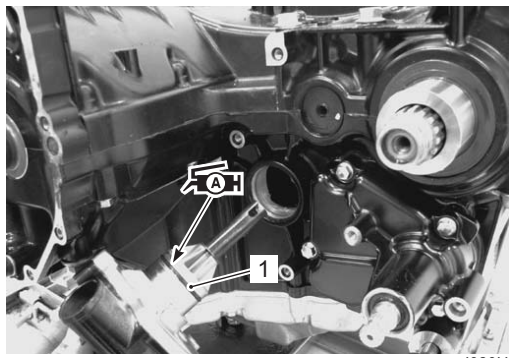

I823H1140493-02

- Tighten the water pump mounting bolts (2) to the specified torque.

Tightening torque
Water pump mounting bolt (a): 10 N·m (1.0 kgf-m, 7.0 lb-ft)

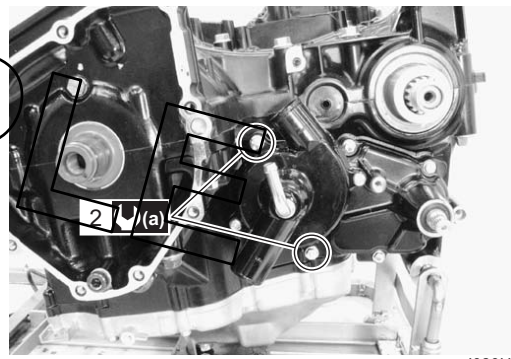

I823H1140494-01

Generator

- Install the generator component parts (1). Refer to “Generator Removal and Installation in Section 1J (Page 1J-6)”.

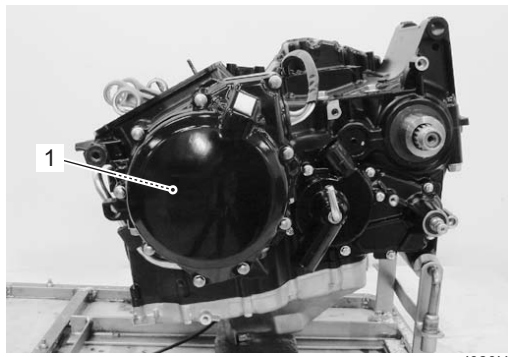

I823H1140419-01

SAMPLE

Cam Chain Tensioner

- Install the cam chain tensioner (1).
- Apply thread lock to the cam chain tensioner bolt (2).

Tightening torque
Cam chain tensioner bolt (a): 23 N·m (2.3 kgf-m, 16.5 lb-ft)

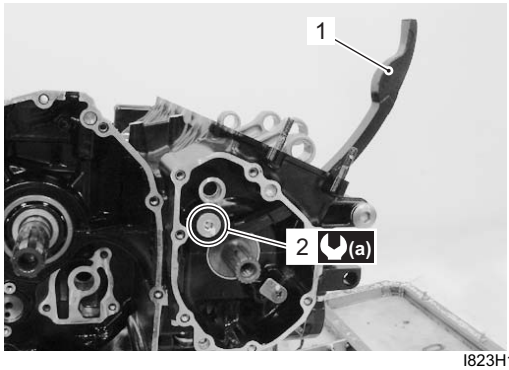

I823H1140496-01

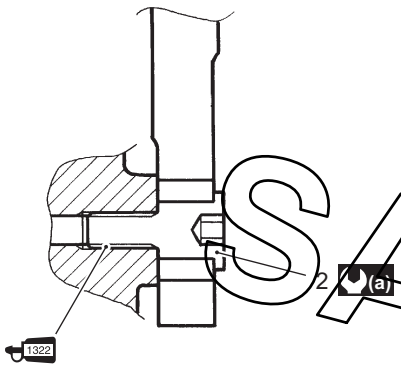

I823H1140581-03

(a) :	23 Nm (2.3 kgf-m, 16.5 lb-ft)
1322 :	Apply thread lock.

Cam Chain

- Install the cam chain drive sprocket (1) to the crankshaft.

NOTE

Align the wide spline tooth of cam chain drive sprocket and that of crankshaft.

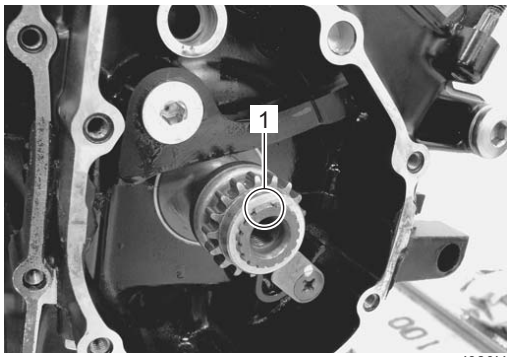

I823H1140497-01

- Install the cam chain (2) onto the cam chain drive sprocket.

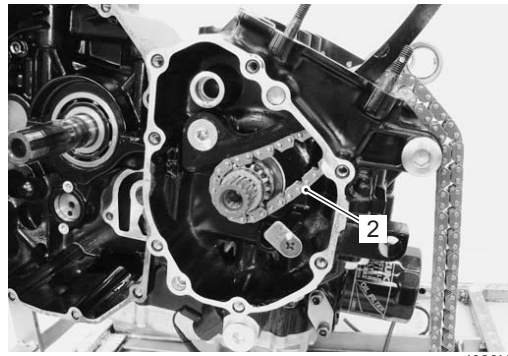

I823H1140498-01

Starter Clutch

- Install the starter clutch (1). Refer to “Starter Torque Limiter / Starter Clutch Removal and Installation in Section 1I (Page 1I-10)”.

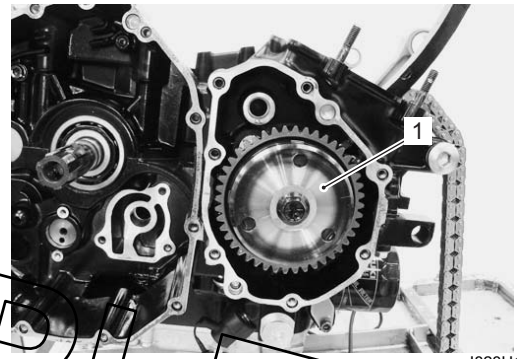

I823H1140416-01

Gear Position Switch

NOTE

Align the gear position switch pin “A” with the gearshift cam hole “B”.

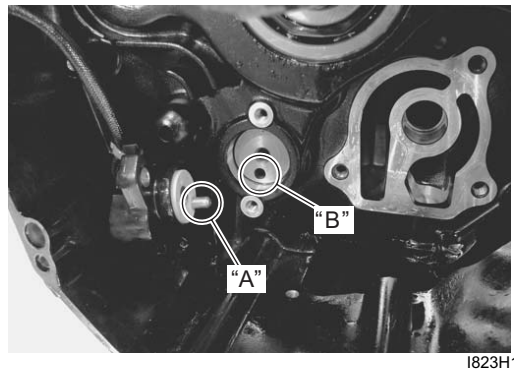

I823H1140495-03

SAMPLE

- Install the gear position switch.
- Install the gear position switch lead wire clamps.
- Apply a bond lightly to the groove of signal generator lead wire grommet.

1207B : Sealant 99000–31140 (SUZUKI BOND No.1207B or equivalent)

NOTE

- **The flat surface of the clamp faces the lead wire.**
- **After contacting the clamp to the stopper "C" of the crankcase, tighten the clamp bolt.**
- **Be sure to install the grommet (1) to the crankcase.**

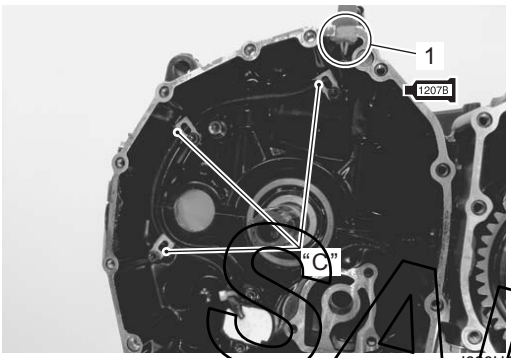

I823H1140499-03

Tightening torque
GP switch mounting bolt (a): 6.5 N·m (0.65 kgf-m, 4.7 lb-ft)
GP switch lead wire clamp bolt (b): 6.5 N·m (0.65 kgf-m, 4.7 lb-ft)

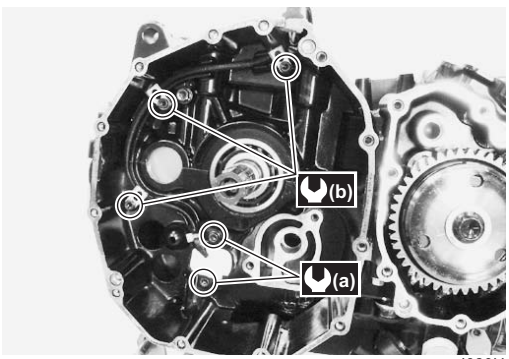

I823H1140500-01

Oil Pump

- Install the new O-ring to the oil pump and apply grease to it.

⚠ CAUTION

Use the new O-ring to prevent oil leakage.

A : Grease 99000–25010 (SUZUKI SUPER GREASE A or equivalent)

NOTE

Set the oil pump shaft end "A" to the water pump shaft.

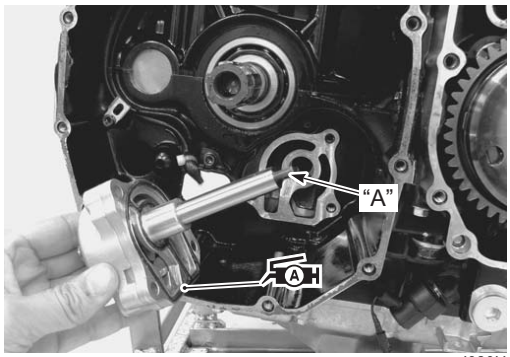

I823H1140501-02

- Install the oil pump and tighten the bolts to the specified torque.

Tightening torque
Oil pump mounting bolt (a): 10 N·m (1.0 kgf-m, 7.0 lb-ft)

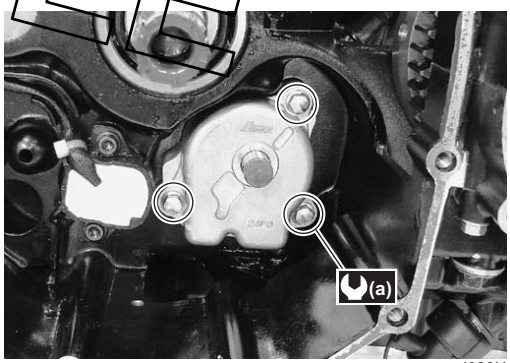

I823H1140502-01

SAMPLE

- Install the washer (1) and pin (2).

NOTE

Be careful not to drop the washer or pin into the crankcase.

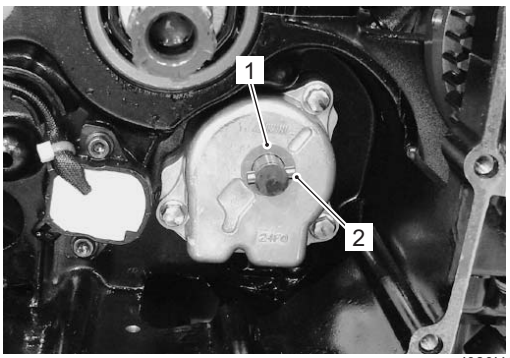

I823H1140503-01

- Install the oil pump driven gear (3).
- Install the snap ring (4).

Special tool
TOOL : 09900–06107 (Snap ring pliers)

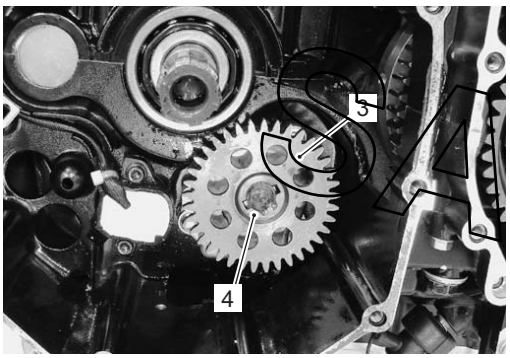

I823H1140504-02

Clutch

- Remove the clutch component parts (1). Refer to “Clutch Removal in Section 5C (Page 5C-15)”.

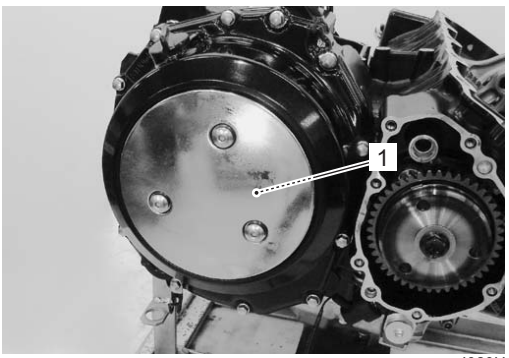

I823H1140411-01

Starter Torque Limiter

- Install the starter idle gear and starter torque limiter. Refer to “Starter Torque Limiter / Starter Clutch Removal and Installation in Section 1I (Page 1I-10)”.

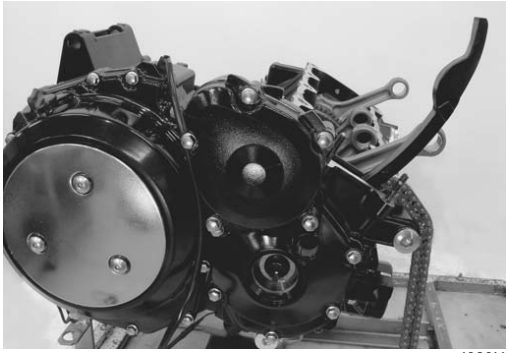

I823H1140505-01

Starter Motor

- Install the starter motor (1). Refer to “Starter Motor Removal and Installation in Section 1I (Page 1I-4)”.

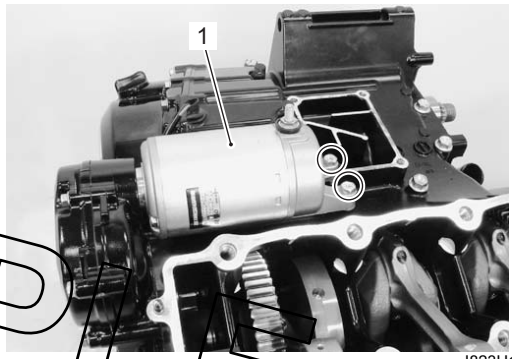

I823H1140409-01

SAMPLE

Crankcase Breather (PCV) Cover

- Apply bond to the mating surface of the breather cover.

NOTE

- **Make surfaces free from moisture, oil, dust and other foreign materials.**
- **Spread the sealant on surfaces thinly to form an even layer, and assemble the breather cover within a few minutes.**
- **Apply to distorted surfaces as it forms a comparatively thick film.**

1207B : Sealant 99000–31140 (SUZUKI BOND No.1207B or equivalent)

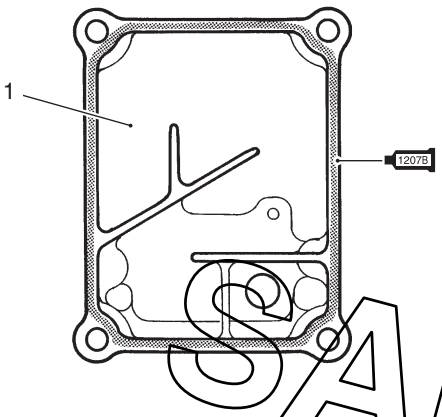

I823H1140508-01

1.	Crankcase breather (PCV) cover
1207B :	Apply bond.

- Install the crankcase breather (PCV) cover (2).

Tightening torque
PCV cover bolt (a): 10 N·m (1.0 kgf-m, 7.0 lb-ft)

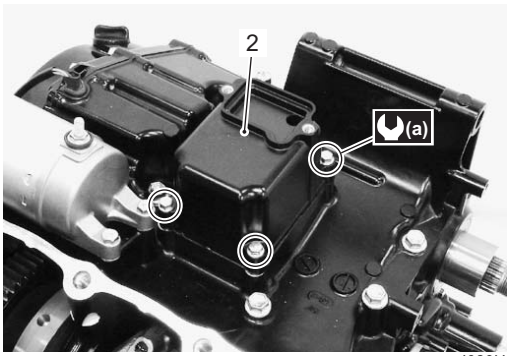

I823H1140507-02

- Install the reed valve (3).

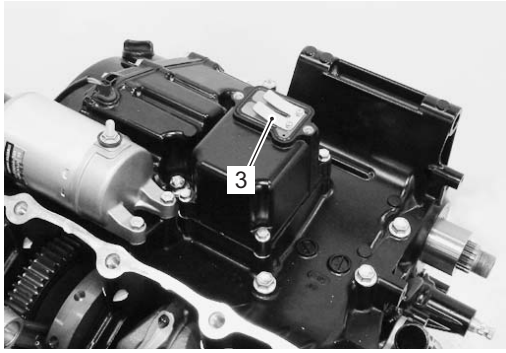

I823H1140506-01

- Install the reed valve cover (4).

Tightening torque
PCV reed valve cover bolt (b): 10 N·m (1.0 kgf-m, 7.0 lb-ft)

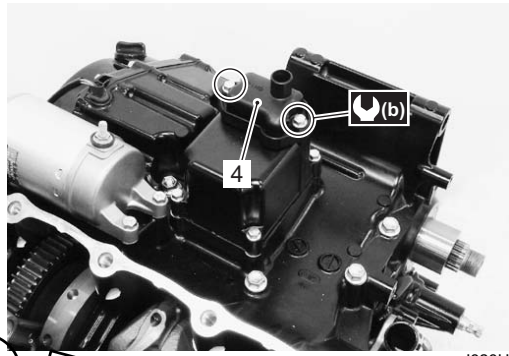

I823H1140508-02

Engine Top Side

- Assemble the engine top side. Refer to “Engine Top Side Disassembly (Page 1D-28)”.

Crankcase Breather (PCV) Hose

- Install the crankcase breather (PCV) hose (1).

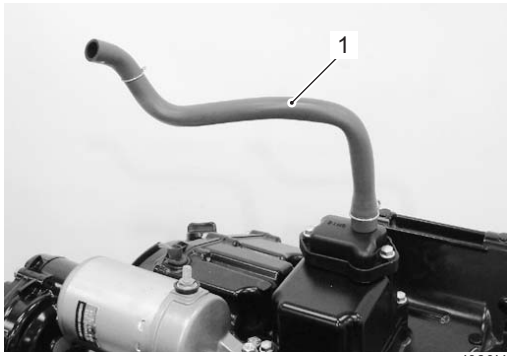

I823H1140405-01

SAMPLE

Crank Balancer Disassembly and Assembly

B823H11406036

Refer to“Engine Bottom Side Disassembly (Page 1D-64)”.
Refer to “Engine Bottom Side Assembly (Page 1D-72)”.

NOTE

It is unnecessary to remove the engine assembly from the frame when removing the crank balancer. Refer to “Oil Pan / Oil Strainer / Oil Pressure Regulator Removal and Installation in Section 1E (Page 1E-6)”.

Disassembly

1) Remove the washers (1), bearings (2) and spacer (3) from the crank balancer.

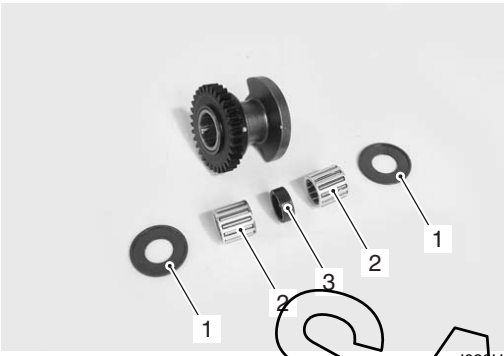

I823H1140267-02

2) Remove the balancer gear (4) along with the dampers (5) from the crank balancer.
3) Remove the dampers (5) from the balancer gear (4).

I823H1140268-02

Assembly

Assemble the crank balancer in the reverse order of disassembly. Pay attention to the following points:

- Apply molybdenum oil solution to the dampers.

  M/O: Molybdenum oil (MOLYBDENUM OIL SOLUTION)

I823H1140269-03

- Install the dampers to the balancer gear as shown in the figure.
- Install the crank balancer to the balancer gear.

NOTE

- **Align the parts “A” of the crank balancer with between the dampers.**
- **Align the engraved line “B” on the crank balancer with the punched mark “C” on the balancer gear.**

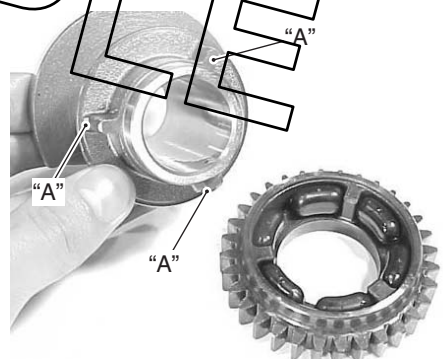

I823H1140270-01

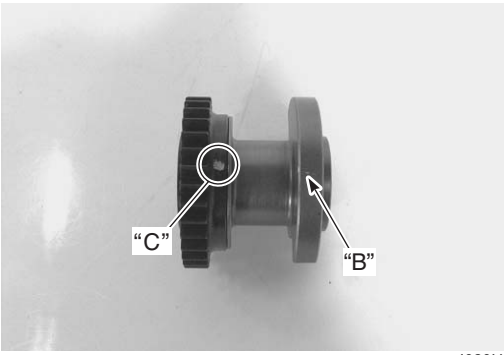

I823H1140271-01

SAMPLE

- Apply molybdenum oil solution to the bearings, spacers and washers.

  M/O: Molybdenum oil (MOLYBDENUM OIL SOLUTION)

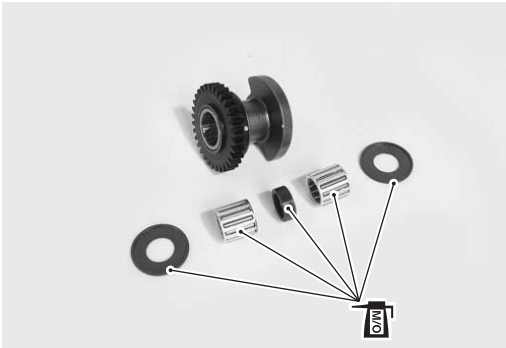

I823H1140272-04

Crank Balancer Inspection

B823H11406037

Refer to “Crank Balancer Disassembly and Assembly (Page 1D-89)”.

Damper

Inspect the damper for wear and damage, replace it if any defects are found.

I823H1140273-01

Bearing and Washer

Inspect the bearings and the washers for wear or damage. Replace the bearing or the washer if there is anything unusual.

I823H1140274-02

Balancer Shaft

Inspect the balancer shaft for wear or damage. Replace the balancer shaft if there is anything unusual.

I823H1140275-01

Conrod Removal and Installation

B823H11406038

Removal

1) Remove the crankshaft assembly from the crankcase. Refer to “Engine Bottom Side Disassembly (Page 1D-64)”.
2) Loosen the conrod cap bolts using a 10 mm, 12 point socket wrench, then tap the conrod cap bolts lightly with plastic hammer to remove the conrod cap.
3) Remove the conrods and mark them to identify their respective cylinders.

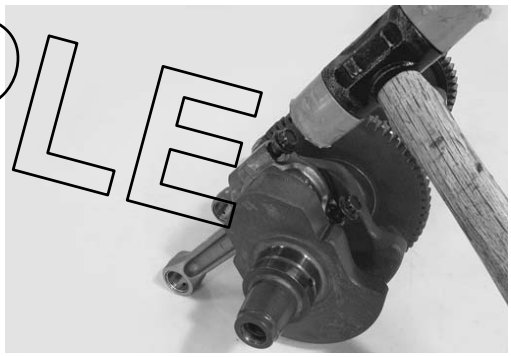

I823H1140276-02

SAMPLE

4) Remove the bearings (1).

NOTE

- **Do not remove the bearings (1) unless absolutely necessary.**
- **Make a note of where the bearings are removed from so that they can be reinstalled in their original positions.**

⚠ CAUTION

When removing the bearings, be careful not to scratch the conrods and the bearings.

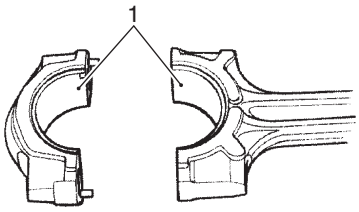

I718H1140269-01

Installation

1) When installing the conrod bearings, be sure to fix the stopper part “A” first, and then press the other side.

NOTE

Inspect and select the conrod crank pin bearing if necessary. Refer to “Conrod Crank Pin Bearing Inspection and Selection (Page 1D-93)”.

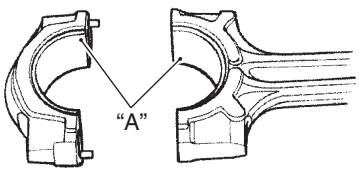

I823H1140578-01

2) Apply molybdenum oil solution to the crank pin and bearing surface.

⚠ CAUTION

Be sure to clean the conrod big end.

M/O: Molybdenum oil (Molybdenum oil solution)

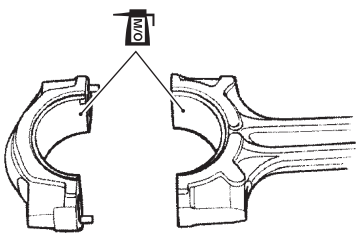

I718H1140273-01

3) When fitting the conrod cap, make sure that I.D. code “B” on each conrod faces intake side.

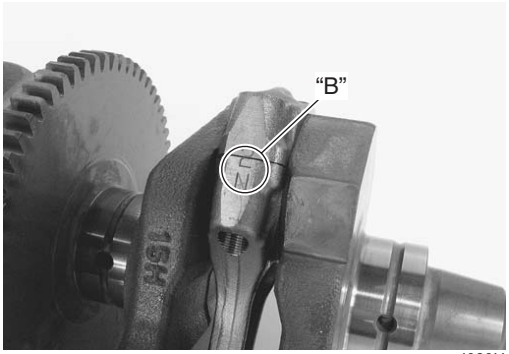

I823H1140277-01

4) Apply engine oil to the conrod cap bolts.
5) Tighten the conrod cap bolt by using a 10 mm, 12 point socket wrench in the following two steps.

Tightening torque
Conrod cap bolt: 21 N·m (2.1 kgf-m, 15.0 lb-ft) then turn in 1/4 (90°) turn

I823H1140278-01

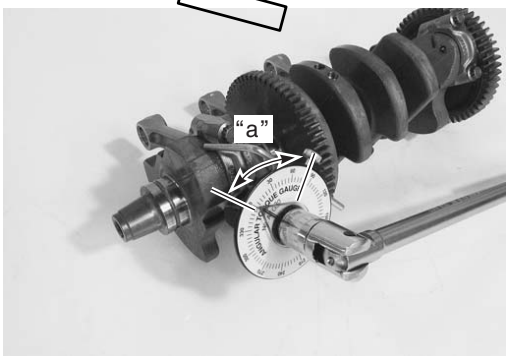

I823H1140279-01

“a”: 90°

6) Check that the conrod moves smoothly.
7) Install the crankshaft assembly to the crankcase. Refer to “Engine Bottom Side Assembly (Page 1D-72)”.

SAMPLE

Conrod and Crankshaft Inspection

B823H11406039

Refer to “Conrod Removal and Installation (Page 1D-90)”.

Conrod Small End I.D.

Measure the conrod small end inside diameter using the small bore gauge.
If the conrod small end inside diameter exceeds the service limit, replace the conrod.

Special tool
TOOL (A): 09900–20602 (Dial gauge (1/1000 mm, 1 mm))
TOOL (B): 09900–22403 (Small bore gauge (18 – 35 mm))

Conrod small end I.D.
Service limit: 18.040 mm (0.7102 in)

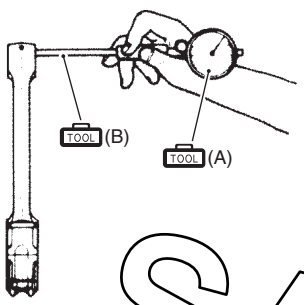

I823H1140280-01

Conrod Big End Side Clearance

1) Check the conrod big end side clearance using the thickness gauge.

Special tool
TOOL (A): 09900–20803 (Thickness gauge)

Conrod big end side clearance
Service limit: 0.3 mm (0.012 in)

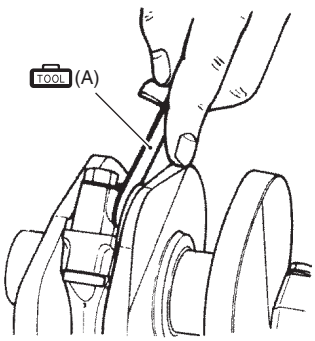

I823H1140281-01

2) If the clearance exceeds the limit, remove the conrod and measure the conrod big end width and crank pin width. Refer to “Conrod Removal and Installation (Page 1D-90)”. If any of the measurements are out of specification, replace the conrod or crankshaft.

Special tool
TOOL (B): 09900–20205 (Micrometer (0 – 25 mm))
TOOL (C): 09900–20605 (Dial calipers (1/100 mm, 10 – 34 mm))

Conrod big end width
Standard: 20.95 – 21.00 mm (0.825 – 0.827 in)

Crank pin width
Standard: 21.10 – 21.15 mm (0.831 – 0.833 in)

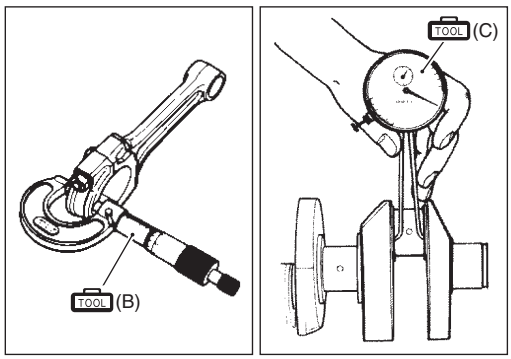

I823H1140282-01

Crankshaft Runout

Support the crankshaft using V-blocks as shown, with the two end journals resting on the blocks. Set up the dial gauge as shown, and rotate the crankshaft slowly to read the runout. Replace the crankshaft if the runout exceeds the service limit.

Special tool
TOOL (A): 09900–20607 (Dial gauge (1/100 mm, 10 mm))
TOOL (B): 09900–20701 (Magnetic stand)
TOOL (C): 09900–21304 (V-block (100 mm))

Crankshaft runout
Service limit: 0.05 mm (0.002 in)

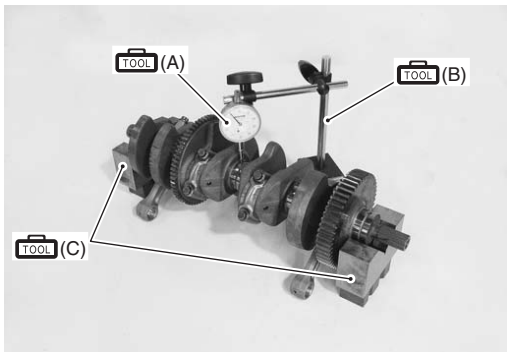

I823H1140283-02

SAMPLE

Conrod Crank Pin Bearing Inspection and Selection

B823H11406040

Refer to “Conrod Removal and Installation (Page 1D-90)”.

Inspection

1) Inspect the bearing surfaces for any signs of fusion, pitting, burn or flaws. If any, replace them with a specified set of bearings.

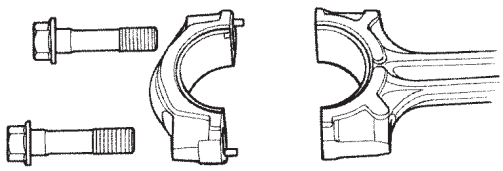

I718H1140285-01

2) Place the plastigauge axially along the crank pin, avoiding the oil hole, as shown in the figure.

Special tool
TOOL (A): 09900–22301 (Plastigauge (0.025 – 0.076 mm))

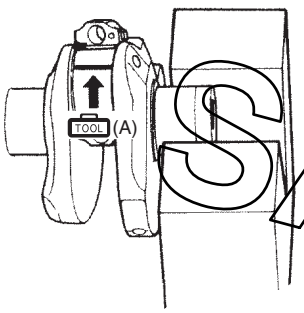

I718H1140286-01

3) Tighten the conrod cap bolts to the specified torque, in two stages.

NOTE

- **When installing the conrod cap to the crank pin, make sure that I.D code “A” on the conrod faces towards the intake side.**
- **Never rotate the crankshaft or conrod when a piece of plastigauge is installed.**

Tightening torque
Conrod cap bolt: 21 N·m (2.1 kgf-m, 15.0 lb-ft) then turn in 1/4 (90°) turn

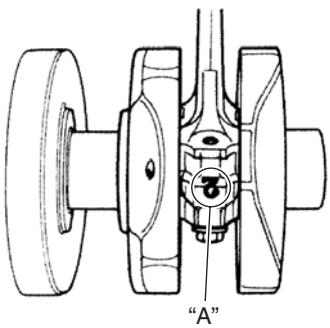

I823H1140284-01

4) Remove the conrod caps and measure the width of the compressed plastigauge using the envelope scale. This measurement should be taken at the widest part of the compressed plastigauge.
If the oil clearance exceeds the service limit, select the specified bearings from the bearing selection table.

Conrod big end oil clearance
Standard: 0.032 – 0.056 mm (0.0013 – 0.0022 in)

Conrod big end oil clearance
Service limit: 0.080 mm (0.0031 in)

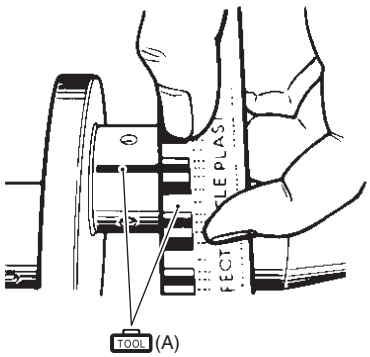

I718H1140289-01

Selection

1) Check the corresponding conrod I.D. code numbers ([1] or [2]) “A”.

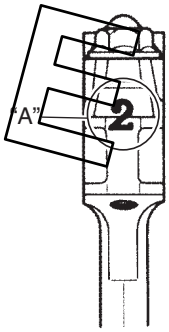

I718H1140290-01

Conrod I.D. specification

Code “A”	I.D. specification
1	41.000 – 41.008 mm (1.6142 – 1.6145 in)
2	41.008 – 41.016 mm (1.6145 – 1.6148 in)

SAMPLE

2) Check the corresponding crank pin O.D. code numbers ([1], [2] or [3]) “B”.

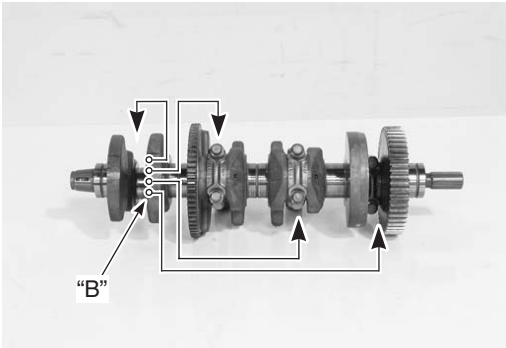

I823H1140285-02

3) Measure the conrod crank pin O.D. with the special tool. If any of the measurements are out of specification, replace the crankshaft.

Crank pin O.D. specification

Code “B”	O.D. specification
1	37.992 – 38.000 mm (1.4957 – 1.4961 in)
2	37.984 – 37.992 mm (1.4954 – 1.4957 in)
3	37.976 – 37.984 mm (1.4951 – 1.4954 in)

Special tool
TOOL (A): 09900–20202 (Micrometer (1/100 mm, 25 – 50 mm))

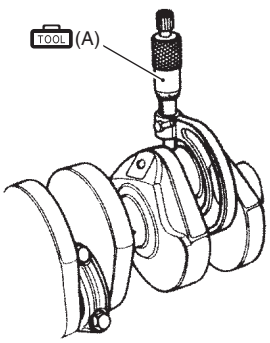

I823H1140286-01

4) Select the specified bearings from the bearing selection table.

⚠ CAUTION

The bearings should be replaced as a set.

Bearing selection table

		Crank pin O.D. “B”		
	Code	1	2	3
Conrod I.D. “A”	1	Green	Black	Brown
	2	Black	Brown	Yellow

I718H1140293-01

Bearing thickness specification

Color “C” (Part No.)	Thickness
Green (12164-46E01-0A0)	1.480 – 1.484 mm (0.0583 – 0.0584 in)
Black (12164-46E01-0B0)	1.484 – 1.488 mm (0.0584 – 0.0586 in)
Brown (12164-46E01-0C0)	1.488 – 1.492 mm (0.0586 – 0.0587 in)
Yellow (12164-46E01-0D0)	1.492 – 1.496 mm (0.0587 – 0.0589 in)

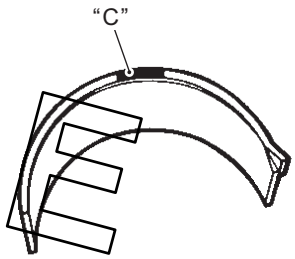

I823H1140595-01

“C”: Color code

SAMPLE

Crankshaft Journal Bearing Inspection and Selection

B823H11406041

Refer to “Engine Bottom Side Disassembly (Page 1D-64)”.
Refer to “Engine Bottom Side Assembly (Page 1D-72)”.

Inspection

1) Inspect each upper and lower crankcase bearing for any damage.

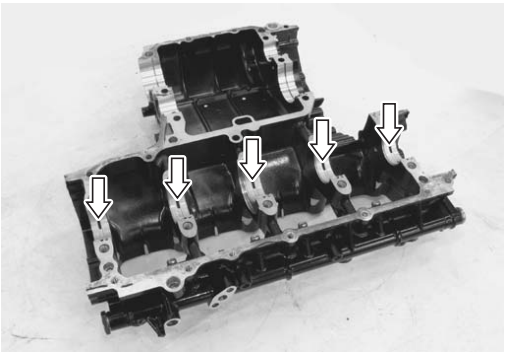

I823H1140449-01

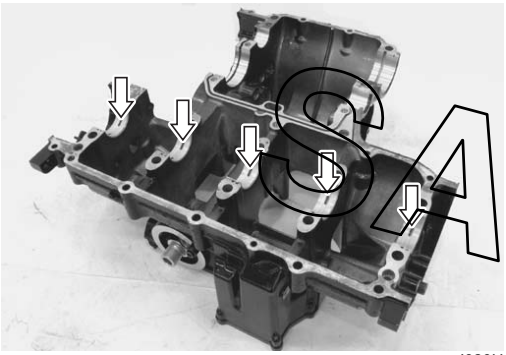

I823H1140450-01

2) Set the crankshaft onto the upper crank case.
3) Install the plastigauge onto each crankshaft journal as shown in the figure.

Special tool
TOOL (A): 09900–22301 (Plastigauge (0.025 – 0.076 mm))

NOTE

Do not place the plastigauge on the oil hole.

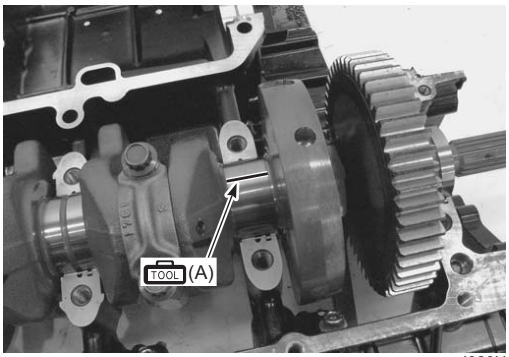

I823H1140511-02

4) Mate the lower crankcase with the upper crankcase.
5) Tighten the crankshaft journal bolts (M9) in ascending order of numbers assigned to these bolts. Tighten each bolt a little at a time to equalize the pressure in the following two steps.

NOTE

Do not rotate the crankshaft when a piece of plastigauge is installed.

Tightening torque
Crankcase journal bolt (Initial): 18 N·m (1.8 kgf-m, 13.0 lb-ft)
Crankcase journal bolt (Final): 32 N·m (3.2 kgf-m, 23.0 lb-ft)

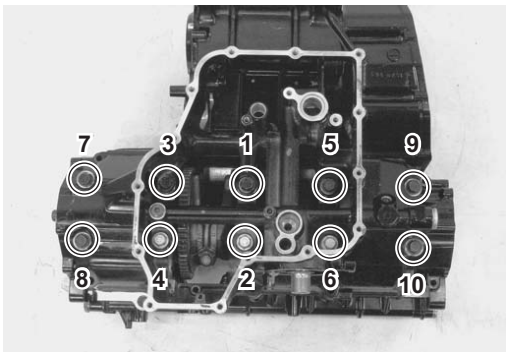

I823H1140512-01

SAMPLE

6) Remove the lower crankcase and measure the width of compressed plastigauge using the envelope scale. This measurement should be taken at the widest part of the compressed plastigauge. If the oil clearance exceeds the service limit, select the specified bearings from the bearing selection table.

Crankshaft journal oil clearance
Standard: 0.010 – 0.028 mm (0.0004 – 0.0011 in)

Crankshaft journal oil clearance
Service limit: 0.080 mm (0.0031 in)

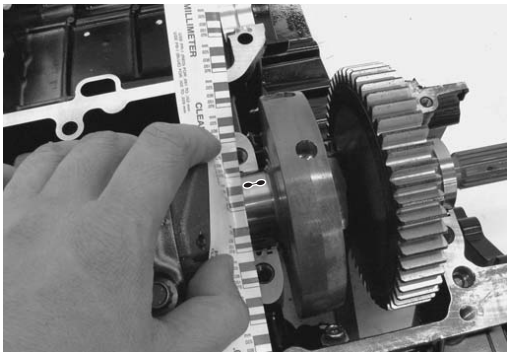

I823H1140509-02

Selection

1) Check the corresponding crankcase journal I.D. codes “A” ([A] or [B]) , which are stamped on the rear of the upper crankcase.

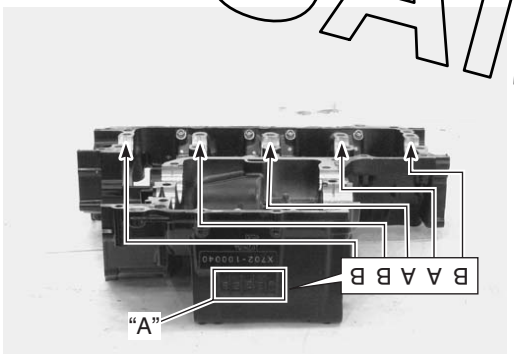

I823H1140510-02

Crankcase journal I.D. specification

Code “A”	I.D. specification
A	43.000 – 43.006 mm (1.6929 – 1.6931 in)
B	43.006 – 43.012 mm (1.6931 – 1.6934 in)
C	43.012 – 43.018 mm (1.6934 – 1.6936 in)

2) Check the corresponding crankshaft journal O.D. codes “B” ([A], [B] or [C]), which are stamped on the crankshaft.

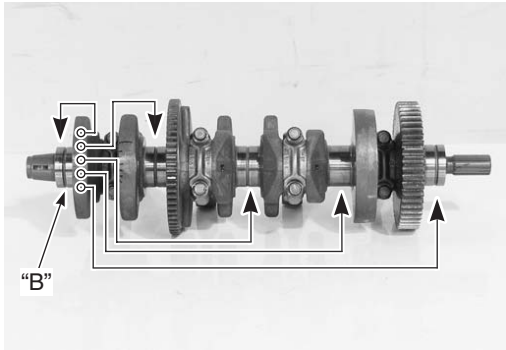

I823H1140293-01

3) Measure the crankshaft O.D. with the special tool. If any of the measurements are out of specification, replace the crankshaft.

Crankshaft journal O.D. specification

Code “B”	O.D. specification
A	39.994 – 40.000 mm (1.5746 – 1.5748 in)
B	39.988 – 39.994 mm (1.5743 – 1.5746 in)
C	39.982 – 39.988 mm (1.5741 – 1.5743 in)

Special tool
TOOL (A): 09900–20202 (Micrometer (1/100 mm, 25 – 50 mm))

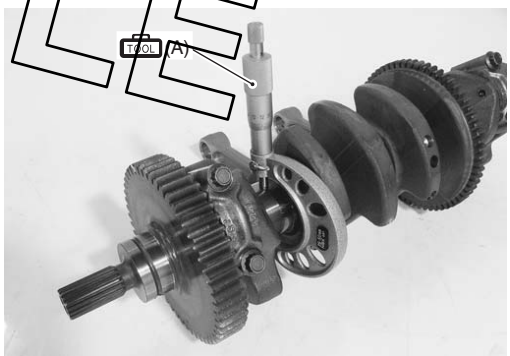

I823H1140294-01

SAMPLE

4) Select the specified bearings from the bearing selection table.

Bearing selection table

		Crankshaft O.D. “B”		
	Code	A	B	C
Crankcase I.D. “A”	A	Green	Black	Brown
	B	Black	Brown	Yellow
	C	Brown	Yellow	Blue

I823H1140299-01

Bearing thickness specification

Color “C” (Part No.)	Thickness
Green (12229-15H00-0A0)	**1.492 – 1.495 mm (0.0587 – 0.0589 in)**
Black (12229-15H00-0B0)	**1.495 – 1.498 mm (0.0589 – 0.0590 in)**
Brown (12229-15H00-0C0)	**1.498 – 1.501 mm (0.0590 – 0.0591 in)**
Yellow (12229-15H00-0D0)	**1.501 – 1.504 mm (0.0591 – 0.0592 in)**
Blue (12229-15H00-0E0)	**1.504 – 1.507 mm (0.0592 – 0.0593 in)**

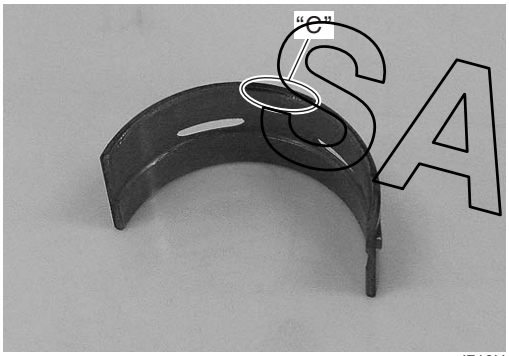

I718H1140303-01

“C”: Color code

Crankshaft Thrust Clearance Inspection and Selection

B823H11406042

Refer to “Engine Bottom Side Disassembly (Page 1D-64)”.
Refer to “Engine Bottom Side Assembly (Page 1D-72)”.

Inspection

1) With the crankshaft’s right-side and left-side thrust bearings inserted into the upper crankcase.
2) Measure the thrust clearance “a” between the left-side thrust bearing and crankshaft using the thickness gauge. If the thrust clearance exceeds the standard range, adjust the thrust clearance.

NOTE

Pull the crankshaft to the left (generator side) so that there is no clearance on the right-side thrust bearing.

Special tool
TOOL (A): 09900–20803 (Thickness gauge)

Crankshaft thrust clearance “a”
Standard: 0.055 – 0.110 mm (0.0022 – 0.0043 in)

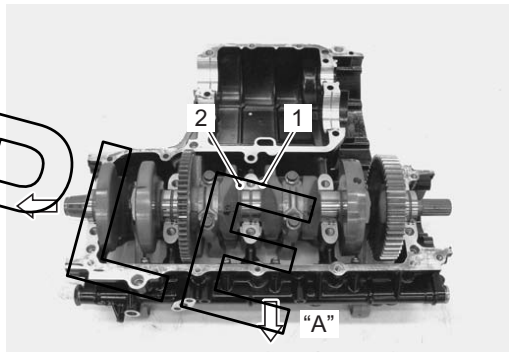

I823H1140513-01

1. Right-side thrust bearing	“A”: Front side
2. Left-side thrust bearing	

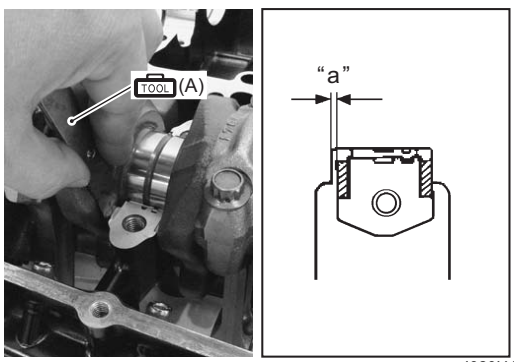

I823H1140514-01

SAMPLE

Selection

1) Remove the right-side thrust bearing and measure its thickness using the micrometer. If the thickness of the right-side thrust bearing is below standard, replace it with a new bearing and measure the thrust clearance again, as described in 1) and 2).

Special tool
TOOL (A): 09900–20205 (Micrometer (0 – 25 mm))

Right-side thrust bearing thickness
Standard: 2.425 – 2.450 mm (0.0955 – 0.0965 in)

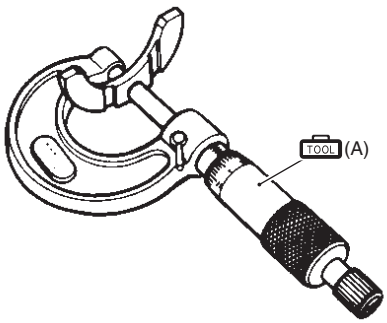

I649G1140343-02

2) If the right-side thrust bearing is within the standard range, reinsert the right-side thrust bearing and remove the left-side thrust bearing.
3) With the left-side thrust bearing removed, measure the clearance “a” using the thickness gauge as shown.

Special tool
TOOL (B): 09900–20803 (Thickness gauge)

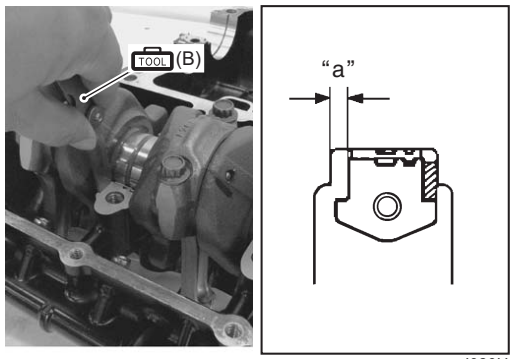

I823H1140515-01

4) Select a left-side thrust bearing from the selection table.

NOTE

Right-side thrust bearing has the same specification as the GREEN (12228-24F00-0D0) of left-side thrust bearing.

SAMPLE

Left-side thrust bearing selection table

Clearance before inserting the left-side thrust bearing	Color “A” (Part No.)	Thrust bearing thickness	Thrust clearance
2.560 – 2.585 mm (0.1008 – 0.1018 in)	White (12228-24F00-0F0)	2.475 – 2.500 mm (0.0974 – 0.0984 in)	0.060 – 0.110 mm (0.0024 – 0.0043 in)
2.535 – 2.560 mm (0.0998 – 0.1008 in)	Yellow (12228-24F00-0E0)	2.450 – 2.475 mm (0.0965 – 0.0974 in)	
2.510 – 2.535 mm (0.0988 – 0.0998 in)	Green (12228-24F00-0D0)	2.425 – 2.450 mm (0.0955 – 0.0965 in)	
2.485 – 2.510 mm (0.0978 – 0.0988 in)	Blue (12228-24F00-0C0)	2.400 – 2.425 mm (0.0945 – 0.0955 in)	
2.460 – 2.485 mm (0.0969 – 0.0978 in)	Black (12228-24F00-0B0)	2.375 – 2.400 mm (0.0935 – 0.0945 in)	
2.430 – 2.460mm (0.0957 – 0.0969 in)	Red (12228-24F00-0A0)	2.350 – 2.375 mm (0.0925 – 0.0935 in)	0.055 – 0.110 mm (0.0022 – 0.0043 in)

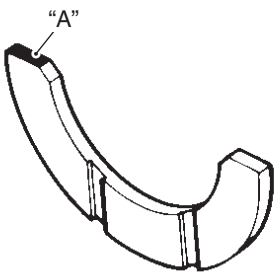

I649G1140345-02

“A”: Color code

5) After selecting a left-side thrust bearing, install it and then measure the thrust clearance again.

Specifications

Service Data

B823H11407001

Valve + Guide

Unit: mm (in)

Item	Standard		Limit
Valve diam.	IN.	33 (1.30)	—
	EX.	27.5 (1.08)	—
Valve clearance (when cold)	IN.	0.08 – 0.18 (0.003 – 0.007)	—
	EX.	0.18 – 0.28 (0.007 – 0.011)	—
Valve guide to valve stem clearance	IN.	0.010 – 0.037 (0.0004 – 0.0015)	—
	EX.	0.030 – 0.057 (0.0012 – 0.0022)	—
Valve guide I.D.	IN. & EX.	5.000 – 5.012 (0.1969 – 0.1973)	—
Valve stem O.D.	IN.	4.975 – 4.990 (0.1959 – 0.1965)	—
	EX.	4.955 – 4.970 (0.1951 – 0.1957)	—
Valve stem deflection	IN. & EX.	—	0.25 (0.010)
Valve stem runout	IN. & EX.	—	0.05 (0.002)
Valve seat width	IN. & EX.	0.9 – 1.1 (0.035 – 0.043)	—
Valve head radial runout	IN. & EX.	—	0.03 (0.001)
Valve spring free length	IN. & EX.	—	42.3 (1.67)
Valve spring tension	IN. & EX.	Approx. 137 N (14.0 kgf, 30.8 lbs) at length 36.6 mm (1.44 in)	—

Camshaft + Cylinder Head

Unit: mm (in)

Item	Standard		Limit
Cam height	IN.	36.98 – 37.02 (1.456 – 1.457)	36.68 (1.444)
	EX.	36.58 – 36.62 (1.440 – 1.442)	36.28 (1.428)
Camshaft journal oil clearance	IN. & EX.	0.032 – 0.066 (0.0013 – 0.0026)	0.150 (0.0059)
Camshaft journal holder I.D.	IN. & EX.	24.012 – 24.025 (0.9454 – 0.9459)	—
Camshaft journal O.D.	IN. & EX.	23.959 – 23.980 (0.9433 – 0.9441)	—
Camshaft runout	—		0.10 (0.004)
Cam chain pin (at arrow “3”)	15th pin		—
Cylinder head distortion	—		0.20 (0.008)

SAMPLE

Cylinder + Piston + Piston Ring
Unit: mm (in)

Item	Standard			Limit
Compression pressure	1 400 – 1 800 kPa (14 – 18 kgf/cm^2, 199 – 256 psi)			1 000 kPa (10 kgf/cm^2, 142 psi)
Compression pressure difference	—			200 kPa (2 kgf/cm^2, 28 psi)
Piston-to-cylinder clearance	0.035 – 0.045 (0.0014 – 0.0018)			0.120 (0.0047)
Cylinder bore	81.000 – 81.015 (3.1890 – 3.1896)			No nicks or Scratches
Piston diam.	80.960 – 80.975 (3.1874 – 3.1880) Measure 15 mm (0.6 in) from the skirt end.			80.880 (3.1842)
Cylinder distortion	—			0.20 (0.008)
Piston ring free end gap	1st	—	Approx. 6.5 (0.26)	5.2 (0.20)
	2nd	2T	Approx. 9.0 (0.35)	7.2 (0.28)
Piston ring end gap	1st	—	0.06 – 0.18 (0.002 – 0.007)	0.50 (0.020)
	2nd	2T		
Piston ring-to-groove clearance	1st		—	0.180 (0.0071)
	2nd		—	0.150 (0.0059)
Piston ring groove width	1st		0.83 – 0.85 (0.0327 – 0.0335) 1.30 – 1.32 (0.0512 – 0.0520)	—
	2nd		1.01 – 1.03 (0.0398 – 0.0406)	—
	Oil		2.01 – 2.03 (0.0791 – 0.0799)	—
Piston ring thickness	1st		0.76 – 0.81 (0.0299 – 0.0319) 1.08 – 1.10 (0.0425 – 0.0433)	—
	2nd		0.97 – 0.99 (0.0382 – 0.0390)	—
Piston pin bore	18.002 – 18.008 (0.7087 – 0.7090)			18.030 (0.7098)
Piston pin O.D.	17.996 – 18.000 (0.7085 – 0.7087)			17.980 (0.7079)

SAMPLE

Conrod + Crankshaft
Unit: mm (in)

Item	Standard		Limit
Conrod small end I.D.	18.010 – 18.018 (0.7091 – 0.7094)		18.040 (0.7102)
Conrod big end side clearance	0.10 – 0.20 (0.004 – 0.008)		0.3 (0.012)
Conrod big end width	20.95 – 21.00 (0.825 – 0.827)		—
Crank pin width	21.10 – 21.15 (0.831 – 0.833)		—
Conrod big end oil clearance	0.032 – 0.056 (0.0013 – 0.0022)		0.080 (0.0031)
Crank pin O.D.	37.976 – 38.000 (1.4951 – 1.4960)		—
Crankshaft journal oil clearance	0.010 – 0.028 (0.0004 – 0.0011)		0.080 (0.0031)
Crankshaft journal O.D.	39.982 – 40.000 (1.5741 – 1.5748)		—
Crankshaft thrust bearing thickness	Right side	2.425 – 2.450 (0.0955 – 0.0965)	—
	Left side	2.350 – 2.500 (0.0925 – 0.0984)	—
Crankshaft thrust clearance	0.055 – 0.110 (0.0022 – 0.0043)		—
Crankshaft runout	—		0.05 (0.002)

Tightening Torque Specifications

B823H11407002

Fastening part	Tightening torque			Note
	N·m	kgf-m	lb-ft	
STP sensor mounting screw	3.5	0.35	2.5	☞(Page 1D-14)
ISC valve mounting screw	2	0.2	1.5	☞(Page 1D-14)
TP sensor mounting screw	3.5	0.35	2.5	☞(Page 1D-14)
Fuel delivery pipe mounting screw	3.5	0.35	2.5	☞(Page 1D-15)
Engine mounting thrust adjuster	10	1.0	7.0	☞(Page 1D-25)
Engine mounting thrust adjuster lock-nut	45	4.5	32.5	☞(Page 1D-26)
Cylinder head bolt (M10) (Initial)	25	2.5	18.0	☞(Page 1D-35)
Cylinder head bolt (M10) (Final)	52	5.2	37.5	☞(Page 1D-35)
Cylinder head bolt (M6)	10	1.0	7.0	☞(Page 1D-35)
Cylinder nut (M6)	10	1.0	7.0	☞(Page 1D-35)
Cylinder head side bolt	14	1.4	10.0	☞(Page 1D-35)
Oil hose union bolt	18	1.8	13.0	☞(Page 1D-36)
Camshaft journal holder bolt	10	1.0	7.0	☞(Page 1D-38) / ☞(Page 1D-44)
Oil pipe bolt (Camshaft housing)	10	1.0	7.0	☞(Page 1D-39)
Cam chain guide No. 2 bolt	10	1.0	7.0	☞(Page 1D-39)
Cam chain tension adjuster mounting bolt	10	1.0	7.0	☞(Page 1D-40)
Cam chain tension adjuster service cap	23	2.3	16.5	☞(Page 1D-40) / ☞(Page 1D-50)
Valve timing inspection cap	23	2.3	16.5	☞(Page 1D-42)
Starter clutch cover cap	11	1.1	8.0	☞(Page 1D-42)
Head cover bolt	14	1.4	10.0	☞(Page 1D-43)
Oil gallery plug (Cylinder head)	10	1.0	7.0	☞(Page 1D-50)
Water bypass union	14	1.4	10.0	☞(Page 1D-50)
Thermostat cover bolt	10	1.0	7.0	☞(Page 1D-51)
Engine coolant temperature sensor	18	1.8	13.0	☞(Page 1D-51)
Water jacket plug	11	1.1	8.0	☞(Page 1D-59)
Water inlet connector bolt	10	1.0	7.0	☞(Page 1D-59)
Oil gallery plug (M6) and (M8)	10	1.0	7.0	☞(Page 1D-73)
Oil gallery plug (M10)	18	1.8	13.0	☞(Page 1D-73)
Oil gallery plug (M14)	23	2.3	16.5	☞(Page 1D-73)
Oil gallery plug (M16)	35	3.5	25.5	☞(Page 1D-73)
Piston cooling oil jet bolt	10	1.0	7.0	☞(Page 1D-74)
Oil jet (For generator)	5	0.5	3.5	☞(Page 1D-74)
Crankshaft journal bolt (M9) (Initial)	18	1.8	13.0	☞(Page 1D-77)
Crankshaft journal bolt (M9) (Final)	32	3.2	23.0	☞(Page 1D-77)
Crankcase bolt (M6)	11	1.1	8.0	☞(Page 1D-77)
Crankcase bolt (M8)	26	2.6	19.0	☞(Page 1D-77)
Crankcase bolt (M10)	50	5.0	36.0	☞(Page 1D-77)
Balancer shaft arm bolt	10	1.0	7.0	☞(Page 1D-79)
Balancer shaft mounting bolt	10	1.0	7.0	☞(Page 1D-79)
Balancer cover bolt	10	1.0	7.0	☞(Page 1D-80)
Breather pipe bolt	10	1.0	7.0	☞(Page 1D-80)
Oil strainer bolt	10	1.0	7.0	☞(Page 1D-80)
Oil pan bolt	10	1.0	7.0	☞(Page 1D-81)
Oil pressure switch	14	1.4	10.0	☞(Page 1D-81)
Oil pipe bolt (M6)	10	1.0	7.0	☞(Page 1D-82)
Oil pipe union bolt (M14)	28	2.8	20.5	☞(Page 1D-82)
Gearshift cam stopper bolt	10	1.0	7.0	☞(Page 1D-83)
Gearshift cam stopper plate bolt	13	1.3	9.5	☞(Page 1D-83)
Gearshift cover bolt	10	1.0	7.0	☞(Page 1D-84)
Water pump mounting bolt	10	1.0	7.0	☞(Page 1D-84)
Cam chain tensioner bolt	23	2.3	16.5	☞(Page 1D-85)
GP switch mounting bolt	6.5	0.65	4.7	☞(Page 1D-86)
GP switch lead wire clamp bolt	6.5	0.65	4.7	☞(Page 1D-86)
Oil pump mounting bolt	10	1.0	7.0	☞(Page 1D-86)

SAMPLE

Fastening part	Tightening torque			Note
	N·m	kgf-m	lb-ft	
PCV cover bolt	10	1.0	7.0	☞(Page 1D-88)
PCV reed valve cover bolt	10	1.0	7.0	☞(Page 1D-88)
Conrod cap bolt	21 N·m (2.1 kgf-m, 15.0 lb-ft) then turn in 1/4 (90°) turn			☞(Page 1D-91) / ☞(Page 1D-93)
Crankcase journal bolt (Initial)	18	1.8	13.0	☞(Page 1D-95)
Crankcase journal bolt (Final)	32	3.2	23.0	☞(Page 1D-95)

NOTE

The specified tightening torque is also described in the following.
“Throttle Body Components (Page 1D-8)”
“Throttle Body Construction (Page 1D-9)”
“Engine Assembly Installation (Page 1D-25)”
“Engine Bottom Side Assembly (Page 1D-72)”

Reference:
For the tightening torque of fastener not specified in this section, refer to “Tightening Torque List in Section 0C (Page 0C-9)”.

Special Tools and Equipment

Recommended Service Material

B823H11408001

Material	SUZUKI recommended product or Specification		Note
Grease	SUZUKI SUPER GREASE A or equivalent	P/No.: 99000–25010	☞(Page 1D-14) / ☞(Page 1D-14) / ☞(Page 1D-80) / ☞(Page 1D-81) / ☞(Page 1D-82) / ☞(Page 1D-84) / ☞(Page 1D-84) / ☞(Page 1D-86)
Molybdenum oil	MOLYBDENUM OIL SOLUTION	—	☞(Page 1D-32) / ☞(Page 1D-36) / ☞(Page 1D-52) / ☞(Page 1D-78) / ☞(Page 1D-89) / ☞(Page 1D-90) / ☞(Page 1D-91)
Sealant	SUZUKI BOND No.1207B or equivalent	P/No.: 99000–31140	☞(Page 1D-42) / ☞(Page 1D-50) / ☞(Page 1D-75) / ☞(Page 1D-81) / ☞(Page 1D-86) / ☞(Page 1D-88)
Thread lock cement	THREAD LOCK CEMENT SUPER 1303 or equivalent	P/No.: 99000–32030	☞(Page 1D-83)
	THREAD LOCK CEMENT SUPER 1322 or equivalent	P/No.: 99000–32110	☞(Page 1D-74) / ☞(Page 1D-79) / ☞(Page 1D-80) / ☞(Page 1D-80) / ☞(Page 1D-80) / ☞(Page 1D-82) / ☞(Page 1D-83)

SAMPLE

NOTE

Required service material is also described in the following.
“Throttle Body Components (Page 1D-8)”
“Engine Bottom Side Assembly (Page 1D-72)”

Special Tool

B823H11408002

09900–06107 Snap ring pliers ☞(Page 1D-87)	09900–20102 Vernier calipers (1/20 mm, 200 mm) ☞(Page 1D-55) / ☞(Page 1D-63)
09900–20202 Micrometer (1/100 mm, 25 – 50 mm) ☞(Page 1D-43) / ☞(Page 1D-94) / ☞(Page 1D-96)	09900–20204 Micrometer (75 – 100 mm) ☞(Page 1D-62)
09900–20205 Micrometer (0 – 25 mm) ☞(Page 1D-45) / ☞(Page 1D-55) / ☞(Page 1D-62) / ☞(Page 1D-63) / ☞(Page 1D-92) / ☞(Page 1D-98)	09900–20530 Cylinder gauge set ☞(Page 1D-60)
09900–20602 Dial gauge (1/1000 mm, 1 mm) ☞(Page 1D-45) / ☞(Page 1D-63) / ☞(Page 1D-92)	09900–20605 Dial calipers (1/100 mm, 10 – 34 mm) ☞(Page 1D-92)
09900–20607 Dial gauge (1/100 mm, 10 mm) ☞(Page 1D-43) / ☞(Page 1D-53) / ☞(Page 1D-54) / ☞(Page 1D-54) / ☞(Page 1D-92)	09900–20701 Magnetic stand ☞(Page 1D-43) / ☞(Page 1D-53) / ☞(Page 1D-54) / ☞(Page 1D-54) / ☞(Page 1D-92)
09900–20803 Thickness gauge ☞(Page 1D-53) / ☞(Page 1D-60) / ☞(Page 1D-62) / ☞(Page 1D-63) / ☞(Page 1D-92) / ☞(Page 1D-97) / ☞(Page 1D-98)	09900–21304 V-block (100 mm) ☞(Page 1D-43) / ☞(Page 1D-53) / ☞(Page 1D-54) / ☞(Page 1D-92)

SAMPLE

09900–22301 Plastigauge (0.025 – 0.076 mm) ☞(Page 1D-44) / ☞(Page 1D-93) / ☞(Page 1D-95)	09900–22302 Plastigauge (0.051 – 0.152 mm) ☞(Page 1D-44)
09900–22403 Small bore gauge (18 – 35 mm) ☞(Page 1D-45) / ☞(Page 1D-63) / ☞(Page 1D-92)	09915–40610 Oil filter wrench ☞(Page 1D-67) / ☞(Page 1D-82)
09915–63311 Compression gauge attachment ☞(Page 1D-3)	09915–64512 Compression gauge ☞(Page 1D-3)
09916–10911 Valve lapper set ☞(Page 1D-56)	09916–14510 Valve spring compressor ☞(Page 1D-48) / ☞(Page 1D-52)
09916–14522 Valve spring compressor attachment ☞(Page 1D-48) / ☞(Page 1D-52)	09916–34542 Reamer handle ☞(Page 1D-57) / ☞(Page 1D-58)
09916–34570 Valve guide reamer (5.0 mm) ☞(Page 1D-58)	09916–34580 Valve guide reamer (10.8 mm) ☞(Page 1D-57)
09916–44310 Valve guide remover/ installer ☞(Page 1D-57) / ☞(Page 1D-57)	09916–53350 Attachment ☞(Page 1D-57)
09916–74521 Holder body ☞(Page 1D-33)	09916–74550 Band (Piston diam.: 73 – 85 mm) ☞(Page 1D-33)

SAMPLE

09916–84511 Valve adjuster driver ☞(Page 1D-48) / ☞(Page 1D-52) 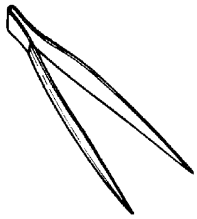	09919–28620 Sleeve protector ☞(Page 1D-48) / ☞(Page 1D-52) 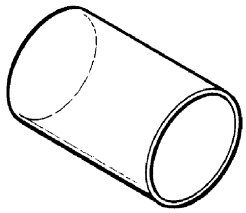
09930–11950 Torx wrench ☞(Page 1D-13) / ☞(Page 1D-14) / ☞(Page 1D-14) 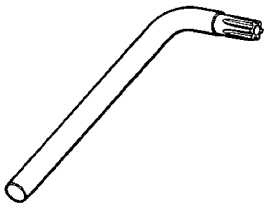	09940–14990 Engine mounting thrust adjuster socket wrench ☞(Page 1D-24) / ☞(Page 1D-24) / ☞(Page 1D-26) 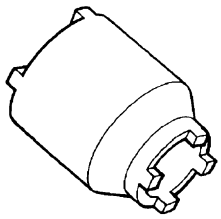

SAMPLE

Engine Lubrication System

Precautions

Precautions for Engine Oil

B823H11500001

Refer to “Fuel and Oil Recommendation in Section 0A (Page 0A-3)”.

Schematic and Routing Diagram

Engine Lubrication System Chart Diagram

B823H11502001

SAMPLE

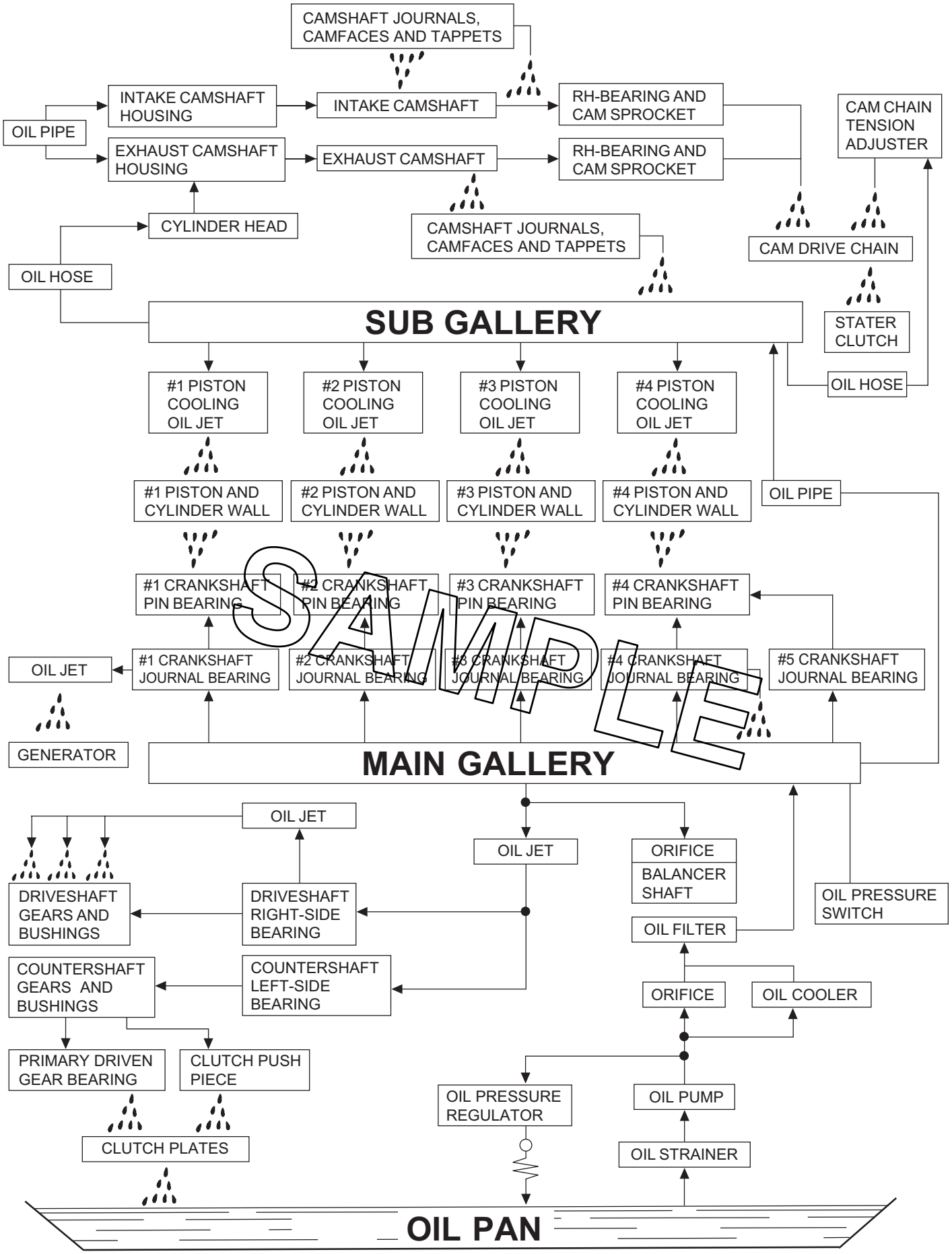

I823H1150001-04

Engine Lubrication Circuit Diagram

B823H11502002

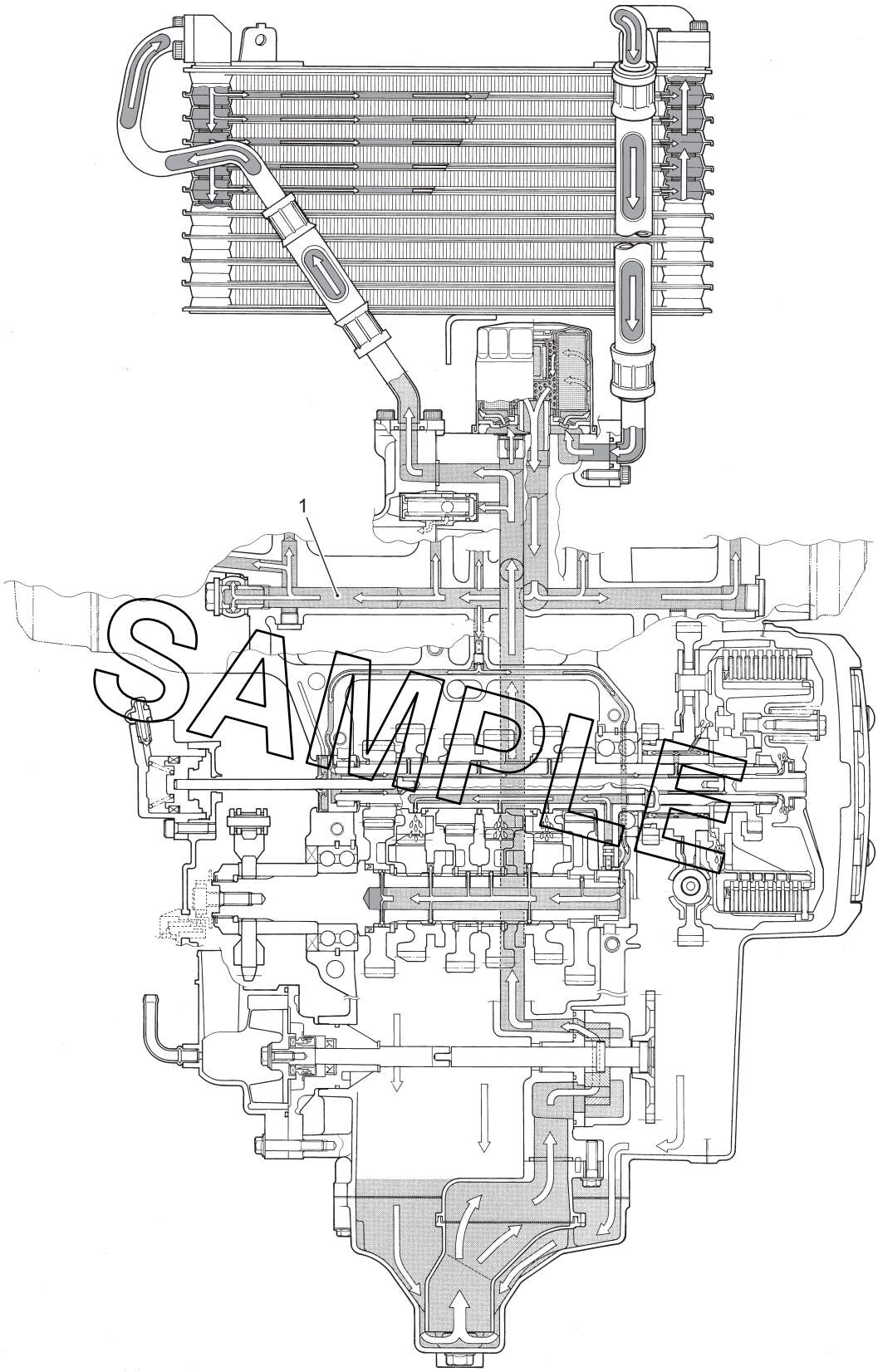

I823H1150042-01

1: Main gallery

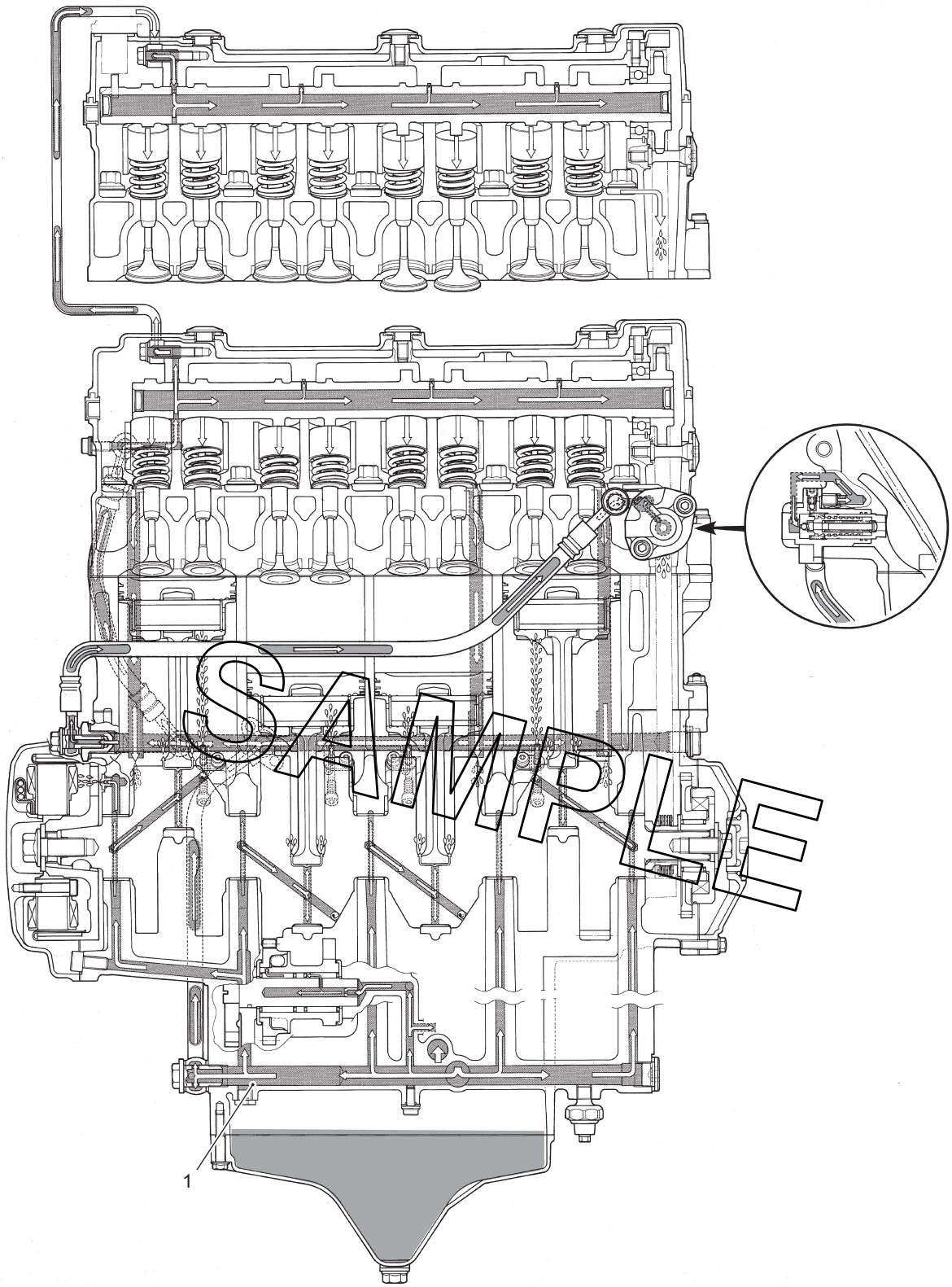

I823H1150043-02

1: Main gallery

Diagnostic Information and Procedures

Engine Lubrication Symptom Diagnosis

B823H11504001

Condition	Possible cause	Correction / Reference Item
Engine overheats	Insufficient amount of engine oil.	*Check level and add.*
	Defective oil pump.	*Replace.*
	Clogged oil circuit.	*Clean.*
	Clogged oil cooler.	*Clean or replace.*
	Incorrect engine oil.	*Change.*
Exhaust smoke is dirty or thick	Excessive amount of engine oil.	*Check level and drain.*
Engine lacks power	Excessive amount of engine oil.	*Check level and drain.*

Oil Pressure Check

B823H11504002

Check the engine oil pressure periodically. This will give a good indication of the condition of the moving parts.

NOTE

Before checking the oil pressure, check the following.

- **Oil level (Refer to "Engine Oil and Filter Replacement in Section 0B (Page 0B-10)".)**
- **Oil leaks (If leak is found, repair it.)**
- **Oil quality (If oil is discolored or deteriorated, replace it.)**

1) Start the engine and check if the oil pressure indicator light is turned on. If the light stays on, check the oil pressure indicator light circuit. If the circuit is OK, check the oil pressure in the following manner.
2) Remove the main oil gallery plug (1).

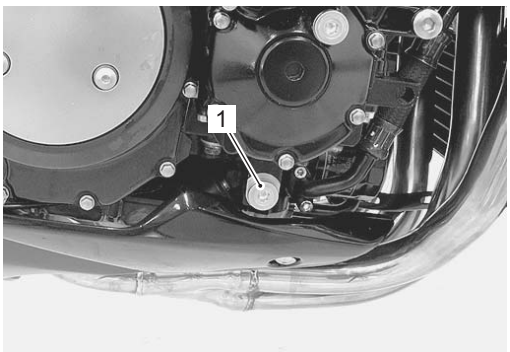

I823H1150002-01

3) Install the oil pressure gauge and attachment to the main oil gallery.

Special tool
(A): 09915–74521 (Oil pressure gauge hose)
(B): 09915–74540 (Oil pressure gauge attachment)
(C): 09915–77331 (Meter (for high pressure))

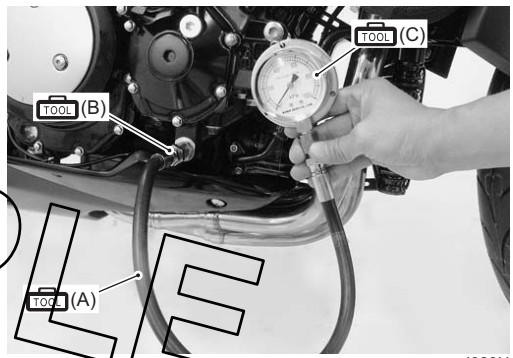

I823H1150044-01

SAMPLE

4) Warm up the engine as follows:
   Summer: 10 min. at 2 000 r/min
   Winter: 20 min. at 2 000 r/min
5) After warming up, increase the engine speed to 3 000 r/min (Observe the tachometer), and read the oil pressure gauge.
   If the oil pressure is lower or higher than the specification, the following causes may be considered.

   Oil pressure specification
   200 – 500 kPa (2.0 – 5.0 kgf/cm², 28.4 – 71.1 psi) at 3 000 r/min, Oil temp. at 60 °C (140 °F)

High oil pressure	Low oil pressure
• Engine oil viscosity is too high • Clogged oil passage • Combination of the above items	• Clogged oil filter • Oil leakage from the oil passage • Damaged O-ring • Defective oil pump • Combination of the above items

6) Stop the engine and remove the oil pressure gauge and attachment.
7) Reinstall the main oil gallery plug and tighten it to the specified torque.

⚠ CAUTION

Use a new gasket to oil leakage.

Tightening torque
Main oil gallery plug (M16) (a): 35 N·m (3.5 kgf-m, 25.5 lb-ft)

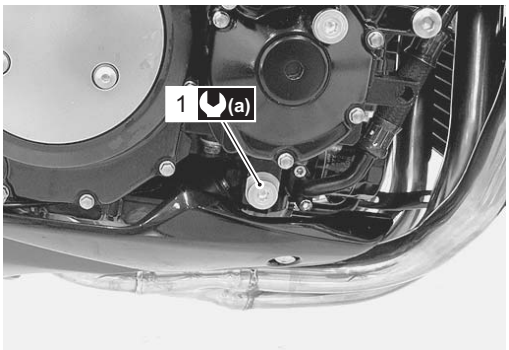

I823H1150003-01

8) Check the engine oil level. Refer to “Engine Oil and Filter Replacement in Section 0B (Page 0B-10)”.

SAMPLE

Repair Instructions

Engine Oil and Filter Replacement

B823H11506001

Refer to “Engine Oil and Filter Replacement in Section 0B (Page 0B-10)”.

Engine Oil Level Inspection

B823H11506002

Refer to “Engine Oil and Filter Replacement in Section 0B (Page 0B-10)”.

Oil Pan / Oil Strainer / Oil Pressure Regulator Removal and Installation

B823H11506003

Removal

1) Drain engine oil. Refer to “Engine Oil and Filter Replacement in Section 0B (Page 0B-10)”.
2) Remove the under cowling. Refer to “Exterior Parts Removal and Installation in Section 9D (Page 9D-14)”.
3) Remove the exhaust pipe assembly (1). Refer to “Engine Assembly Removal in Section 1D (Page 1D-19)” and “Engine Assembly Installation in Section 1D (Page 1D-25)”.
4) Remove the radiator outlet pipe bolt (2) and oil cooler bracket bolts (3).
5) Remove the left oil cooler hose bolts (4).

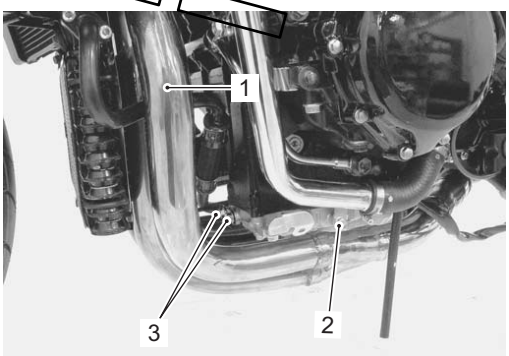

I823H1150004-01

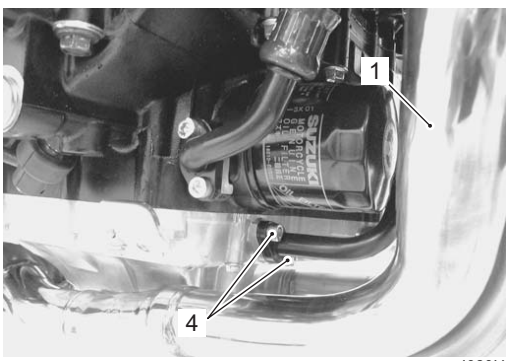

I823H1150005-01

6) Remove the oil pan (5) and gasket. Refer to “Engine Bottom Side Disassembly in Section 1D (Page 1D-64)”.

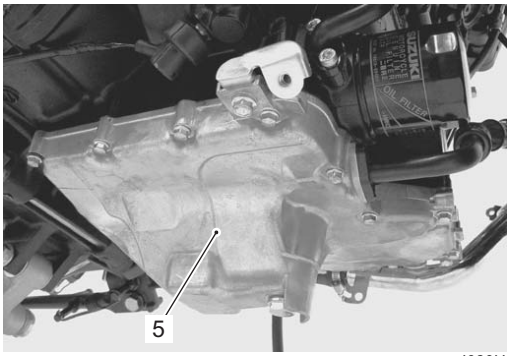

I823H1150006-01

7) Remove the oil pressure regulator (6), breather pipe (7) and oil strainer (8).

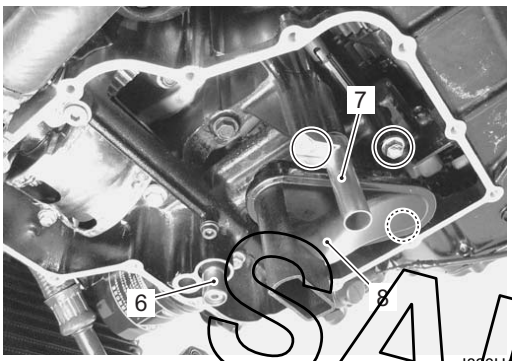

I823H1150007-02

8) Remove the O-ring (9).

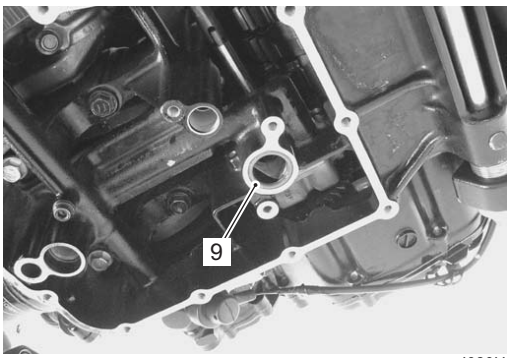

I823H1150008-01

Installation

Installation is in the reverse order of removal. Pay attention to the following points:

- Apply grease to the O-rings.

⚠ CAUTION

Use the new O-rings to prevent oil leakage.

A H : Grease 99000–25010 (SUZUKI SUPER GREASE A or equivalent)

I823H1150009-02

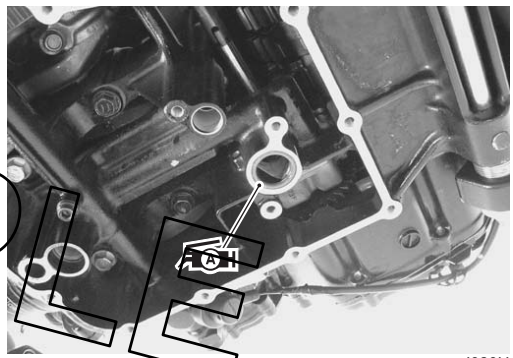

I823H1150010-01

SAMPLE

- Tighten the oil pan bolts diagonally.

⚠ CAUTION

- **Use the new oil pan gasket to prevent oil leakage.**
- **Fit a new gasket washer to the oil pan bolt (1) to prevent oil leakage.**

I823H1150011-02

- After installing the removed parts, pour engine oil and engine coolant. Refer to “Engine Oil and Filter Replacement in Section 0B (Page 0B-10)” and “Cooling System Inspection in Section 0B (Page 0B-13)”.

Oil Pressure Regulator / Oil Strainer Inspection

B823H11506004

Refer to “Oil Pan / Oil Strainer / Oil Pressure Regulator Removal and Installation (Page 1E-6)”.

Oil pressure regulator

Inspect the operation of the oil pressure regulator by pushing on the piston with a proper bar.
If the piston does not operate, replace the oil pressure regulator with a new one.

I718H1150033-01

Oil Strainer

Clean the oil strainer if necessary.
Inspect the oil strainer body for damage. If necessary, replace it with a new one.

I823H1150012-01

Oil Cooler / Oil Cooler Hose Inspection and Cleaning

B823H11506013

Oil Cooler Hose Inspection

Inspect the oil cooler hoses for any damage and oil leakage. If any defects are found, replace the oil cooler hose with new ones.

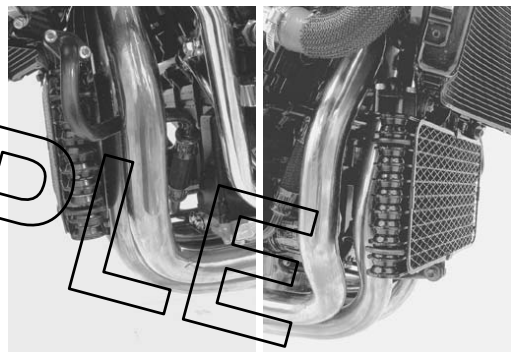

I823H1150024-01

Oil Cooler Inspection

Inspect the oil cooler for oil leakage. If any defects are found, replace the oil cooler with a new one. If the fins are bent or dented, repair them by carefully straightening them with the blade of a small screwdriver.

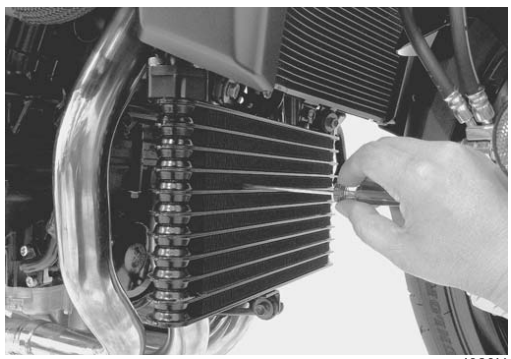

I823H1150025-01

SAMPLE

Oil Cooler Cleaning

Blow out any foreign matter that is stuck in the oil cooler fins using compressed air.

⚠ CAUTION

- **Make sure not to bend the fins when using compressed air.**
- **If compressed air is applied from the front side, dirt will be forced into the pores of oil cooler.**

I823H1150026-01

Oil Cooler / Oil Cooler Hose Removal and Installation

B823H11506005

Removal

1) Remove the under cowling. Refer to “Exterior Parts Removal and Installation in Section 9D (Page 9D-14)”.
2) Drain engine oil. Refer to “Engine Oil and Filter Replacement in Section 0B (Page 0B-10)”.
3) Remove the oil hoses (1) and (2).

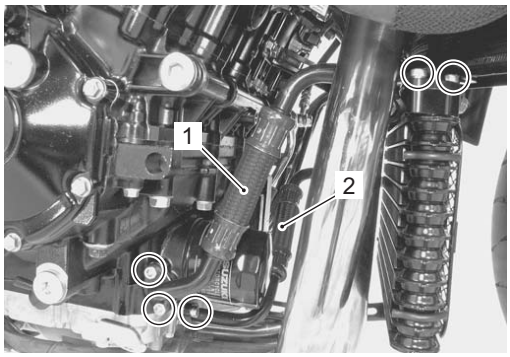

I823H1150027-01

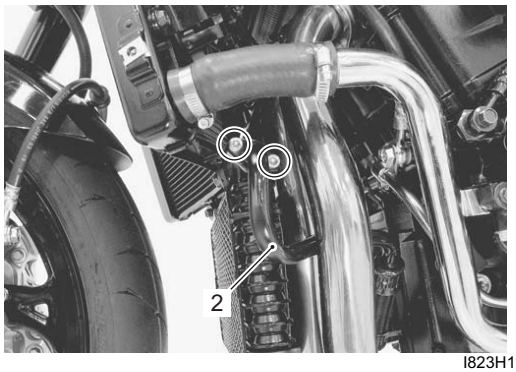

I823H1150028-01

4) Remove the oil cooler guard (3).
5) Remove the oil cooler.

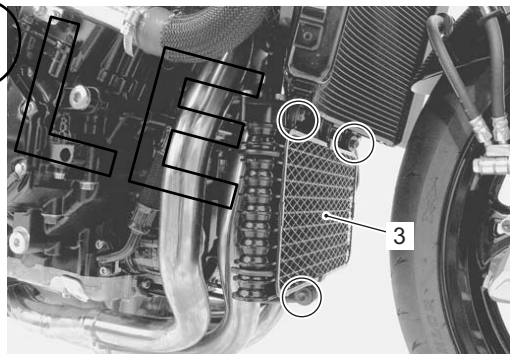

I823H1150029-01

SAMPLE

Installation

Install the oil cooler and oil cooler hoses in the reverse order of removal. Pay attention to the following points:

- Apply engine oil to the O-rings.

⚠ CAUTION

Replace the O-rings with new ones to prevent oil leakage.

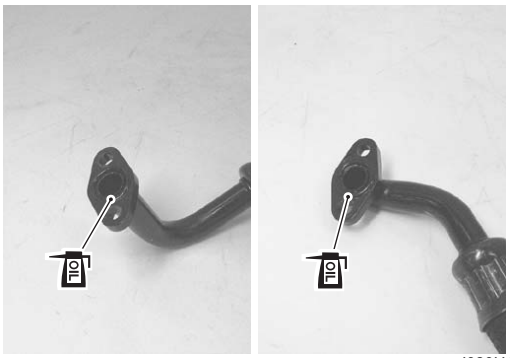

I823H1150030-01

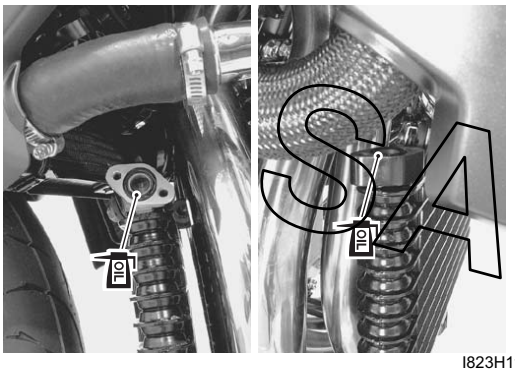

I823H1150031-01

- Tighten the oil cooler hose bolts to the specified torque.

  Tightening torque
  Oil cooler hose bolt: 10 N·m (1.0 kgf-m, 7.0 lb-ft)

- Pour engine oil. Refer to “Engine Oil and Filter Replacement in Section 0B (Page 0B-10)”.
- Install the removed parts.

Oil Pressure Switch Removal and Installation

B823H11506006

Refer to “Electrical Components Location in Section 0A (Page 0A-7)”.

Removal

1) Turn the ignition switch OFF.
2) Remove the under cowling. Refer to “Exterior Parts Removal and Installation in Section 9D (Page 9D-14)”.
3) Drain engine oil. Refer to “Engine Oil and Filter Replacement in Section 0B (Page 0B-10)”.
4) Disconnect the oil pressure switch lead wire (1).

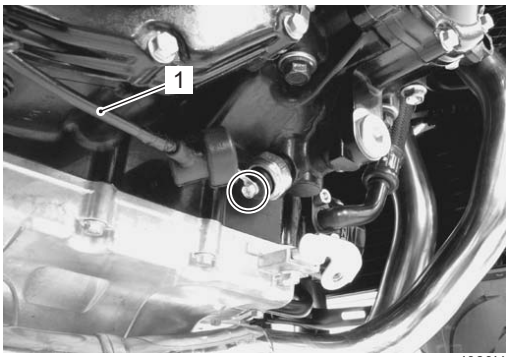

I823H1150013-01

5) Remove the oil pressure switch (2).

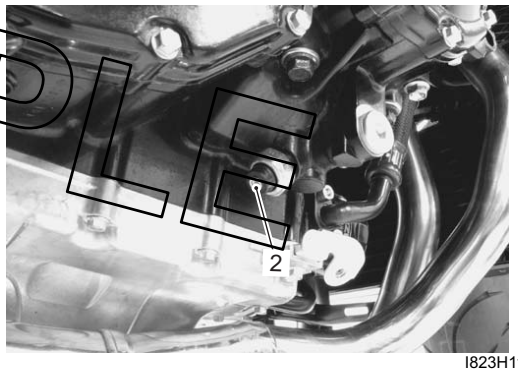

I823H1150014-01

SAMPLE

Installation

1) Install the oil pressure switch (1), apply a bond lightly to its thread and tighten it to the specified torque.

   1207B : Sealant 99000–31140 (SUZUKI Bond 1207B or equivalent)

   Tightening torque
   Oil pressure switch (a): 14 N·m (1.4 kgf-m, 10.0 lb-ft)

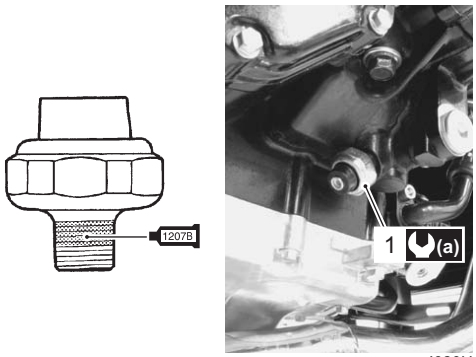

I823H1150046-02

2) Connect the oil pressure switch lead wire securely. Refer to “Wiring Harness Routing Diagram in Section 9A (Page 9A-5)”.

   Tightening torque
   Oil pressure switch lead wire bolt (b): 1.5 N·m (0.15 kgf-m, 1.1 lb-ft)

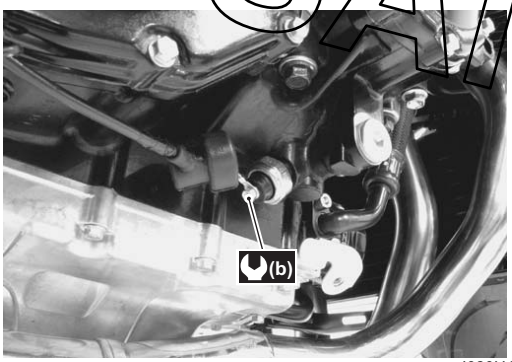

I823H1150016-01

3) Pour engine oil. Refer to “Engine Oil and Filter Replacement in Section 0B (Page 0B-10)”.
4) Install the removed parts.

Oil Pressure Switch Inspection

B823H11506007

Refer to “Oil Pressure Indicator Inspection in Section 9C (Page 9C-8)”.

Oil Jet / Oil Gallery Jet Removal and Installation

B823H11506008

Oil Jet (For Pistons)

Removal

1) Remove the engine assembly. Refer to “Engine Assembly Removal in Section 1D (Page 1D-19)”.
2) Remove the Cylinder. Refer to “Engine Top Side Disassembly in Section 1D (Page 1D-28)”.
3) Remove the piston cooling oil jets (1).

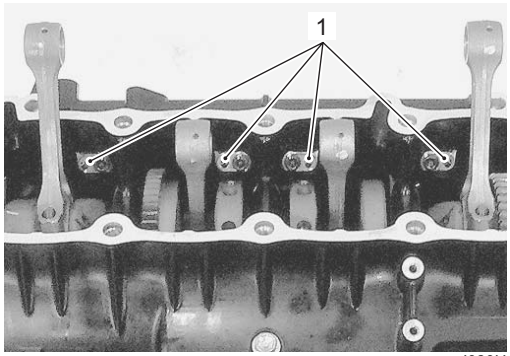

I823H1150032-02

Installation

Installation is in the reverse order of removal. Pay attention to the following points:

- Fit the new O-ring (1) to each piston cooling oil jet and apply engine oil to them.

⚠ CAUTION

Use the new O-rings to prevent oil pressure leakage.

I823H1150033-01

SAMPLE

- Apply a small quantity of thread lock to the bolts and tighten them to the specified torque.

  1322 : Thread lock cement 99000–32110 (THREAD LOCK CEMENT SUPER 1322 or equivalent)

  Tightening torque
  Piston cooling oil jet bolt (a): 10 N·m (1.0 kgf-m, 7.0 lb-ft)

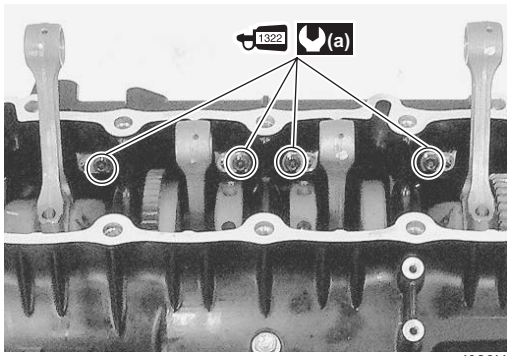

I823H1150034-01

Oil Jet (For Transmission)
Removal

1) Remove the engine assembly. Refer to “Engine Assembly Removal in Section 1D (Page 1D-19)”.
2) Separate the crankcases, upper and lower. Refer to “Engine Bottom Side Disassembly in Section 1D (Page 1D-64)”.
3) Remove the oil jet (1) (for transmission oil spray) from the upper crankcase.

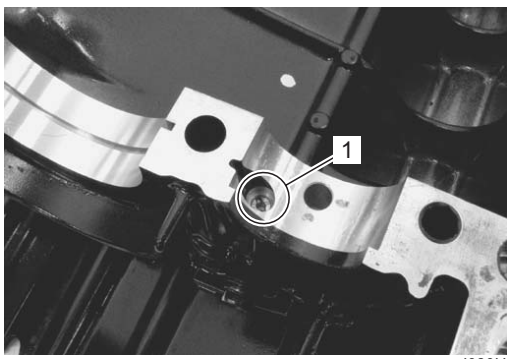

I823H1150035-01

4) Remove the oil jet (2) (for transmission) from the lower crankcase.

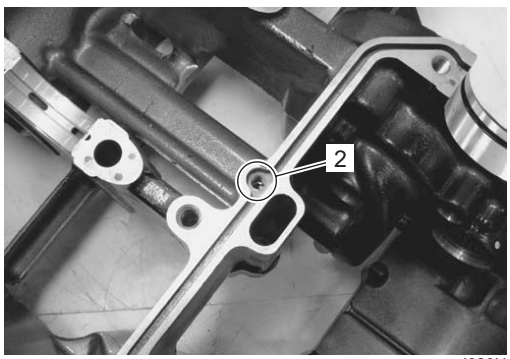

I823H1150036-01

Installation
Installation is in the reverse order of removal.

Oil Jet (For Generator)
Removal

1) Remove the generator cover. Refer to “Generator Removal and Installation in Section 1J (Page 1J-6)”.
2) Remove the oil jet (1) (for generator).

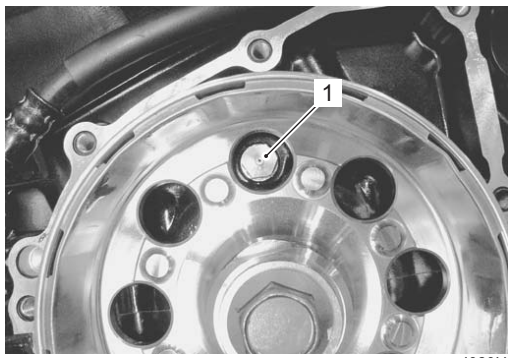

I823H1150037-01

Installation
Installation is in the reverse order of removal. Pay attention to the following point:

- Tighten the oil jet (for generator) to the specified torque.

  Tightening torque
  Oil jet (For generator) (a): 5 N·m (0.5 kgf-m, 3.5 lb-ft)

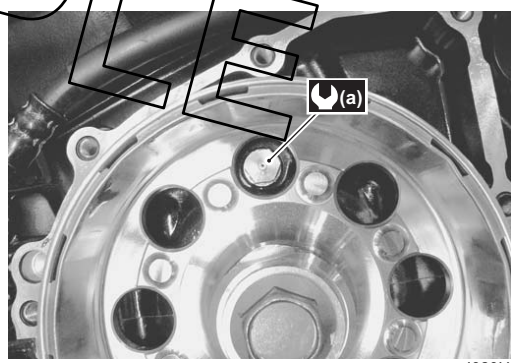

I823H1150038-01

SAMPLE

Oil Gallery Jet

Removal

1) Remove the oil filter. Refer to “Engine Oil and Filter Replacement in Section 0B (Page 0B-10)”.
2) Remove the oil gallery jet (1) from the lower crankcase.

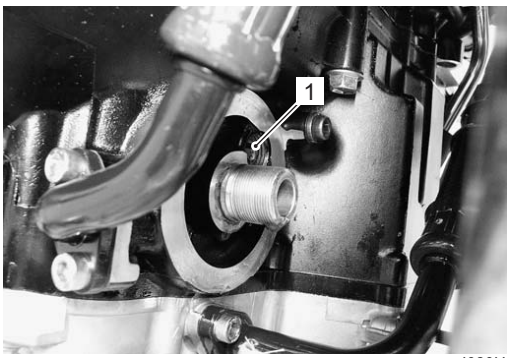

I823H1150045-01

Installation

Installation is in the reverse order of removal. Pay attention to the following point:

- Replace the oil filter with a new one. Refer to “Engine Oil and Filter Replacement in Section 0B (Page 0B-10)”.

Oil Jet / Oil Gallery Jet Inspection

B823H11506010

Refer to “Oil Jet / Oil Gallery Jet Removal and Installation (Page 1E-11)”.

SAMPLE

Oil Jet

Make sure that the oil jets are not clogged. If they are clogged, clean their oil passage using a wire of the proper size and compressed air.

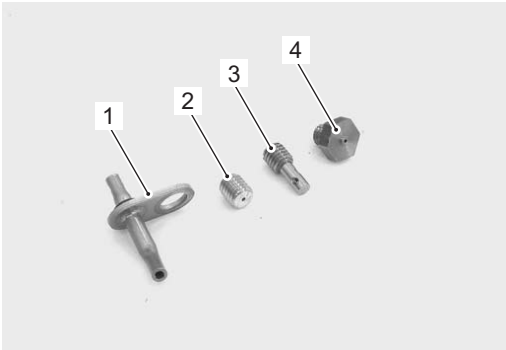

I823H1150040-01

1.	Piston cooling jet
2.	Oil jet (For transmission oil spray)
3.	Oil jet (For transmission)
4.	Oil jet (For generator)

Oil Gallery Jet

Inspect the oil gallery jet for clogging. Clean the oil gallery if necessary.

I823H1150041-01

Oil Pump Removal and Installation

B823H11506011

NOTE

Be careful not to drop any parts into the crankcase.

Removal

1) Drain engine oil. Refer to “Engine Oil and Filter Replacement in Section 0B (Page 0B-10)”.
2) Remove the clutch assembly. Refer to “Clutch Removal in Section 5C (Page 5C-15)”.
3) Remove the snap ring (1) and oil pump driven gear (2).

Special tool

TOOL : 09900–06107 (Snap ring pliers)

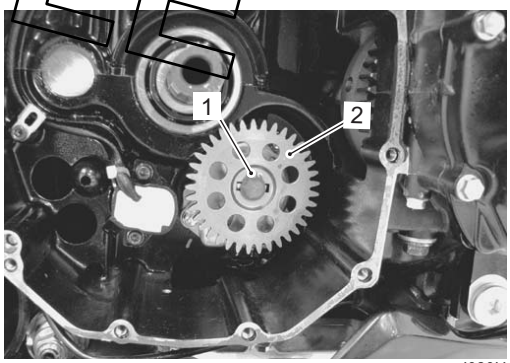

I823H1150017-01

4) Remove the pin (3) and washer (4).
5) Remove the oil pump (5).

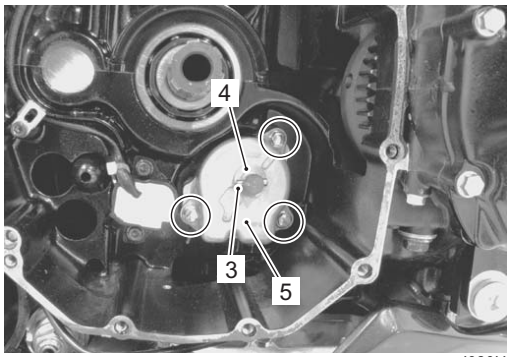

I823H1150018-01

Installation

Installation is in reverse order of removal. Pay attention to the following points:

- Apply grease to the O-ring.

⚠ CAUTION

Use a new O-ring to prevent oil leakage.

: Grease 99000–25010 (SUZUKI SUPER GREASE A or equivalent)

- Install the oil pump.

NOTE

Set the oil pump shaft end "A" to the water pump shaft.

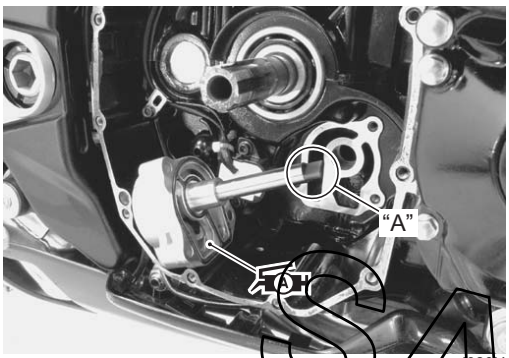

I823H1150019-01

- Tighten the oil pump mounting bolts (1) to the specified torque.

Tightening torque
Oil pump mounting bolt (a): 10 N·m (1.0 kgf-m, 7.0 lb-ft)

- Install the washer (2) and pin (3).

NOTE

Be careful not to drop any parts into the crankcase.

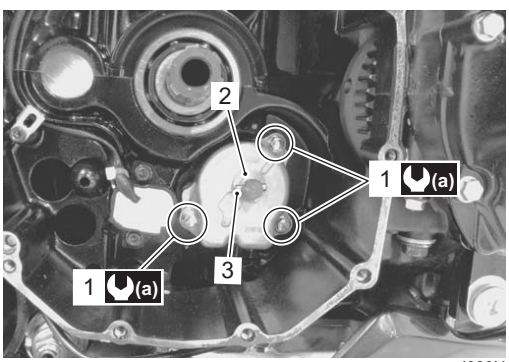

I823H1150020-02

- Install the oil pump driven gear (4) and snap ring (5).

⚠ CAUTION

Never reuse a snap ring.

Special tool

TOOL : 09900–06107 (Snap ring pliers)

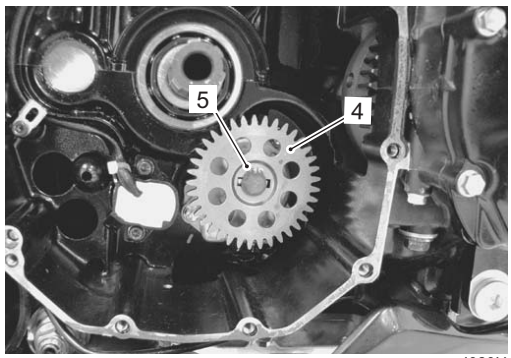

I823H1150021-02

- Install the clutch assembly. Refer to "Clutch Installation in Section 5C (Page 5C-17)".

Oil Pump Inspection

B823H11506012

Inspect the oil pump in the following procedures:

1) Remove the oil pump. Refer to "Oil Pump Removal and Installation (Page 1E-13)".
2) Rotate the oil pump by hand and check that it moves smoothly. If it does not move smoothly, replace the oil pump assembly.

⚠ CAUTION

Do not attempt to disassemble the oil pump. The oil pump is available only as an assembly.

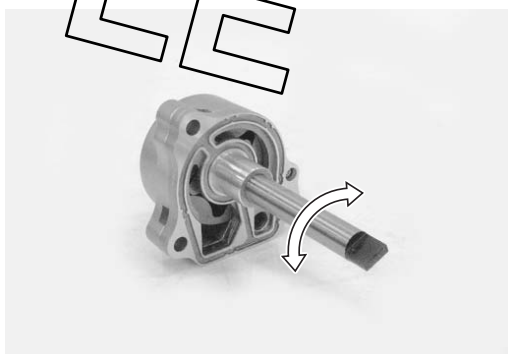

I823H1150022-02

3) Install the oil pump. Refer to "Oil Pump Removal and Installation (Page 1E-13)".

SAMPLE

Specifications

Service Data

B823H11507001

Oil Pump

Item	Standard	Limit
Oil pressure (at 60 °C, 140 °F)	200 – 500 kPa (2.0 – 5.0 kgf/cm^2, 28.4 – 71.1 psi) at 3 000 r/min	—

Oil

Item	Specification		Note
Engine oil type	SAE 10W-40, API SF/SG or SH/SJ with JASO MA		
Engine oil capacity	Change	3 100 ml (3.3/2.7 US/Imp qt)	
	Filter change	3 300 ml (3.5/2.9 US/Imp qt)	
	Overhaul	4 000 ml (4.2/3.5 US/Imp qt)	

Tightening Torque Specifications

B823H11507002

Fastening part	Tightening torque			Note
	N·m	kgf-m	lb-ft	
Main oil gallery plug (M16)	35	3.5	25.5	☞(Page 1E-6)
Oil cooler hose bolt	10	1.0	7.0	☞(Page 1E-10)
Oil pressure switch	14	1.4	10.0	☞(Page 1E-11)
Oil pressure switch lead wire bolt	1.5	0.15	1.1	☞(Page 1E-11)
Piston cooling oil jet bolt	10	1.0	7.0	☞(Page 1E-12)
Oil jet (For generator)	5	0.5	3.5	☞(Page 1E-12)
Oil pump mounting bolt	10	1.0	7.0	☞(Page 1E-14)

Reference:
For the tightening torque of fastener not specified in this section, refer to “Tightening Torque List in Section 0C (Page 0C-9)”.

SAMPLE

Special Tools and Equipment

Recommended Service Material

B823H11508001

Material	SUZUKI recommended product or Specification		Note
Grease	SUZUKI SUPER GREASE A or equivalent	P/No.: 99000–25010	☞(Page 1E-7) / ☞(Page 1E-14)
Sealant	SUZUKI Bond 1207B or equivalent	P/No.: 99000–31140	☞(Page 1E-11)
Thread lock cement	THREAD LOCK CEMENT SUPER 1322 or equivalent	P/No.: 99000–32110	☞(Page 1E-12)

Special Tool

B823H11508002

09900–06107 Snap ring pliers ☞(Page 1E-13) / ☞(Page 1E-14) 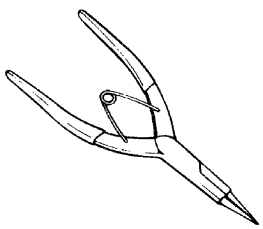	09915–74521 Oil pressure gauge hose ☞(Page 1E-5)
09915–74540 Oil pressure gauge attachment ☞(Page 1E-5) 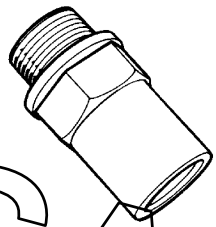	09915–77331 Meter (for high pressure) ☞(Page 1E-5)

SAMPLE

Engine Cooling System

Precautions

Precautions for Engine Cooling System

B823H11600001

⚠ WARNING

- **You can be injured by boiling fluid or steam if you open the radiator cap when the engine is hot. After the engine cools, wrap a thick cloth around cap and carefully remove the cap by turning it a quarter turn to allow pressure to escape and then turn the cap all the way off.**
- **The engine must be cool before servicing the cooling system.**
- **Coolant is harmful:**
  - **If it comes in contact with skin or eyes, flush with water.**
  - **If swallowed accidentally, induce vomiting and call physician immediately.**
  - **Keep it away from children.**

Precautions for Engine Coolant

B823H11600002

Refer to “Engine Coolant Recommendation in Section 0A (Page 0A-4)”.

General Description

Engine Coolant Description

B823H11601001

⚠ CAUTION

- **Use a high quality ethylene glycol base anti-freeze, mixed with distilled water. Do not mix an alcohol base anti-freeze and different brands of anti-freeze.**
- **Do not put in more than 60% anti-freeze or less than 50%. (Refer to Fig. 1 and 2.)**

At the time of manufacture, the cooling system is filled with a 50:50 mixture of distilled water and ethylene glycol anti-freeze. This 50:50 mixture will provide the optimum corrosion protection and excellent heat protection, and will protect the cooling system from freezing at temperatures above –31 °C (–24 °F).
If the vehicle is to be exposed to temperatures below –31 °C (–24 °F), this mixing ratio should be increased up to 55% or 60% according to the figure.

Anti-freeze Proportioning Chart

Anti-freeze density	Freezing point
50%	–31 °C (–24 °F)
55%	–40 °C (–40 °F)
60%	–55 °C (–67 °F)

Fig.1: Engine coolant density-freezing point curve

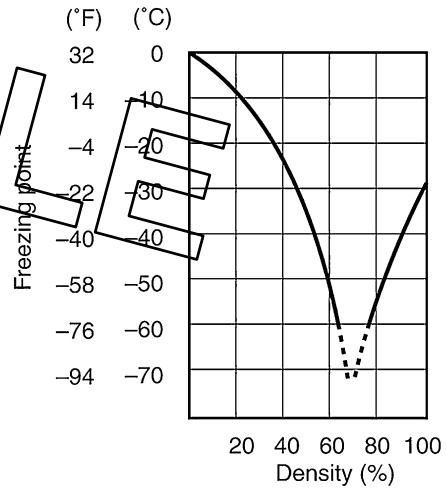

I310G1160001-01

Fig.2: Engine coolant density-boiling point curve

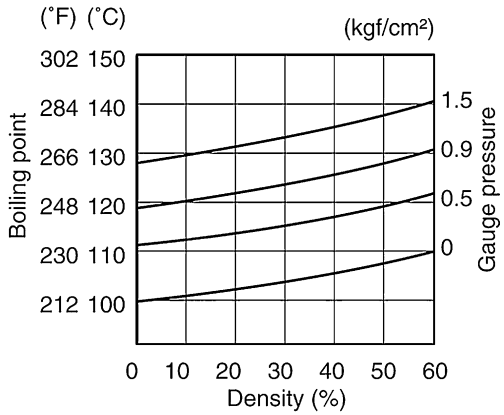

I310G1160002-01

SAMPLE

Schematic and Routing Diagram

Cooling Circuit Diagram

B823H11602001

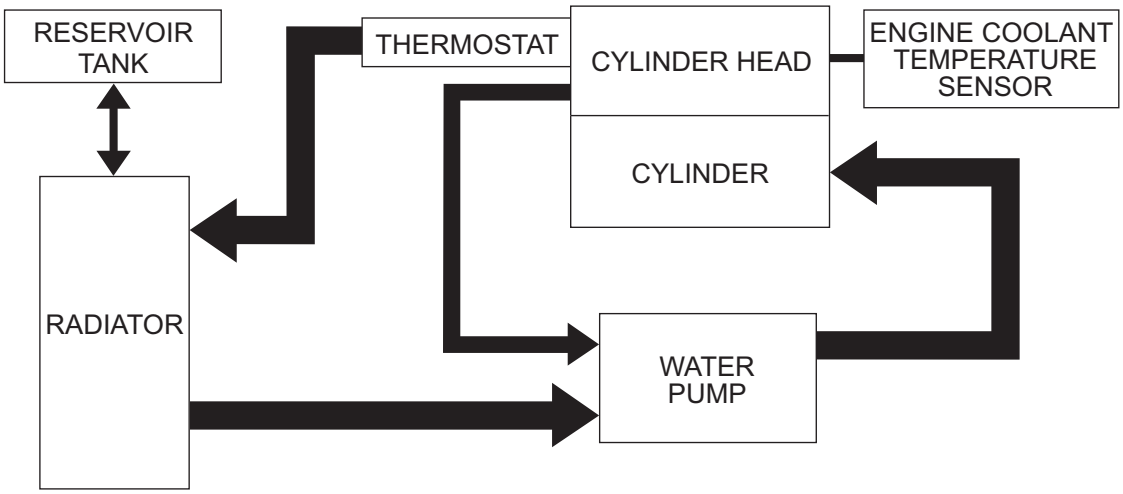

I823H1160001-01

SAMPLE

Water Hose Routing Diagram

B823H11602002

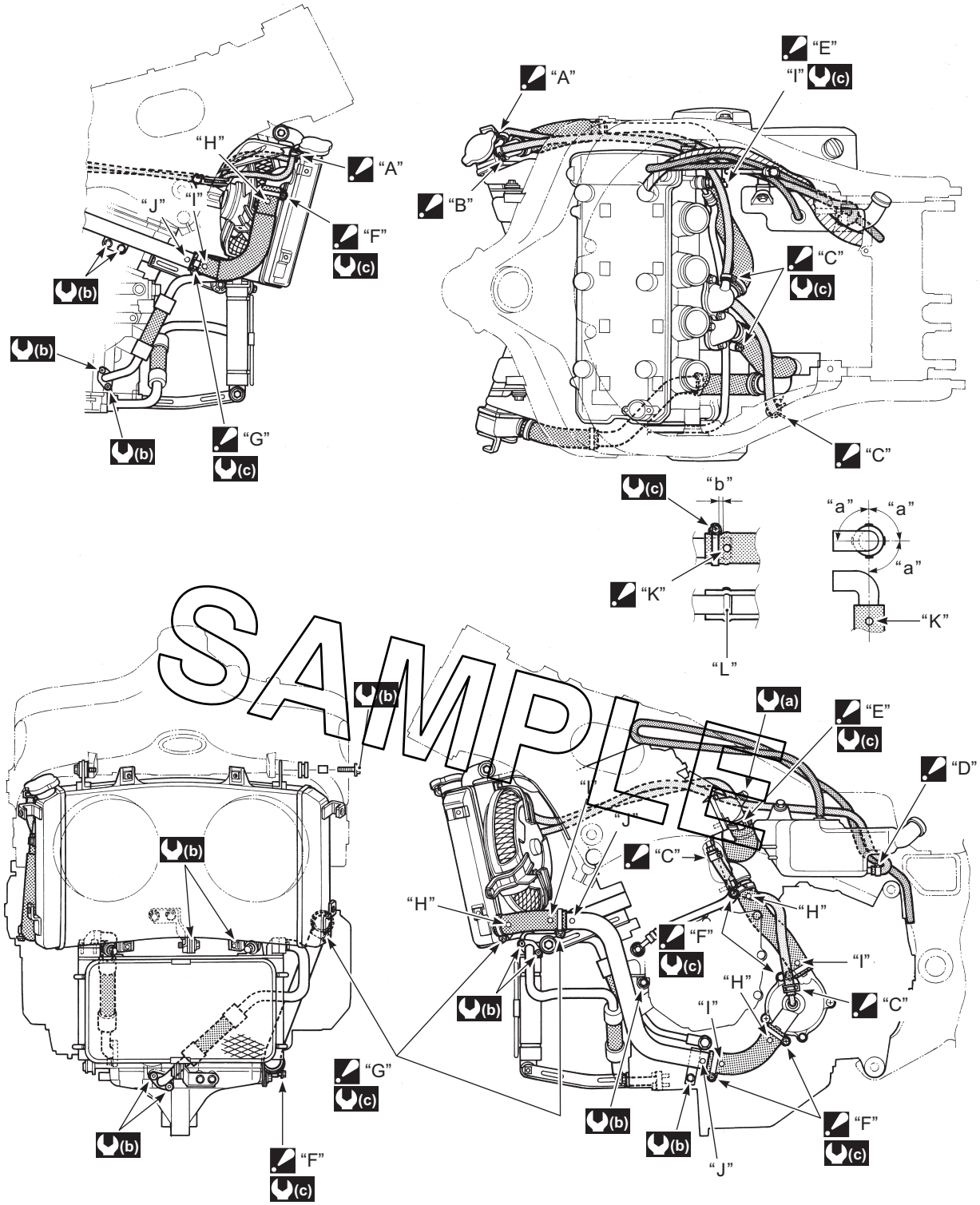

I823H1160002-06

"A": Clamp ends should face forward.	"J": Punched marking
"B": Clamp ends should face inside.	"K": Color paint marking position : Align the marking "K" with rib "L" of pipe.
"C": Clamp ends should face backward.	"L": Rib of pipe
"D": Clamp ends should face upside.	"a": 90°
"E": Clamp screw head should face backward.	"b": Keep a clearance.
"F": Clamp screw head should face outside.	(a) : 6 N·m (0.6 kgf-m, 4.5 lb-ft)
"G": Clamp screw head should face downside.	(b) : 10 N·m (1.0 kgf-m, 7.0 lb-ft)
"H": Yellow marking	(c) : 1.5 N·m (0.15 kgf-m, 1.0 lb-ft)
"I": White marking	

Diagnostic Information and Procedures

Engine Cooling Symptom Diagnosis

B823H11604001

Condition	Possible cause	Correction / Reference Item
Engine overheats	Not enough engine coolant.	*Add engine coolant.*
	Radiator core clogged with dirt or scale.	*Clean.*
	Faulty cooling fan.	*Repair or replace.*
	Defective cooling fan relay, or open-or-short circuited.	*Repair or replace.*
	Clogged water passage.	*Clean.*
	Air trapped in the cooling circuit.	*Bleed air.*
	Defective water pump.	*Replace.*
	Use of incorrect engine coolant.	*Replace.*
	Defective thermostat.	*Replace.*
	Defective ECT sensor.	*Replace.*
	Defective ECM.	*Replace.*
	Damaged ISC valve.	*Replace.*
	ISC bad learning.	*Reset learned value.*
Engine over cools	Defective cooling fan relay, or open-or-short circuited.	*Repair or replace.*
	Extremely cold weather.	*Put on radiator cover.*
	Defective thermostat.	*Replace.*
	Defective ECT sensor.	*Replace.*
	Defective ECM.	*Replace.*

SAMPLE

Repair Instructions

Cooling Circuit Inspection

B823H1160601

⚠ WARNING

- **Do not open the radiator cap when the engine is hot, as you may be injured by escaping hot liquid or vapor.**
- **When removing the radiator cap tester, put a rag on the filler to prevent the engine coolant from spraying out.**

Inspect the cooling circuit in the following procedures:

1) Remove the right frame body cover (1). Refer to “Exterior Parts Removal and Installation in Section 9D (Page 9D-14)”.

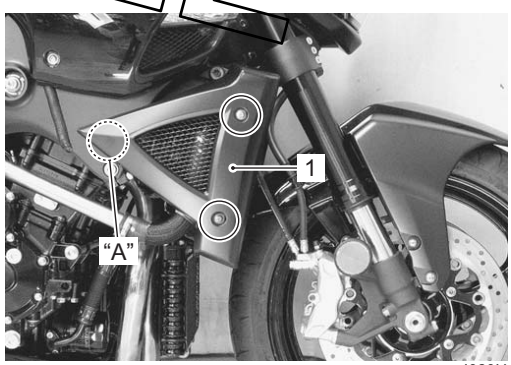

I823H1160003-01

“A”: Hooking point

2) Remove the radiator cap (2) and connect the radiator tester (3) to the filler.

3) Pressurize the cooling system with 110 kPa (1.1 kgf/cm, 15.6 psi) of pressure, and then check if it holds the pressure for 10 seconds.

⚠ CAUTION

Do not exceed the radiator cap release pressure, or the radiator cap and subsequently the radiator, can be damaged.

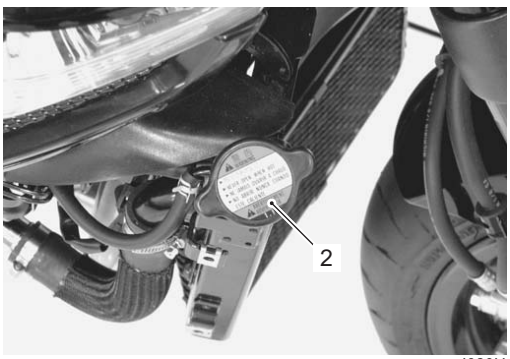

I823H1160004-01

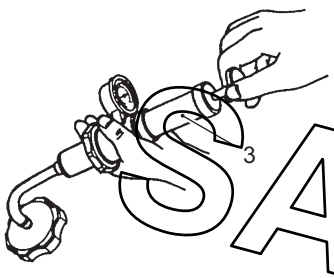

I823H1160005-01

4) After finishing the cooling circuit inspection, reinstall the removed parts.

Radiator Cap Inspection

B823H11606002

Inspect the radiator cap in the following procedures:

1) Remove the radiator cap. Refer to “Cooling Circuit Inspection (Page 1F-4)”.
2) Attach the radiator cap (1) to the radiator tester (2) as shown.

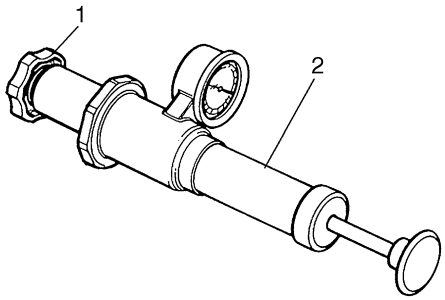

I718H1160033-01

3) Slowly apply pressure to the radiator cap.
   If the radiator cap does not hold the pressure for at least 10 seconds, replace it with a new one.

   Radiator cap release pressure
   93 – 123 kPa (0.93 – 1.23 kgf/cm^2, 13.2 – 17.5 psi)

4) After finishing the radiator cap inspection, reinstall the removed parts.

Radiator Inspection and Cleaning

B823H11606003

Radiator Hose

Refer to “Cooling System Inspection in Section 0B (Page 0B-13)”.

Radiator

Inspect the radiator for water leaks. If any defects are found, replace the radiator with a new one.
If the fins are bent or dented, repair them by carefully straightening them with the blade of a small screwdriver.

I823H1160006-01

SAMPLE

Radiator Cleaning

Blow out any foreign matter that is stuck in the radiator fins using compressed air.

⚠ CAUTION

- **Make sure not to bend the fins when using compressed air.**
- **If compressed air is applied from the front side, dirt will be forced into the pores of radiator.**

1) Remove the frame body covers. Refer to “Exterior Parts Removal and Installation in Section 9D (Page 9D-14)”.
2) Disconnect the cooling fan motor couplers (1).

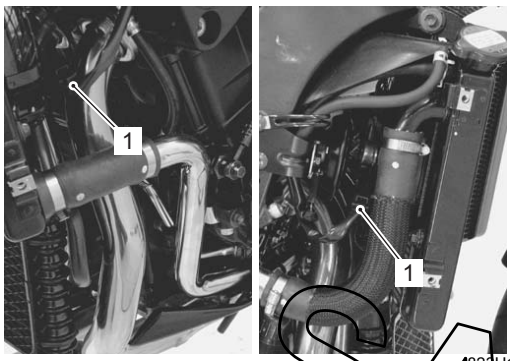

I823H1160054-01

3) Remove the radiator mounting bolts (2).

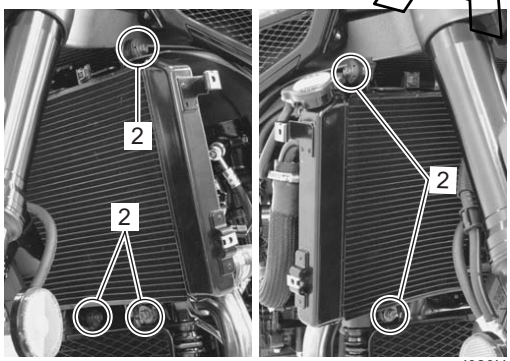

I823H1160055-02

4) Move the radiator forward.
5) Always apply compressed air from the engine side.

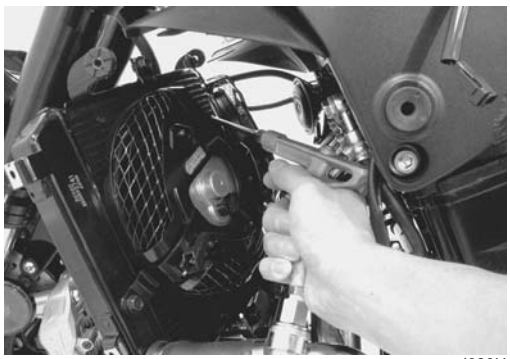

I823H1160056-01

6) Reinstall the removed parts.

Radiator / Cooling Fan Motor Removal and Installation

B823H11606004

Removal

1) Remove the frame body covers (1) and under cowling (2). Refer to “Exterior Parts Removal and Installation in Section 9D (Page 9D-14)”.

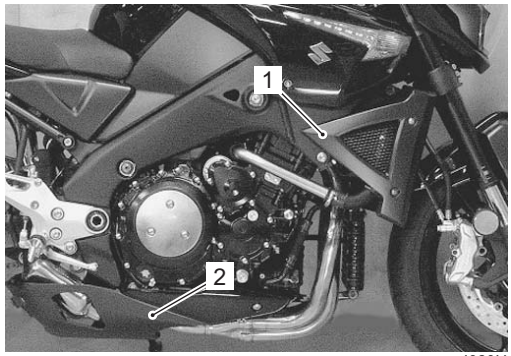

I823H1160008-01

2) Drain engine coolant. Refer to “Cooling System Inspection in Section 0B (Page 0B-13)”.
3) Disconnect the radiator inlet hose (3), reservoir tank hose (4), water air bleed hose (5) and cooling fan motor coupler (right) (6).

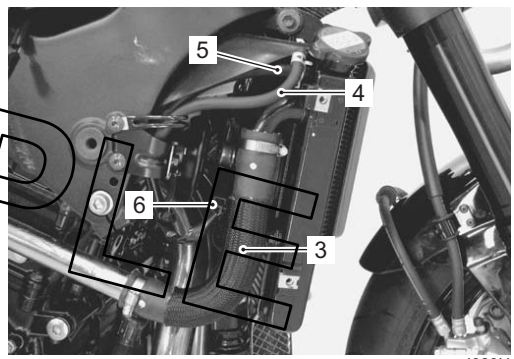

I823H1160009-01

4) Disconnect the cooling fan motor coupler (left) (7) and radiator outlet hose (8).

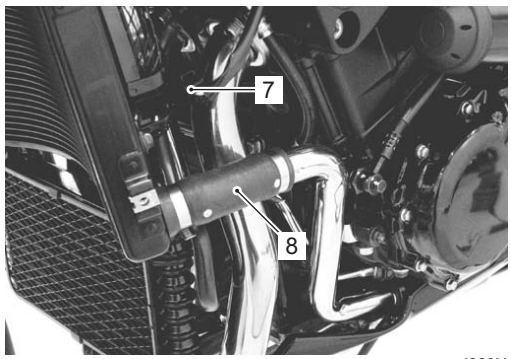

I823H1160010-01

SAMPLE

5) Remove the radiator assembly (9) by removing the bolts.

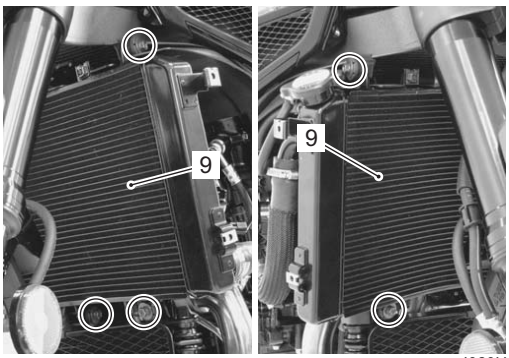

I823H1160011-01

6) Remove the cooling fan motors (10) from the radiator.

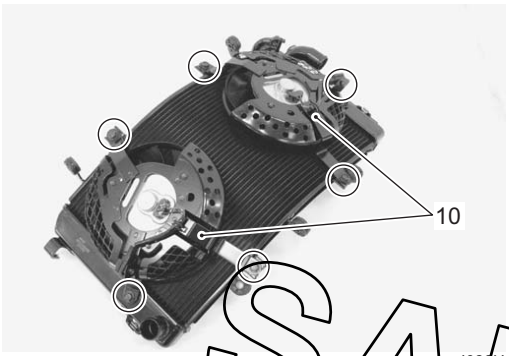

I823H1160012-01

SAMPLE

Installation

Install the radiator in the reverse order of removal. Pay attention to the following points:

- Connect the radiator hoses securely. Refer to “Water Hose Routing Diagram (Page 1F-3)”.
- Pour engine coolant. Refer to “Cooling System Inspection in Section 0B (Page 0B-13)”.
- Bleed air from the cooling circuit. Refer to “Cooling System Inspection in Section 0B (Page 0B-13)”.

Water Hose Inspection

B823H11606005

Inspect the water hoses in the following procedures:

1) Remove the frame body covers and under cowl. Refer to “Exterior Parts Removal and Installation in Section 9D (Page 9D-14)”.
2) Lift and support the fuel tank. Refer to “Fuel Tank Removal and Installation in Section 1G (Page 1G-10)”.
3) Check the water hoses for crack, damage or engine coolant leakage. If any defect is found, replace the radiator hose with a new one.
4) Any leakage from the connecting section should be corrected by proper tightening. Refer to “Water Hose Routing Diagram (Page 1F-3)”.

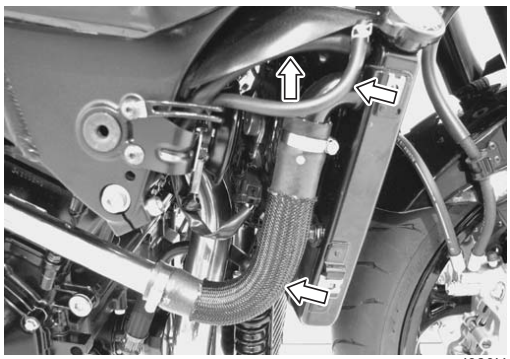

I823H1160013-01

I823H1160014-01

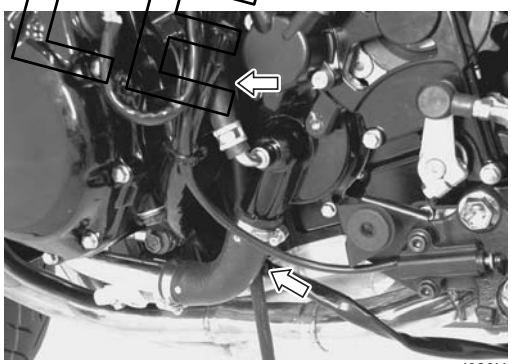

I823H1160057-01

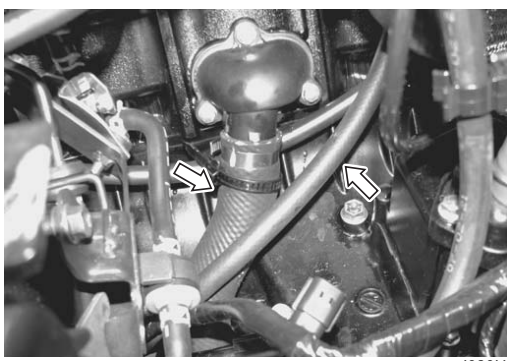

I823H1160015-01

5) After finishing the water hose inspection, reinstall the removed parts.

Water Hose Removal and Installation

B823H11606006

Removal

1) Remove the frame body cover and under cowl. Refer to “Exterior Parts Removal and Installation in Section 9D (Page 9D-14)”.
2) Drain engine coolant. Refer to “Cooling System Inspection in Section 0B (Page 0B-13)”.
3) Lift and support the fuel tank. Refer to “Fuel Tank Removal and Installation in Section 1G (Page 1G-10)”.
4) Remove the water hose as shown in the water hose routing diagram. Refer to “Water Hose Routing Diagram (Page 1F-3)”.

Installation

1) Install the water hose as shown in the water hose routing diagram. Refer to “Water Hose Routing Diagram (Page 1F-3)”.
2) Pour engine coolant and bleed air from the cooling circuit. Refer to “Cooling System Inspection in Section 0B (Page 0B-13)”.
3) Reinstall the fuel tank. Refer to “Fuel Tank Removal and Installation in Section 1G (Page 1G-10)”.
4) Install the frame body covers and under cowl. Refer to “Exterior Parts Removal and Installation in Section 9D (Page 9D-14)”.

SAMPLE

Radiator Reservoir Tank Removal and Installation

B823H11606008

Removal

1) Lift and support the fuel tank. Refer to “Fuel Tank Removal and Installation in Section 1G (Page 1G-10)”.
2) Disconnect the following couplers:
   - HO2 sensor coupler (1)
   - Rear brake switch coupler (2)
   - Oil pressure switch coupler (3)
   - Speed sensor coupler (4)
3) Remove the harness band (5).
4) Remove the reservoir tank bolt (6).

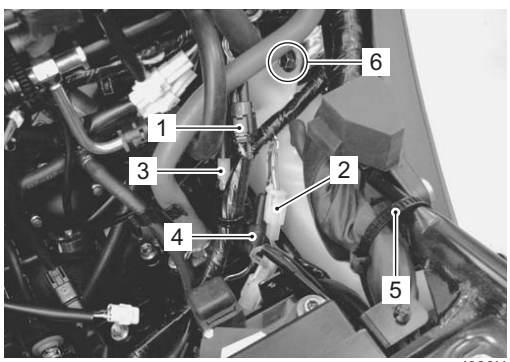

I823H1160016-01

5) After moving the reservoir tank (7) up, disconnect the reservoir hose (8).

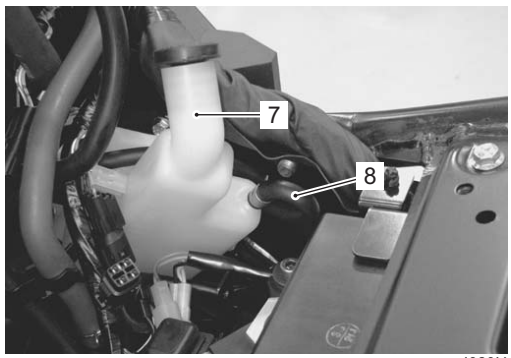

I823H1160017-01

6) Remove the reservoir tank and drain engine coolant.

Installation

Install radiator reservoir tank in the reverse order of removal. Pay attention to the following point:

- Fill the reservoir tank to the upper level “A”. Refer to “Cooling System Inspection in Section 0B (Page 0B-13)”.

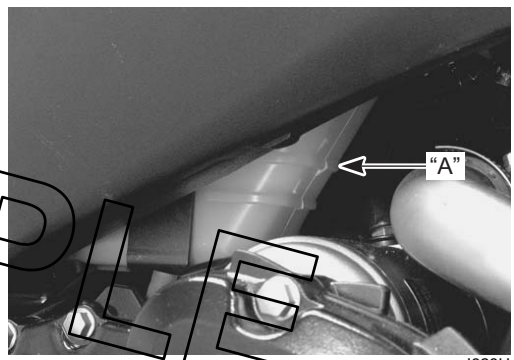

I823H1160018-01

“A”: Upper level

Radiator Reservoir Tank Inspection

B823H11606020

Inspect the radiator reservoir tank cooling leaks. If any defects are found, replace the radiator reservoir tank with a new one.

I823H1160019-01

Cooling Fan Inspection

B823H11606009

Cooling fan operating temperature
Standard
(ON → OFF): Approx. 100 °C (212 °F)
(OFF → ON): Approx. 105 °C (221 °F)

Inspect the cooling fan in the following procedures:

1) Disconnect the cooling fan motor couplers (1).

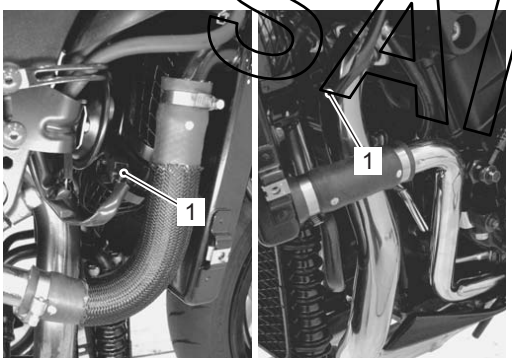

I823H1160020-01

2) Test the cooling fan motor for load current with an ammeter connected as shown in the figure.
If the fan motor does not turn, replace the cooling fan assembly with a new one. Refer to “Radiator / Cooling Fan Motor Removal and Installation (Page 1F-6)”.

NOTE

- **When making this test, it is not necessary to remove the cooling fan.**
- **The voltmeter is for making sure that the battery applies 12 V to the motor. With the fan motor with electric motor fan running at full speed, the ammeter should be indicating not more than 5 A.**

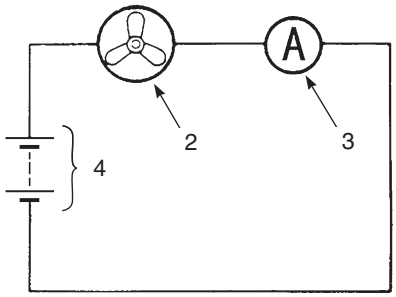

I718H1160048-01

2. Fan motor	3. Ammeter	4. Battery

3) Connect the cooling fan motor couplers.

SAMPLE

Cooling Fan Relay Inspection

B823H11606010

Inspect the fan relay in the following procedures:

1) Remove the seat. Refer to “Exterior Parts Removal and Installation in Section 9D (Page 9D-14)”.
2) Remove the cooling fan relay (1).

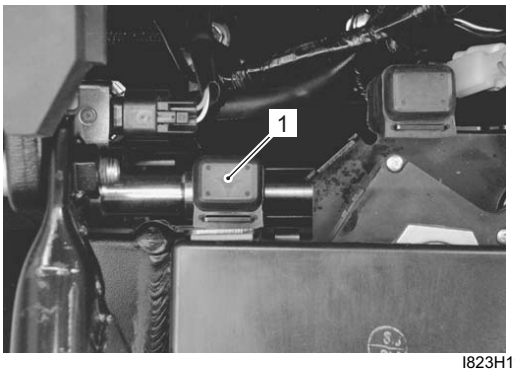

I823H1160021-01

3) First check the insulation between “A” and “B” terminals with tester. Then apply 12 volts to “C” and “D” terminals, (+) to “C” and (–) to “D”, and check the continuity between “A” and “B”.
   If there is no continuity, replace it with a new one.

   Special tool
   TOOL : 09900–25008 (Multi-circuit tester set)

   Tester knob indication set
   Continuity test (•))))

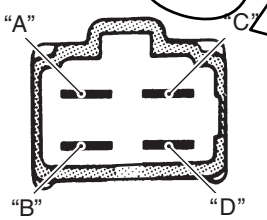

I718H1160006-03

4) Reinstall the removed parts.

ECT Sensor Removal and Installation

B823H11606011

Refer to “ECT Sensor Removal and Installation in Section 1C (Page 1C-5)”.

ECT Sensor Inspection

B823H11606012

Refer to “ECT Sensor Inspection in Section 1C (Page 1C-5)”.

Thermostat Cover / Thermostat Removal and Installation

B823H11606013

Removal

1) Drain a small amount of engine coolant. Refer to “Cooling System Inspection in Section 0B (Page 0B-13)”.
2) Lift and support the fuel tank. Refer to “Fuel Tank Removal and Installation in Section 1G (Page 1G-10)”.
3) Disconnect the water air bleed hose (1) and cylinder head outlet hose (2).

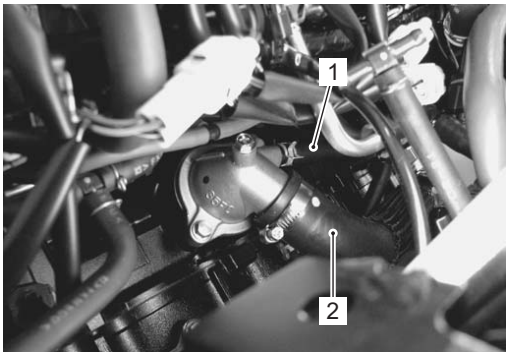

I823H1160022-01

4) After removing of the thermostat cover bolts (3), remove the thermostat cover (4).

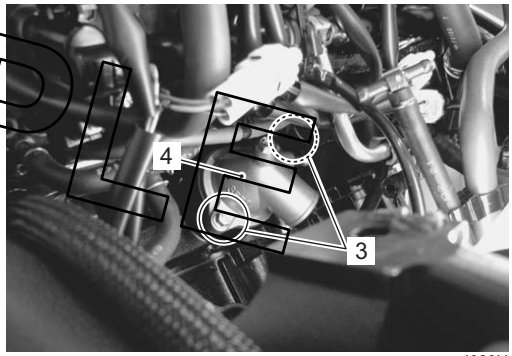

I823H1160023-01

5) Remove the thermostat (5).

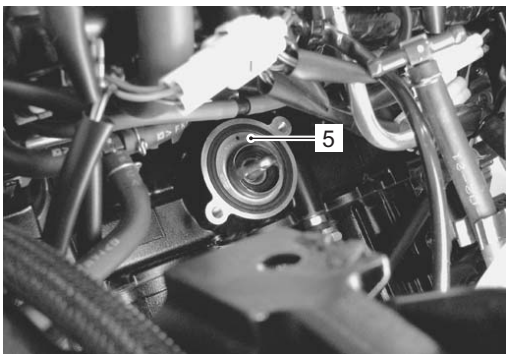

I823H1160024-01

SAMPLE

Installation

Install the thermostat in the reverse order of removal. Pay attention to the following points:

- Install the thermostat.

NOTE

The jiggle valve "A" of the thermostat faces upside.

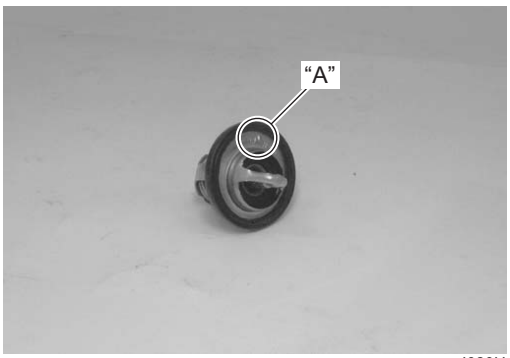

I823H1160025-01

- Tighten the thermostat cover bolts (1) to the specified torque.

Tightening torque
Thermostat cover bolt (a): 10 N·m (1.0 kgf-m, 7.0 lb-ft)

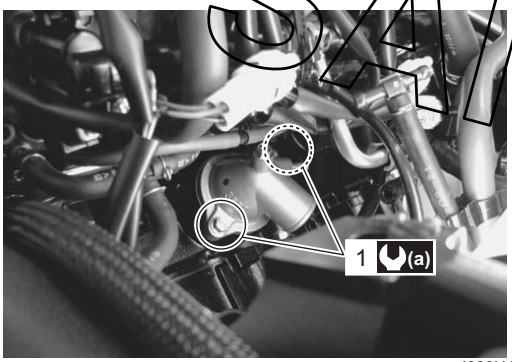

I823H1160026-01

- Connect the water hoses securely. Refer to "Water Hose Routing Diagram (Page 1F-3)".
- Pour engine coolant and bleed air from the cooling circuit. Refer to "Cooling System Inspection in Section 0B (Page 0B-13)".

Thermostat Inspection

B823H11606014

Inspect the thermostat in the following procedures:

1) Remove the thermostat. Refer to "Thermostat Cover / Thermostat Removal and Installation (Page 1F-10)".
2) Inspect the thermostat pellet for signs of cracking.

I823H1160027-01

3) Test the thermostat at the bench for control action.

⚠ CAUTION

- **Do not contact the thermostat (1) and column thermometer (2) with a pan.**
- **As the thermostat operating response to water temperature change is gradual, do not raise water temperature too quickly.**
- **The thermostat with its valve open even slightly under normal temperature must be replaced.**

4) Immerse the thermostat (1) in the water contained in a beaker and note that the immersed thermostat is in suspension.
5) Heat the water by placing the beaker on a stove and observe the rising temperature on a thermometer (2).

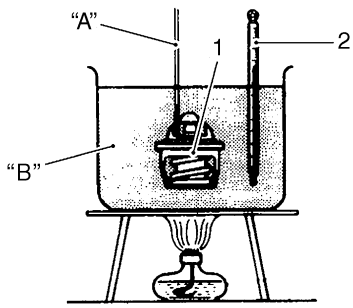

I705H1160030-03

"A": String	"B": Water

SAMPLE

6) Read the thermometer just when opening the thermostat. If this reading, which is the temperature level at which the thermostat valve begins to open, is out of the standard value, replace the thermostat with a new one.

Thermostat valve opening temperature
Standard: Approx. 82 °C (180 °F)

7) Keep on heating the water to raise its temperature.

8) Just when the water temperature reaches specified value, the thermostat valve should have been lifted by at least 8 mm (0.31 in). A thermostat failing to satisfy either of the two requirements (start-to-open temperature and valve lift) must be replaced.

Thermostat valve lift "a"
Standard: Over 8 mm (0.31 in) and at 95 °C (203 °F)

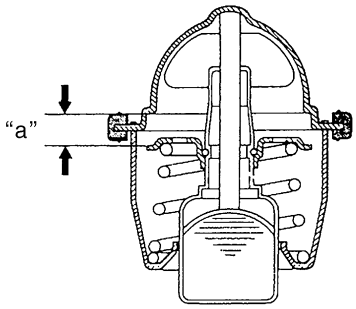

I705H1160031-04

9) Install the thermostat. Refer to "Thermostat Cover / Thermostat Removal and Installation (Page 1F-10)".

Water pump Components

B823H11606015

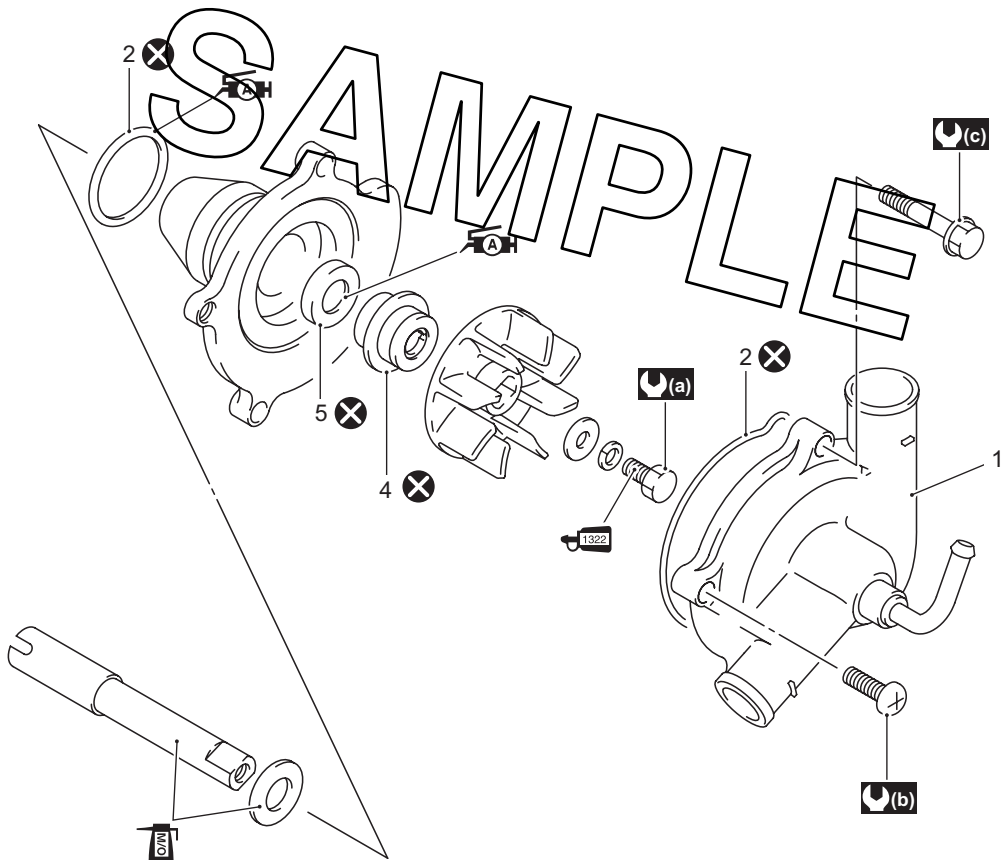

I823H1160058-03

1. Water pump case	(a) : 8 N·m (0.8 kgf-n, 6.0 lb-ft)	MO : Apply molybudenum oil solution.
2. O-ring	(b) : 6 N·m (0.6 kgf-n, 4.5 lb-ft)	1322 : Apply thread lock.
3. Impeller	(c) : 10 N·m (1.0 kgf-n, 7.0 lb-ft)	⊗ : Do not reuse.
4. Mechanical seal	A : Apply grease.	
5. Oil seal	LLC : Apply engine coolant.	

Water Pump Construction

B823H11606016

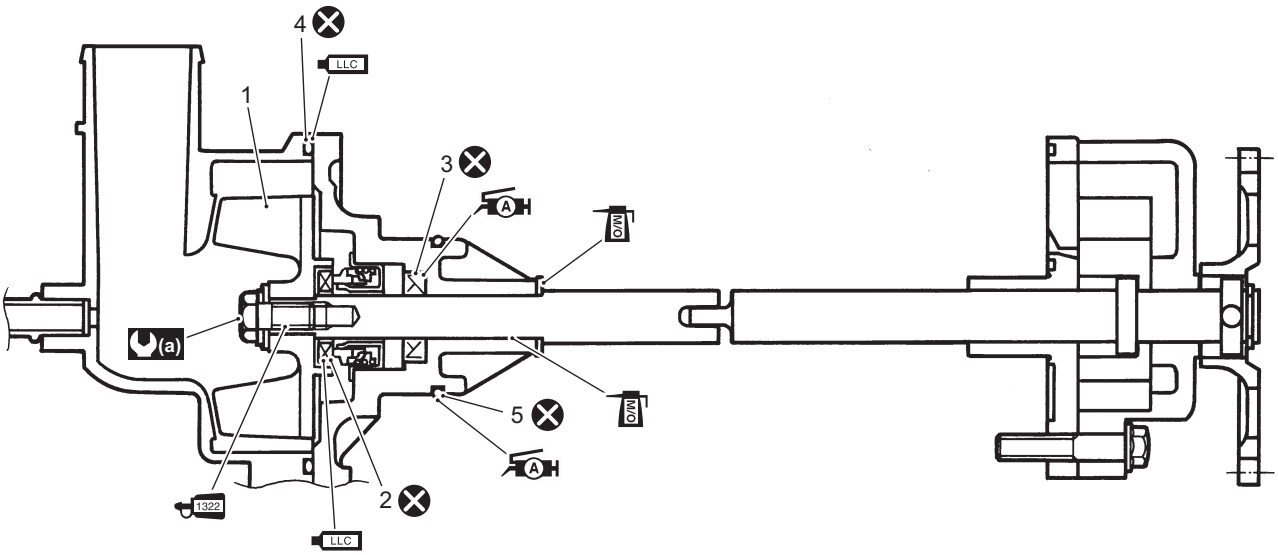

I823H1160028-03

1. Impeller	5. O-ring	1322 : Apply thread lock.
2. Mechanical seal	(a) : 8 N·m (0.8 kgf-m, 6.0 lb-ft)	M/O : Apply molybudenum oil solution.
3. Oil seal	A : Apply grease.	✕ : Do not reuse.
4. O-ring	LLC : Apply engine coolant.	

Water Pump Removal and Installation

B823H11606017

Removal

NOTE

Before draining engine oil and engine coolant, inspect engine oil and coolant leakage between the water pump and crankcase. If engine oil is leaking, visually inspect the oil seal and O-ring. If engine coolant is leaking, visually inspect the mechanical seal and seal washer. Refer to "Water Pump Related Parts Inspection (Page 1F-17)".

1) Drain engine oil and coolant. Refer to "Engine Oil and Filter Replacement in Section 0B (Page 0B-10)" and "Cooling System Inspection in Section 0B (Page 0B-13)".
2) Remove the engine sprocket covers, outer and inner. Refer to "Engine Sprocket Removal and Installation in Section 3A (Page 3A-2)".
3) Disconnect the water bypass hose (1), water pump inlet hose (2) and cylinder inlet hose (3).

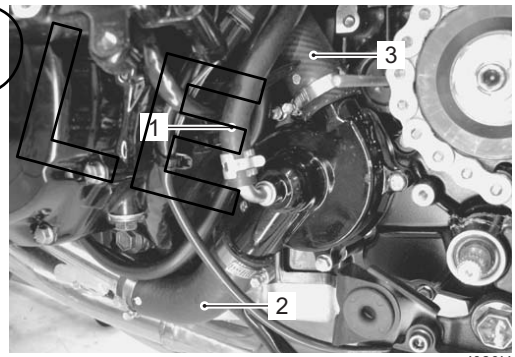

I823H1160029-01

4) Remove the water pump (4).

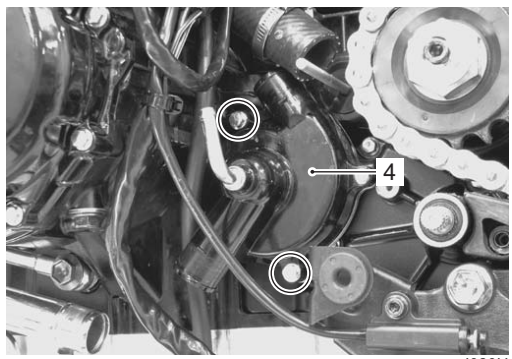

I823H1160030-01

SAMPLE

Installation

Install the water pump in the reverse order of removal. Pay attention to the following points:

- Apply grease to the O-ring.

⚠ CAUTION

Replace the O-ring with the a new one.

: Grease 99000–25010 (SUZUKI SUPER GREASE A or equivalent)

- Install the water pump assembly with the slot on the pump shaft end “A” securely engaged with the flat “B” on the oil pump shaft.

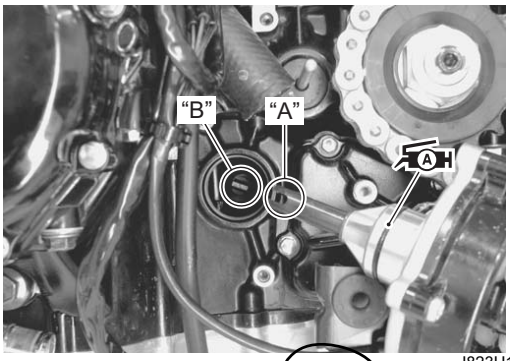

I823H1160031-01

- Tighten the water pump mounting bolts (1) to the specified torque.

Tightening torque
Water pump mounting bolt (a): 10 N·m (1.0 kgf-m, 7.0 lb-ft)

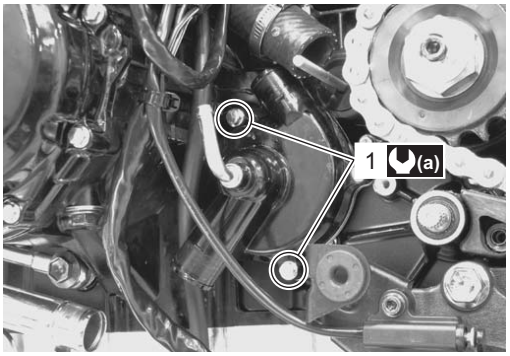

I823H1160032-01

- Connect the water hoses securely. Refer to “Water Hose Routing Diagram (Page 1F-3)”.
- Pour engine oil and coolant. Refer to “Engine Oil and Filter Replacement in Section 0B (Page 0B-10)” and “Cooling System Inspection in Section 0B (Page 0B-13)”.
- Bleed air from the cooling circuit. Refer to “Cooling System Inspection in Section 0B (Page 0B-13)”.

Water Pump Disassembly and Assembly

B823H11606018

Refer to “Water Pump Removal and Installation (Page 1F-13)”.

Disassembly

1) Remove the water pump case (1).

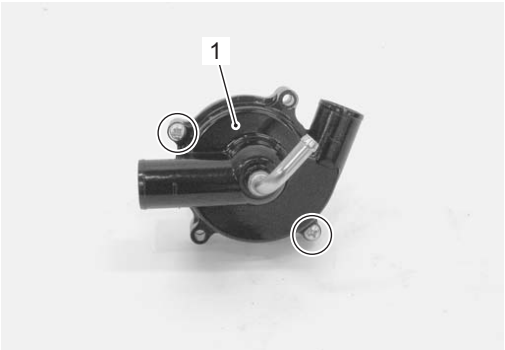

I823H1160033-01

2) Remove the impeller securing bolt by holding the impeller (2) with a water pump pliers.

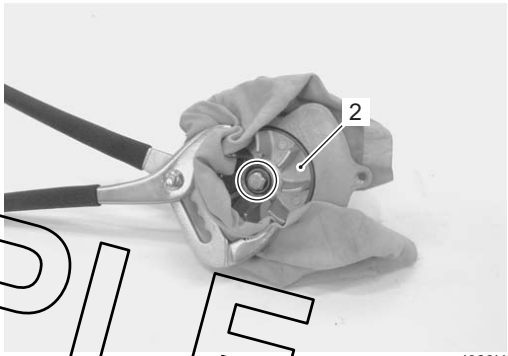

I823H1160034-01

3) Remove the mechanical seal ring (3) and rubber seal (4) from the impeller.

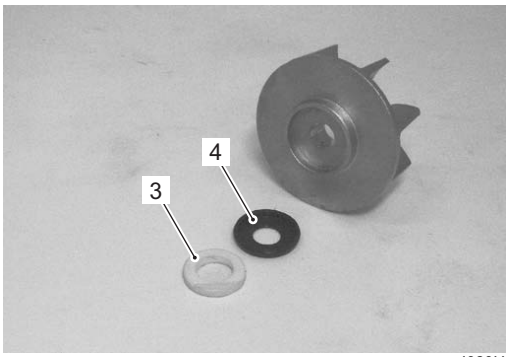

I823H1160035-01

SAMPLE

4) Remove the impeller shaft (5) and washer (6) from the water pump body.

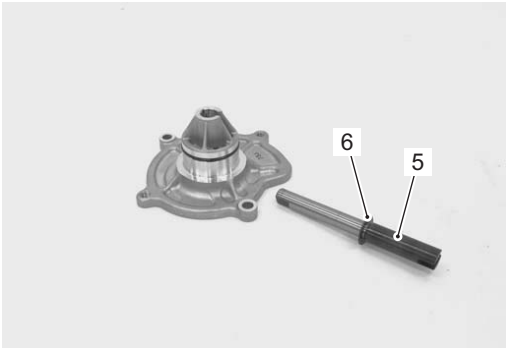

I823H1160036-01

5) Remove the mechanical seal with the special tool.

NOTE

If there is no abnormal condition, the mechanical seal removal is not necessary.

Special tool
(A): 09921–20240 (Bearing remover set)

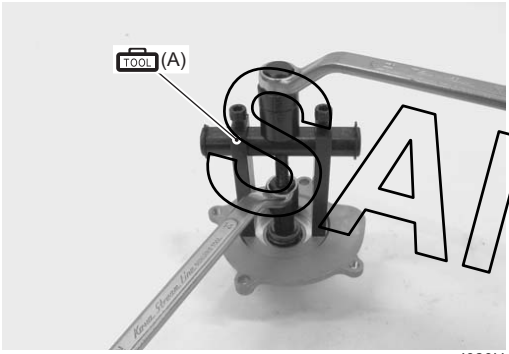

I823H1160037-02

6) Remove the oil seal.

NOTE

If there is no abnormal condition, the oil seal removal is not necessary.

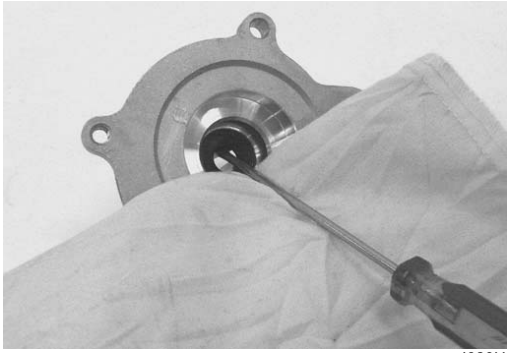

I823H1160038-02

Assembly

1) Install the oil seal with the special tool.

⚠ CAUTION

The removed oil seal must be replaced with a new one.

NOTE

The stamped mark on the oil seal should face mechanical seal side.

Special tool
(A): 09913–70210 (Bearing installer set)

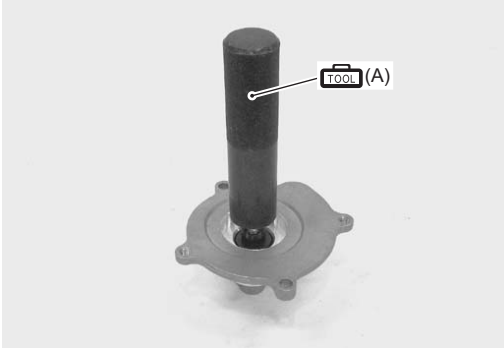

I823H1160039-01

2) Apply a small quantity of the grease to the oil seal lip.

: Grease 99000–25010 (SUZUKI SUPER GREASE A or equivalent)

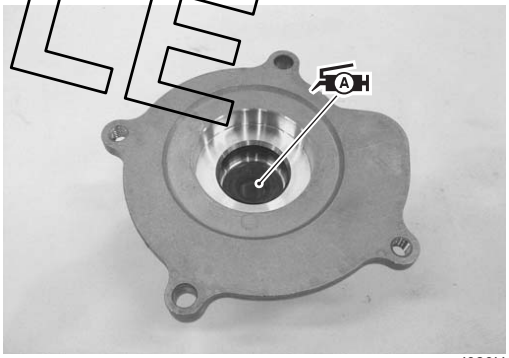

I823H1160040-01

SAMPLE

3) Install a new mechanical seal using a suitable size socket wrench.

⚠ CAUTION

The removed mechanical seal must be replaced with a new one.

NOTE

On new mechanical seals, the sealer "A" has been applied.

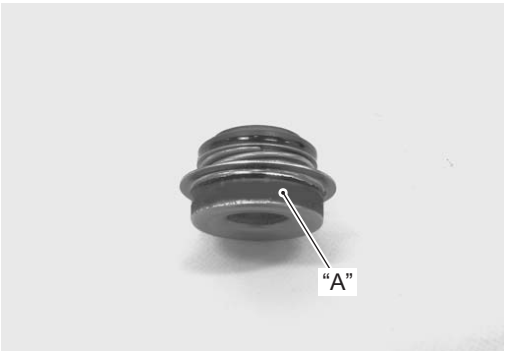

I823H1160041-01

I823H1160042-01

4) Apply molybudenum solution to the impeller shaft (1) and washer (2).

M/O: Moly paste 99000–25140 (SUZUKI MOLY PASTE or equivalent)

5) Install the impeller shaft (1) and washer (2) to the water pump body.

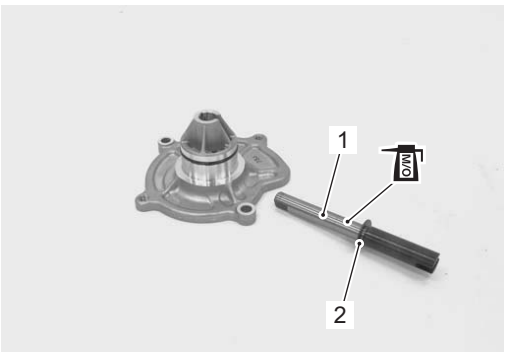

I823H1160043-03

6) Install the rubber seal (3) into the impeller (4).

7) After wiping off the oily or greasy matter from the mechanical seal ring (5), install it into the impeller.

NOTE

The paint marked side "B" of mechanical seal ring faces the rubber seal.

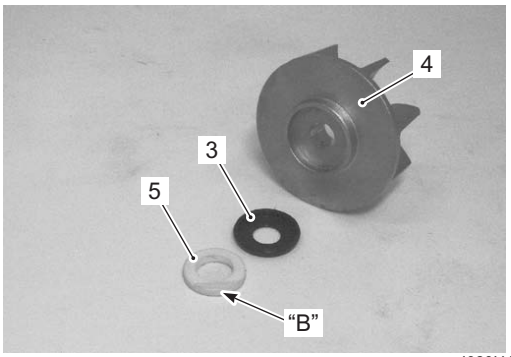

I823H1160044-02

8) Install the washer (6) and seal washer (7) onto the impeller securing bolt.

NOTE

The metal side "C" of seal washer and the curved side "D" of washer face the impeller securing bolt head.

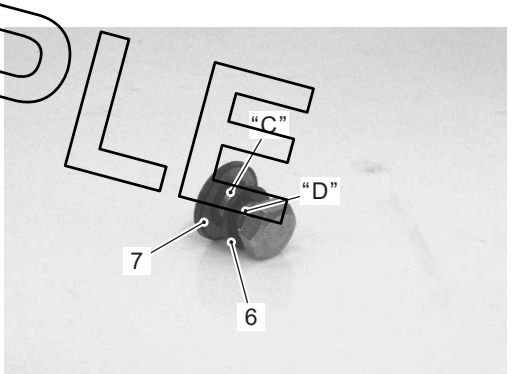

I823H1160045-03

9) Install the impeller and tighten the impeller securing bolt (8) to the specified torque.

Tightening torque
Impeller securing bolt (a): 8 N·m (0.8 kgf-m, 6.0 lb-ft)

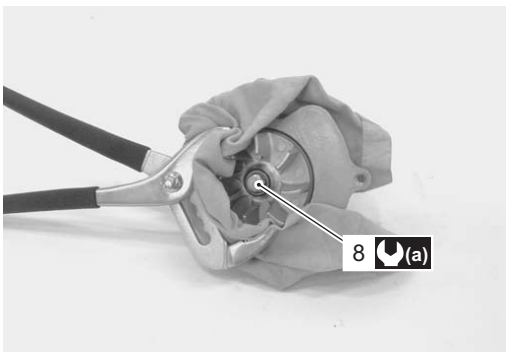

I823H1160046-01

SAMPLE

10) Install new O-ring (9) and (10).

⚠ CAUTION

Use new O-ring to prevent engine coolant or oil leakage.

NOTE

- **Apply engine coolant to the O-ring (9).**
- **Apply grease to the O-ring (10).**

: Grease 99000–25010 (SUZUKI SUPER GREASE A or equivalent)

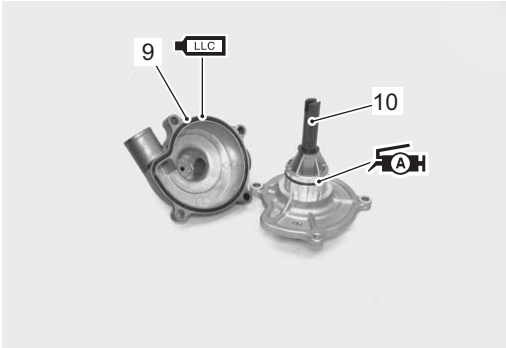

I823H1160047-03

11) Fit the water pump case and tighten the water pump case screws (11) to the specified torque.

Tightening torque
Water pump case screw (b): 6 N·m (0.6 kgf-m, 4.5 lb-ft)

I823H1160048-01

Water Pump Related Parts Inspection

B823H11606019

Refer to “Water Pump Disassembly and Assembly (Page 1F-14)”.

Mechanical Seal

Visually inspect the mechanical seal for damage, with particular attention given to the sealing face.
Replace the mechanical seal that shows indications of leakage.

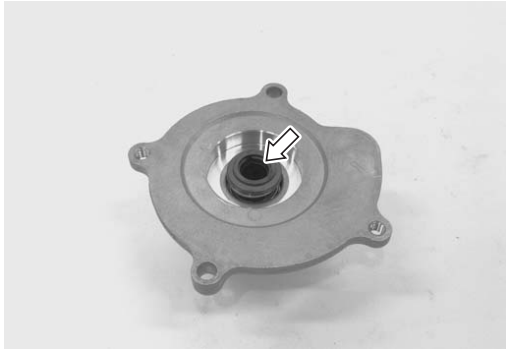

I823H1160049-01

Oil Seal

Visually inspect the oil seal for damage, with particular attention given to the lip.
Replace the oil seal that shows indications of leakage.

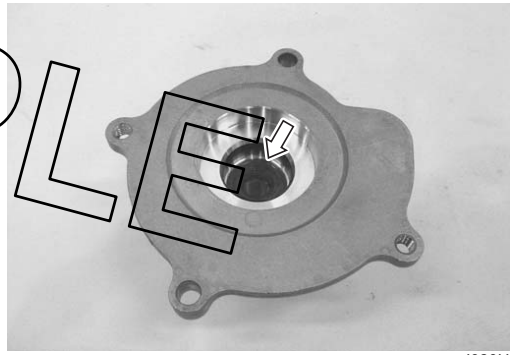

I823H1160050-01

Seal Washer

Visually inspect the seal washer for damage, with particular attention given to the sealing face.
Replace the seal washer that shows indications of leakage.

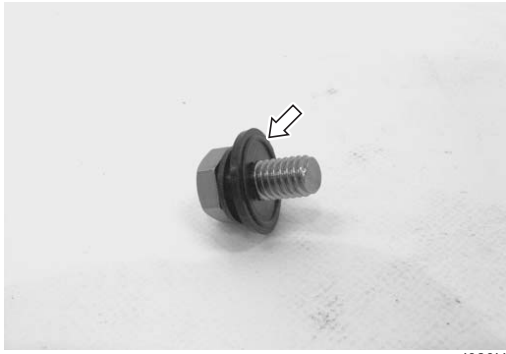

I823H1160051-01

SAMPLE

Impeller / Shaft
Visually inspect the impeller and its shaft for damage. Replace the impeller or shaft if necessary.

I823H1160052-01

Impeller Shaft Journal
Visually inspect the journal for damage or scratch. Replace the water pump body if necessary.

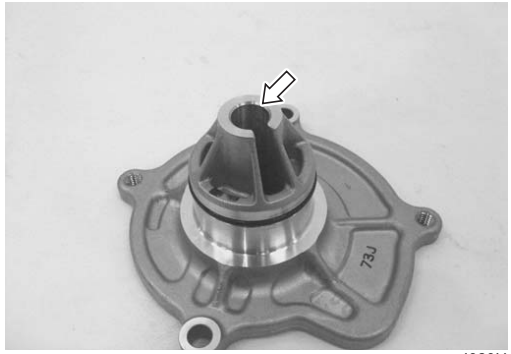

I823H1160053-01

Specifications

Service Data

B823H11607001

Thermostat + Radiator + Fan + Coolant

Item		Specification	Note
Thermostat valve opening temperature		Approx. 82 °C (180 °F)	—
Thermostat valve lift		Over 8 mm (0.31 in) and at 95 °C (203 °F)	—
ECT sensor resistance	20 °C (68 °F)	Approx. 2.45 kΩ	—
	50 °C (122 °F)	Approx. 0.811 kΩ	—
	80 °C (176 °F)	Approx. 0.318 kΩ	—
	110 °C (230 °F)	Approx. 0.142 kΩ	—
Radiator cap valve opening pressure		93 – 123 kPa (0.93 – 1.23 kgf/cm^2, 13.2 – 17.5 psi)	—
Cooling fan thermo-switch operating temperature	OFF → ON	Approx. 105 °C (221 °F)	—
	ON → OFF	Approx. 100 °C (212 °F)	—
Engine coolant type		Use an anti-freeze/coolant compatible with aluminum radiator, mixed with distilled water only, at the ratio of 50:50.	—
Engine coolant including reserve	Reserve tank side	Approx. 250 ml (0.3/0.2 US/Imp qt)	—
	Engine side	Approx. 2 650 ml (2.8/2.3 US/Imp qt)	—

SAMPLE

Tightening Torque Specifications

B823H11607002

Fastening part	Tightening torque			Note
	N·m	kgf-m	lb-ft	
Thermostat cover bolt	10	1.0	7.0	☞(Page 1F-11)
Water pump mounting bolt	10	1.0	7.0	☞(Page 1F-14)
Impeller securing bolt	8	0.8	6.0	☞(Page 1F-16)
Water pump case screw	6	0.6	4.5	☞(Page 1F-17)

NOTE

The specified tightening torque is also described in the following.
“Water Hose Routing Diagram (Page 1F-3)”
“Water pump Components (Page 1F-12)”
“Water Pump Construction (Page 1F-13)”

Reference:
For the tightening torque of fastener not specified in this section, refer to “Tightening Torque List in Section 0C (Page 0C-9)”.

Special Tools and Equipment

Recommended Service Material

B823H11608001

Material	SUZUKI recommended product or Specification		Note
Grease	SUZUKI SUPER GREASE A or equivalent	P/No.: 99000–25010	☞(Page 1F-14) / ☞(Page 1F-15) / ☞(Page 1F-17)
Moly paste	SUZUKI MOLY PASTE or equivalent	P/No.: 99000–25140	☞(Page 1F-16)

SAMPLE

NOTE

Required service material is also described in the following.
“Water pump Components (Page 1F-12)”
“Water Pump Construction (Page 1F-13)”

Special Tool

B823H11608002

09900–25008 Multi-circuit tester set ☞(Page 1F-10) 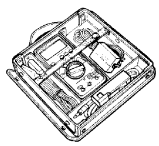	09913–70210 Bearing installer set ☞(Page 1F-15) 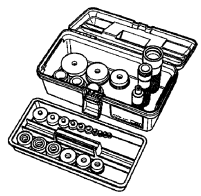
09921–20240 Bearing remover set ☞(Page 1F-15) 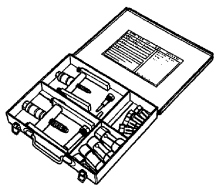	

Fuel System

Precautions

Precautions for Fuel System

B823H11700001

⚠ WARNING

- **Keep away from fire or spark.**
- **During disassembling, use care to minimize spillage of gasoline.**
- **Spilled gasoline should be wiped off immediately.**
- **Work in a well-ventilated area.**
- **For California models, drain fuel from the fuel tank before disconnecting the fuel feed hose to prevent fuel leakage.**

⚠ CAUTION

- **To prevent the fuel system (fuel tank, fuel hose, etc.) from contamination with foreign particles, blind all openings.**
- **After removing the throttle body, tape the cylinder intake section to prevent foreign particles from entering.**

SAMPLE

General Description

Fuel Injection System Description

B823H11701001

Fuel System

The fuel delivery system consists of the fuel tank (1), fuel pump (2), fuel filters (3) and (4), fuel feed hose (5), fuel delivery pipes (6) including fuel injectors (7) and (8), fuel pressure regulator (9). There is no fuel return hose. The fuel in the fuel tank is pumped up by the fuel pump and pressurized fuel flows into the injectors installed in the fuel delivery pipe. Fuel pressure is regulated by the fuel pressure regulator. As the fuel pressure applied to the fuel injectors (the fuel pressure in the fuel delivery pipe) is always kept at absolute fuel pressure of 300 kPa (3.0 kgf/cm^2, 43 psi), the fuel is injected into the throttle body in conic dispersion when the injector opens according to the injection signal from the ECM.

The fuel relieved by the fuel pressure regulator flows back to the fuel tank.

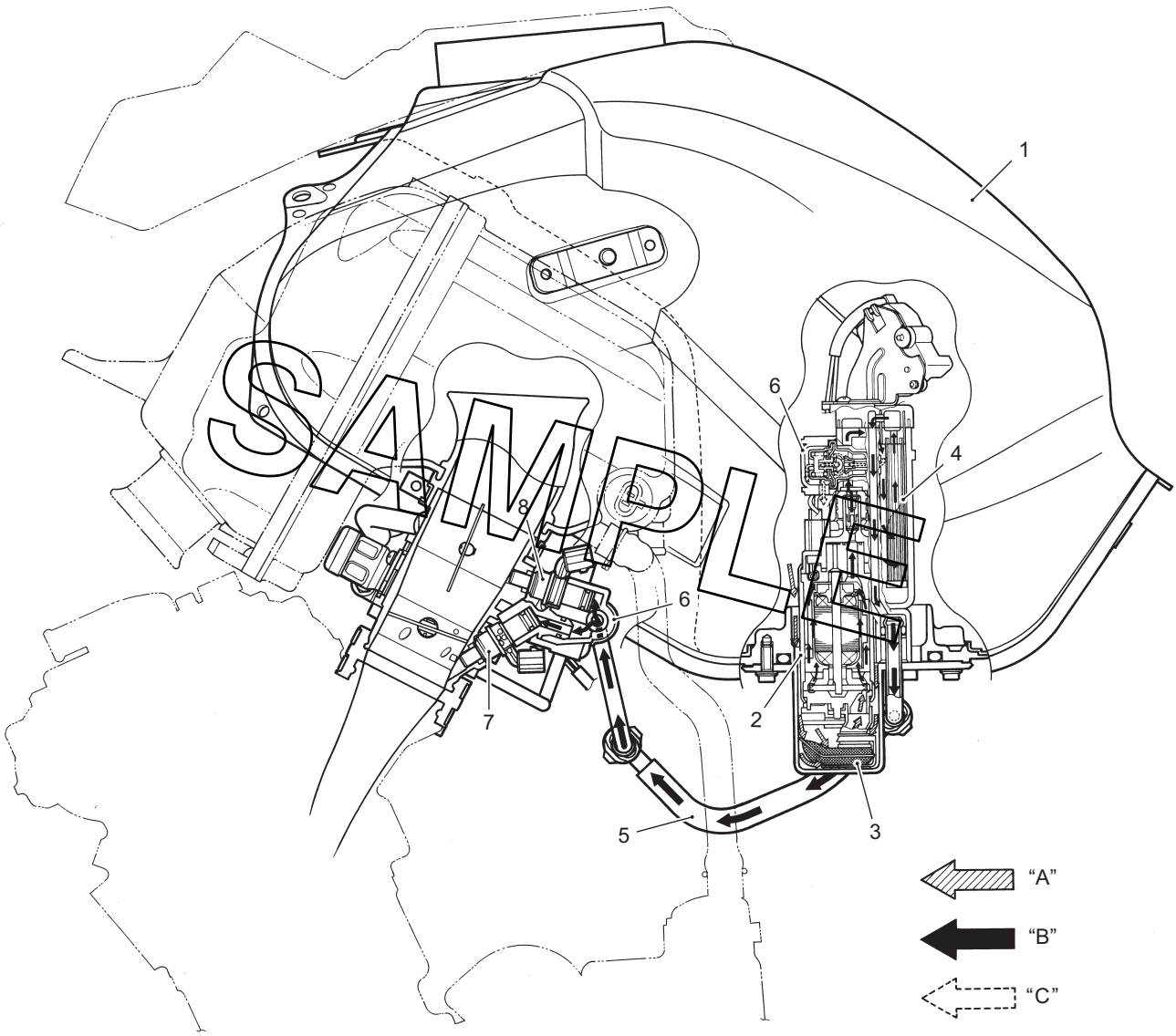

SAMPL

I823H1170028-03

1. Fuel tank	7. Primary fuel injector
2. Fuel pump	8. Secondary fuel injector
3. Fuel mesh filter (For low pressure)	9. Fuel pressure regulator
4. Fuel filter (For high pressure)	"A": Before-pressurized fuel
5. Fuel feed hose	"B": Pressurized fuel
6. Fuel delivery pipe	"C": Relieved fuel

Schematic and Routing Diagram

Fuel Tank Drain Hose and Breather Hose Routing Diagram

B823H11702001

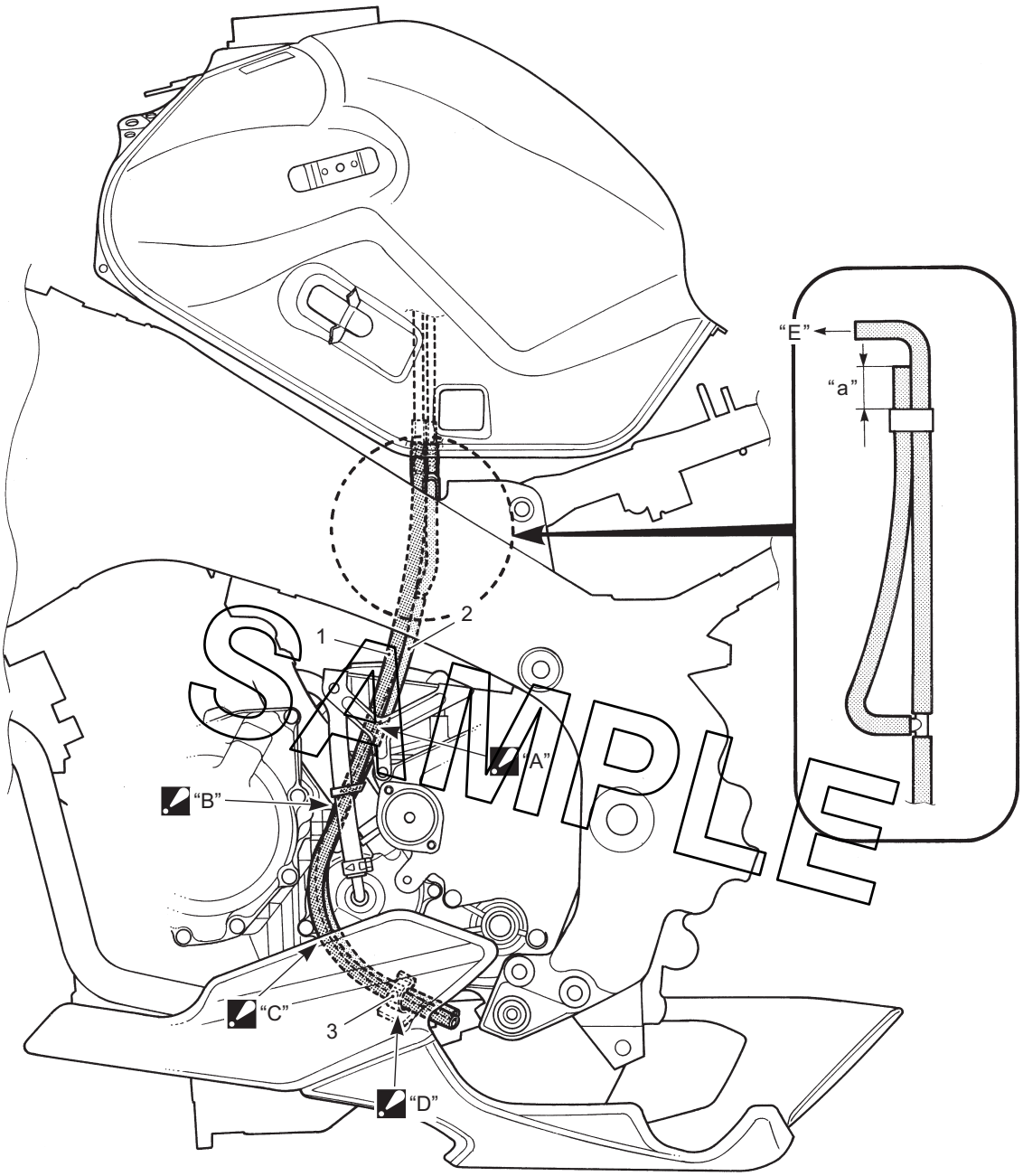

I823H1170038-02

1.	Fuel tank drain hose
2.	Fuel tank breather hose
3.	Hose clamp : Clamp the hoses at white marking point.
"A":	Pass the fuel tank drain hose and fuel tank breather hose behind of the engine sprocket cover bracket.
"B":	Pass the fuel tank drain hose and fuel tank breather hose behind of the water hose.
"C":	Pass the fuel tank drain hose and fuel tank breather hose ahead of the water hose.
"D":	Align the white paint mark on the hoses with the hose clamp.
"E":	To the fuel tank
"a":	20 mm (0.18 in)

Diagnostic Information and Procedures

Fuel System Diagnosis

B823H11704001

Condition	Possible cause	Correction / Reference Item
Engine will not start or is hard to start (No fuel reaching the intake manifold)	Clogged fuel filter or fuel hose.	*Clean or replace.*
	Defective fuel pump.	*Replace.*
	Defective fuel pressure regulator.	*Replace.*
	Defective fuel injector.	*Replace.*
	Defective fuel pump relay.	*Replace.*
	Defective ECM.	*Replace.*
	Open-circuited wiring connection.	*Check and repair.*
Engine will not start or is hard to start (Incorrect fuel/air mixture)	TP sensor out of adjustment.	*Adjust.*
	Defective fuel pump.	*Replace.*
	Defective fuel pressure regulator.	*Replace.*
	Defective TP sensor.	*Replace.*
	Defective CKP sensor.	*Replace.*
	Defective IAP sensor.	*Replace.*
	Defective ECM.	*Replace.*
	Defective ECT sensor.	*Replace.*
	Defective IAT sensors.	*Replace.*
	Defective AP sensors.	*Replace.*
	Clogged ISC valve air passage way.	*Repair or replace.*
Engine stalls often (Incorrect fuel/air mixture)	Defective IAP sensor or circuit.	*Repair or replace.*
	Clogged fuel filter.	*Clean or replace.*
	Defective fuel pump.	*Replace.*
	Defective fuel pressure regulator.	*Replace.*
	Defective ECT sensor.	*Replace.*
	Defective thermostat.	*Replace.*
	Defective IAT sensor.	*Replace.*
	Damaged or cracked vacuum hose.	*Replace.*
	Damaged or cracked ISC valve.	*Repair or replace.*
Engine stalls often (Fuel injector improperly operating)	Defective fuel injector.	*Replace.*
	No injection signal from ECM.	*Repair or replace.*
	Open or short circuited wiring connection.	*Repair or replace.*
	Defective battery or low battery voltage.	*Replace or recharge.*
Engine runs poorly in high speed range (Defective control circuit or sensor)	Low fuel pressure.	*Repair or replace.*
	Defective TP sensor.	*Replace.*
	Defective IAT sensor.	*Replace.*
	Defective CMP sensor.	*Replace.*
	Defective CKP sensor.	*Replace.*
	Defective GP switch.	*Replace.*
	Defective IAP sensor.	*Replace.*
	Defective ECM.	*Replace.*
	TP sensor out of adjustment.	*Replace.*
	Defective STP sensor and/or STVA.	*Replace.*
	Defective EXCVA.	*Replace.*

SAMPLE

Repair Instructions

Fuel Pressure Inspection

B823H11706001

⚠ WARNING

- **Keep away from fire or spark.**
- **Spilled gasoline should be wiped off immediately.**
- **Work in a well-ventilated area.**

Inspect the fuel pressure in the following procedures:

1) Lift and support the fuel tank. Refer to “Fuel Tank Removal and Installation (Page 1G-10)”.
2) Place a rag under the fuel feed hose (1) and remove the fuel feed hose.

I823H1170032-01

3) Install the special tools between the fuel pump and fuel delivery pipe.

Special tool
TOOL (A): 09940–40211 (Fuel pressure gauge adapter)
TOOL (B): 09940–40220 (Fuel pressure gauge hose attachment)
TOOL (C): 09915–77331 (Meter (for high pressure))
TOOL (D): 09915–74521 (Oil pressure gauge hose)

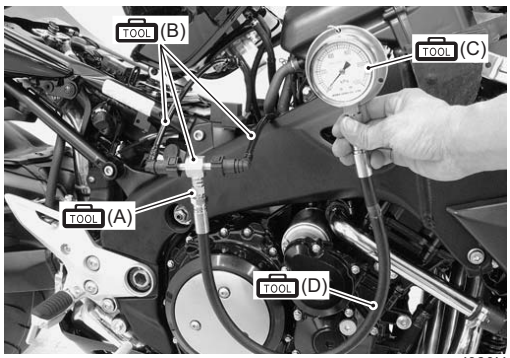

I823H1170033-02

4) Turn the ignition ON and check for fuel pressure.

Fuel pressure
Approx. 300 kPa (3.0 kgf/cm^2, 43 psi)

If the fuel pressure is lower than the specification, check for the followings:

- Fuel hose leakage
- Clogged fuel filter
- Pressure regulator
- Fuel pump

If the fuel pressure is higher than the specification, check for the followings:

- Fuel pump
- Pressure regulator

5) Remove the special tools.

⚠ WARNING

Before removing the special tools, turn the ignition switch OFF and release the fuel pressure slowly.

6) Reinstall the fuel tank. Refer to “Fuel Tank Removal and Installation (Page 1G-10)”.

NOTE

Connect the fuel feed hose to the fuel pump until it locks securely (a click is heard).

SAMPLE

Fuel Pump Inspection

B823H11706002

Turn the ignition switch ON and check that the fuel pump operates for a few seconds.
If the fuel pump motor does not make operating sound, inspect the fuel pump circuit connections or inspect the fuel pump relay and TO sensor. Refer to “Fuel Pump Relay Inspection (Page 1G-7)” and “DTC “C23” (P1651-H/L): TO Sensor Circuit Malfunction in Section 1A (Page 1A-65)”.
If the fuel pump relay, TO sensor and fuel pump circuit connections are OK, the fuel pump may be faulty, replace the fuel pump with a new one. Refer to “Fuel Pump Disassembly and Assembly (Page 1G-13)”.

Fuel Discharge Amount Inspection

B823H11706003

⚠ WARNING

- **Keep away from fire or spark.**
- **Spilled gasoline should be wiped off immediately.**
- **Work in a well-ventilated area.**

Inspect the fuel discharge amount in the following procedures:

1) Lift and support the fuel tank. Refer to “Fuel Tank Removal and Installation (Page 1G-10)”.
2) Place a rag under the fuel feed hose (1) and disconnect fuel feed hose from the fuel pump.

I823H1170034-01

3) Connect a proper fuel hose (2) to the fuel pump.
4) Place the measuring cylinder and insert the fuel hose end into the measuring cylinder.
5) Disconnect the fuel pump lead wire coupler (3).

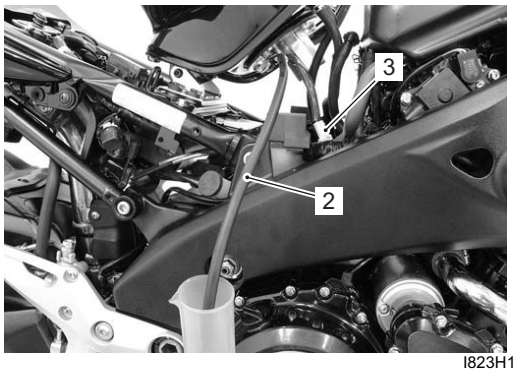

I823H1170035-01

6) Connect a proper lead wire into the fuel pump lead wire coupler (fuel pump side) and apply 12 V to the fuel pump (between (+) Y/R wire and (–) B/W wire) for 10 seconds and measure the amount of fuel discharged.
If the discharge amount is out of the specification, the probable cause may be failure of the fuel pump or clogged fuel filter.

NOTE

The battery must be in fully charged condition.

Fuel discharge amount
220 ml (7.4/7.7 US/Imp oz) and more/10 seconds

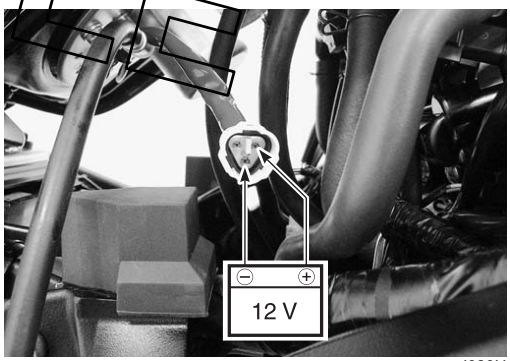

I823H1170036-01

7) After finishing the fuel discharge inspection, reinstall the fuel tank. Refer to “Fuel Tank Removal and Installation (Page 1G-10)”.

NOTE

Connect the fuel feed hose to the fuel pump until it locks securely (a click is heard).

SAMPLE

Fuel Pump Relay Inspection

B823H11706004

Refer to “Electrical Components Location in Section 0A (Page 0A-7)”.

Inspect the fuel pump relay in the following procedures:

1) Lift and support the fuel tank. Refer to “Fuel Tank Removal and Installation (Page 1G-10)”.
2) Remove the fuel pump relay (1).

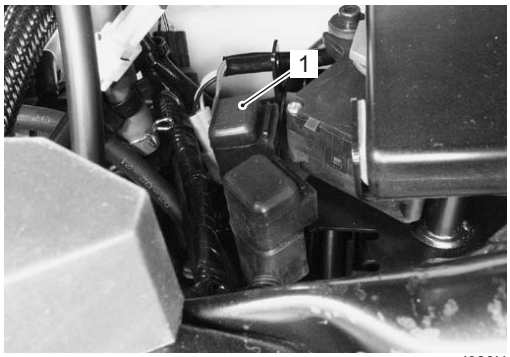

I823H1170027-01

3) First, check for insulation with the tester between terminals “A” and “B”. Next, check for continuity between “A” and “B” with 12 V voltage applied, positive (+) to terminal “C” and negative (–) to terminal “D”. If continuity does not exist, replace the relay with a new one.

Special tool

TOOL : 09900–25008 (Multi-circuit tester set)

Tester knob indication

Continuity test (•))))

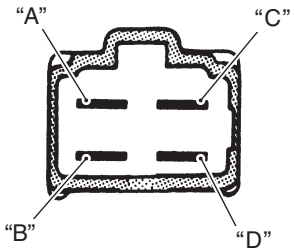

I718H1170013-01

Fuel Hose Inspection

B823H11706005

Refer to “Fuel Line Inspection in Section 0B (Page 0B-10)”.

Fuel Level Gauge Inspection

B823H11706006

Refer to “Fuel Level Gauge Inspection in Section 9C (Page 9C-6)”.

SAMPLE

Fuel Tank Construction

B823H11706009

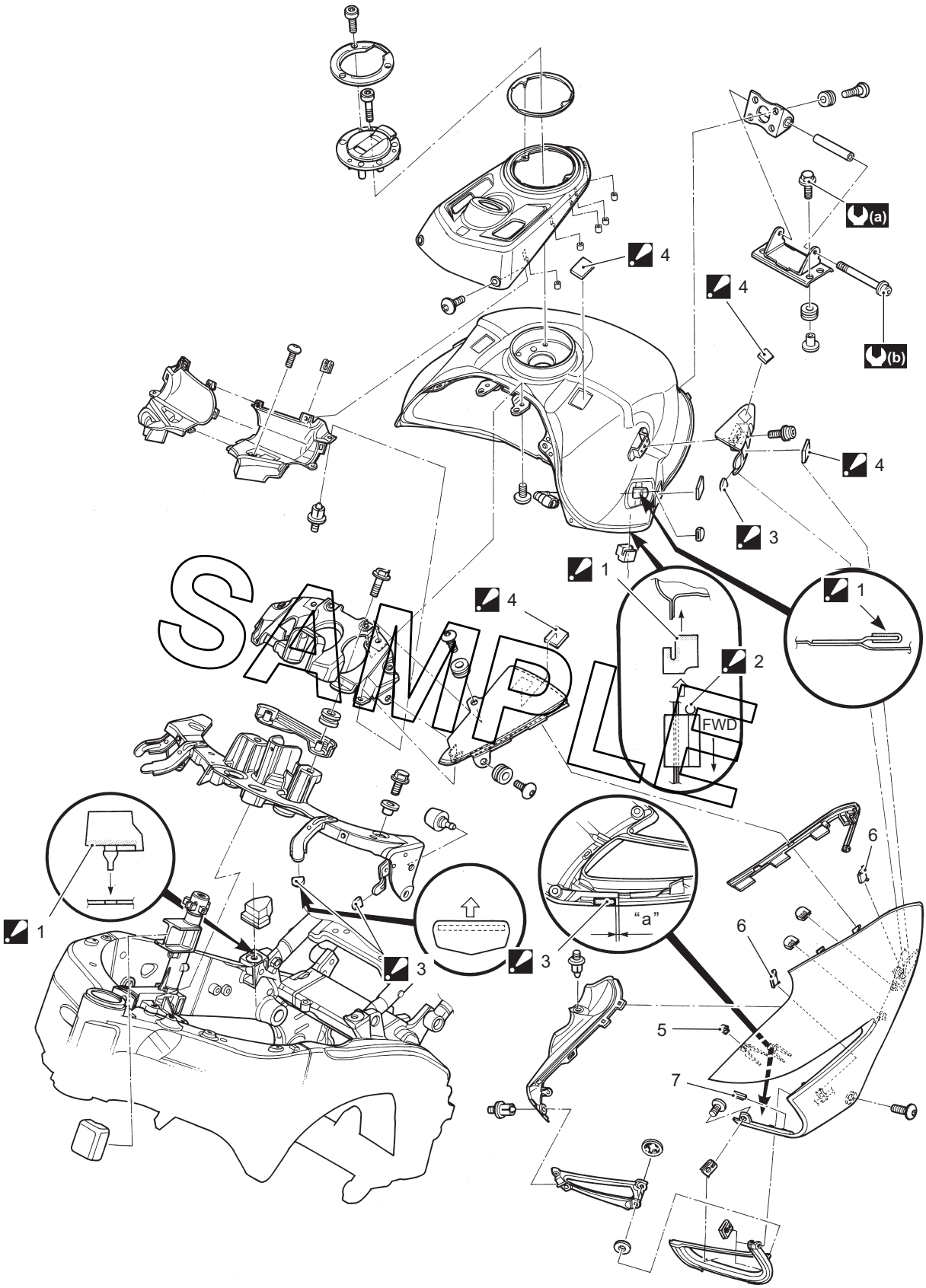

SAMPLE

I823H1170030-03

1. Fuel tank cushion : Clean the adhesive surface and then apply an adhesive agent.	6. Fuel tank cover guide
2. Dent mark : Align the fuel tank cushion with the dent mark (2).	7. Fuel tank cover cushion
3. Fuel tank cover cushion : Clean the adhesive surface and then apply an adhesive agent.	“a”: 0 – 5 mm (0 – 0.2 in)
4. Velcro fastening : Clean the adhesive surface of the velcro fastening and align the verclo fastening to the aligning mark.	(a) : 11 N·m (1.1 kgf-m, 8.0 lb-ft)
5. Slide clip	(b) : 13 N·m (1.3 kgf-m, 9.5 lb-ft)

Fuel Tank Heat Shield Construction

B823H11706017

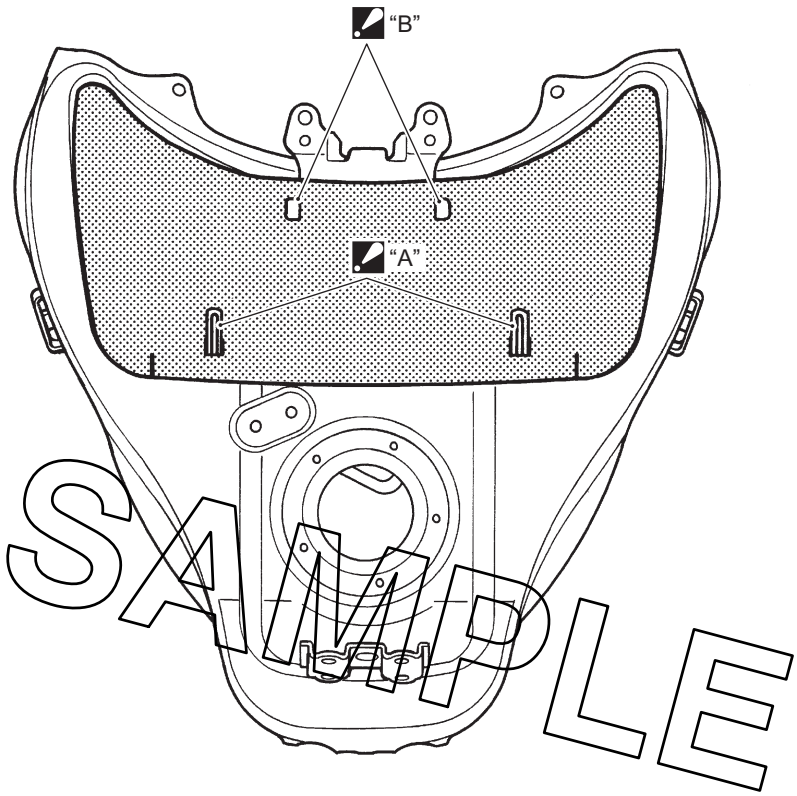

I823H1170031-01

“A”: The end of the clamp should face forward.	“B”: Hitch the heat shield to the tab of the fuel tank.

Fuel Tank Removal and Installation

B823H11706010

Removal

⚠ WARNING

- **Keep away from fire or spark.**
- **Spilled gasoline should be wiped off immediately.**
- **Work in a well-ventilated area.**

1) Remove the front seat. Refer to “Exterior Parts Removal and Installation in Section 9D (Page 9D-14)”.
2) Remove the frame side covers (1). Refer to “Exterior Parts Removal and Installation in Section 9D (Page 9D-14)”.

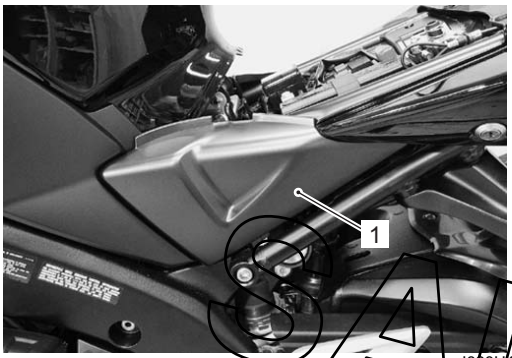

I823H1170001-01

3) Take out the fuel tank prop stay (2).

I823H1170002-01

4) Remove the front frame side covers (3). Refer to “Exterior Parts Removal and Installation in Section 9D (Page 9D-14)”.

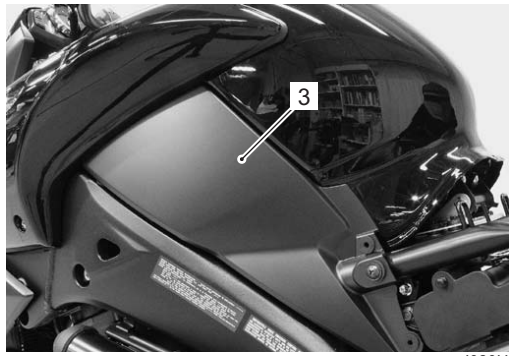

I823H1170003-01

5) Remove the fuel tank upper cover (center) (4). Refer to “Exterior Parts Removal and Installation in Section 9D (Page 9D-14)”.

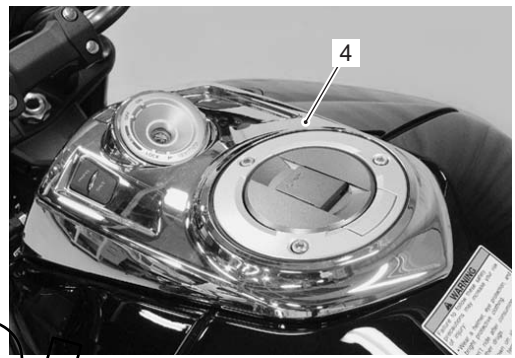

I823H1170004-01

6) Remove the fuel tank side covers (5). Refer to “Exterior Parts Removal and Installation in Section 9D (Page 9D-14)”.

I823H1170005-01

SAMPLE

7) Remove the fasteners and bolts.

I823H1170006-01

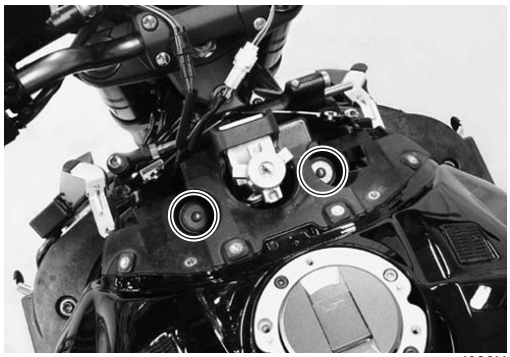

I823H1170007-01

8) Lift and support the fuel tank with the prop stay.

I823H1170008-01

9) Disconnect the fuel pump lead wire coupler (6).

10) Disconnect the fuel tank drain hose (7) and fuel tank breather hose (8).

11) Place a rag under the fuel feed hose (9) and disconnect the fuel feed hose from the fuel tank.

⚠ CAUTION

When removing the fuel tank, do not leave the fuel feed hose on the fuel pump side.

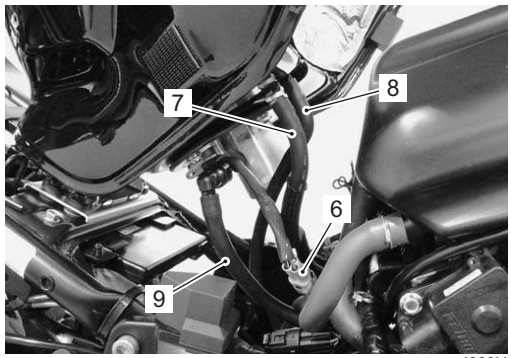

I823H1170009-01

12) Remove the fuel tank by removing the mounting bolt.

I823H1170010-01

SAMPLE

Installation

Install the fuel tank in the reverse order of removal.

NOTE

Connect the fuel feed hose to the fuel pump until it locks securely (a click is heard).

Fuel Pump Components

B823H11706011

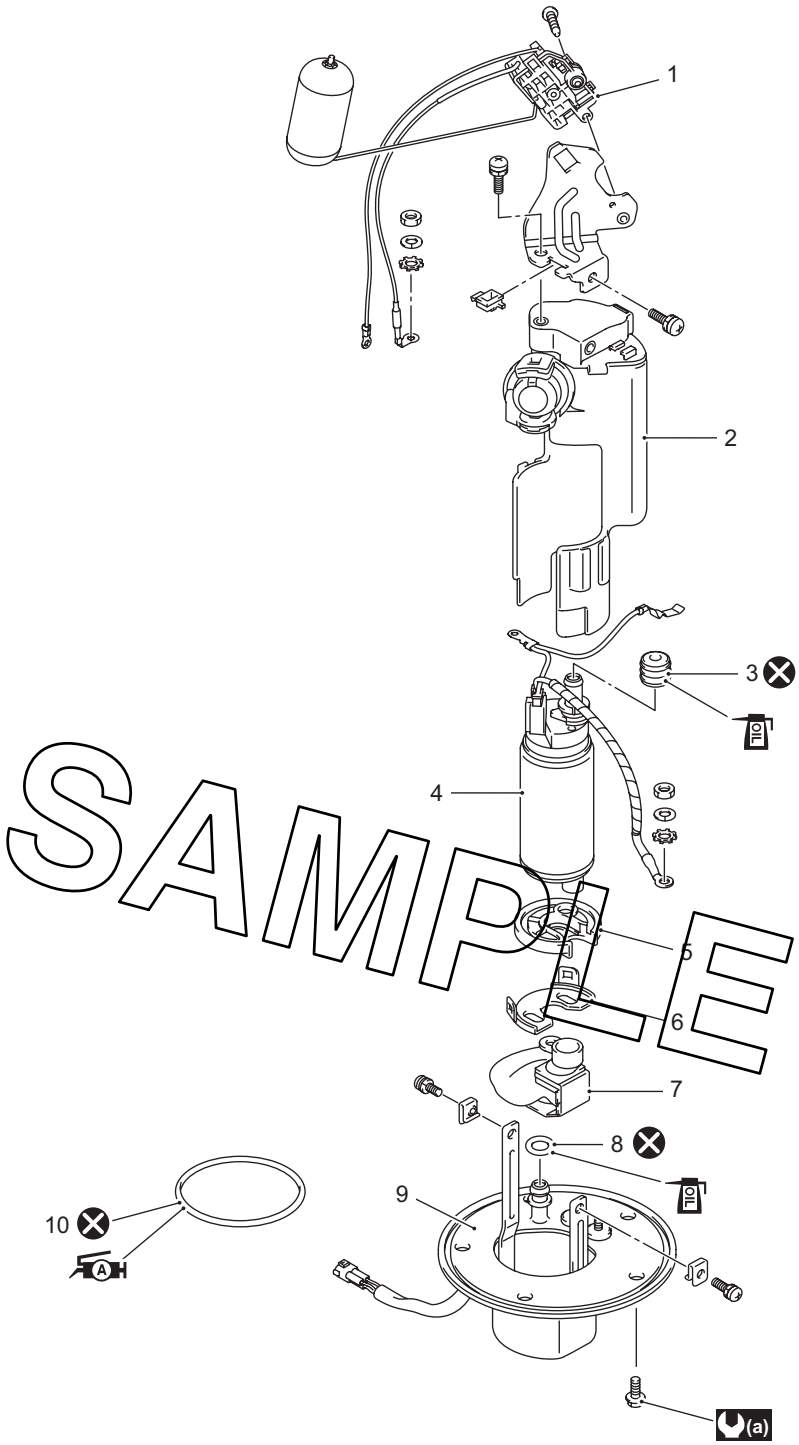

I823H1170037-02

1. Fuel level gauge	6. Fuel pump holder	(a) : 10 N·m (1.0 kgf-m, 7.0 lb-ft)
2. Fuel filter cartridge	7. Fuel mesh filter	A : Apply grease.
3. Bushing	8. O-ring	OIL : Apply engine oil.
4. Fuel pump	9. Fuel pump plate	⊗ : Do not reuse.
5. Fuel pump cushion	10. O-ring (Fuel tank side)	

Fuel Pump Disassembly and Assembly

B823H11706012

Disassembly

1) Remove the fuel tank. Refer to “Fuel Tank Removal and Installation (Page 1G-10)”.
2) Remove the fuel pump assembly (1) by removing its mounting bolts diagonally.

⚠ WARNING

- **Spilled gasoline should be wipe off immediately.**
- **Keep away from fire or spark.**
- **Work in a well-ventilated area.**

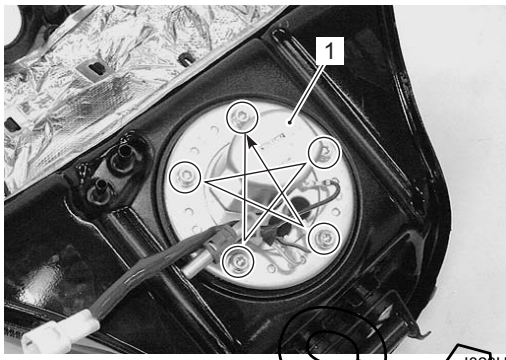

I823H1170011-02

3) Disconnect the lead wires (2).

I823H1170012-01

4) Remove the fuel level gauge (3).

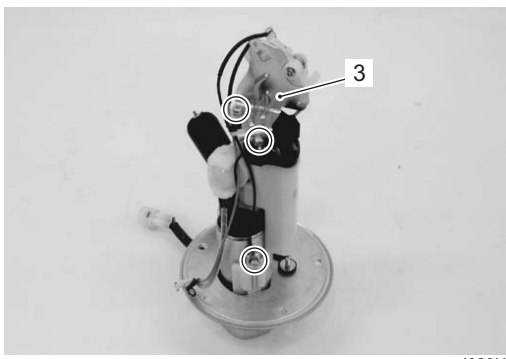

I823H1170013-01

5) Disconnect the ground read wire (4).
6) Remove the fuel pump plate (5).

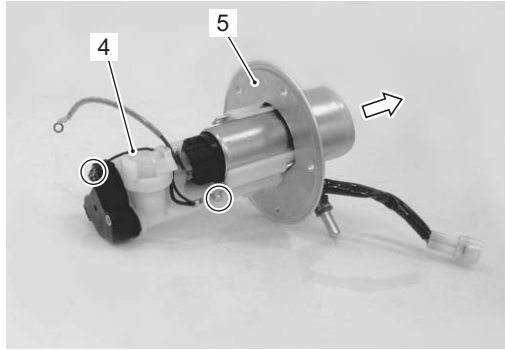

I823H1170014-02

7) Remove the O-ring (6).

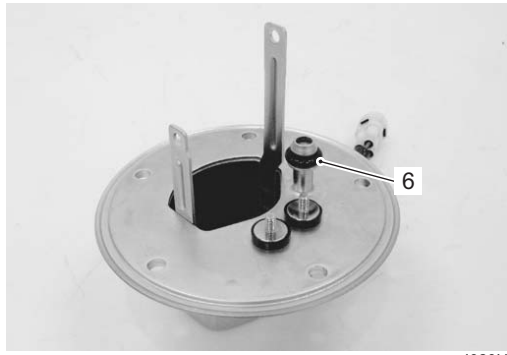

I823H1170015-02

8) Remove the fuel pump holder (7) and cushion (8).
9) Remove the fuel mesh filter (9).

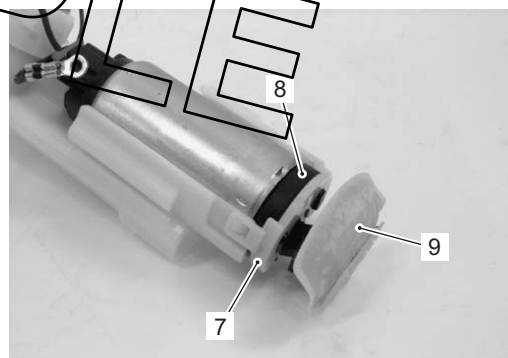

I823H1170016-02

10) Remove the fuel pump (10) from the fuel filter cartridge (case) (11).

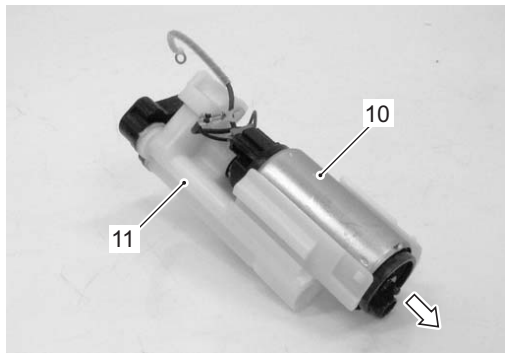

I823H1170017-03

SAMPLE

11) Remove the bushing (12) and lead wires (13).

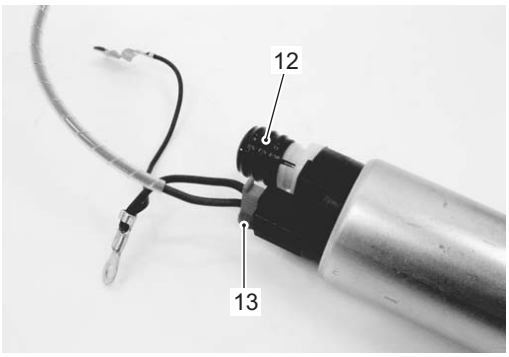

I823H1170018-05

Assembly

Refer to “Fuel Mesh Filter Inspection and Cleaning (Page 1G-15)”.

Assemble the fuel tank pump in the reverse order of the disassembly. Pay attention to the following points:

⚠ CAUTION

- **To prevent fuel leakage, the bushing and O-ring must be replaced with new ones.**
- **Apply engine oil lightly to the bushing and O-ring.**

I823H1170019-01

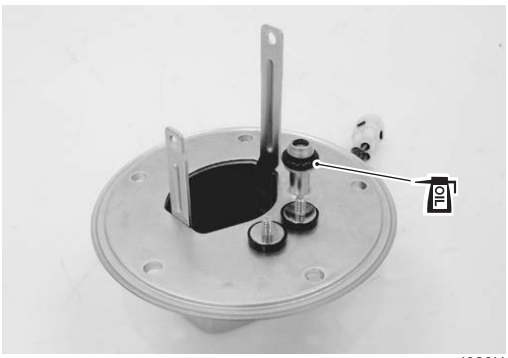

I823H1170020-01

- Connect all lead wires securely so as not to cause contact failure.

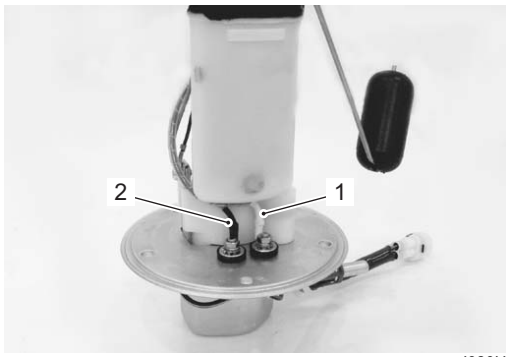

I823H1170021-01

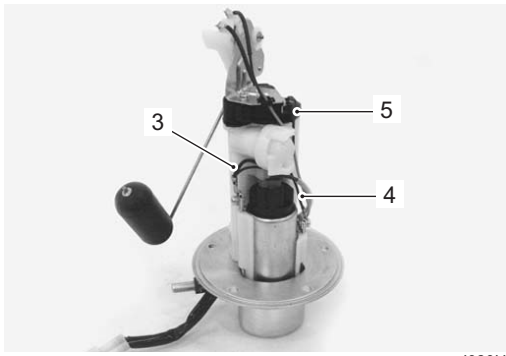

I823H1170022-01

1.	Fuel pump (+) lead wire (BI)
2.	Fuel level gauge (+) lead wire (R)
3.	Fuel pump (–) lead wire (B)
4.	Fuel level gauge (–) lead wire (B)
5.	Ground lead wire

- Install a new O-ring and apply grease to it.

A : Grease 99000–25010 (SUZUKI SUPER GREASE A or equivalent)

⚠ WARNING

The O-ring must be replaced with a new one to prevent fuel leakage.

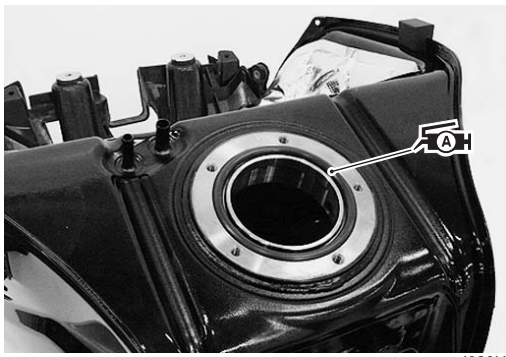

I823H1170023-01

SAMPLE

- When installing the fuel pump assembly, first tighten all the fuel pump mounting bolts lightly and then to the specified torque, in the ascending of numbers.

  Tightening torque
  Fuel pump mounting bolt (a): 10 N·m (1.0 kgf-m, 7.0 lb-ft)

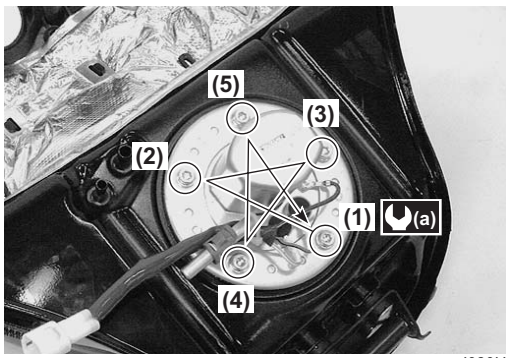

I823H1170024-05

Fuel Mesh Filter Inspection and Cleaning

B823H11706014

Inspect the fuel mesh filter in the following procedures:

1) Remove the fuel mesh filter. Refer to “Fuel Pump Disassembly and Assembly (Page 1G-13)”.
2) If the fuel mesh filter is clogged with foreign particles, it hinders smooth gasoline flow resulting in loss of engine power. Such a filter should be cleaned by blowing with compressed air.

   NOTE

   When the fuel mesh filter is dirtied excessively, replace the fuel filter cartridge with a new one.

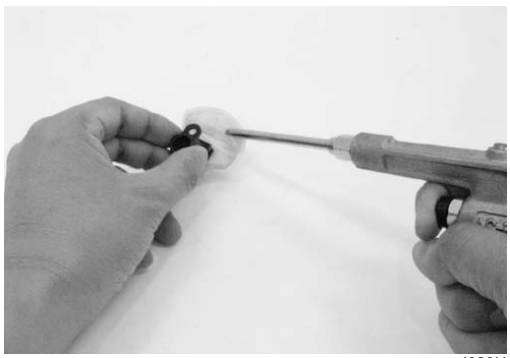

I823H1170025-01

3) After finishing the fuel mesh filter inspection, reinstall the fuel mesh filter. Refer to “Fuel Pump Disassembly and Assembly (Page 1G-13)”.

Fuel Injector / Fuel Delivery Pipe / T-joint Removal and Installation

B823H11706015

Refer to “Throttle Body Disassembly and Assembly in Section 1D (Page 1D-12)”.

Fuel Injector Inspection and Cleaning

B823H11706016

Inspect the fuel injector in the following procedures:

1) Remove the fuel injector. Refer to “Throttle Body Disassembly and Assembly in Section 1D (Page 1D-12)”.
2) Check the fuel injector filter for evidence of dirt and contamination. If present, clean and check for presence of dirt in the fuel lines and fuel tank.

I823H1170026-01

3) Install the fuel injector. Refer to “Throttle Body Disassembly and Assembly in Section 1D (Page 1D-12)”.

SAMPLE

Specifications

Service Data

B823H11707001

Injector + Fuel Pump + Fuel Pressure Regulator

Item	Specification	Note
Injector resistance	11 – 13 Ω at 20 °C (68 °F)	
Fuel pump discharge amount	220 ml (7.4/7.7 US/Imp oz) and more/10 sec.	
Fuel pressure regulator operating set pressure	Approx. 300 kPa (3.0 kgf/cm^2, 43 psi)	

Fuel

Item	Specification		Note
Fuel type	Use only unleaded gasoline of at least 90 pump octane (R/2 + M/2). Gasoline containing MTBE (Methyl Tertiary Butyl Ether), less than 10% ethanol, or less than 5% methanol with appropriate cosolvents and corrosion inhibitor is permissible.		E-03, 28, 33
	Gasoline used should be graded 95 octane or higher. An unleaded gasoline type is recommended.		Others
Fuel tank capacity	Including reserve	16.0 L (4.2/3.5 US/Imp gal)	E-33
		16.5 L (4.4/3.6 US/Imp gal)	Others

Tightening Torque Specifications

B823H11707002

Fastening part	Tightening torque			Note
	N·m	kgf-m	lb-ft	
Fuel pump mounting bolt	10	1.0	7.0	☞(Page 1G-15)

NOTE

The specified tightening torque is also described in the following.
“Fuel Tank Construction (Page 1G-8)”
“Fuel Pump Components (Page 1G-12)”

Reference:
For the tightening torque of fastener not specified in this section, refer to “Tightening Torque List in Section 0C (Page 0C-9)”.

SAMPLE

Special Tools and Equipment

Recommended Service Material

B823H11708001

Material	SUZUKI recommended product or Specification		Note
Grease	SUZUKI SUPER GREASE A or equivalent	P/No.: 99000–25010	☞(Page 1G-14)

NOTE

Required service material is also described in the following.
“Fuel Pump Components (Page 1G-12)”

Special Tool

B823H11708002

09900–25008 Multi-circuit tester set ☞(Page 1G-7) 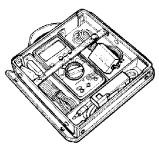	09915–74521 Oil pressure gauge hose ☞(Page 1G-5)
09915–77331 Meter (for high pressure) ☞(Page 1G-5) 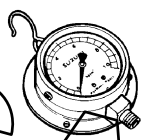	09940–40211 Fuel pressure gauge adapter ☞(Page 1G-5) 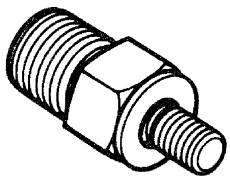
09940–40220 Fuel pressure gauge hose attachment ☞(Page 1G-5) 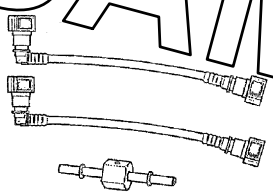	

SAMPLE

Ignition System

General Description

Immobilizer Description (For E-02, 19, 24)

B823H11801001

The immobilizer, an anti-theft system, is installed as a standard equipment.
The immobilizer verifies that the key ID agrees with ECM ID by means of radio communication through the immobilizer antenna. When the ID agreement is verified, the system makes the engine ready to start.

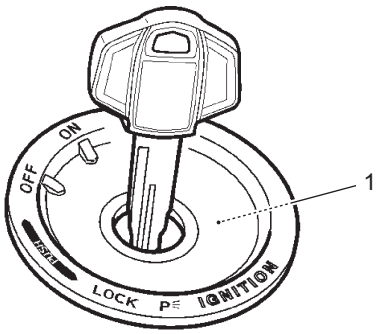

I823H1180001-01

1. Immobilizer antenna	

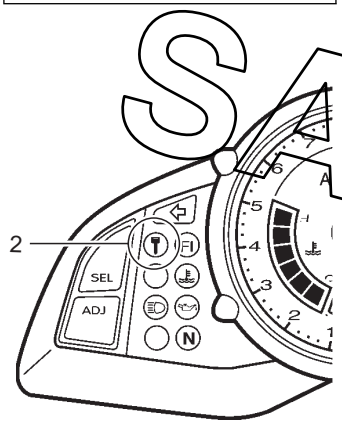

I823H1180002-01

2. Indicator light	

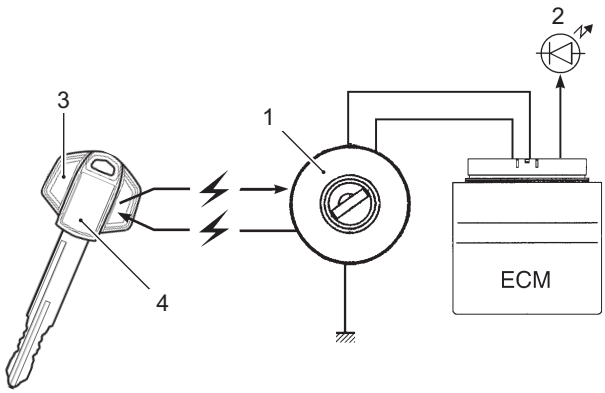

I823H1180003-01

1. Immobilizer antenna	3. Transponder
2. Indicator light	4. ID

Operation

When the ignition switch is turned ON with the engine stop switch in ON, the immobi-antenna and ECM are powered ON.
The ECM transmits a signal to the transponder through the immobi-antenna in order to make comparison between the key ID and ECM ID.
With the signal received, the transponder transmits the key ID signal to ECM so that ECM can make comparison with its own ID, and if it matches, the engine is made ready to start.

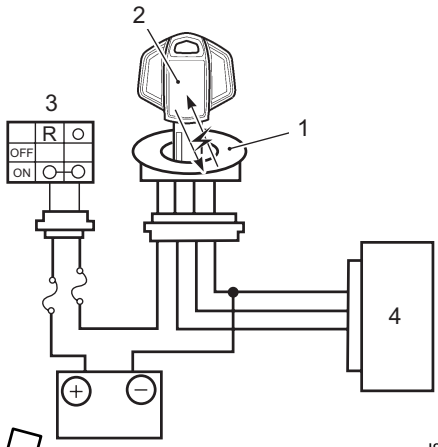

I823H1180004-01

1. Immobilizer antenna	3. Ignition switch
2. Transponder	4. ECM

SAMPLE

Also, when the ignition switch is turned ON, the indicator light flashes as many as the number of IDs registered in ECM. Thereafter, if the IDs are in agreement, the indicator light turns on for two seconds to notify of completion in successful communication.
If the indicator light (LED) flashes fast, it notifies of communication error or disagreement of ID.

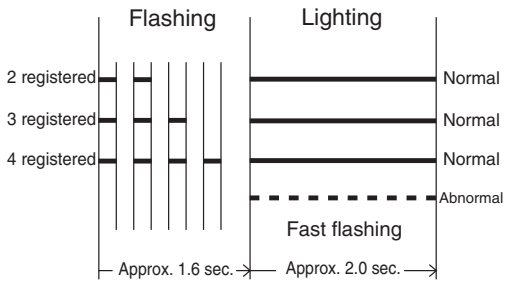

I705H1180006-01

NOTE

If the indicator light flashes fast, turn the ignition switch OFF then ON to make judgment again as there is possible misjudgment due to environmental radio interference.

⚠ CAUTION

When the battery performance is lowered in winter (low temperature), the system may at times makes a re-judgment at the time of beginning the starter motor operation. In this case, the indicator light operation starts immediately after the starter operation.

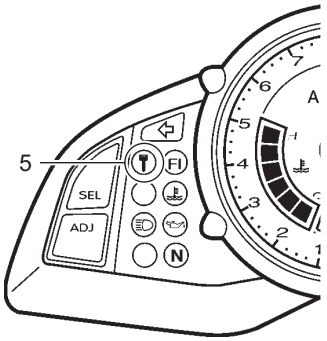

I823H1180005-02

5. Indicator light

Drive Mode Selector Description

B823H11801002

Engine power characteristics can be changed in 2 modes by operating the drive mode selector to meet various riding conditions and rider's preference.

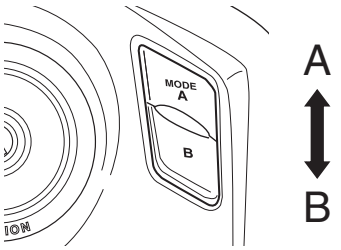

I823H1180027-01

Operation

Drive mode is preset at A-mode when the ignition switch and engine stop switch are turned on. Follow the procedure below to operate drive mode selector.

1) Turn on the ignition switch and engine stop switch.
2) Push drive mode selector to change drive mode. Push A or B to select the mode. Drive mode indicator indicates actual drive mode.

NOTE

- **Stop the motorcycle when operating drive mode selector. Drive mode selector operation will be cancelled when the motorcycle is moving.**
- **Drive mode indicator blinks when drive mode change operation is failed.**
- **Turning off the ignition switch or engine stop switch will return the drive mode to A-mode. Start the engine and reset the drive mode.**

Drive Mode

A-mode

A-mode provides sharp throttle response at all throttle opening range to obtain maximum engine power.

B-mode

B-mode provides soft throttle response at all throttle opening range by reducing engine power.

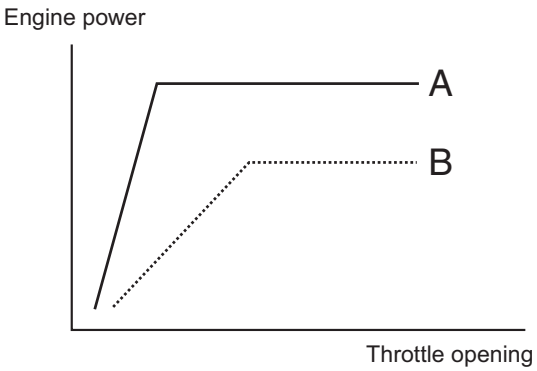

I823H1180028-03

SAMPLE

Schematic and Routing Diagram

Ignition System Diagram

B823H11802001

Refer to “Wire Color Symbols in Section 0A (Page 0A-5)”.

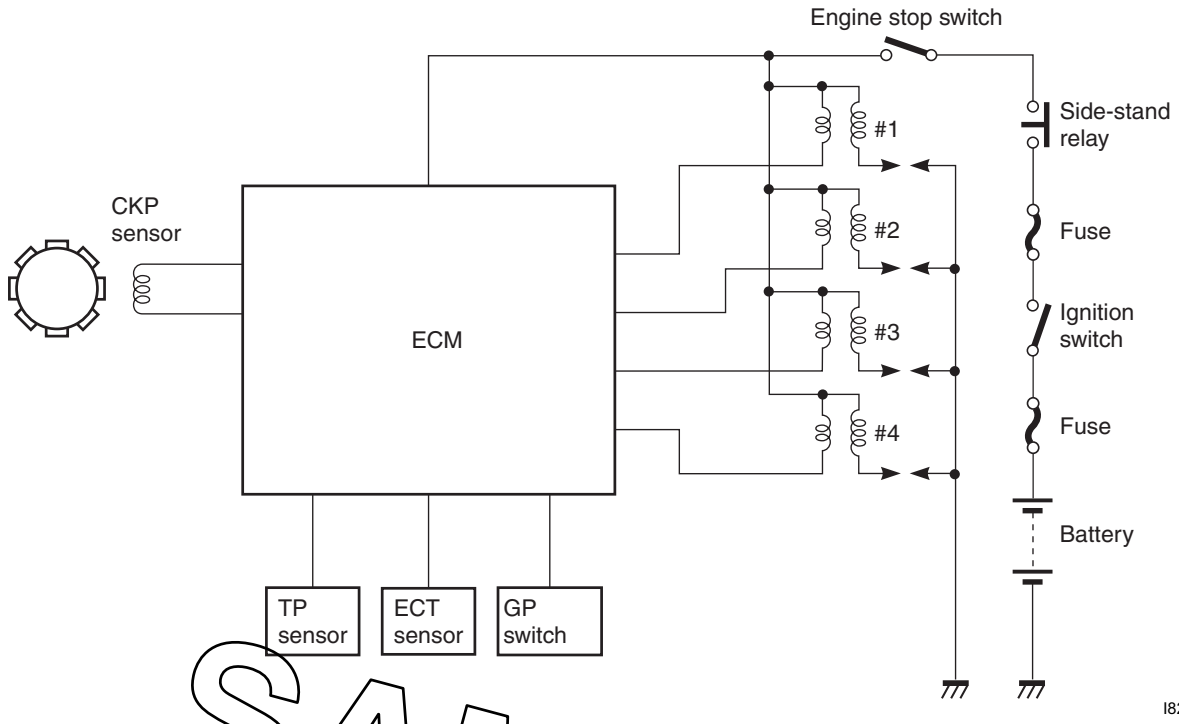

I823H1180025-01

SAMPLE

Ignition System Components Location

B823H11802002

Refer to “Electrical Components Location in Section 0A (Page 0A-7)”.

Diagnostic Information and Procedures

Ignition System Symptom Diagnosis

B823H11804001

Condition	Possible cause	Correction / Reference Item
Spark plug not sparking	Damaged spark plug.	*Replace.*
	Fouled spark plugs.	*Clean or replace.*
	Wet spark plugs.	*Clean and dry or replace.*
	Defective ignition coil/plug caps.	*Replace.*
	Defective CKP sensor.	*Replace.*
	Defective ECM.	*Replace.*
	Open-circuited wiring connections.	*Repair or replace.*
Engine stalls easily (No spark)	Fouled spark plugs.	*Clean or replace.*
	Defective CKP sensor.	*Replace.*
	Defective ECM.	*Replace.*
Spark plug is wet or quickly becomes fouled with carbon	Excessively rich air/fuel mixture.	*Inspect FI system.*
	Excessively high idling speed.	*Inspect FI system.*
	Incorrect gasoline.	*Change.*
	Dirty air cleaner element.	*Clean or replace.*
	Incorrect spark plug (Cold type).	*Change to hot type spark plug.*
Spark plug quickly becomes fouled with oil or carbon	Worn piston rings.	*Replace.*
	Worn pistons.	*Replace.*
	Worn cylinders.	*Replace.*
	Excessive valve-stem to valve-guide clearance.	*Replace.*
	Worn valve stem oil seals.	*Replace.*
Spark plug electrodes overheat or burn	Incorrect spark plug (Hot type).	*Change to cold type spark plug.*
	Overheated engine.	*Tune-up.*
	Loose spark plugs.	*Tighten.*
	Excessively lean air/fuel mixture.	*Inspect FI system.*

SAMPLE

No Spark or Poor Spark

B823H11804002

Troubleshooting

NOTE

Check that the transmission is in neutral and the engine stop switch is in the "RUN" position. Grasp the clutch lever. Check that the fuse is not blown and the battery is fully-charged before diagnosing.

Step	Action	Yes	No
1	Check the ignition system couplers for poor connections. *Is there connection in the ignition system couplers?*	Go to Step 2.	Poor connection of couplers.
2	Measure the battery voltage between input lead wires at the ECM with the ignition switch in the "ON" position. (E-02, 19: O/G and B/W, E-03, 24, 28, 33: O/W and B/W) *Is the voltage OK?*	Go to Step 3.	• Faulty ignition switch. • Faulty turn signal/ side-stand relay. • Faulty engine stop switch. • Broken wire harness or poor connection of related circuit couplers.
3	Measure the ignition coil primary peak voltage. Refer to "Ignition Coil / Plug Cap Inspection (Page 1H-7)". **NOTE** **This inspection method is applicable only with the multi-circuit tester and the peak volt adaptor.** *Is the peak voltage OK?*	Go to Step 4.	Go to Step 5.
4	Inspect the spark plugs. Refer to "Spark Plug Inspection and Cleaning in Section 0B (Page 0B-9)". *Is the spark plug(-s) OK?*	Go to Step 5.	Faulty spark plug(-s).
5	Inspect the ignition coil/plug cap(-s). Refer to "Ignition Coil / Plug Cap Inspection (Page 1H-7)". *Is the ignition coil/plug cap(-s) OK?*	Go to Step 6.	• Faulty ignition coil/ plug cap(-s). • Poor connection of the ignition coil/plug cap(-s).
6	Measure the CKP sensor peak voltage and its resistance. Refer to "CKP Sensor Inspection (Page 1H-10)". **NOTE** **The CKP sensor peak voltage inspection is applicable only with the multi-circuit tester and peak volt adaptor.** *Are the peak voltage and resistance OK?*	• Faulty ECM. • Open or short circuit in wire harness. • Poor connection of ignition couplers.	• Faulty CKP sensor. • Metal particles or foreign material being stuck on the CKP sensor and rotor tip.

SAMPLE

Repair Instructions

Ignition Coil / Plug Cap and Spark Plug Removal and Installation

B823H11806001

Removal

⚠ WARNING

The hot engine can burn you.
Wait until the engine is cool enough to touch.

1) Turn the ignition switch OFF.
2) Remove the air cleaner box. Refer to “Air Cleaner Box Removal and Installation in Section 1D (Page 1D-6)”.
3) Disconnect all lead wire couplers (1) from ignition coil/plug caps (2).

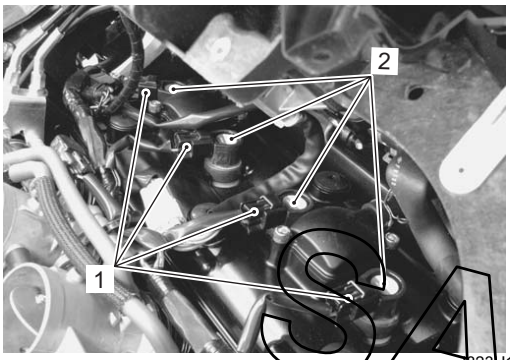

I823H1180006-01

⚠ CAUTION

Disconnect the lead wire coupler before removing the ignition coil/plug cap to avoid lead wire coupler damage.

4) Remove the ignition coils/plug caps (2).

⚠ CAUTION

- **Do not pry up the ignition coil/plug cap with a screwdriver or a bar to avoid its damage.**
- **Be careful not to drop the ignition coil/plug cap to prevent short/open circuit.**

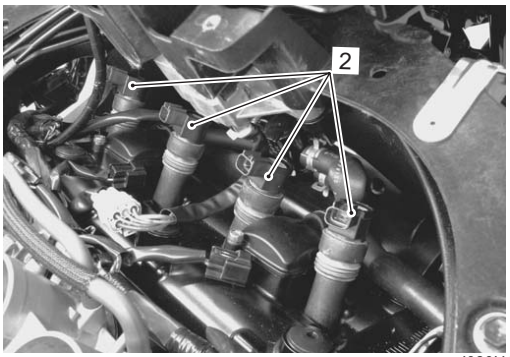

I823H1180007-01

5) Remove the spark plugs with a spark plug wrench.

Special tool
TOOL (A): 09930–10121 (Spark plug wrench set)

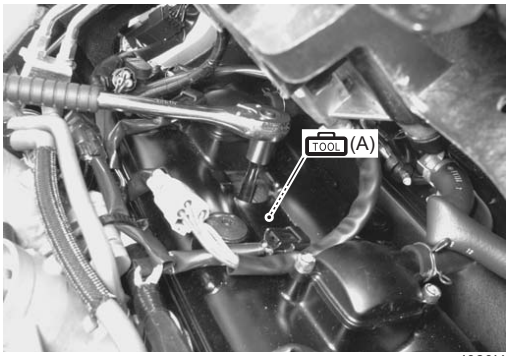

I823H1180008-01

Installation

Install the spark plugs in the reverse order of removal. Pay attention to the following points:

- Screw the spark plugs into the cylinder head with fingers, and then tighten them to the specified torque.

⚠ CAUTION

Do not cross thread or over tighten the spark plug, or such an operation will damage the aluminum threads of the cylinder head.

Special tool
TOOL (A): 09930–10121 (Spark plug wrench set)

Tightening torque
Spark plug: 11 N·m (1.1 kgf-m, 8.0 lb-ft)

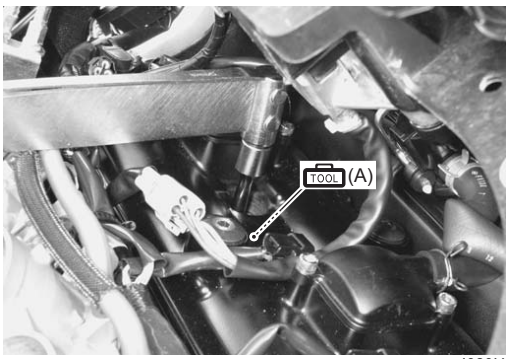

I823H1180009-01

SAMPLE

- Install the ignition coil/plug caps and connect their lead wire couplers.

⚠ CAUTION

Do not hit the ignition coil/plug cap with a plastic hammer when installing it.

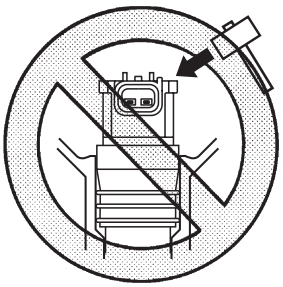

INCORRECT

I718H1180012-01

NOTE

The coupler of #1 ignition coil/plug cap faces left side.

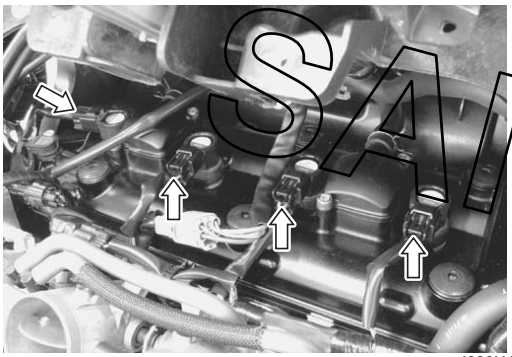

I823H1180010-03

Spark Plug Inspection and Cleaning

B823H11806002

Refer to “Spark Plug Inspection and Cleaning in Section 0B (Page 0B-9)”.

Ignition Coil / Plug Cap Inspection

B823H11806003

Refer to “Electrical Components Location in Section 0A (Page 0A-7)”.

Ignition Coil Primary Peak Voltage

1) Remove the air cleaner box. Refer to “Air Cleaner Box Removal and Installation in Section 1D (Page 1D-6)”.
2) Disconnect all ignition coil/plug caps. Refer to “Ignition Coil / Plug Cap and Spark Plug Removal and Installation (Page 1H-6)”.

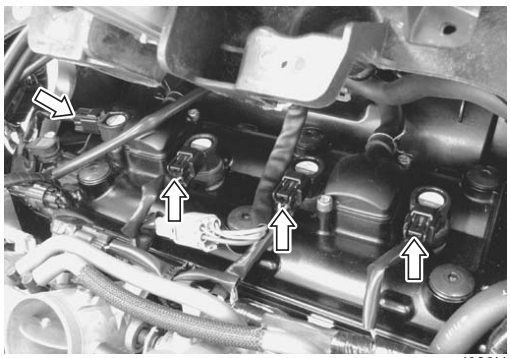

I823H1180031-02

3) Connect the new spark plugs to each ignition coil/spark plug cap.

SAMPLE

4) Connect all the ignition coil/plug cap lead wire couplers to the ignition coil/plug caps respectively, and ground them on the cylinder head (each spark plug hole).

⚠ CAUTION

Avoid grounding the spark plugs and suppling the electrical shock to the cylinder head cover (magnesium parts) to prevent the magnesium material from damage.

NOTE

Be sure that all the spark plugs are connected properly and the battery used is in fully-charged condition.

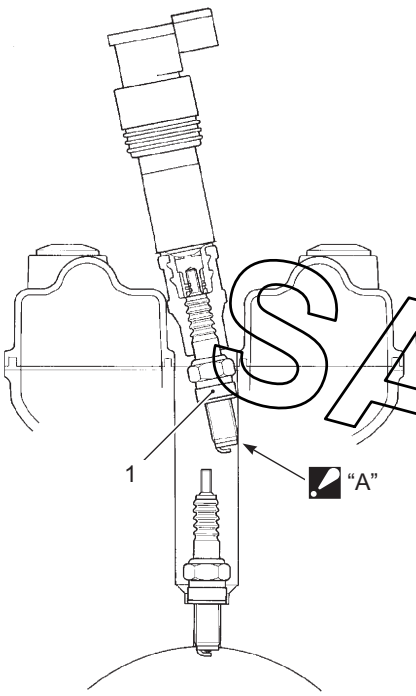

I823H1180011-02

1.	New spark plug
"A":	Contact the spark plug to the cylinder head.

5) Insert the needle pointed probe to the lead wire coupler.

⚠ CAUTION

Use the special tool to prevent the rubber of the water proof coupler from damage.

6) Connect the multi-circuit tester with the peak voltage adaptor as follows.

⚠ CAUTION

Before using the multi-circuit tester and peak voltage adaptor, refer to the appropriate instruction manual.

Special tool
TOOL (A): 09900–25008 (Multi-circuit tester set)
TOOL (B): 09900–25009 (Needle pointed probe set)

Tester knob indication: Voltage (⎓)

	(+) Probe	(–) Probe
Ignition coil/Plug cap #1	W/Bl wire terminal	Ground
Ignition coil/Plug cap #2	Black wire terminal	Ground
Ignition coil/Plug cap #3	Yellow wire terminal	Ground
Ignition coil/Plug cap #4	Green wire terminal	Ground

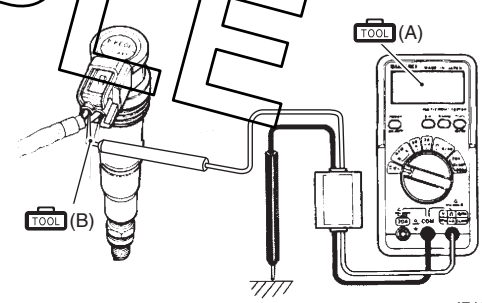

I718H1180003-02

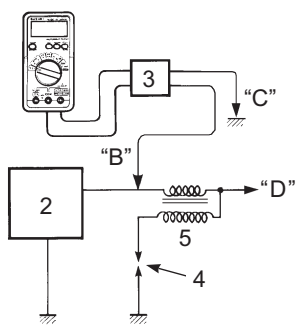

I823H1180026-01

2. ECM	"B": (+) probe
3. Peak voltage adaptor	"C": (–) probe
4. New spark plug	"D": To engine stop switch
5. Ignition coil	

SAMPLE

7) Measure the ignition coil primary peak voltage in the following procedures:

⚠ WARNING

Do not touch the tester probes and spark plugs to prevent an electric shock while testing.

a) Shift the transmission into neutral, turn the ignition switch ON and grasp the clutch lever.
b) Press the starter button and allow the engine to crank for a few seconds, and then measure the ignition coil primary peak voltage.

8) Repeat the b) procedure several times and measure the highest peak voltage.
If the voltage is lower than standard range, inspect the ignition coil/plug cap and the CKP sensor.

Ignition coil primary peak voltage
80 V and more

9) After measuring the ignition coil primary peak voltage, reinstall the removed parts.

Ignition Coil / Plug Cap Resistance

1) Remove the ignition coil/plug caps. Refer to “Ignition Coil / Plug Cap and Spark Plug Removal and Installation (Page 1H-6)”.
2) Measure the ignition coil/plug cap for resistance in both primary and secondary coils. If the resistance is not within the standard range, replace the ignition coil/plug cap with a new one.

Special tool
TOOL (A): 09900–25008 (Multi-circuit tester set)

Tester knob indication
Resistance (Ω)

Ignition coil resistance
Primary: 1.0 – 1.9 Ω ((+) terminal – (–) terminal)
Secondary: 10.0 – 16.2 kΩ (Spark plug cap – (–) terminal)

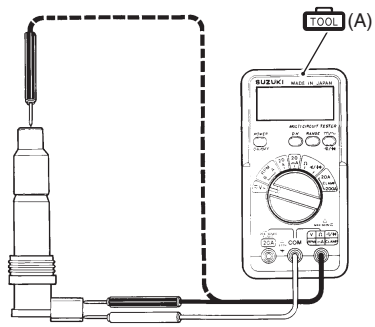

I718H1180005-01

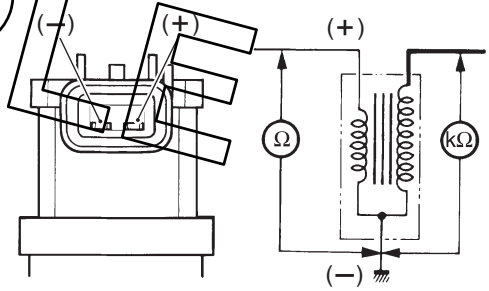

I718H1180006-01

3) After measuring the ignition coil/plug cap resistance, reinstall the removed parts.

SAMPLE

CKP Sensor Inspection

B823H11806004

Refer to “Electrical Components Location in Section 0A (Page 0A-7)”.

CKP Sensor Peak Voltage

1) Disconnect the CKP sensor coupler (1).

NOTE

Be sure that all of the couplers are connected properly and the battery is fully-charged.

I823H1180012-01

2) Connect the multi-circuit tester with the peak volt adaptor as follows.

⚠ CAUTION

Before using the multi-circuit tester and peak voltage adaptor, refer to the appropriate instruction manual.

Special tool

TOOL (A): 09900–25008 (Multi-circuit tester set)

Tester knob indication: Voltage (⎓)

CKP sensor	(+) Probe	(–) Probe
	Bl	G

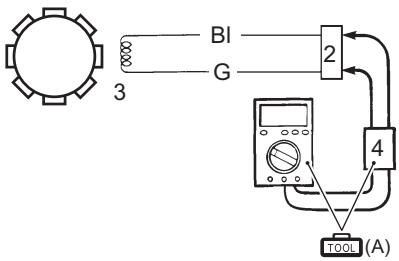

I823H1180013-01

2. CKP sensor coupler	4. Peak voltage adaptor
3. CKP sensor	

3) Measure the CKP sensor peak voltage in the following procedures:
   a) Shift the transmission into neutral, turn the ignition switch ON and grasp the clutch lever.
   b) Press the starter button and allow the engine to crank for a few seconds, and then measure the CKP sensor peak voltage.
4) Repeat the b) procedure several times and measure the highest CKP sensor peak voltage.

CKP sensor peak voltage
3.0 V and more (Bl – Green)

5) If the peak voltage is within the specification, check the continuity between the CKP sensor coupler and ECM coupler.

⚠ CAUTION

Normally, use the needle pointed probe to the backside of the lead wire coupler to prevent the terminal bend and terminal alignment.

6) After measuring the CKP sensor peak voltage, connect the CKP sensor coupler.

SAMPLE

CKP Sensor Resistance

1) Disconnect the CKP sensor coupler (1).

I823H1180012-01

2) Measure the resistance between the lead wires and ground. If the resistance is not within the standard range, replace the CKP sensor with a new one. Refer to “CKP Sensor Removal and Installation (Page 1H-11)”.

Tester knob indication
Resistance (Ω)

CKP sensor resistance
180 – 280 Ω (Bl – Green)
∞ Ω (Bl – Ground)

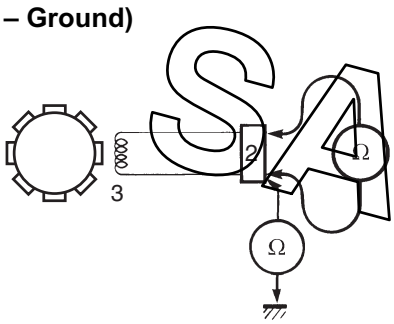

I718H1180008-02

2. CKP sensor coupler	3. CKP sensor

3) After measuring the CKP sensor resistance, connect the CKP sensor coupler.

CKP Sensor Removal and Installation

B823H11806005

Refer to “Generator Removal and Installation in Section 1J (Page 1J-6)”.

Engine Stop Switch Inspection

B823H11806006

Inspect the engine stop switch in the following procedures:

1) Turn the ignition switch OFF.
2) Remove the left fuel tank cover. Refer to “Exterior Parts Removal and Installation in Section 9D (Page 9D-14)”.
3) Disconnect the right handlebar switch coupler (1).

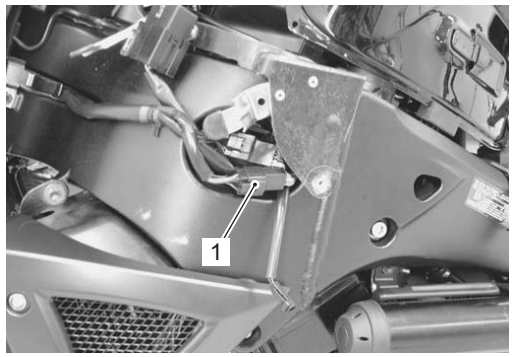

I823H1180014-01

4) Inspect the engine stop switch for continuity with a tester.
If any abnormality is found, replace the right handlebar switch assembly with a new one. Refer to “Handlebar Removal and Installation in Section 6B (Page 6B-3)”.

Special tool
TOOL : 09900–25008 (Multi-circuit tester set)

Tester knob indication
Continuity (•))))

Position \ Color	B/Bl	B/R
OFF ( )		
RUN ( )	○———	———○

I649G1180022-02

5) After finishing the engine stop switch inspection, reinstall the removed parts.

SAMPLE

Ignition Switch Inspection

B823H11806007

Refer to “Ignition Switch Inspection in Section 9C (Page 9C-9)”.

Ignition Switch Removal and Installation

B823H11806008

Removal

1) Remove the air cleaner box. Refer to “Air Cleaner Box Removal and Installation in Section 1D (Page 1D-6)”.
2) Remove the steering damper. Refer to “Steering Damper Construction in Section 6B (Page 6B-6)”.
3) Remove the fuel tank center covers (1).

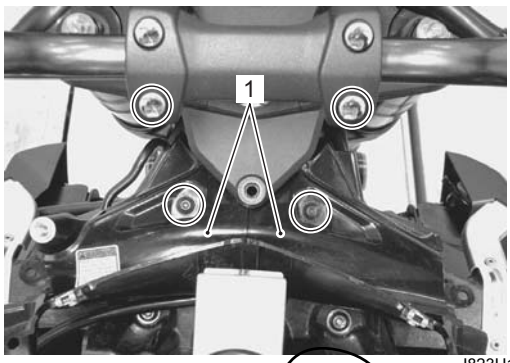

I823H1180015-02

4) Disconnect the ignition switch coupler (2).

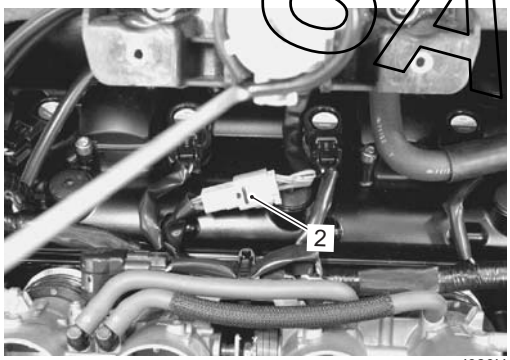

I823H1180016-01

5) Remove the relay box (3) from its bracket.

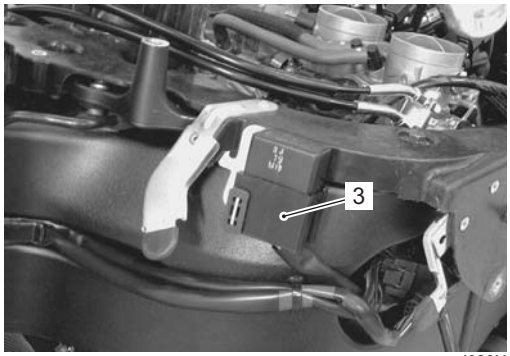

I823H1180017-01

6) Remove the throttle cable guide (4).

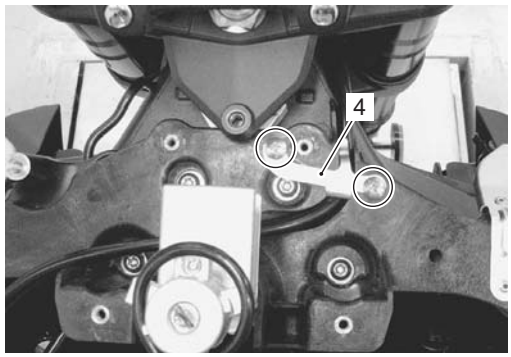

I823H1180018-01

7) Remove the ignition switch mounting bolts (5) and washers using the special tools.

Special tool
(A): 09930–11920 (Torx bit (JT40H))
(B): 09930–11940 (Bit holder)

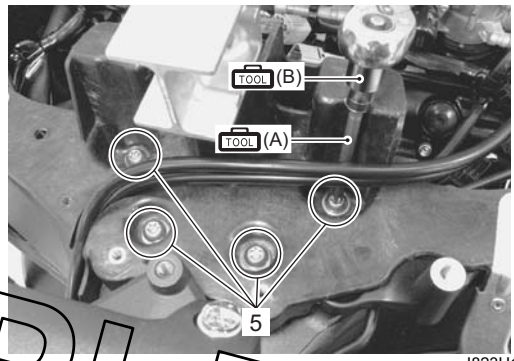

I823H1180019-02

8) Remove the fuel tank cover bracket (6).

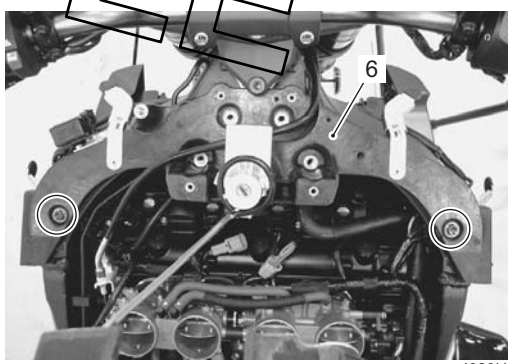

I823H1180020-01

SAMPLE

9) Remove the ignition switch (7).

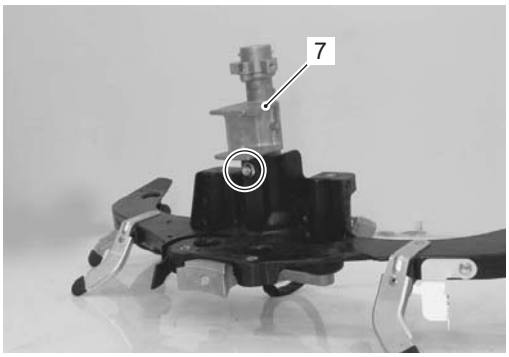

I823H1180021-01

Installation
Install the ignition switch in the reverse order of removal. Pay attention to the following points:

- Tighten the ignition switch mounting bolts (1) to the specified torque with the special tools.

  Special tool
  (A): 09930–11920 (Torx bit (JT40H))
  (B): 09930–11940 (Bit holder)

  Tightening torque
  Ignition switch mounting bolt (a): 6 N·m (0.6 kgf-m, 4.5 lb-ft)

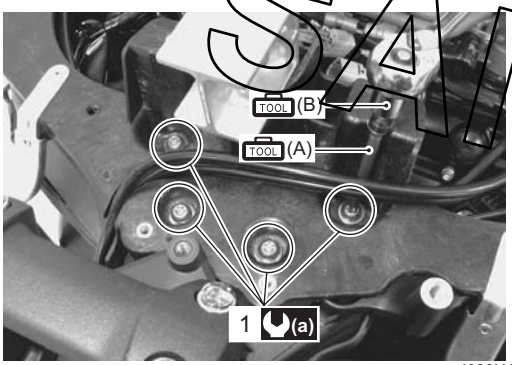

I823H1180022-01

- Route the throttle cable.

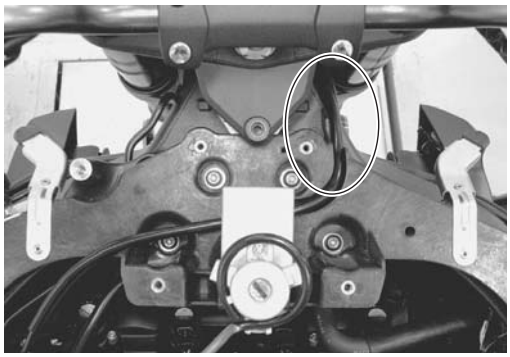

I823H1180023-01

- Tighten the steering damper mounting bolts (2) to the specified torque. Refer to “Steering Damper Construction in Section 6B (Page 6B-6)”.

  Tightening torque
  Steering damper mounting bolt (b): 23 N·m (2.3 kgf-m, 16.5 lb-ft)

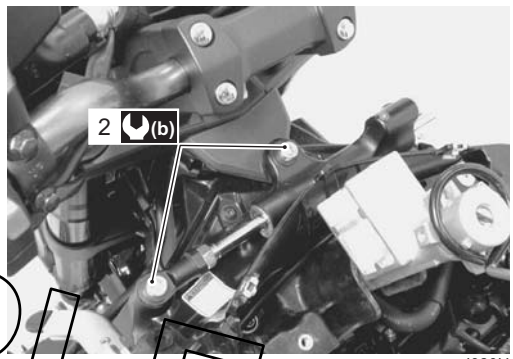

I823H1180024-01

SAMPLE

Drive Mode Selector Inspection

B823H11806010

Inspect the drive mode selector in the following procedures:

1) Set up the SDS tool. (Refer to the SDS operation manual for further details.)
2) Turn the ignition switch ON.
3) Click “Date monitor”.
4) Make sure each of “Driving mode selection” on the monitor is indicated “Open”.

Item	Value	Unit
☐ Gear position	N	
☐ Driving mode selection 1	Open	
☐ Driving mode selection 2	Open	
☐ Engine coolant / oil tempera...	55.3	℃

I823H1180029-02

5) Push each of drive mode selector A (1) and B (2). At this time, if the indication is changed to “GND”, the function is normal.

Item	Value	Unit
☐ Gear position	N	
☐ Driving mode selection 1	GND	
☐ Driving mode selection 2	Open	
☐ Engine coolant / oil tempera...	56.0	℃

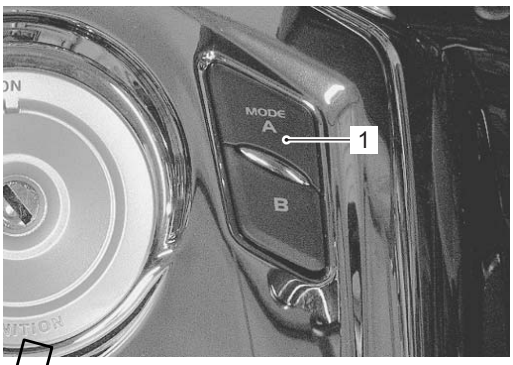

Item	Value	Unit
☐ Gear position	N	
☐ Driving mode selection 1	Open	
☐ Driving mode selection 2	GND	
☐ Engine coolant / oil tempera...	55.3	℃

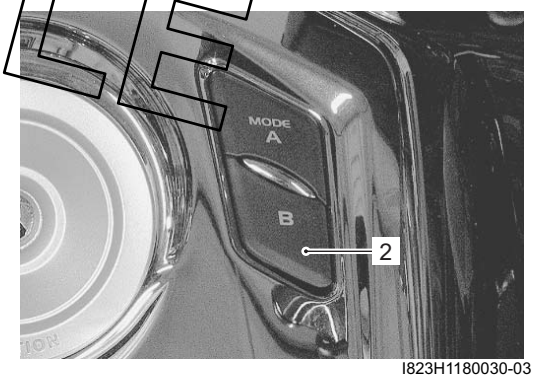

I823H1180030-03

SAMPLE

Immobilizer Antenna Removal and Installation (For E-02, 19, 24)

B823H11806009

Removal

1) Turn the ignition switch OFF.
2) Remove the fuel tank upper cover (center). Refer to “Exterior Parts Removal and Installation in Section 9D (Page 9D-14)”.
3) Remove the immobilizer antenna (1).

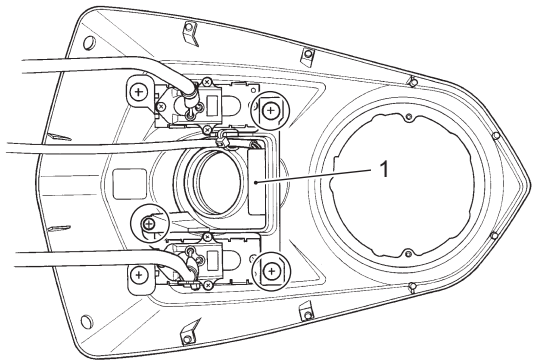

I823H1180032-02

Installation

Install the immobilizer antenna in the reverse order of removal.

Specifications

Service Data

B823H11807001

Electrical

Unit: mm (in)

Item	Specification		Note
Firing order	1 · 2 · 4 · 3		
Spark plug	Type	NGK: CR9EIA-9 DENSO: IU27D	
	Gap	0.8 – 0.9 (0.031 – 0.035)	
Spark performance	Over 8 (0.3) at 1 atm.		
CKP sensor resistance	180 – 280 Ω		
CKP sensor peak voltage	3.0 V and more		
Ignition coil resistance	Primary	1.0 – 1.9 Ω	Terminal – Terminal
	Secondary	10.0 – 16.2 kΩ	Plug cap – Terminal
Ignition coil primary peak voltage	80 V and more		When cranking

SAMPLE

Tightening Torque Specifications

B823H11807002

Fastening part	Tightening torque			Note
	N·m	kgf-m	lb-ft	
Spark plug	11	1.1	8.0	☞(Page 1H-6)
Ignition switch mounting bolt	6	0.6	4.5	☞(Page 1H-13)
Steering damper mounting bolt	23	2.3	16.5	☞(Page 1H-13)

Reference:

For the tightening torque of fastener not specified in this section, refer to “Tightening Torque List in Section 0C (Page 0C-9)”.

Special Tools and Equipment

Special Tool

B823H11808001

09900–25008 Multi-circuit tester set ☞(Page 1H-8) / ☞(Page 1H-9) / ☞(Page 1H-10) / ☞(Page 1H-11) 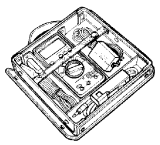	09900–25009 Needle pointed probe set ☞(Page 1H-8) 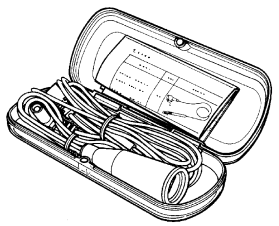
09930–10121 Spark plug wrench set ☞(Page 1H-6) / ☞(Page 1H-6) 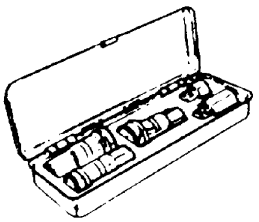	09930–11920 Torx bit (JT40H) ☞(Page 1H-12) / ☞(Page 1H-13) 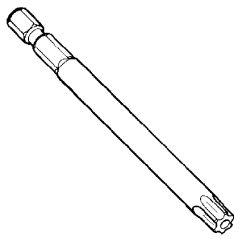
09930–11940 Bit holder ☞(Page 1H-12) / ☞(Page 1H-13) 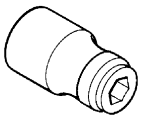	

SAMPLE

Starting System

Schematic and Routing Diagram

Starting System Diagram

B823H11902001

Refer to “Wire Color Symbols in Section 0A (Page 0A-5)”.

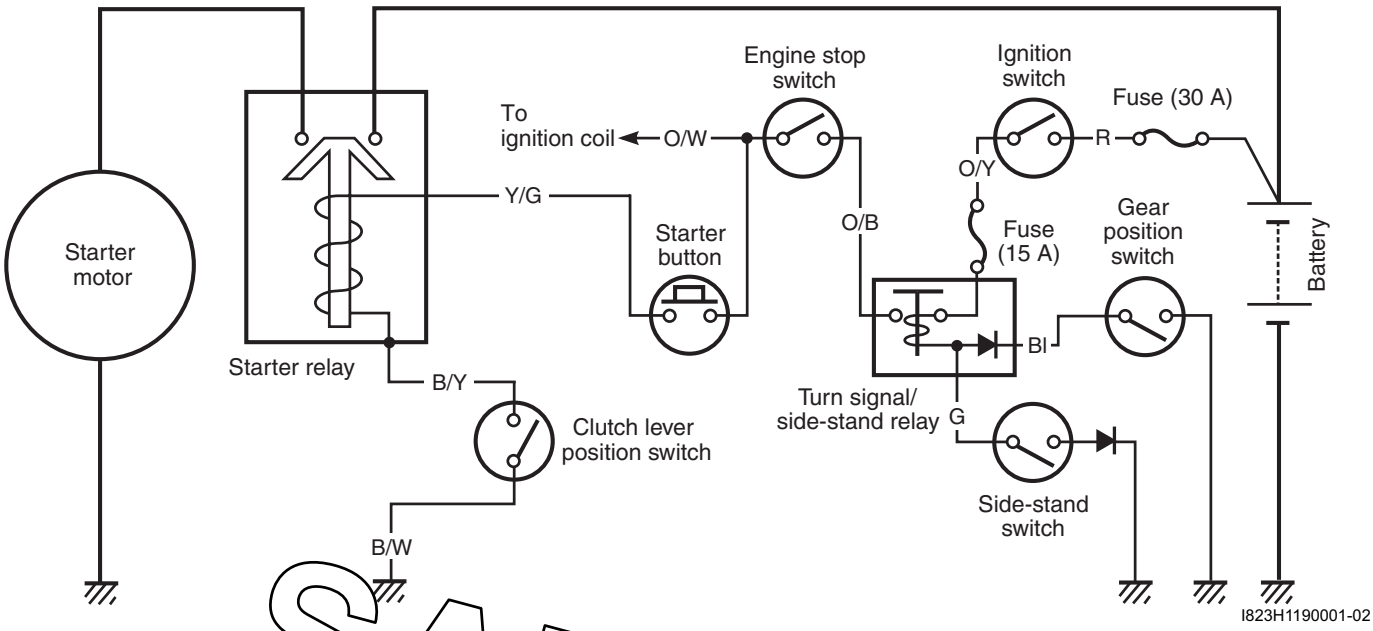

SAMPLE

Component Location

Starting System Components Location

B823H11903001

Refer to “Electrical Components Location in Section 0A (Page 0A-7)”.

Diagnostic Information and Procedures

Starting System Symptom Diagnosis

B823H11904001

Condition	Possible cause	Correction / Reference Item
Engine does not turn though the starter motor runs	Faulty starter clutch.	*Replace.*
Starter button is not effective	Run down battery.	*Repair or replace.*
	Defective switch contacts.	*Replace.*
	Brushes not seating properly on starter motor commutator.	*Repair or replace.*
	Defective starter relay or starter interlock switch.	*Replace.*
	Defective main fuse.	*Replace.*

Starter Motor Will Not Run

B823H11904002

NOTE

Make sure the fuses are not blown and the battery is fully-charged before diagnosing.

Troubleshooting

Step	Action	Yes	No
1	1) Shift the transmission into neutral. 2) Grasp the clutch lever, turn on the ignition switch with the engine stop switch in the “RUN” position and listen for a click from the starter relay when the starter button is pushed. *Is the click sound heard?*	Go to Step 2.	Go to Step 3.
2	Check if the starter motor runs when its terminal is connected to the battery (+) terminal. (Do not use thin “wire” because a large amount of current flows.) *Does the starter motor run?*	• Faulty starter relay. • Loose or disconnected starter motor lead wire. • Loose or disconnected between starter relay and battery (+) terminal.	Faulty starter motor.
3	Measure the starter relay voltage at the starter relay terminal (between Y/G (+) and B/Y (–)) when the starter button is pushed. *Is the voltage OK?*	Go to Step 4.	• Faulty ignition switch. • Faulty engine stop switch. • Faulty clutch lever position switch. • Faulty gear position switch. • Faulty turn signal/ side-stand relay. • Faulty starter button. • Faulty side-stand switch. • Poor contact of the coupler. • Open circuit in wire harness.
4	Check the starter relay. Refer to “Starter Relay Inspection (Page 1I-7)”. *Is the starter relay OK?*	Poor contact of the starter relay.	Faulty starter relay.

SAMPLE

Starter Motor Runs But Does Not Crank The Engine

B823H11904003

The starter motor runs when the transmission is in neutral, but does not run when the transmission is in any position other than neutral, with the side-stand up.

Step	Action	Yes	No
1	Check the side-stand switch. Refer to “Side-stand / Ignition Interlock System Parts Inspection (Page 1I-8)”. *Is the side-stand switch OK?*	Go to Step 2.	Faulty side-stand switch.
2	Check the starter clutch. Refer to “Starter Clutch Inspection (Page 1I-12)”. *Is the starter clutch OK?*	• Open circuit in wire harness. • Poor contact of connector.	Faulty starter clutch.

Repair Instructions

Starter Motor Components

B823H11906001

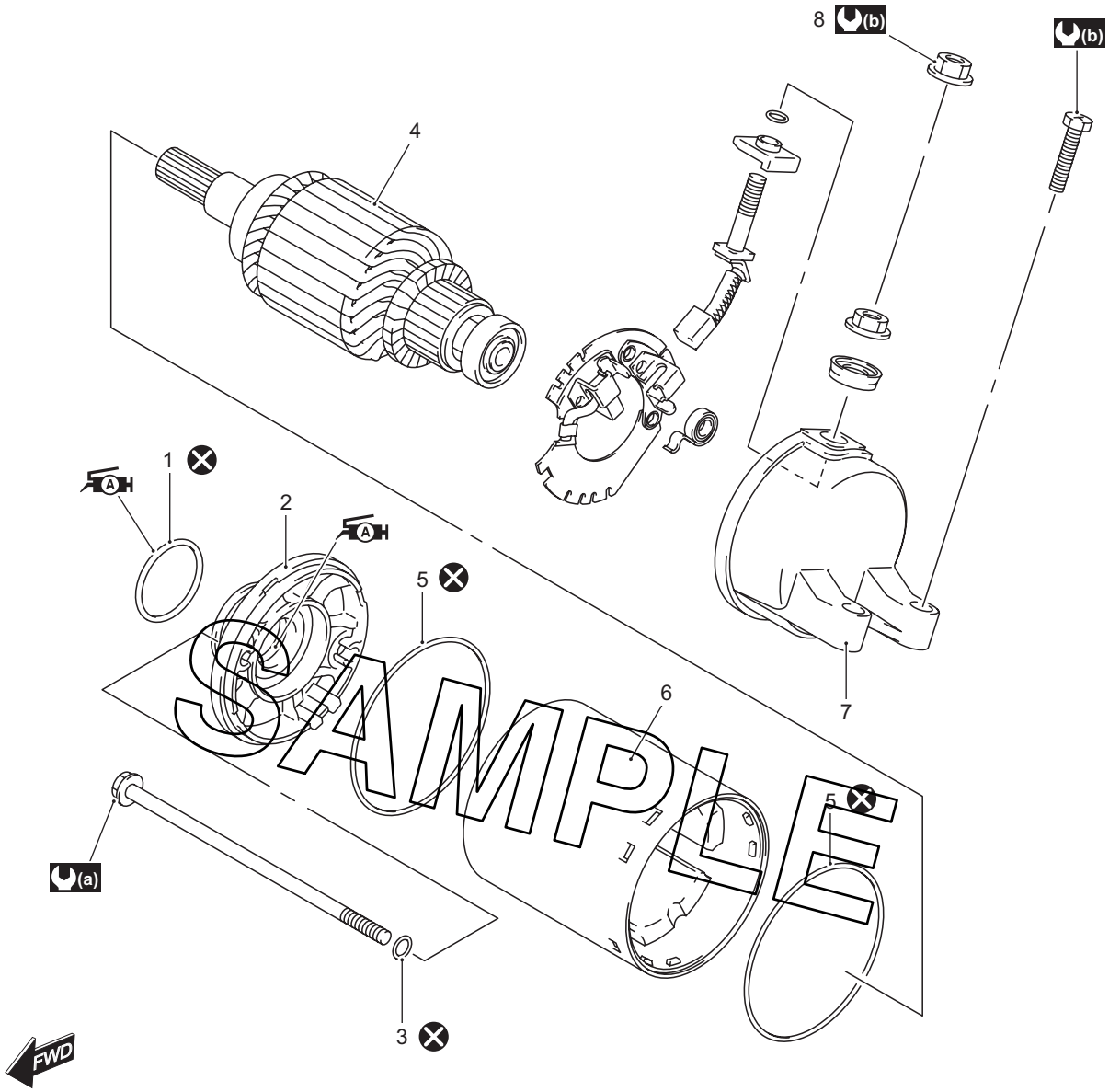

I823H1190037-06

1. O-ring	5. O-ring	(a) : 5 N·m (0.5 kgf-m, 3.5 lb-ft)
2. Housing end (Inside)	6. Starter motor case	(b) : 6 N·m (0.6 kgf-m, 4.5 lb-ft)
3. O-ring	7: Housing end assembly (Outside)	A : Apply grease to sliding surface.
4. Armature	8. Starter motor lead wire nut	⊗ : Do not reuse.

Starter Motor Removal and Installation

B823H11906002

Removal

1) Turn the ignition switch OFF and disconnect the battery (–) lead wire. Refer to “Battery Removal and Installation in Section 1J (Page 1J-14)”.
2) Remove the throttle body. Refer to “Throttle Body Removal and Installation in Section 1D (Page 1D-10)”.
3) Disconnect the starter motor lead wire (1).
4) Remove the starter motor (2).

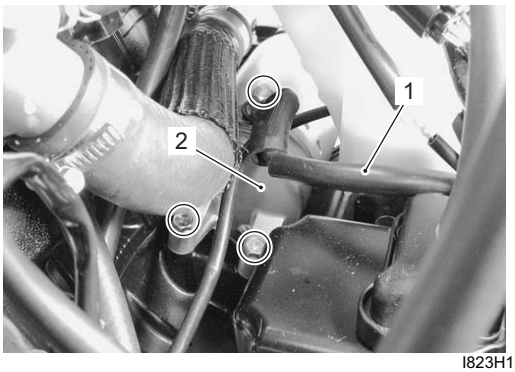

I823H1190038-01

Installation

Install the starter motor in the reverse order of removal. Pay attention to the following points:

- Apply grease to the O-ring.

: Grease 99000–25010 (SUZUKI SUPER GREASE A or equivalent)

⚠ CAUTION

Replace the O-ring with a new one.

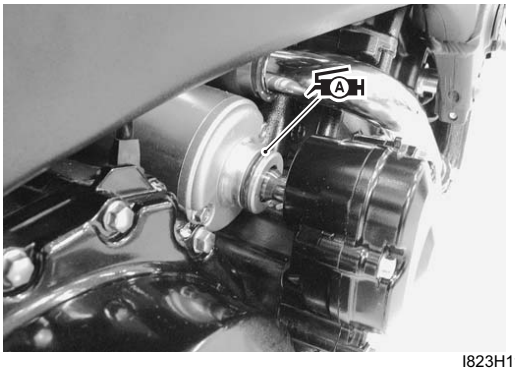

I823H1190039-01

- Install the starter motor. Refer to “Wiring Harness Routing Diagram in Section 9A (Page 9A-5)”.

Starter Motor Disassembly and Assembly

B823H11906003

Refer to “Starter Motor Removal and Installation (Page 1I-4)”.

Disassembly

Disassemble the starter motor as shown in the starter motor components diagram. Refer to “Starter Motor Components (Page 1I-3)”.

Assembly

Reassemble the starter motor in the reverse order of removal. Pay attention to the following points:

⚠ CAUTION

Replace the O-rings with new ones to prevent oil leakage and moisture.

- Apply grease to the lip of the oil seal.

: Grease 99000–25010 (SUZUKI SUPER GREASE A or equivalent)

I823H1190003-01

- Apply grease to the bearing.

: Grease 99000–25010 (SUZUKI SUPER GREASE A or equivalent)

I823H1190004-02

- Align the match marks on the starter motor case with the match mark on each housing end.

SAMPLE

- Tighten the starter motor housing bolts to the specified torque.

  Tightening torque
  Starter motor housing bolt (a): 5 N·m (0.5 kgf-m, 3.5 lb-ft)

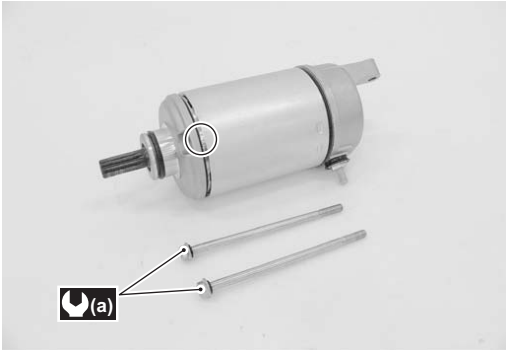

I823H1190005-02

I823H1190006-01

Starter Motor Inspection

B823H11906004

Refer to “Starter Motor Disassembly and Assembly (Page 1I-4)”.

Carbon Brush

Inspect the carbon brushes for abnormal wear, cracks or smoothness in the brush holder.
If either carbon brush is defective, replace the brush holder set with a new one.
Measure the length “a” of the carbon brushes using a vernier calipers. If the measurement is less than the service limit, replace the housing end assembly (outside) with a new one.

Brush length “a”
Service limit: 8.5 mm (0.33 in)

Special tool
TOOL : 09900–20102 (Vernier calipers (1/20 mm, 200 mm))

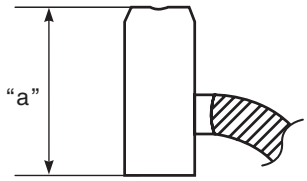

I718H1190013-01

Commutator

Inspect the commutator for discoloration, abnormal wear or undercut “A”.
If the commutator is abnormally worn, replace the armature assembly.
If the commutator surface is discolored, polish it with #400 sandpaper and wipe it using a clean, dry cloth.
If there is no undercut, scrape out the insulator (1) with a saw blade.

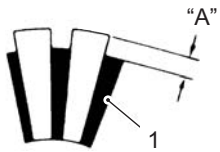

I823H1190007-01

SAMPLE

Armature Coil
Inspect for continuity between each segment.
Inspect for continuity between each segment and the armature shaft.
If there is no continuity between the segments or there is continuity between the segments and shaft, replace the armature assembly with a new one.

Special tool
(A): 09900–25008 (Multi-circuit tester set)

Tester knob indication
Continuity set (•))))

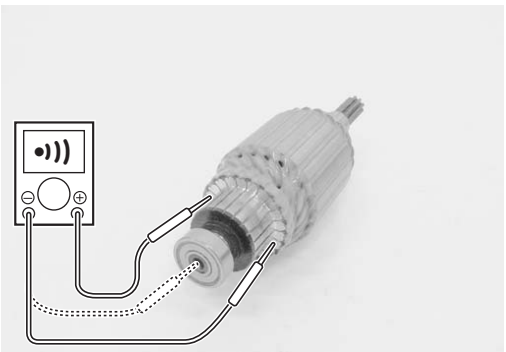

I823H1190008-01

Bearing
Check the bearings for damage.
If any damage is found, replace the armature assembly with a new one.

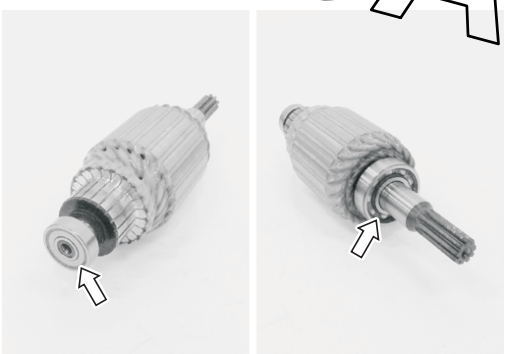

I823H1190033-01

Oil Seal
Check the seal lip for damage.
If any damage is found, replace the housing end (inside).

I823H1190034-01

Starter Relay Removal and Installation

B823H11906005

Removal

1) Turn the ignition switch OFF.
2) Disconnect the battery (–) lead wire from the battery.
3) Remove the frame cover center lid. Refer to “Exterior Parts Removal and Installation in Section 9D (Page 9D-14)”.
4) Disconnect the starter relay coupler (1) and remove the starter relay cover (2).

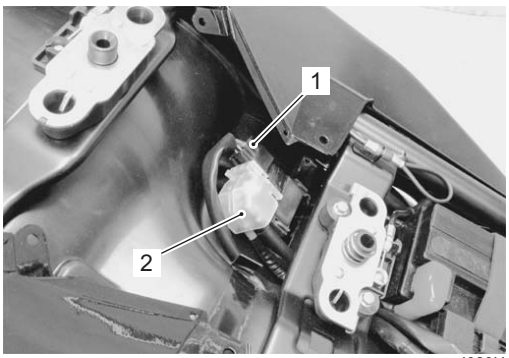

I823H1190009-02

5) Disconnect the starter motor lead wire (3) and battery (+) lead wire (4).
6) Remove the starter relay (5).

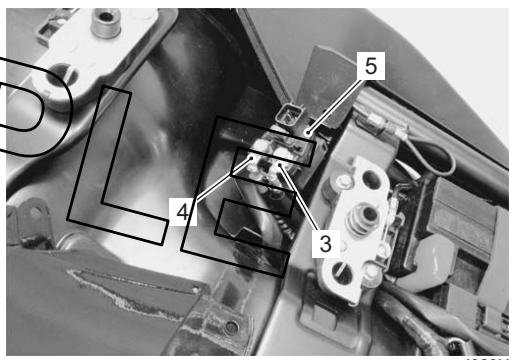

I823H1190011-01

Installation
Install the starter relay in the reverse order of removal.

SAMPLE

Starter Relay Inspection

B823H11906006

Inspect the starter relay in the following procedures:

1) Remove the starter relay. Refer to “Starter Relay Removal and Installation (Page 1I-6)”.
2) Apply 12 V to “A” and “B” terminals and check for continuity between the positive and negative terminals using the multi-circuit tester. If the starter relay clicks and continuity is found, the relay is ok.

⚠ CAUTION

Do not apply battery voltage to the starter relay for five seconds and more, since the relay coil may overheat and get damaged.

Special tool
TOOL (A): 09900–25008 (Multi-circuit tester set)

Tester knob indication
Continuity test (•))))

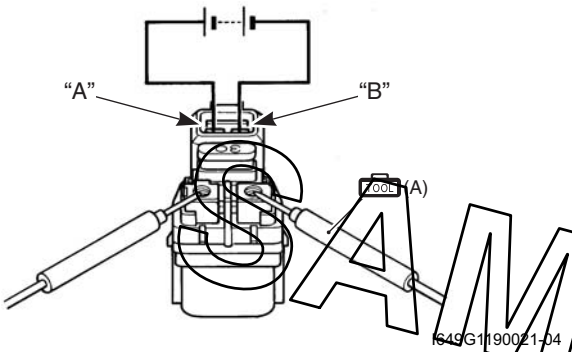

I649G1190021-04

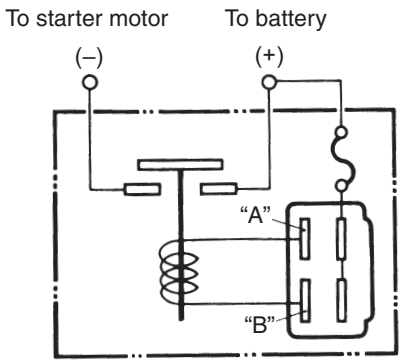

I823H1190040-02

3) Measure the relay coil resistance between the terminals using the multi-circuit tester. If the resistance is not within the specified value, replace the starter relay with a new one.

Special tool
TOOL (A): 09900–25008 (Multi-circuit tester set)

Starter relay resistance
3 – 5 Ω

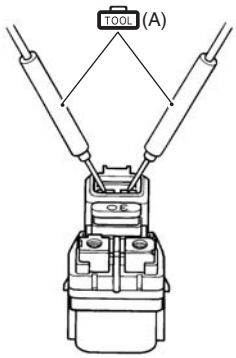

I649G1190023-03

4) Install the starter relay. Refer to “Starter Relay Removal and Installation (Page 1I-6)”.

Turn Signal / Side-stand Relay Removal and Installation

B823H11906007

Removal

1) Turn the ignition switch OFF.
2) Remove the left fuel tank cover. Refer to “Exterior Parts Removal and Installation in Section 9D (Page 9D-14)”.
3) Remove the turn signal/side-stand relay (1).

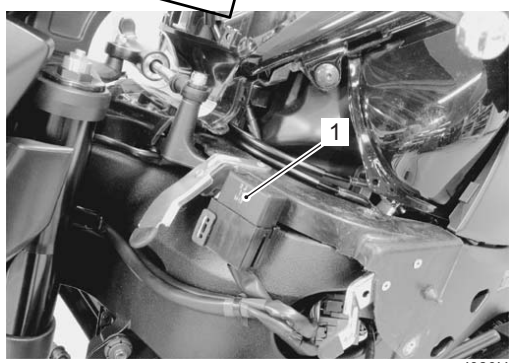

I823H1190012-01

Installation

Install the turn signal/side-stand relay in the reverse order of removal.

SAMPLE

Side-stand / Ignition Interlock System Parts Inspection

B823H11906008

Check the interlock system for proper operation. If the interlock system does not operate properly, check each component for damage or abnormalities. If any abnormality is found, replace the component with a new one.

Side-stand Switch

1) Turn the ignition switch OFF.
2) Remove the engine sprocket outer cover. Refer to "Exterior Parts Removal and Installation in Section 9D (Page 9D-14)".
3) Disconnect the side-stand switch coupler (1).

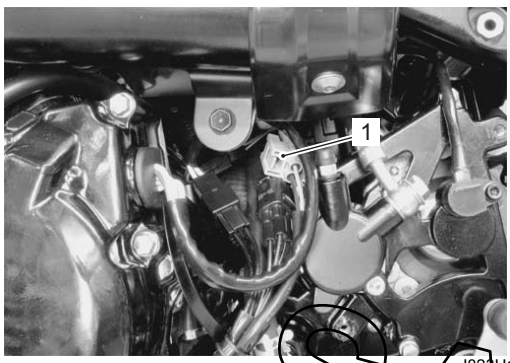

I823H1190013-01

4) Measure the voltage between G and B/W lead wires.

Special tool
TOOL : 09900–25008 (Multi-circuit tester set)

Tester knob indication
Diode test (⊣◀)

	G ((+) probe)	B/W ((–) probe)
ON (Side-stand up)	0.4 – 0.6 V	
OFF (Side-stand down)	1.4 V and more (Tester's battery voltage)	

NOTE

If the tester reads 1.4 V and below when the tester probes are not connected, replace its battery.

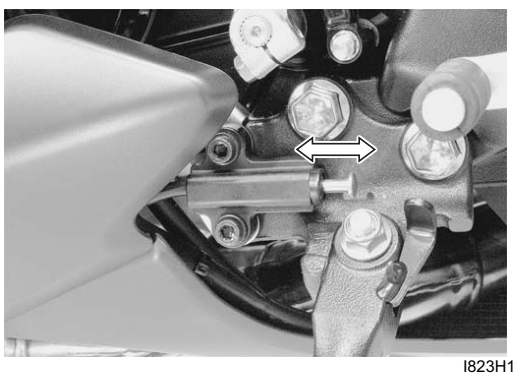

I823H1190014-01

5) Connect the side-stand switch coupler.
6) Install the engine sprocket outer cover. Refer to "Exterior Parts Removal and Installation in Section 9D (Page 9D-14)".

Turn Signal / Side-stand Relay

The turn signal/side-stand relay is composed of the turn signal relay, side-stand relay and diode.

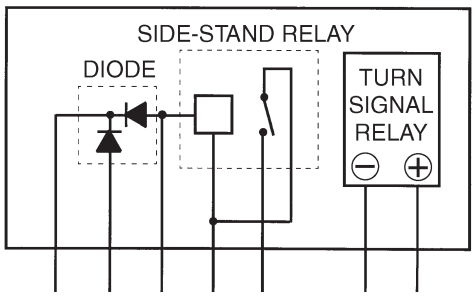

I649G1190027-02

Side-stand relay

1) Remove the turn signal/side-stand relay. Refer to "Turn Signal / Side-stand Relay Removal and Installation (Page 1I-7)".
2) Check the insulation between "D" and "E" terminals using the multi-circuit tester.
3) Apply 12 V to terminals "D" and "C" ((+) to "D" and (–) to "C") and check the continuity between "D" and "E". If there is no continuity, replace the turn signal/side-stand relay with a new one.

Special tool
TOOL : 09900–25008 (Multi-circuit tester set)

Tester knob indication
Continuity test (•))))

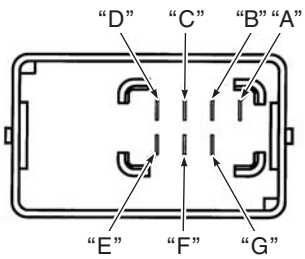

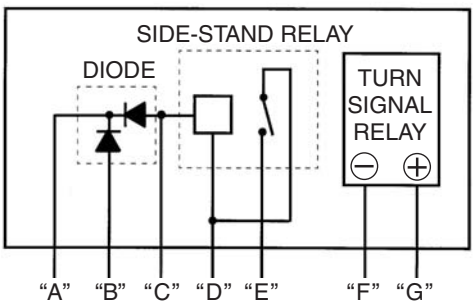

I649G1190028-02

SAMPLE

4) Install the turn signal/side-stand relay. Refer to “Turn Signal / Side-stand Relay Removal and Installation (Page 1I-7)”.

Diode inspection

1) Remove the turn signal/side-stand relay. Refer to “Turn Signal / Side-stand Relay Removal and Installation (Page 1I-7)”.
2) Measure the voltage between the “A”, “B” and “C” terminals using the multi-circuit tester.

Special tool
TOOL : 09900–25008 (Multi-circuit tester set)

Tester knob indication
Diode test (⊣◀)

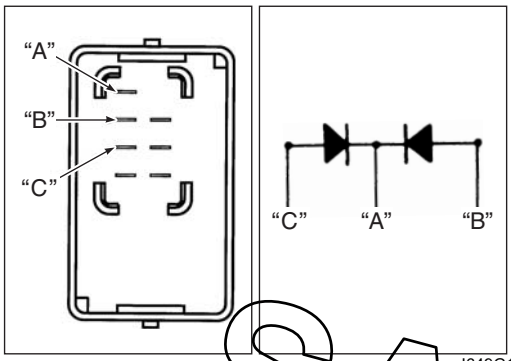

I649G1190029-02

		⊕ Probe of tester to:	
		“B”, “C”	“A”
⊖ Probe of tester to:	“B”, “C”	—	1.4 V and more (Tester's battery voltage)
	“A”	0.4 – 0.6 V	—

I649G1190046-04

NOTE

If the multi circuit tester reads 1.4 V and below when the tester probes are not connected, replace its battery.

3) Install the turn signal/side-stand relay. Refer to “Turn Signal / Side-stand Relay Removal and Installation (Page 1I-7)”.

Gear Position Switch

1) Lift and support the fuel tank. Refer to “Fuel Tank Removal and Installation in Section 1G (Page 1G-10)”.
2) Disconnect the gear position switch coupler (1).

⚠ CAUTION

When disconnecting and connecting the gear position switch coupler, make sure to turn off the ignition switch, or electronic parts may get damaged.

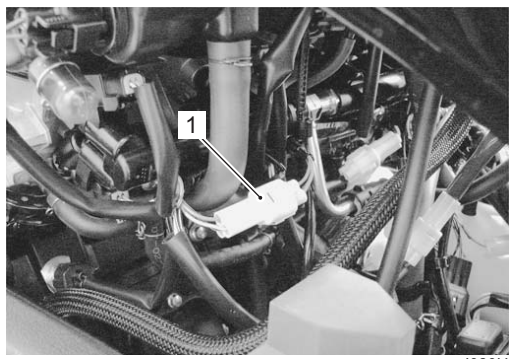

I823H1190015-01

3) Check the continuity between Bl and B lead wires with the transmission in “neutral”.

Special tool
TOOL : 09900–25008 (Multi-circuit tester set)

Tester knob indication
Continuity test (•))))

	Bl	B
ON (Neutral)	○	○
OFF (Except neutral)		

I823H1190016-01

4) Connect the gear position switch coupler to the wiring harness.
5) Insert the needle pointed probes to the lead wire coupler.
6) Turn the ignition switch ON and side-stand to upright position.

SAMPLE

7) Measure the voltage between R and B lead wires using the multi-circuit tester when shifting the gearshift lever from low to top.

Special tool
(A): 09900–25008 (Multi-circuit tester set)
(B): 09900–25009 (Needle pointed probe set)

Tester knob indication
Voltage (⎓)

Gear position switch voltage (Except neutral position)
0.6 V and more ((+) R – (–) B)

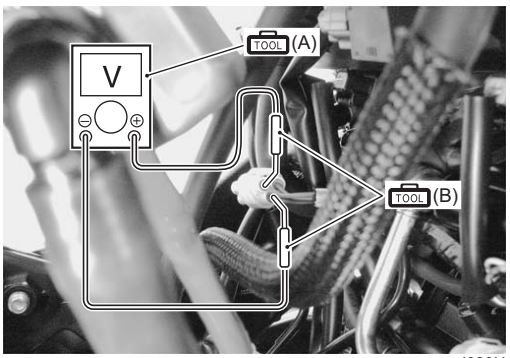

I823H1190017-01

8) Turn the ignition switch OFF.
9) Install the left frame cover. Refer to “Exterior Parts Removal and Installation in Section 9D (Page 9D-14)”.

Starter Torque Limiter / Starter Clutch Removal and Installation

B823H11906009

Removal

1) Drain engine oil.
2) Remove the starter torque limiter cover (1).

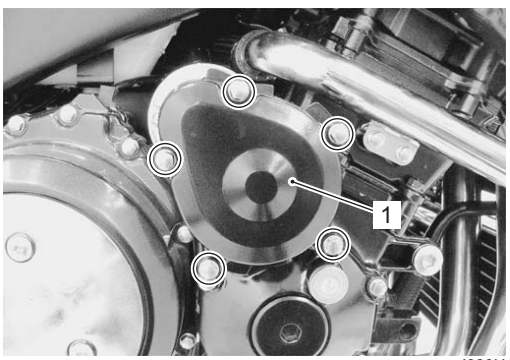

I823H1190018-01

3) Remove the gasket (2) and dowel pins.
4) Remove the starter torque limiter (3) and shaft (4).

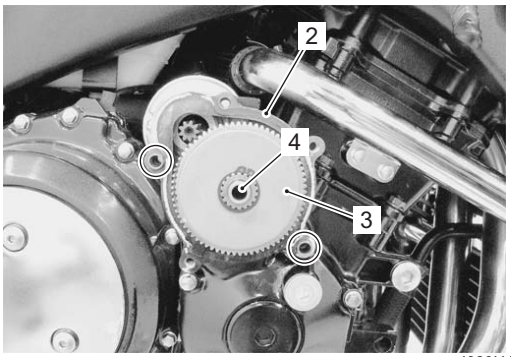

I823H1190019-01

5) Remove the starter clutch cover (5).

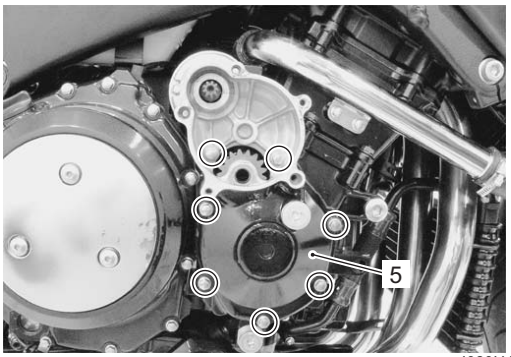

I823H1190020-01

6) Remove the gasket (6) and dowel pins.
7) Remove the wave washer (7), starter idle gear (8) and shaft (9).

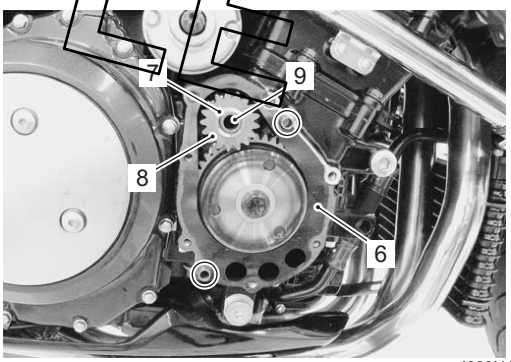

I823H1190021-02

SAMPLE

8) Hold the starter clutch with the special tool.
9) Remove the starter clutch.

Special tool
TOOL (A): 09920–34830 (Starter clutch holder)

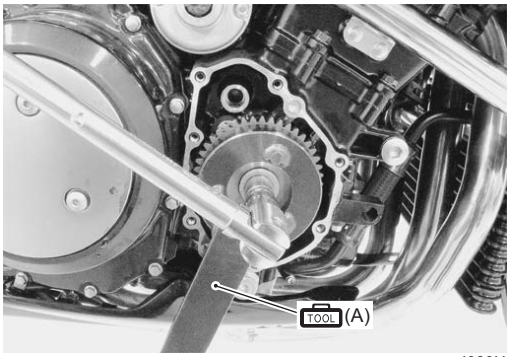

I823H1190022-01

Installation
Installation is in the reverse order of removal. Pay attention to the following points:

⚠ CAUTION

Replace the gaskets with new ones to prevent oil leakage.

- When installing the starter clutch, align the wide spline tooth of starter clutch with that of crankshaft.

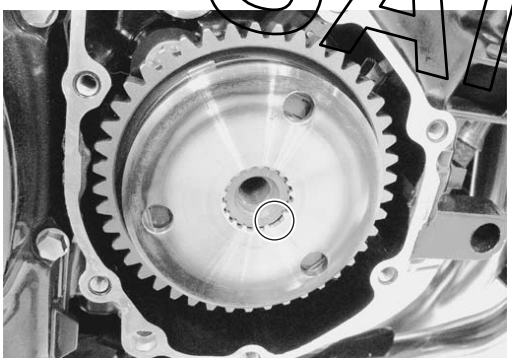

I823H1190024-01

- With the starter clutch held immovable using the special tool, tighten the starter clutch bolt to the specified torque.

Special tool
TOOL (A): 09920–34830 (Starter clutch holder)

Tightening torque
Starter clutch bolt: 55 N·m (5.5 kgf-m, 40.0 lb-ft)

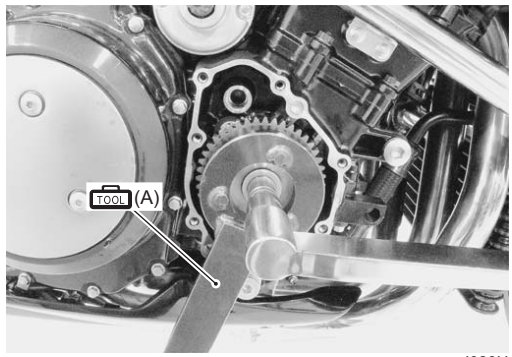

I823H1190025-04

- Apply a bond lightly to the mating surfaces at the parting line between the upper and lower crankcases.

1207B : Sealant 99000–31140 (SUZUKI BOND No.1207B or equivalent)

- Apply grease to the starter motor O-ring.

A : Grease 99000–25010 (SUZUKI SUPER GREASE A or equivalent)

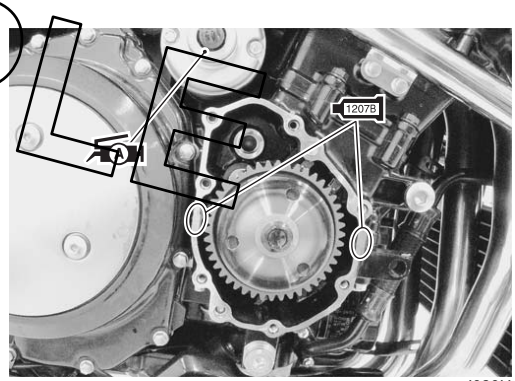

I823H1190026-02

- Fit the new gasket to the bolt “A”.

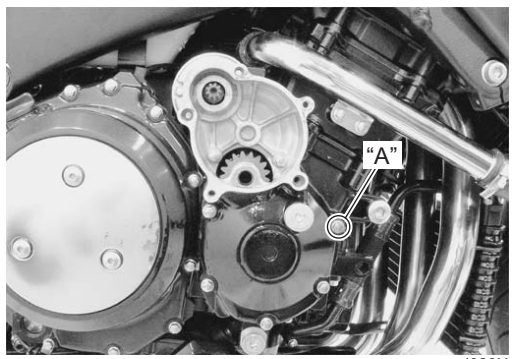

I823H1190027-02

SAMPLE

Starter Torque Limiter Inspection

B823H11906012

⚠ CAUTION

- **Do not attempt to disassemble the starter torque limiter.**
- **The starter torque limiter is available only as an assembly part.**

1) Hold the starter torque limiter with the special tools and vise.

   Special tool
   TOOL (A): 09930–73130 (Starter torque limiter holder)

   Special tool
   TOOL (B): 09930–73140 (Starter torque limiter socket)

2) Turn the starter torque limiter with a torque wrench and check the slip torque. If the slip torque is not within the specification, replace the starter torque limiter with a new one.

   Starter torque limiter slip torque
   Standard: 33.3 – 52.0 N·m (3.3 – 5.2 kgf-m, 24.0 – 37.5 lb-ft)

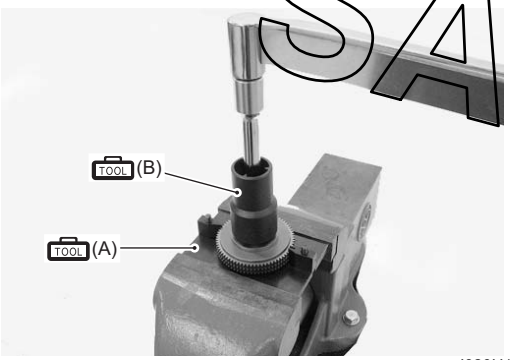

I823H1190028-01

Starter Clutch Inspection

B823H11906010

Refer to “Starter Torque Limiter / Starter Clutch Removal and Installation (Page 1I-10)”.

Starter Clutch

1) Install the starter driven gear onto the starter clutch.
2) Turn the starter driven gear by hand to inspect the starter clutch for a smooth movement. The gear turns in one direction only. If a large resistance is felt for rotation, inspect the starter clutch or the starter clutch contacting surface on the starter driven gear for wear or damage.
   If they are found to be damaged, replace them with new ones.

I823H1190029-01

Starter Clutch Bearing and Starter Driven Gear
Inspect the starter clutch bearing and starter clutch contacting surface on the starter driven gear for wear and damage. If they are found to be damaged, replace them with new ones.

I823H1190030-01

I823H1190031-03

SAMPLE

Starter Button Inspection

B823H11906011

Inspect the starter button in the following procedures:

1) Remove the left fuel tank cover. Refer to “Exterior Parts Removal and Installation in Section 9D (Page 9D-14)”.
2) Disconnect the right handlebar switch coupler (1).

NOTE

Red tape “A” is sticked on the right handle bar switch harness.

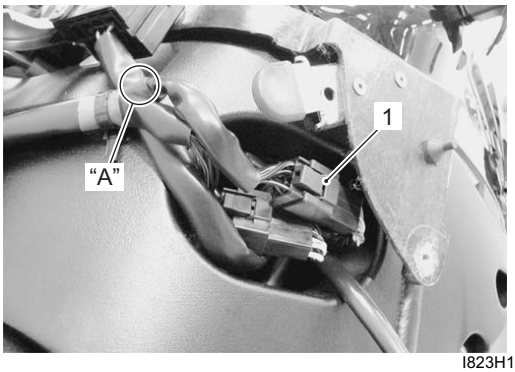

I823H1190032-02

3) Inspect the starter button for continuity with the tester.
   If any abnormality is found, replace the right handle switch assembly with a new one. Refer to “Handlebar Removal and Installation in Section 6B (Page 6B-3)”.

Special tool

TOOL : 09900–25008 (Multi-circuit tester set)

Tester knob indication

Continuity (•))))

Position \ Color	B/R	Bl/B	B/Y	B/W
•			○——	——○
PUSH	○——	——○		

I718H1190040-01

4) After finishing the starter button inspection, reinstall the removed parts.

Specifications

SAMPLE

Service Data

B823H11907001

Electrical

Unit: mm

Item	Specification		Note
Starter motor brush length	Standard	12.0 (0.47)	
	Limit	8.5 (0.33)	
Starter torque limiter slip torque	Standard	33.3 – 52.0 N·m (3.3 – 5.2 kgf-m, 24.0 – 37.5 lb-ft)	
Starter relay resistance	3 – 5 Ω		

Tightening Torque Specifications

B823H11907002

Fastening part	Tightening torque			Note
	N·m	kgf-m	lb-ft	
Starter motor housing bolt	5	0.5	3.5	☞(Page 1I-5)
Starter clutch bolt	55	5.5	40.0	☞(Page 1I-11)

NOTE

The specified tightening torque is also described in the following.
“Starter Motor Components (Page 1I-3)”

Reference:

For the tightening torque of fastener not specified in this section, refer to “Tightening Torque List in Section 0C (Page 0C-9)”.

Special Tools and Equipment

Recommended Service Material

B823H11908001

Material	SUZUKI recommended product or Specification		Note
Grease	SUZUKI SUPER GREASE A or equivalent	P/No.: 99000–25010	☞(Page 1I-4) / ☞(Page 1I-4) / ☞(Page 1I-4) / ☞(Page 1I-11)
Sealant	SUZUKI BOND No.1207B or equivalent	P/No.: 99000–31140	☞(Page 1I-11)

NOTE

Required service material is also described in the following.
"Starter Motor Components (Page 1I-3)"

Special Tool

B823H11908002

09900–20102 Vernier calipers (1/20 mm, 200 mm) ☞(Page 1I-5) 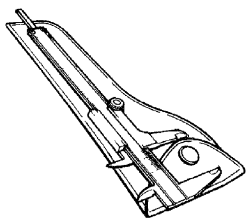	09900–25008 Multi-circuit tester set ☞(Page 1I-6) / ☞(Page 1I-7) / ☞(Page 1I-7) / ☞(Page 1I-8) / ☞(Page 1I-8) / ☞(Page 1I-9) / ☞(Page 1I-9) / ☞(Page 1I-10) / ☞(Page 1I-13) 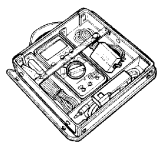
09900–25009 Needle pointed probe set ☞(Page 1I-10) 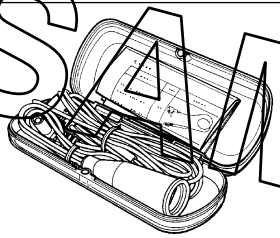	09920–34830 Starter clutch holder ☞(Page 1I-11) / ☞(Page 1I-11) 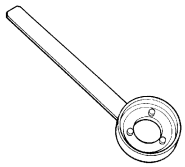
09930–73130 Starter torque limiter holder ☞(Page 1I-12) 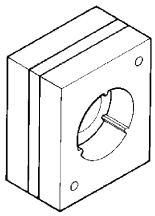	09930–73140 Starter torque limiter socket ☞(Page 1I-12) 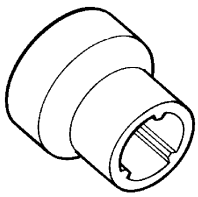

SAMPLE

Charging System

Schematic and Routing Diagram

Charging System Diagram

B823H11A02001

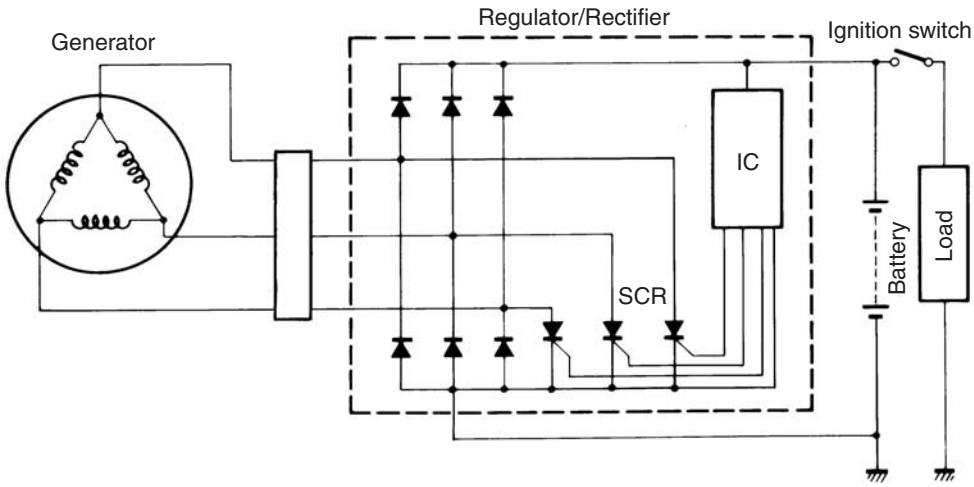

I718H11A0001-01

Component Location

Charging System Components Location

B823H11A03001

Refer to “Electrical Components Location in Section 0A (Page 0A-7)”.

SAMPLE

Diagnostic Information and Procedures

Charging System Symptom Diagnosis

B823H11A04001

Condition	Possible cause	Correction / Reference Item
Generator does not charge	Open- or short-circuited lead wires, or loose lead connections.	*Repair, replace or connect properly.*
	Short-circuited, grounded or open generator coil.	*Replace.*
	Short-circuited or punctured regulator/ rectifier.	*Replace.*
Generator does charge, but charging rate is below the specification	Lead wires tend to get short- or open-circuited or loosely connected at terminals.	*Repair or retighten.*
	Grounded or open-circuited generator coil.	*Replace.*
	Defective regulator/rectifier.	*Replace.*
	Defective cell plates in the battery.	*Replace the battery.*
Generator overcharges	Internal short-circuit in the battery.	*Replace the battery.*
	Damaged or defective regulator/rectifier.	*Replace.*
	Poorly grounded regulator/rectifier.	*Clean and tighten ground connection.*
Unstable charging	Lead wire insulation frayed due to vibration, resulting in intermittent short-circuiting.	*Repair or replace.*
	Internally short-circuited generator.	*Replace.*
	Defective regulator/rectifier.	*Replace.*

Condition	Possible cause	Correction / Reference Item
Battery overcharges	Faulty regulator/rectifier.	*Replace.*
	Faulty battery.	*Replace.*
	Poor contact of generator lead wire coupler.	*Repair.*
Battery runs down quickly	Trouble in charging system.	*Check the generator, regulator/rectifier and circuit connections and make necessary adjustments to obtain specified charging operation.*
	Cell plates have lost much of their active materials a result of overcharging.	*Replace the battery and correct the charging system.*
	Internal short-circuit in the battery.	*Replace the battery.*
	Too low battery voltage.	*Recharge the battery fully.*
	Too old battery.	*Replace the battery.*
Battery "sulfation"	Incorrect charging rate. (When not in use battery should be checked at least once a month to avoid sulfation.)	*Replace the battery.*
	The battery was left unused in a cold climate for too long.	*Replace the battery if badly sulfated.*

Battery Runs Down Quickly

B823H11A04002

Troubleshooting

Step	Action	Yes	No
1	Check accessories which use excessive amounts of electricity. *Are accessories being installed?*	Remove accessories.	Go to Step 2.
2	Check the battery for current leakage. Refer to "Battery Current Leakage Inspection (Page 1J-4)" *Is the battery for current leakage OK?*	Go to Step 3.	• Short circuit of wire harness. • Faulty electrical equipment.
3	Measure the regulated voltage between the battery terminals. Refer to "Regulated Voltage Inspection (Page 1J-4)". *Is the regulated voltage OK?*	• Faulty battery. • Abnormal driving condition.	Go to Step 4.
4	Measure the resistance of the generator coil. Refer to "Generator Inspection (Page 1J-5)". *Is the resistance of generator coil OK?*	Go to Step 5.	• Faulty generator coil. • Disconnected lead wires.
5	Measure the generator no-load performance. Refer to "Generator Inspection (Page 1J-5)". *Is the generator no-load performance OK?*	Go to Step 6.	Faulty generator.
6	Inspect the regulator/rectifier. Refer to "Regulator / Rectifier Inspection (Page 1J-10)". *Is the regulator/rectifier OK?*	Go to Step 7.	Faulty regulator/rectifier.
7	Inspect wirings. *Is the wirings OK?*	Faulty battery.	• Short circuit of wire harness. • Poor contact of couplers.

SAMPLE

Repair Instructions

Battery Cushion Rubber Attachment Construction

B823H11A06012

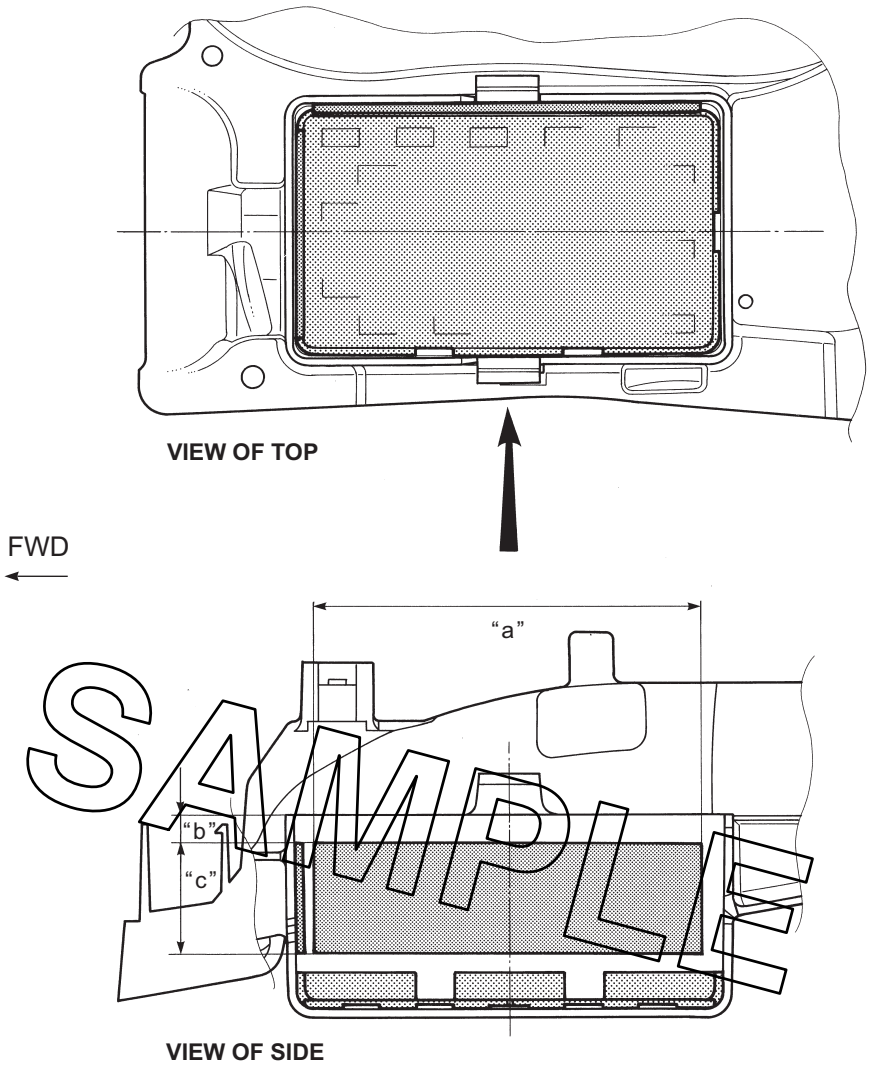

SAMPLE

I823H11A0022-02

"a": 140 mm (5.5 in)	"b": 10 mm (0.4 in)	"c": 40 mm (1.6 in)

Battery Current Leakage Inspection

B823H11A06001

Inspect the battery current leakage in the following procedures:

1) Turn the ignition switch OFF.
2) Remove the seat. Refer to “Exterior Parts Removal and Installation in Section 9D (Page 9D-14)”.
3) Disconnect the battery (–) lead wire.
4) Measure the current between battery (–) terminal and the battery (–) lead wire using the multi-circuit tester. If the reading exceeds the specified value, leakage is evident.

⚠ CAUTION

- **In case of a large current leak, turn the tester to high range first to avoid tester damage.**
- **Do not turn the ignition switch ON when measuring current.**

Special tool
(A): 09900–25008 (Multi-circuit tester set)

Tester knob indication
Current (⎓ , 20 mA)

Battery current (Leak)
Under 3 mA

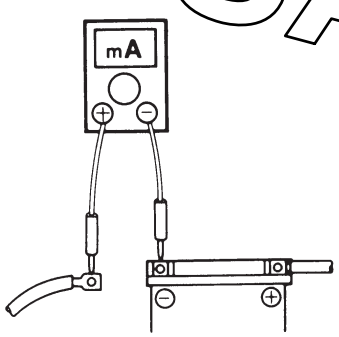

I649G11A0002-02

5) Connect the battery (–) terminal and install the seat. Refer to “Battery Removal and Installation (Page 1J-14)” and “Exterior Parts Removal and Installation in Section 9D (Page 9D-14)”.

Regulated Voltage Inspection

B823H11A06002

Inspect the regulated voltage in the following procedures:

1) Remove the seat. Refer to “Exterior Parts Removal and Installation in Section 9D (Page 9D-14)”.
2) Start the engine and keep it running at 5 000 r/min with the dimmer switch turned HI position.
3) Measure the DC voltage between the battery (+) and (–) terminals using the multi-circuit tester. If the voltage is not within the specified value, inspect the generator and regulator/rectifier. Refer to “Generator Inspection (Page 1J-5)” and “Regulator / Rectifier Inspection (Page 1J-10)”.

NOTE

When making this test, be sure that the battery is in fully charged condition.

Special tool
(A): 09900–25008 (Multi-circuit tester set)

Tester knob indication
Voltage (⎓)

Regulated voltage (Charging output)
Standard: 13.5 – 15.5 V at 5 000 r/min

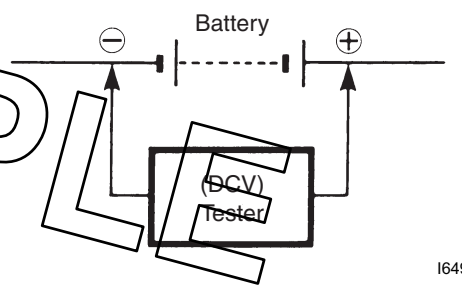

I649G11A0003-02

4) Install the seat. Refer to “Exterior Parts Removal and Installation in Section 9D (Page 9D-14)”.

SAMPLE

Generator Inspection

B823H11A06003

Generator Coil Resistance

1) Disconnect the generator coupler (1).

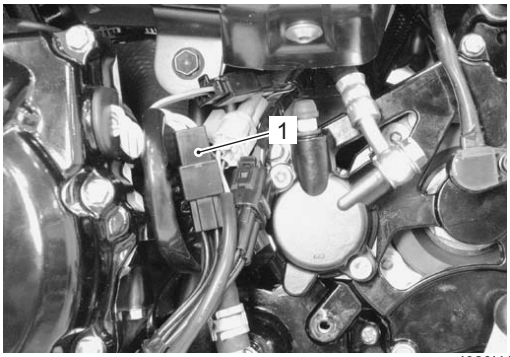

I823H11A0001-01

2) Measure the resistance between the three lead wires.
   If the resistance is out of specified value, replace the stator with a new one. Also, check that the generator core is insulated properly.

NOTE

When making this test, be sure that the battery is in fully charged condition.

Special tool
TOOL : 09900–25008 (Multi-circuit tester set)

Tester knob indication
Resistance (Ω)

Generator coil resistance
0.2 – 0.7 Ω (B – B)
∞ Ω (B – Ground)

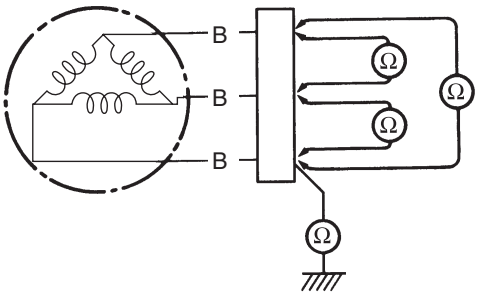

I718H11A0005-02

3) Connect the generator coupler.

No-load Performance

1) Disconnect the generator coupler (1).

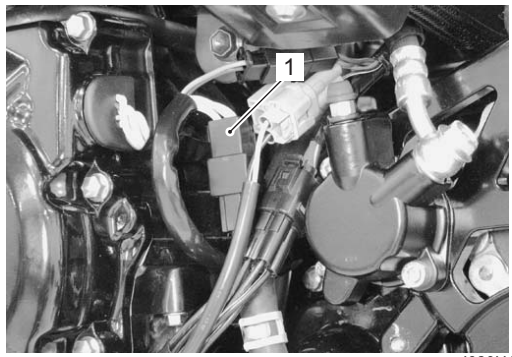

I823H11A0002-01

2) Start the engine and keep it running at 5 000 r/min.
3) Using the multi-circuit tester, measure the voltage between three lead wires.
   If the tester reads under the specified value, replace the generator with a new one.

Special tool
TOOL : 09900–25008 (Multi-circuit tester set)

Tester knob indication
Voltage (~)

Generator no-load performance (When engine is cold)
70 V (AC) and more at 5 000 r/min

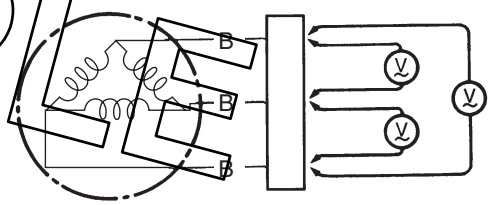

I718H11A0006-02

SAMPLE

Generator Removal and Installation

B823H11A06004

Removal

1) Disconnect the battery (–) lead wire. Refer to “Battery Removal and Installation (Page 1J-14)”.
2) Drain engine oil. Refer to “Engine Oil and Filter Replacement in Section 0B (Page 0B-10)”.
3) Remove the engine sprocket outer cover (1).

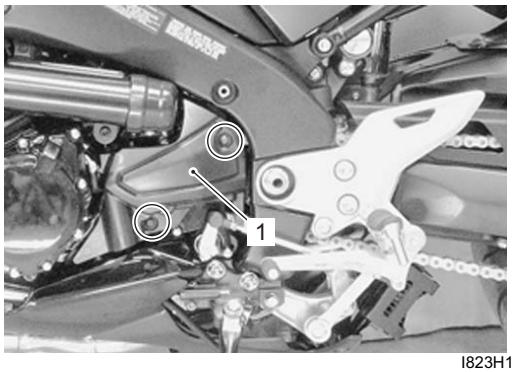

I823H11A0003-03

4) Disconnect the CKP sensor coupler (2) and generator coupler (3).

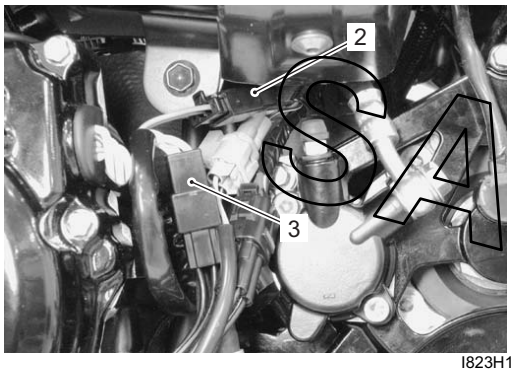

I823H11A0005-01

5) Remove the generator cover (4).

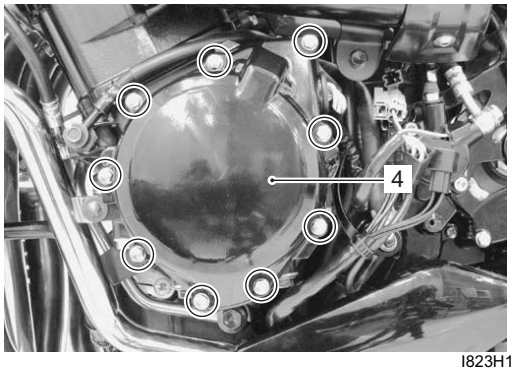

I823H11A0006-01

6) Remove the gasket (5) and dowel pins (6).

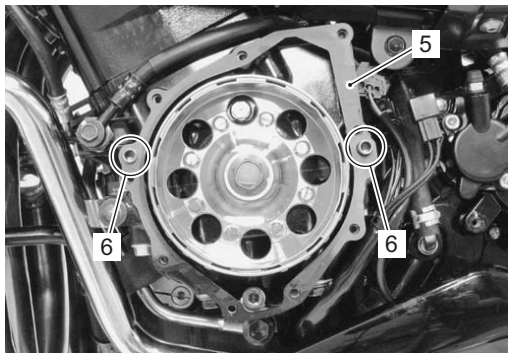

I823H11A0007-01

7) Hold the generator rotor with the special tool.

Special tool
TOOL (A): 09930–44530 (Rotor holder)

8) Remove the generator rotor bolt and washer.

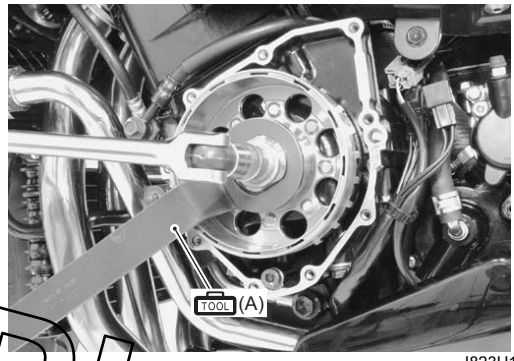

I823H11A0008-01

9) Remove the generator rotor (7) with the special tool.

Special tool
TOOL (A): 09930–44530 (Rotor holder)
TOOL (B): 09930–30450 (Rotor remover bolt)

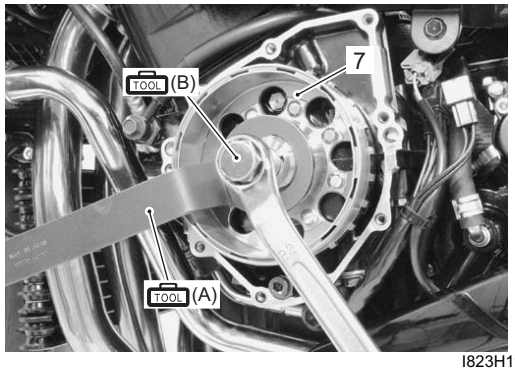

I823H11A0009-01

SAMPLE

10) Remove the key (8).

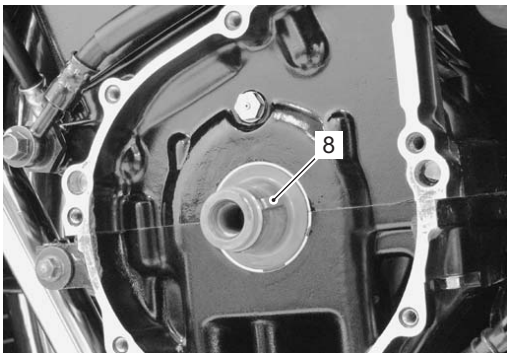

I823H11A0010-01

11) Remove the generator stator (9) along with the CKP sensor (10).

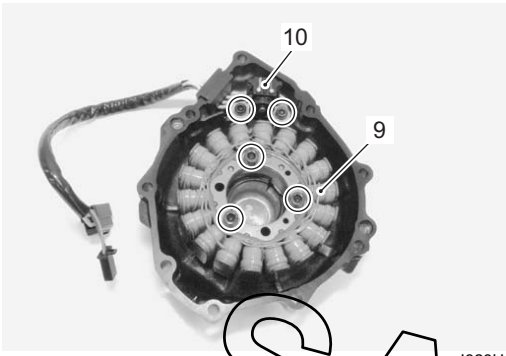

I823H11A0011-01

SAMPLE

Installation

Install the generator in the reverse order of removal. Pay attention to the following points:

- Tighten the generator starter set bolts and CKP sensor mounting bolts to the specified torque.

NOTE

Be sure the grommet (1) is set to the generator cover.

Tightening torque
Generator stator set bolt (a): 11 N·m (1.1 kgf-m, 8.0 lb-ft)
CKP sensor mounting bolt (b): 6.5 N·m (0.65 kgf-m, 4.7 lb-ft)

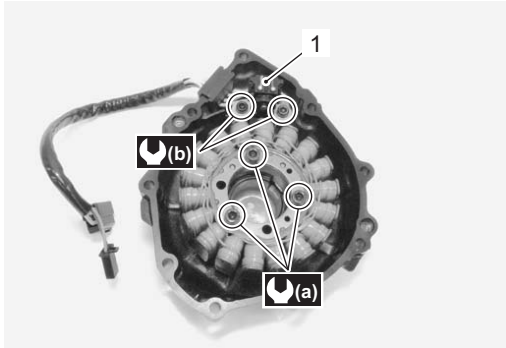

I823H11A0012-01

- Degrease the tapered portion “A” of generator rotor and also the crankshaft “B”. Use nonflammable cleaning solvent to wipe off oily or greasy matter and make these surfaces completely dry.
- Fit the key (2) in the key slot on the crankshaft.
- Install the generator rotor onto crankshaft.

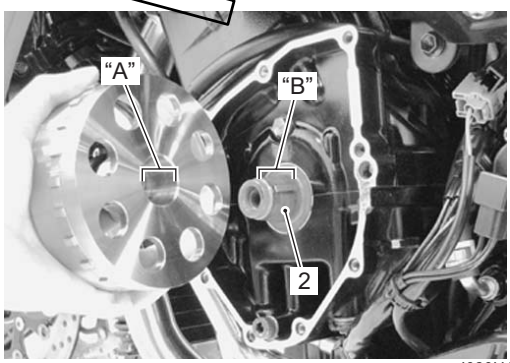

I823H11A0013-02

- Install the rotor bolt with the washer.
- Hold the generator rotor with the special tool and tighten its bolt to the specified torque.

Special tool
TOOL (A): 09930–44530 (Rotor holder)

Tightening torque
Generator rotor bolt (a): 120 N·m (12.0 kgf-m, 87.0 lb-ft)

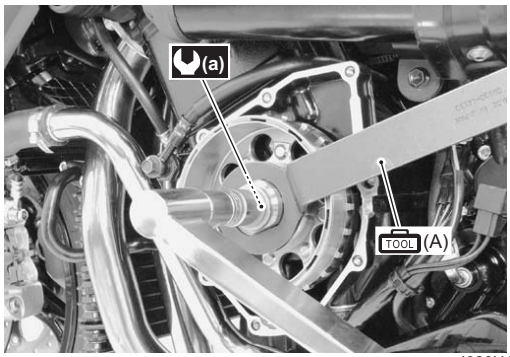

I823H11A0014-01

- Apply a bond lightly to the mating surfaces at the parting line between the upper and lower crankcases as shown.

1207B : Sealant 99000–31140 (SUZUKI BOND No.1207B or equivalent)

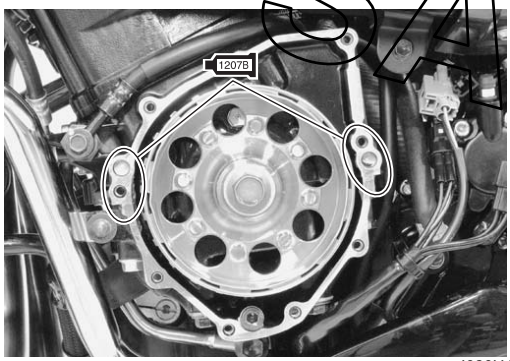

I823H11A0015-01

- Install the dowel pins and new gasket (3).

⚠ CAUTION

Use a new gasket to prevent oil leakage.

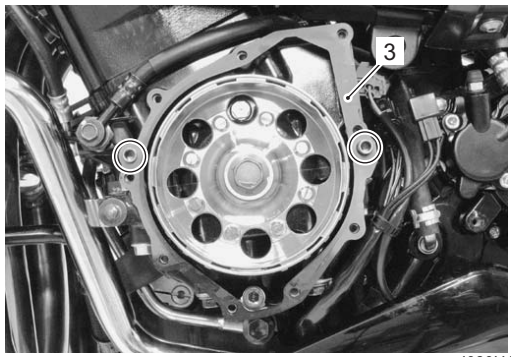

I823H11A0016-01

- Install the generator cover and tighten the generator cover bolts.

⚠ WARNING

Be careful not to pinch the finger between the generator cover and crankcase.

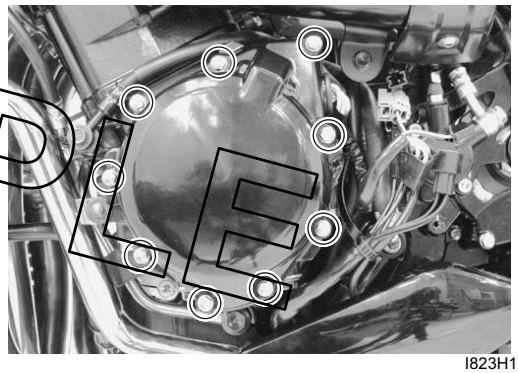
I823H11A0017-01

SAMPLE

Regulator / Rectifier Construction

B823H11A06005

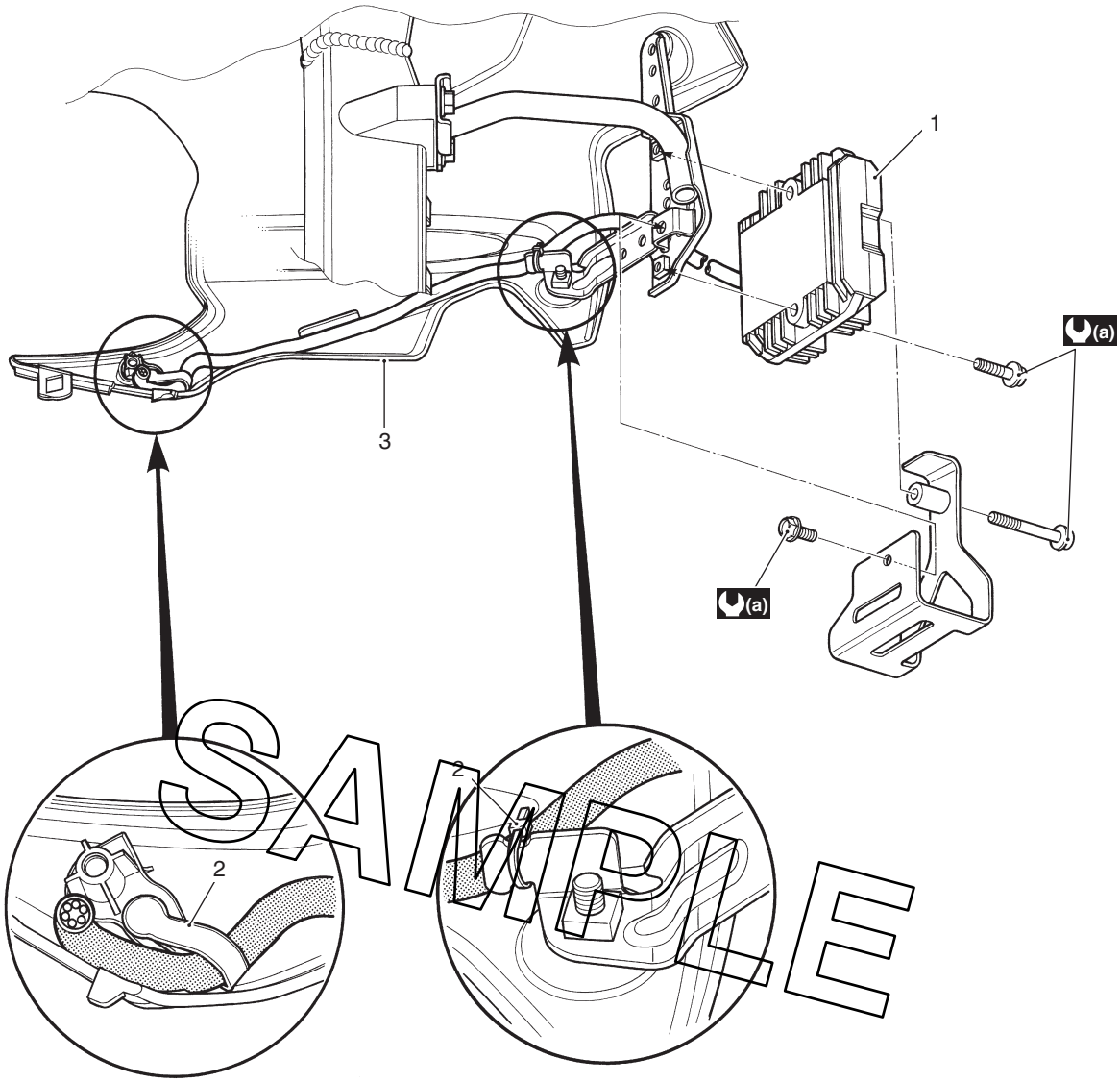

I823H11A0018-01

1. Regulator/rectifier	2. Clamp	3. Under cowling	(a) : 10 N·m (1.0 kgf-m, 7.0 lb-ft)

Regulator / Rectifier Removal and Installation

B823H11A06011

Removal

1) Turn the ignition switch OFF.
2) Disconnect the regulator/rectifier couplers (1).

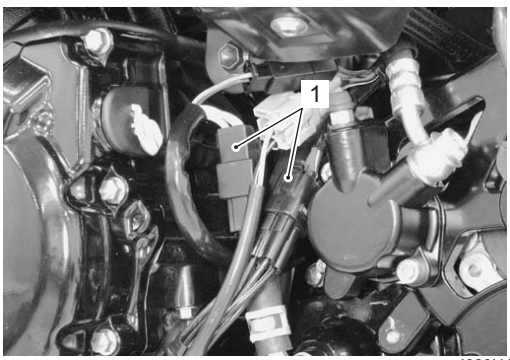

I823H11A0019-01

3) Remove the under cowling. Refer to “Exterior Parts Removal and Installation in Section 9D (Page 9D-14)”.
4) Remove the regulator/rectifier as shown in the regulator/rectifier construction. Refer to “Regulator / Rectifier Construction (Page 1J-9)”.

Installation

Install the regulator/rectifier as shown in the regulator/rectifier construction. Refer to “Regulator / Rectifier Construction (Page 1J-9)”.

Regulator / Rectifier Inspection

B823H11A06006

Inspect the regulator/rectifier in the following procedures:

1) Turn the ignition switch OFF.
2) Disconnect the regulator/rectifier couplers (1).

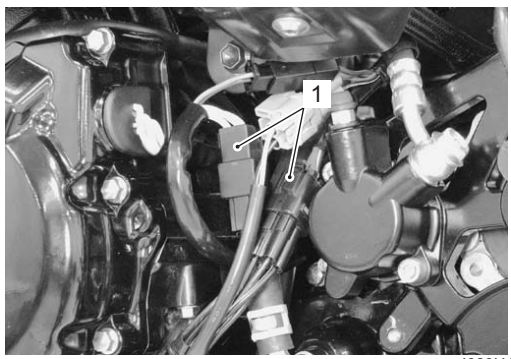

I823H11A0019-01

3) Measure the voltage between the terminals using the multi-circuit testers as indicated in the following table. If the voltage is not within the specified value, replace the regulator/rectifier with a new one. Refer to “Regulator / Rectifier Construction (Page 1J-9)”.

NOTE

If the tester reads 1.4 V and below when the tester probes are not connected, replace its battery.

Special tool
TOOL : 09900–25008 (Multi-circuit tester set)

Tester knob indication
Diode test (⊣◀)

SAMPLE

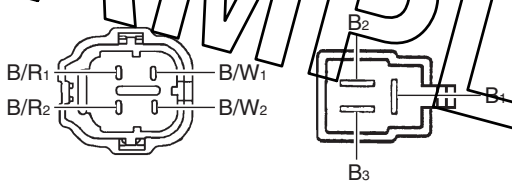

I823H11A0020-04

Unit: V

		(+) probe of tester to:						
		B/R_1	B/R_2	B_1	B_2	B_3	B/W_1	B/W_2
(–) probe of tester to:	B/R_1	—	0	0.1 – 0.8	0.1 – 0.8	0.1 – 0.8	0.2 – 0.9	0.2 – 0.9
	B/R_2	0	—	0.1 – 0.8	0.1 – 0.8	0.1 – 0.8	0.2 – 0.9	0.2 – 0.9
	B_1	*	*	—	0.5 – 1.2	0.5 – 1.2	0.1 – 0.8	0.1 – 0.8
	B_2	*	*	0.5 – 1.2	—	0.5 – 1.2	0.1 – 0.8	0.1 – 0.8
	B_3	*	*	0.5 – 1.2	0.5 – 1.2	—	0.1 – 0.8	0.1 – 0.8
	B/W_1	*	*	0.3 – 1.0	0.3 – 1.0	0.3 – 1.0	—	0
	B/W_2	*	*	0.3 – 1.0	0.3 – 1.0	0.3 – 1.0	0	—
*1.4 V and more (tester’s battery voltage)								

4) Connect the regulator/rectifier couplers and bind the clamp.

Battery Components

B823H11A06007

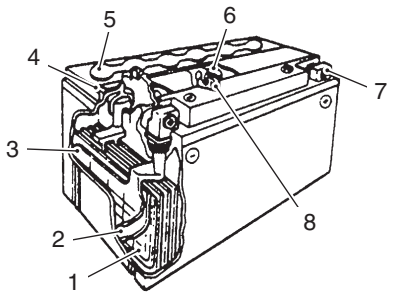

I649G11A0046-03

1. Anode plates	5. Stopper
2. Separator (Fiberglass plate)	6. Filter
3. Cathode plates	7. Terminal
4. Upper cover breather	8. Safety valve

Battery Charging

B823H11A06008

Initial Charging

Filling electrolyte

NOTE

When filling electrolyte, the battery must be removed from the vehicle and must be put on the level ground.

1) Remove the aluminum tape (1) which seals the battery filler holes “A”.

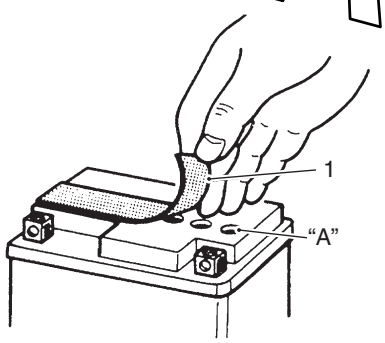

I649G11A0039-03

2) Remove the caps (2) from the electrolyte container.

NOTE

- **Do not remove or pierce the sealed areas “B” of the electrolyte container.**
- **After filling the electrolyte completely, use the removed cap (2) as sealing caps of battery-filler holes.**

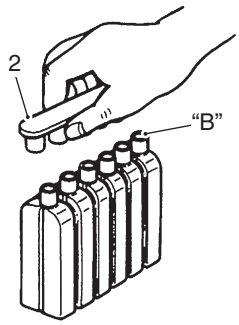

I649G11A0040-03

3) Insert the nozzles of the electrolyte container (3) into the electrolyte filler holes of the battery.
4) Hold the electrolyte container firmly so that it does not fall.

NOTE

Do not allow any of the electrolyte to spill.

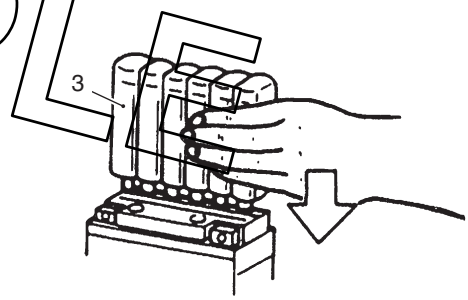

I649G11A0041-03

SAMPLE

5) Make sure that air bubbles (4) rise to the top of each electrolyte container, and leave in this position for about more than 20 minutes.

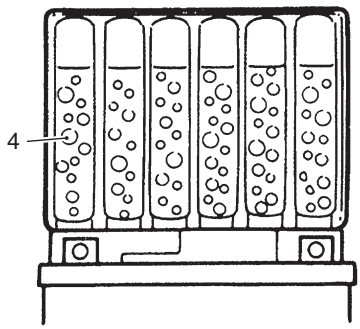

I649G11A0042-03

NOTE

If no air bubbles come out from a filler port, tap the bottom of the electrolyte container two or three times.
Never remove the container from the battery.

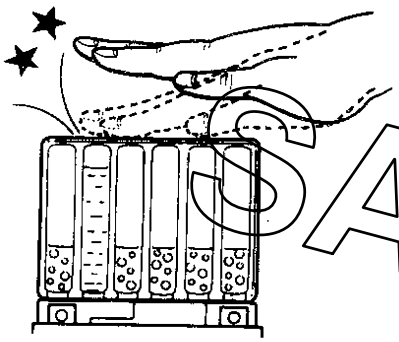

I310G11A0024-01

6) After confirming that the electrolyte has entered the battery completely, remove the electrolyte containers from the battery.
7) Wait for about 20 minutes.
8) Insert the caps (2) into the filler holes, pressing in firmly so that the top of the caps do not protrude above the upper surface of the battery's top cover.

⚠ CAUTION

- **Once the caps are installed to the battery, do not remove the caps.**
- **Do not tap the caps with a hammer when installing them.**

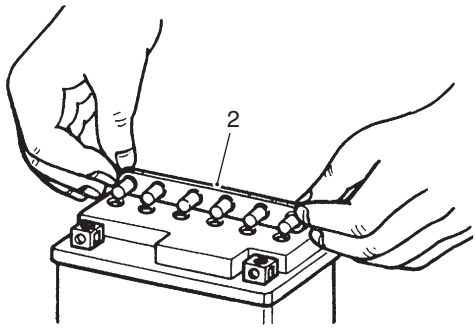

I718H11A0027-01

Correct

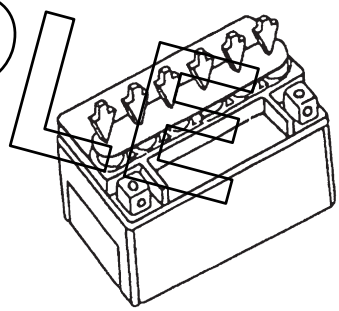

Incorrect

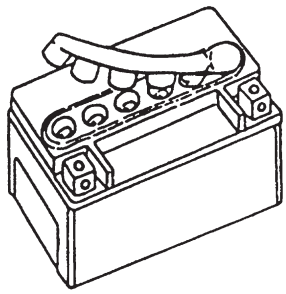

I649G11A0047-02

SAMPLE

Charging

For initial charging, use the charger specially designed for MF battery.

⚠ CAUTION

- **For charging the battery, make sure to use the charger specially designed for MF battery. Otherwise, the battery may be overcharged resulting in shortened service life.**
- **Do not remove the cap during charging.**
- **Position the battery with the cap facing upward during charging.**

Battery Recharging

⚠ CAUTION

Do not remove the caps on the battery top while recharging.

NOTE

When the motorcycle is not used for a long period, check the battery every 1 month to prevent the battery discharge.

1) Remove the battery from the motorcycle. Refer to "Battery Removal and Installation (Page 1J-14)".
2) Measure the battery voltage using the multi-circuit tester.
   If the voltage reading is less than the 12 V (DC), recharge the battery with a battery charger.

   Recharging time
   1.2 A for 5 to 10 hours or 5 A for 1 hour

⚠ CAUTION

Be careful not to permit the charging current to exceed 5 A at any time.

3) After recharging, wait at least 30 minutes and then measure the battery voltage using the multi-circuit tester.
   If the battery voltage is less than 12.5 V, recharge the battery again.
   If the battery voltage is still less than 12.5 V after recharging, replace the battery with a new one.

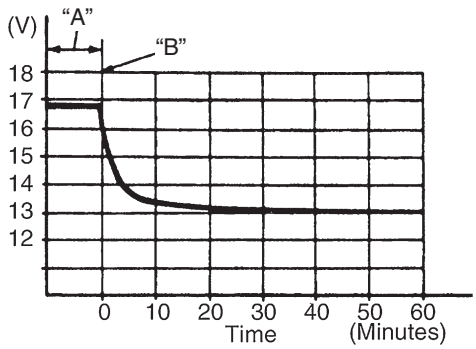

I649G11A0045-02

"A": Charging period	"B": Stop charging

4) Install the battery to the motorcycle. Refer to "Battery Removal and Installation (Page 1J-14)".

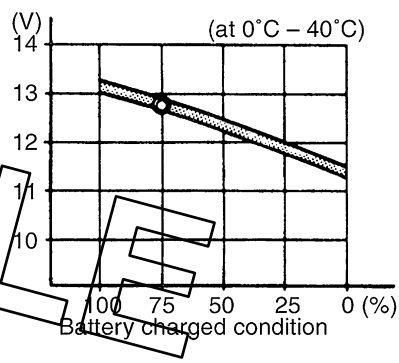

I705H11A0029-02

SAMPLE

Battery Removal and Installation

B823H11A06009

Removal

1) Remove the seat. Refer to “Exterior Parts Removal and Installation in Section 9D (Page 9D-14)”.
2) Disconnect the battery (–) lead wire (1).
3) Disconnect the battery (+) lead wire (2).

NOTE

Be sure to disconnect the battery (–) lead wire (1) first, then disconnect the battery (+) lead wire (2).

4) Remove the rubber band (3).
5) Remove the battery (4) from the motorcycle.

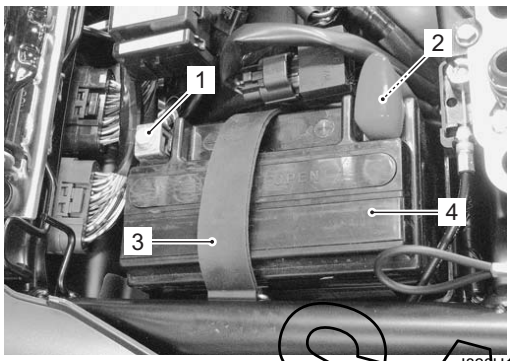

I823H11A0004-01

Installation

Install the battery in the reverse order of removal.
Pay attention to following points:

⚠ CAUTION

Never use anything except the specified battery.

- Install the rubber band.
- Tighten the battery lead wire mounting bolts securely.

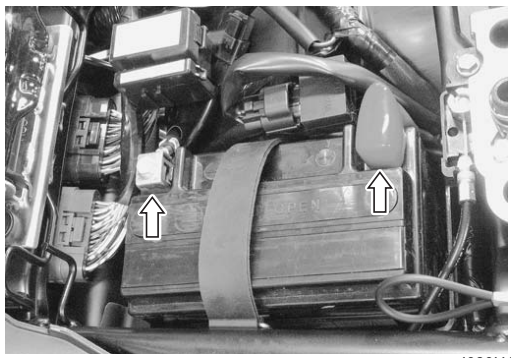

I823H11A0021-01

Battery Visual Inspection

B823H11A06010

Inspect the battery in the following procedures:

1) Remove the seat. Refer to “Exterior Parts Removal and Installation in Section 9D (Page 9D-14)”.
2) Visually inspect the surface of the battery container. If any signs of cracking or electrolyte leakage from the sides of the battery have occurred, replace the battery with a new one.
   If the battery terminals are found to be coated with rust or an acidic white powdery substance, clean the battery terminals with sandpaper.
3) Install the seat. Refer to “Exterior Parts Removal and Installation in Section 9D (Page 9D-14)”.

SAMPLE

Specifications

Service Data

B823H11A07001

Electrical

Unit: mm

Item		Specification	Note
Generator coil resistance		0.2 – 0.7 Ω	
Generator maximum output		Approx. 400 W at 5 000 r/min	
Generator no-load voltage (When engine is cold)		70 V (AC) and more at 5 000 r/min	
Regulated voltage		13.5 – 15.5 V at 5 000 r/min	
Battery	Type designation	YTX12-BS	
	Capacity	12 V 36 kC (10 Ah)/10 HR	
	Standard electrolyte S.G.	1.320 at 20 °C (68 °F)	

⚠ CAUTION

Never use anything except the specified battery.

Tightening Torque Specifications

B823H11A07002

Fastening part	Tightening torque			Note
	N·m	kgf-m	lb-ft	
Generator stator set bolt	11	1.1	8.0	☞(Page 1J-7)
CKP sensor mounting bolt	6.5	0.65	4.7	☞(Page 1J-7)
Generator rotor bolt	120	12.0	87.0	☞(Page 1J-8)

NOTE

The specified tightening torque is also described in the following.
“Regulator / Rectifier Construction (Page 1J-9)”

Reference:
For the tightening torque of fastener not specified in this section, refer to “Tightening Torque List in Section 0C (Page 0C-9)”.

SAMPLE

Special Tools and Equipment

Recommended Service Material

B823H11A08001

Material	SUZUKI recommended product or Specification		Note
Sealant	SUZUKI BOND No.1207B or equivalent	P/No.: 99000–31140	☞(Page 1J-8)

Special Tool

B823H11A08002

09900–25008 Multi-circuit tester set ☞(Page 1J-4) / ☞(Page 1J-4) / ☞(Page 1J-5) / ☞(Page 1J-5) / ☞(Page 1J-10) 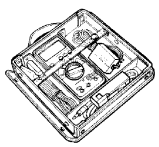	09930–30450 Rotor remover bolt ☞(Page 1J-6) 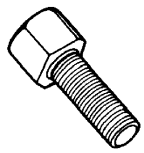
09930–44530 Rotor holder ☞(Page 1J-6) / ☞(Page 1J-6) / ☞(Page 1J-8) 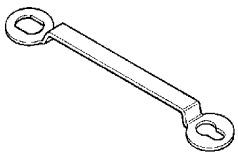	

SAMPLE

Exhaust System

Precautions

Precautions for Exhaust System

B823H11B00001

⚠ WARNING

To avoid the risk of being burned, do not touch the exhaust system when the system is hot. Any service on the exhaust system should be performed when the system is cool.

⚠ CAUTION

Make sure that the exhaust pipes, muffler joint and muffler have enough clearance from the rubber parts and plastic parts to avoid melting.

General Description

Exhaust Control System Description

B823H11B01001

The exhaust control system (EXCS) consists of the exhaust control valve (EXCV), exhaust control valve actuator (EXCVA) and exhaust control valve cables (EXCV cables). EXCV is installed in the muffler joint. EXCVA is mounted on the main frame. The EXCV is operated by the EXCVA via the cables. This system is designed to improve the engine torque at low engine rpm.

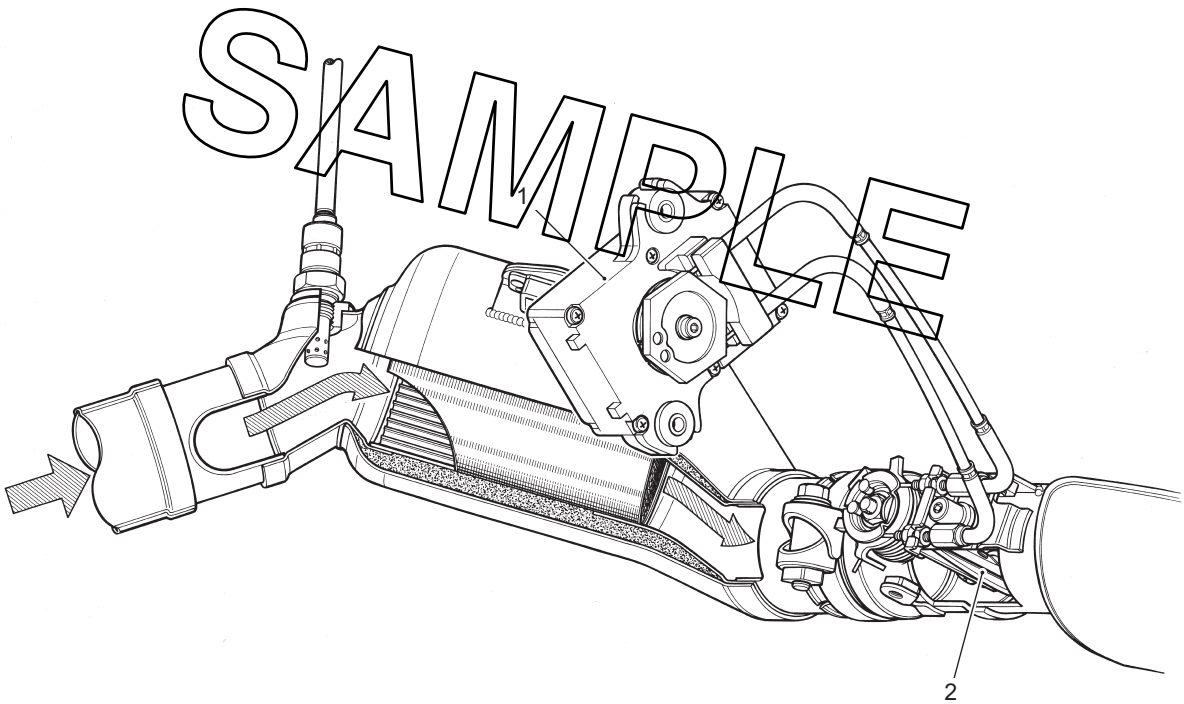

SAMPLE

I823H11B0001-04

1. Exhaust control valve actuator (EXCVA)	2. Exhaust control valve (EXCV)

Exhaust Control System Operation

B823H11B01002

The EXCS is operated by the signal supplied from the ECM.The open/close operation of the EXCV is performed by the EXCVA which is controlled by the ECM by changing the current direction of the actuator motor. The position sensor (incorporated in the EXCVA) detects the EXCVA movement by measuring the voltage and then the ECM determines the EXCV opening angle based on the engine rpm and gear positions. Every time the ignition switch is turned ON, the EXCVA automatically drives the EXCV and detects full close/open position voltages and sets the EXCV to middle position.

FULL CLOSE

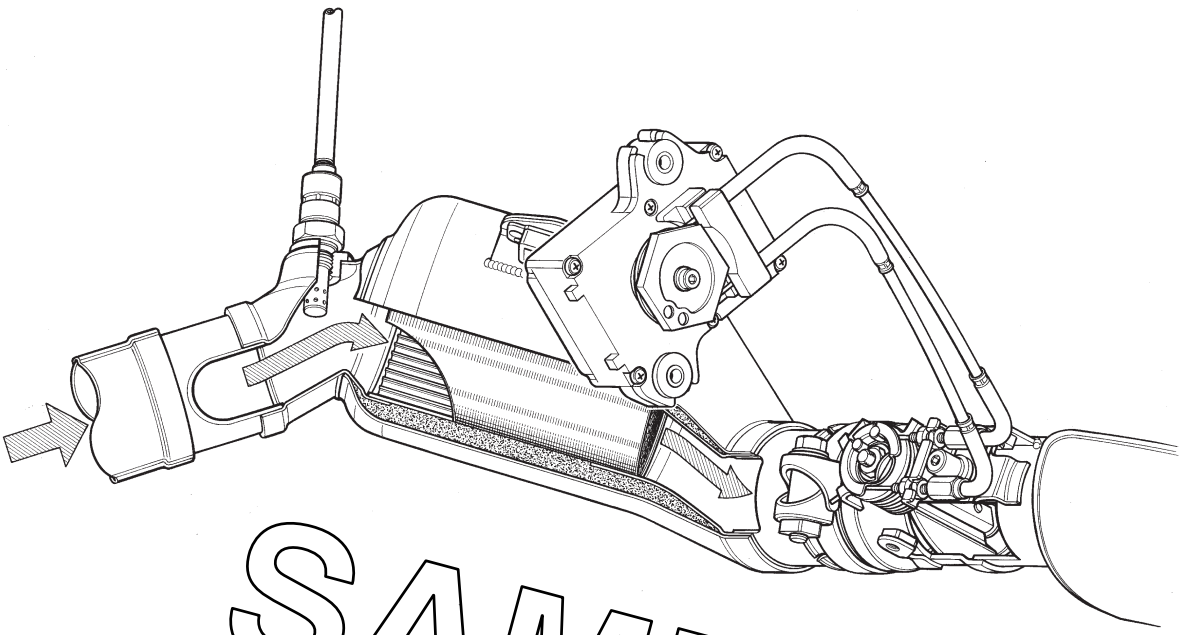

I823H11B0002-03

SAMPLE

FULL OPEN

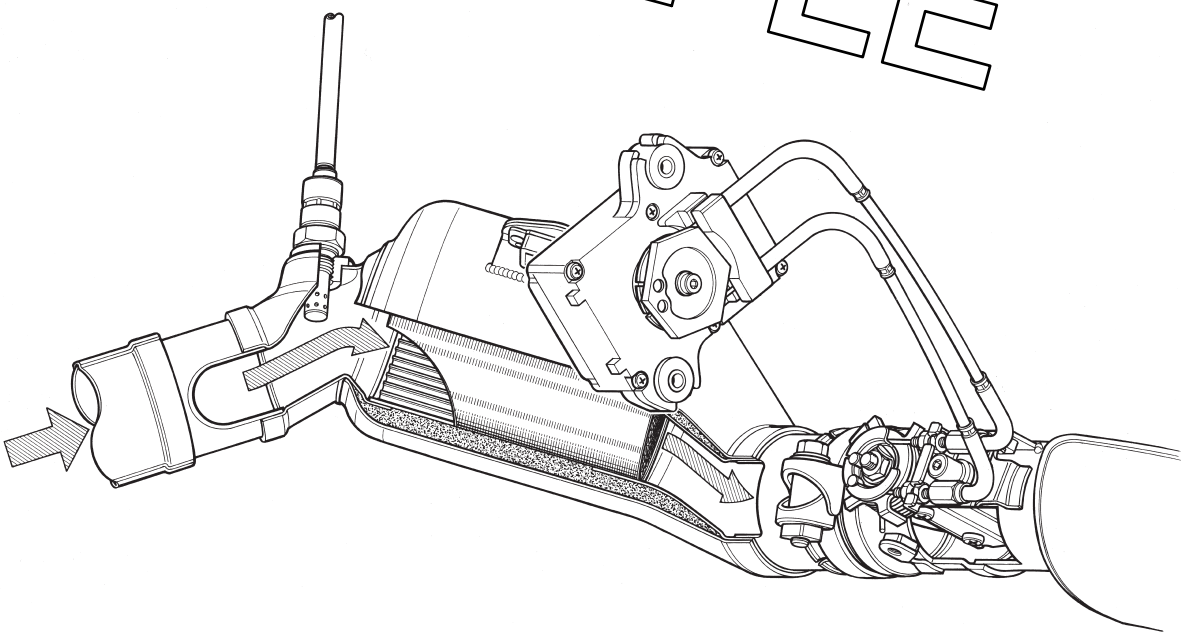

I823H11B0048-03

Repair Instructions

Exhaust Control System Construction

B823H11B06005

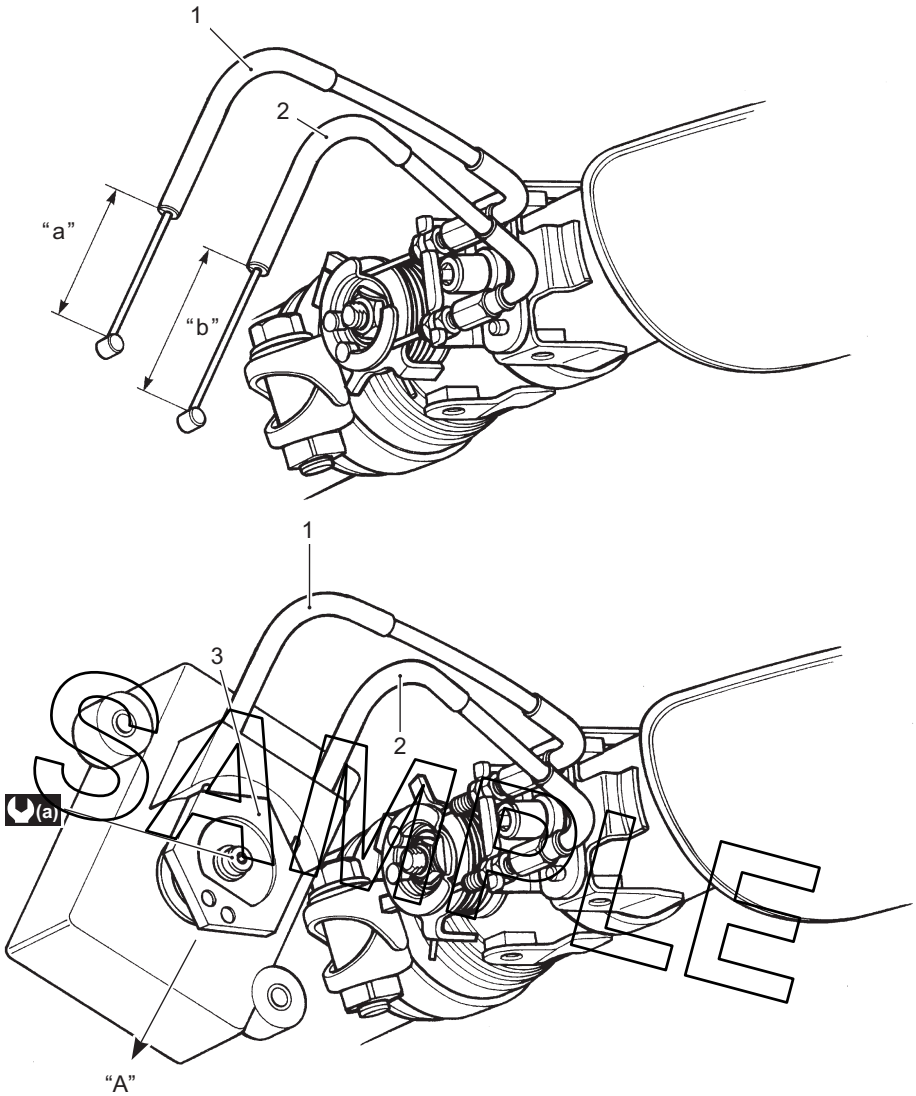

I823H11B0024-05

1. No. 1 EXCV cable	"a": 43 – 44 mm (1.69 – 1.73 in)	"A": Adjustment position
2. No. 2 EXCV cable	"b": 47 – 48 mm (1.85 – 1.89 in)	
3. EXCVA pulley	(a) : 5 N·m (0.5 kgf-m, 3.5 lb-ft)	

Exhaust System Components

B823H11B06001

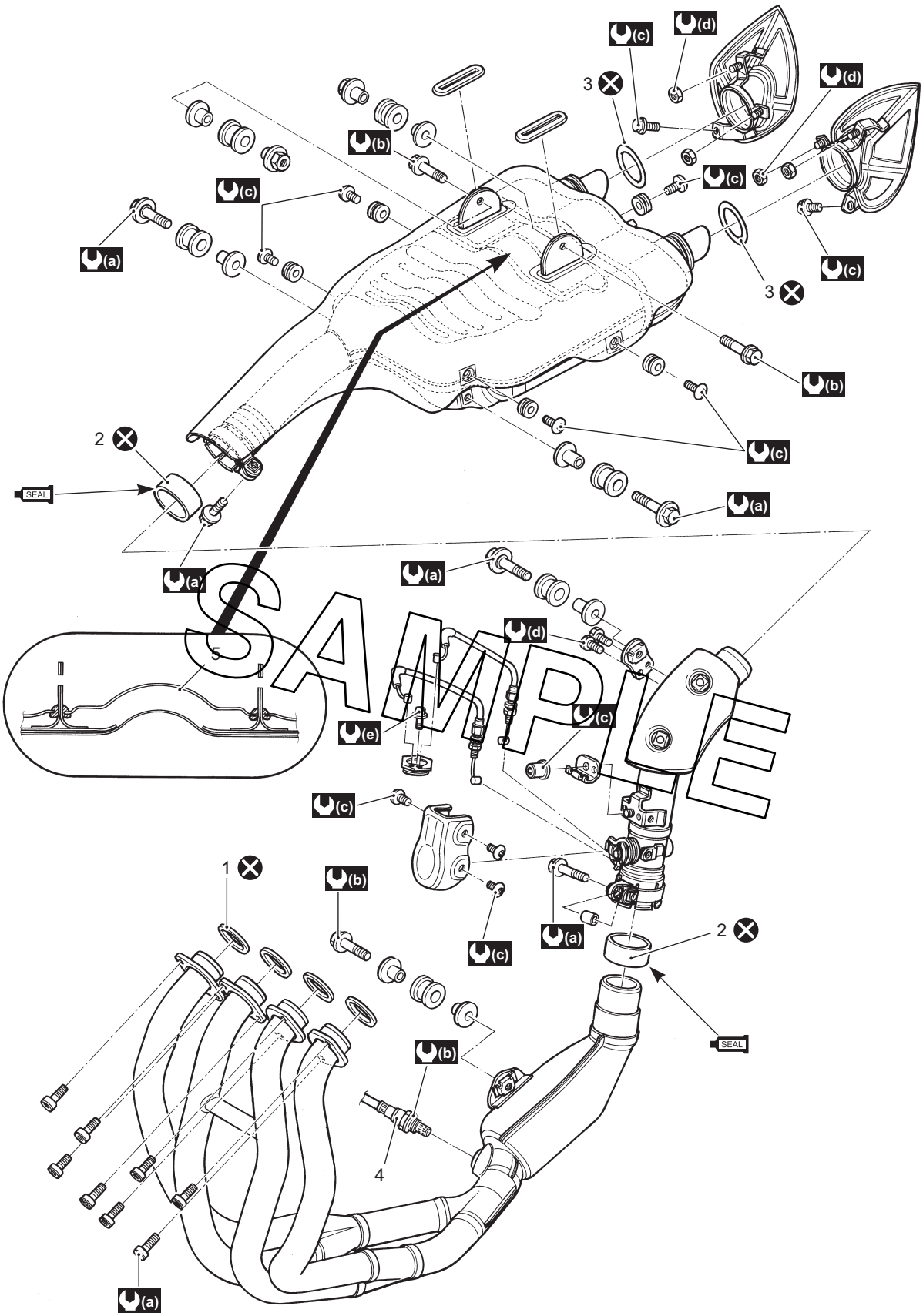

SAMPLE

I823H11B0045-07

1. Gasket	5. Heat shield plate	(d) : 11 N·m (1.1 kgf-m, 8.0 lb-ft)
2. Connector	(a) : 23 N·m (2.3 kgf-m, 16.5 lb-ft)	(e) : 5 N·m (0.5 kgf-m, 3.5 lb-ft)
3. O-ring	(b) : 25 N·m (2.5 kgf-m, 18.0 lb-ft)	SEAL : Apply muffler seal.
4. HO2 sensor	(c) : 10 N·m (1.0 kgf-m, 7.0 lb-ft)	⊗ : Do not reuse.

⚠ **CAUTION**

Replace the gaskets, connectors and O-rings with new ones when reassembling.

EXCV Cable Removal and Installation

B823H11B06008

Removal

1) Turn the ignition switch OFF.
2) Lift and support the fuel tank. Refer to “Fuel Tank Removal and Installation in Section 1G (Page 1G-10)”.
3) Connect the special tool (Mode select switch) to the dealer mode coupler. Refer to “Self-Diagnostic Procedures in Section 1A (Page 1A-12)”.
4) After turning the mode select switch ON, turn the ignition switch ON.

Special tool
TOOL (A): 09930–82720 (Mode select switch)

I823H11B0003-01

5) Check that the cable slots of the EXCVA pulley comes to the middle (Adjustment position) “A”.
6) Turn the ignition switch OFF.

⚠ **CAUTION**

Before removing the EXCV cables, be sure to set the EXCVA pulley to the adjustment position.

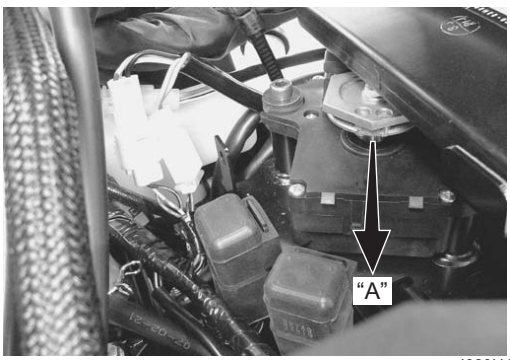

I823H11B0004-01

7) Remove the EXCV cover.

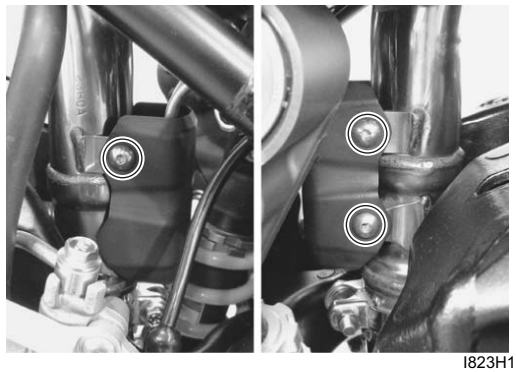

I823H11B0005-01

8) Remove the EXCV cable bracket (1) by removing the nut (2).
9) Disconnect the EXCV cables (3) from the EXCV pulley (4).

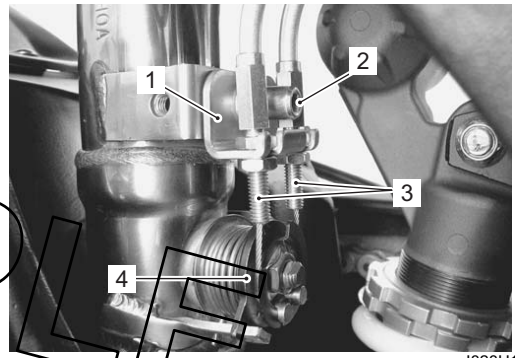

I823H11B0006-01

10) Remove the EXCV cables from the EXCVA pulley (5).

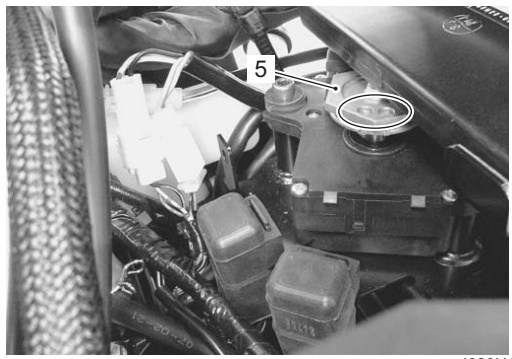

I823H11B0007-03

SAMPLE

11) Remove the EXCV cables from its bracket (1).

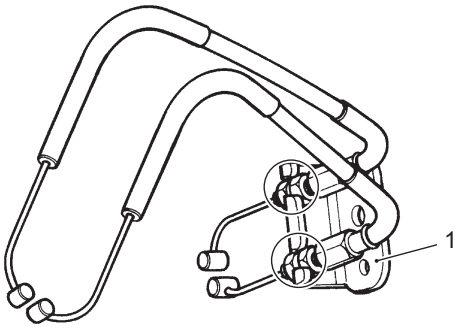

I823H11B0046-03

Installation

⚠ CAUTION

The cable slots of EXCVA pulley must be located adjustment position.

1) Temporarily connect the EXCV cable No. 1 (23H0CL) (1) and No. 2 (23H0OP) (2) to the EXCV cable bracket and install them to the muffler joint.

NOTE

The EXCV cables are identified by the letters.
No. 1 cable (1) : 23H0CL
No. 2 cable (2) : 23H0OP

2) Adjust the inner cable length “a” of No. 1 cable in 43 – 44 mm (1.69 – 1.73 in) by turning the adjuster (3), then tighten the lock-nuts (4).
3) Adjust the inner cable length “b” of the No. 2 cable in 47 – 48 mm (1.85 – 1.89 in) by turning the adjuster (5), then tighten the lock-nuts (6).

4) Remove the EXCV cable bracket along with cables by removing the nut (7).

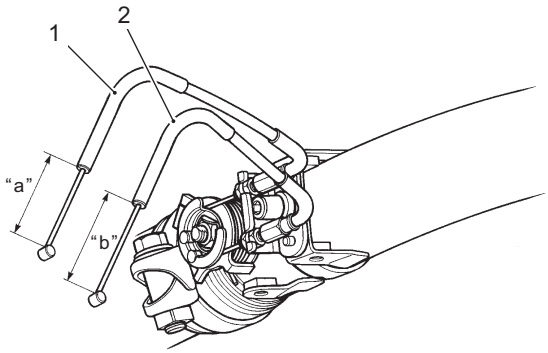

I823H11B0047-02

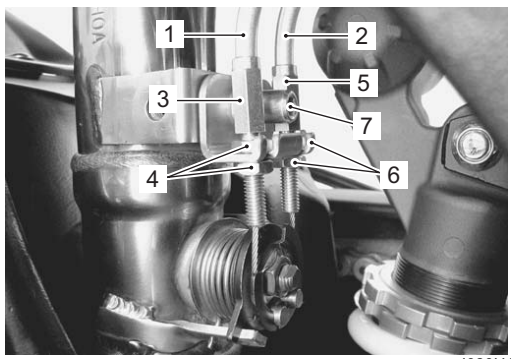

I823H11B0008-02

5) Connect the other end of EXCV cable No. 1 (1) and No. 2 (2) to the EXCVA pulley.

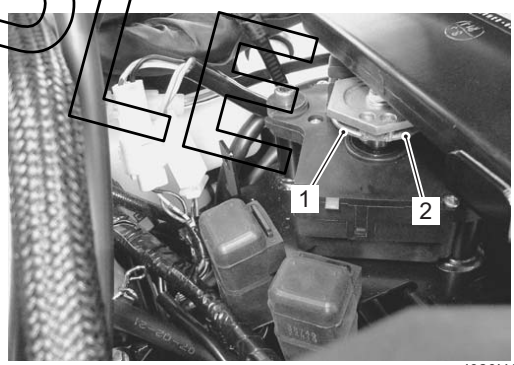

I823H11B0009-01

SAMPLE

6) Reinstall the bracket and cables and tighten the nut (7) to the specified torque.

Tightening torque
EXCV cable bracket nut (a): 10 N·m (1.0 kgf-m, 7.0 lb-ft)

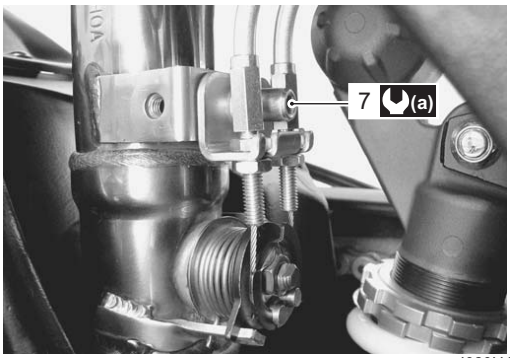

I823H11B0010-02

7) Install the EXCV cover.

Tightening torque
EXCV cover bolt (b): 10 N·m (1.0 kgf-m, 7.0 lb-ft)

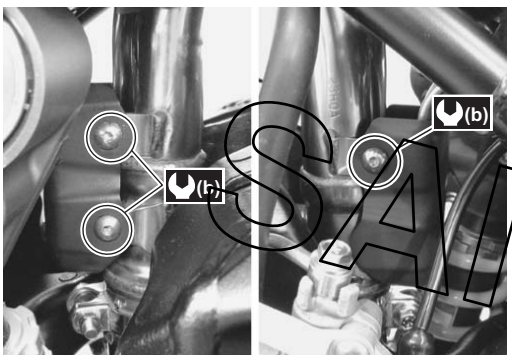

I823H11B0011-03

8) Install the removed exterior parts.

EXCVA Removal and Installation

B823H11B06009

Removal

1) Turn the ignition switch OFF.
2) Lift and support the fuel tank. Refer to “Fuel Tank Removal and Installation in Section 1G (Page 1G-10)”.
3) Connect the special tool (Mode select switch) to the dealer mode coupler. Refer to “Self-Diagnostic Procedures in Section 1A (Page 1A-12)”.
4) After turning the mode select switch ON, turn the ignition switch ON.

Special tool
TOOL (A): 09930–82720 (Mode select switch)

I823H11B0012-01

5) Check that the cable slots of the EXCVA pulley comes to the middle (Adjustment position) “A”.
6) Turn the ignition switch OFF.

⚠ CAUTION

Before removing the EXCVA, be sure to set the EXCVA pulley to the adjustment position.

7) Disconnect the EXCVA position sensor coupler (1) and motor coupler (2).
8) Remove the ECM (3). Refer to “ECM Removal and Installation in Section 1C (Page 1C-2)”.

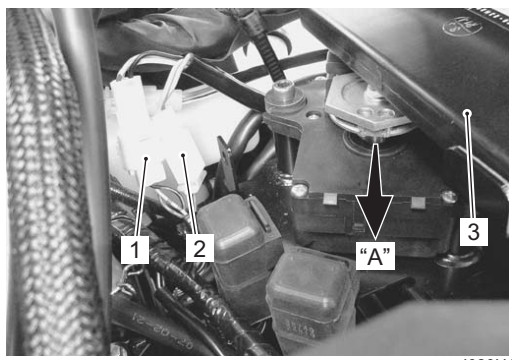

I823H11B0013-01

SAMPLE

9) Remove the EXCV cover.

I823H11B0014-01

10) Remove the EXCV cables. Refer to “EXCV Cable Removal and Installation (Page 1K-5)”.
11) Remove the EXCVA (4).

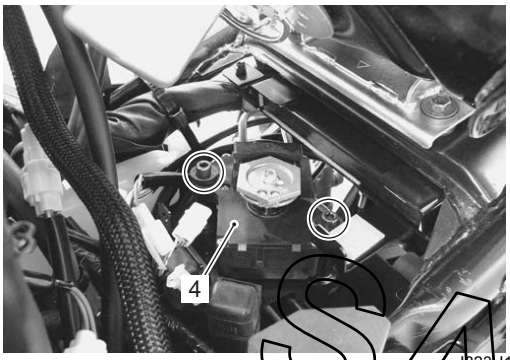

I823H11B0015-01

12) Hold the pulley with an adjustable wrench, and loosen the pulley mounting bolt (5).

⚠ CAUTION

- **When loosening or tightening the pulley bolt, be sure to fix the pulley with an adjustable wrench, or EXCVA may get damaged.**
- **Do not use the adjustable wrench to turn EXCVA pulley so as not cause damage to the internal gear of EXCVA.**

13) Remove the pulley from the EXCVA body.

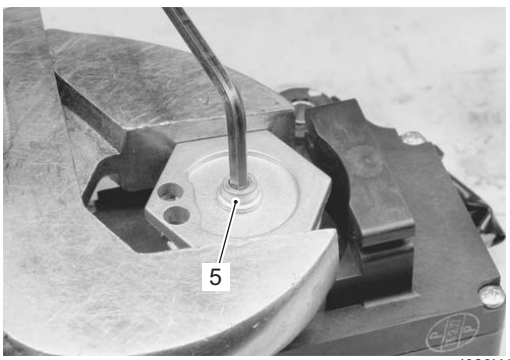

I823H11B0016-02

Installation

Install the EXCVA in the reverse order of removal. Pay attention to the following points:

- Install the EXCVA pulley to the shaft.

NOTE

Align the shaft’s line “A” and cable slots “B”.

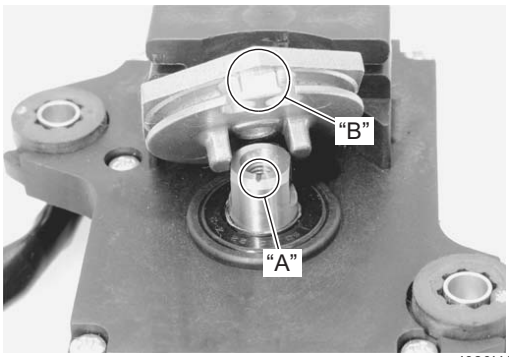

I823H11B0017-02

- Hold the pulley with an adjustable wrench, and then tighten the pulley mounting bolt (1) to the specified torque.

Tightening torque
EXCVA pulley mounting bolt (a): 5 N·m (0.5 kgf-m, 3.5 lb-ft)

⚠ CAUTION

When loosening or tightening the pulley bolt, be sure to fix pulley with an adjustable wrench, or EXCVA may get damaged.

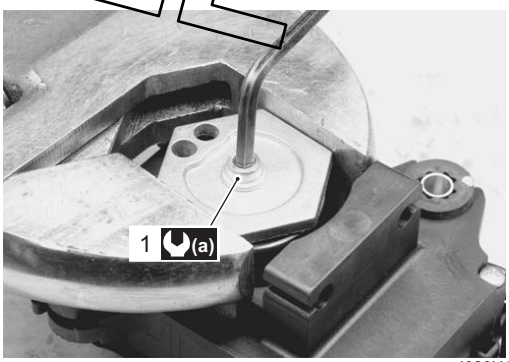

I823H11B0018-03

SAMPLE

- Install the EXCVA.

  Tightening torque
  EXCVA mounting bolt (b): 10 N·m (1.0 kgf-m, 7.0 lb-ft)

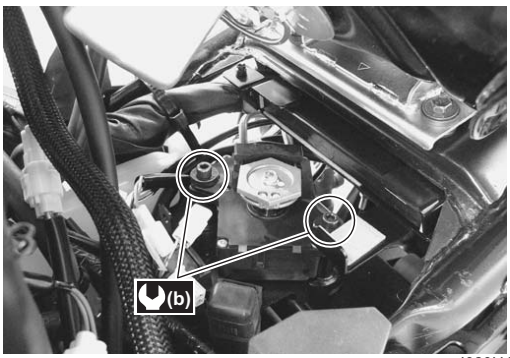

I823H11B0019-01

- Install the EXCV cables. Refer to “EXCV Cable Removal and Installation (Page 1K-5)”.
- Connect the ECM and battery. Refer to “ECM Removal and Installation in Section 1C (Page 1C-2)”.
- Adjust the EXCVA. Refer to “EXCVA Adjustment (Page 1K-9)”.
- Install the EXCV cover.

  Tightening torque
  EXCV cover bolt (c): 10 N·m (1.0 kgf-m, 7.0 lb-ft)

I823H11B0020-03

EXCVA Inspection

B823H11B06010

Refer to “DTC “C46” (P1657-H/L or P1658): EXCV Actuator Circuit Malfunction in Section 1A (Page 1A-110)”.

EXCVA Pulley Inspection

B823H11B06011

Inspect the EXCVA pulley in the following procedures:

1) Remove the EXCVA pulley. Refer to “EXCV Cable Removal and Installation (Page 1K-5)”.
2) Visually inspect the EXCVA pulley for wear and damage. If there is anything unusual, replace the pulley with a new one.

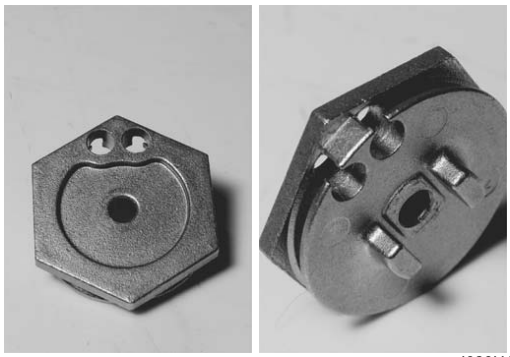

I823H11B0021-01

3) Install the pulley and EXCVA. Refer to “EXCVA Removal and Installation (Page 1K-7)”.

EXCVA Adjustment

B823H11B06012

Inspect the EXCVA operation and adjust it if necessary in the following steps:

Step 1

1) Set the EXCVA to the adjustment position. Refer to “EXCV Cable Removal and Installation (Page 1K-5)”.

Step 2

1) Turn the ignition switch OFF.
2) Turn the mode select switch OFF.
3) Turn the ignition switch ON and check the operation of EXCVA.
   (EXCVA operation order: Full close → Full open → Approx. 40% open)

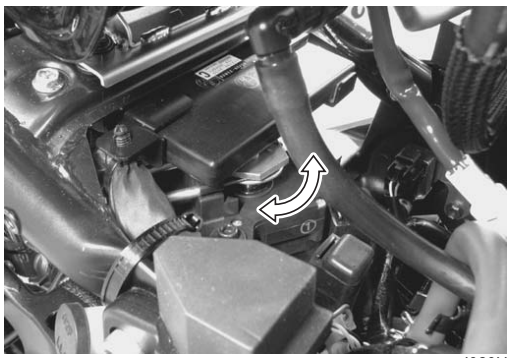

I823H1110159-01

SAMPLE

4) Turn the mode select switch ON. If DTC “C46” is not indicated on the LCD display, the adjustment is correctly completed. If “C46” is indicated, repeat the procedures from Step 3 to Step 4.

I823H11B0022-02

Step 3

1) Turn the ignition switch OFF.
2) Disconnect the EXCVA motor coupler (1).
3) To set the EXCV to fully closed position, apply 12 V to the terminals as follows:
   Positive wire — P wire terminal
   Negative wire — Gr wire terminal
4) Insert the needle pointed probes into the back side of the EXCVA position sensor coupler (2) ((+) Y – (–) W)

⚠ CAUTION

To prevent the motor damage, stop applying 12 V as soon as EXCV reaches fully closed position.

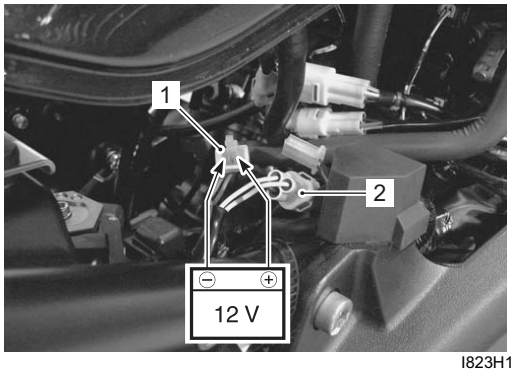

I823H11B0043-01

5) Turn the ignition switch ON.
6) Measure the EXCVA position sensor output voltage at fully closed position.

STVA position sensor output voltage
EXCV is fully closed: 0.45 ≤ Output voltage ≤ 1.4 V ((+) Y – (–) W)

Special tool
TOOL (A): 09900–25008 (Multi-circuit tester set)
TOOL (B): 09900–25009 (Needle pointed probe set)

Tester knob indication:
Voltage (⎓)

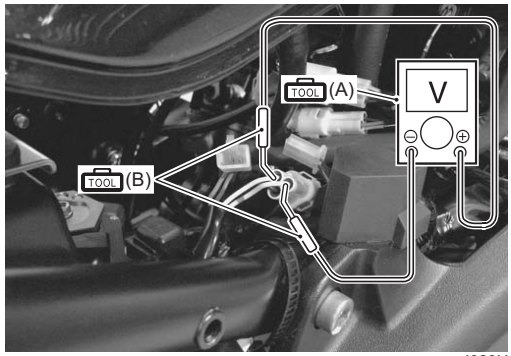

I823H1110165-02

7) If the measured voltage is less than specification, adjust the No. 1 cable adjuster as follows:
   a) Set the EXCVA to the adjustment position. Refer to “EXCV Cable Removal and Installation (Page 1K-5)”.

⚠ CAUTION

Adjusting the No. 1 cable with the EXCV fully closed can damage the EXCVA. Be sure to adjust the No. 1 cable with the EXCV set in the adjustment position.

   b) Turn the No. 1 cable adjuster (3) in or out to set the output voltage within the specified value.

NOTE

If C46 code is indicated after adjusting the voltage, increase the voltage to 0.9 V.

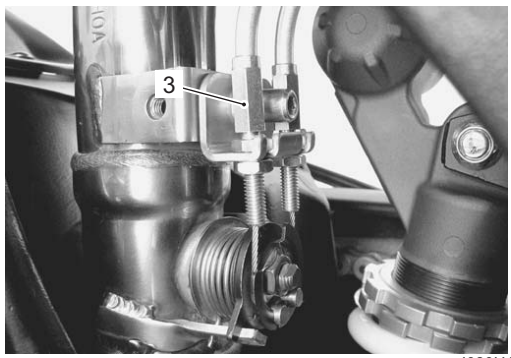

I823H11B0023-02

SAMPLE

Step 4

1) To set the EXCV to fully opened position, apply 12 V to the terminal oppositely.
   Positive wire — Gr wire terminal
   Negative wire — P wire terminal

⚠ CAUTION

To prevent the motor damage, stop applying 12 V as soon as the EXCV reaches fully opened position.

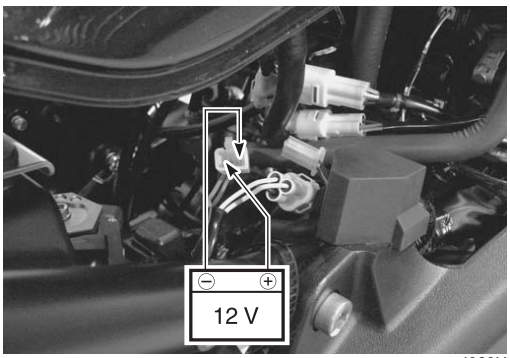

I823H1110166-01

2) Measure the position sensor output voltage at fully opened position.

EXCVA position sensor out put voltage
EXCV is fully opened: 3.6 ≤ Output voltage ≤ 4.55 V ((+) Y – (–) W)

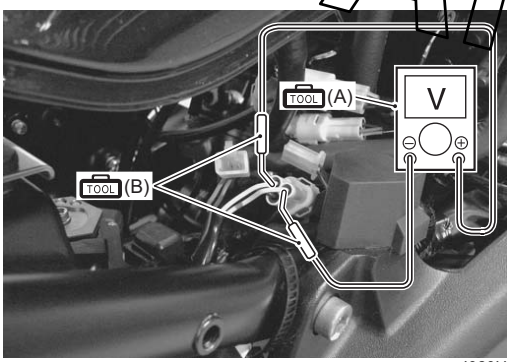

I823H1110165-02

3) If the measured voltage is more than specification, adjust the No. 2 cable adjuster as follows:
   a) Set the EXCVA to the adjustment position. Refer to “EXCV Cable Removal and Installation (Page 1K-5)”.

⚠ CAUTION

Adjusting the No. 2 cable with the EXCV fully opened can damage the EXCVA. Be sure to adjust the No. 2 cable with the EXCV set in adjustment position.

   b) Turn out the No. 2 cable adjuster (1) in or out to set the output voltage within the specified value.

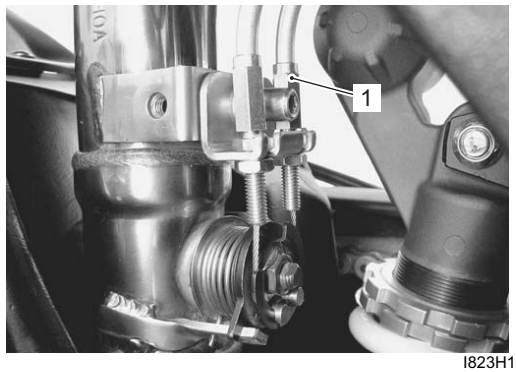

I823H11B0044-01

4) After adjusting the EXCV cables, perform Step 2 to confirm DTC “46” is not indicated.

SAMPLE

Muffler / Muffler Joint / Exhaust Pipe Removal and Installation

B823H11B06002

Removal

1) Remove the frame cover and muffler covers. Refer to “Exterior Parts Removal and Installation in Section 9D (Page 9D-14)”.
2) Disconnect the taillight/rear turn signal light lead wire coupler (1).

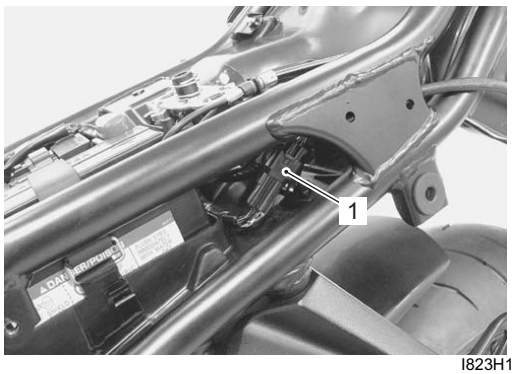

I823H11B0025-01

3) Remove the rear fender (2) along with the bracket (3).

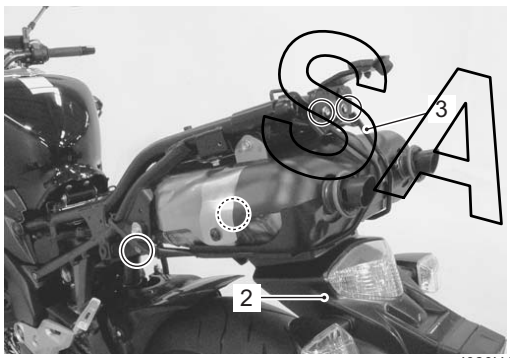

I823H11B0026-02

4) Loosen the muffler connecting bolt (4).

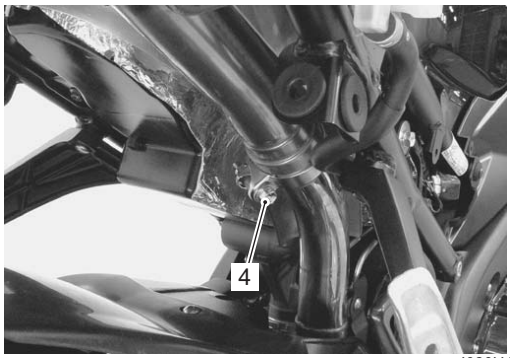

I823H11B0027-01

5) Remove the muffler assembly (5).

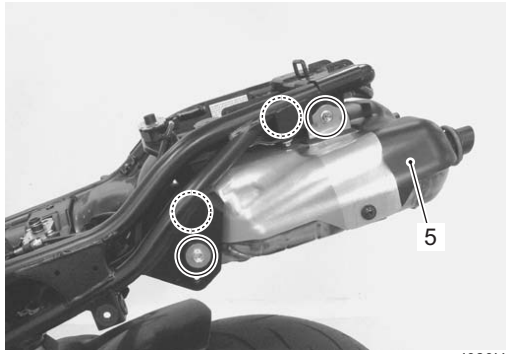

I823H11B0028-02

6) Remove the heat shield plate (6) and O-rings (7) from the muffler.

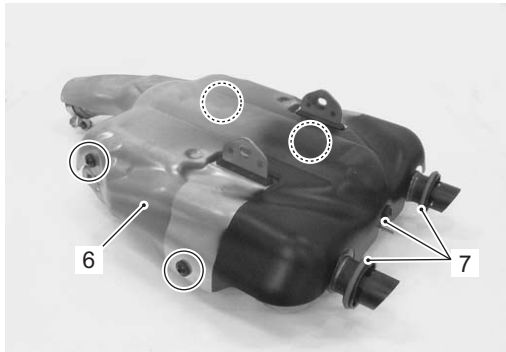

I823H11B0029-02

7) Remove the EXCV cover.

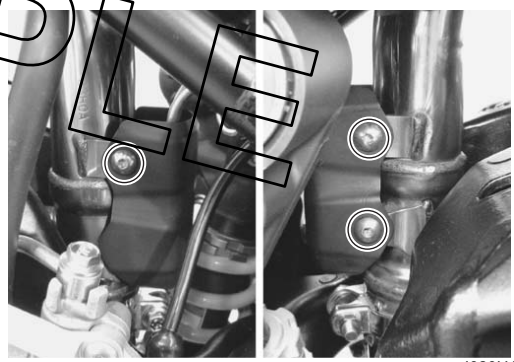

I823H11B0030-01

8) Remove the EXCV cable bracket nut (8) and disconnect the cables from the EXCV pulley (9).

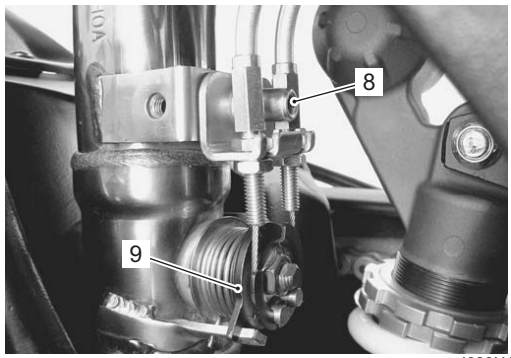

I823H11B0031-02

SAMPLE

9) Loosen the muffler joint connecting bolt (10).

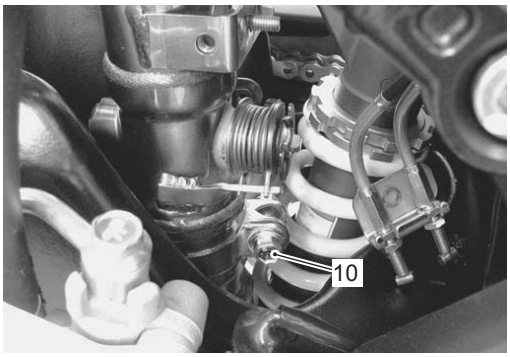

I823H11B0032-02

10) Remove the muffler joint (11).

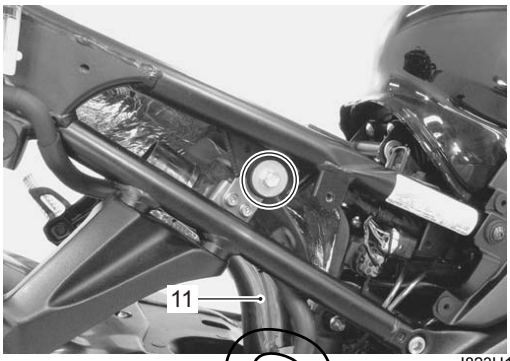

I823H11B0033-01

11) Remove the bracket (12) from the muffler joint.

I823H11B0034-01

12) Lift and support the fuel tank. Refer to “Fuel Tank Removal and Installation in Section 1G (Page 1G-10)”.

13) Disconnect the HO2 sensor coupler (13).

I823H11B0035-01

14) Remove the regulator/rectifier bracket. Refer to “Regulator / Rectifier Removal and Installation in Section 1J (Page 1J-9)”.

15) Move the radiator and oil cooler forward. Refer to “Radiator Inspection and Cleaning in Section 1F (Page 1F-5)”.

16) Remove the exhaust pipe bolts and exhaust pipe assembly.

⚠ CAUTION

Take care not to bend the radiator and oil cooler fins.

I823H11B0036-01

17) Remove the exhaust pipe gaskets (14).

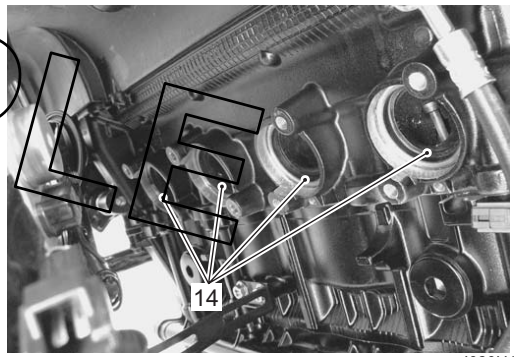

I823H11B0037-01

SAMPLE

18) Remove the HO2 sensor (15).

⚠ CAUTION

- **Take care not to expose the HO2 sensor to an excessive shock.**
- **Take care not to twist or damage the HO2 sensor lead wire.**

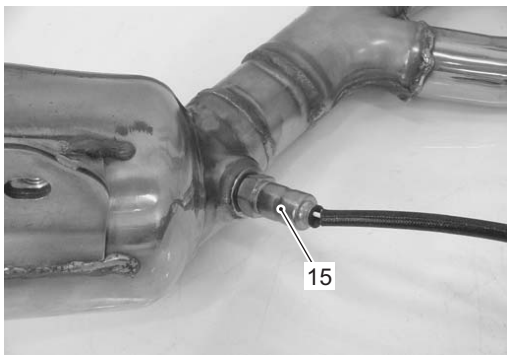

I823H11B0038-01

Installation

Installation is in the reverse order of removal. Pay attention to the following points:

- Tighten the HO2 sensor (1) to the specified torque.

Tightening torque
HO2 sensor (a): 25 N·m (2.5 kgf-m, 18.0 lb-ft)

⚠ CAUTION

- **Take care not to expose the HO2 sensor to an excessive shock.**
- **Take care not to twist or damage the HO2 sensor lead wire.**
- **Do not apply oil or other materials to the sensor air holes.**
- **Do not use an impact wrench when installing the HO2 sensor.**

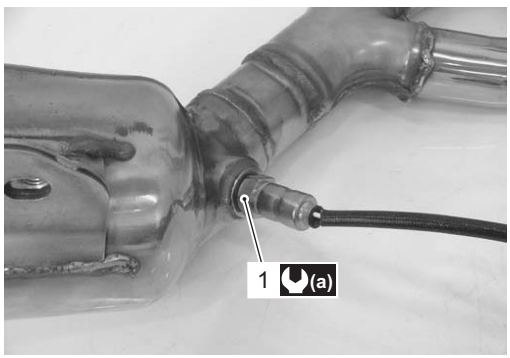

I823H11B0039-02

- Install the exhaust pipe gaskets (2) and connectors (3).

⚠ CAUTION

Replace the gaskets and connectors with new ones.

NOTE

When installing new connectors, remove all of the old sealer from the exhaust pipe, muffler joint and muffler. Apply the exhaust gas sealer to both the inside and outside of the new connector.

SEAL : Muffler seal (MUFFLER SEAL LOCTITE 5920 (commercially available) or equivalent)

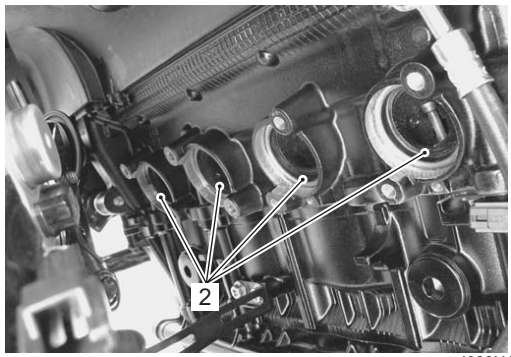

I823H11B0040-02

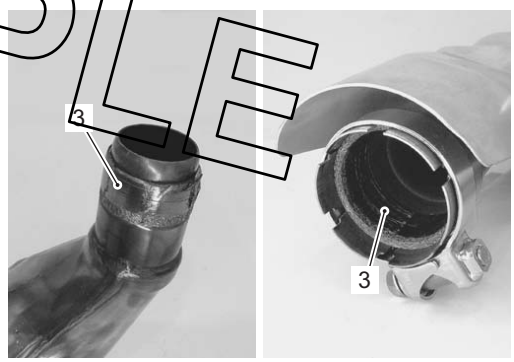

I823H11B0041-02

SAMPLE

- Route the HO2 sensor lead wire properly. Refer to “Wiring Harness Routing Diagram in Section 9A (Page 9A-5)”.
- Install EXCV cables and EXCV cover. Refer to “EXCV Cable Removal and Installation (Page 1K-5)”.
- Tighten each bolt to the specified torque. Refer to “Exhaust System Components (Page 1K-4)”.

Exhaust System Inspection

B823H11B06003

Inspect the exhaust pipe connection and muffler connection for exhaust gas leakage and mounting condition. If any defect is found, replace the exhaust pipe assembly or muffler with a new one.
Check the exhaust pipe bolts, muffler connecting bolts and muffler mounting bolts are tightened to their specified torque.
Refer to “Exhaust Pipe Bolt and Muffler Bolt Inspection in Section 0B (Page 0B-3)”.

EXCV Inspection

B823H11B06004

Inspect the EXCV in the following procedures:

1) Remove the exhaust pipe assembly. Refer to “Muffler / Muffler Joint / Exhaust Pipe Removal and Installation (Page 1K-12)”.
2) Turn the lever (1) and inspect that the EXCV (2) moves smoothly. If it does not moves smoothly, replace the exhaust pipe assembly with a new one.

⚠ CAUTION

- **Do not attempt to disassemble the EXCV.**
- **The EXCV is available only as the exhaust pipe assembly.**

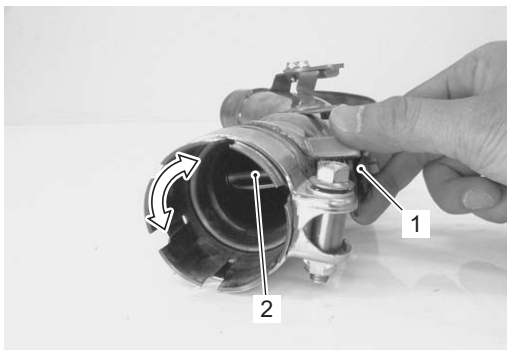

I823H11B0042-01

3) Decarbonize the EXCV if necessary.
4) Install the exhaust pipe assembly. Refer to “Muffler / Muffler Joint / Exhaust Pipe Removal and Installation (Page 1K-12)”.

SAMPLE

Specifications

Service Data

B823H11B07001

FI Sensors

Item	Standard/Specification		Note
EXCVA position sensor output voltage	Closed	0.45 – 1.4 V	
	Opened	3.6 – 4.55 V	

Tightening Torque Specifications

B823H11B07002

Fastening part	Tightening torque			Note
	N·m	kgf-m	lb-ft	
EXCV cable bracket nut	10	1.0	7.0	☞(Page 1K-7)
EXCV cover bolt	10	1.0	7.0	☞(Page 1K-7) / ☞(Page 1K-9)
EXCVA pulley mounting bolt	5	0.5	3.5	☞(Page 1K-8)
EXCVA mounting bolt	10	1.0	7.0	☞(Page 1K-9)
HO2 sensor	25	2.5	18.0	☞(Page 1K-14)

NOTE

The specified tightening torque is also described in the following.
“Exhaust Control System Construction (Page 1K-3)”
“Exhaust System Components (Page 1K-4)”

Reference:
For the tightening torque of fastener not specified in this section, refer to “Tightening Torque List in Section 0C (Page 0C-9)”.

Special Tools and Equipment

Recommended Service Material

B823H11B08001

Material	SUZUKI recommended product or Specification		Note
Muffler seal	MUFFLER SEAL LOCTITE 5920 (commercially available) or equivalent	—	☞(Page 1K-14)

NOTE

Required service material is also described in the following.
“Exhaust System Components (Page 1K-4)”

Special Tool

B823H11B08002

09900–25008 Multi-circuit tester set ☞(Page 1K-10)	09900–25009 Needle pointed probe set ☞(Page 1K-10)
09930–82720 Mode select switch ☞(Page 1K-5) / ☞(Page 1K-7)	

SAMPLE

Section 2

Suspension

CONTENTS

Precautions 2-1
- **Precautions 2-1**
  - Precautions for Suspension 2-1

Suspension General Diagnosis 2A-1
- **Diagnostic Information and Procedures 2A-1**
  - Suspension and Wheel Symptom Diagnosis 2A-1

Front Suspension 2B-1
- **Repair Instructions 2B-1**
  - Front Fork Components 2B-1
  - Front Fork Removal and Installation 2B-2
  - Front Fork Disassembly and Assembly 2B-5
  - Front Fork Parts Inspection 2B-11
- **Specifications 2B-12**
  - Service Data 2B-12
  - Tightening Torque Specifications 2B-12
- **Special Tools and Equipment 2B-13**
  - Recommended Service Material 2B-13
  - Special Tool 2B-13

Rear Suspension 2C-1
- **Repair Instructions 2C-1**
  - Rear Suspension Components 2C-1
  - Rear Suspension Assembly Construction 2C-2
  - Rear Shock Absorber Removal and Installation 2C-3
  - Rear Suspension Inspection 2C-3
  - Rear Shock Absorber Inspection 2C-4
  - Rear Suspension Adjustment 2C-4
  - Rear Shock Absorber Disposal 2C-5
  - Cushion Lever Removal and Installation 2C-6
  - Cushion Lever Inspection 2C-6
  - Cushion Lever Bearing Removal and Installation 2C-7
  - Swingarm / Cushion Rod Removal and Installation 2C-8
  - Swingarm Related Parts Inspection 2C-11
  - Swingarm Bearing Removal and Installation 2C-12
- **Specifications 2C-13**
  - Service Data 2C-13
  - Tightening Torque Specifications 2C-13
- **Special Tools and Equipment 2C-14**
  - Recommended Service Material 2C-14
  - Special Tool 2C-14

Wheels and Tires 2D-1
- **Precautions 2D-1**
  - Precautions for Wheel and Tire 2D-1
- **Repair Instructions 2D-2**
  - Front Wheel Components 2D-2
  - Front Wheel Assembly Construction 2D-3
  - Front Wheel Assembly Removal and Installation 2D-4
  - Front Wheel Related Parts Inspection 2D-6
  - Front Wheel Dust Seal / Bearing Removal and Installation 2D-7
  - Rear Wheel Components 2D-9
  - Rear Wheel Assembly Construction 2D-10
  - Rear Wheel Assembly Removal and Installation 2D-11
  - Rear Wheel Related Parts Inspection 2D-12
  - Rear Wheel Dust Seal / Bearing Removal and Installation 2D-13
  - Tire Removal and Installation 2D-15
  - Wheel / Tire / Air Valve Inspection and Cleaning 2D-16
  - Air Valve Removal and Installation 2D-17
  - Wheel Balance Check and Adjustment 2D-18
- **Specifications 2D-19**
  - Service Data 2D-19
  - Tightening Torque Specifications 2D-19
- **Special Tools and Equipment 2D-20**
  - Recommended Service Material 2D-20
  - Special Tool 2D-20

SAMPLE

Precautions

Precautions

Precautions for Suspension

B823H12000001

Refer to “General Precautions in Section 00 (Page 00-1)”.

⚠ WARNING

All suspensions, bolts and nuts are an important part in that it could affect the performance of vital parts. They must be tightened to the specified torque periodically and if the suspension effect is lost, replace it with a new one.

⚠ CAUTION

Never attempt to heat, quench or straighten any suspension part. Replace it with a new one, or damage to the part may result.

SAMPLE

Suspension General Diagnosis

Diagnostic Information and Procedures

Suspension and Wheel Symptom Diagnosis

B823H12104001

Condition	Possible cause	Correction / Reference Item
Wobbly front wheel	Distorted wheel rim.	*Replace.*
	Worn front wheel bearings.	*Replace.*
	Defective or incorrect tire.	*Replace.*
	Loose front axle nut.	*Tighten.*
	Loose front axle pinch bolt.	*Tighten.*
	Incorrect fork oil level.	*Adjust.*
Front suspension too soft	Weak spring.	*Replace.*
	Insufficient fork oil.	*Check level and add.*
	wrong weight fork oil.	*Replace.*
	Improperly set front fork spring adjuster.	*Adjust.*
	Improperly set front fork damping force adjuster.	*Adjust.*
Front suspension too stiff	Excessively viscous fork oil.	*Replace.*
	Excessive fork oil.	*Check level and drain.*
	Bent front axle.	*Replace.*
Front suspension too noisy	Insufficient fork oil.	*Check level and add.*
	Loose front suspension fastener.	*Tighten.*
Wobbly rear wheel	Distorted wheel rim.	*Replace.*
	Worn rear wheel bearing.	*Replace.*
	Defective or incorrect tire.	*Replace.*
	Worn swingarm bearing.	*Replace.*
	Worn rear suspension bearing.	*Replace.*
	Loose rear suspension fastener.	*Tighten.*
Rear suspension too soft	Weak rear shock absorber spring.	*Replace.*
	Rear shock absorber leaks oil.	*Replace.*
	Improperly set rear spring pre-load adjuster.	*Adjust.*
	Improperly set damping force adjuster.	*Adjust.*
Rear suspension too stiff	Bent rear shock absorber shaft.	*Replace.*
	Bent swingarm.	*Replace.*
	Worn swingarm and rear suspension related. bearings.	*Replace.*
	Improperly set rear spring pre-load adjuster.	*Adjust.*
	Improperly set damping force adjuster.	*Adjust.*
Rear suspension too noisy	Loose nuts or bolts on rear suspension.	*Retighten.*
	Worn rear suspension bearing.	*Replace.*
	Worn swingarm bearing.	*Replace.*

SAMPLE

Front Suspension

Repair Instructions

Front Fork Components

B823H12206001

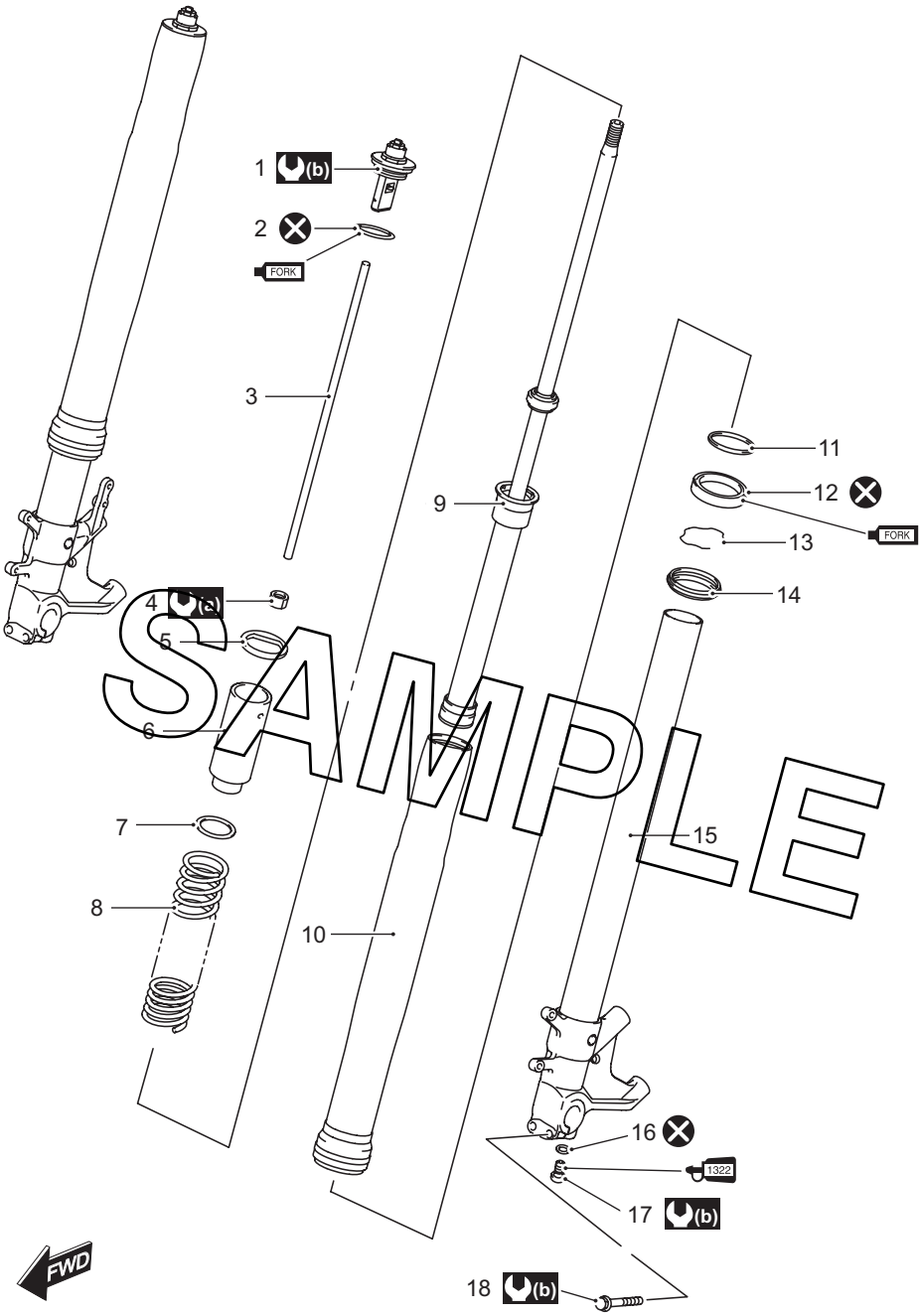

SAMPLE

I823H1220081-03

1. Front fork cap bolt	9. Inner rod/Damper rod (cartridge)	17. Damper rod bolt
2. O-ring	10. Outer tube	18. Front axle pinch bolt
3. Adjuster rod	11. Oil seal retainer	(a) : 15 N·m (1.5 kgf-m, 11.0 lb-ft)
4. Lock-nut	12. Oil seal	(b) : 23 N·m (2.3 kgf-m, 16.5 lb-ft)
5. Spring retainer	13. Oil seal stopper ring	1322 : Apply thread lock to the thread part.
6. Spacer	14. Dust seal	FORK : Apply fork oil.
7. Washer	15. Inner tube	⊗ : Do not reuse.
8. Spring	16. Gasket	

Front Fork Removal and Installation

B823H12206002

NOTE

The right and left front forks are installed symmetrically and therefore the removal procedure for one side is the same as that for the other side.

Removal

1) Remove the front wheel assembly. Refer to “Front Wheel Assembly Removal and Installation in Section 2D (Page 2D-4)”.

⚠ CAUTION

- **Make sure that the motorcycle is supported securely.**
- **Do not operate the front brake lever with the front wheel removed.**

2) Disconnect the brake hose clamp (1) from the front fender.
3) Disconnect the brake hose (2) from the brake hose clamp.
4) Remove the front fender by removing the bolts (3), left and right.
5) Remove the reflex reflector for E-03, 24, 28, 33.

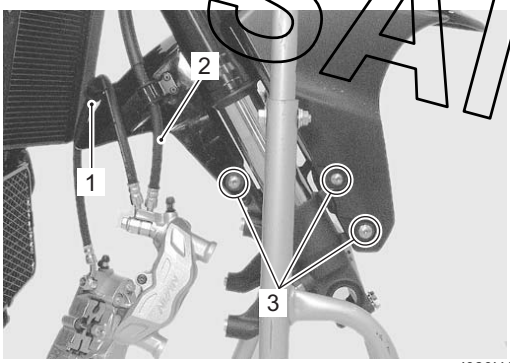

I823H1220082-01

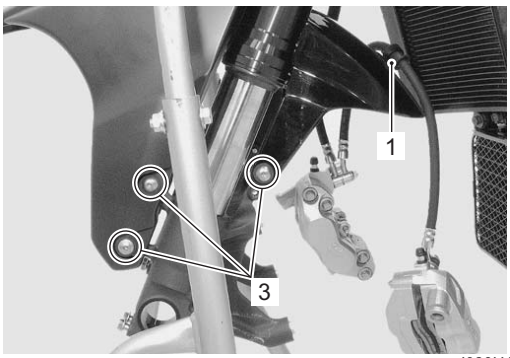

I823H1220083-01

6) After removing of the headlight cover upper screws (4), move the headlight assembly forward.

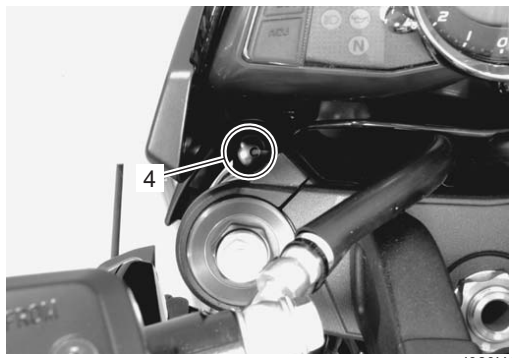

I823H1220039-01

I823H1220040-01

7) Loose the front fork upper clamp bolt (5).

NOTE

- **Slightly loosen the front fork cap bolt (6) to facilitate later disassembly.**
- **Be sure to adjust the rebound damping force adjuster (7) to the softest position before removing the front fork.**

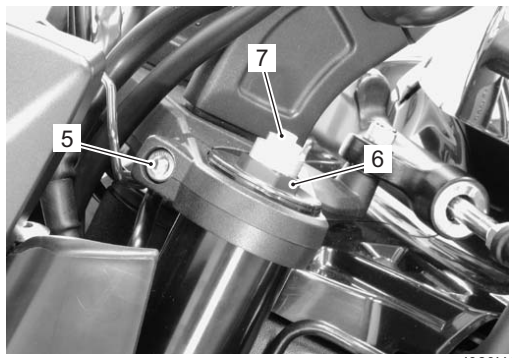

I823H1220041-01

SAMPLE

8) Loosen the front fork lower clamp bolts (8) and remove the front fork.

NOTE

Hold the front fork by the hand to prevent sliding out of the steering stem.

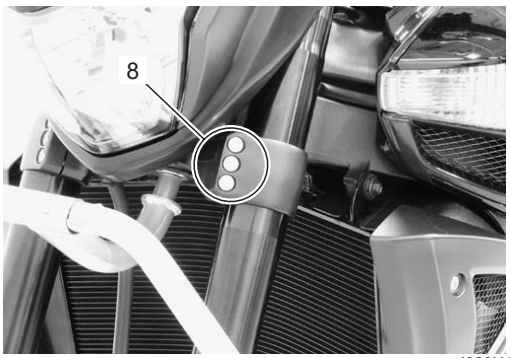

I823H1220042-01

Installation

1) Set the front fork to the front fork lower bracket temporarily by tightening the lower clamp bolts (1).

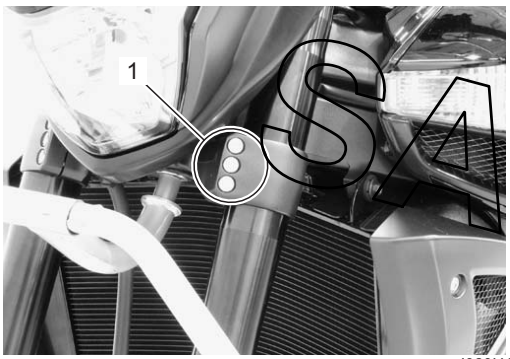

I823H1220043-01

2) Tighten the front fork cap bolt (2) to the specified torque.

Tightening torque
Front fork cap bolt (a): 23 N·m (2.3 kgf-m, 16.5 lb-ft)

3) Loosen the lower clamp bolts.

4) Set the front fork with the upper surface “T” of the outer tube positioned 3.0 mm (0.12 in) “a” from the upper surface of the steering stem upper bracket.

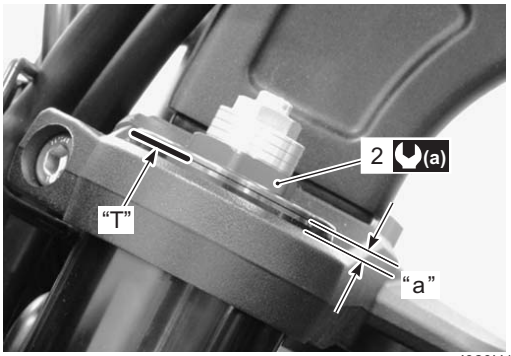

I823H1220044-03

“a”: 3.0 mm (0.12 in)

5) Tighten the front fork lower clamp bolts (1).

Tightening torque
Front fork lower clamp bolt (b): 23 N·m (2.3 kgf-m, 16.5 lb-ft)

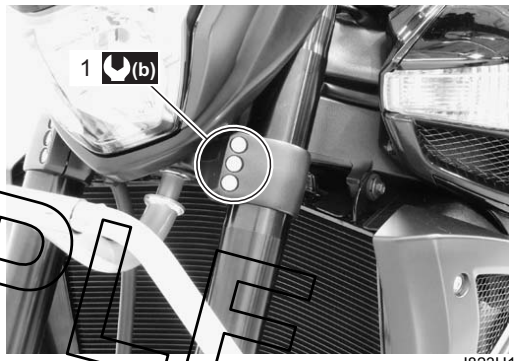

I823H1220045-01

6) Tighten the front fork upper clamp bolt (3).

Tightening torque
Front fork upper clamp bolt (c): 23 N·m (2.3 kgf-m, 16.5 lb-ft)

I823H1220046-01

SAMPLE

7) Install the headlight assembly.
8) Install the front fender.
9) Install the front wheel assembly. Refer to “Front Wheel Assembly Removal and Installation in Section 2D (Page 2D-4)”.

NOTE

Before tightening the front axle and front axle pinch bolts, move the front fork up and down four or five times.

⚠ WARNING

After remounting the brake calipers, pump the brake lever until the pistons push the pads correctly.

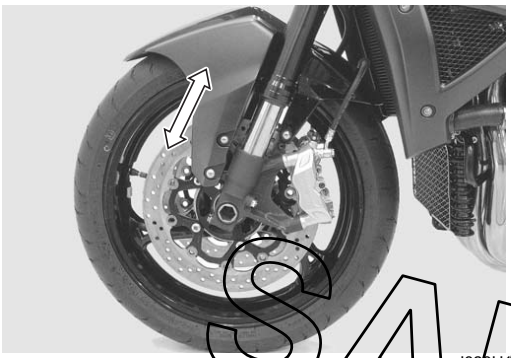

I823H1220084-01

10) Adjust the headlight beam. Refer to “Headlight Beam Adjustment in Section 9B (Page 9B-6)”.

SAMPLE

Front Suspension Adjustment

After installing the front fork, adjust the spring pre-load and two kinds of damping force as follows.

⚠ WARNING

Adjust the left and right front forks to the same setting.

Spring pre-load adjustment

- There are five grooved lines on the side of the spring adjuster.
  Position 0 provides the maximum spring pre-load and position 5 provides the minimum spring pre-load.
- Turn the adjustment (1) to the desired position.

STD position
3rd groove from top

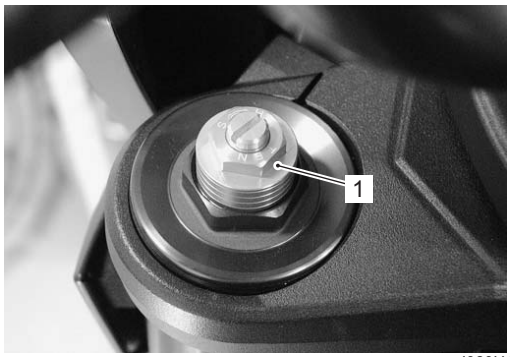

I823H1220048-01

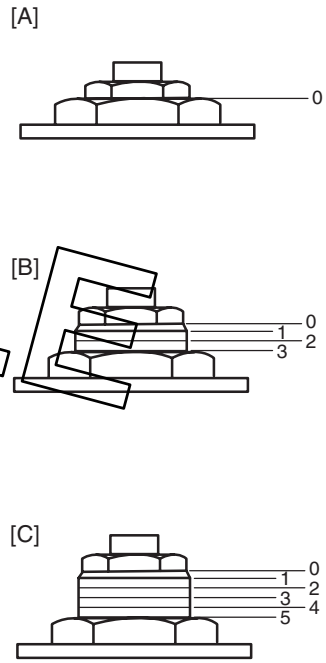

I823H1220049-03

[A]: Position 0	[B]: Position 3 (STD)	[C]: Position 5

Damping force adjustment

NOTE

Make sure to check the 1st click position by the last click sound when turning in the adjuster.

Rebound damping force
Fully turn the damping force adjuster (2) clockwise. From that position (stiffest), turn it out to standard setting position.

STD position
9 clicks out from stiffest position

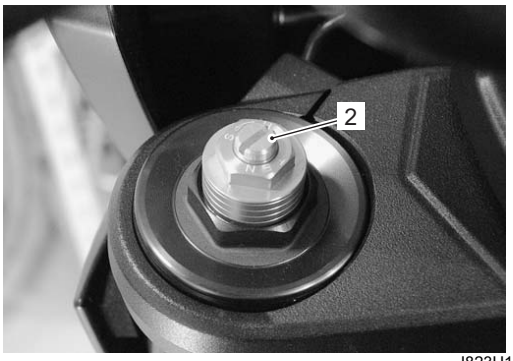

I823H1220050-01

Compression damping force
Fully turn the damping force adjuster (3) clockwise. From that position (stiffest), turn it out to the standard setting position.

STD position
8 clicks out from stiffest position

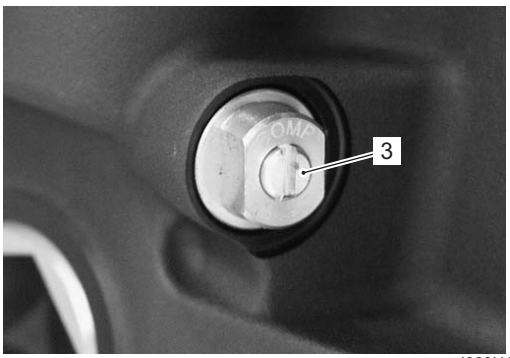

I823H1220051-02

Front Fork Disassembly and Assembly

B823H12206005

Refer to “Front Fork Removal and Installation (Page 2B-2)”.

NOTE

The right and left front forks are installed symmetrically and therefore the disassembly procedure for one side is the same as that for the other side.

Disassembly

1) Loosen the front fork cap bolt (1).

NOTE

Align the holes “A” of the spacer with the cutaway “B” of the fork cap bolt before installing the special tool.

2) Install the special tool to the holes “A”.

Special tool
TOOL (A): 09940–94930 (Front fork spacer holder)

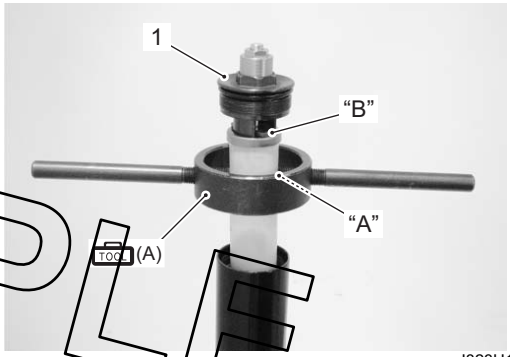

I823H1220053-05

3) Compress the front fork spring with the special tool (A) and insert the special tool (B) between the lock-nut (2) and the spring retainer (3).

Special tool
TOOL (A): 09940–94930 (Front fork spacer holder)
TOOL (B): 09940–94922 (Front fork spring stopper plate)

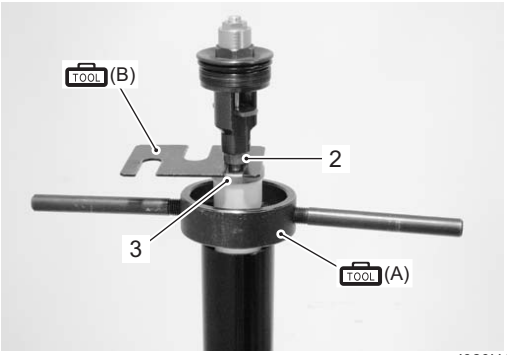

I823H1220054-03

SAMPLE

4) Remove the front fork cap bolt (1) from the inner rod by loosening the lock-nut (2).
5) Compress the fork spring with the special tool (A) and remove the special tool (B).

Special tool
TOOL (A): 09940–94930 (Front fork spacer holder)
TOOL (B): 09940–94922 (Front fork spring stopper plate)

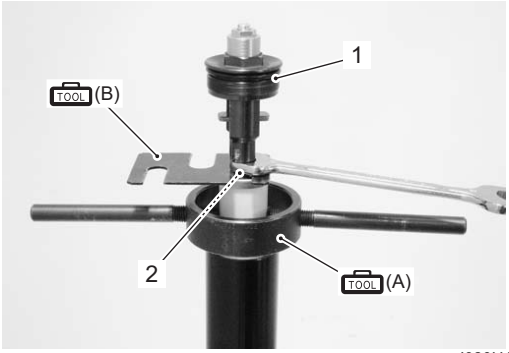

I823H1220055-02

6) Remove the spring retainer (3), spacer (4), washer (5), spring (6) and adjuster rod (7).

⚠ CAUTION

- **Do not disassemble the front fork cap bolt (2).**
- **After removing the front fork cap bolt (2), avoid holding the outer tube vertically by hand to prevent the inner tube from falling and damaged.**

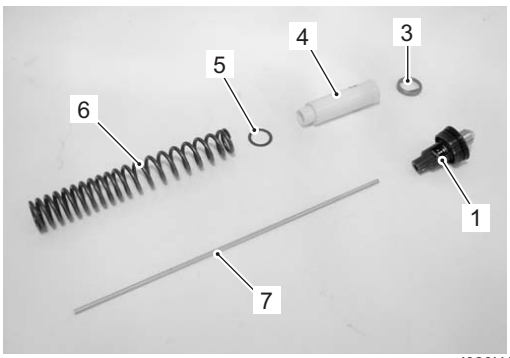

I823H1220056-02

7) Invent the fork and stroke it several times to drain out fork oil.
8) Hold the fork inverted for a few minutes to drain oil.

I823H1220018-01

9) Remove the outer tube from the inner tube.

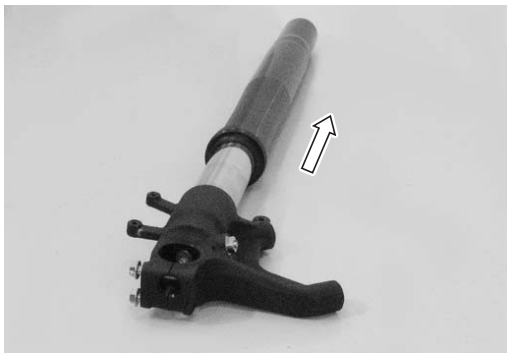

I823H1220057-01

10) Remove the outside of the front axle pinch bolt (8).

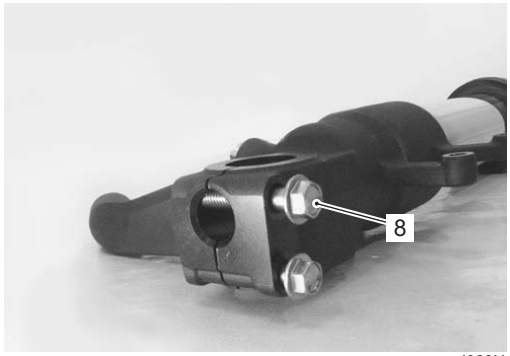

I823H1220058-04

11) Remove the damper rod bolt with the special tool.

Special tool
TOOL (C): 09940–30221 (Front fork assembling tool)

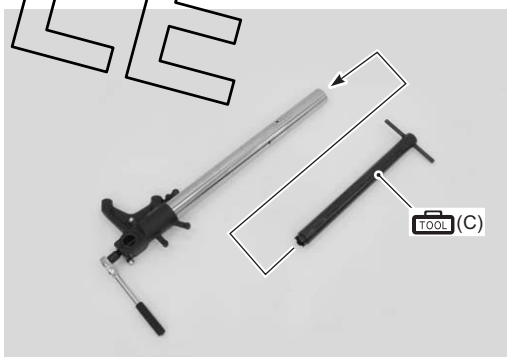

I823H1220059-01

SAMPLE

12) Remove the inner rod/damper rod (cartridge) (9).

⚠ CAUTION

Do not disassemble the inner rod/damper rod (cartridge).

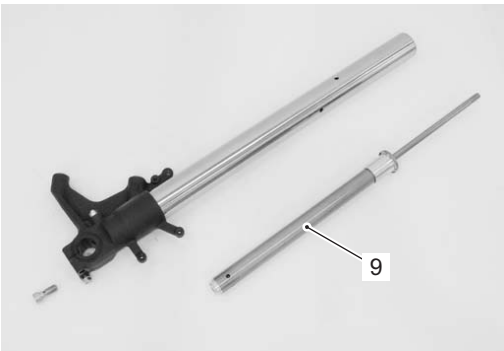

I823H1220060-02

13) Remove the dust seal (10) and oil seal stopper ring (11).

I823H1220061-02

14) Remove the oil seal (12) with the special tool.

15) Remove the oil seal retainer (13).

Special tool
TOOL (D): 09913–50121 (Oil seal remover)

⚠ CAUTION

The removed oil seal must be replaced with a new one.

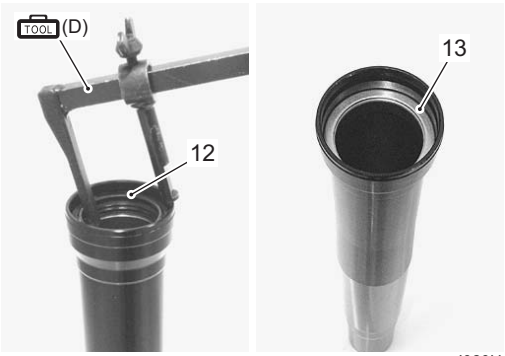

I823H1220062-02

Assembly
Assemble the front fork in the reverse order of disassembly. Pay attention to the following points:

Damper rod bolt

- Install the inner rod/damper rod (cartridge) (1) into the inner tube.

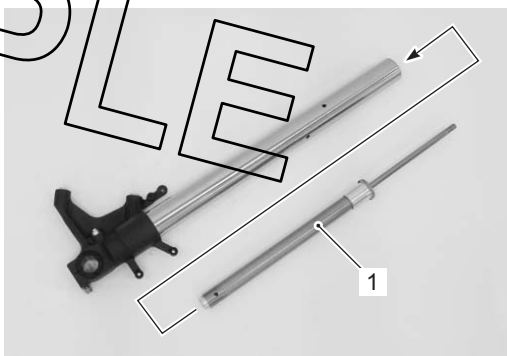

I823H1220067-01

SAMPLE

- Apply thread lock to the damper rod bolt (2) and tighten it to the specified torque with the special tools.

⚠ CAUTION

Use a new damper rod bolt gasket (3) to prevent oil leakage.

1322 : Thread lock cement 99000–32110 (THREAD LOCK CEMENT SUPER 1322 or equivalent)

Special tool
TOOL (A): 09940–30221 (Front fork assembling tool)

Tightening torque
Front fork damper rod bolt (a): 23 N·m (2.3 kgf-m, 16.5 lb-ft)

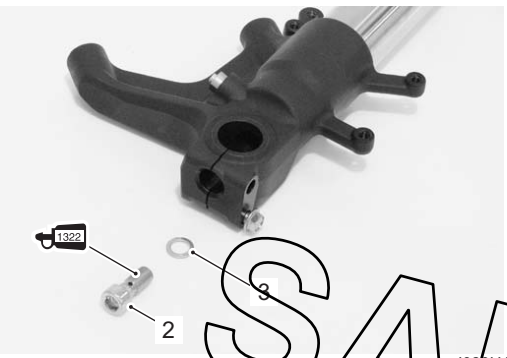

I823H1220068-01

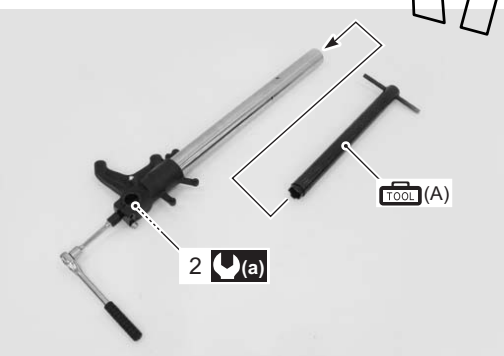

I823H1220069-02

Oil seal and dust seal

- Install the following parts onto the inner tube.
  - Dust seal (1)
  - Oil seal stopper ring (2)
  - Oil seal (3)
  - Oil seal retainer (4)

⚠ CAUTION

- **The oil seal and dust seal must be replaced with new ones when assembling front fork.**
- **When installing the oil seal to inner tube, be careful not to damage the oil seal lip.**

- Apply fork oil to the oil seal lip.

FORK : Fork Oil 99000–99044–L01 (SUZUKI FORK OIL L01 or equivalent)

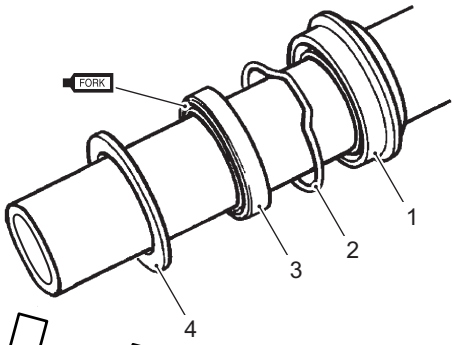

I823H1220080-02

- Apply fork oil to the anti-friction metals “A” and “B”.

FORK : Fork Oil 99000–99044–L01 (SUZUKI FORK OIL L01 or equivalent)

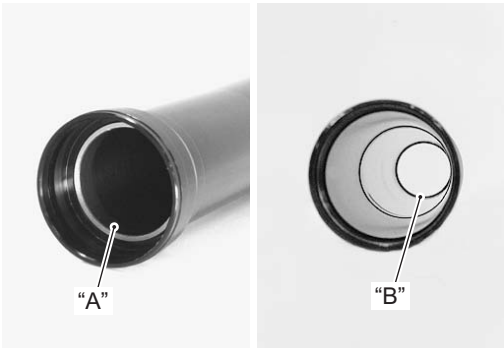

I823H1220064-02

- Install the outer tube onto the inner tube.

⚠ CAUTION

Be careful not to damage the dust seal lip and the oil seal lip, when installing the outer tube.

SAMPLE

- Install the oil seal (3) using the special tool.

Special tool
TOOL (A): 09940–52861 (Front fork oil seal installer)

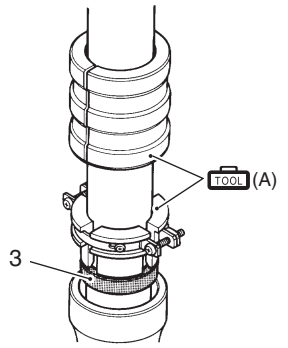

I823H1220025-01

- Install the oil seal stopper ring (2).

⚠ CAUTION

Make sure that the oil seal stopper ring is fitted securely.

- Install the dust seal (1).

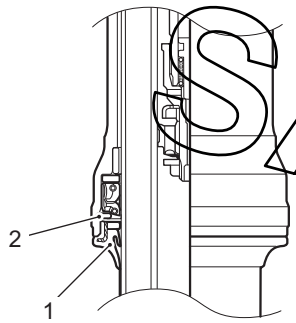

I823H1220066-01

Fork oil

- Place the front fork vertically without spring.
- Compress it fully.
- Pour specified front fork oil up to the top level of the outer tube.

FORK : Fork Oil 99000–99044–L01 (SUZUKI FORK OIL L01 or equivalent)

<u>Front fork oil capacity (each leg)</u>
527 ml (17.8/18.6 US/Imp oz)

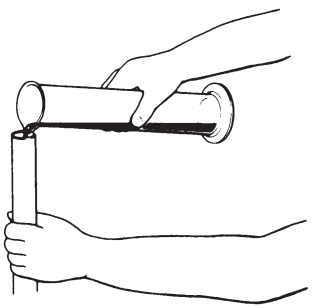

I649G1220026-02

- Move the inner rod slowly with the special tool more than ten times until bubbles do not come out from the oil.

NOTE

Refill front fork oil up to the top of the outer tube to find bubbles while bleeding air.

Special tool
TOOL (A): 09940–52841 (Inner rod holder)

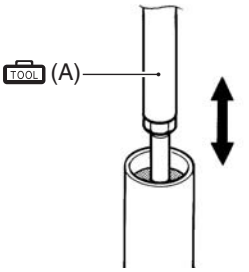

I649G1220027-05

- Refill specified front fork oil up to the top level of the outer tube again. Move the outer tube up and down several strokes until bubbles do not come out from the oil.
- Keep the front fork vertically and wait 5 – 6 minutes.

NOTE

- **Always keep oil level over the cartridge top end, or air may enter the cartridge during this procedure.**
- **Take extreme attention to pump out air completely.**

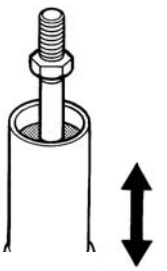

I649G1220028-03

SAMPLE

- Hold the front fork vertically and adjust fork oil level with the special tool.

NOTE

When adjusting the fork oil level, remove the fork spring and compress the outer tube fully.

Special tool
(B): 09943–74111 (Fork oil level gauge)

Fork oil level "a"
100 mm (3.9 in)

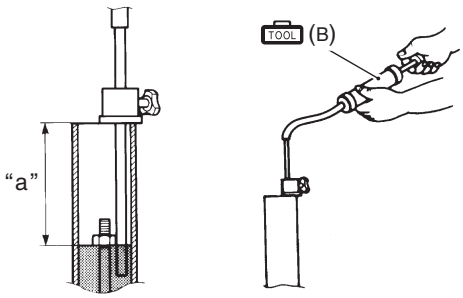

I823H1220028-01

Fork spring

NOTE

The smaller pitch "a" should face to the bottom side of the front fork.

SAMPLE

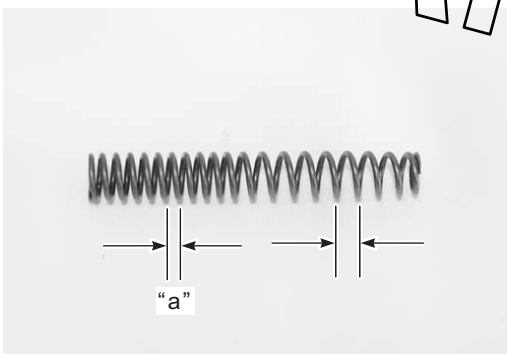

I823H1220073-01

- Install the spring (1), washer (2), spacer (3) and spring retainer (4).

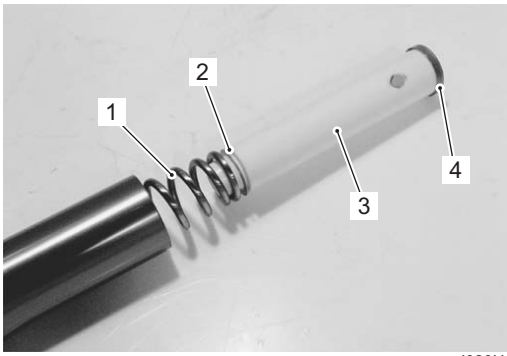

I823H1220074-01

Front fork cap bolt

- Adjust the height "a" of the inner rod threads by turning the lock-nut (1) as shown in the figure.

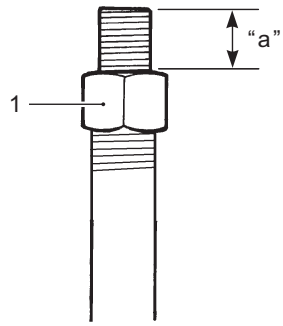

I823H1220029-02

"a": 11 mm (0.43 in)

- Pull up the inner rod with the special tool (A).
- Compress the spring with the special tool (B) and then insert the special tool (C) between the lock-nut and spring retainer.

Special tool
(A): 09940–52841 (Inner rod holder)
(B): 09940–94930 (Front fork spacer holder)
(C): 09940–94922 (Front fork spring stopper plate)

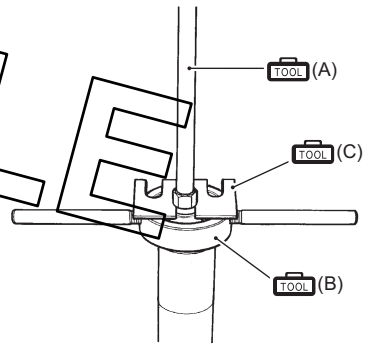

I823H1220031-02

- Make sure that the height "a" of the inner rod threads after removing the special tool.

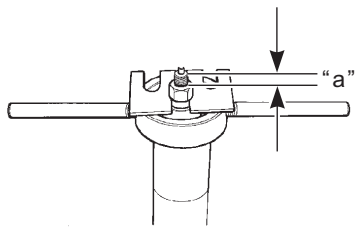

I823H1220075-01

- Insert the adjuster rod in to the inner rod.
- Apply fork oil to the O-ring.

⚠ CAUTION

- **Make sure that the rebound damping force adjuster (1) to the softest position before installing the cap bolt.**
- **Use a new O-ring to prevent oil leakage.**

FORK : Fork Oil 99000–99044–L01 (SUZUKI FORK OIL L01 or equivalent)

I823H1220076-01

- Slowly turn the cap bolt completely by hand until the end of the cap bolt seats on the lock-nut.
- Hold the cap bolt (2) and tighten the lock-nut (3) to the specified torque.

Tightening torque
Front fork inner rod lock-nut (a): 15 N·m (1.5 kgf-m, 11.0 lb-ft)

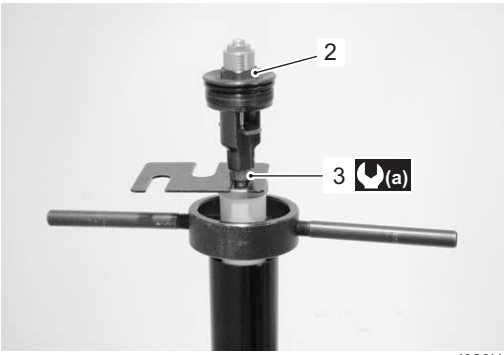

I823H1220077-02

- Remove the special tools.
- Tighten the front fork cap to the outer tube temporarily.

Front Fork Parts Inspection

B823H12206006

Refer to “Front Fork Disassembly and Assembly (Page 2B-5)”.

Inner and Outer Tubes

- Inspect the inner tube outer surface and outer tube inner surface for scratches.
- Inspect the “ANTI-FRICTION” metal surfaces for scratches.
- If any defects are found, replace them with the new ones.

⚠ CAUTION

Do not remove the “ANTI-FRICTION” metals “A” and “B”.

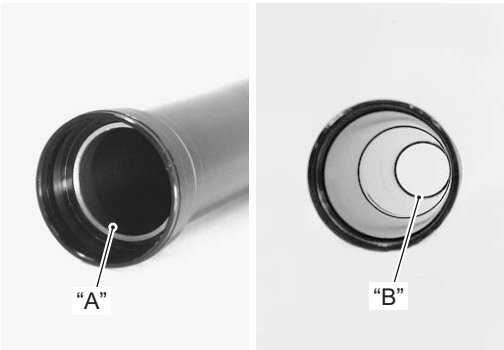

I823H1220064-02

Fork Spring

Measure the fork spring free length. If it is shorter than the service limit, replace it with a new one.

Front fork spring free length
Service limit: 252 mm (9.9 in)

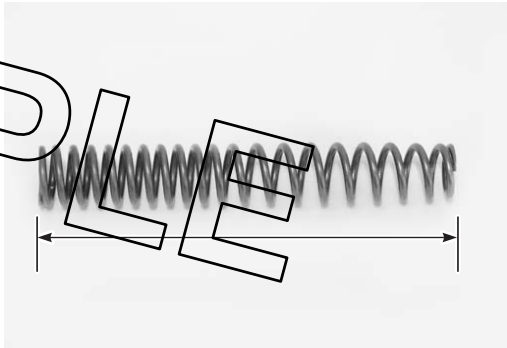

I823H1220079-01

Damper Rod

Move the inner rod by hand to examine it for smoothness.
If any defects are found, replace inner rod/damper rod (cartridge) with a new one.

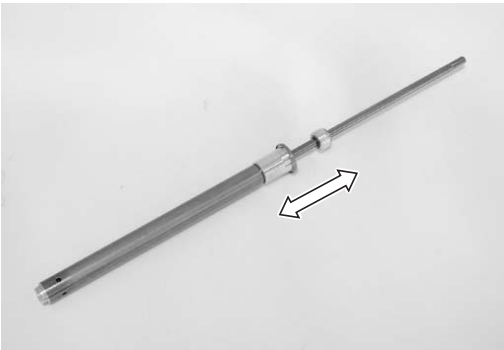

I823H1220078-01

SAMPLE

Specifications

Service Data

B823H12207001

Suspension

Unit: mm (in)

Item	Standard		Limit
Front fork stroke	120 (4.7)		—
Front fork spring free length	257.2 (10.13)		252 (9.9)
Front fork oil level (Without spring, outer tube fully compressed)	100 (3.9)		—
Front fork oil type	SUZUKI FORK OIL L01 or an equivalent fork oil		—
Front fork oil capacity (Each leg)	527 ml (17.8/18.6 US/Imp oz)		—
Front fork inner tube O.D.	43 (1.7)		—
Front fork spring adjuster	3rd groove from top		—
Front fork damping force adjuster	Rebound	9 clicks out from stiffest position	—
	Compression	8 clicks out from stiffest position	—

Tightening Torque Specifications

B823H12207002

Fastening part	Tightening torque			Note
	N·m	kgf-m	lb-ft	
Front fork cap bolt	23	2.3	16.5	☞(Page 2B-3)
Front fork lower clamp bolt	23	2.3	16.5	☞(Page 2B-3)
Front fork upper clamp bolt	23	2.3	16.5	☞(Page 2B-3)
Front fork damper rod bolt	23	2.3	16.5	☞(Page 2B-8)
Front fork inner rod lock-nut	15	1.5	11.0	☞(Page 2B-11)

NOTE

The specified tightening torque is also described in the following.
“Front Fork Components (Page 2B-1)”

Reference:
For the tightening torque of fastener not specified in this section, refer to “Tightening Torque List in Section 0C (Page 0C-9)”.

SAMPLE

Special Tools and Equipment

Recommended Service Material

B823H12208001

Material	SUZUKI recommended product or Specification		Note
Fork Oil	SUZUKI FORK OIL L01 or equivalent	P/No.: 99000–99044–L01	☞(Page 2B-8) / ☞(Page 2B-8) / ☞(Page 2B-9) / ☞(Page 2B-11)
Thread lock cement	THREAD LOCK CEMENT SUPER 1322 or equivalent	P/No.: 99000–32110	☞(Page 2B-8)

NOTE

Required service material is also described in the following.
“Front Fork Components (Page 2B-1)”

Special Tool

B823H12208002

09913–50121 Oil seal remover ☞(Page 2B-7) 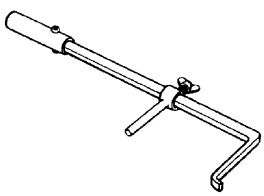	09940–30221 Front fork assembling tool ☞(Page 2B-6) / ☞(Page 2B-8) 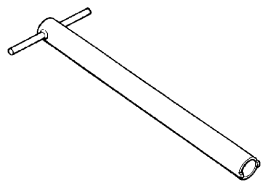
09940–52841 Inner rod holder ☞(Page 2B-9) / ☞(Page 2B-10)	09940–52861 Front fork oil seal installer ☞(Page 2B-9) 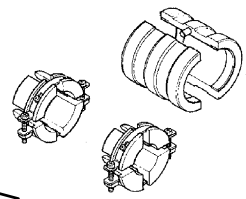
09940–94922 Front fork spring stopper plate ☞(Page 2B-5) / ☞(Page 2B-6) / ☞(Page 2B-10) 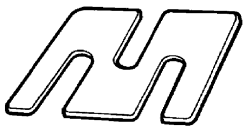	09940–94930 Front fork spacer holder ☞(Page 2B-5) / ☞(Page 2B-5) / ☞(Page 2B-6) / ☞(Page 2B-10) 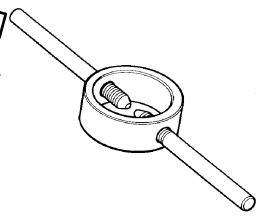
09943–74111 Fork oil level gauge ☞(Page 2B-10) 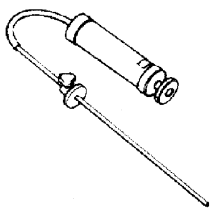	

SAMPLE

Rear Suspension

Repair Instructions

Rear Suspension Components

B823H12306001

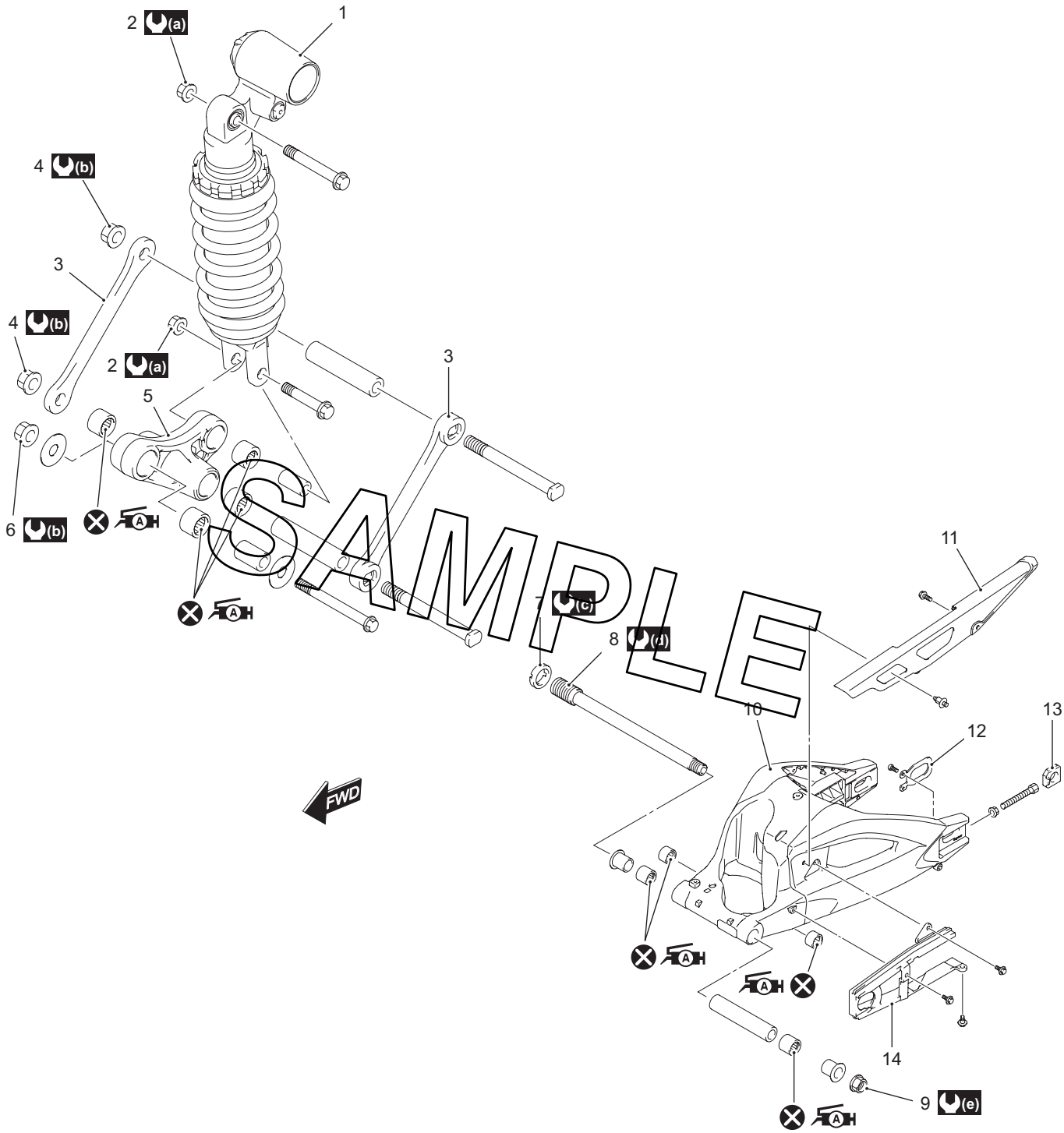

I823H1230049-03

1. Rear shock absorber	8. Swingarm pivot shaft	(a) : 50 N·m (5.0 kgf-m, 36.0 lb-ft)
2. Rear shock absorber mounting nut	9. Swingarm pivot nut	(b) : 78 N·m (7.8 kgf-m, 56.5 lb-ft)
3. Cushion rod	10. Swingarm	(c) : 90 N·m (9.0 kgf-m, 65.0 lb-ft)
4. Cushion rod mounting nut	11. Chain case	(d) : 15 N·m (1.5 kgf-m, 11.0 lb-ft)
5. Cushion lever	12. Plate	(e) : 100 N·m (10.0 kgf-m, 72.5 lb-ft)
6. Cushion lever mounting nut	13. Chain adjuster	A : Apply grease to the bearing.
7. Swingarm pivot lock-nut	14. Chain buffer	⊗ : Do not reuse.

Rear Suspension Assembly Construction

B823H12306002

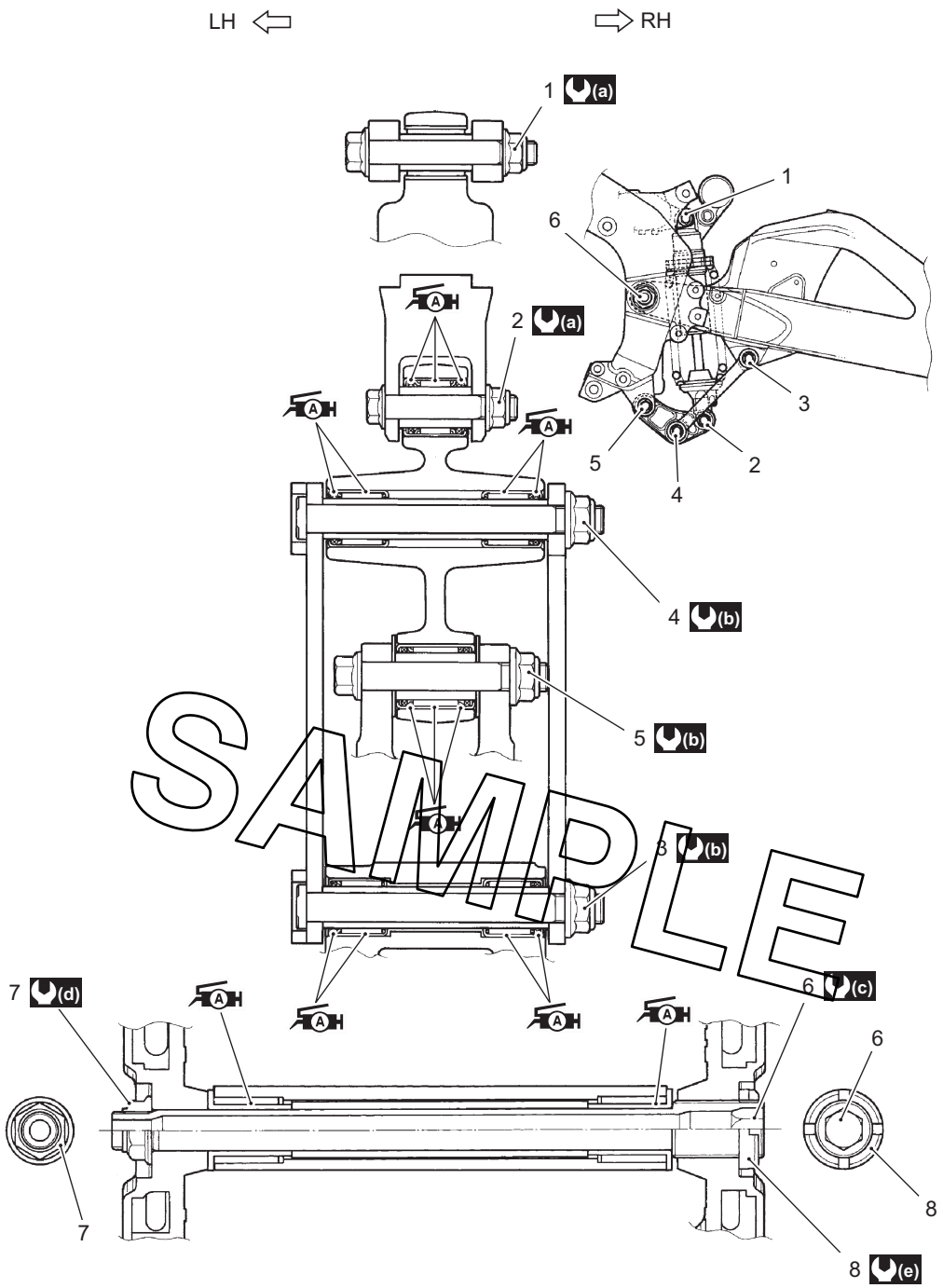

SAMPLE

I823H1230050-01

1. Rear shock absorber mounting nut (Upper)	6. Swingarm pivot shaft	(c) : 15 N·m (1.5 kgf-m, 11.0 lb-ft)
2. Rear shock absorber mounting nut (Lower)	7. Swingarm pivot nut	(d) : 100 N·m (10.0 kgf-m, 72.5 lb-ft)
3. Cushion rod mounting nut (Upper)	8. Swingarm pivot lock-nut	(e) : 90 N·m (9.0 kgf-m, 65.0 lb-ft)
4. Cushion rod mounting nut (Lower)	(a) : 50 N·m (5.0 kgf-m, 36.0 lb-ft)	A : Apply grease to the bearing and dust seal lip.
5. Cushion lever mounting nut	(b) : 78 N·m (7.8 kgf-m, 56.5 lb-ft)	

Rear Shock Absorber Removal and Installation

B823H12306003

Removal

1) Support the motorcycle with a jack to relieve load on the rear shock absorber.
2) Remove the under cowling. Refer to “Exterior Parts Removal and Installation in Section 9D (Page 9D-14)”.
3) Remove the rear shock absorber lower mounting bolt and cushion lever mounting bolt.

I823H1230001-01

4) Remove the rear shock absorber upper mounting bolt.

I823H1230002-01

5) Remove the rear shock absorber.

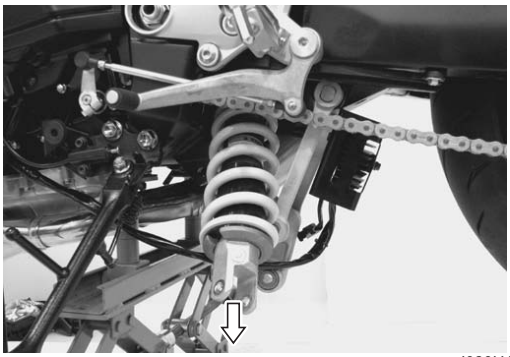

I823H1230003-01

Installation

Install the rear shock absorber in the reverse order of removal. Pay attention to the following points:

- Temporarily install the rear shock absorber and cushion lever mounting bolt.
- Tighten the rear shock absorber upper/lower mounting bolts and nuts.

  Tightening torque
  Rear shock absorber mounting nut (a): 50 N·m (5.0 kgf-m, 36.0 lb-ft)

- Tighten the cushion lever mounting bolt and nut.

  Tightening torque
  Cushion lever mounting nut (b): 78 N·m (7.8 kgf-m, 56.5 lb-ft)

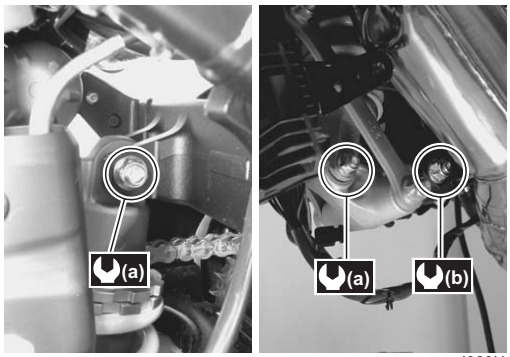

I823H1230004-01

Rear Suspension Inspection

B823H12306004

Refer to “Rear Suspension Inspection in Section 0B (Page 0B-20)”.

SAMPLE

Rear Shock Absorber Inspection

B823H12306005

Inspect the rear shock absorber in the following procedures:

1) Remove the rear shock absorber. Refer to “Rear Shock Absorber Removal and Installation (Page 2C-3)”.
2) Inspect the rear shock absorber for damage and oil leakage, and absorber bushing for wear and damage. If any defect is found, replace the rear shock absorber with a new one.

⚠ CAUTION

Do not attempt to disassemble the rear shock absorber. It is unserviceable.

I823H1230005-03

I823H1230047-01

3) Install the rear shock absorber. Refer to “Rear Shock Absorber Removal and Installation (Page 2C-3)”.

Rear Suspension Adjustment

B823H12306006

After installing the rear suspension, adjust the spring pre-load and damping force as follows:

Spring Pre-load Adjustment

- The set length 177 mm provides the maximum spring pre-load.
- The set length 187 mm provides the minimum spring pre-load.

STD position
182 mm (7.2 in)

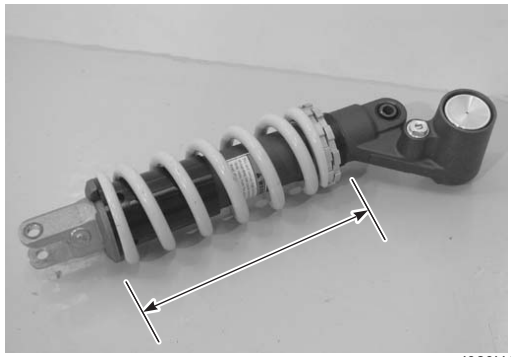

I823H1230006-01

Damping Force Adjustment

NOTE

Turn the adjuster clockwise to stiffen the damping force and turn it counterclockwise to soften the damping force.

Rebound side

Turn the damping force adjuster (1) to the desired position.

STD position
2 turns out from stiffest position

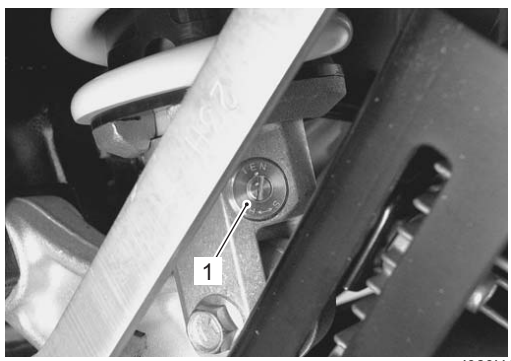

I823H1230007-02

SAMPLE

Compression side
Turn the damping force adjuster (2) to the desired position.

STD position
2 turns out of from stiffest position

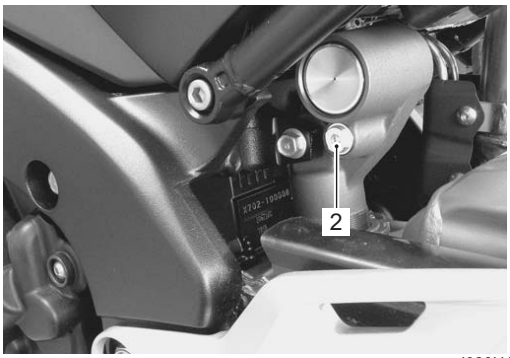

I823H1230008-02

Rear Shock Absorber Disposal

B823H12306007

Refer to “Rear Shock Absorber Removal and Installation (Page 2C-3)”.
The rear shock absorber unit contains high-pressure nitrogen gas.

⚠ WARNING

- **Mishandling can cause explosion.**
- **Keep away from fire and heat. High gas pressure caused by heat can cause an explosion.**
- **Release gas pressure before disposing.**

Gas Pressure Release
Make sure to observe the following precautions:

⚠ WARNING

- **Never apply heat or disassemble the damper unit since it can explode or oil can splash hazardously.**
- **When discarding the rear cushion unit, be sure to release gas pressure from the unit following the procedures.**

1) Mark the drill center at the location “A” using a center punch.

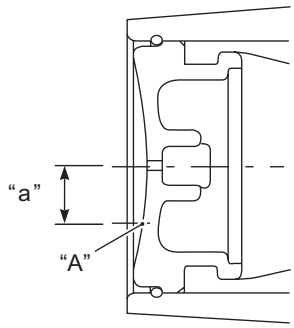

I823H1230009-01

“a”: 9 mm (0.35 in)	“A”: Mark the drill hole

2) Wrap rear shock absorber (1) with a plastic bag (2) and fix it on a vise as shown in the figure.
3) Drill a 2 – 3 mm (0.08 – 0.12 in) hole at the marked drill center using a drilling machine and let out gas while taking care not to get the plastic bag entangled with the drill bit.

⚠ WARNING

- **Be sure to wear protective glasses since drilling chips and oil may fly off with blowing gas when the drill bit has penetrated through the body.**
- **Make sure to drill at the specified position. Otherwise, pressurized oil many spout out forcefully.**

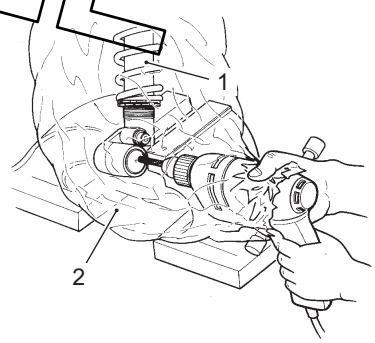

I823H1230010-01

SAMPLE

Cushion Lever Removal and Installation

B823H12306008

Removal

1) Support the motorcycle with a jack to relieve load on the cushion lever.
2) Remove the cushion lever by removing its related bolts, nuts and washers.
3) Remove the rear shock absorber lower mounting bolt and nut.

I823H1230012-01

Installation

Install the cushion lever in the reverse order of removal. Pay attention to the following point:

- Tighten each nut to the specified torque.

  Tightening torque
  Cushion lever mounting nut (a): 78 N·m (7.8 kgf-m, 56.5 lb-ft)
  Cushion rod mounting nut (b): 78 N·m (7.8 kgf-m, 56.5 lb-ft)
  Rear shock absorber lower mounting nut (c): 50 N·m (5.0 kgf-m, 36.0 lb-ft)

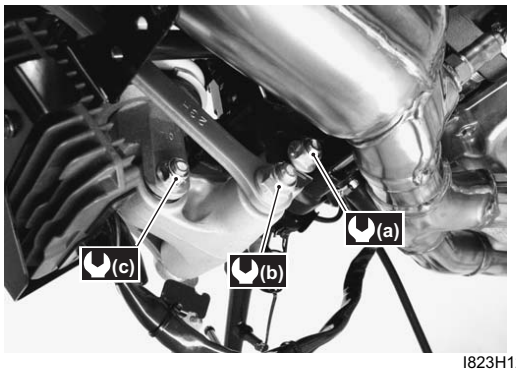

I823H1230011-01

Cushion Lever Inspection

B823H12306009

Refer to “Cushion Lever Removal and Installation (Page 2C-6)”.

Spacer

1) Remove the spacers from the cushion lever.
2) Inspect the spacers for any flaws or other damage. If any defects are found, replace the spacers with new ones.

I823H1230013-01

Cushion Lever Bearing

1) Insert the spacers into bearings.
2) Check the play by moving the spacers up and down. If excessive play is noted, replace the bearing with a new one. Refer to “Cushion Lever Bearing Removal and Installation (Page 2C-7)”.

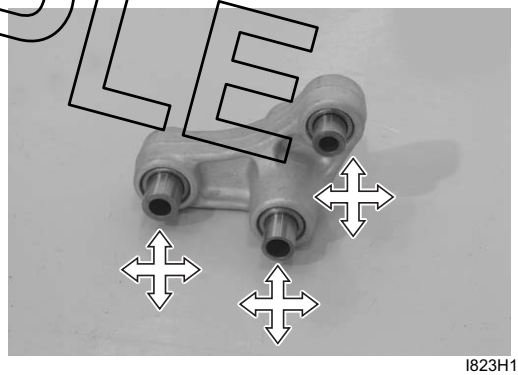

I823H1230014-01

Cushion Lever

Inspect the cushion lever for damage. If any defect is found, replace the cushion lever with a new one.

I823H1230015-01

SAMPLE

Cushion Rod

Refer to “Swingarm Related Parts Inspection (Page 2C-11)”.

Cushion Lever Bearing Removal and Installation

B823H12306010

Removal

1) Remove the cushion lever. Refer to “Cushion Lever Removal and Installation (Page 2C-6)”.
2) Remove the cushion lever bearings using the special tools.

Special tool
TOOL (A): 09921–20240 (Bearing remover set)
TOOL (B): 09913–70210 (Bearing installer set)

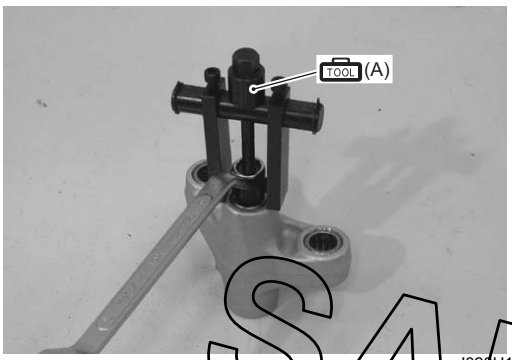

I823H1230016-01

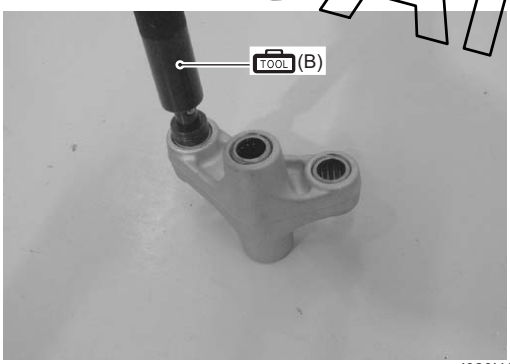

I823H1230017-02

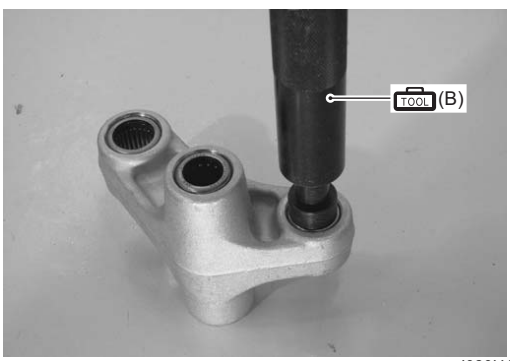

I823H1230018-01

Installation

⚠ CAUTION

The removed bearings must be replaced with new ones.

1) Press the bearings into the cushion lever at 1 mm (0.04 in) depth “A” and 0.5 mm (0.02 in) depth “B” from the cushion laver surface with the special tool and suitable size socket wrench.

NOTE

When installing the bearing, stamped mark on the bearing must face outside.

Special tool
TOOL (A): 09924–84521 (Bearing installer set)

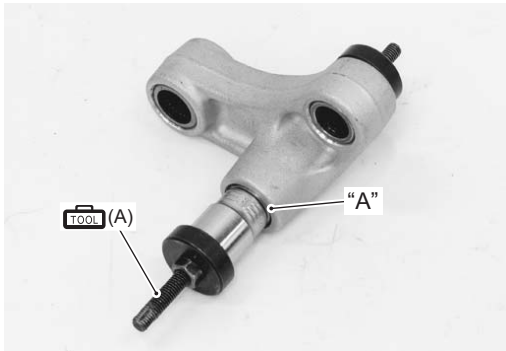

I823H1230043-01

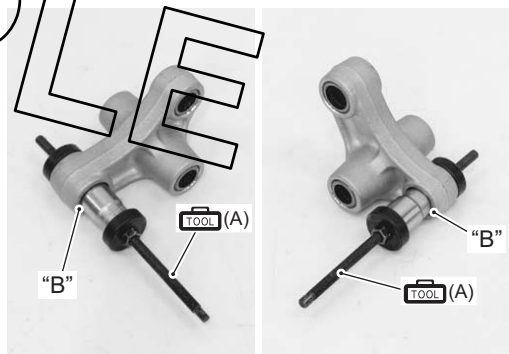

I823H1230044-01

2) Apply grease to the bearings.

A H : Grease 99000–25010 (SUZUKI SUPER GREASE A or equivalent)

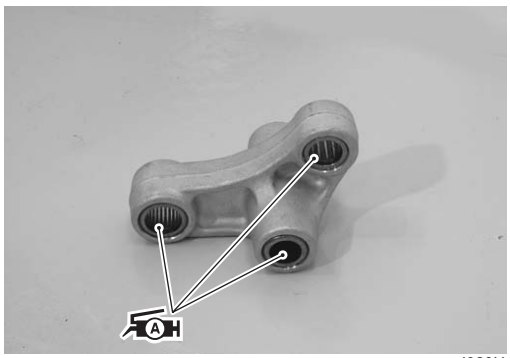

I823H1230019-01

3) Install the cushion lever. Refer to “Cushion Lever Removal and Installation (Page 2C-6)”.

SAMPLE

Swingarm / Cushion Rod Removal and Installation

B823H12306011

Removal

1) Cut the drive chain. Refer to “Drive Chain Replacement in Section 3A (Page 3A-7)”.
2) Remove the rear wheel assembly. Refer to “Rear Wheel Assembly Removal and Installation in Section 2D (Page 2D-11)”.
3) Remove the brake hose clamp bolt (1).
4) Remove the brake caliper (2) from the swingarm.

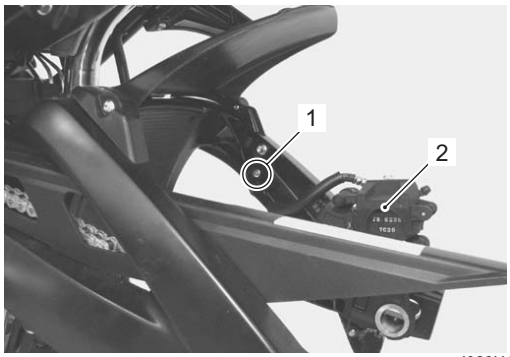

I823H1230020-02

5) Remove the cushion lever (2) and rear shock absorber (3). Refer to “Cushion Lever Removal and Installation (Page 2C-6)” and “Rear Shock Absorber Removal and Installation (Page 2C-3)”.

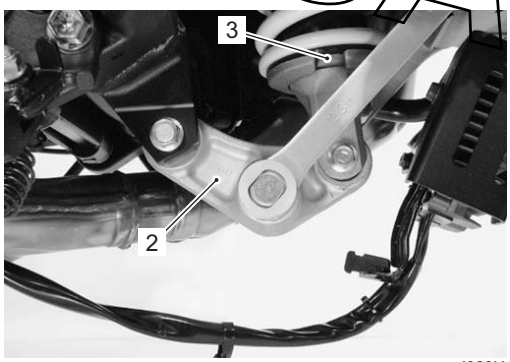

I823H1230045-01

6) Remove the front and rear seats as an assembly. Refer to “Exterior Parts Removal and Installation in Section 9D (Page 9D-14)”.
7) Remove the frame covers. Refer to “Exterior Parts Removal and Installation in Section 9D (Page 9D-14)”.
8) Remove the muffler covers. Refer to “Exterior Parts Removal and Installation in Section 9D (Page 9D-14)”.
9) Remove the rear fender. Refer to “Rear Fender Construction in Section 9D (Page 9D-11)”.
10) Remove the muffler. Refer to “Muffler / Muffler Joint / Exhaust Pipe Removal and Installation in Section 1K (Page 1K-12)”.
11) Remove the exhaust joint pipe. Refer to “Muffler / Muffler Joint / Exhaust Pipe Removal and Installation in Section 1K (Page 1K-12)”.
12) Remove the swingarm pivot shaft lock-nut with the special tool.

Special tool
TOOL (A): 09940–14940 (Swingarm pivot thrust adjuster socket wrench)

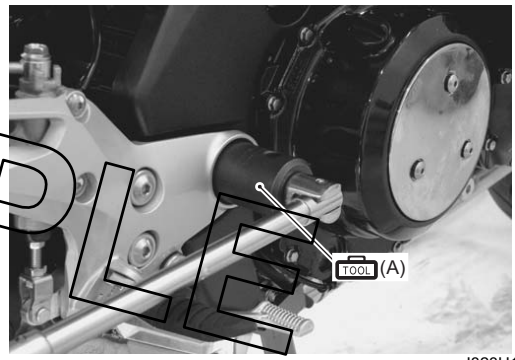

I823H1230021-01

13) Hold the swingarm pivot shaft (5) and remove the swingarm pivot nut (6).

Special tool
TOOL (B): 09944–28320 (Hexagon socket (19 mm))

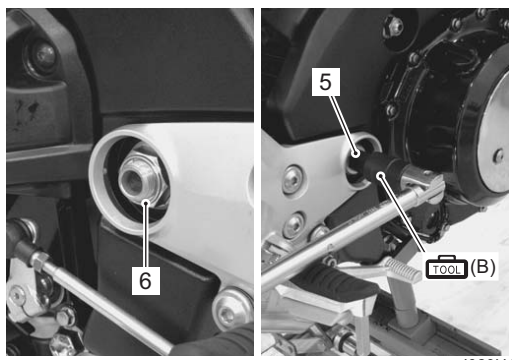

I823H1230022-02

SAMPLE

14) Remove the swingarm pivot shaft.
15) Remove the swingarm.
16) Remove the cushion rods (7).

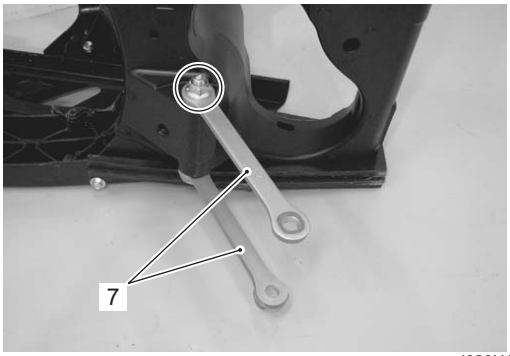

I823H1230023-02

17) Remove the rear fender (lower) (8), chain case (9) and chain buffer (10) from the swingarm.

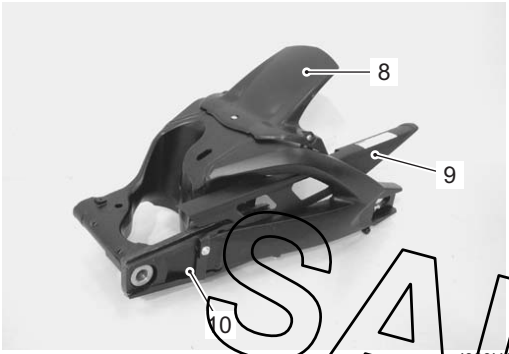

I823H1230024-01

18) Remove the plate (11).

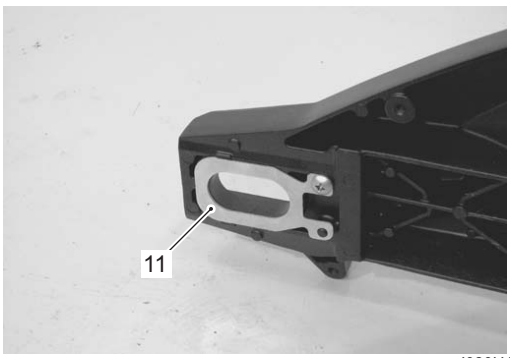

I823H1230025-01

Installation

Install the swingarm in the reverse order of removal. Pay attention to the following points:

- Temporarily install the cushion rod mounting nut.

NOTE

The stamped marks "A" on the cushion rod should be face out side.

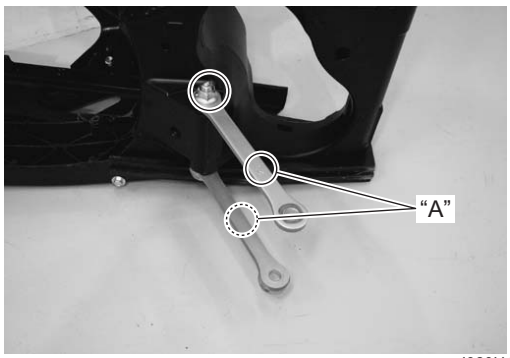

I823H1230026-02

- Adjust swingarm pivot thrust clearance in the following procedures:
  - Insert the swingarm pivot shaft and tighten it to the specified torque.

Special tool

TOOL (A): 09944–28320 (Hexagon socket (19 mm))

Tightening torque

Swingarm pivot shaft: 15 N·m (1.5 kgf-m, 11.0 lb-ft)

I823H1230027-01

SAMPLE

– Hold the swingarm pivot shaft and tighten the swingarm pivot nut to the specified torque.

Tightening torque
Swingarm pivot nut: 100 N·m (10.0 kgf-m, 72.5 lb-ft)

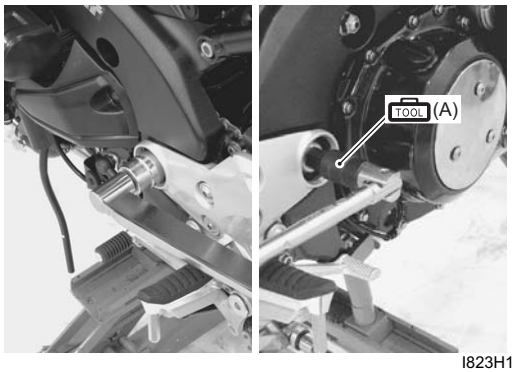

I823H1230028-02

– Tighten the swingarm pivot lock-nut to the specified torque with the special tool.

Special tool
TOOL (B): 09940–14940 (Swingarm pivot thrust adjuster socket wrench)

Tightening torque
Swingarm pivot lock-nut: 90 N·m (9.0 kgf-m, 65.0 lb-ft)

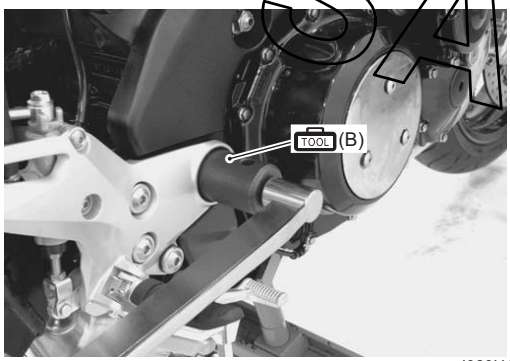

I823H1230029-01

– Tighten the cushion lever, cushion rod and rear shock absorber mounting nut to the specified torque.

Tightening torque
Cushion rod mounting nut (a): 78 N·m (7.8 kgf-m, 56.5 lb-ft)
Cushion lever mounting nut (b): 78 N·m (7.8 kgf-m, 56.5 lb-ft)
Rear shock absorber mounting nut (c): 50 N·m (5.0 kgf-m, 36.0 lb-ft)

NOTE

Install the washers between cushion lever and frame.

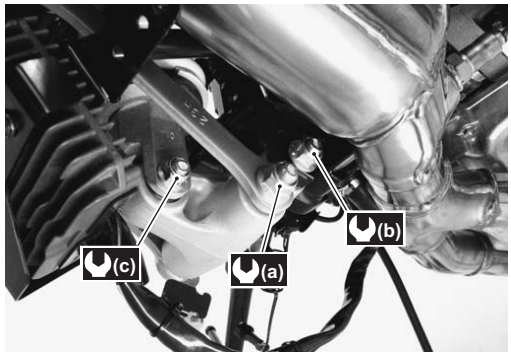

I823H1230051-01

I823H1230031-01

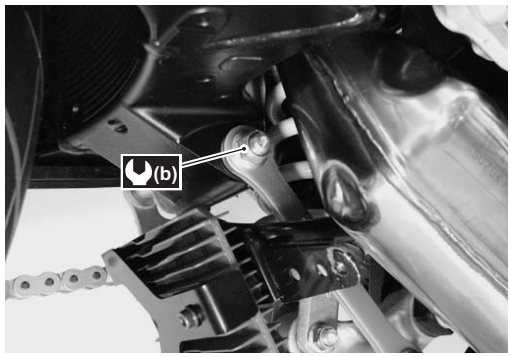

I823H1230032-01

SAMPLE

Swingarm Related Parts Inspection

B823H12306012

Refer to “Swingarm / Cushion Rod Removal and Installation (Page 2C-8)”.

Spacers

1) Remove the spacers from the swingarm.
2) Inspect the spacers for wear and damage. If any defects are found, replace the spacers with new ones.

I823H1230033-02

Chain Buffer

Inspect the chain buffer for wear and damage. If any defect is found, replace the chain buffer with a new one.

I823H1230034-01

Swingarm Bearing and Cushion Rod Bearing

1) Insert the spacers into bearings.
2) Check the play by moving the spacers up and down. If excessive play is noted, replace the bearing with a new one. Refer to “Swingarm Bearing Removal and Installation (Page 2C-12)”.

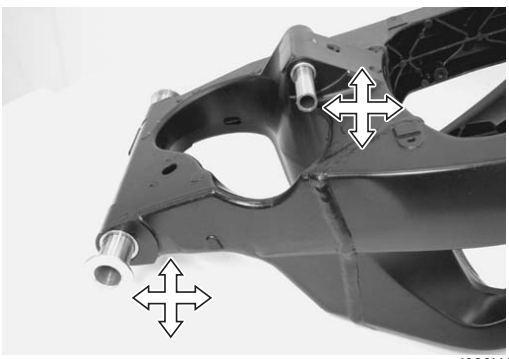

I823H1230035-01

Swingarm

Inspect the swingarm for damage. If any defect is found, replace the swingarm with a new one.

I823H1230036-01

Cushion Rod

Inspect the cushion rods for damage and bend. If any defects are found, replace the cushion rods with new ones.

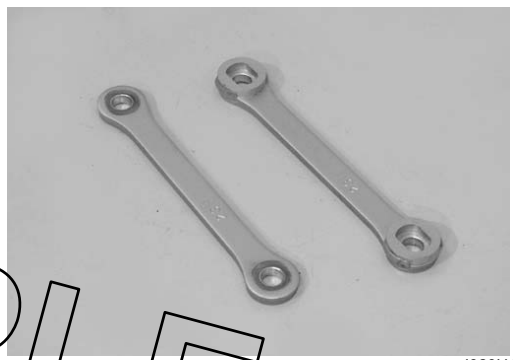

I823H1230037-01

SAMPLE

Swingarm Pivot Shaft

Measure the swingarm pivot shaft runout using the dial gauge. If the runout exceeds the service limit, replace the pivot shaft.

Special tool

TOOL (A): 09900–20607 (Dial gauge (1/100 mm, 10 mm))
TOOL (B): 09900–20701 (Magnetic stand)
TOOL (C): 09900–21304 (V-block (100 mm))

<u>Swingarm pivot shaft runout</u>
Service limit: 0.3 mm (0.01 in)

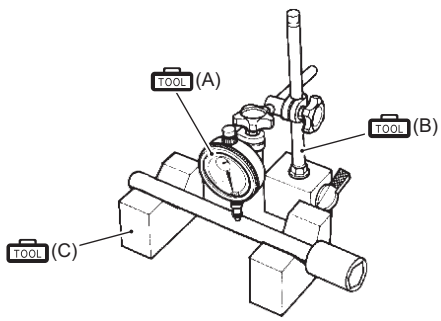

I823H1230048-01

Swingarm Bearing Removal and Installation

B823H12306013

Removal

1) Remove the rear wheel assembly. Refer to “Rear Wheel Assembly Removal and Installation in Section 2D (Page 2D-11)”.
2) Remove the swingarm. Refer to “Swingarm / Cushion Rod Removal and Installation (Page 2C-8)”.
3) Remove the swingarm pivot bearings (1) using the special tool.

Special tool
TOOL (A): 09921–20240 (Bearing remover set)

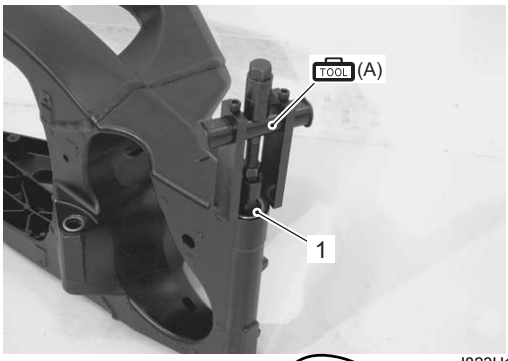

I823H1230038-01

4) Remove the center spacer (2).

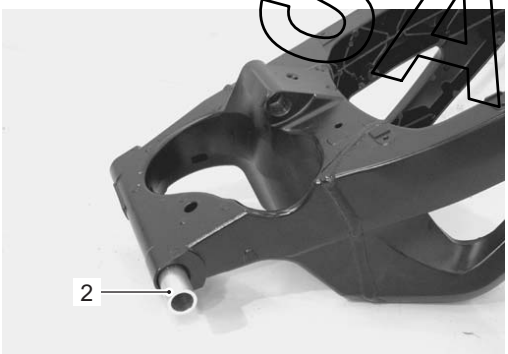

I823H1230039-01

5) Remove the swingarm cushion rod bearings (3) using the special tools.

Special tool
TOOL (A): 09921–20240 (Bearing remover set)

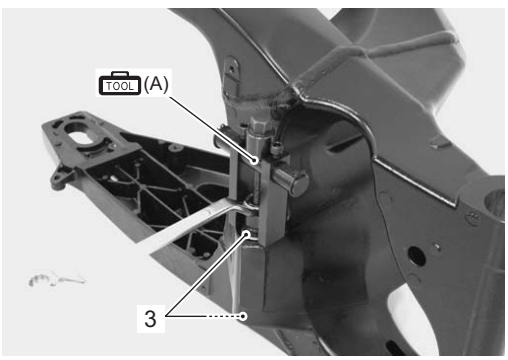

I823H1230040-01

Installation

⚠ CAUTION

The removed bearings must be replaced with new ones.

1) Press the bearings into the swingarm cushion rod at 1 mm (0.04 in) depth “A” from the swingarm cushion rod surface with the special tool and suitable size socket wrench.

NOTE

When installing the bearing, stamped mark on the bearing must face outside.

Special tool
TOOL (A): 09924–84521 (Bearing installer set)

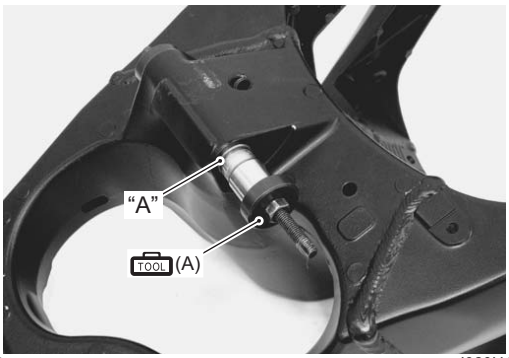

I823H1230046-02

2) Install the center spacer.
3) Press the bearings into the swingarm pivot with the special tool.

NOTE

When installing the bearing, stamped mark on the bearing must face outside.

Special tool
TOOL (B): 09941–34513 (Steering race installer)

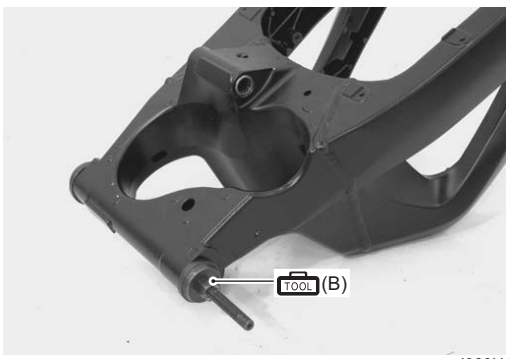

I823H1230041-01

SAMPLE

4) Apply grease to the bearings.

: Grease 99000–25010 (SUZUKI SUPER GREASE A or equivalent)

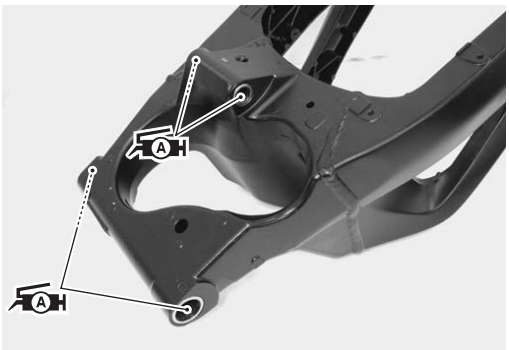

I823H1230042-02

5) Install the swingarm. Refer to “Swingarm / Cushion Rod Removal and Installation (Page 2C-8)”.
6) Install the rear wheel assembly. Refer to “Rear Wheel Assembly Removal and Installation in Section 2D (Page 2D-11)”.

Specifications

Service Data

B823H12307001

Suspension

Unit: mm (in)

Item	Standard		Limit
Rear shock absorber spring pre-set length	182 (7.2)		—
Rear shock absorber damping force adjuster	Rebound	2 turns out from stiffed position	—
	Compression		
Rear wheel travel	137 (5.4)		—
Swingarm pivot shaft runout	—		0.3 (0.01)

SAMPLE

Tightening Torque Specifications

B823H12307002

Fastening part	Tightening torque			Note
	N·m	kgf-m	lb-ft	
Rear shock absorber mounting nut	50	5.0	36.0	☞(Page 2C-3) / ☞(Page 2C-10)
Cushion lever mounting nut	78	7.8	56.5	☞(Page 2C-3) / ☞(Page 2C-6) / ☞(Page 2C-10)
Cushion rod mounting nut	78	7.8	56.5	☞(Page 2C-6) / ☞(Page 2C-10)
Rear shock absorber lower mounting nut	50	5.0	36.0	☞(Page 2C-6)
Swingarm pivot shaft	15	1.5	11.0	☞(Page 2C-9)
Swingarm pivot nut	100	10.0	72.5	☞(Page 2C-10)
Swingarm pivot lock-nut	90	9.0	65.0	☞(Page 2C-10)

NOTE

The specified tightening torque is also described in the following.
“Rear Suspension Components (Page 2C-1)”
“Rear Suspension Assembly Construction (Page 2C-2)”

Reference:
For the tightening torque of fastener not specified in this section, refer to “Tightening Torque List in Section 0C (Page 0C-9)”.

Special Tools and Equipment

Recommended Service Material

B823H12308001

Material	SUZUKI recommended product or Specification		Note
Grease	SUZUKI SUPER GREASE A or equivalent	P/No.: 99000–25010	☞(Page 2C-7) / ☞(Page 2C-13)

NOTE

Required service material is also described in the following.
“Rear Suspension Components (Page 2C-1)”
“Rear Suspension Assembly Construction (Page 2C-2)”

Special Tool

B823H12308002

09900–20607 Dial gauge (1/100 mm, 10 mm) ☞(Page 2C-11) 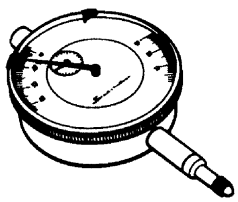	09900–20701 Magnetic stand ☞(Page 2C-11) 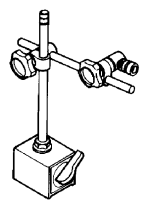
09900–21304 V-block (100 mm) ☞(Page 2C-11) 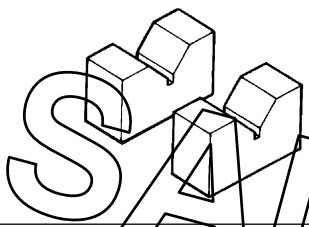	09913–70210 Bearing installer set ☞(Page 2C-7) 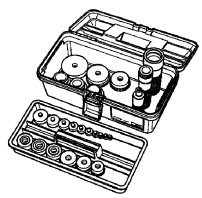
09921–20240 Bearing remover set ☞(Page 2C-7) / ☞(Page 2C-12) / ☞(Page 2C-12) 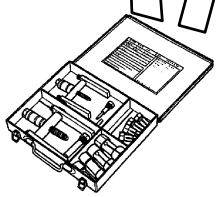	09924–84521 Bearing installer set ☞(Page 2C-7) / ☞(Page 2C-12) 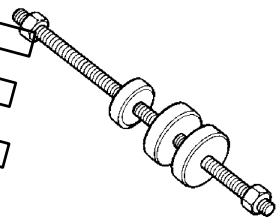
09940–14940 Swingarm pivot thrust adjuster socket wrench ☞(Page 2C-8) / ☞(Page 2C-10) 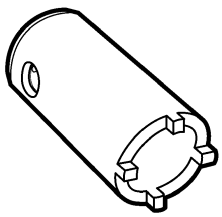	09941–34513 Steering race installer ☞(Page 2C-12) 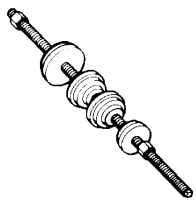
09944–28320 Hexagon socket (19 mm) ☞(Page 2C-8) / ☞(Page 2C-9) 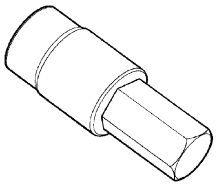	

SAMPLE

Wheels and Tires

Precautions

Precautions for Wheel and Tire

B823H12400001

⚠ WARNING

- **Proper tire pressure and proper tire loading are important factors. Over loading tire can lead to tire failure and loss of motorcycle control.**
- **Under-inflated tires make smooth cornering difficult, and can result in rapid tire wear.**
- **Over-inflated tires have a smaller amount of tire in contact with the load, which can contribute to skidding and loss of control.**
- **Replace the wheel when wheel runout exceed the service limit or if find damage such as distortion, crack, nick or scratch.**
- **When tire replacement is necessary, the original equipment type tire should be used.**
- **Do not mix different types of tires on the same vehicle such as radial and bias-belted tires except in emergencies, because handling may be seriously affected and may result in loss of control.**
- **Replacement wheel must be equivalent to the original equivalent wheel.**

SAMPLE

Repair Instructions

Front Wheel Components

B823H12406001

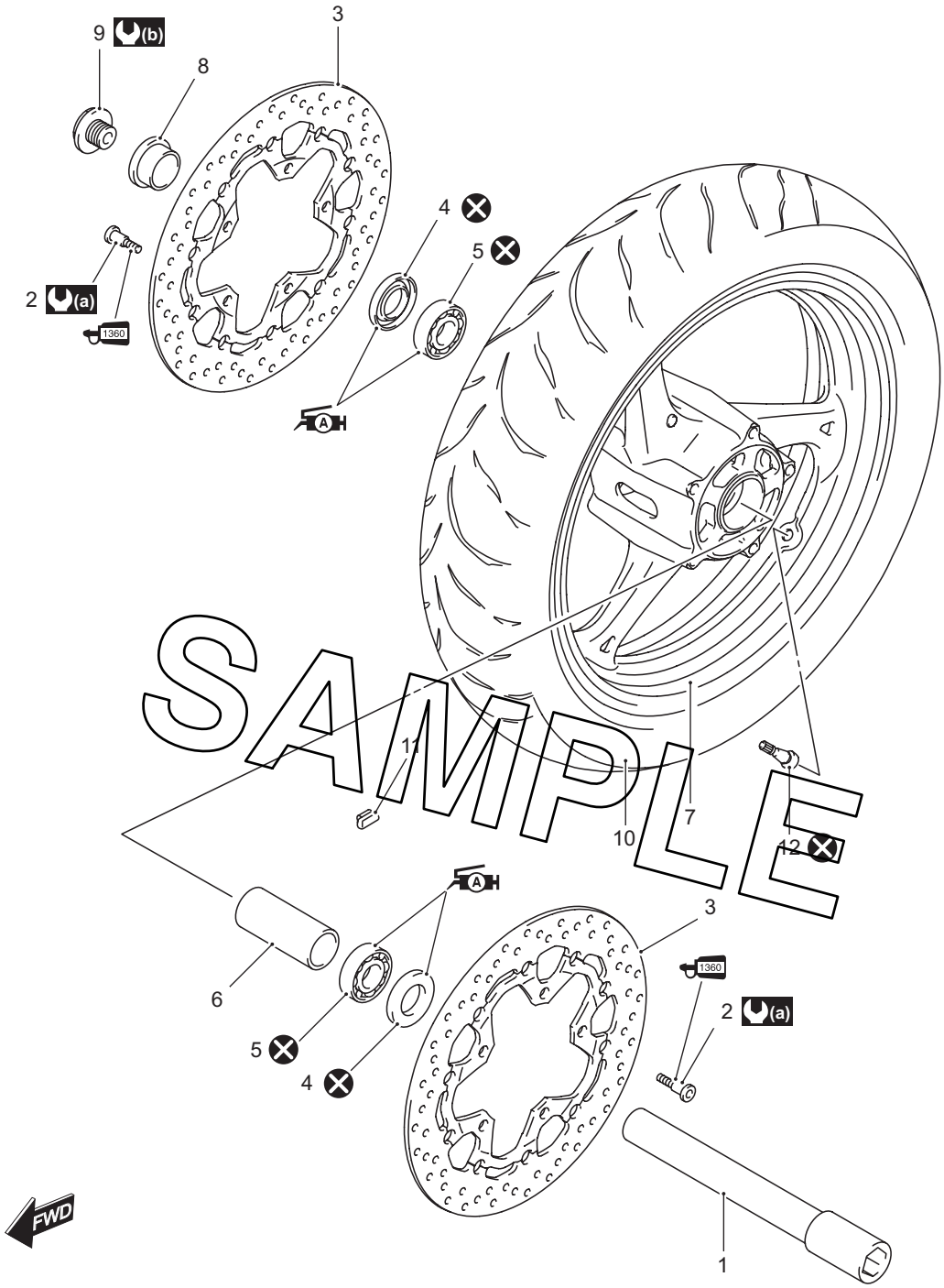

SAMPLE

I823H1240060-02

1. Front axle	7. Front wheel	(a) : 23 N·m (2.3 kgf-m, 16.5 lb-ft)
2. Brake disc bolt	8. Collar	(b) : 100 N·m (10.0 kgf-m, 72.5 lb-ft)
3. Brake disc	9. Front axle bolt	A : Apply grease.
4. Dust seal	10. Tire	1360 : Apply thread lock to the thread part.
5. Bearing	11. Wheel balancer	⊗ : Do not reuse.
6. Spacer	12. Air valve	

Front Wheel Assembly Construction

B823H12406002

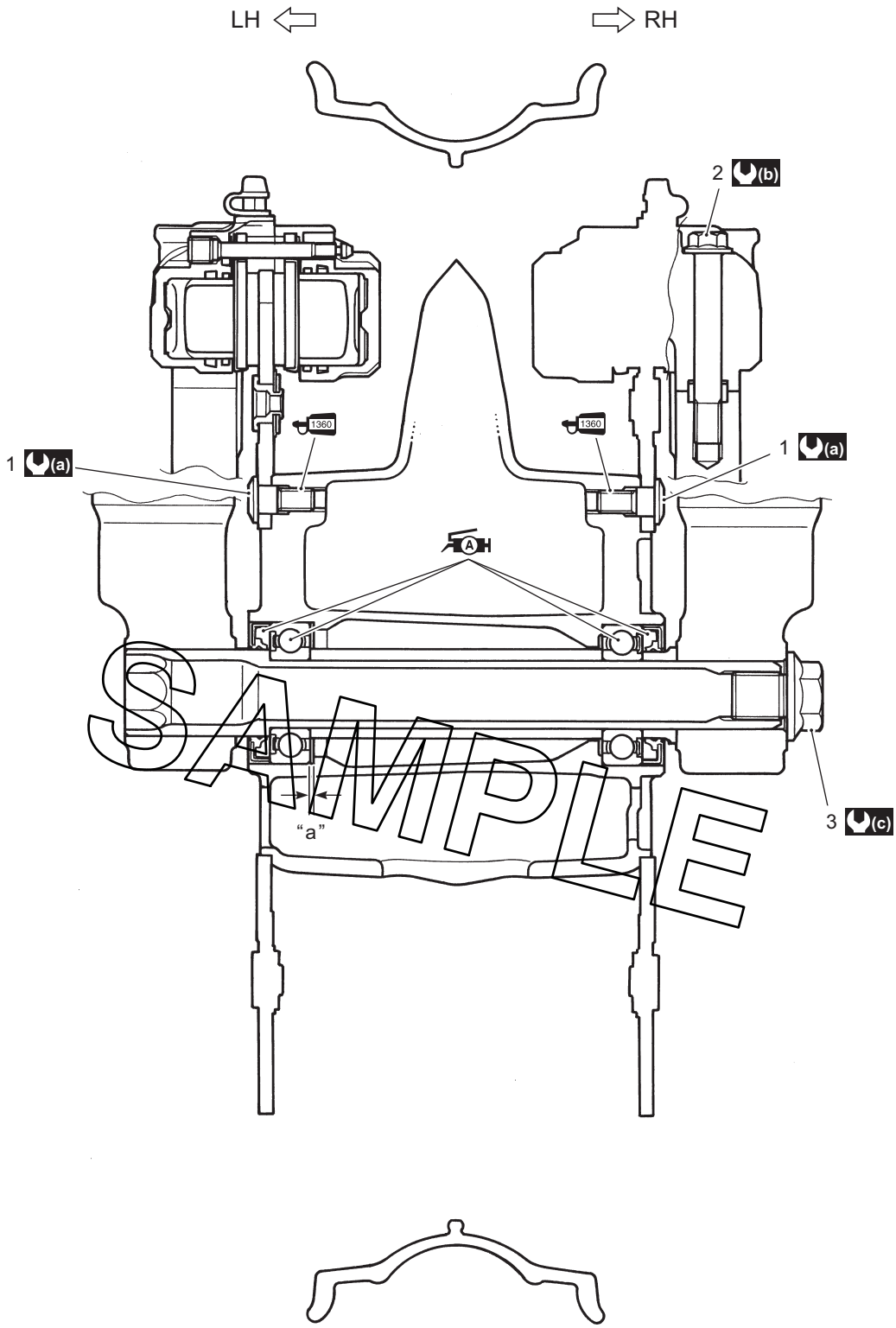

SAMPLE

I823H1240061-01

1. Brake disc bolt	"a": Clearance	(c) : 100 N·m (10.0 kgf-m, 72.5 lb-ft)
2. Brake caliper mounting bolt	(a) : 23 N·m (2.3 kgf-m, 16.5 lb-ft)	A : Apply grease.
3. Front axle bolt	(b) : 39 N·m (3.9 kgf-m, 28.0 lb-ft)	1360 : Apply thread lock to the thread part.

Front Wheel Assembly Removal and Installation

B823H12406003

Removal

1) Raise the front wheel off the ground and support the motorcycle with a jack or a wooden block.

⚠ CAUTION

Do not carry out the work with the motorcycle resting on the side-stand. Do not support the motorcycle with the exhaust pipes. Make sure that the motorcycle is supported securely.

2) Remove the brake calipers. Refer to “Front Brake Caliper Removal and Installation in Section 4B (Page 4B-3)”.

⚠ CAUTION

Do not operate the brake lever with the caliper removed.

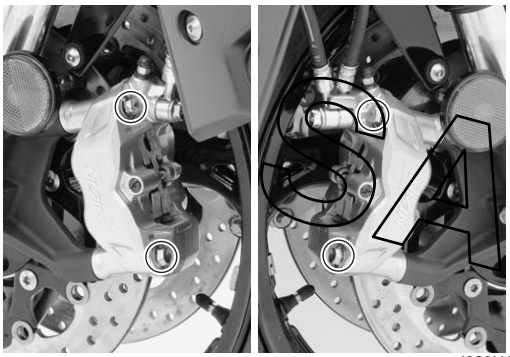

I823H1240029-01

3) Loosen two axle pinch bolts (1) on the right front fork leg.
4) Remove the front axle bolt (2).

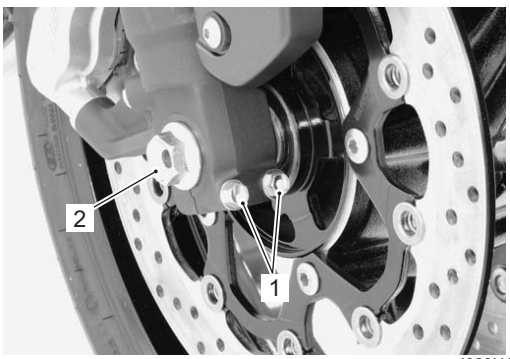

I823H1240030-01

5) Loosen two axle pinch bolts (3) on the left front fork leg.
6) Draw out the front axle and remove the front wheel.

NOTE

After removing the front wheel, fit the calipers temporarily to the original positions.

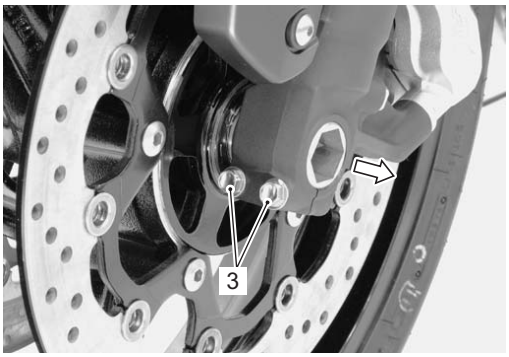

I823H1240031-01

7) Remove the collar (4). (RH only)

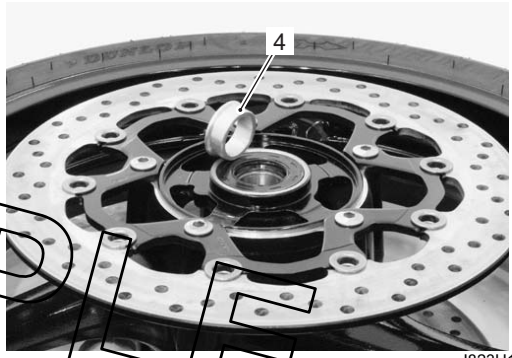

I823H1240032-02

SAMPLE

Installation

1) Install the collar (1) to right side of the wheel.

I823H1240033-03

2) Install the front wheel with the front axle and tighten the front axle bolt temporarily.

⚠ WARNING

The directional arrow on the tire should point to the wheel rotation, when remounting the wheel.

I823H1240034-02

3) Tighten the brake caliper mounting bolts (2) to the specified torque.

Tightening torque
Front brake caliper mounting bolt (a): 39 N·m (3.9 kgf-m, 28.0 lb-ft)

⚠ WARNING

After remounting the brake calipers, pump the brake lever until the pistons push the pad correctly.

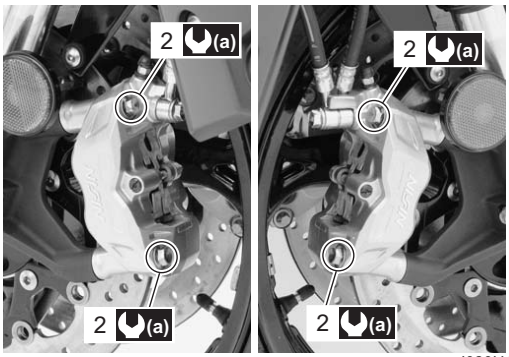

I823H1240035-01

4) Hold the front axle with the special tool and tighten the front axle bolt (3) to the specified torque.

Special tool
TOOL (A): 09900–18740 (Hexagon socket (24 mm))

Tightening torque
Front axle bolt (b): 100 N·m (10.0 kgf-m, 72.5 lb-ft)

5) Tighten two axle pinch bolts (4) on the right fork leg to the specified torque.

Tightening torque
Front axle pinch bolt (c): 23 N·m (2.3 kgf-m, 16.5 lb-ft)

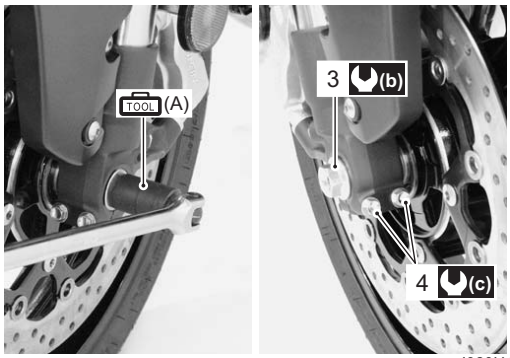

I823H1240036-01

6) Move the front fork up and down 4 or 5 times.

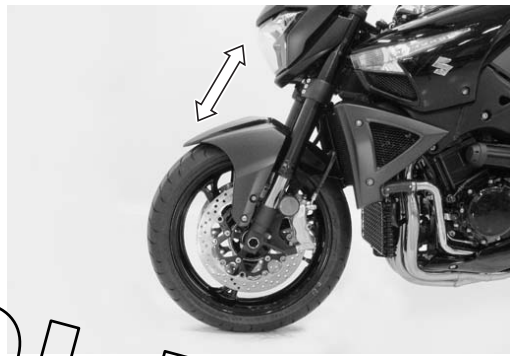

I823H1240037-01

7) Tighten two axle pinch bolts (5) on the left front fork leg to the specified torque.

Tightening torque
Front axle pinch bolt (d): 23 N·m (2.3 kgf-m, 16.5 lb-ft)

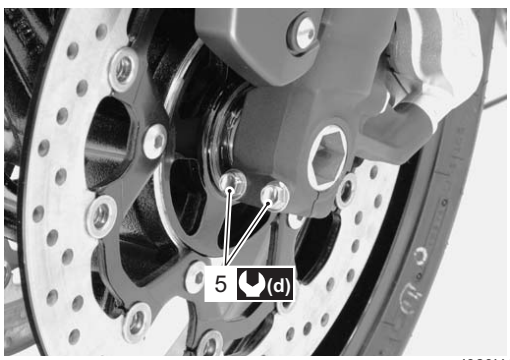

I823H1240038-01

SAMPLE

Front Wheel Related Parts Inspection

B823H12406004

Refer to “Front Wheel Assembly Removal and Installation (Page 2D-4)”.

Tire

Refer to “Tire Inspection in Section 0B (Page 0B-19)”.

Front Brake Disc

Refer to “Front Brake Disc Inspection in Section 4B (Page 4B-8)”.

Dust Seal

Inspect the dust seal lips for wear or damage. If any defects are found, replace the dust seal with the new ones. Refer to “Front Wheel Dust Seal / Bearing Removal and Installation (Page 2D-7)”.

I823H1240039-02

Wheel Axle

Using a dial gauge, check the wheel axle for runout. If the runout exceeds the limit, replace the axle shaft.

Special tool

TOOL (A): 09900–20607 (Dial gauge (1/100 mm, 10 mm))
TOOL (B): 09900–20701 (Magnetic stand)
TOOL (C): 09900–21304 (V-block (100 mm))

Wheel axle runout
Service limit: 0.25 mm (0.010 in)

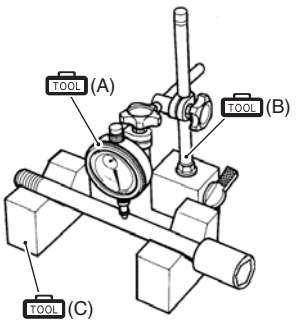

I649G1240054-02

Wheel

1) Remove the brake pads. Refer to “Front Brake Pad Replacement in Section 4B (Page 4B-2)”.
2) Make sure that the wheel runout checked as shown does not exceed the service limit. An excessive runout is usually due to worn or loosened wheel bearings and can be reduced by replacing the bearings. If bearing replacement fails to reduce the runout, replace the wheel.
3) Install the brake pads. Refer to “Front Brake Pad Replacement in Section 4B (Page 4B-2)”.

Wheel rim runout
Service limit (Axial and Radial): 2.0 mm (0.08 in)

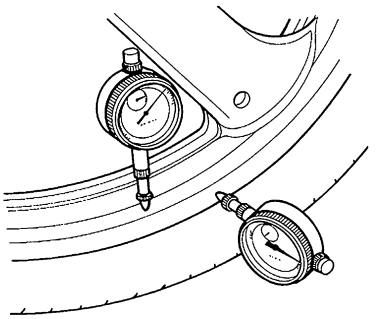

I649G1240014-02

Wheel Bearing

Inspect the play of the wheel bearings by finger while they are in the wheel. Rotate the inner race by finger to inspect for abnormal noise and smooth rotation. Replace the bearing if there is anything unusual. Refer to “Front Wheel Dust Seal / Bearing Removal and Installation (Page 2D-7)”.

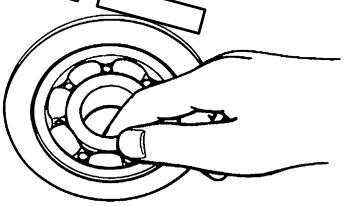

I649G1240015-02

SAMPLE

Front Wheel Dust Seal / Bearing Removal and Installation

B823H12406005

Removal

1) Remove the front wheel assembly. Refer to “Front Wheel Assembly Removal and Installation (Page 2D-4)”.
2) Remove the dust seals (1) using the special tool.

Special tool
TOOL (A): 09913–50121 (Oil seal remover)

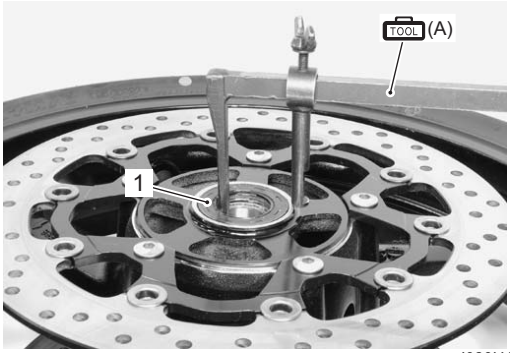

I823H1240040-01

3) Remove the bearings (2) using the special tool.

Special tool
TOOL (B): 09921–20240 (Bearing remover set)

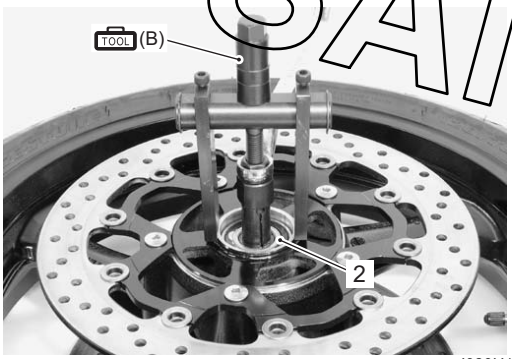

I823H1240041-01

4) Remove the spacer (3).

I823H1240042-01

Installation

⚠ CAUTION

The removed dust seals and bearings must be replaced with new ones.

1) Apply grease to the wheel bearings.

A : Grease 99000–25010 (SUZUKI SUPER GREASE A or equivalent)

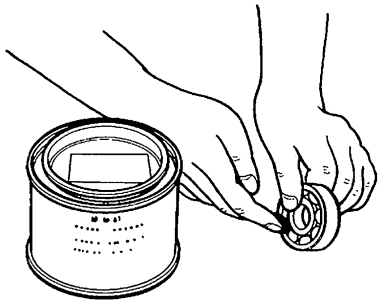

I649G1240019-02

SAMPLE

2) First install the right wheel bearing, then install the spacer (1) and left wheel bearing with the special tool.

Special tool
TOOL (A): 09924–84510 (Bearing installer set)

⚠ CAUTION

The sealed cover of the bearing must face outside.

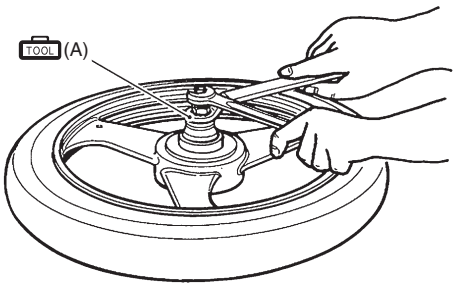

I649G1240020-03

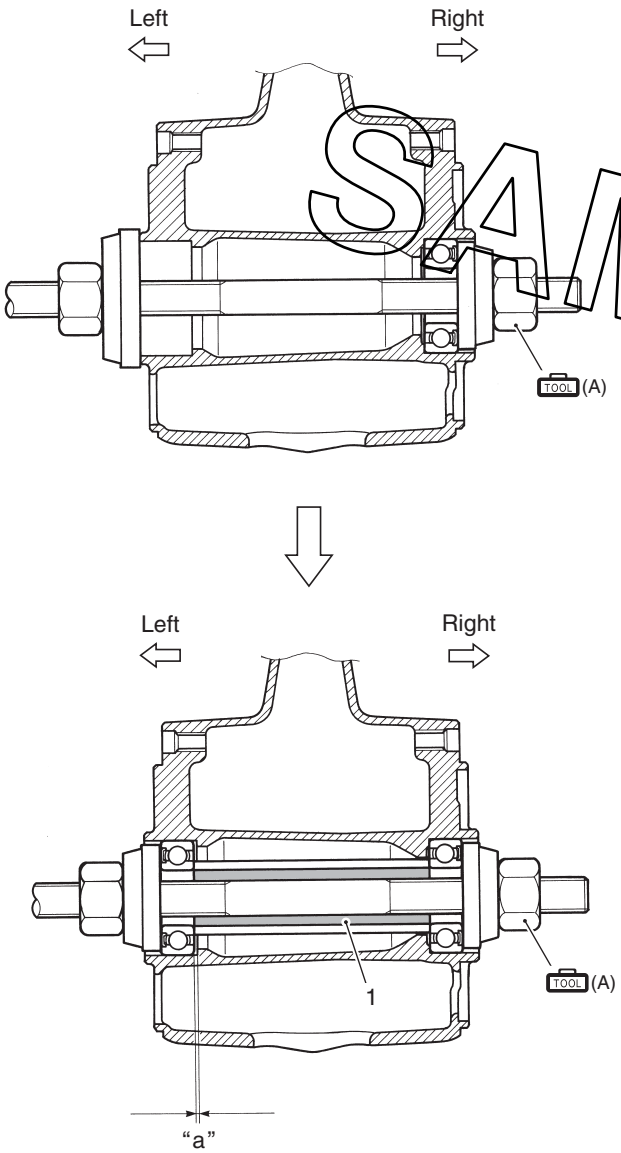

I823H1240058-02

1. Spacer	"a": Clearance

3) Install the dust seals with the special tool.

Special tool
TOOL (B): 09913–70210 (Bearing installer set)

I823H1240043-01

4) Apply grease to the lip of dust seals.

A H : Grease 99000–25010 (SUZUKI SUPER GREASE A or equivalent)

I823H1240044-01

5) Install the front wheel assembly. Refer to "Front Wheel Assembly Removal and Installation (Page 2D-4)".

SAMPLE

Rear Wheel Components

B823H12406006

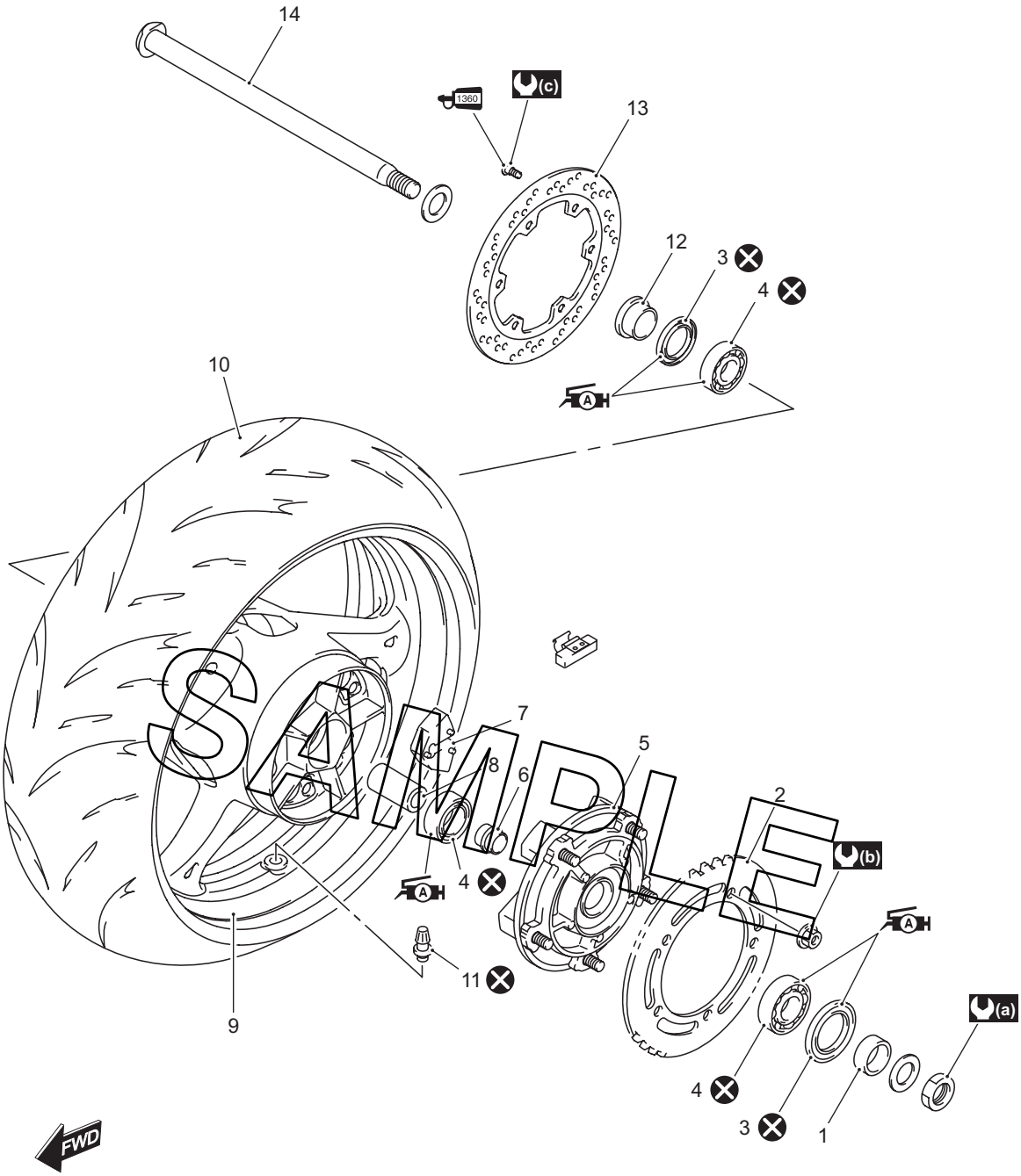

I823H1240062-01

1. Spacer	8. Spacer	(a) : 100 N·m (10.0 kgf-m, 72.5 lb-ft)
2. Rear sprocket	9. Rear wheel	(b) : 60 N·m (6.0 kgf-m, 43.5 lb-ft)
3. Dust seal	10. Tire	(c) : 35 N·m (3.5 kgf-m, 25.5 lb-ft)
4. Bearing	11. Air valve	A : Apply grease.
5. Sprocket mounting drum	12. Collar	1360 : Apply thread lock to the thread part.
6. Retainer	13. Rear brake disc	⊗ : Do not reuse.
7. Wheel damper	14. Rear axle	

Rear Wheel Assembly Construction

B823H12406007

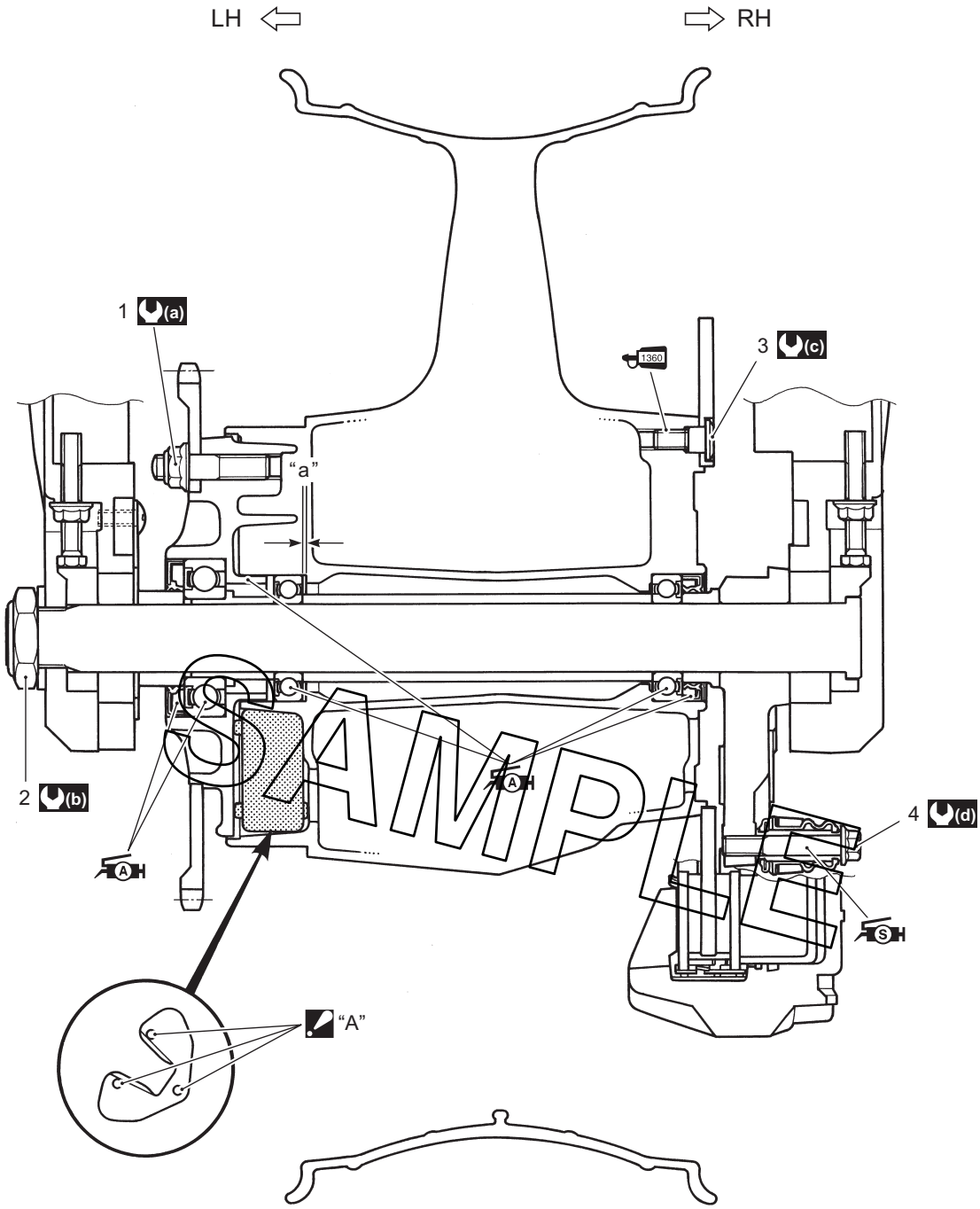

I823H1240063-01

1. Rear sprocket nut	(b) : 100 N·m (10.0 kgf-m, 72.5 lb-ft)
2. Rear axle nut	(c) : 35 N·m (3.5 kgf-m, 25.5 lb-ft)
3. Brake disc bolt	(d) : 33 N·m (3.3 kgf-m, 24.0 lb-ft)
4. Brake caliper mounting bolt	A : Apply grease.
"A": Three protrusions "A" on the damper must face sprocket side.	S : Apply silicone grease.
"a": Clearance	1360 : Apply thread lock to the thread part.
(a) : 60 N·m (6.0 kgf-m, 43.5 lb-ft)	

Rear Wheel Assembly Removal and Installation

B823H12406008

Removal

1) Support the motorcycle with a jack or wooden block.

⚠ CAUTION

Make sure that the motorcycle is supported securely.

2) Remove the rear axle nut (1).

I823H1240045-01

3) Draw out the rear axle and disengage the drive chain from the rear sprocket.
4) Remove the rear wheel assembly.

⚠ CAUTION

Do not operate the rear brake pedal with the rear wheel removed.

I823H1240046-01

5) Remove the spacer (2) and collar (3).

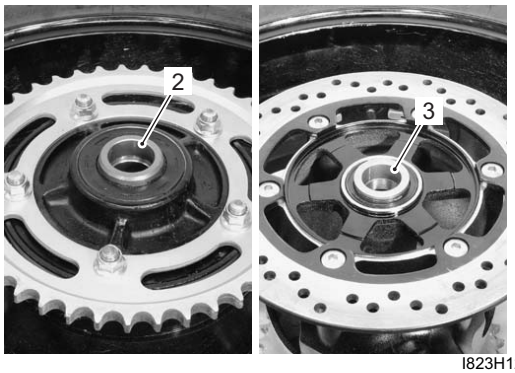

I823H1240047-01

Installation

1) Install the spacer (1) and collar (2).

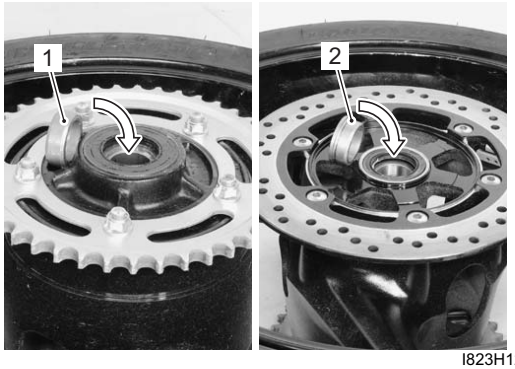

I823H1240048-01

2) Install the rear wheel with the rear axle and tighten the rear axle nut temporarily.
3) Adjust the drive chain slack after installing the rear wheel. Refer to “Drive Chain Inspection and Adjustment in Section 0B (Page 0B-15)”.
4) Tighten the rear axle nut (3) to the specified torque.

Tightening torque
Rear axle nut (a): 100 N·m (10.0 kgf-m, 72.5 lb-ft)

⚠ WARNING

After remounting the rear wheel, pump the brake pedal several times to check for proper brake operation.

I823H1240049-01

SAMPLE

Rear Wheel Related Parts Inspection

B823H12406009

Refer to “Rear Wheel Assembly Removal and Installation (Page 2D-11)”.

Tire

Refer to “Tire Inspection in Section 0B (Page 0B-19)”.

Rear Brake Disc

Refer to “Rear Brake Disc Inspection in Section 4C (Page 4C-7)”.

Wheel Damper

Refer to “Drive Chain Related Parts Inspection in Section 3A (Page 3A-5)”.

Sprocket

Refer to “Drive Chain Related Parts Inspection in Section 3A (Page 3A-5)”.

Dust Seal

Inspect the dust seal lip for wear or damage. If any defects is found, replace the dust seal with a new one. Refer to “Rear Wheel Dust Seal / Bearing Removal and Installation (Page 2D-13)”.

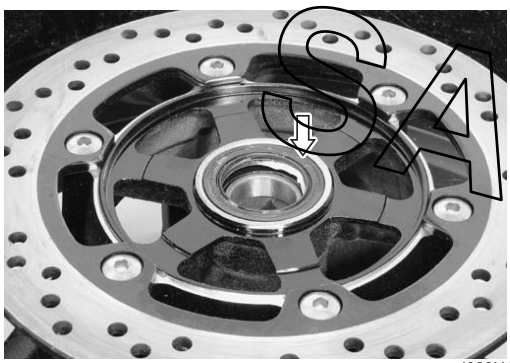

I823H1240050-02

Wheel Axle

Using a dial gauge, check the wheel axle for runout, If the runout exceeds the limit, replace the axle shaft.

Wheel axle runout

Service limit: 0.25 mm (0.010 in)

Special tool

TOOL (A): 09900–20607 (Dial gauge (1/100 mm, 10 mm))

TOOL (B): 09900–20701 (Magnetic stand)

TOOL (C): 09900–21304 (V-block (100 mm))

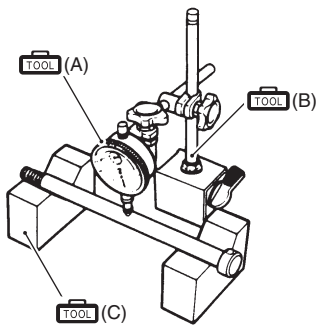

I649G1230034-03

Wheel

1) Remove the brake pads. Refer to “Rear Brake Pad Replacement in Section 4C (Page 4C-2)”.
2) Make sure that the wheel runout checked as shown does not exceed the service limit. An excessive runout is usually due to worn or loosened wheel bearings and can be reduced by replacing the bearings. If bearing replacement fails to reduce the runout, replace the wheel.
3) Install the brake pads. Refer to “Rear Brake Pad Replacement in Section 4C (Page 4C-2)”.

Wheel rim runout

Service limit (Axial and Radial): 2.0 mm (0.08 in)

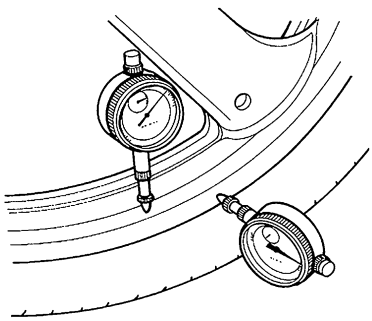

I649G1240014-02

SAMPLE

Bearing

Inspect the play of the wheel bearings by hand while they are in the wheel. Rotate the inner race by hand to inspect for abnormal noise and smooth rotation. Replace the bearing if there is anything unusual. Refer to “Rear Wheel Dust Seal / Bearing Removal and Installation (Page 2D-13)”.

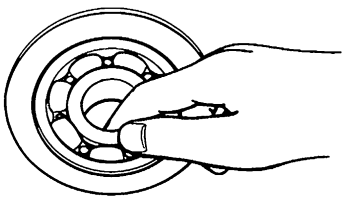

I649G1240015-02

Rear Wheel Dust Seal / Bearing Removal and Installation

B823H12406010

Removal

1) Remove the rear wheel assembly. Refer to “Rear Wheel Assembly Removal and Installation (Page 2D-11)”.
2) Remove the rear sprocket mounting drum assembly (1) from the rear wheel.

I823H1240051-01

3) Remove the dust seal (2).

Special tool
TOOL (A): 09913–50121 (Oil seal remover)

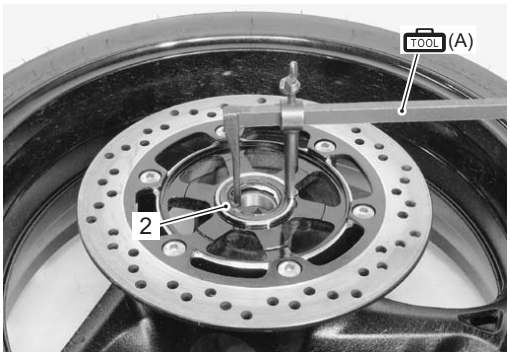

I823H1240052-01

4) Remove the bearings (3) on both sides using the special tool.

Special tool
TOOL (B): 09921–20240 (Bearing remover set)

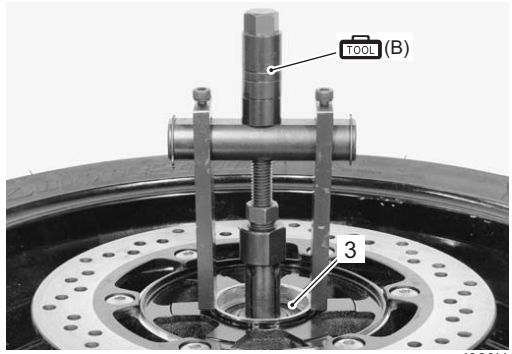

I823H1240053-01

5) Remove the spacer.

Installation

⚠ CAUTION

The removed dust seals and bearings must be replaced with new ones.

1) Apply grease to the wheel bearings.

A : Grease 99000–25010 (SUZUKI SUPER GREASE A or equivalent)

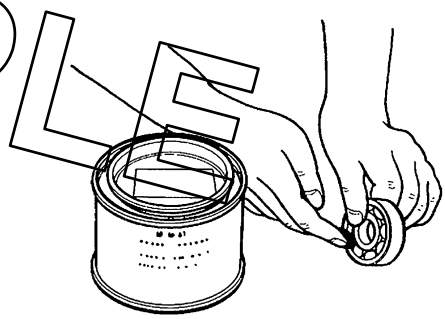

I649G1240019-02

SAMPLE

2) First install the right wheel bearing, then install the spacer (1) and left wheel bearing with the special tools.

Special tool
TOOL (A): 09941–34513 (Steering race installer)
TOOL (B): 09924–84510 (Bearing installer set)

⚠ CAUTION

The sealed cover of the bearing must face outside.

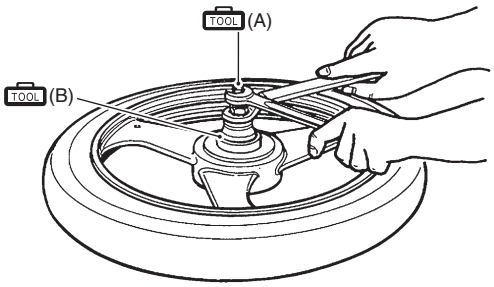

I649G1240030-02

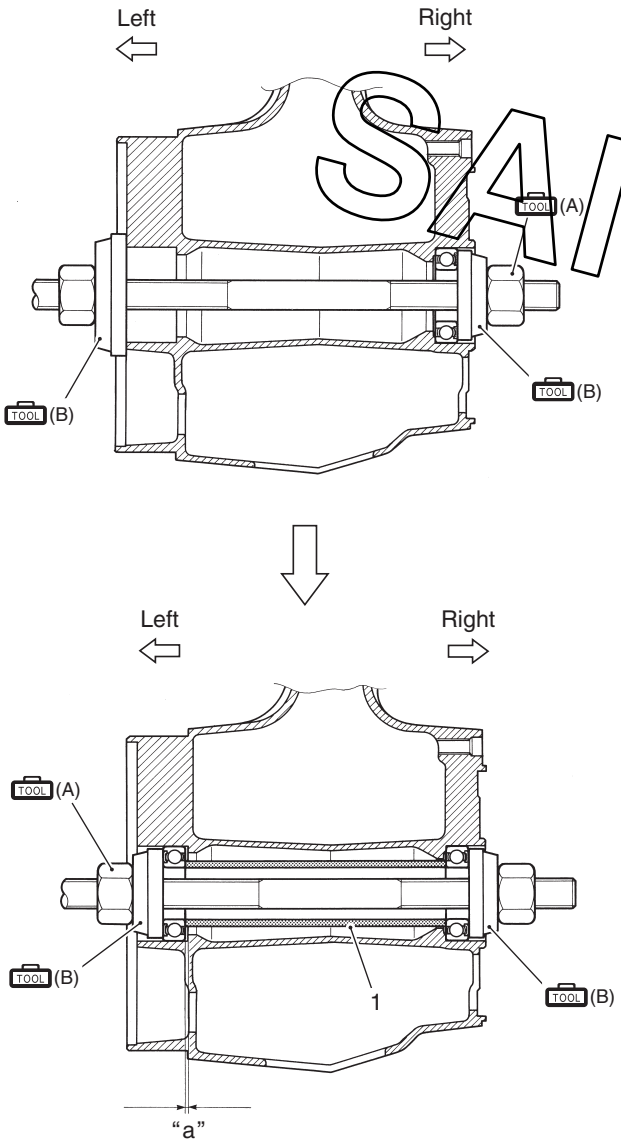

I823H1240059-02

1. Spacer	"a": Clearance

3) Install a new dust seal with the special tool.

Special tool
TOOL (C): 09913–70210 (Bearing installer set)

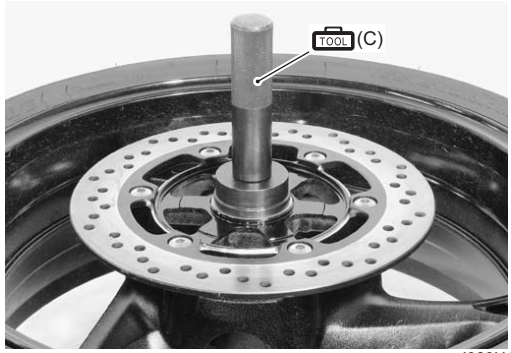

I823H1240054-01

4) Apply grease to the dust seal lip.

A: Grease 99000–25010 (SUSUKI SUPER GREASE A or equivalent)

I823H1240055-01

5) Install the rear sprocket mounting drum assembly.

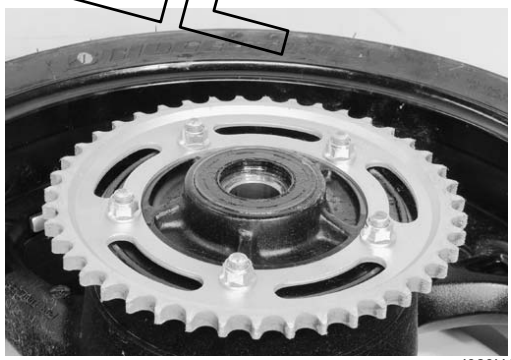

I823H1240056-01

6) Install the rear wheel assembly. Refer to "Rear Wheel Assembly Removal and Installation (Page 2D-11)".

SAMPLE

Tire Removal and Installation

B823H12406011

Removal

The most critical factor of a tubeless tire is the seal between the wheel rim and the tire bead. For this reason, it is recommended to use a tire changer that can satisfy this sealing requirement and can make the operation efficient as well as functional.

1) Removal the wheel assembly. Refer to “Front Wheel Assembly Removal and Installation (Page 2D-4)” and “Rear Wheel Assembly Removal and Installation (Page 2D-11)”.
2) Remove the mounting drum from the rear wheel. (For rear wheel) Refer to “Rear Wheel Assembly Removal and Installation (Page 2D-11)”.
3) Remove the valve core.
4) Remove the tire using the tire changer.

⚠ CAUTION

For operating procedures, refer to the instructions supplied by the tire changer manufacturer.

NOTE

When removing the tire in case of repair or inspection, mark the tire with a chalk to indicate the tire position relative to the valve position. Even though the tire is refitted to the original position after repairing puncture, the tire may have to be balanced again since such a repair can cause imbalance.

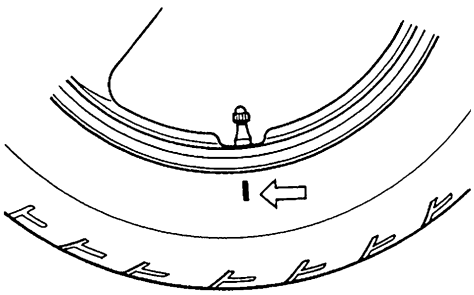

I649G1240037-02

Installation

⚠ CAUTION

Do not reuse the valve which has been once removed.

1) Apply tire lubricant to the tire bead.

⚠ CAUTION

Never use oil, grease or gasoline on the tire bead in place of tire lubricant.

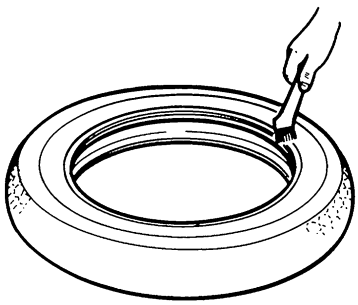

I649G1240038-02

2) Install the tire onto the wheel.

⚠ CAUTION

For installation procedure of tire onto the wheel, follow the instructions given by the tire changer manufacturer.

NOTE

- **When installing the tire, the arrow “A” on the side wall should point to the direction of wheel rotation.**
- **Align the chalk mark put on the tire at the time of removal with the valve position.**

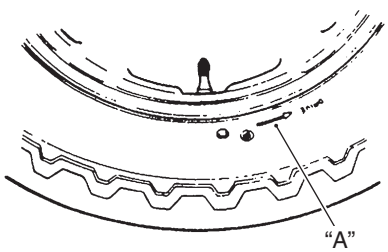

I649G1240039-02

SAMPLE

3) Bounce the tire several times while rotating. This makes the tire bead expand outward to contact the wheel, thereby facilitating air inflation.
4) Install the valve core and inflate the tire.

⚠ WARNING

- **Do not inflate the tire to more than 400 kPa (4.0 kgf/cm², 57 psi). If inflated beyond this limit, the tire can burst and possibly cause injury. Do not stand directly over the tire while inflating.**
- **In the case of preset pressure air inflator, pay special care for the set pressure adjustment.**

5) In this condition, check the “grim line” “B” cast on the tire side walls. The line must be equidistant from the wheel rim all around.
6) If the distance between the rim line and wheel rim varies, this indicates that the bead is not properly seated. If this is the case, deflate the tire completely and unseat the bead for both sides. Coat the bead with lubricant and fit the tire again.

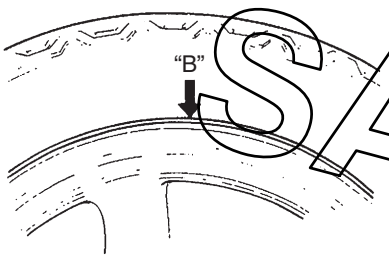

I649G1240040-02

7) When the bead has been fitted properly, adjust the pressure to specification.
8) As necessary, adjust the tire balance. Refer to “Wheel Balance Check and Adjustment (Page 2D-18)”.

Cold inflation tire pressure

	Front	Rear
Solo riding	**250 kPa (2.50 kgf/cm², 36 psi)**	**290 kPa (2.90 kgf/cm², 42 psi)**
Dual riding	**250 kPa (2.50 kgf/cm², 36 psi)**	**290 kPa (2.90 kgf/cm², 42 psi)**

9) Install the mounting drum to the rear wheel. (For rear wheel) Refer to “Rear Wheel Assembly Removal and Installation (Page 2D-11)”.
10) Install the wheel assembly. Refer to “Front Wheel Assembly Removal and Installation (Page 2D-4)” and “Rear Wheel Assembly Removal and Installation (Page 2D-11)”.

Wheel / Tire / Air Valve Inspection and Cleaning

B823H12406012

Refer to “Tire Removal and Installation (Page 2D-15)”.

Wheel

Wipe the wheel clean and check for the following points:

- Distortion and crack
- Any flaws and scratches at the bead seating area.
- Wheel rim runout. Refer to “Front Wheel Related Parts Inspection (Page 2D-6)” and “Rear Wheel Related Parts Inspection (Page 2D-12)”.

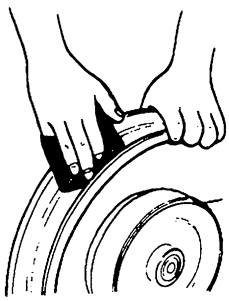

I649G1240041-02

Tire

Tire must be checked for the following points:

- Nick and rupture on side wall
- Tire tread depth (Refer to “Tire Inspection in Section 0B (Page 0B-19)”.)
- Tread separation
- Abnormal, uneven wear on tread
- Surface damage on bead
- Localized tread wear due to skidding (Flat spot)
- Abnormal condition of inner liner

SAMPLE

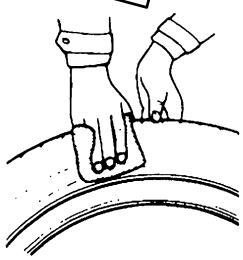

I649G1240042-02

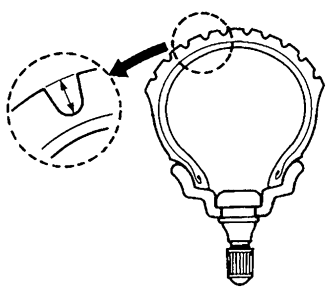

I649G1240043-02

Air Valve

Inspect the air valve for peeling and damage. If any defect is found, replace the air valve with a new one. Refer to “Air Valve Removal and Installation (Page 2D-17)”.

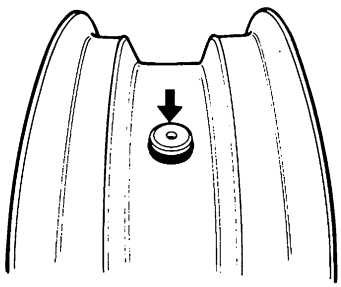

I649G1240044-02

Inspect the valve core seal (1) for wear and damage. If any defect is found, replace the valve core with a new one. Refer to “Air Valve Removal and Installation (Page 2D-17)”.

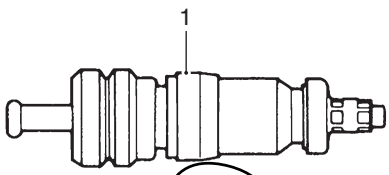

I649G1240045-02

1. Seal

Air Valve Removal and Installation

B823H1240601B

Removal

1) Remove the wheel assembly. Refer to “Front Wheel Assembly Removal and Installation (Page 2D-4)” and “Rear Wheel Assembly Removal and Installation (Page 2D-11)”.
2) Remove the tire. Refer to “Tire Removal and Installation (Page 2D-15)”.
3) Remove the air valve (1) from the wheel.

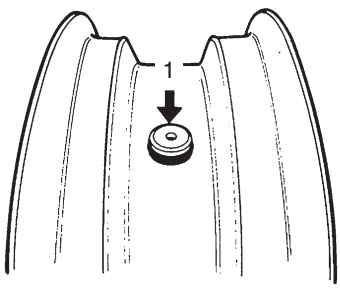

I649G1240046-02

Installation

Install the air valve in the reverse order of removal. Pay attention to the following points:

- Any dust or rust around the valve hole (1) must be cleaned off.

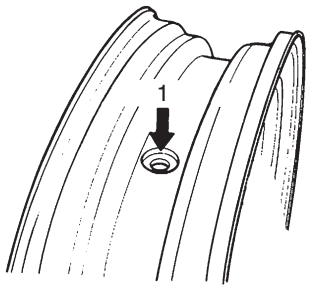

I718H1240054-01

- Install the air valve (2) in the wheel (3).

⚠ CAUTION

- **Be careful not to damage the lip (4) of the valve.**
- **Replace the air valve with a new one.**

NOTE

To properly install the valve into the valve hole, apply a special tire lubricant or neutral soapy liquid to the valve.

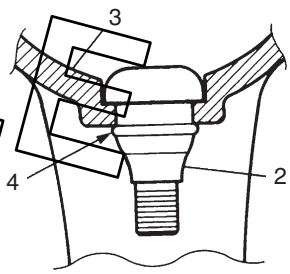

I718H1240055-01

SAMPLE

Wheel Balance Check and Adjustment

B823H12406014

Check and adjust the wheel balance in the following procedures:

1) Removal the wheel assembly. Refer to “Front Wheel Assembly Removal and Installation (Page 2D-4)” and “Rear Wheel Assembly Removal and Installation (Page 2D-11)”.
2) Remove the mounting drum from the rear wheel. (For rear wheel) Refer to “Rear Wheel Assembly Removal and Installation (Page 2D-11)”.
3) Check the wheel balance using the balancer and adjust the wheel balance if necessary.

⚠ CAUTION

For operating procedures, refer to the instructions supplied by the wheel balancer manufacturer.

4) When installing the balancer weight to the wheel, set the balancer weight on center rib of the wheel.

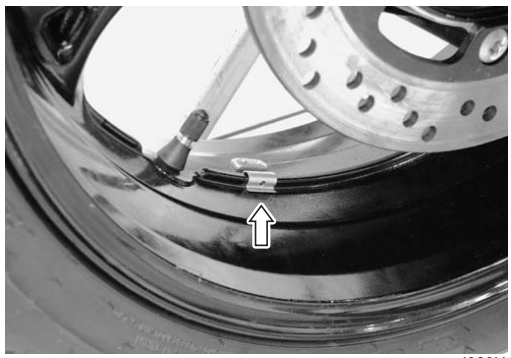

I823H1240057-01

5) Recheck the wheel balance.
6) Install the mounting drum to the rear wheel. (For rear wheel) Refer to “Rear Wheel Assembly Removal and Installation (Page 2D-11)”.
7) Install the wheel assembly. Refer to “Front Wheel Assembly Removal and Installation (Page 2D-4)” and “Rear Wheel Assembly Removal and Installation (Page 2D-11)”.

SAMPLE

Specifications

Service Data

B823H12407001

Wheel

Unit: mm (in)

Item	Standard		Limit
Wheel rim runout	Axial	—	2.0 (0.08)
	Radial		
Wheel rim size	Front	17 M/C x MT 3.50	—
	Rear	17 M/C x MT 6.00	—
Wheel axle runout	Front	—	0.25 (0.010)
	Rear		

Tire

Item	Standard		Limit
Cold inflation tire pressure (Solo riding)	Front	250 kPa (2.50 kgf/cm^2, 36 psi)	—
	Rear	290 kPa (2.90 kgf/cm^2, 42 psi)	—
Cold inflation tire pressure (Dual riding)	Front	250 kPa (2.50 kgf/cm^2, 36 psi)	—
	Rear	290 kPa (2.90 kgf/cm^2, 42 psi)	—
Tire size	Front	120/70 ZR17 M/C (58 W)	—
	Rear	200/50 ZR17 M/C (75 W)	—
Tire type	Front	DUNLOP: Qualifier MT	—
	Rear	DUNLOP: Qualifier NK	—
Tire tread depth (Recommended depth)	Front	—	1.6 mm (0.06 in)
	Rear	—	2.0 mm (0.08 in)

Tightening Torque Specifications

B823H12407002

Fastening part	Tightening torque			Note
	N·m	kgf·m	lb-ft	
Front brake caliper mounting bolt	39	3.9	28.0	☞(Page 2D-5)
Front axle bolt	100	10.0	72.5	☞(Page 2D-5)
Front axle pinch bolt	23	2.3	16.5	☞(Page 2D-5) / ☞(Page 2D-5)
Rear axle nut	100	10.0	72.5	☞(Page 2D-11)

NOTE

The specified tightening torque is also described in the following.
“Front Wheel Components (Page 2D-2)”
“Front Wheel Assembly Construction (Page 2D-3)”
“Rear Wheel Components (Page 2D-9)”
“Rear Wheel Assembly Construction (Page 2D-10)”

Reference:
For the tightening torque of fastener not specified in this section, refer to “Tightening Torque List in Section 0C (Page 0C-9)”.

SAMPLE

Special Tools and Equipment

Recommended Service Material

B823H12408001

Material	SUZUKI recommended product or Specification		Note
Grease	SUZUKI SUPER GREASE A or equivalent	P/No.: 99000–25010	☞(Page 2D-7) / ☞(Page 2D-8) / ☞(Page 2D-13) / ☞(Page 2D-14)

NOTE

Required service material is also described in the following.
“Front Wheel Components (Page 2D-2)”
“Front Wheel Assembly Construction (Page 2D-3)”
“Rear Wheel Components (Page 2D-9)”
“Rear Wheel Assembly Construction (Page 2D-10)”

Special Tool

B823H12408002

09900–18740 Hexagon socket (24 mm) ☞(Page 2D-5) 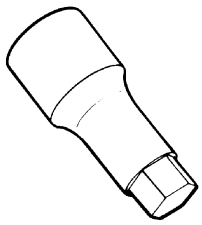	09900–20607 Dial gauge (1/100 mm, 10 mm) ☞(Page 2D-6) / ☞(Page 2D-12) 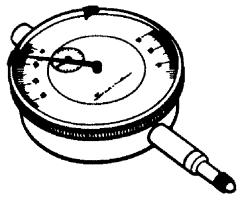
09900–20701 Magnetic stand ☞(Page 2D-6) / ☞(Page 2D-12) 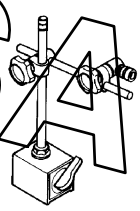	09900–21304 V-block (100 mm) ☞(Page 2D-6) / ☞(Page 2D-12) 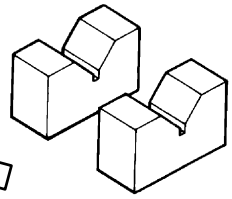
09913–50121 Oil seal remover ☞(Page 2D-7) / ☞(Page 2D-13) 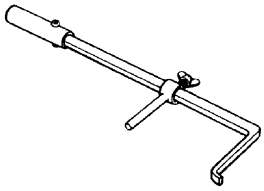	09913–70210 Bearing installer set ☞(Page 2D-8) / ☞(Page 2D-14) 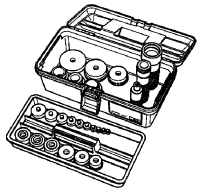
09921–20240 Bearing remover set ☞(Page 2D-7) / ☞(Page 2D-13) 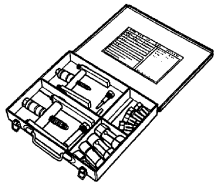	09924–84510 Bearing installer set ☞(Page 2D-8) / ☞(Page 2D-14) 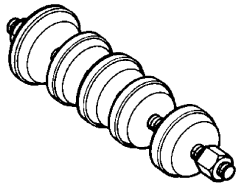
09941–34513 Steering race installer ☞(Page 2D-14) 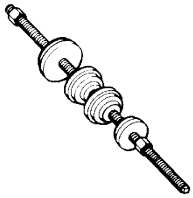	

SAMPLE

Section 3

Driveline / Axle

CONTENTS

Precautions 3-1
Precautions 3-1
Precautions for Driveline / Axle 3-1

Drive Chain / Drive Train / Drive Shaft ... 3A-1
Diagnostic Information and Procedures 3A-1
Drive Chain and Sprocket Symptom Diagnosis 3A-1
Repair Instructions 3A-1
Drive Chain Related Components 3A-1
Engine Sprocket Removal and Installation 3A-2
Rear Sprocket / Rear Sprocket Mounting Drum Removal and Installation 3A-4
Drive Chain Related Parts Inspection 3A-5
Sprocket Mounting Drum Dust Seal / Bearing Removal and Installation 3A-5
Drive Chain Replacement 3A-7
Specifications 3A-11
Service Data 3A-11
Tightening Torque Specifications 3A-11
Special Tools and Equipment 3A-11
Recommended Service Material 3A-11
Special Tool 3A-12

SAMPLE

Precautions

Precautions

Precautions for Driveline / Axle

B823H13000001

Refer to “General Precautions in Section 00 (Page 00-1)”.

⚠ WARNING

Never inspect or adjust the drive chain while the engine is running.

⚠ CAUTION

- **Do not use trichloroethylene, gasoline or such similar solvent. These fluids will damage the O-rings of the drive chain.**
- **Clean the drive chain with a spray-type chain cleaner and blow dry with compressed air. If the drive chain cannot be cleaned with a spray cleaner, it may be necessary to use a kerosine. Always follow the chemical manufacturer’s instructions on proper use, handling and storage.**
- **Lubricate the drive chain with a heavy weight motor oil. Wipe off any excess oil or chain lubricant. Do not use any oil sold commercially as “drive chain oil”. Such oil can damage the O-rings.**
- **The standard drive chain is RK GB50GSVZ4. Suzuki recommends to use this standard drive chain as a replacement.**

SAMPLE

Drive Chain / Drive Train / Drive Shaft

Diagnostic Information and Procedures

Drive Chain and Sprocket Symptom Diagnosis

B823H13104001

Condition	Possible cause	Correction / Reference Item
Noisy Drive Chain	Worn sprocket.	*Replace.*
	Worn drive chain.	*Replace.*
	Stretched drive chain.	*Replace.*
	Too large drive chain slack.	*Adjust.*
	Drive chain out of adjustment.	*Adjust.*

Repair Instructions

Drive Chain Related Components

B823H13106001

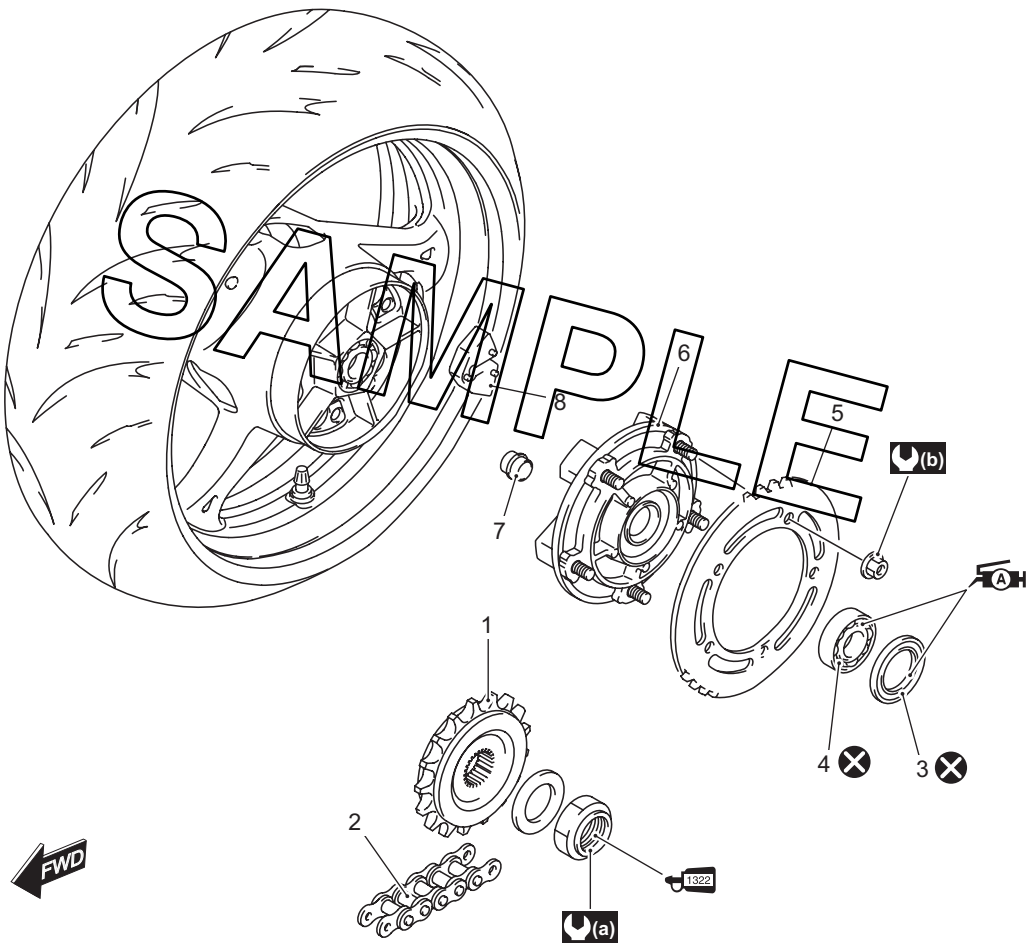

I823H1310025-01

1. Engine sprocket	5. Rear sprocket	(a) : 145 N·m (14.5 kgf-m, 105.0 lb-ft)
2. Drive chain	6. Sprocket mounting drum	(b) : 60 N·m (6.0 kgf-m, 43.5 lb-ft)
3. Dust seal	7. Retainer	A : Apply grease.
4. Bearing	8. Wheel damper	1322 : Apply thread lock to the thread part.

Engine Sprocket Removal and Installation

B823H13106002

Removal

1) Support the motorcycle with a jack or wooden block.
2) Remove the engine sprocket outer cover (1).

I823H1310001-01

3) Remove the gearshift link arm (2) by removing the bolt.

NOTE

Mark the gearshift shaft head at which the gearshift link arm slit set for correct reinstallation.

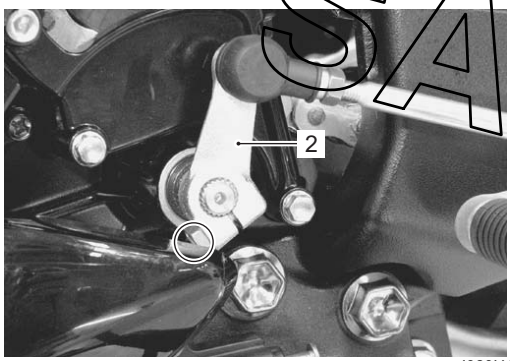

I823H1310002-01

4) Remove the speed sensor (3).
5) Remove the engine sprocket inner cover (4) along with the clutch release cylinder.

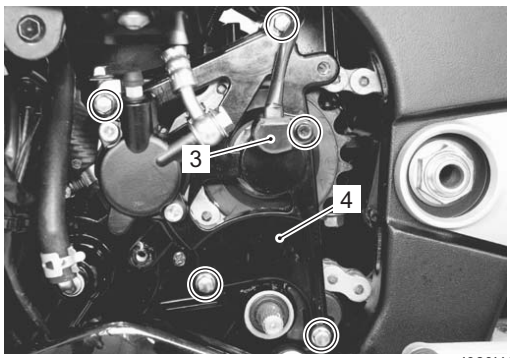

I823H1310003-01

6) Remove the speed sensor rotor (5) by removing its bolt while depressing the rear brake pedal.

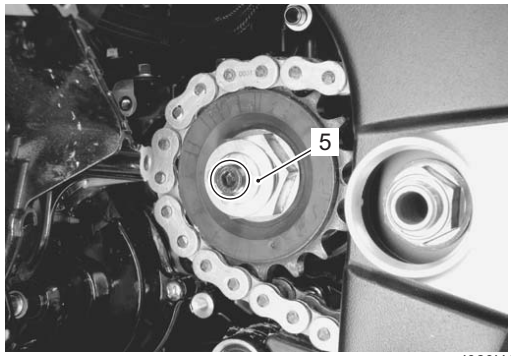

I823H1310004-02

7) Remove the engine sprocket nut (6) while depressing the rear brake pedal.
8) Remove the washer (7).

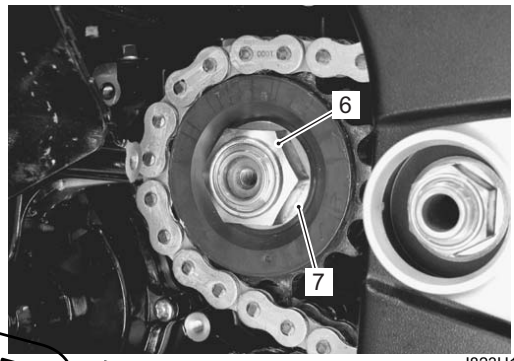

I823H1310005-02

9) Loosen the rear axle nut (8).
10) Loosen the chain adjusters (9) to provide additional chain slack.

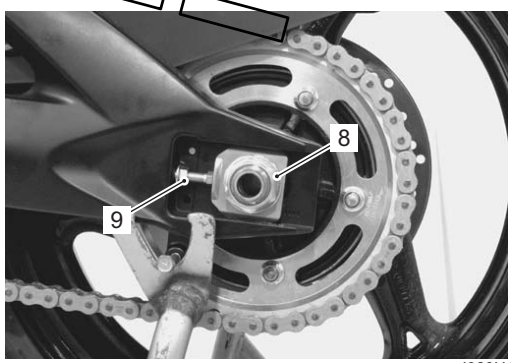

I823H1310006-01

11) Remove the engine sprocket (10).

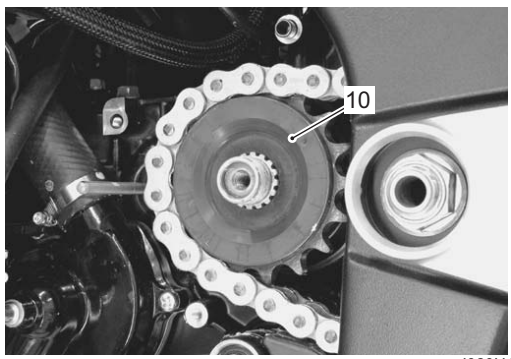

I823H1310007-01

SAMPLE

Installation

Install the engine sprocket in the reverse order of removal. Pay attention to the following points:

- Apply thread lock to the driveshaft.

  1322 : Thread lock cement 99000–32110 (THREAD LOCK CEMENT SUPER 1322 or equivalent)

- Tighten the engine sprocket nut (1) to the specified torque.

  Tightening torque
  Engine sprocket nut (a): 145 N·m (14.5 kgf-m, 105.0 lb-ft)

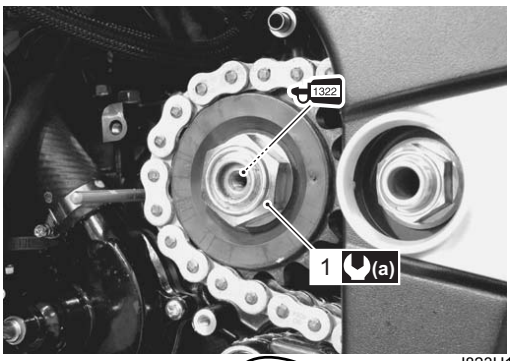

I823H1310008-01

- Tighten the speed sensor rotor bolt (2) to the specified torque.

  Tightening torque
  Speed sensor rotor bolt (b): 28 N·m (2.8 kgf-m, 20.0 lb-ft)

- Before installing the engine sprocket inner cover, apply a small quantity of grease to the clutch push rod.

  A : Grease 99000–25010 (SUZUKI SUPER GREASE A or equivalent)

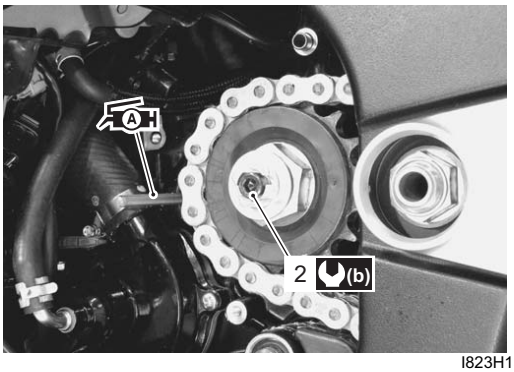

I823H1310009-01

- Install the engine sprocket inner cover (3).
- Tighten the speed sensor mounting bolt (4) to the specified torque.

  Tightening torque
  Speed sensor bolt (c): 6.5 N·m (0.65 kgf-m, 4.7 lb-ft)

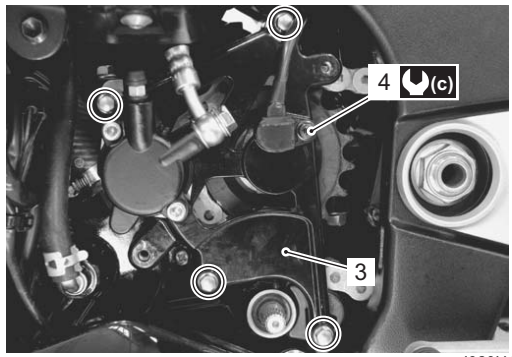

I823H1310010-01

- Fit the gearshift link arm to the gearshift shaft so that the gearshift lever is located at height “a” above the footrest.

  Gearshift lever height “a”
  Standard: 55 – 65 mm (2.2 – 2.6 in)

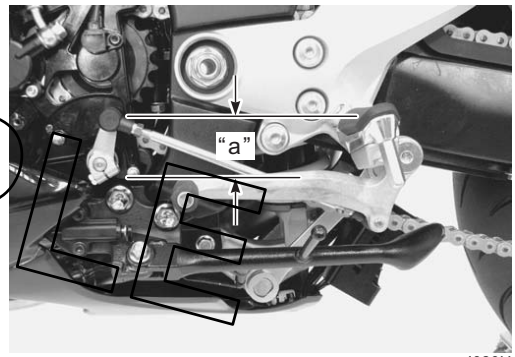

I823H1310011-01

- Adjust the drive chain slack. Refer to “Drive Chain Inspection and Adjustment in Section 0B (Page 0B-15)”.

SAMPLE

Rear Sprocket / Rear Sprocket Mounting Drum Removal and Installation

B823H13106003

Removal

1) Remove the rear wheel assembly by disengaging the drive chain. Refer to “Rear Wheel Assembly Removal and Installation in Section 2D (Page 2D-11)”.
2) Draw out the rear sprocket mounting drum (2) along with the rear sprocket (1) from the wheel hub.
3) Remove the rear sprocket nuts and separate the rear sprocket (1) from its mounting drum (2).

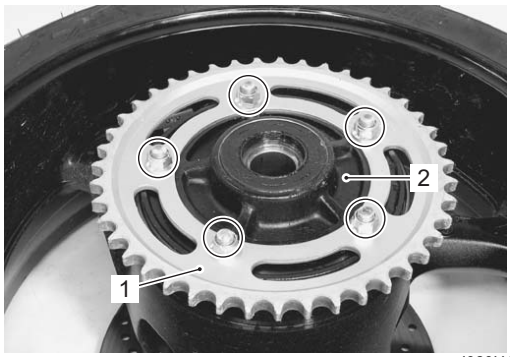

I823H1310012-01

4) Remove the retainer (3).

I823H1310013-01

5) Remove the wheel dampers (4).

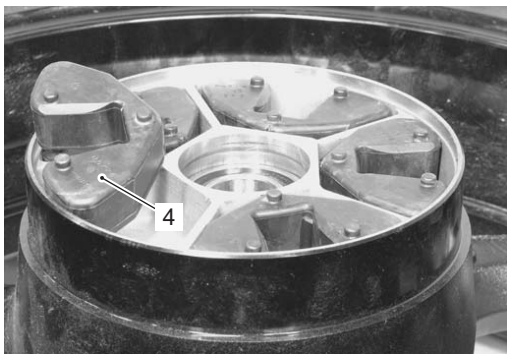

I823H1310014-01

Installation

Install the rear sprocket and rear sprocket mounting drum in the reverse order of removal. Pay attention to the following points:

- Apply grease to the contacting surface between the rear wheel hub and rear sprocket mounting drum.

  : Grease 99000–25010 (SUZUKI SUPER GREASE A or equivalent)

- Apply a special tire lubricant or neutral soapy liquid to the wheel damper surface.

⚠ CAUTION

- **Never use oil, grease or gasoline on the wheel damper in place of the tire lubricant.**
- **Three protrusions on the wheel damper must face outside.**

I823H1310015-01

- Tighten the rear sprocket nuts to the specified torque.

Tightening torque
Rear sprocket nut (a): 60 N·m (6.0 kgf-m, 43.5 lb-ft)

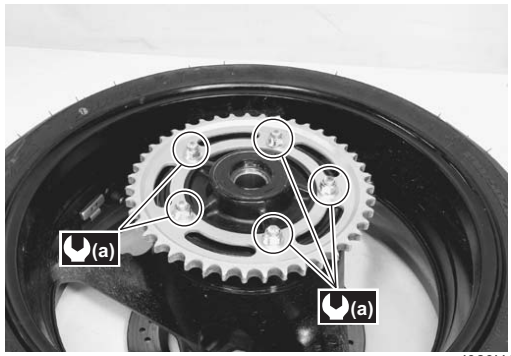

I823H1310016-01

- Install the rear wheel assembly. Refer to “Rear Wheel Assembly Removal and Installation in Section 2D (Page 2D-11)”.

SAMPLE

Drive Chain Related Parts Inspection

B823H13106004

Refer to “Rear Sprocket / Rear Sprocket Mounting Drum Removal and Installation (Page 3A-4)”.

Dust Seal

Inspect the dust seal for wear or damage. If any damage is found, replace the dust seal with a new one.

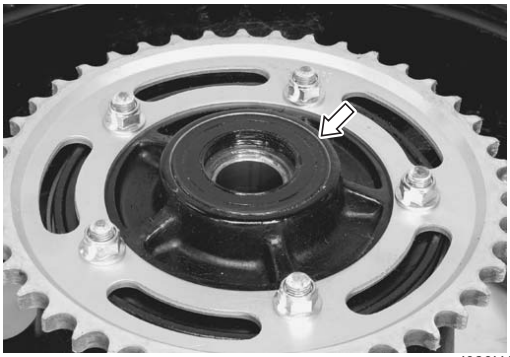

I823H1310017-01

Bearing

Inspect the play of the sprocket mounting drum bearing by hand while it is in the drum. Rotate the inner race by hand to inspect for abnormal noise and smooth rotation. Replace the bearing if there is anything unusual.

I649G1310015-02

Engine Sprocket and Rear Sprocket

Inspect the sprocket teeth for wear. If they are worn as shown, replace the engine sprocket, rear sprocket and drive chain as a set.

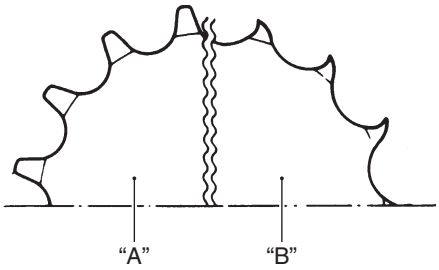

I649G1310016-02

“A”: Normal wear	“B”: Excessive wear

Wheel Damper

Inspect the dampers for wear and damage. Replace the damper if there is anything unusual.

I823H1310018-01

Drive Chain

Refer to “Drive Chain Inspection and Adjustment in Section 0B (Page 0B-15)”.

Sprocket Mounting Drum Dust Seal / Bearing Removal and Installation

B823H13106005

Removal

1) Remove the rear sprocket mounting drum assembly from the rear wheel hub. Refer to “Rear Sprocket / Rear Sprocket Mounting Drum Removal and Installation (Page 3A-4)”.
2) Remove the retainer (1).

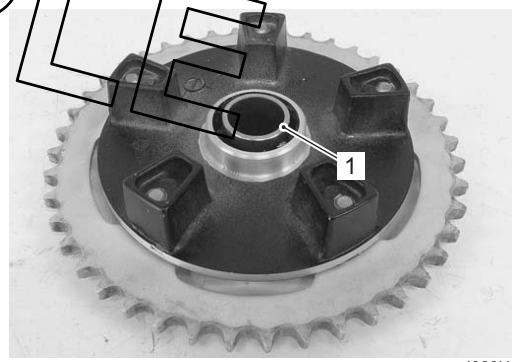

I823H1310019-01

3) Remove the sprocket mounting drum dust seal (2) using the special tool.

Special tool

TOOL (A): 09913–50121 (Oil seal remover)

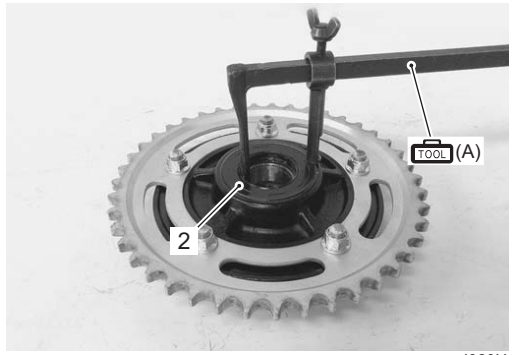

I823H1310020-01

SAMPLE

4) Remove the sprocket mounting drum bearing using the special tool.

Special tool
TOOL (B): 09921–20240 (Bearing remover set)

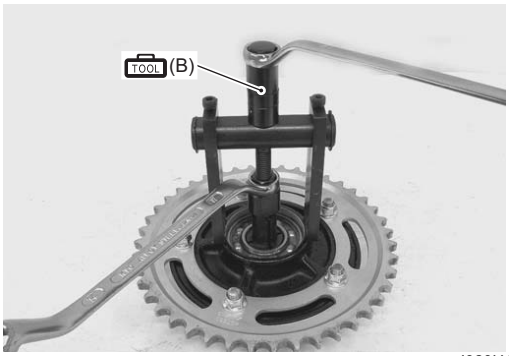

I823H1310021-01

Installation

⚠ CAUTION

The removed dust seal and bearing must be replaced with new ones.

1) Apply grease to the bearing before installing.

A: Grease 99000–25010 (SUZUKI SUPER GREASE A or equivalent)

I649G1310020-02

2) Install the bearing (1) and dust seal (2) to the sprocket mounting drum using the special tools.

⚠ CAUTION

The sealed cover of the bearing must face wheel hub side.

Special tool
TOOL (A): 09924–84510 (Bearing installer set)
TOOL (B): 09913–70210 (Bearing installer set)

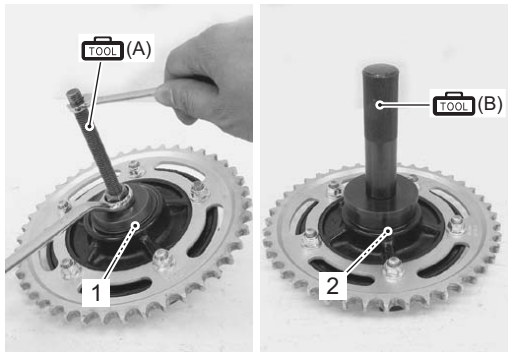

I823H1310022-03

3) Apply grease to the dust seal lip.
4) Apply grease to the retainer before installing the rear sprocket mounting drum.

A: Grease 99000–25010 (SUZUKI SUPER GREASE A or equivalent)

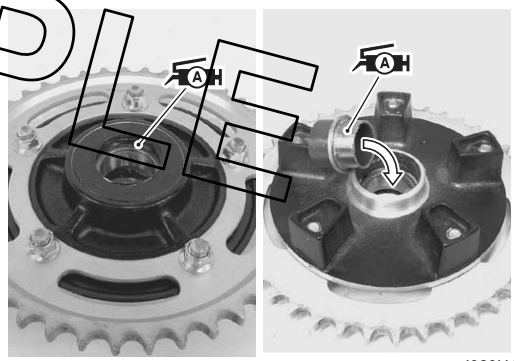

I823H1310023-02

SAMPLE

5) Install the rear sprocket mounting drum assembly to rear wheel hub. Refer to “Rear Sprocket / Rear Sprocket Mounting Drum Removal and Installation (Page 3A-4)”.
6) Install the rear wheel assembly. Refer to “Rear Wheel Assembly Removal and Installation in Section 2D (Page 2D-11)”.

Drive Chain Replacement

B823H13106006

Use the special tool in the following procedures, to cut and rejoin the drive chain.

NOTE

When using the special tool, apply a small quantity of grease to the threaded parts of the special tool.

Special tool

TOOL : 09922–22711 (Drive chain cutting and joining tool)

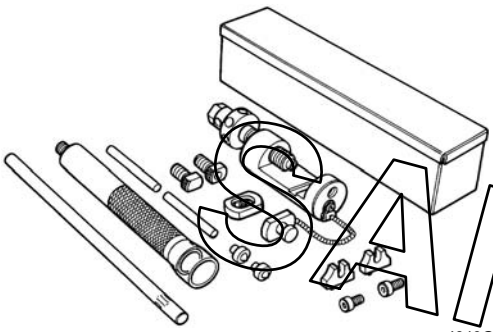

I649G1310023-02

Drive Chain Cutting

1) Set up the special tool as shown in the figure.

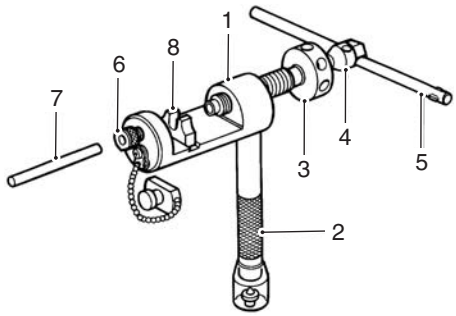

I649G1310024-02

1.	Tool body
2.	Grip handle
3.	Pressure bolt [A]
4.	Pressure bolt [B]
5.	Bar
6.	Adjuster bolt (With through hole)
7.	Pin remover
8.	Chain holder (Engraved mark 500) with reamer bolt M5 x 10

NOTE

The tip of pin remover (1) should be positioned inside “a” approximately 5 mm (0.2 in) from the end face of pressure bolt [A] (2) as shown in the figure.

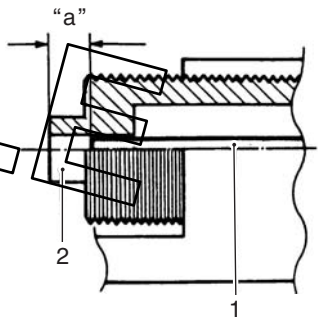

I649G1310025-02

“a”: 5 mm (0.2 in)

SAMPLE

2) Place the drive chain link being disjointed on the holder part (8) of the tool.
3) Turn in both the adjuster bolt (6) and pressure bolt [A] (3) so that each of their end hole fits over the chain joint pin properly.
4) Tighten the pressure bolt [A] (3) with the bar.

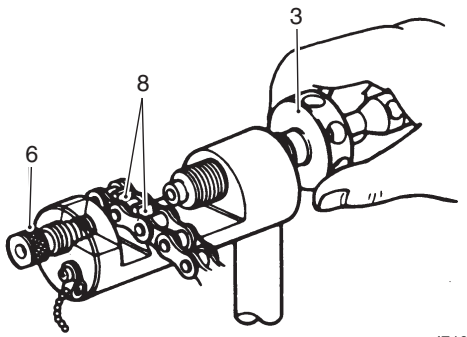

I718H1310032-01

5) Turn in the pressure bolt [B] (4) with the bar (5) and force out the drive chain joint pin (9).

⚠ CAUTION

Continue turning in the pressure bolt [B] (4) until the joint pin should been completely pushed out of the chain.

NOTE

After the joint pin (9) is removed, loosen the pressure bolt [B] (4) and then pressure bolt [A] (3).

6) Remove the joint pin (9) of the other side of joint plate.

⚠ CAUTION

Never reuse joint pins, O-rings and plates.

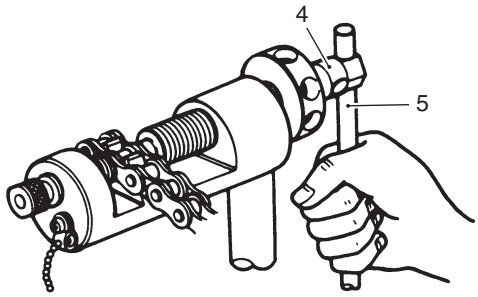

I649G1310027-02

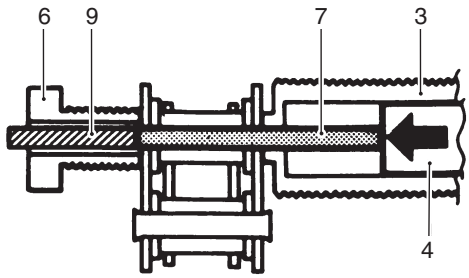

I649G1310028-02

Drive Chain Connecting

⚠ WARNING

Do not use joint clip type of drive chain. The joint clip may have a chance to drop which may cause severe damage to motorcycle and severe injury.

Joint plate installation

1) Set up the special tool as shown in the figure.

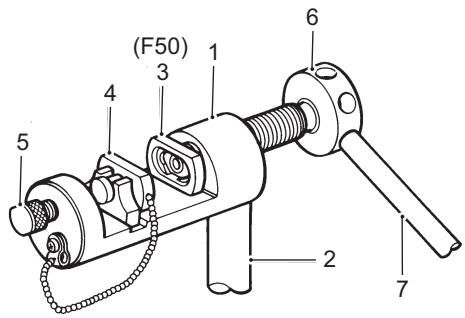

I823H1310024-01

1.	Tool body
2.	Grip handle
3.	Joint plate holder (Engraved mark “F50”)
4.	Wedge holder & wedge pin
5.	Adjuster bolt (Without hole)
6.	Pressure bolt [A]
7.	Bar

SAMPLE

2) Apply grease to the joint pins (8), O-rings (9) and plates (10).

⚠ CAUTION

Replace the joint pins (8), O-rings (9) and plates (10) with new ones.

3) Connect both ends of the drive chain with the joint pin (8) inserted from the wheel side “A” as installed on the motorcycle.

Joint set part number
RK: 27620 – 24F60

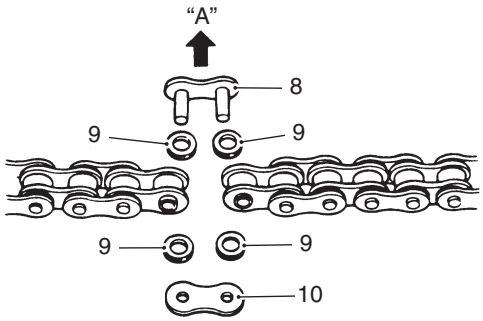

I649G1310030-02

4) Apply grease on the recessed portion of the joint plate holder (3) and set the joint plate (10).

NOTE

When positioning the joint plate (10) on the tool, its stamp mark must face the joint plate holder (3) side.

5) Set the drive chain on the tool as illustrated and turn in the adjuster bolt (5) to secure the wedge holder and wedge pin (4).

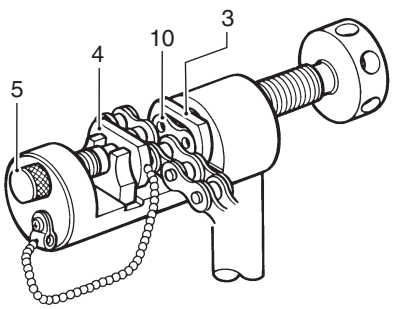

I649G1310031-02

6) Turn in the pressure bolt [A] (6) and align two joint pins (11) properly with the respective holes of the joint plate (10).

7) Turn in the pressure bolt [A] (6) further using the bar (7) to press the joint plate over the joint pins.

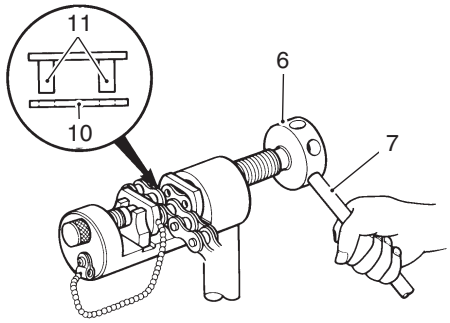

I649G1310032-02

8) Continue pressing the joint plate until the distance between the two joint plates comes to the specification.

Joint plate distance specification “a”
22.25 – 22.55 mm (0.876 – 0.888 in)

⚠ CAUTION

If pressing of the joint plate makes the dimension out of specification excessively, the work must be carried out again by using new joint parts.

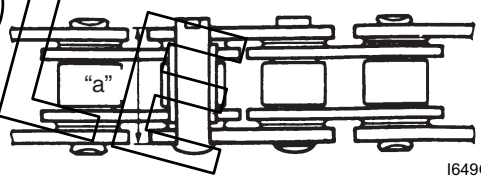

I649G1310033-03

SAMPLE

Joint pin staking

1) Set up the special tool as shown in the figure.

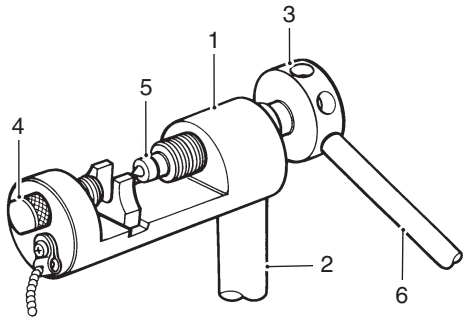

I649G1310034-02

1.	Tool body
2.	Grip handle
3.	Pressure bolt [A]
4.	Adjuster bolt (Without hole)
5.	Staking pin (Stowed inside grip handle behind rubber cap)
6.	Bar

NOTE

Before staking the joint pin, apply a small quantity of grease to the staking pin (5).

2) Stake the joint pin by turning (approximately 7/8 turn) the pressure bolt [A] (3) with the bar until the pin end diameter becomes the specified dimension.

⚠ CAUTION

- **After joining of the chain has been completed, check to make sure that the link is smooth and no abnormal condition is found.**
- **Should any abnormal condition be found, reassemble the chain link using the new joint parts.**

Pin end diameter specification "a"
RK: 5.55 – 5.95 mm (0.219 – 0.234 in)

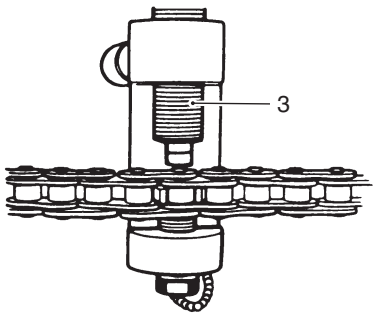

I649G1310035-02

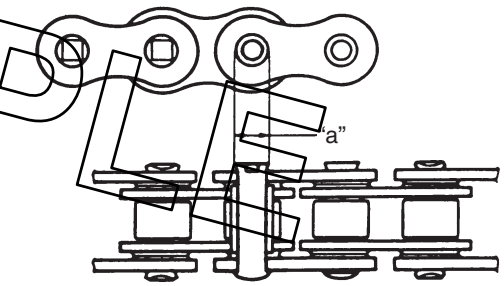

I649G1310036-03

3) Adjust the drive chain slack, after connecting it. Refer to "Drive Chain Inspection and Adjustment in Section 0B (Page 0B-15)".

SAMPLE

Specifications

Service Data

B823H13107001

Drive Train

Unit: mm (in)

Item	Standard		Limit
Final reduction ratio	2.388 (43/18)		—
Drive chain	Type	RK GB50GSVZ4	—
	Links	118 links	—
	20-pitch length	—	319.4 (12.57)
Drive chain slack (on center stand)	20 – 30 (0.8 – 1.2)		—
Gearshift lever height	55 – 65 (2.2 – 2.6)		—

Tightening Torque Specifications

B823H13107002

Fastening part	Tightening torque			Note
	N·m	kgf-m	lb-ft	
Engine sprocket nut	145	14.5	105.0	☞(Page 3A-3)
Speed sensor rotor bolt	28	2.8	20.0	☞(Page 3A-3)
Speed sensor bolt	6.5	0.65	4.7	☞(Page 3A-3)
Rear sprocket nut	60	6.0	43.5	☞(Page 3A-4)

NOTE

The specified tightening torque is also described in the following.
“Drive Chain Related Components (Page 3A-1)”

Reference:
For the tightening torque of fastener not specified in this section, refer to “Tightening Torque List in Section 0C (Page 0C-9)”.

SAMPLE

Special Tools and Equipment

Recommended Service Material

B823H13108001

Material	SUZUKI recommended product or Specification		Note
Grease	SUZUKI SUPER GREASE A or equivalent	P/No.: 99000–25010	☞(Page 3A-3) / ☞(Page 3A-4) / ☞(Page 3A-6) / ☞(Page 3A-6)
Thread lock cement	THREAD LOCK CEMENT SUPER 1322 or equivalent	P/No.: 99000–32110	☞(Page 3A-3)

NOTE

Required service material is also described in the following.
“Drive Chain Related Components (Page 3A-1)”

Special Tool

B823H13108002

09913–50121 Oil seal remover ☞(Page 3A-5) 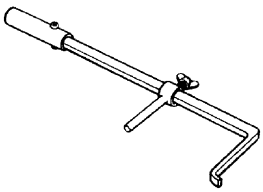	09913–70210 Bearing installer set ☞(Page 3A-6) 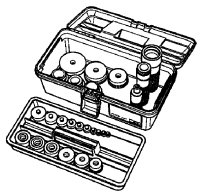
09921–20240 Bearing remover set ☞(Page 3A-6) 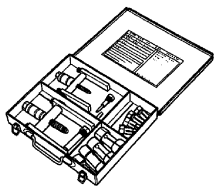	09922–22711 Drive chain cutting and joining tool ☞(Page 3A-7) 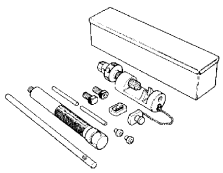
09924–84510 Bearing installer set ☞(Page 3A-6) 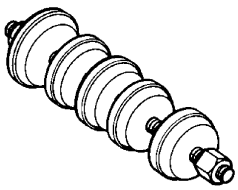	

SAMPLE

Section 4

Brake

CONTENTS

Precautions 4-1
- **Precautions 4-1**
  - Precautions for Brake System 4-1
  - Brake Fluid Information 4-1

Brake Control System and Diagnosis ... 4A-1
- **Schematic and Routing Diagram 4A-1**
  - Front Brake Hose Routing Diagram 4A-1
  - Rear Brake Hose Routing Diagram 4A-2
- **Diagnostic Information and Procedures 4A-3**
  - Brake Symptom Diagnosis 4A-3
- **Repair Instructions 4A-3**
  - Brake Pedal Height Inspection and Adjustment 4A-3
  - Front Brake Light Switch Inspection 4A-3
  - Rear Brake Light Switch Inspection 4A-4
  - Rear Brake Light Switch Inspection and Adjustment 4A-4
  - Brake Fluid Level Check 4A-4
  - Brake Hose Inspection 4A-4
  - Air Bleeding from Brake Fluid Circuit 4A-4
  - Brake Fluid Replacement 4A-6
  - Front Brake Hose Removal and Installation 4A-8
  - Rear Brake Hose Removal and Installation 4A-8
  - Front Brake Master Cylinder Components 4A-9
  - Front Brake Master Cylinder Assembly Removal and Installation 4A-10
  - Front Brake Master Cylinder / Brake Lever Disassembly and Assembly 4A-10
  - Front Brake Master Cylinder Parts Inspection 4A-12
  - Rear Brake Master Cylinder Components 4A-13
  - Rear Brake Master Cylinder Assembly Removal and Installation 4A-14
  - Rear Brake Master Cylinder Disassembly and Assembly 4A-15
  - Rear Brake Master Cylinder Parts Inspection 4A-16
  - Rear Brake Pedal Construction 4A-17
  - Rear Brake Pedal Removal and Installation 4A-17
- **Specifications 4A-18**
  - Service Data 4A-18
  - Tightening Torque Specifications 4A-18
- **Special Tools and Equipment 4A-19**
  - Recommended Service Material 4A-19
  - Special Tool 4A-19

Front Brakes 4B-1
- **Repair Instructions 4B-1**
  - Front Brake Components 4B-1
  - Front Brake Pad Inspection 4B-2
  - Front Brake Pad Replacement 4B-2
  - Front Brake Caliper Removal and Installation 4B-3
  - Front Brake Caliper Disassembly and Assembly 4B-4
  - Front Brake Caliper Parts Inspection 4B-6
  - Front Brake Disc Removal and Installation 4B-7
  - Front Brake Disc Inspection 4B-8
- **Specifications 4B-9**
  - Service Data 4B-9
  - Tightening Torque Specifications 4B-9
- **Special Tools and Equipment 4B-10**
  - Recommended Service Material 4B-10
  - Special Tool 4B-10

Rear Brakes 4C-1
- **Repair Instructions 4C-1**
  - Rear Brake Components 4C-1
  - Rear Brake Pad Inspection 4C-2
  - Rear Brake Pad Replacement 4C-2
  - Rear Brake Caliper Removal and Installation 4C-3
  - Rear Brake Caliper Disassembly and Assembly 4C-4
  - Rear Brake Caliper Parts Inspection 4C-6
  - Rear Brake Disc Removal and Installation 4C-6
  - Rear Brake Disc Inspection 4C-7
- **Specifications 4C-8**
  - Service Data 4C-8
  - Tightening Torque Specifications 4C-8
- **Special Tools and Equipment 4C-9**
  - Recommended Service Material 4C-9
  - Special Tool 4C-9

SAMPLE

Precautions

Precautions

Precautions for Brake System

B823H14000001

Refer to “General Precautions in Section 00 (Page 00-1)”.

Brake Fluid Information

B823H14000002

⚠ WARNING

- **This brake system is filled with an ethylene glycol-based DOT 4 brake fluid. Do not use or mix different types of fluid, such as silicone-based or petroleum-based.**
- **Do not use any brake fluid taken from old, used or unsealed containers. Never reuse brake fluid left over from the last servicing or which has been stored for a long period of time.**
- **When storing brake fluid, seal the container completely and keep it away from children.**
- **When replenishing brake fluid, take care not to get dust into the fluid.**
- **When washing brake components, use new brake fluid. Never use cleaning solvent.**
- **A contaminated brake disc or brake pad reduces braking performance. Discard contaminated pads and clean the disc with high quality brake cleaner or neutral detergent.**

⚠ CAUTION

Immediately and completely wipe off any brake fluid contacting any part of the motorcycle. The brake fluid reacts chemically with paint, plastics and rubber materials, etc., and will damage them severely.

SAMPLE

Brake Control System and Diagnosis

Schematic and Routing Diagram

Front Brake Hose Routing Diagram

B823H14102001

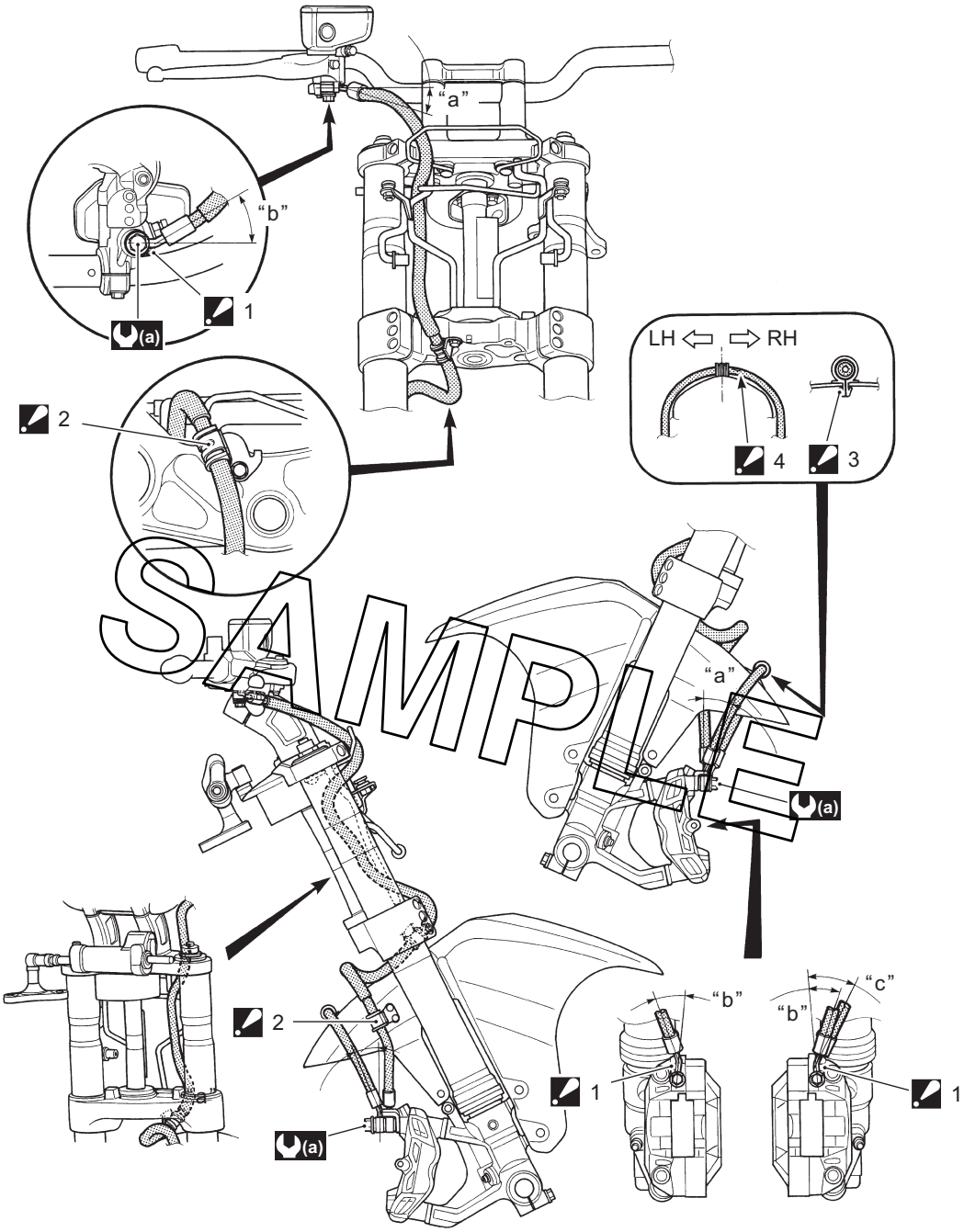

SAMPLE

I823H1410047-02

1. Stopper : After the brake hose union has contacted the stopper, tighten the union bolt.	"a": 21°
2. Hose guide : Fit the grommet sleeve on the brake hose to the hose guide properly.	"b": 28°
3. Brake hose clamp : Insert the clamp to the hole of the front fender fully.	"c": 35°
4. Green paint marking : Locate the green paint marking on the brake hose No. 2 to the right side of the brake hose clamp and it faces top side.	(a) : 23 N·m (2.3 kgf-m, 16.5 lb-ft)

Rear Brake Hose Routing Diagram

B823H14102002

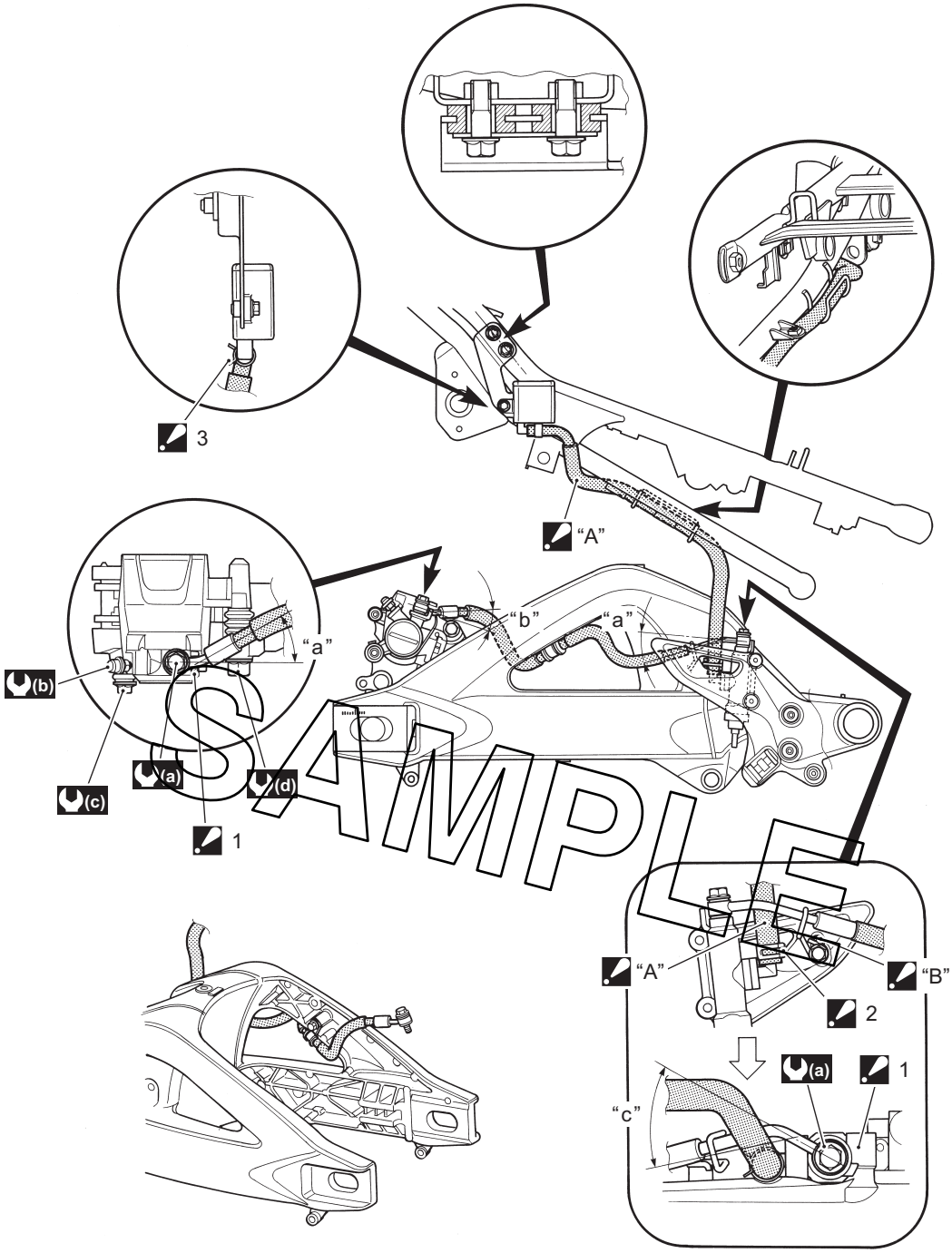

I823H1410049-03

1. Stopper : After the brake hose union has contacted the stopper, tighten the union bolt.	"b": 21°
2. Brake hose clamp : Brake hose clamp ends should face backward.	"c": 42°
3. Brake hose clamp : Brake hose clamp ends should face inside.	(a) : 23 N·m (2.3 kgf-m, 16.5 lb-ft)
"A": Face the white paint mark to inside.	(b) : 7.5 N·m (0.75 kgf-m, 5.5 lb-ft)
"B": Position the brake hose guide firmly.	(c) : 18 N·m (1.8 kgf-m, 13.0 lb-ft)
"a": 28°	(d) : 33 N·m (3.3 kgf-m, 24.0 lb-ft)

Diagnostic Information and Procedures

Brake Symptom Diagnosis

B823H14104001

Condition	Possible cause	Correction / Reference Item
Insufficient brake power	Leakage of brake fluid from hydraulic system.	*Repair or replace.*
	Worn pads and disc.	*Replace.*
	Oil adhesion on friction surface of pads.	*Clean disc and pads.*
	Air in hydraulic system.	*Bleed air.*
	Not enough brake fluid in the reservoir.	*Replenish.*
Brake squeaking	Carbon adhesion on pad surface.	*Repair surface with sandpaper.*
	Tilted pad.	*Correct pad fitting or replace.*
	Damaged wheel bearing.	*Replace.*
	Loose front-wheel axle or rear-wheel axle.	*Tighten to specified torque.*
	Worn pads and disc.	*Replace.*
	Foreign material in brake fluid.	*Replace brake fluid.*
	Clogged return port of master cylinder.	*Disassemble and clean master cylinder.*
Excessive brake lever stroke	Air in hydraulic system.	*Bleed air.*
	Insufficient brake fluid.	*Replenish fluid to specified level; bleed air.*
	Improper quality of brake fluid.	*Replace with correct fluid.*
Leakage of brake fluid	Insufficient tightening of connection joints.	*Tighten to specified torque.*
	Cracked hose.	*Replace.*
	Worn piston and/or cup.	*Replace piston and/or cup.*
	Worn piston seals and dust seals.	*Replace piston seals and dust seals.*
Brake drags	Rusty part.	*Clean and lubricate.*
	Insufficient brake lever or brake pedal pivot lubrication.	*Lubricate.*

SAMPLE

Repair Instructions

Brake Pedal Height Inspection and Adjustment

B823H14106001

Refer to “Brake System Inspection in Section 0B (Page 0B-17)”.

Front Brake Light Switch Inspection

B823H14106002

Inspect the front brake light switch in the following procedures:

1) Disconnect the front brake light switch lead wires (1).

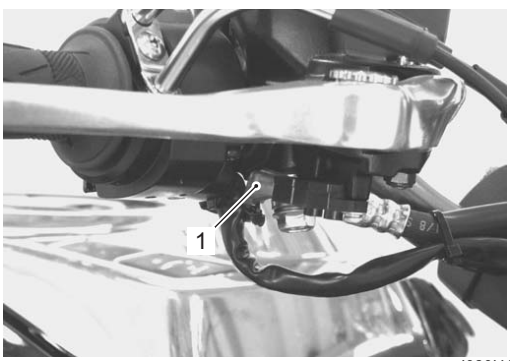

I823H1410001-02

2) Inspect the switch for continuity with a tester.
   If any abnormality is found, replace the front brake light switch with a new one. Refer to “Front Brake Master Cylinder / Brake Lever Disassembly and Assembly (Page 4A-10)”.

   Special tool
   TOOL : 09900–25008 (Multi-circuit tester set)

   Tester knob indication
   Continuity (•))))

Color / Position	Terminal (B/G)	Terminal (B)
OFF		
ON	○	○

I649G1410004-03

3) Connect the front brake light switch lead wires.

Rear Brake Light Switch Inspection

B823H14106003

Inspect the rear brake light switch in the following procedures:

1) Disconnect the rear brake light switch lead coupler (1).

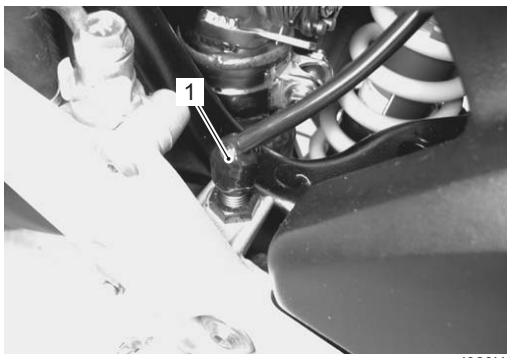

I823H1410002-01

2) Inspect the switch for continuity with a tester.
   If any abnormality is found, replace the rear brake light switch with a new one.

   Special tool
   TOOL : 09900–25008 (Multi-circuit tester set)

   Tester knob indication
   Continuity (•))))

Rear brake light switch

Color / Position	Terminal (O)	Terminal (W/B)
ON	○	○
OFF		

I823H1410003-02

3) Connect the rear brake light switch lead coupler.

Rear Brake Light Switch Inspection and Adjustment

B823H14106004

Check the rear brake light switch so that the brake light will come on just before pressure is felt when the brake pedal is depressed. If the brake light switch adjustment is necessary, turn the adjuster nut (1) in or out while holding the brake pedal.

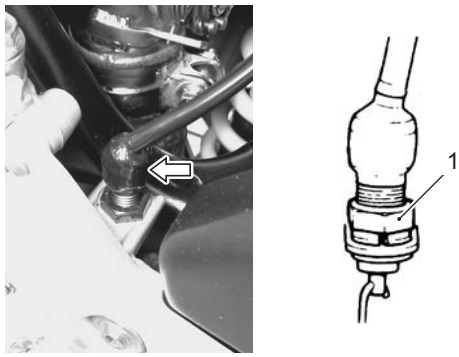

I823H1410004-01

Brake Fluid Level Check

B823H14106005

Refer to “Brake System Inspection in Section 0B (Page 0B-17)”.

Brake Hose Inspection

B823H14106006

Refer to “Brake System Inspection in Section 0B (Page 0B-17)”.

Air Bleeding from Brake Fluid Circuit

B823H14106007

Air trapped in the brake fluid circuit acts like a cushion to absorb a large proportion of the pressure developed by the master cylinder and thus interferes with the full braking performance of the brake caliper. The presence of air is indicated by “sponginess” of the brake lever and also by lack of braking force. Considering the danger to which such trapped air exposes the machine and rider, it is essential that after remounting the brake and restoring the brake system to the normal condition, the brake fluid circuit be purged of air in the following manner:

⚠ CAUTION

Handle brake fluid with care: the fluid reacts chemically with paint, plastic, rubber materials, etc.

SAMPLE

Front Brake

1) Fill the master cylinder reservoir to the top of the inspection window. Place the reservoir cap to prevent dirt from entering.

I823H1410005-01

2) Attach a hose to the air bleeder valve, and insert the free end of the hose into a receptacle.
3) Squeeze and release the brake lever several times in rapid succession and squeeze the lever fully without releasing it.

I823H1410006-01

4) Loosen the air bleeder valve by turning it a quarter of a turn so that the brake fluid runs into the receptacle, this will remove the tension of the brake lever causing it to touch the handlebar grip.

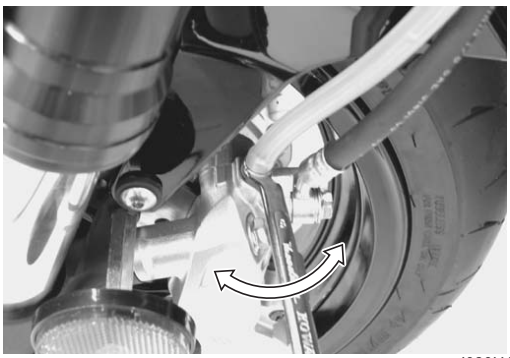

I823H1410007-01

5) Close the air bleeder valve, pump and squeeze the lever, and open the valve.
6) Repeat this process until the fluid flowing into the receptacle no longer contains air bubbles.

NOTE

While bleeding the brake system, replenish the brake fluid in the reservoir as necessary. Make sure that there is always some fluid visible in the reservoir.

7) Close the air bleeder valve and disconnect the hose.

Tightening torque
Air bleeder valve (Front): 6 N·m (0.6 kgf-m, 4.5 lb-ft)

8) Fill the reservoir with brake fluid.

I823H1410043-01

9) Install the reservoir cap.

SAMPLE

Rear Brake

Bleed air from the rear brake system as the same manner of front brake.

- Remove the right frame cover. Refer to “Exterior Parts Removal and Installation in Section 9D (Page 9D-14)”.

NOTE

The only difference of bleeding operation from the front brake is that the rear master cylinder is actuated by a pedal.

Tightening torque
Air bleeder valve (Rear): 7.5 N·m (0.75 kgf-m, 5.5 lb-ft)

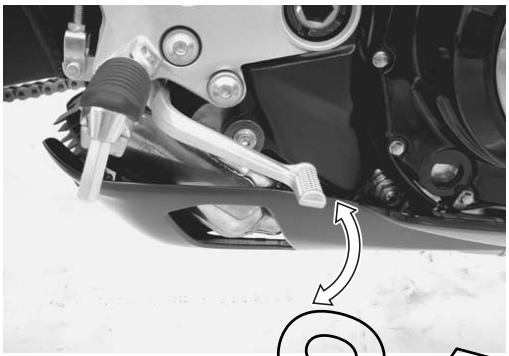

I823H1410008-01

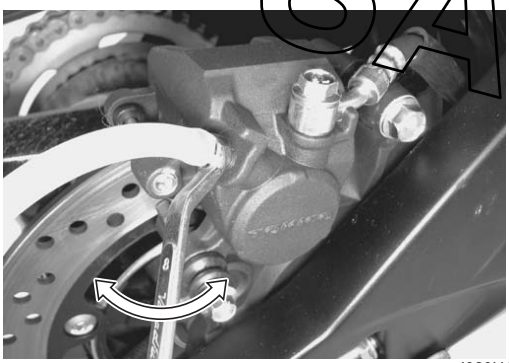

I823H1410009-01

- Fill the reservoir with brake fluid to the upper mark of the reservoir.

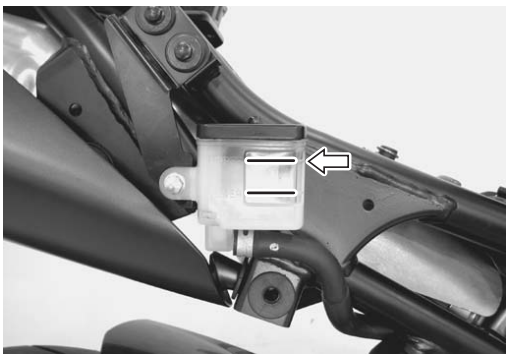

I823H1410010-02

- Install the right frame cover. Refer to “Exterior Parts Removal and Installation in Section 9D (Page 9D-14)”.

Brake Fluid Replacement

B823H14106008

⚠ CAUTION

Handle brake fluid with care: the fluid reacts chemically with paint, plastic, rubber materials, etc.

Front Brake

1) Place the motorcycle on a level surface and keep the handlebars straight.
2) Remove the brake fluid reservoir cap and diaphragm.
3) Suck up the old brake fluid as much as possible.

I823H1410011-01

4) Fill the reservoir with new brake fluid.

BF: Brake fluid (DOT 4)

5) Connect a clear hose to the air bleeder valve and insert the other end of the hose into a receptacle.
6) Loosen the air bleeder valve and pump the brake lever until the old brake fluid flows out of the brake system.

I823H1410012-01

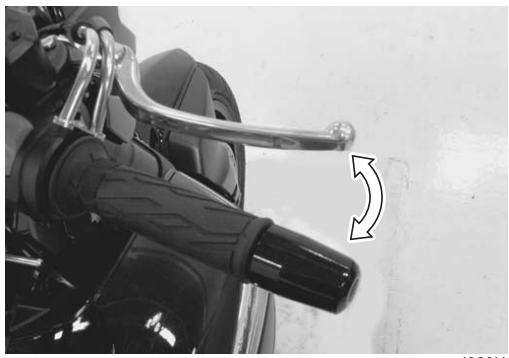

I823H1410013-01

SAMPLE

7) Close the air bleeder valve (1) and disconnect the clear hose.

Tightening torque
Air bleeder valve (Front) (a): 6 N·m (0.6 kgf-m, 4.5 lb-ft)

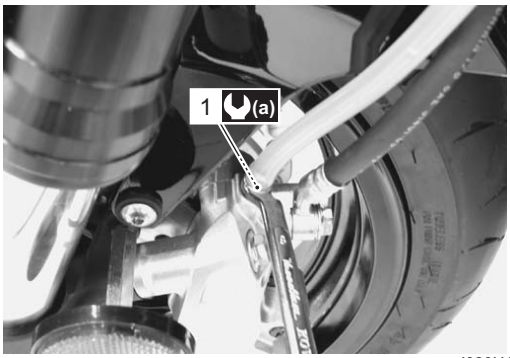

I823H1410014-02

8) Fill the reservoir with brake fluid.

I823H1410044-01

9) Install the reservoir cap.

Rear Brake

1) Place the motorcycle on a level surface.
2) Remove the right frame cover. Refer to “Exterior Parts Removal and Installation in Section 9D (Page 9D-14)”.
3) Remove the brake fluid reservoir cap and diaphragm.
4) Suck up the old brake fluid as much as possible.

I823H1410015-01

5) Fill the reservoir with new brake fluid.

BF: Brake fluid (DOT 4)

6) Connect a clear hose to the air bleeder valve and insert the other end of the hose into a receptacle.
7) Loosen the air bleeder valve and pump the brake pedal until the old brake fluid flows out of the brake system.

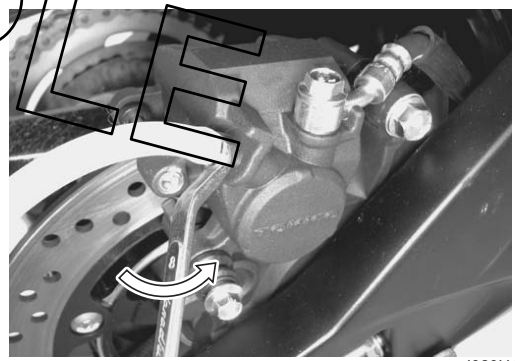

I823H1410016-02

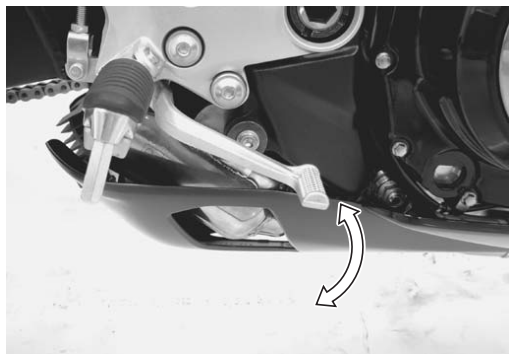

I823H1410017-01

SAMPLE

8) Close the air bleeder valve (1) and disconnect the clear hose.

Tightening torque
Air bleeder valve (Rear) (a): 7.5 N·m (0.75 kgf-m, 5.5 lb-ft)

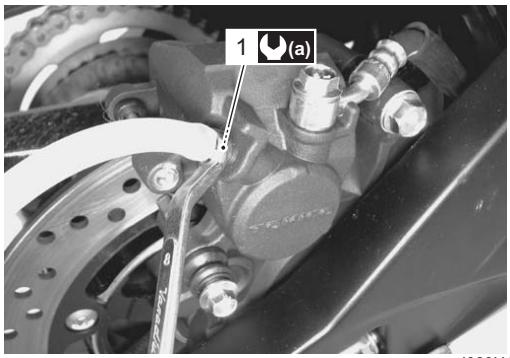

I823H1410018-04

9) Fill the reservoir with brake fluid to the upper mark of the reservoir.

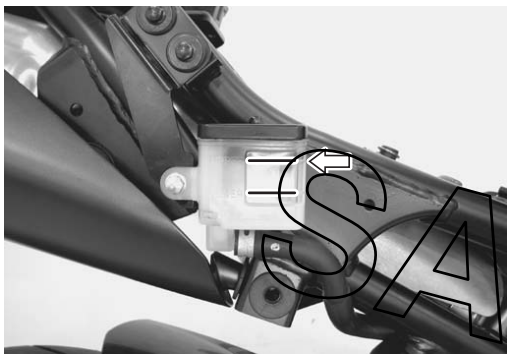

I823H1410019-02

10) Reinstall the removed part.

Front Brake Hose Removal and Installation

B823H14106009

Removal

1) Remove the headlight. Refer to “Headlight Removal and Installation in Section 9B (Page 9B-4)”.
2) Drain brake fluid. Refer to “Brake Fluid Replacement (Page 4A-6)”.
3) Remove the front brake hoses as shown in the front brake hose routing diagram. Refer to “Front Brake Hose Routing Diagram (Page 4A-1)”.

Installation

⚠ CAUTION

The seal washers should be replaced with the new ones to prevent fluid leakage.

1) Install the front brake hose as shown in the front brake hose routing diagram. Refer to “Front Brake Hose Routing Diagram (Page 4A-1)”.
2) Bleed air from the front brake system. Refer to “Air Bleeding from Brake Fluid Circuit (Page 4A-4)”.
3) Reinstall the removed parts.

Rear Brake Hose Removal and Installation

B823H14106010

Removal

1) Remove the right frame cover. Refer to “Exterior Parts Removal and Installation in Section 9D (Page 9D-14)”.
2) Drain brake fluid. Refer to “Brake Fluid Replacement (Page 4A-6)”.
3) Remove the rear brake hoses as shown in the rear brake hose routing diagram. Refer to “Rear Brake Hose Routing Diagram (Page 4A-2)”.

Installation

⚠ CAUTION

The seal washers should be replaced with the new ones to prevent fluid leakage.

1) Install the rear brake hose as shown in the rear brake hose routing diagram. Refer to “Rear Brake Hose Routing Diagram (Page 4A-2)”.
2) Bleed air from the rear brake system. Refer to “Air Bleeding from Brake Fluid Circuit (Page 4A-4)”.
3) Reinstall the removed parts.

SAMPLE

Front Brake Master Cylinder Components

B823H14106011

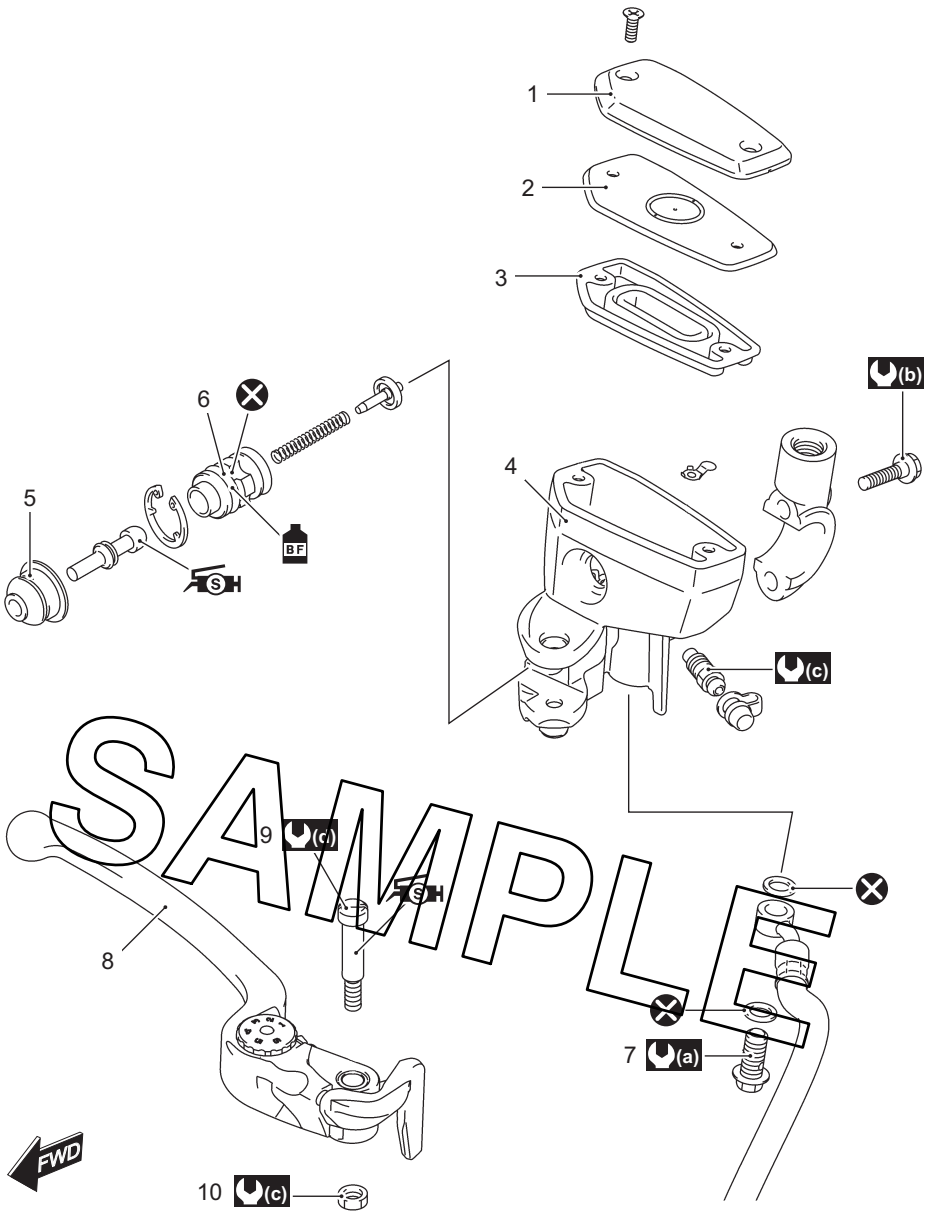

SAMPLE

I823H1410045-02

1. Reservoir cap	7. Brake hose union bolt	(c) : 6.0 N·m (0.6 kgf-m, 4.5 lb-ft)
2. Plate	8. Brake lever	(d) : 1.0 N·m (0.1 kgf-m, 0.7 lb-ft)
3. Diaphragm	9. Brake lever pivot bolt	BF : Apply brake fluid.
4. Master cylinder	10. Brake lever pivot bolt lock-nut	S : Apply silicone grease.
5. Dust boot	(a) : 23 N·m (2.3 kgf-m, 16.5 lb-ft)	⊗ : Do not reuse.
6. Piston set	(b) : 10 N·m (1.0 kgf-m, 7.0 lb-ft)	

Front Brake Master Cylinder Assembly Removal and Installation

B823H14106012

Removal

1) Drain brake fluid. Refer to “Brake Fluid Replacement (Page 4A-6)”.
2) Disconnect the front brake light switch lead wires (1).
3) Place a rag underneath the brake hose union bolt (2) on the master cylinder to catch any spilt brake fluid.
4) Remove the brake hose union bolt (2) and disconnect the brake hose.
5) Remove the right rear view mirror (3).
6) Remove the master cylinder assembly (4).

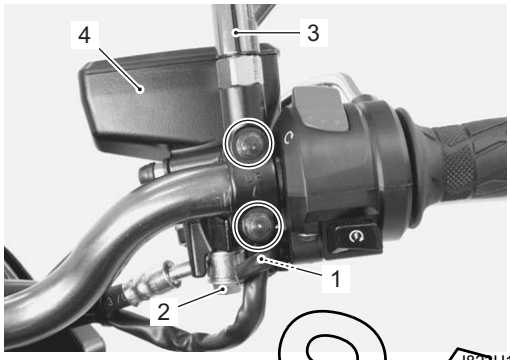

I823H1410020-01

Installation

Install the front brake master cylinder in the reverse order of removal. Pay attention to the following points:

- When installing the master cylinder (1) onto the handlebars (2), align the master cylinder holder’s mating surface “A” with the punch mark “B” on the handlebars (2) and tighten the upper holder bolt first. Refer to “Handlebar Construction in Section 6B (Page 6B-2)”.

  Tightening torque
  Master cylinder holder bolt (Upper and Lower) (a): 10 N·m (1.0 kgf-m, 7.0 lb-ft)

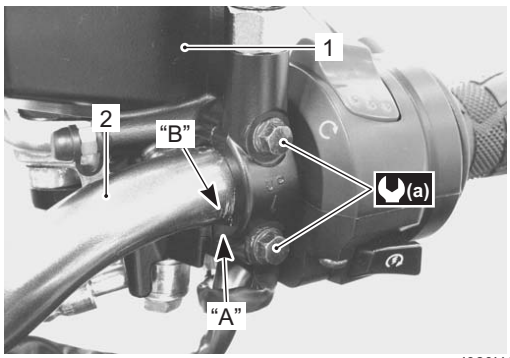

I823H1410022-02

- After setting the brake hose union to the stopper, tighten the union bolt (3) to the specified torque.

  ⚠ CAUTION

  The seal washers should be replaced with the new ones to prevent fluid leakage.

  Tightening torque
  Brake hose union bolt (b): 23 N·m (2.3 kgf-m, 16.5 lb-ft)

- Bleed air from the master cylinder in the same manner as caliper side.

  Tightening torque
  Air bleeder valve (Master cylinder) (c): 6 N·m (0.6 kgf-m, 4.5 lb-ft)

  NOTE

  If air is trapped in the master cylinder, bleed air from the master cylinder first.

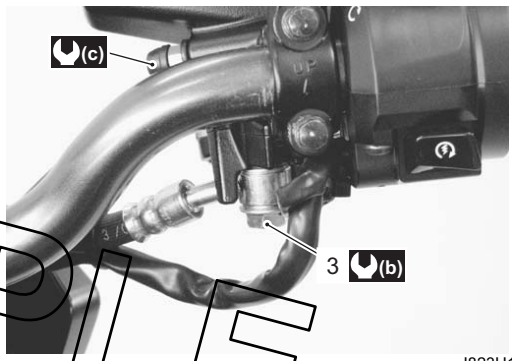

I823H1410021-02

- Bleed air from the brake system. Refer to “Air Bleeding from Brake Fluid Circuit (Page 4A-4)”.

Front Brake Master Cylinder / Brake Lever Disassembly and Assembly

B823H14106013

Refer to “Front Brake Master Cylinder Assembly Removal and Installation (Page 4A-10)”.

Disassembly

1) Remove the reservoir cap (1), plate (2) and diaphragm (3).

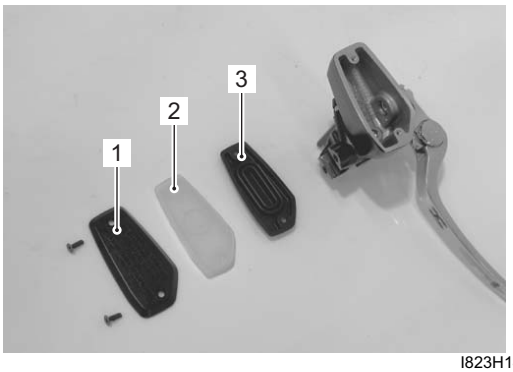

I823H1410024-01

SAMPLE

2) Remove the brake lever (4) and brake light switch (5).

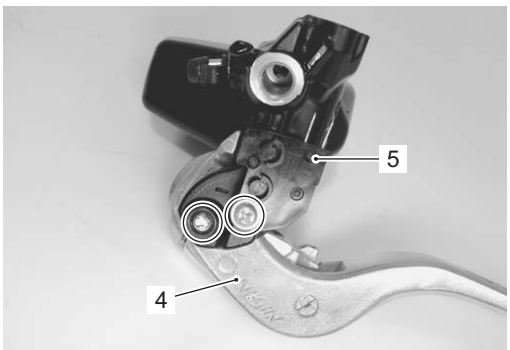

I823H1410023-01

3) Pull out the dust boot (6) and push rod (7).
4) Remove the snap ring (8).

Special tool
TOOL : 09900–06108 (Snap ring pliers)

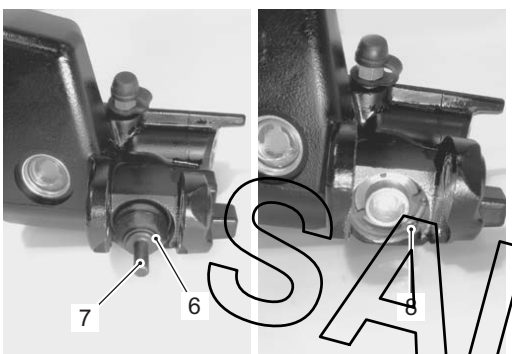

I823H1410025-01

5) Remove the following parts from the master cylinder.
- Secondary cup (9)
- Piston (10)
- Primary cup (11)
- Spring (12)
- Spring guide (13)

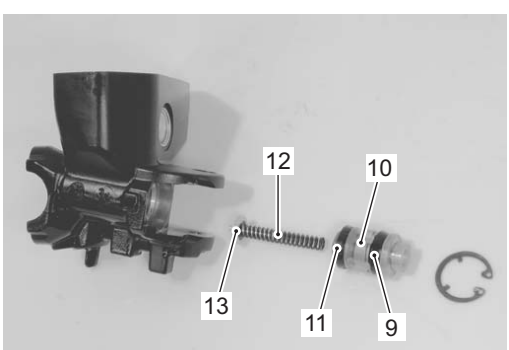

I823H1410026-01

Assembly
Assemble the master cylinder in the reverse order of disassembly. Pay attention to the following points:

⚠ CAUTION

- **Wash the master cylinder components with new brake fluid before reassembly.**
- **Do not wipe the brake fluid off after washing the components.**
- **When washing the components, use the specified brake fluid. Never use different types of fluid or cleaning solvents such as gasoline, kerosine, etc.**
- **Apply brake fluid to the master cylinder bore and all of the master cylinder component to be inserted into the bore.**

BF: Brake fluid (DOT 4)

I823H1410027-02

- When install the spring guide, fit the convex part “A” of the spring guide into the concave part “B” of the master cylinder.

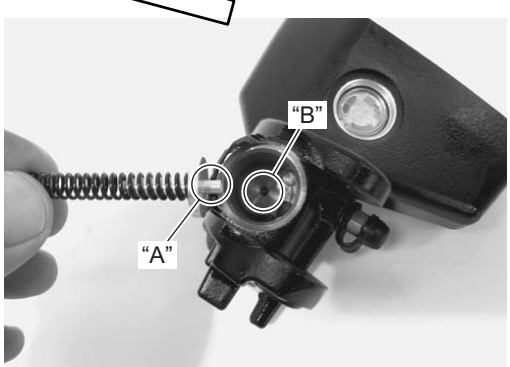

I823H1410028-02

SAMPLE

- When installing the brake light switch, align the projection on the switch with the hole in the master cylinder.

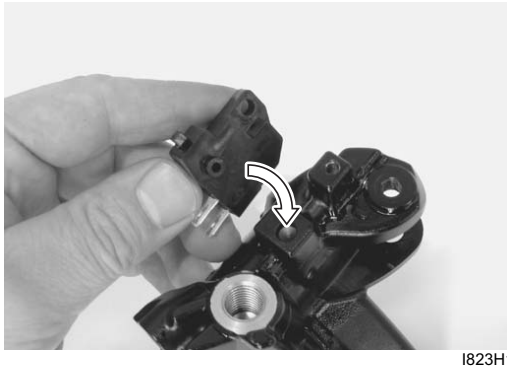

I823H1410029-01

- Apply grease to the push rod.

: Grease 99000–25100 (SUZUKI SILICONE GREASE or equivalent)

I823H1410030-02

- Apply grease to the brake lever pivot bolt.

: Grease 99000–25100 (SUZUKI Silicone Grease or equivalent)

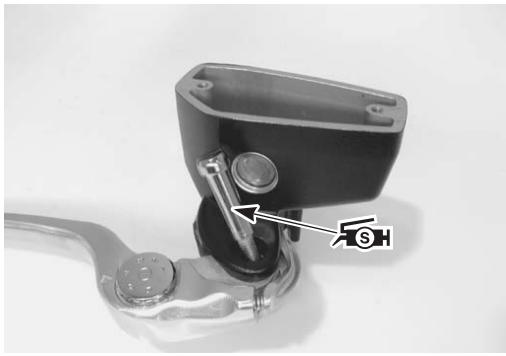

I823H1410031-01

- Tighten the pivot bolt (1) and lock-nut (2) to the specified torque.

Tightening torque
Brake lever pivot bolt (a): 1 N·m (0.1 kgf-m, 0.7 lb-ft)
Brake lever pivot bolt lock-nut (b): 6 N·m (0.6 kgf-m, 4.5 lb-ft)

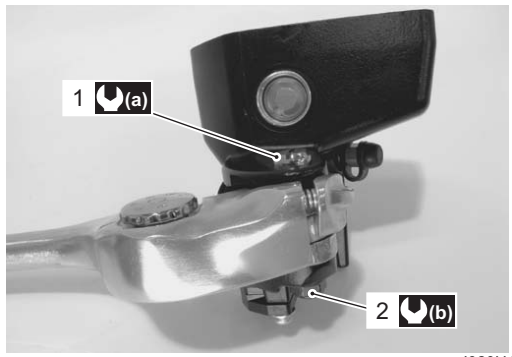

I823H1410032-02

Front Brake Master Cylinder Parts Inspection

B823H14106014

Refer to “Front Brake Master Cylinder / Brake Lever Disassembly and Assembly (Page 4A-10)”.

Master Cylinder

Inspect the master cylinder bore for any scratches or other damage.

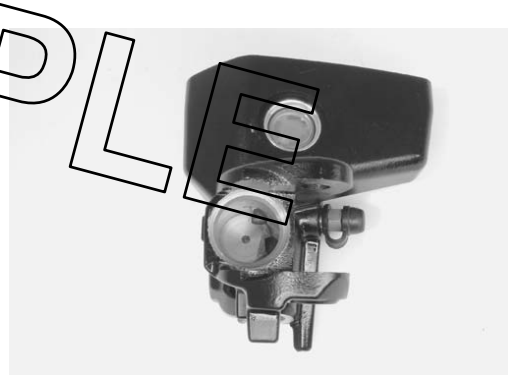

I823H1410033-01

Piston / Rubber Parts

Inspect the piston surface for any scratches or other damage.
Inspect the primary cup, secondary cup and dust boot for wear or damage.

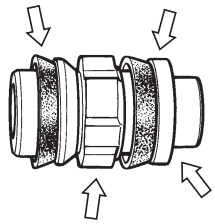

I823H1410034-02

SAMPLE

Rear Brake Master Cylinder Components

B823H14106015

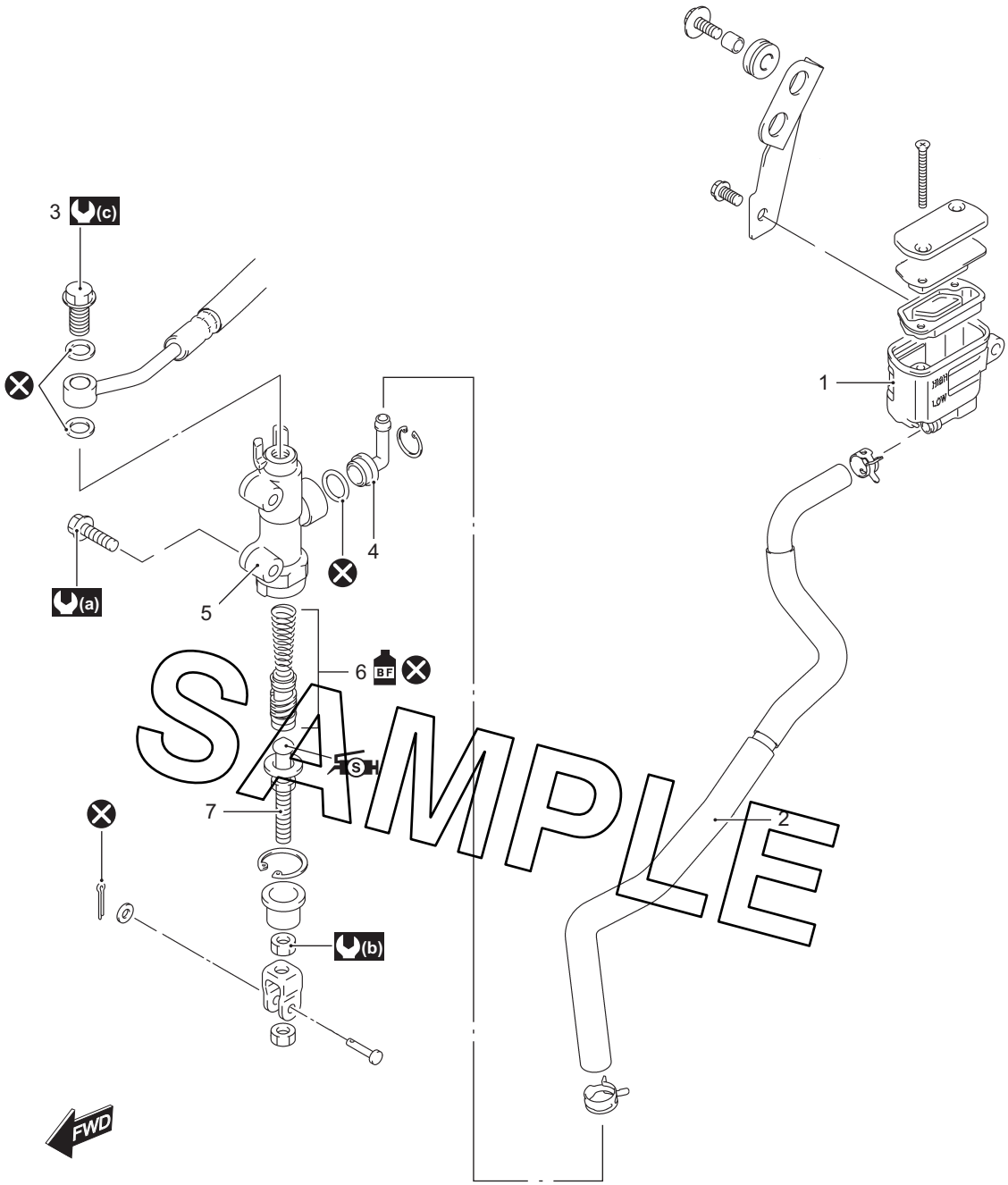

I823H1410046-05

1. Reservoir tank	6. Piston/Cup set	: Apply silicone grease.
2. Reservoir hose	7. Push rod	: Apply brake fluid.
3. Brake hose union bolt	(a) : 10 N·m (1.0 kgf-m, 0.7 lb-ft)	: Do not reuse.
4. Brake hose connector	(b) : 18 N·m (1.8 kgf-m, 13.0 lb-ft)	
5. Master cylinder	(c) : 23 N·m (2.3 kgf-m, 16.5 lb-ft)	

Rear Brake Master Cylinder Assembly Removal and Installation

B823H14106016

Removal

1) Remove the right frame cover. Refer to “Exterior Parts Removal and Installation in Section 9D (Page 9D-14)”.
2) Drain brake fluid. Refer to “Brake Fluid Replacement (Page 4A-6)”.
3) Remove the reservoir mounting bolt (1).

I823H1410035-01

4) Place a rag underneath the brake hose union bolt (2) on the master cylinder to catch any spilt brake fluid.
5) Remove the brake hose union bolt (2) and disconnect the brake hose.
6) Loosen the lock-nut (3).
7) Remove the master cylinder mounting bolts (4).
8) Remove the master cylinder along with the reservoir by turning the push rod (5).

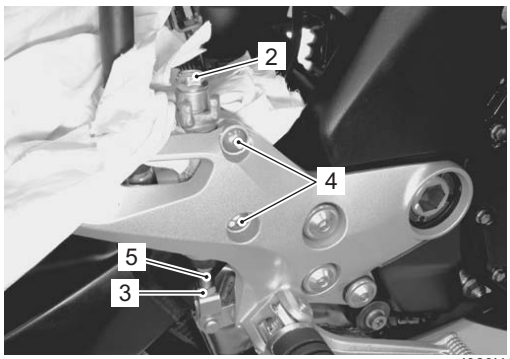

I823H1410036-01

Installation

Install the rear brake master cylinder in the reverse order of removal. Pay attention to the following points:

⚠ CAUTION

The seal washers should be replaced with the new ones to prevent fluid leakage.

- Tighten the master cylinder mounting bolts (1) to the specified torque.
- Tighten the lock-nut (2) to the specified torque.
- After setting the brake hose union to the stopper, tighten the union bolt (3) to the specified torque.

Tightening torque
Rear brake master cylinder mounting bolt (a): 10 N·m (1.0 kgf-m, 7.0 lb-ft)
Rear brake master cylinder rod lock-nut (b): 18 N·m (1.8 kgf-m, 13.0 lb-ft)
Brake hose union bolt (c): 23 N·m (2.3 kgf-m, 16.5 lb-ft)

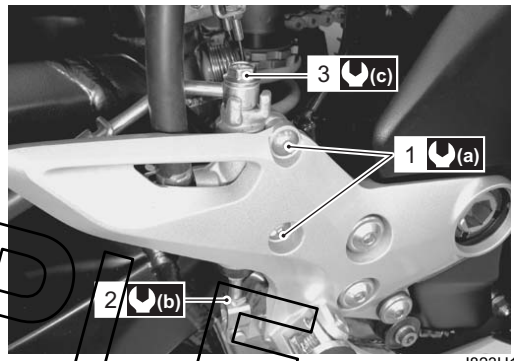

I823H1410037-01

- Bleed air from the system after reassembling the master cylinder. Refer to “Air Bleeding from Brake Fluid Circuit (Page 4A-4)”.
- Adjust the brake pedal height. Refer to “Brake System Inspection in Section 0B (Page 0B-17)”.

SAMPLE

Rear Brake Master Cylinder Disassembly and Assembly

B823H14106017

Refer to “Front Brake Master Cylinder Assembly Removal and Installation (Page 4A-10)”.

Disassembly

1) Disconnect the reservoir hose (1).
2) Remove the lock-nut (2).

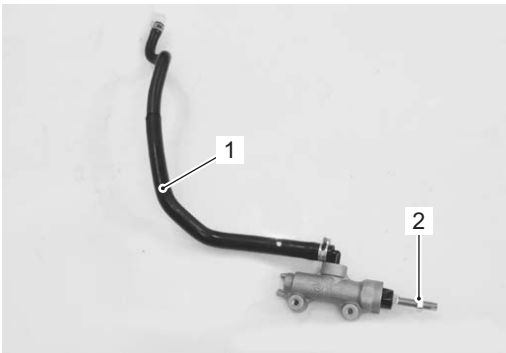

I823H1410038-02

3) Remove the snap ring (3), brake hose connector (4) and O-ring (5).

Special tool
TOOL : 09900–06108 (Snap ring pliers)

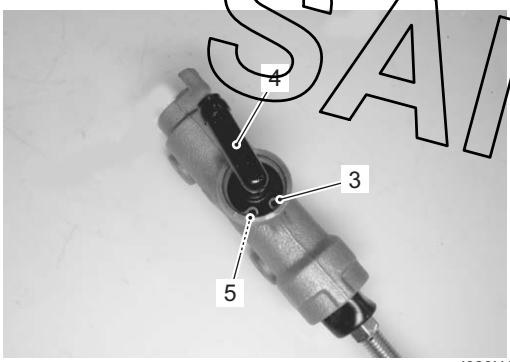

I823H1410039-01

4) Pull out the dust boot (6) and remove the snap ring (7).

Special tool
TOOL : 09900–06108 (Snap ring pliers)

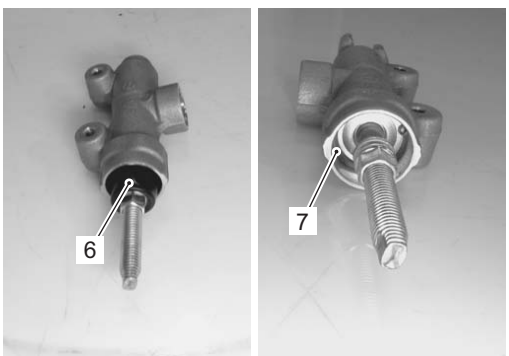

I823H1410040-01

5) Remove the push rod (8), piston/cup set (9) and spring (10).

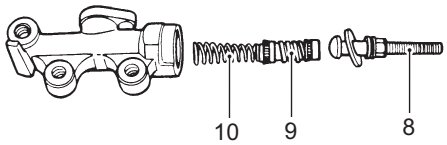

I823H1410041-02

Assembly

Assemble the master cylinder in the reverse order of disassembly. Pay attention to the following points:

⚠ CAUTION

- **Wash the master cylinder components with new brake fluid before reassembly.**
- **Do not wipe the brake fluid off after washing the components.**
- **When washing the components, use the specified brake fluid. Never use different types of fluid or cleaning solvents such as gasoline, kerosine, etc.**
- **Apply brake fluid to the master cylinder bore and all of the master cylinder component to be inserted into the bore.**

BF: Brake fluid (DOT 4)

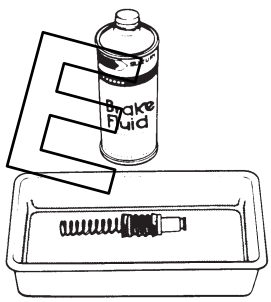

I649G1410036-02

SAMPLE

- Apply grease to the push rod end.

  : Grease 99000–25100 (SUZUKI Silicone Grease or equivalent)

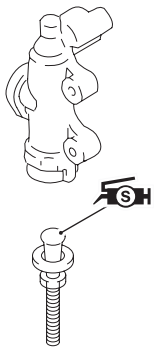

I649G1410041-03

- Install the O-ring (1).

⚠ CAUTION

Replace the O-ring (1) with a new one.

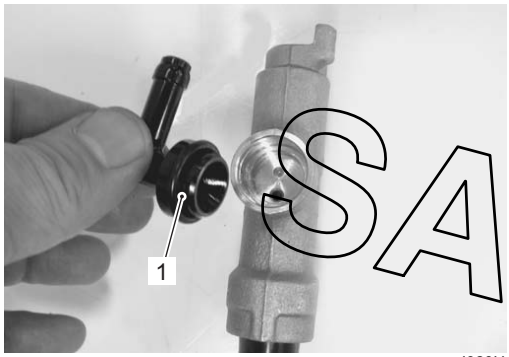

I823H1410042-01

Rear Brake Master Cylinder Parts Inspection

B823H14106018

Refer to “Rear Brake Master Cylinder Disassembly and Assembly (Page 4A-15)”.

Master Cylinder

Inspect the master cylinder bore for any scratches or other damage.

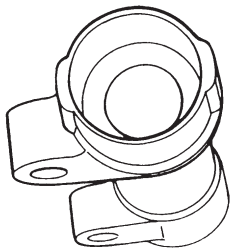

I649G1410038-02

Piston / Rubber Parts

Inspect the piston surface for any scratches or other damage.

Inspect the primary cup, secondary cup and dust boot for wear or damage.

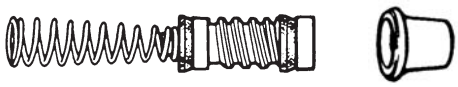

I649G1410039-02

SAMPLE

Rear Brake Pedal Construction

B823H14106019

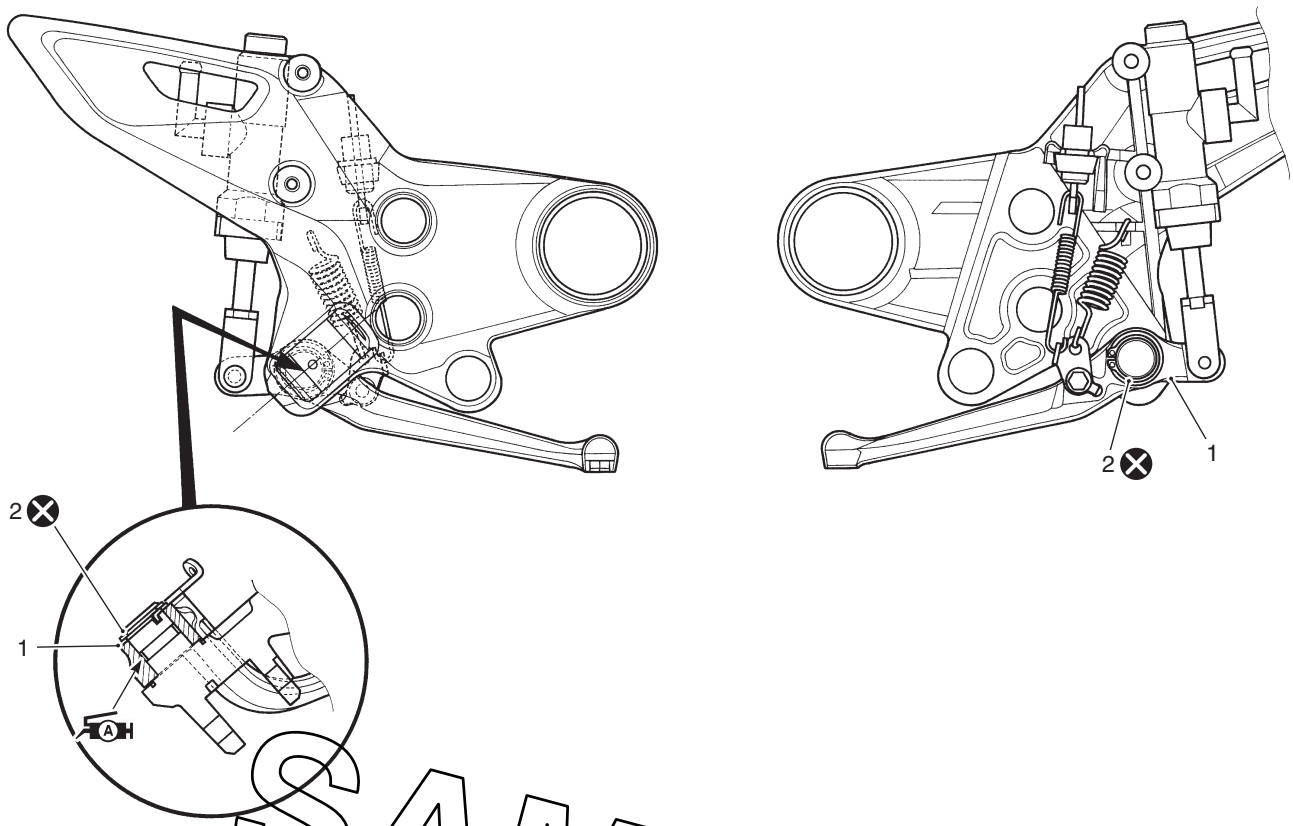

I823H1410050-01

1. Washer	2. Snap ring	A : Apply grease.	⊗ : Do not reuse.

SAMPLE

Rear Brake Pedal Removal and Installation

B823H14106020

Removal

1) Remove the master cylinder assembly. Refer to “Rear Brake Master Cylinder Assembly Removal and Installation (Page 4A-14)”.
2) Remove the rear brake pedal as shown in the rear brake pedal construction. Refer to “Rear Brake Pedal Construction (Page 4A-17)”.

Installation

⚠ CAUTION

Replace the snap ring with a new one.

Install the rear brake pedal as shown in the rear brake pedal construction. Refer to “Rear Brake Pedal Construction (Page 4A-17)”.

Specifications

Service Data

B823H14107001

Brake

Unit: mm (in)

Item	Standard		Limit
Rear brake pedal height	55 – 65 (2.2 – 2.6)		—
Master cylinder bore	Front	19.050 – 19.093 (0.7500 – 0.7517)	—
	Rear	12.700 – 12.743 (0.5000 – 0.5017)	—
Master cylinder piston diam.	Front	19.018 – 19.034 (0.7487 – 0.7494)	—
	Rear	12.657 – 12.684 (0.4983 – 0.4994)	—
Brake fluid type	DOT 4		—

Tightening Torque Specifications

B823H14107002

Fastening part	Tightening torque			Note
	N·m	kgf-m	lb-ft	
Air bleeder valve (Front)	6	0.6	4.5	☞(Page 4A-5) / ☞(Page 4A-7)
Air bleeder valve (Rear)	7.5	0.75	5.5	☞(Page 4A-6) / ☞(Page 4A-8)
Master cylinder holder bolt (Upper and Lower)	10	1.0	7.0	☞(Page 4A-10)
Brake hose union bolt	23	2.3	16.5	☞(Page 4A-10) / ☞(Page 4A-14)
Air bleeder valve (Master cylinder)	6	0.6	4.5	☞(Page 4A-10)
Brake lever pivot bolt	1	0.1	0.7	☞(Page 4A-12)
Brake lever pivot bolt lock-nut	6	0.6	4.5	☞(Page 4A-12)
Rear brake master cylinder mounting bolt	10	1.0	7.0	☞(Page 4A-14)
Rear brake master cylinder rod lock-nut	18	1.8	13.0	☞(Page 4A-14)

SAMPLE

NOTE

The specified tightening torque is also described in the following.
“Front Brake Hose Routing Diagram (Page 4A-1)”
“Rear Brake Hose Routing Diagram (Page 4A-2)”
“Front Brake Master Cylinder Components (Page 4A-9)”
“Rear Brake Master Cylinder Components (Page 4A-13)”

Reference:
For the tightening torque of fastener not specified in this section, refer to “Tightening Torque List in Section 0C (Page 0C-9)”.

Special Tools and Equipment

Recommended Service Material

B823H14108001

Material	SUZUKI recommended product or Specification		Note
Brake fluid	DOT 4	—	☞(Page 4A-6) / ☞(Page 4A-7) / ☞(Page 4A-11) / ☞(Page 4A-15)
Grease	SUZUKI SILICONE GREASE or equivalent	P/No.: 99000–25100	☞(Page 4A-12) / ☞(Page 4A-12) / ☞(Page 4A-16)

NOTE

Required service material is also described in the following.
“Front Brake Master Cylinder Components (Page 4A-9)”
“Rear Brake Master Cylinder Components (Page 4A-13)”
“Rear Brake Pedal Construction (Page 4A-17)”

Special Tool

B823H14108002

09900–06108 Snap ring pliers ☞(Page 4A-11) / ☞(Page 4A-15) / ☞(Page 4A-15)	09900–25008 Multi-circuit tester set ☞(Page 4A-3) / ☞(Page 4A-4)

SAMPLE

Front Brakes

Repair Instructions

Front Brake Components

B823H14206001

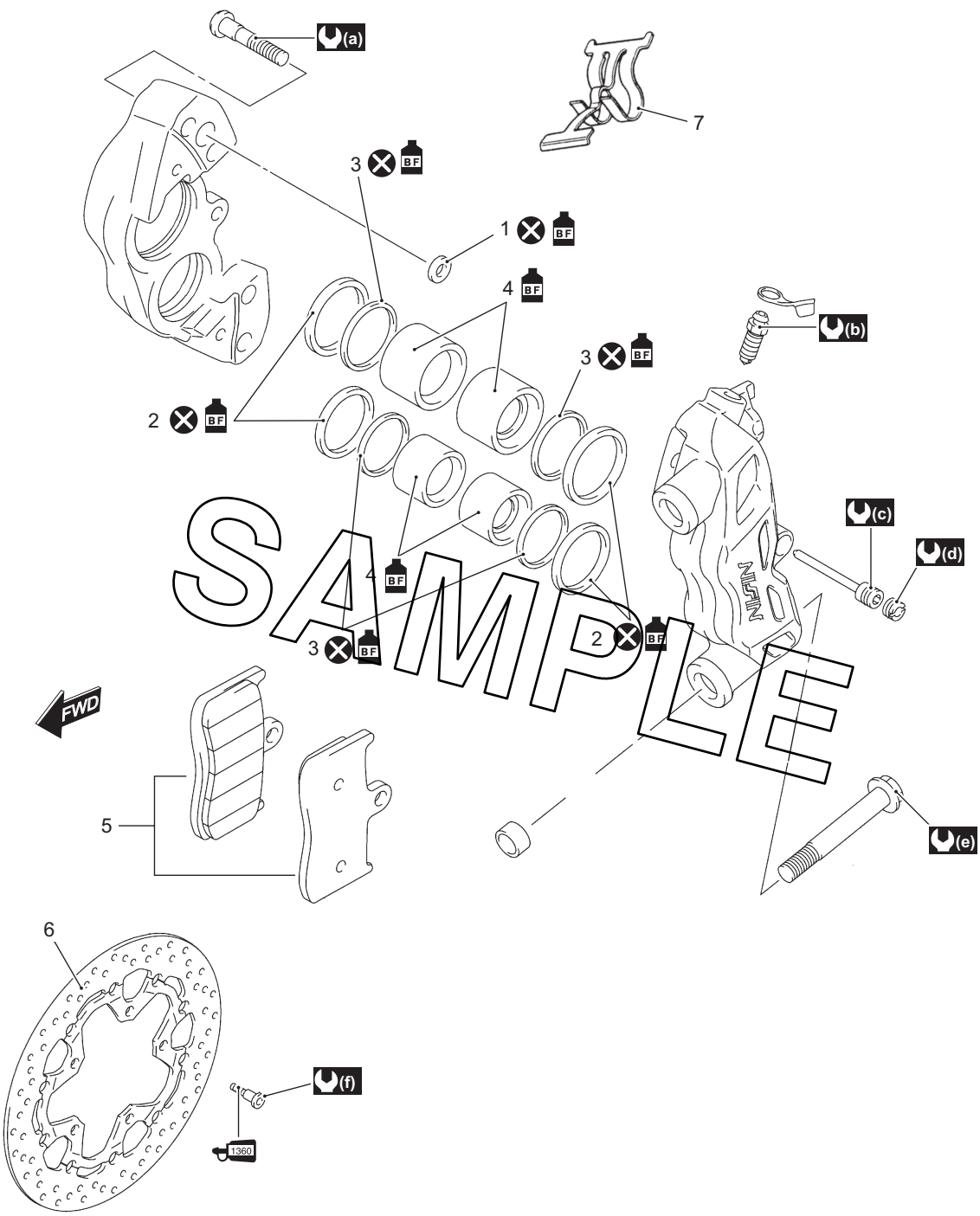

I823H1420023-07

1. O-ring	7. Brake pad spring	(f) : 23 N·m (2.3 kgf-m, 16.5 lb-ft)
2. Piston seal	(a) : 27 N·m (2.7 kgf-m, 19.5 lb-ft)	1360 : Apply thread lock to the thread part.
3. Dust seal	(b) : 6 N·m (0.6 kgf-m, 4.5 lb-ft)	BF : Apply brake fluid.
4. Piston	(c) : 17 N·m (1.7 kgf-m, 12.5 lb-ft)	⊗ : Do not reuse.
5. Front brake pad set	(d) : 2.5 N·m (0.25 kgf-m, 1.8 lb-ft)	
6. Front brake disc	(e) : 39 N·m (3.9 kgf-m, 28.0 lb-ft)	

Front Brake Pad Inspection

B823H14206002

The extent of brake pads wear can be checked by observing the grooved limit line “A” on the pads. When the wear exceeds the grooved limit line, replace the pads with new ones. Refer to “Front Brake Pad Replacement (Page 4B-2)”.

⚠ CAUTION

Replace the brake pad as a set, otherwise braking performance will be adversely affected.

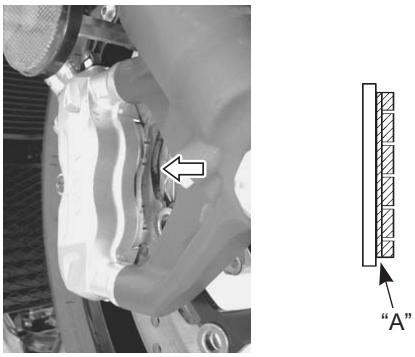

I823H1420001-02

Front Brake Pad Replacement

B823H14206003

1) Remove the plug (1).

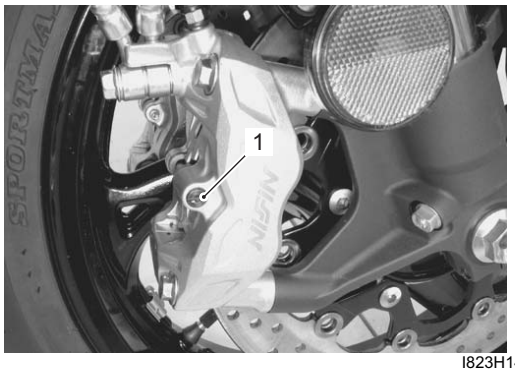

I823H1420002-01

2) Remove the spring (2) and brake pads (3) by removing the pad mounting pin (4).

NOTE

When removing the pads, push the piston all the way into the brake caliper.

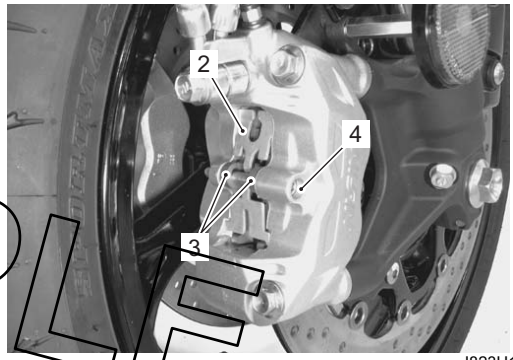

I823H1420003-02

⚠ CAUTION

Do not operate the brake lever while dismounting the pads.

SAMPLE

3) Clean up the caliper especially around the caliper piston.
4) Install the new brake pads.

⚠ CAUTION

Replace the brake pads as a set, otherwise braking performance will be adversely affected.

I823H1420004-01

5) Tighten the pad mounting pin (4) and plug (1) to the specified torque.

Tightening torque
Front brake pad mounting pin (a): 17 N·m (1.7 kgf-m, 12.5 lb-ft)
Pad pin plug (b): 2.5 N·m (0.25 kgf-m, 1.8 lb-ft)

SAMPLE

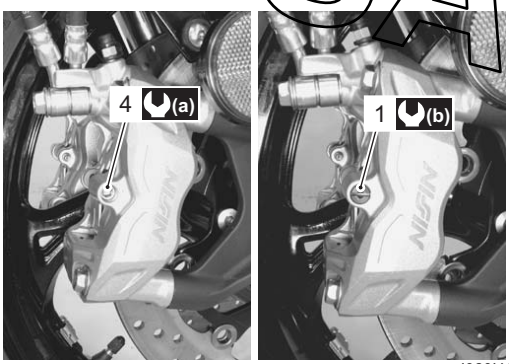

I823H1420005-02

NOTE

After replacing the brake pads, pump the brake lever several times to check for proper brake operation and then check the brake fluid level.

Front Brake Caliper Removal and Installation

B823H14206004

NOTE

The right and left calipers are installed symmetrically and therefore the removal procedure for one side is the same as that for the other side.

Removal

1) Drain brake fluid. Refer to “Brake Fluid Replacement in Section 4A (Page 4A-6)”.
2) Remove the brake hose from the caliper by removing the union bolt (1) and catch the brake fluid in a suitable receptacle.

NOTE

- **Place a rag underneath the union bolt on the brake caliper to catch any spilt brake fluid.**
- **Slightly loosen the brake caliper housing bolts (3) to facilitate later disassembly, if necessary.**

3) Remove the brake caliper by removing the caliper mounting bolts (2).

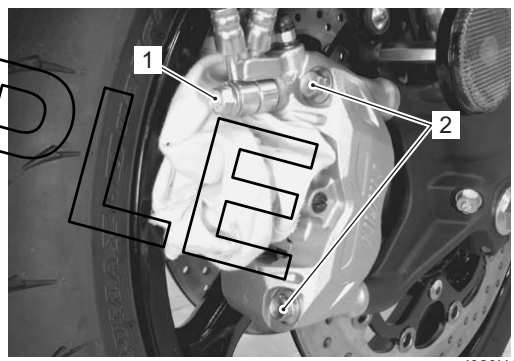

I823H1420006-01

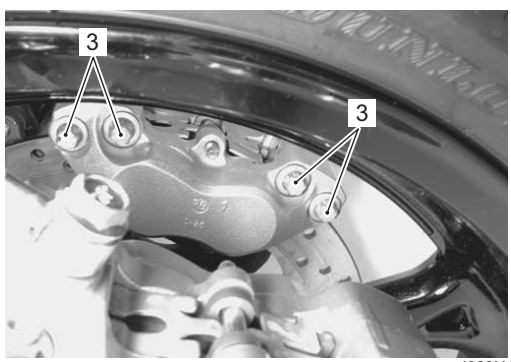

I823H1420007-01

Installation

Install the brake caliper in the reverse order of removal. Pay attention to the following points:

- Tighten each bolt to the specified torque.

  Tightening torque
  Front brake caliper mounting bolt (a): 39 N·m (3.9 kgf-m, 28.0 lb-ft)
  Front brake caliper housing bolt (b): 27 N·m (2.7 kgf-m, 19.5 lb-ft)

- After setting the brake hose union to the stopper, tighten the union bolt to the specified torque.

  ⚠ CAUTION

  The seal washers should be replaced with the new ones to prevent fluid leakage.

  Tightening torque
  Brake hose union bolt (c): 23 N·m (2.3 kgf-m, 16.5 lb-ft)

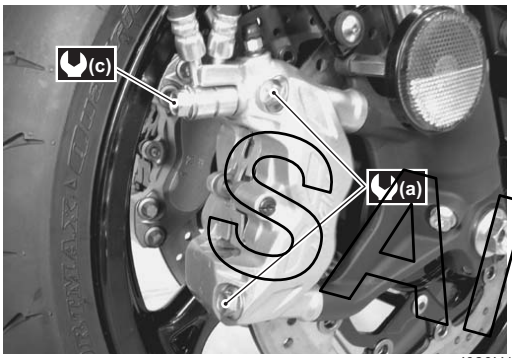

I823H1420008-01

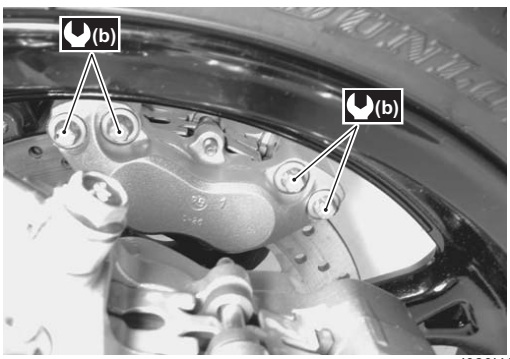

I823H1420009-01

- Bleed air from the brake system after installing the caliper. Refer to “Air Bleeding from Brake Fluid Circuit in Section 4A (Page 4A-4)”.
- Check the brake fluid leakage and brake operation.

  ⚠ WARNING

  Brake fluid, if it leaks, will interfere with safe running and discolor painted surfaces.
  Check the brake hose and hose joints for cracks and fluid leakage.

Front Brake Caliper Disassembly and Assembly

B823H14206005

Refer to “Front Brake Caliper Removal and Installation (Page 4B-3)”.

NOTE

The right and left calipers are installed symmetrically and therefore the disassembly procedure for one side is the same as that for the other side.

Disassembly

1) Remove the brake pads. Refer to “Front Brake Pad Replacement (Page 4B-2)”.
2) Separate the caliper halves by removing the caliper housing bolts.

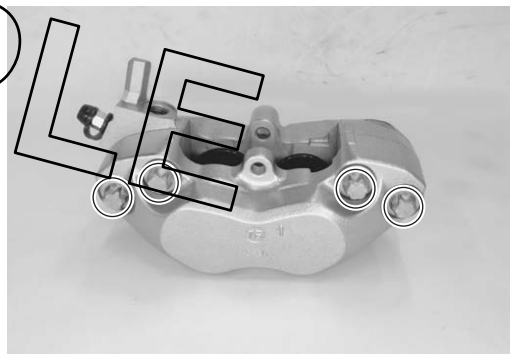
I823H1420010-01

SAMPLE

3) Remove the O-ring.

I823H1420011-01

4) Place a rag over the pistons to prevent it from popping out and then force out the pistons using compressed air.

⚠ CAUTION

Do not use high pressure air to prevent piston damage.

I823H1420012-02

I823H1420013-01

5) Remove the dust seals (1) and piston seals (2).

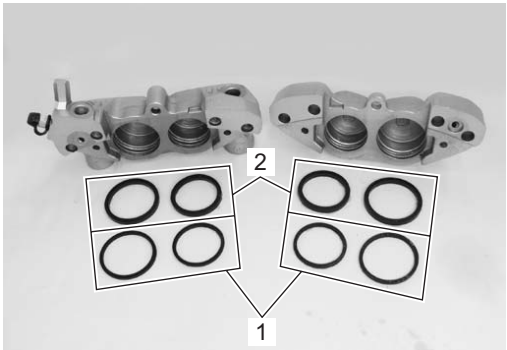

I823H1420014-04

Assembly

Assemble the caliper in the reverse order of disassembly. Pay attention to the following points:

- Wash the caliper bores and pistons with specified brake fluid. Particularly wash the dust seal grooves and piston seal grooves.

  BF: Brake fluid (DOT 4)

⚠ CAUTION

- **Wash the caliper components with fresh brake fluid before reassembly. Never use cleaning solvent or gasoline to wash them.**
- **Do not wipe the brake fluid off after washing the components.**
- **When washing the components, use the specified brake fluid. Never use different types of fluid or cleaning solvent such as gasoline, kerosine or the others.**

SAMPLE

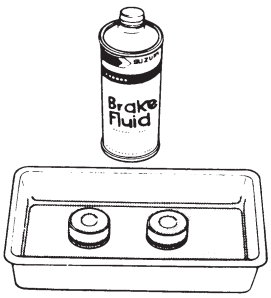

I649G1420012-02

- Apply the brake fluid to piston seals (1) and dust seals (2).

⚠ CAUTION

Replace the piston seals (1) and dust seals (2) with new ones.

BF: Brake fluid (DOT 4)

- Install the piston seals as shown in the figure.

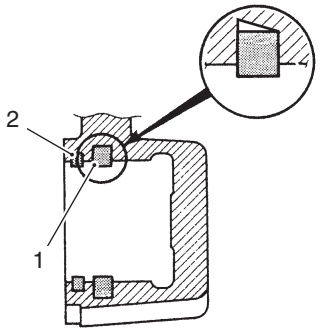

I649G1420013-02

- Install a new O-ring and reassemble caliper halves.

⚠ CAUTION

Replace the O-ring with a new one.

I823H1420015-01

- Temporarily tighten the brake caliper housing bolts.

⚠ CAUTION

After installing the brake caliper to the front fork, tighten the brake caliper housing bolts to the specified torque. Refer to "Front Brake Caliper Removal and Installation (Page 4B-3)".

Tightening torque
Front brake caliper housing bolt (a): 27 N·m (2.7 kgf-m, 19.5 lb-ft)

I823H1420016-02

- Install the brake pads. Refer to "Front Brake Pad Replacement (Page 4B-2)".

Front Brake Caliper Parts Inspection

B823H14206006

Refer to "Front Brake Caliper Disassembly and Assembly (Page 4B-4)".

Brake Caliper Cylinder

Inspect the brake caliper cylinder wall for nicks, scratches or other damage. If any damage is found, replace the caliper with a new one.

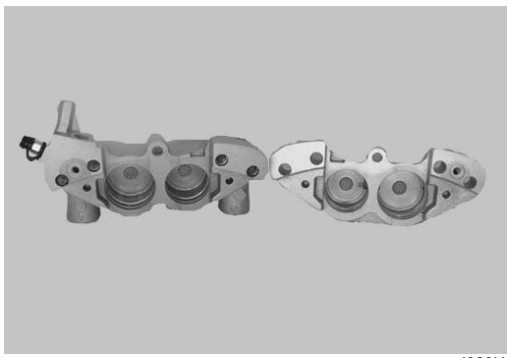

I823H1420017-01

SAMPLE

Brake Caliper Piston

Inspect the brake caliper piston surface for any scratches or other damage. If any damage is found, replace the piston with a new one.

I823H1420018-01

Brake Pad Mounting Pin

Inspect the brake Pad mounting pin for wear and other damage. If any damage is found, replace the mounting pin with a new one.

I823H1420019-01

Brake Pad Spring

Inspect the brake pad spring for damage and excessive bend. If any defects are found, replace them with new ones.

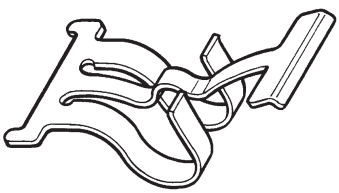

I823H1420024-02

Front Brake Disc Removal and Installation

B823H14206007

Removal

1) Remove the front wheel assembly. Refer to “Front Wheel Assembly Removal and Installation in Section 2D (Page 2D-4)”.
2) Remove the front brake disc.

I823H1420021-01

Installation

Install the front brake disc in the reverse order of removal. Pay attention to the following points:

- Make sure that the brake discs are clean and free of any grease.
- Apply thread lock to the brake disc bolts (1) and tighten them to the specified torque.

1360 : Thread lock cement 99000–32130 (Thread Lock Cement Super 1360 or equivalent)

Tightening torque
Brake disc bolt (Front) (a): 23 N·m (2.3 kgf-m, 16.5 lb-ft)

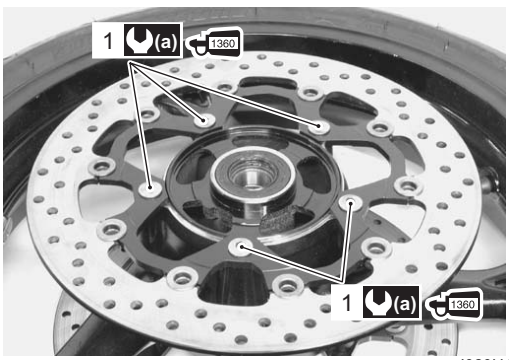

I823H1420022-01

SAMPLE

Front Brake Disc Inspection

B823H14206008

Brake Disc Thickness

Check the brake disc for damage or cracks and measure the thickness using the micrometer.
Replace the brake disc if the thickness is less than the service limit or if defect is found.

Special tool
TOOL (A): 09900–20205 (Micrometer (0 – 25 mm))

Brake disc thickness
Service limit (Front): 5.0 mm (0.20 in)

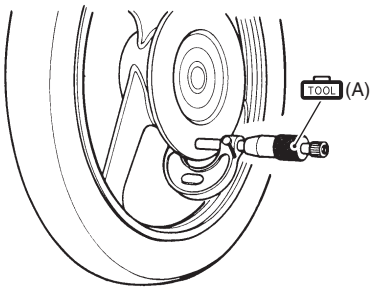

I649G1420019-03

Brake Disc Runout

1) Dismount the front brake caliper. Refer to “Front Brake Caliper Removal and Installation (Page 4B-3)”.
2) Measure the runout using the dial gauge.
   Replace the disc if the runout exceeds the service limit.

   Special tool
   TOOL (A): 09900–20607 (Dial gauge (1/100 mm, 10 mm))
   TOOL : 09900–20701 (Magnetic stand)

   Brake disc runout
   Service limit: 0.30 mm (0.012 in)

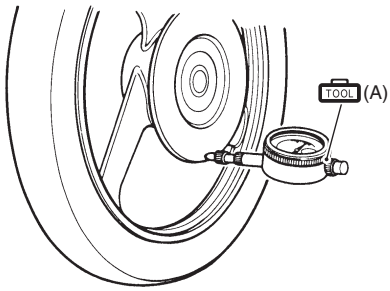

I649G1420020-03

3) Remount the front brake caliper. Refer to “Front Brake Caliper Removal and Installation (Page 4B-3)”.

SAMPLE

Specifications

Service Data

B823H14207001

Brake

Unit: mm (in)

Item	Standard			Limit
Brake disc thickness	Front	5.3 – 5.7 (0.21 – 0.22)		5.0 (0.20)
Brake disc runout	—			0.30 (0.012)
Brake caliper cylinder bore	Front	Leading	30.230 – 30.280 (1.1902 – 1.1921)	—
		Trailing	33.960 – 34.010 (1.3370 – 1.3390)	—
Brake caliper piston diam.	Front	Leading	30.148 – 30.198 (1.1869 – 1.1889)	—
		Trailing	33.878 – 33.928 (1.3338 – 1.3357)	—
Brake fluid type	DOT 4			—

Tightening Torque Specifications

B823H14207002

Fastening part	Tightening torque			Note
	N·m	kgf-m	lb-ft	
Front brake pad mounting pin	17	1.7	12.5	☞(Page 4B-3)
Pad pin plug	2.5	0.25	1.8	☞(Page 4B-3)
Front brake caliper mounting bolt	39	3.9	28.0	☞(Page 4B-4)
Front brake caliper housing bolt	27	2.7	19.5	☞(Page 4B-4) / ☞(Page 4B-6)
Brake hose union bolt	23	2.3	16.5	☞(Page 4B-4)
Brake disc bolt (Front)	23	2.3	16.5	☞(Page 4B-7)

NOTE

The specified tightening torque is also described in the following.
“Front Brake Components (Page 4B-4)”

Reference:
For the tightening torque of fastener not specified in this section, refer to “Tightening Torque List in Section 0C (Page 0C-9)”.

SAMPLE

Special Tools and Equipment

Recommended Service Material

B823H14208001

Material	SUZUKI recommended product or Specification		Note
Brake fluid	DOT 4	—	☞(Page 4B-5) / ☞(Page 4B-6)
Thread lock cement	Thread Lock Cement Super 1360 or equivalent	P/No.: 99000–32130	☞(Page 4B-7)

NOTE

Required service material is also described in the following.
“Front Brake Components (Page 4B-1)”

Special Tool

B823H14208002

09900–20205 Micrometer (0 – 25 mm) ☞(Page 4B-8) 	09900–20607 Dial gauge (1/100 mm, 10 mm) ☞(Page 4B-8) 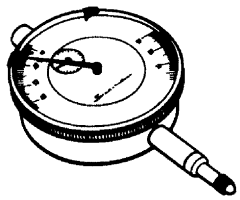
09900–20701 Magnetic stand ☞(Page 4B-8) 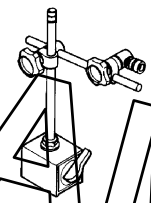	

SAMPLE

Rear Brakes

Repair Instructions

Rear Brake Components

B823H14306001

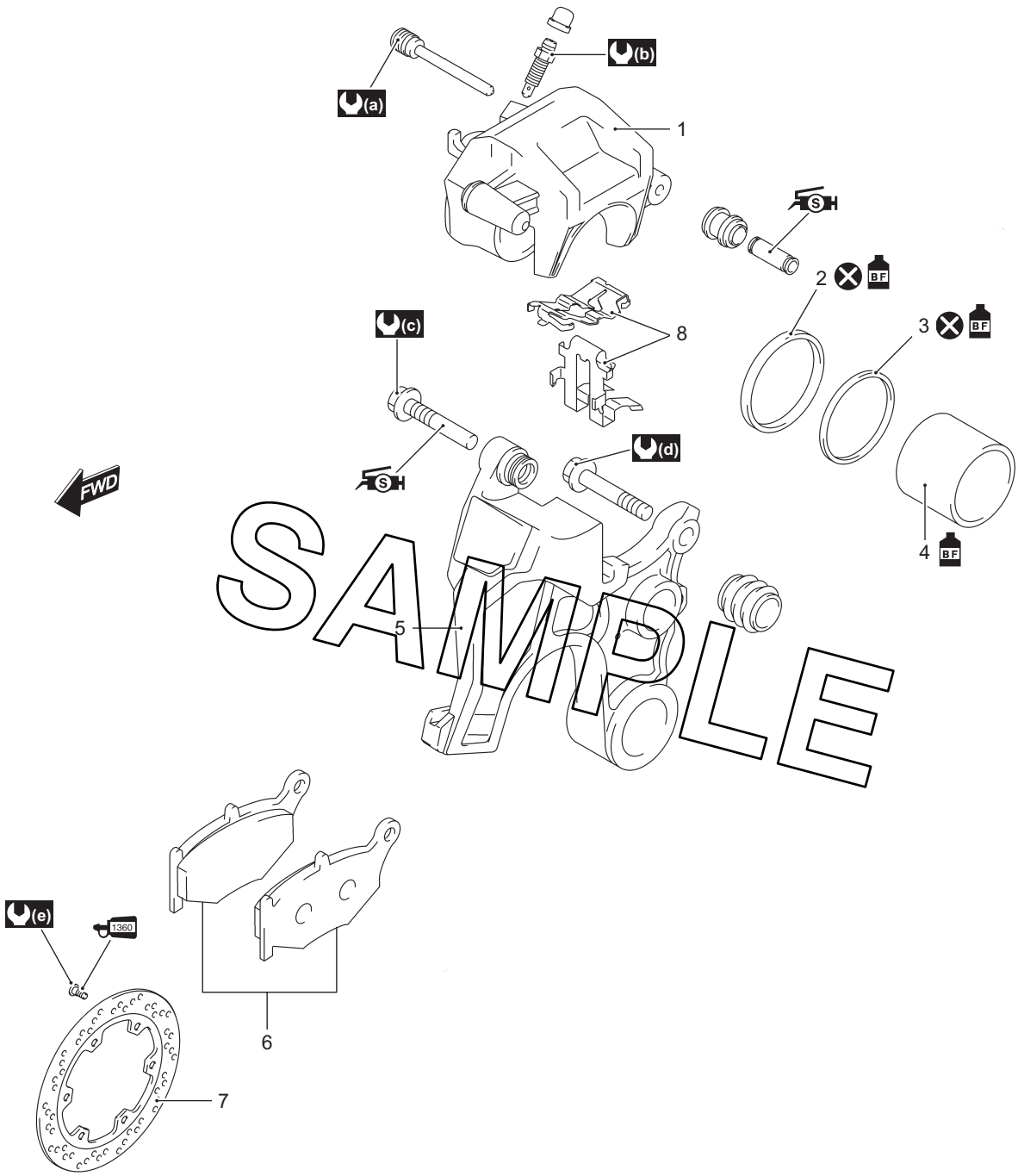

SAMPLE

I823H1430025-04

1. Rear caliper	7. Rear brake disc	(e) : 35 N·m (3.5 kgf-m, 2.5 lb-ft)
2. Piston seal	8. Brake pad spring	S : Apply silicone grease to sliding surface.
3. Dust seal	(a) : 15 N·m (1.5 kgf-m, 11.0 lb-ft)	1360 : Apply thread lock to the thread part.
4. Piston	(b) : 7.5 N·m (0.75 kgf-m, 5.5 lb-ft)	BF : Apply brake fluid.
5. Rear caliper bracket	(c) : 33 N·m (3.3 kgf-m, 24.0 lb-ft)	: Do not reuse.
6. Rear brake pad set	(d) : 17 N·m (1.7 kgf-m, 12.5 lb-ft)	

Rear Brake Pad Inspection

B823H14306002

The extent of brake pads wear can be checked by observing the grooved limit line “A” on the pads. When the wear exceeds the grooved limit line, replace the pads with new ones. Refer to “Rear Brake Pad Replacement (Page 4C-2)”.

⚠ CAUTION

Replace the brake pad as a set, otherwise braking performance will be adversely affected.

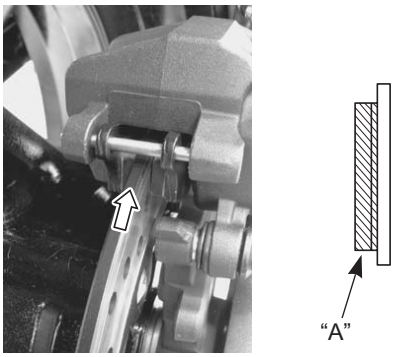

I823H1430001-03

Rear Brake Pad Replacement

B823H14306003

1) Remove the pad mounting pin (1).
2) Remove the caliper mounting bolt (2).

⚠ CAUTION

Do not operate the brake pedal while dismounting the pads.

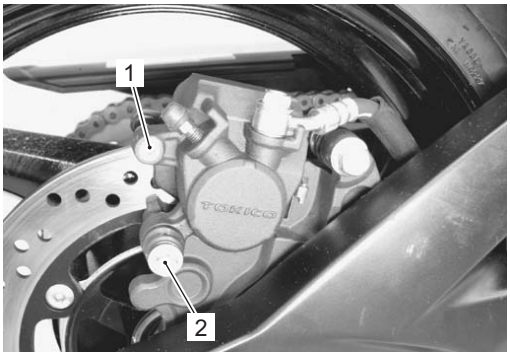

I823H1430002-01

3) Remove the brake pads (3) with the rear caliper pivoted up.

NOTE

When removing the pads, push the piston all the way into brake caliper.

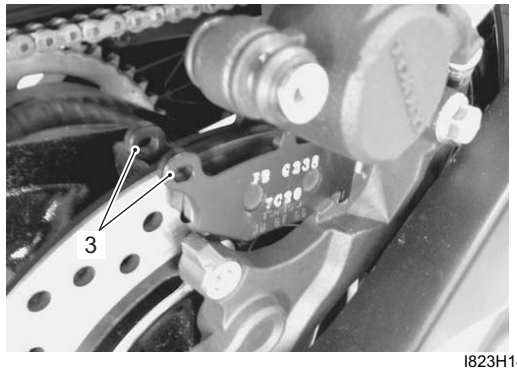

I823H1430003-01

4) Clean up the caliper, especially around the caliper piston.

⚠ CAUTION

Replace the brake pads as a set, otherwise braking performance will be adversely affected.

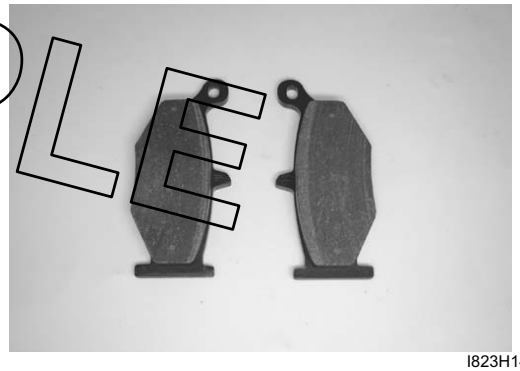

I823H1430004-01

5) Install the new brake pads.

NOTE

Make sure that the detent of the pad is seated onto the retainer on the caliper bracket.

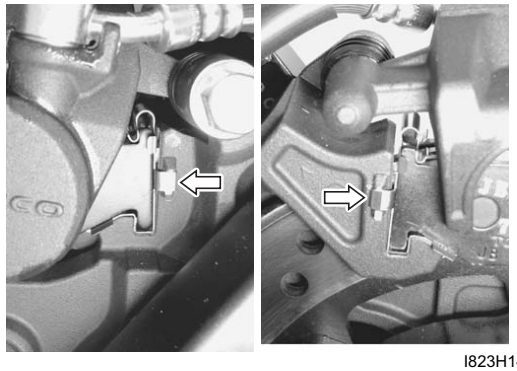

I823H1430005-01

SAMPLE

6) Tighten the caliper mounting bolt (4) and pad mounting pin (5) to the specified torque.

Tightening torque
Rear brake caliper mounting bolt (a): 17 N·m (1.7 kgf-m, 12.5 lb-ft)
Rear brake pad mounting pin (b): 15 N·m (1.5 kgf-m, 11.0 lb-ft)

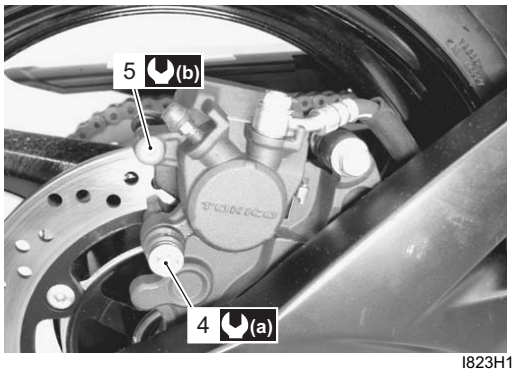

I823H1430006-01

NOTE

After replacing the brake pads, pump the brake pedal several times to check for proper brake operation and then check the brake fluid level.

Rear Brake Caliper Removal and Installation

B823H14306004

Removal

1) Drain brake fluid. Refer to “Brake Fluid Replacement in Section 4A (Page 4A-6)”.
2) Remove the brake hose from the caliper by removing the union bolt (1) and catch the brake fluid in a suitable receptacle.

NOTE

Place a rag underneath the union bolt on the brake caliper to catch any spilt brake fluid.

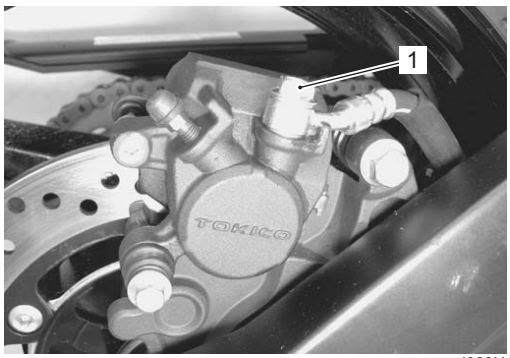

I823H1430007-01

3) Remove the brake pads. Refer to “Rear Brake Pad Replacement (Page 4C-2)”.
4) Pivot the caliper up and remove the caliper from the caliper bracket.

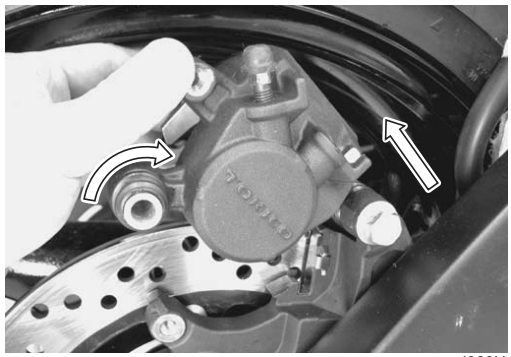
I823H1430008-01

Installation

Install the brake caliper in the reverse order of removal. Pay attention to the following points:

- Install the brake pad and remount the brake caliper. Refer to “Rear Brake Pad Replacement (Page 4C-2)”.
- After setting the brake hose union to the stopper, tighten the union bolt (1) to the specified torque.

⚠ CAUTION

The seal washers should be replaced with the new ones to prevent fluid leakage.

Tightening torque
Brake hose union bolt (a): 23 N·m (2.3 kgf-m, 16.5 lb-ft)

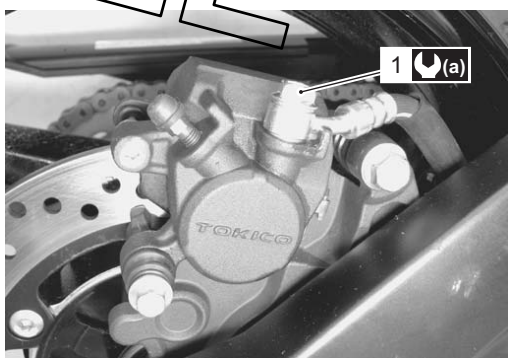

I823H1430009-01

- Bleed air from the brake system after installing the caliper. Refer to “Air Bleeding from Brake Fluid Circuit in Section 4A (Page 4A-4)”.
- Check the brake fluid leakage and brake operation.

⚠ WARNING

Brake fluid, if it leaks, will interfere with safe running and discolor painted surfaces.
Check the brake hose and hose joints for cracks and fluid leakage.

SAMPLE

Rear Brake Caliper Disassembly and Assembly

B823H14306005

Refer to “Rear Brake Caliper Removal and Installation (Page 4C-3)”.

Disassembly

1) Remove the pad spring (1), rubber boot (2) and sliding pin (3).

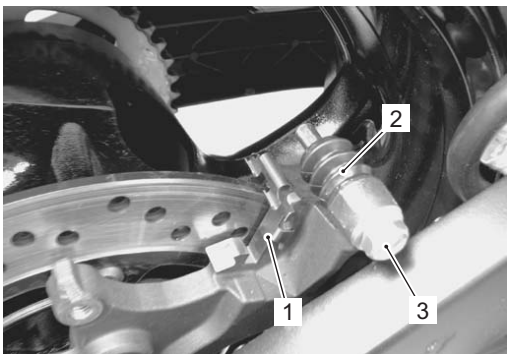

I823H1430010-01

2) Remove the pad spring (4).
3) Remove the spacer (5) and rubber boot (6) from the caliper.

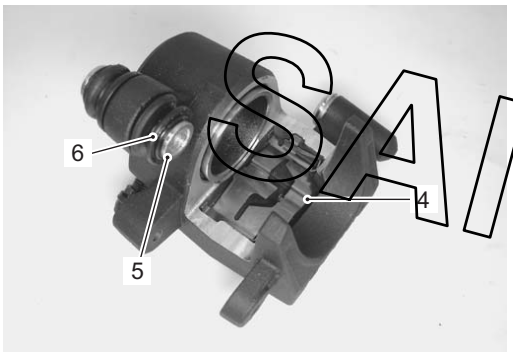

I823H1430011-02

4) Place a rag over the piston to prevent it from popping out and then force out the piston using compressed air.

⚠ CAUTION

Do not use high pressure air to prevent piston damage.

I823H1430012-01

5) Remove the dust seal (7) and piston seal (8).

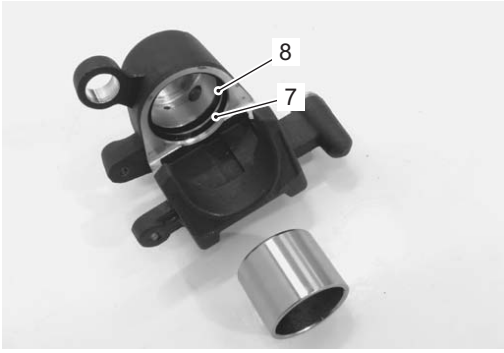

I823H1430013-01

Assembly

Assemble the caliper in the reverse order of disassembly. Pay attention to the following points:

- Wash the caliper bore and piston with specified brake fluid. Particularly wash the dust seal groove and piston seal groove.

  BF: Brake fluid (DOT 4)

⚠ CAUTION

- **Wash the caliper components with fresh brake fluid before reassembly. Never use cleaning solvent or gasoline to wash them.**
- **Do not wipe the brake fluid off after washing the components.**
- **When washing the components, use the specified brake fluid. Never use different types of fluid or cleaning solvent such as gasoline, kerosine or the others.**

SAMPLE

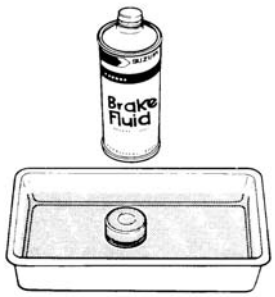

I649G1430018-02

- Apply the brake fluid to piston seal (1) and dust seal (2).

⚠ CAUTION

Replace the piston seal (1) and dust seal (2) with new ones.

BF: Brake fluid (DOT 4)

- Install the piston seal (1) as shown in the figure.

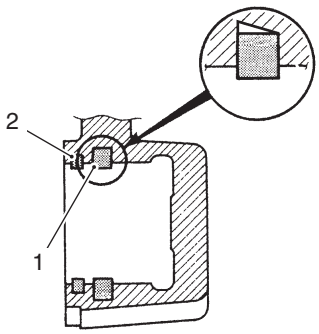

I649G1420013-02

- Apply grease to the inside of the rubber boot.

: Grease 99000–25100 (SUZUKI Silicone Grease or equivalent)

- Set the rubber boot to the caliper.
- Install the spacer into the rubber boot.

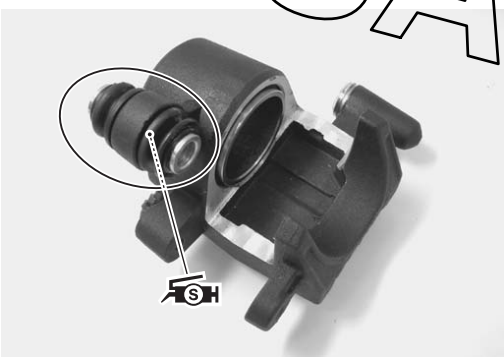

I823H1430014-01

- Tighten the sliding pin (3) and apply grease to the sliding pin.

: Grease 99000–25100 (SUZUKI Silicone Grease or equivalent)

Tightening torque
Rear brake caliper sliding pin (a): 33 N·m (3.3 kgf-m, 24.0 lb-ft)

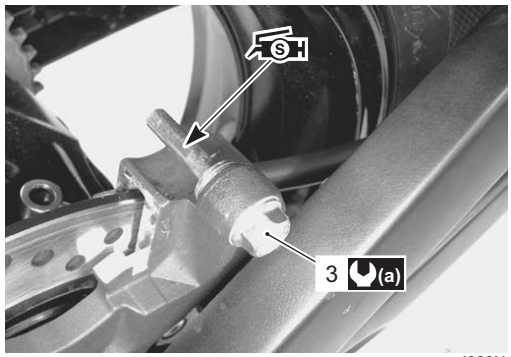

I823H1430015-01

- Set the rubber boot onto the brake caliper and sliding pin.
- Install the brake caliper to its bracket.

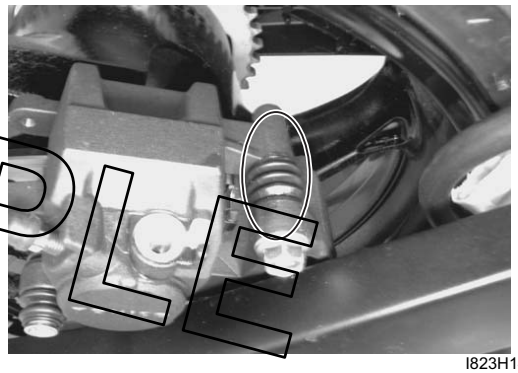

I823H1430024-01

SAMPLE

Rear Brake Caliper Parts Inspection

B823H14306006

Refer to “Rear Brake Caliper Disassembly and Assembly (Page 4C-4)”.

Brake Caliper Cylinder

Inspect the brake caliper cylinder wall for nicks, scratches or other damage. If any damage is found, replace the caliper with a new one.

I823H1430018-01

Brake Caliper Piston

Inspect the brake caliper piston surface for any scratches or other damage. If any damage is found, replace the piston with a new one.

I823H1430017-01

Brake Caliper Sliding Pin

Inspect the brake caliper sliding pin for wear and other damage. If any damage is found, replace the sliding pin with a new one.

I823H1430019-01

Boot and Spacer

Inspect the boots and spacer for damage and wear. If any defects are found, replace them with new ones.

I823H1430020-01

Brake Pad Spring

Inspect the brake pad springs for damage and excessive bend. If any defects are found, replace them with new ones.

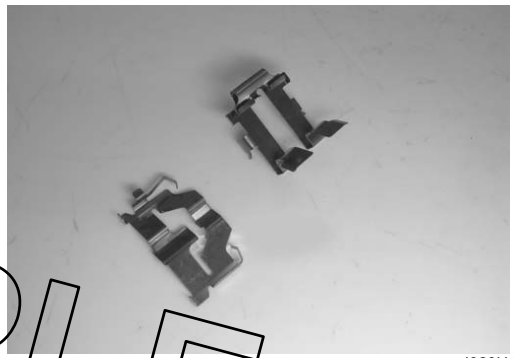

I823H1430021-01

SAMPLE

Rear Brake Disc Removal and Installation

B823H14306007

Removal

1) Remove the rear wheel assembly. Refer to “Rear Wheel Assembly Removal and Installation in Section 2D (Page 2D-11)”.
2) Remove the rear brake disc.

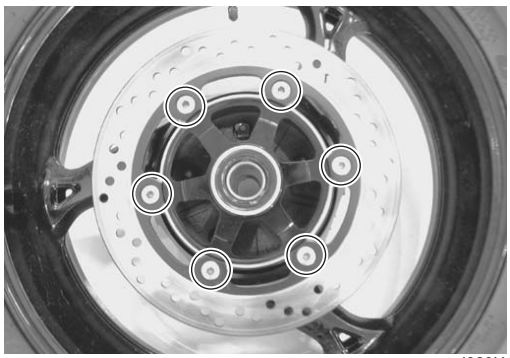

I823H1430022-01

Installation

Install the rear brake disc in the reverse order of removal. Pay attention to the following points:

- Make sure that the brake discs are clean and free of any grease.
- Apply thread lock to the brake disc bolts (1) and tighten them to the specified torque.

1360 : Thread lock cement 99000–32130 (Thread Lock Cement Super 1360 or equivalent)

Tightening torque
Brake disc bolt (Rear) (a): 35 N·m (3.5 kgf-m, 25.5 lb-ft)

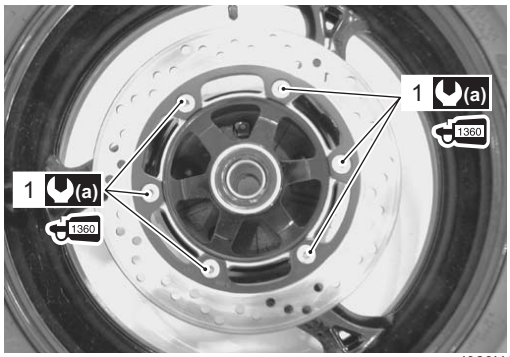

I823H1430023-01

Rear Brake Disc Inspection

B823H14306008

Brake Disc Thickness

Check the brake disc for damage or cracks and measure the thickness using the micrometer.
Replace the brake disc if the thickness is less than the service limit or if defect is found.

Special tool
TOOL (A): 09900–20205 (Micrometer (0 – 25 mm))

Brake disc thickness
Service limit (Rear): 5.0 mm (0.20 in)

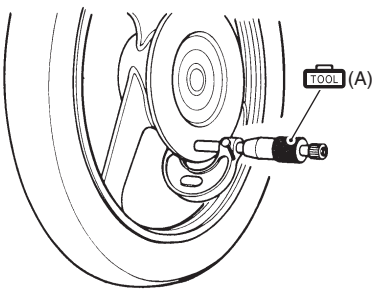

I649G1430027-03

Brake Disc Runout

1) Dismount the rear brake caliper. Refer to “Rear Brake Caliper Removal and Installation (Page 4C-3)”.
2) Measure the runout using the dial gauge.
   Replace the disc if the runout exceeds the service limit.

   Special tool
   TOOL (A): 09900–20607 (Dial gauge (1/100 mm, 10 mm))
   TOOL : 09900–20701 (Magnetic stand)

   Brake disc runout
   Service limit: 0.30 mm (0.012 in)

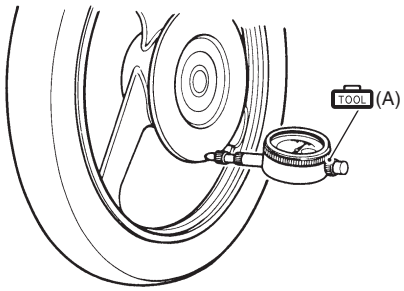

I649G1430028-03

3) Remount the rear brake caliper. Refer to “Rear Brake Caliper Removal and Installation (Page 4C-3)”.

SAMPLE

Specifications

Service Data

B823H14307001

Brake

Unit: mm (in)

Item	Standard		Limit
Brake disc thickness	Rear	5.3 – 5.7 (0.21 – 0.22)	5.0 (0.20)
Brake disc runout	—		0.30 (0.012)
Brake caliper cylinder bore	Rear	38.180 – 38.256 (1.5031 – 1.5061)	—
Brake caliper piston diam.	Rear	38.098 – 38.148 (1.4999 – 1.5019)	—
Brake fluid type	DOT 4		—

Tightening Torque Specifications

B823H14307002

Fastening part	Tightening torque			Note
	N·m	kgf-m	lb-ft	
Rear brake caliper mounting bolt	17	1.7	12.5	☞(Page 4C-3)
Rear brake pad mounting pin	15	1.5	11.0	☞(Page 4C-3)
Brake hose union bolt	23	2.3	16.5	☞(Page 4C-3)
Rear brake caliper sliding pin	33	3.3	24.0	☞(Page 4C-5)
Brake disc bolt (Rear)	35	3.5	25.5	☞(Page 4C-7)

NOTE

The specified tightening torque is also described in the following.
“Rear Brake Components (Page 4C-1)”

Reference:
For the tightening torque of fastener not specified in this section, refer to “Tightening Torque List in Section 0C (Page 0C-9)”.

SAMPLE

Special Tools and Equipment

Recommended Service Material

B823H14308001

Material	SUZUKI recommended product or Specification		Note
Brake fluid	DOT 4	—	☞(Page 4C-4) / ☞(Page 4C-5)
Grease	SUZUKI Silicone Grease or equivalent	P/No.: 99000–25100	☞(Page 4C-5) / ☞(Page 4C-5)
Thread lock cement	Thread Lock Cement Super 1360 or equivalent	P/No.: 99000–32130	☞(Page 4C-7)

NOTE

Required service material is also described in the following.
“Rear Brake Components (Page 4C-1)”

Special Tool

B823H14308002

09900–20205 Micrometer (0 – 25 mm) ☞(Page 4C-7) 	09900–20607 Dial gauge (1/100 mm, 10 mm) ☞(Page 4C-7) 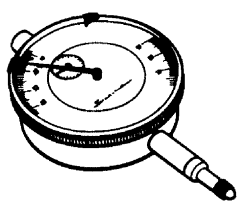
09900–20701 Magnetic stand ☞(Page 4C-7) 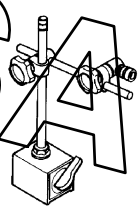	

SAMPLE

Section 5

Transmission / Transaxle

CONTENTS

Precautions 5-1
- **Precautions 5-1**
  - Precautions for Transmission / Transaxle 5-1

Manual Transmission 5B-1
- **Diagnostic Information and Procedures 5B-1**
  - Manual Transmission Symptom Diagnosis 5B-1
- **Repair Instructions 5B-2**
  - Transmission Components 5B-2
  - Transmission Removal 5B-3
  - Transmission Installation 5B-4
  - Transmission Construction 5B-7
  - Countershaft Gear / Driveshaft Gear Disassembly and Assembly 5B-7
  - Transmission Related Parts Inspection 5B-10
  - Gear Position (GP) Switch Inspection 5B-11
  - Gear Position (GP) Switch Removal and Installation 5B-11
  - Gearshift Lever Construction 5B-13
  - Gearshift Lever Removal and Installation 5B-14
  - Gearshift Lever Height Inspection and Adjustment 5B-14
  - Gearshift Shaft / Gearshift Cam Plate Components 5B-14
  - Gearshift Shaft Construction 5B-15
  - Gearshift Shaft / Gearshift Cam Plate Removal and Installation 5B-16
  - Gearshift Linkage Inspection 5B-17
  - Gearshift Shaft Oil Seal / Bearing Removal and Installation 5B-17
- **Specifications 5B-19**
  - Service Data 5B-19
  - Tightening Torque Specifications 5B-19
- **Special Tools and Equipment 5B-20**
  - Recommended Service Material 5B-20
  - Special Tool 5B-20

Clutch 5C-1
- **Precautions 5C-1**
  - Precautions for Clutch System 5C-1
  - Clutch Fluid (Brake Fluid) Information 5C-1
- **Schematic and Routing Diagram 5C-2**
  - Clutch Hose Routing Diagram (Except for E-33) 5C-2
  - Clutch Hose Routing Diagram (For E-33) 5C-3
- **Diagnostic Information and Procedures 5C-4**
  - Clutch System Symptom Diagnosis 5C-4
- **Repair Instructions 5C-4**
  - Clutch Lever Position Switch Inspection 5C-4
  - Clutch Fluid Level Check 5C-4
  - Clutch Hose Inspection 5C-4
  - Air Bleeding from Clutch Fluid Circuit 5C-5
  - Clutch Fluid Replacement 5C-5
  - Clutch Hose Removal and Installation 5C-6
  - Clutch Control System Components 5C-7
  - Clutch Master Cylinder Assembly Removal and Installation 5C-8
  - Clutch Master Cylinder / Clutch Lever Disassembly and Assembly 5C-9
  - Clutch Master Cylinder Components Inspection 5C-11
  - Clutch Release Cylinder / Push Rod Removal and Installation 5C-11
  - Clutch Push Rod Inspection 5C-12
  - Clutch Release Cylinder Disassembly and Assembly 5C-12
  - Clutch Release Cylinder Inspection 5C-13
  - Clutch Components 5C-14
  - Clutch Removal 5C-15
  - Clutch Installation 5C-17
  - Clutch Parts Inspection 5C-21
- **Specifications 5C-23**
  - Service Data 5C-23
  - Tightening Torque Specifications 5C-23
- **Special Tools and Equipment 5C-24**
  - Recommended Service Material 5C-24
  - Special Tool 5C-24

SAMPLE

Precautions

Precautions

Precautions for Transmission / Transaxle

B823H15000001

Refer to “General Precautions in Section 00 (Page 00-1)”.

SAMPLE

Manual Transmission

Diagnostic Information and Procedures

Manual Transmission Symptom Diagnosis

B823H15204001

Condition	Possible cause	Correction / Reference Item
Engine is noisy (Noise seems to come from the transmission)	Worn or rubbing gear.	*Replace.*
	Worn countershaft spline.	*Replace countershaft.*
	Worn driveshaft spline.	*Replace driveshaft.*
	Worn or rubbing primary gear.	*Replace.*
	Worn bearing.	*Replace.*
Transmission will not shift	Broken gearshift cam.	*Replace.*
	Distorted gearshift fork.	*Replace.*
	Worn gearshift pawl.	*Replace.*
Transmission will not shift back	Broken gearshift shaft return spring.	*Replace.*
	Rubbing or stuck gearshift shaft.	*Repair or replace.*
	Worn or distorted gearshift fork.	*Replace.*
Transmission jumps out of gear	Worn shifting gears on driveshaft or countershaft.	*Replace.*
	Worn or distorted gearshift fork.	*Replace.*
	Weakened gearshift stopper spring.	*Replace.*
	Worn gearshift cam plate.	*Replace.*

SAMPLE

Repair Instructions

Transmission Components

B823H15206001

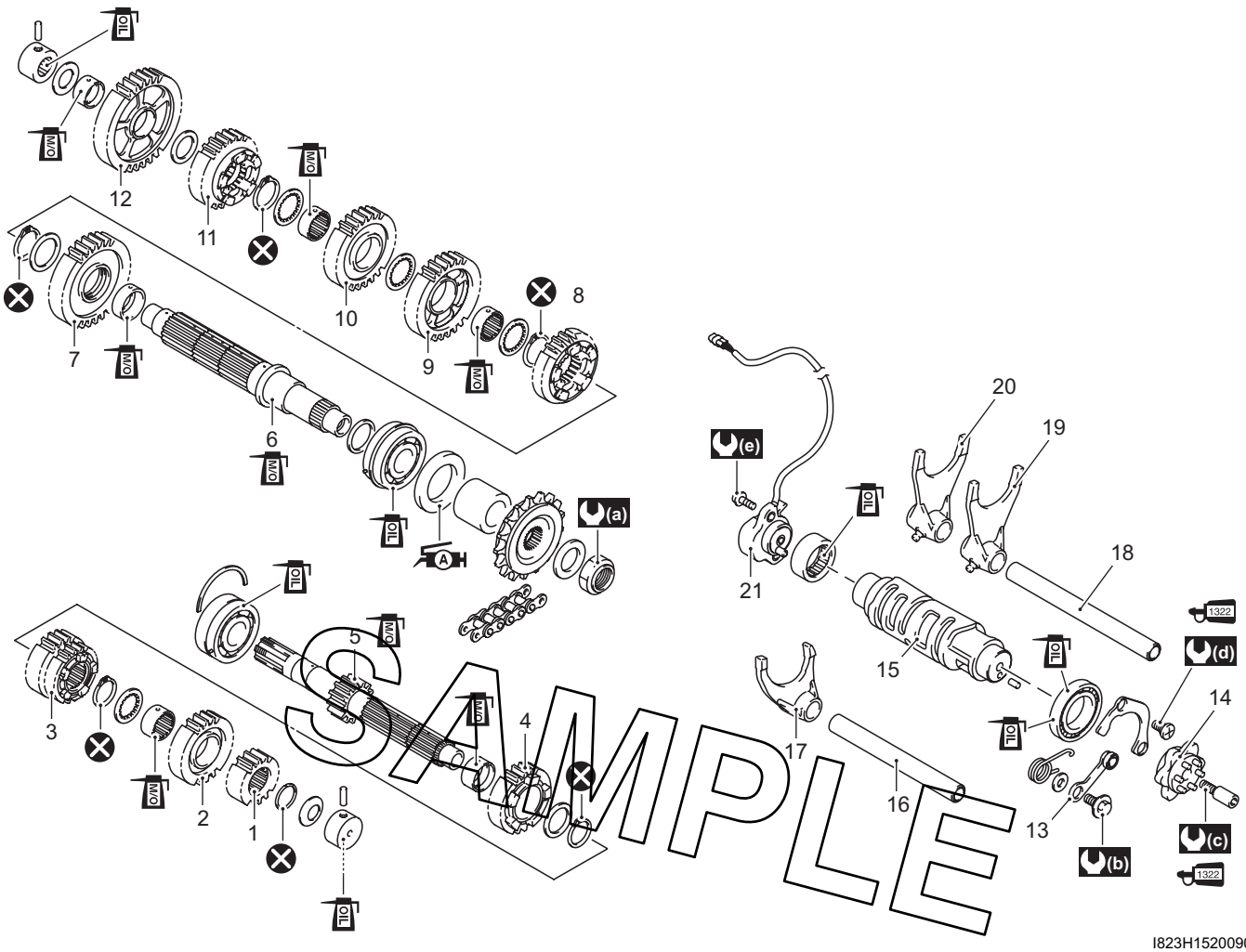

I823H1520090-04

1. 2nd drive gear	12. 1st driven gear	(b) : 10 N·m (1.0 kgf-m, 7.0 lb-ft)
2. 6th drive gear	13. Gearshift cam stopper	(c) : 13 N·m (1.3 kgf-m, 9.5 lb-ft)
3. 3rd/4th drive gears	14. Gearshift cam plate	(d) : 8 N·m (0.8 kgf-m, 6.0 lb-ft)
4. 5th drive gear	15. Gearshift cam	(e) : 6.5 N·m (0.65 kgf-m, 4.7 lb-ft)
5. Countershaft/1st drive gear	16. Gearshift fork shaft	OIL : Apply engine oil.
6. Driveshaft	17. Gearshift fork (For 3rd/4th drive gears)	M/O : Apply molybdenum oil solution.
7. 2nd driven gear	18. Gearshift fork shaft	A : Apply grease to the oil seal lip.
8. 6th driven gear	19. Gearshift fork (For 6th driven gear)	1322 : Apply thread lock to the thread part.
9. 3rd driven gear	20. Gearshift fork (For 5th driven gear)	⊗ : Do not reuse.
10. 4th driven gear	21. GP switch	
11. 5th driven gear	(a) : 145 N·m (14.5 kgf-m, 105.0 lb-ft)	

Transmission Removal

B823H15206002

1) Remove the engine assembly from the frame. Refer to “Engine Assembly Removal in Section 1D (Page 1D-19)”.
2) Remove the engine top side. Refer to “Engine Top Side Disassembly in Section 1D (Page 1D-28)”.
3) Separate the upper and lower crankcases. Refer to “Engine Bottom Side Disassembly in Section 1D (Page 1D-64)”.

Driveshaft Assembly / Countershaft Assembly

1) Remove the driveshaft assembly (1) and countershaft assembly (2).
2) Remove the oil seal (3).

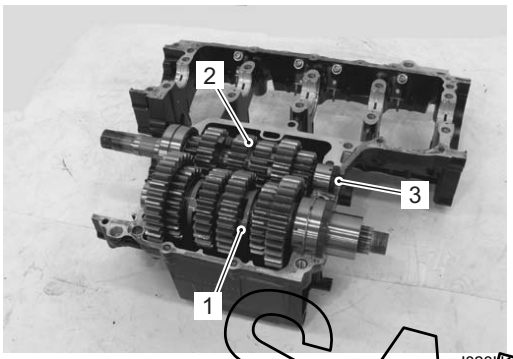

I823H1520057-02

3) Remove the bearing pins (4) and C-ring (5).

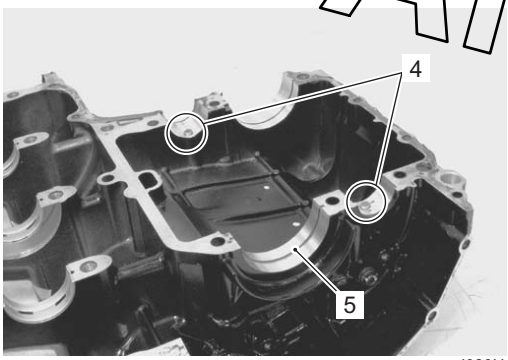

I823H1520058-01

Gearshift Fork and Gearshift Cam

1) Remove the gearshift cam bearing retainer (1) from the lower crankcase.

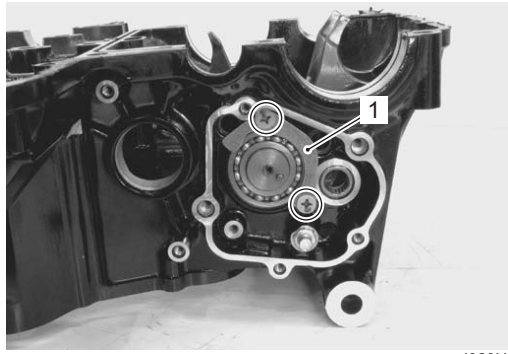

I823H1520059-01

2) Remove the gearshift fork shafts (2) and gearshift forks (3) from the lower crankcase.

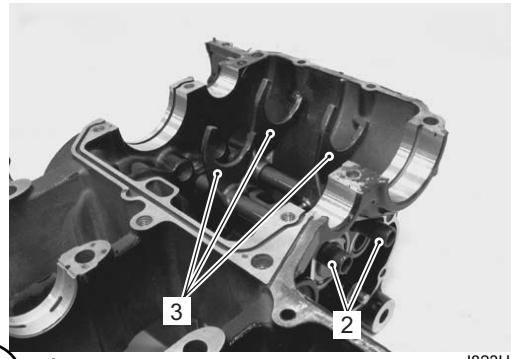

I823H1520060-02

3) Remove the gearshift cam (4) and its bearing.

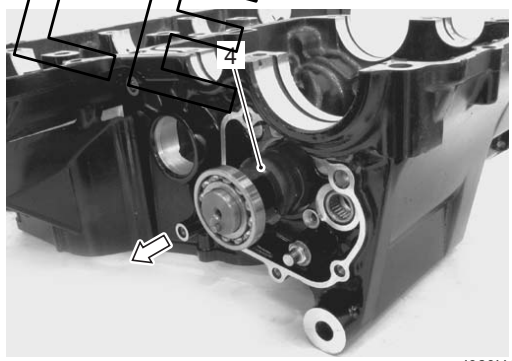

I823H1520061-01

SAMPLE

Bearing

1) Remove the gearshift shaft bearing using the special tool.

Special tool
TOOL (A): 09921–20240 (Bearing remover set)

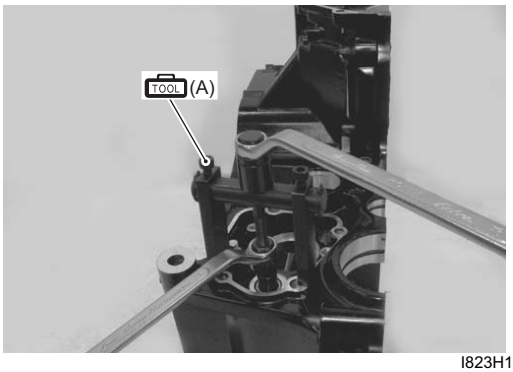

I823H1520062-01

2) Remove the gearshift cam bearing using the special tools.

Special tool
TOOL (B): 09923–74511 (Bearing remover)
TOOL (C): 09930–30104 (Rotor remover slide shaft)

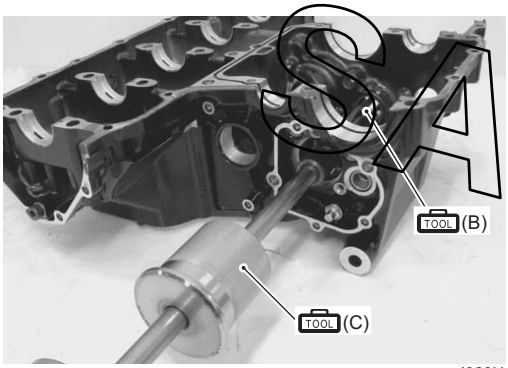

I823H1520063-01

Transmission Installation

B823H15206017

Install the transmission in the reverse order of removal. Pay attention to the following points:

Bearing

⚠ CAUTION

Replace the removed bearings with new ones.

- Install the gearshift shaft bearing using the special tool.

Special tool
TOOL (A): 09913–70210 (Bearing installer set)

NOTE

The stamped mark side of the gearshift shaft bearing faces outside.

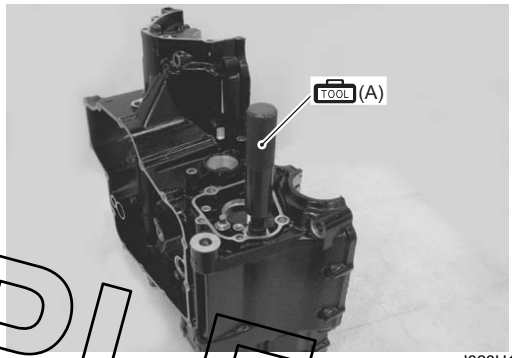

I823H1520064-01

- Install the gearshift cam bearing using the special tool.

Special tool
TOOL (A): 09913–70210 (Bearing installer set)

NOTE

The stamped mark side of gearshift cam bearing faces the gearshift cam.

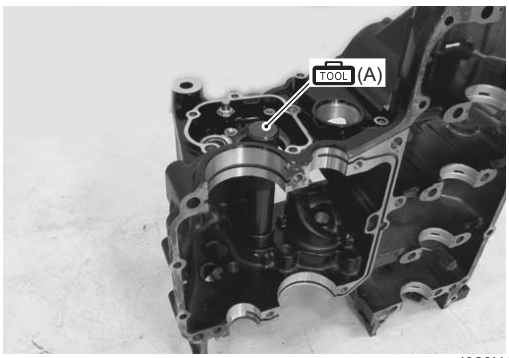

I823H1520065-01

SAMPLE

- Install the gearshift cam along with the bearing.

NOTE

The stamped mark side of the gearshift cam bearing faces outside.

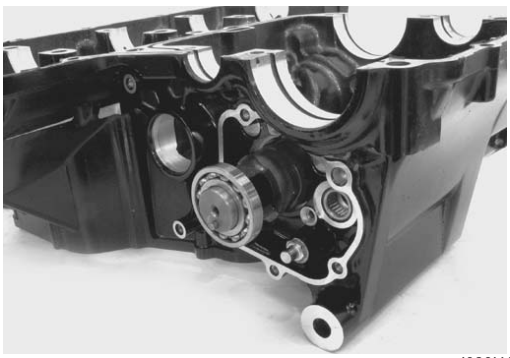

I823H1520066-03

- Install the gearshift forks and their shafts in position.

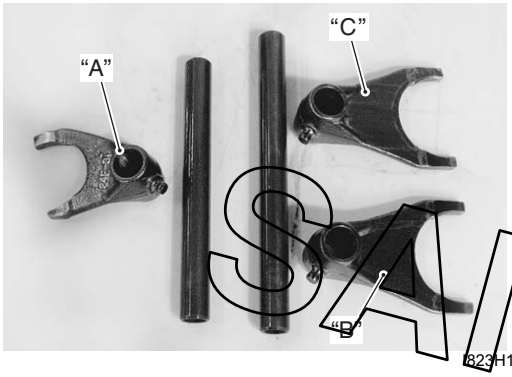

I823H1520011-02

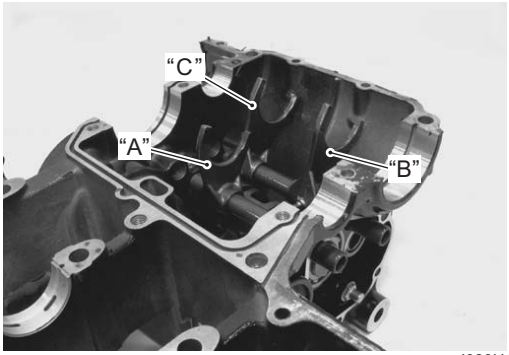

I823H1520067-01

"A":	For 3rd/ 4th drive gears
"B":	For 6th driven gear
"C":	For 5th driven gear

- Install the bearing retainer (4).

NOTE

Apply a small quantity of thread lock to the bearing retainer screws and tighten them to the specified torque.

1322 : Thread lock cement 99000–32110 (THREAD LOCK CEMENT SUPER 1322 or equivalent)

Tightening torque
Bearing retainer screw: 8 N·m (0.8 kgf-m, 6.0 lb-ft)

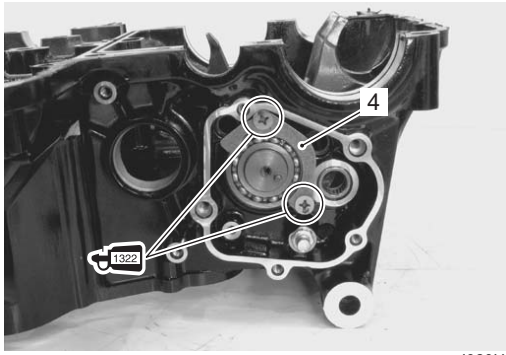

I823H1520068-02

Driveshaft / Countershaft Assembly

- Install the bearing pins (1) and C-ring (2) on the upper crankcase.

NOTE

Before installing the transmission assembly, use a nonflammable cleaning solvent to wipe off only or greasy matter from the crankcase mating surfaces and outside of the oil seal fitting surfaces.

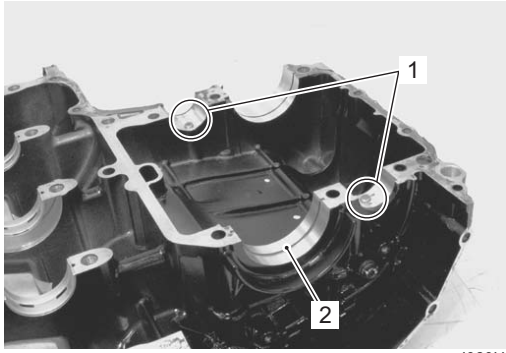

I823H1520069-01

SAMPLE

- Install the driveshaft assembly on the upper crankcase.

NOTE

Align the bearing ring “A” with the groove “B” on the crankcase and the bearing pin (1) with the indent “C” on the bearing.

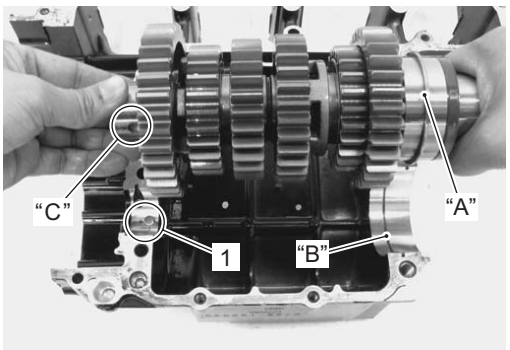

I823H1520070-01

- Install the countershaft assembly on the upper crankcase.

NOTE

Align the C-ring (3) with the groove “D” on the bearing and the bearing pin (4) with the indent “E” on the bearing.

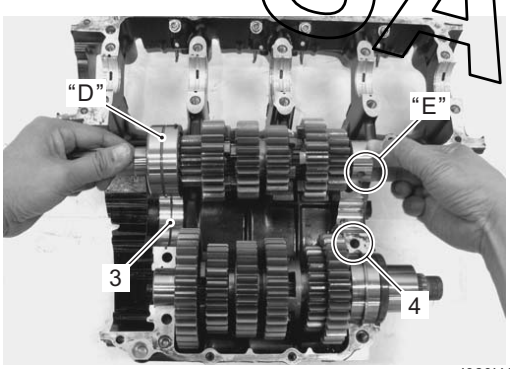

I823H1520071-02

- Install the oil seal (5).
- Turn each bearing to set the bearing dowel pin “F” and “G” in position.

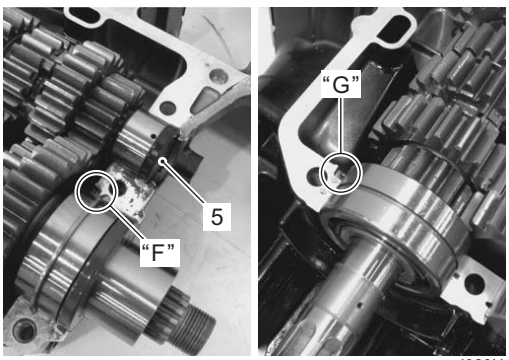

I823H1520072-02

- Assemble the engine. Refer to “Engine Bottom Side Assembly in Section 1D (Page 1D-72)” and “Engine Top Side Assembly in Section 1D (Page 1D-32)”.
- Remount the engine assembly. Refer to “Engine Assembly Installation in Section 1D (Page 1D-25)”.

SAMPLE

Transmission Construction

B823H15206004

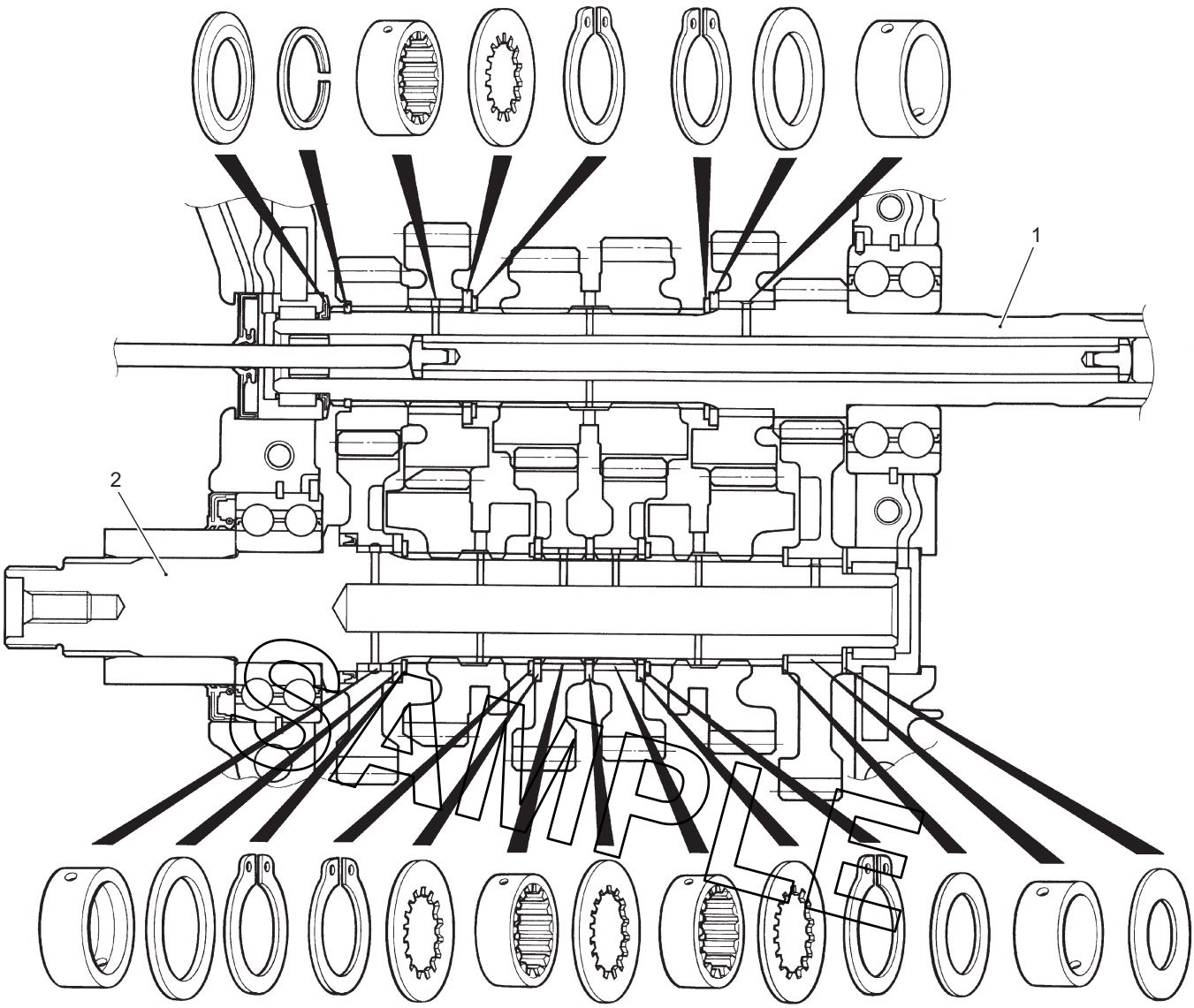

I823H1520086-02

1. Countershaft	2. Driveshaft

Countershaft Gear / Driveshaft Gear Disassembly and Assembly

B823H15206005

Refer to “Transmission Removal (Page 5B-3)” and “Transmission Installation (Page 5B-4)”.

Disassembly

⚠ CAUTION

Identify the position of each removed part. Organize the parts in their respective groups (i.e., drive or driven) so that they can be reinstalled in their original positions.

Disassemble the countershaft and driveshaft as shown in the transmission construction. Refer to “Transmission Construction (Page 5B-7)”.
Pay attention to the following points:

Countershaft

- Remove the 6th drive gear snap ring (1) from its groove and slide it towards the 3rd/4th drive gears (2).

Special tool
TOOL : 09900–06104 (Snap ring pliers)

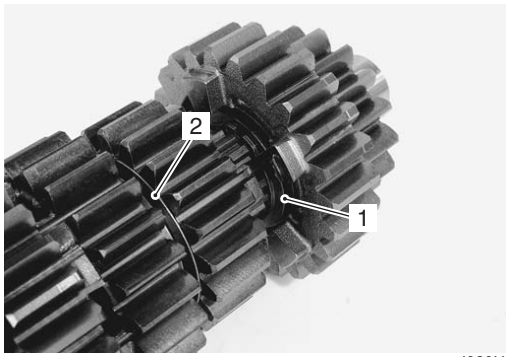

I823H1520018-01

- Slide the 6th (3) and 2nd (4) drive gears toward the 3rd/4th drive gears (2), then remove the 2nd drive gear circlip (5).
- Remove the 2nd drive gear (4) and 6th drive gear (3).

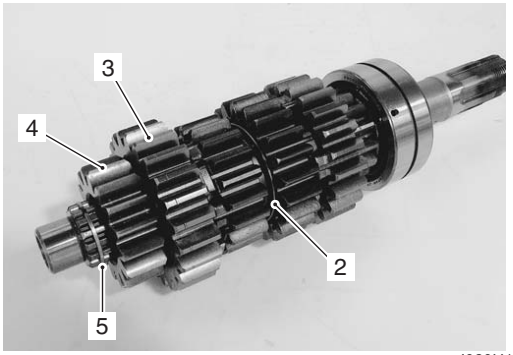

I823H1520019-01

- Remove the countershaft bearing (6) using hydraulic press.

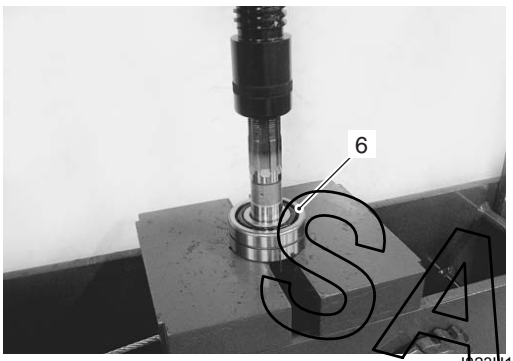

I823H1520020-01

Driveshaft

- Remove the friction ring (1) on the driveshaft by using a screwdriver.

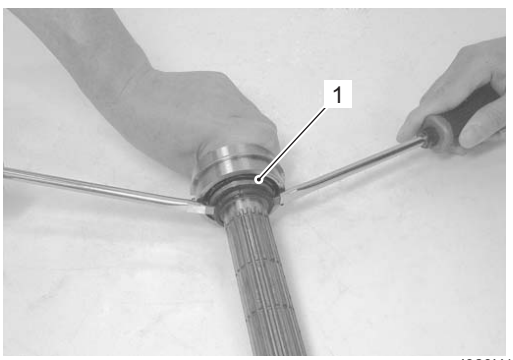

I823H1520087-01

- Remove the driveshaft bearing (2) along with the spacer (3) using a hydraulic press.

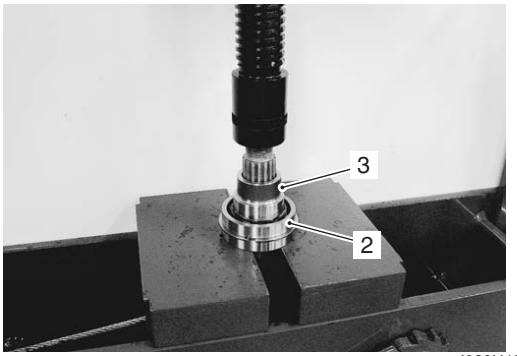

I823H1520021-02

Assembly

NOTE

When reassembling the transmission gears, attention must be given to the locations and positions of washers and snap rings. The cross sectional view shows the correct position of the gears, bushings, washers and snap rings. Refer to “Transmission Construction (Page 5B-7)”.

⚠ CAUTION

- **Never reuse a snap ring. After a snap ring has been removed from the shaft, it should be discarded and a new snap ring must be installed.**
- **When installing a new snap ring, do not expand the end gap larger than required to slip the snap ring over the shaft.**
- **After installing a snap ring, make sure that it is completely seated in the groove and securely fitted.**

SAMPLE

NOTE

- **Rotate the bearing by hand to inspect if there is any abnormal noise and for smooth rotation. Replace the bearing if there is anything unusual.**
- **Before installing the gears, apply molybdenum oil to the driveshaft and countershaft.**
- **Before installing the oil seal, apply grease to the oil seal lip.**

M/O: Molybdenum oil (MOLYBDENUM OIL SOLUTION)
: Grease 99000–25010 (SUZUKI SUPER GREASE A or equivalent)

- When installing a new snap ring (1), pay attention to its direction. Fit it to the side where the thrust is as shown in the figure.

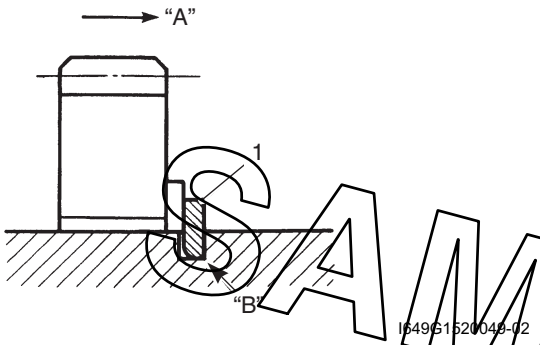

I649G1520049-02

"A": Thrust	"B": Sharp edge

Driveshaft

- Install the driveshaft bearing (1) using a hydraulic press and special tool.

⚠ CAUTION

Never reuse driveshaft bearing (1).

Special tool
TOOL (A): 09913–70210 (Bearing installer set)

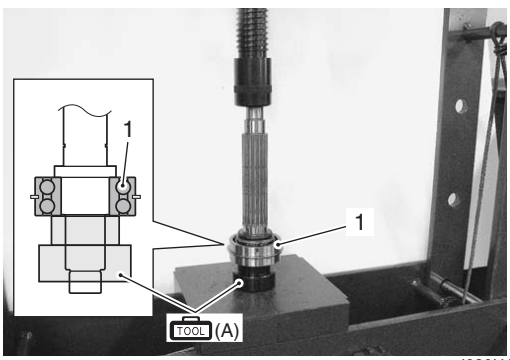

I823H1520022-01

- Install the spacer (2) using a hydraulic press and special tool.

Special tool
TOOL (A): 09913–70210 (Bearing installer set)

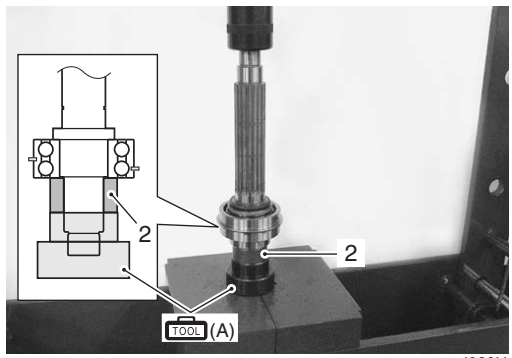

I823H1520023-02

- Press fit the friction ring (3) of the driveshaft with the special tool until the dimension "a" becomes 4.5 – 4.8 mm (0.18 – 0.19 in).

Special tool
TOOL (A): 09913–70210 (Bearing installer set)

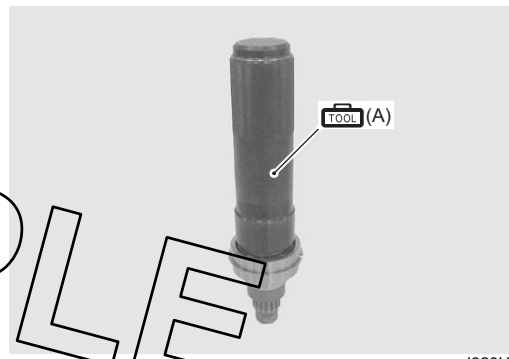

I823H1520088-01

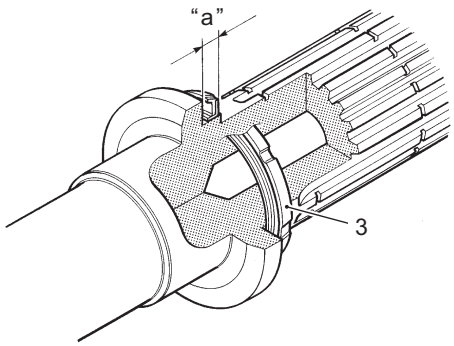

I823H1520089-02

"a": 4.5 – 4.8 mm (0.18 – 0.19 in)

SAMPLE

- When installing the gear bushings onto the driveshaft, align the shaft oil holes “A” with the bushing oil hole “B”.

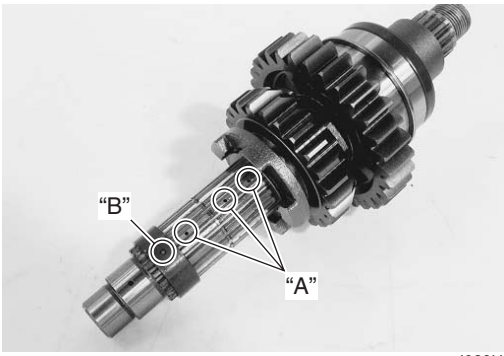

I823H1520024-01

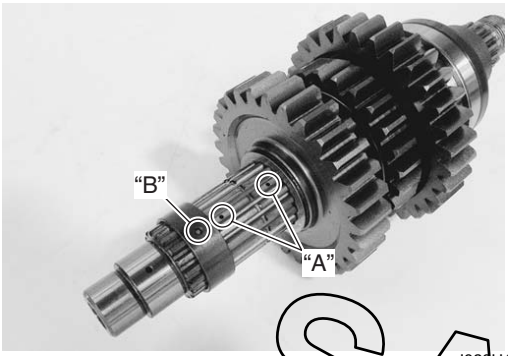

I823H1520025-01

Countershaft

- Install the countershaft bearing (1) using a hydraulic press and special tool.

Special tool
TOOL (A): 09913–70210 (Bearing installer set)

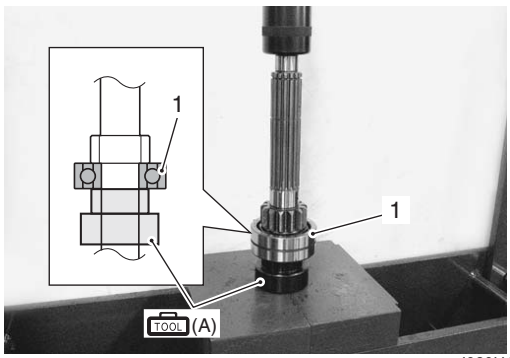

I823H1520026-02

- When installing the gear bushing onto the countershaft, align the shaft oil hole “A” with the bushing oil hole “B”.

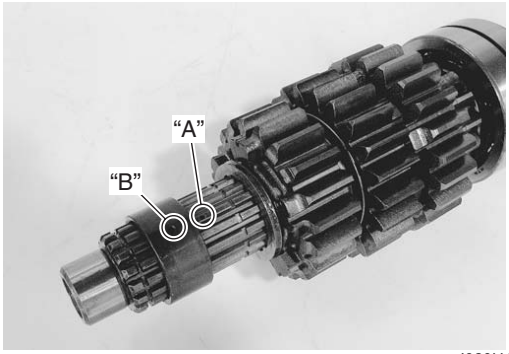

I823H1520027-01

Transmission Related Parts Inspection

B823H15206006

Refer to “Transmission Removal (Page 5B-3)”, “Transmission Installation (Page 5B-4)” and “Countershaft Gear / Driveshaft Gear Disassembly and Assembly (Page 5B-7)”.

Gearshift Fork to Groove Clearance

NOTE

The clearance for each gearshift fork plays an important role in the smoothness and positiveness of the shifting action.

Using the thickness gauge, check the gearshift fork clearance in the groove of its gear.
If the clearance checked is noted to exceed the limit specified, replace the fork or its gear, or both.

Special tool
TOOL (A): 09900–20803 (Thickness gauge)

Gearshift fork to gearshift fork groove clearance
Standard: 0.1 – 0.3 mm (0.004 – 0.012 in)
Service limit: 0.5 mm (0.02 in)

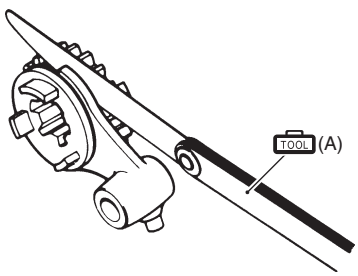

I649G1520056-03

SAMPLE

Gearshift Fork Groove Width
Measure the gearshift fork groove width using the vernier calipers.

Special tool
TOOL (A): 09900–20102 (Vernier calipers (1/20 mm, 200 mm))

Gearshift fork groove width
Standard: 5.0 – 5.1 mm (0.197 – 0.201 in)

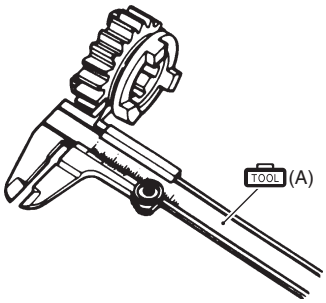

I649G1520057-03

Gearshift Fork Thickness
Measure the gearshift fork thickness using the vernier calipers.

Special tool
TOOL (A): 09900–20102 (Vernier calipers (1/20 mm, 200 mm))

Gearshift fork thickness
Standard: 4.8 – 4.9 mm (0.189 – 0.193 in)

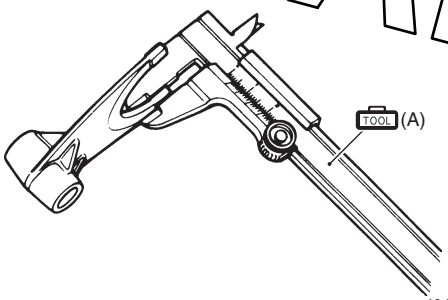

I649G1520058-03

Gearshift Cam Bearing
Inspect the gearshift cam bearings, left and right for abnormal noise and smooth rotation.
Replace the bearing if there is anything unusual. Refer to “Transmission Removal (Page 5B-3)” and “Transmission Installation (Page 5B-4)”.

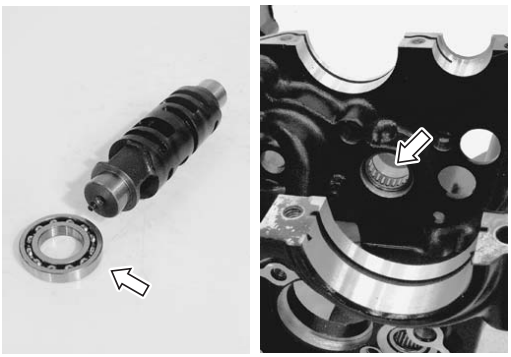
I823H1520074-01

Gear Position (GP) Switch Inspection

B823H15206007

Refer to “Side-stand / Ignition Interlock System Parts Inspection in Section 1I (Page 1I-8)”.

Gear Position (GP) Switch Removal and Installation

B823H15206008

Removal

1) Turn the ignition switch OFF.
2) Drain engine oil.
3) Remove the primary driven gear assembly. Refer to “Clutch Removal in Section 5C (Page 5C-15)” and “Clutch Installation in Section 5C (Page 5C-17)”.
4) Lift and support the fuel tank. Refer to “Fuel Tank Removal and Installation in Section 1G (Page 1G-10)”.
5) Disconnect the gear position switch coupler (1).

I823H1520073-01

6) Remove the gear position switch (2).

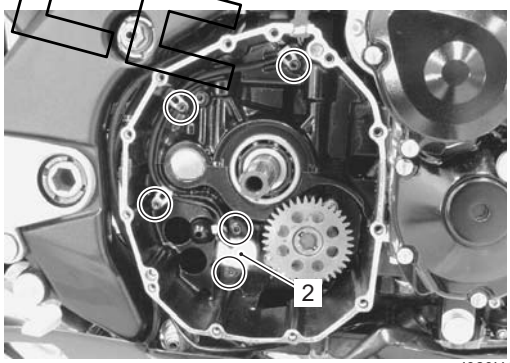

I823H1520091-01

SAMPLE

Installation

Install the gear position switch in the reverse order of removal. Pay attention to the following points:

NOTE

Align the gear position switch pin "A" with the gearshift cam hole "B".

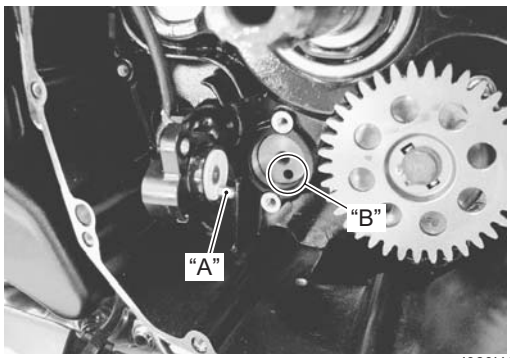

I823H1520092-01

- Apply a bond lightly to the gear position switch bolt lead wire grommet (1).

1207B : Sealant 99000–31140 (SUZUKI BOND No.1207B or equivalent)

NOTE

- **The flat surface of the clamp faces the lead wire.**
- **After contacting the clamp to the stopper "C" of the crankcase, tighten the clamp bolt.**
- **Be sure to install the grommet (1) to the crankcase.**

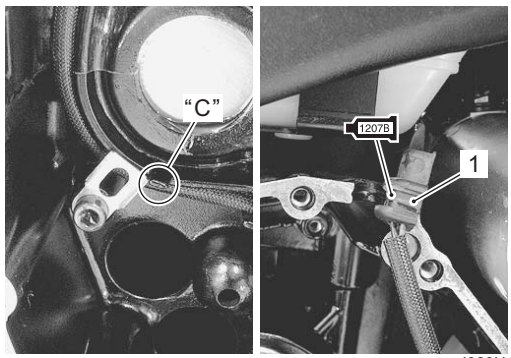

I823H1520093-02

Tightening torque
Gear position switch mounting bolt (a): 6.5 N·m (0.65 kgf-m, 4.7 lb-ft)
Gear position switch lead wire clamp bolt (b): 6.5 N·m (0.65 kgf-m, 4.7 lb-ft)

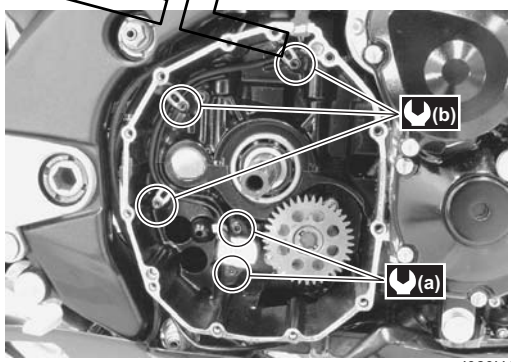

I823H1520094-01

- Route the gear position switch lead wire. Refer to "Wiring Harness Routing Diagram in Section 9A (Page 9A-5)".

SAMPLE

Gearshift Lever Construction

B823H15206009

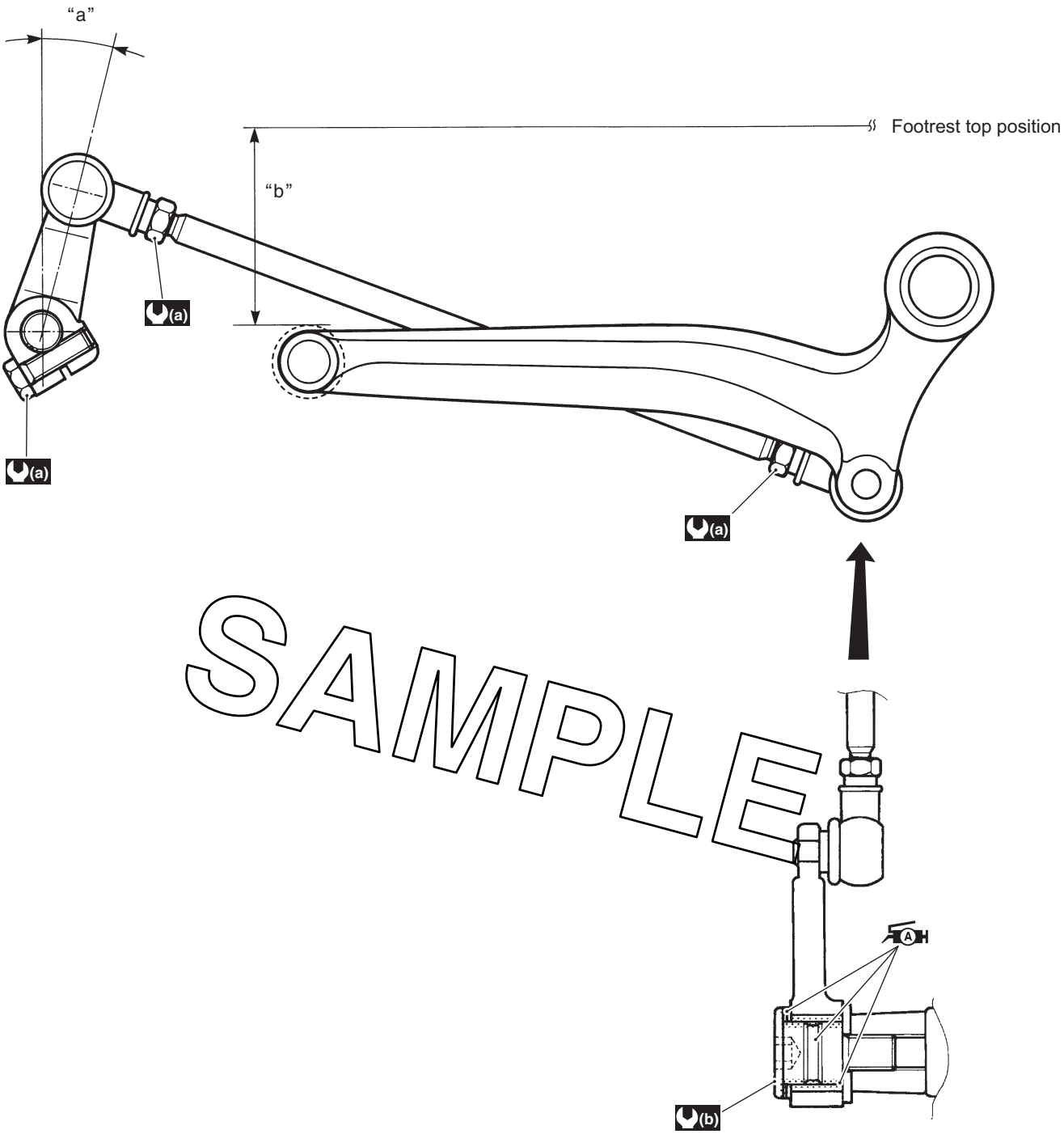

SAMPLE

I823H1520048-03

(a) : 10 N·m (1.0 kgf-m, 7.0 lb-ft)	"a": Approx. 14°	A : Apply grease.
(b) : 40 N·m (4.0 kgf-m, 29.0 lb-ft)	"b": 55 – 65 mm (2.2 – 2.6 in)	

Gearshift Lever Removal and Installation

B823H15206010

Removal

Remove the gearshift lever as shown in the gearshift lever construction. Refer to “Gearshift Lever Construction (Page 5B-13)”.

Installation

1) Install the gearshift lever as shown in the gearshift lever construction. Refer to “Gearshift Lever Construction (Page 5B-13)”.
2) After installing the gearshift lever, check the gearshift lever height. Refer to “Gearshift Lever Height Inspection and Adjustment (Page 5B-14)”.

Gearshift Lever Height Inspection and Adjustment

B823H15206011

Inspect and adjust the gearshift lever height in the following procedures:

1) Inspect the gearshift lever height “a” between the lever top and footrest.
   Adjust the gearshift lever height if necessary.

   Gearshift lever height “a”
   Standard: 55 – 65 mm (2.2 – 2.6 in)

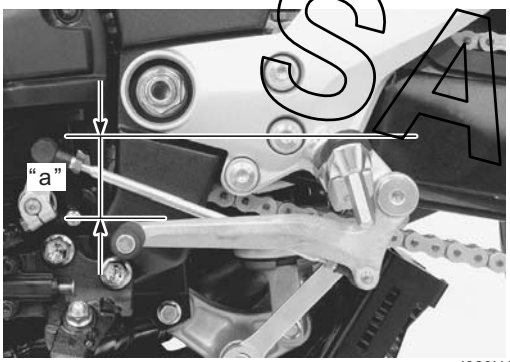

I823H1520095-01

2) Loosen the lock-nuts (1).
3) Turn the gearshift link rod (2) until the gearshift lever is 55 – 65 mm (2.2 – 2.6 in) below the top of the footrest.
4) Tighten the lock-nuts securely.

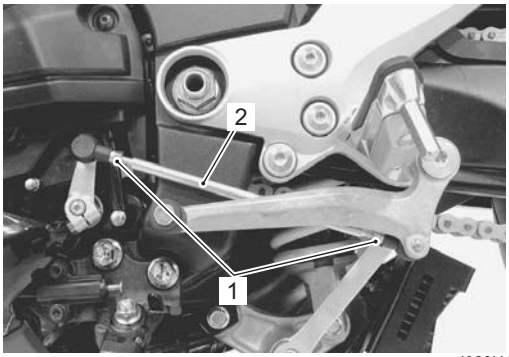

I823H1520096-01

Gearshift Shaft / Gearshift Cam Plate Components

B823H15206012

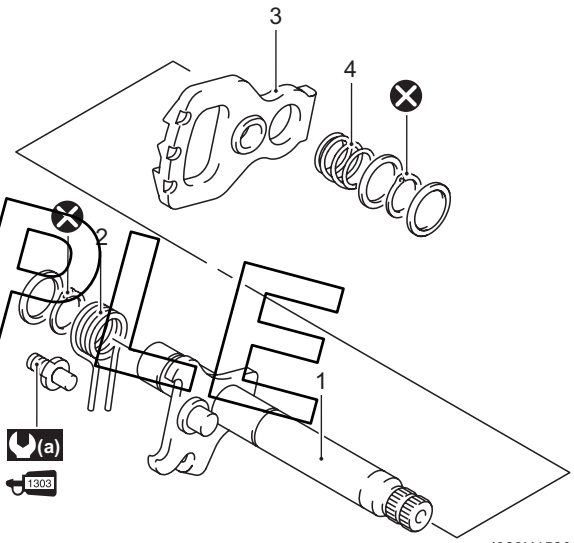

I823H1520097-01

1.	Gearshift shaft
2.	Gearshift shaft return spring
3.	Gearshift cam drive plate
4.	Gearshift plate return spring
(a) :	19 N·m (1.9 kgf-m, 13.5 lb-ft)
1303 :	Apply thread lock to the thread part.
⊗ :	Do not reuse.

SAMPLE

Gearshift Shaft Construction

B823H15206013

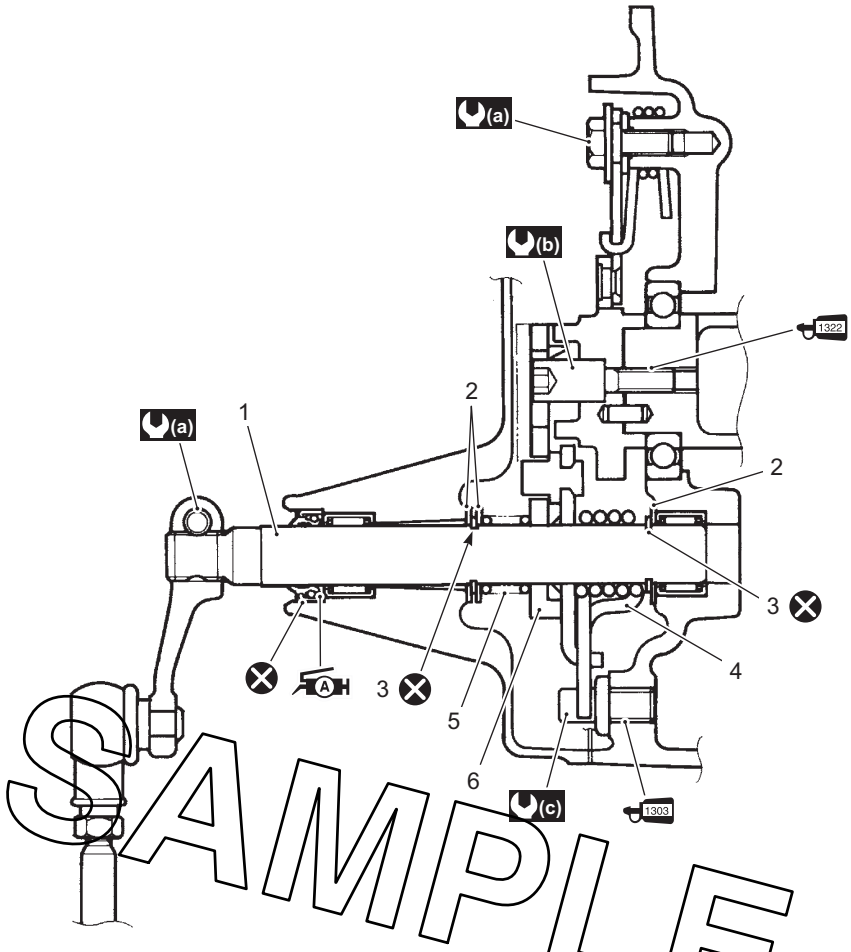

SAMPLE

I823H1520049-04

1. Gearshift shaft	6. Gearshift cam drive plate	1307 : Apply thread lock to the thread part.
2. Washer	(a) : 10 N·m (1.0 kgf-m, 7.0 lb-ft)	1322 : Apply thread lock to the thread part.
3. Snap ring	(b) : 13 N·m (1.3 kgf-m, 9.5 lb-ft)	⊗ : Do not reuse.
4. Gearshift shaft return spring	(c) : 19 N·m (1.9 kgf-m, 13.5 lb-ft)	
5. Gearshift plate return spring	A : Apply grease.	

Gearshift Shaft / Gearshift Cam Plate Removal and Installation

B823H15206014

Refer to “Engine Assembly Removal in Section 1D (Page 1D-19)”.
Refer to “Engine Assembly Installation in Section 1D (Page 1D-25)”.

Removal

NOTE

It is necessary to remove the engine assembly from the frame for gearshift system related parts removal.

1) Remove the gearshift shaft, gearshift cam plate and gearshift cam stopper. Refer to “Engine Bottom Side Disassembly in Section 1D (Page 1D-64)”.
2) Remove the parts in the figure from the gearshift shaft.

Special tool
TOOL : 09900–06107 (Snap ring pliers)

I823H1520031-02

1.	Washer
2.	Snap ring
3.	Gearshift shaft return spring
4.	Gearshift cam drive plate
5.	Gearshift plate return spring
6.	Washer
7.	Snap ring

Installation

Refer to “Engine Bottom Side Assembly in Section 1D (Page 1D-72)”.
Install the gearshift shaft and gearshift cam plate in the reverse order of removal. Pay attention to the following points:

⚠ CAUTION

The removed snap rings must be replaced with new ones.

- When installing the gearshift shaft return spring, position the stopper “A” of gearshift arm between the shaft return spring ends “B”.

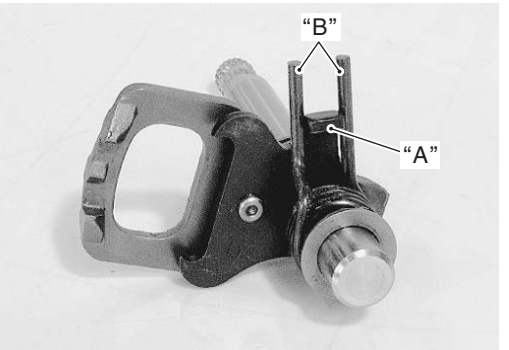

I823H1520039-03

- After installing the gearshift lever, check the gearshift lever height. Refer to “Gearshift Lever Height Inspection and Adjustment (Page 5B-14)”.

SAMPLE

Gearshift Linkage Inspection

B823H15206015

Refer to “Gearshift Shaft / Gearshift Cam Plate Removal and Installation (Page 5B-16)”.

Gearshift Shaft

Check the gearshift shaft for bend or wear.
Check the return spring for damage or fatigue.
If any defects are found, replace the defective part(-s).

I823H1520041-01

Gearshift Shaft Oil Seal

Inspect the gearshift shaft oil seal lip for damage or wear. If any defect is found, replace the oil seal with a new one.

I823H1520080-01

Gearshift Shaft Bearing

Inspect the gearshift shaft bearings for abnormal noise and smooth rotation. Replace the bearing if there is anything unusual.

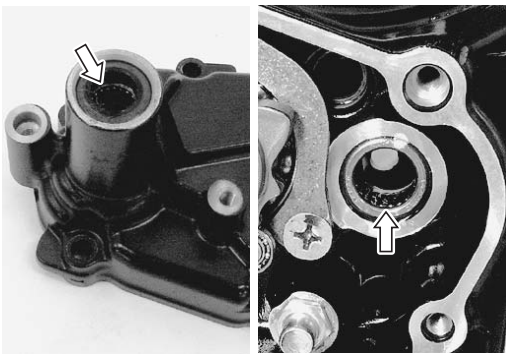

I823H1520081-01

Gearshift Shaft Oil Seal / Bearing Removal and Installation

B823H15206016

Removal

1) Remove the gearshift shaft. Refer to “Gearshift Shaft / Gearshift Cam Plate Removal and Installation (Page 5B-16)”.
2) Remove the gearshift shaft oil seal.

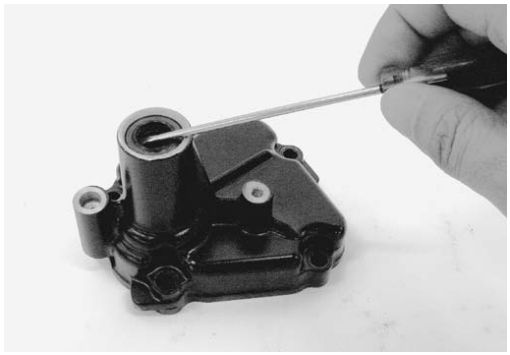

I823H1520082-01

3) Remove the bearings (1) and (2) with the special tools.

Special tool
TOOL (A): 09921–20240 (Bearing remover set)

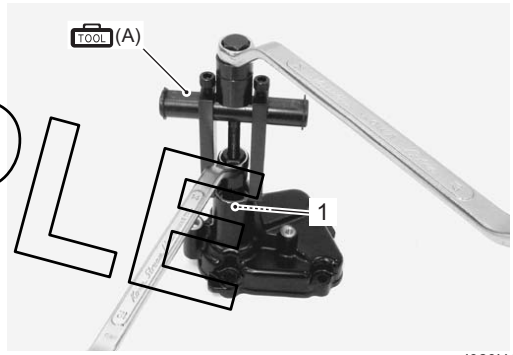

I823H1520083-04

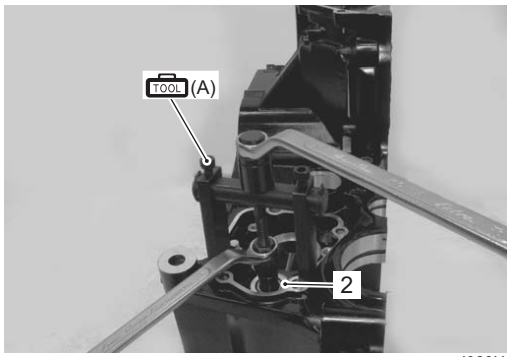

I823H1520056-01

SAMPLE

Installation

Install the oil seal and bearings in the reverse order of removal. Pay attention to the following points:

⚠ CAUTION

The removed oil seal and bearings must be replaced with new ones.

- Install the bearings with the special tool.

NOTE

The stamped mark side of gearshift shaft bearing faces outside.

Special tool

TOOL (A): 09913–70210 (Bearing installer set)

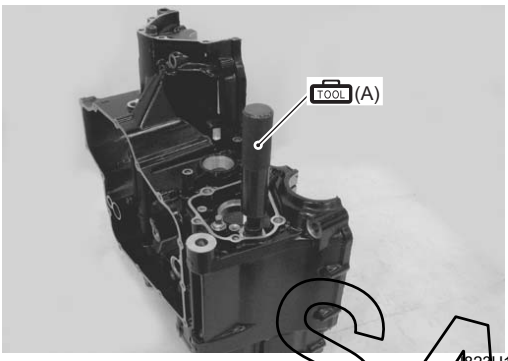

I823H1520064-01

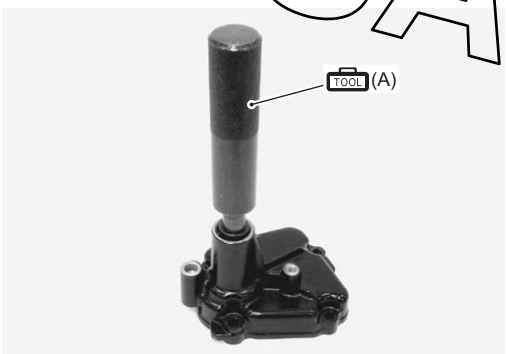

I823H1520084-02

- Install the oil seal with the special tool.

Special tool

TOOL (A): 09913–70210 (Bearing installer set)

- Apply grease to the oil seal lip.

A H : Grease 99000–25010 (SUZUKI SUPER GREASE A or equivalent)

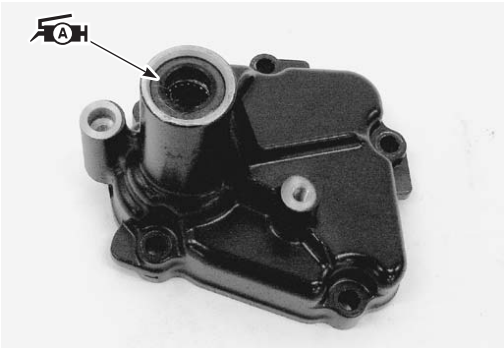

I823H1520053-01

SAMPLE

Specifications

Service Data

B823H15207001

Drive Train

Unit: mm (in) Except ratio

Item		Standard		Limit
Primary reduction ratio		1.596 (83/52)		—
Final reduction ratio		2.388 (43/18)		—
Gear ratios	Low	2.615 (34/13)		—
	2nd	1.937 (31/16)		—
	3rd	1.526 (29/19)		—
	4th	1.285 (27/21)		—
	5th	1.136 (25/22)		—
	Top	1.043 (24/23)		—
Shift fork to groove clearance		0.1 – 0.3 (0.004 – 0.012)		0.5 (0.02)
Shift fork groove width		5.0 – 5.1 (0.197 – 0.201)		—
Shift fork thickness		4.8 – 4.9 (0.189 – 0.193)		—
Drive chain	Type	RK GB50GSVZ4		—
	Links	118 links		—
	20-pitch length	—		319.4 (12.57)
Drive chain slack (on side-stand)		20 – 30 (0.79 – 1.18)		—
Gearshift lever height		55 – 65 (2.2 – 2.6)		—

Tightening Torque Specifications

B823H15207002

Fastening part	Tightening torque			Note
	N·m	kgf-m	lb-ft	
Bearing retainer screw	8	0.8	6.0	☞(Page 5B-5)
Gear position switch mounting bolt	6.5	0.65	4.7	☞(Page 5B-12)
Gear position switch lead wire clamp bolt	6.5	0.65	4.7	☞(Page 5B-12)

SAMPLE

NOTE

The specified tightening torque is also described in the following.
“Transmission Components (Page 5B-2)”
“Gearshift Lever Construction (Page 5B-13)”
“Gearshift Shaft / Gearshift Cam Plate Components (Page 5B-14)”
“Gearshift Shaft Construction (Page 5B-15)”

Reference:
For the tightening torque of fastener not specified in this section, refer to “Tightening Torque List in Section 0C (Page 0C-9)”.

Special Tools and Equipment

Recommended Service Material

B823H15208001

Material	SUZUKI recommended product or Specification		Note
Grease	SUZUKI SUPER GREASE A or equivalent	P/No.: 99000–25010	☞(Page 5B-9) / ☞(Page 5B-18)
Molybdenum oil	MOLYBDENUM OIL SOLUTION	—	☞(Page 5B-9)
Sealant	SUZUKI BOND No.1207B or equivalent	P/No.: 99000–31140	☞(Page 5B-12)
Thread lock cement	THREAD LOCK CEMENT SUPER 1322 or equivalent	P/No.: 99000–32110	☞(Page 5B-5)

NOTE

Required service material is also described in the following.
“Transmission Components (Page 5B-2)”
“Gearshift Lever Construction (Page 5B-13)”
“Gearshift Shaft / Gearshift Cam Plate Components (Page 5B-14)”
“Gearshift Shaft Construction (Page 5B-15)”

Special Tool

B823H15208002

09900–06104 Snap ring pliers ☞(Page 5B-7)	09900–06107 Snap ring pliers ☞(Page 5B-16)
09900–20102 Vernier calipers (1/20 mm, 200 mm) ☞(Page 5B-11) / ☞(Page 5B-11)	09900–20803 Thickness gauge ☞(Page 5B-10)
09913–70210 Bearing installer set ☞(Page 5B-4) / ☞(Page 5B-4) / ☞(Page 5B-9) / ☞(Page 5B-9) / ☞(Page 5B-9) / ☞(Page 5B-10) / ☞(Page 5B-18) / ☞(Page 5B-18)	09921–20240 Bearing remover set ☞(Page 5B-4) / ☞(Page 5B-17)
09923–74511 Bearing remover ☞(Page 5B-4)	09930–30104 Rotor remover slide shaft ☞(Page 5B-4)

SAMPLE

Clutch

Precautions

Precautions for Clutch System

B823H15300001

Refer to “General Precautions in Section 00 (Page 00-1)”.

Clutch Fluid (Brake Fluid) Information

B823H15300002

⚠ WARNING

- **This clutch system is filled with an ethylene glycol-based DOT 4 brake fluid. Do not use or mix different types of fluid such as silicone-based or petroleum-based.**
- **Do not use any brake fluid taken from old, used or unsealed containers. Never reuse brake fluid left over from the last servicing or stored for long periods.**
- **When storing brake fluid, seal the container completely and keep away from children.**
- **When replenishing brake fluid, take care not to get dust into fluid.**
- **When washing clutch components, use fresh brake fluid. Never use cleaning solvent.**

⚠ CAUTION

Immediately and completely wipe off any brake fluid contacting any part of the motorcycle. The brake fluid reacts chemically with paint, plastics and rubber materials, etc., and will damage them severely.

SAMPLE

Schematic and Routing Diagram

Clutch Hose Routing Diagram (Except for E-33)

B823H15302001

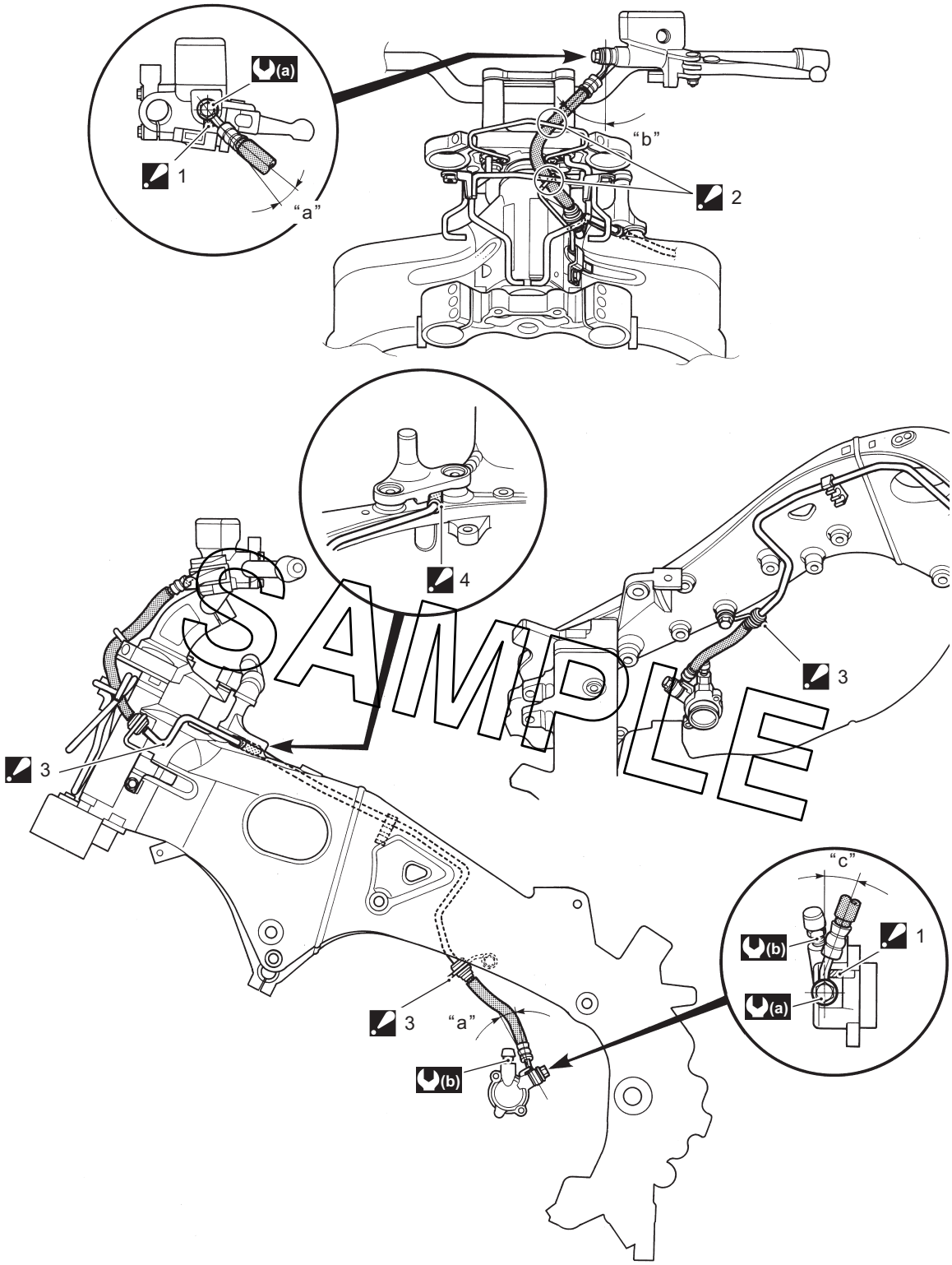

SAMPLE

I823H1530001-04

1. Stopper : After the clutch hose union has contacted the stopper, tighten the union bolt.	(b) : 6 N·m (0.6 kgf-m, 4.5 lb-ft)
2. Hose guide : Pass the clutch hose behind the guide.	"a": 14°
3. Hose guide : Install the grommet on the clutch hose to the hose guide (2) properly.	"b": 42°
4. Protective rubber : Pass the clutch hose under the steering damper bracket.	"c": 21°
(a) : 23 N·m (2.3 kgf-m, 16.5 lb-ft)	

Clutch Hose Routing Diagram (For E-33)

B823H15302002

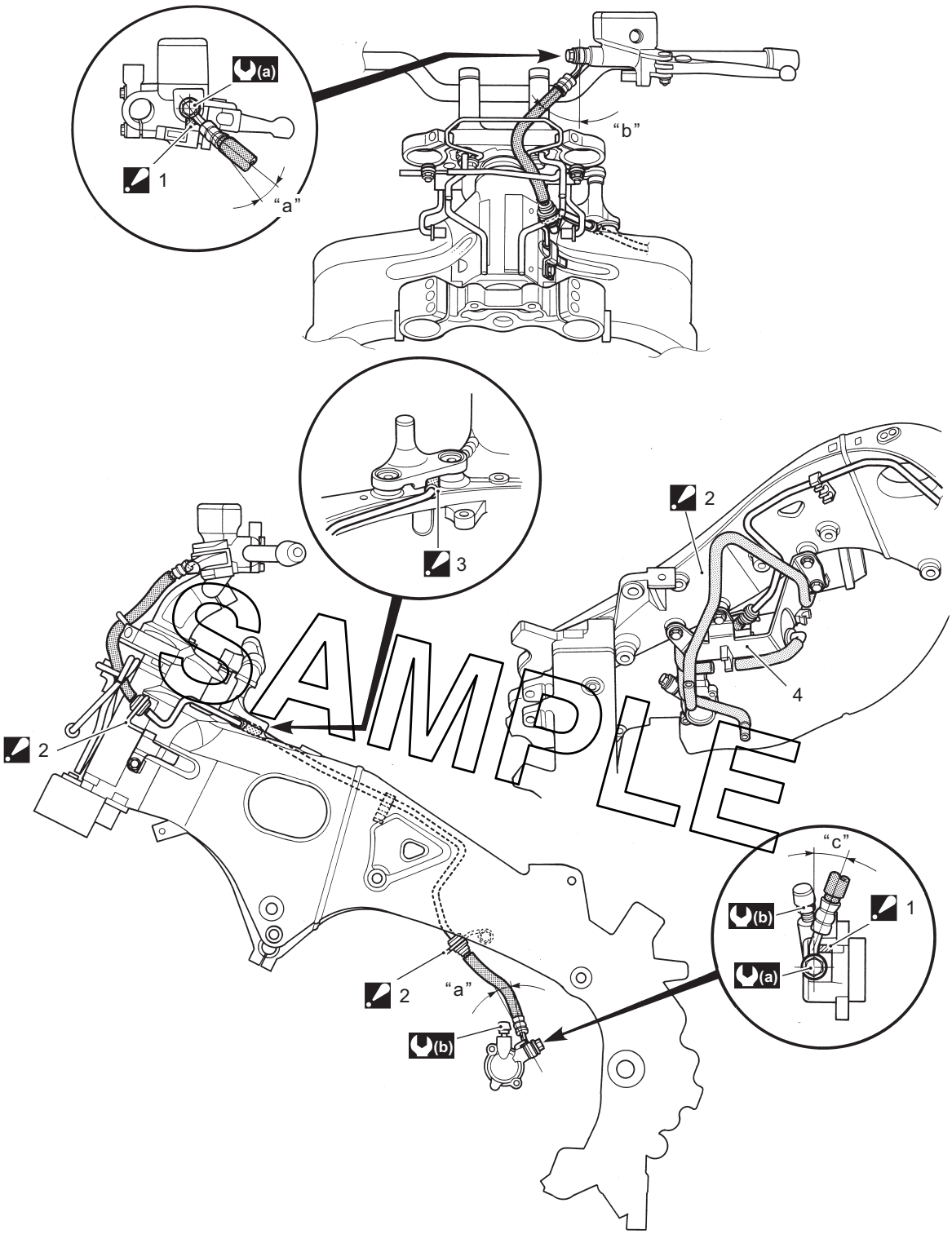

SAMPLE

I823H1530060-01

1. Stopper : After the clutch hose union has contacted the stopper, tighten the union bolt.	(b) : 6 N·m (0.6 kgf-m, 4.5 lb-ft)
2. Hose guide : Install the grommet on the clutch hose to the hose guide (2) properly.	"a": 14°
3. Protective rubber : Pass the clutch hose under the steering damper bracket.	"b": 42°
4. EVAP canister bracket	"c": 21°
(a) : 23 N·m (2.3 kgf-m, 16.5 lb-ft)	

Diagnostic Information and Procedures

Clutch System Symptom Diagnosis

B823H15304001

Condition	Possible cause	Correction / Reference Item
Engine is noisy (Noise seems to come from the clutch)	Worn countershaft spline.	*Replace countershaft.*
	Worn clutch hub spline.	*Replace clutch hub.*
	Worn clutch plate teeth.	*Replace clutch plate.*
	Distorted clutch plate.	*Replace.*
	Worn clutch release bearing.	*Replace.*
	Weakened clutch damper.	*Replace primary driven gear.*
	Worn clutch lifter related parts.	*Replace clutch lifter related parts as a set.*
Clutch slips	Weakened clutch spring.	*Replace.*
	Worn or distorted clutch pressure plate.	*Replace.*
	Distorted clutch plate.	*Replace.*
Clutch drags	Leakage of clutch fluid.	*Repair or replace.*
	Worn or damaged clutch cylinder/ release cylinder.	*Replace.*
	Some clutch springs are weak, while others are not.	*Replace.*
	Worn or distorted clutch pressure plate.	*Replace.*
	Distorted clutch plate.	*Replace.*
Leakage of clutch fluid	Leakage of clutch fluid from system.	*Repair or replace.*
Excessive clutch lever stroke	Air in hydraulic system.	*Bleed air.*

SAMPLE

Repair Instructions

Clutch Lever Position Switch Inspection

B823H15306001

Inspect the clutch lever position switch in the following procedures:

1) Disconnect the clutch lever position switch coupler (1).

I823H1530061-01

2) Inspect the clutch lever position switch for continuity with the tester.
If any abnormality is found, replace the switch with a new one.

Special tool
TOOL : 09900–25008 (Multi-circuit tester set)

Tester knob indication
Continuity (•))))

Clutch lever position switch

Color / Position	Terminal (B/Y)	Terminal (B/W)
FREE		
•	○	○

I649G1530004-03

3) Connect the clutch lever position switch coupler.

Clutch Fluid Level Check

B823H15306002

Refer to “Clutch System Inspection in Section 0B (Page 0B-14)”.

Clutch Hose Inspection

B823H15306003

Refer to “Clutch System Inspection in Section 0B (Page 0B-14)”.

Air Bleeding from Clutch Fluid Circuit

B823H15306004

⚠ **CAUTION**

Handle brake fluid with care: the fluid reacts chemically with paint, plastics, rubber materials, etc.

The clutch fluid circuit may be purged of air in the following manner:

1) Keep the motorcycle upright and place the handlebars straight.
2) Fill up the clutch master cylinder reservoir to the upper end of the inspection window. Replace the reservoir cap to prevent entry of dirt.
3) Remove the engine sprocket outer cover (1).

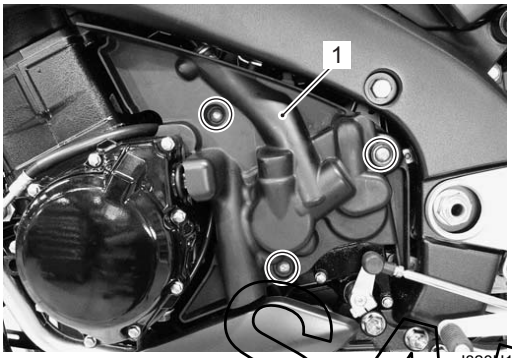

I823H1530002-01

4) Connect a clear hose to the air bleeder valve and insert the free end of the hose into a receptacle.

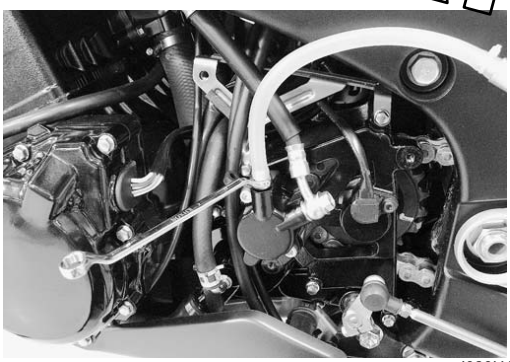

I823H1530003-01

5) Squeeze and release the clutch lever several times in rapid succession, and squeeze the lever fully without releasing it.

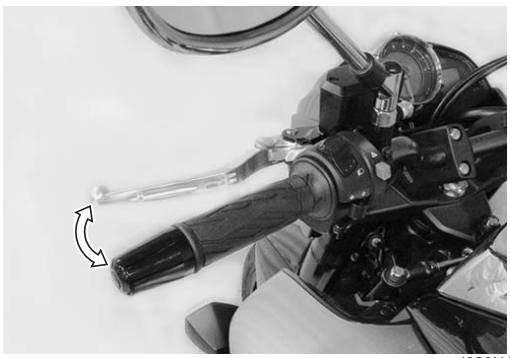

I823H1530004-01

6) Loosen the air bleeder valve by turning it a quarter of a turn so that the fluid runs into the receptacle; this will remove the tension of the clutch lever causing it to touch the handlebar grip.
7) Close the air bleeder valve, pump and squeeze the lever, and open the valve.
8) Repeat this process until the fluid flowing into the receptacle no longer contains air bubbles.
9) Close the air bleeder valve and disconnect the hose.

   Tightening torque
   Air bleeder valve (Clutch): 6 N·m (0.6 kgf-m, 4.5 lb-ft)

10) Fill the reservoir with brake fluid to the upper end of the inspection window.
11) Reinstall the removed parts.

Clutch Fluid Replacement

B823H15306005

⚠ **CAUTION**

Handle brake fluid with care: the fluid reacts chemically with paint, plastic, rubber materials, etc.

1) Place the motorcycle on a level surface and keep the handlebars straight.
2) Remove the clutch master cylinder reservoir cap and diaphragm.
3) Suck up the old clutch fluid as much as possible.

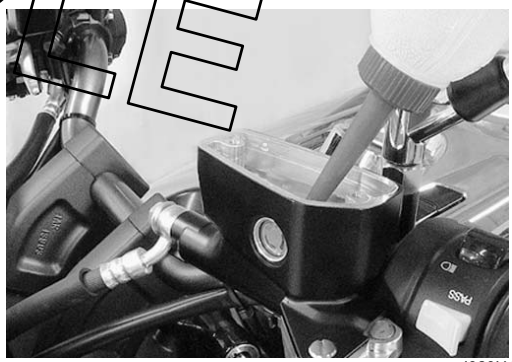

I823H1530005-02

4) Fill the reservoir with new clutch fluid.

   BF: Brake fluid (DOT 4)

5) Remove the engine sprocket outer cover (1).

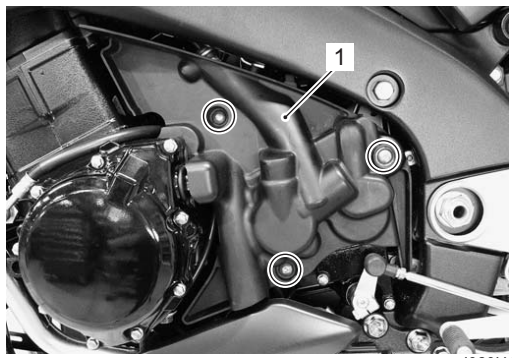

I823H1530002-01

SAMPLE

6) Connect a clear hose to the air bleeder valve and insert the other end of hose into a receptacle.

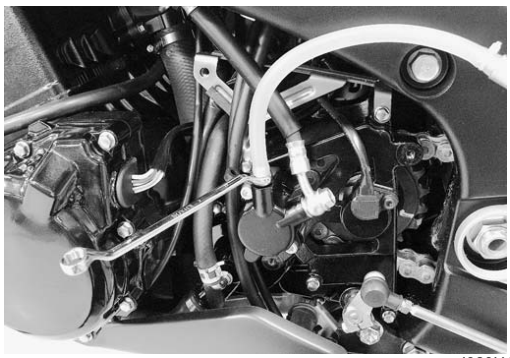

I823H1530003-01

7) Loosen the air bleeder valve and pump the clutch lever until old clutch fluid flows out of the clutch fluid circuit.

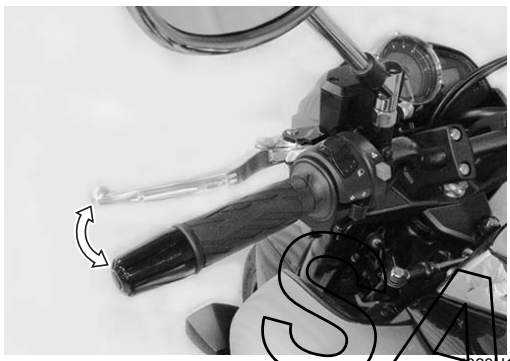

I823H1530004-01

8) Close the air bleeder valve (2) and disconnect the hose.

Tightening torque
Air bleeder valve (Clutch) (a): 6 N·m (0.6 kgf-m, 4.5 lb-ft)

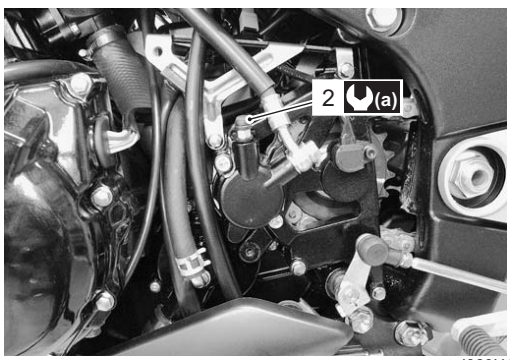

I823H1530006-02

9) Fill the reservoir with new fluid.
10) Reinstall the removed parts.

Clutch Hose Removal and Installation

B823H15306006

Removal

1) Drain clutch fluid. Refer to “Clutch Fluid Replacement (Page 5C-5)”.
2) Remove the air cleaner box. Refer to “Air Cleaner Box Removal and Installation in Section 1D (Page 1D-6)”.
3) Remove the engine sprocket outer cover (1).

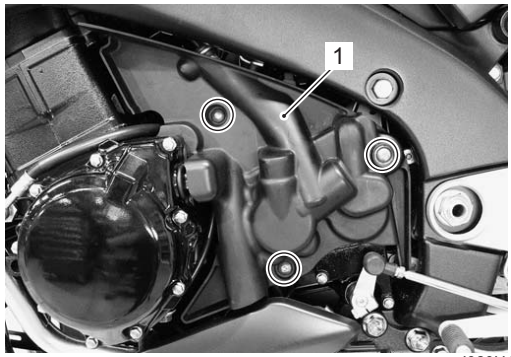

I823H1530002-01

4) Remove the clutch hose as shown in the clutch hose routing diagram. Refer to “Clutch Hose Routing Diagram (Except for E-33) (Page 5C-2)”.

Installation

1) Install the clutch hose as shown in the clutch hose routing diagram. Refer to “Clutch Hose Routing Diagram (Except for E-33) (Page 5C-2)”.
2) Bleed air from the clutch system. Refer to “Air Bleeding from Clutch Fluid Circuit (Page 5C-5)”.
3) Reinstall the removed parts.

SAMPLE

Clutch Control System Components

B823H15306007

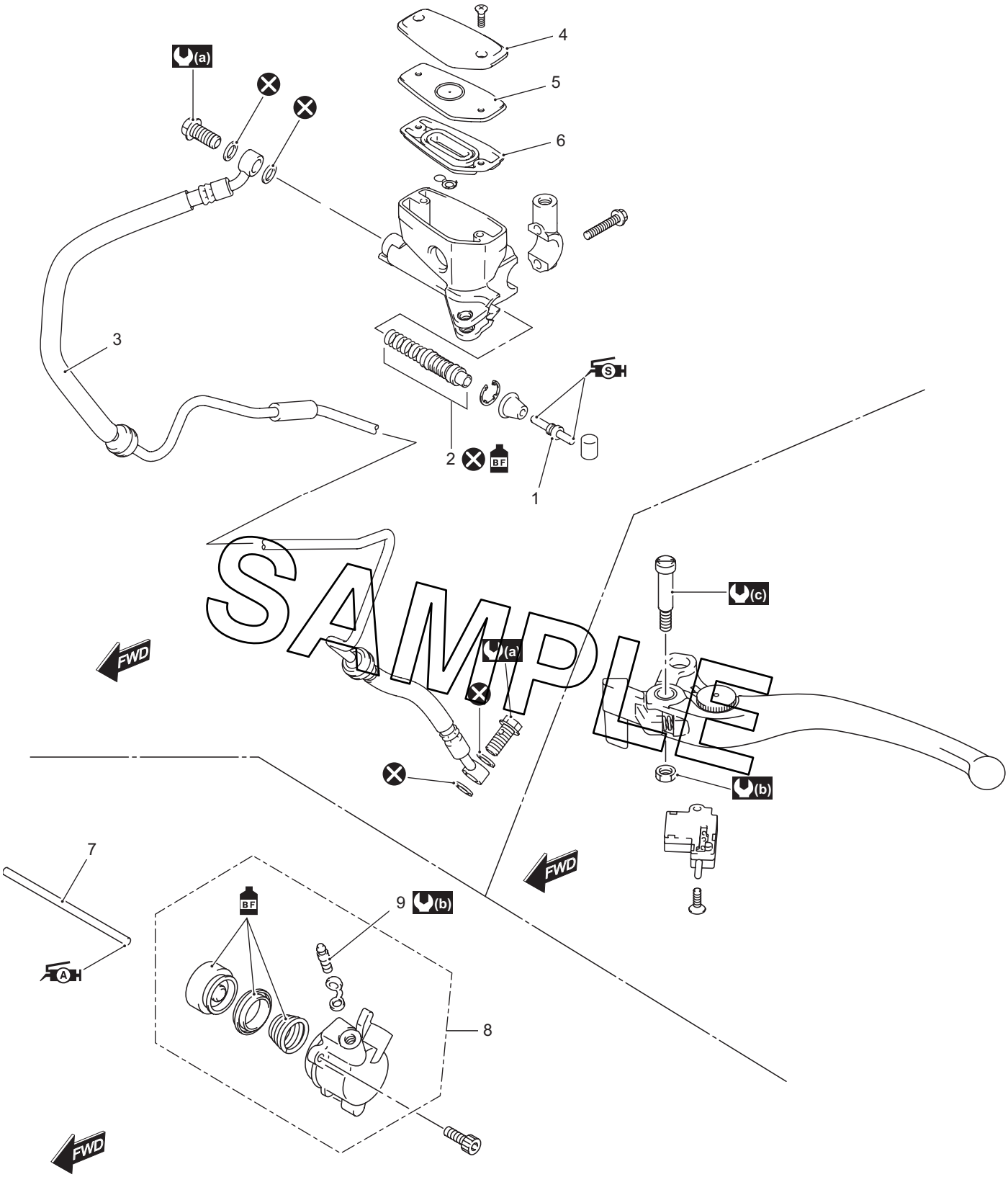

SAMPLE

I823H1530058-04

1. Push rod	7. Push rod	: Apply brake fluid.
2. Piston/Cup set	8. Clutch release cylinder set	: Apply grease.
3. Clutch hose	9. Air bleeder valve	: Apply silicone grease.
4. Reservoir cap	(a) : 23 N·m (2.3 kgf-m, 16.5 lb-ft)	: Do not reuse.
5. Plate	(b) : 6 N·m (0.6 kgf-m, 4.5 lb-ft)	
6. Diaphragm	(c) : 1 N·m (0.1 kgf-m, 0.7 lb-ft)	

Clutch Master Cylinder Assembly Removal and Installation

B823H15306008

Removal

1) Drain clutch fluid. Refer to “Clutch Fluid Replacement (Page 5C-5)”.
2) Disconnect the clutch lever position switch coupler (1).
3) Place a rag under the clutch hose union bolt (2) to catch any spilt brake fluid.
4) Disconnect the clutch hose by removing the clutch hose union bolt (2).

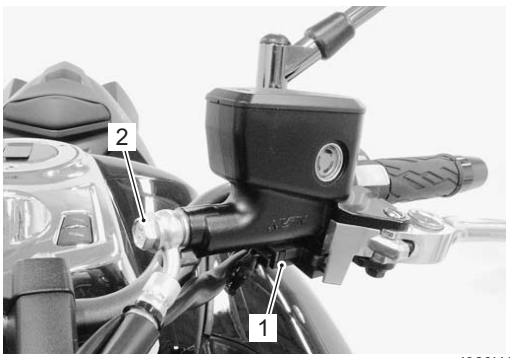

I823H1530062-01

5) Remove the clutch master cylinder assembly.

I823H1530063-01

Installation

Install the clutch master cylinder in the reverse order of removal. Pay attention to the following points:

- When installing the clutch master cylinder (1) onto the handlebars (2), align the master cylinder holder’s mating surface “A” with the punch mark “B” on the handlebars (2) and tighten the upper holder bolt first. Refer to “Handlebar Construction in Section 6B (Page 6B-2)”.

Tightening torque
Clutch master cylinder holder bolt (a): 10 N·m (1.0 kgf-m, 7.0 lb-ft)

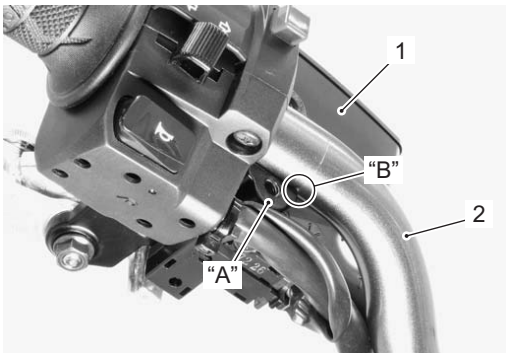

I823H1530007-02

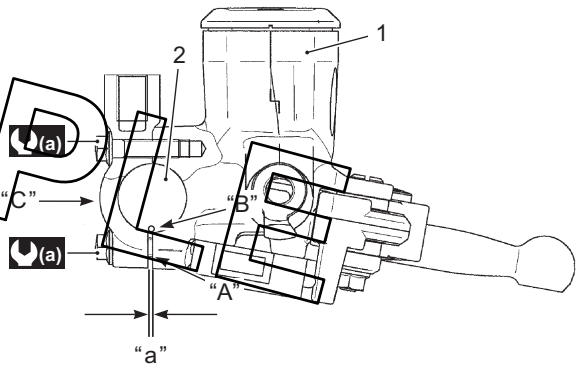

I823H1530067-01

“C”: “UP” mark	“a”: Clearance

SAMPLE

- After setting the clutch hose union to the stopper, tighten the union bolt (3) to the specified torque.

⚠ CAUTION

The seal washers should be replaced with new ones to prevent fluid leakage.

Tightening torque
Clutch hose union bolt (b): 23 N·m (2.3 kgf-m, 16.5 lb-ft)

I823H1530064-01

- Bleed air from the clutch system. Refer to “Air Bleeding from Clutch Fluid Circuit (Page 5C-5)”.

Clutch Master Cylinder / Clutch Lever Disassembly and Assembly

B823H15306009

Refer to “Clutch Master Cylinder Assembly Removal and Installation (Page 5C-8)”.

Disassembly

1) Remove the reservoir cap (1), plate (2) and diaphragm (3).

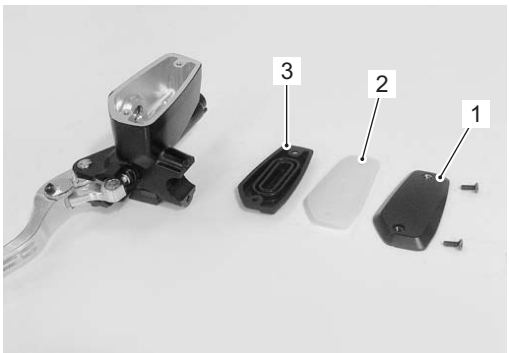

I823H1530008-01

2) Remove the clutch lever (4).

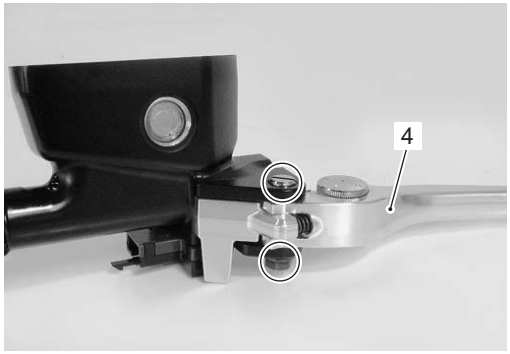

I823H1530009-01

3) Remove the clutch lever position switch (5).

I823H1530010-01

4) Pull out the push rod (6) and dust boot (7).
5) Remove the snap ring (8).

Special tool
TOOL : 09900–06108 (Snap ring pliers)

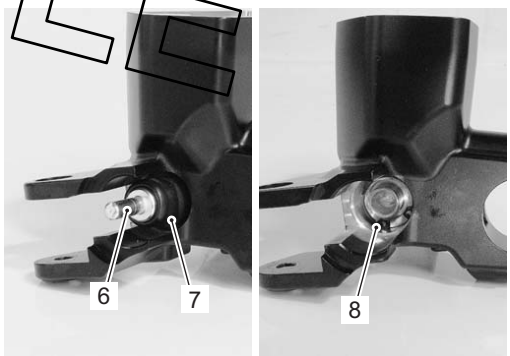

I823H1530011-01

SAMPLE

6) Remove the following parts from the master cylinder.
- Washer (9)
- Secondary cup (10)
- Piston (11)
- Primary cup (12)
- Spring (13)

I823H1530012-01

Assembly
Assemble the master cylinder in the reverse order of disassembly. Pay attention to the following points:

⚠ CAUTION

- **Wash the master cylinder components with new brake fluid before reassembly.**
- **Do not wipe the clutch fluid off after washing the components.**
- **When washing the components, use the specified clutch fluid (Brake fluid). Never use different types of fluid or cleaning solvents such as gasoline, kerosine, etc.**
- **Apply brake fluid to the master cylinder bore and to all of the master cylinder components to be inserted into the bore.**

BF: Brake fluid (DOT 4)

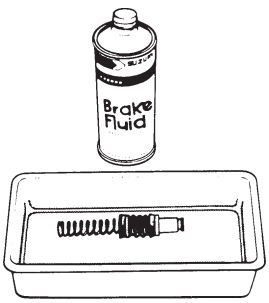

I649G1530016-02

- Apply silicone grease to the push rod ends.

: Grease 99000–25100 (SUZUKI Silicone Grease or equivalent)

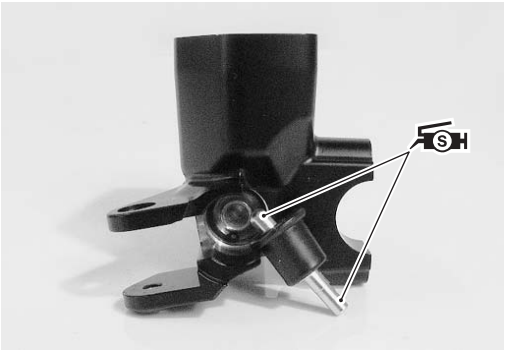

I823H1530013-01

- When installing the clutch lever position switch, align the projection “A” on the switch with the hole “B” on the master cylinder.

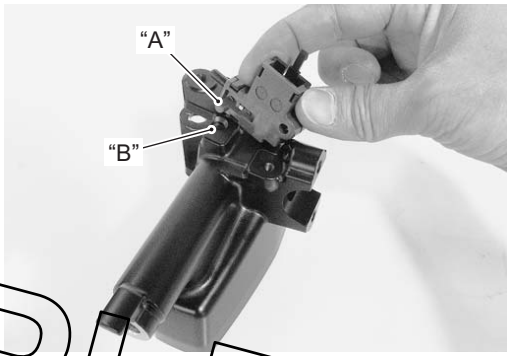

I823H1530014-01

- Apply silicone grease to the clutch lever pivot bolt.

: Grease 99000–25100 (SUZUKI Silicone Grease or equivalent)

Tightening torque
Clutch lever pivot bolt: 1.0 N·m (0.1 kgf-m, 0.7 lb-ft)
Clutch lever pivot bolt lock-nut: 6.0 N·m (0.6 kgf-m, 4.5 lb-ft)

I823H1530015-01

SAMPLE

Clutch Master Cylinder Components Inspection

B823H15306010

Refer to “Clutch Master Cylinder / Clutch Lever Disassembly and Assembly (Page 5C-9)”.

Master Cylinder

Inspect the master cylinder bore for any scratches or other damage.

I823H1530068-01

Piston

Inspect the piston surface for any scratches or other damage.

Rubber Parts

Inspect the primary cup, secondary cup and dust boot for wear or damage.

I649G1530021-02

SAMPLE

Clutch Release Cylinder / Push Rod Removal and Installation

B823H15306011

Removal

1) Drain clutch fluid. Refer to “Clutch Fluid Replacement (Page 5C-5)”.
2) Remove the engine sprocket outer cover (1).

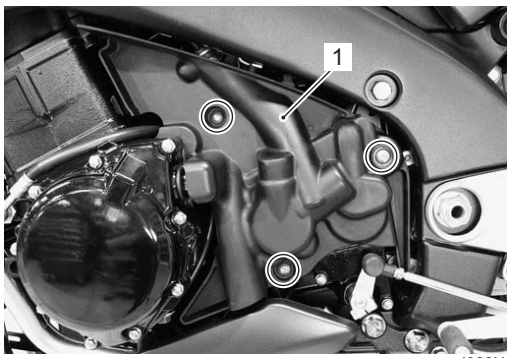

I823H1530002-01

3) Place a rag under the clutch hose union bolt (2) to catch any spilt brake fluid.
4) Disconnect the clutch hose by removing the union bolt (2).
5) Remove the clutch release cylinder (3).

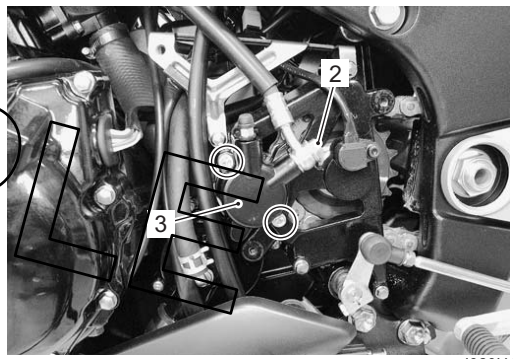

I823H1530017-01

6) Remove the push rod (4).

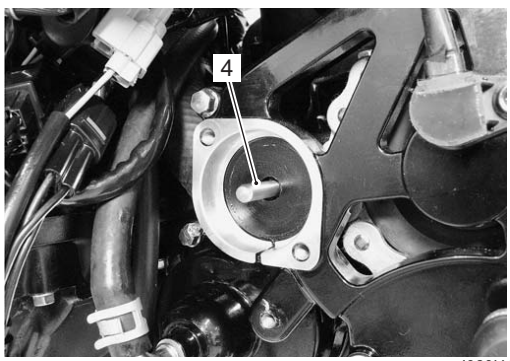

I823H1530065-01

Installation

Install the clutch release cylinder in the reverse order of removal. Pay attention to the following points:

- Apply a small quantity of grease to the push rod.

  : Grease 99000–25010 (SUZUKI SUPER GREASE A or equivalent)

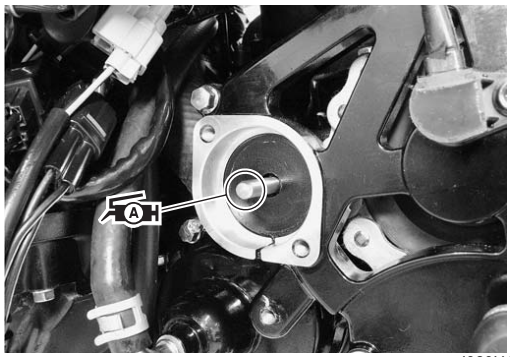

I823H1530066-01

- Tighten each bolt to the specified torque.

  Tightening torque
  Clutch release mounting bolt (a): 10 N·m (1.0 kgf-m, 7.0 lb-ft)
  Clutch hose union bolt (b): 23 N·m (2.3 kgf-m, 16.5 lb-ft)

⚠ CAUTION

The seal washers should be replaced with the new ones to prevent fluid leakage.

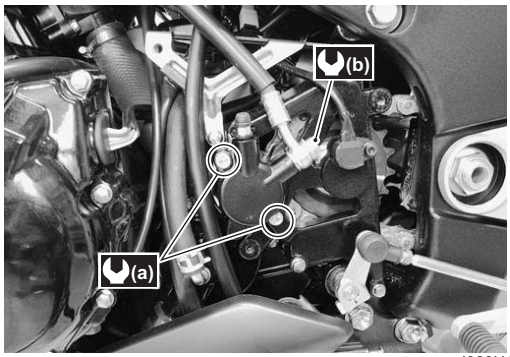

I823H1530018-01

- Bleed air from the clutch system. Refer to “Air Bleeding from Clutch Fluid Circuit (Page 5C-5)”.

Clutch Push Rod Inspection

B823H15306012

Inspect the push rod in the following procedures:

1) Remove the clutch push rod. Refer to “Clutch Release Cylinder / Push Rod Removal and Installation (Page 5C-11)”.
2) Inspect the push rod for wear or bend. If any defects are found, replace it with a new one.

I718H1530025-01

3) Reinstall the removed parts. Refer to “Clutch Release Cylinder / Push Rod Removal and Installation (Page 5C-11)”.

Clutch Release Cylinder Disassembly and Assembly

B823H15306013

Refer to “Clutch Release Cylinder / Push Rod Removal and Installation (Page 5C-11)”.

Disassembly

1) Place a rag over the piston to prevent it popping out.
2) Force out the piston using compressed air.

⚠ CAUTION

Do not use high pressure air to prevent piston damage.

I823H1530019-01

SAMPLE

Assembly

Assemble the clutch release cylinder in the reverse order of disassembly. Pay attention to the following points:

- Wash the cylinder bore and piston with specified brake fluid.

  BF: Brake fluid (DOT 4)

  ⚠ CAUTION

  - **Wash the cylinder components with fresh brake fluid before reassembling. Never use cleaning solvent or gasoline to wash them.**
  - **Do not wipe the brake fluid off after washing the components.**
  - **When washing the components, use the specified brake fluid. Never use different types of fluid or cleaning solvent such as gasoline, kerosine or the others.**

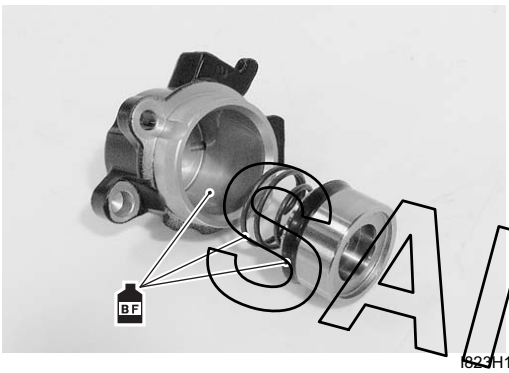

I823H1530020-01

- Bleed air from the clutch system. Refer to “Air Bleeding from Clutch Fluid Circuit (Page 5C-5)”.

Clutch Release Cylinder Inspection

B823H15306014

Refer to “Clutch Release Cylinder Disassembly and Assembly (Page 5C-12)”.
Inspect the clutch cylinder bore wall for nicks, scratches or other damage.
Inspect the piston surface for any scratches or other damage.

I823H1530021-01

SAMPLE

Clutch Components

B823H15306015

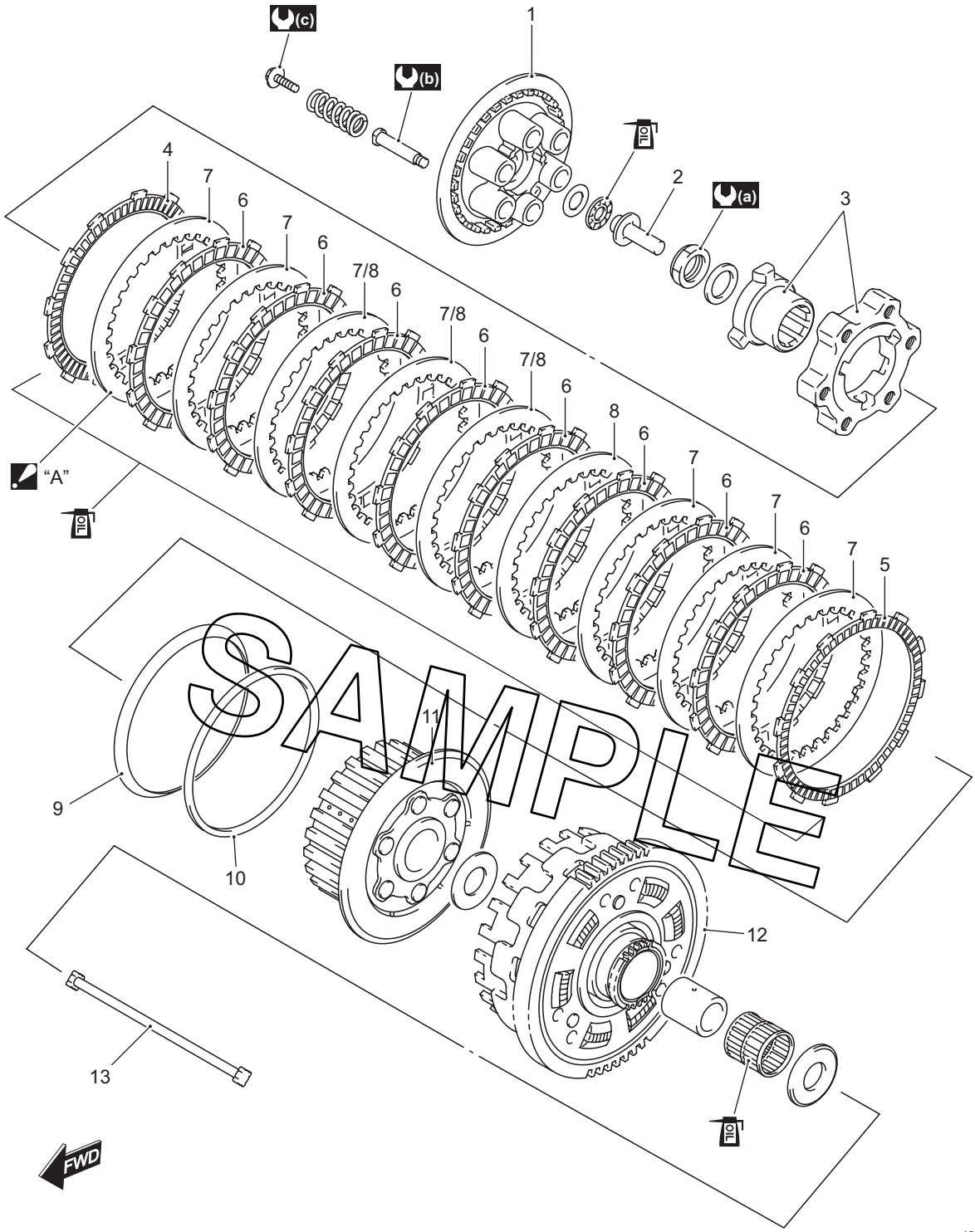

I823H1530059-06

1. Clutch pressure plate	7. No. 1 driven plate (8 – 5 pcs.)	13. Push rod
2. Clutch push piece	8. No. 2 driven plate (1 – 4 pcs.)	"A": The No. 1 and No. 2 driven plates are 9 in total.
3. Clutch lifter drive/driven cam set	9. Spring washer	(a) : 150 N·m (15.0 kgf-m, 108.5 lb-ft)
4. No. 2 drive plate	10. Spring washer seat	(b) : 23 N·m (2.3 kgf-m, 16.5 lb-ft)
5. No. 3 drive plate	11. Clutch sleeve hub	(c) : 10 N·m (1.0 kgf-m, 7.0 lb-ft)
6. No. 1 drive plate	12. Primary driven gear assembly	OIL : Apply engine oil.

Clutch Removal

B823H15306016

1) Drain engine oil. Refer to “Engine Oil and Filter Replacement in Section 0B (Page 0B-10)”.
2) Remove the clutch cover (1).

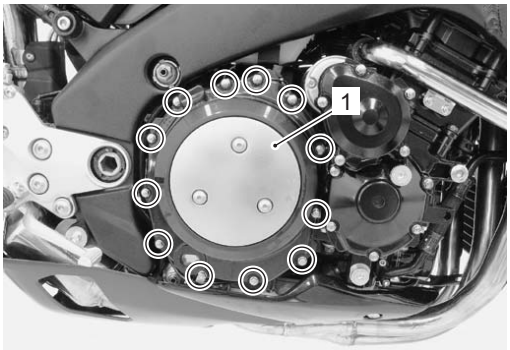

I823H1530022-01

3) Remove the gasket (2) and dowel pins.

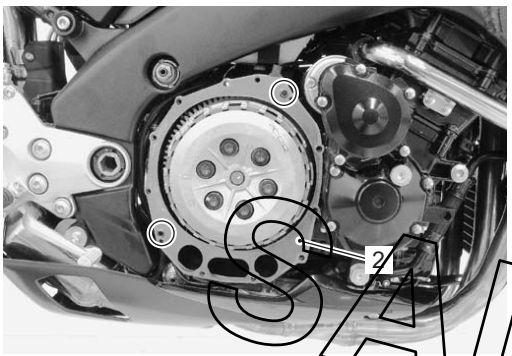

I823H1530023-01

4) Remove the clutch springs and pressure plate (3).

NOTE

Loosen the clutch spring set bolts little by little and diagonally.

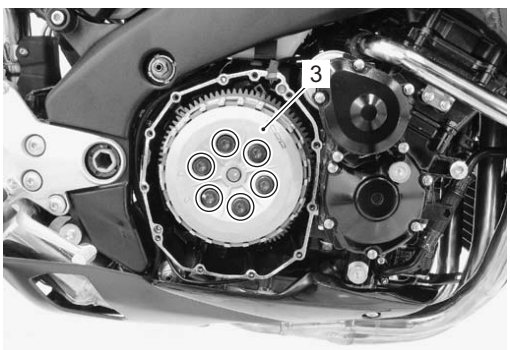

I823H1530024-03

5) Remove the clutch drive plates (4) and driven plates (5).

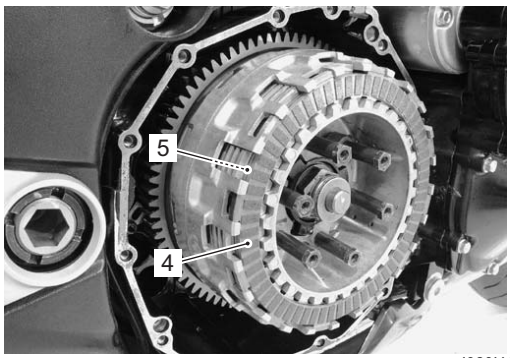

I823H1530025-01

6) Remove the spring washer (6) and its seat (7).

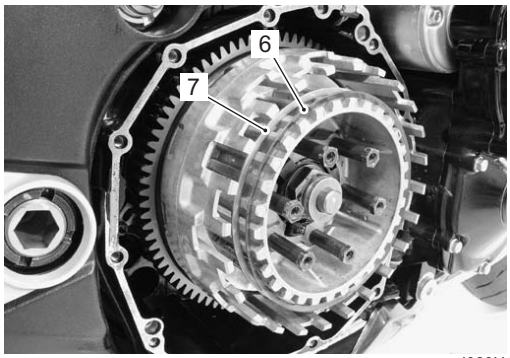

I823H1530026-01

7) Remove the thrust washer (8), bearing (9) and clutch push piece (10).

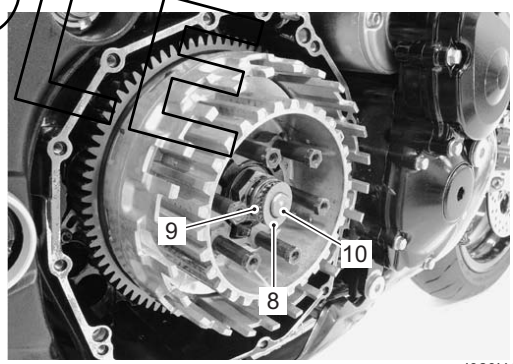

I823H1530027-01

SAMPLE

8) Remove the clutch push rod (11).

NOTE

If it is difficult to pull out the push rod (11), use a magnetic hand or wire.

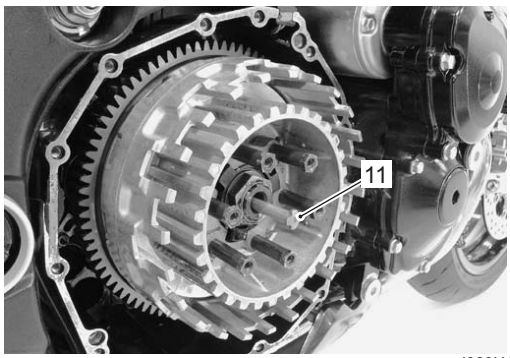

I823H1530028-01

9) Unlock the clutch sleeve hub nut.

I823H1530029-01

10) Hold the clutch sleeve hub with the special tool.

Special tool
TOOL (A): 09920–53740 (Clutch sleeve hub holder)

11) Remove the clutch sleeve hub nut.

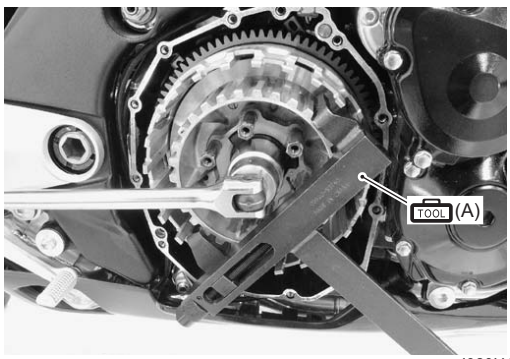

I823H1530030-01

12) Remove the conical spring washer (12).

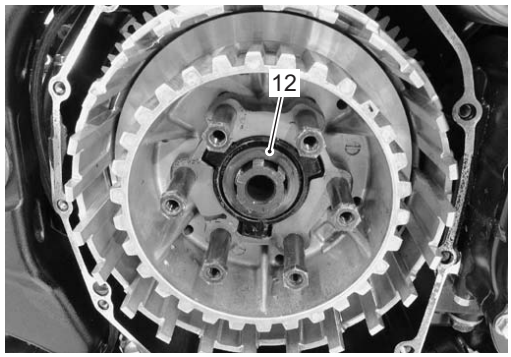

I823H1530031-01

13) Remove the clutch sleeve hub (13), clutch lifter drive cam (14) and its driven cam (15).

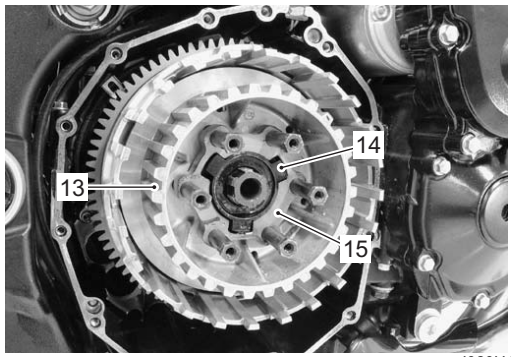

I823H1530032-01

14) Remove the thrust washer (16), spacer (17) and bearing (18).

15) Remove the primary driven gear assembly (19).

NOTE

If it is difficult to remove the primary driven gear, rotate the crankshaft.

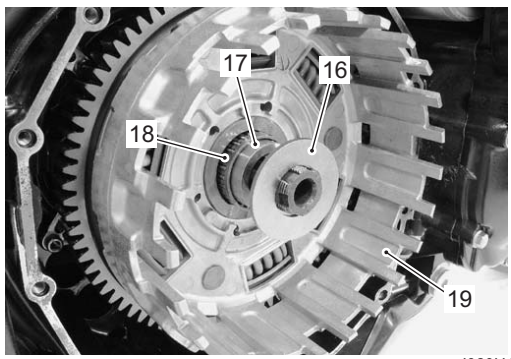

I823H1530033-02

SAMPLE

16) Remove the oil pump drive gear (20) from the primary driven gear assembly.

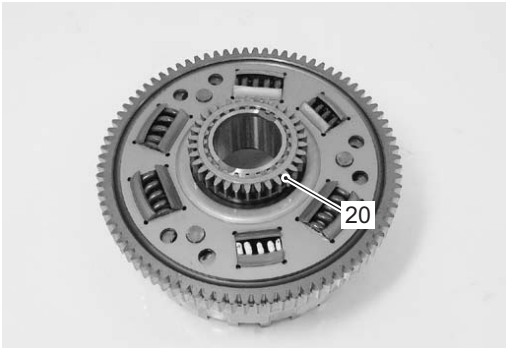

I823H1530034-01

17) Remove the thrust washer (21).

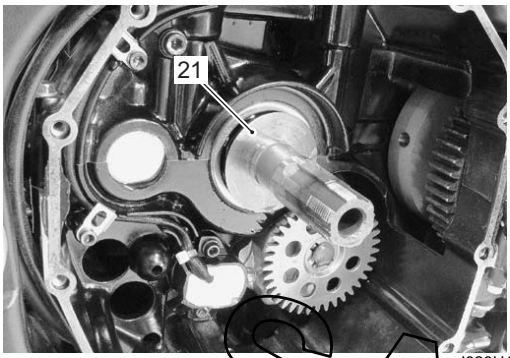

I823H1530035-01

Clutch Installation

B823H15306017

Installation is in the reverse order of removal. Pay attention to the following points:

- Install the thrust washer onto the countershaft.

NOTE

The chamfer side "A" of the thrust washer faces crankcase side.

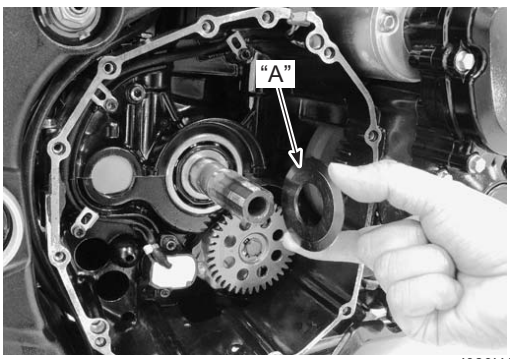

I823H1530036-01

- Install the oil pump drive gear to the primary driven gear assembly.

NOTE

The off-set side "B" of the oil pump drive gear faces the primary driven gear side.

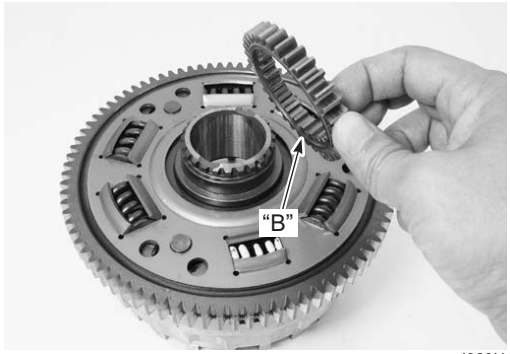

I823H1530037-01

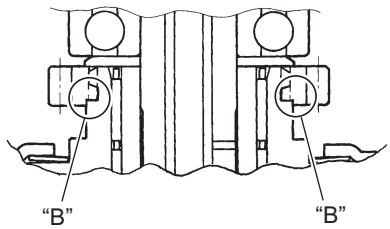

I823H1530038-02

- Install the primary driven gear assembly.

NOTE

- **If it is difficult to install the primary driven gear, rotate the crankshaft.**
- **Be sure to engage the oil pump drive and driven gears, primary drive and driven gears.**

- Install the bearing (1) and spacer (2) and apply engine oil to them.
- Install the trust washer (3).

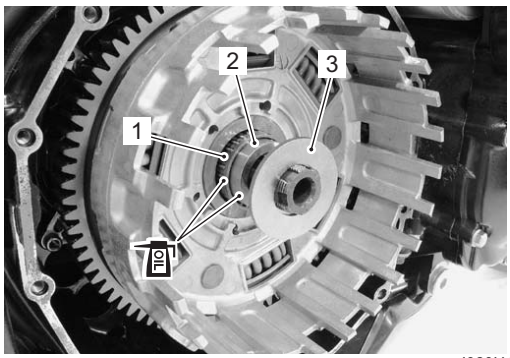

I823H1530039-02

SAMPLE

- Install the clutch lifter drive cam (4), driven cam (5) to the clutch sleeve hub (6).

NOTE

- **Align the punch mark "C" on the clutch lifter drive cam (4) with the punch mark "D" on its driven cam (5).**
- **The clutch lifter drive (4) and driven (5) cams should be replaced as a set.**
- **When replacing the clutch spring support bolts (7), apply thread lock and tighten them to the specified torque.**

1303 : Thread lock cement 99000–32030 (THREAD LOCK CEMENT SUPER 1303 or equivalent)

Tightening torque
Clutch spring support bolt (a): 23 N·m (2.3 kgf-m, 16.5 lb-ft)

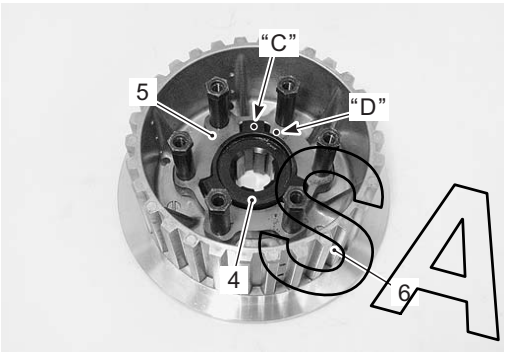

I823H1530040-01

I823H1530041-03

- Install the clutch sleeve hub along with the clutch lifter drive and driven cams onto the countershaft.
- Install the conical spring washer (8).

NOTE

The conical carve side of the spring washer (8) faces outside.

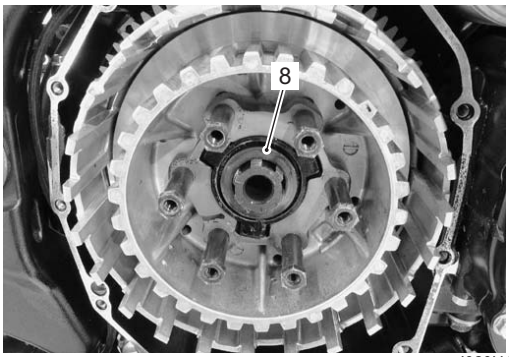

I823H1530042-01

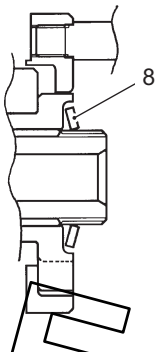

I823H1530043-01

- Hold the clutch sleeve hub using the special tool.

Special tool
TOOL (A): 09920–53740 (Clutch sleeve hub holder)

I823H1530044-01

SAMPLE

- Tighten the clutch sleeve hub nut to the specified torque.

  Tightening torque
  Clutch sleeve hub nut: 150 N·m (15.0 kgf-m, 108.5 lb-ft)

- Lock the clutch sleeve hub nut with a center punch.

I823H1530045-01

- Install the spring washer seat (9) and spring washer (10) onto the clutch sleeve hub correctly.

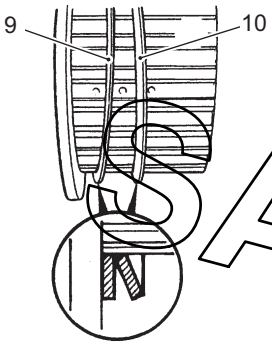

I823H1530047-01

- Insert the clutch drive plates and driven plate one by one into the clutch sleeve hub in the prescribed order.

NOTE

Insert the outermost No. 2 drive plate claws "E" to the other slits "F" of clutch housing as shown in the figure.

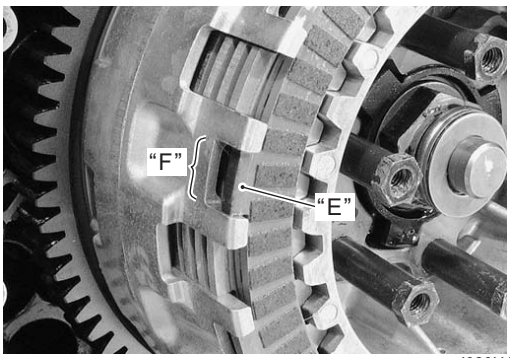

I823H1530048-04

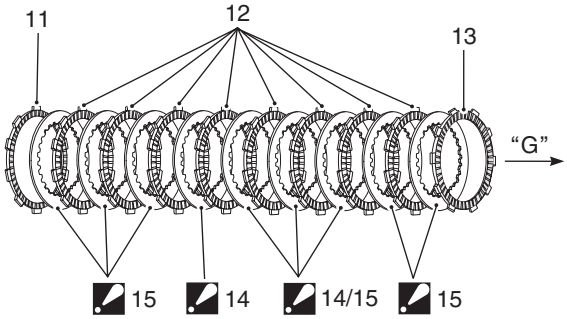

I823H1530049-03

11.	No. 3 drive plate
12.	No. 1 drive plate
13.	No. 2 drive plate
14.	No. 2 driven plate (1 – 4 pcs.) : The No. 1 and No. 2 driven plates are 9 in total.
15.	No. 1 driven plate (8 – 5 pcs.) : The No. 1 and No. 2 driven plates are 9 in total.
"G":	Direction of outside

NOTE

Three kinds of the drive plate (No. 1, No. 2 and No. 3) are equipped in the clutch system, they can be distinguished by the inside diameter and clutch facing "H".

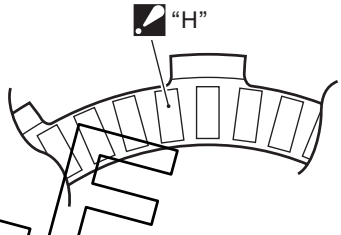

I823H1530050-02

"H":	Clutch facing : Make sure to check the numbers of clutch facing, before installing them.

Drive plate	I.D.	Clutch facing "H"
No. 1	126 mm (4.96 in)	36 pcs.
No. 2	127 mm (5.00 in)	60 pcs.
No. 3	135 mm (5.31 in)	60 pcs.

NOTE

Two kinds of the driven plate (No. 1 and No. 2) are equipped in the clutch system, they can be distinguished by the thickness.
The No. 1 and No. 2 driven plates are 9 pcs. in total. 5 – 8 pcs. of No. 1 driven plates are used with 4 – 1 pc(-s). of No. 2 driven plate(-s) as a set.
The No. 2 driven plate(-s) must be installed to 4th to 7th position of driven plates order from the sleeve hub side.

Driven plate	Thickness
No. 1	2.0 mm (0.08 in)
No. 2	2.3 mm (0.09 in)

SAMPLE

- Tighten the clutch spring set bolts (16) to the specified torque.

  Tightening torque
  Clutch spring set bolt (b): 10 N·m (1.0 kgf-m, 7.0 lb-ft)

  NOTE

  Tighten the clutch spring set bolt diagonally.

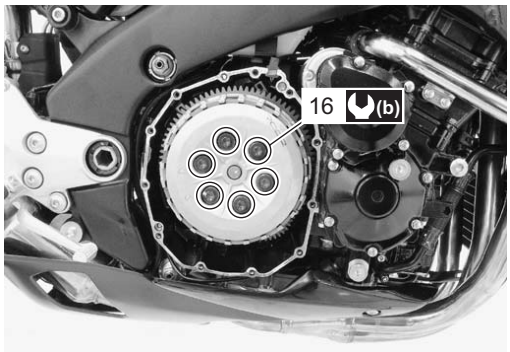

I823H1530051-03

- Apply a bond lightly to the mating surfaces at the parting line between the upper and lower crankcase as shown in the figure.

  1207B : Sealant 99000–31140 (SUZUKI BOND No.1207B or equivalent)

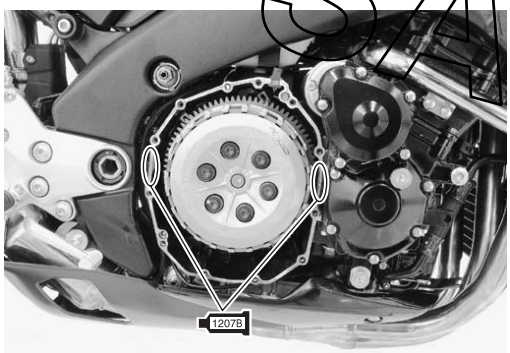

I823H1530052-01

- Install the gasket (17) and the dowel pins.

  ⚠ CAUTION

  Use the new gasket to prevent oil leakage.

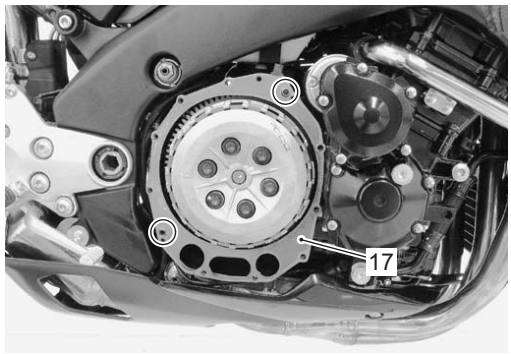

I823H1530053-01

- Install the cushion (18) and clutch outer cover (19) to the clutch cover.

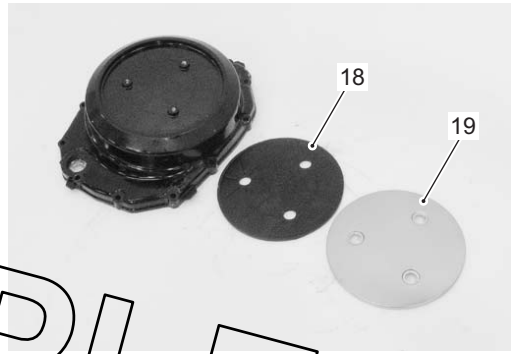

I823H1530054-01

- Tighten the clutch outer cover bolts (20) with the washers (21) securely.

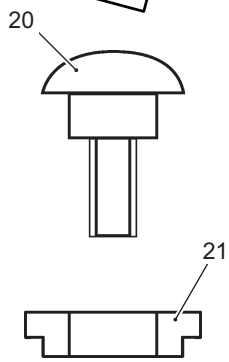

I823H1530055-01

SAMPLE

- Install the clutch cover and tighten its bolts (22) to the specified torque.

  Tightening torque
  Clutch cover bolt (c): 10 N·m (1.0 kgf-m, 7.0 lb-ft)

  NOTE

  Fit the clamp to the bolt (22).

I823H1530056-04

Clutch Parts Inspection

B823H15306018

Refer to “Clutch Removal (Page 5C-15)” and “Clutch Installation (Page 5C-17)”.

Clutch Drive and Driven Plate

NOTE

Wipe off the engine oil from the drive and driven plates with a clean rag.

Measure the thickness of drive plates with a vernier calipers. If the drive plate thickness is found to have reached the limit, replace it with a new one.

Special tool
TOOL (A): 09900–20102 (Vernier calipers (1/20 mm, 200 mm))

Clutch drive plate thickness
Service limit (No. 1 drive plate): 2.62 mm (0.103 in)
Service limit (No. 2 and No. 3 drive plates): 3.42 mm (0.135 in)

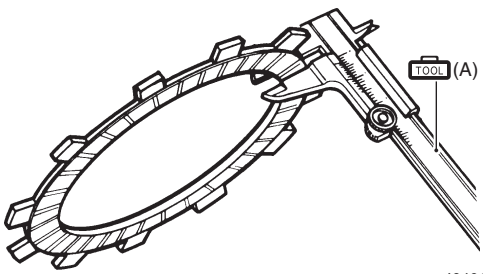

I649G1530056-03

Measure the claw width of drive plates with a vernier calipers. Replace the drive plates found to have worn down to the limit.

Special tool
TOOL (A): 09900–20102 (Vernier calipers (1/20 mm, 200 mm))

Clutch drive plate claw width
Service limit (No. 1 drive plate): 13.05 mm (0.514 in)
Service limit (No. 2 and No. 3 drive plate): 13.10 mm (0.516 in)

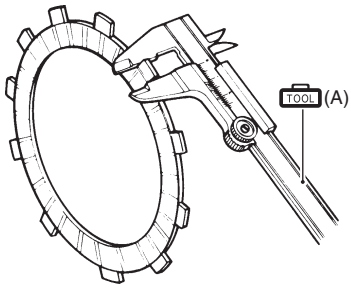

I649G1530057-03

Measure each driven plate for distortion with a thickness gauge and surface plate.
Replace driven plates which exceed the limit.

Special tool
TOOL (B): 09900–20803 (Thickness gauge)

Clutch driven plate distortion
Service limit: 0.10 mm (0.004 in)

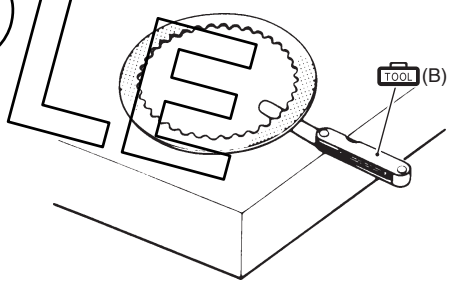

I649G1530058-03

SAMPLE

Clutch Spring

Measure the free length of each coil spring with a vernier calipers, and compare the length with the specified limit. Replace all the springs if any spring is not within the limit.

Special tool

TOOL (A): 09900–20102 (Vernier calipers (1/20 mm, 200 mm))

Clutch spring free length

Service limit: 35.3 mm (1.39 in)

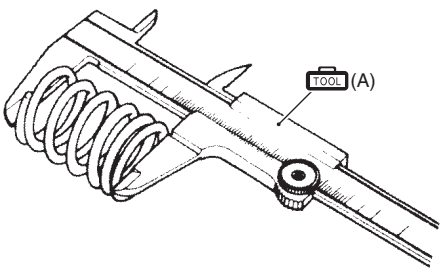

I718H1530062-01

Clutch Release Bearing

Inspect the clutch release bearing for any abnormality, especially cracks. When removing the bearing from the clutch, decide whether it can be reused or if it should be replaced.

Smooth engagement and disengagement of the clutch depends on the condition of this bearing.

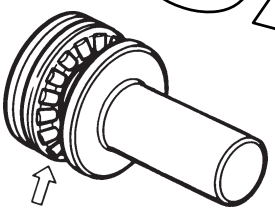

I649G1530059-02

Push Rod

Inspect the push rod for wear and damage.

If any defects are found, replace the push rod with a new one.

I718H1530063-01

Clutch Sleeve Hub and Primary Driven Gear Assembly

Inspect the slot of the clutch sleeve hub and primary driven gear assembly for damage or wear caused by the clutch plates. If necessary, replace it with a new one.

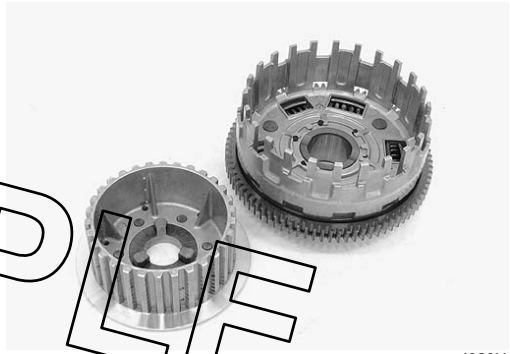

I823H1530057-01

SAMPLE

Specifications

Service Data

B823H15307001

Clutch

Unit: mm (in)

Item	Standard		Limit
Clutch drive plate thickness	No. 1	2.92 – 3.08 (0.115 – 0.121)	2.62 (0.103)
	No. 2 & 3	3.72 – 3.88 (0.146 – 0.153)	3.42 (0.135)
Clutch drive plate claw width	No. 1	13.85 – 13.96 (0.542 – 0.550)	13.05 (0.514)
	No. 2 & 3	13.90 – 14.00 (0.547 – 0.551)	13.10 (0.516)
Clutch driven plate distortion	—		0.10 (0.004)
Clutch spring free length	37.13 (1.462)		35.3 (1.39)
Clutch master cylinder bore	14.000 – 14.043 (0.5512 – 0.5529)		—
Clutch master cylinder piston diam.	13.957 – 13.984 (0.5495 – 0.5506)		—
Clutch release cylinder bore	33.600 – 33.662 (1.3228 – 1.3253)		—
Clutch release cylinder piston diam.	33.550 – 33.575 (1.3209 – 1.3218)		—
Clutch fluid type	Brake fluid DOT 4		—

Tightening Torque Specifications

B823H15307002

Fastening part	Tightening torque			Note
	N·m	kgf-m	lb-ft	
Air bleeder valve (Clutch)	6	0.6	4.5	☞(Page 5C-5) / ☞(Page 5C-6)
Clutch master cylinder holder bolt	10	1.0	7.0	☞(Page 5C-8)
Clutch hose union bolt	23	2.3	16.5	☞(Page 5C-9) / ☞(Page 5C-12)
Clutch lever pivot bolt	1.0	0.1	0.7	☞(Page 5C-10)
Clutch lever pivot bolt lock-nut	6.0	0.6	4.5	☞(Page 5C-10)
Clutch release mounting bolt	10	1.0	7.0	☞(Page 5C-12)
Clutch spring support bolt	23	2.3	16.5	☞(Page 5C-18)
Clutch sleeve hub nut	150	15.0	108.5	☞(Page 5C-19)
Clutch spring set bolt	10	1.0	7.0	☞(Page 5C-20)
Clutch cover bolt	10	1.0	7.0	☞(Page 5C-21)

SAMPLE

NOTE

The specified tightening torque is also described in the following.
“Clutch Hose Routing Diagram (Except for E-33) (Page 5C-2)”
“Clutch Hose Routing Diagram (For E-33) (Page 5C-3)”
“Clutch Control System Components (Page 5C-7)”
“Clutch Components (Page 5C-14)”

Reference:
For the tightening torque of fastener not specified in this section, refer to “Tightening Torque List in Section 0C (Page 0C-9)”.

Special Tools and Equipment

Recommended Service Material

B823H15308001

Material	SUZUKI recommended product or Specification		Note
Brake fluid	DOT 4	—	☞(Page 5C-5) / ☞(Page 5C-10) / ☞(Page 5C-13)
Grease	SUZUKI SUPER GREASE A or equivalent	P/No.: 99000–25010	☞(Page 5C-12)
	SUZUKI Silicone Grease or equivalent	P/No.: 99000–25100	☞(Page 5C-10) / ☞(Page 5C-10)
Sealant	SUZUKI BOND No.1207B or equivalent	P/No.: 99000–31140	☞(Page 5C-20)
Thread lock cement	THREAD LOCK CEMENT SUPER 1303 or equivalent	P/No.: 99000–32030	☞(Page 5C-18)

NOTE

Required service material is also described in the following.
“Clutch Control System Components (Page 5C-7)”
“Clutch Components (Page 5C-14)”

Special Tool

B823H15308002

09900–06108 Snap ring pliers ☞(Page 5C-9)	09900–20102 Vernier calipers (1/20 mm, 200 mm) ☞(Page 5C-21) / ☞(Page 5C-21) / ☞(Page 5C-22)
09900–20803 Thickness gauge ☞(Page 5C-21)	09900–25008 Multi-circuit tester set ☞(Page 5C-4)
09920–53740 Clutch sleeve hub holder ☞(Page 5C-16) / ☞(Page 5C-18)	

SAMPLE

Section 6

Steering

CONTENTS

Precautions 6-1
Precautions 6-1
Precautions for Steering 6-1
Steering General Diagnosis 6A-1
Diagnostic Information and Procedures 6A-1
Steering Symptom Diagnosis 6A-1
Steering / Handlebar 6B-1
Repair Instructions 6B-1
Handlebar Components 6B-1
Handlebar Construction 6B-2
Handlebar Removal and Installation 6B-3
Handlebars Inspection 6B-4
Steering Components 6B-5
Steering Damper Construction 6B-6
Steering Removal and Installation 6B-7
Steering Related Parts Inspection 6B-10
Steering System Inspection 6B-10
Steering Stem Bearing Removal and Installation 6B-10
Steering Tension Adjustment 6B-11
Specifications 6B-12
Tightening Torque Specifications 6B-12
Special Tools and Equipment 6B-12
Recommended Service Material 6B-12
Special Tool 6B-13

SAMPLE

Precautions

Precautions

Precautions for Steering

B823H16000001

Refer to “General Precautions in Section 00 (Page 00-1)”.

SAMPLE

Steering General Diagnosis

Diagnostic Information and Procedures

Steering Symptom Diagnosis

B823H16104001

Condition	Possible cause	Correction / Reference Item
Heavy steering	Over tightened steering stem nut.	*Adjust.*
	Broken bearing in steering stem.	*Replace.*
	Distorted steering stem.	*Replace.*
	Not enough pressure in tires.	*Adjust.*
	Defective steering damper unit.	*Replace.*
Wobbly handlebars	Loss of balance between right and left front forks.	*Replace fork, adjust fork oil level or replace spring.*
	Distorted front fork.	*Repair or replace.*
	Distorted front axle or crooked tire.	*Replace.*
	Loose steering stem nut.	*Adjust.*
	Worn or incorrect tire or wrong tire pressure.	*Adjust or replace.*
	Worn bearing/race in steering stem.	*Replace.*

SAMPLE

Steering / Handlebar

Repair Instructions

Handlebar Components

B823H16206001

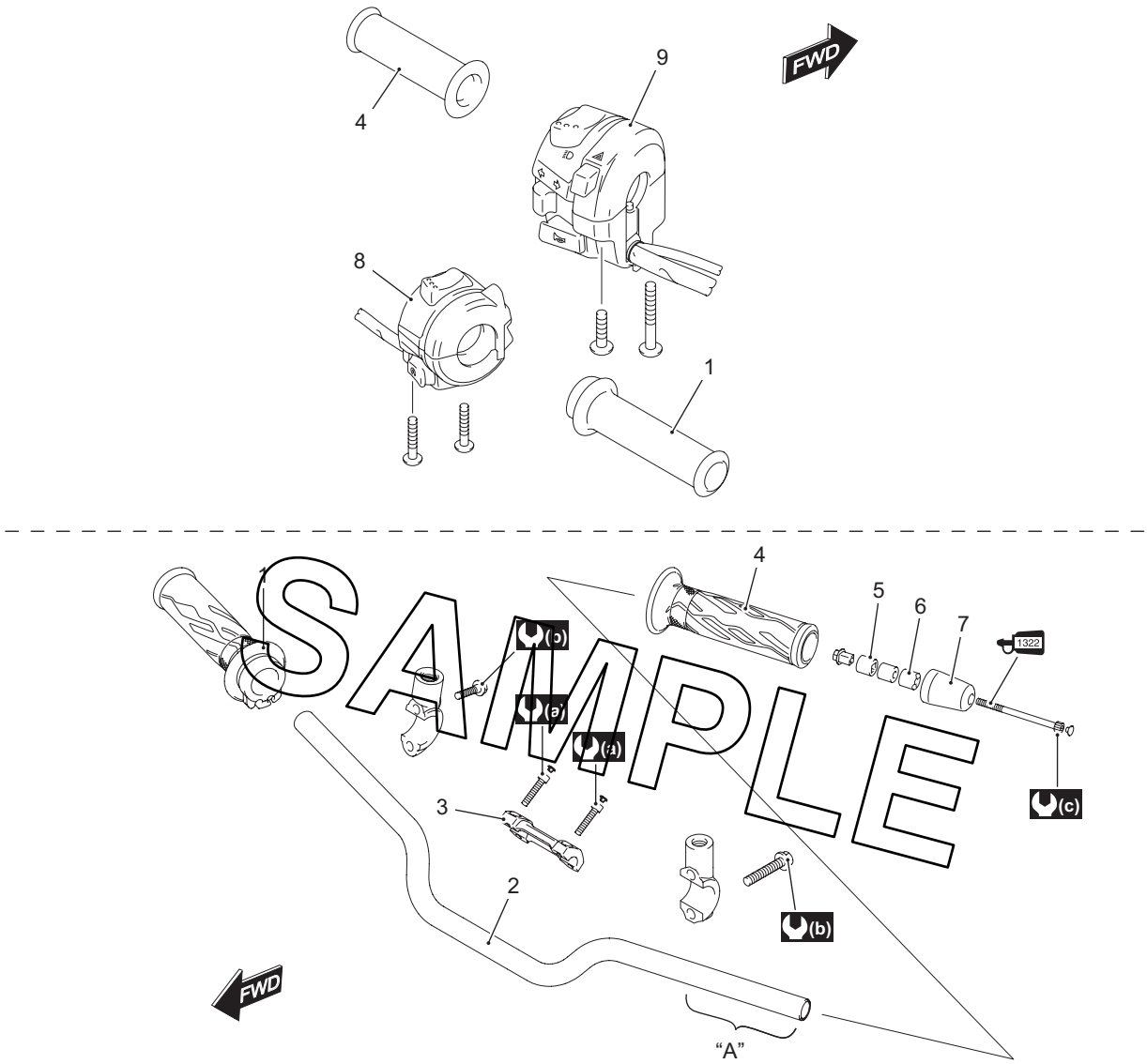

I823H1620029-07

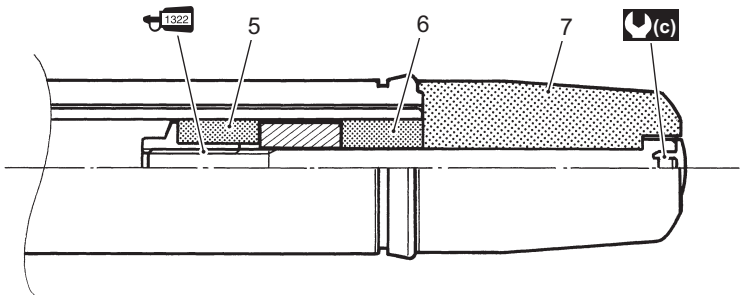

I823H1620030-04

1. Throttle grip	6. Handle balancer expander	(a) : 23 N·m (2.3 kgf-m, 16.5 lb-ft)
2. Handlebars	7. Handlebar balancer	(b) : 10 N·m (1.0 kgf-m, 7.0 lb-ft)
3. Handlebar holder (Upper)	8. Right handlebar switch box	(c) : 5.5 N·m (0.55 kgf-m, 4.0 lb-ft)
4. Grip rubber	9. Left handlebar switch box	1322 : Apply thread lock to the thread part.
5. Handle expander	"A": Apply handle grip bond.	

Handlebar Construction

B823H16206002

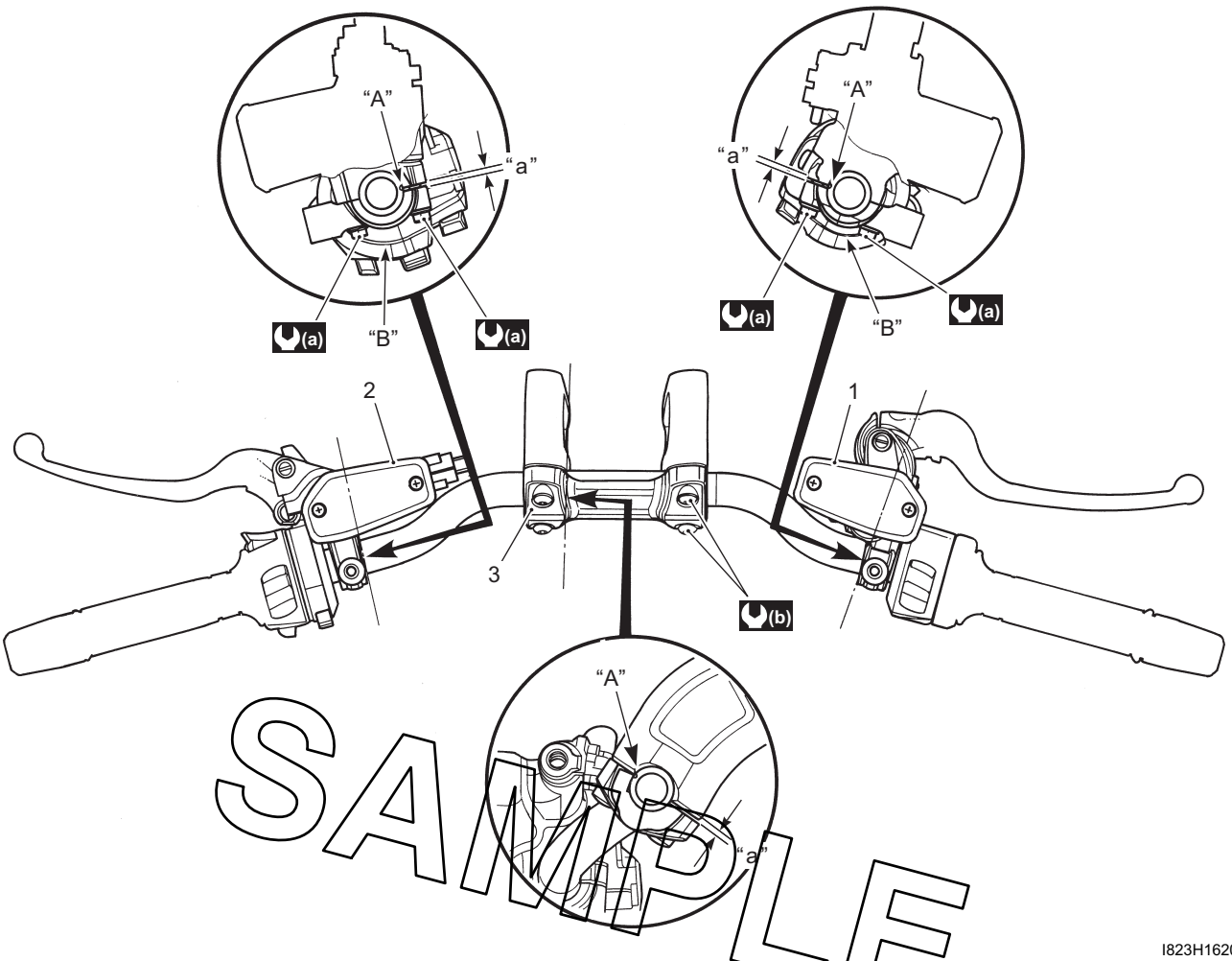

SAMPLE

I823H1620031-04

1. Front brake master cylinder	"A": Punch mark	(a) : 10 N·m (1.0 kgf-m, 7.0 lb-ft)
2. Clutch master cylinder	"B": UP mark	(b) : 23 N·m (2.3 kgf-m, 16.5 lb-ft)
3. Handlebar holder	"a": Clearance	

Handlebar Removal and Installation

B823H16206003

Removal

1) Remove the following parts from the left handlebar.
   a) Rear view mirror (1)
   b) Clutch master cylinder/clutch lever (2)

⚠ CAUTION

Do not turn the clutch master cylinder upside down.

   c) Left handlebar switch box (3)
   d) Handlebar balancer (4)
   e) Grip rubber (5)

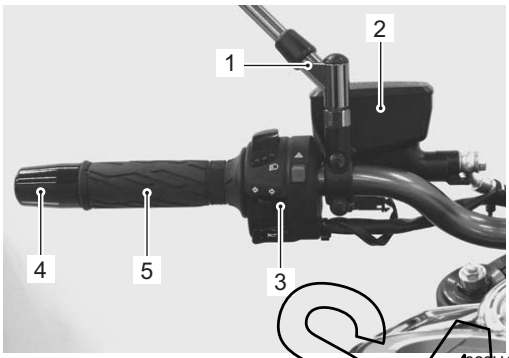

I823H1620001-01

2) Remove the following parts from the right handlebar.
   a) Rear view mirror (6)
   b) Front brake master cylinder/Front brake lever (7)

⚠ CAUTION

Do not turn the front brake master cylinder upside down.

   c) Right handlebar switch box (8)
   d) Handlebar balancer (9)
   e) Throttle grip (10)

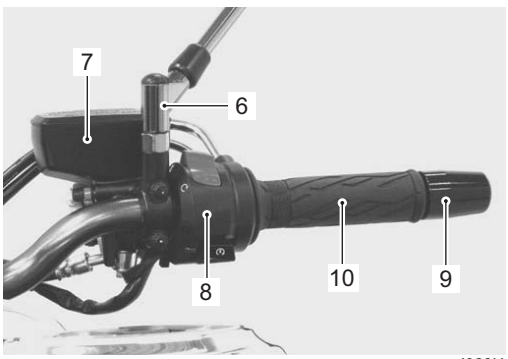

I823H1620002-01

3) Remove the caps and handlebar holder bolts.

I823H1620003-02

Installation

Install the handlebars in the reverse order of removal. Pay attention to the following points:

- Set the handlebars so that its punch mark “A” aligns with the mating surface of the left handlebar holder. Refer to “Handlebar Construction (Page 6B-2)”.

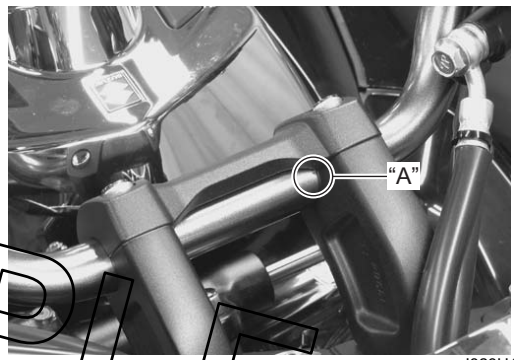

I823H1620005-02

- Tighten the handlebar holder bolts.

NOTE

First tighten the handlebar holder bolts (1) (front ones) to the specified torque.

Tightening torque
Handlebar holder bolt (a): 23 N·m (2.3 kgf-m, 16.5 lb-ft)

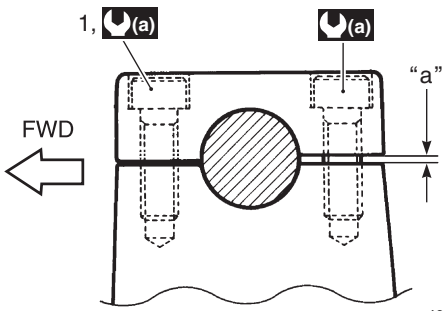

I649G1620006-02

“a”: Clearance

SAMPLE

- Apply grease to the end of the throttle cables and cable pulley.

  : Grease 99000–25010 (SUZUKI SUPER GREASE A or equivalent)

- Insert the projection “B” of the right handlebar switch box into the hole of the handlebars.

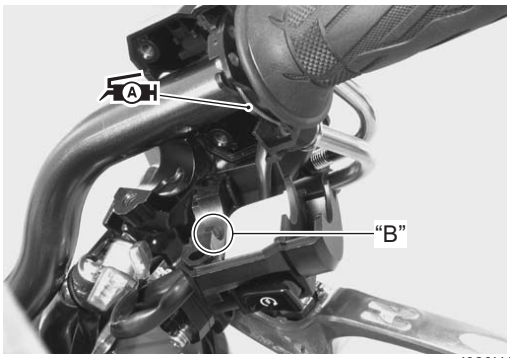

I823H1620006-02

- Install the front brake master cylinder. Refer to “Front Brake Master Cylinder Assembly Removal and Installation in Section 4A (Page 4A-10)”.
- Apply a handle grip bond “C” onto the left handlebar before installing the handlebar grip.

  : Handle grip bond (Handle Grip Bond (commercially available))

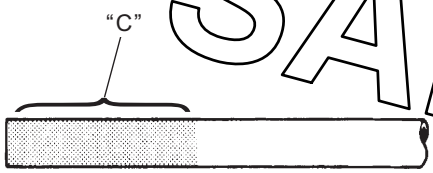

I823H1620004-02

- Insert the projection “D” of the left handlebar switch box into the hole of the handlebars.

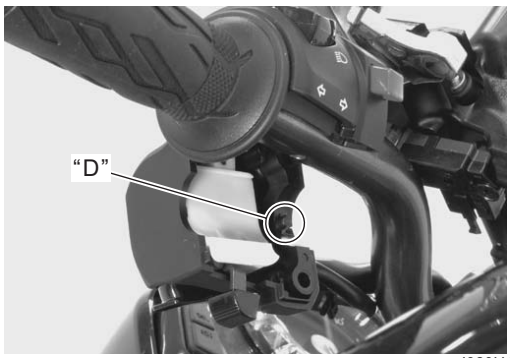

I823H1620007-01

- Install the clutch master cylinder. Refer to “Clutch Master Cylinder Assembly Removal and Installation in Section 5C (Page 5C-8)”.
- After installing the steering, the following adjustments are required before driving.
  - Cable routing (Refer to “Throttle Cable Routing Diagram in Section 1D (Page 1D-2)”.)
  - Throttle cable play (Refer to “Throttle Cable Play Inspection and Adjustment in Section 0B (Page 0B-12)”.)

Handlebars Inspection

B823H16206004

Refer to “Handlebar Removal and Installation (Page 6B-3)”.

Inspect the handlebars for distortion and damage.

If any defect is found, replace the handlebars with a new one.

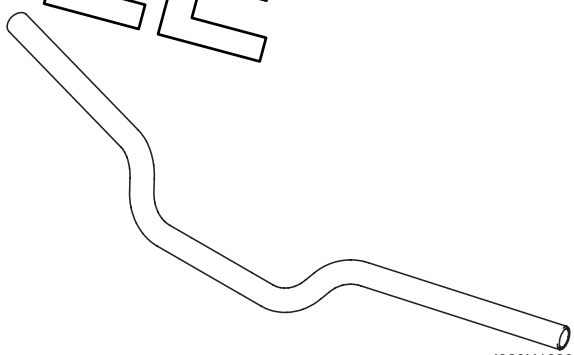

I823H1620032-01

SAMPLE

Steering Components

B823H16206005

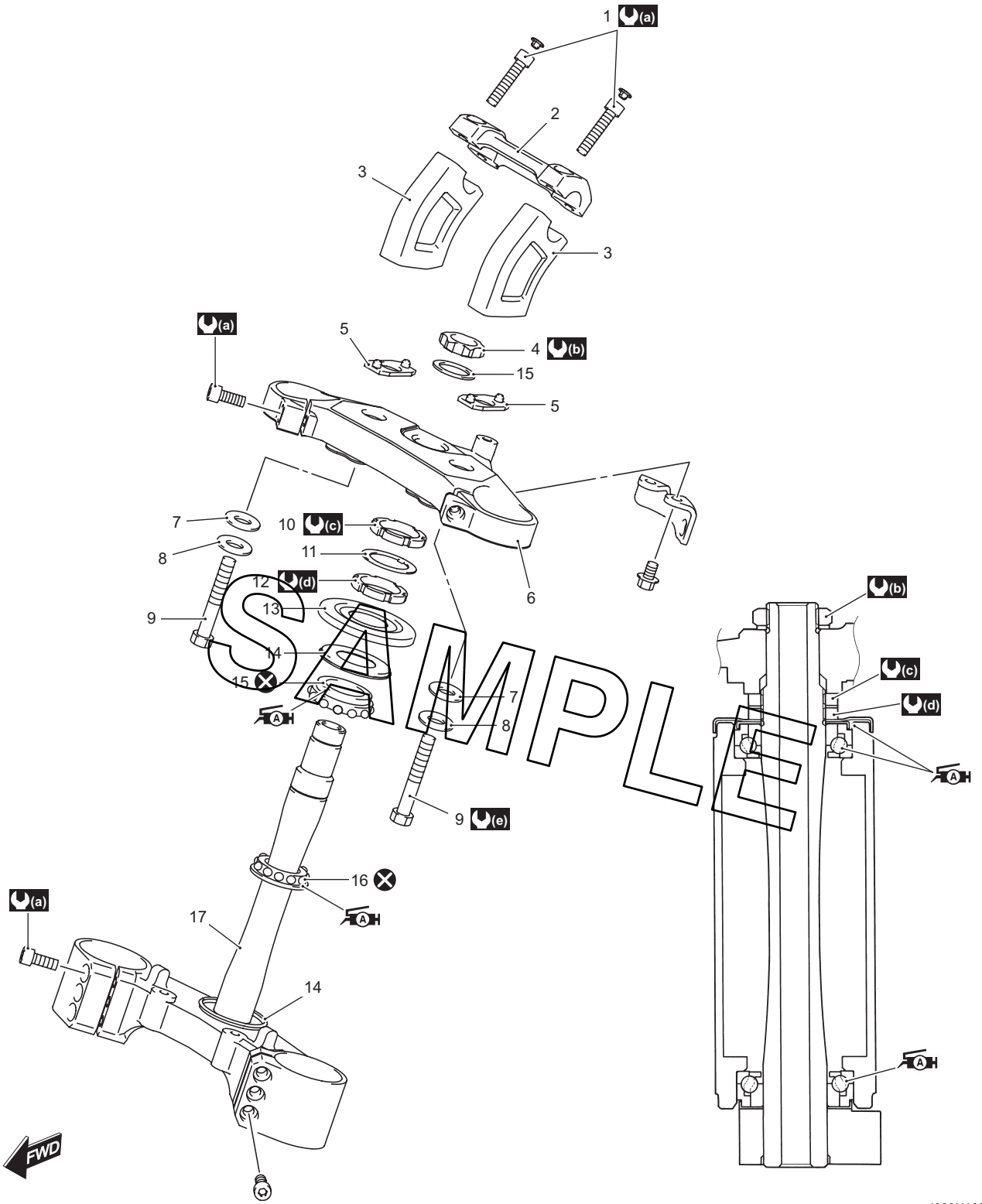

I823H1620033-05

1. Handlebar holder bolt	9. Handlebar holder mounting bolt	17. Steering stem lower bracket
2. Handlebar holder (Upper)	10. Steering stem lock-nut	(a) : 23 N·m (2.3 kgf-m, 16.5 lb-ft)
3. Handlebar holder (Lower)	11. Washer	(b) : 90 N·m (9.0 kgf-m, 65.0 lb-ft)
4. Steering stem head nut	12. Steering stem nut	(c) : 80 N·m (8.0 kgf-m, 58.0 lb-ft)
5. Handlebar holder rubber	13. Dust seal cover	(d) : 45 N·m (4.5 kgf-m, 32.5 lb-ft) and turn back 1/4 – 1/2
6. Steering stem upper bracket	14. Dust seal	(e) : 45 N·m (4.5 kgf-m, 32.5 lb-ft)
7. Rubber	15. Steering stem upper bearing	A : Apply grease.
8. Washer	16. Steering stem lower bearing	⊗ : Do not reuse.

Steering Damper Construction

B823H16206011

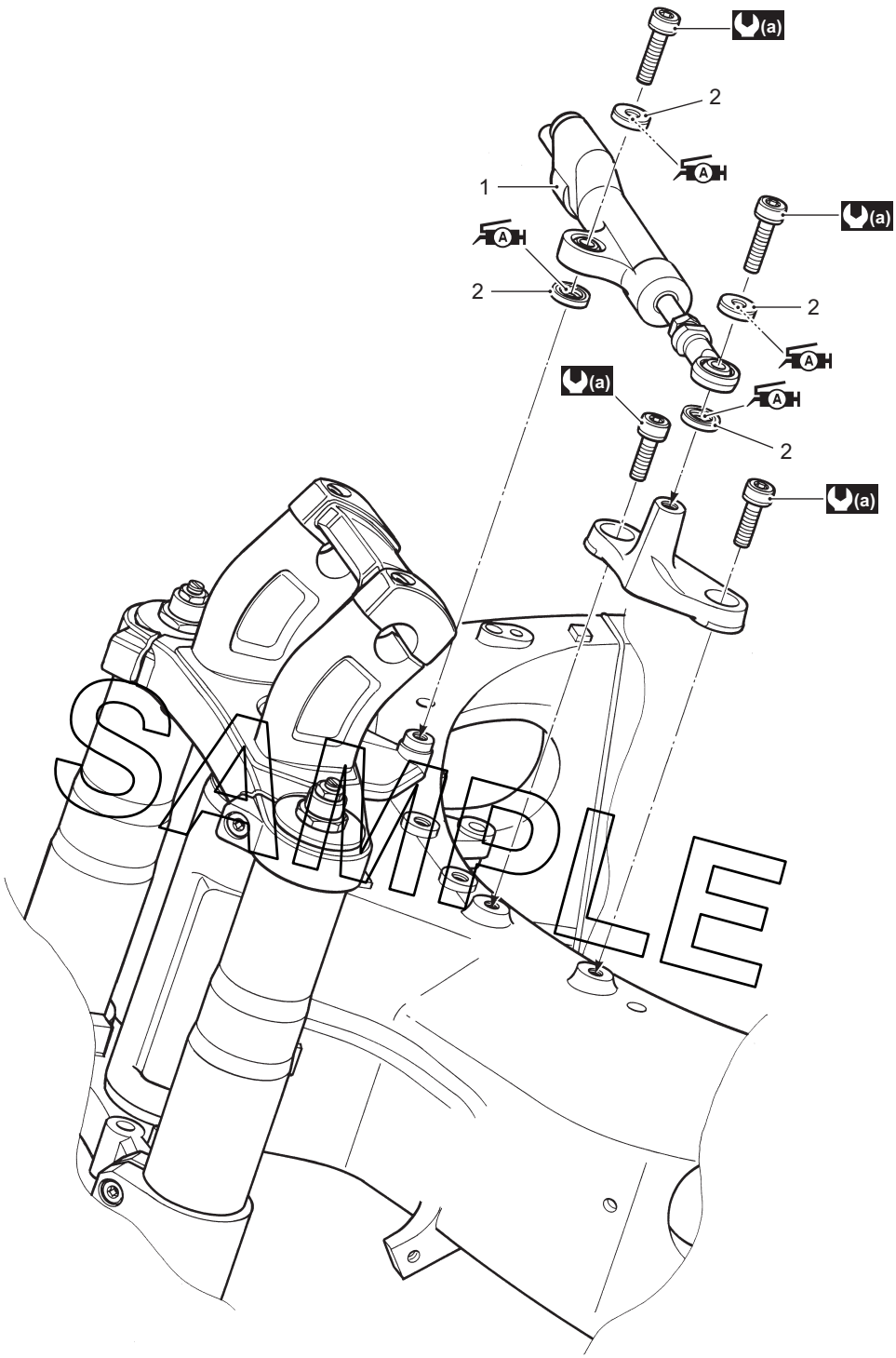

I823H1620034-02

1. Steering damper	2. Dust seal	(a) : 23 N·m (2.3 kgf-m, 16.5 lb-ft)	A : Apply grease.

Steering Removal and Installation

B823H16206006

Removal

1) Support the motorcycle with a jack or a wooden block.
2) Remove the front wheel assembly. Refer to “Front Wheel Assembly Removal and Installation in Section 2D (Page 2D-4)”.
3) Remove the brake hose clamp bolt (1).

I823H1620028-01

4) Remove the headlight. Refer to “Headlight Removal and Installation in Section 9B (Page 9B-4)”.
5) Remove the front forks. Refer to “Front Fork Removal and Installation in Section 2B (Page 2B-2)”.
6) Remove the cable guides (2).

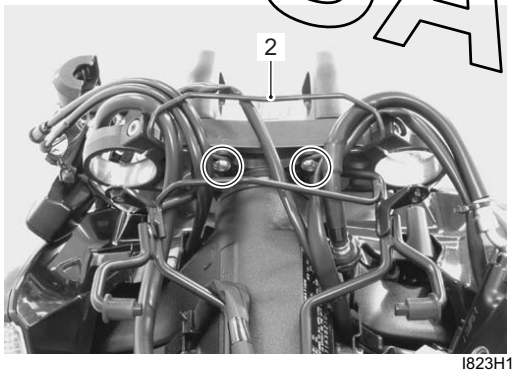

I823H1620008-01

7) After removing of the caps and bolts, remove the steering damper (3).

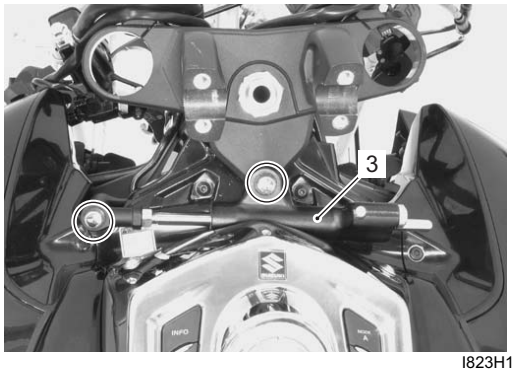

I823H1620009-01

8) Remove the steering stem upper bracket (4) by removing the steering stem head nut (5) and washer (6).

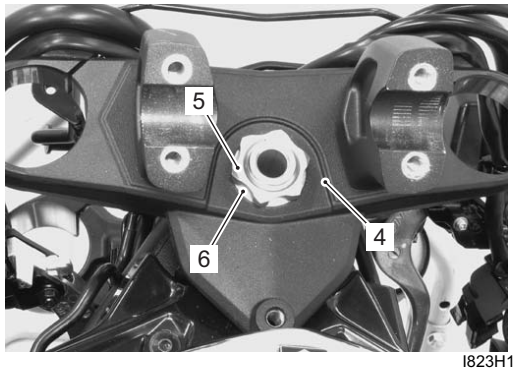

I823H1620010-01

9) Remove the steering stem lock-nut, washer and steering stem nut with the special tools.

NOTE

When loosening the stem nuts, hold the steering stem lower bracket to prevent it from falling.

Special tool
TOOL (A): 09940–14911 (Steering stem nut wrench)
TOOL (B): 09940–14960 (Steering nut wrench socket)

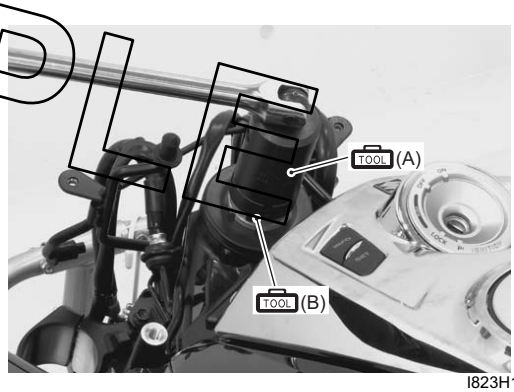

I823H1620011-01

10) Remove the steering stem lower bracket.
11) Remove the dust seal cover (7), dust seal (8), upper bearing inner race (9) and bearing (10).

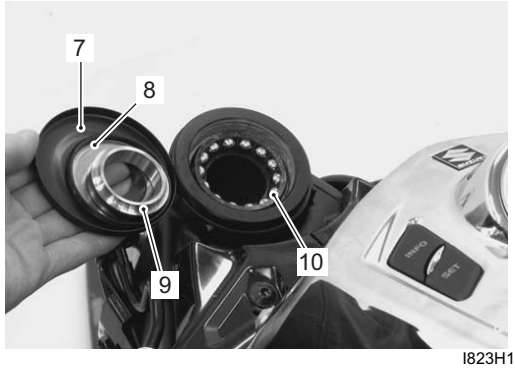

I823H1620012-01

SAMPLE

Installation
Install the steering in the reverse order of removal.
Pay attention to the following points:

Bearing

- Apply grease to the bearings, bearing races and dust seals before remounting the steering stem.

  : Grease 99000–25010 (SUZUKI SUPER GREASE A or equivalent)

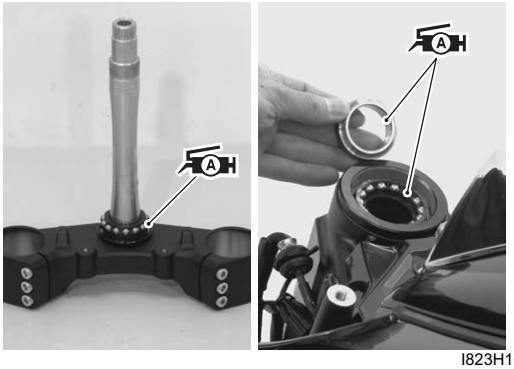

I823H1620013-03

Steering stem nut

- Tighten the steering stem nut (1) to the specified torque using the special tools.

  Special tool
  (A): 09940–14911 (Steering stem nut wrench)
  (B): 09940–14960 (Steering nut wrench socket)

  Tightening torque
  Steering stem nut (a): 45 N·m (4.5 kgf-m, 32.5 lb-ft) then turn back 1/2 – 1/4

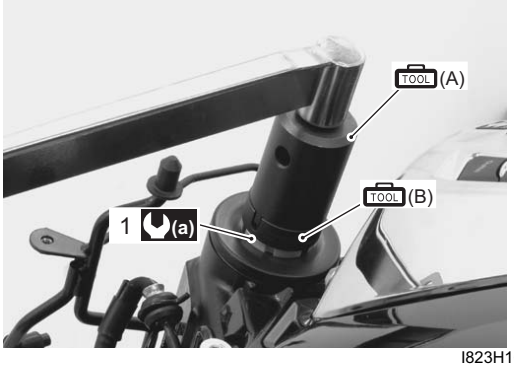

I823H1620014-02

- Turn the steering stem lower bracket about five or six times to the left and right so that the angular ball bearings seat properly.
- Loosen the steering stem nut 1/4 – 1/2 turn “a”.

NOTE

This adjustment will vary from motorcycle to motorcycle.

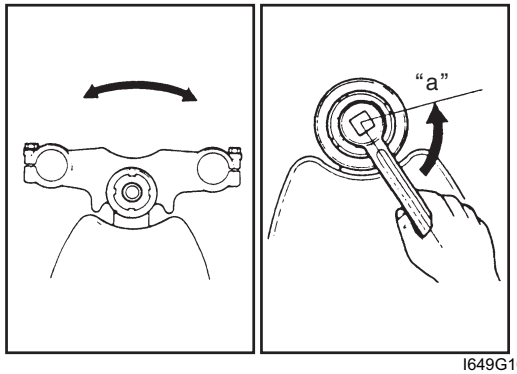

I649G1620026-02

- When installing the washer (2), align the lug of the washer to the groove of the steering stem.

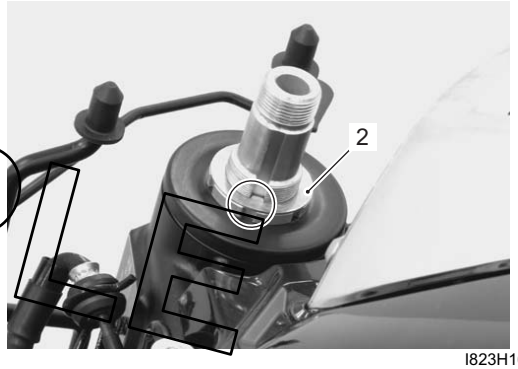

I823H1620015-01

- Tighten the steering stem lock-nut (3) to the specified torque using the special tools.

  Special tool
  (A): 09940–14911 (Steering stem nut wrench)
  (B): 09940–14960 (Steering nut wrench socket)

  Tightening torque
  Steering stem lock-nut (b): 80 N·m (8.0 kgf-m, 58.0 lb-ft)

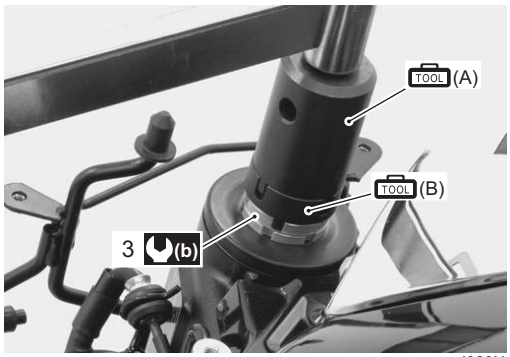

I823H1620016-02

SAMPLE

Steering stem upper bracket

Install the front forks and steering stem upper bracket in the following steps:

1) Temporarily install the upper bracket, washer (1) and steering stem head nut (2).
2) Temporarily install the front forks.
3) Tighten the steering stem head nut (2).

   Tightening torque
   Steering stem head nut (a): 90 N·m (9.0 kgf-m, 65.0 lb-ft)

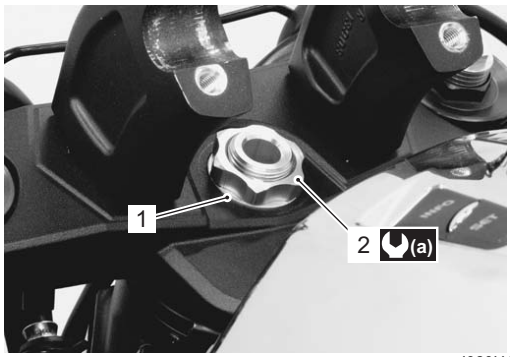

I823H1620017-01

4) Tighten the front fork upper and lower clamp bolts. Refer to “Front Fork Removal and Installation in Section 2B (Page 2B-2)”.

Handlebar holder

- Tighten the handlebar holder set nuts (1) to the specified torque.

  Tightening torque
  Handlebar holder set nut (a): 45 N·m (4.5 kgf-m, 32.5 lb-ft)

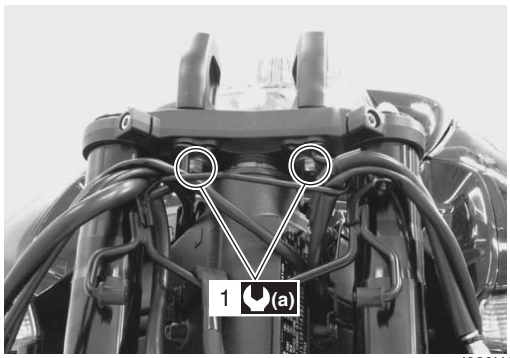

I823H1620018-02

Steering damper

- Apply grease to the bearings and dust seals.

  : Grease 99000–25010 (SUZUKI SUPER GREASE A or equivalent)

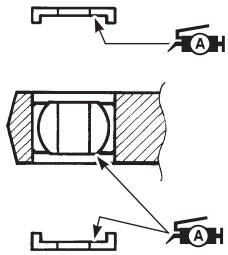

I823H1620019-02

- Install the steering damper and tighten the bolts (1).

  Tightening torque
  Steering damper bolt (a): 23 N·m (2.3 kgf-m, 16.5 lb-ft)

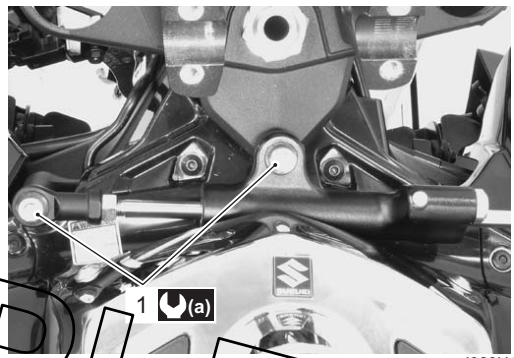

I823H1620020-02

Inspection after installation

- Check the steering tension. Refer to “Steering Tension Adjustment (Page 6B-11)”.

SAMPLE

Steering Related Parts Inspection

B823H16206007

Refer to “Steering Removal and Installation (Page 6B-7)”.

Inspect the removed parts for the following abnormalities:

- Distortion of the steering stem
- Bearing wear or damage
- Abnormal bearing noise
- Race wear or damage
- Bearing lower seal damage
- Rubber seat and damper bushing wear or damage
- Inspect the steering damper body, bearing dust seal and oil seal for damage and oil leaking.
- Move the steering damper rod by hand to inspect for a smooth movement.

If any abnormal points are found, replace defective parts with new ones.

I823H1620021-01

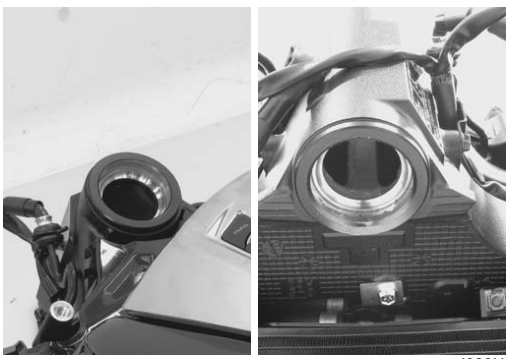

I823H1620022-01

I823H1620023-01

Steering System Inspection

B823H16206008

Refer to “Steering System Inspection in Section 0B (Page 0B-20)”.

Steering Stem Bearing Removal and Installation

B823H16206009

Removal

1) Remove the steering stem lower bracket. Refer to “Steering Removal and Installation (Page 6B-7)”.
2) Remove the dust seal cover (1), dust seal (2), steering stem upper bearing inner race (3) and bearing (4).

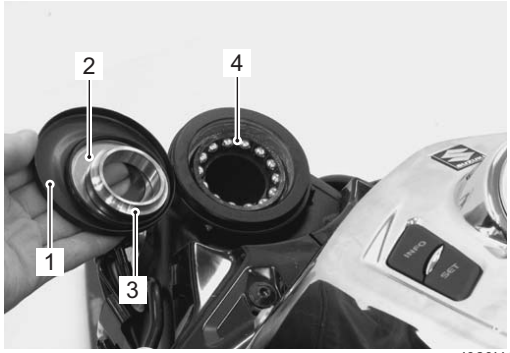

I823H1620024-02

3) Remove the steering stem lower bearing and inner race using a chisel.

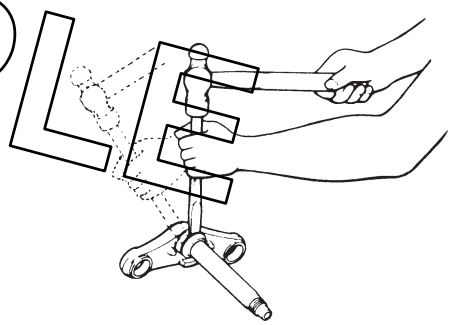

I649G1620033-02

4) Remove the steering stem upper and lower bearing races using the special tools.

Special tool
TOOL (A): 09941–54911 (Bearing outer race remover)
TOOL (B): 09941–74911 (Steering bearing installer)

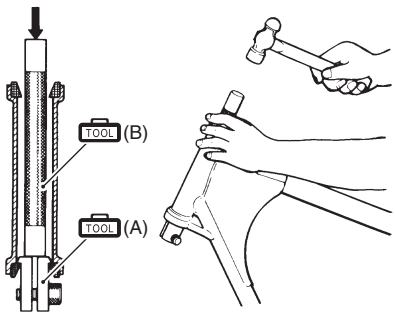

I649G1620034-03

SAMPLE

Installation
Install the steering stem bearings in the reverse order of removal. Pay attention to the following points:

⚠ CAUTION

The removed bearings and races should be replaced with new ones.

Outer race

- Press in the upper and lower outer races using the special tool.

Special tool
TOOL (A): 09941–34513 (Steering race installer)

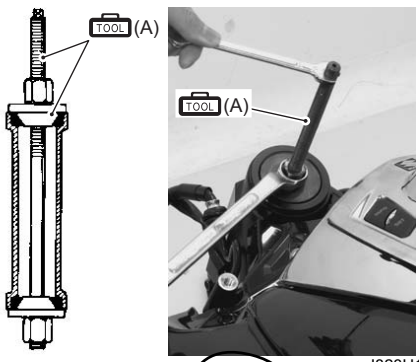

I823H1620025-02

Inner race

- Press in the lower bearing inner race and bearing using the special tool.

Special tool
TOOL (A): 09925–18011 (Steering bearing installer)

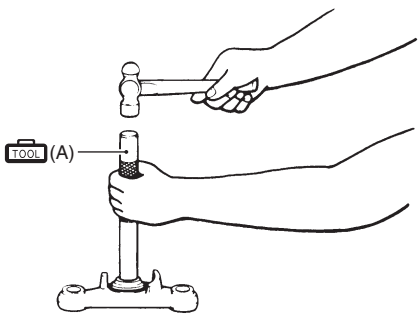

I649G1620036-03

- Install the steering. Refer to “Steering Removal and Installation (Page 6B-7)”.

Steering Tension Adjustment

B823H16206010

Check the steering movement in the following procedures:

1) By supporting the motorcycle with a jack, lift the front wheel unit is off the floor 20 – 30 mm (0.8 – 1.2 in).
2) Remove the steering damper. Refer to “Steering Damper Construction (Page 6B-6)”.
3) Check to make sure that the cables and wire harnesses are properly routed.
4) With the front wheel in the straight ahead state, hitch the spring scale (special tool) on one handlebar grip end as shown in the figure and read the graduation when the handlebar starts moving.

Initial force
200 – 500 grams

Special tool
TOOL (A): 09940–92720 (Spring scale)

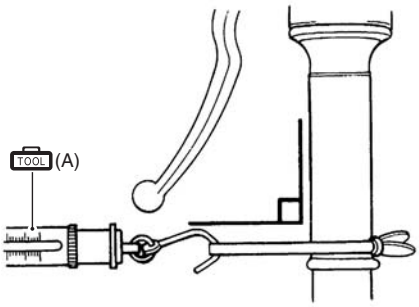

I649G1620040-02

5) Do the same on the other grip end.
6) If the initial force read on the scale when the handlebar starts turning is either too heavy or too light, adjust it till it satisfies the specification.
   a) First, loosen the front fork upper and lower clamp bolts, steering stem head nut and steering stem lock-nut, and then adjust the steering stem nut by loosening or tightening it.

Special tool
TOOL (B): 09910–60611 (Universal clamp wrench)

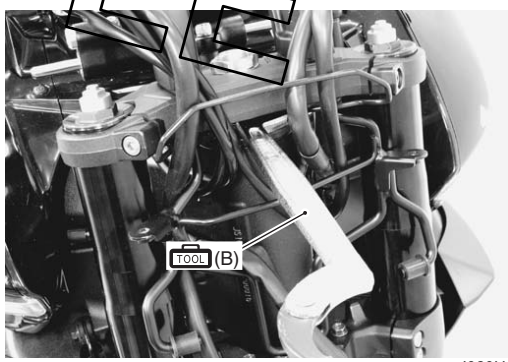

I823H1620026-01

   b) Tighten the steering stem lock-nut, stem head nut and front fork upper and lower clamp bolts to the specified torque and recheck the initial force with the spring scale according to the previously described procedure.
   c) If the initial force is found within the specified range, adjustment has been completed.

NOTE

Hold the front fork legs, move them back and forth and make sure that the steering is not loose.

SAMPLE

Specifications

Tightening Torque Specifications

B823H16207001

Fastening part	Tightening torque			Note
	N·m	kgf-m	lb-ft	
Handlebar holder bolt	23	2.3	16.5	☞(Page 6B-3)
Steering stem nut	45 N·m (4.5 kgf-m, 32.5 lb-ft) then turn back 1/2 – 1/4			☞(Page 6B-8)
Steering stem lock-nut	80	8.0	58.0	☞(Page 6B-8)
Steering stem head nut	90	9.0	65.0	☞(Page 6B-9)
Handlebar holder set nut	45	4.5	32.5	☞(Page 6B-9)
Steering damper bolt	23	2.3	16.5	☞(Page 6B-9)

NOTE

The specified tightening torque is also described in the following.
“Handlebar Components (Page 6B-1)”
“Handlebar Construction (Page 6B-2)”
“Steering Components (Page 6B-5)”
“Steering Damper Construction (Page 6B-6)”

Reference:
For the tightening torque of fastener not specified in this section, refer to “Tightening Torque List in Section 0C (Page 0C-9)”.

Special Tools and Equipment

SAMPLE

Recommended Service Material

B823H16208001

Material	SUZUKI recommended product or Specification		Note
Grease	SUZUKI SUPER GREASE A or equivalent	P/No.: 99000–25010	☞(Page 6B-4) / ☞(Page 6B-8) / ☞(Page 6B-9)
Handle grip bond	Handle Grip Bond (commercially available)	—	☞(Page 6B-4)

NOTE

Required service material is also described in the following.
“Handlebar Components (Page 6B-1)”
“Steering Components (Page 6B-5)”
“Steering Damper Construction (Page 6B-6)”

Special Tool

B823H16208002

09910–60611 Universal clamp wrench ☞(Page 6B-11)	09925–18011 Steering bearing installer ☞(Page 6B-11)
09940–14911 Steering stem nut wrench ☞(Page 6B-7) / ☞(Page 6B-8) / ☞(Page 6B-8)	09940–14960 Steering nut wrench socket ☞(Page 6B-7) / ☞(Page 6B-8) / ☞(Page 6B-8)
09940–92720 Spring scale ☞(Page 6B-11)	09941–34513 Steering race installer ☞(Page 6B-11)
09941–54911 Bearing outer race remover ☞(Page 6B-10)	09941–74911 Steering bearing installer ☞(Page 6B-10)

SAMPLE

Section 9

Body and Accessories

CONTENTS

Precautions 9-1
Precautions 9-1
Precautions for Electrical System 9-1
Component Location 9-1
Electrical Components Location 9-1

Wiring Systems 9A-1
Schematic and Routing Diagram 9A-1
Wiring Diagram 9A-1
Wiring Harness Routing Diagram 9A-5
Specifications 9A-10
Service Data 9A-10
Tightening Torque Specifications 9A-10
Special Tools and Equipment 9A-10
Recommended Service Material 9A-10

Lighting Systems 9B-1
Repair Instructions 9B-1
Headlight Housing Cover Construction 9B-1
Headlight Housing Cover Cushion Construction 9B-2
Headlight Components 9B-3
Headlight Construction 9B-3
Headlight Removal and Installation 9B-4
Headlight Bulb and Position Light Bulb Replacement 9B-5
Headlight Beam Adjustment 9B-6
Front Turn Signal Light Components 9B-7
Front Turn Signal Light Bulb Replacement 9B-8
Rear Lighting System Construction 9B-9
Rear Combination Light Removal and Installation 9B-10
Rear Combination Light Replacement 9B-11
License Plate Light Components 9B-11
License Plate Light Removal and Installation 9B-12
License Plate Light Bulb Replacement 9B-12
Rear Turn Signal Light Components 9B-13
Rear Turn Signal Light Removal and Installation 9B-13
Rear Turn Signal Light Bulb Replacement 9B-14
Reflex Refractor Construction 9B-14
Turn Signal / Side-Stand Relay Inspection 9B-15
Turn Signal / Side-Stand Relay Removal and Installation 9B-15
Hazard Switch Inspection 9B-15
Turn Signal Switch Inspection 9B-15
Passing Light Switch Inspection 9B-16
Dimmer Switch Inspection 9B-16
Specifications 9B-17
Service Data 9B-17
Tightening Torque Specifications 9B-17
Special Tools and Equipment 9B-17
Recommended Service Material 9B-17
Special Tool 9B-17

Combination Meter / Fuel Meter / Horn .. 9C-1
General Description 9C-1
Combination Meter System Description 9C-1
Repair Instructions 9C-2
Combination Meter Components 9C-2
Combination Meter Removal and Installation 9C-2
Combination Meter Disassembly and Assembly 9C-3
Combination Meter Inspection 9C-3
Engine Coolant Temperature Indicator and Indicator Light Inspection 9C-4
ECT Sensor Removal and Installation 9C-5
Fuel Level Indicator Inspection 9C-5
Fuel Level Gauge Inspection 9C-6
Speedometer Inspection 9C-7
Speed Sensor Removal and Installation 9C-7
Speed Sensor Inspection 9C-7
Oil Pressure Indicator Inspection 9C-8
Oil Pressure Switch Removal and Installation 9C-8
Oil Pressure Switch Inspection 9C-8
Ignition Switch Inspection 9C-9
Ignition Switch Removal and Installation 9C-9
Horn Inspection 9C-9
Horn Removal and Installation 9C-10
Specifications 9C-11
Service Data 9C-11
Tightening Torque Specifications 9C-11
Special Tools and Equipment 9C-11
Special Tool 9C-11

Exterior Parts 9D-1
Schematic and Routing Diagram 9D-1
Seat Lock Cable Routing Diagram 9D-1
Repair Instructions 9D-2

SAMPLE

Frame Cover Construction 9D-2
Frame Side Cover Cushion Attachment.....9D-3
Front Frame Cover Cushion Attachment 9D-3
Frame Body Cover Construction.....9D-4
Under Cowling Construction 9D-5
Under Cowling Heat Shield Attachment.....9D-6
Frame Cover Cushion Attachment.....9D-6
Muffler Cover Construction 9D-7
Muffler Cover Heat Shield Attachment.....9D-8
Tool Box Heat Shield Attachment 9D-9
Engine Sprocket Outer Cover Cushion Attachment (Except for E-33).....9D-10
Engine Sprocket Outer Cover Cushion Attachment (For E-33) 9D-10
Rear Fender Construction.....9D-11
Rear Fender Heat Shield / Cushion Attachment.....9D-12
Wiring Harness Protector Attachment.....9D-13
Fastener Removal and Installation.....9D-13
Exterior Parts Removal and Installation 9D-14
Specifications 9D-18
Tightening Torque Specifications.....9D-18

Body Structure..... 9E-1
Repair Instructions 9E-1
Body Frame Construction 9E-1
Front Footrest Bracket Construction 9E-2
Side-stand Construction.....9E-3
Side-stand Removal and Installation.....9E-4
Specifications 9E-4
Tightening Torque Specifications.....9E-4
Special Tools and Equipment 9E-4
Recommended Service Material 9E-4

SAMPLE

Precautions

Precautions

Precautions for Electrical System

B823H19000001

Refer to “General Precautions in Section 00 (Page 00-1)” and “Precautions for Electrical Circuit Service in Section 00 (Page 00-2)”.

Component Location

Electrical Components Location

B823H19003001

Refer to “Electrical Components Location in Section 0A (Page 0A-7)”.

SAMPLE

Wiring Systems

Schematic and Routing Diagram

Wiring Diagram

B823H19102001

Refer to “Wire Color Symbols in Section 0A (Page 0A-5)”.

SAMPLE

For E-02, 19, 24

I823H1910901-09

For E-03, 28

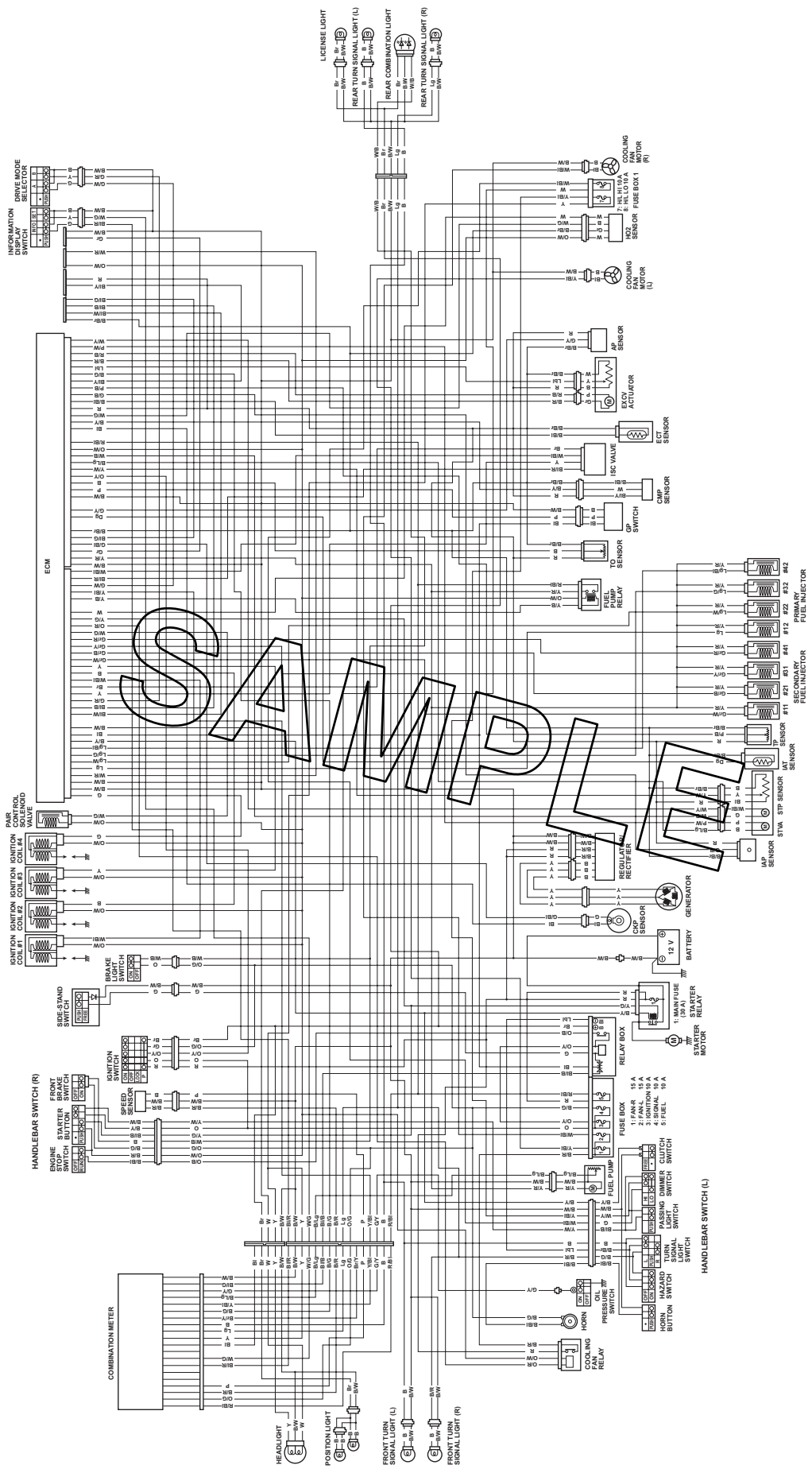

I823H1910902-08

For E-33

SAMPLE

I823H1910903-09

Wiring Harness Routing Diagram

B823H19102005

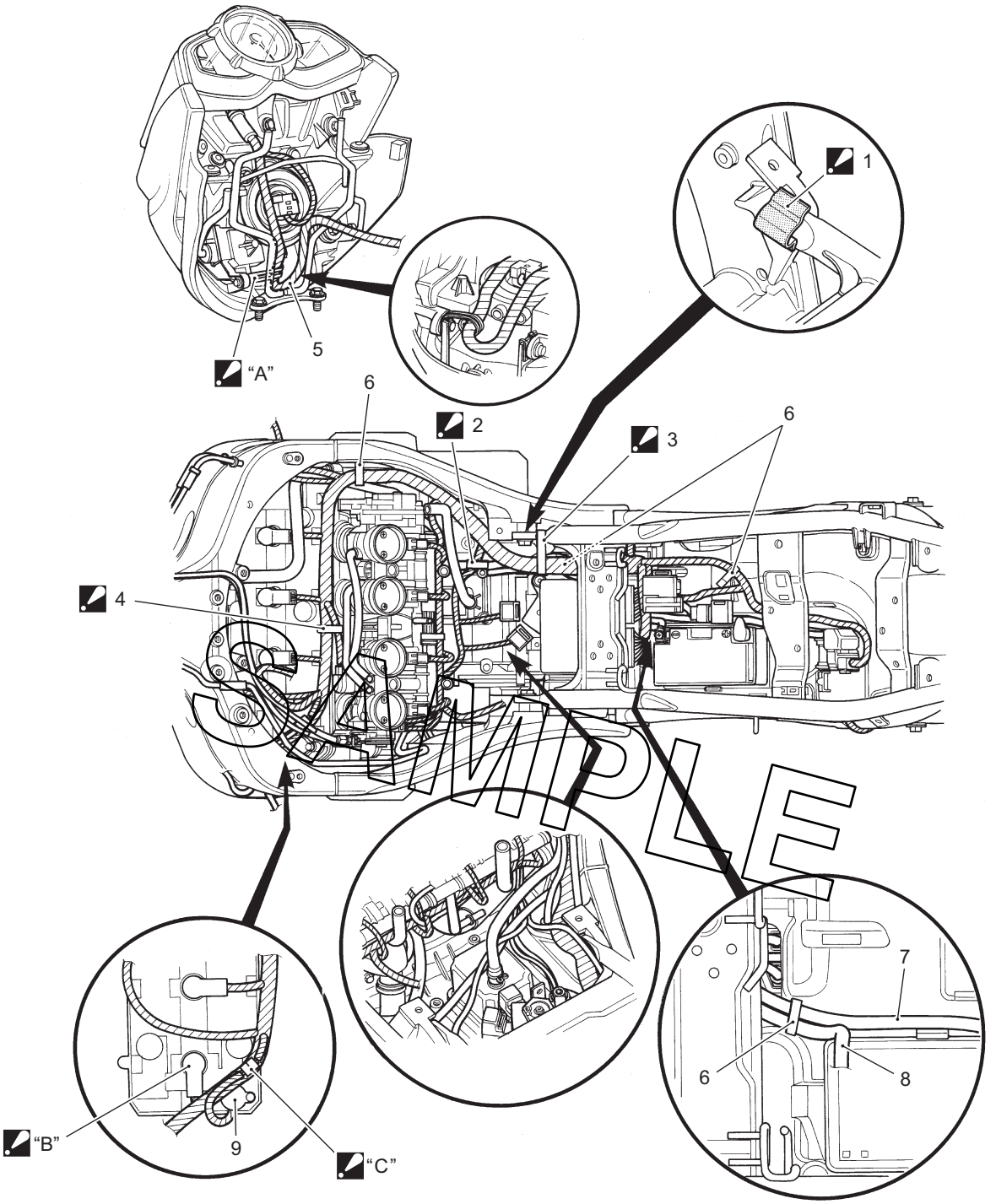

I823H1910904-04

1. Wiring harness protector : Stick the wiring harness protector onto the seat rail bolt.	7. Starter motor lead wire
2. Clamp : Bind the wiring harness, oil pressure switch lead wire and HO2 sensor lead wire with the clamp.	8. Battery (–) lead wire
3. Clamp : Bind the wiring harness and rear brake light switch lead wire with the clamp.	9. CMP sensor
4. Clamp : Bind the wiring harness and ISC valve lead wire with rib of the throttle body at white taping point.	"A": Set the clamp between the headlight and headlight housing.
5. Wiring harness No. 2	"B": Turn the coupler side of the #1 ignition coil/plug cap to the left.
6. Fixed clamp	"C": Rout the CMP sensor lead wire above the wiring harness.

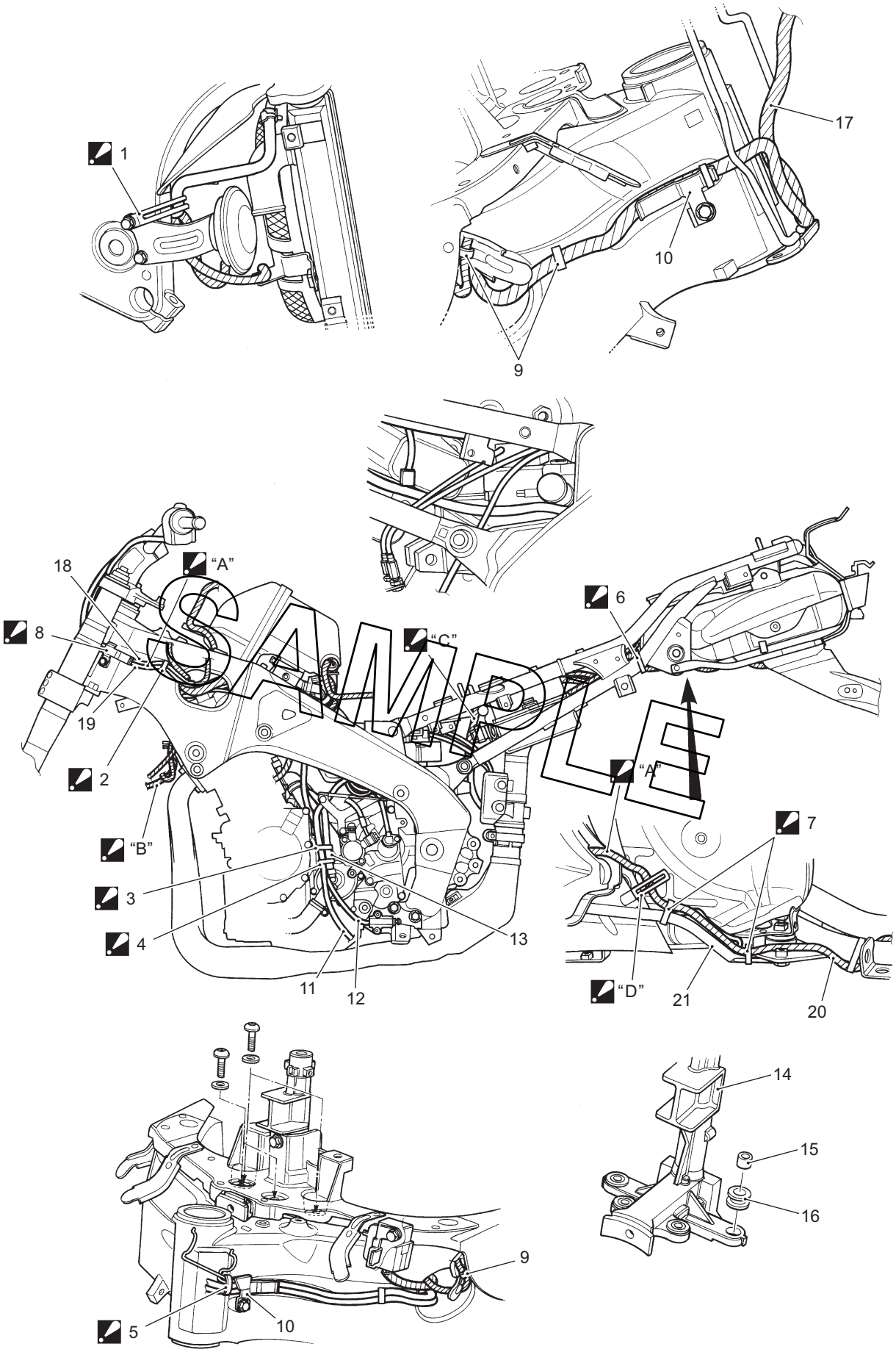

SAMPLE

1. Clamp : Pass the radiator breather hose above the horn bracket. Be careful not to contact the lead wires with the horn bracket.	14. Ignition switch
2. Clamp : Bind the handlebar switch wiring harnesses. Cut off the excess end of the clamp.	15. Spacer
3. Clamp : Bind the side-stand switch lead wire, regulator/rectifier lead wire and fuel tank drain hose with the clamp. Do not bind the fuel tank drain hose too tight.	16. Cushion
4. Clamp : Bind the side-stand switch lead wire and regulator/rectifier lead wire at the front of water bypass hose. Cut the excessive part of the clamp.	17. Wiring harness No. 2
5. Clamp : Bind the left and right handlebar switch harnesses with the harness guide. Cut off excess end of the clamp.	18. Right handlebar switch lead wire (Red)
6. Clamp : Face the clamp end inside.	19. Left handlebar switch lead wire (Blue)
7. Clamp : Cut off the excess end of the clamp and set the locked part facing inside.	20. Rear combination light lead wire
8. Harness guide : Install the harness guide after binding the each lead wire.	21. Rear fender bracket
9. Fixed clamp	"A": Do not make slacked part.
10. Harness guide	"B": Pass the left and right cooling fan and horn lead wires between the frame and cylinder head.
11. Regulator/Rectifier lead wire	"C": Pass the starter motor lead wire to right side of the tool box.
12. Side-stand switch lead wire	"D": Bend the clamp half upward.
13. Water bypass hose	

SAMPLE

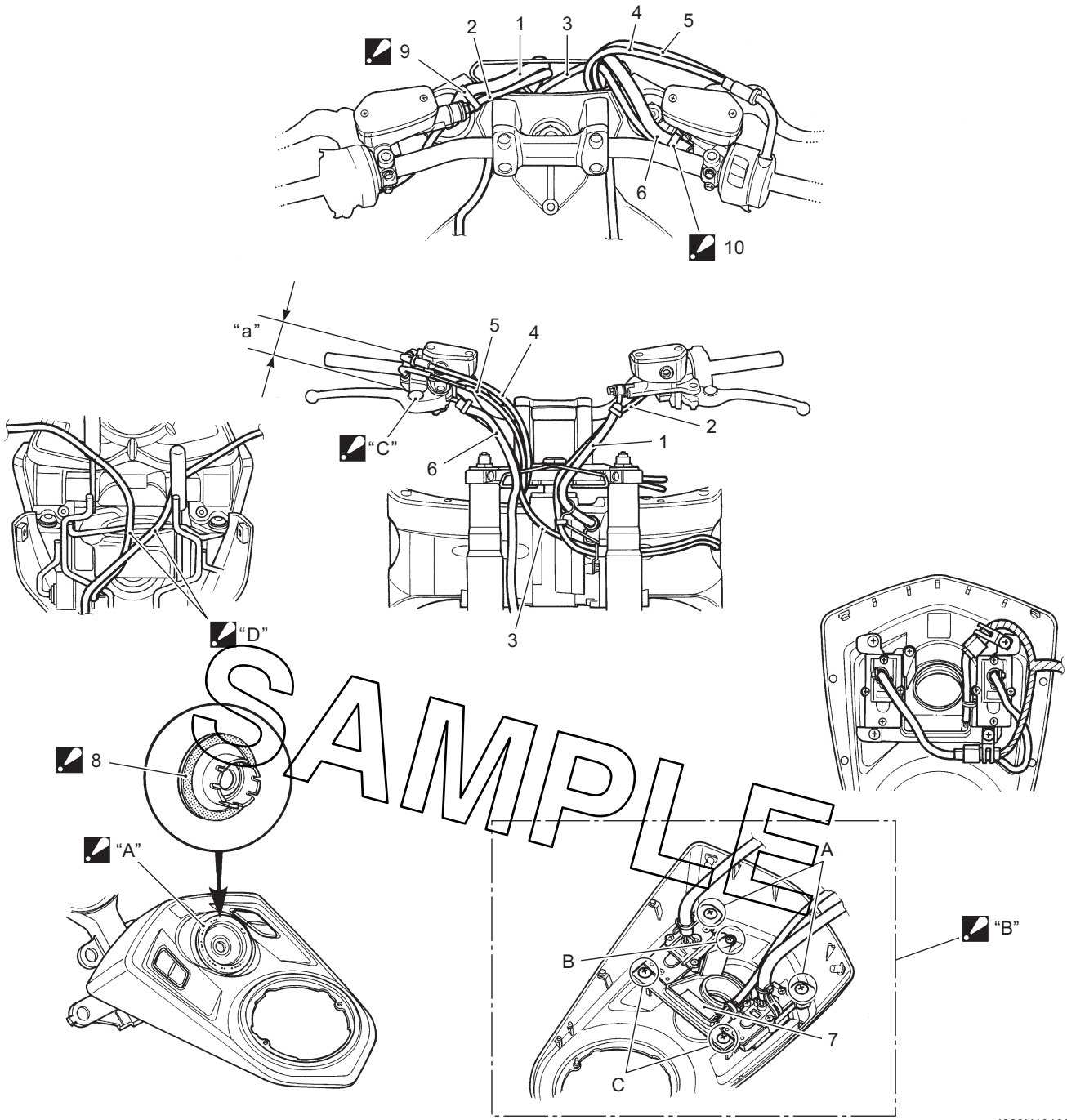

SAMPLE

I823H1910906-07

1. Clutch hose	9. Clamp : Bind the clutch hose and left handlebar switch lead wires. Cut off the excess end of the clamp.
2. Left handlebar switch lead wire	10. Clamp : Bind the front brake hose and right handlebar switch lead wires. Cut off the excess end of the clamp.
3. Right handlebar switch lead wire	"A": Push in the cap and turn it to set the ON position to the top.
4. Throttle cable No. 1	"B": When installing the immobilizer antenna, tighten the screws in this order (A → B → C).
5. Throttle cable No. 2	"C": Make sure that the distance between throttle cable adjuster top and brake lever adjuster is 55 mm (2.16 in) or less.
6. Front brake hose	"D": Pass the left and right handlebar switch harnesses behind the headlight brace.
7. Immobilizer antenna (For E-02, 19, 24)	"a": 55 mm (2.16 in) or less
8. Cushion seat : Stick the cushion seat to the back side of the ignition switch cap properly.	

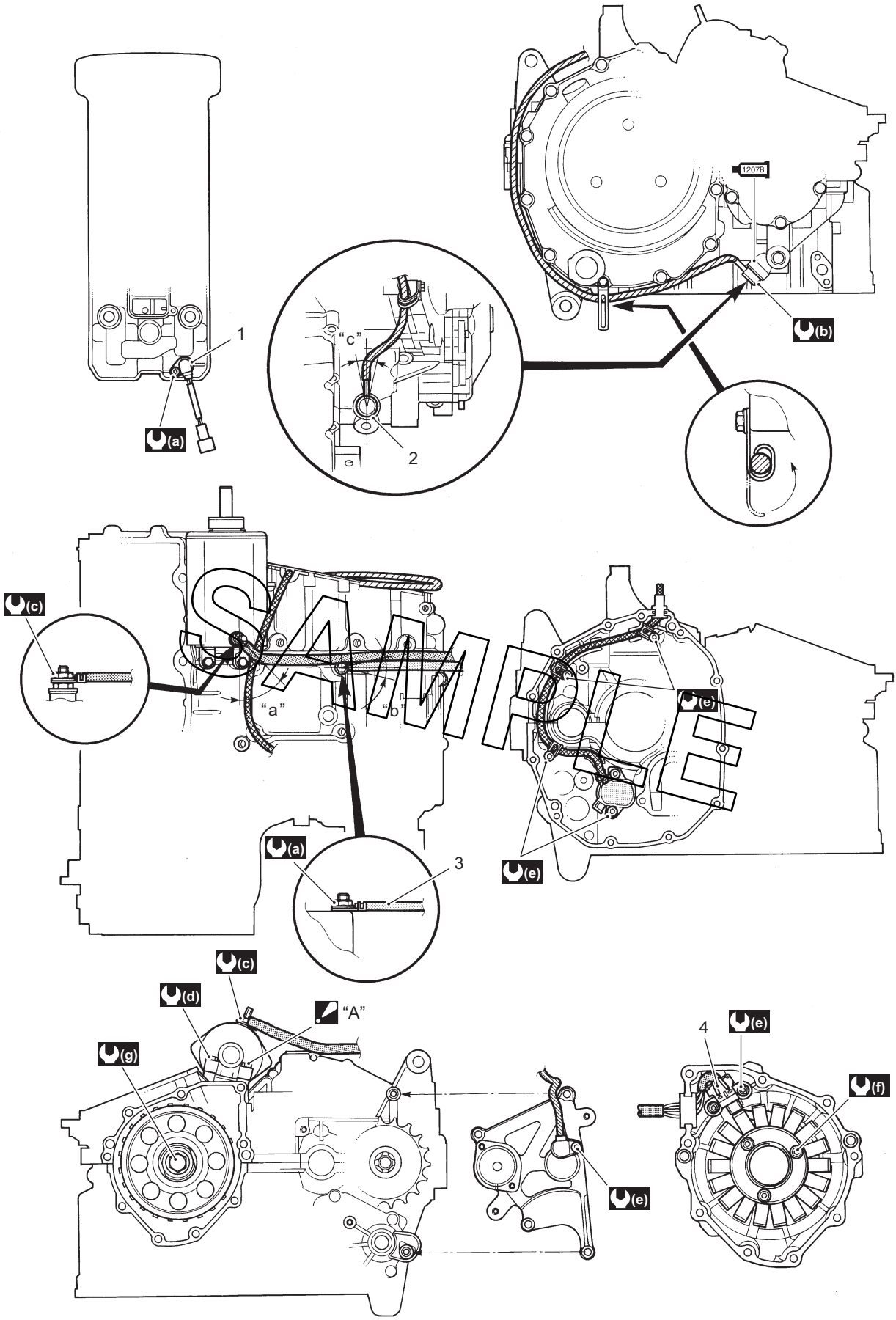

SAMPLE

I823H1910907-04

1. CMP sensor	(b) : 14 N·m (1.4 kgf-m, 10.0 lb-ft)	"a": Approx. 45°
2. Oil pressure switch	(c) : 5 N·m (0.5 kgf-m, 3.5 lb-ft)	"b": Within 20°
3. Engine ground lead wire	(d) : 6 N·m (0.6 kgf-m, 4.3 lb-ft)	"c": Within 10°
4. CKP sensor	(e) : 6.5 N·m (0.65 kgf-m, 4.7 lb-ft)	1207B : Apply bond to the thread part.
"A": When tightening the starter motor mounting bolts, tighten rear one first.	(f) : 11 N·m (1.1 kgf-m, 8.0 lb-ft)	
(a) : 10 N·m (1.0 kgf-m, 4.7 lb-ft)	(g) : 120 N·m (12 kgf-m, 87 lb-ft)	

Specifications

Service Data

B823H19107001

Electrical

Item			Specification	Note
Fuse size	Headlight	HI	10 A	
		LO	10 A	
	Signal		10 A	
	Ignition		10 A	
	Fuel		10 A	
	Fan (LH)		15 A	
	Fan (RH)			
	Main		30 A	

Tightening Torque Specifications

B823H19107002

NOTE

The specified tightening torque is also described in the following.
"Wiring Harness Routing Diagram (Page 9A-5)"

Reference:
For the tightening torque of fastener not specified in this section, refer to "Tightening Torque List in Section 0C (Page 0C-9)".

SAMPLE

Special Tools and Equipment

Recommended Service Material

B823H19108001

NOTE

Required service material is also described in the following.
"Wiring Harness Routing Diagram (Page 9A-5)"

Lighting Systems

Repair Instructions

Headlight Housing Cover Construction

B823H19206028

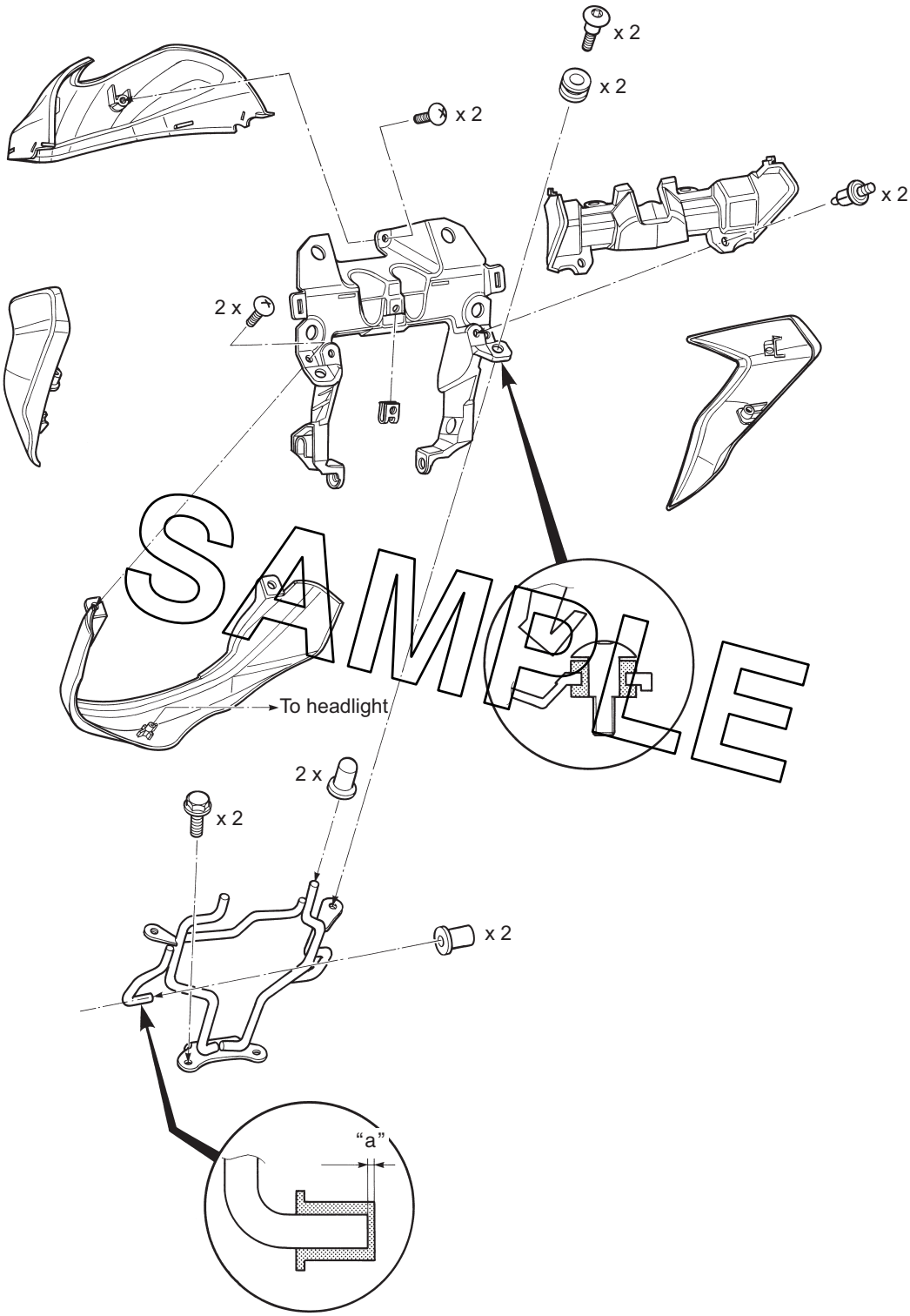

SAMPLE

I823H1920048-01

"a": Approx. 1 mm (0.04 in)

Headlight Housing Cover Cushion Construction

B823H19206027

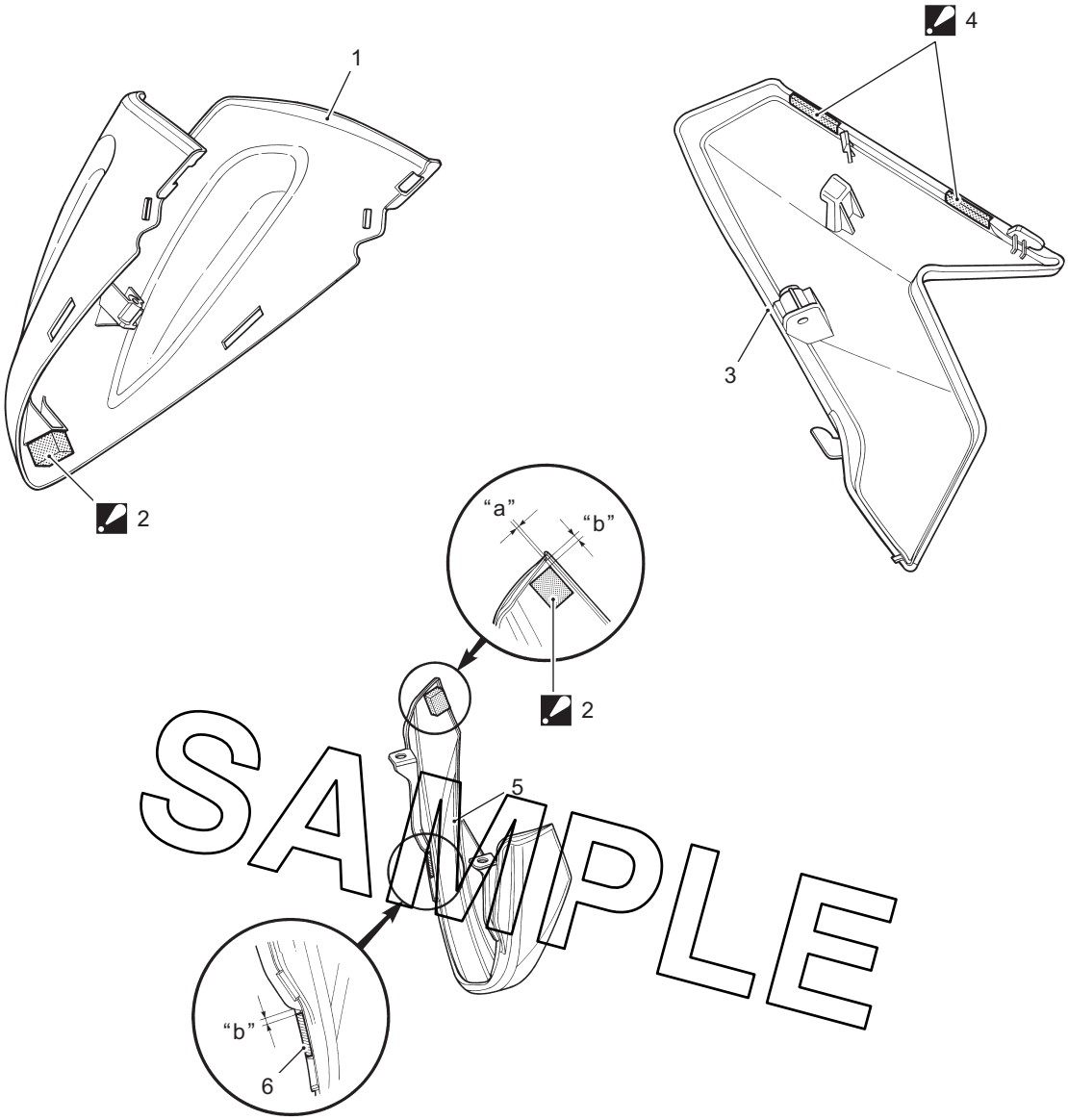

SAMPLE

I823H1920047-02

1. Headlight upper housing	5. Headlight lower cover
2. Cushion rubber : Clean an adhesive surface before adhering the cushion.	6. Protective tape
3. Headlight side housing	"a": 1.5 mm (0.06 in)
4. Protective tape : Align the protective tape to the aligned mark.	"b": 3 mm (0.12 in)

Headlight Components

B823H19206001

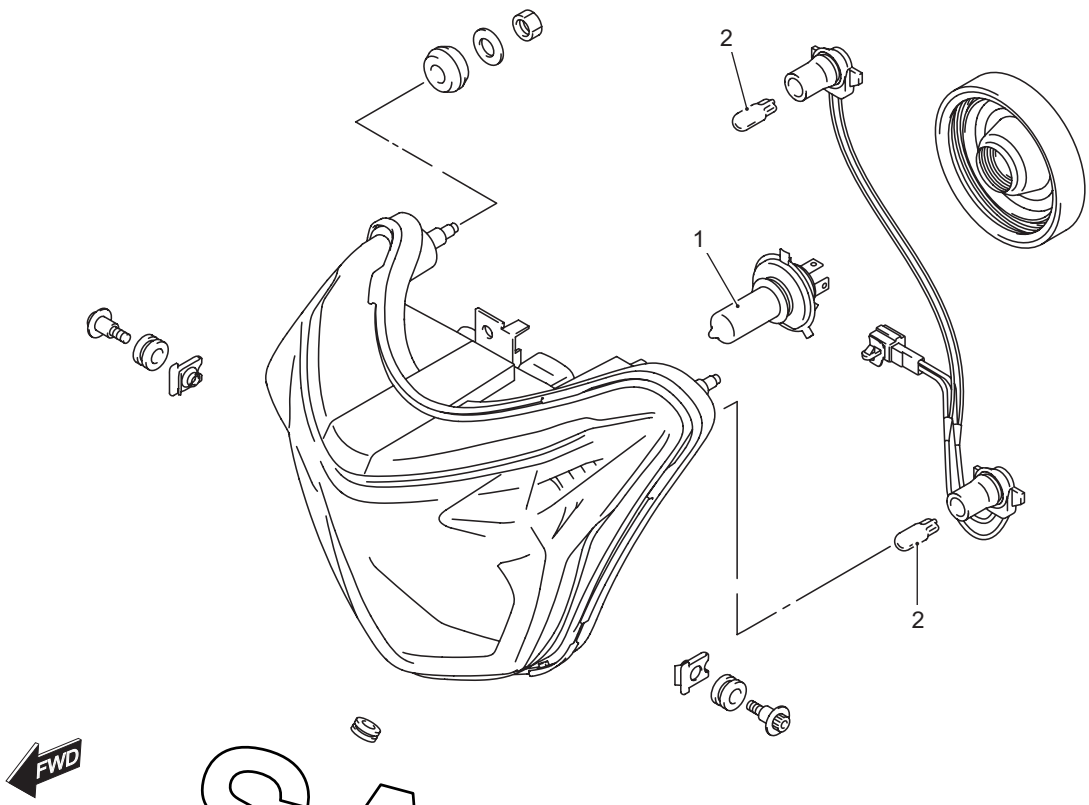

I823H1920046-02

1. Headlight bulb (12 V 60/55 W, H4)	2. Position light bulb (12 V 5 W)

SAMPLE

Headlight Construction

B823H19206029

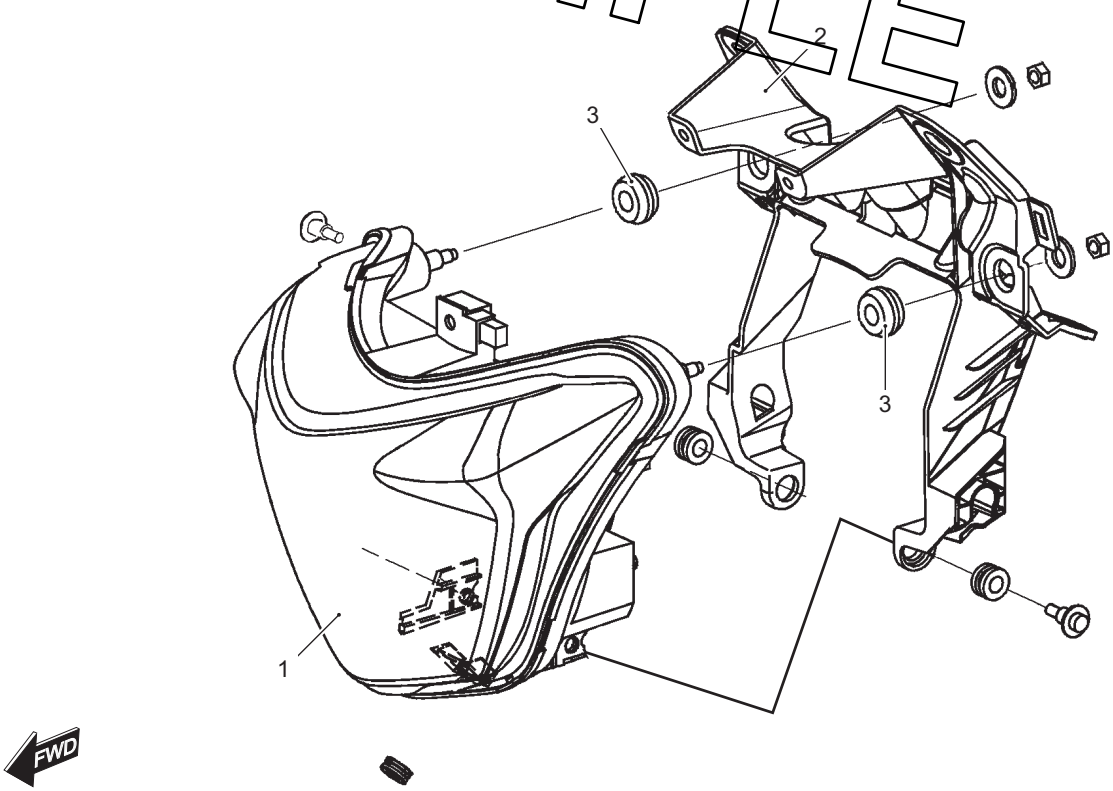

I823H1920049-02

1. Headlight	2. Headlight cover	3. Cushion

Headlight Removal and Installation

B823H19206002

Removal

1) Remove the combination meter. Refer to “Combination Meter Removal and Installation in Section 9C (Page 9C-2)”.
2) Remove the headlight cover screws (1).

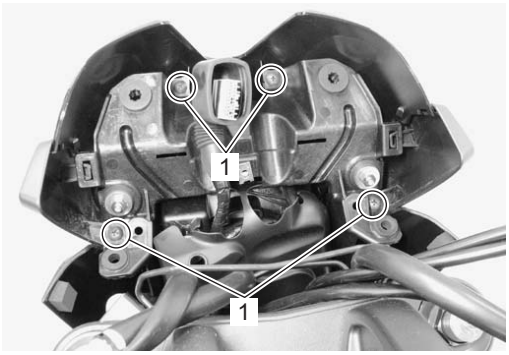

I823H1920001-01

3) Remove the headlight covers (2).

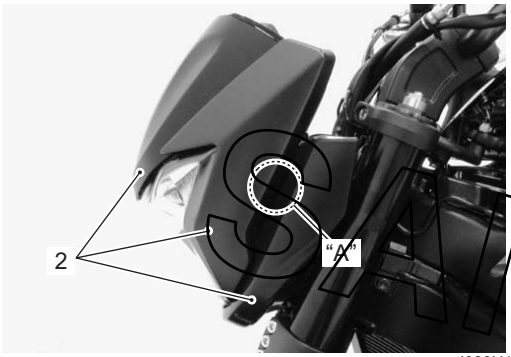

I823H1920002-01

“A”: Hooked point

4) Disconnect the position light coupler (3).

I823H1920003-01

5) Disconnect the headlight coupler (4).

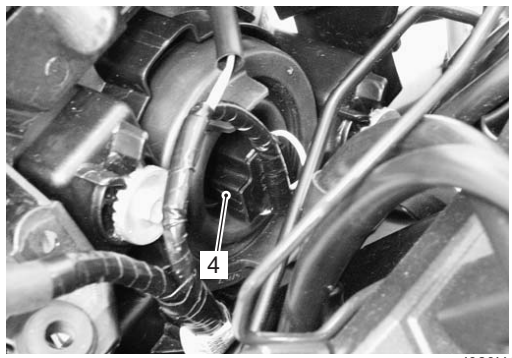

I823H1920004-01

6) Remove the headlight assembly.
7) Remove the headlight as shown in the headlight construction. Refer to “Headlight Construction (Page 9B-3)”.

Installation

Installation is in the reverse order of removal. Pay attention to the following point:

- After installing, be sure to inspect the headlight beam. Refer to “Headlight Beam Adjustment (Page 9B-6)”.

SAMPLE

Headlight Bulb and Position Light Bulb Replacement

B823H19206023

⚠ CAUTION

When you touch the bulb with your bare hands, clean the bulb with a cloth moistened with alcohol or soap water to prevent premature bulb failure.

1) Remove the headlight cover screws (1).

I823H1920005-01

2) Disconnect the headlight coupler (2) and remove the rubber cap (3).

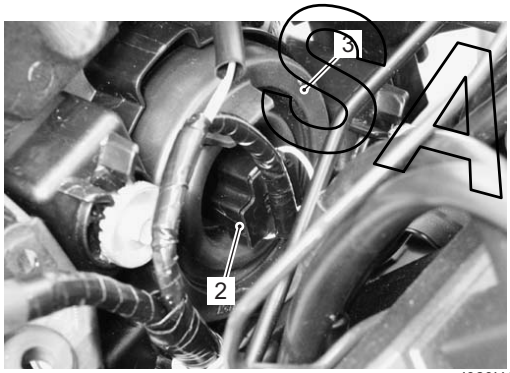

I823H1920006-01

3) Unhook the bulb holder spring (4) and remove the headlight bulb (5).

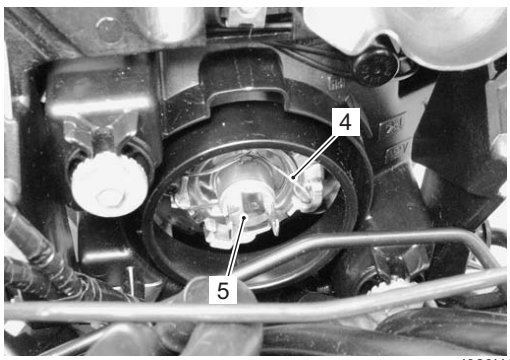

I823H1920007-01

4) Replace the headlight bulb with a new one.

5) Remove the headlight housing cover (6).

I823H1920008-01

6) Remove the headlight lower cover screws (7).

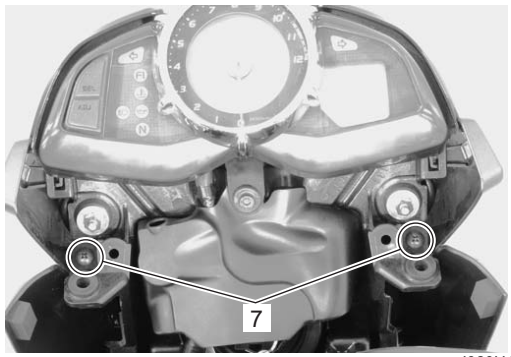

I823H1920009-01

7) Remove the headlight lower cover (8).

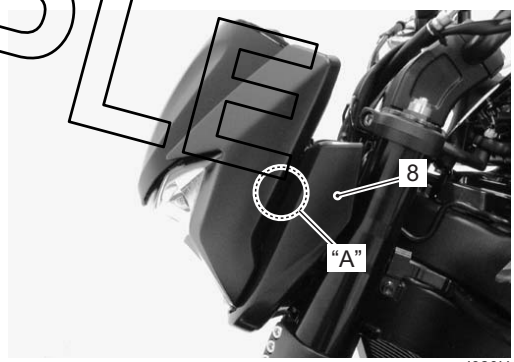

I823H1920011-03

"A": Hooked point

SAMPLE

8) Remove the position light socket (9).

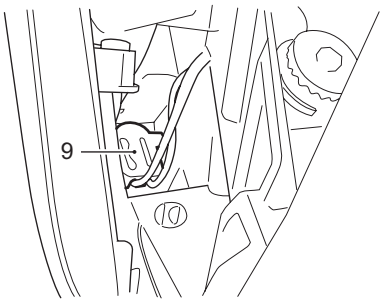

I823H1920010-03

9) Replace the position light bulb (10) with a new one.

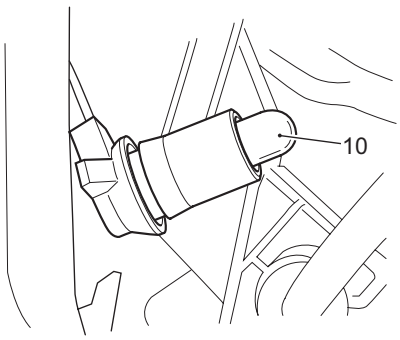

I823H1920012-03

10) Reinstall the removed parts.

Headlight Beam Adjustment

B823H19206004

Insert a (+) screwdriver as shown in the figure and adjust the headlight beam horizontally and vertically.

I823H1920013-01

"A": Vertical adjuster

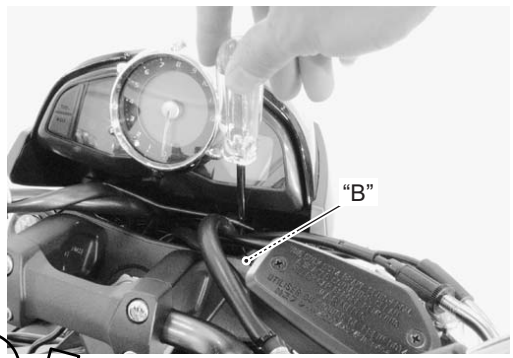

I823H1920014-02

"B": Horizontal adjuster

SAMPLE

Front Turn Signal Light Components

B823H19206012

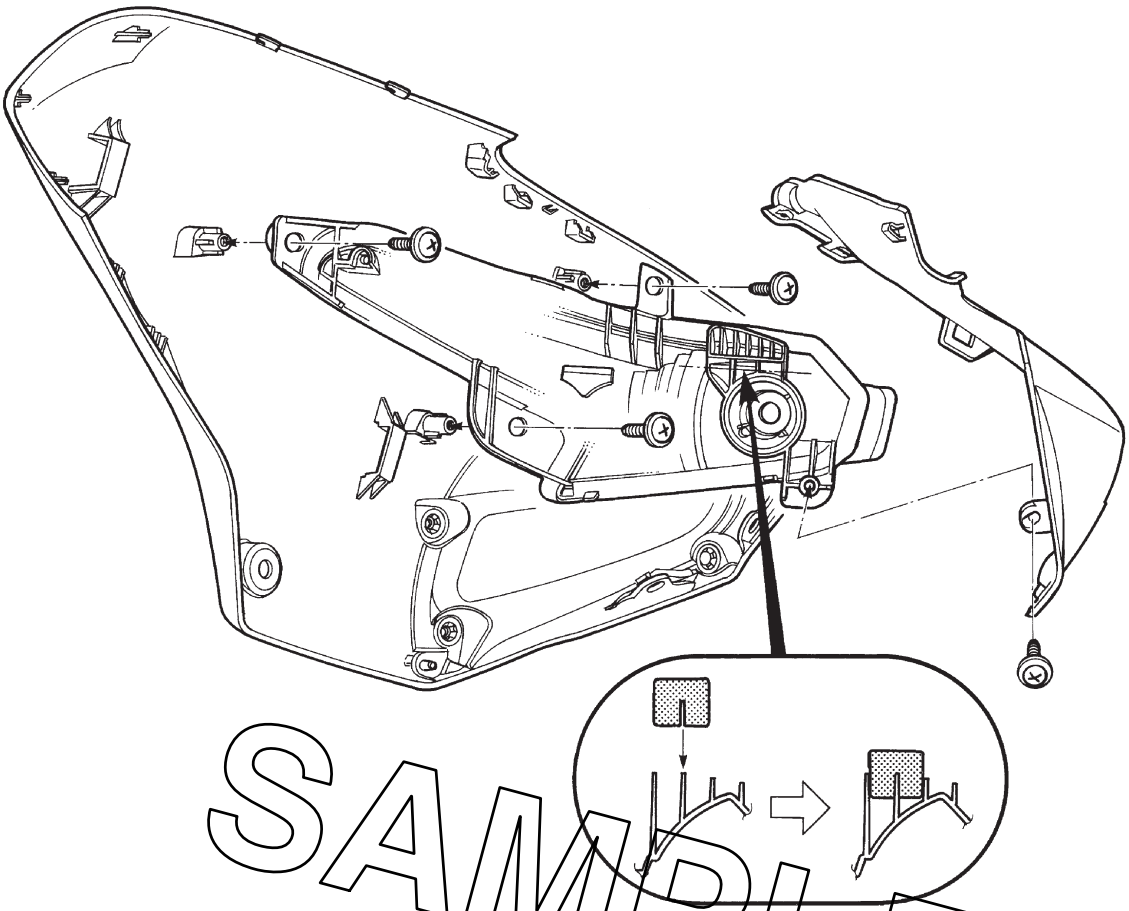

SAMPLE

I823H1920050-01

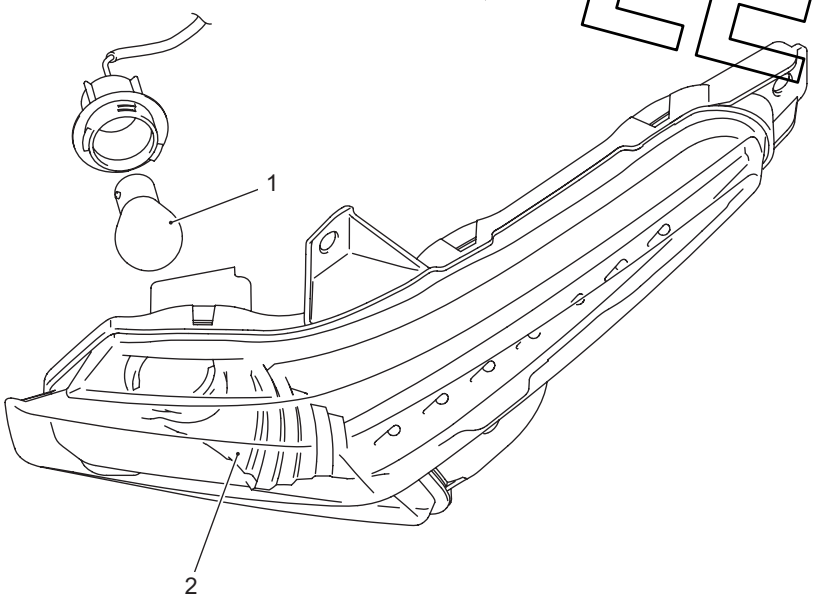

I823H1920015-01

1. Turn signal light bulb (12 V 21 W x 2)	2. Front turn signal light

Removal

1) Remove the fuel tank cover. Refer to “Exterior Parts Removal and Installation in Section 9D (Page 9D-14)”.
2) Remove the front turn signal light (1).

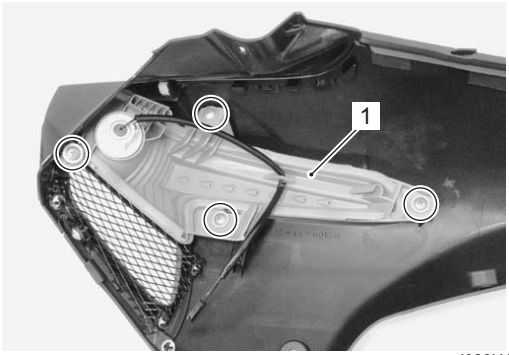

I823H1920016-01

Installation

Install the front turn signal light in the reverse order of removal.

Front Turn Signal Light Bulb Replacement

B823H19206015

⚠ CAUTION

When you touch the bulb with your bare hands, clean the bulb with a cloth moistened with alcohol or soap water to prevent premature bulb failure.

1) Remove the fuel tank cover. Refer to “Exterior Parts Removal and Installation in Section 9D (Page 9D-14)”.
2) Remove the socket (1) by turning it counter clockwise.

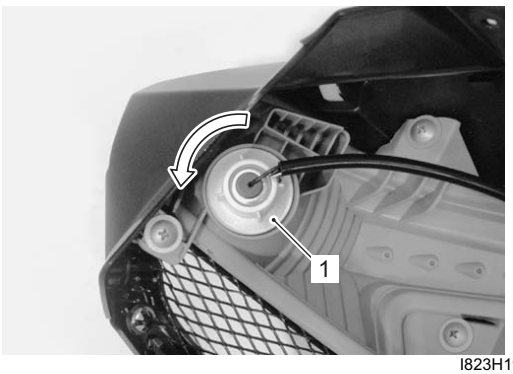

I823H1920017-01

3) Replace the front turn signal light bulb (2).

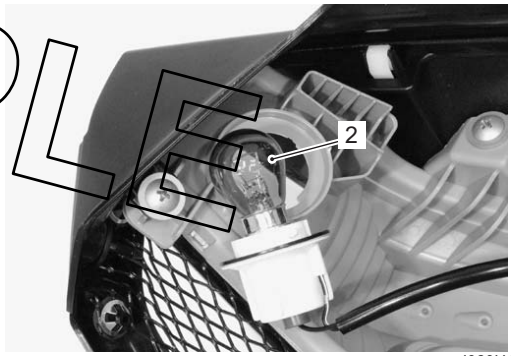

I823H1920018-01

SAMPLE

Rear Lighting System Construction

B823H19206006

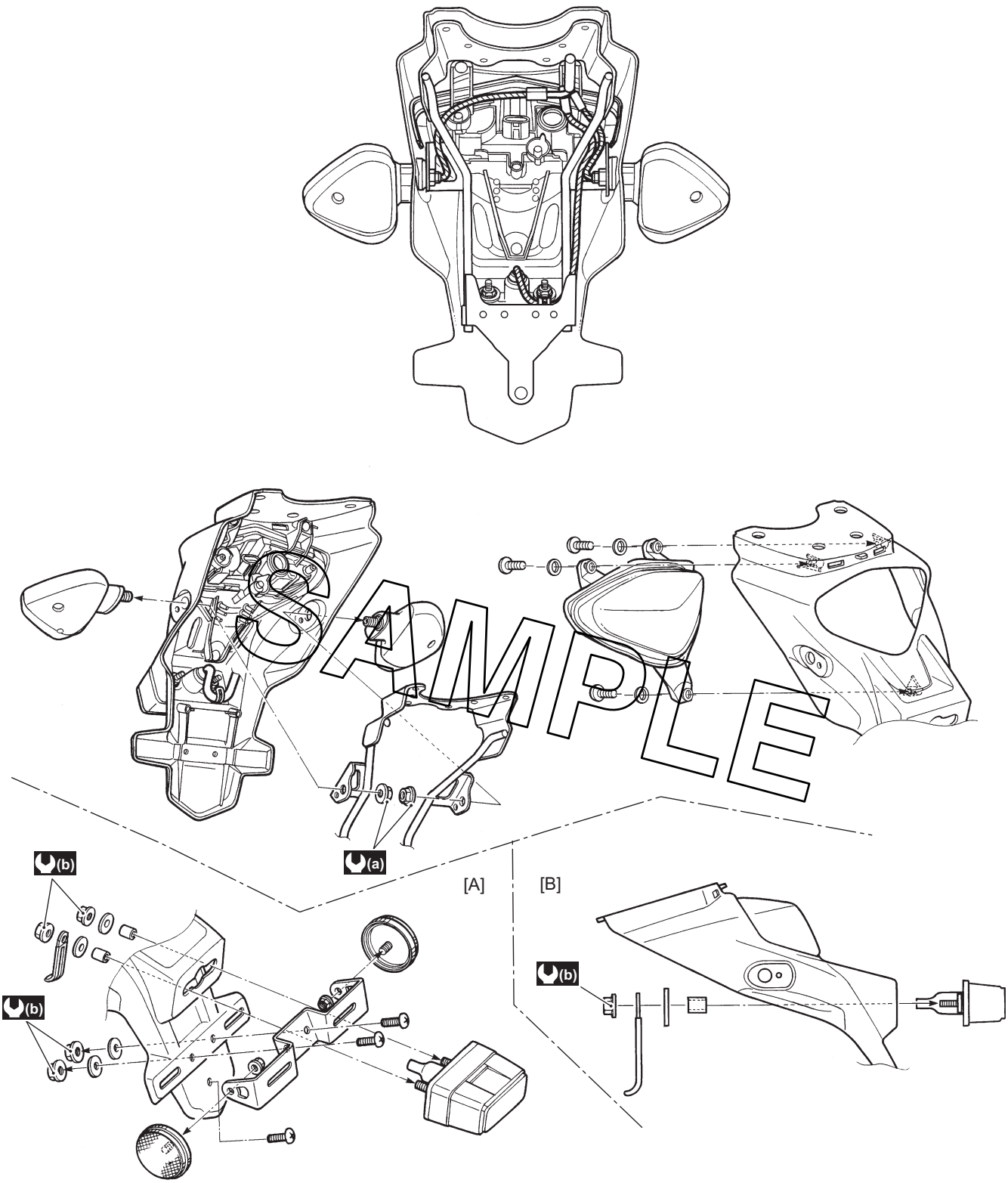

SAMPLE

I823H1920019-05

(a) : 7 N·m (0.7 kgf-m, 5.0 lb-ft)	(b) : 5 N·m (0.5 kgf-m, 3.5 lb-ft)	[A]: For E-03, 28, 33	[B]: For E-02, 19, 24

Rear Combination Light Removal and Installation

B823H19206007

Removal

1) Remove the rear fender cover (1).

I823H1920020-01

2) Disconnect the combination light coupler (2), license plate light coupler (3) and turn signal light couplers (4).

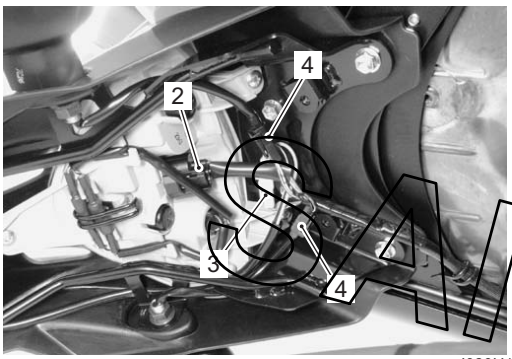

I823H1920021-02

3) Remove the rear fender assembly (5).

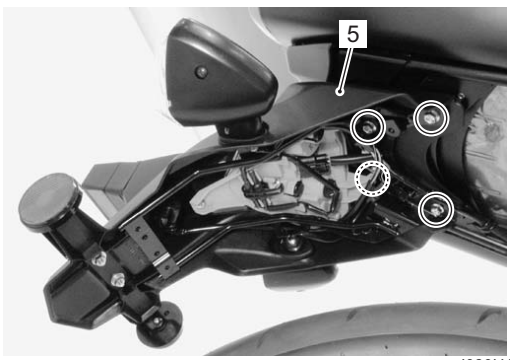

I823H1920022-01

4) Remove the turn signal mounting nuts (5) and remove the rear fender bracket (6) by removing the screw (7).

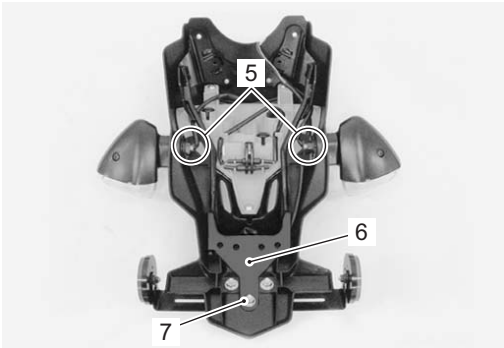

I823H1920023-03

5) Remove the rear combination light (7).

I823H1920024-01

SAMPLE

Installation

Install the rear combination light in the reverse order of removal. Pay attention to the following point:

- Tighten the turn signal light mounting nuts (1) and rear fender mounting bolts (2) to the specified torque.

NOTE

When reusing the removed bolt (2), apply a small quantity of the thread lock to them.

Tightening torque
Rear turn signal light mounting nut (a): 7 N·m (0.7 kgf-m, 5.0 lb-ft)
Rear fender mounting bolt (b): 10 N·m (1.0 kgf-m, 7.0 lb-ft)

1322 : Thread lock cement 99000–32110 (THREAD LOCK CEMENT SUPER 1322 or equivalent)

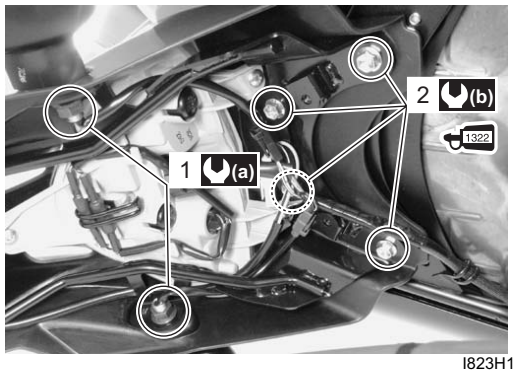

I823H1920025-03

Rear Combination Light Replacement

B823H19206024

⚠ CAUTION

If LED operation is abnormal, replace the rear combination light with a new one.

License Plate Light Components

B823H19206009

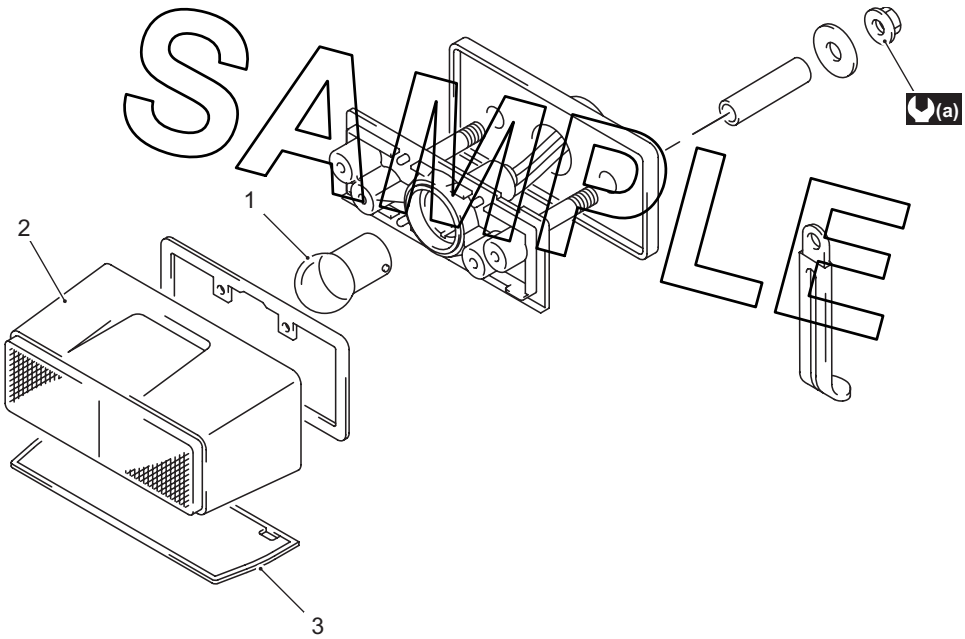

SAMPLE

I823H1920026-01

1. License plate light bulb (12 V 5 W)	3. Lens
2. Lens cover	(a) : 5 N·m (0.5 kgf-m, 3.5 lb-ft)

License Plate Light Removal and Installation

B823H19206010

Removal

1) Remove the rear fender cover (1).

I823H1920027-01

2) Disconnect the license plate light coupler (2).

I823H1920028-01

3) Remove the license plate light (3).

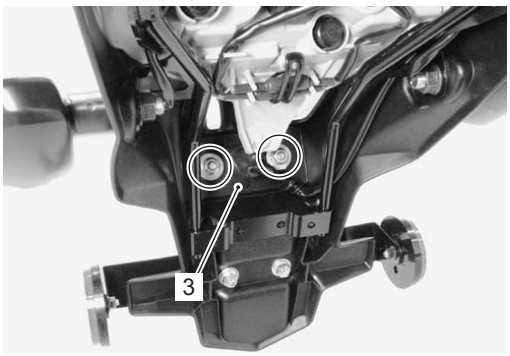

I823H1920029-01

Installation

Install the rear license plate light in the reverse order of removal. Pay attention to the following point:

- Tighten the rear license plate light mounting nuts (1) to the specified torque.

  Tightening torque
  Rear license plate light mounting nut (a): 5 N·m (0.5 kgf-m, 3.5 lb-ft)

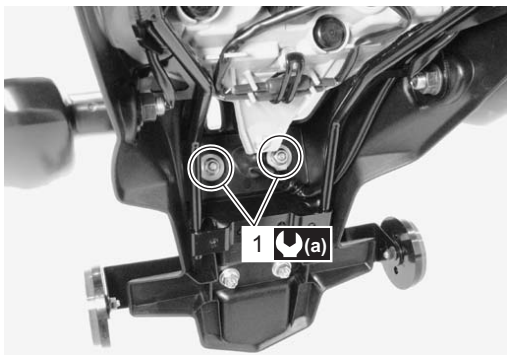

I823H1920030-02

License Plate Light Bulb Replacement

B823H19206011

1) Remove the license plate light. Refer to “License Plate Light Removal and Installation (Page 9B-12)”.
2) Remove the lens by removing the screws.

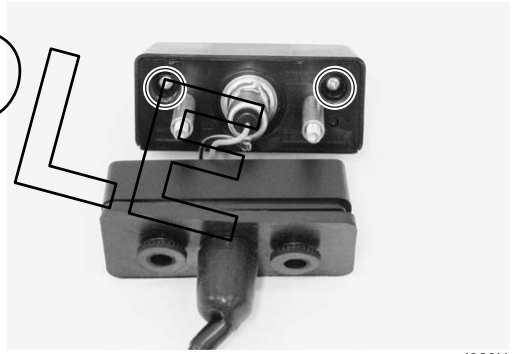

I823H1920031-01

3) Replace the bulb (1).

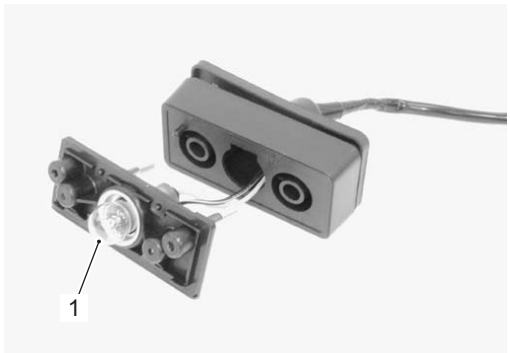

I823H1920032-01

4) Reinstall the removed parts.

SAMPLE

Rear Turn Signal Light Components

B823H19206025

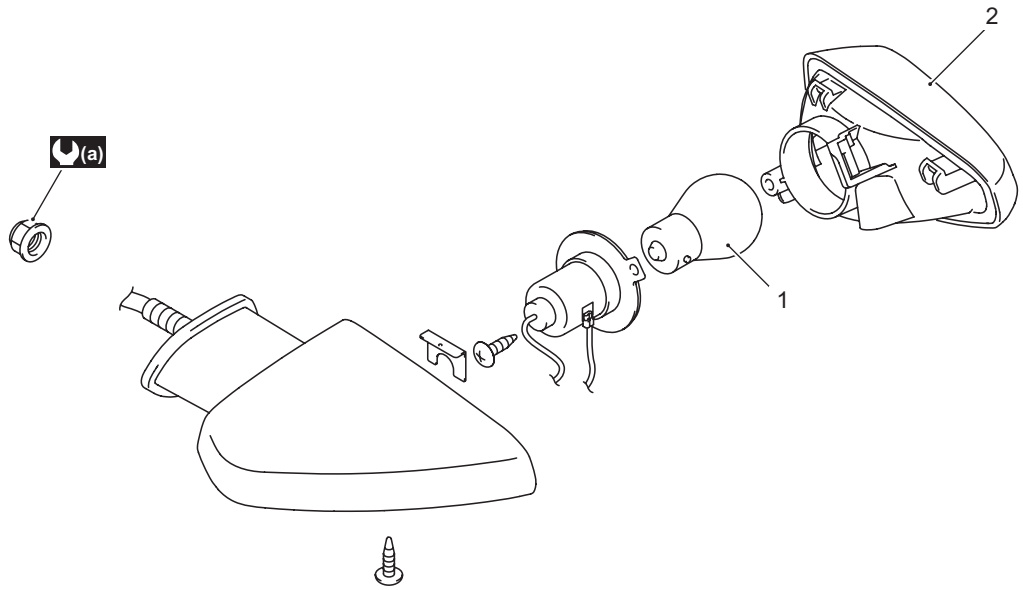

I823H1920033-01

1. Rear turn signal light bulb (12 V 21 W x 2)	2. Lens	(a) : 7.0 N·m (0.7 kgf-m, 5.0 lb-ft)

Rear Turn Signal Light Removal and Installation

B823H19206014

Removal

1) Remove the rear fender cover (1).

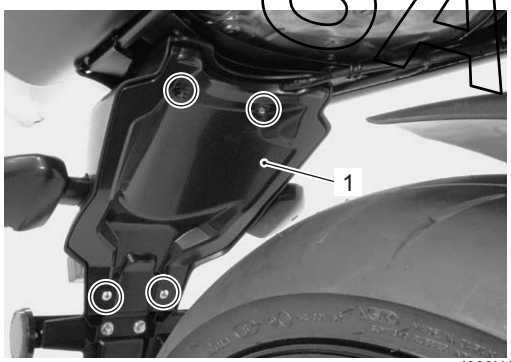

I823H1920034-01

2) Disconnect the rear turn signal light couplers (2).
3) Remove the rear turn signal lights (3).

I823H1920035-01

Installation

Install the rear turn signal light in the reverse order of removal. Pay attention to the following point:

- Tighten the rear turn signal light mounting nut (1) to the specified torque.

Tightening torque
Rear turn signal light mounting nut (a): 7 N·m (0.7 kgf-m, 5.0 lb-ft)

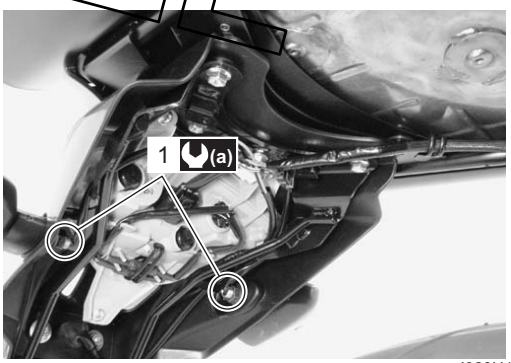

I823H1920036-02

SAMPLE

Rear Turn Signal Light Bulb Replacement

B823H19206026

⚠ CAUTION

When you touch the bulb with your bare hands, clean the bulb with a cloth moistened with alcohol or soap water to prevent premature bulb failure.

1) Move the rear turn signal light.

I823H1920037-01

2) Remove the lens by removing the screw.

I823H1920038-01

3) Replace the bulb (1).

I823H1920039-01

4) Reinstall the lens.

SAMPLE

Reflex Refractor Construction

B823H19206016

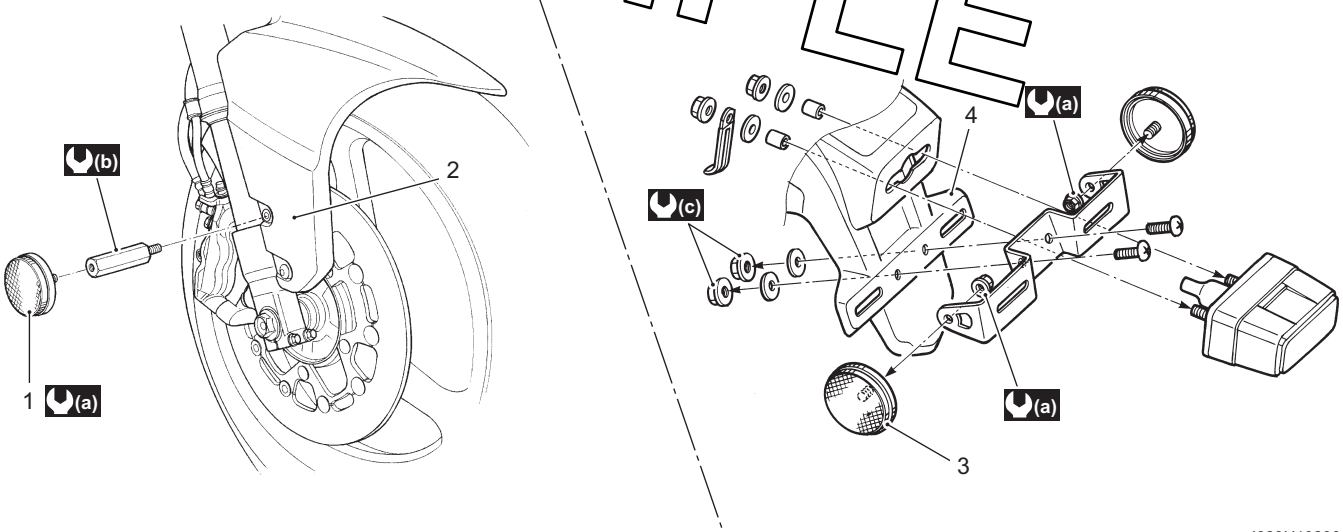

I823H1920040-03

1. Front reflex refractor (For E-03, 24, 28, 33)	(a) : 1.8 N·m (0.18 kgf-m, 1.3 lb-ft)
2. Front fender	(b) : 10 N·m (1.0 kgf-m, 7.0 lb-ft)
3. Rear reflex refractor (For E-03, 28, 33)	(c) : 5.0 N·m (0.5 kgf-m, 3.5 lb-ft)
4. Rear fender	

Turn Signal / Side-Stand Relay Inspection

B823H19206017

Refer to “Electrical Components Location in Section 0A (Page 0A-7)”.

NOTE

Make sure that the battery is fully charged.

Before removing the turn signal/side-stand relay, check the operation of the turn signal light.
If the turn signal light does not illuminate, inspect the bulb, turn signal switch and circuit connection.
If the bulb, turn signal switch and circuit connection are OK, the turn signal relay may be faulty; therefore, replace the turn signal/side-stand relay with a new one. Refer to “Turn Signal / Side-Stand Relay Removal and Installation (Page 9B-15)”.

Turn Signal / Side-Stand Relay Removal and Installation

B823H19206018

Removal

1) Remove the left fuel tank cover. Refer to “Exterior Parts Removal and Installation in Section 9D (Page 9D-14)”.
2) Remove the turn signal/side-stand relay (1).

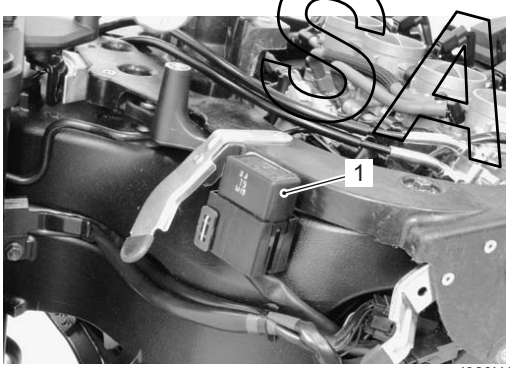

I823H1920041-01

Installation

Install the turn signal/side-stand relay in the reverse order of removal.

Hazard Switch Inspection

B823H19206019

Inspect the hazard switch in the following procedures:

1) Remove the left fuel tank cover. Refer to “Exterior Parts Removal and Installation in Section 9D (Page 9D-14)”.
2) Disconnect the left handlebar switch coupler (1).

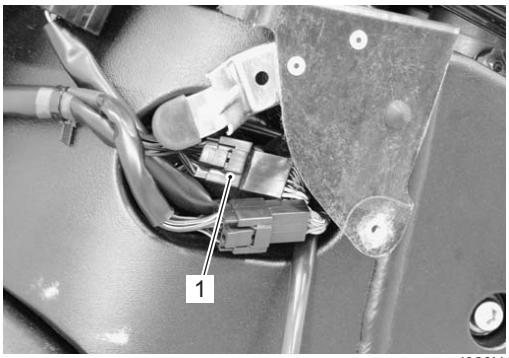

I823H1920042-01

3) Inspect the hazard switch for continuity with a tester. If any abnormality is found, replace the left handlebar switch assembly with a new one. Refer to “Handlebar Removal and Installation in Section 6B (Page 6B-3)”.

Special tool
TOOL : 09900–25008 (Multi-circuit tester set)

Tester knob indication
Continuity (•)))

Position \ Color	B	B/Br	B/G
OFF			
ON	○——	○——	○——

I718H1920045-01

4) After finishing the hazard switch inspection, reinstall the removed parts.

SAMPLE

Turn Signal Switch Inspection

B823H19206020

Inspect the turn signal switch in the following procedures:

1) Remove the left fuel tank cover. Refer to “Exterior Parts Removal and Installation in Section 9D (Page 9D-14)”.
2) Disconnect the left handlebar switch coupler (1).

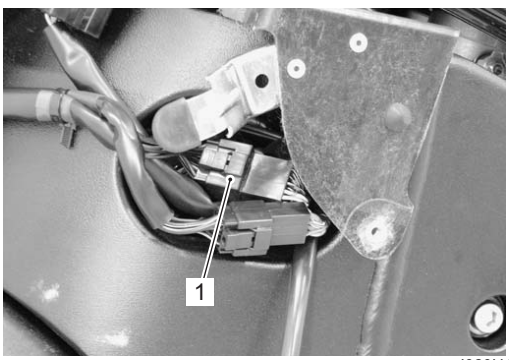

I823H1920043-01

3) Inspect the turn signal switch for continuity with a tester. If any abnormality is found, replace the left handlebar switch assembly with a new one.
Refer to “Handlebar Removal and Installation in Section 6B (Page 6B-3)”.

Special tool
TOOL : 09900–25008 (Multi-circuit tester set)

Tester knob indication
Continuity (•))))

Position \ Color	B/G	B/Br	B
L		○	○
PUSH			
R	○	○	

I649G1920037-02

4) After finishing the turn signal switch inspection, reinstall the removed parts.

Passing Light Switch Inspection

B823H19206021

Inspect the passing light switch in the following procedures:

1) Remove the left fuel tank cover. Refer to “Exterior Parts Removal and Installation in Section 9D (Page 9D-14)”.
2) Disconnect the left handlebar switch coupler (1).

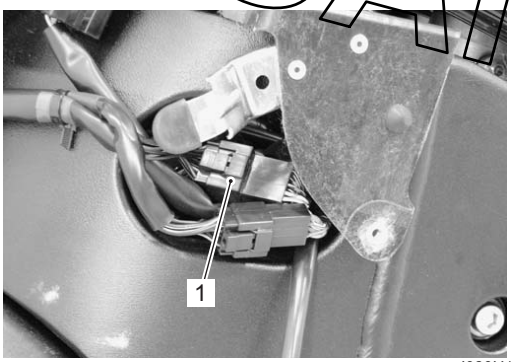

I823H1920044-01

3) Inspect the passing light switch for continuity with a tester.
If any abnormality is found, replace the left handlebar switch assembly with a new one.
Refer to “Handlebar Removal and Installation in Section 6B (Page 6B-3)”.

Special tool
TOOL : 09900–25008 (Multi-circuit tester set)

Tester knob indication
Continuity (•))))

Position \ Color	G/B	Dg
•		
PUSH	○	○

I649G1920038-02

4) After finishing the passing light switch inspection, reinstall the removed parts.

Dimmer Switch Inspection

B823H19206022

Inspect the dimmer switch in the following procedures:

1) Remove the left fuel tank cover. Refer to “Exterior Parts Removal and Installation in Section 9D (Page 9D-14)”.
2) Disconnect the left handlebar switch coupler (1).

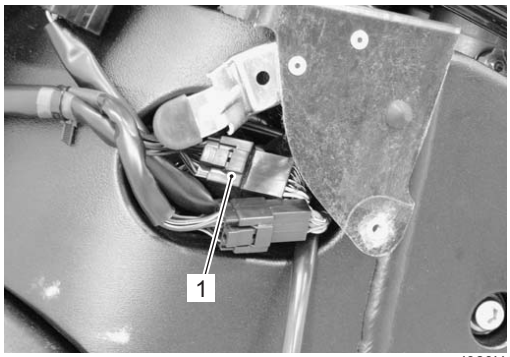

I823H1920045-01

3) Inspect the dimmer switch for continuity with a tester. If any abnormality is found, replace the left handlebar switch assembly with a new one.
Refer to “Handlebar Removal and Installation in Section 6B (Page 6B-3)”.

Special tool
TOOL : 09900–25008 (Multi-circuit tester set)

Tester knob indication
Continuity (•))))

Position \ Color	Dbr	Dg	G/B
HI		○	○
LO	○		○

I718H1920046-04

4) After finishing the dimmer switch inspection, reinstall the removed parts.

SAMPLE

Specifications

Service Data

B823H19207001

Wattage

Unit: W

Item		Specification	
		E-02, 19, 24	The other countries
Headlight	HI	60	←
	LO	55	←
Parking or position light		5 x 2	←
Brake light/Taillight		LED	←
Turn signal light		21 x 4	←
License plate light		5	←

Tightening Torque Specifications

B823H19207002

Fastening part	Tightening torque			Note
	N·m	kgf-m	lb-ft	
Rear turn signal light mounting nut	7	0.7	5.0	☞(Page 9B-11) / ☞(Page 9B-13)
Rear fender mounting bolt	10	1.0	7.0	☞(Page 9B-11)
Rear license plate light mounting nut	5	0.5	3.5	☞(Page 9B-12)

NOTE

The specified tightening torque is also described in the following.
“Rear Lighting System Construction (Page 9B-9)”
“License Plate Light Components (Page 9B-11)”
“Rear Turn Signal Light Components (Page 9B-13)”
“Reflex Refractor Construction (Page 9B-14)”

SAMPLE

Reference:
For the tightening torque of fastener not specified in this section, refer to “Tightening Torque List in Section 0C (Page 0C-9)”.

Special Tools and Equipment

Recommended Service Material

B823H19208001

Material	SUZUKI recommended product or Specification		Note
Thread lock cement	THREAD LOCK CEMENT SUPER 1322 or equivalent	P/No.: 99000–32110	☞(Page 9B-11)

Special Tool

B823H19208002

09900–25008 Multi-circuit tester set ☞(Page 9B-15) / ☞(Page 9B-16) / ☞(Page 9B-16) / ☞(Page 9B-16) 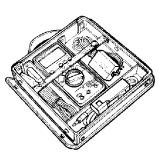	

Combination Meter / Fuel Meter / Horn

General Description

Combination Meter System Description

B823H19301001

This combination meter mainly consists of the stepping motor, LCD (Liquid Crystal Display) and LED (Light Emitting Diode).
The rpm pointer is driven by the stepping motor.
The LCDs indicate Speed, Gear position, Drive mode, Clock, Fuel level indicator, Engine coolant temperature indicator and Odo / Trip 1 / Trip 2 / FI (DTC) respectively.

LED (Light Emitting Diode)
LED is used for the illumination light and each indicator light.
LED is maintenance free. LED is less power consuming and more resistant to vibration resistance compared to the bulb.

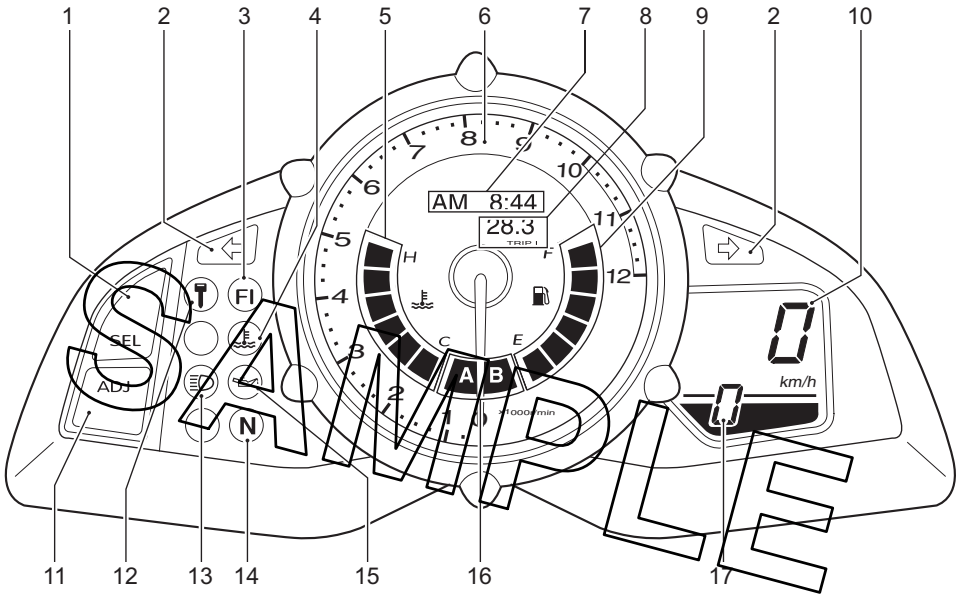

I823H1930001-02

1. Select button	10. LCD (Speedometer)
2. LED (Turn signal indicator light)	11. Adjust button
3. LED (FI indicator light)	12. LED (Immobilizer indicator light) [For E-02, 19, 24]
4. LED (Engine coolant temperature indicator light)	13. LED (High-beam indicator light)
5. LCD (Engine coolant temperature indicator)	14. LED (Neutral indicator light)
6. Tachometer	15. LED (Oil pressure indicator light)
7. LCD (Clock)	16. LCD (Drive mode indicator)
8. LCD (Odo / Trip 1 / Trip 2 / FI)	17. LCD (Gear position indicator)
9. LCD (Fuel level indicator)	

Repair Instructions

Combination Meter Components

B823H19306001

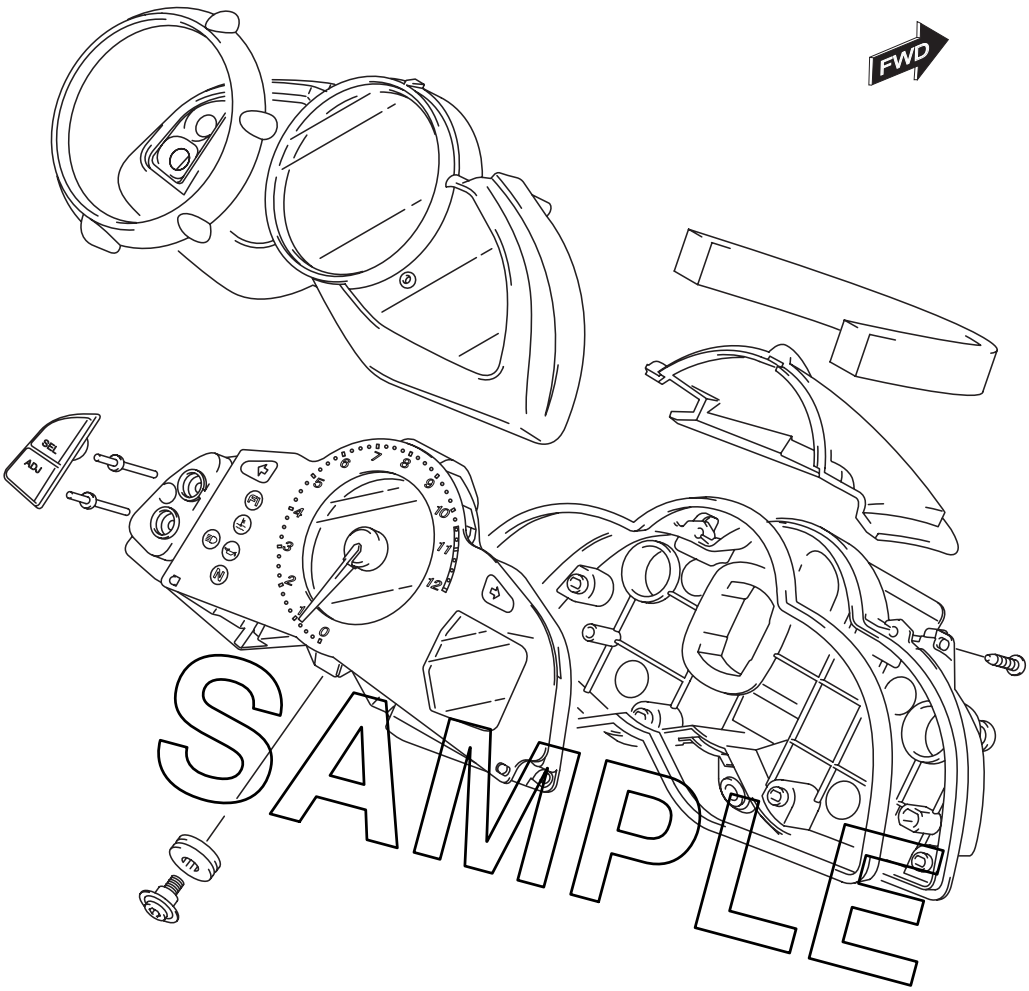

I823H1930002-03

Combination Meter Removal and Installation

B823H19306002

Removal

1) Remove the headlight cover screws (1).

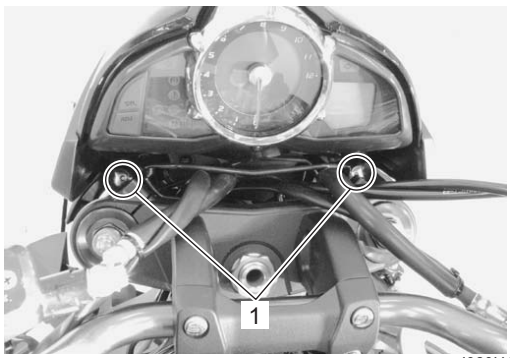

I823H1930026-01

2) Remove the headlight housing cover (2) by removing the screws.

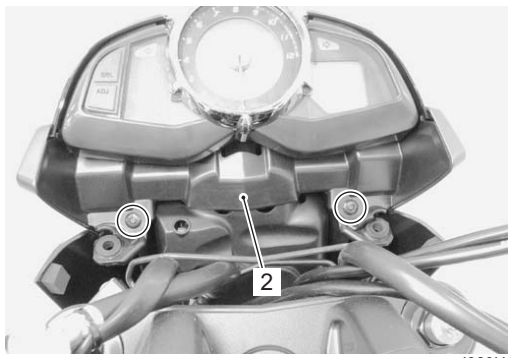

I823H1930028-01

3) Remove the bolt (3) and pull out the combination meter from the headlight cover (4).

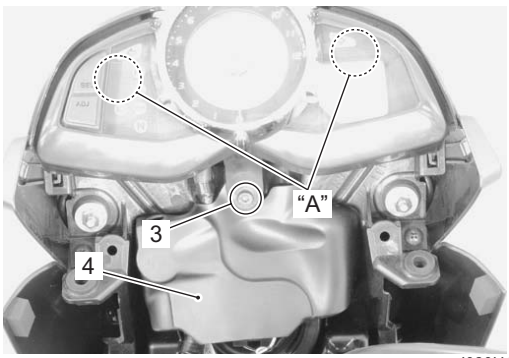

I823H1930029-02

"A": Hooked point

4) Disconnect the combination meter coupler (5) and remove the combination meter assembly.

I823H1930030-02

Installation

Install the combination meter in the reverse order of removal. Pay attention to the following point:

NOTE

Fix the boot of the combination meter coupler properly.

- After installing, be sure to inspect the headlight beam. Refer to "Headlight Beam Adjustment in Section 9B (Page 9B-6)".

Combination Meter Disassembly and Assembly

B823H19306003

Refer to "Combination Meter Removal and Installation (Page 9C-2)".

Disassembly

Disassemble the combination meter as shown in the combination meter components. Refer to "Combination Meter Components (Page 9C-2)".

Assembly

Assemble the combination meter as shown in the combination meter components. Refer to "Combination Meter Components (Page 9C-2)".

Combination Meter Inspection

B823H19306004

LED Inspection

Check that the LEDs (FI indicator light, Oil pressure, Engine coolant temperature indicator light, Immobilizer indicator light (For E-02, 19, 24), and Meter panel illumination) immediately light up when the ignition switch is turned to ON.

Check that other LEDs (Neutral indicator light, High-beam indicator light and Turn signal indicator lights) light up/go off by operating each switch.

If abnormal condition is found, replace the combination meter assembly with a new one after checking its wire harness/coupler. Refer to "Combination Meter Removal and Installation (Page 9C-2)".

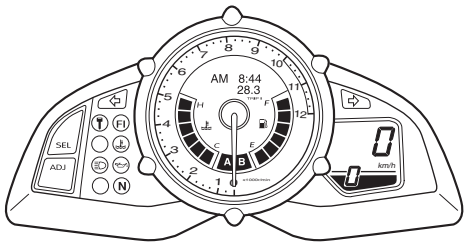

I823H1930003-02

Stepping Motor Inspection and Adjustment

1) Check that the pointer calibrates itself immediately after turning the ignition switch on and stops at zero point.

If abnormal condition is found, replace the combination meter assembly with a new one after checking its wire harness/coupler.

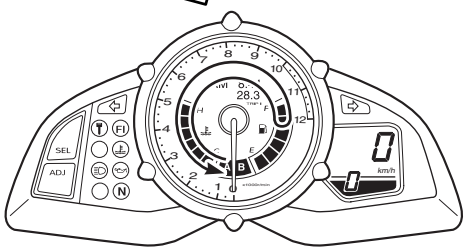

I823H1930004-03

NOTE

- **The pointer may not return to the proper position even turning the ignition switch on under low temperature condition. In that case, you can reset the pointer to the proper position by the following instruction.**
- **Complete the operation within 10 seconds after the ignition switch has been turned on.**

SAMPLE

2) With the adjuster button (1) pressed, turn the ignition switch ON.
3) Keep pushing the ADJ button for more than 3 sec.

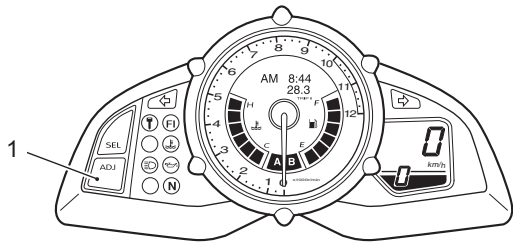

I823H1930005-03

Time	Ignition switch	Adjuster button (1)
	OFF	PUSH
0	ON	
•		
•		
3 sec.		
•		
•		Reset
•		
•		
•		
•		

I823H1930031-04

Pointer will return to the starting point right after the completion of the operation. In the case of the pointer not returning to the proper position after doing above, replace the combination meter unit. Refer to “Combination Meter Removal and Installation (Page 9C-2)”.

Engine Coolant Temperature Indicator and Indicator Light Inspection

B823H19306005

Inspect the engine coolant temperature indicator light in the following procedures:

1) Lift and support the fuel tank. Refer to “Fuel Tank Removal and Installation in Section 1G (Page 1G-10)”.
2) Disconnect the ECT sensor coupler (1).

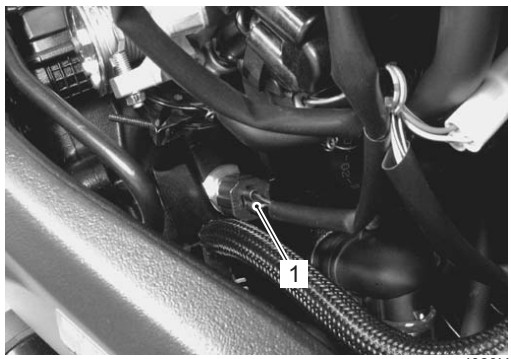

I823H1110116-01

3) Connect a variable resistor (2) between the terminals.

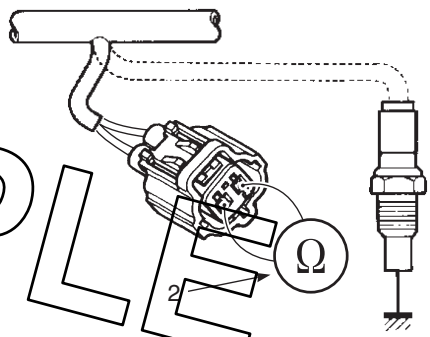

I718H1930009-05

SAMPLE

4) Turn the ignition switch ON.
5) Check the engine coolant temperature indicator LCD (3) and LED (4) operations when the resistance is adjusted to the specified values.
   If either one or all indications are abnormal, replace the combination meter assembly with a new one. Refer to “Combination Meter Removal and Installation (Page 9C-2)”.

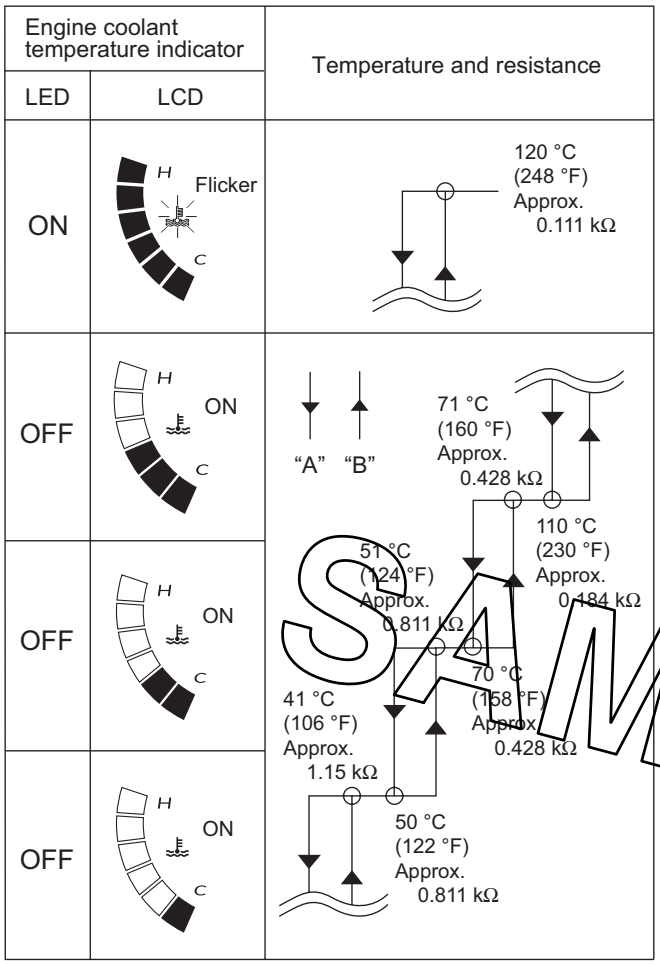

I823H1930032-09

“A”:	When decreasing the temperature
“B”:	When increasing the temperature

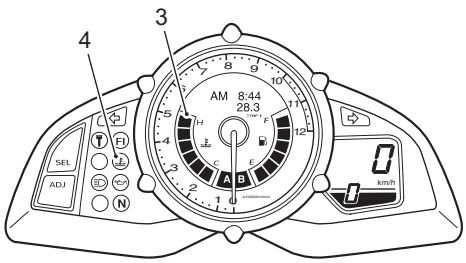

I823H1930007-03

6) Connect the ECT sensor coupler.
7) Install the removed parts.

ECT Sensor Removal and Installation

B823H19306006

Refer to “ECT Sensor Removal and Installation in Section 1C (Page 1C-5)”.

Fuel Level Indicator Inspection

B823H19306007

Inspect the fuel level indicator in the following procedures:

1) Lift and support the fuel tank. Refer to “Fuel Tank Removal and Installation in Section 1G (Page 1G-10)”.
2) Disconnect the fuel pump coupler (1).

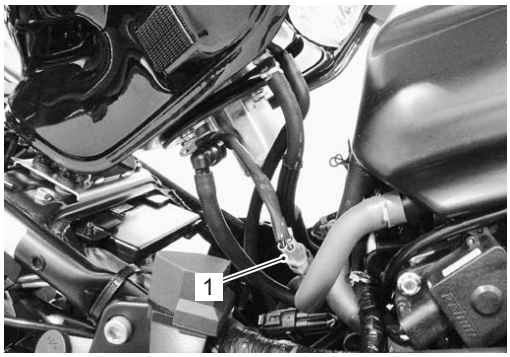

I823H1930009-01

3) Connect a variable resistor (2) between the B/Lg and B/W lead wires of the wire harness side coupler.

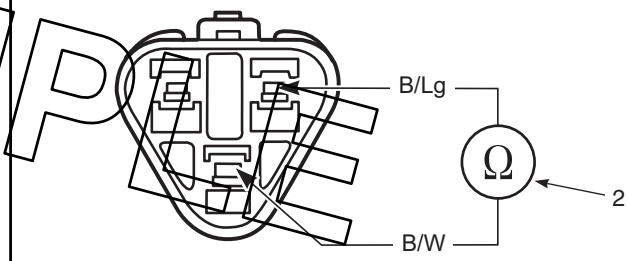

I823H1930010-03

4) Turn the ignition switch ON.
5) Check the display of fuel level indicator (LCD) as shown in the figure.
   If any abnormality is found, replace the combination meter with a new one. Refer to “Combination Meter Removal and Installation (Page 9C-2)”.

SAMPLE

NOTE

It takes approx. 30 seconds that the fuel level indicator indicates the detected fuel level.

Resistance	Fuel level indicator
104 ± 4.7 Ω and more	F, Flicker, E, Flicker
75.2 ± 4.5 Ω – 104 ± 4.7 Ω	F, Flicker, E
60.5 ± 4.3 Ω – 75.2 ± 4.5 Ω	F, ON, E
42.3 ± 4.0 Ω – 60.5 ± 4.3 Ω	F, ON, E
25.8 ± 3.7 Ω – 42.3 ± 4.0 Ω	F, ON, E
15.0 ± 3.2 Ω – 25.8 ± 3.7 Ω	F, ON, E

I823H1930011-09

6) Connect the fuel level gauge coupler and reinstall the fuel tank.
   Refer to “Fuel Tank Removal and Installation in Section 1G (Page 1G-10)”.

Fuel Level Gauge Inspection

B823H19306009

Inspect the fuel level gauge in the following procedures:

1) Remove the fuel level gauge. Refer to “Fuel Pump Disassembly and Assembly in Section 1G (Page 1G-13)”.
2) Measure the resistance at each fuel level gauge in float position. If the resistance is incorrect, replace fuel level gauge with a new one.

   Special tool
   TOOL : 09900–25008 (Multi-circuit tester set)

   Tester knob indication
   Resistance (Ω)

Float position	Resistance
Full “a”	**Approx. 3 Ω**
Empty “b”	**Approx. 120 Ω**

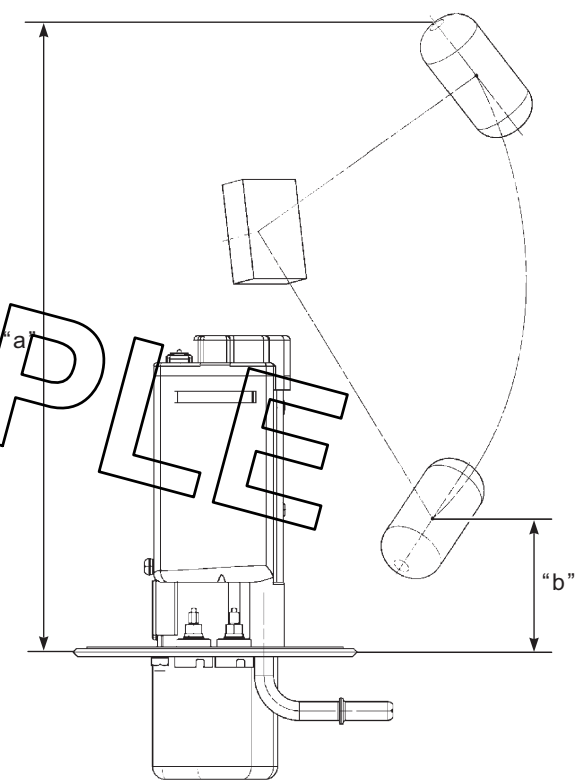

I823H1930012-02

“a”: 241.2 mm (9.50 in)	“b”: 55 mm (2.17 in)

3) Install the fuel level gauge. Refer to “Fuel Pump Disassembly and Assembly in Section 1G (Page 1G-13)”.

SAMPLE

Speedometer Inspection

B823H19306010

If the speedometer, odometer or tripmeter does not function properly, inspect the speed sensor and the coupler connections. If the speed sensor and coupler connections are OK, replace the combination meter unit with a new one. Refer to “Combination Meter Removal and Installation (Page 9C-2)”.

Speed Sensor Removal and Installation

B823H19306011

Removal

1) Lift and support the fuel tank. Refer to “Fuel Tank Removal and Installation in Section 1G (Page 1G-10)”.
2) Disconnect the speed sensor lead wire coupler (1).

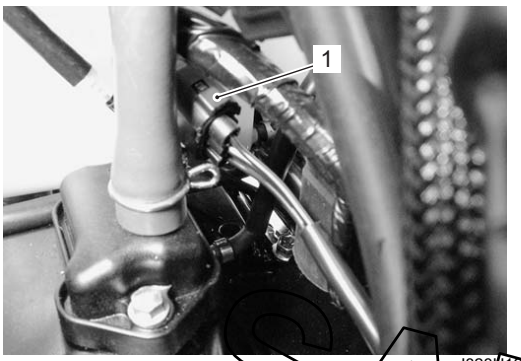

I823H1930013-01

3) Remove the speed sensor (2).

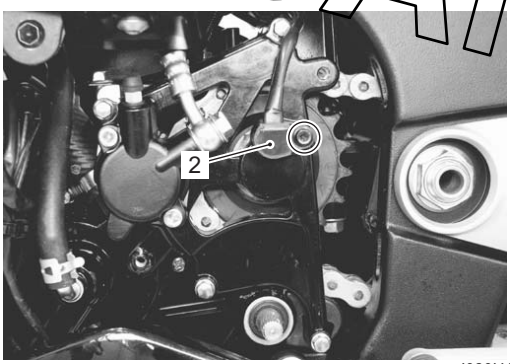

I823H1930014-01

Installation

Install the speed sensor in the reverse order of removal. Pay attention to the following points:

- Tighten the speed sensor mounting bolt (1) to the specified torque.

  Tightening torque
  Speed sensor mounting bolt (a): 6.5 N·m (0.65 kgf-m, 4.7 lb-ft)

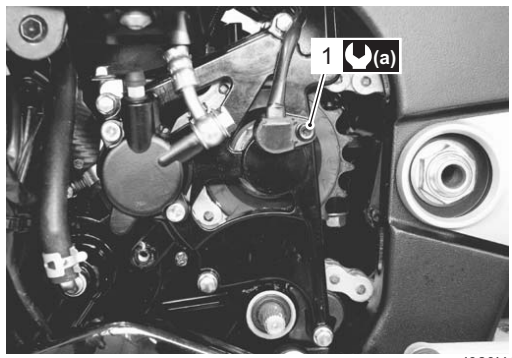

I823H1930015-01

- Route the speed sensor lead wire. Refer to “Wiring Harness Routing Diagram in Section 9A (Page 9A-5)”.

Speed Sensor Inspection

B823H19306012

Inspect the speed sensor in the following procedures:

1) Remove the speed sensor. Refer to “Speed Sensor Removal and Installation (Page 9C-7)”.
2) Connect a 12 V battery (between B and B/W), 10 kΩ resistor (between B/R and B) and multi-circuit tester (tester (+) probe to B and tester (–) probe to B/R) as shown in the figure.

   Special tool
   TOOL : 09900–25008 (Multi-circuit tester set)

   Tester knob indication
   Voltage (⎓)

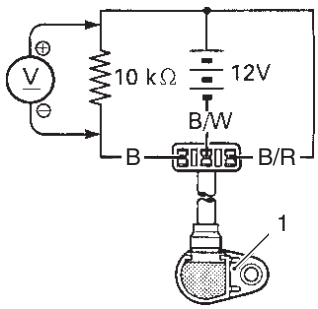

I649G1930016-02

1. Speed sensor

SAMPLE

3) Move a screwdriver back and forth across the pick-up surface of the speed sensor. The voltage readings should cycle as follows (0 V → 12 V or 12 V → 0 V). If the voltage reading does not change, replace the speed sensor with a new one.

NOTE

While testing, the highest voltage reading should be the same as the battery voltage (12 V).

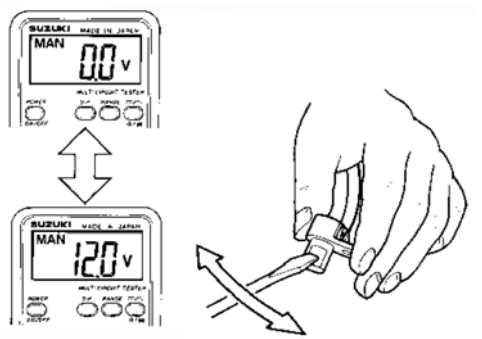

I649G1930017-02

Oil Pressure Indicator Inspection

B823H19306013

Inspect the oil pressure indicator in the following procedures:

NOTE

Before inspecting the oil pressure switch, check if the engine oil level is correct. Refer to "Engine Oil and Filter Replacement in Section 0B (Page 0B-10)".

1) Remove the under cowling. Refer to "Exterior Parts Removal and Installation in Section 9D (Page 9D-14)".
2) Disconnect the oil pressure switch lead wire (1) from the oil pressure switch.

I823H1930016-01

3) Turn the ignition switch ON.
4) Check if the oil pressure indicator (LED) will light up when grounding the lead wire (1).
If the oil pressure indicator does not light up, replace the combination meter assembly with a new one after checking the connection of couplers.

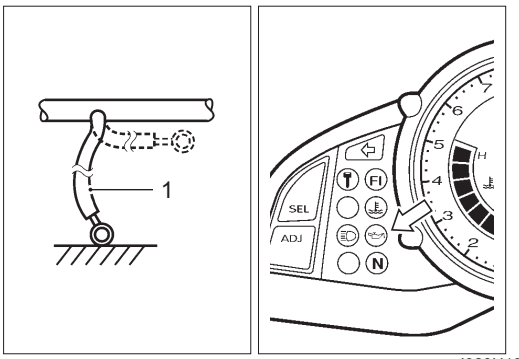

I823H1930017-02

Oil Pressure Switch Removal and Installation

B823H19306014

Refer to "Oil Pressure Switch Removal and Installation in Section 1E (Page 1E-10)".

Oil Pressure Switch Inspection

B823H19306019

Inspect the oil pressure switch in the following procedures:

NOTE

Before inspecting the oil pressure switch, check if the engine oil level is correct. Refer to "Engine Oil and Filter Replacement in Section 0B (Page 0B-10)".

1) Remove the under cowling. Refer to "Exterior Parts Removal and Installation in Section 9D (Page 9D-14)".
2) Disconnect the oil pressure switch lead wire from the oil pressure switch.
3) Inspect the oil pressure switch for continuity with the tester. If any abnormality is found, replace the oil pressure switch with a new one.

Special tool
TOOL : 09900–25008 (Multi-circuit tester set)

Tester knob indication
Continuity (•)))

Position \ Color	G/Y	Ground
ON (Engine is at stop.)	○	○
OFF (Engine is running.)		

I823H1930033-01

4) After finishing the oil pressure switch inspection, reinstall the removed parts.

SAMPLE

Ignition Switch Inspection

B823H19306015

Inspect the ignition switch in the following procedures:

1) Lift and support the fuel tank. Refer to “Fuel Tank Removal and Installation in Section 1G (Page 1G-10)”.
2) Remove the air cleaner box. Refer to “Air Cleaner Box Removal and Installation in Section 1D (Page 1D-6)”.
3) Disconnect the ignition switch coupler (1).

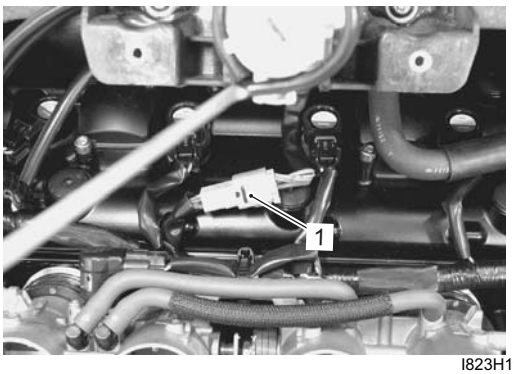

I823H1930018-01

4) Inspect the ignition switch for continuity with a tester. If any abnormality is found, replace the ignition switch with a new one.

Special tool
TOOL : 09900–25008 (Multi-circuit tester set)

Tester knob indication
Continuity (•))))

E-02, 19, 24

Position \ Color	R	O	Gr	Br
ON	○	○	○	○
OFF				
LOCK				
P	○			○

I823H1930019-02

E-03, 28, 33

Position \ Color	R	O	O/Y	Gr	Br
ON	○	○	○	○	○
OFF					
LOCK					
P	○				○

I823H1930020-02

5) After finishing the ignition switch inspection, reinstall the removed parts.

Ignition Switch Removal and Installation

B823H19306016

Refer to “Ignition Switch Removal and Installation in Section 1H (Page 1H-12)”.

Horn Inspection

B823H19306017

NOTE

If the horn sound condition is normal, it is not necessary to inspect the horn button continuity.

Horn Button Inspection

1) Remove the left fuel tank cover. Refer to “Exterior Parts Removal and Installation in Section 9D (Page 9D-14)”.
2) Disconnect the left handlebar switch coupler (1).

NOTE

Blue tape “A” is sicked on the left handle bar switch harness.

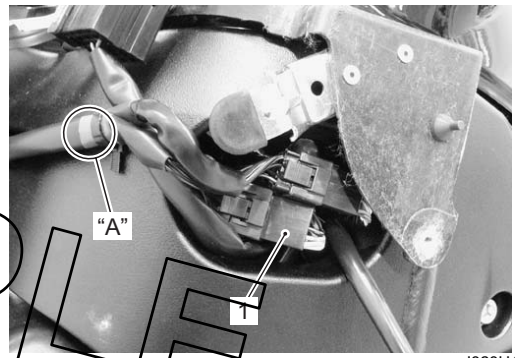

I823H1930021-01

3) Inspect the horn button for continuity with a tester. If any abnormality is found, replace the left handlebar switch assembly with a new one. Refer to “Handlebar Removal and Installation in Section 6B (Page 6B-3)”.

Special tool
TOOL : 09900–25008 (Multi-circuit tester set)

Tester knob indication
Continuity (•))))

Position \ Color	B/Bl	B/W
•		
PUSH	○	○

I718H1930028-03

SAMPLE

Horn Inspection

1) Remove the right frame body cover. Refer to “Exterior Parts Removal and Installation in Section 9D (Page 9D-14)”.
2) Disconnect the horn coupler (1).

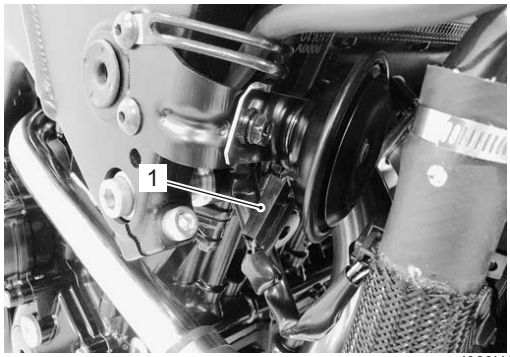

I823H1930022-01

3) Connect a 12 V battery to the horn terminals. If the sound is not heard from the horn, replace the horn with a new one.

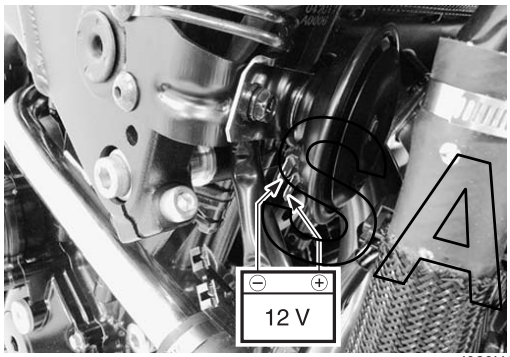

I823H1930023-01

4) Connect the horn coupler.
5) Install the removed parts.

Horn Removal and Installation

B823H19306018

Removal

1) Remove the right frame body cover. Refer to “Exterior Parts Removal and Installation in Section 9D (Page 9D-14)”.
2) Disconnect the horn couplers (1).
3) Remove the horn (2) by removing the mounting bolt.

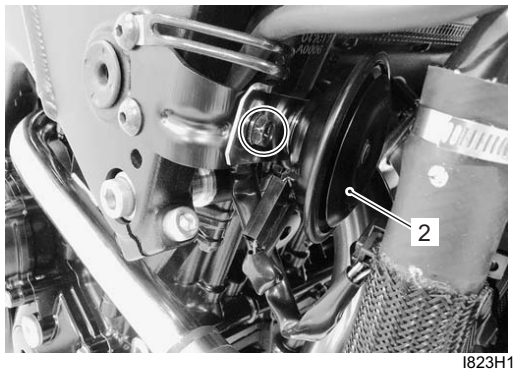

I823H1930024-01

Installation

Install the horn in the reverse order of removal.

SAMPLE

Specifications

Service Data

B823H19307001

Wattage

Unit: W

Item		Specification	
		E-02, 19, 24	The other countries
Headlight	HI	60	←
	LO	55	←
Parking or position light		5 x 2	←
Brake light/Taillight		LED	←
Turn signal light		21 x 4	←
License plate light		5	←
Tachometer light		LED	←
Speedometer light		LED	←
Turn signal indicator light		LED	←
High beam indicator light		LED	←
Neutral position indicator light		LED	←
Oil pressure indicator light		LED	←
FI indicator light		LED	←
Engine coolant temp. indicator light		LED	←
Immobilizer indicator light		LED	—

Tightening Torque Specifications

B823H19307002

Fastening part	Tightening torque			Note
	N·m	kgf-m	lb-ft	
Speed sensor mounting bolt	6.5	0.65	4.7	☞(Page 9C-7)

Reference:
For the tightening torque of fastener not specified in this section, refer to “Tightening Torque List in Section 0C (Page 0C-9)”.

SAMPLE

Special Tools and Equipment

Special Tool

B823H19308001

09900–25008 Multi-circuit tester set ☞(Page 9C-6) / ☞(Page 9C-7) / ☞(Page 9C-8) / ☞(Page 9C-9) / ☞(Page 9C-9) 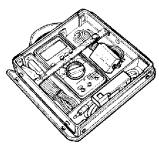	

Exterior Parts

Schematic and Routing Diagram

Seat Lock Cable Routing Diagram

B823H19402001

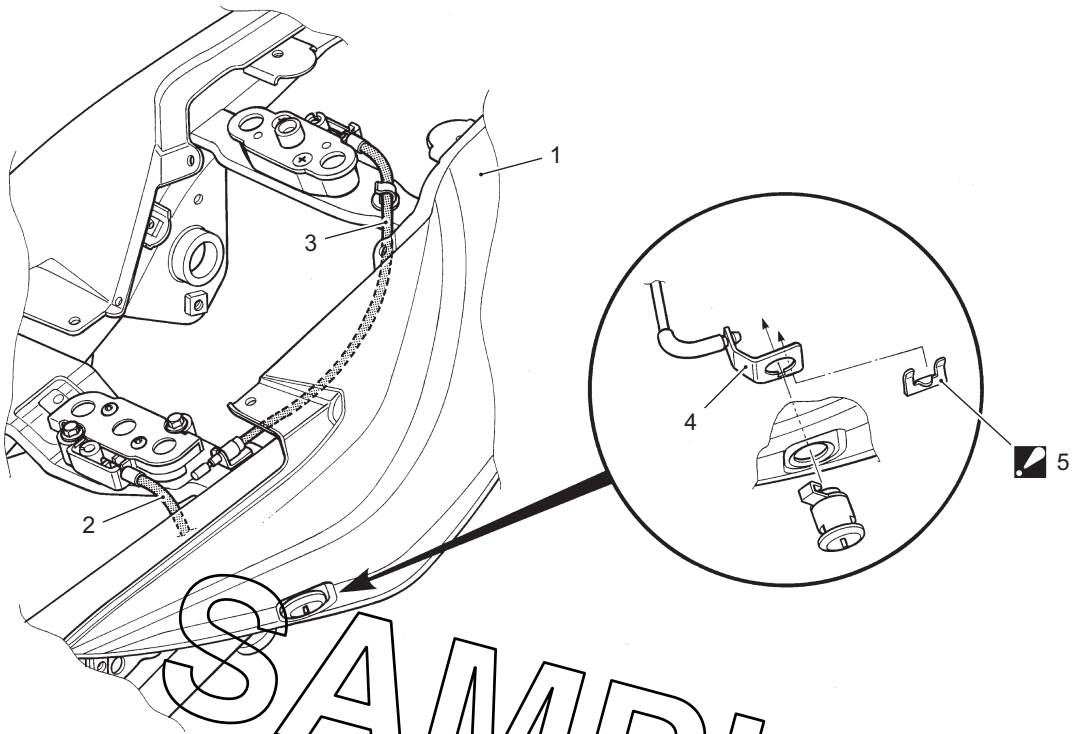

I823H1940078-01

1. Frame cover	4. Seat lock cable guide
2. Front seat lock cable	5. Plate : Set the plate in the reverse side of the guide.
3. Rear seat lock cable	

SAMPLE

Repair Instructions

Frame Cover Construction

B823H19406013

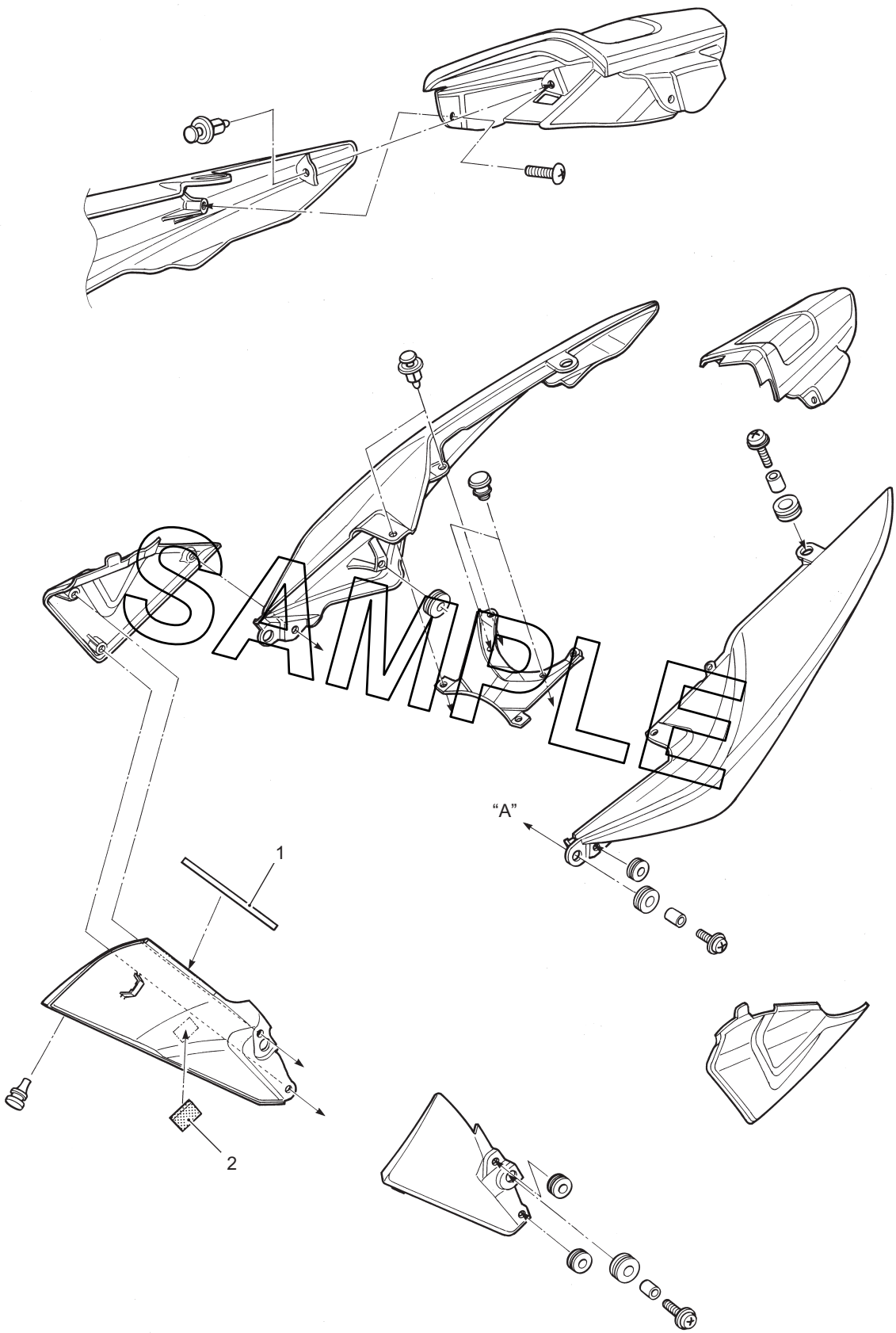

I823H1940079-01

1. Cushion rubber	2. Velcro fastening	"A" To seat rail

Frame Side Cover Cushion Attachment

B823H19406014

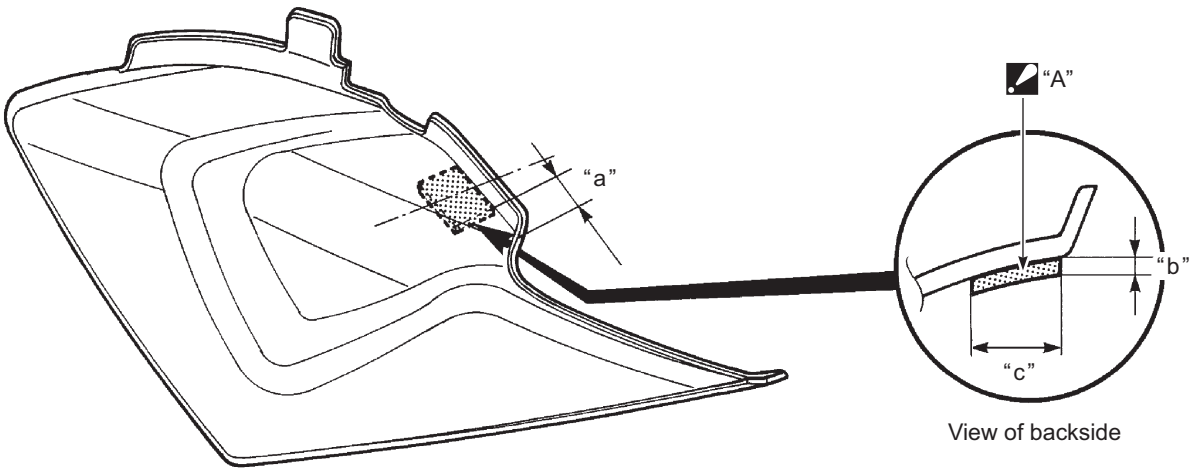

I823H1940080-01

"A": Clean the adhesive surface before adhering the cushion rubber.	"a": 20 mm (0.8 in)	"b": 2 mm (0.08 in)	"c": 15 mm (0.6 in)

Front Frame Cover Cushion Attachment

B823H19406015

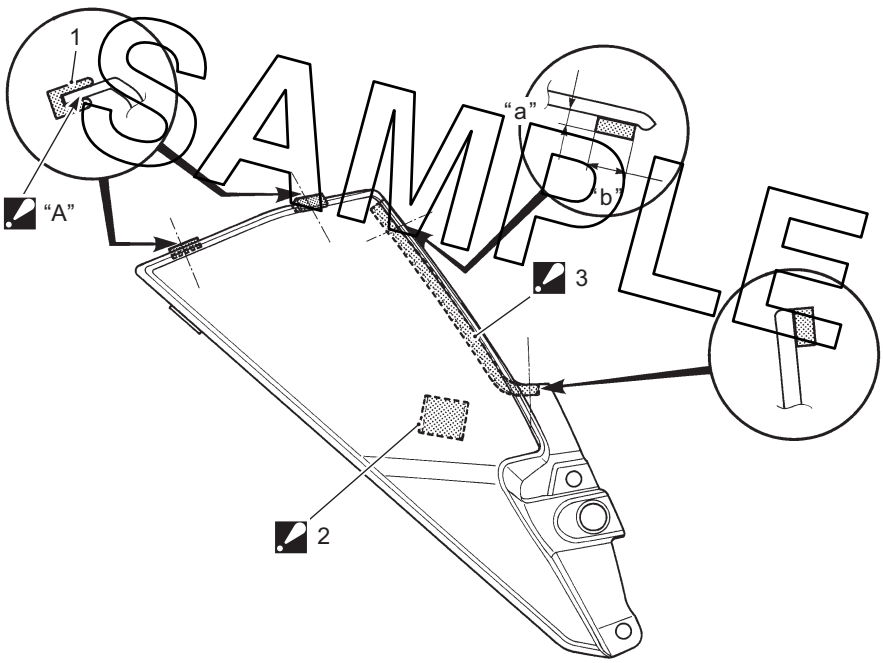

SAMPLE

I823H1940081-01

1. Cushion rubber	"A": Apply adhesive agent to the inside surface of the cushion rubber.
2. Velcro fastening : Align the velcro fastening to the aligned mark.	"a": 3 mm (0.1 in)
3. Cushion rubber : Clean the adhesive surface before adhesing the cushion rubber.	"b": 7 mm (0.3 in)

Frame Body Cover Construction

B823H19406027

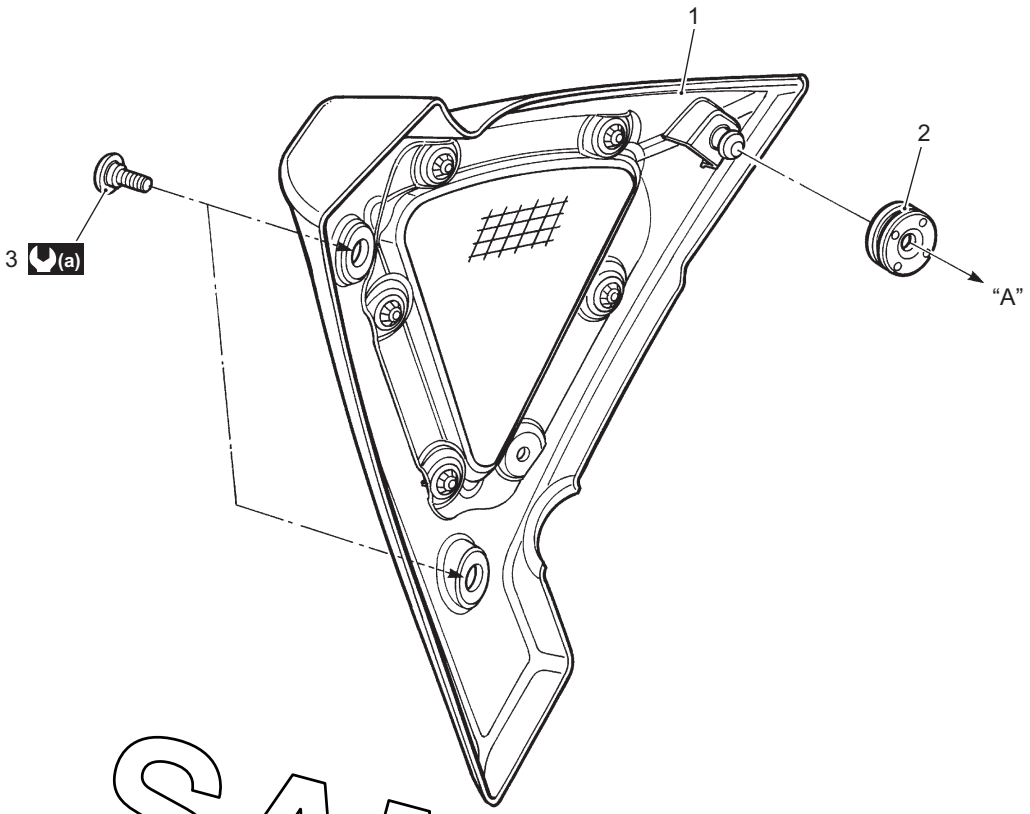

I823H1940093-01

1. Frame body cover	2. Cushion	3. Screw	"A" To the frame	(a) : 4.5 N·m (0.45 kgf-m, 3.3 lb-ft)

SAMPLE

Under Cowling Construction

B823H19406016

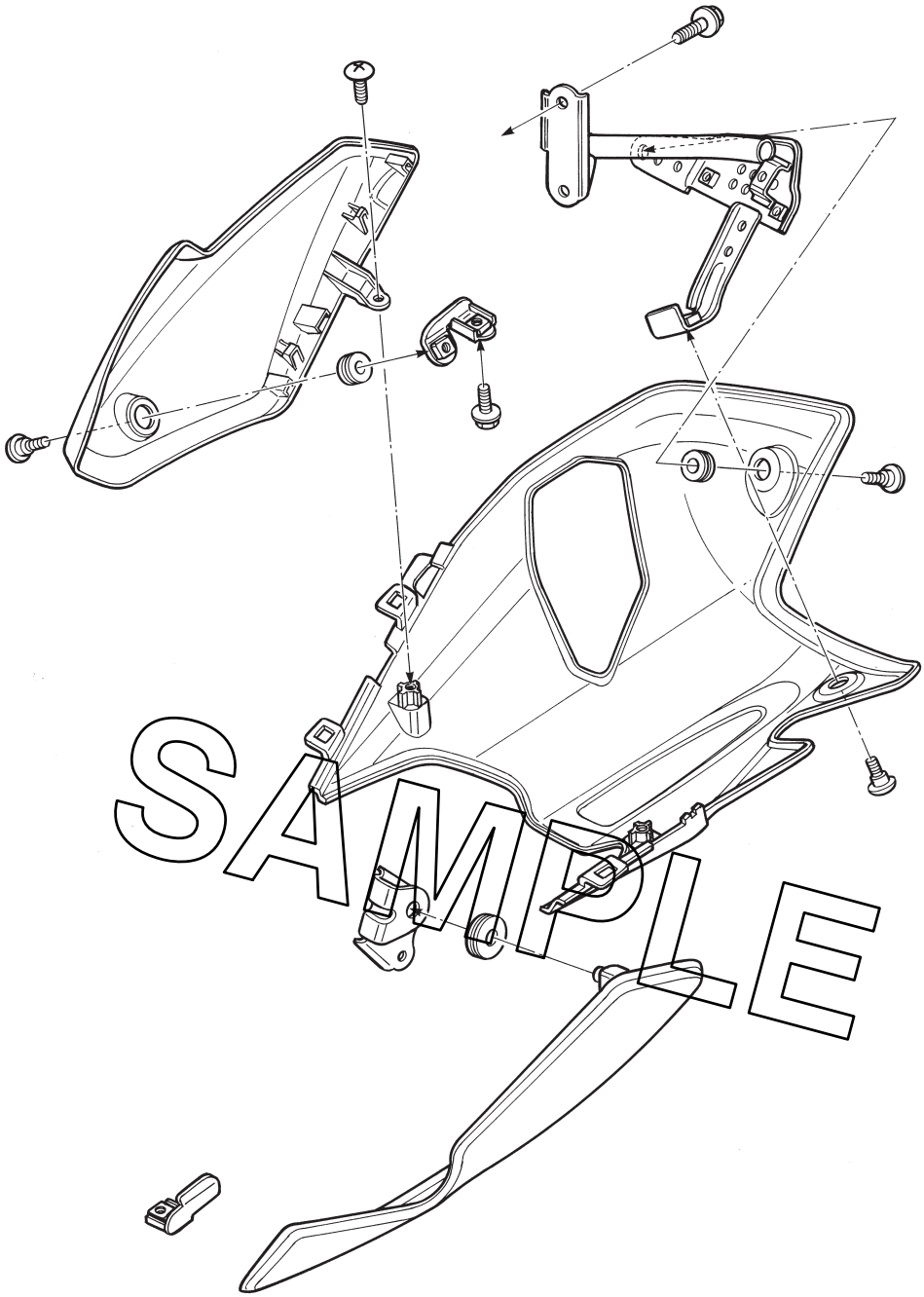

I823H1940082-01

Under Cowling Heat Shield Attachment

B823H19406017

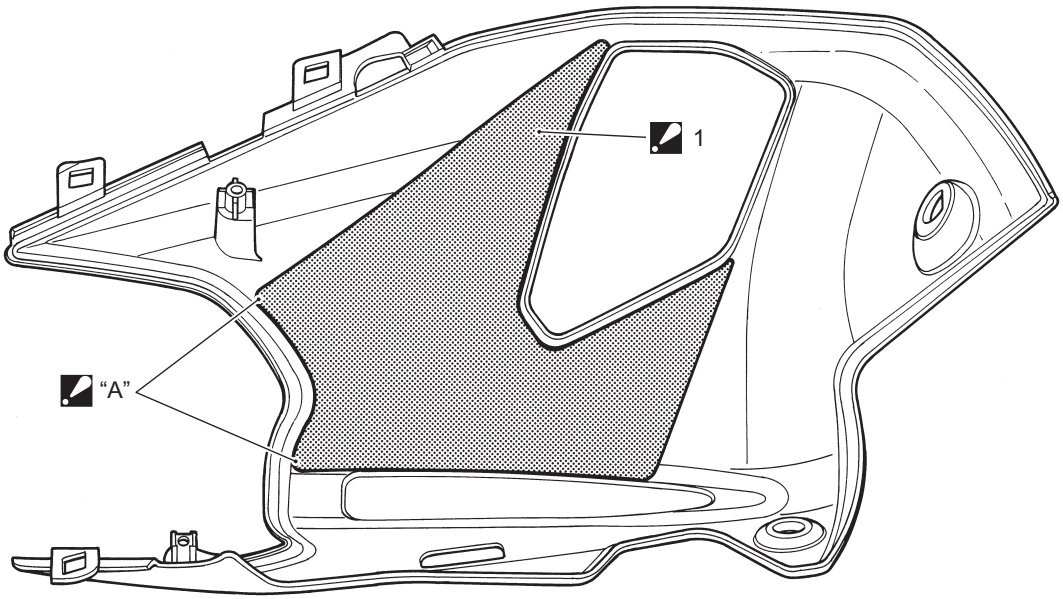

I823H1940083-01

1. Heat shield : Clean the adhesive surface before adhering the heat shield.	"A": Align the tips of the heat shield to the alignment points on the under cowling.

Frame Cover Cushion Attachment

B823H19406018

SAMPLE

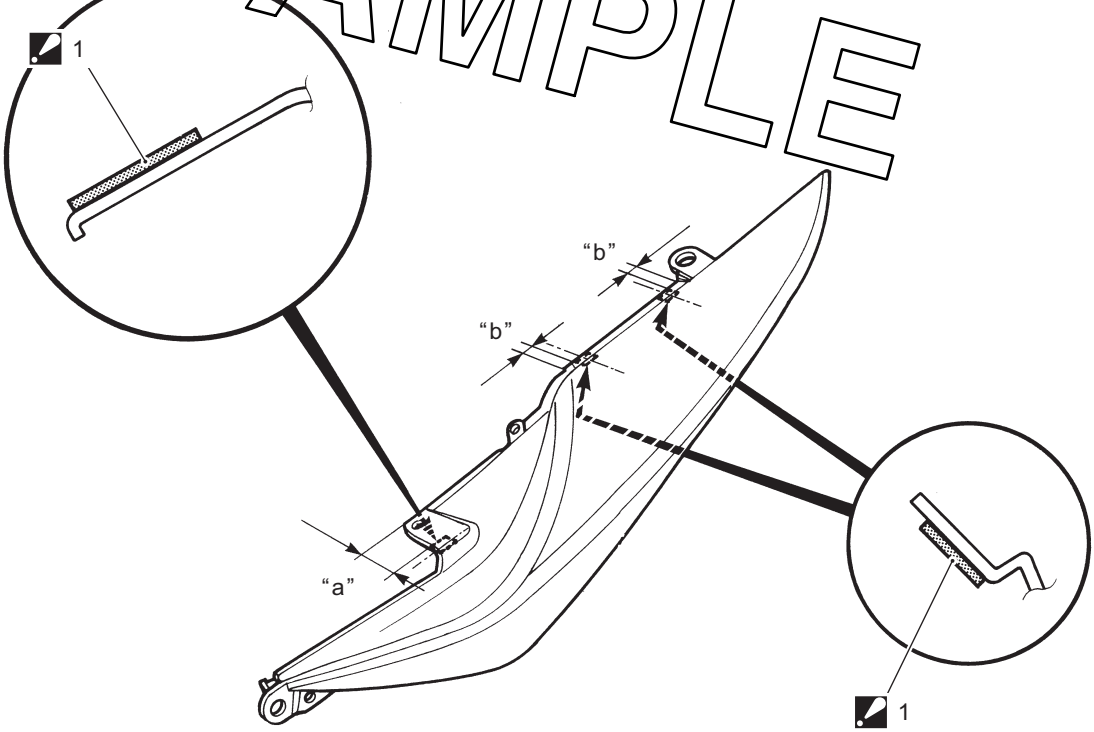

I823H1940084-01

1. Cushion rubber : Clean the adhesive surface before adhering the cushion rubber.	"a": 50 mm (2.0 in)	"b": 20 mm (0.8 in)

Muffler Cover Construction

B823H19406019

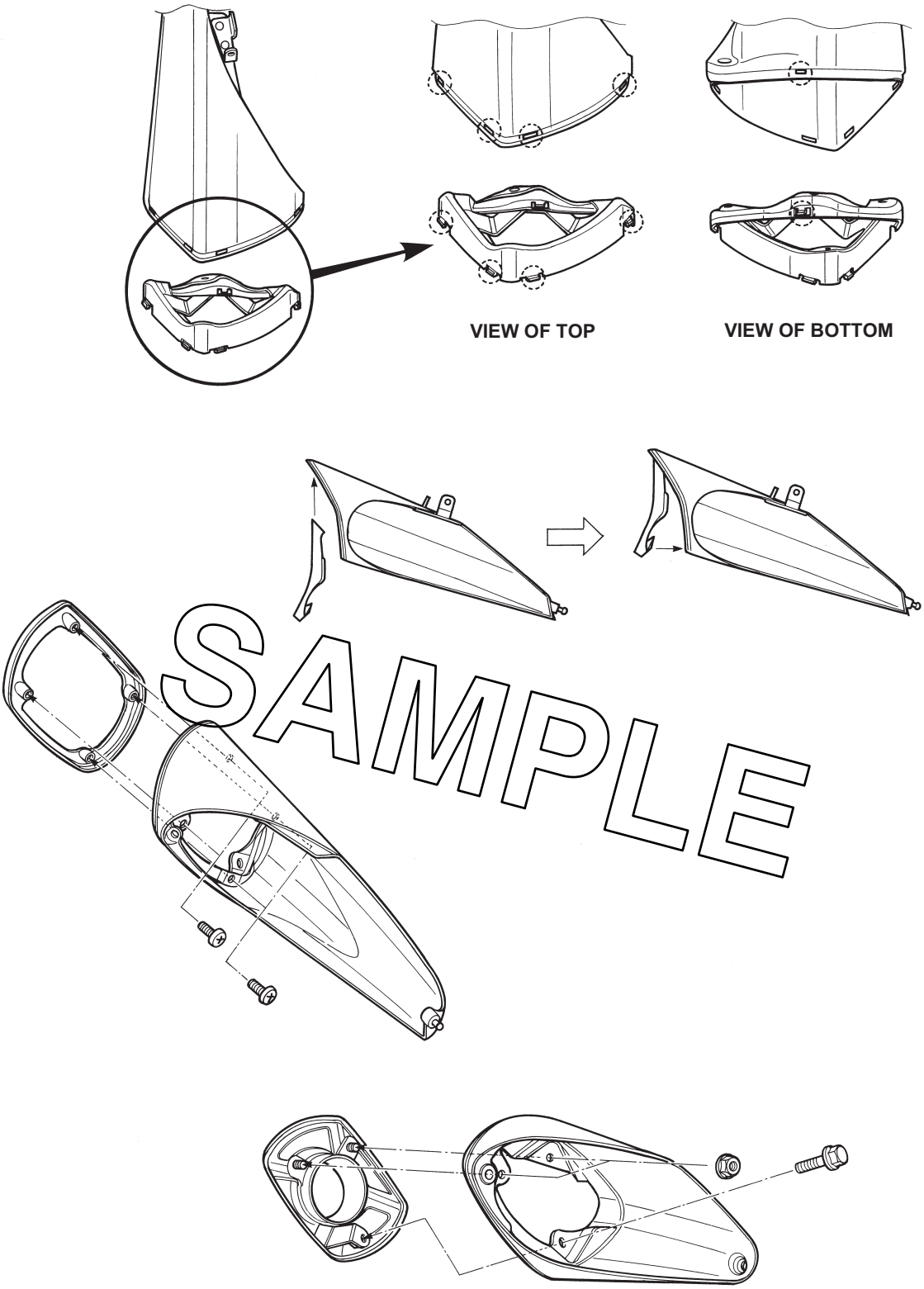

I823H1940085-01

Muffler Cover Heat Shield Attachment

B823H19406020

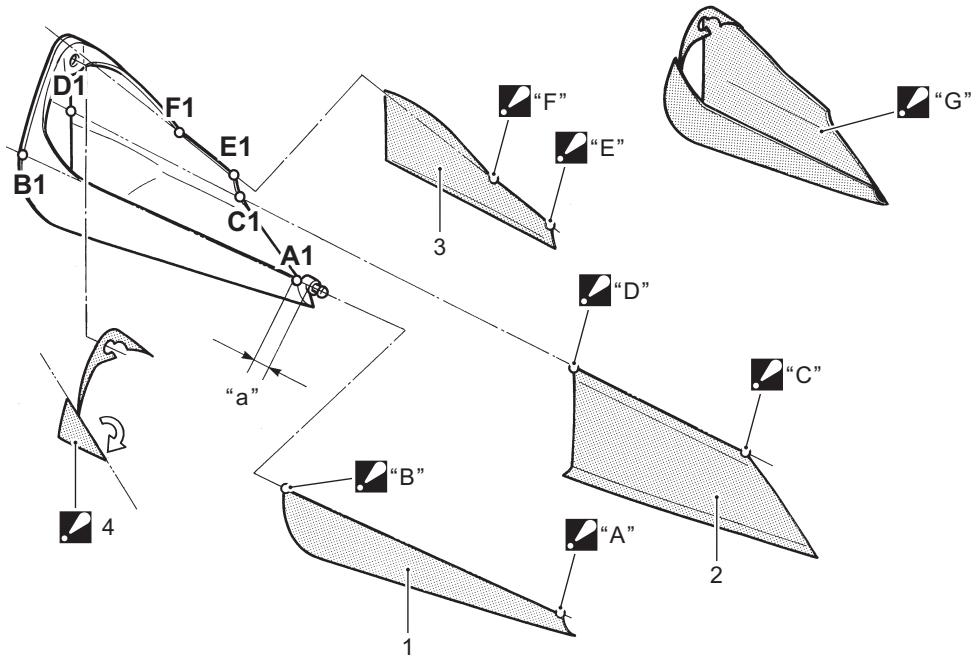

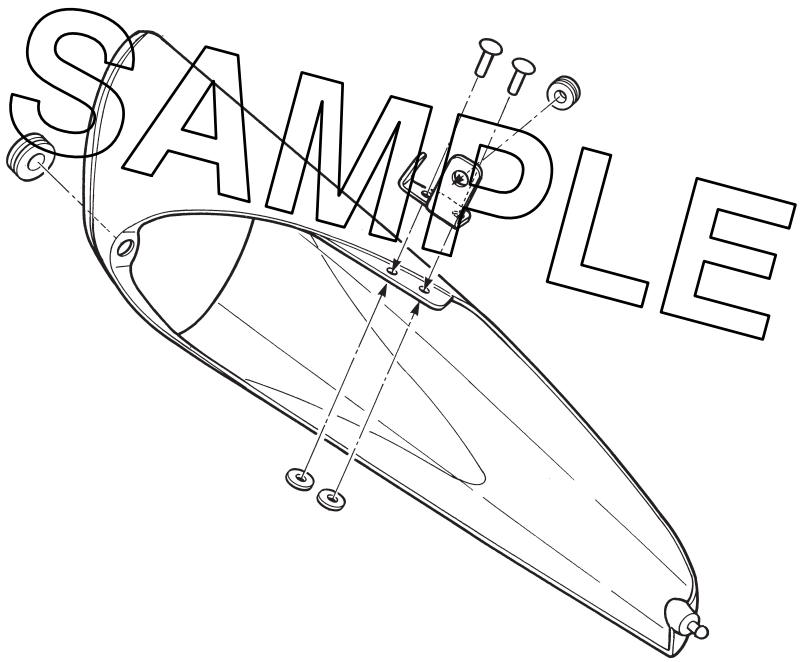

I823H1940086-01

1. Heat shield No. 1	"C": Align "C" point to "C1" point.
2. Heat shield No. 2	"D": Align "D" point to "D1" point.
3. Heat shield No. 3	"E": Align "E" point to "E1" point.
4. Heat shield No. 4 : Bend the tip of the heat shield to inside of the muffler cover.	"F": Align "F" point to "F1" point.
"A": Align "A" point to "A1" point.	"G": Heated shield completed figure.
"B": Align "B" point to "B1" point.	"a": 10 mm (0.4 in)

Tool Box Heat Shield Attachment

B823H19406021

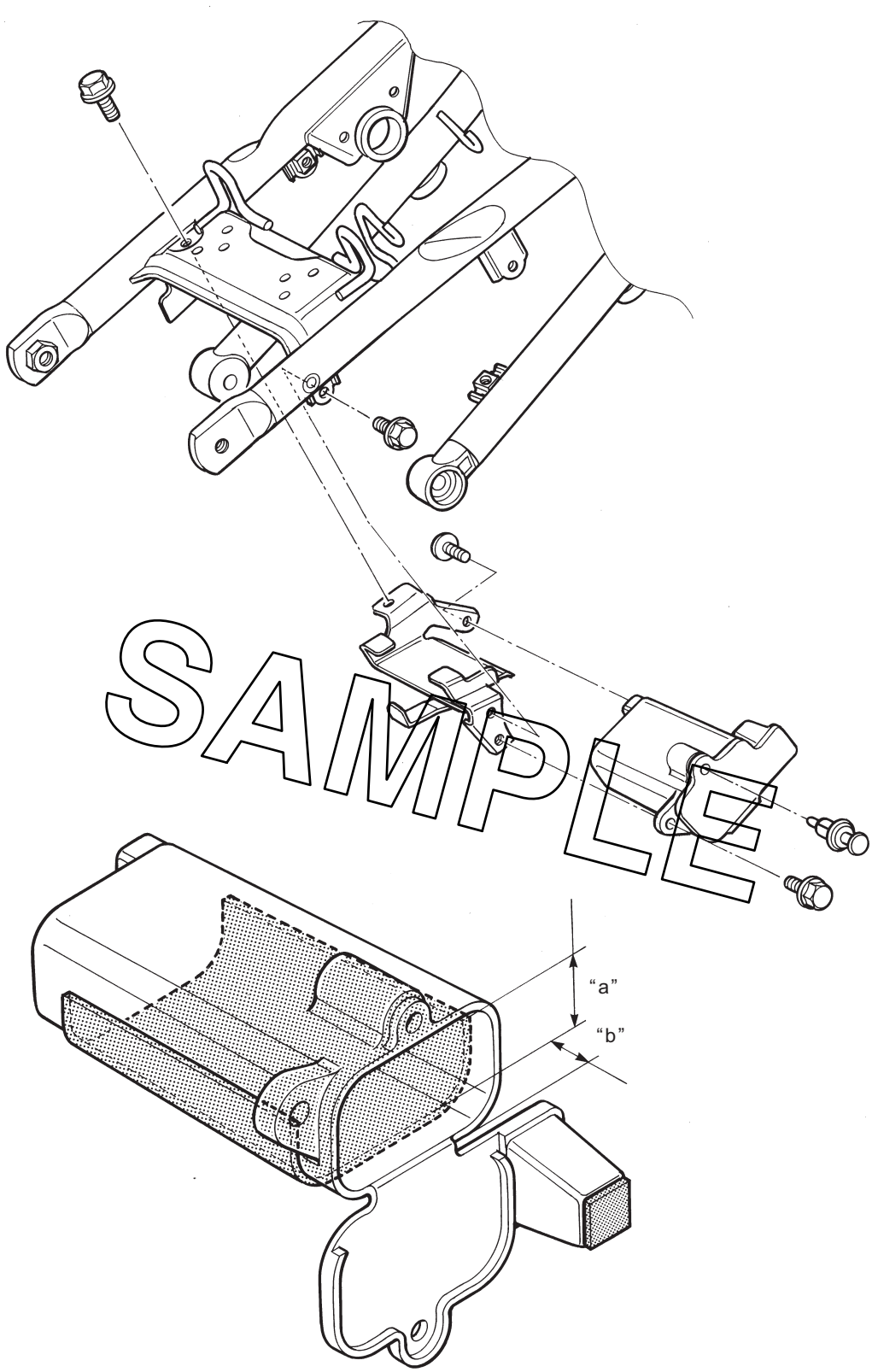

I823H1940087-01

“a”: 25 mm (1.0 in)	“b”: 10 mm (0.4 in)

Engine Sprocket Outer Cover Cushion Attachment (Except for E-33)

B823H19406022

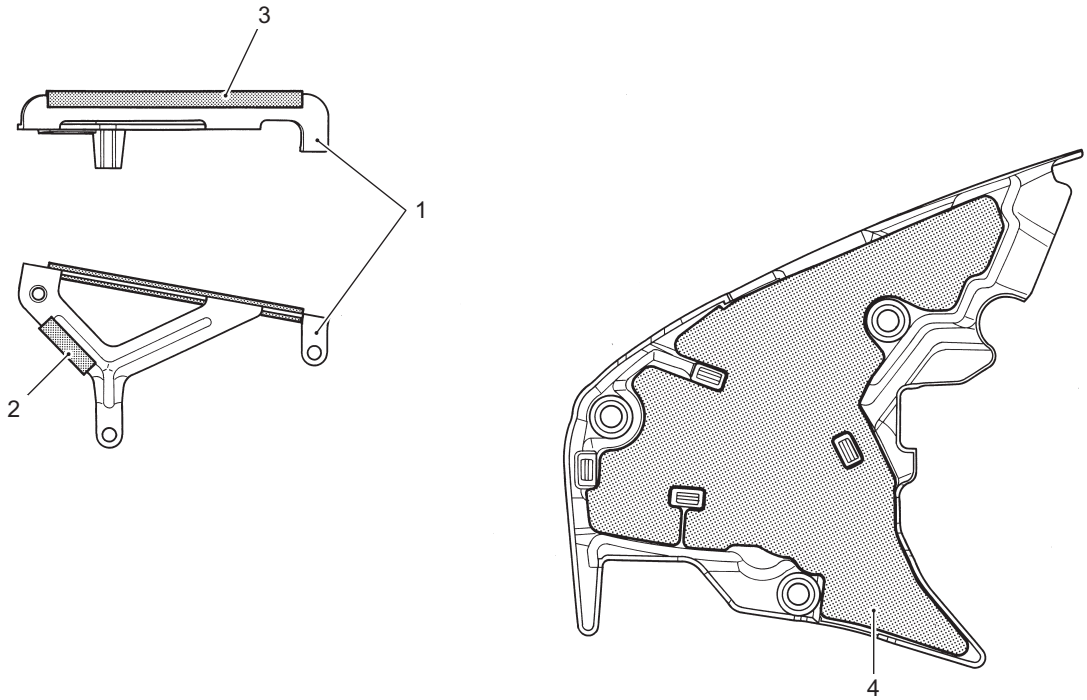

I823H1940088-01

1. Engine sprocket cover bracket	2. Protective tape No. 1	3. Protective tape No. 2	4. Cushion rubber

SAMPLE

Engine Sprocket Outer Cover Cushion Attachment (For E-33)

B823H19406023

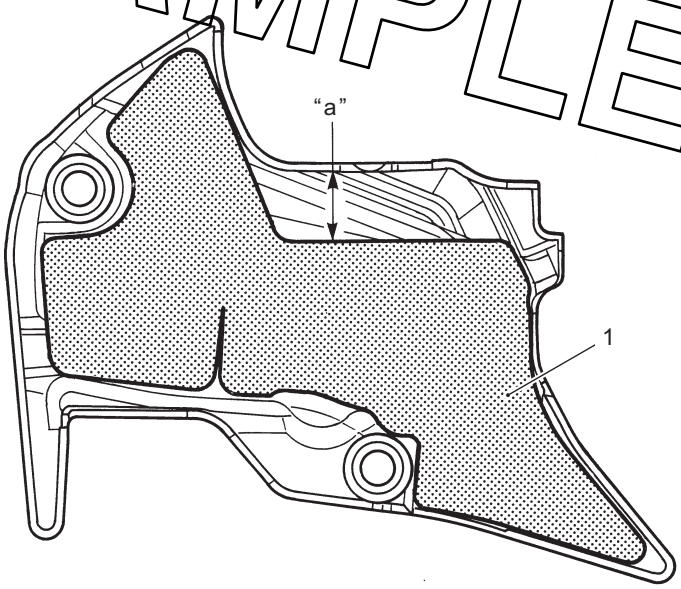

I823H1940089-01

1. Cushion rubber	"a": 18 – 23 mm (0.7 – 0.9 in)

Rear Fender Construction

B823H19406024

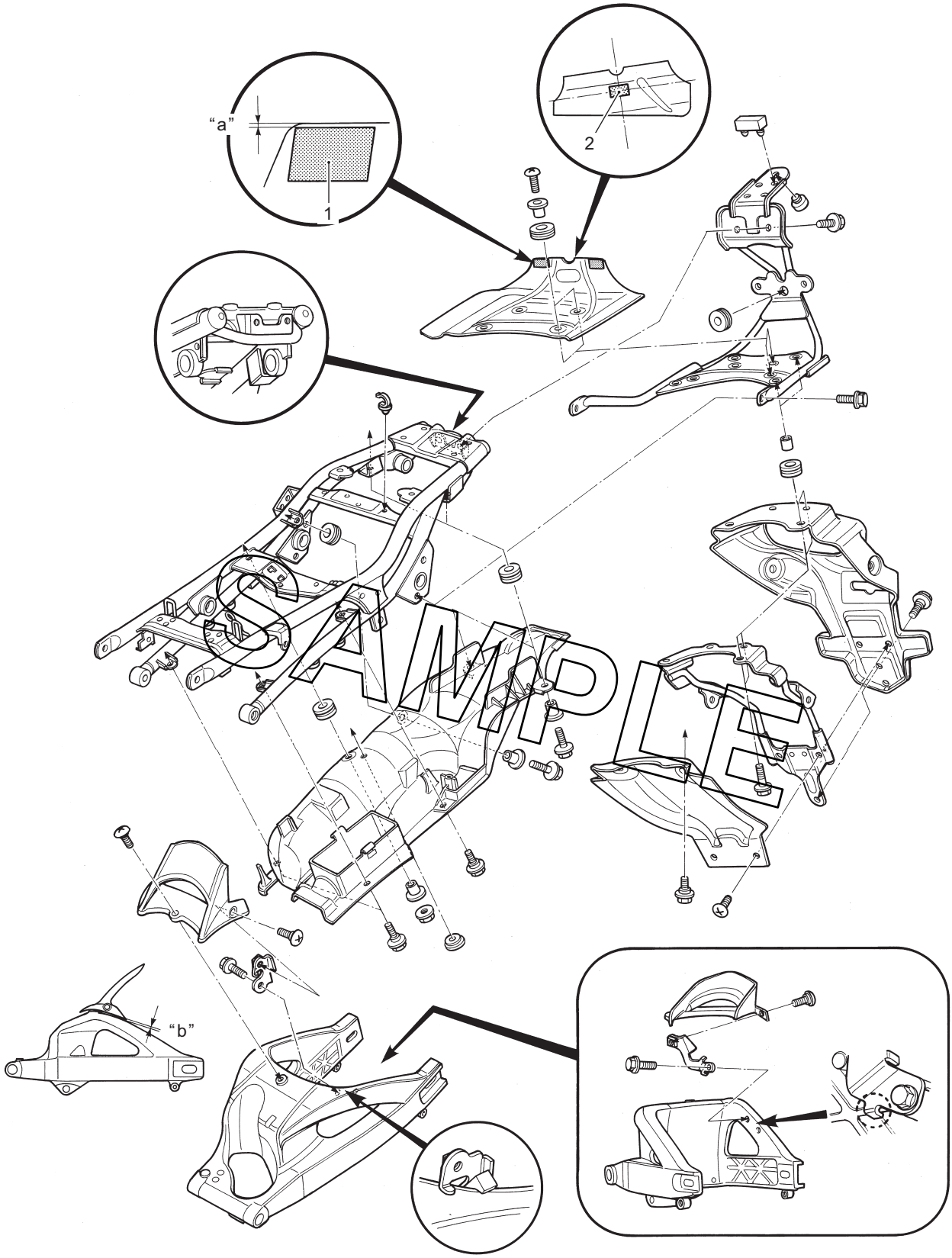

I823H1940090-03

1. Heat shield cushion	2. Heat shield cushion	"a": 1 mm (0.04 in)	"b": 0.5 – 3 mm (0.02 – 0.12 in)

Rear Fender Heat Shield / Cushion Attachment

B823H19406025

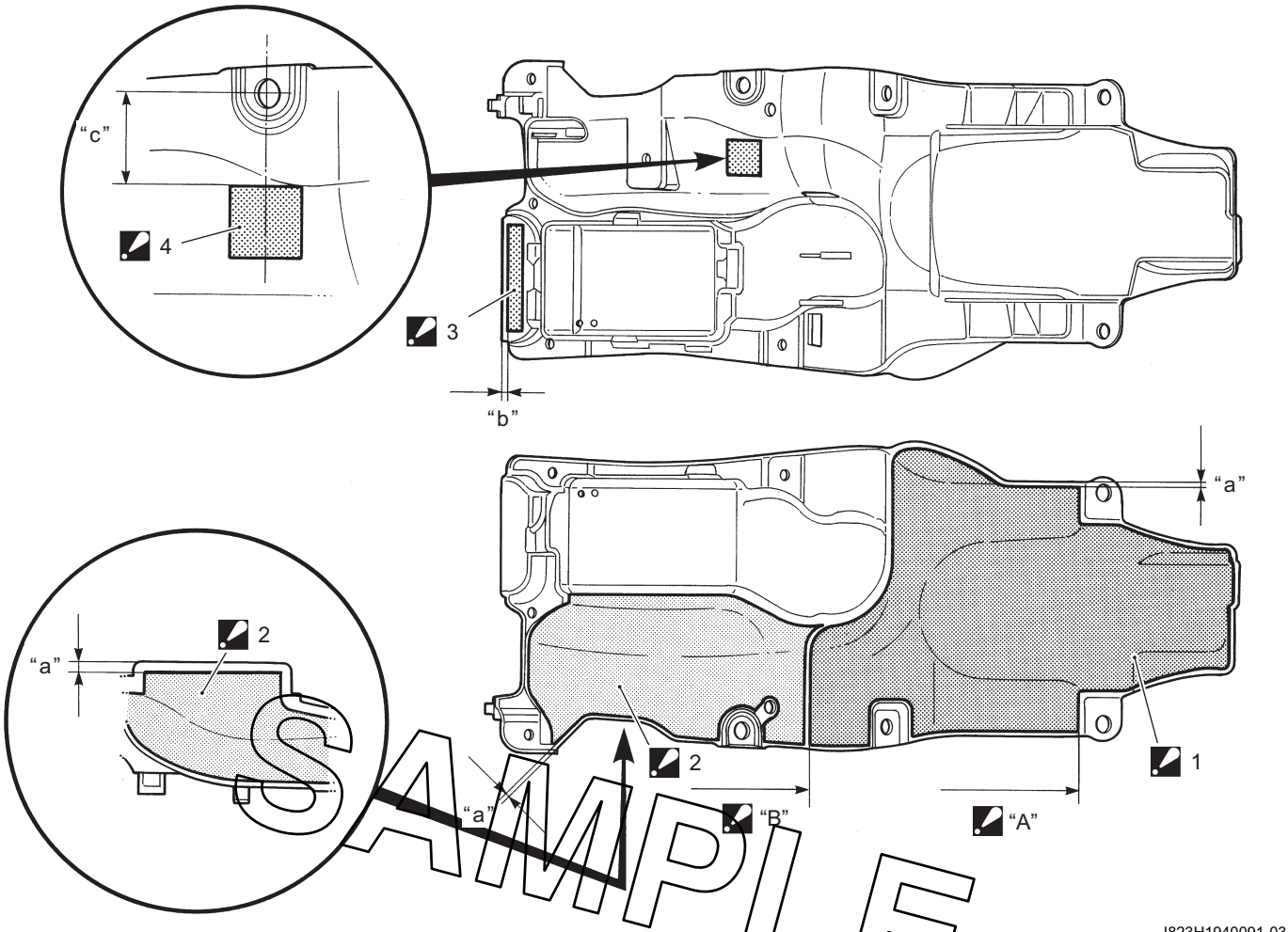

I823H1940091-03

SAMPLE

1. Heat shield No. 1 : Clean the adhesive surface before adhering the heat shield.	"B": Align the heat shield No. 2 to the heat shield No. 1.
2. Heat shield No. 2 : Clean the adhesive surface before adhering the heat shield.	"a": 5 mm (0.2 in)
3. Cushion rubber No. 1 : Clean the adhesive surface before adhering the cushion rubber.	"b": 1 mm (0.04 in)
4. Cushion rubber No. 2 : Clean the adhesive surface before adhering the cushion rubber.	"c": 45 mm (1.8 in)
"A": Align the heat shield No. 1 to the edge of the rear fender.	

Wiring Harness Protector Attachment

B823H19406026

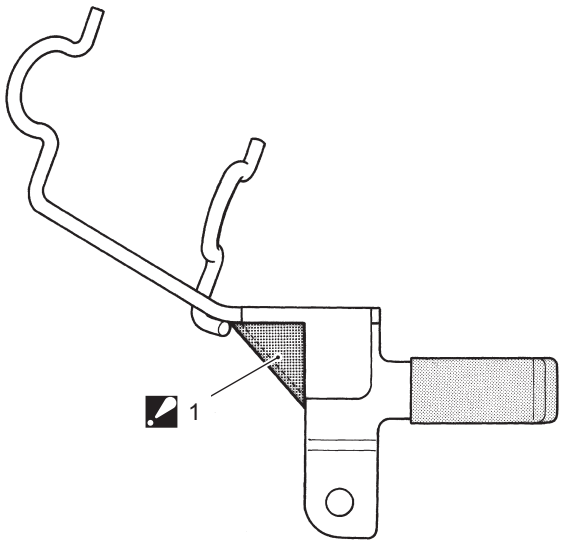

I823H1940092-01

1. Wiring harness protector
   : Stick the wiring harness protector onto the harness guide as shown in the figure.

Fastener Removal and Installation

B823H19406005

Type A

Removal

1) Depress the head of fastener center piece (1).
2) Pull out the fastener (2).

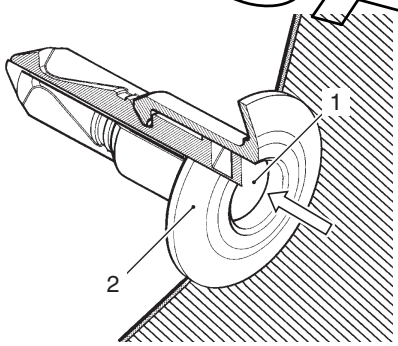

I649G1940005-02

Installation

1) Let the center piece stick out toward the head so that the pawls “A” closes.

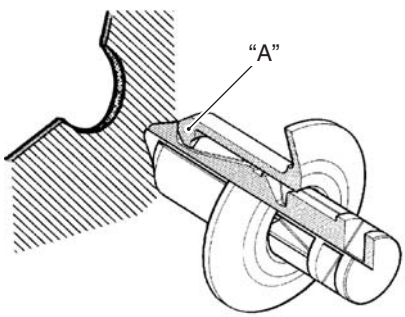

I649G1940006-02

2) Insert the fastener into the installation hole.

NOTE

To prevent the pawl “A” from damage, insert the fastener all the way into the installation hole.

3) Push in the head of center piece until it becomes flush with the fastener outside face.

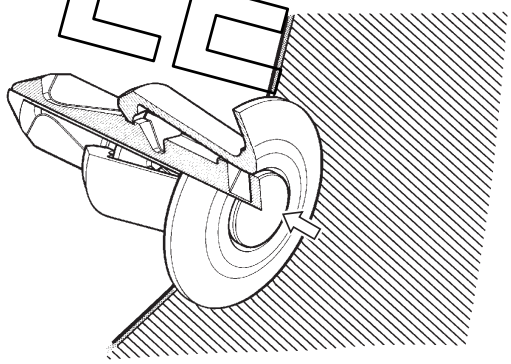

I649G1940007-02

SAMPLE

Type B
Removal

1) Pry up the head of fastener center piece (1) with a screwdriver.
2) Pull out the fastener “A”.

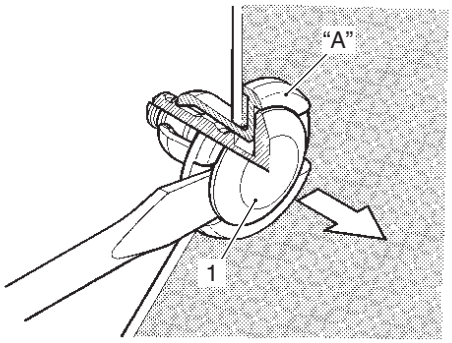

I823H1940001-01

Installation

1) Insert the fastener into the installation hole.

NOTE

To prevent the pawl (2) from damage, insert the fastener all the way into the installation hole.

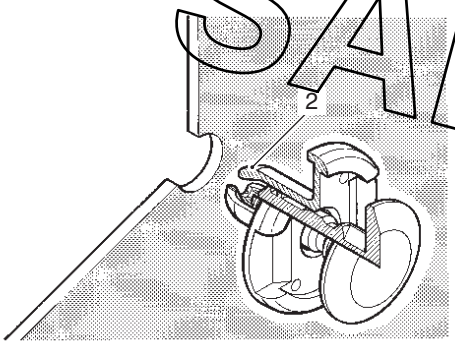

I823H1940002-01

2) Push in the head of center piece.

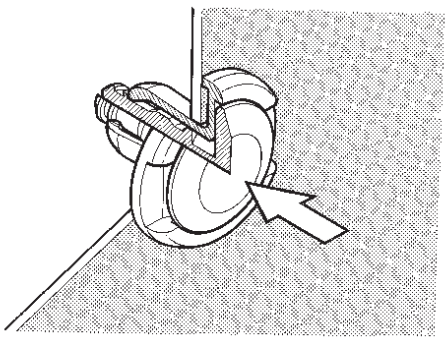

I823H1940003-01

Exterior Parts Removal and Installation

B823H19406006

Front Seat
Removal

Remove the front seat with the ignition key.

I823H1940054-02

Installation

Slide the seat hooks into the seat hook retainers and push down firmly until the seat snaps into locked position.

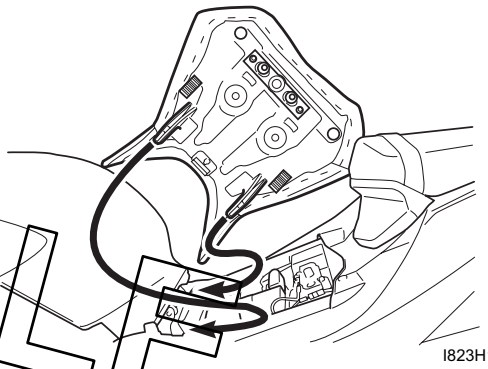

I823H1940057-01

SAMPLE

Rear Seat / Seat Tail Cover
Removal

1) Remove the front seat.
2) Pull the rear seat lock cable (1) and remove the rear seat (seat tail cover).

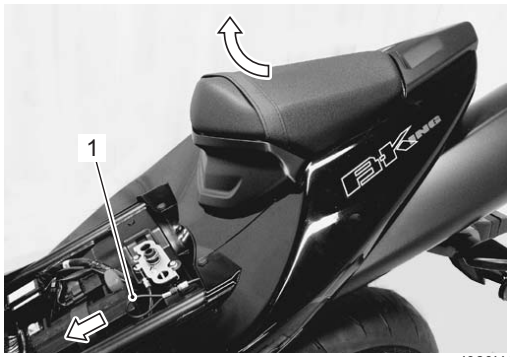

I823H1940055-01

Installation
Slide the hook into the hook retainer and push down firmly until the seat (seat tail cover) snaps into the locked position.

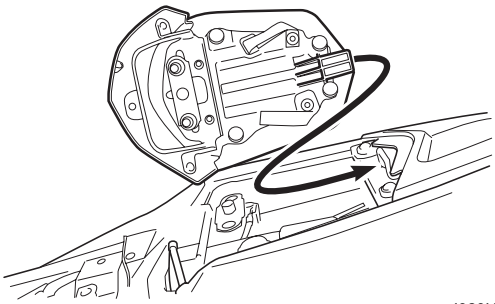

I823H1940056-01

Frame Side Cover
Removal

1) Remove the front seat.
2) Remove the frame side cover(-s) (1) (LH & RH).

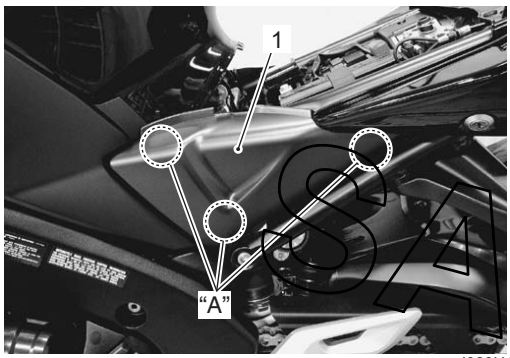

I823H1940058-03

"A": Hooked point

Installation
Install the frame side cover in the reverse order of removal.

Front Frame Side Cover
Removal

1) Remove the frame side covers.
2) Remove the front frame cover(-s) (1) (LH & RH).

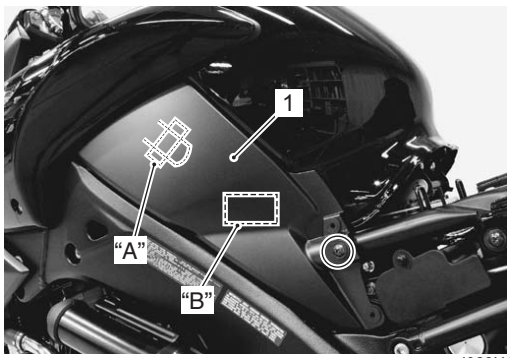

I823H1940060-02

"A": Guide	"B": Velcro fastening

Fuel Tank Cover
Removal

1) Remove the fasteners and bolts.
2) Remove the fuel tank cover(-s) (1) from the guides by sliding it forward.

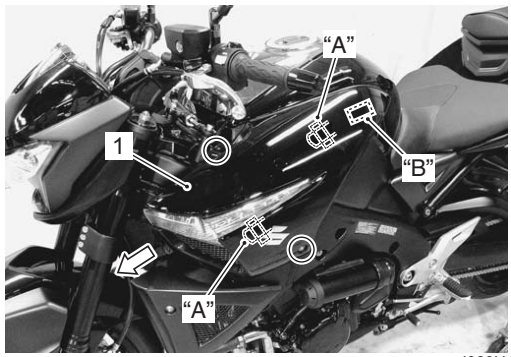

I823H1940062-03

"A": Guide	"B": Velcro fastening

3) Disconnect the turn signal light coupler(-s) (2) (LH & RH).

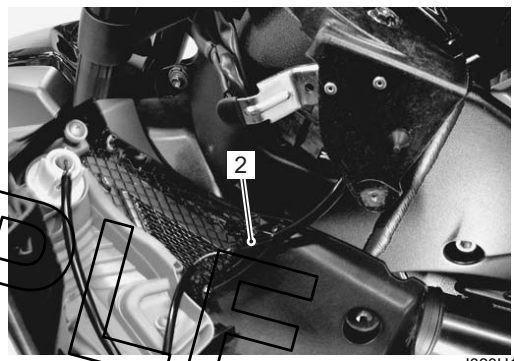

I823H1940064-01

SAMPLE

Installation
Install the fuel tank side cover in the reverse order of removal.

Fuel Tank Upper Cover (Center)
Refer to "Fuel Tank Construction in Section 1G (Page 1G-8)".

Removal

1) Remove the ignition switch cover (1).
2) Remove the fuel tank cap cover (2).

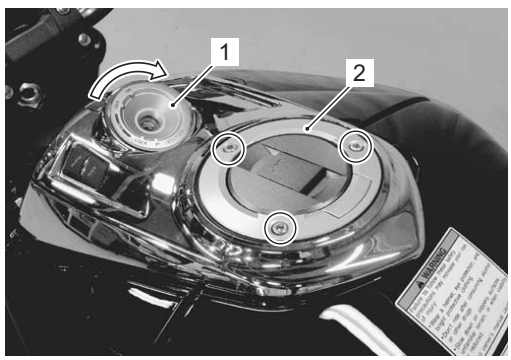

I823H1940065-01

3) Remove the bolts.

I823H1940066-01

4) Disconnect the information display switch coupler (3) and driving mode selector coupler (4).
5) Remove the fuel tank upper cover (5) (center).

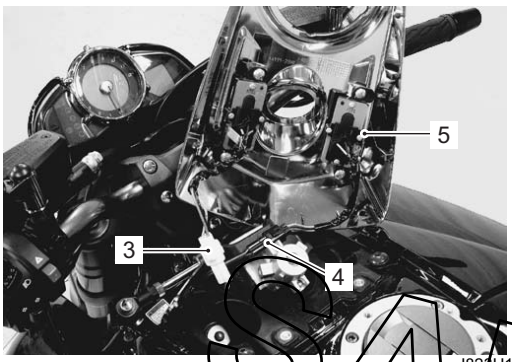

I823H1940067-01

SAMPLE

Installation
Install the fuel tank upper cover (center) in the reverse order of removal.

Fuel Tank Upper Cover (LH & RH)
Refer to “Fuel Tank Construction in Section 1G (Page 1G-8)”.

Removal
1) Remove the fuel tank cover.
2) Remove the fuel tank upper cover (center).
3) Remove the fuel tank upper cover(-s) (1) (LH & RH).

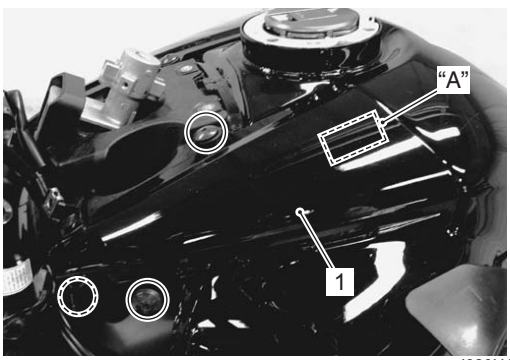

I823H1940068-04

“A”: Velcro fastening

Installation
Install the fuel tank upper cover(-s) in the reverse order of removal.

Under Cowling
Removal
1) Remove the bolts.
2) Open the clamps (1) and remove the under cowling (2).

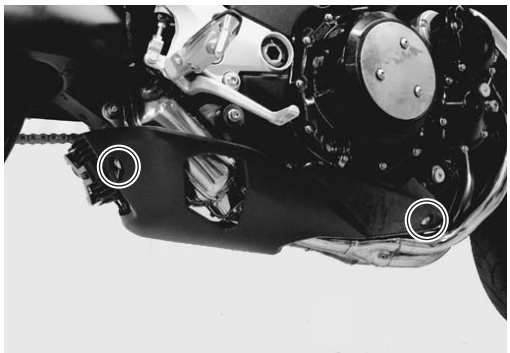

I823H1940069-02

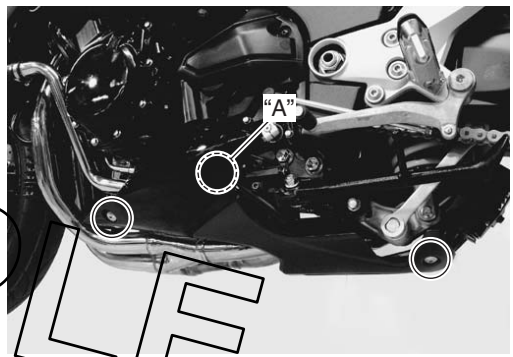

I823H1940070-02

“A”: Hooked point

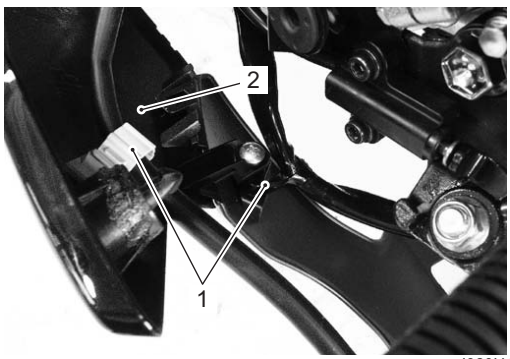

I823H1940071-02

Frame Cover

Removal

1) Remove the frame cover center lid (1).
2) Disconnect the front seat lock cable (2) and rear seat lock cable (3).

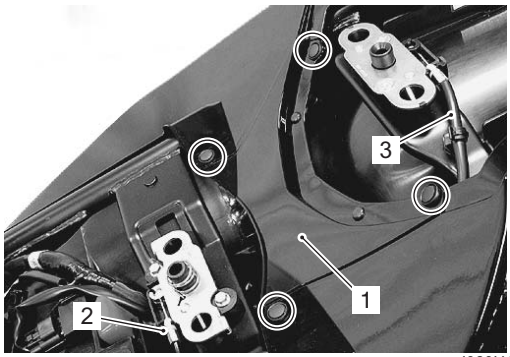

I823H1940072-04

3) Remove the frame cover assembly (4).

I823H1940073-02

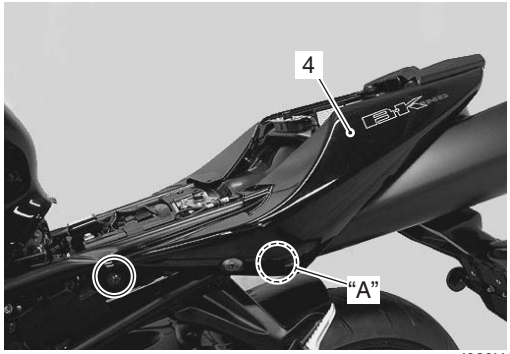

I823H1940074-03

"A": Hooked point

4) Remove the front seat lock cable (2) from the frame cover by removing the plate (5).

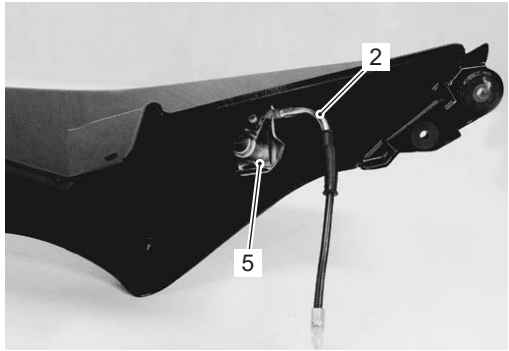

I823H1940075-02

Installation

Install the frame cover assembly in the reverse order of removal. Pay attention to the following point:

- Set the seat lock cables properly. Refer to "Seat Lock Cable Routing Diagram (Page 9D-1)".

Muffler Cover

Removal

1) Remove the frame cover.
2) Remove the muffler cover (1) (center).

I823H1940076-01

3) Remove the muffler cover(-s) (2) (LH & RH).

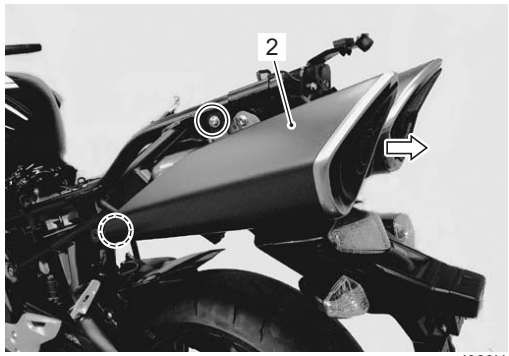

I823H1940077-01

SAMPLE

Frame Body Cover

Removal

Remove the frame body cover(-s) (1) (LH & RH).

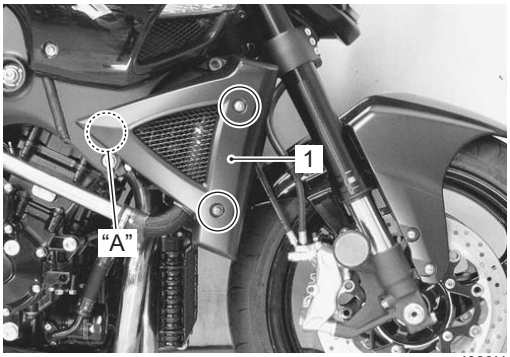

I823H1160003-01

"A": Hooking point

Installation

Install the frame body cover(-s) in the reverse order of removal.

Front Fender

Removal

Refer to "Front Fork Removal and Installation in Section 2B (Page 2B-2)".

Installation

Refer to "Front Fork Removal and Installation in Section 2B (Page 2B-2)".

Rear Fender

Removal

Refer to "Seat Lock Cable Routing Diagram (Page 9D-1)".

Installation

Refer to "Rear Fender Construction (Page 9D-11)".

Specifications

Tightening Torque Specifications

B823H19407001

NOTE

The specified tightening torque is also described in the following.
"Frame Body Cover Construction (Page 9D-4)"

Reference:

For the tightening torque of fastener not specified in this section, refer to "Tightening Torque List in Section 0C (Page 0C-9)".

SAMPLE

Body Structure

Repair Instructions

Body Frame Construction

B823H19506001

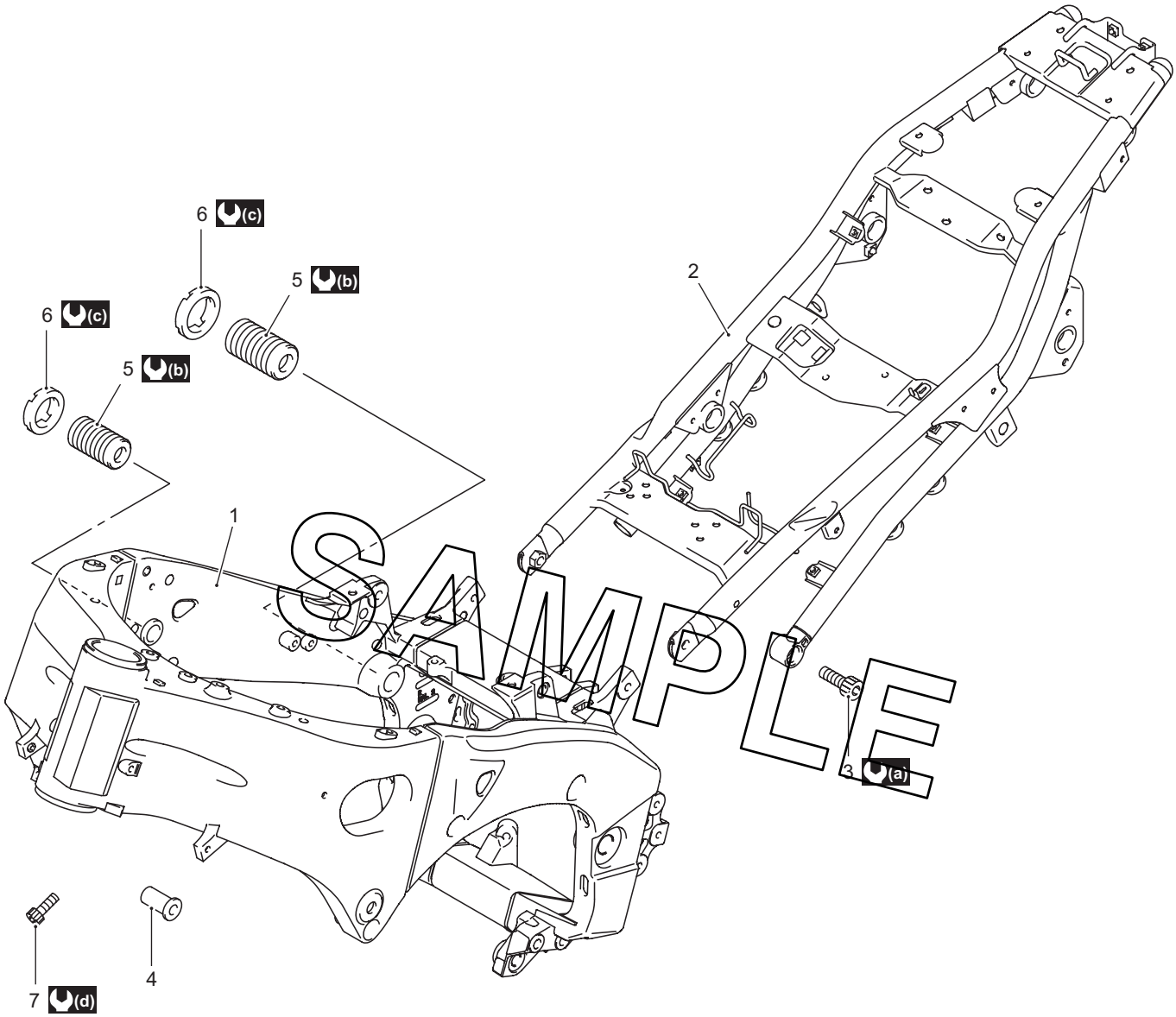

SAMPLE

I823H1950001-03

1. Frame	5. Adjuster	(b) : 10 N·m (1.0 kgf-m, 7.0 lb-ft)
2. Seat rail	6. Adjuster lock-nut	(c) : 45 N·m (4.5 kgf-m, 32.5 lb-ft)
3. Seat rail bolt	7. Engine mounting pinch bolt	(d) : 23 N·m (2.3 kgf-m, 16.5 lb-ft)
4. Spacer	(a) : 50 N·m (5.0 kgf-m, 36.0 lb-ft)	

Front Footrest Bracket Construction

B823H19506004

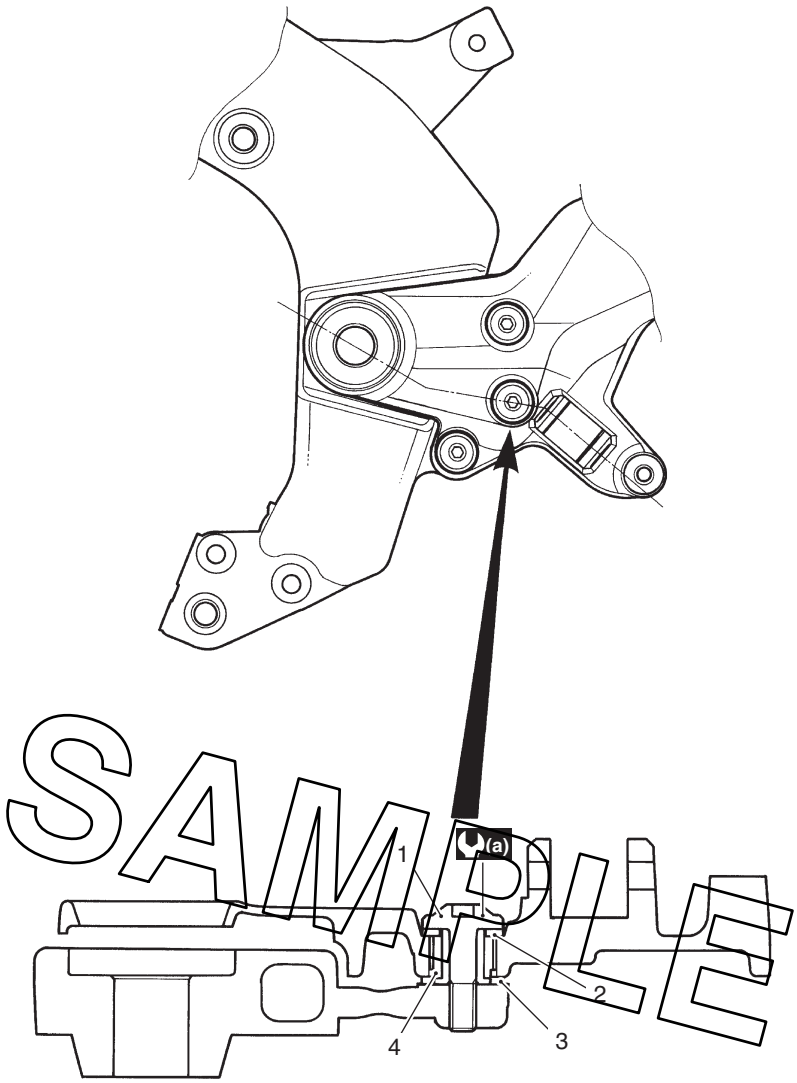

SAMPLE

I823H1950002-01

1. Bolt	2. Washer	3. Washer	4. Bushing	(a) : 23 N·m (2.3 kgf-m, 16.5 lb-ft)

Side-stand Construction

B823H19506005

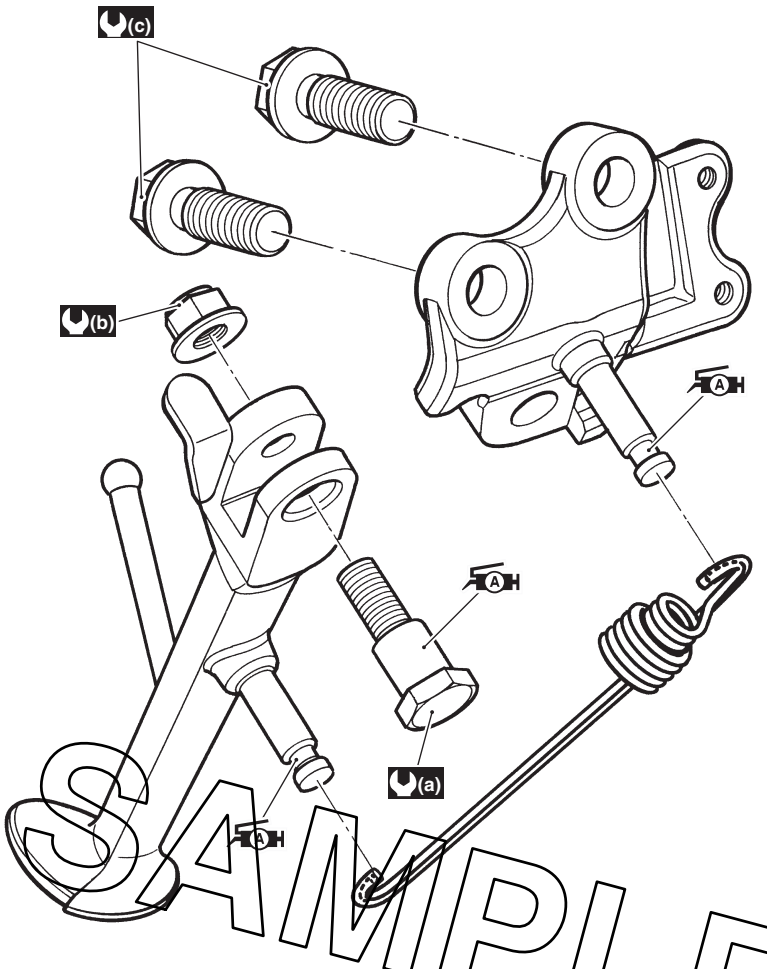

I823H1950003-01

(a) : 50 N·m (5.0 kgf-m, 36.0 lb-ft)	(c) : 95 N·m (9.5 kgf-m, 68.5 lb-ft)
(b) : 60 N·m (6.0 kgf-m, 43.5 lb-ft)	A : Apply grease to sliding surface.

SAMPLE

Side-stand Removal and Installation

B823H19506006

Removal

1) Support the motorcycle with a jack or wooden block.

⚠ CAUTION

- **Do not support the motorcycle with the exhaust pipes.**
- **Make sure that the motorcycle is supported securely.**

2) Remove the side-stand as shown in the side-stand construction. Refer to “Side-stand Construction (Page 9E-3)”.

Installation

Install the side-stand as shown in the side-stand construction. Refer to “Side-stand Construction (Page 9E-3)”.

Specifications

Tightening Torque Specifications

B823H19507001

NOTE

The specified tightening torque is also described in the following.
“Body Frame Construction (Page 9E-1)”
“Front Footrest Bracket Construction (Page 9E-2)”
“Side-stand Construction (Page 9E-3)”

Reference:

For the tightening torque of fastener not specified in this section, refer to “Tightening Torque List in Section 0C (Page 0C-9)”.

SAMPLE

Special Tools and Equipment

Recommended Service Material

B823H19508001

NOTE

Required service material is also described in the following.
“Side-stand Construction (Page 9E-3)”

Prepared by
SUZUKI MOTOR CORPORATION

July, 2007
Part No. 99500-39320-01E
Printed in Japan

SAMPLE

SUZUKI MOTOR CORPORATION

SAMPLE

Printed in Japan (TK)
K8