SUZUKI

GSX-R1000

SERVICE MANUAL

99500-39310-01E

FOREWORD

This manual contains an introductory description on the SUZUKI GSX-R1000 and procedures for its inspection/service and overhaul of its main components.
Other information considered as generally known is not included.
Read the GENERAL INFORMATION section to familiarize yourself with the motorcycle and its maintenance. Use this section as well as other sections to use as a guide for proper inspection and service.
This manual will help you know the motorcycle better so that you can assure your customers of fast and reliable service.

- *This manual has been prepared on the basis of the latest specifications at the time of publication. If modifications have been made since then, differences may exist between the content of this manual and the actual motorcycle.*
- *Illustrations in this manual are used to show the basic principles of operation and work procedures. They may not represent the actual motorcycle exactly in detail.*
- *This manual is written for persons who have enough knowledge, skills and tools, including special tools, for servicing SUZUKI motorcycles. If you do not have the proper knowledge and tools, ask your authorized SUZUKI motorcycle dealer to help you.*

⚠ WARNING

Inexperienced mechanics or mechanics without the proper tools and equipment may not be able to properly perform the services described in this manual.
Improper repair may result in injury to the mechanic and may render the motorcycle unsafe for the rider and passenger.

SUZUKI MOTOR CORPORATION

GROUP INDEX

GENERAL INFORMATION	1
PERIODIC MAINTENANCE	2
ENGINE	3
FI SYSTEM DIAGNOSIS	4
FUEL SYSTEM AND THROTTLE BODY	5
EXHAUST SYSTEM	6
COOLING AND LUBRICATION SYSTEM	7
CHASSIS	8
ELECTRICAL SYSTEM	9
SERVICING INFORMATION	10
EMISSION CONTROL INFORMATION	11
WIRING DIAGRAM	12

GENERAL INFORMATION

1

CONTENTS

WARNING/CAUTION/NOTE 1- 2
GENERAL PRECAUTIONS 1- 2
SUZUKI GSX-R1000K7 ('07-MODEL) 1- 4
SERIAL NUMBER LOCATION 1- 4
FUEL, OIL AND ENGINE COOLANT RECOMMENDATION 1- 5
FUEL (FOR USA AND CANADA) 1- 5
FUEL (FOR OTHER COUNTRIES) 1- 5
ENGINE OIL (FOR USA) 1- 5
ENGINE OIL (FOR OTHER COUNTRIES) 1- 5
BRAKE FLUID 1- 5
FRONT FORK OIL 1- 6
ENGINE COOLANT 1- 6
WATER FOR MIXING 1- 6
ANTI-FREEZE/ENGINE COOLANT 1- 6
LIQUID AMOUNT OF WATER/ENGINE COOLANT 1- 6
BREAK-IN PROCEDURES 1- 7
CYLINDER IDENTIFICATION 1- 7
INFORMATION LABELS 1- 8
SPECIFICATIONS 1- 9
DIMENSIONS AND DRY MASS 1- 9
ENGINE 1- 9
DRIVE TRAIN 1- 9
CHASSIS 1-10
ELECTRICAL 1-10
CAPACITIES 1-10

COUNTRY AND AREA CODES

The following codes stand for the applicable country(-ies) and area(-s).

CODE	COUNTRY or AREA	EFFECTIVE FRAME NO.
E-02	U.K.	JS1CL111100100001 –
E-03	U.S.A. (Except for California)	JS1GT77A 72100001 –
E-19 (GSX-R1000)	E.U.	JS1CL111100100001 –
E-19 (GSX-R1000UF)	E.U.	JS1CL211100100001 –
E-24	Australia	JS1CL111200100001 –
E-28	Canada	JS1GT77A 72100001 –
E-33	California (U.S.A.)	JS1GT77A 72100001 –

WARNING/CAUTION/NOTE

Please read this manual and follow its instructions carefully. To emphasize special information, the symbol and the words WARNING, CAUTION and NOTE have special meanings. Pay special attention to the messages highlighted by these signal words.

⚠ WARNING

Indicates a potential hazard that could result in death or injury.

CAUTION

Indicates a potential hazard that could result in motorcycle damage.

NOTE:
Indicates special information to make maintenance easier or instructions clearer.

Please note, however, that the warnings and cautions contained in this manual cannot possibly cover all potential hazards relating to the servicing, or lack of servicing, of the motorcycle. In addition to the WARNINGS and CAUTIONS stated, you must use good judgement and basic mechanical safety principles. If you are unsure about how to perform a particular service operation, ask a more experienced mechanic for advice.

GENERAL PRECAUTIONS

⚠ WARNING

* **Proper service and repair procedures are important for the safety of the service mechanic and the safety and reliability of the motorcycle.**
* **When 2 or more persons work together, pay attention to the safety of each other.**
* **When it is necessary to run the engine indoors, make sure that exhaust gas is forced outdoors.**
* **When working with toxic or flammable materials, make sure that the area you work in is well-ventilated and that you follow all of the material manufacturer's instructions.**
* **Never use gasoline as a cleaning solvent.**
* **To avoid getting burned, do not touch the engine, engine oil, radiator and exhaust system until they have cooled.**
* **After servicing the fuel, oil, water, exhaust or brake systems, check all lines and fittings related to the system for leaks.**

CAUTION

* If parts replacement is necessary, replace the parts with Suzuki Genuine Parts or their equivalent.
* When removing parts that are to be reused, keep them arranged in an orderly manner so that they may be reinstalled in the proper order and orientation.
* Be sure to use special tools when instructed.
* Make sure that all parts used in reassembly are clean. Lubricate them when specified.
* Use the specified lubricant, bond, or sealant.
* When removing the battery, disconnect the negative cable first and then the positive cable.
* When reconnecting the battery, connect the positive cable first and then the negative cable, and replace the terminal cover on the positive terminal.
* When performing service to electrical parts, if the service procedures do not require use of battery power, disconnect the negative cable from the battery.
* When tightening the cylinder head or case bolts and nuts, tighten the larger sizes first. Always tighten the bolts and nuts diagonally from the inside toward outside and to the specified tightening torque.
* Whenever you remove oil seals, gaskets, packing, O-rings, locking washers, self-locking nuts, cotter pins, circlips and certain other parts as specified, be sure to replace them with new ones. Also, before installing these new parts, be sure to remove any left over material from the mating surfaces.
* Never reuse a circlip. When installing a new circlip, take care not to expand the end gap larger than required to slip the circlip over the shaft. After installing a circlip, always ensure that it is completely seated in its groove and securely fitted.
* Use a torque wrench to tighten fasteners to the specified torque. Wipe off grease and oil if a thread is smeared with them.
* After reassembling, check parts for tightness and proper operation.

* To protect the environment, do not unlawfully dispose of used motor oil, engine coolant and other fluids: batteries and tires.
* To protect Earth's natural resources, properly dispose of used motorcycle and parts.

SUZUKI GSX-R1000K7 (’07-MODEL)

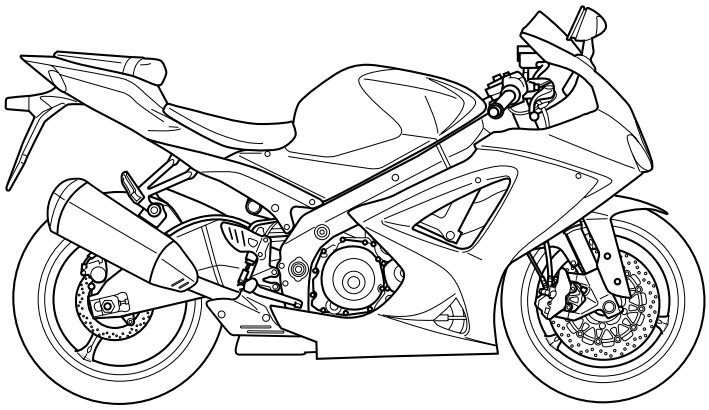

RIGHT SIDE

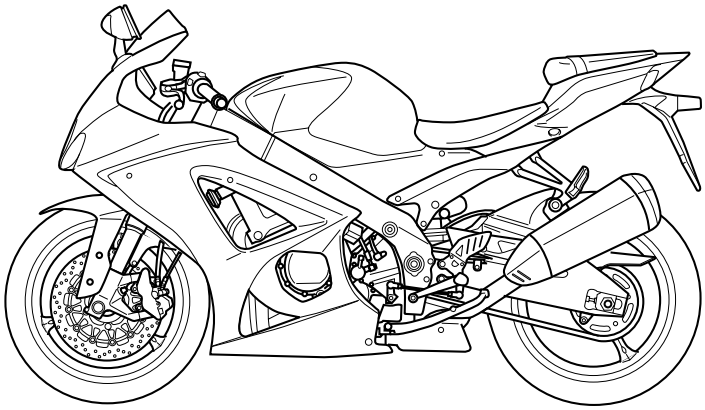

LEFT SIDE

- Difference between illustration and actual motorcycle may exist depending on the markets.

SERIAL NUMBER LOCATION

The frame serial number or V.I.N. (Vehicle Identification Number) ① is stamped on the right side of the steering head pipe. The engine serial number ② is located on the rear side of the crankcase. These numbers are required especially for registering the machine and ordering spare parts.

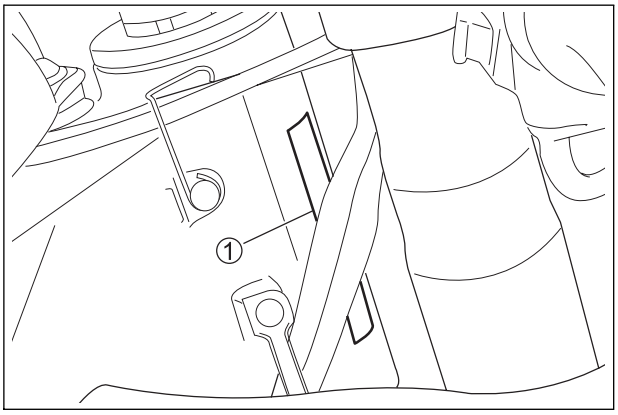

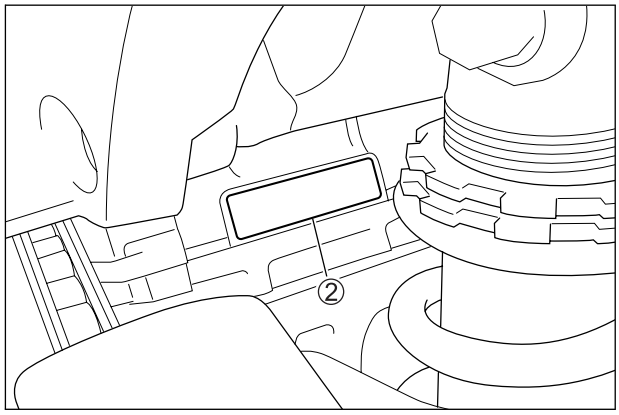

FUEL, OIL AND ENGINE COOLANT RECOMMENDATION

FUEL (FOR USA AND CANADA)

Use only unleaded gasoline of at least 90 pump octane (R/2 + M/2).
Gasoline containing MTBE (Methyl Tertiary Butyl Ether), less than 10% ethanol, or less than 5% methanol with appropriate cosolvents and corrosion inhibitor is permissible.

FUEL (FOR OTHER COUNTRIES)

Gasoline used should be graded 95 octane (Research Method) or higher. Unleaded gasoline is recommended.

ENGINE OIL (FOR USA)

Oil quality is a major contributor to your engine's performance and life. Always select good quality engine oil. Suzuki recommends the use of SUZUKI PERFORMANCE 4 MOTOR OIL or equivalent engine oil. Use of SF/SG or SH/SJ in API with MA in JASO.
Suzuki recommends the use of SAE 10W-40 engine oil. If SAE 10W-40 engine oil is not available, select an alternative according to the following chart.

ENGINE OIL (FOR OTHER COUNTRIES)

Oil quality is a major contributor to your engine's performance and life. Always select good quality engine oil. Use of SF/SG or SH/SJ in API with MA in JASO.
Suzuki recommends the use of SAE 10W-40 engine oil. If SAE 10W-40 engine oil is not available, select an alternative according to the right chart.

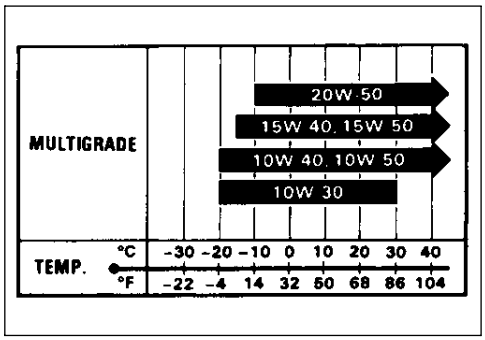

BRAKE FLUID

Specification and classification: DOT 4

⚠ WARNING

Since the brake system of this motorcycle is filled with a glycol-based brake fluid by the manufacturer, do not use or mix different types of fluid such as silicone-based and petroleum-based fluid for refilling the system, otherwise serious damage will result.
Do not use any brake fluid taken from old or used or unsealed containers.
Never re-use brake fluid left over from a previous servicing, which has been stored for a long period.

FRONT FORK OIL
Use fork oil L01 or an equivalent fork oil.

ENGINE COOLANT
Use an anti-freeze/engine coolant compatible with an aluminum radiator, mixed with distilled water only.

WATER FOR MIXING
Use distilled water only. Water other than distilled water can corrode and clog the aluminum radiator.

ANTI-FREEZE/ENGINE COOLANT
The engine coolant performs as a corrosion and rust inhibitor as well as anti-freeze. Therefore, the engine coolant should be used at all times even though the atmospheric temperature in your area does not go down to freezing point.
Suzuki recommends the use of SUZUKI COOLANT anti-freeze/engine coolant. If this is not available, use an equivalent which is compatible with an aluminum radiator.

LIQUID AMOUNT OF WATER/ENGINE COOLANT
Solution capacity (total): Approx. 2 500 ml (2.6/2.2 US/Imp qt)
For engine coolant mixture information, refer to cooling system section in page 7-2.

CAUTION

Mixing of anti-freeze/engine coolant should be limited to 60%. Mixing beyond it would reduce its efficiency. If the anti-freeze/engine coolant mixing ratio is below 50%, rust inhabiting performance is greatly reduced. Be sure to mix it above 50% even though the atmospheric temperature does not go down to the freezing point.

BREAK-IN PROCEDURES

During manufacture only the best possible materials are used and all machined parts are finished to a very high standard but it is still necessary to allow the moving parts to “BREAK-IN” before subjecting the engine to maximum stresses. The future performance and reliability of the engine depends on the care and restraint exercised during its early life. The general rules are as follows.

- Keep to these break-in engine speed limits:

Initial 800 km (500 miles): Below 6 500 r/min
Up to 1 600 km (1 000 miles): Below 10 000 r/min
Over to 1 600 km (1 000 miles): Below 13 750 r/min

- Upon reaching an odometer reading of 1 600 km (1 000 miles) you can subject the motorcycle to full throttle operation.
  However, do not exceed 13 750 r/min at any time.

CYLINDER IDENTIFICATION

The four cylinders of this engine are identified as No. 1, No. 2, No. 3 and No. 4 cylinder, as counted from left to right (as viewed by the rider on the seat).

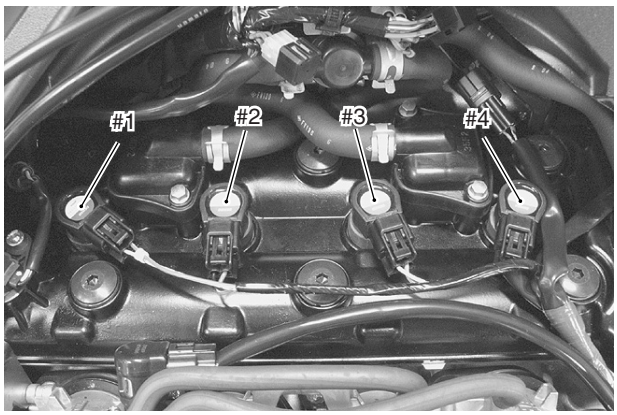

INFORMATION LABELS

	GSX-R1000	GSX-R1000UF
① Noise label	A (For E-03, 24, 33)	
② Information label	A (For E-03, 28, 33)	
③ Vacuum hose routing label	A (For E-33)	
④ Fuel caution label	A (For E-02, 24)	
⑤ Fuel information label	A	A
⑥ Manual notice label	A (For E-03, 33)	
⑦ Screen label	A	A
⑧ Warning steering label	A	A
⑨ Tire information label	A	A
⑩ General warning label	A	A
⑪ ICES Canada label	A (For E-28)	
⑫ I.D. plate	A (For E-02, 19, 24)	A
⑬ E-19 I.D. label		A
⑭ Safety plate	A (For E-03, 28, 33)	

A: Attached
*1: This label is attached on the left side of rear fender.
*2: This label is attached on the upper side of rear fender.

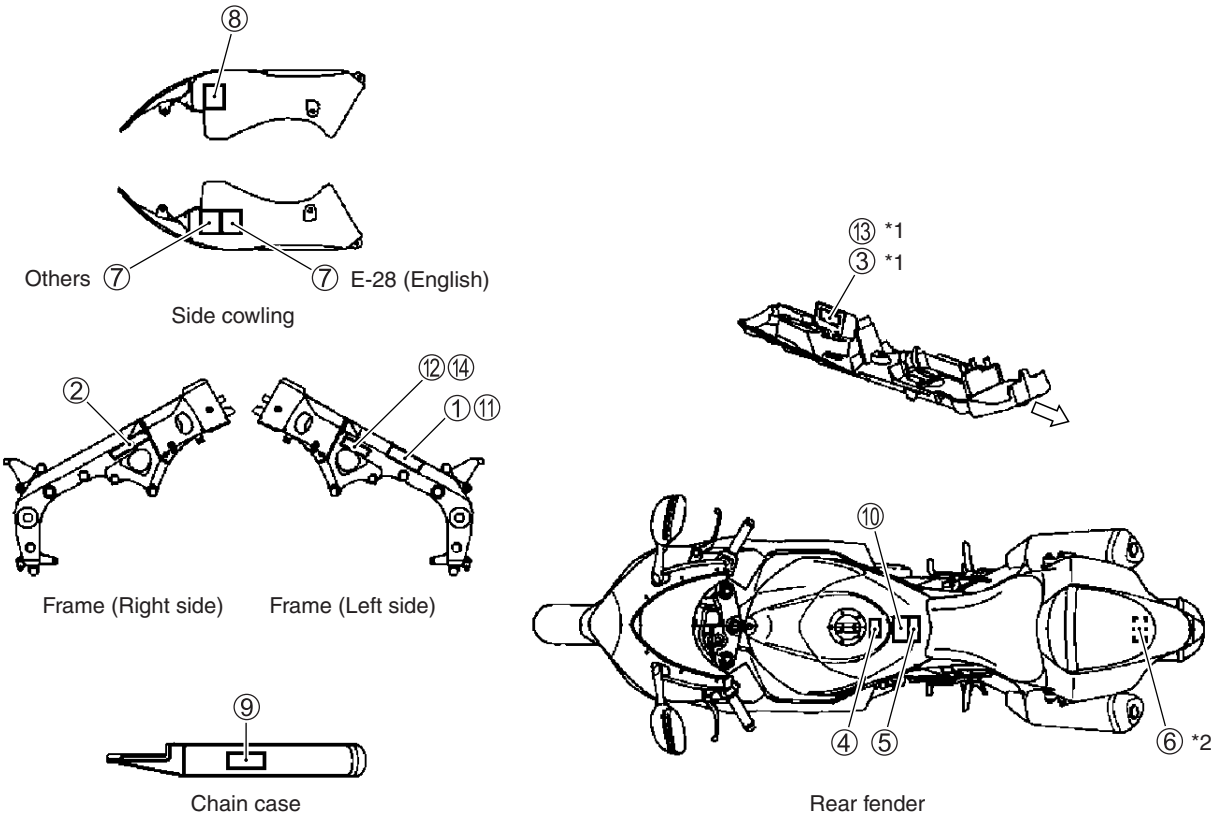

SPECIFICATIONS

DIMENSIONS AND DRY MASS

Overall length	2 045 mm (80.5 in)
Overall width	720 mm (28.3 in)
Overall height	1 130 mm (44.5 in)
Wheelbase	1 415 mm (55.7 in)
Ground clearance	130 mm (5.1 in)
Seat height	810 mm (31.9 in)
Dry mass	173 kg (381 lbs) E-33
	172 kg (379 lbs) .....Others

ENGINE

Type	Four stroke, liquid-cooled, DOHC
Number of cylinders	4
Bore	73.4 mm (2.900 in)
Stroke	59.0 mm (2.323 in)
Displacement	999 cm^3 (61.0 cu. in)
Compression ratio	12.5 : 1
Fuel system	Fuel injection
Air cleaner	Paper element
Starter system	Electric
Lubrication system	Wet sump
Idle speed	1 150 ± 100 r/min

DRIVE TRAIN

Clutch	Wet multi-plate type
Transmission	6-speed constant mesh
Gearshift pattern	1-down, 5-up
Primary reduction ratio	1.553 (73/47)
Gear ratios, Low	2.562 (41/16)
2nd	2.052 (39/19)
3rd	1.714 (36/21)
4th	1.500 (36/24)
5th	1.360 (34/25)
Top	1.269 (33/26)
Final reduction ratio	2.529 (43/17)
Drive chain	DID530 VA9, 112 links

CHASSIS

Front suspension	Inverted telescopic, coil spring, oil damped
Rear suspension	Link type, coil spring, oil damped
Front fork stroke	125 mm (4.9 in)
Rear wheel travel	135 mm (5.3 in)
Steering angle	27°
Caster	23° 45’
Trail	98.4 mm (3.87 in)
Turning radius	3.4 m (11.2 ft)
Front brake	Disc brake, twin
Rear brake	Disc brake
Front tire size	120/70 ZR 17 M/C (58 W), tubeless
Rear tire size	190/50 ZR 17 M/C (73 W), tubeless

ELECTRICAL

Ignition type	Electronic ignition (Transistorized)
Ignition timing	4° B.T.D.C.at 1 150 r/min
Spark plug	NGK CR9EIA-9 or DENSO IU27D
Battery	12 V 36.0 kC (10 Ah)/10 HR
Generator	Three-phase A.C. generator
Main fuse	30 A
Fuse	15/15/10/10/10/10 A
Headlight	12 V 55 W (H7) + 12 V 65 W (H9)
Turn signal light	12 V 21 W
License plate light	12 V 5 W
Brake light/Taillight	LED
Speedometer light	LED
Tachometer light	LED
Neutral indicator light	LED
High beam indicator light	LED
Turn signal indicator light	LED
Position/Parking light	12 V 5 W × 1
Oil pressure/Coolant temperature/Fuel injection warning light	LED
Fuel level indicator light	LED
Engine RPM indicator light	LED
Immobilizer indicator light	LED E-02, 19, 24

CAPACITIES

Fuel tank, including reserve	16.5 L (4.4/3.6 US/Imp gal).....E-33
	17.5 L (4.6/3.8 US/Imp gal).....Others
Engine oil, oil change	3 000 ml (3.2/2.6 US/Imp qt)
with filter change	3 300 ml (3.5/2.9 US/Imp qt)
overhaul	3 600 ml (3.8/3.2 US/Imp qt)
Coolant	2.5 L (2.6/2.2 US/Imp qt)

These specifications are subject to change without notice.

PERIODIC MAINTENANCE

CONTENTS

PERIODIC MAINTENANCE SCHEDULE 2- 2
- PERIODIC MAINTENANCE CHART 2- 2
- LUBRICATION POINTS 2- 3

MAINTENANCE AND TUNE-UP PROCEDURES 2- 4
- AIR CLEANER 2- 4
- SPARK PLUG 2- 5
- VALVE CLEARANCE 2- 7
- ENGINE OIL AND OIL FILTER 2-12
- EXHAUST CONTROL VALVE 2-13
- FUEL LINE 2-14
- THROTTLE VALVE SYNCHRONIZATION 2-14
- EVAPORATIVE EMISSION CONTROL SYSTEM (E-33 ONLY) 2-14
- PAIR (AIR SUPPLY) SYSTEM 2-14
- THROTTLE CABLE PLAY 2-15
- CLUTCH 2-16
- COOLING SYSTEM 2-18
- DRIVE CHAIN 2-21
- BRAKE 2-23
- TIRES 2-27
- STEERING 2-28
- FRONT FORK 2-28
- REAR SUSPENSION 2-28
- EXHAUST PIPE BOLT AND MUFFLER BOLT 2-29
- CHASSIS BOLTS AND NUTS 2-30

COMPRESSION PRESSURE CHECK 2-32
- COMPRESSION TEST PROCEDURE 2-32

OIL PRESSURE CHECK 2-33

SDS CHECK 2-34

PERIODIC MAINTENANCE SCHEDULE

The chart below lists the recommended intervals for all the required periodic service work necessary to keep the motorcycle operating at peak performance and economy. Mileages are expressed in terms of kilometers, miles and time for your convenience.

NOTE:
More frequent servicing may be required on motorcycles that are used under severe conditions.

PERIODIC MAINTENANCE CHART

Interval / Item	km	1 000	6 000	12 000	18 000	24 000
	miles	600	4 000	7 500	11 000	14 500
	months	2	12	24	36	48
Air cleaner element		—	I	I	R	I
Exhaust pipe bolts and muffler bolts		T	—	T	—	T
Exhaust control valve		I	—	I	—	I
Valve clearance		—	—	—	—	I
Spark plugs		—	I	R	I	R
Fuel line		—	I	I	I	I
Evaporative emission control system (E-33 only)		—	—	I	—	I
Engine oil		R	R	R	R	R
Engine oil filter		R	—	—	R	—
Throttle cable play		I	I	I	I	I
Throttle valve synchronization		I (E-33 only)	—	I	—	I
PAIR (air supply) system		—	—	I	—	I
Engine coolant		Replace every 2 years.				
Radiator hose		—	I	I	I	I
Clutch fluid		—	I	I	I	I
		Replace every 2 years.				
Clutch hose		—	I	I	I	I
		Replace every 4 years.				
Drive chain		I	I	I	I	I
		Clean and lubricate every 1 000 km (600 miles).				
Brakes		I	I	I	I	I
Brake fluid		—	I	I	I	I
		Replace every 2 years.				
Brake hoses		—	I	I	I	I
		Replace every 4 years.				
Tires		—	I	I	I	I
Steering		I	—	I	—	I
Front forks		—	—	I	—	I
Rear suspension		—	—	I	—	I
Chassis bolts and nuts		T	T	T	T	T

NOTE:
I = Inspect and clean, adjust, replace or lubricate as necessary, R = Replace, T = Tighten

LUBRICATION POINTS

Proper lubrication is important for smooth operation and long life of each working part of the motorcycle. Major lubrication points are indicated below.

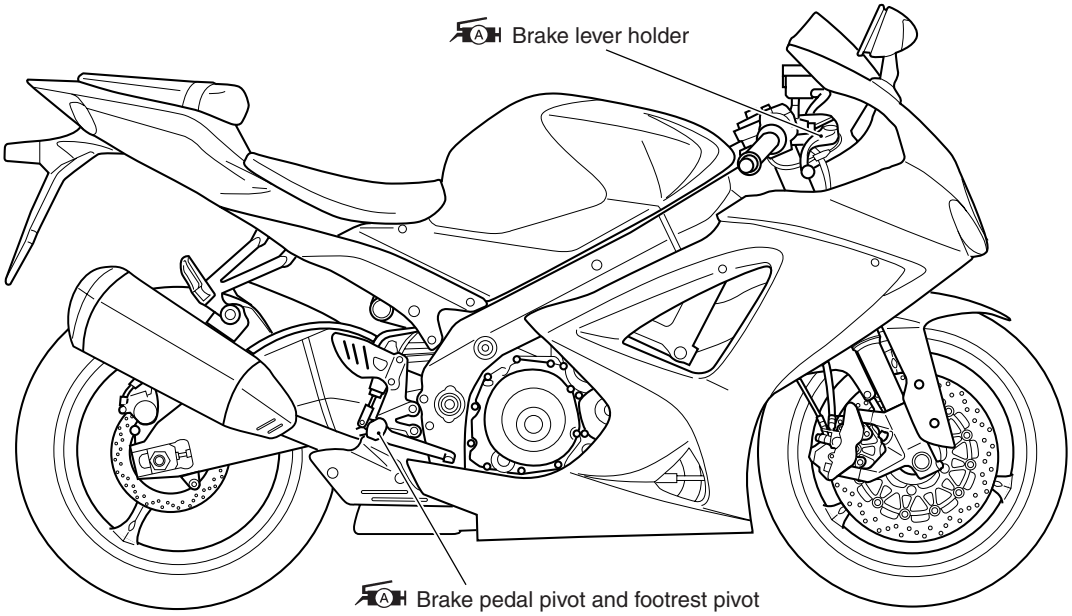

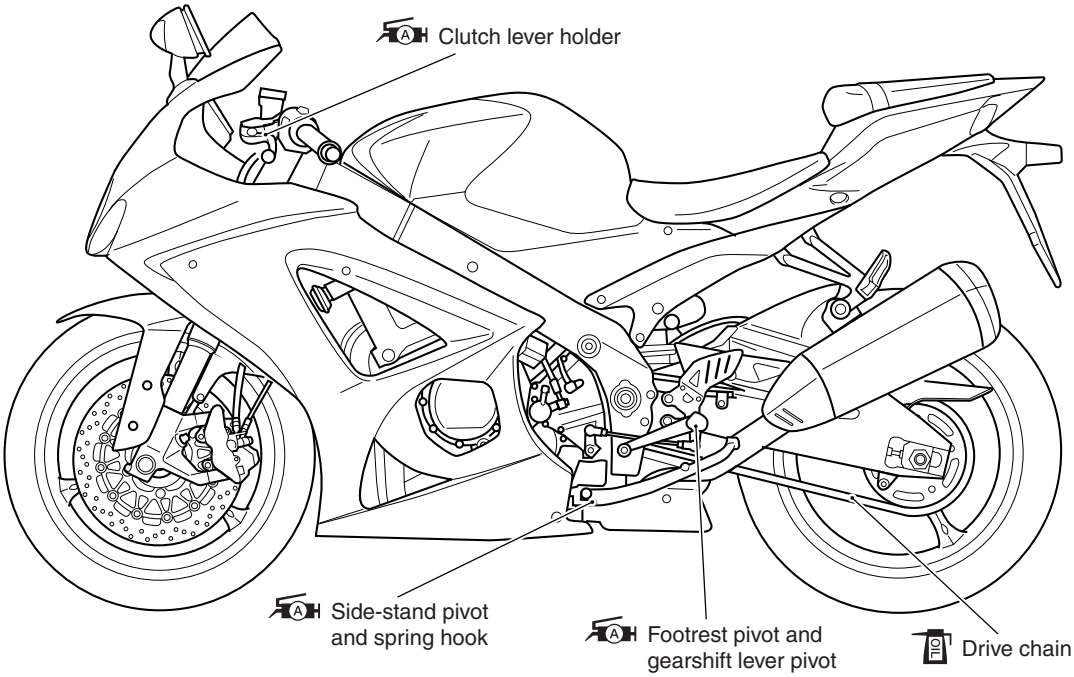

NOTE:

** Before lubricating each part, clean off any rusty spots and wipe off any grease, oil, dirt or grime.*

** Lubricate exposed parts which are subject to rust, with a rust preventative spray whenever the motorcycle has been operated under wet or rainy conditions.*

MAINTENANCE AND TUNE-UP PROCEDURES

This section describes the servicing procedures for each item of the Periodic Maintenance requirements.

AIR CLEANER

Inspect every 6 000 km (4 000 miles, 12 months).
Replace every 18 000 km (11 000 miles, 36 months).

- Lift and support the fuel tank. (☞5-3)
- Remove the air cleaner box cover ①.
- Remove the air cleaner element.

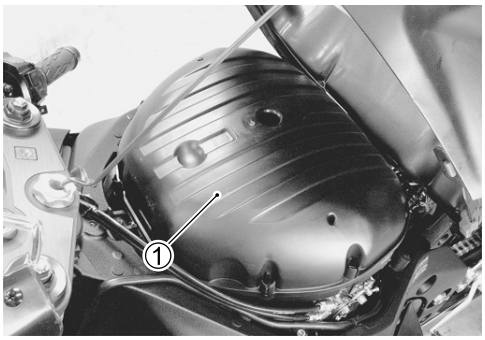

- Inspect the air cleaner element for clogging.
  If the air cleaner element is clogged with dust, replace the air cleaner element with a new one.

CAUTION

Do not blow the air cleaner element with compressed air.

NOTE:
If driving under dusty conditions, replace the air cleaner element more frequently. Make sure that the air cleaner is in good condition at all times. The life of the engine depends largely on this component.

- Install the air cleaner element in the reverse order of removal.
- Remove the drain plug ② from the air cleaner box to allow any water to drain out.

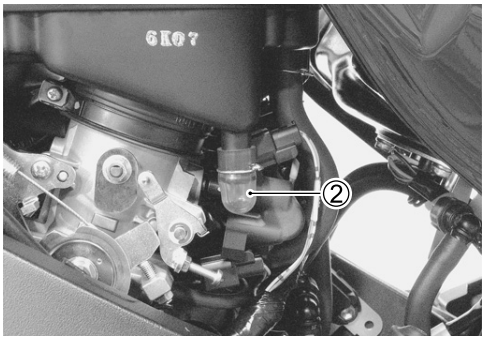

SPARK PLUG

Inspect every 6 000 km (4 000 miles, 12 months). Replace every 12 000 km (7 500 miles, 24 months).

SPARK PLUG AND IGNITION COIL/PLUG CAP REMOVAL

- Lift and support the fuel tank. (☞5-3)
- Remove the air cleaner box. (☞5-14)
- Disconnect all lead wire couplers from the ignition coil/plug caps.

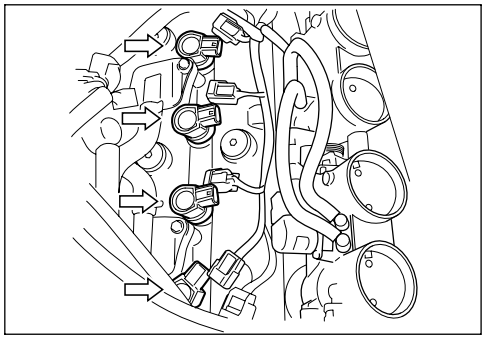

CAUTION

Disconnect the lead wire coupler before removing the ignition coil/plug cap to avoid lead wire coupler damage.

- Remove the ignition coils/plug caps.

CAUTION

*** Do not pry up the ignition coil/plug cap with a screw driver or a bar to avoid its damage.**
*** Be careful not to drop the ignition coil/plug cap to prevent short/open circuit.**

- Remove the spark plugs.

TOOL 09930-10121: Spark plug wrench set

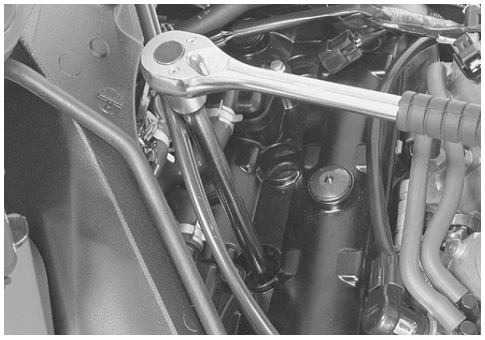

HEAT RANGE

- Check spark plug heat range by observing electrode color. If the electrode of the spark plug is wet appearing or dark color, replace the spark plug with hotter type one. If it is white or glazed appearing, replace the spark plug with colder type one.

	Hot type	Standard	Cold type
NGK	CR8EIA-9	CR9EIA-9	CR10EIA-9
ND	IU24D	IU27D	IU31D

SPARK PLUG GAP

- Measure the spark plug gap Ⓐ with a wire gauge.
- If it is not within the specification, replace the spark plug.

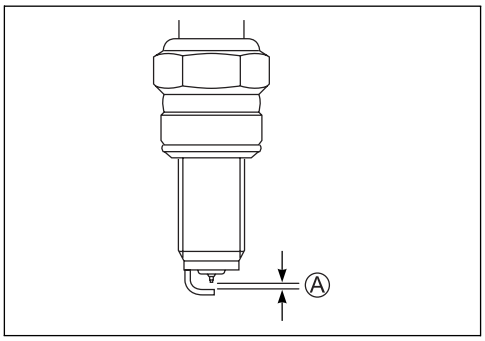

CAUTION

*** To prevent the damage of iridium center electrode, use a wire gauge to check the gap.**
*** Never adjust the spark plug gap.**

DATA Spark plug gap:
Standard: 0.8 – 0.9 mm (0.031 – 0.035 in)

ELECTRODE'S CONDITION

- Check the condition of the electrode.
- If it is extremely worn or burnt, replace the spark plug. Replace the spark plug if it has a broken insulator, damaged thread, etc.

CAUTION

Confirm the thread size and reach when replacing the plug. If the reach is too short, carbon will be deposited on the screw portion of the plug hole and engine damage may result.

SPARK PLUG AND IGNITION COIL/PLUG CAP INSTALLATION

- Screw the spark plugs into the cylinder head with fingers, and then tighten them to the specified torque.

Spark plug: 11 N·m (1.1 kgf-m, 8.0 lb-ft)

CAUTION

Do not cross thread or over tighten the spark plug, or such an operation will damage the aluminum threads of the cylinder head.

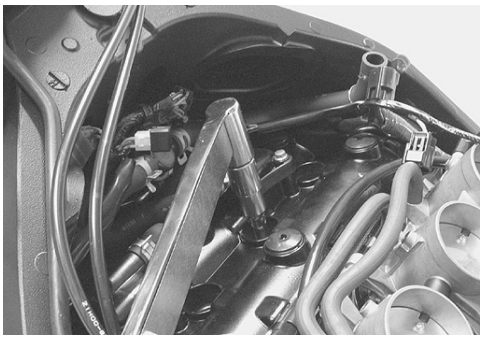

- Install the ignition coils/plug caps and connect their lead wire couplers.

CAUTION

*** Do not hit the ignition coil/plug cap with a plastic hammer when installing it.**
*** Place the ignition coil/spark plug cap so that the coupler does not touch the cylinder head cover.**

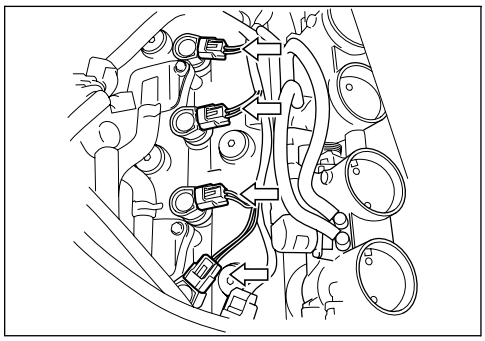

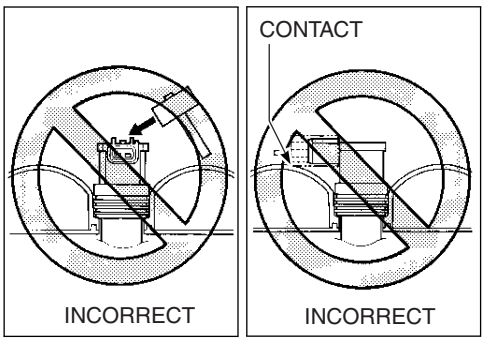

VALVE CLEARANCE

Inspect every 24 000 km (14 500 miles, 48 months).

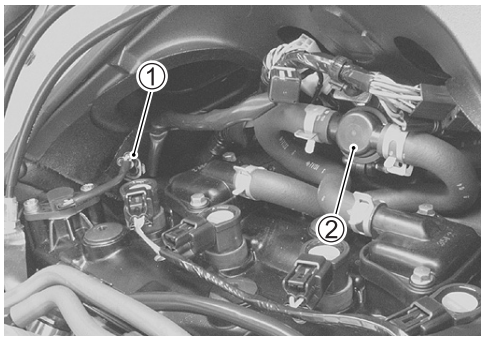

- Remove the right under cowling. (☞8-5)
- Lift and support the fuel tank. (☞5-3)
- Remove the air cleaner box. (☞5-14)
- Disconnect the CMP sensor coupler ①.
- Remove the PAIR control solenoid valve ②.
- Remove the spark plugs. (☞2-5)

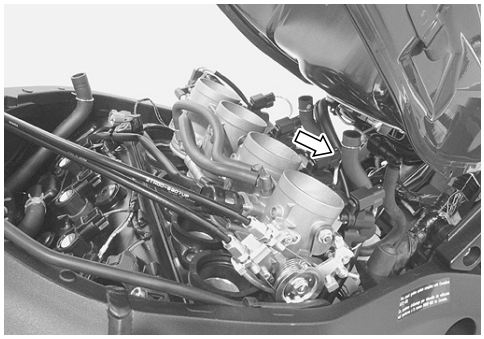

- Loosen the throttle body clamp screws at the intake pipe side. (☞5-16)
- Move the throttle body assembly.
- Remove the cylinder head cover. (☞3-15)

The valve clearance specification is different for intake and exhaust valves. Valve clearance must be checked and adjusted, 1) at the time of periodic inspection, 2) when the valve mechanism is serviced, and 3) when the camshafts are removed for servicing.

DATA Valve clearance (when cold):
Standard: IN. : 0.08 – 0.18 mm (0.003 – 0.007 in)
EX.: 0.18 – 0.28 mm (0.007 – 0.011 in)

NOTE:
* *The cam must be at positions, Ⓐ or Ⓑ, when checking or adjusting the valve clearance. Clearance readings should not be taken with the cam in any other position than these two positions.*
* *The clearance specification is for COLD state.*
* *To turn the crankshaft for clearance checking, be sure to use a wrench, and rotate in the normal running direction. All spark plugs should be removed.*

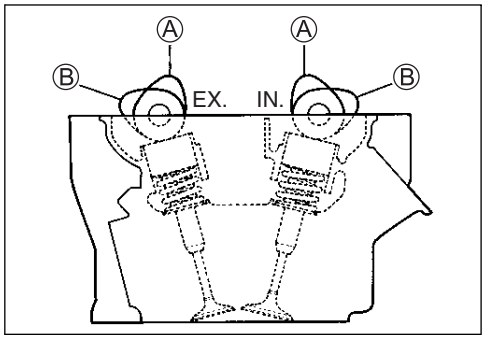

- Remove the valve timing inspection cap ③.

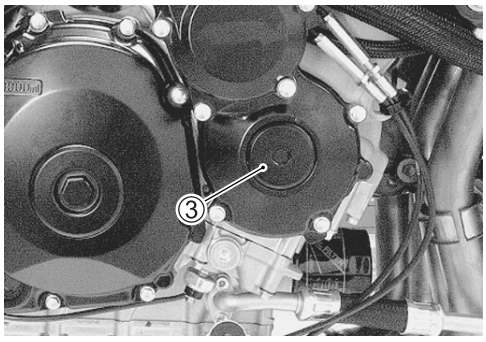

- Turn the crankshaft to bring the “Top” line on the starter clutch to the index mark and also to bring the notches Ⓒ on the left ends of both camshafts (Ex. and In.) to the positions as shown.

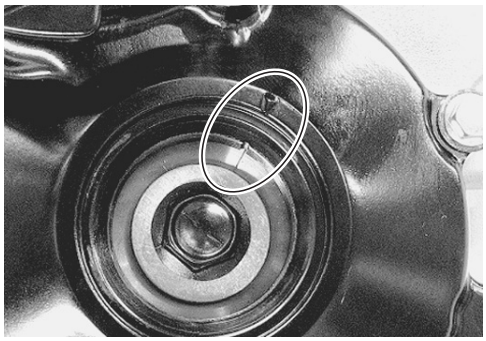

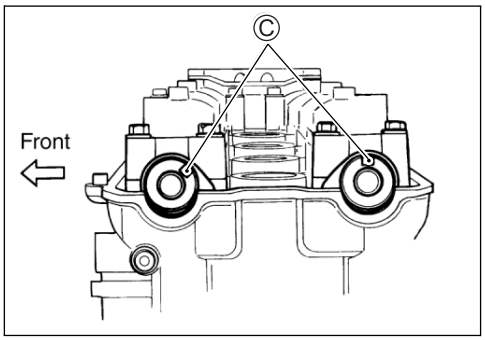

- In this condition, read the valve clearance at the valves Ⓓ (In. and Ex. of No.4 cylinder, Ex. of No.3 and In. of No.2).
- If the clearance is out of specification, adjust the clearance. (☞2-9)

TOOL 09900-20803: Thickness gauge

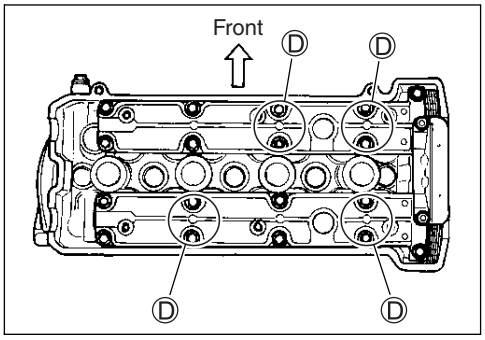

- Turn the crankshaft 360° (one rotation) to bring the “TOP” line on the starter clutch to the index mark of valve timing inspection hole and also to bring the notches Ⓒ to the position as shown.
- Read the clearance at the rest of the valves Ⓔ and adjust the clearance if necessary. (☞2-9)

Cam position	Notch Ⓒ position	
	Exhaust Camshaft	Intake Camshaft
Ⓓ	← Front	← Front
Ⓔ	← Front	← Front

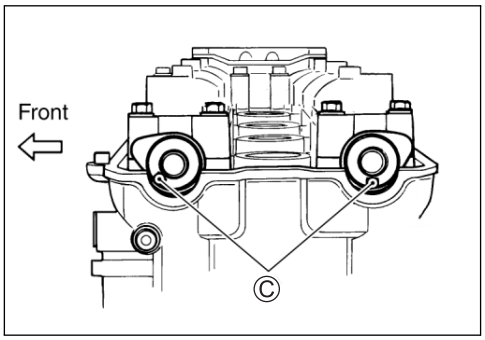

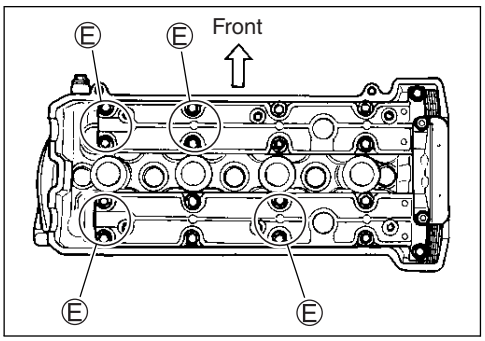

VALVE CLEARANCE ADJUSTMENT

The clearance is adjusted by replacing the existing tappet shim by a thicker or thinner shim.

- Remove the intake or exhaust camshafts. (☞3-16)
- Remove the tappet and shim by fingers or magnetic hand.
- Check the figures printed on the shim. These figures indicate the thickness of the shim, as illustrated.
- Select a replacement shim that will provide a clearance within the specified range. For the purpose of this adjustment, a total of 21 sizes of tappet shim are available ranging from 1.20 to 2.20 mm in steps of 0.05 mm. Fit the selected shim to the valve stem end, with numbers toward tappet. Be sure to check shim size with micrometer to ensure its size. Refer to the tappet shim selection table (☞2-10 and -11) for details.

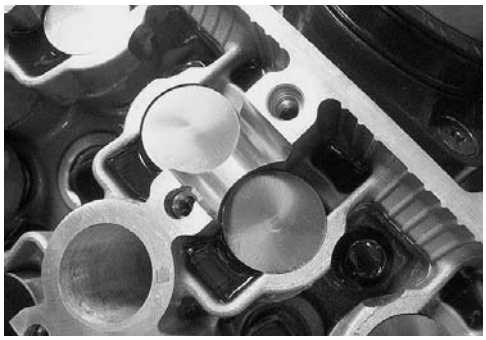

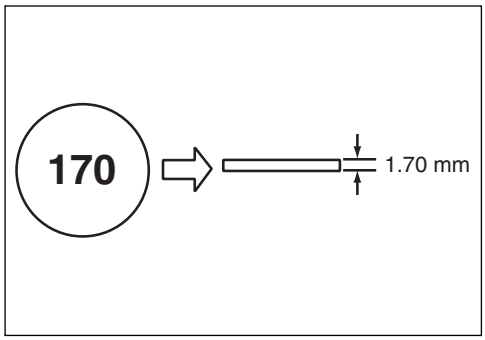

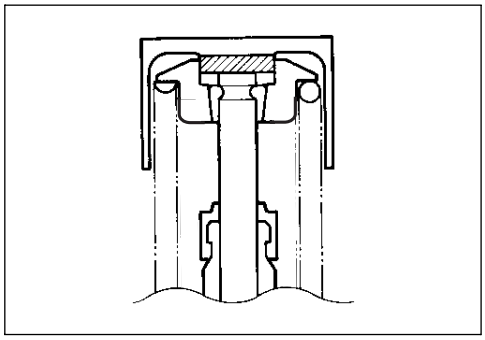

NOTE:

** Be sure to apply engine oil to tappet shim top and bottom faces.*

** When seating the tappet shim, be sure the figure printed surface faces the tappet.*

NOTE:

Reinstall the camshafts in the specified manner. (☞3-99)

- After replacing the tappet shim and installing the camshafts, rotate the engine so that the tappet is depressed fully. This will squeeze out oil trapped between the shim and the tappet that could cause an incorrect measurement. Then check the clearance again to confirm that it is within the specified range.

- After finishing the valve clearance adjustment, reinstall the following items.

* Cylinder head cover (☞3-104)
* Spark plug and plug cap (☞2-6)
* Throttle body assembly (☞5-22)
* Valve timing inspection plug (☞3-104)
* PAIR control solenoid valve (☞11-7)

(INTAKE SIDE)

TAPPET SHIM SELECTION TABLE [INTAKE]
TAPPET SHIM NO. (12892-05C00-XXX)

TAPPET SHIM SET (12800-05830)

MEASURED VALVE CLEARANCE (mm) / SUFFIX NO.	120	125	130	135	140	145	150	155	160	165	170	175	180	185	190	195	200	205	210	215	220
PRESENT SHIM SIZE (mm)	1.20	1.25	1.30	1.35	1.40	1.45	1.50	1.55	1.60	1.65	1.70	1.75	1.80	1.85	1.90	1.95	2.00	2.05	2.10	2.15	2.20
0.00 – 0.02			1.20	1.25	1.30	1.35	1.40	1.45	1.50	1.55	1.60	1.65	1.70	1.75	1.80	1.85	1.90	1.95	2.00	2.05	2.10
0.03 – 0.07		1.20	1.25	1.30	1.35	1.40	1.45	1.50	1.55	1.60	1.65	1.70	1.75	1.80	1.85	1.90	1.95	2.00	2.05	2.10	2.15
0.08 – 0.18	SPECIFIED CLEARANCE/NO ADJUSTMENT REQUIRED																				
0.19 – 0.28	1.30	1.35	1.40	1.45	1.50	1.55	1.60	1.65	1.70	1.75	1.80	1.85	1.90	1.95	2.00	2.05	2.10	2.15	2.20	2.20	
0.29 – 0.33	1.35	1.40	1.45	1.50	1.55	1.60	1.65	1.70	1.75	1.80	1.85	1.90	1.95	2.00	2.05	2.10	2.15	2.20			
0.34 – 0.38	1.40	1.45	1.50	1.55	1.60	1.65	1.70	1.75	1.80	1.85	1.90	1.95	2.00	2.05	2.10	2.15	2.20				
0.39 – 0.43	1.45	1.50	1.55	1.60	1.65	1.70	1.75	1.80	1.85	1.90	1.95	2.00	2.05	2.10	2.15	2.20					
0.44 – 0.48	1.50	1.55	1.60	1.65	1.70	1.75	1.80	1.85	1.90	1.95	2.00	2.05	2.10	2.15	2.20						
0.49 – 0.53	1.55	1.60	1.65	1.70	1.75	1.80	1.85	1.90	1.95	2.00	2.05	2.10	2.15	2.20							
0.54 – 0.58	1.60	1.65	1.70	1.75	1.80	1.85	1.90	1.95	2.00	2.05	2.10	2.15	2.20								
0.59 – 0.63	1.65	1.70	1.75	1.80	1.85	1.90	1.95	2.00	2.05	2.10	2.15	2.20									
0.64 – 0.68	1.70	1.75	1.80	1.85	1.90	1.95	2.00	2.05	2.10	2.15	2.20										
0.69 – 0.73	1.75	1.80	1.85	1.90	1.95	2.00	2.05	2.10	2.15	2.20											
0.74 – 0.78	1.80	1.85	1.90	1.95	2.00	2.05	2.10	2.15	2.20												
0.79 – 0.83	1.85	1.90	1.95	2.00	2.05	2.10	2.15	2.20													
0.84 – 0.88	1.90	1.95	2.00	2.05	2.10	2.15	2.20														
0.89 – 0.93	1.95	2.00	2.05	2.10	2.15	2.20															
0.94 – 0.98	2.00	2.05	2.10	2.15	2.20																
0.99 – 1.03	2.05	2.10	2.15	2.20																	
1.04 – 1.08	2.10	2.15	2.20																		
1.09 – 1.13	2.15	2.20																			
1.14 – 1.18	2.20																				

HOW TO USE THIS CHART:

I. Measure valve clearance. “ENGINE IS COLD”
II. Measure present shim size.
III. Match clearance in vertical column with present shim size in horizontal column.

EXAMPLE

Valve clearance is	0.23 mm
Present shim size	1.70 mm
Shim size to be used	1.80 mm

(EXHAUST SIDE)

TAPPET SHIM SELECTION TABLE [EXHAUST]
TAPPET SHIM NO. (12892-05C00-XXX)

TAPPET SHIM SET (12800-05830)

MEASURED VALVE CLEARANCE (mm) / SUFFIX NO.	120	125	130	135	140	145	150	155	160	165	170	175	180	185	190	195	200	205	210	215	220
PRESENT SHIM SIZE (mm)	1.20	1.25	1.30	1.35	1.40	1.45	1.50	1.55	1.60	1.65	1.70	1.75	1.80	1.85	1.90	1.95	2.00	2.05	2.10	2.15	2.20
0.03 – 0.07				1.20	1.25	1.30	1.35	1.40	1.45	1.50	1.55	1.60	1.65	1.70	1.75	1.80	1.85	1.90	1.95	2.00	2.05
0.08 – 0.12			1.20	1.25	1.30	1.35	1.40	1.45	1.50	1.55	1.60	1.65	1.70	1.75	1.80	1.85	1.90	1.95	2.00	2.05	2.10
0.13 – 0.17		1.20	1.25	1.30	1.35	1.40	1.45	1.50	1.55	1.60	1.65	1.70	1.75	1.80	1.85	1.90	1.95	2.00	2.05	2.10	2.15
0.18 – 0.28	SPECIFIED CLEARANCE/NO ADJUSTMENT REQUIRED																				
0.29 – 0.38	1.30	1.35	1.40	1.45	1.50	1.55	1.60	1.65	1.70	1.75	1.80	1.85	1.90	1.95	2.00	2.05	2.10	2.15	2.20	2.20	
0.39 – 0.43	1.35	1.40	1.45	1.50	1.55	1.60	1.65	1.70	1.75	1.80	1.85	1.90	1.95	2.00	2.05	2.10	2.15	2.20			
0.44 – 0.48	1.40	1.45	1.50	1.55	1.60	1.65	1.70	1.75	1.80	1.85	1.90	1.95	2.00	2.05	2.10	2.15	2.20				
0.49 – 0.53	1.45	1.50	1.55	1.60	1.65	1.70	1.75	1.80	1.85	1.90	1.95	2.00	2.05	2.10	2.15	2.20					
0.54 – 0.58	1.50	1.55	1.60	1.65	1.70	1.75	1.80	1.85	1.90	1.95	2.00	2.05	2.10	2.15	2.20						
0.59 – 0.63	1.55	1.60	1.65	1.70	1.75	1.80	1.85	1.90	1.95	2.00	2.05	2.10	2.15	2.20							
0.64 – 0.68	1.60	1.65	1.70	1.75	1.80	1.85	1.90	1.95	2.00	2.05	2.10	2.15	2.20								
0.69 – 0.73	1.65	1.70	1.75	1.80	1.85	1.90	1.95	2.00	2.05	2.10	2.15	2.20									
0.74 – 0.78	1.70	1.75	1.80	1.85	1.90	1.95	2.00	2.05	2.10	2.15	2.20										
0.79 – 0.83	1.75	1.80	1.85	1.90	1.95	2.00	2.05	2.10	2.15	2.20											
0.84 – 0.88	1.80	1.85	1.90	1.95	2.00	2.05	2.10	2.15	2.20												
0.89 – 0.93	1.85	1.90	1.95	2.00	2.05	2.10	2.15	2.20													
0.94 – 0.98	1.90	1.95	2.00	2.05	2.10	2.15	2.20														
0.99 – 1.03	1.95	2.00	2.05	2.10	2.15	2.20															
1.04 – 1.08	2.00	2.05	2.10	2.15	2.20																
1.09 – 1.13	2.05	2.10	2.15	2.20																	
1.14 – 1.18	2.10	2.15	2.20																		
1.19 – 1.23	2.15	2.20																			
1.24 – 1.28	2.20																				

HOW TO USE THIS CHART:

I. Measure valve clearance. “ENGINE IS COLD”
II. Measure present shim size.
III. Match clearance in vertical column with present shim size in horizontal column.

EXAMPLE

Valve clearance is	0.33 mm
Present shim size	1.70 mm
Shim size to be used	1.80 mm

ENGINE OIL AND OIL FILTER

(ENGINE OIL)
Replace initially at 1 000 km (600 miles, 2 months) and every 6 000 km (4 000 miles, 12 months) thereafter.

(OIL FILTER)
Replace initially at 1 000 km (600 miles, 2 months) and every 18 000 km (11 000 miles, 36 months) thereafter.

ENGINE OIL REPLACEMENT

- Place an oil pan below the engine, and drain oil by removing the oil drain plug ① and filler cap ②.
- Tighten the drain plug ① to the specified torque, and pour fresh oil through the oil filler. The engine will hold about 3.0 L (3.2/2.6 US/Imp qt) of oil. Use of SF/SG or SH/SJ in API with MA in JASO.

Oil drain plug: 23 N·m (2.3 kgf-m, 16.5 lb-ft)

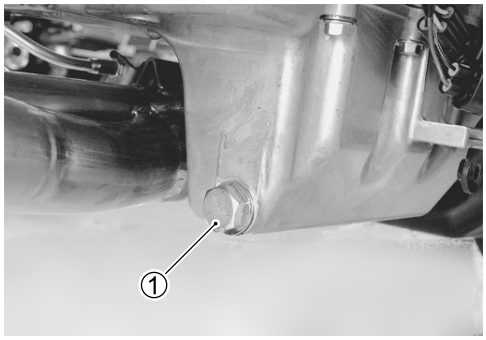

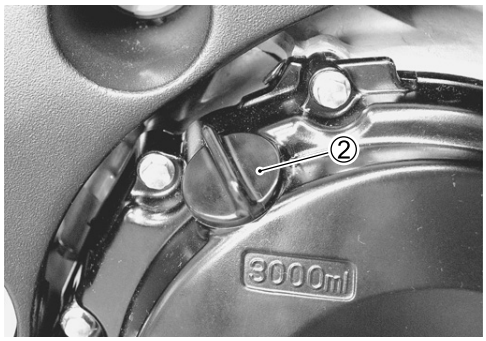

- Start up the engine and allow it to run for several minutes at idling speed.
- Turn off the engine and wait about three minutes.
- Hold the motor cycle vertically and check the oil level through the inspection window. If the level is below mark “L”, add oil to “F” level. If the level is above mark “F”, drain oil to “F” level.

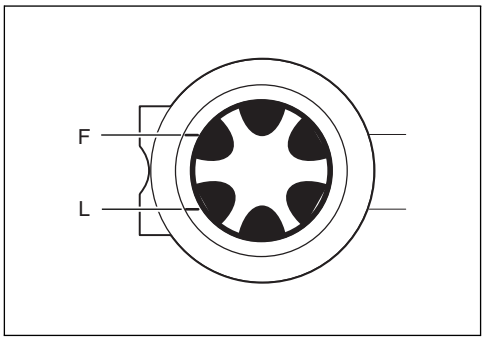

OIL FILTER REPLACEMENT

- Drain the engine oil as described in the engine oil replacement procedure.
- Remove the right under cowling. (☞8-5)
- Remove the oil filter ① with the special tool.

TOOL 09915-40610: Oil filter wrench

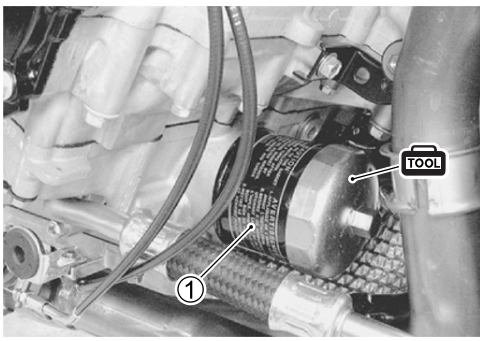

- Apply engine oil lightly to the gasket of the new oil filter before installation.

- Install the new oil filter. Turn it by hand until you feel that the oil filter gasket contacts the oil filter mounting surface. Then, tighten the oil filter two full turns (or to specified torque) with the special tool.

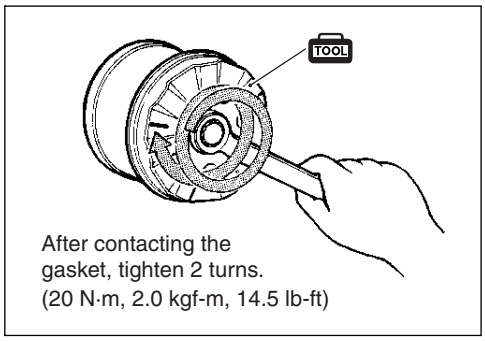

NOTE:
To properly tighten the oil filter, use the special tool. Never tighten the oil filter by hand.

Oil filter: 20 N·m (2.0 kgf-m, 14.5 lb-ft)

- Add new engine oil and check the oil level is as described in the engine oil replacement procedure.

DATA NECESSARY AMOUNT OF ENGINE OIL:

Oil change	**: 3.0 L (3.2/2.6 US/Imp qt)**
Oil and filter change	**: 3.3 L (3.5/2.9 US/Imp qt)**
Engine overhaul	**: 3.6 L (3.8/3.2 US/Imp qt)**

CAUTION

ONLY USE A GENUINE SUZUKI MOTORCYCLE OIL FILTER. Other manufacturer's oil filters may differ in thread specifications (thread diameter and pitch), filtering performance and durability which may lead to engine damage or oil leaks. Also, do not use a genuine Suzuki automobile oil filter on this motorcycle.

EXHAUST CONTROL VALVE

Inspect initially at 1 000 km (600 miles, 2 months) and every 12 000 km (7 500 miles, 24 months) thereafter.

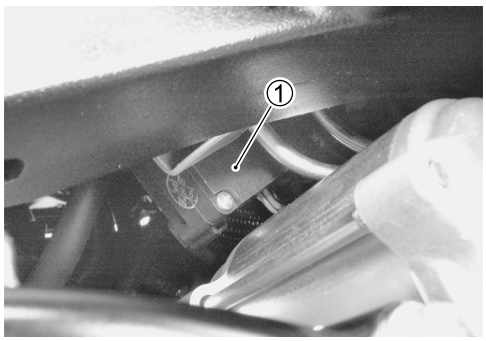

- Check the exhaust control valve actuator ① for its movement when the ignition switch is turned on.
- If the exhaust valve actuator does not move, check exhaust valve actuator electrical circuit and exhaust valve carbon sticking.
- Check the exhaust control valve cable play. (☞6-9)

- Remove the right under cowling. (☞8-5)
- Check the lock-nuts ② tightness. If the lock-nuts ② are loose, adjust the cable play (☞6-9) and tighten them.

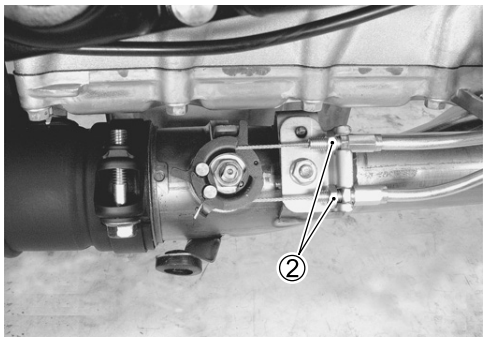

FUEL LINE

Inspect every 6 000 km (4 000 miles, 12 months).

- Inspect the fuel feed hose ① for damage and fuel leakage. If any defects are found, the fuel feed hose must be replaced.

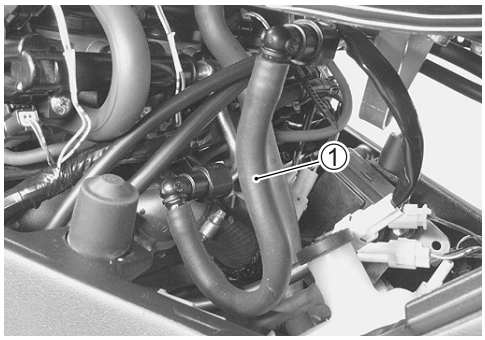

THROTTLE VALVE SYNCHRONIZATION

Inspect initially at 1 000 km (600 miles, 2 months) (E-33 only) and every 12 000 km (7 500 miles, 24 moths).

- Inspect the throttle valve synchronization periodically. (☞5-27)

EVAPORATIVE EMISSION CONTROL SYSTEM (E-33 ONLY)

Inspect every 12 000 km (7 500 miles, 24 months).
Replace vapor hose every 4 years.

- Inspect the evaporative emission control system periodically.

PAIR (AIR SUPPLY) SYSTEM

Inspect every 12 000 km (7 500 miles, 24 months).

- Inspect the PAIR (air supply) system periodically. (☞11-6)

THROTTLE CABLE PLAY

Inspect initially at 1 000 km (600 miles, 2 months) and every 6 000 km (4 000 miles, 12 months) thereafter.

- Adjust the throttle cable play Ⓐ as follows.

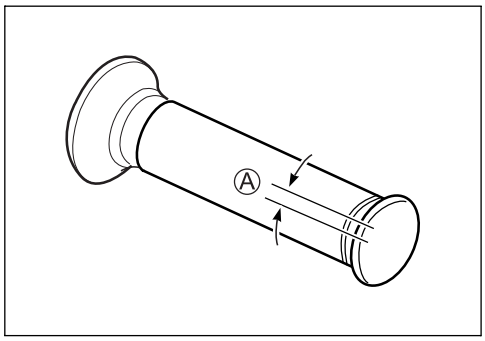

- Loosen the lock-nut ② of the throttle pulling cable ①.
- Turn the adjuster ③ in or out until the throttle cable play (at the throttle grip) Ⓐ is between 2.0 – 4.0 mm (0.08 – 0.16 in).
- Tighten the lock-nut ② while holding the adjuster ③.

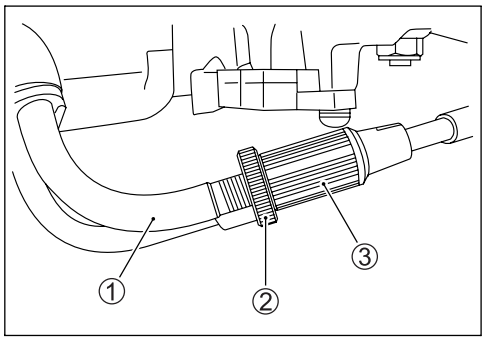

DATA Throttle cable play Ⓐ: 2.0 – 4.0 mm (0.08 – 0.16 in)

⚠ WARNING

After the adjustment is completed, check that handlebar movement does not raise the engine idle speed and that the throttle grip returns smoothly and automatically.

CLUTCH

(CLUTCH HOSE AND CLUTCH FLUID)
Inspect every 6 000 km (4 000 miles, 6 months).
Replace hose every 4 years.
Replace fluid every 2 years.

CLUTCH FLUID LEVEL

- Keep the motorcycle upright and place the handlebars straight.
- Check the clutch fluid level by observing the lower line on the clutch fluid reservoir.
- If the level is found to be lower than the lower line, replenish with BRAKE FLUID that meets the following specification.

Specification and classification: DOT 4

WARNING

*** The clutch system of this motorcycle is filled with a glycol-based brake fluid. Do not use or mix different types of fluid such as silicone-based or petroleum based. Do not use any brake fluid taken from old, used or unsealed containers. Never re-use brake fluid left over from the last servicing or stored for a long periods.**

*** Brake fluid, if it leaks, will interfere with safe running and immediately discolor painted surfaces. Check the clutch hose and hose joints for cracks and fluid leakage before riding.**

BLEEDING AIR FROM THE CLUTCH FLUID CIRCUIT

The clutch fluid circuit may be purged of air in the following manner.

- Keep the motorcycle upright and place the handlebars straight.
- Fill up the clutch master cylinder reservoir to the upper line. Place the reservoir cap to prevent entry of dirt.
- Attach a hose to the bleeder valve and insert the free end of the hose into a receptacle.
- Squeeze and release the clutch lever several times in rapid succession, and squeeze the lever fully without releasing it. Loosen the bleeder valve by turning it a quarter of a turn so that the fluid runs into the receptacle; this will remove the tension of the clutch lever causing it to touch the handlebar grip. Then, close the valve, pump and squeeze the lever, and open the valve. Repeat this process until the fluid flowing into the receptacle contains no air bubbles.
- Close the bleeder valve, and disconnect the pipe. Fill the reservoir with brake fluid to the upper line.

Air bleeder valve: 6.0 N·m (0.6 kgf-m, 4.5 lb-ft)

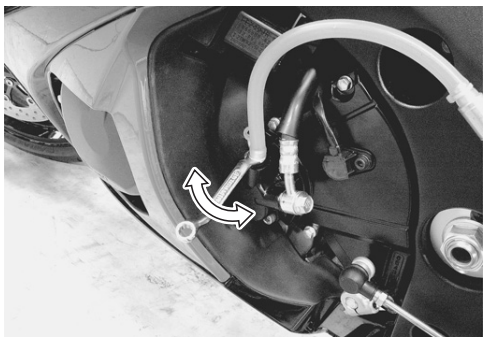

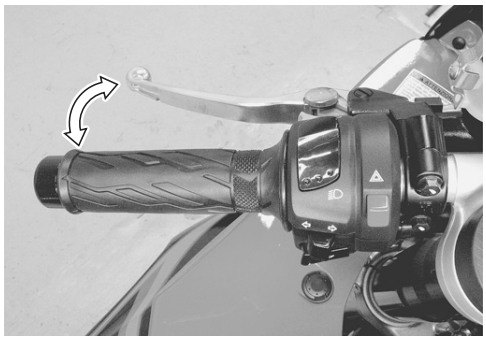

COOLING SYSTEM

Inspect every 6 000 km (4 000 miles, 12 months).
Replace engine coolant every 2 years.

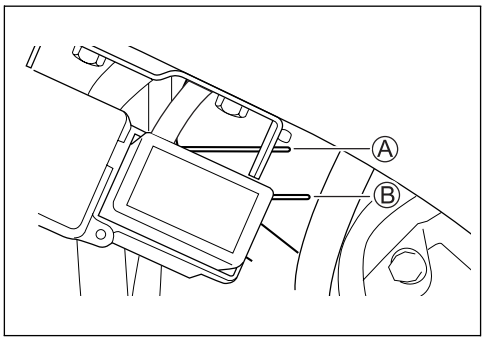

ENGINE COOLANT LEVEL CHECK

- Keep the motorcycle upright.
- Check the engine coolant level by observing the upper and lower lines on the engine coolant reservoir.
  Ⓐ Upper line Ⓑ Lower line
- If the level is below the lower line, lift and support the fuel tank (☞5-3), and add engine coolant to the full line from the engine coolant reservoir filler.

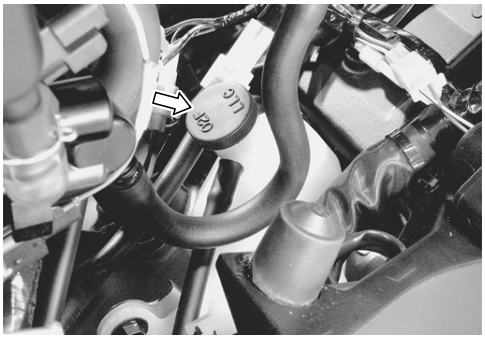

ENGINE COOLANT CHANGE

- Remove the under cowlings. (☞8-5)
- Remove the radiator cap ①.
- Drain engine coolant by disconnecting the radiator hose ② from the water pump.

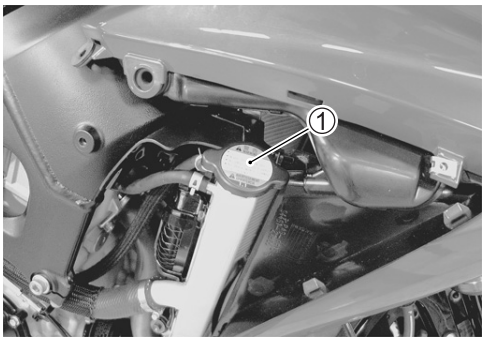

⚠ WARNING

- **Do not open the radiator cap when the engine is hot, as you may be injured by escaping hot liquid or vapor.**
- **Engine coolant may be harmful if swallowed or if it comes in contact with skin or eyes. If engine coolant gets into the eyes or in contact with the skin, flush thoroughly with plenty of water. If swallowed, induce vomiting and call physician immediately!**

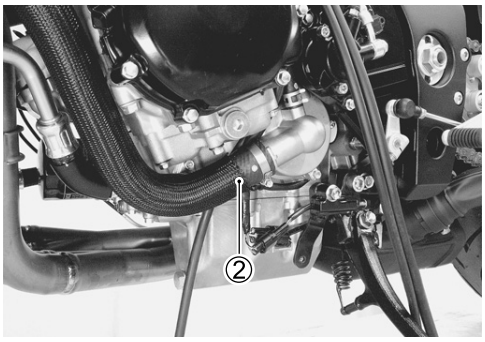

- Flush the radiator with fresh water if necessary.
- Connect the radiator hose ② securely.
- Pour the specified engine coolant up to the radiator inlet.

LLC Engine coolant capacity (excluding reservoir):
2 250 ml (2.4/2.0 US/Imp qt)

- Bleed the air from the engine coolant circuit in the following procedure. (☞2-19)

ENGINE COOLANT INFORMATION (☞7-2)

AIR BLEEDING THE COOLING CIRCUIT

- Add engine coolant up to the radiator inlet.
- Support the motorcycle upright.
- Slowly swing the motorcycle, right and left, to bleed the air trapped in the cooling circuit.
- Add engine coolant up to the radiator inlet.

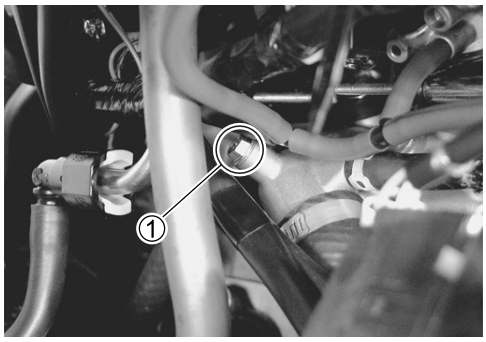

- Start up the engine and bleed air from the radiator inlet completely.
- Add engine coolant up to the radiator inlet.
- Repeat the above procedure until no air bleeds from the radiator inlet.
- Lift and support the fuel tank. (☞5-3)
- Loosen the air bleeder bolt ① and check that the engine coolant flows out.
- Tighten the air bleeder bolt securely.
- Close the radiator cap securely.
- After warming up and cooling down the engine several times, add the engine coolant up to the full level of the reservoir.

CAUTION

Repeat the above procedure several times and make sure that the radiator is filled with engine coolant up to the reservoir full level.

LLC **Engine coolant capacity:**

Engine side	**: 2 250 ml (2.4/2.0 US/Imp qt)**
Reservoir tank side :	**250 ml (0.3/0.2 US/Imp qt)**

RADIATOR HOSES

- Remove the under cowlings. (☞8-5)
- Lift and support the fuel tank. (☞5-3)
- Remove the sprocket cover bolts.
- Check the radiator hoses for crack, damage or engine coolant leakage.
- If any defect is found, replace the radiator hose with new one.

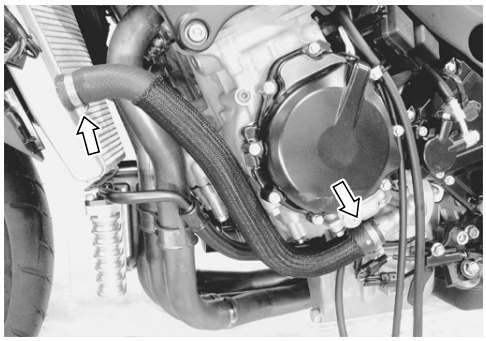

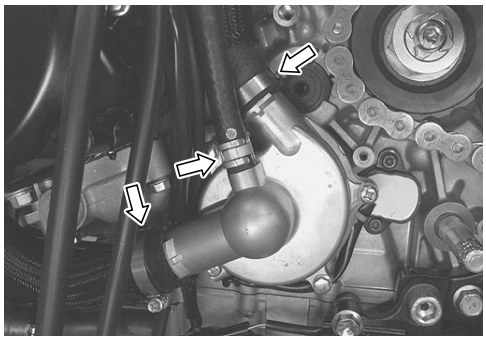

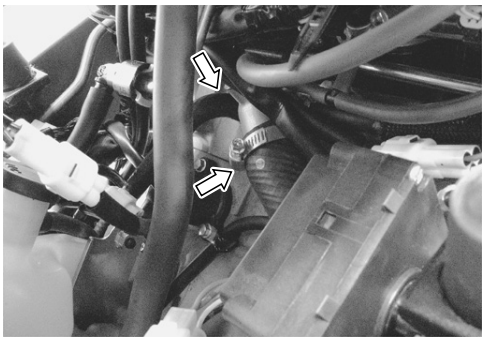

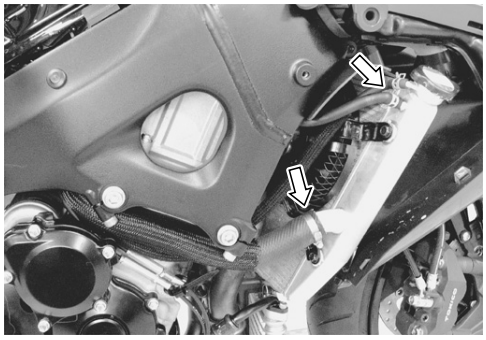

DRIVE CHAIN

Inspect initially at 1 000 km (600 miles, 2 months) and every 6 000 km (4 000 miles, 12 months) thereafter. Clean and lubricate every 1 000 km (600 miles).

Visually check the drive chain for the possible defects listed below. (Support the motorcycle by a jack or a wooden block, turn the rear wheel slowly by hand with the transmission shifted to Neutral.)

* Loose pins
* Damaged rollers
* Dry or rusted links
* Kinked or binding links
* Excessive wear
* Improper chain adjustment
* Missing O-ring seals

If any defect is found, the drive chain must be replaced.

NOTE:
When replacing the drive chain, replace the drive chain and sprockets as a set.

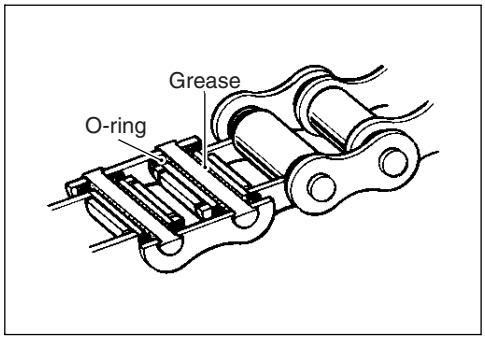

CHECKING

- Loosen the axle nut ①.
- Loosen the chain adjuster lock-nuts ② (LH and RH).
- Give tension to the drive chain fully by turning both chain adjuster bolts ③ (LH and RH).

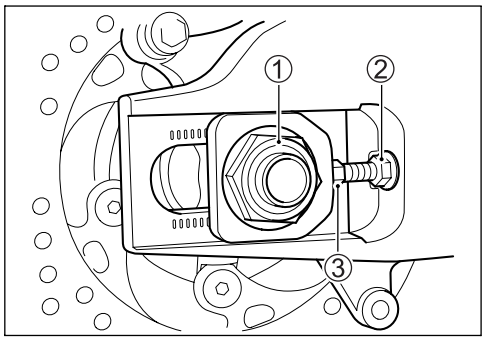

- Count out 21 pins (20 pitches) on the chain and measure the distance between the two points. If the distance exceeds the service limit, the chain must be replaced.

DATA Drive chain 20-pitch length:
Service limit: 319.4 mm (12.57 in)

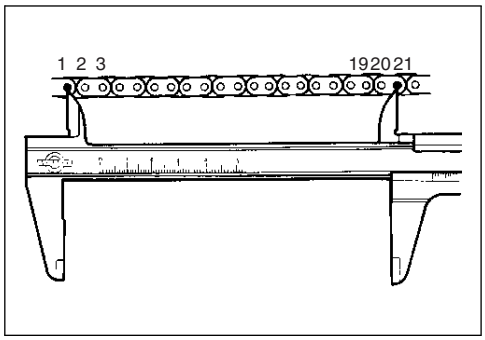

ADJUSTING

- Loosen or tighten both chain adjuster bolts ① until there is 20 – 30 mm (0.8 – 1.2 in) of slack at the middle of the chain between the engine and rear sprockets as shown. The chain adjuster position relative to the reference marks Ⓐ on both sides of the swingarm must be equal to ensure that the front and rear wheels are correctly aligned.

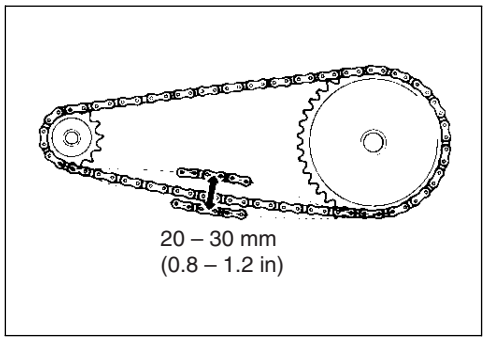

DATA Drive chain slack:
Standard: 20 – 30 mm (0.8 – 1.2 in)

- Place the motorcycle on the side-stand for accurate adjustment.
- After adjusting the drive chain, tighten the axle nut ② to the specified torque.
- Tighten chain adjuster lock-nuts ③ (LH and RH) securely.

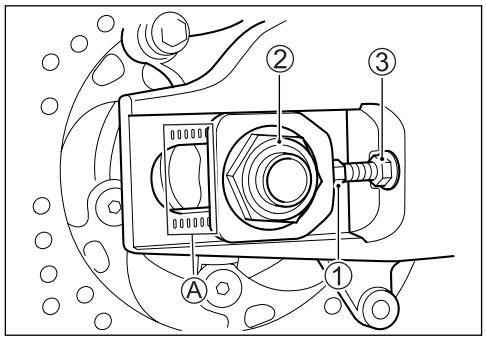

Rear axle nut: 100 N·m (10.0 kgf-m, 72.5 lb-ft)

- Recheck the drive chain slack after tightening the axle nut.

CLEANING AND LUBRICATING

- Clean the drive chain with kerosine. If the drive chain tends to rust quickly, the intervals must be shortened.

CAUTION

Do not use trichloroethylene, gasoline or any similar solvent. These fluids will damage the O-rings. Use only kerosine to clean the drive chain.

- After washing and drying the chain, oil it with a heavyweight motor oil.

CAUTION

*** Do not use any oil sold commercially as "drive chain oil". Such oil can damage the O-rings.**
*** The standard drive chain is DID530 V9. Suzuki recommends to use this standard drive chain as a replacement.**

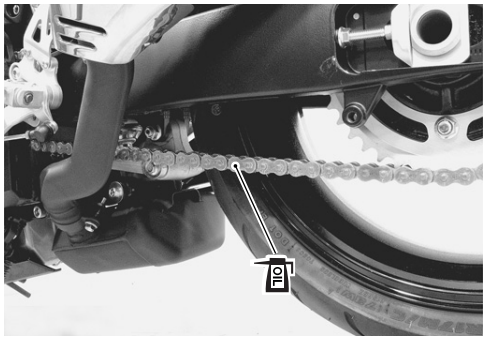

BRAKE

(BRAKE)
Inspect initially at 1 000 km (600 miles, 2 months) and every 6 000 km (4 000 miles, 12 months) thereafter.

(BRAKE HOSE AND BRAKE FLUID)
Inspect every 6 000 km (4 000 miles, 12 months). Replace hoses every 4 years. Replace fluid every 2 years.

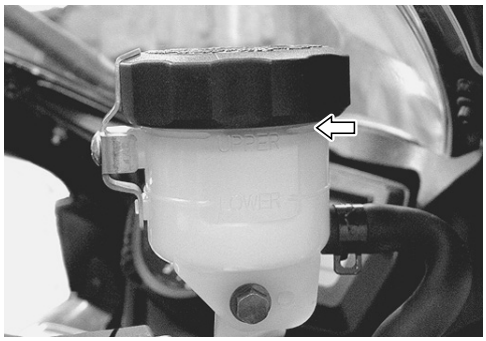

BRAKE FLUID LEVEL CHECK

- Keep the motorcycle upright and place the handlebars straight.
- Check the brake fluid level by observing the lower lines on the front and rear brake fluid reservoirs.
- When the level is below the lower line, replenish with brake fluid that meets the following specification.

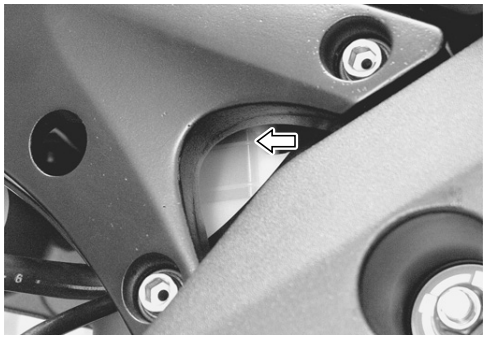

Specification and classification: DOT 4

WARNING

*** The brake system of this motorcycle is filled with a glycol-based brake fluid. Do not use or mix different types of fluid such as silicone-based and petroleum-based fluids. Do not use any brake fluid taken from old, used or unsealed containers. Never re-use brake fluid left over from the last servicing or stored for a long period of time.**
*** Brake fluid, if it leaks, will interfere with safe running and immediately discolor painted surfaces. Check the brake hoses and hose joints for cracks and fluid leakage before riding.**

BRAKE PADS

Front brake

The extent of brake pad wear can be checked by observing the grooved limit line Ⓐ on the pads. When the wear exceeds the grooved limit line, replace the pads with the new ones.
(☞8-66)

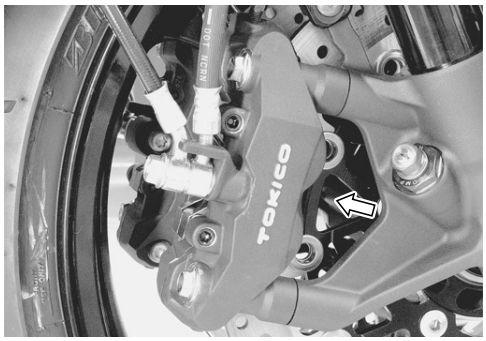

CAUTION

Replace the brake pads as a set, otherwise braking performance will be adversely affected.

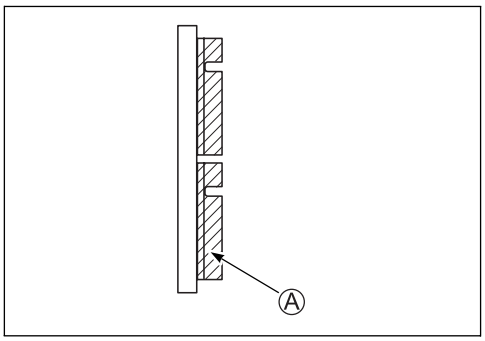

Rear brake

The extent of brake pad wear can be checked by observing the grooved limit line Ⓐ on the pads. When the wear exceeds the grooved limit line, replace the pads with the new ones.
(☞8-77)

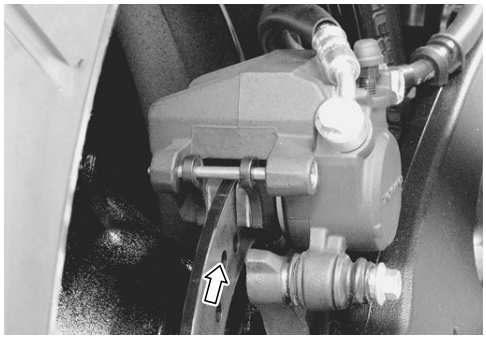

CAUTION

Replace the brake pads as a set, otherwise braking performance will be adversely affected.

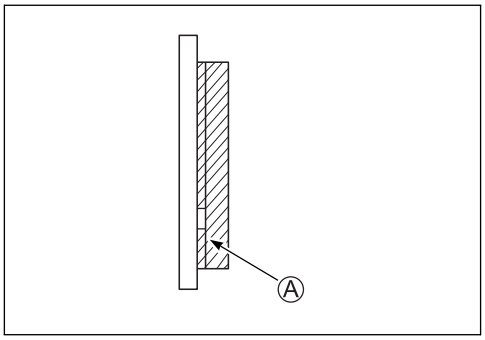

BRAKE PEDAL HEIGHT

- Loosen the lock-nut ①.
- Turn the push rod ② until the brake pedal height becomes 65 – 75 mm (2.6 – 3.0 in) Ⓐ below the top of the footrest.
- Tighten the lock-nut ① securely.

Rear brake master cylinder rod lock-nut:
18 N·m (1.8 kgf-m, 13.0 lb-ft)

DATA Brake pedal height Ⓐ:
Standard: 65 – 75 mm (2.6 – 3.0 in)

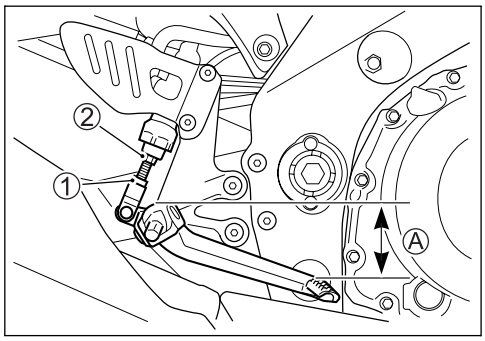

BRAKE LIGHT SWITCH

- Adjust the rear brake light switch so that the brake light will come on just before pressure is felt when the brake pedal is depressed.

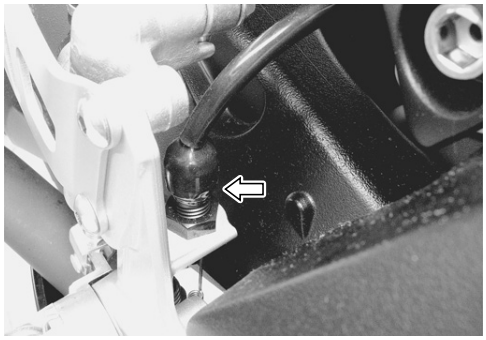

AIR BLEEDING FROM BRAKE FLUID CIRCUIT

Air trapped in the brake fluid circuit acts like a cushion to absorb a large proportion of the pressure developed by the master cylinder and thus interferes with the full braking performance of the brake caliper. The presence of air is indicated by “sponginess” of the brake lever and also by lack of braking force. Considering the danger to which such trapped air exposes the machine and rider, it is essential that after remounting the brake and restoring the brake system to the normal condition, the brake fluid circuit be purged of air in the following manner:

FRONT BRAKE (Caliper side)

- Fill the master cylinder reservoir to the upper level. Place the reservoir cap to prevent dirt from entering.
- Attach a hose to the brake caliper air bleeder valve and insert the free end of the hose into a receptacle.
- Squeeze and release the brake lever several times in rapid succession and squeeze the lever fully without releasing it. Loosen the air bleeder valve by turning it a quarter of a turn so that the brake fluid runs into the receptacle. This will remove the tension of the brake lever causing it to touch the handlebar grip. Then, close the air bleeder valve, pump and squeeze the lever, and open the valve. Repeat this process for each caliper until fluid flowing into the receptacle contains no air bubbles.

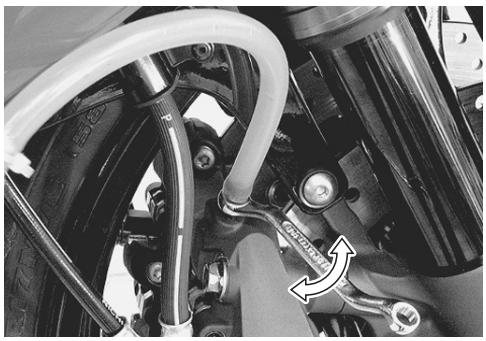

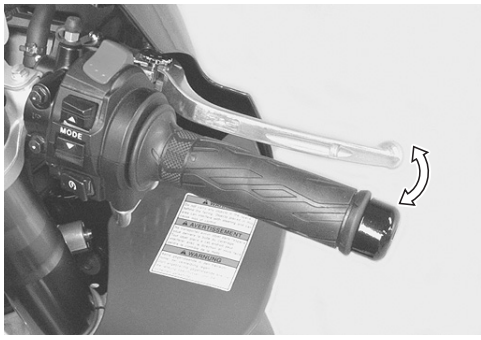

NOTE:
While bleeding the brake system, replenish the brake fluid in the reservoir as necessary. Make sure that there is always some fluid visible in the reservoir.

- Close the air bleeder valve and disconnect the hose. Fill the reservoir with brake fluid to the upper line.

Air bleeder valve: 7.5 N·m (0.75 kgf-m, 5.5 lb-ft)

CAUTION

Handle brake fluid with care: the fluid reacts chemically with paint, plastics, rubber materials, etc.

FRONT BRAKE (Master cylinder side)

- Bleed air from the master cylinder in the same manner as front brake (caliper side).

Air bleeder valve: 6.0 N·m (0.6 kgf-m, 4.5 lb-ft)

NOTE:
If air is trapped in the master cylinder, bleed air from the master cylinder first.

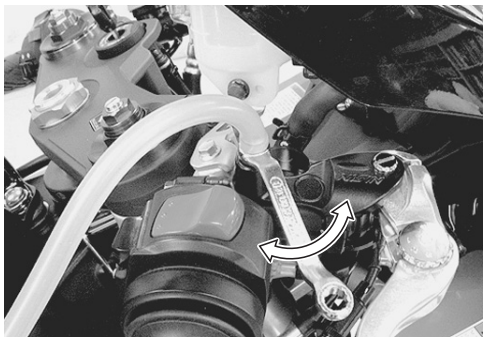

REAR BRAKE

- Bleed air from the rear brake system in the same manner as front brake.

Air bleeder valve: 7.5 N·m (0.75 kgf-m, 5.5 lb-ft)

NOTE:
The only of between operation from bleeding the front brake is that the rear master cylinder is actuated by a pedal.

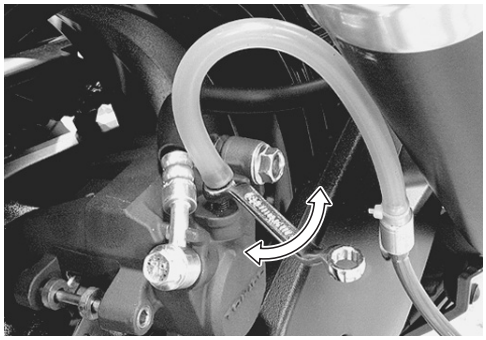

TIRES

Inspect every 6 000 km (4 000 miles, 12 months).

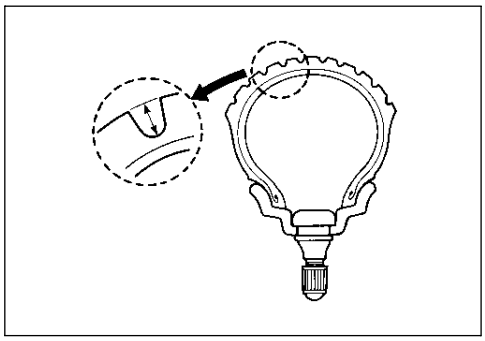

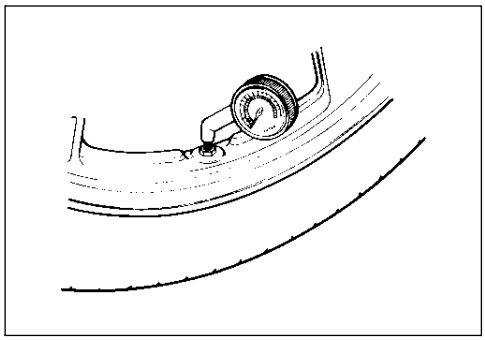

TIRE TREAD CONDITION

Operating the motorcycle with excessively worn tires will decrease riding stability and consequently invite a dangerous situation. It is highly recommended to replace a tire when the remaining depth of tire tread reaches the following specification.

TOOL 09900-20805: Tire depth gauge

DATA Tire tread depth:
Service Limit: FRONT: 1.6 mm (0.06 in)
REAR : 2.0 mm (0.08 in)

TIRE PRESSURE

If the tire pressure is too high or too low, steering will be adversely affected and tire wear will increase. Therefore, maintain the correct tire pressure for good roadability and a longer tire life. Cold inflation tire pressure is as follows.

DATA Cold inflation tire pressure:
Solo riding: Front: 250 kPa (2.50 kgf/cm^2, 36 psi)
Rear: 290 kPa (2.90 kgf/cm^2, 42 psi)
Dual riding: Front: 250 kPa (2.50 kgf/cm^2, 36 psi)
Rear: 290 kPa (2.90 kgf/cm^2, 42 psi)

CAUTION

The standard tire fitted on this motorcycle is 120/70 ZR17 M/C (58 W) for the front and 190/50 ZR17 M/C (73 W) for the rear. The use of tires other than those specified may cause instability. It is highly recommended to use the specified tires.

DATA TIRE TYPE
BRIDGESTONE (Front: BT015F N, Rear: BT015R G)

STEERING

Inspect initially at 1 000 km (600 miles, 2 months) and every 12 000 km (7 500 miles, 24 months) thereafter.

The steering should be adjusted properly for smooth turning of the handlebars and safe operation. Overtighten steering prevents smooth turning of the handlebars and too loose steering will cause poor stability. Check that there is no play in the front fork. Support the motorcycle so that the front wheel is off the ground. With the wheel facing straight ahead, grasp the lower fork tubes near the axle and pull forward. If play is found, readjust the steering. (☞8-35)

FRONT FORK

Inspect every 12 000 km (7 500 miles, 24 months).

- Inspect the front forks for oil leakage, scoring or scratches on the outer surface of the inner tubes. Replace any defective parts, if necessary. (☞8-19)

REAR SUSPENSION

Inspect every 12 000 km (7 500 miles, 24 months).

- Inspect the rear shock absorber for oil leakage and check that there is no play in the swingarm. Replace any defective parts if necessary. (☞8-51 and -56)

EXHAUST PIPE BOLT AND MUFFLER BOLT

Tighten initially at 1 000 km (600 miles, 2 months) and every 12 000 km (7 500 miles, 24 months) thereafter.

- Tighten the exhaust pipe bolts, muffler mounting bolts and muffler connecting bolts to the specified torque.
- HO2 sensor removal and installation (☞4-113)

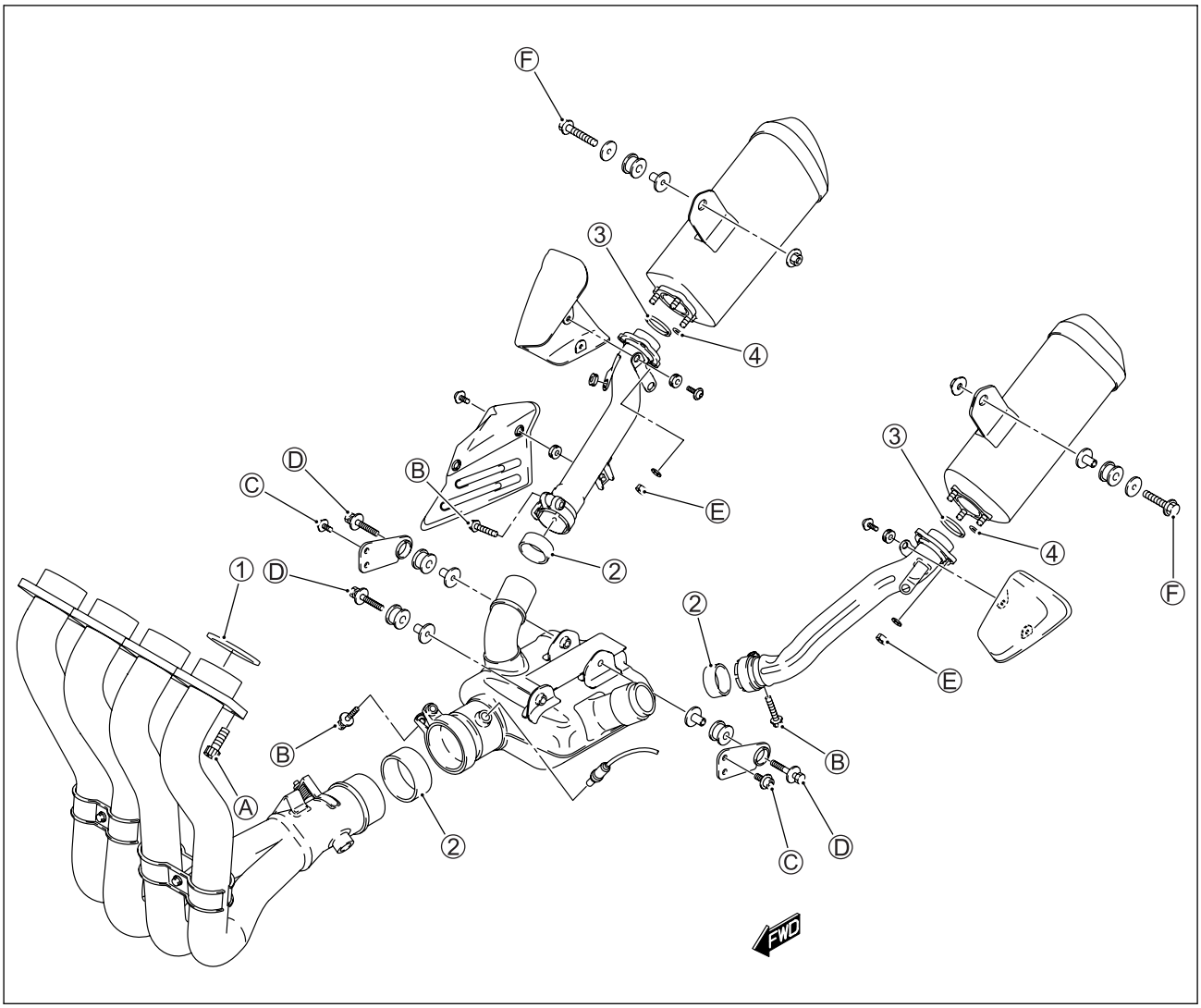

①	Gasket	③	Gasket
②	Connector	④	O-ring

ITEM	N·m	kgf-m	lb-ft
ⒶⒷⒹ	23	2.3	16.5
ⒸⒺⒻ	25	2.5	18.0

CAUTION

Replace the gaskets, connectors and O-rings with new ones when reassembling.

CHASSIS BOLTS AND NUTS

Tighten initially at 1 000 km (600 miles, 2 months) and every 6 000 km (4 000 miles, 12 months) thereafter.

Check that all chassis bolts and nuts are tightened to their specified torque. (Refer to page 2-31 for the locations of the following nuts and bolts on the motorcycle.)

Item	N·m	kgf-m	lb-ft
① Steering stem head nut	90	9.0	6.5
② Steering stem lock-nut	80	8.0	58.0
③ Front fork upper clamp bolt	23	2.3	16.5
④ Front fork lower clamp bolt	23	2.3	16.5
⑤ Front fork cap bolt	23	2.3	16.5
⑥ Front axle bolt	100	10.0	72.5
⑦ Front axle pinch bolt	23	2.3	16.5
⑧ Handlebar clamp bolt	23	2.3	16.5
⑨ Master cylinder mounting bolt (Front brake & Clutch)	10	1.0	7.0
⑩ Front brake caliper mounting bolt	39	3.9	28.0
⑪ Front brake caliper housing bolt	22	2.2	16.0
⑫ Brake hose union bolt (Front & Rear)	23	2.3	16.5
⑬ Clutch hose union bolt	23	2.3	16.5
⑭ Air bleeder valve (Front & Rear brake caliper)	7.5	0.75	5.5
⑮ Air bleeder valve (Front master cylinder)	6.0	0.6	4.5
⑯ Air bleeder valve (Clutch)	6.0	0.6	4.5
⑰ Brake disc bolt (Front)	23	2.3	16.5
⑱ Brake disc bolt (Rear)	35	3.5	25.5
⑲ Rear brake caliper mounting bolt	18	1.8	13.0
⑳ Rear brake caliper sliding pin	33	3.3	24.0
㉑ Rear brake master cylinder mounting bolt	10	1.0	7.0
㉒ Rear brake master cylinder rod lock-nut	18	1.8	13.0
㉓ Front footrest bracket mounting bolt	23	2.3	16.5
㉔ Swingarm pivot nut	100	10.0	72.5
㉕ Swingarm pivot lock-nut	90	9.0	65.0
㉖ Rear suspension bracket nut	115	11.5	83.0
㉗ Rear shock absorber mounting bolt/nut (Upper & Lower)	50	5.0	36.0
㉘ Cushion rod bolt/nut (Front side)	98	9.8	71.0
㉙ Cushion rod bolt/nut (Rear side)	78	7.8	56.5
㉚ Cushion lever mounting bolt/nut	98	9.8	71.0
㉛ Rear axle nut	100	10.0	72.5
㉜ Rear sprocket nut	60	6.0	43.5
㉝ Steering damper bolt/nut	23	2.3	16.5

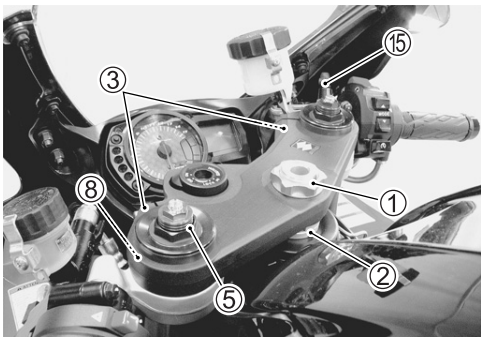
15
3
8
1
2
5

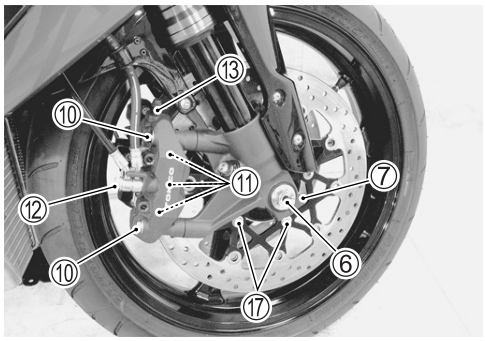
13
10
11
7
12
6
10
17

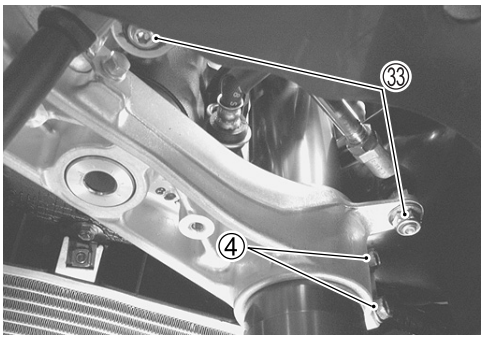
33
4

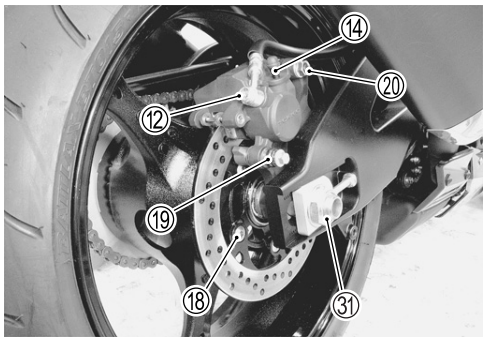
14
20
12
19
18
31

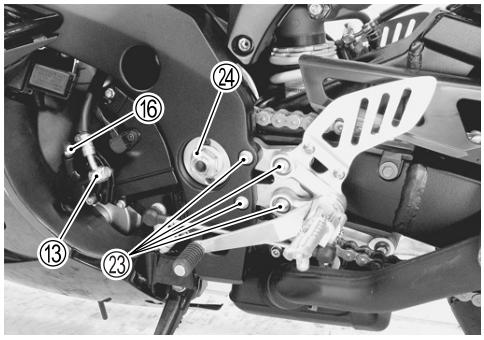
24
16
13
23

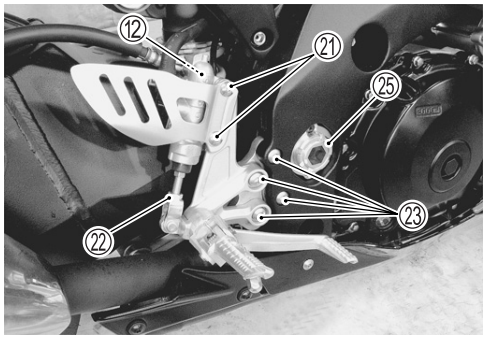
12
21
25
23
22


13
9
9
13

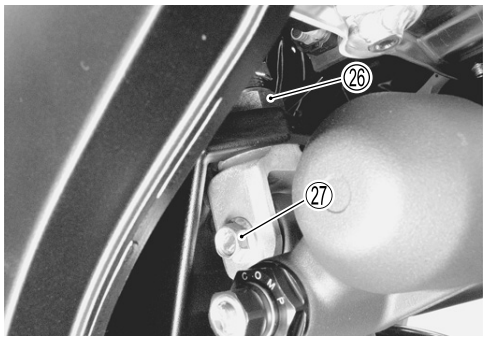
26
27

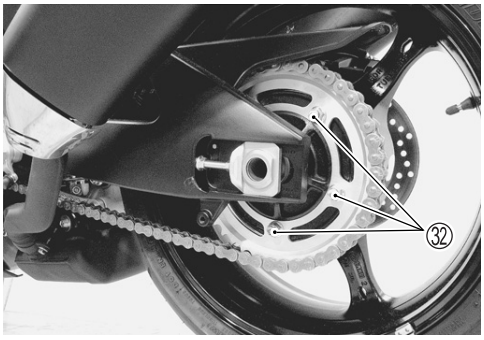
32

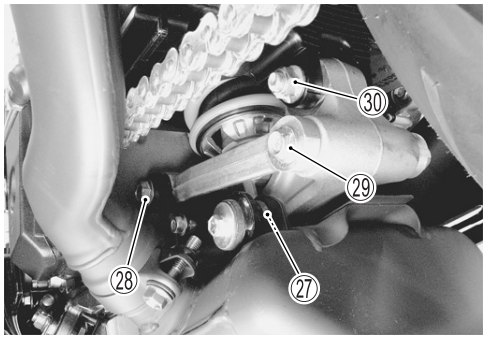
30
29
28
27

COMPRESSION PRESSURE CHECK

The compression pressure reading of a cylinder is a good indicator of its internal condition.
The decision to overhaul the cylinder is often based on the results of a compression test. Periodic maintenance records kept at your dealership should include compression readings for each maintenance service.

COMPRESSION PRESSURE SPECIFICATION

Standard	Limit	Difference
1 300 – 1 700 kPa (13 – 17 kgf/cm^2, 185 – 242 psi)	1 000 kPa (10 kgf/cm^2, 148 psi)	200 kPa (2 kgf/cm^2, 28 psi)

Low compression pressure can indicate any of the following conditions:
* Excessively worn cylinder walls
* Worn piston or piston rings
* Piston rings stuck in grooves
* Poor valve seating
* Ruptured or otherwise defective cylinder head gasket

Overhaul the engine in the following cases:
* Compression pressure in one of the cylinders is 1 000 kPa (10 kgf/cm^2, 148 psi) and less.
* The difference in compression pressure between any two cylinders is 200 kPa (2 kgf/cm^2, 28 psi) and more.
* All compression pressure readings are below 1 300 kPa (13 kgf/cm^2, 185 psi) even when they measure 1 000 kPa (10 kgf/cm^2, 148 psi) and more.

COMPRESSION TEST PROCEDURE

NOTE:
* *Before testing the engine for compression pressure, make sure that the cylinder head nuts are tightened to the specified torque values and the valves are properly adjusted.*
* *Have the engine warmed up before testing.*
* *Make sure that the battery is fully-charged.*

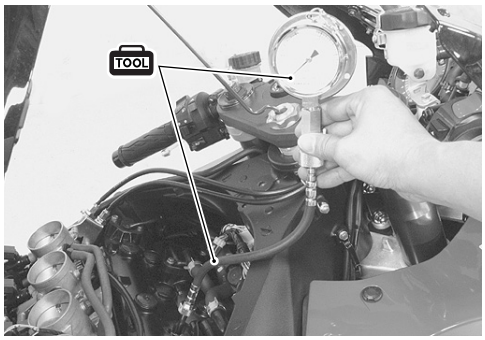

Remove the related parts and test the compression pressure in the following manner.
- Lift and support the fuel tank. (☞5-3)
- Remove all the spark plugs. (☞2-5)
- Install the compression gauge and adaptor in the spark plug hole. Make sure that the connection is tight.
- Keep the throttle grip in the fully opened position.
- Press the starter button and crank the engine for a few seconds. Record the maximum gauge reading as the cylinder compression.
- Repeat this procedure with the other cylinders.

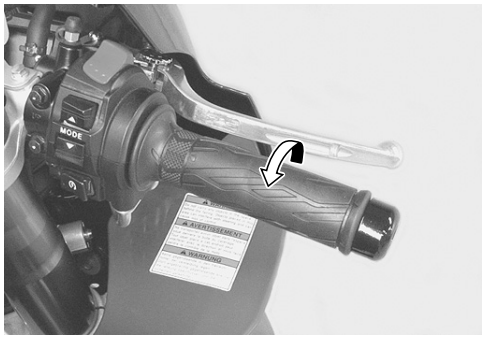

TOOL 09915-64512: Compression gauge set
09913-10750: Adaptor

OIL PRESSURE CHECK

Check the engine oil pressure periodically. This will give a good indication of the condition of the moving parts.

OIL PRESSURE SPECIFICATION

100 – 400 kPa (1.0 – 4.0 kgf/cm², 14 – 57 psi) at 3 000 r/min, Oil temp. at 60 °C (140 °F)

If the oil pressure is lower or higher than the specification, the following causes may be considered.

LOW OIL PRESSURE

* Clogged oil filter
* Oil leakage from the oil passage
* Damaged O-ring
* Defective oil pump
* Combination of the above items

HIGH OIL PRESSURE

* Engine oil viscosity is too high
* Clogged oil passage
* Combination of the above items

OIL PRESSURE TEST PROCEDURE

Start the engine and check if the oil pressure indicator light is turned on. If the light stays on, check the oil pressure indicator light circuit. If the circuit is OK, check the oil pressure in the following manner.

- Remove the right under cowling. (☞8-5)
- Remove the main gallery plug ①.
- Install the oil pressure gauge and adaptor into the main oil gallery.
- Warm up the engine as follows:
  Summer : 10 min at 2 000 r/min
  Winter : 20 min at 2 000 r/min
- After warming up, increase the engine speed to 3 000 r/min (observe the tachometer), and read the oil pressure gauge.

TOOL 09915-74521: Oil pressure gauge hose
09915-74540: Oil pressure gauge attachment
09915-77331: Meter (for high pressure)

Oil gallery plug (M16): 35 N·m (3.5 kgf-m, 25.5 lb-ft)

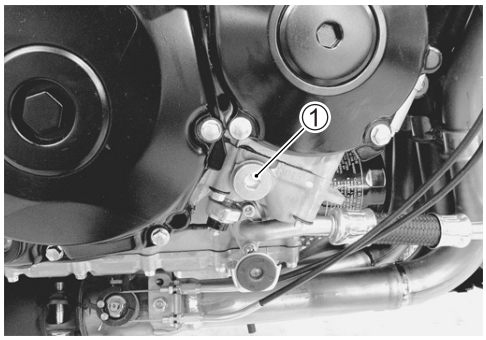

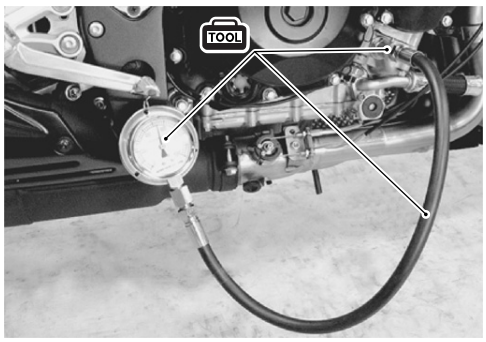

SDS CHECK

Using SDS, sample the data at the time of new and periodic vehicle inspections.

After saving the sampled data in the computer, file them by model and by user.
The periodically filed data help improve the accuracy of troubleshooting since they can indicate the condition of vehicle functions that has changed with time.
For example, when a vehicle is brought in for service but the troubleshooting of a failure is not easy, comparing the current data value to the past filed data value at time of normal condition can allow the specific engine failure to be determined.
Also, in the case of a customer vehicle which is not periodically brought in for service with no past data value having been saved, if the data value of a good vehicle condition have been already saved as a master (STD), comparison between the same models helps facilitate the troubleshooting.

- Remove the front seat. (☞8-8)
- Set up the SDS tools. (☞4-27)

TOOL 09904-41010: SDS set tool
99565-01010-010: CD-ROM Ver.10

NOTE:
** Before taking the sample of data, check and clear the Past DTC. (☞4-28)*
** A number of different data under a fixed condition as shown below should be saved or filed as sample.*

SAMPLE:
Data sampled from cold starting through warm-up

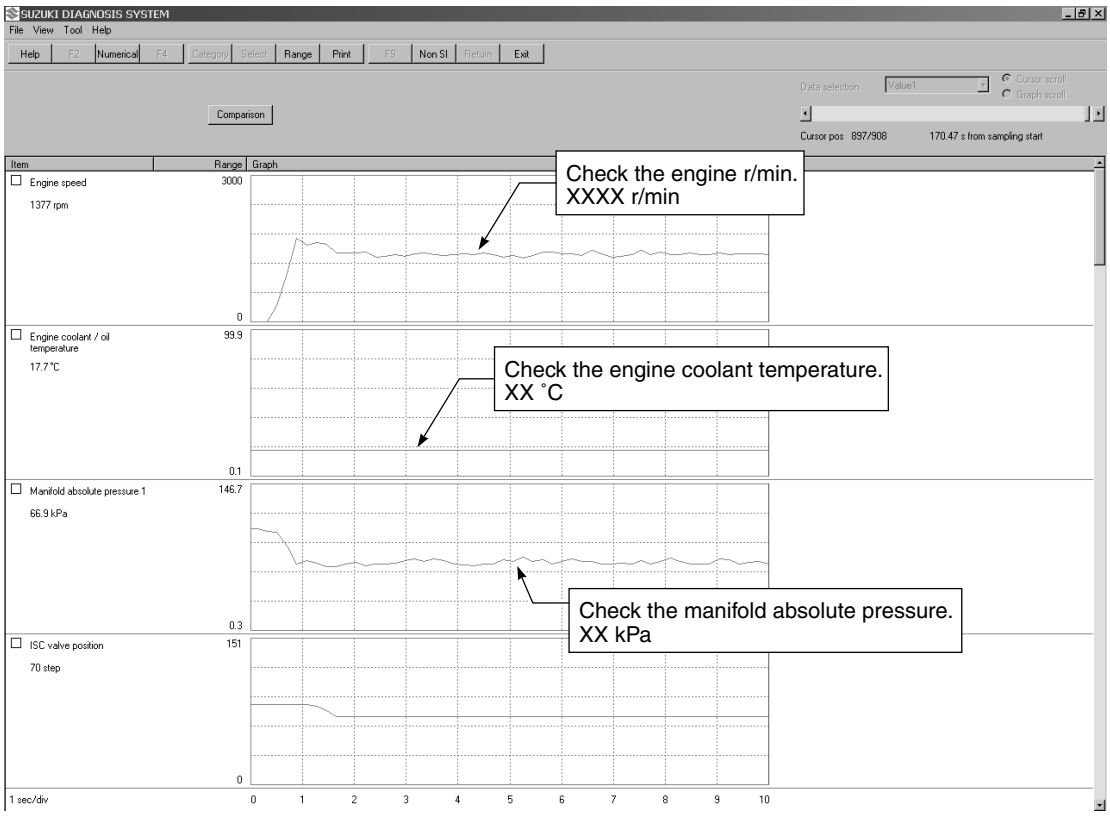

Data at 3 000 r/min under no load

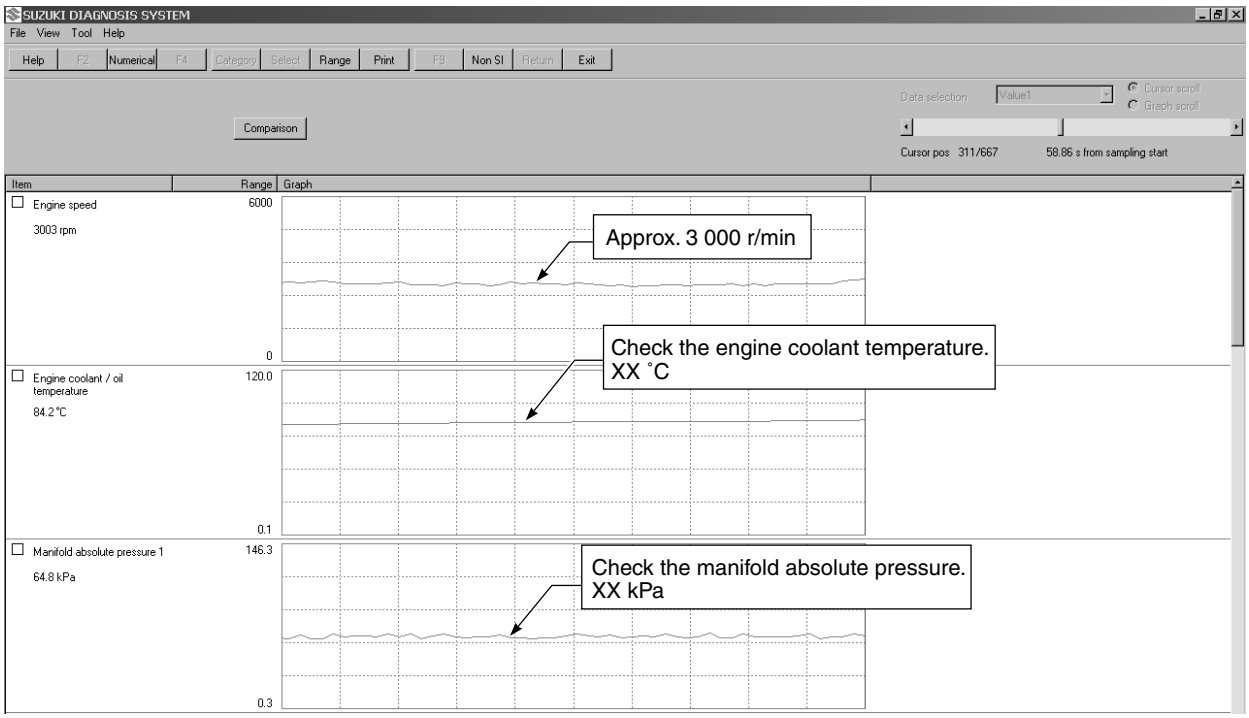

Data at the time of racing

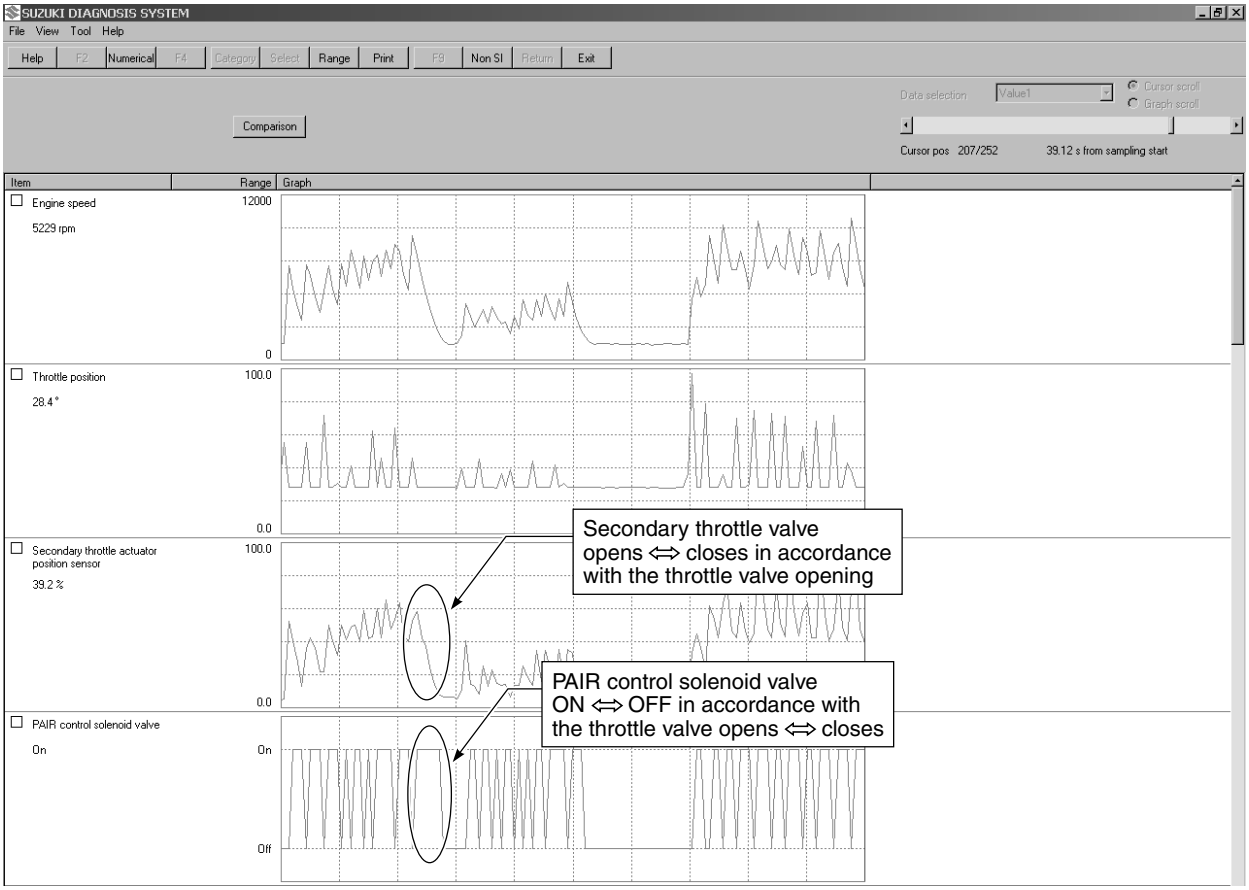

Data of intake negative pressure during idling (100 °C)

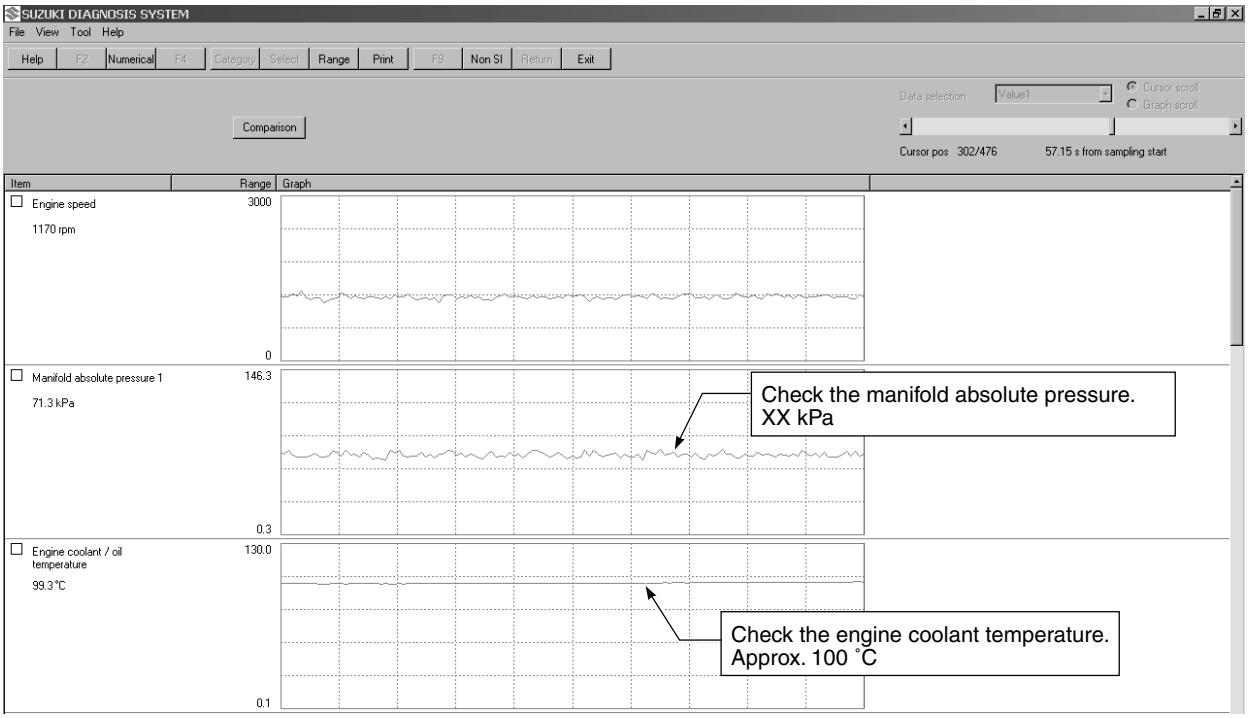

Data of manifold absolute pressure operation at the time of starting

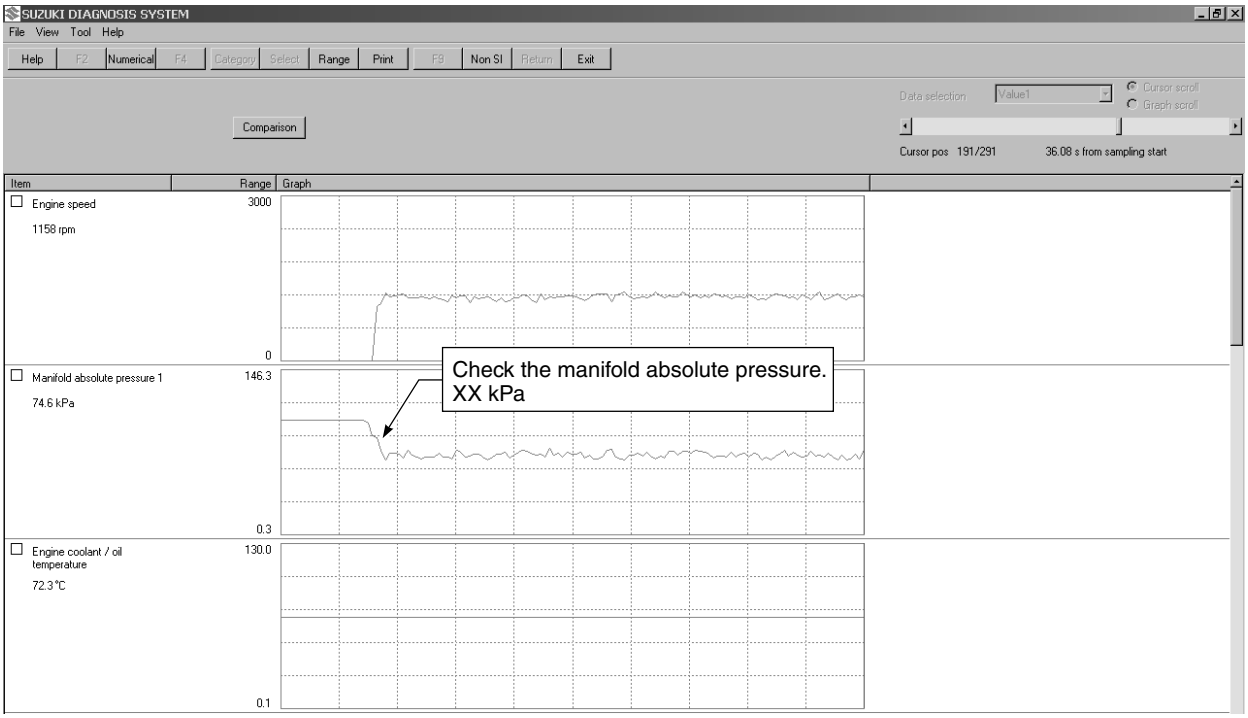

Example of trouble

Three data; value 1 (current data 1), value 2 (past data 2) and value 3 (past data 3); can be made in comparison by showing them in the graph. Read the change of value by comparing the current data to the past data that have been saved under the same condition, then you may determine how changes have occurred with the pass of time and identify what problem is currently occurring.

With DTC not output, if the value of engine coolant temperature is found to be lower than the data saved previously, the possible cause may probably lie in a sensor circuit open or ground circuit opened or influence of internal resistance value changes, etc.

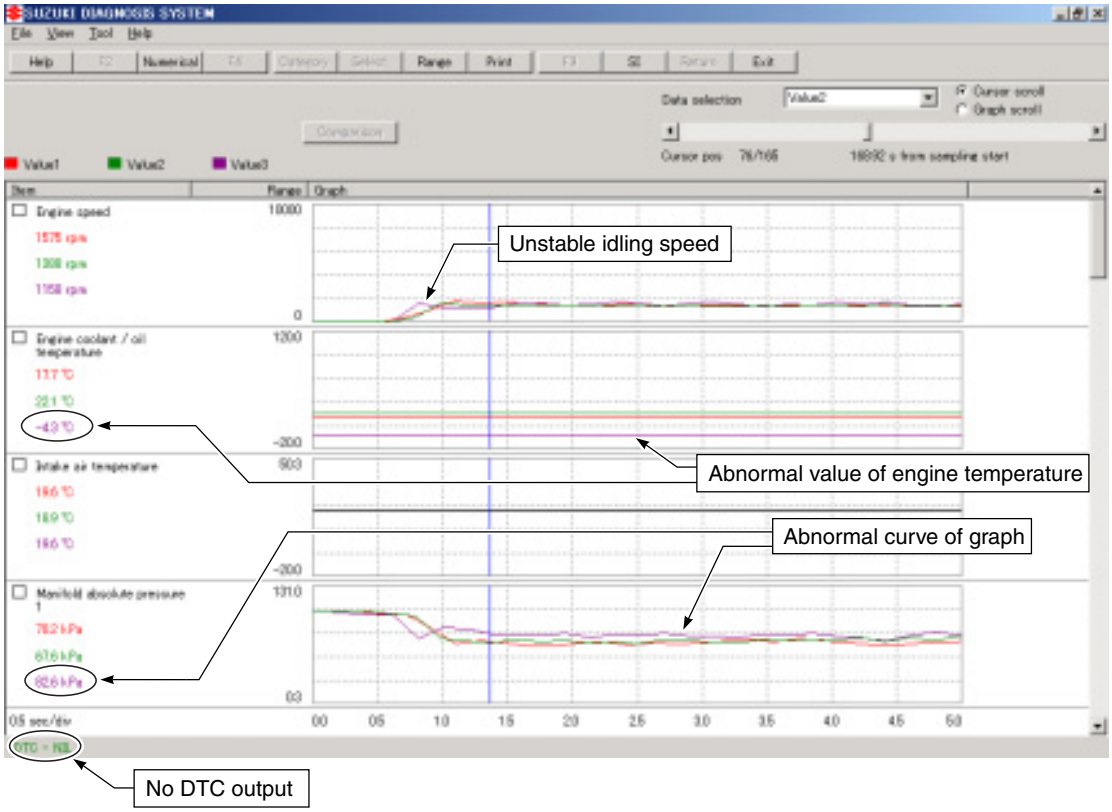

ENGINE

CONTENTS

ENGINE COMPONENTS REMOVABLE WITH ENGINE IN PLACE 3- 2
ENGINE REMOVAL AND INSTALLATION..... 3- 3
ENGINE REMOVAL 3- 3
ENGINE INSTALLATION 3-10
ENGINE DISASSEMBLY 3-15
ENGINE COMPONENTS INSPECTION
AND SERVICE 3-29
CYLINDER HEAD COVER 3-29
CMP SENSOR 3-29
PAIR REED VALVE..... 3-29
CAMSHAFT 3-30
CAM CHAIN TENSION ADJUSTER 3-32
CAM CHAIN TENSIONER..... 3-33
CAM CHAIN GUIDE 3-33
CYLINDER HEAD AND VALVE..... 3-33
CLUTCH 3-41
CLUTCH LIFTER..... 3-43
OIL PUMP..... 3-44
STARTER CLUTCH 3-45
GENERATOR 3-45
WATER PUMP..... 3-46
GEARSHIFT SYSTEM..... 3-46
OIL PRESSURE REGULATOR..... 3-47
OIL STRAINER..... 3-47
TRANSMISSION..... 3-48
CYLINDER..... 3-51
PISTON AND PISTON RING..... 3-52
CRANKCASE 3-55
BALANCER SHAFT 3-62
BALANCER SHAFT JOURNAL BEARING 3-62
CRANKSHAFT AND CONROD 3-64
CRANKSHAFT JOURNAL BEARING 3-68
CRANKSHAFT THRUST BEARING 3-71
ENGINE REASSEMBLY 3-73

ENGINE COMPONENTS REMOVABLE WITH ENGINE IN PLACE

The parts listed below can be removed and reinstalled without removing the engine from the frame. Refer to page listed in each section for removal and reinstallation instructions.

ENGINE CENTER

ITEM	REMOVAL	INSPECTION	INSTALLATION
PAIR control solenoid valve	☞11-6	☞11-6	☞11-7
Starter motor	☞9-13	☞9-14	☞9-16
Crankcase breather cover	☞3-25	—	☞3-84
Thermostat	☞7-9	☞7-9	☞7-10
Cylinder head cover	☞3-15	☞3-29	☞3-104
Camshaft	☞3-16	☞3-30	☞3-99
Intake pipe	☞3-40	—	☞3-41
Oil filter	☞2-13	—	☞2-13
Oil cooler	☞7-17	☞7-18	☞7-18
Oil pan	☞3-26	—	☞3-82

ENGINE RIGHT SIDE

ITEM	REMOVAL	INSPECTION	INSTALLATION
Exhaust pipe and muffler	☞6-12	—	☞6-16
Cam chain tension adjuster	☞3-16	☞3-32	☞3-102
Clutch cover	☞3-18	—	☞3-96
Clutch (plates)	☞3-19	☞3-41 and -42	☞3-94
Clutch lifter	☞3-20	☞3-43	☞3-92
Primary driven gear	☞3-20	☞3-43	☞3-92
Oil pump	☞3-21	☞3-44	☞3-91
Gearshift shaft	☞3-21	☞3-46	☞3-90
Starter idle gear cover	☞3-22	—	☞3-89
Starter idle gear	☞3-22	—	☞3-89
Starter clutch cover	☞3-22	—	☞3-89
Starter clutch	☞3-23	☞3-45	☞3-88
CKP sensor	☞3-23	☞4-38	☞3-87
Oil pump driven gear	☞3-21	—	☞3-91
Cam chain tensioner	☞3-23	☞3-33	☞3-87
Cam chain guide	☞3-23	☞3-33	☞3-87

ENGINE LEFT SIDE

ITEM	REMOVAL	INSPECTION	INSTALLATION
Engine sprocket	☞3-8	—	☞3-13
Gear position switch	☞3-25	☞4-73	☞3-84
Generator (cover)	☞3-24	—	☞3-86
Generator rotor	☞3-24	—	☞3-85
Water pump	☞7-11	☞7-13	☞7-14

ENGINE REMOVAL AND INSTALLATION

ENGINE REMOVAL

Before taking the engine out of the frame, wash the engine using a steam cleaner. Engine removal is sequentially explained in the following steps. Reinstall the engine by reversing the removal procedure.

- Remove the under cowlings. (☞8-5)
- Remove the side cowlings. (☞8-6)
- Drain engine oil. (☞2-12)
- Drain engine coolant. (☞2-18)
- Lift and support the fuel tank. (☞5-3)

- Disconnect the battery ⊖ lead wire.

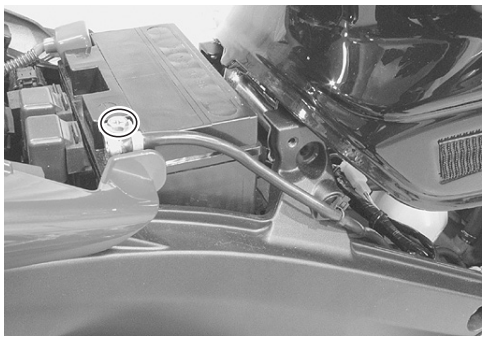

- Remove the air cleaner box ①. (☞5-14)

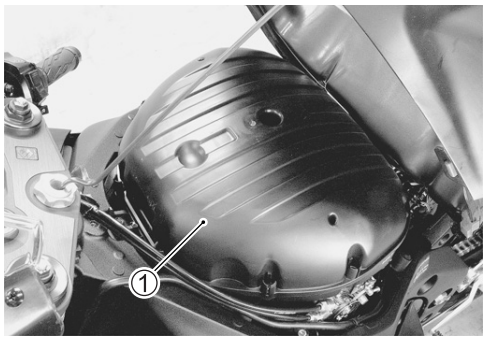

- Remove the throttle body assembly ②. (☞5-15)

OIL COOLER

- Remove the oil cooler hose bolts.

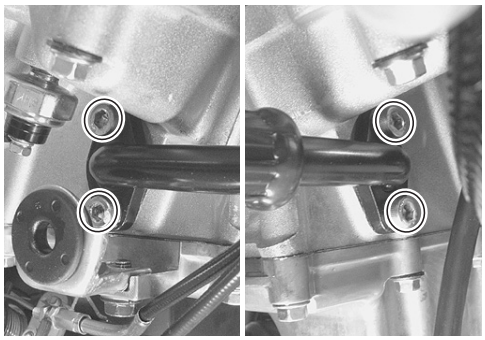

- Remove the oil cooler ①.

CAUTION

Be careful not to bend the oil cooler fins.

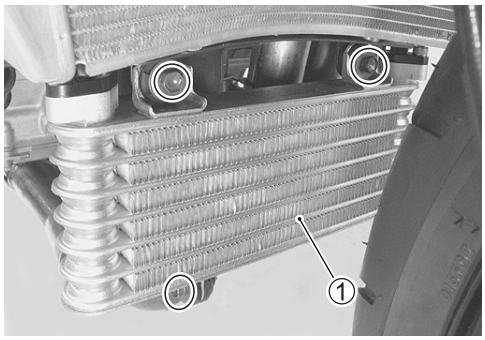

RADIATOR

- Remove the regulator/rectifier bracket.

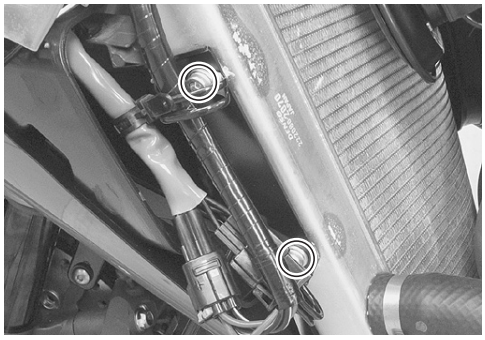

- Disconnect the water/air bleed hose ① and radiator inlet hose ②.

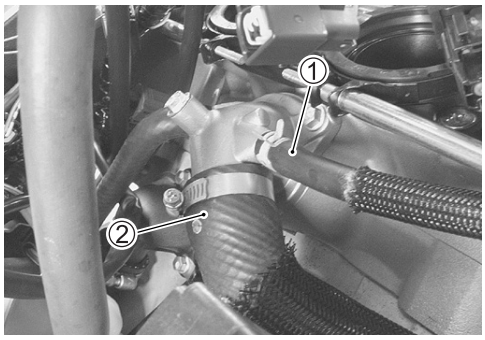

- Disconnect the reservoir inlet hose ③.
- Disconnect the cooling fan lead wire coupler ④.

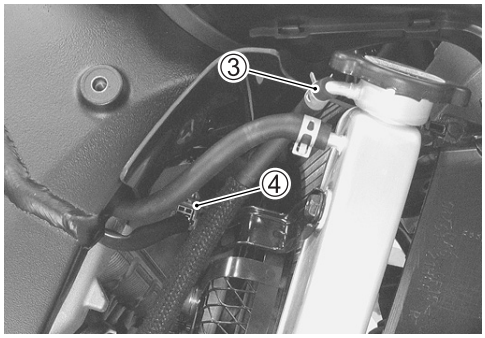

- Remove the radiator mounting bolts.
- Remove the radiator ⑤.

CAUTION

Be careful not to bend the radiator fins.

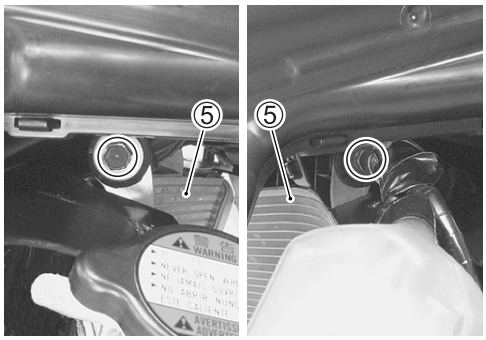

- Remove the horn ⑥.
- Remove the front engine cover ⑦.

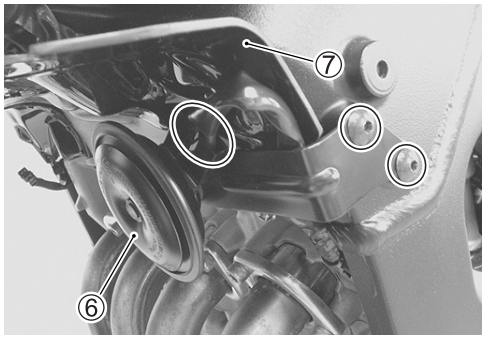

MUFFLER, CHAMBER AND EXHAUST PIPE

- Remove the EXCV cables along with the bracket ①.
- Disconnect the HO2 sensor coupler lead wire. (☞6-13)
- Remove the mufflers, muffler chamber and exhaust pipes. (☞6-12)

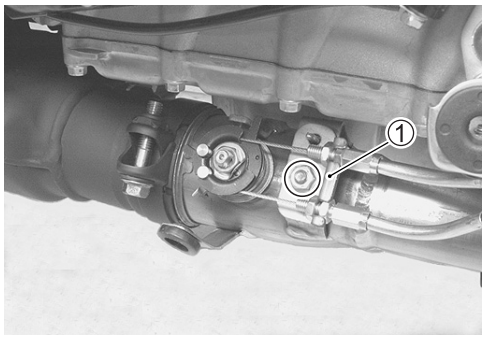

- Remove the radiator mounting bracket ②.

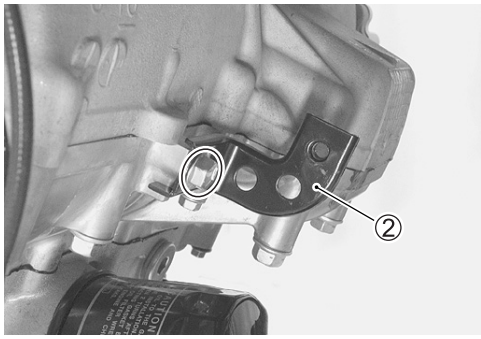

ELECTRIC PARTS AND PAIR HOSE

- Disconnect the oil pressure switch lead wire ①.

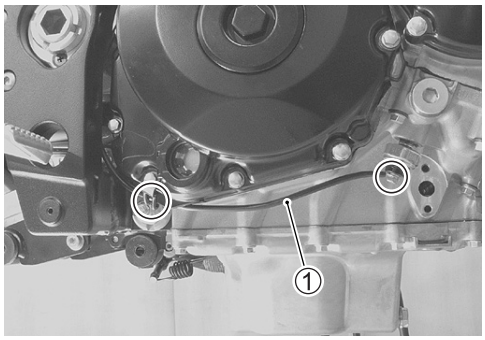

- Disconnect the starter motor lead wire ②.

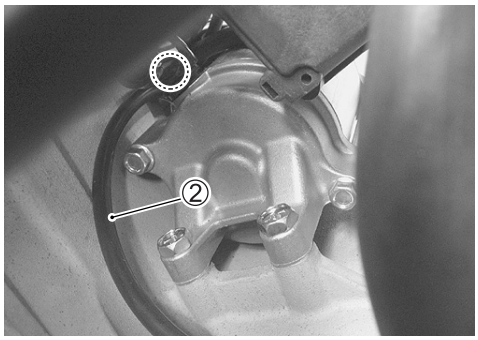

- Disconnect the ground lead wire ③.
- Disconnect the CKP sensor lead wire coupler ④.

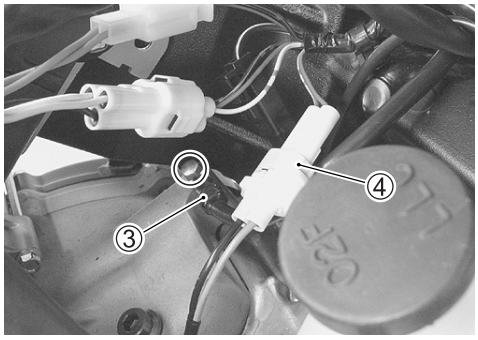

- Disconnect the ECT sensor lead wire coupler ⑤.
- Disconnect the GP switch lead wire coupler ⑥.
- Disconnect the speed sensor lead wire coupler ⑦.
- Disconnect the generator lead wire coupler ⑧.

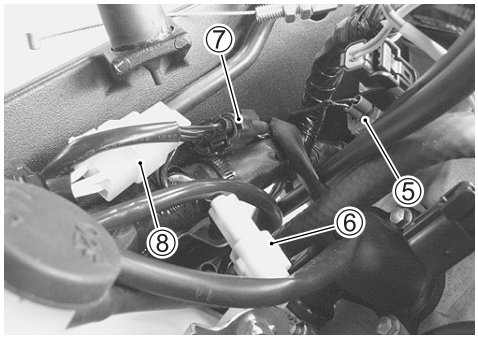

- Disconnect the CMP sensor lead wire coupler ⑨ and ignition coil/plug cap lead wire couplers.

CAUTION

Do not remove the ignition coil/plug cap before disconnecting its coupler.

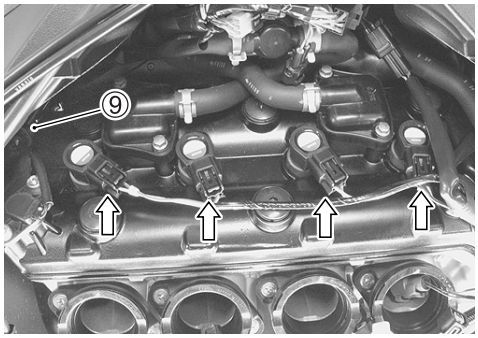

- Remove the ignition coils/plug caps.

CAUTION

> *** Do not pry up the ignition coil/plug cap with a screw driver or a bar to avoid its damage.**
> *** Be careful not to drop the ignition coil/plug cap to prevent its short or open circuit.**

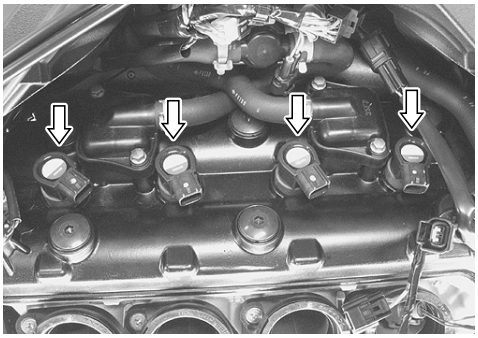

- Disconnect the PAIR hoses ⑩.

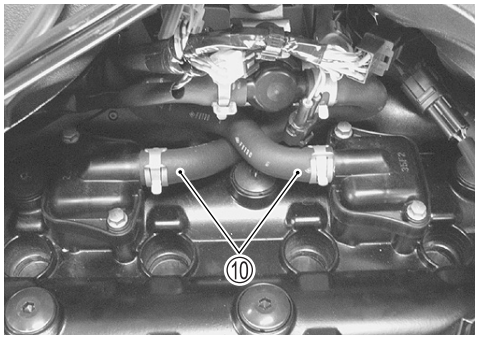

ENGINE SPROCKET AND GEARSHIFT LEVER

- Disengage the gearshift lever ① from the gearshift shaft.
- Remove the engine sprocket cover ②.

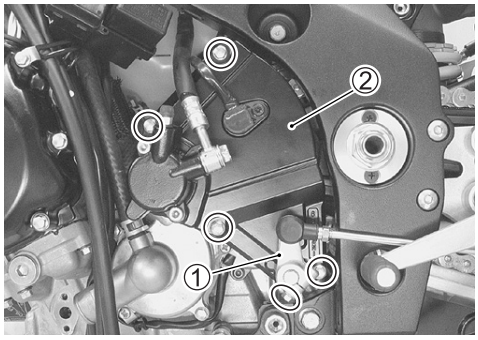

- Remove the clutch push rod ③.

- Remove the speed sensor rotor ④.
- Remove the engine sprocket nut ⑤ and the washer ⑥.

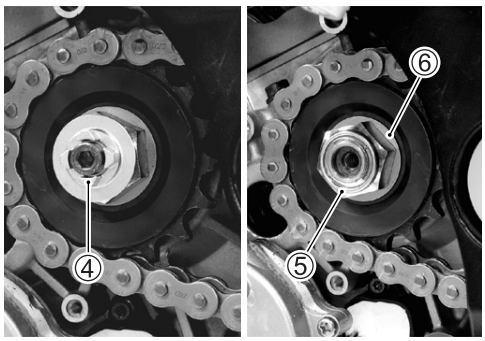

- Loosen the rear axle nut ⑦.
- Loosen the chain adjuster lock-nuts (LH and RH). ⑧
- Loosen the chain adjusters ⑨. (LH and RH)

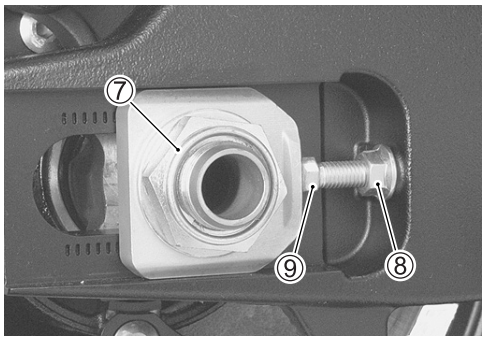

- Push the rear wheel forward and make sure that the drive chain ⑩ has enough slack.
- Disengage the drive chain from the rear sprocket.

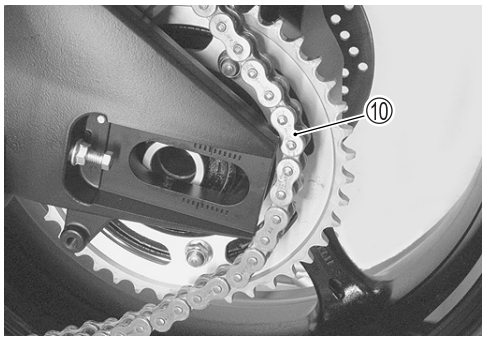

- Remove the engine sprocket ⑩.

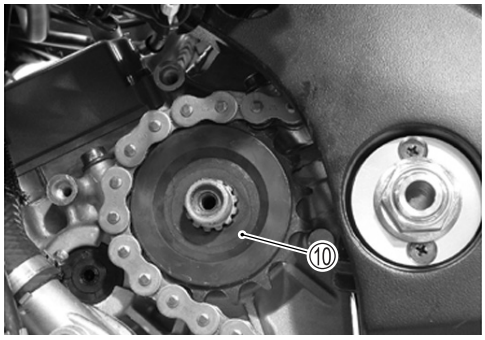

ENGINE MOUNTING

- Support the engine using an engine jack.

- Remove the engine mounting bolts Ⓐ and Ⓒ.

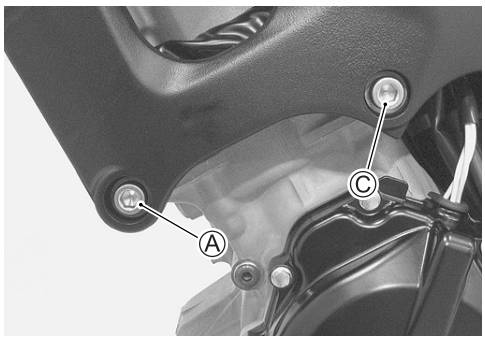

- Loosen the engine mounting pinch bolts ① and ②.
- Remove the engine mounting bolts Ⓑ and Ⓓ.

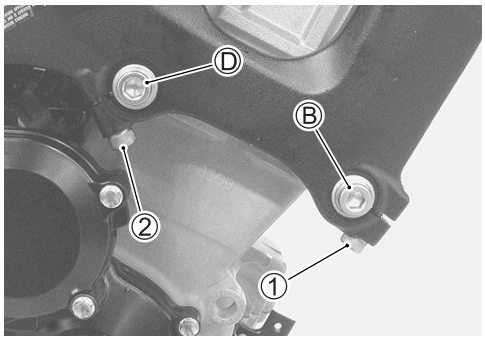

- Remove the engine mounting nut ③.
- Remove the engine mounting thrust adjuster lock-nut ④ with the special tool.
- Loosen the engine mounting thrust adjuster ⑤ fully.

TOOL 09940-14980: Engine mounting thrust adjuster socket wrench

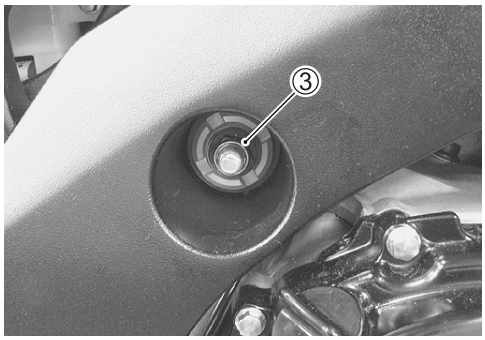

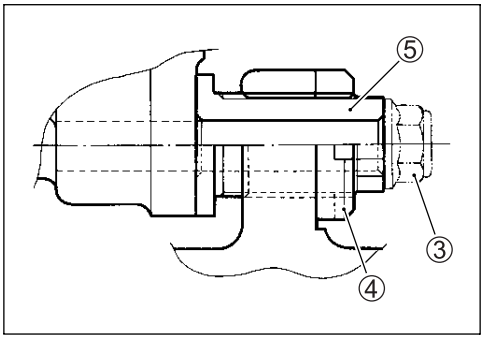

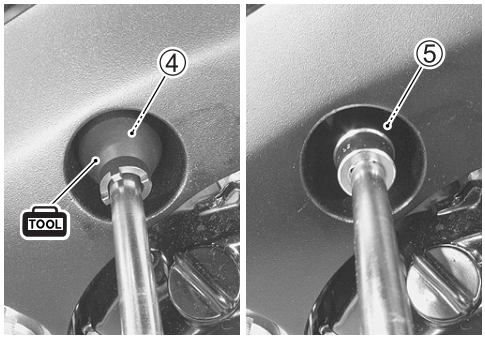

- Remove the engine mounting nut ⑥.
- Loosen the engine mounting thrust adjuster lock-nut ⑦ with the special tool.
- Loosen the engine mounting thrust adjuster ⑧.

TOOL 09940-14980: Engine mounting thrust adjuster socket wrench

NOTE:
Do not remove the engine mounting bolts at this stage.

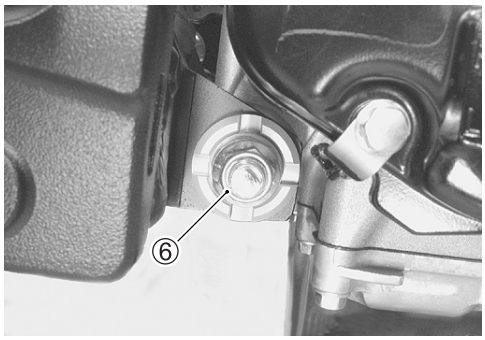

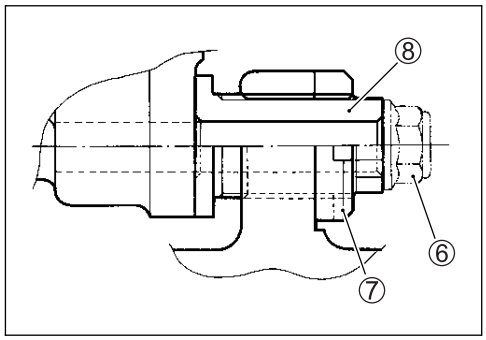

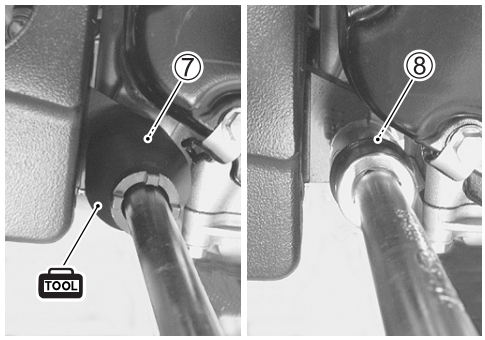

- Remove the engine mounting bolts and gradually lower the front side of the engine. Then, take off the drive chain from the driveshaft.
- Remove the engine assembly.

ENGINE INSTALLATION

Install the engine in the reverse order of engine removal.
Pay attention to the following points:

NOTE:
Be careful not to damage the frame and engine when installing the engine.

- Before installing the engine, install the spacers ①.

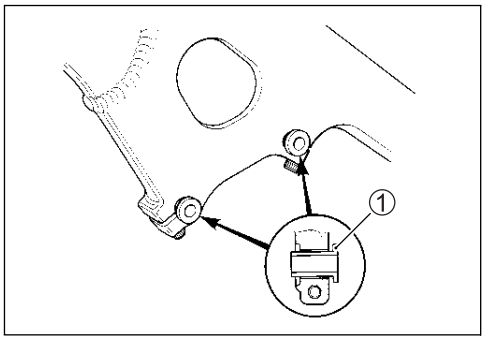

- Before installing the engine, install the engine mounting thrust adjusters ② and ③.

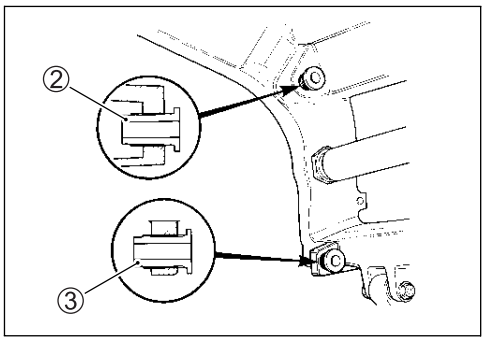

- Gradually raise the rear side of the engine assembly, and then put the drive chain on the driveshaft.
- Install all engine mounting bolts, spacers and tighten them temporarily. (☞3-12)

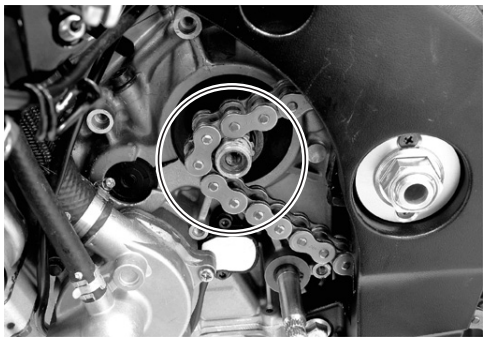

CAUTION

Be careful not to catch the wiring harness between the frame and the engine.

- Tighten the engine mounting thrust adjusters to the specified torque.

Engine mounting thrust adjuster:
23 N·m (2.3 kgf-m, 16.5 lb-ft)

- Tighten the engine mounting thrust adjuster lock-nuts to the specified torque with the special tool.

Engine mounting thrust adjuster lock-nut:
45 N·m (4.5 kgf-m, 32.5 lb-ft)

TOOL 09940-14980: Engine mounting thrust adjuster socket wrench

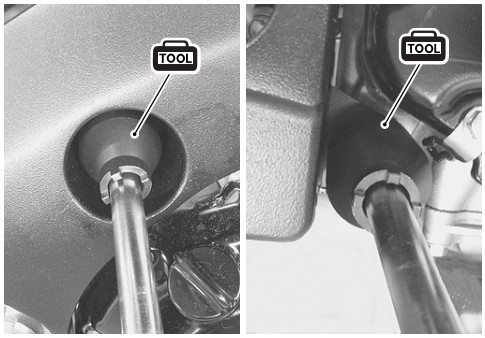

- Tighten all engine mounting bolts and nuts to the specified torque. (☞3-12)

NOTE:
The engine mounting nuts are self-locking. Once the nuts have been removed, they are no longer of any use.

- Tighten the engine mounting pinch bolts to the specified torque. (☞3-12)

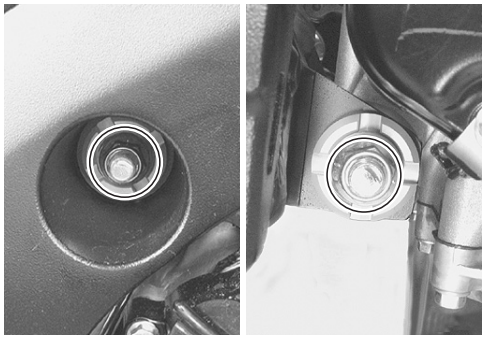

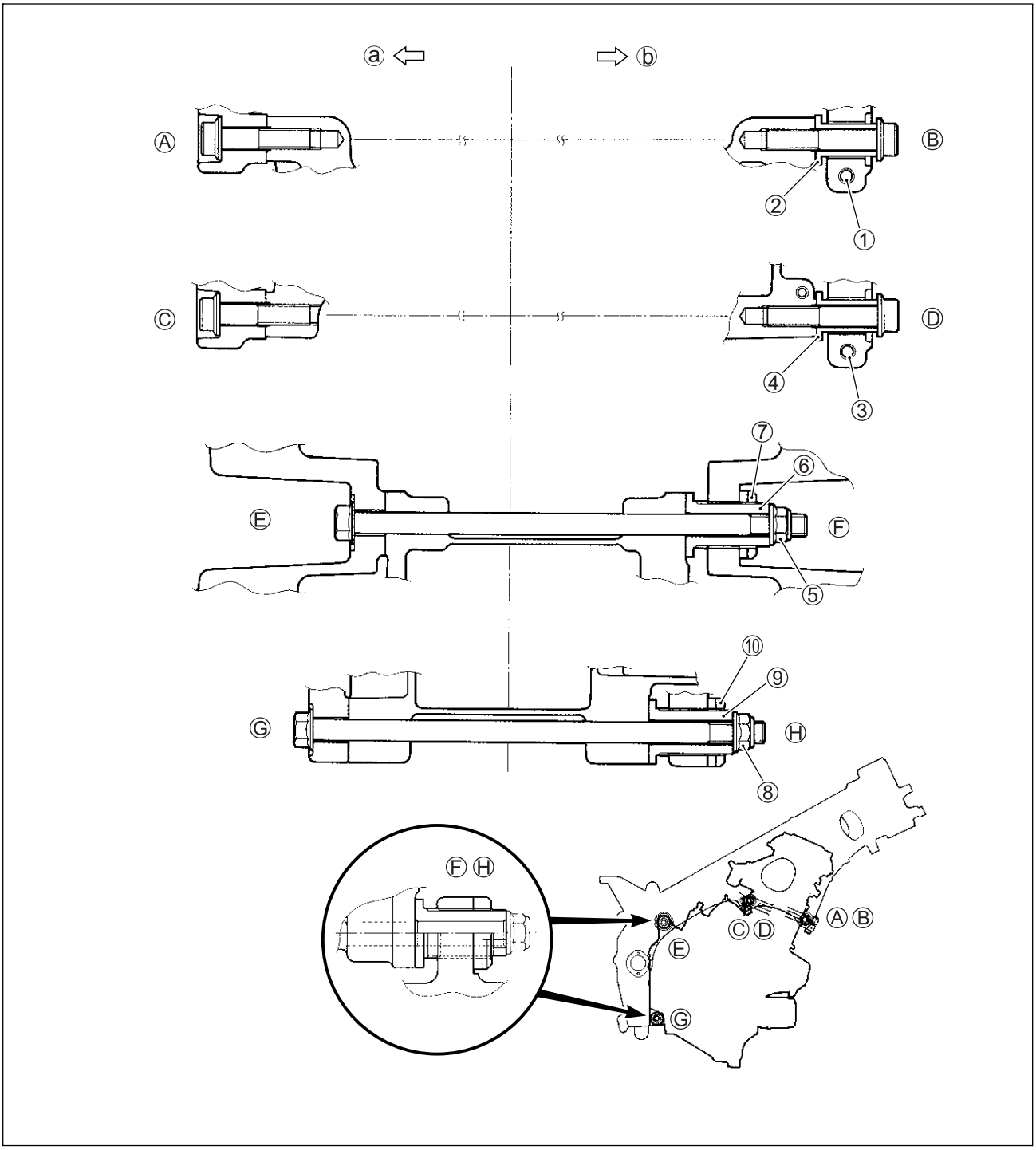

ITEM	N·m	kgf-m	lb-ft
ⒶⒷⒸⒹ	55	5.5	40.0
⑤⑧	75	7.5	54.0
①③	23	2.3	16.5
⑥⑨	23	2.3	16.5
⑦⑩	45	4.5	32.5

ⓐ LH ⓑ RH

LENGTH

ITEM		mm	in
Bolt	ⒶⒸ	45	1.77
	ⒷⒹ	55	2.17
	ⒺⒼ	215	8.46
Spacer	②④	30.5	1.20
Adjuster	⑥⑨	40	1.57

- Install the engine sprocket and the washer.
- Apply a small quantity of thread lock to the driveshaft thread portion.

1322 99000-32110: THREAD LOCK SUPER "1322" or equivalent

- Tighten the engine sprocket nut ④ to the specified torque.

Engine sprocket nut: 115 N·m (11.5 kgf-m, 83.0 lb-ft)

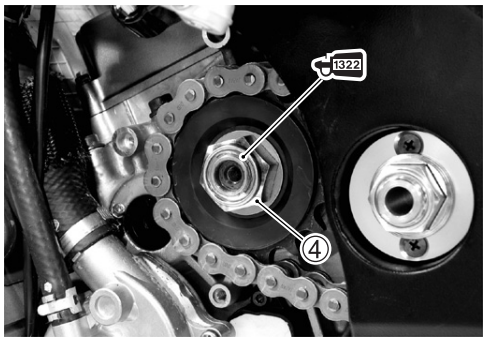

- Install the speed sensor rotor ⑤.
- Tighten the speed sensor rotor bolt ⑥ to the specified torque.

Speed sensor rotor bolt: 25 N·m (2.5 kgf-m, 18.0 lb-ft)

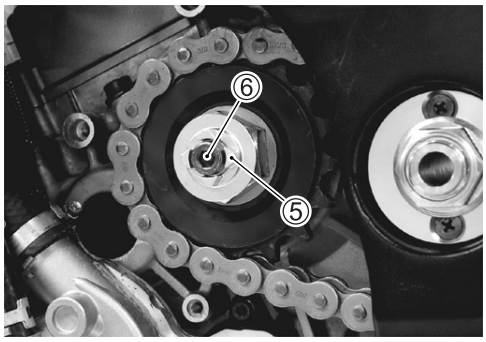

- Apply grease to the clutch push rod end.

A 99000-25010: SUZUKI SUPER GREASE "A" or equivalent

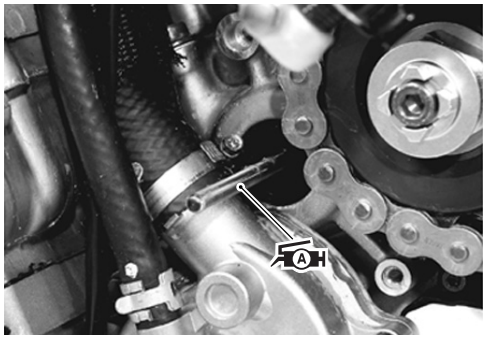

- Install the engine sprocket cover ⑦.
- Install the gearshift lever ⑧. (☞10-34)

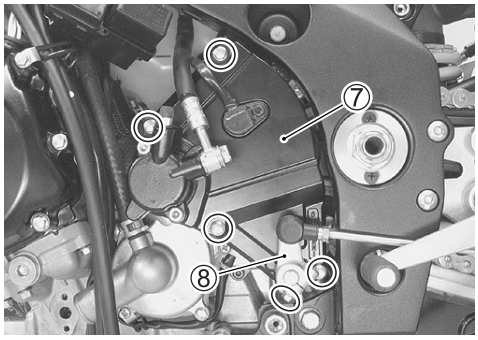

- Install the radiator mounting bracket ⑨.

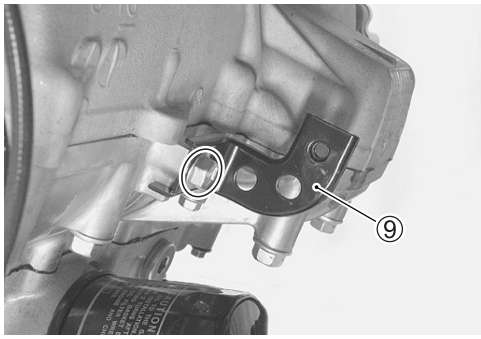

- Install the exhaust pipes, muffler chamber and mufflers. (☞6-16)

CAUTION

Replace the gaskets and connectors with new ones.

- Connect the EXCV cables and install the bracket ⑩.

EXCV cable bracket nut: 11 N·m (1.1 kgf-m, 8.0 lb-ft)

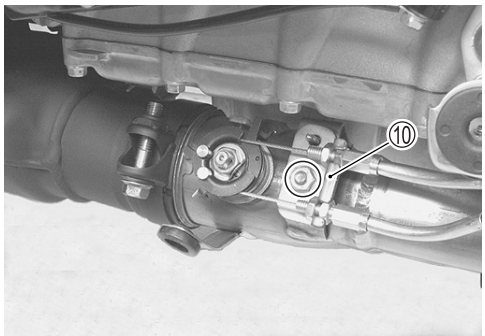

- Fit the new O-rings to the union of the oil cooler pipes.
- Apply thread lock to the bolts, install the oil cooler hose.

1322 99000-32110: THREAD LOCK SUPER "1322" or equivalent

Oil cooler bolt: 10 N·m (1.0 kgf-m, 7.0 lb-ft)

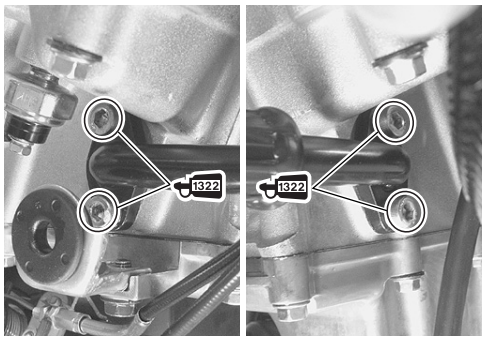

- Perform service and adjustment in the following items.

* Gearshift lever position (☞10-34)
* Engine oil (☞2-12)
* Engine coolant (☞2-18)
* Throttle cable play (☞2-15)
* Clutch operation (☞2-16)
* Throttle valve synchronization (☞5-27)
* Drive chain slack (☞2-21)
* Wiring harness, cables and hoses routing (☞10-14 to -24)

ENGINE DISASSEMBLY

CAUTION

Identify the position of each removed part. Organize the parts in their respective groups (e.g., intake, exhaust) so that they can be reinstalled in their original positions.

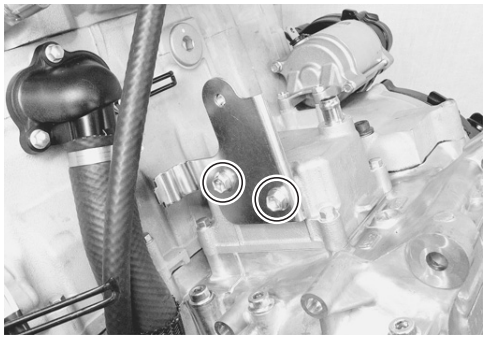

- Remove all the spark plugs. (☞2-5)
- Remove the engine coolant reservoir bracket.

STARTER MOTOR

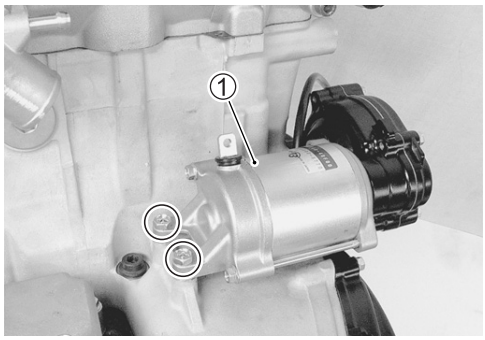

- Remove the starter motor ①.

CYLINDER HEAD COVER

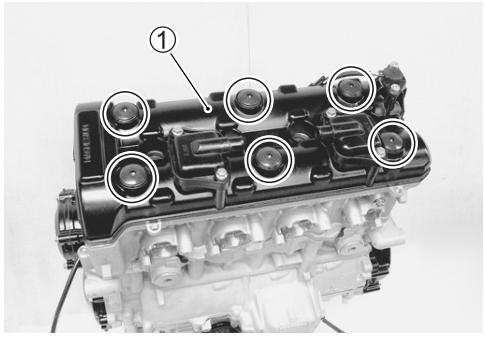

- Remove the cylinder head cover ① and its gaskets.

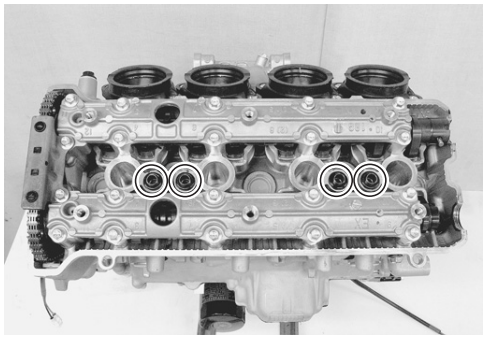

- Remove the dowel pins and O-rings.

CAMSHAFT

- Remove the valve timing inspection cap ①.

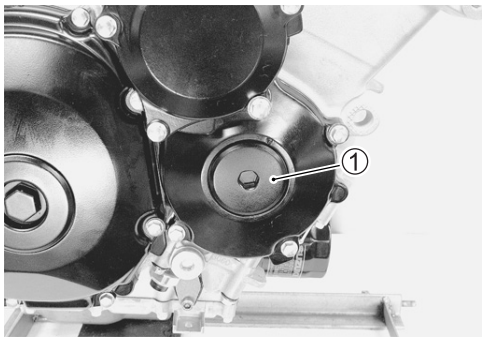

- Turn the crankshaft to bring the line Ⓐ on the starter clutch to the index mark Ⓑ of the valve timing inspection hole and also to bring the cams to the position as shown below.

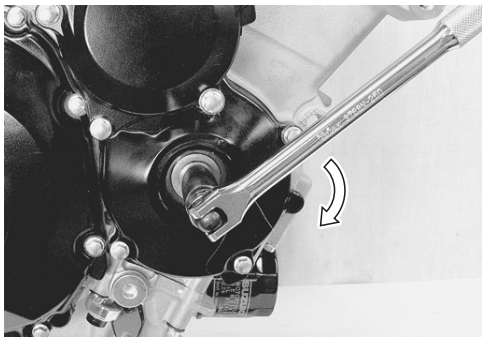

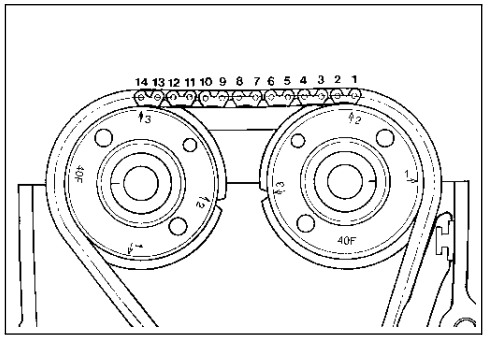

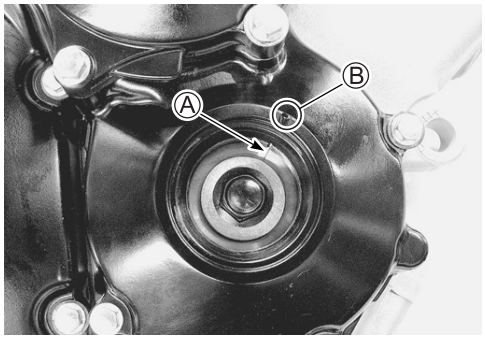

- Remove the cam chain tension adjuster cap bolt ②, washer ③ and spring ④.
- Remove the cam chain tension adjuster ⑤.
- Remove the gasket ⑥.

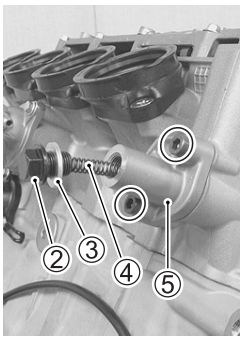

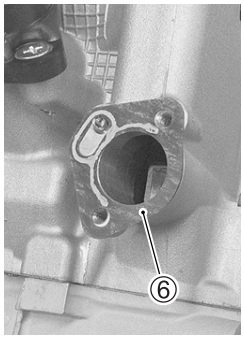

- Remove the cam chain guide No.2 ⑦.
- Remove the intake camshaft journal holder ⑧.
- Remove the exhaust camshaft journal holder ⑨.

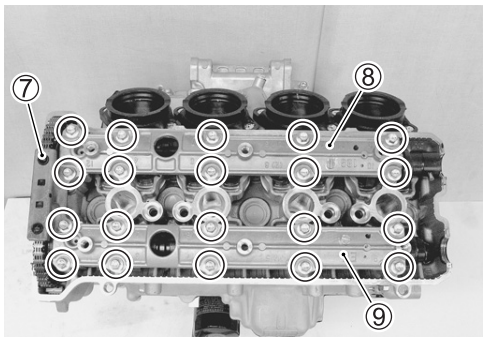

CAUTION

Be sure to loosen the camshaft journal holder bolts evenly by shifting the wrench in the descending order of numbers.

- Remove the intake camshaft ⑩.
- Remove the exhaust camshaft ⑪.
- Remove the dowel pins.

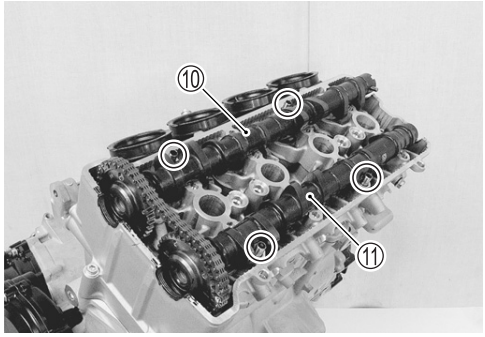

CYLINDER HEAD

- Remove the bypass hose ①.
- Remove the thermostat cover ② and thermostat.

Thermostat inspection (☞7-9)

- Remove the ECT sensor ③.

ECT sensor inspection (☞7-8)

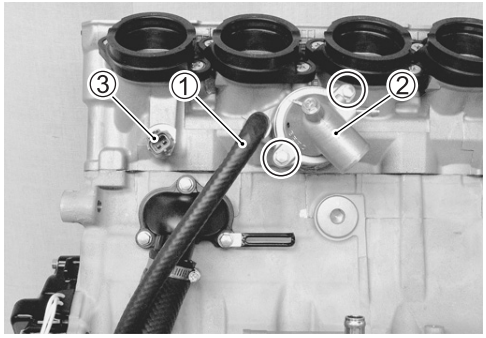

- Remove the cylinder head bolts (M6) ④.

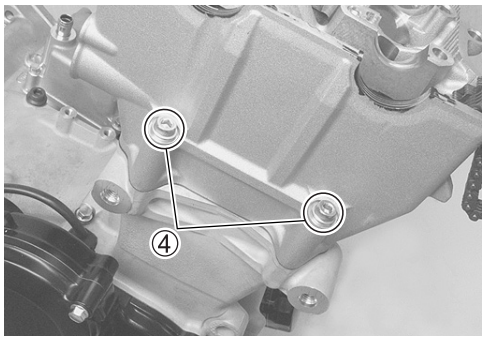

- Remove the cylinder head bolts and washers.

NOTE:
When loosening the cylinder head bolts, loosen each bolt little by little diagonally.

- Remove the cylinder head ⑤.

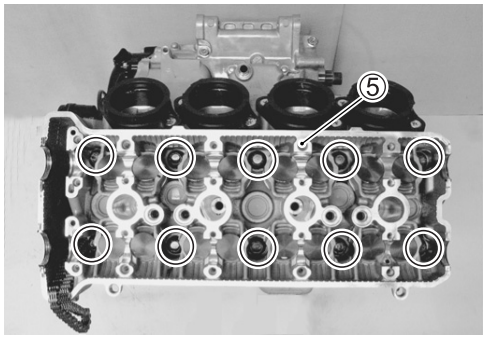

- Remove the cylinder head gasket ⑥ and dowel pins.

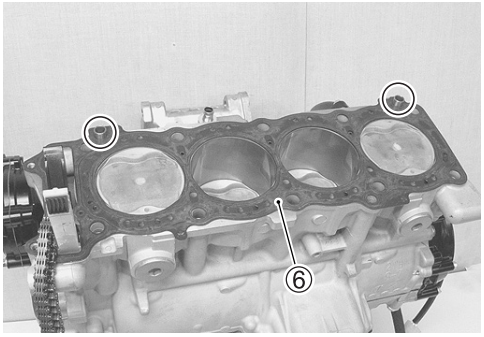

CLUTCH

- Remove the clutch cover ①.

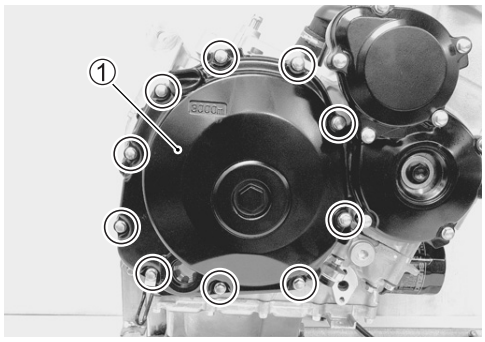

- Remove the gasket ② and dowel pins.

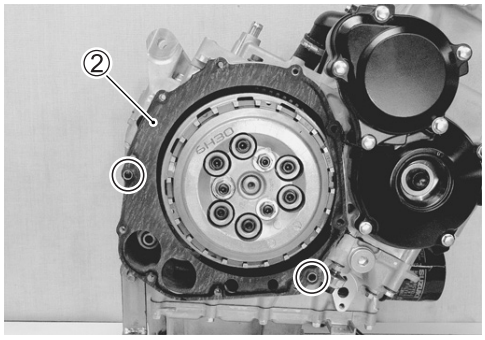

- Hold the clutch housing with the special tool.

CAUTION

Do not damage the clutch plates by the special tool.

TOOL 09920-53740: Clutch sleeve hub holder

- Remove the clutch springs.

NOTE:
Loosen the clutch spring set bolts little by little and diagonally.

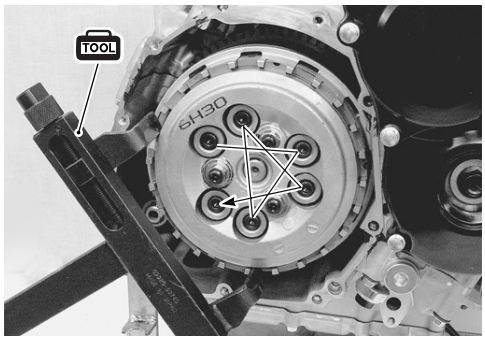

- Remove the pressure plate ③.

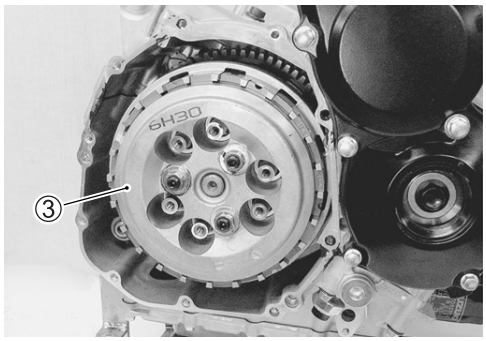

- Remove the clutch drive plates ④ and driven plates ⑤.
- Remove the clutch push piece ⑥, bearing ⑦ and the thrust washer ⑧.

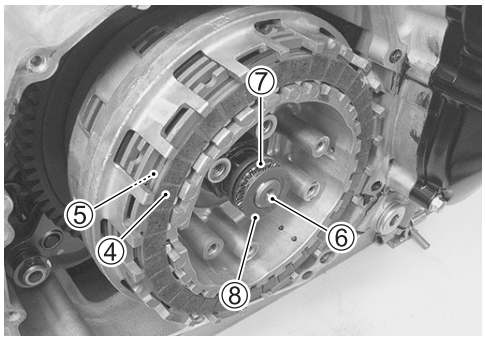

- Remove the spring washer ⑨ and its seat ⑩.

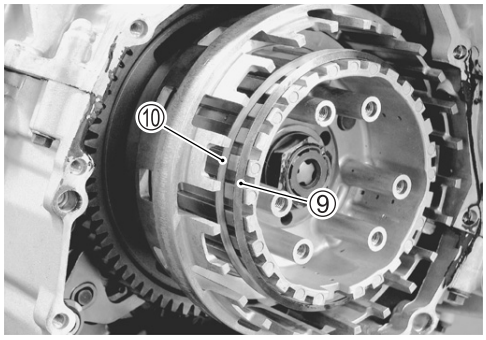

- Remove the clutch push rod ⑪.

NOTE:
If it is difficult to pull out the push rod ⑪, use a magnetic hand or a wire.

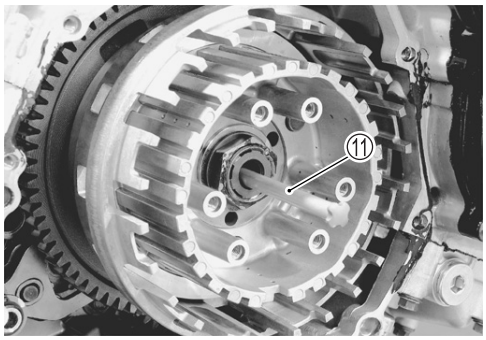

- Unlock the clutch sleeve hub nut.

- Hold the clutch sleeve hub with the special tool.

TOOL 09920-53740: Clutch sleeve hub holder

- Remove the clutch sleeve hub ⑫.

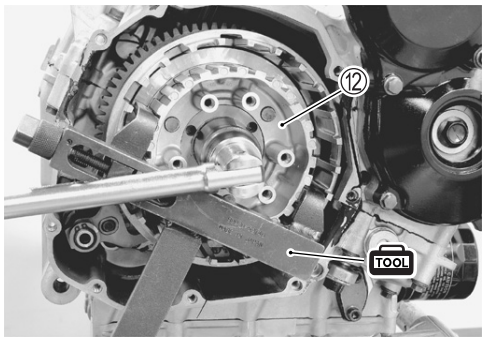

- Remove the conical spring washer ⑬, washer ⑭ and spring washer seat ⑮ from the clutch sleeve hub.

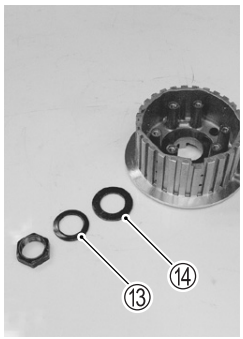

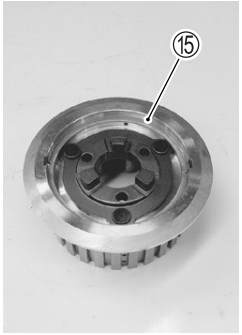

- Remove the spring washers ⑯ and clutch lifter driven cam ⑰.

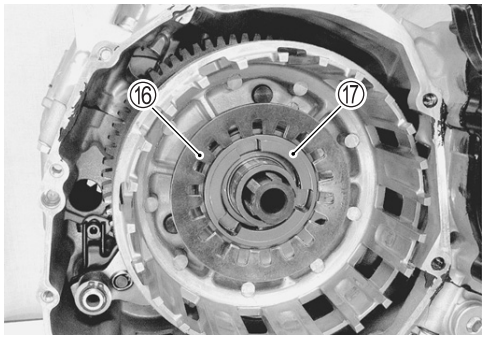

- Remove the clutch lifter drive cam ⑱ and washer ⑲.

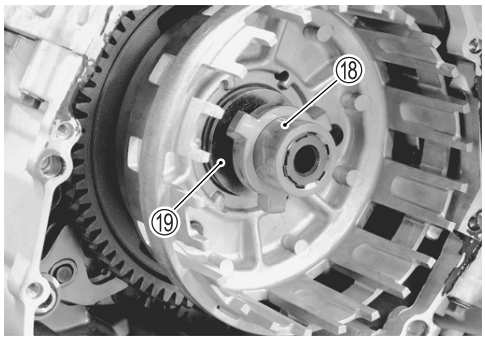

- Remove the spacer ⑳ and bearing ㉑.
- Remove the primary driven gear assembly ㉒.

NOTE:
If it is difficult to remove the primary driven gear, rotate the crankshaft.

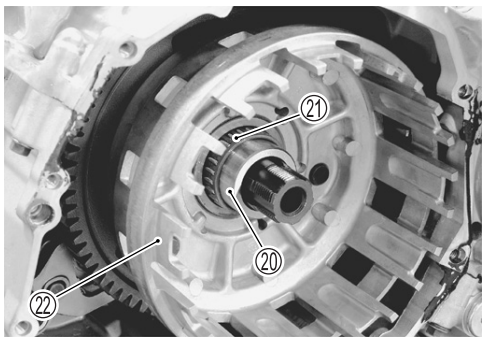

- Hold the clutch sleeve hub with the special tool.

TOOL 09920-53740: Clutch sleeve hub holder

- Remove the clutch sleeve hub ⑫.

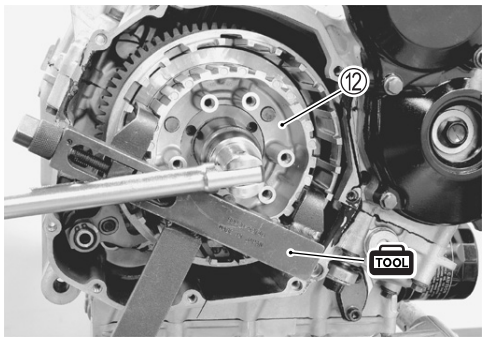

- Remove the conical spring washer ⑬, washer ⑭ and spring washer seat ⑮ from the clutch sleeve hub.

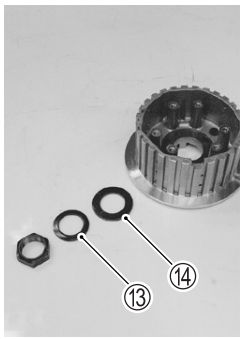

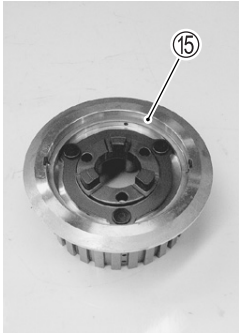

- Remove the spring washers ⑯ and clutch lifter driven cam ⑰.

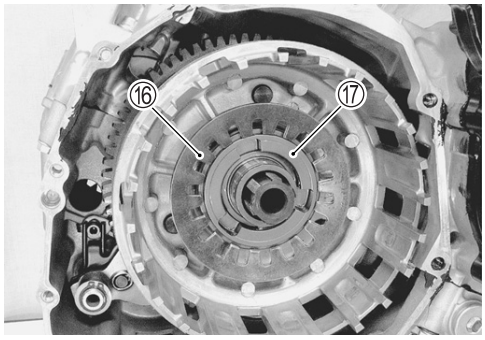

- Remove the clutch lifter drive cam ⑱ and washer ⑲.

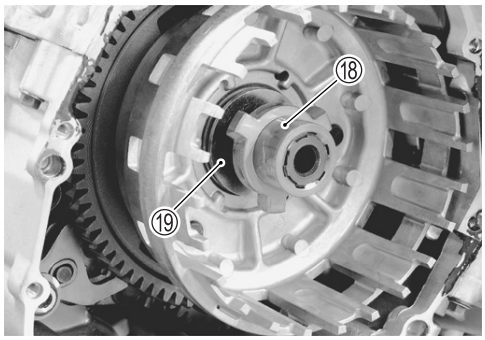

- Remove the spacer ⑳ and bearing ㉑.
- Remove the primary driven gear assembly ㉒.

NOTE:
If it is difficult to remove the primary driven gear, rotate the crankshaft.

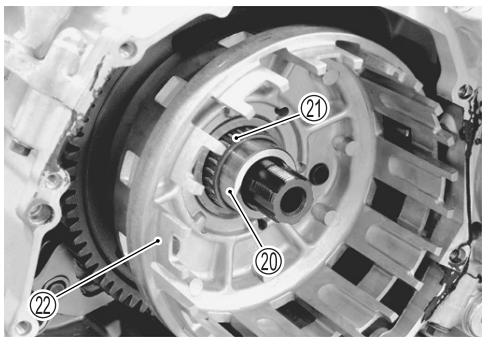

- Remove the thrust washer ㉓.
- Remove the oil pump drive gear ㉔ from the primary driven gear assembly ㉕.

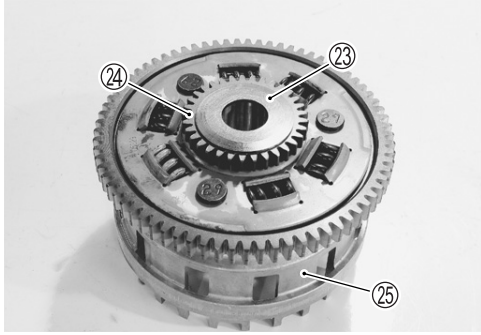

OIL PUMP

- Remove the snap ring ①.
- Remove the oil pump driven gear ②.

NOTE:
Do not drop the snap ring ① into the crankcase.

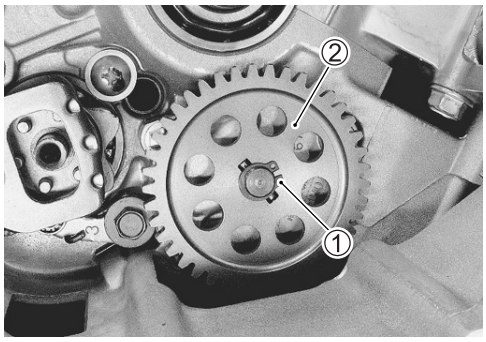

- Remove the pin ③ and washer ④.
- Remove the oil pump ⑤.

NOTE:
Do not drop the pin ③ and washer ④ into the crankcase.

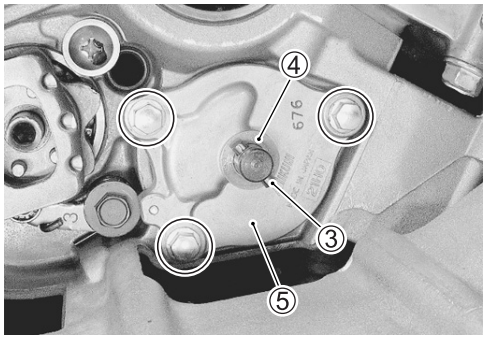

GEARSHIFT SYSTEM

- With the snap ring ① and washer removed, remove the gearshift shaft assembly ②.

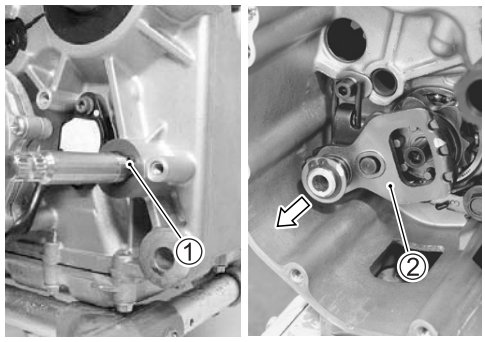

- Remove the gearshift cam plate bolt ③ and gearshift cam plate ④.
- Remove the gearshift cam stopper ⑤.

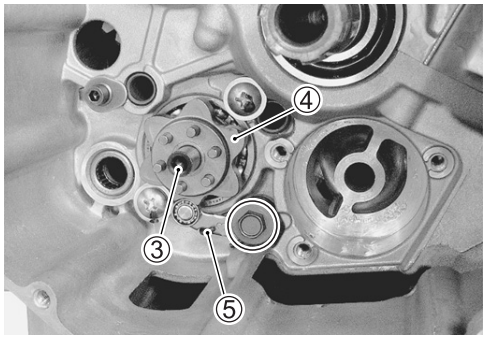

STARTER IDLE GEAR

- Remove the starter idle gear cover ①.

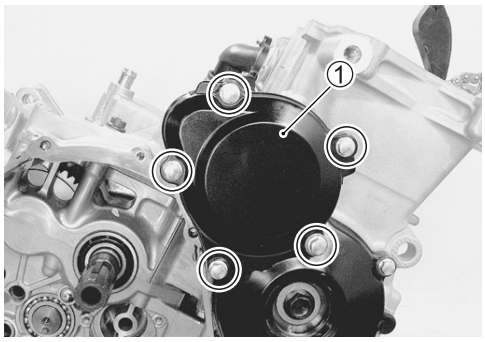

- Remove the dowel pins and gasket ②.

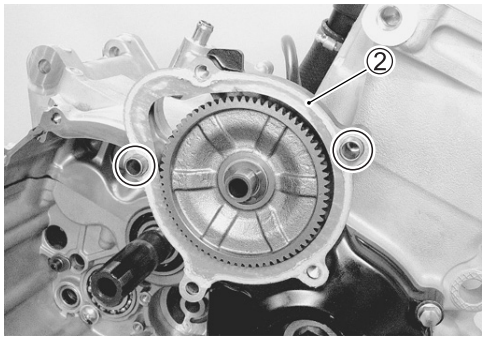

- Remove the spring washer ③, washer ④ and starter idle gear No.1 ⑤.

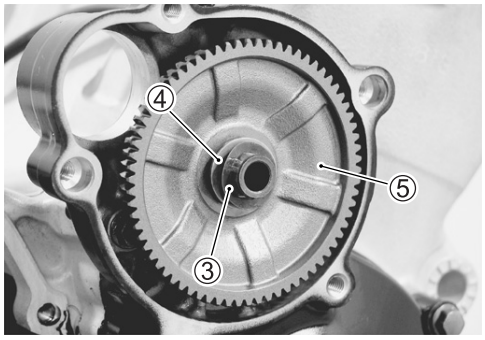

- Remove the shaft ⑥, bearing ⑦ and thrust washer ⑧.

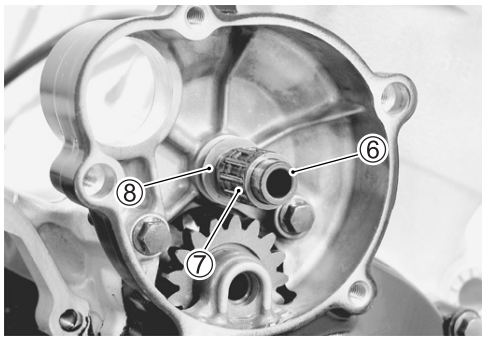

- Remove the starter clutch cover ⑨.

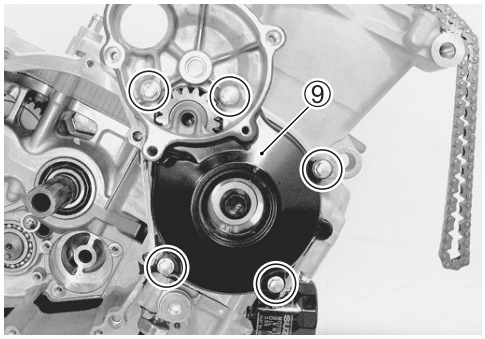

- Remove the dowel pins and gasket ⑩.

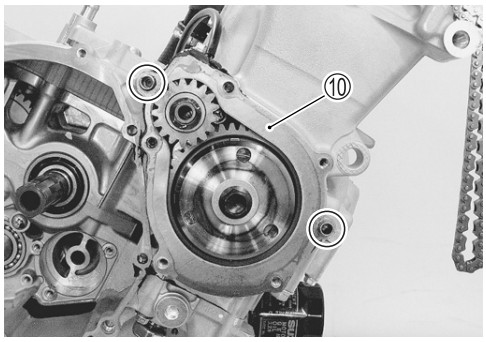

- Remove the spring washer ⑪, starter idle gear No.2 ⑫ and shaft ⑬.

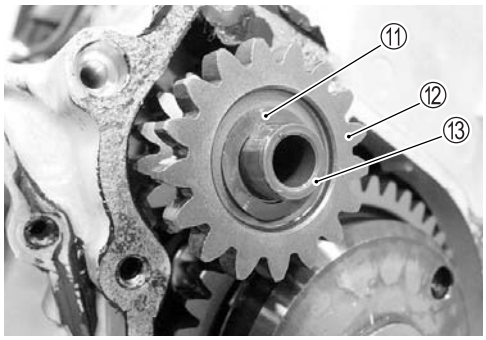

STARTER CLUTCH

- Hold the starter clutch with the special tool.

TOOL 09920-34830: Starter clutch holder

- Remove the starter clutch bolt and washer.
- Remove the starter clutch assembly and washer.

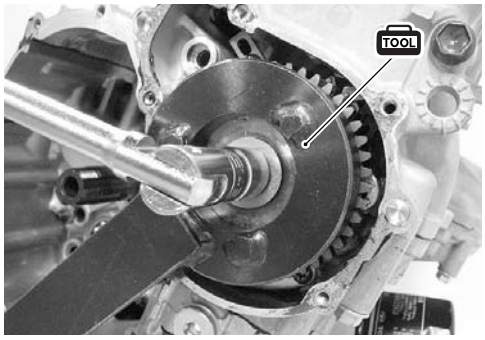

CAM CHAIN/CAM CHAIN TENSIONER/CAM CHAIN GUIDE No.1

- Remove the cam chain tensioner ① and cam chain guide No.1 ②.
- Remove the cam chain ③ and cam chain drive sprocket ④.

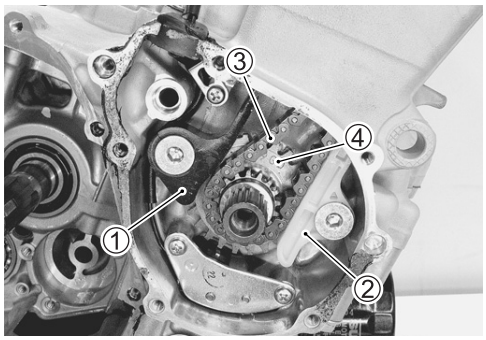

CKP SENSOR

- Remove the CKP sensor ①.

CKP sensor inspection (☞4-38)

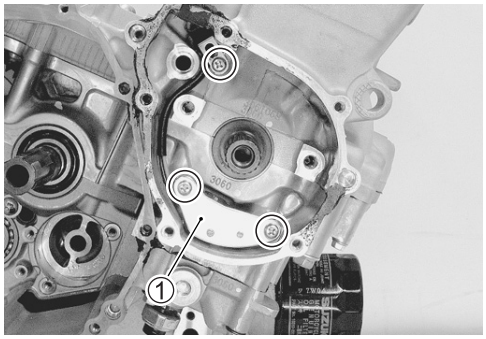

GENERATOR COVER

- Remove the generator cover ①.

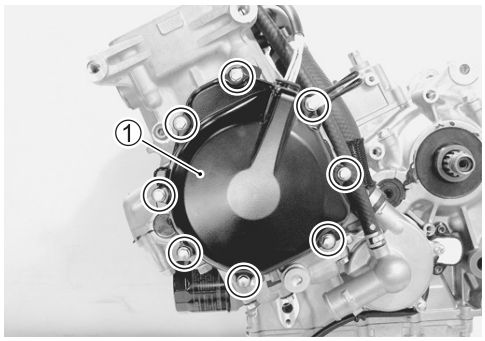

- Remove the dowel pins and gasket ②.

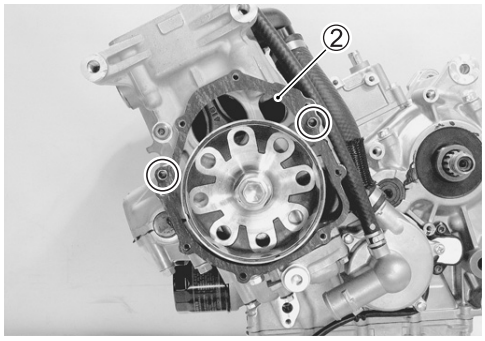

GENERATOR ROTOR

- Hold the generator rotor with the special tool.

TOOL 09930-44520: Rotor holder

- Remove the generator rotor bolt.

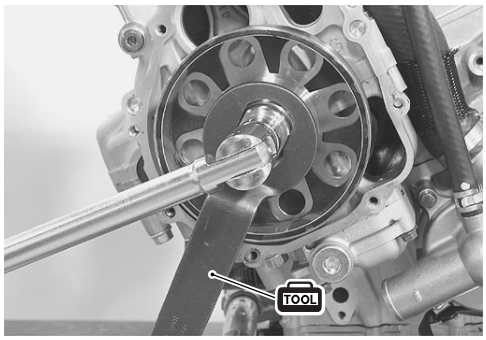

- Install a bolt Ⓐ of suitable size to the left end of crankshaft.

SUITABLE BOLT Ⓐ [M12, length: 28 – 38 mm (1.1 – 1.5 in)]

- Remove the generator rotor with the special tool.

TOOL 09930-34980: Rotor remover

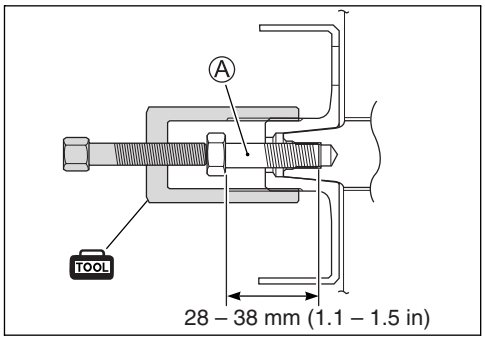

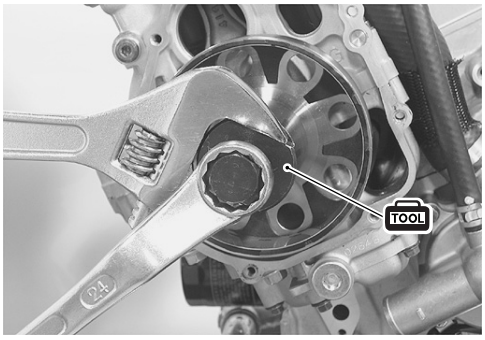

WATER PUMP

- Remove the water inlet cover ①.

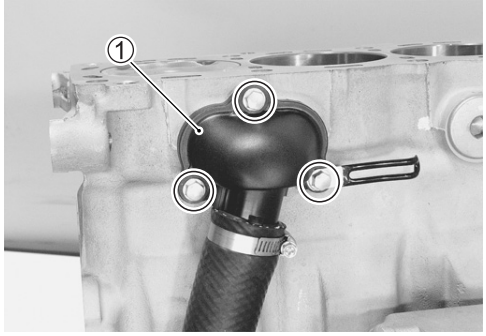

- Remove the water pump ②.

Water pump servicing (☞7-13)

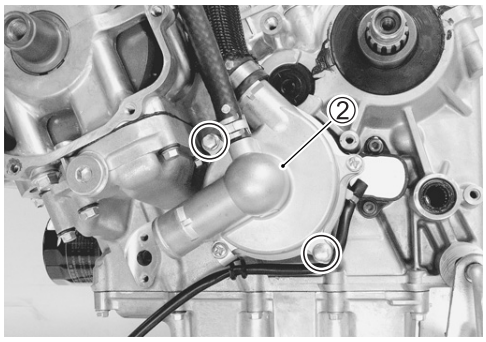

GEAR POSITION SWITCH

- Remove the gear position switch ①.

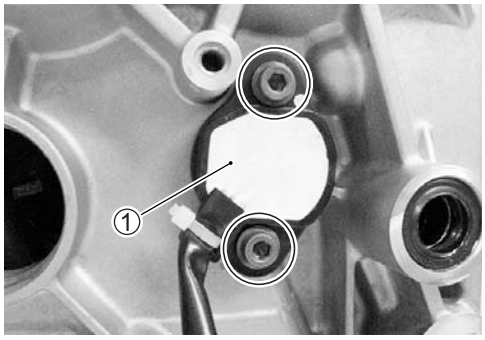

CRANKCASE BREATHER (PCV) COVER

- Remove the crankcase breather cover ①.

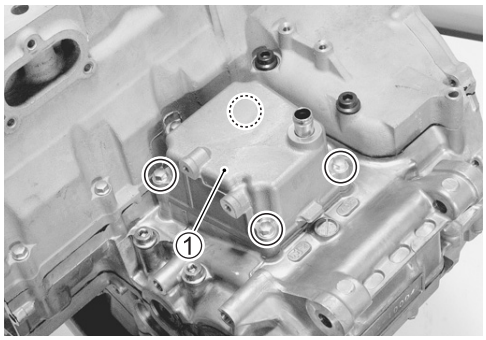

- Remove the gasket ②.

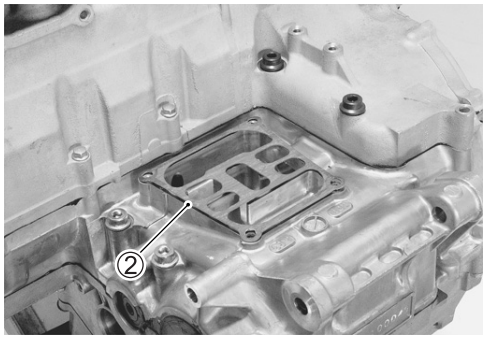

OIL FILTER

- Remove the oil filter with the special tool.

TOOL 09915-40610: Oil filter wrench

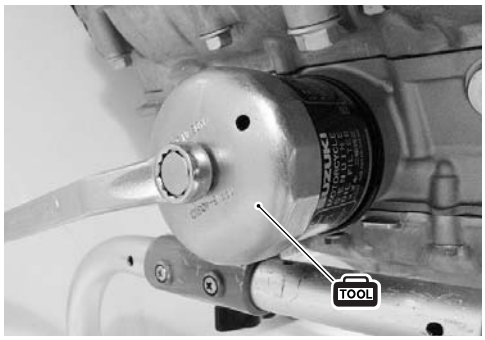

OIL PAN

- Remove the oil pan ①.

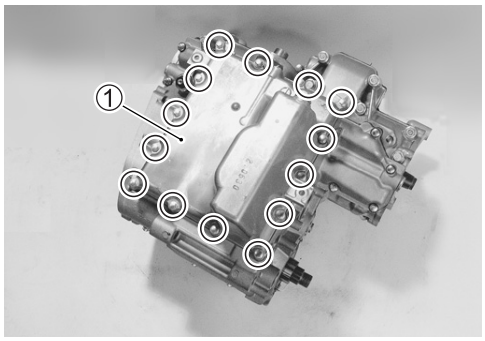

- Remove the gasket ②.
- Remove the oil pipe ③.

OIL PRESSURE SWITCH

- Remove the oil pressure switch ④.

OIL STRAINER

- Remove the oil strainer ⑤ and O-ring.

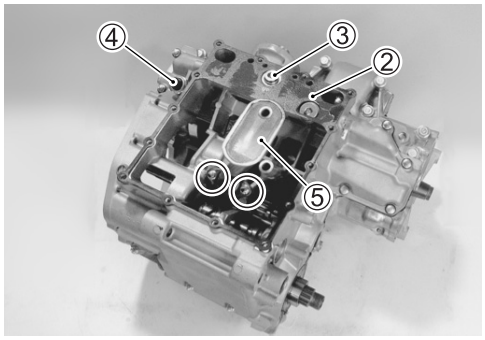

LOWER CRANKCASE

- Remove the lower crankcase bolts (M6).

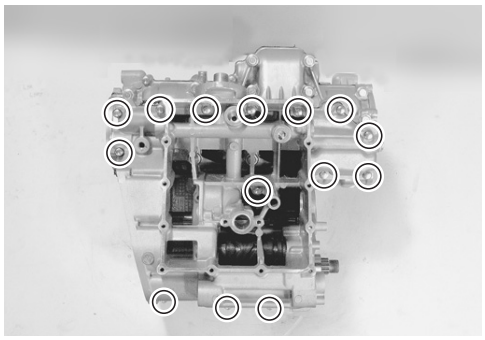

- Remove the lower crankcase bolts (M8).
- Remove the lower crankcase assembly.

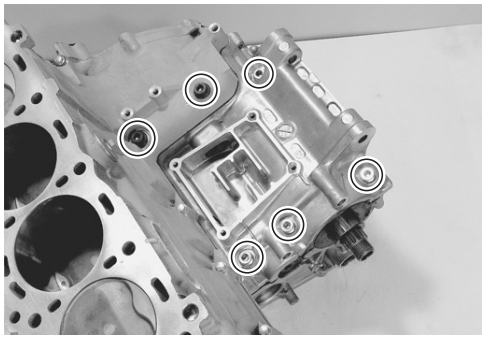

TRANSMISSION

- Remove the countershaft assembly ① and driveshaft assembly ②.
- Remove the O-rings and dowel pins.

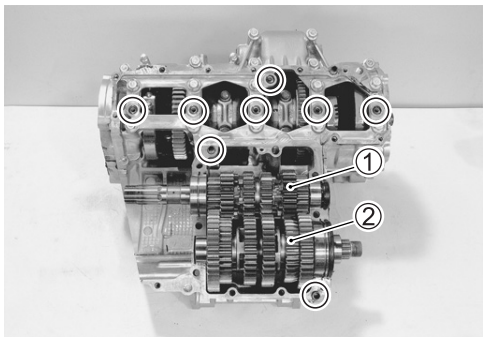

- Remove the C-rings ③ and bearing pins ④.

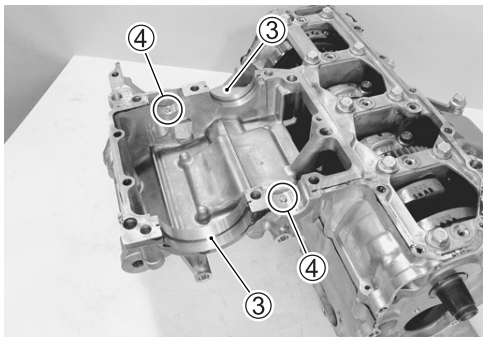

MIDDLE CRANKCASE

- Remove the crankcase bolts (M6).

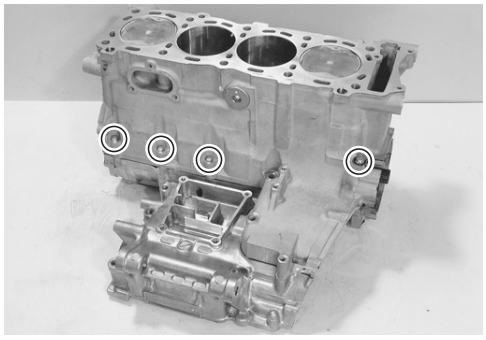

- Remove the crankcase bolts (M6).
- Remove the crankcase bolts (M8).
- Remove the crankshaft journal bolts (M9).

NOTE:
Loosen the crankcase bolts diagonally with the smaller sizes first.

- Remove the middle crankcase and dowel pins.

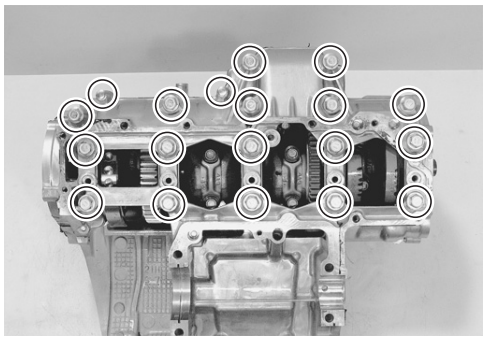

BALANCER SHAFT

- Remove the balancer shaft ① and oil seal ②.

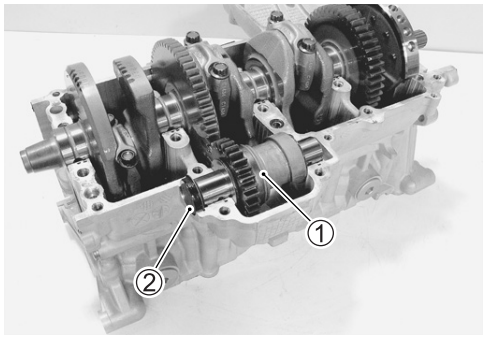

CRANKSHAFT

- Remove the O-ring ①.
- Loosen the bearing cap bolts by using 10 mm, 12 point socket wrench, and tap the bearing cap bolts lightly with plastic hammer to remove the bearing cap.
- Remove the crankshaft and thrust washers ②.

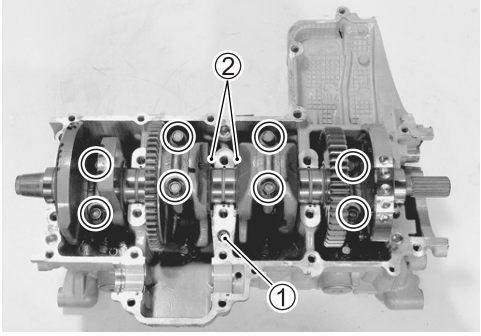

PISTON AND CONROD

- Push the conrod to cylinder head side and remove the piston and conrod from the upper crankcase.

CAUTION

Be careful not to damage the cylinder wall by the conrod.

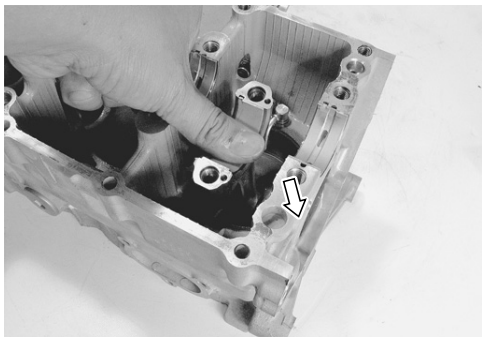

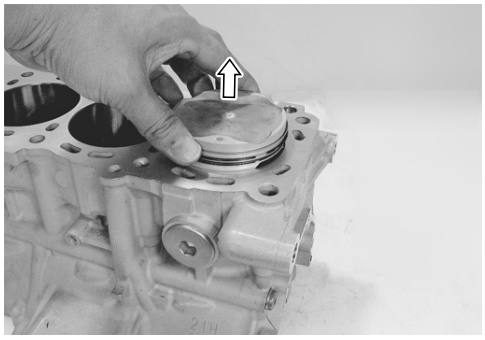

- Remove the piston pin circlip ①.

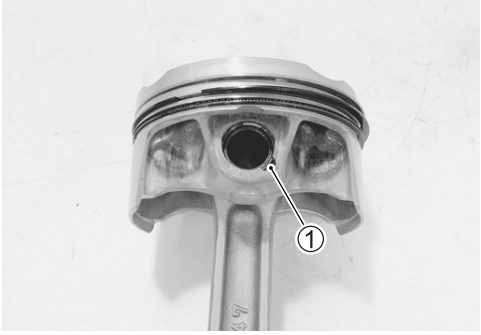

- Separate the piston and conrod by driving out the piston pin.

NOTE:
Scribe the cylinder number on the piston head.

ENGINE COMPONENTS INSPECTION AND SERVICE

CAUTION

Identify the position of each removed part. Organize the parts in their respective groups (i.e., intake, exhaust, No.1 or No.2) so that they can be installed in their original locations.

CYLINDER HEAD COVER

- Clean and check the gasket grooves Ⓐ and PAIR reed valve gasket mating surfaces Ⓑ of cylinder head cover.
- If it is damaged, replace the cylinder head cover with a new one.

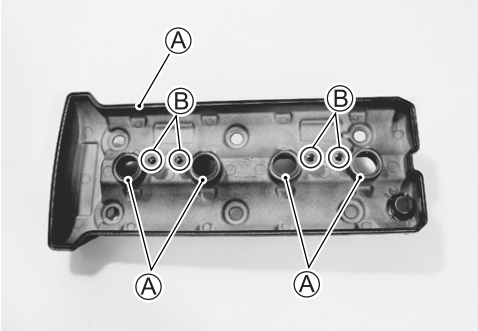

CMP SENSOR

REMOVAL

- Remove the CMP sensor ① from the cylinder head cover.

INSPECTION

- Inspect the CMP sensor. (☞4-36)

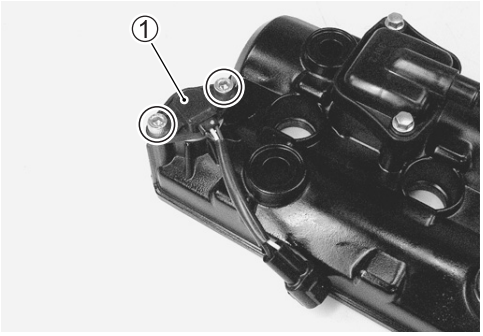

INSTALLATION

- Install the CMP sensor ①.

NOTE:
When installing, clean the CMP sensor's face.

CMP sensor mounting bolt: 10 N·m (1.0 kgf-m, 7.0 lb-ft)

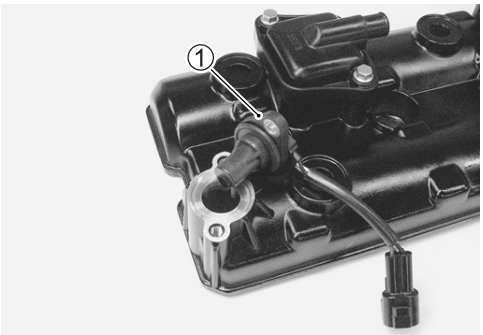

PAIR REED VALVE

REMOVAL

- Remove the PAIR reed valve covers ①.

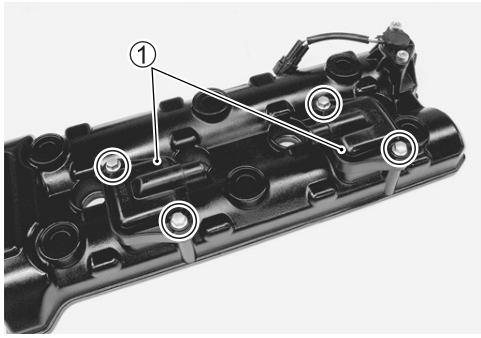

INSPECTION
- Inspect the reed valve for the carbon deposit.
- If the carbon deposit is found in the reed valve, replace the PAIR reed valve with a new one.

INSTALLATION
- Install the PAIR reed valves and PAIR reed valve covers.
- Apply thread lock to the bolts and tighten to the specified torque.

1322 99000-32110: THREAD LOCK SUPER "1322" or equivalent

PAIR reed valve cover bolt: 10 N·m (1.0 kgf-m, 7.0 lb-ft)

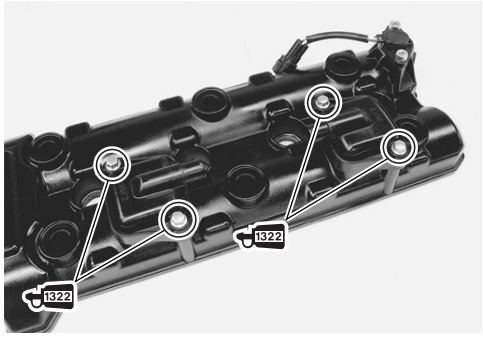

CAMSHAFT

CAMSHAFT IDENTIFICATION

The exhaust camshaft can be distinguished from that of the intake by the embossed letters "EX" (for exhaust) as against letters "IN" (for intake).

CAM WEAR
- Check the camshaft for wear or damage.
- Measure the cam height Ⓗ with a micrometer.

DATA Cam height Ⓗ:
Service Limit (IN) : 37.28 mm (1.468 in)
(EX): 36.58 mm (1.440 in)

TOOL 09900-20202: Micrometer (25 – 50 mm)

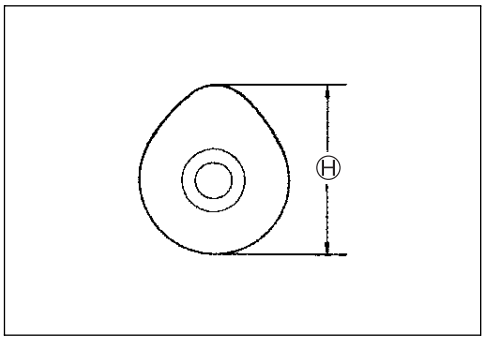

CAMSHAFT JOURNAL WEAR

- Determine whether or not each journal is worn down to the limit by measuring the oil clearance with the camshaft installed in place.
- Use the plastigauge ① to read the clearance at the widest portion, which is specified as follows:

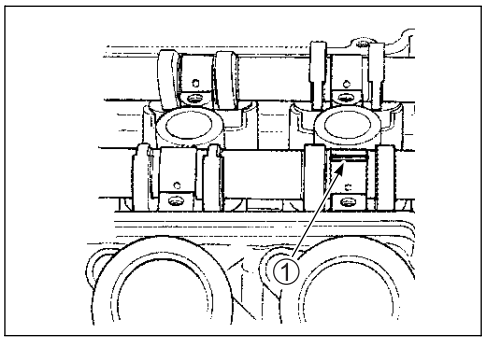

DATA Camshaft journal oil clearance:
Service Limit (IN & EX): 0.150 mm (0.0059 in)

TOOL 09900-22301: Plastigauge
09900-22302: Plastigauge

NOTE:
Install camshaft journal holders to their original positions. (☞3-101)

- Tighten the camshaft journal holder bolts evenly and diagonally to the specified torque.

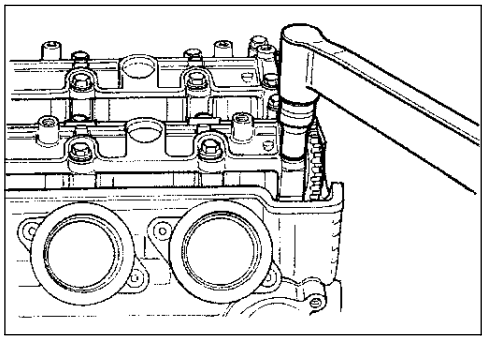

Camshaft journal holder bolt: 10 N·m (1.0 kgf-m, 7.0 lb-ft)

NOTE:
Do not rotate the camshaft with the plastigauge in place.

- Remove the camshaft holders, and read the width of the compressed plastigauge with envelope scale.
- This measurement should be taken at the widest part.

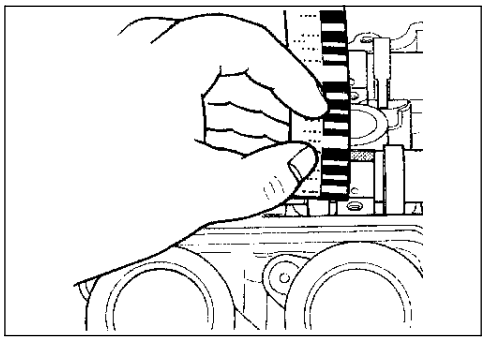

- If the camshaft journal oil clearance measured exceeds the limit, measure the inside diameter of the camshaft journal holder and outside diameter of the camshaft journal.
- Replace the camshaft or the cylinder head depending upon which one exceeds the specification.

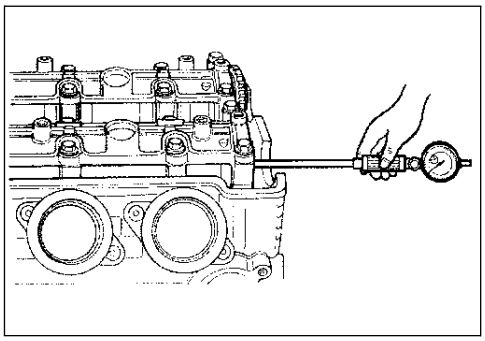

DATA Camshaft journal holder I.D.:
Standard (IN & EX):
24.012 – 24.025 mm (0.9454 – 0.9459 in)

TOOL 09900-20602: Dial gauge (1/1000, 1 mm)
09900-22403: Small bore gauge (18 – 35 mm)

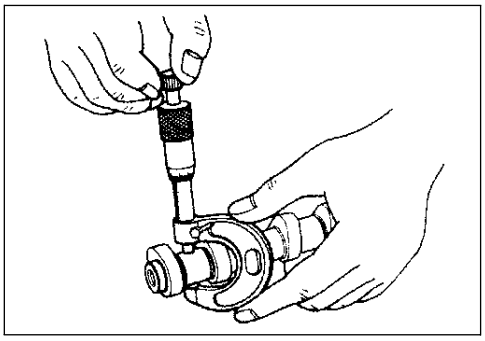

DATA Camshaft journal O.D.:
Standard (IN & EX):
23.959 – 23.980 mm (0.9433 – 0.9441 in)

TOOL 09900-20205: Micrometer (0 – 25 mm)

CAMSHAFT RUNOUT
- Measure the runout using the dial gauge.
- Replace the camshaft if the runout exceeds the limit.

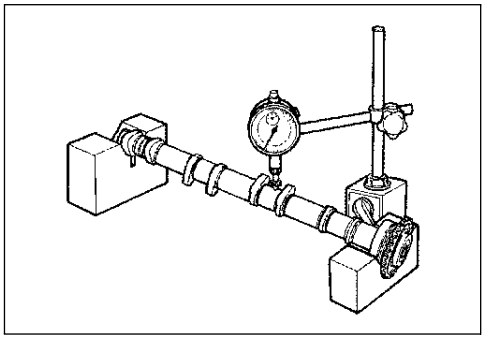

DATA Camshaft runout:
Service Limit (IN & EX): 0.10 mm (0.004 in)

TOOL 09900-20607: Dial gauge (1/100 mm)
09900-20701: Magnetic stand
09900-21304: V-block set (100 mm)

CAM SPROCKET
- Inspect the sprocket teeth for wear.
- If they are worn, replace the sprocket/camshaft assembly and cam chain as a set.

CAM CHAIN TENSION ADJUSTER

INSPECTION
- Remove the cam chain tension adjuster cap bolt and spring.
- Check that the push rod slides smoothly when releasing stopper ①.
- If it does not slide smoothly, replace the cam chain tension adjuster with a new one.

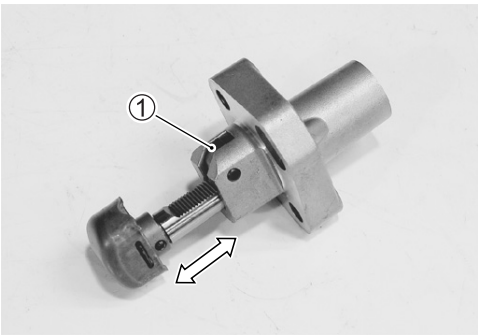

CAM CHAIN TENSIONER

INSPECTION

- Check the contacting surface of the cam chain tensioner.
- If it is worn or damaged, replace it with a new one.

CAM CHAIN GUIDE

INSPECTION

- Check the contacting surfaces of the cam chain guides No.1 and No.2.
- If they are worn or damaged, replace them with the new ones.

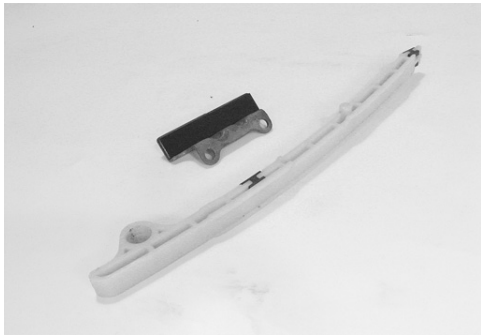

CYLINDER HEAD AND VALVE

VALVE AND VALVE SPRING DISASSEMBLY

- Remove the tappet ① and shim ② by fingers or magnetic hand.

CAUTION

Identify the position of each removed part.

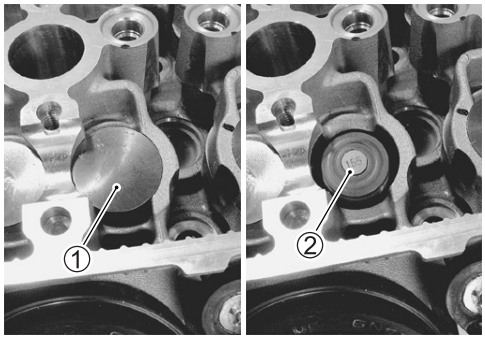

- Insert the special tool ③ between the valve spring and cylinder head.
- Using the special tools, compress the valve spring and remove the two cotter halves from the valve stem.

TOOL 09916-14510: Valve lifter
09916-14530: Valve lifter attachment
09916-84511: Tweezers
09919-28610: Sleeve protector

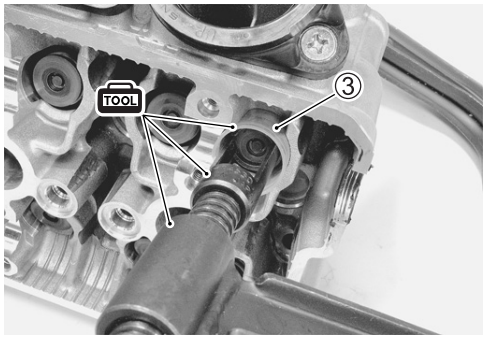

CAUTION

To prevent damage of the tappet sliding surface with the special tool, use the protector.

- Remove the valve spring retainer ④ and valve spring ⑤.
- Pull out the valve ⑥ from the combustion chamber side.

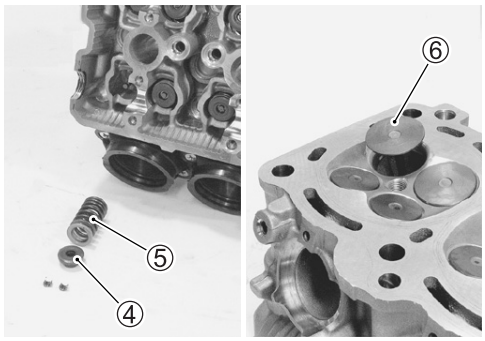

- Remove the oil seal ⑦ and spring seat ⑧.

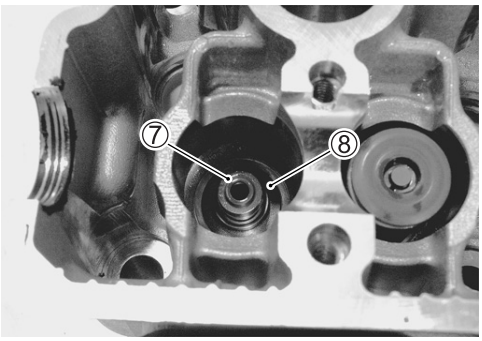

CAUTION

Do not reuse the removed oil seal.

- Remove the other valves in the same manner as described previously.

CYLINDER HEAD DISTORTION

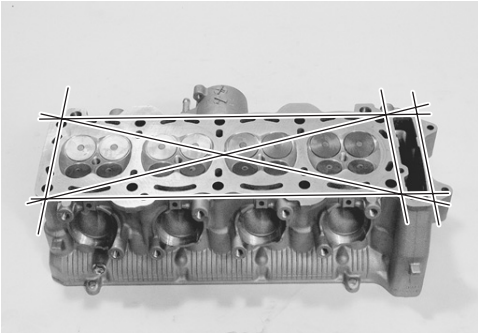

- Decarbonize the combustion chambers.
- Check the gasketed surface of the cylinder head for distortion with a straightedge and thickness gauge, taking a clearance reading at several places indicated.
- If the largest reading at any position of the straightedge exceeds the limit, replace the cylinder head.

DATA Cylinder head distortion:
Service Limit: 0.20 mm

TOOL 09900-20803: Thickness gauge

VALVE STEM RUNOUT

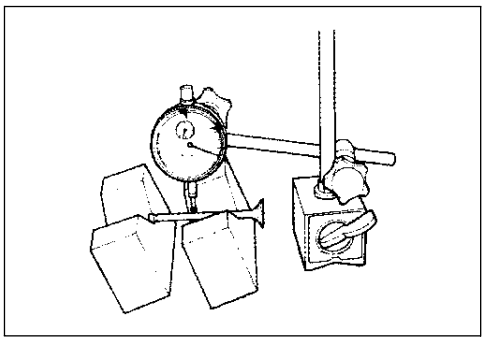

- Support the valve using V-blocks and check its runout using the dial gauge as shown.
- If the runout exceeds the service limit, replace the valve.

DATA Valve stem runout:
Service Limit: 0.05 mm

TOOL 09900-20607: Dial gauge (1/100 mm)
09900-20701: Magnetic stand
09900-21304: V-block set (100 mm)

CAUTION

Be careful not to damage the valve and valve stem when handling it.

VALVE HEAD RADIAL RUNOUT

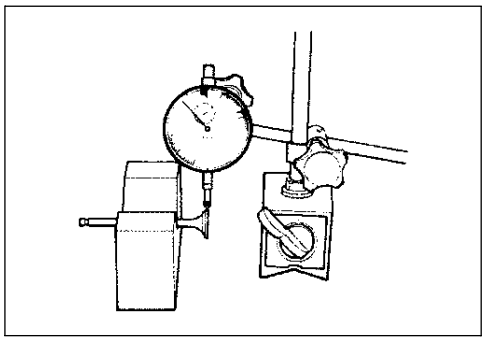

- Place the dial gauge at a right angle to the valve head face and measure the valve head radial runout.
- If it measures more than the service limit, replace the valve.

DATA Valve head radial runout:
Service Limit: 0.03 mm (0.001 in)

TOOL 09900-20607: Dial gauge (1/100 mm)
09900-20701: Magnetic stand
09900-21304: V-block set (100 mm)

CAUTION

Be careful not to damage the valve and valve stem when handling it.

VALVE STEM AND VALVE FACE WEAR CONDITION

- Visually inspect each valve stem and valve face for wear and pitting. If it is worn or damaged, replace the valve with a new one.

VALVE STEM DEFLECTION

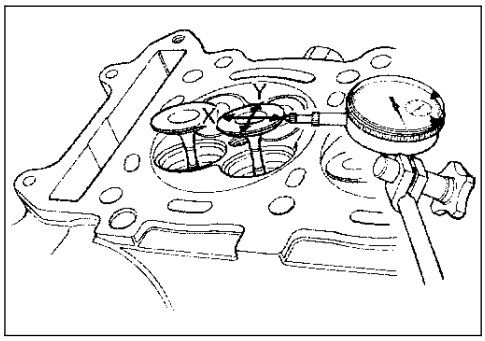

- Lift the valve about 10 mm from the valve seat.
- Measure the valve stem deflection in two directions, perpendicular to each other, by positioning the dial gauge as shown.
- If the deflection measured exceeds the limit, then determine whether the valve or the guide should be replaced with a new one.

DATA Valve stem deflection (IN & EX):
Service Limit: 0.25 mm

TOOL 09900-20607: Dial gauge (1/100 mm)
09900-20701: Magnetic stand

VALVE STEM WEAR

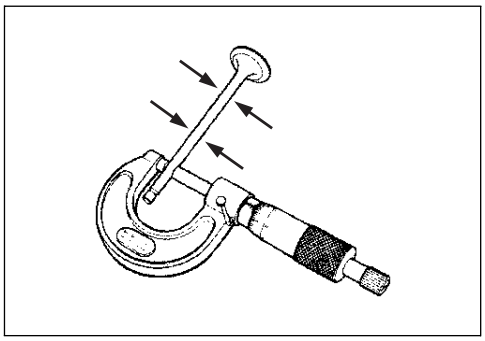

- If the valve stem is worn down to the limit, as measured with a micrometer, replace the valve.
- If the stem is within the limit, then replace the guide.
- After replacing valve or guide, be sure to recheck the deflection.

DATA Valve stem O.D.:
Standard (IN) : 4.475 – 4.490 mm (0.1762 – 0.1768 in)
(EX) : 4.455 – 4.470 mm (0.1754 – 0.1760 in)

TOOL 09900-20205: Micrometer (0 – 25 mm)

NOTE:
If valve guides have to be removed for replacement after inspecting related parts, carry out the steps shown in valve guide servicing. (☞ below)

VALVE GUIDE SERVICING

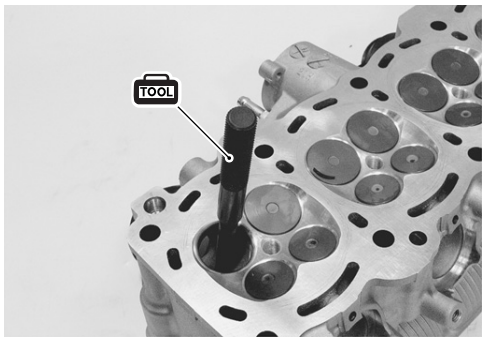

- Using the valve guide remover, drive the valve guide out toward the intake or exhaust camshaft side.

TOOL 09916-43211: Valve guide remover/installer

NOTE:
** Discard the removed valve guide subassemblies.*
** Only oversized valve guides are available as replacement parts. (Part No.11115-29G70)*

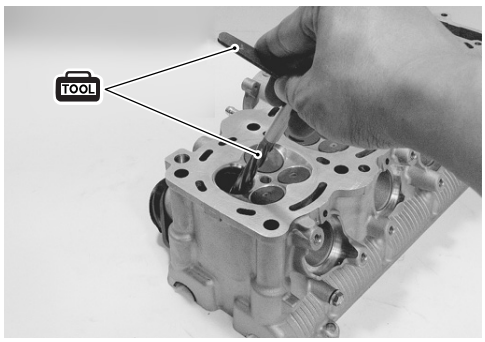

- Re-finish the valve guide holes in cylinder head with the reamer and handle.

TOOL 09916-33320: Valve guide reamer
09916-34542: Reamer handle

CAUTION

When refinishing or removing the reamer from the valve guide hole, always turn it clockwise.

- Cool down the new valve guides in a freezer for about one hour and heat the cylinder head to 100 – 150 °C (212 – 302 °F) with a hot plate.

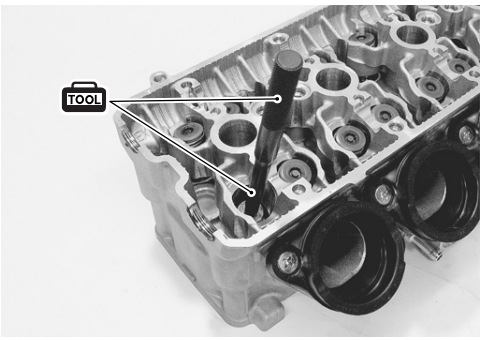

CAUTION

Do not use a burner to heat the valve guide hole to prevent cylinder head distortion.

- Apply engine oil to the valve guide hole.
- Drive the valve guide into the hole using the valve guide installer ① and attachment ②.

TOOL 09916-43211: Valve guide installer/remover
09916-53330: Attachment

NOTE:
Install the valve guide until the attachment ② contacts the cylinder head ③.

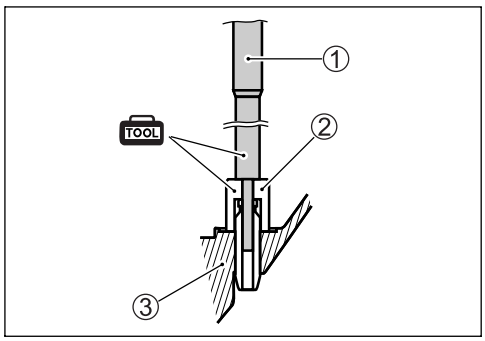

CAUTION

Failure to oil the valve guide hole before driving the new guide into place may result in a damaged guide or head.

- After installing the valve guides, re-finish their guiding bores using the reamer.
- Clean and oil the guides after reaming.

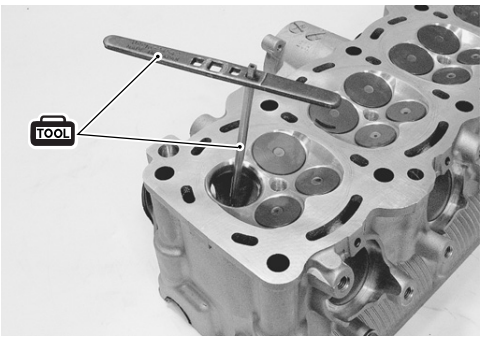

TOOL 09916-33210: Valve guide reamer
09916-34542: Reamer handle

NOTE:
** Be sure to cool down the cylinder head to ambient air temperature.*
** Insert the reamer from the combustion chamber and always turn the reamer handle clockwise.*

VALVE SEAT WIDTH INSPECTION

- Visually check for valve seat width on each valve face.
- If the valve face has worn abnormally, replace the valve.
- Coat the valve seat with a red lead (Prussian Blue) and set the valve in place. Rotate the valve with light pressure.
- Check that the transferred red lead (blue) on the valve face is uniform all around and in center of the valve face.

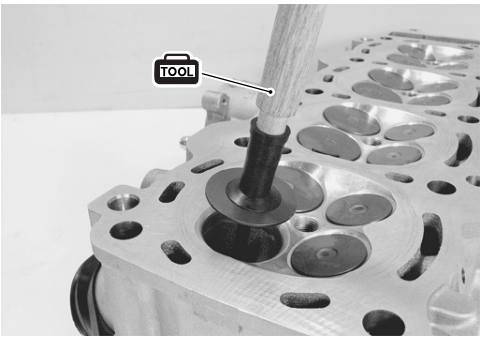

TOOL 09916-10911: Valve lapper set

- If the seat width Ⓦ measured exceeds the standard value or seat width is not uniform, reface the seat using the seat cutter.

DATA Valve seat width Ⓦ:
Standard: 0.9 – 1.1 mm (0.035 – 0.043 in)

If the valve seat is out of specification, re-cut the seat.

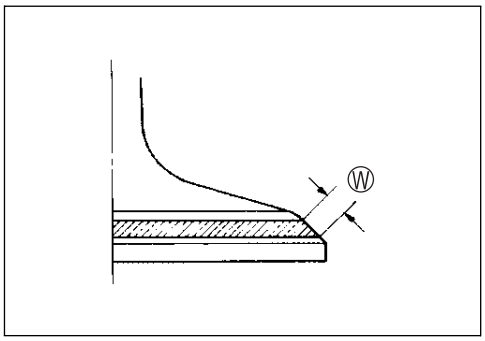

VALVE SEAT SERVICING

- The valve seats ① for both the intake valve ② and exhaust valve ③ are machined to five different angles. The seat contact surface is cut at 45°.

	IN	EX
Valve seat angles	30°, 45°, 55°	15°, 45°, 60°
Valve seat width	0.9 – 1.1mm (0.035 – 0.043 in)	
Valve diameter	30 mm (1.18 in)	24 mm (0.94 in)
Valve guide I.D.	4.500 – 4.512 mm (0.177 – 0.178 in)	

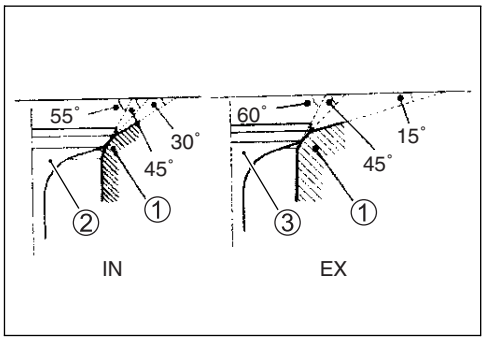

CAUTION

- **The valve seat contact area must be inspected after each cut.**
- **Do not use lapping compound after the final cut is made. The finished valve seat should have a velvety smooth finish but not a highly polished or shiny finish. This will provide a soft surface for the final seating of the valve which will occur during the first few seconds of engine operation.**
- **The titanium valves are coated with an oxidized membrane treatment to resist wear but the membrane tend to be removed if lapped after valve seat servicing.**

NOTE:
After servicing the valve seats, be sure to check the valve clearance after the cylinder head has been reinstalled. (☞2-7)

- Clean and assemble the head and valve components. Fill the intake and exhaust ports with gasoline to check for leaks.
- If any leaks occur, inspect the valve seat and face for burrs or other things that could prevent the valve from sealing.

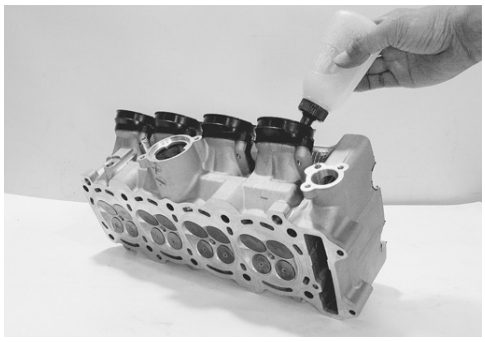

⚠ WARNING

Always use extreme caution when handling gasoline.

VALVE SPRING

The force of the coil spring keeps the valve seat tight. Weakened spring result in reduced engine power output, and often account for the chattering noise coming from the valve mechanism.

- Check the valve spring for proper strength by measuring its free length and also by the force required to compress it.
- If the spring length is less than the service limit, or if the force required to compress the spring does not fall within the range specified, replace the spring.

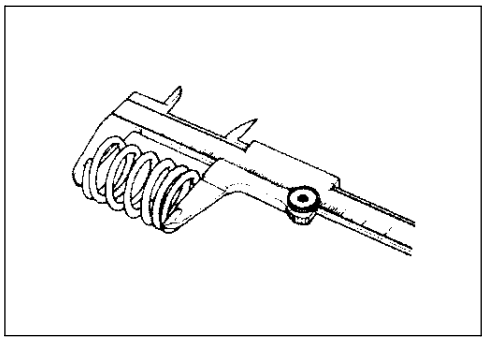

DATA Valve spring free length:
Service limit (IN & EX): 38.0 mm (1.50 in)

TOOL 09900-20102: Vernier calipers

DATA Valve spring tension (IN & EX):
Standard:
Approx. 163 N, 16.6 kgf/33.55 mm (36.6 lbs/1.32 in)

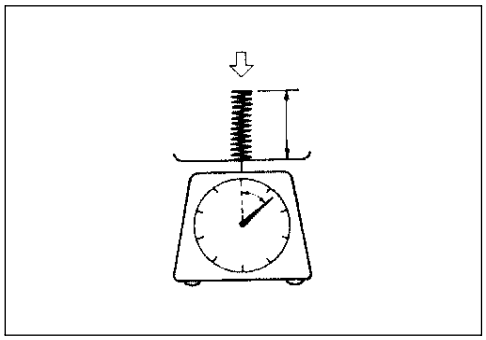

VALVE AND VALVE SPRING REASSEMBLY

- Install the valve spring seat.
- Apply MOLYBDENUM OIL SOLUTION to the oil seal ①, and press-fit it into position.

M/O MOLYBDENUM OIL SOLUTION

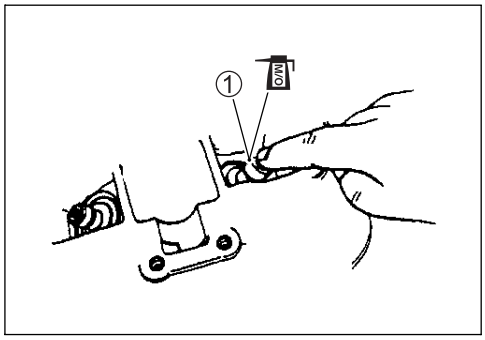

CAUTION

Do not reuse the removed oil seal.

- Insert the valve, with its stem coated with MOLYBDENUM OIL SOLUTION all around and along the full stem length without any break.

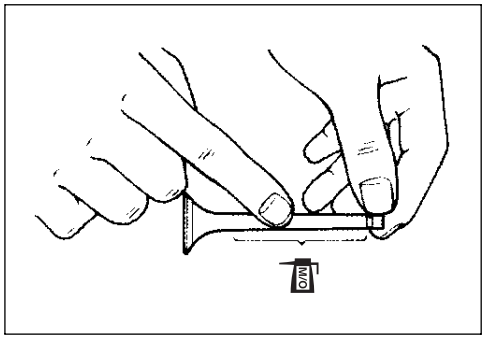

CAUTION

When inserting the valve, take care not to damage the lip of the oil seal.

M/O MOLYBDENUM OIL SOLUTION

- Install the valve spring with the small-pitch portion Ⓐ facing cylinder head.

Ⓑ Large-pitch portion
Ⓒ UPWARD
Ⓓ Paint

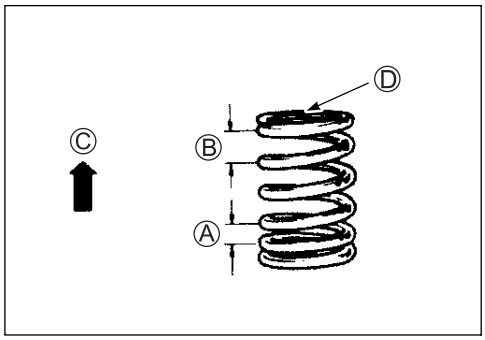

- Put on the valve spring retainer ②, and using the special tools, press down the spring, fit the cotter halves ③ to the stem end, and release the lifter to allow the cotter halves to wedge in between retainer and stem.

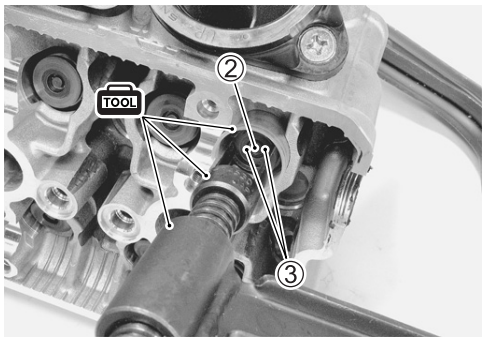

TOOL 09916-14510: Valve lifter
09916-14530: Valve lifter attachment
09916-84511: Tweezers
09919-28610: Sleeve protector

- Be sure that the rounded lip Ⓔ of the cotter fits snugly into the groove Ⓕ in the stem end.
- Install the other valves and springs in the same manner as described previously.

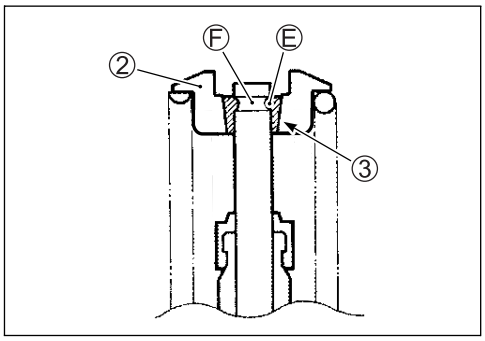

CAUTION

Be sure to restore each spring and valve to their original positions.

CAUTION

Be careful not to damage the valve and valve stem when handling it.

② Valve spring retainer
③ Cotter

- Install the tappet shims and the tappets to their original positions.

NOTE:
** Apply engine oil to the stem end, shim and tappet before fitting them.*
** When seating the tappet shim, be sure the figure printed surface faces the tappet.*

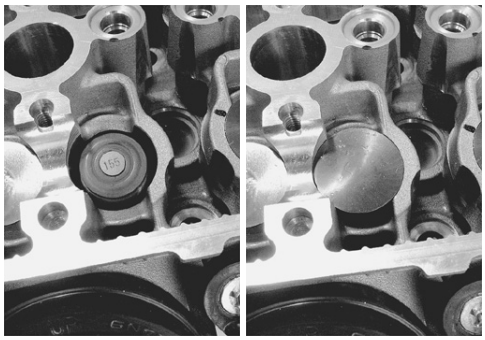

INTAKE PIPE

- Remove the intake pipes.

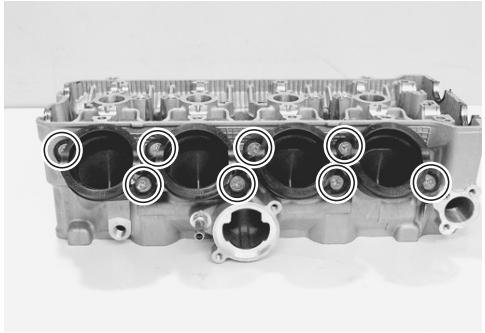

- Apply grease to the O-rings.

99000-25010: SUZUKI SUPER GREASE "A" or equivalent

- Install the intake pipes with "UP" mark faces to the top side.

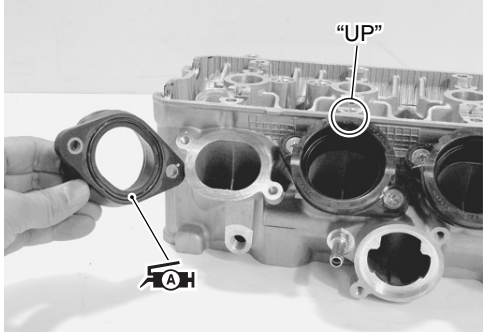

WATER BYPASS UNION

- Remove the water bypass union ①.

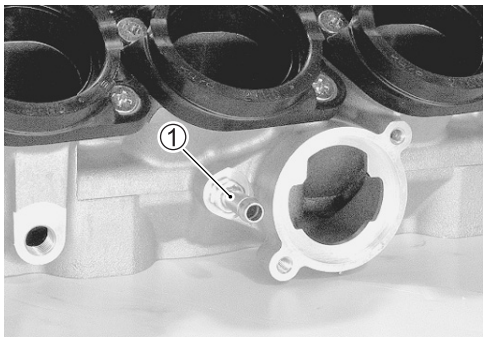

- Apply bond to the thread part of water bypass union and tighten it to the specified torque.

1207B 99000-31140: SUZUKI BOND "1207B" or equivalent

Water bypass union: 12 N·m (1.2 kgf-m, 8.5 lb-ft)

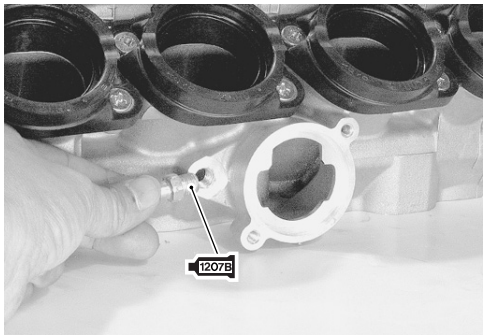

CLUTCH

CLUTCH DRIVE PLATE INSPECTION

NOTE:

** Wipe off engine oil from the clutch drive plates with a clean rag.*

** Clutch drive plate No.1: I.D. 111 mm (4.4 in)/ Friction piece: 36 pcs*

** Clutch drive plate No.2: I.D. 111 mm (4.4 in)/ Friction piece: 48 pcs*

** Clutch drive plate No.3: I.D. 118 mm (4.6 in)/ Friction piece: 36 pcs*

Refer to page 3-94 for details.

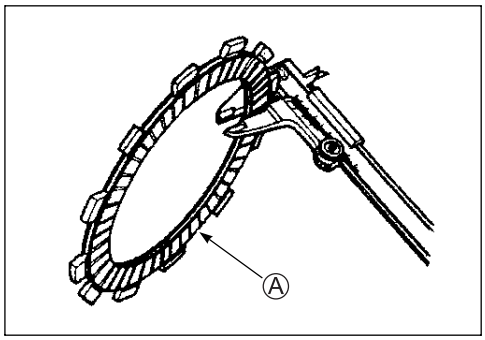

Ⓐ Friction piece

- Measure the thickness of drive plates with a vernier calipers.
- If the drive plate thickness is found to have reached the limit, replace it with a new one.

DATA Drive plate thickness: Service Limit: 2.42 mm (0.095 in)

TOOL 09900-20102: Vernier calipers

- Measure the claw width of drive plates with a vernier calipers.
- Replace the drive plates found to have worn down to the limit.

DATA Drive plate claw width:
Service Limit: 13.05 mm (0.5138 in)

TOOL 09900-20102: Vernier calipers

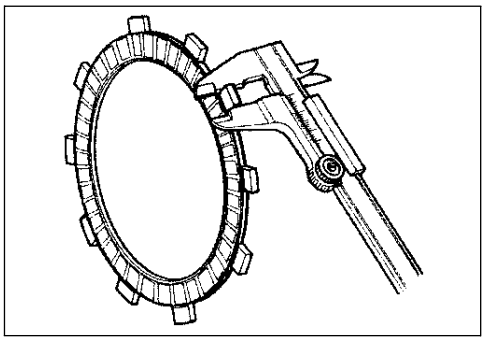

CLUTCH DRIVEN PLATE INSPECTION

NOTE:
Wipe off engine oil from the clutch driven plates with a clean rag.

- Measure each driven plate for distortion with a thickness gauge and surface plate.
- Replace driven plates which exceed the limit.

DATA Driven plate distortion (No.1, No.2 and No.3):
Service Limit: 0.10 mm (0.004 in)

TOOL 09900-20803: Thickness gauge

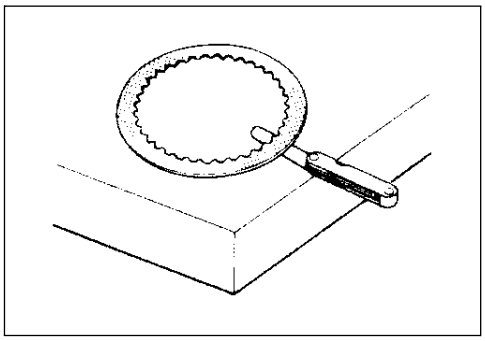

CLUTCH SPRING INSPECTION

- Measure the free length of each coil spring with a vernier calipers, and compare the length with the specified limit.
- Replace all the springs if any spring is not within the limit.

DATA Clutch spring free length:
Service Limit: 54.2 mm (2.134 in)

TOOL 09900-20102: Vernier calipers

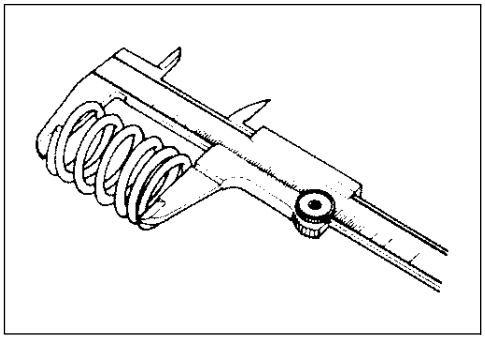

CLUTCH BEARING INSPECTION

- Inspect the clutch release bearing for any abnormality, particularly cracks, to decide whether it can be reused or should be replaced.
- Smooth engagement and disengagement of the clutch depends on the condition of this bearing.

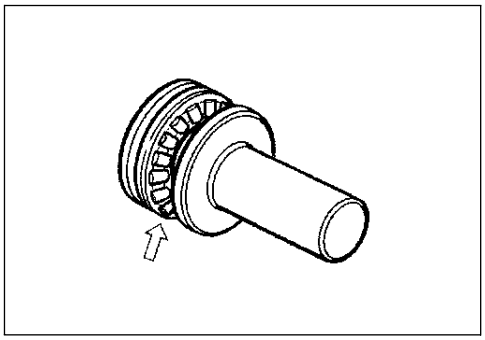

CLUTCH SLEEVE HUB/PRIMARY DRIVEN GEAR ASSEMBLY

- Inspect the slot of the clutch sleeve hub and primary driven gear assembly for damage or wear caused by the clutch plates. If necessary, replace it with a new one.

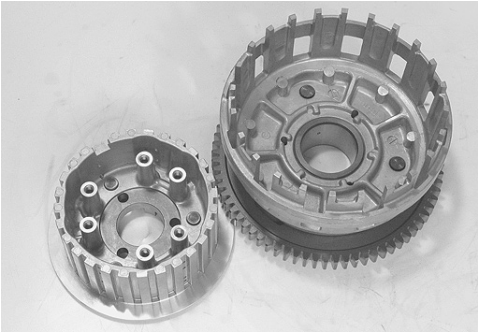

CLUTCH LIFTER

CLUTCH LIFTER DRIVE CAM AND DRIVEN CAM INSPECTION

- Inspect the clutch lifter drive cam and driven cam for wear or damage.
- If any defects are found, replace the clutch lifter drive cam and driven cam as a set.

CLUTCH LIFTER PIN ADJUSTMENT

NOTE:
When adjusting the clutch lifter, it is not necessary to install the clutch onto the countershaft.

- Assemble the following parts into the primary driven gear assembly. (☞3-92 to -96)

* Clutch sleeve hub
* Spring washer seat, Spring washer
* Clutch drive plates, Clutch driven plates
* Pressure plate
* Clutch springs, Clutch springs set bolts

Clutch spring set bolt: 10 N·m (1.0 kgf-m, 7.0 lb-ft)

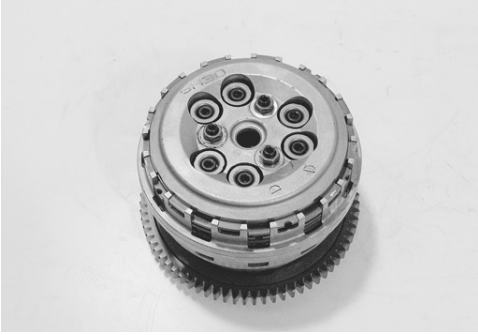

- Remove the clutch assembly from the primary driven gear assembly.

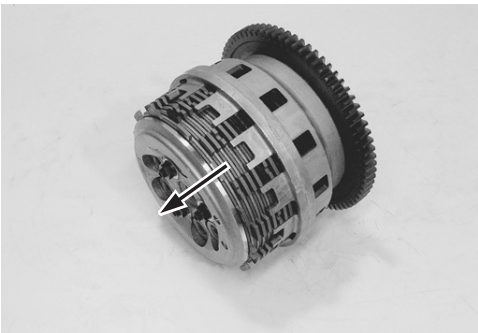

- Check the height Ⓗ of clutch lifter adjusting pin screws at three positions using the thickness gauges.
- If the measurement is out of the specification, adjust the height Ⓗ in the following procedures.

NOTE:
Each clutch lifter adjusting pin screw height should be as close as possible.

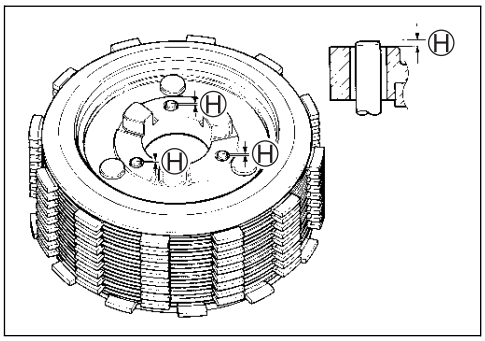

- Loosen the lock-nut and turn out the adjusting pin screw.
- Set the thickness gauges of 0.3 mm (0.012 in).
- Place a proper flat plate on the thickness gauges and hold them by hand.
- Slowly turn in the adjusting pin screw until resistance is felt.
- Tighten the lock-nut.

DATA Clutch lifter adjusting pin screw height Ⓗ:
Standard: 0.2 – 0.4 mm (0.008 – 0.016 in)

TOOL 09900-20803: Thickness gauge

Clutch lifter pin lock-nut: 23 N·m (2.3 kgf-m, 16.5 lb-ft)

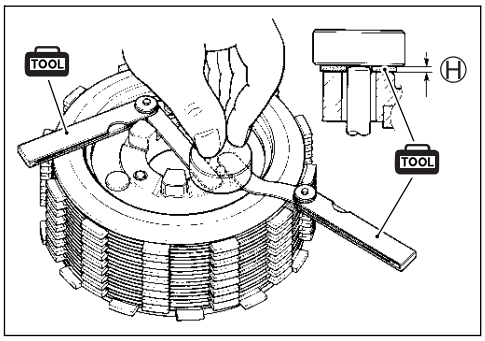

WAVE SPRING WASHER INSPECTION

- Measure the free height Ⓗ of each wave spring washer with the vernier calipers.
- If a wave spring washer height Ⓗ is not within the specified limit, replace it with a new one.

TOOL 09900-20102: Vernier calipers

DATA Wave spring washer height Ⓗ:
Service Limit: 4.30 mm (0.169 in)

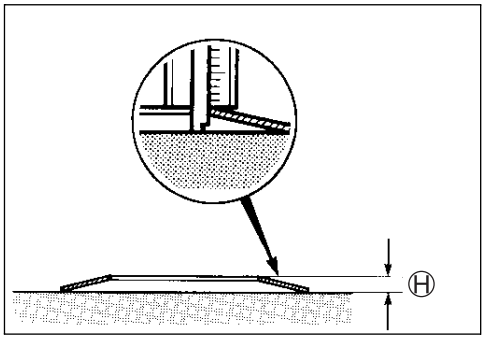

OIL PUMP

INSPECTION

- Rotate the oil pump by hand and check that it moves smoothly.
- If it does not move smoothly, replace the oil pump assembly.

CAUTION

*** Do not attempt to disassemble the oil pump assembly.**
*** The oil pump is available only as an assembly.**

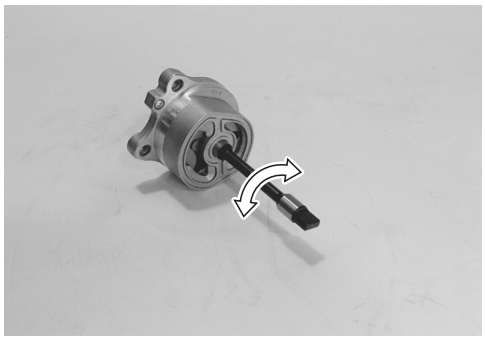

STARTER CLUTCH

INSPECTION

- Install the starter driven gear ① onto the starter clutch ②.

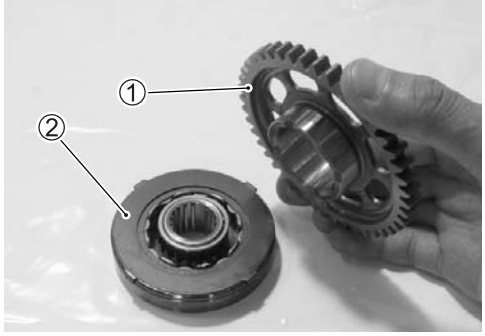

- Turn the starter driven gear by hand.
- Inspect the starter clutch for a smooth movement.
- Check that the gear turns only in one direction.

- If a large resistance is felt for rotation, inspect the starter clutch bearing or the starter clutch contacting surface on the starter driven gear for wear and damage.
- If they are found to be damaged, replace them with the new ones.

GENERATOR

INSPECTION (☞9-10 and -11)

REASSEMBLY

- When installing the generator stator set bolts, tighten them to the specified torque.

Generator stator set bolt: 11 N·m (1.1 kgf-m, 8.0 lb-ft)

NOTE:
Be sure to install the grommet ① to the generator cover.

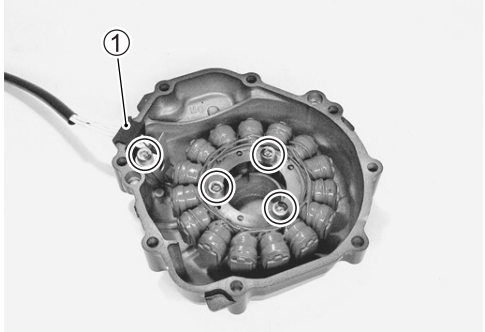

WATER PUMP

☞7-13

GEARSHIFT SYSTEM

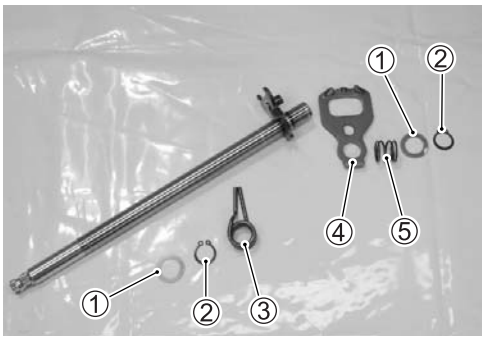

GEARSHIFT SHAFT/GEARSHIFT ARM DISASSEMBLY

- Remove the following parts from the gearshift shaft/gearshift arm.

① Washer
② Snap ring
③ Gearshift shaft return spring
④ Gearshift cam drive plate
⑤ Plate return spring

GEARSHIFT SHAFT/GEARSHIFT ARM INSPECTION

- Inspect the gearshift shaft/gearshift arm for wear or bend.
- Inspect the return springs for damage or fatigue.
- Replace the arm or spring if there is anything unusual.

GEARSHIFT SHAFT/GEARSHIFT ARM REASSEMBLY

- Install the following parts to the gearshift shaft/gearshift arm as shown in the illustration.

① Washer
② Snap ring
③ Gearshift shaft return spring
④ Gearshift cam drive plate
⑤ Plate return spring

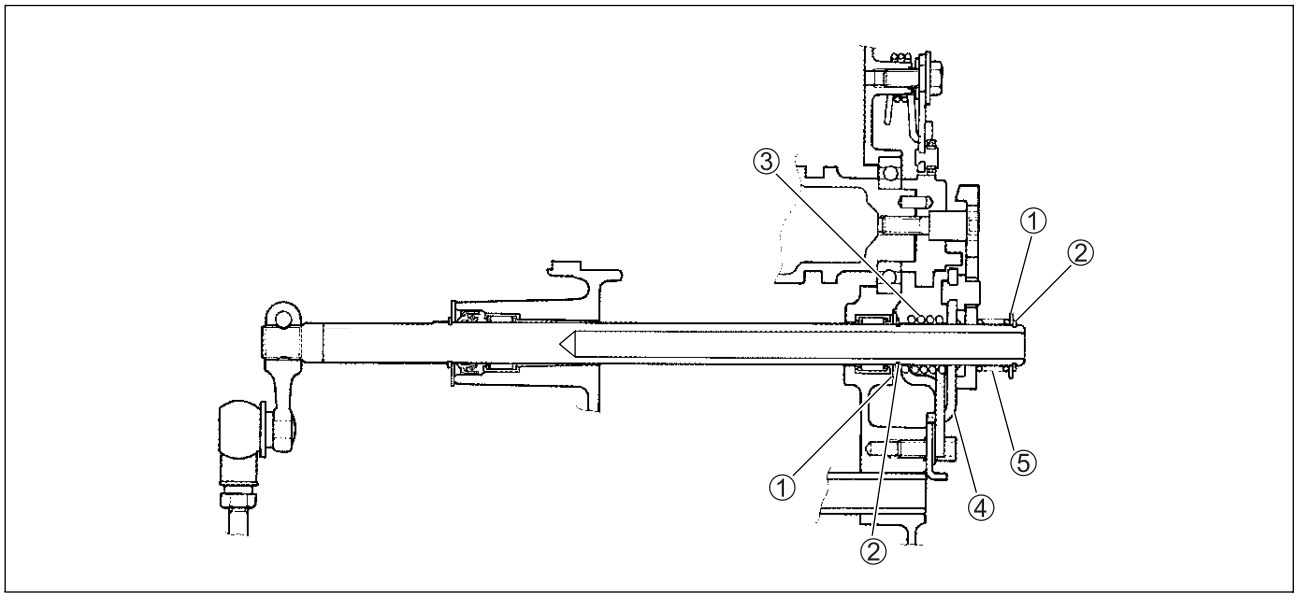

NOTE:
When installing the gearshift shaft return spring, position the stopper Ⓐ of gearshift arm between the shaft return spring ends Ⓑ.

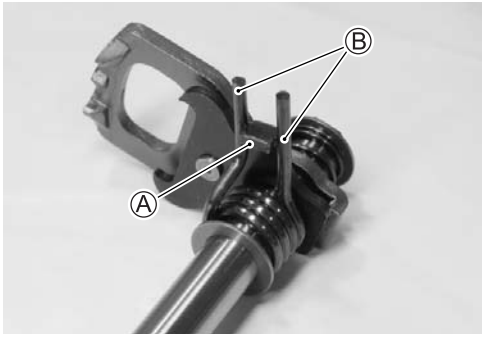

OIL PRESSURE REGULATOR

REMOVAL

- Remove the oil pressure regulator case ① from the oil pan.
- Remove the oil pressure regulator ②.

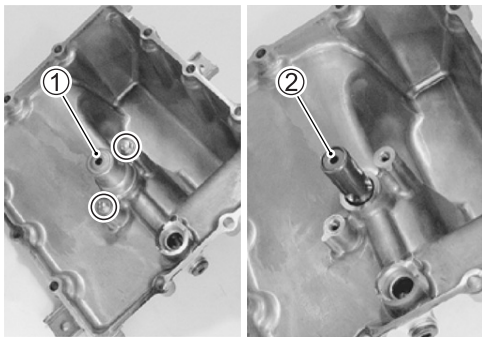

INSPECTION

- Inspect the operation of the oil pressure regulator by pushing on the piston with a proper bar.
- If the piston does not operate, replace the oil pressure regulator with a new one.

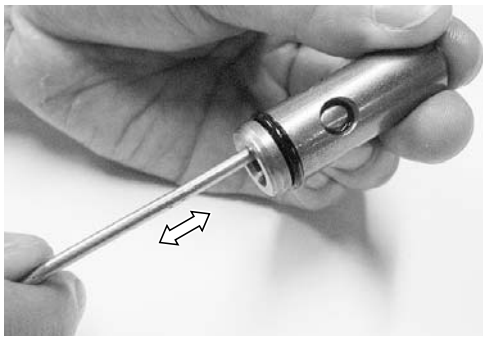

INSTALLATION

- Apply grease to the O-ring.

99000-25010: SUZUKI SUPER GREASE "A" or equivalent

CAUTION

Use new O-ring to prevent oil leakage.

- Press in the oil pressure regulator ① to the oil pan.
- Install the oil pressure regulator case ②.

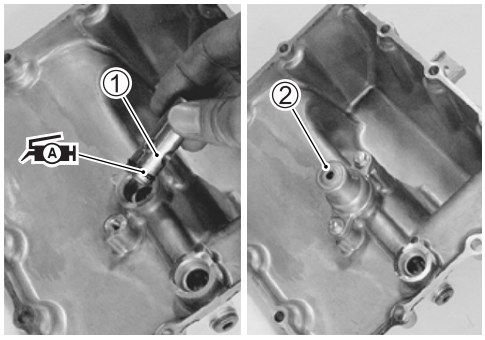

OIL STRAINER

- Inspect the oil strainer body for damage.
- Clean the oil strainer if necessary.

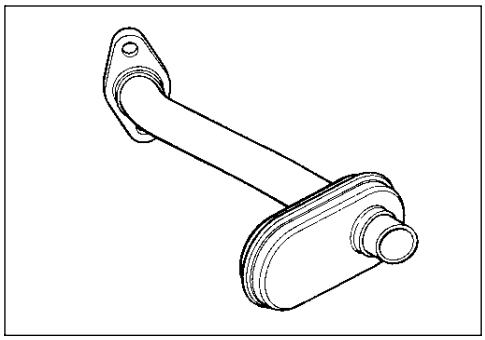

TRANSMISSION

DISASSEMBLY

Disassemble the countershaft and driveshaft. Pay attention to the following points:

- Remove the 6th drive gear snap ring ① from its groove and slide it towards the 3rd/4th drive gears ②.
- Slide the 6th ③ and 2nd ④ drive gears toward the 3rd/4th drive gears ②, then remove the 2nd drive gear circlip ⑤.

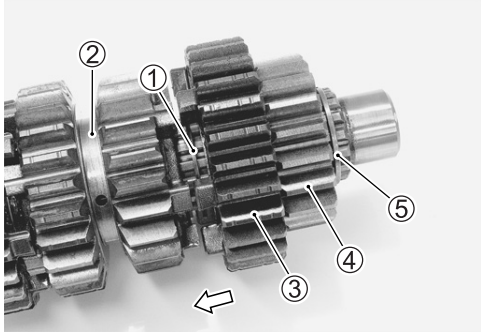

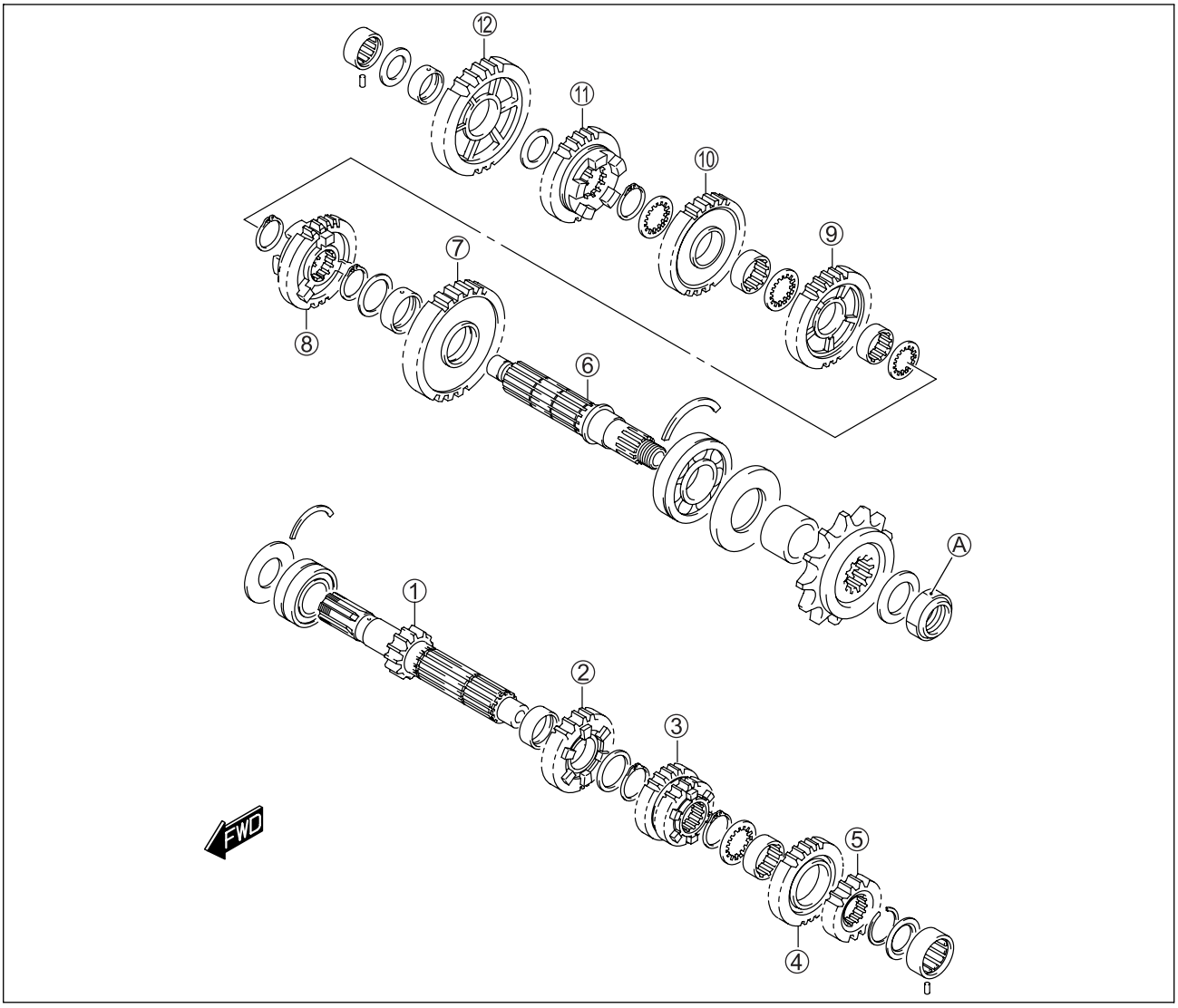

①	Countershaft/1st drive gear	⑧	6th driven gear
②	5th drive gear	⑨	3rd driven gear
③	3rd/4th drive gears	⑩	4th driven gear
④	6th drive gear	⑪	5th driven gear
⑤	2nd drive gear	⑫	1st driven gear
⑥	Driveshaft	Ⓐ	Engine sprocket nut
⑦	2nd driven gear		

ITEM	N·m	kgf-m	lb-ft
Ⓐ	115	11.5	83.0

REASSEMBLY

Assemble the countershaft and driveshaft in the reverse order of disassembly. Pay attention to the following points:

NOTE:

** Rotate the bearings by hand to inspect for smooth rotation. Replace the bearings if there is anything unusual.*

** Before installing the gears, apply engine oil to the driveshaft and countershaft.*

** When installing the oil seal, apply grease to it.*

99000-25010: SUZUKI SUPER GREASE "A" or equivalent

CAUTION

*** Never reuse a snap ring. After a snap ring has been removed from a shaft, it should be discarded and a new snap ring must be installed.**

*** When installing a new snap ring, do not expand the end gap larger than required to slip the snap ring over the shaft.**

*** After installing a snap ring, make sure that it is completely seated in its groove and securely fitted.**

NOTE:

When reassembling the transmission, attention must be given to the locations and positions of washers and snap rings. The cross sectional view shows the correct position of the gears, bushings, washers and snap rings. (☞3-50)

- When installing a new snap ring, pay attention to its direction. Fit it to the side where the thrust is as shown in the illustration.

Ⓐ Thrust
Ⓑ Sharp edge

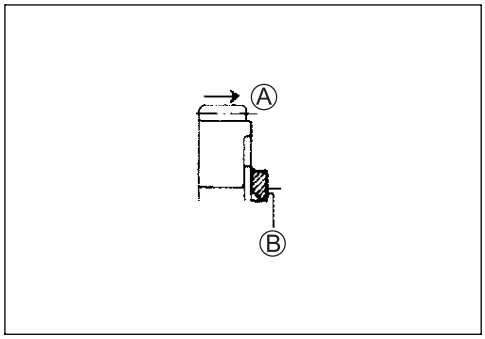

CAUTION

When installing the gear bushing onto the countershaft ① and driveshaft ②, align the shaft oil hole ③ with the bushing oil hole ④.

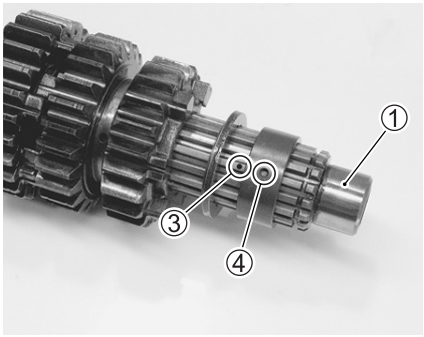

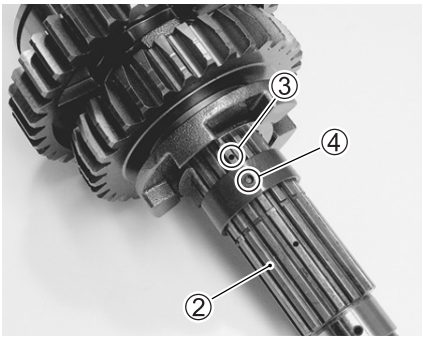

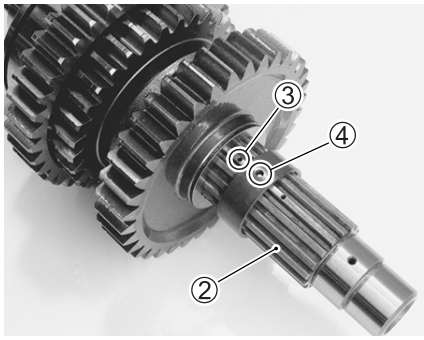

TRANSMISSION PARTS LOCATION

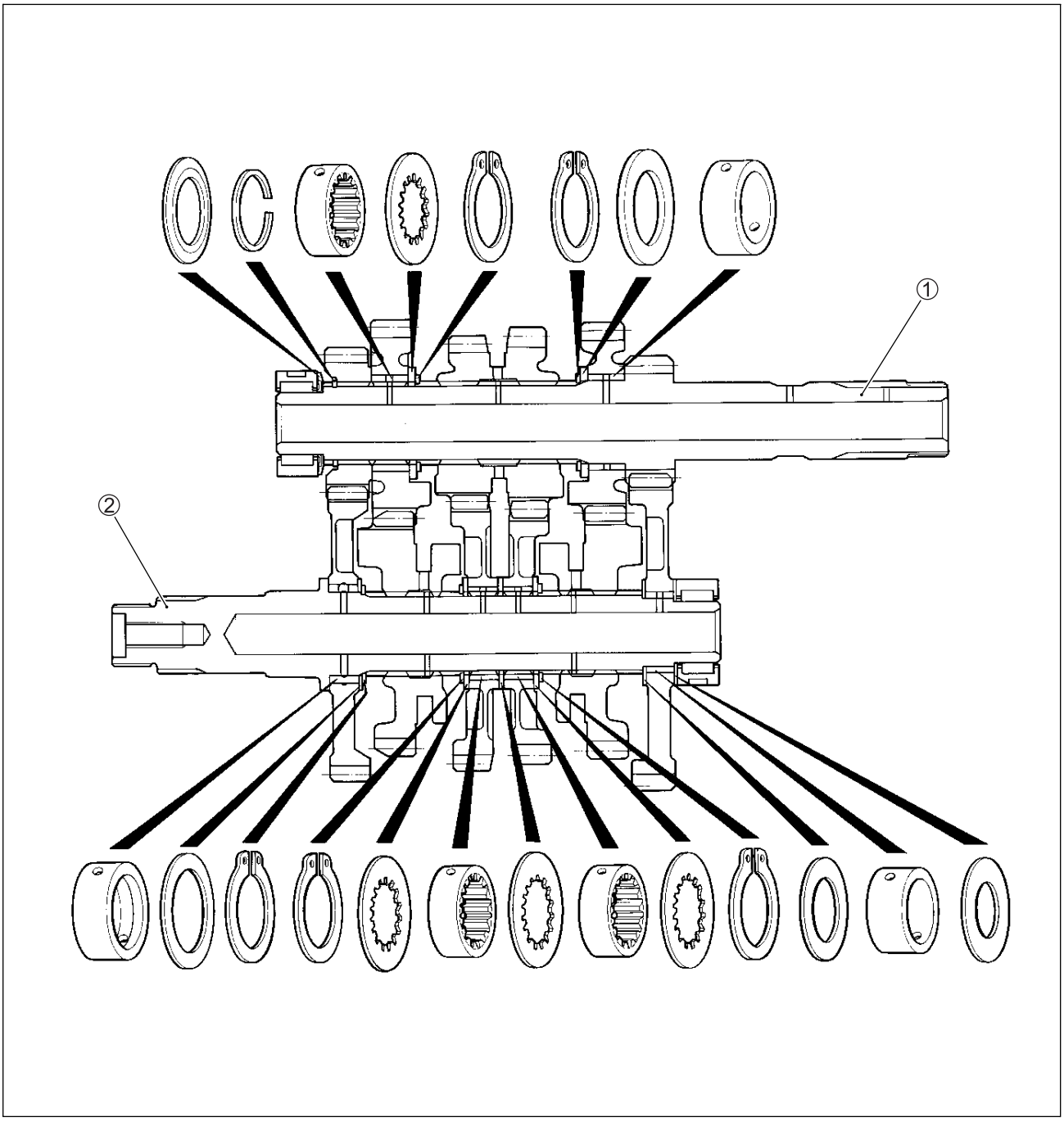

①	Countershaft	②	Driveshaft

CYLINDER

CRANKCASE SERVICING (☞3-55)

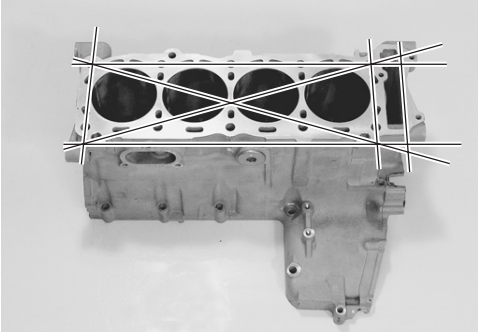

CYLINDER DISTORTION

- Check the gasketed surface of the cylinder for distortion with a straightedge and thickness gauge, taking a clearance reading at several places as indicated.
- If the largest reading at any position of the straightedge exceeds the limit, replace the crankcase set.

DATA Cylinder distortion:
Service Limit: 0.02 mm (0.008 in)

TOOL 09900-20803: Thickness gauge

CYLINDER BORE

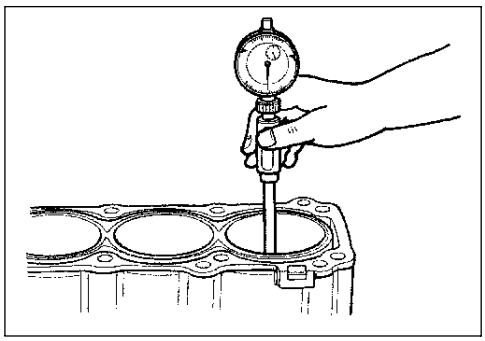

- Inspect the cylinder wall for any scratches, nicks or other damage.
- Measure the cylinder bore diameter at six places.

DATA Cylinder bore:
Standard: 73.400 – 73.415 mm (2.8900 – 2.8903 in)

TOOL 09900-20508: Cylinder gauge set

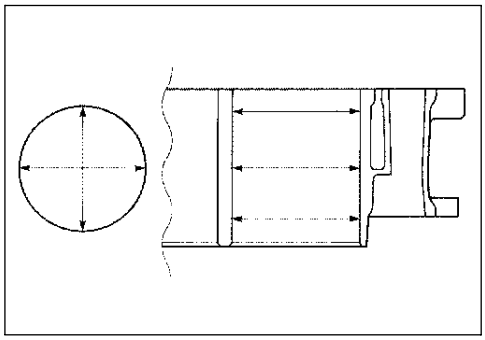

PISTON AND PISTON RING

PISTON DIAMETER

- Using a micrometer, measure the piston outside diameter at 15 mm (0.6 in) Ⓐ from the piston skirt end.
- If the measurement is less than the limit, replace the piston.

DATA Piston diameter:
Service Limit: 73.280 mm (2.8850 in)
at 10 mm (0.39 in) from the skirt end

TOOL 09900-20203: Micrometer (50 – 75 mm)

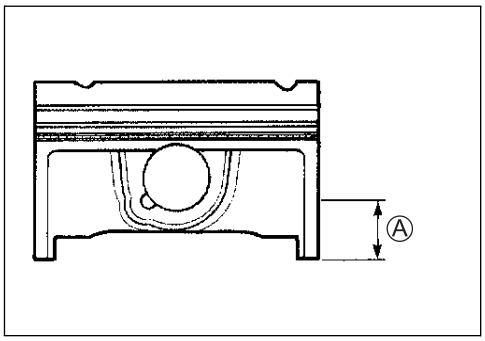

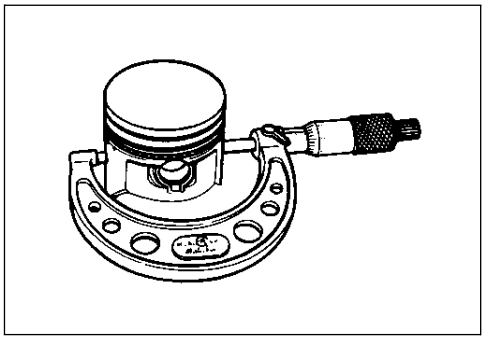

PISTON-TO-CYLINDER CLEARANCE

- Subtract the piston diameter from the cylinder bore diameter. (☞3-53 and -54)
- If the piston-to-cylinder clearance exceeds the service limit, replace the crankcase set or the piston, or both.

DATA Piston-to-cylinder clearance:
Service Limit: 0.120 mm (0.0047 in)

PISTON PIN AND PIN BORE

- Measure the piston pin bore diameter using the small bore gauge.
- If the measurement is out of specification, replace the piston.

DATA Piston pin bore I.D.:
Service Limit: 15.030 mm (0.5917 in)

TOOL 09900-20602: Dial gauge (1/1 000 mm)
09900-22401: Small bore gauge (10 – 18 mm)

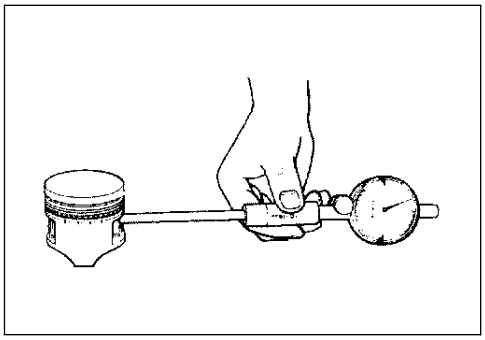

- Measure the piston pin outside diameter at three positions using the micrometer.
- If any of the measurements is out of specification, replace the piston pin.

DATA Piston pin O.D.:
Service Limit: 14.980 mm (0.5898 in)

TOOL 09900-20205: Micrometer (0 – 25 mm)

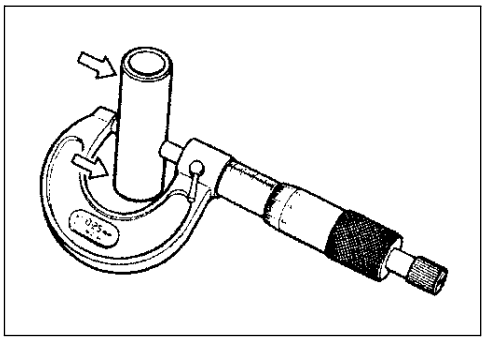

PISTON RING-TO-GROOVE CLEARANCE

- Measure the side clearances of the 1st and 2nd piston rings using the thickness gauge.
- If any of the clearances exceeds the limit, replace both the piston and piston rings.

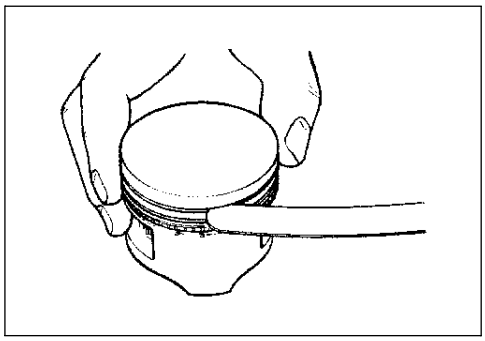

TOOL 09900-20803: Thickness gauge
09900-20205: Micrometer (0 – 25 mm)

DATA Piston ring-to-groove clearance:
Service Limit (1st) : 0.180 mm (0.0071 in)
(2nd) : 0.150 mm (0.0059 in)

DATA Piston ring groove width:
Standard (1st ⓐ): 0.83 – 0.85 mm (0.0327 – 0.0335 in)
(1st ⓑ): 1.30 – 1.32 mm (0.0512 – 0.0520 in)
(2nd) : 0.81 – 0.83 mm (0.0319 – 0.0327 in)
(Oil) : 1.51 – 1.53 mm (0.0594 – 0.0602 in)

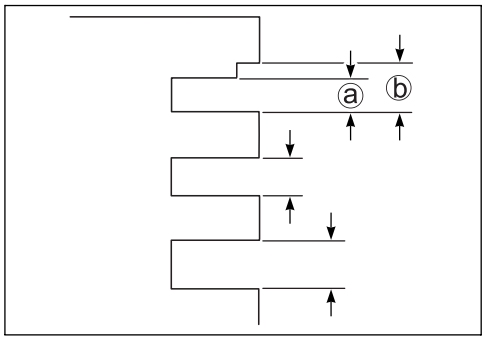

DATA Piston ring thickness:
Standard (1st) : 0.76 – 0.81 mm (0.0299 – 0.0319 in)
: 1.08 – 1.10 mm (0.0425 – 0.0433 in)
(2nd) : 0.77 – 0.79 mm (0.0303 – 0.0311 in)

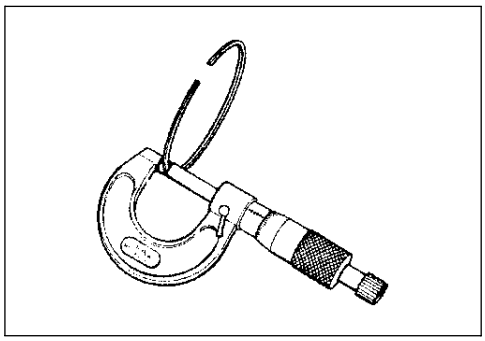

PISTON RING FREE END GAP AND PISTON RING END GAP

- Measure the piston ring free end gap using the vernier calipers.
- Next, fit the piston ring squarely into the cylinder and measure the piston ring end gap using the thickness gauge.
- If any of the measurements exceeds the service limit, replace the piston ring with a new one.

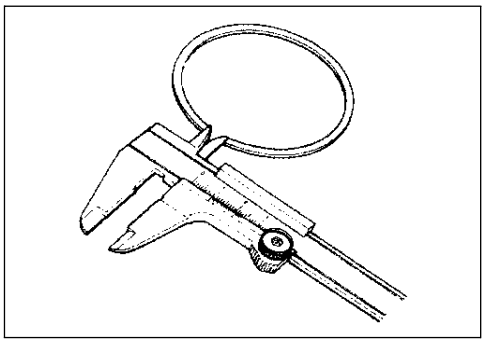

DATA Piston ring free end gap:
Service Limit (1st) : 5.2 mm (0.20 in)
(2nd): 6.4 mm (0.25 in)

TOOL 09900-20102: Vernier calipers

DATA Piston ring end gap:
Service Limit (1st) : 0.50 mm (0.020 in)
(2nd): 0.50 mm (0.020 in)

TOOL 09900-20803: Thickness gauge

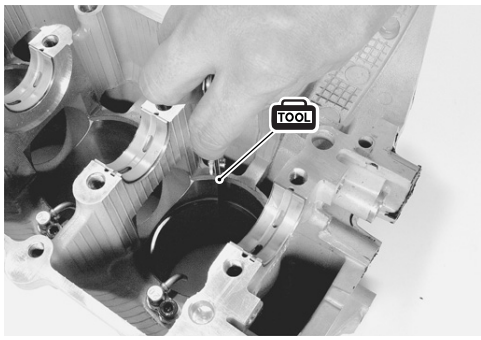

CRANKCASE

GEARSHIFT FORK AND GEARSHIFT CAM

Removal

- Remove the gearshift cam bearing retainer screws ① and gearshift fork shaft retainer ② from the lower crankcase.

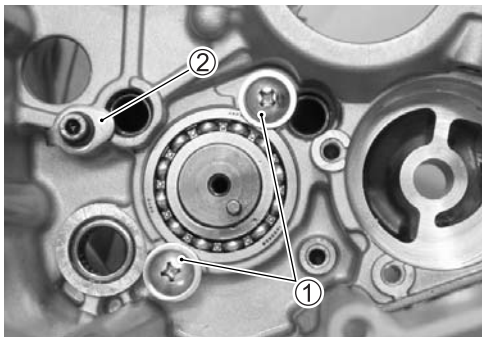

- Remove the gearshift fork shafts ③ and gearshift forks ④ from the lower crankcase.
- Remove the gearshift cam ⑤ and its bearing ⑥.

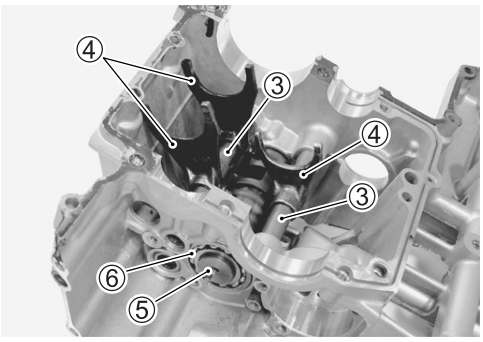

GEARSHIFT FORK-TO-GROOVE CLEARANCE

- Using a thickness gauge, check the gearshift fork clearance in the groove of its gear.
- The clearance for each gearshift fork plays an important role in the smoothness and positiveness of the shifting action.

DATA Shift fork-to-groove clearance:
Service Limit: 0.5 mm (0.020 in)

TOOL 09900-20803: Thickness gauge

- If the clearance checked is noted to exceed the limit specified, replace the fork or its gear, or both.

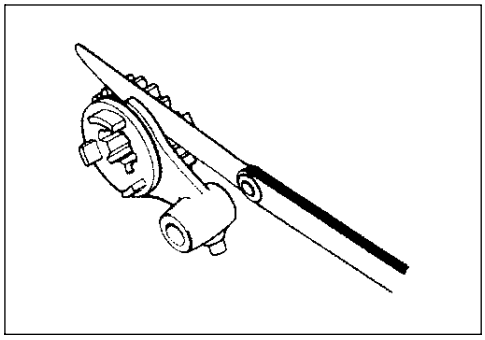

GEARSHIFT FORK GROOVE WIDTH

- Measure the gearshift fork groove width using the vernier calipers.

DATA Shift fork groove width:
Standard: 5.0 – 5.1 mm (0.197 – 0.201 in)

TOOL 09900-20102: Vernier calipers

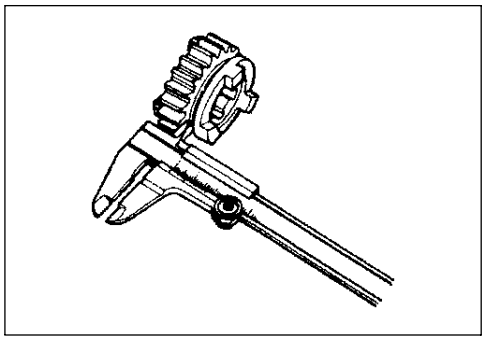

GEARSHIFT FORK THICKNESS

- Measure the gearshift fork thickness using the vernier calipers.

DATA Shift fork thickness:
Standard: 4.8 – 4.9 mm (0.189 – 0.193 in)

TOOL 09900-20102: Vernier calipers

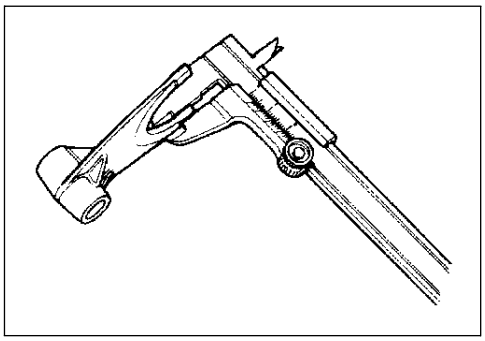

GEARSHIFT CAM BEARING AND GEARSHIFT SHAFT BEARING

Bearing inspection

- Inspect the gearshift cam bearing for abnormal noise and smooth rotation.
- Replace the bearings if there is anything unusual.

- Inspect the gearshift cam bearing ①, gearshift shaft bearings ② and ③ for abnormal noise and smooth rotation while they are in the crankcase.
- Replace a bearing if there is anything unusual.

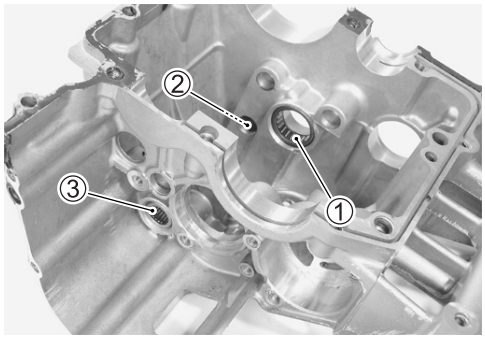

Bearing removal

- Remove the gearshift shaft bearing with the special tools.

TOOL 09921-20210: Bearing remover
09930-30104: Sliding shaft

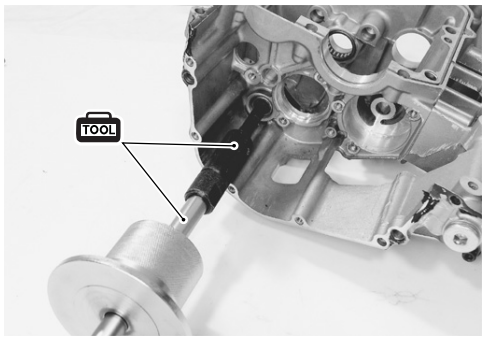

- Remove the gearshift cam bearing with the special tools.

TOOL 09923-74511: Bearing remover
09930-30104: Sliding shaft

CAUTION

Be careful not to lean the bearing remover.

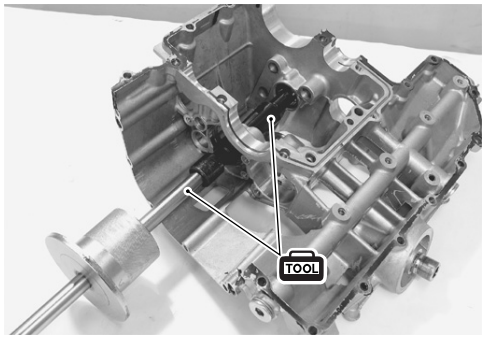

- Remove the oil seal ①.
- Remove the gearshift shaft bearing with the special tool.

TOOL 09921-20240: Bearing remover set (15 mm)

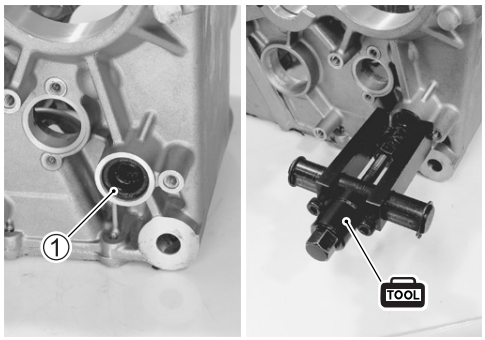

Installation

- Install the bearings with the special tool.

TOOL 09913-70210: Bearing installer set (① ϕ20)
(② ϕ22)
(③ ϕ32)

NOTE:
The stamped mark side of the gearshift shaft bearing faces outside.

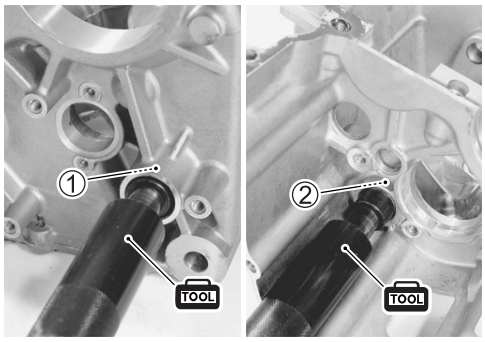

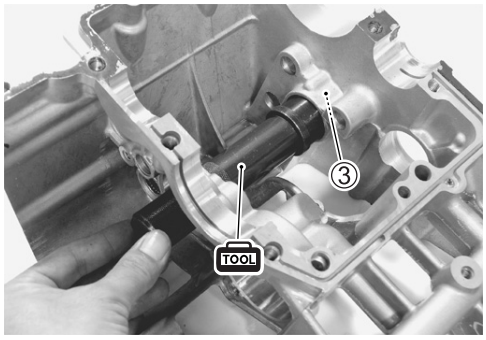

- Install the oil seal with the special tool.

TOOL 09913-70210: Bearing installer set (ϕ22)

- Apply grease to the oil seal lip.

A 99000-25010: SUZUKI SUPER GREASE "A" or equivalent

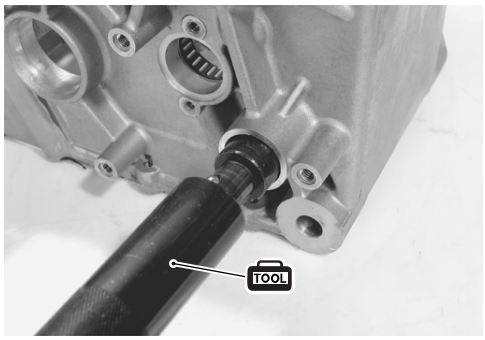

- Install the gearshift cam ④ with the bearing ⑤.

NOTE:
The stamped mark side of the gearshift cam bearing faces outside.

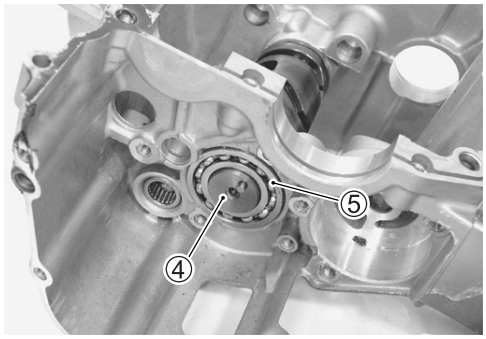

- Install the gearshift forks and their shafts as shown.

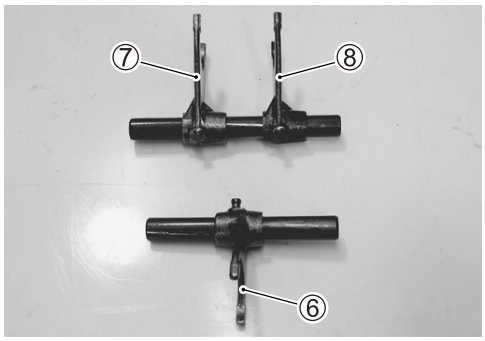

⑥ For 3rd/4th drive gears
⑦ For 5th driven gear
⑧ For 6th driven gear

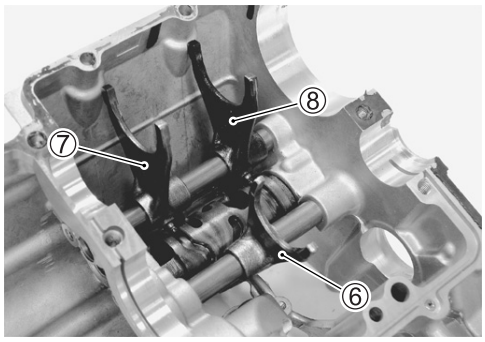

- Apply a small quantity of thread lock to the bearing retainer screws ⑨.
- Tighten the bearing retainer screws ⑨ and gearshift fork shaft retainer bolt ⑩ to the specified torque.

1322 99000-32110: THREAD LOCK SUPER "1322" or equivalent

Bearing retainer screw: 10 N·m (1.0 kgf-m, 7.0 lb-ft)
Gearshift fork shaft retainer bolt: 10 N·m (1.0 kgf-m, 7.0 lb-ft)

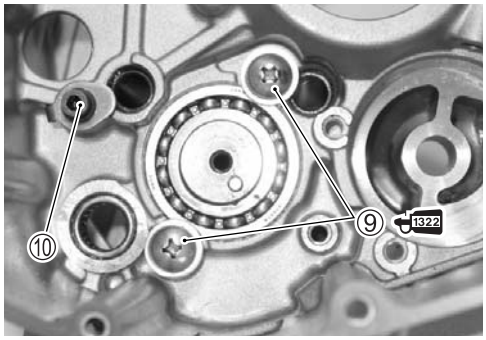

OIL JET

Removal

- Remove the piston cooling oil jets ① from the upper crankcase.

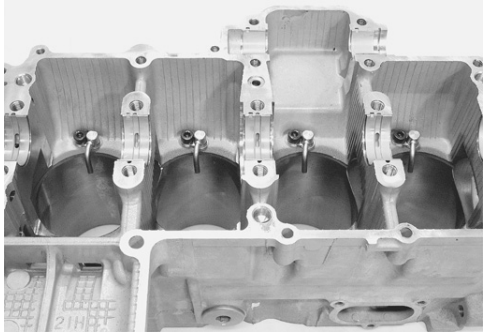

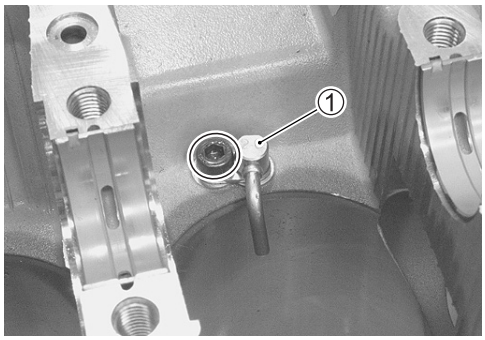

- Remove the oil jet ② (for transmission) from the lower crankcase.

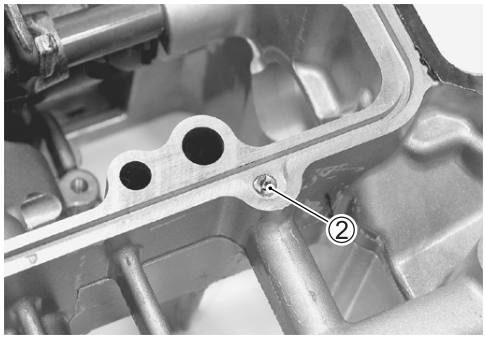

- Remove the oil jet ③ (for cam chain tension adjuster) from the cylinder head.

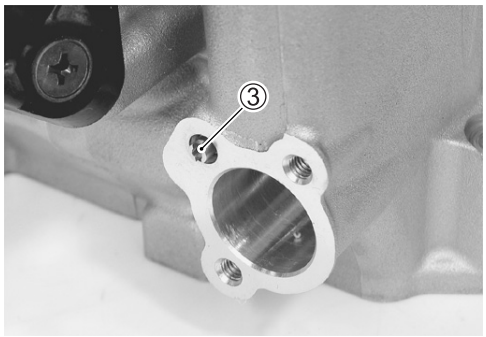

Inspection and cleaning

- Check the oil jets for clogging.
- If they are clogged, clean their oil passage with a proper wire and compressed air.

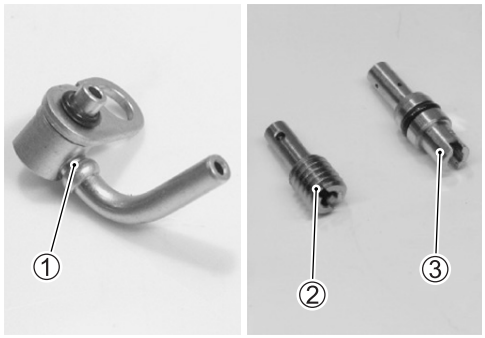

① Piston cooling oil jet
② Oil jet (#14) (For transmission)
③ Oil jet (#8) (For cam chain tension adjuster)

Installation

- Fit new O-ring ① to each piston cooling oil jet and apply engine oil to them.

CAUTION

Use new O-rings to prevent oil pressure leakage.

- Install each piston cooling oil jet with the bolt.

NOTE:
Apply a small quantity of thread lock to the bolts and tighten them to the specified torque.

1322 99000-32110: THREAD LOCK SUPER "1322" or equivalent

Piston cooling oil jet bolt: 10 N·m (1.0 kgf-m, 7.0 lb-ft)

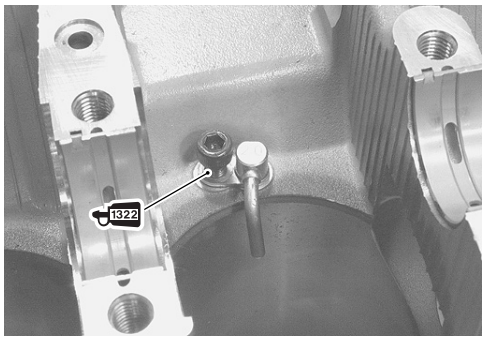

- Install the oil jet (for transmission).

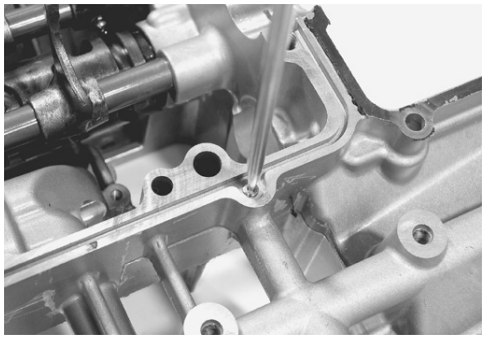

- Apply engine oil to the O-ring.
- Install the oil jet (for cam chain tension adjuster).

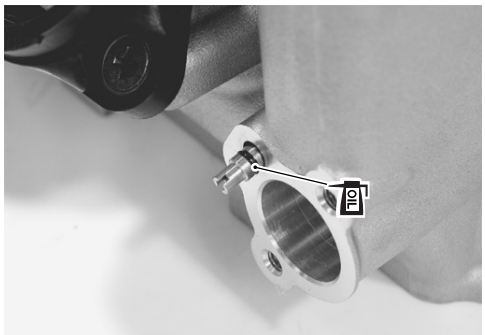

PLUG

Removal

- Remove the oil gallery plugs ① and ②.

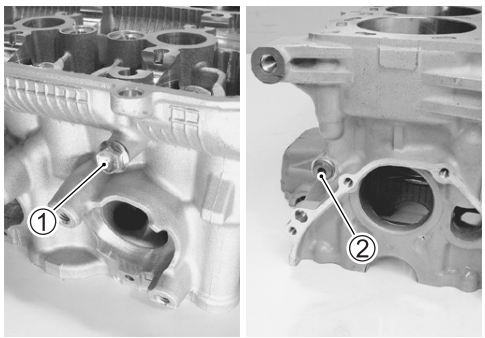

① (for cylinder head side)
② (for upper crankcase side)

- Remove the water jacket plugs ③.

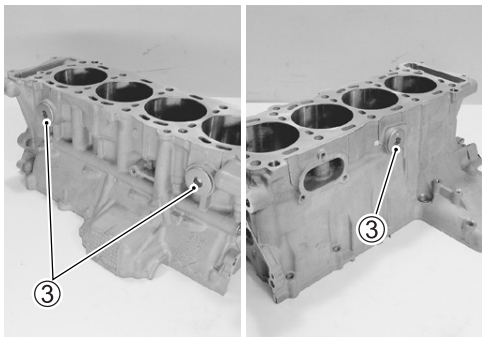

- Remove the oil gallery plugs ④ (for lower crankcase side).

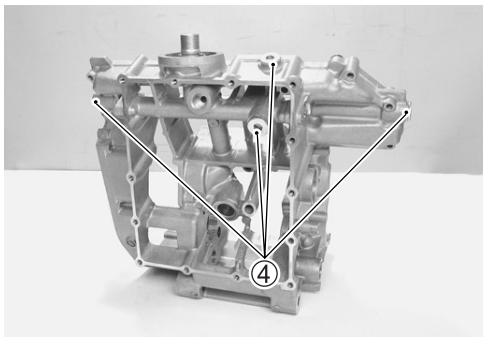

Installation

- Apply engine coolant to the O-rings of the water jacket plugs ①.
- Apply thread lock to the oil gallery plug ②.

1322 99000-32110: THREAD LOCK SUPER "1322" or equivalent

NOTE:
It is not required to apply thread lock when installing the other removed oil gallery plugs.

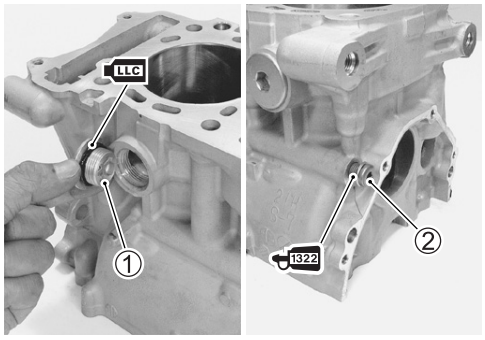

- Tighten each plug to the specified torque.

① Water jacket plug: 9.5 N·m (0.95 kgf-m, 6.9 lb-ft)
② Oil gallery plug (upper crankcase): 18 N·m (1.8 kgf-m, 13.0 lb-ft)
③ Oil gallery plug (lower crankcase): 35 N·m (3.5 kgf-m, 25.5 lb-ft)
④ Oil gallery plug (cylinder head): 10 N·m (1.0 kgf-m, 7.0 lb-ft)

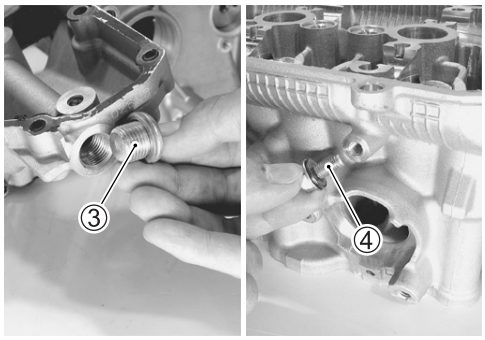

CAUTION

Use new gaskets and O-rings.

BALANCER SHAFT

DISASSEMBLY

- Remove the balancer gear along with the dampers from the balancer shaft.

INSPECTION

- Inspect the damper for wear and damage, replace it if any defects are found.

REASSEMBLY

- Apply MOLYBDENUM OIL SOLUTION to each part.

MOLYBDENUM OIL SOLUTION

- Set the dampers and install the balancer shaft to balancer gear.

NOTE:

** Fit the stopper of the balancer shaft between the dampers.*

** Align the line Ⓐ on the balancer shaft with the punch Ⓑ on the balancer gear.*

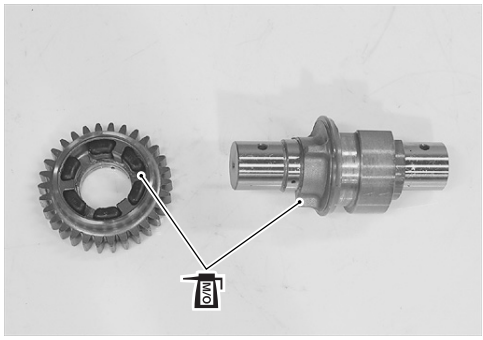

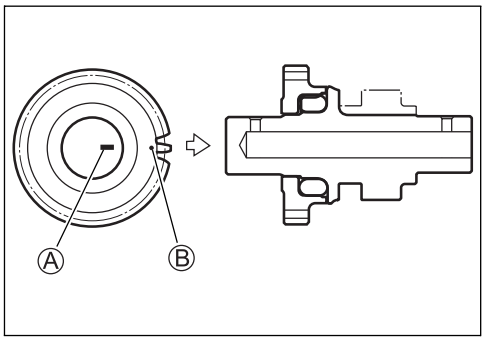

BALANCER SHAFT JOURNAL BEARING

INSPECTION

- Inspect each bearing of upper and middle crankcases for any damage.

SELECTION

- Place the plastigauge axially along the balancer shaft journal as shown.

09900-22301: Plastigauge

CAUTION

Never rotate the balancer shaft when a piece of plastigauge is installed.

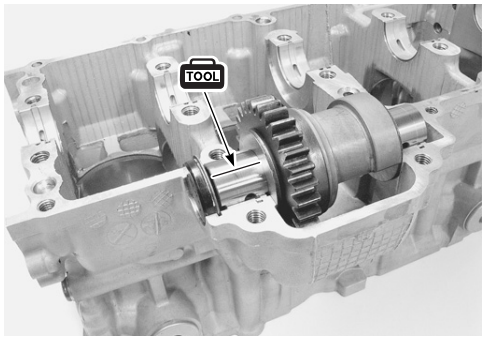

- Mate the middle crankcase with the upper crankcase, and tighten the crankcase bolts (M8) and crankshaft journal bolts (M9) to the specified torque.

Crankshaft journal bolt (M9):
Initial: 18 N·m (1.8 kgf-m, 13.0 lb-ft)
Final : 50°
Crankcase bolt (M8):
Initial: 15 N·m (1.5 kgf-m, 11.0 lb-ft)
Final : 26 N·m (2.6 kgf-m, 19.0 lb-ft)

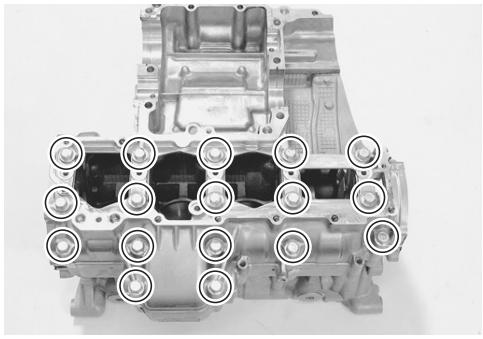

- Remove the middle crankcase and measure the width of the compressed plastigauge using the envelope scale. This measurement should be taken at the widest part of the compressed plastigauge.

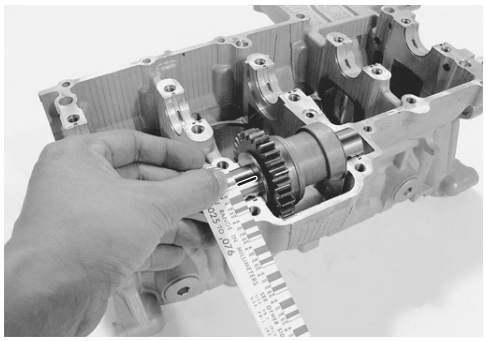

DATA Balancer shaft journal oil clearance:
Standard: 0.028 – 0.052 mm (0.0011 – 0.0020 in)
Service Limit: 0.080 mm (0.031 in)

- If the oil clearance exceeds the service limit, select the specified bearings from the bearing selection table.
- Check the corresponding crankcase journal I.D. code number Ⓐ, “A” or “B” which is stamped on the rear of upper crankcase.
- Check the corresponding balancer shaft journal O.D. code number Ⓑ, “A” or “B” which is stamped on the balancer shaft.

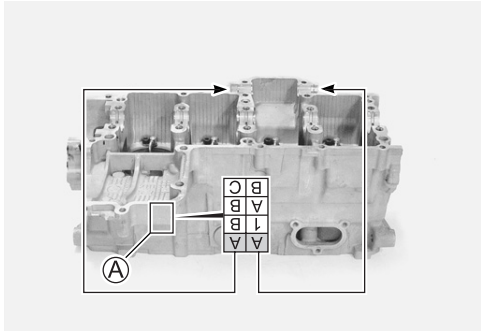

DATA Bearing selection table

		Balancer shaft journal O.D. Ⓑ	
	Code	A	B
Crankcase I.D. Ⓐ	A	Green	Black
	B	Black	Brown

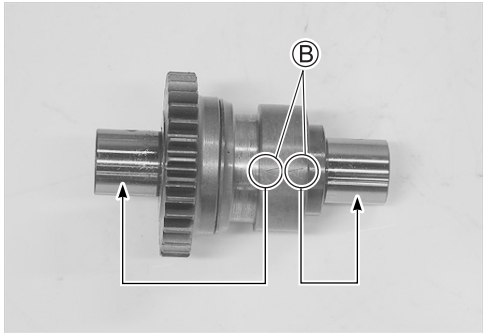

DATA Crankcase I.D. specification

Code	I.D. specification
A	26.000 – 26.008 mm (1.0236 – 1.0239 in)
B	26.009 – 26.016 mm (1.0240 – 1.0243 in)

DATA Balancer shaft journal O.D. specification

Code	O.D. specification
A	22.984 – 22.992 mm (0.9049 – 0.9052 in)
B	22.976 – 22.984 mm (0.9046 – 0.9049 in)

TOOL 09900-20205: Micrometer (0 – 25 mm)

DATA Bearing thickness specification

Color (Part No.)	Thickness
Green (12229-40F50-0A0)	1.486 – 1.490 mm (0.0585 – 0.0587 in)
Black (12229-40F50-0B0)	1.490 – 1.494 mm (0.0587 – 0.0588 in)
Brown (12229-40F50-0C0)	1.494 – 1.498 mm (0.0588 – 0.0590 in)

NOTE:
The balancer shaft journal bearings on upper and middle crankcases are the same.

INSTALLATION

- When fitting the balancer shaft journal bearings to the upper and middle crankcases, be sure to fix the stopper part Ⓐ first and press the other end.

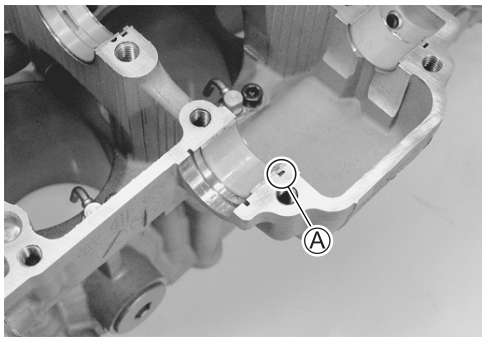

CAUTION

Do not touch the bearing surfaces with your hands. Grasp by the edge of the bearing shell.

CRANKSHAFT AND CONROD

CRANKSHAFT RUNOUT

- Support the crankshaft with V-blocks as shown, with the two end journals resting on the blocks.
- Set up the dial gauge, as shown.
- Rotate the crankshaft slowly to read the runout.
- Replace the crankshaft if the runout is greater than the limit.

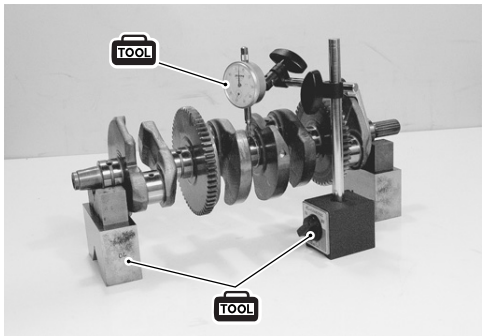

DATA Crankshaft runout:
Service Limit: 0.05 mm (0.002 in)

TOOL 09900-20607: Dial gauge (1/100 mm, 10 mm)
09900-20701: Magnetic stand
09900-21303: V-block set (75 mm)
09900-21304: V-block set (100 mm)

CONROD SMALL END I.D.

- Using a small bore gauge, measure the inside diameter of the conrod small end.

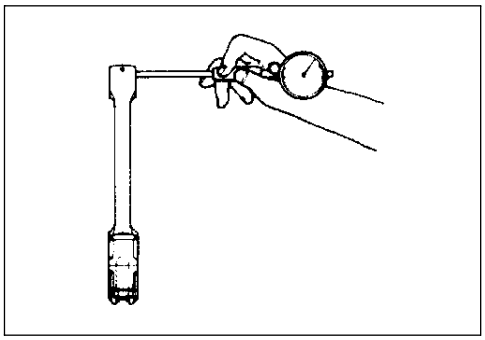

DATA Conrod small end I.D.:
Service Limit: 15.040 mm (0.5921 in)

TOOL 09900-20602: Dial gauge (1/1 000 mm, 1 mm)
09900-22401: Small bore gauge (10 – 18 mm)

- If the inside diameter of the conrod small end exceeds the limit, replace the conrod.

CONROD BIG END SIDE CLEARANCE

- Inspect the conrod side clearance by using a thickness gauge.
- If the clearance exceeds the limit, remove the conrod and inspect the conrod big end width and the crank pin width.
- If the width exceed the limit, replace conrod or crankshaft.

DATA Conrod big end side clearance:
Service Limit: 0.30 mm (0.012 in)

TOOL 09900-20803: Thickness gauge

DATA Conrod big end width:
Standard: 19.95 – 20.00 mm (0.7854 – 0.7874 in)

TOOL 09900-20205: Micrometer (0 – 25 mm)

DATA Crank pin width:
Standard: 20.10 – 20.15 mm (0.7913 – 0.7933 in)

TOOL 09900-20605: Dial calipers (1/100 mm, 10 – 34 mm)

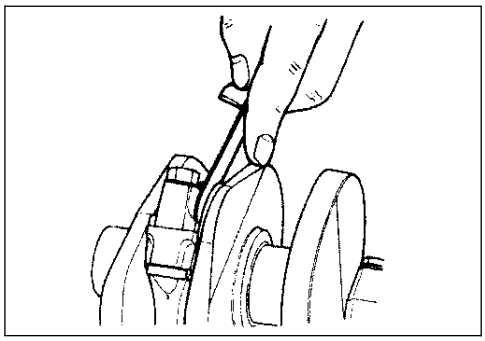

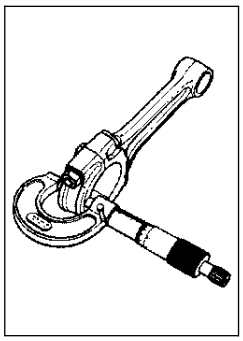

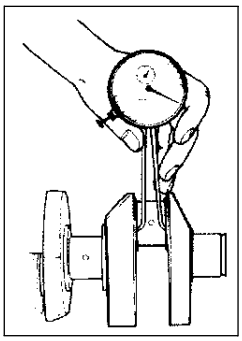

CONROD-BIG END BEARING INSPECTION

- Inspect the bearing surfaces for any sign of fusion, pitting, burn, or flaws. If any, replace them with a specified set of bearings.

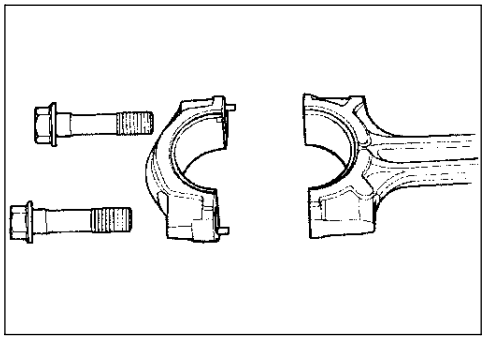

CONROD-BIG END BEARING SELECTION

- Place the plastigauge axially along the crank pin, avoiding the oil hole, as shown.

TOOL 09900-22301: Plastigauge

- Tighten the conrod cap bolts to the specified torque, in two stages. (☞3-76)

CAUTION

> *** Apply engine oil to the bearing cap bolt.**
> *** Never rotate the crankshaft or conrod when a piece of plastigauge is installed.**

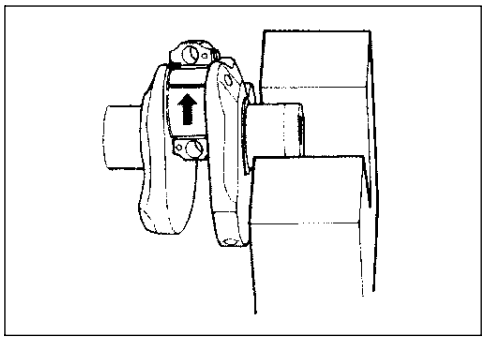

*1: The number faces the intake side.

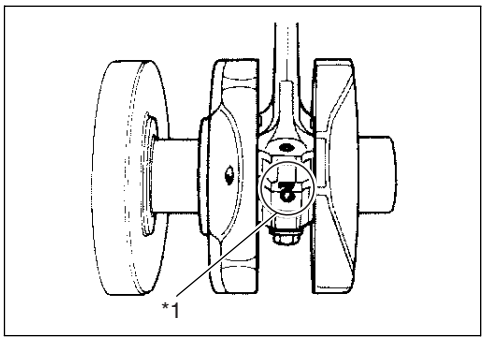

- Remove the bearing caps and measure the width of the compressed plastigauge using the envelope scale. This measurement should be taken at the widest part of the compressed plastigauge.

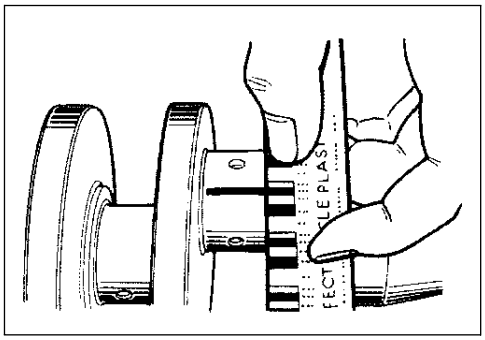

DATA Conrod big end oil clearance:
Standard: 0.032 – 0.056 mm (0.0013 – 0.0022 in)
Service Limit: 0.080 mm (0.0031 in)

- If the oil clearance exceeds the service limit, select the specified bearings from the bearing selection table.

- Check the corresponding conrod I.D. code number (“1” or “2”) Ⓐ.

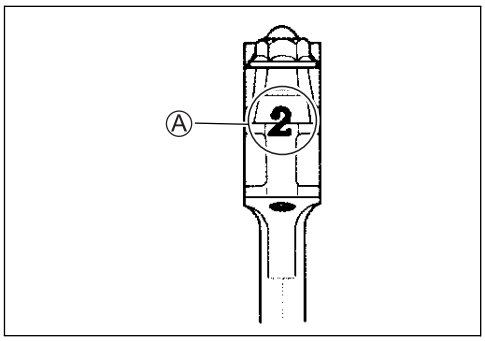

- Check the corresponding crank pin O.D. code number (“1”, “2” or “3”) Ⓑ.

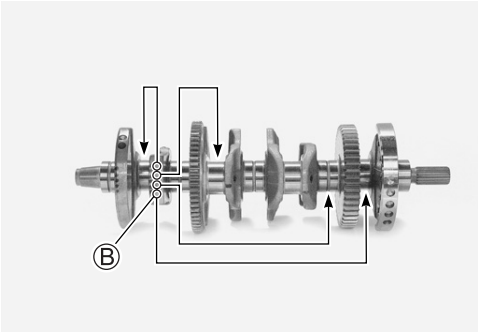

DATA Bearing selection table

		Crank pin O.D. Ⓑ		
	Code	1	2	3
Conrod I.D Ⓐ	1	Green	Black	Brown
	2	Black	Brown	Yellow

DATA Conrod I.D.

Code	I.D. specification
1	38.000 – 38.008 mm (1.4961 – 1.4964 in)
2	38.008 – 38.016 mm (1.4964 – 1.4967 in)

DATA Crank pin O.D.

Code	O.D. specification
1	34.992 – 35.000 mm (1.3776 – 1.3780 in)
2	34.984 – 34.992 mm (1.3773 – 1.3776 in)
3	34.976 – 34.984 mm (1.3770 – 1.3773 in)

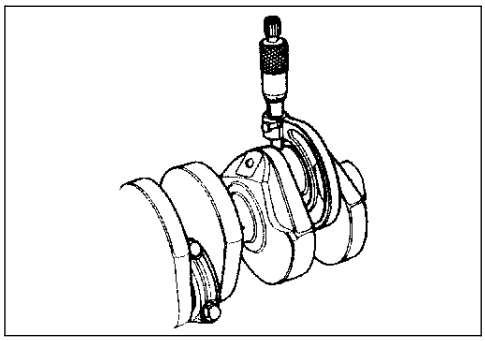

TOOL 09900-20202: Micrometer (25 – 50 mm)

DATA Bearing thickness

Color (Part No.)	Thickness
Green (12164-41G01-0A0)	1.480 – 1.484 mm (0.0583 – 0.0584 in)
Black (12164-41G01-0B0)	1.484 – 1.488 mm (0.0584 – 0.0586 in)
Brown (12164-41G01-0C0)	1.488 – 1.492 mm (0.0586 – 0.0587 in)
Yellow (12164-41G01-0D0)	1.492 – 1.496 mm (0.0587 – 0.0589 in)

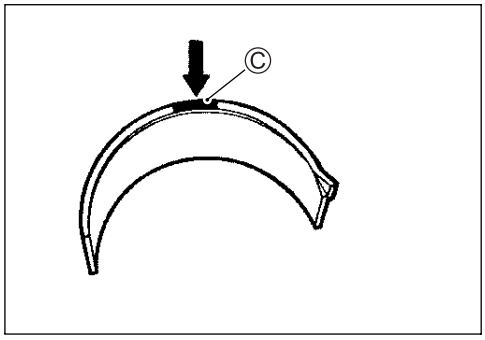

CAUTION

The bearings must be replaced as a set.

CRANKSHAFT JOURNAL BEARING

INSPECTION

- Inspect each bearing of upper and middle crankcases for any damage.

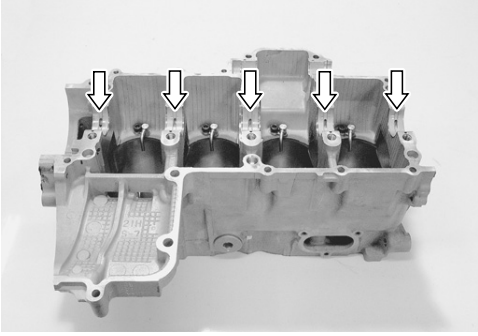

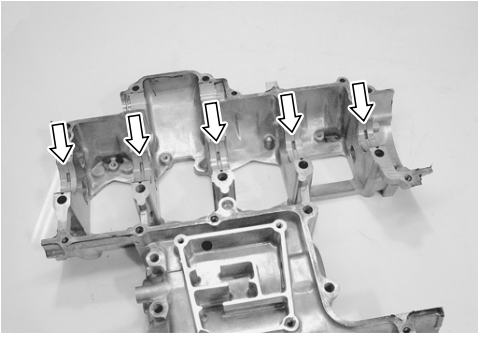

SELECTION

- Place the plastigauge axially along the crankshaft journal, avoiding the oil hole, as shown.

TOOL 09900-22301: Plastigauge

CAUTION

Never rotate the crankshaft when a piece of plastigauge is installed.

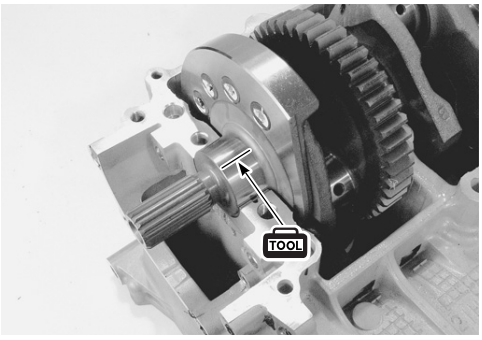

- Mate the middle crankcase with the upper crankcase.
- Tighten the crankshaft journal bolts (M9) in ascending order of numbers assigned to these bolts. Tighten each bolt a little at a time to equalize the pressure in the following two steps.

Crankshaft journal bolt (M9):
Initial: 18 N·m (1.8 kgf-m, 13.0 lb-ft)
Final : 50°

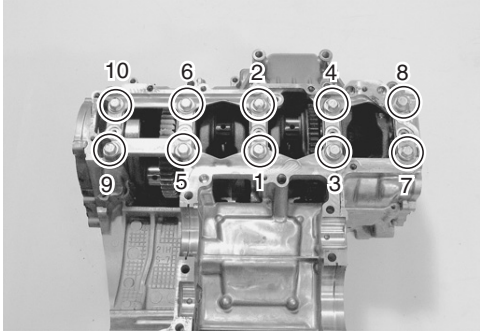

- Remove the middle crankcase and measure the width of the compressed plastigauge using the envelope scale. This measurement should be taken at the widest part of the compressed plastigauge.

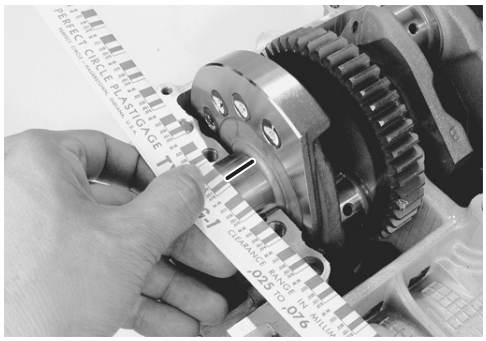

DATA Crankshaft journal oil clearance:
Standard: 0.010 – 0.028 mm (0.0004 – 0.0011 in)
Service Limit: 0.080 mm (0.0031 in)

- If the oil clearance exceeds the service limit, select the specified bearings from the bearing selection table.

- Check the corresponding crankcase journal I.D. code number Ⓐ, “A”, “B” or “C” which is stamped on the rear of upper crankcase.
- Check the corresponding crankshaft journal O.D. code number Ⓑ, “A”, “B” or “C” which is stamped on the crankshaft.

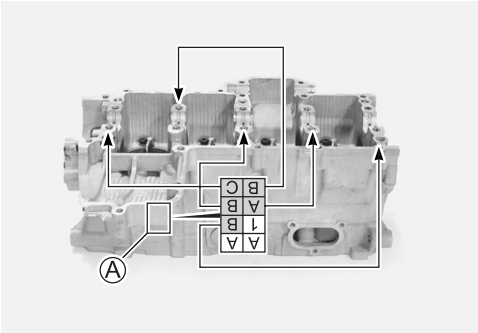

DATA Bearing selection table

		Crankshaft journal O.D. Ⓑ		
	Code	A	B	C
Crankcase I.D. Ⓐ	A	Green	Black	Brown
	B	Black	Brown	Yellow
	C	Brown	Yellow	Blue

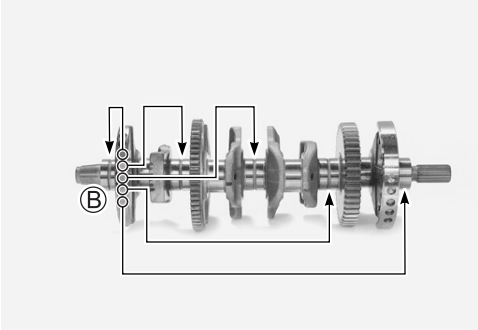

DATA Crankcase I.D. specification

Code	I.D. specification
A	38.000 – 38.006 mm (1.4961 – 1.4963 in)
B	38.007 – 38.012 mm (1.4963 – 1.4965 in)
C	38.013 – 38.018 mm (1.4966 – 1.4968 in)

DATA Crankshaft journal O.D. specification

Code	O.D. specification
A	34.994 – 35.000 mm (1.3777 – 1.3780 in)
B	34.988 – 34.994 mm (1.3775 – 1.3777 in)
C	34.982 – 34.988 mm (1.3772 – 1.3775 in)

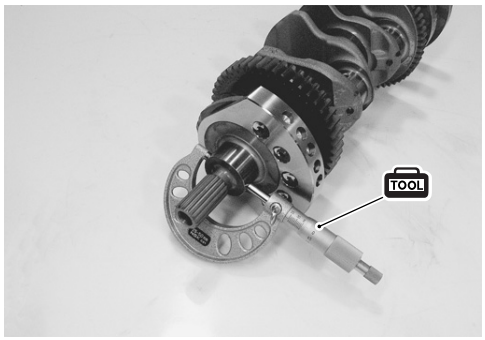

TOOL 09900-20202: Micrometer (25 – 50 mm)

DATA Bearing thickness specification

Color (Part No.)	Thickness
Green (12229-41G00-0A0)	1.492 – 1.495 mm (0.0587 – 0.0589 in)
Black (12229-41G00-0B0)	1.495 – 1.498 mm (0.0589 – 0.0590 in)
Brown (12229-41G00-0C0)	1.498 – 1.501 mm (0.0590 – 0.0591 in)
Yellow (12229-41G00-0D0)	1.501 – 1.504 mm (0.0591 – 0.0592 in)
Blue (12229-41G00-0E0)	1.504 – 1.507 mm (0.0592 – 0.0593 in)

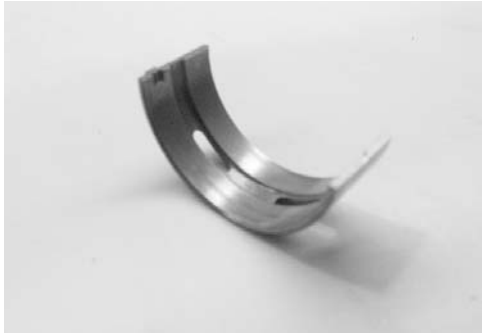

NOTE:
Upper and middle crankshaft journal bearings are the same.

INSTALLATION

- When fitting the crankshaft journal bearings to the upper and middle crankcases, be sure to fix the stopper part Ⓐ first and press the other end.

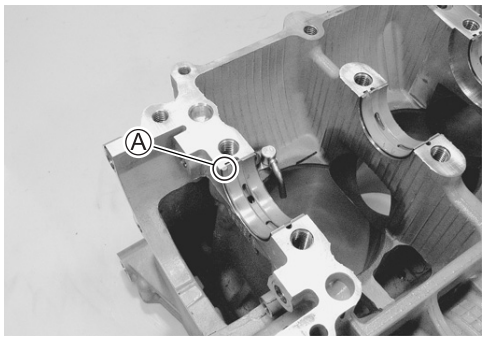

CAUTION

Do not touch the bearing surfaces with your hands. Grasp by the edge of the bearing shell.

CRANKSHAFT THRUST BEARING

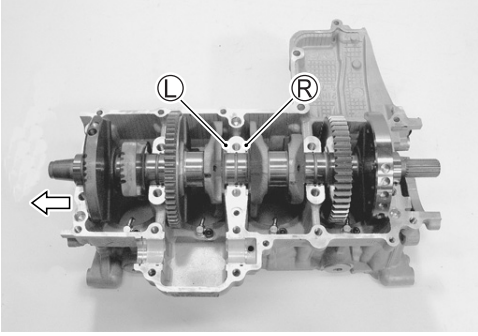

- With the crankshaft, right-side thrust bearing and left-side thrust bearing inserted in the upper crankcase, measure the thrust clearance on the left side by using the thickness gauge.

Ⓛ: Left-side thrust bearing
Ⓡ: Right-side thrust bearing

NOTE:
Pull the crankshaft to the generator side, so that there is no clearance on the right-side thrust bearing.

DATA Thrust clearance:
Standard: 0.060 – 0.110 mm (0.0024 – 0.0043 in)

TOOL 09900-20803: Thickness gauge

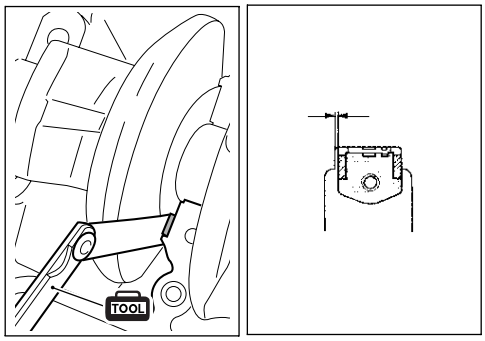

- If the thrust clearance exceeds the standard range, adjust the thrust clearance by the following procedures.

CRANKSHAFT THRUST CLEARANCE ADJUSTMENT

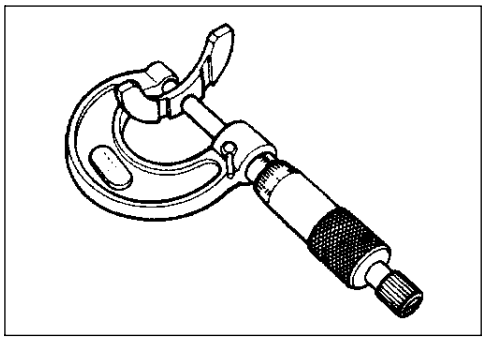

- Remove the right-side thrust bearing and measure its thickness with a micrometer.
- If the thickness of the right-side thrust bearing is below standard, replace it with a new one and once again perform the thrust clearance measurement listed above, checking to make sure it is within standard.

DATA Right-side thrust bearing thickness:
Standard: 2.420 – 2.440 mm (0.0953 – 0.0961 in)

TOOL 09900-20205: Micrometer (0 – 25 mm)

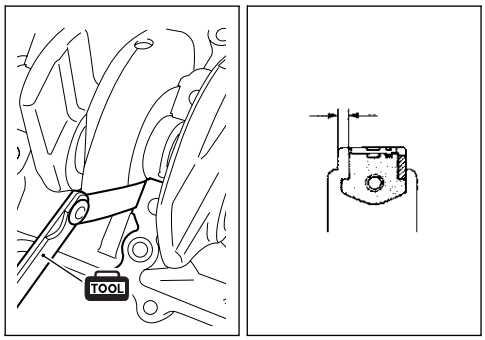

- If the right-side thrust bearing is within the standard range, reinsert the right-side thrust bearing and remove the left-side thrust bearing.
- As shown in the illustration, measure the clearance by using a thickness gauge before inserting the left-side thrust bearing.

TOOL 09900-20803: Thickness gauge

- Select a left-side thrust bearing from the selection table. (☞3-72)

DATA Thrust bearing selection table

Clearance before inserting left-side thrust bearing	Color (Part No.)	Thrust bearing thickness	Thrust clearance
2.570 – 2.590 mm (0.1012 – 0.1020 in)	Brown (12228-48B00-0B0)	2.480 – 2.500 mm (0.0976 – 0.0984 in)	0.070 – 0.110 mm (0.0028 – 0.0043 in)
2.550 – 2.570 mm (0.1004 – 0.1012 in)	Red (12228-48B00-0C0)	2.460 – 2.480 mm (0.0969 – 0.0976 in)	0.070 – 0.110 mm (0.0028 – 0.0043 in)
2.530 – 2.550 mm (0.0996 – 0.1004 in)	Yellow (12228-48B00-0D0)	2.440 – 2.460 mm (0.0961 – 0.0969 in)	0.070 – 0.110 mm (0.0028 – 0.0043 in)
2.510 – 2.530 mm (0.0988 – 0.0996 in)	Green (12228-48B00-0E0)	2.420 – 2.440 mm (0.0953 – 0.0961 in)	0.070 – 0.110 mm (0.0028 – 0.0043 in)
2.490 – 2.510 mm (0.0980 – 0.0988 in)	Blue (12228-48B00-0F0)	2.400 – 2.420 mm (0.0945 – 0.0953 in)	0.070 – 0.110 mm (0.0028 – 0.0043 in)
2.470 – 2.490 mm (0.0972 – 0.0980 in)	Orange (12228-48B00-0G0)	2.380 – 2.400 mm (0.0937 – 0.0945 in)	0.070 – 0.110 mm (0.0028 – 0.0043 in)
2.440 – 2.470 mm (0.0961 – 0.0972 in)	Black (12228-48B00-0H0)	2.360 – 2.380 mm (0.0929 – 0.0937 in)	0.060 – 0.110 mm (0.0024 – 0.0043 in)

- After selecting a left-side thrust bearing, insert it and again perform the thrust clearance measurement to make sure it falls within the standard range.

Ⓐ Color code

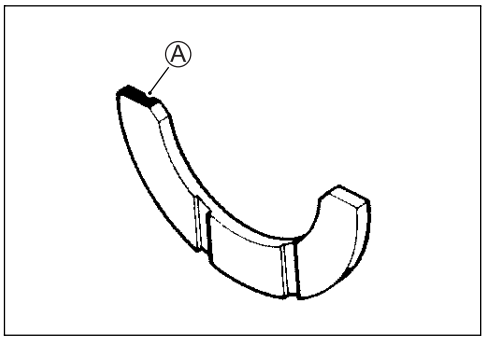

NOTE:
Right-side thrust bearing has the same specification as the GREEN (12228-48B00-0E0) of left-side thrust bearing.

ENGINE REASSEMBLY

- Reassemble the engine in the reverse order of disassembly.
- The following steps require special attention or precautionary measures should be taken.

NOTE:
Apply engine oil to each running and sliding part before reassembling.

- Be sure to install the following items to the crankcase.

* Crankshaft journal bearing (☞3-70)
* Gearshift fork (☞3-58)
* Gearshift fork shaft (☞3-58)
* Gearshift shaft bearing (☞3-57)
* Gearshift cam bearing (☞3-57)
* Gearshift cam (☞3-57)
* Bearing retainer (☞3-58)
* Oil jets (☞3-60)

PISTON RING

- Install the piston rings in the order of oil ring, 2nd ring and 1st ring.
- The first member to go into the oil ring groove is a spacer ①. After placing the spacer, fit the two side rails ②.

NOTE:
Side designations, top and bottom, are not applied to the spacer and side rails: you can position each either way.

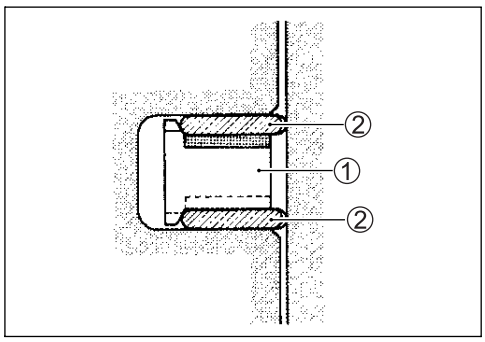

CAUTION

When installing the spacer, be careful not to allow its two ends to overlap in the groove.

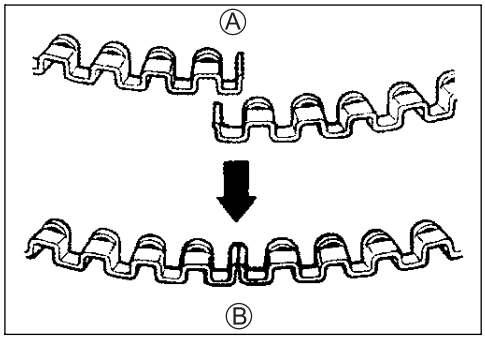

Ⓐ INCORRECT
Ⓑ CORRECT

- Install the 2nd ring ③ and the 1st ring ④ to the piston.

NOTE:
1st ring and 2nd ring differ in shape.

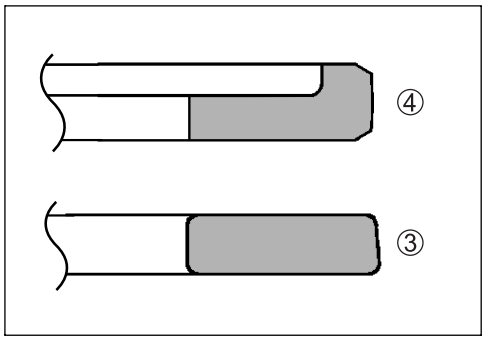

- Be sure to bring the concave side of 1st ring to the top when fitting it to the piston.
- 2nd ring has letters “T” marked on the side. Be sure to bring the marked side ring to the top when fitting it to the piston.

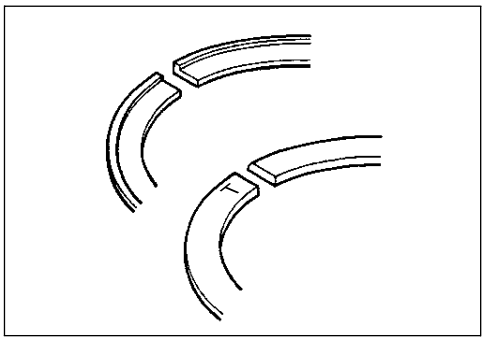

- Position the gaps of the three ring as shown. Before inserting each piston into the cylinder, check that the gaps are so located.

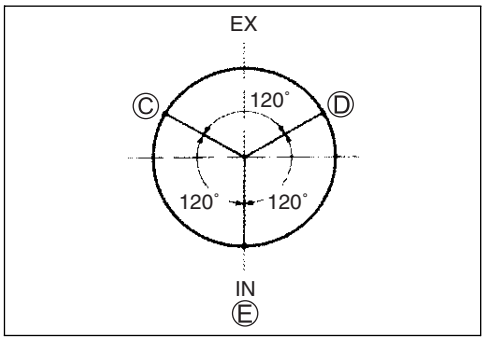

Ⓒ 2nd ring and lower side rail
Ⓓ Upper side rail
Ⓔ 1st ring and spacer

PISTON AND CONROD

- Apply a small quantity of MOLYBDENUM OIL SOLUTION onto each piston pin.

MOLYBDENUM OIL SOLUTION

- Assemble the piston and conrod.

NOTE:
When installing the pistons, the indent Ⓐ on the piston head must be brought to the other side of ID code Ⓑ on the conrod big end.

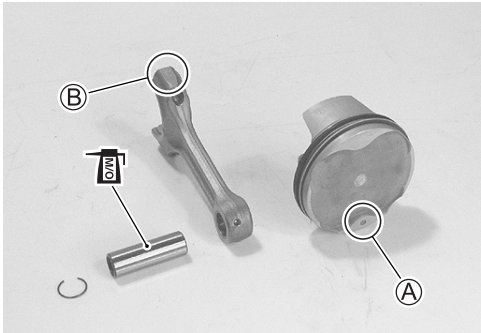

- Install the piston pin circlips ①.

CAUTION

Use new piston pin circlips to prevent circlip failure which will occur with a bend one.

NOTE:
End gap of the circlip should not be aligned with the cutaway in the piston pin bore.

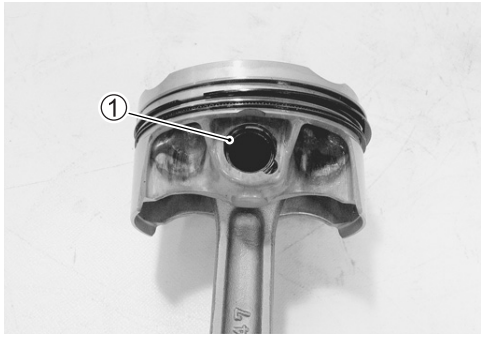

- Apply a small quantity of MOLYBDENUM OIL SOLUTION to the sliding surface of the pistons and cylinder walls.

MOLYBDENUM OIL SOLUTION

NOTE:
Be sure to install the pistons in the cylinders from which they were removed in disassembly, referring to the cylinder numbers, "1" through "4", scribed on the piston.

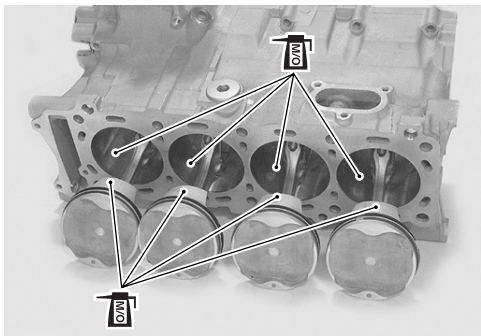

- Install the pistons with conrods into the cylinders from topside using the special tool.

NOTE:
When installing the pistons, the indent Ⓒ of each piston head must be brought to the exhaust side.

09916-77310: Piston ring compressor

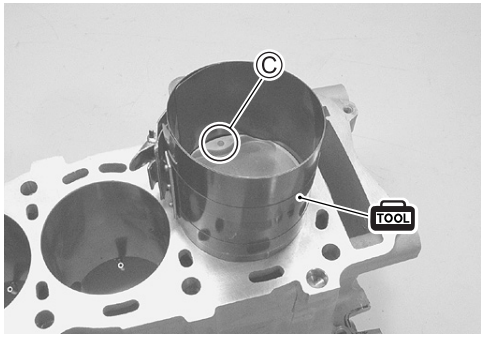

CAUTION

Be careful not to damage the cylinder wall and piston jet by the conrod.

- Check that I.D. code Ⓓ on each conrod faces intake side.

CAUTION

Be sure to clean the conrod big end.

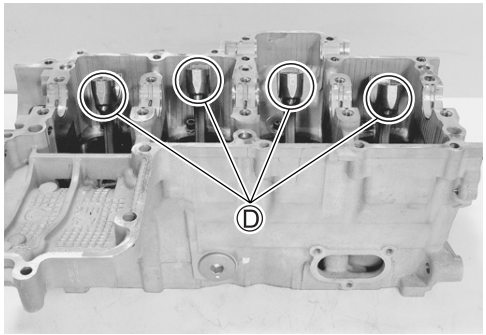

- Apply a MOLYBDENUM OIL SOLUTION to each crank pin bearing surface and crankshaft journal bearing surface.

MOLYBDENUM OIL SOLUTION

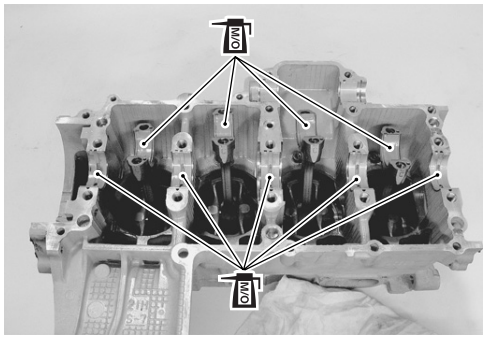

CRANKSHAFT

- Position the No.2 and No.3 conrod big ends on the same side, and the No.1 and No.4 conrod big ends on the opposite side of No.2 and No.3.

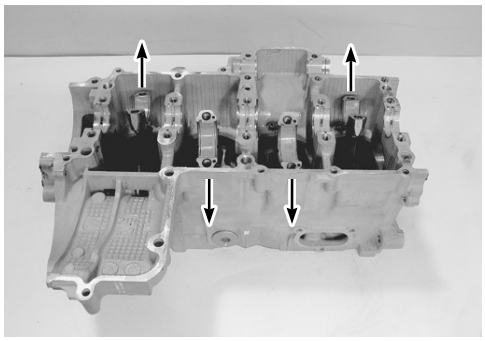

- Set the crankshaft to the conrods and upper crankcase.

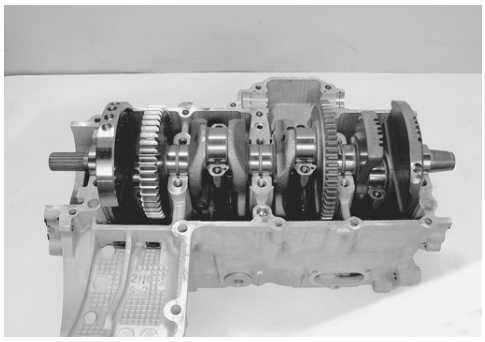

- Apply a MOLYBDENUM OIL SOLUTION to the crank pin and bearing surface.

MOLYBDENUM OIL SOLUTION

CAUTION

Be sure to clean the conrod big end.

- When fitting the conrod cap, make sure that I.D. code Ⓐ on each conrod faces intake side.

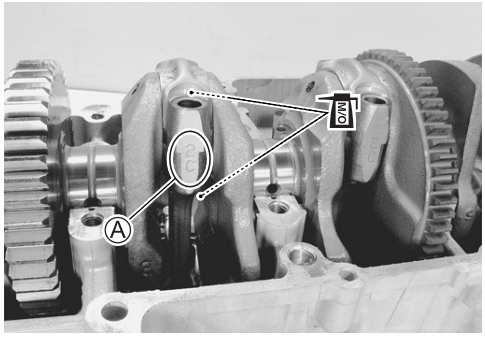

- Apply engine oil to the bearing cap bolts.
- Tighten the bearing cap bolt by using a 10 mm, 12 point socket wrench in the following two steps.

Conrod bearing cap bolt:
Initial: 37 N·m (3.7 kgf-m, 27.0 lb-ft)
Final : 60° (1/6 turn)

- Apply engine oil to the conrod big end side surfaces.
- Check the conrod movement for smooth turning.

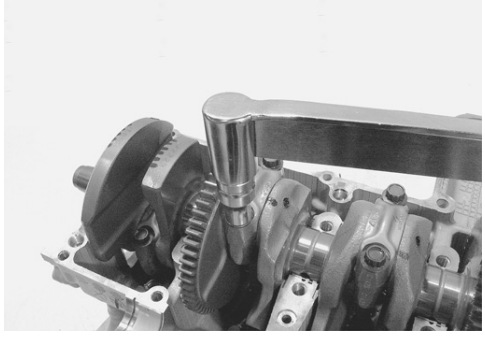

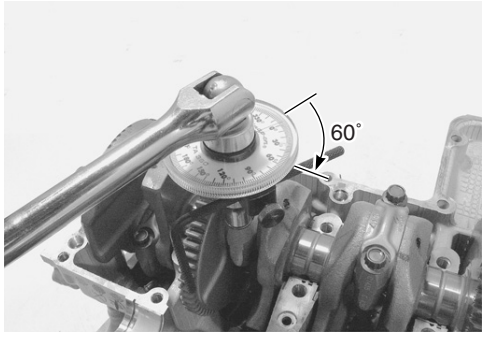

- Apply a MOLYBDENUM OIL SOLUTION to each crankshaft journal and bearing lightly.

MOLYBDENUM OIL SOLUTION

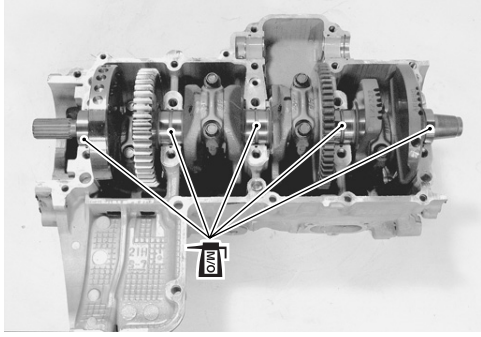

- Insert the right and left-thrust bearings with oil groove Ⓑ facing the crank web.

NOTE:
Right-thrust bearing has green painting.

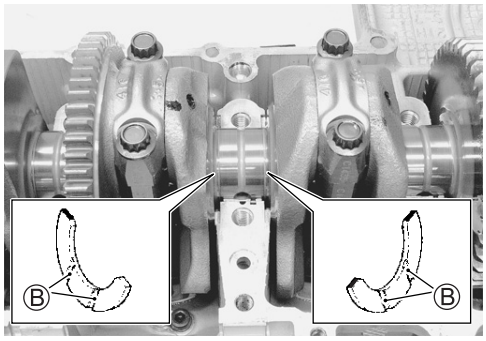

BALANCER SHAFT

- Install the thrust washers ①, ② and oil seal ③.
- Apply a MOLYBDENUM OIL SOLUTION to each balancer shaft journal and bearing lightly.

MOLYBDENUM OIL SOLUTION

- Set the balancer shaft so that its punch mark Ⓐ is aligned with the index Ⓑ on the crankshaft.

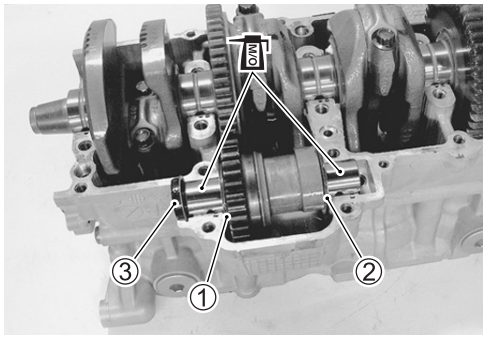

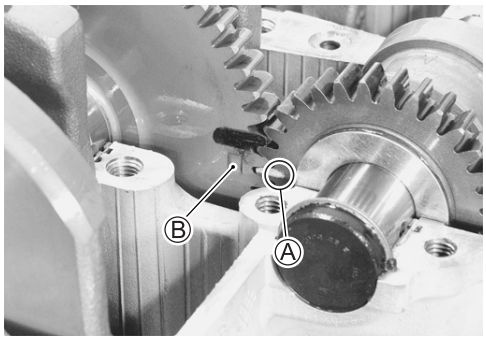

CRANKCASE

- Clean the mating surfaces of the crankcases.
- Install the dowel pins and O-ring ① to the upper crankcase.

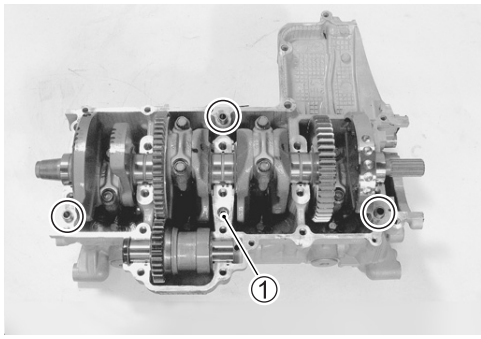

- Apply bond to the mating surface of the middle crankcase.

1207B 99000-31140: SUZUKI BOND "1207B" or equivalent

NOTE:
Use of bond is as follows:
** Make surfaces free from moisture, oil, dust and other foreign materials.*
** Spread on surfaces thinly to form an even layer, and assemble the crankcases within few minutes.*
** Take extreme care not to apply any bond to the oil hole, oil groove and bearing.*
** Apply to distorted surfaces as it forms a comparatively thick film.*

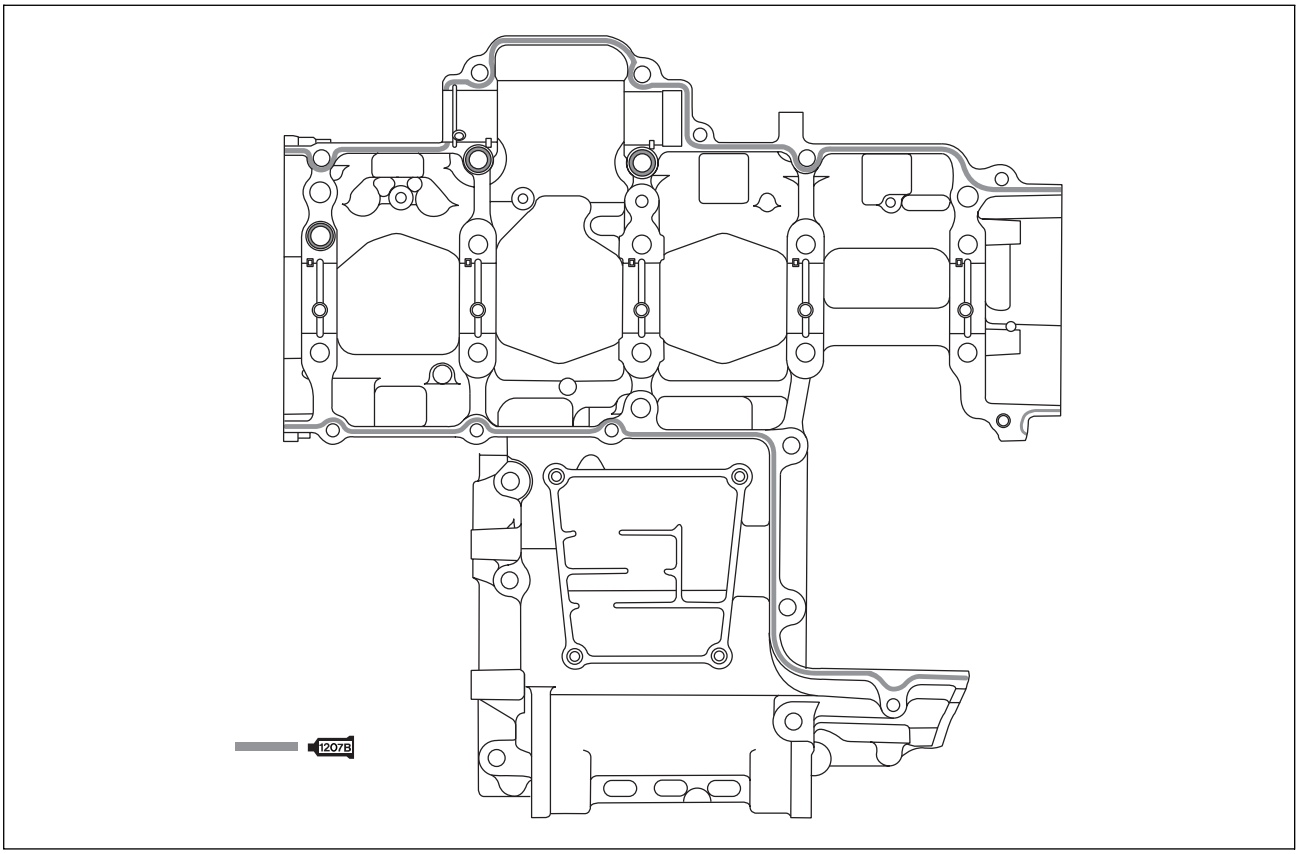

- Tighten the crankshaft journal bolts (M9) in ascending order of numbers assigned to these bolts. Tighten each bolt a little at a time to equalize the pressure in the following two steps.

Crankshaft journal bolt (M9):
Initial: 18 N·m (1.8 kgf-m, 13.0 lb-ft)
Final : 50°

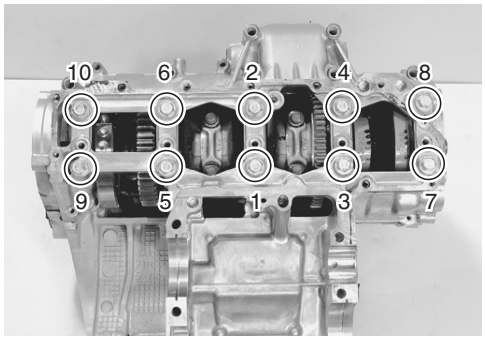

- Tighten the other crankcase bolts a little at a time to equalize the pressure.

Crankcase bolt: (M6) Initial: 6 N·m (0.6 kgf-m, 4.5 lb-ft)
Final : 11 N·m (1.1 kgf-m, 8.0 lb-ft)
(M8) Initial: 15 N·m (1.5 kgf-m, 11.0 lb-ft)
Final : 26 N·m (2.6 kgf-m, 19.0 lb-ft)

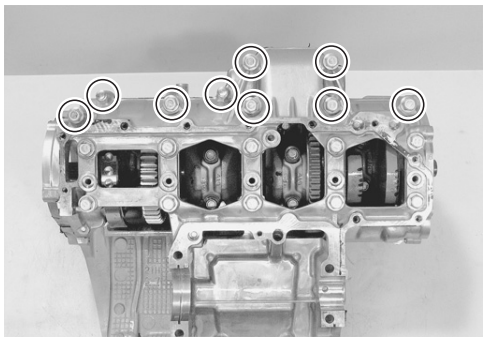

NOTE:
Fit a new gasket washer to the crankcase bolt Ⓐ.

CAUTION

Use a new gasket washer to prevent oil leakage.

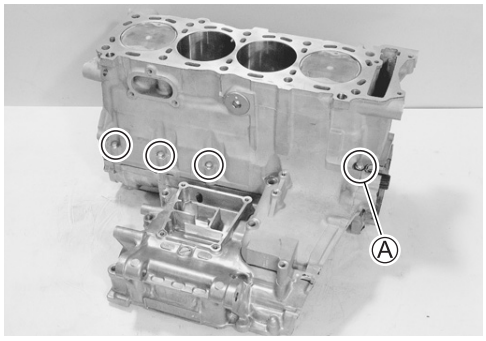

NOTE:
After the crankshaft journal bolts and crankcase bolts have been tightened, check if the crankshaft rotates smoothly.

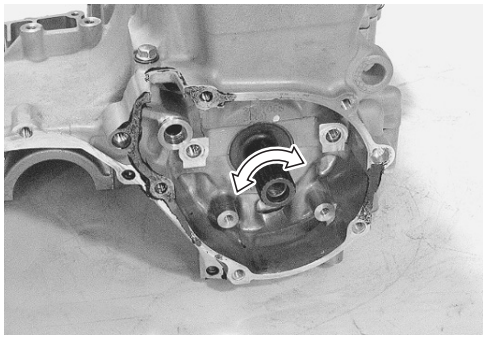

TRANSMISSION

- Install the bearing pins ① and the C-rings ② on the middle crankcase.

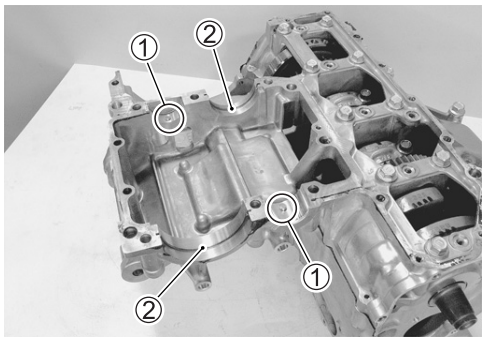

- Install the countershaft assembly to the middle crankcase.

NOTE:
Align the C-ring with the groove of bearing and the bearing pin with the indent on the bearing.

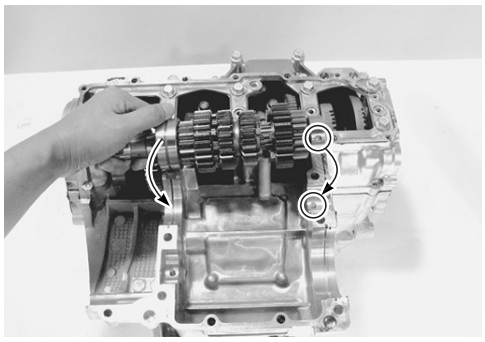

- Install the driveshaft assembly to the middle crankcase.

NOTE:
Align the C-ring with the groove of bearing and the bearing pin with the indent on the bearing.

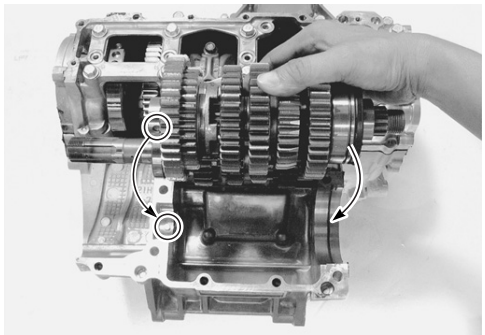

- Install the oil seal ③.
- Turn the bearings to fit the bearing dowel pins Ⓐ in the respective positions.

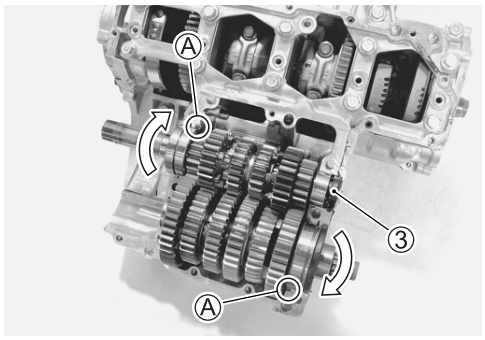

- Install the O-rings and dowel pins.

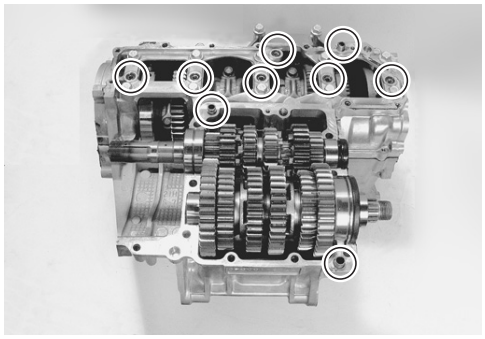

- Apply bond to the mating surface of the lower crankcase.

1207B 99000-31140: SUZUKI BOND "1207B" or equivalent

NOTE:
Use of bond is as follows:
** Make surfaces free from moisture, oil, dust and other foreign materials.*
** Apply to both mating surfaces of crankcases at hatched parts.*
** Spread on surfaces thinly to form an even layer, and assemble the crankcases within few minutes.*
** Take extreme care not to apply any bond to the oil hole, oil groove and bearing.*
** Apply to distorted surfaces as it forms a comparatively thick film.*

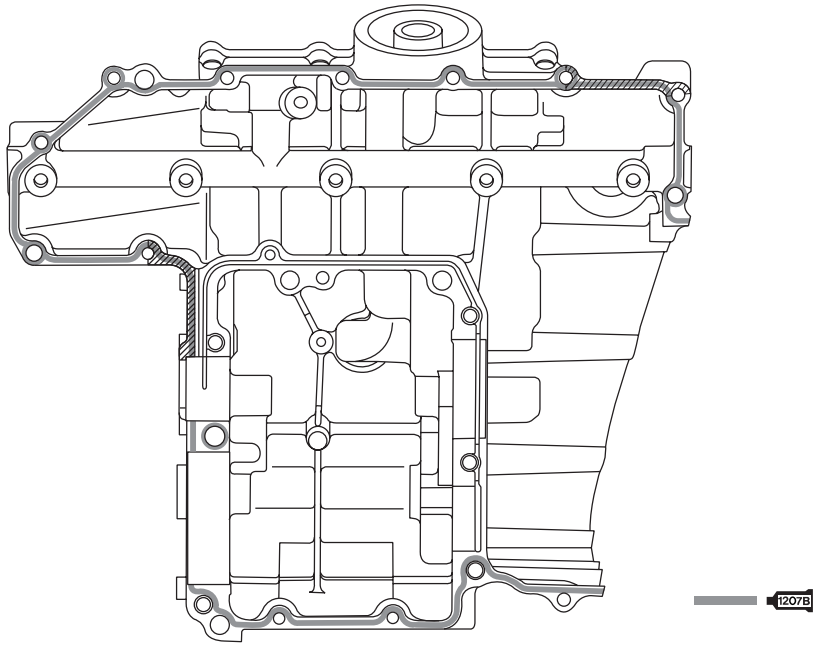

- Match the middle and lower crankcases.

NOTE:
Align the gearshift forks ④ with their grooves ⑤.

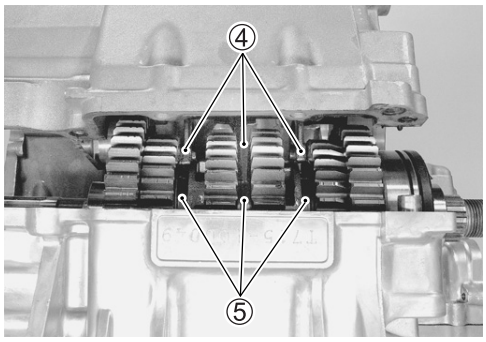

- Tighten the crankcase bolts a little at a time to equalize the pressure.

NOTE:
** Fit the new copper washers to the crankcase bolts Ⓑ.*
** Fit the new gasket washers to the crankcase bolts Ⓒ.*

Crankcase bolt: (M6) Initial: 6 N·m (0.6 kgf-m, 4.5 lb-ft)
Final : 11 N·m (1.1 kgf-m, 8.0 lb-ft)
(M8) Initial: 15 N·m (1.5 kgf-m, 11.0 lb-ft)
Final : 26 N·m (2.6 kgf-m, 19.0 lb-ft)

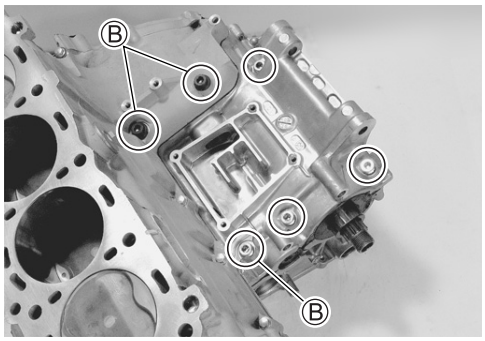

CAUTION

Use new copper washers and new gasket washers to prevent oil leakage.

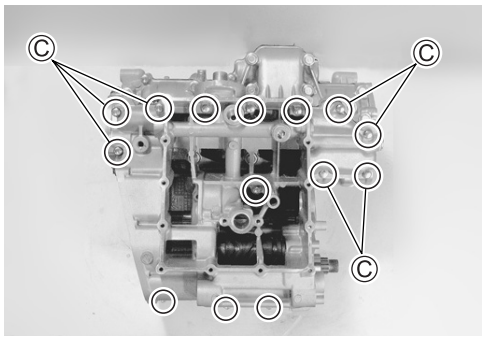

- Check that the countershaft and driveshaft rotate smoothly.

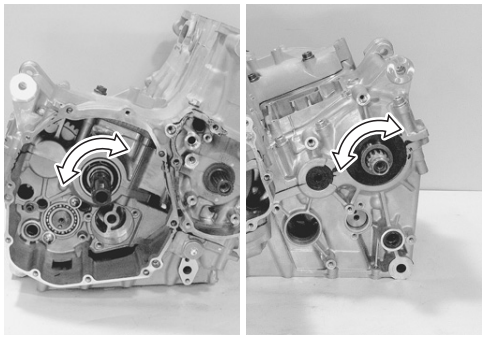

OIL STRAINER
- Install the O-ring.
- Apply grease to the O-ring.

99000-25010: SUZUKI SUPER GREASE "A" or equivalent

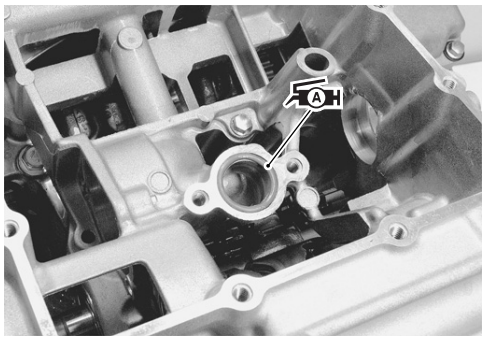

CAUTION

Use a new O-ring to prevent oil leakage.

- Install the oil strainer ① and tighten the oil strainer bolts to the specified torque.

Oil strainer bolt: 11 N·m (1.1 kgf-m, 8.0 lb-ft)

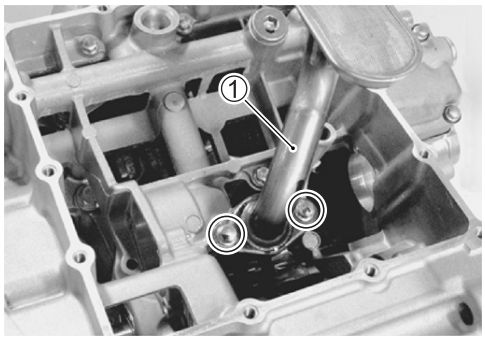

OIL PIPE

- Apply grease to the O-rings.
- Press in the oil pipe ① to the crankcase.

99000-25010: SUZUKI SUPER GREASE "A" or equivalent

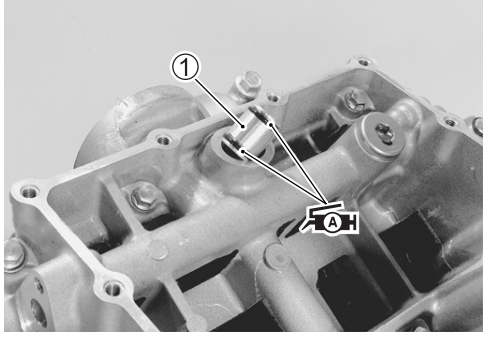

CAUTION

Use new O-rings to prevent oil leakage.

OIL PRESSURE SWITCH

- Apply bond to the thread part of oil pressure switch and tighten oil pressure switch to the specified torque.

99000-31140: SUZUKI BOND "1207B" or equivalent

Oil pressure switch: 14 N·m (1.4 kgf-m, 10.0 lb-ft)

NOTE:
Be careful not to apply bond to the hole of thread end.

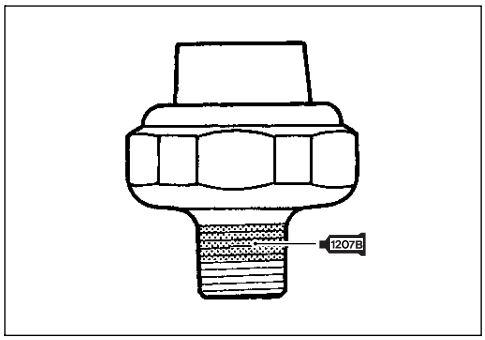

OIL PAN

- Install a new gasket ①.

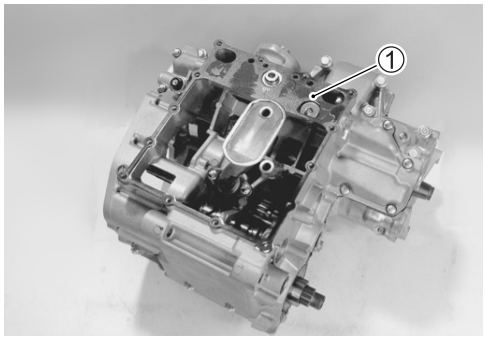

- Install the oil pan.

NOTE:
Fit the gasket washers to the oil pan bolts Ⓐ.

CAUTION

Use new gasket washers to prevent oil leakage.

- Tighten the oil pan bolts diagonally to the specified torque.

Oil pan bolt: 10 N·m (1.0 kgf-m, 7.0 lb-ft)

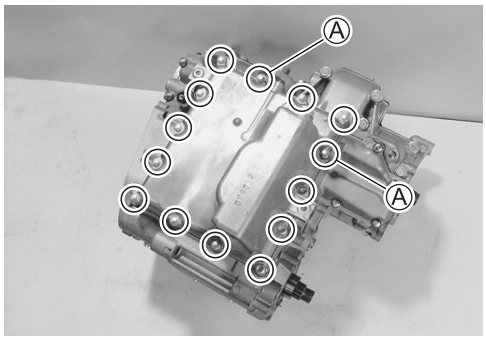

OIL FILTER

- Install oil filter with the special tool. (☞2-13)

TOOL 09915-40610: Oil filter wrench

Oil filter: 20 N·m (2.0 kgf-m, 14.5 lb-ft)

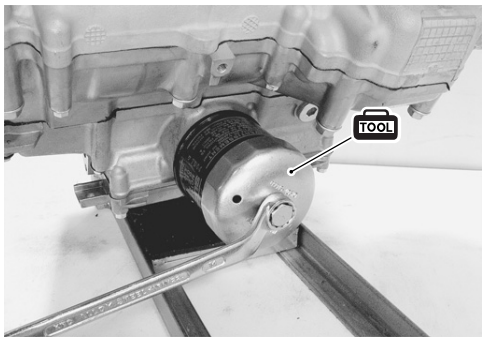

CRANKCASE BREATHER COVER

- Install a new gasket ①.

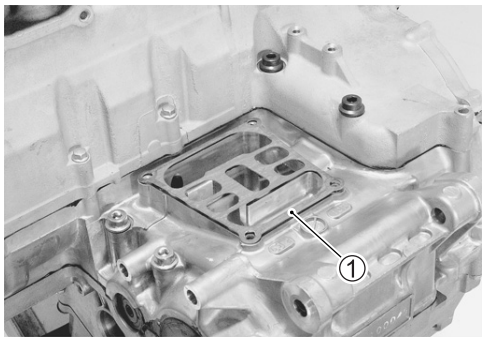

- Install the breather cover ②.

Breather cover bolt: 10 N·m (1.0 kgf-m, 7.0 lb-ft)

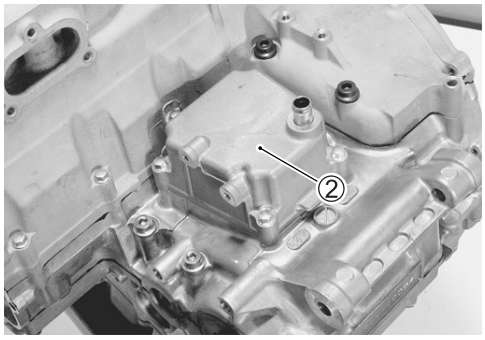

GEAR POSITION SWITCH

- Apply grease to the O-ring.

NOTE:
Align the gear position switch pin Ⓐ with the gearshift cam hole Ⓑ.

99000-25010: SUZUKI SUPER GREASE "A" or equivalent

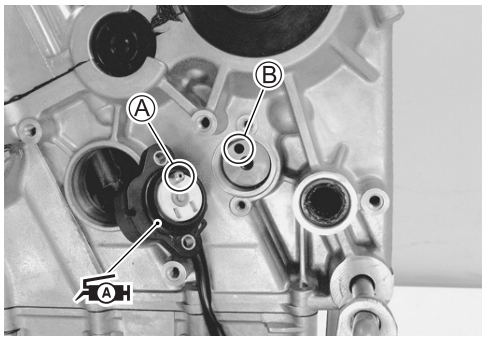

- Install the gear position switch.
- Apply thread lock to the gear position switch bolts.

1322 99000-32110: THREAD LOCK SUPER "1322" or equivalent

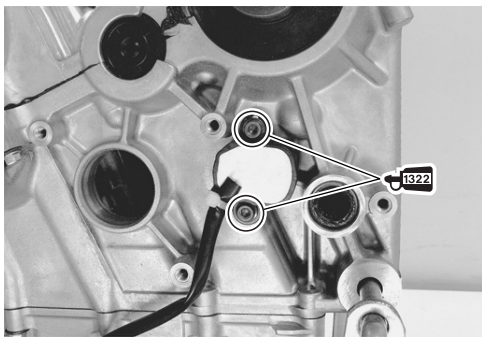

WATER PUMP

- Apply grease to the O-ring.

CAUTION

Use a new O-ring to prevent oil leakage.

99000-25010: SUZUKI SUPER GREASE "A" or equivalent

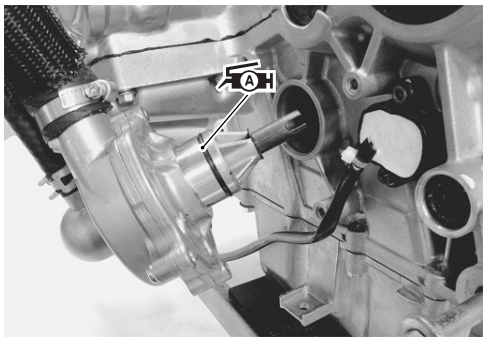

- Tighten the water pump mounting bolts ① to the specified torque.

Water pump mounting bolt: 10 N·m (1.0 kgf-m, 7.0 lb-ft)

NOTE:
Pass the gear position switch lead wire ② under the water pump rib and clamp the gear position switch lead wire.

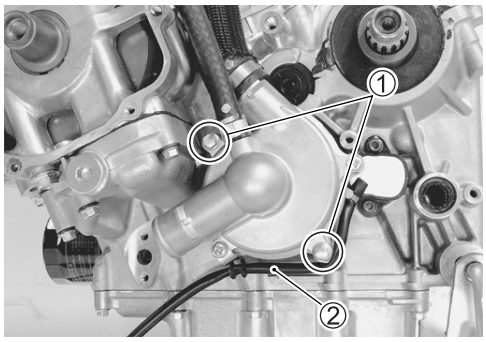

- Apply engine coolant to the O-ring.

CAUTION

Use a new O-ring to prevent engine coolant leakage.

- Install the water inlet cover ③.

Water inlet cover bolt: 10 N·m (1.0 kgf-m, 7.0 lb-ft)

NOTE:
Fit the clamp to the bolt Ⓐ.

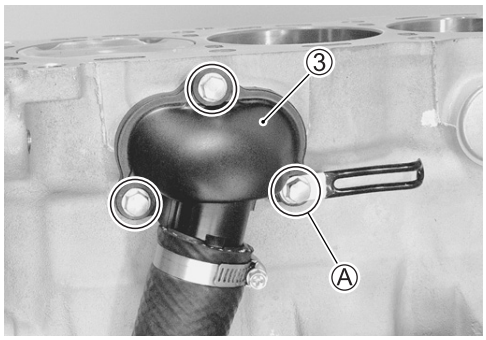

GENERATOR ROTOR

- Degrease the tapered portion Ⓐ of generator rotor and also the crankshaft Ⓑ. Use nonflammable cleaning solvent to wipe off oily or greasy matter and make these surfaces completely dry.

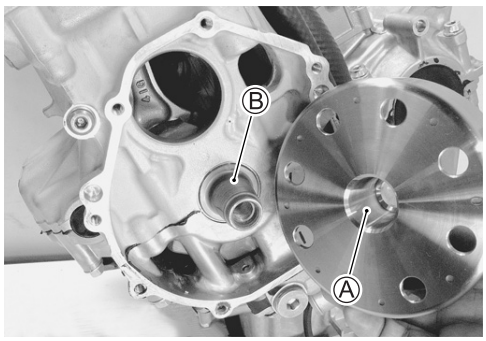

- Install the generator rotor onto the crankshaft.
- Hold the generator rotor with the special tool and tighten its bolt to the specified torque.

TOOL 09930-44520: Rotor holder

Generator rotor bolt: 120 N·m (12.0 kgf-m, 87.0 lb-ft)

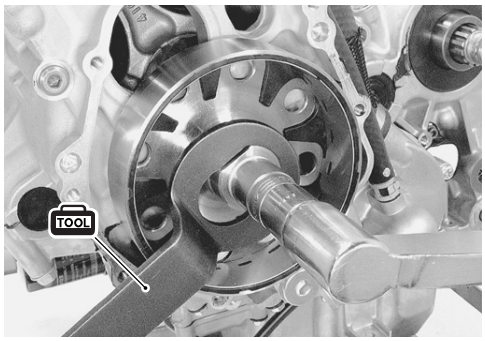

GENERATOR COVER

- Apply bond lightly to the mating surfaces at the parting line between the upper and middle crankcases as shown.

1207B 99000-31140: SUZUKI BOND "1207B" or equivalent

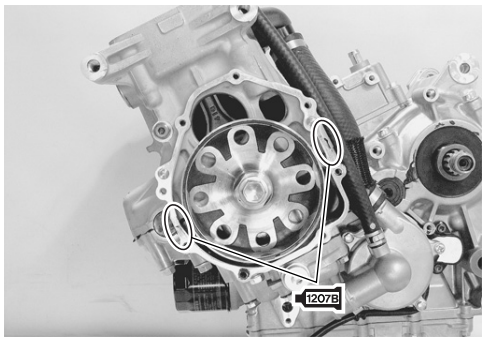

- Install the dowel pins and new gasket ①.

CAUTION

Use a new gasket to prevent oil leakage.

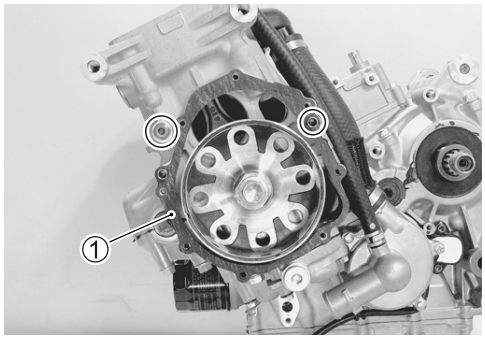

- Install the generator cover and tighten the generator cover bolts to the specified torque.

Generator cover bolt: 10 N·m (1.0 kgf-m, 7.0 lb-ft)

WARNING

Be careful not to pinch finger between the generator cover and crankcase.

CAUTION

Use new gasket washers to prevent oil leakage.

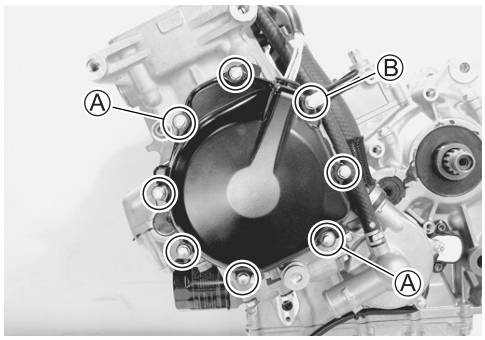

NOTE:

** Fit the gasket washers to the bolts Ⓐ.*

** Fit the clamp to the bolt Ⓑ.*

- Install the CKP sensor ②.

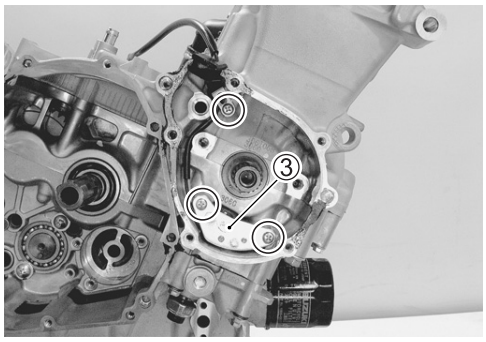

- Apply bond lightly to the groove of signal generator lead wire grommet.

1207B 99000-31140: SUZUKI BOND "1207B" or equivalent

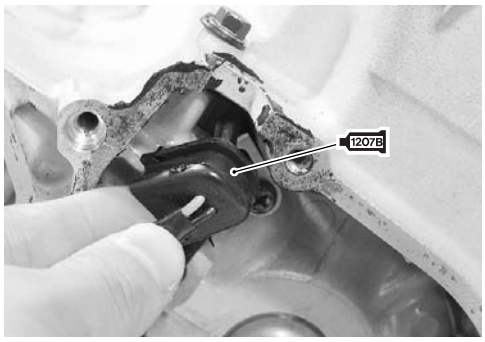

CAM CHAIN DRIVE SPROCKET

- Install the cam chain drive sprocket onto the crankshaft.

NOTE:
When installing the cam chain drive sprocket, align the wide spline teeth Ⓐ and Ⓑ.

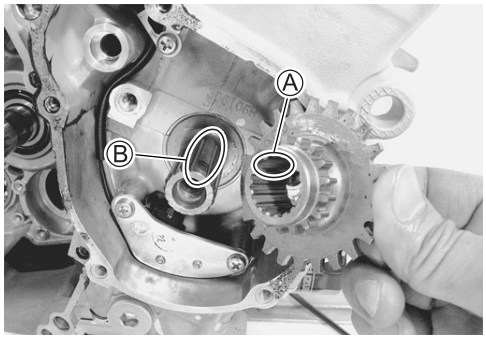

CAM CHAIN TENSIONER/CAM CHAIN GUIDE

- Install the cam chain.
- Apply a small quantity of thread lock to the cam chain tensioner bolt and cam chain guide bolt.
- Install the cam chain tensioner ①.
- Install the cam chain guide ②.

1322 99000-32110: THREAD LOCK SUPER "1322" or equivalent

Cam chain tensioner bolt: 23 N·m (2.3 kgf-m, 16.5 lb-ft)
Cam chain guide bolt: 23 N·m (2.3 kgf-m, 16.5 lb-ft)

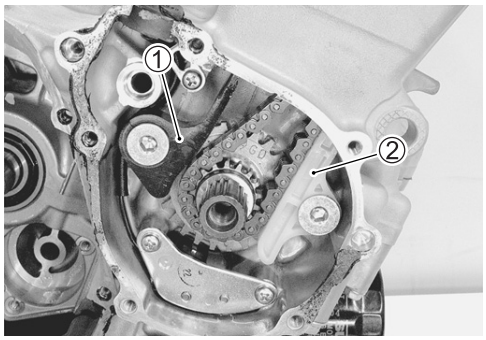

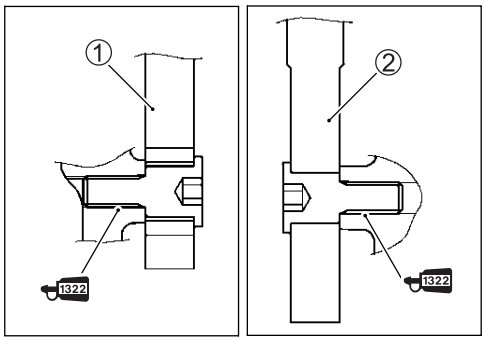

STARTER CLUTCH

- Install the washer ①.
- Install the starter clutch assembly onto the crankshaft.

NOTE:
When installing the starter clutch assembly, align the wide spline teeth Ⓐ and Ⓑ.

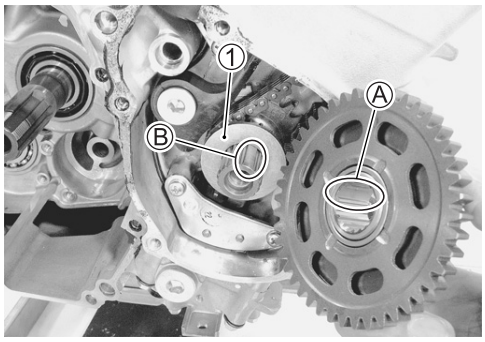

- Install the starter clutch bolt with the washer.
- Hold the starter clutch with the special tool and tighten its bolt to the specified torque.

TOOL 09920-34830: Starter clutch holder

Starter clutch bolt: 55 N·m (5.5 kgf-m, 40.0 lb-ft)

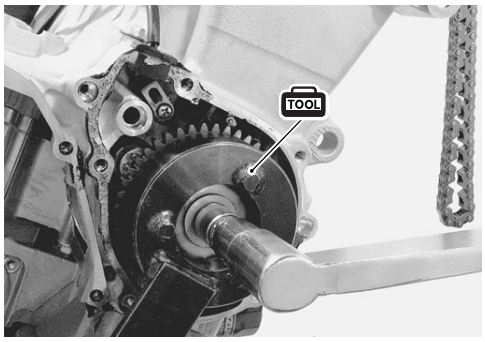

STARTER IDLE GEAR

- Install the starter idle gear No.2 ①, shaft ② and spring washer ③.

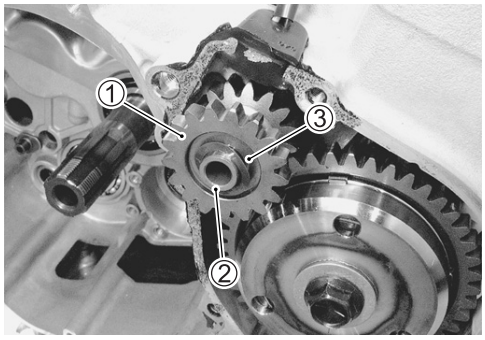

- Apply bond lightly to the mating surfaces Ⓐ at the parting line between the upper and middle crankcases and surface of grommet Ⓑ as shown.

1207B 99000-31140: SUZUKI BOND "1207B" or equivalent

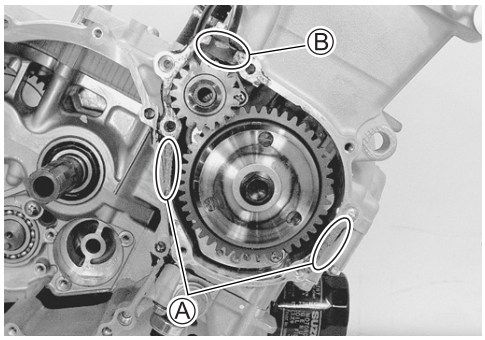

- Install a new gasket ④ and dowel pins.

CAUTION

Use a new gasket to prevent oil leakage.

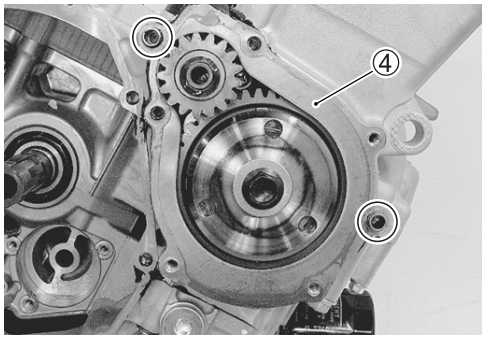

- Install the starter clutch cover and tighten the bolts.

NOTE:
** Fit a new gasket washer to the bolt Ⓒ.*

CAUTION

Use a new gasket washer to prevent oil leakage.

Starter clutch cover bolt: 10 N·m (1.0 kgf-m, 7.0 lb-ft)

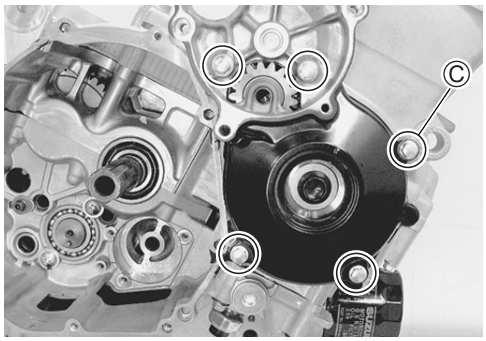

- Install the starter idle gear No.1 shaft ⑤, thrust washer ⑥, bearing ⑦, starter idle gear No.1 ⑧, washer ⑨, and spring washer ⑩.

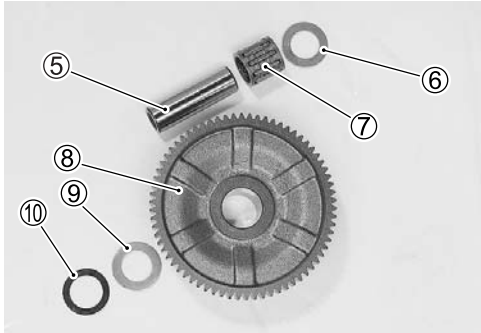

- Install the dowel pins and new gasket ⑪.

CAUTION

Use a new gasket to prevent oil leakage.

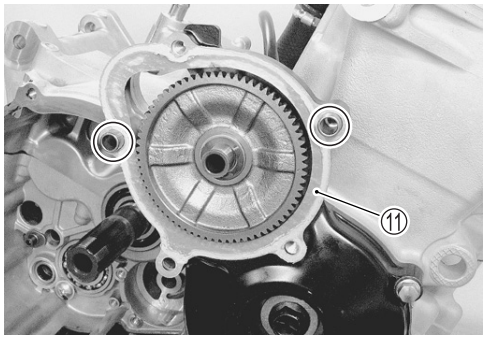

- Install the starter idle gear cover and tighten its bolts to the specified torque.

Starter idle gear cover bolt: 10 N·m (1.0 kgf-m, 7.0 lb-ft)

NOTE:
Fit a new gasket washer to the bolt Ⓓ.

CAUTION

Use a new gasket washer to prevent oil leakage.

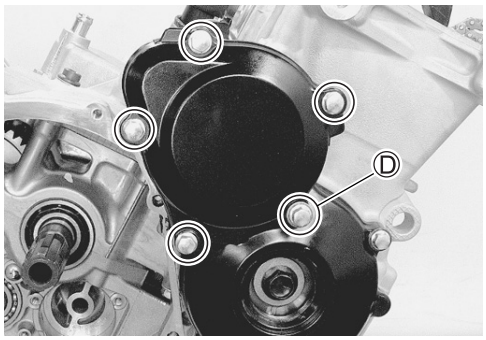

GEARSHIFT SYSTEM

- Install the gearshift cam stopper ①, its bolt ②, washer ③ and return spring ④.

NOTE:
Apply a small quantity of thread lock to the gearshift cam stopper bolt ② and tighten it to the specified torque.

1322 99000-32110: THREAD LOCK SUPER "1322" or equivalent

Gearshift cam stopper bolt: 10 N·m (1.0 kgf-m, 7.0 lb-ft)

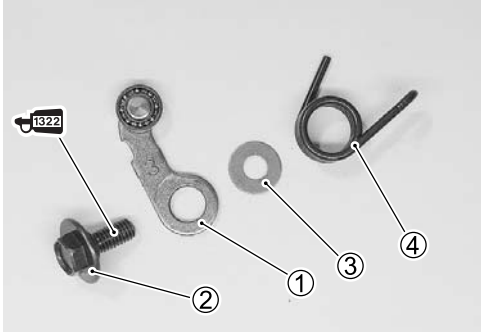

NOTE:
Hook the return spring end Ⓐ to the stopper ①.

- Check the gearshift cam stopper moves smoothly.
- Locate the gearshift cam in the neutral position.

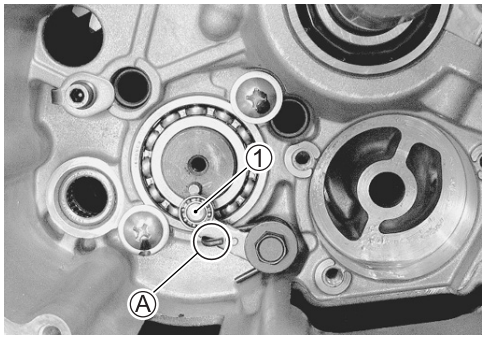

- Install the gearshift cam stopper plate ⑤.

NOTE:
Align the gearshift cam pin Ⓑ with the gearshift cam stopper plate hole Ⓒ.

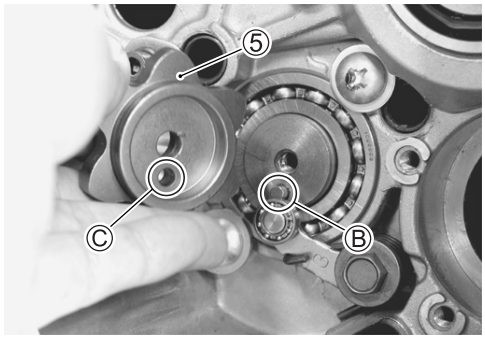

- Apply a small quantity of thread lock to the gearshift cam stopper plate bolt and tighten it to the specified torque.

1322 99000-32110: THREAD LOCK SUPER "1322" or equivalent

Gearshift cam stopper plate bolt: 13 N·m (1.3 kgf-m, 9.5 lb-ft)

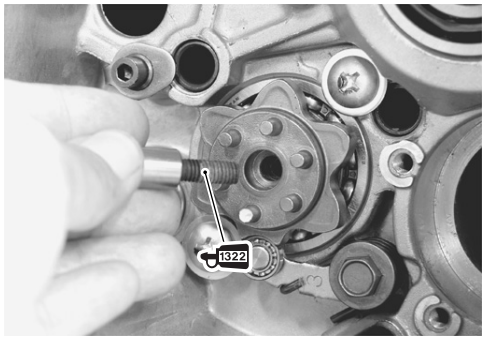

- Install the gearshift shaft assembly ⑥ and washer ⑦ as shown.

NOTE:
Pinch the gearshift arm stopper ⑧ with return spring ends Ⓓ.

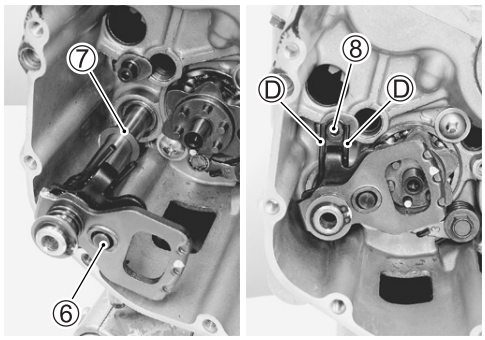

- Install the washer ⑨ and snap ring ⑩.

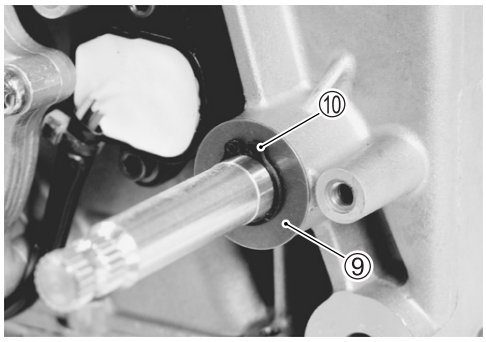

OIL PUMP

- Install the O-ring to the oil pump and apply grease to it.

CAUTION

Use a new O-ring to prevent oil leakage.

NOTE:
Set the oil pump shaft end Ⓐ to the water pump shaft.

99000-25010: SUZUKI SUPER GREASE "A" or equivalent

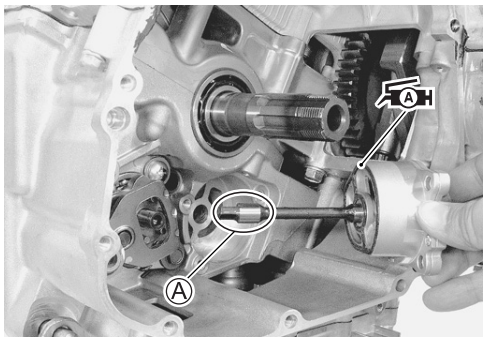

- Install the oil pump with the oil pump mounting bolts and then tighten them to the specified torque.

Oil pump mounting bolt: 10 N·m (1.0 kgf-m, 7.0 lb-ft)

- Install the washer ① and pin ②.

NOTE:
Be careful not to drop the washer ① and pin ② into the crankcase.

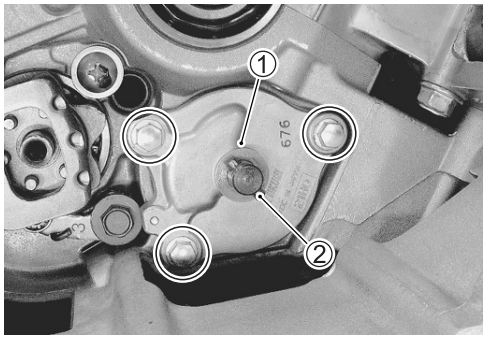

- Install the oil pump driven gear ③.
- Install the snap ring ④.

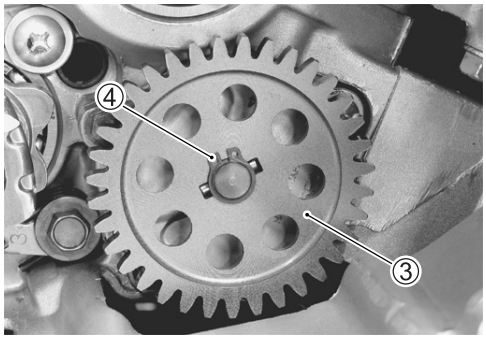

CLUTCH

NOTE:
Before assembling the clutch, adjust the clutch lifter. (☞3-43)

- Install the thrust washer onto the countershaft.

NOTE:
The chamfer side Ⓐ of thrust washer faces inside.

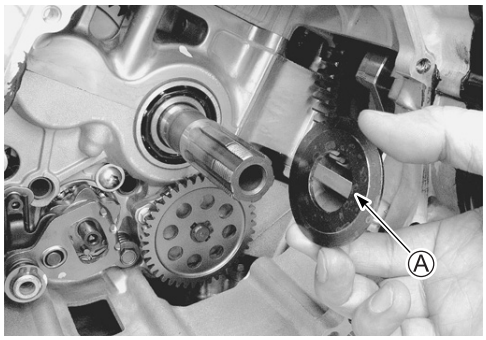

- Install the oil pump drive gear ① to the primary driven gear assembly ②.

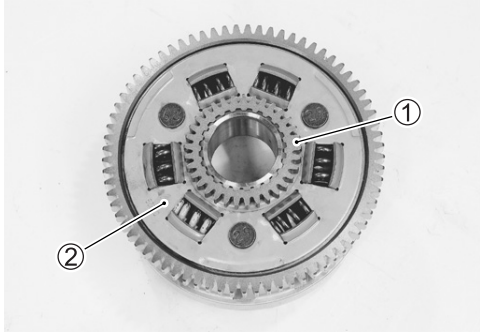

- Install the primary driven gear assembly ②.

NOTE:

** If it is difficult to install the primary driven gear, rotate the crankshaft.*

** Be sure to engage the oil pump driven gear with the drive gear and the primary driven gear with the drive gear.*

- Install the bearing ③ and spacer ④, and apply engine oil to them.
- Install the thrust washer ⑤.

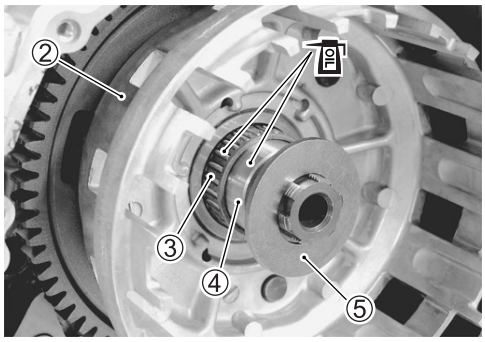

- Install the spring washer seat ⑥ to the clutch sleeve hub ⑦.

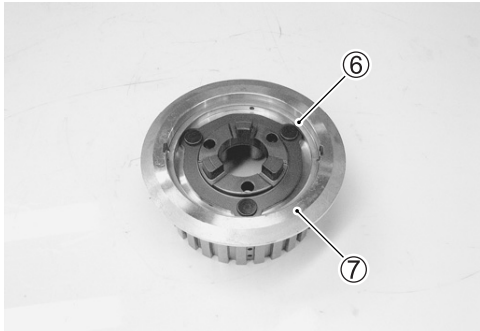

- Install the spring washers ⑧, clutch lifter driven cam ⑨ and clutch lifter drive cam ⑩ to the clutch sleeve hub ⑦.

NOTE:

Apply a small quantity of MOLYBDENUM OIL SOLUTION to the contact surfaces of the clutch lifter drive cam ⑩ and driven cam ⑨.

MOLYBDENUM OIL SOLUTION

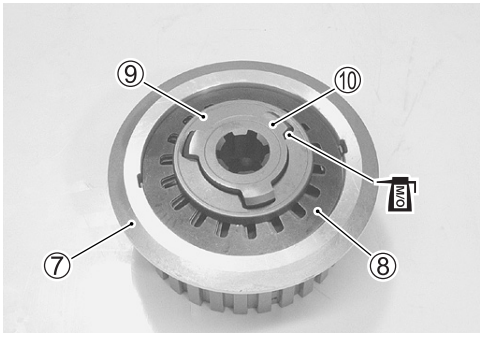

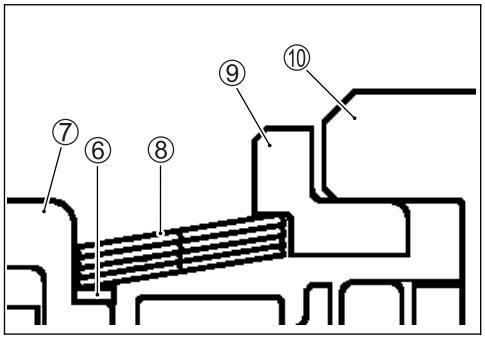

- Install the clutch sleeve hub assembly onto the countershaft.
- Install the washer ⑪ and spring washer ⑫.

NOTE:

** Before installing the washer ⑪, visually inspect the washer surface for wear and damage. If necessary, replace it with a new one.*

** The conical curve side of spring washer ⑫ faces outside.*

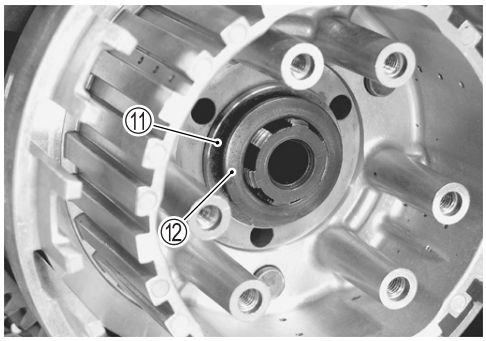

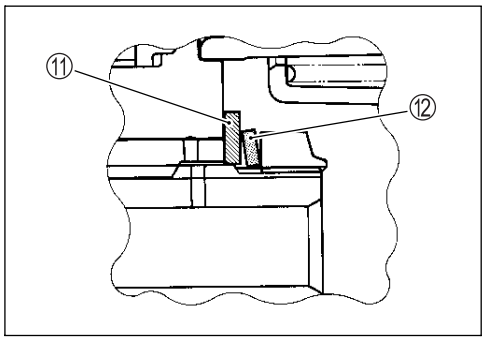

- Hold the clutch sleeve hub with the special tool.

TOOL 09920-53740: Clutch sleeve hub holder

- Tighten the clutch sleeve hub nut to the specified torque.

Clutch sleeve hub nut: 95 N·m (9.5 kgf-m, 68.5 lb-ft)

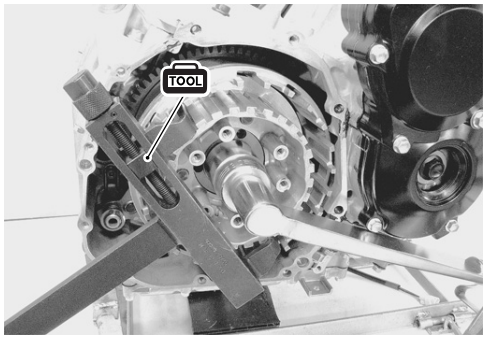

- Lock the clutch sleeve hub nut with a center punch.

- Install the spring washer seat ⑬ and spring washer ⑭ onto the clutch sleeve hub correctly.

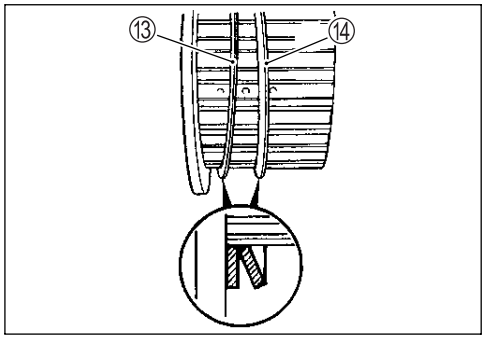

- Install the clutch push rod ⑮ into the countershaft.

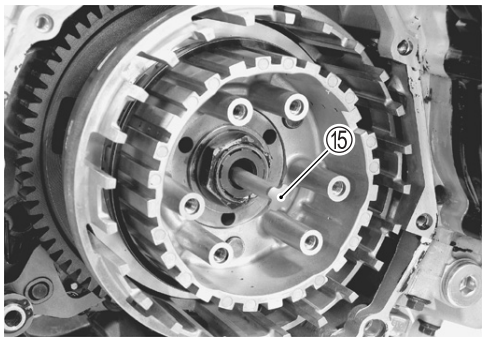

- Install the clutch push piece ⑯, bearing ⑰ and thrust washer ⑱ to the countershaft.

NOTE:
Thrust washer ⑱ is located between the pressure plate and bearing ⑰.

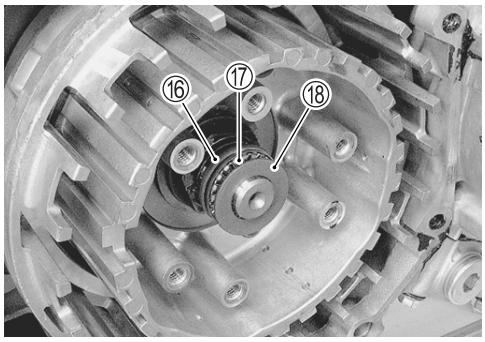

- Insert the clutch drive plates and driven plates one by one into the clutch sleeve hub in the prescribed order.

NOTE:
Insert the outermost No.2 drive plate claws Ⓑ to the other slits Ⓒ of clutch housing as shown.

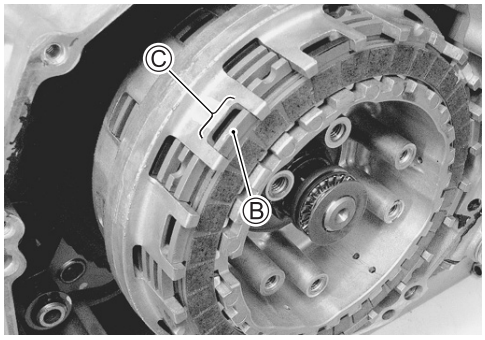

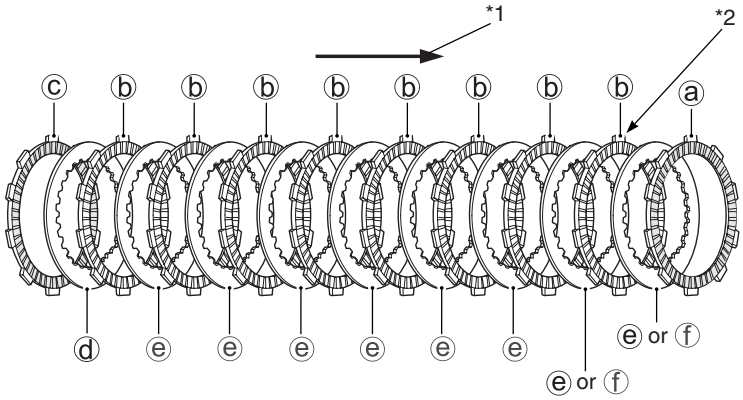

*1: Direction of outside
*2: Paint
DRIVE PLATE:
ⓐ No. 2 Drive plate.....1 pc. [No paint/Friction Piece: 48 pcs/I.D. 111 mm (4.4 in)]
ⓑ No. 1 Drive plate.....8 pcs. [Purple paint/Friction Piece: 36 pcs/I.D. 111 mm (4.4 in)]
ⓒ No. 3 Drive plate.....1 pc. [No paint/Friction Piece: 36 pcs/I.D. 118 mm (4.6 in)]

NOTE:
No. 1, No. 2 and No. 3 drive plates are equipped in the clutch system, they can be distinguished by the inside diameter (I.D.), clutch friction piece and painted color.

DRIVEN PLATE: (ⓓ + ⓔ + ⓕ = Total 9 pcs)
ⓓ No. 2 Driven plate (Thickness): 2.3 mm (0.091 in).....1 pc. [Dark colored]
ⓔ No. 1 Driven plate (Thickness): 2.3 mm (0.102 in).....6 – 8 pcs.
ⓕ No. 3 Driven plate (Thickness): 2.6 mm (0.102 in).....2 – 0 pcs.

NOTE:
No.2 driven plate can be distinguished by the color.

- Install the pressure plate ⑲.

NOTE:
When install the pressure plate, fit the convex part Ⓓ of the pressure plate onto the concave part Ⓔ of the clutch sleeve hub.

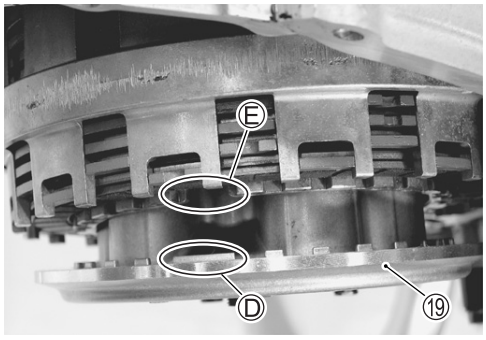

- Install the clutch springs and bolts.

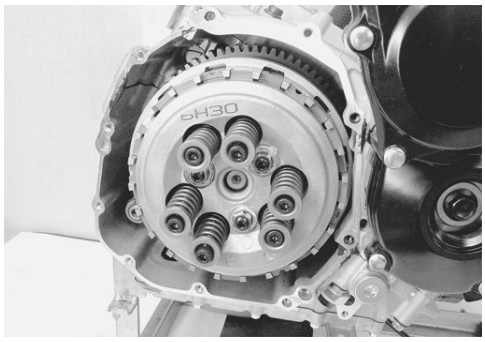

- Hold the clutch housing with the special tool.

CAUTION

Be careful not to damage the clutch housing or clutch plates.

TOOL 09920-53740: Clutch sleeve hub holder

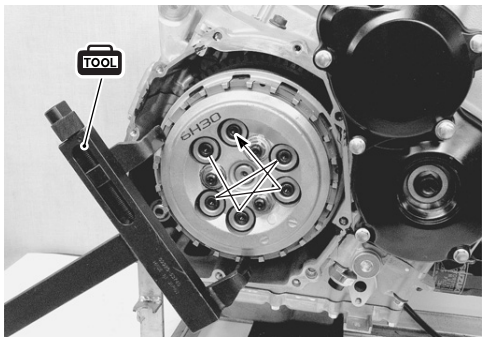

- Tighten the clutch spring set bolts to the specified torque.

Clutch spring set bolt: 10 N·m (1.0 kgf-m, 7.0 lb-ft)

NOTE:
Tighten the clutch spring set bolts diagonally.

CLUTCH COVER

- Apply bond lightly to the mating surfaces at the parting line between the upper, middle and lower crankcases as shown.

1207B 99000-31140: SUZUKI BOND "1207B" or equivalent

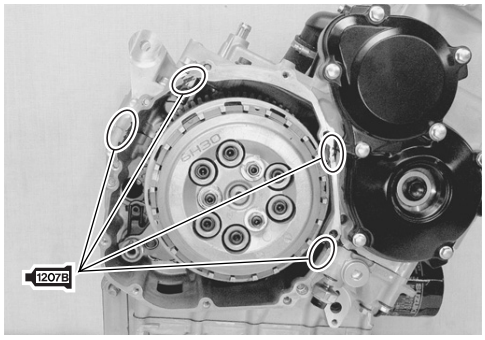

- Install gasket ① and dowel pins.

CAUTION

Use a new gasket to prevent oil leakage.

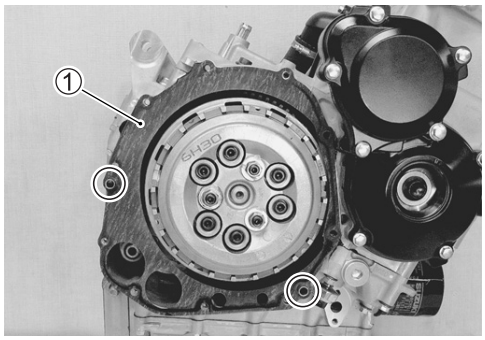

- Install the clutch cover and tighten its bolts to the specified torque.

Clutch cover bolt: 10 N·m (1.0 kgf-m, 7.0 lb-ft)

NOTE:
** Fit the clamp to the bolt Ⓐ.*
** Fit new gasket washers to the bolts Ⓑ.*

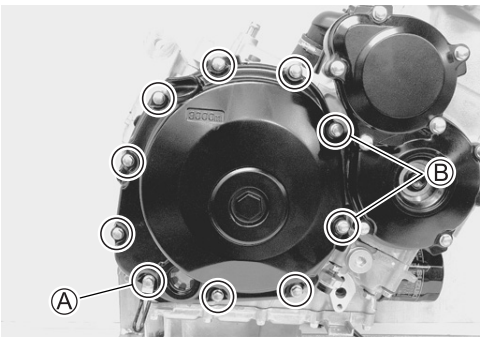

CAUTION

Use new gasket washers to prevent oil leakage.

CYLINDER HEAD

- Install dowel pins and new cylinder head gasket ① to the cylinder.

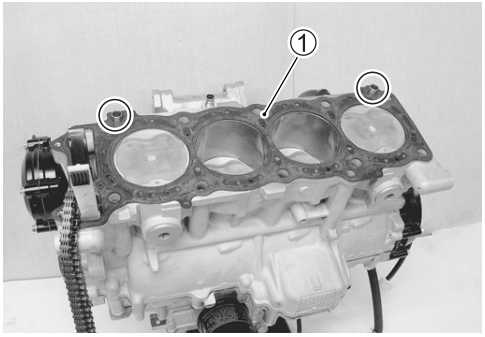

CAUTION

Use a new gasket to prevent gas leakage.

- Place the cylinder head on the cylinder.

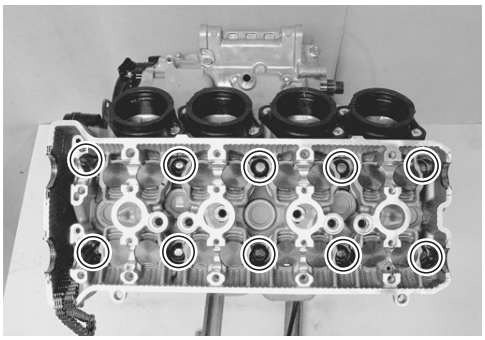

NOTE:
When installing the cylinder head, keep the cam chain taut.

- Tighten the cylinder head bolts (M10) in the following four-step.

Step 1:
- Tighten the cylinder head bolts to the specified torque with a torque wrench sequentially and diagonally.

Step 2:
- Loosen all the cylinder head bolts diagonally.

Step 3:
- Retighten the cylinder head bolts to the specified torque with a torque wrench sequentially and diagonally.

Step 4:
- Additionally tighten the cylinder head bolts with the specified angles diagonally using an angular torque gauge.

Cylinder head bolt (M10):
Step 1/Step 3: 31 N·m (3.1 kgf-m, 22.5 lb-ft)
Final step : 60° (1/6 turn)

NOTE:
Apply engine oil to the washers and thread portion of the bolts before installing the cylinder head bolts.

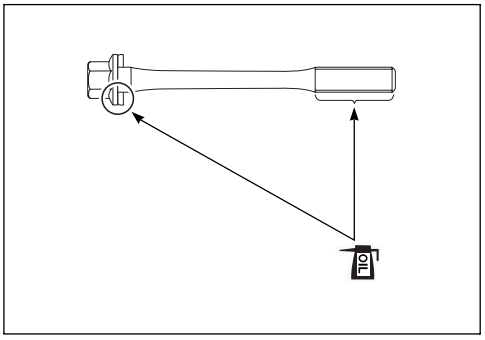

- Tighten the cylinder head bolts to the specified torque.

Cylinder head bolt (M6): 10 N·m (1.0 kgf-m, 7.0 lb-ft)

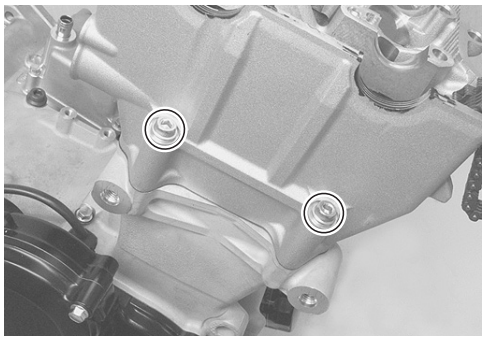

- Fit the gasket ② and tighten the ECT sensor.

ECT sensor: 18 N·m (1.8 kgf-m, 13.0 lb-ft)

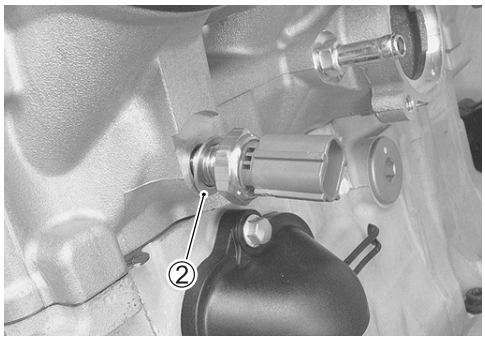

- Install the thermostat ③.

NOTE:
The jiggle valve Ⓐ of thermostat faces upside.

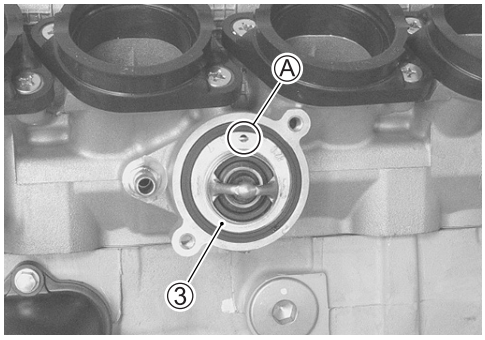

- Install the thermostat cover ④.

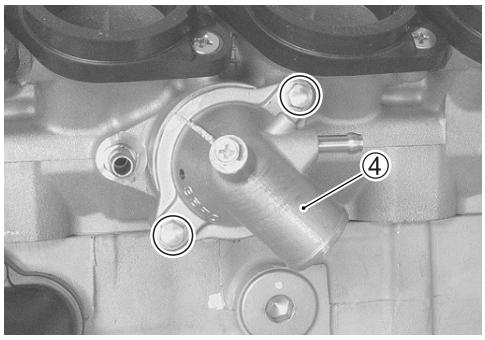

- Install the water hose ⑤. (☞10-20)

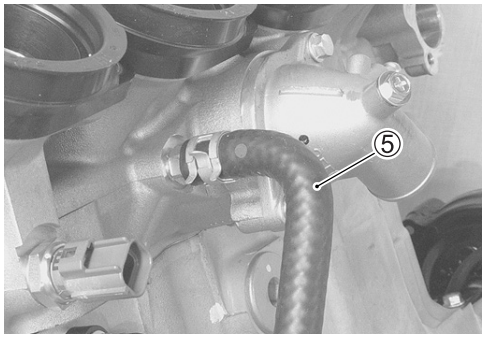

CAMSHAFT

- Turn the crankshaft clockwise with the box wrench and align the line Ⓐ on the starter clutch with the index mark Ⓑ of valve timing inspection hole while keeping the cam chain pulled upward.

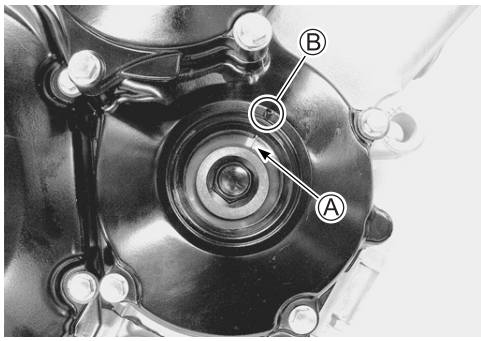

CAUTION

Pull the cam chain upward, or the chain will be caught between crankcase and cam drive sprocket.

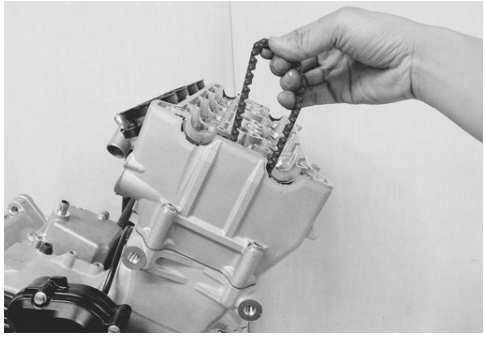

CAUTION

To adjust the camshaft timing correctly, be sure to align the line Ⓐ with the index mark Ⓑ and hold this position when installing the camshafts.

- The camshafts are identified by the embossed letters.
- Before replacing the camshafts on cylinder head, apply MOLYBDENUM OIL SOLUTION to their journals and cam faces.
- Apply a MOLYBDENUM OIL SOLUTION to the camshaft journal holders.

MOLYBDENUM OIL SOLUTION

NOTE:

Before installing the camshaft, check that the tappets are installed correctly.

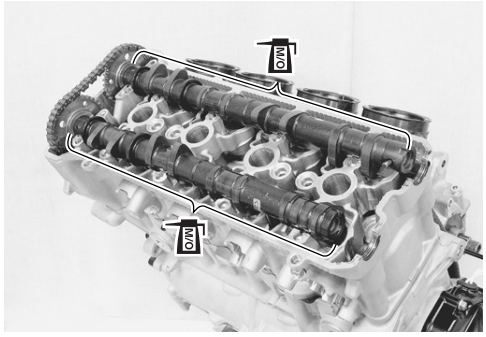

- Pull the cam chain lightly.
- The exhaust camshaft sprocket has an arrow marked “1” Ⓒ. Turn the exhaust camshaft so that the arrow is aligned with the gasket surface of the cylinder head.
- Engage the cam chain with the exhaust camshaft sprocket.
- Bind the cam chain and sprocket with a proper wire clamp ① to prevent the cam chain disengagement while installing the camshaft journal holders.
- The other arrow marked “2” Ⓓ should now be pointing straight up. Starting from the roller pin that is directly above the arrow marked “2” Ⓓ, count out 14 roller pins (from the exhaust camshaft side going towards the intake camshaft side).

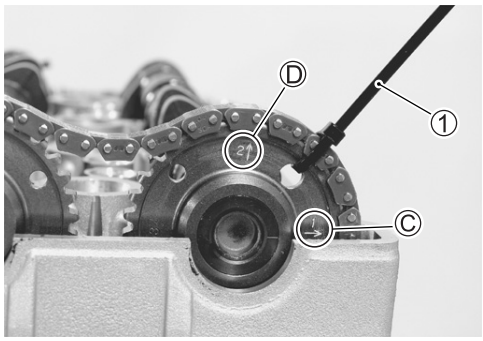

- Engage the 14th roller pin Ⓔ on the cam chain with the arrow marked “3” on the intake sprocket.
- Bind the cam chain and sprocket with a proper wire clamp ② to prevent the cam chain disengagement while installing the camshaft journal holders.

NOTE:
The cam chain should now be on all three sprockets. Be careful not to move the crankshaft until the camshaft journal holders and cam chain tension adjuster are secured.

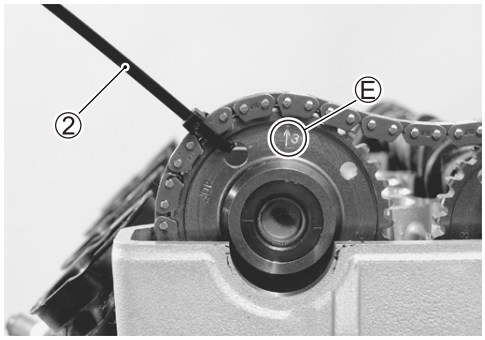

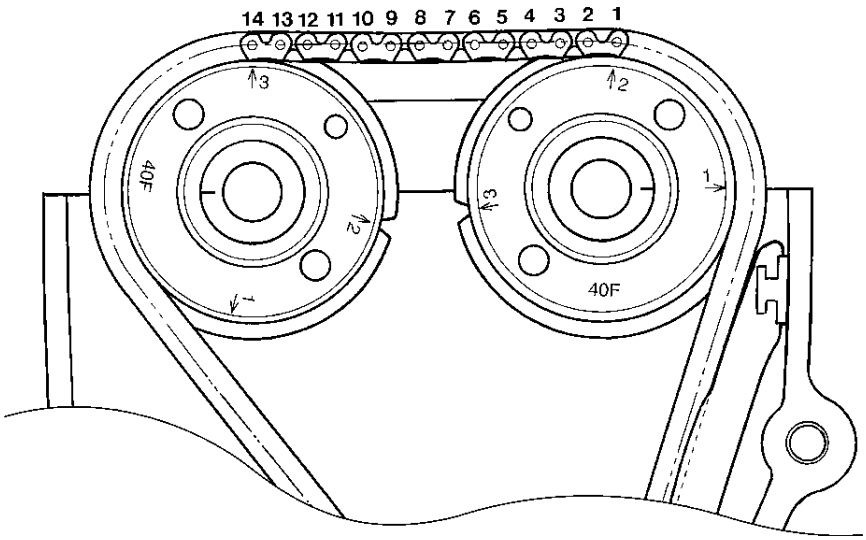

- Install the dowel pins.
- Install the camshaft journal holders, intake and exhaust, and cam chain guide.
- Have the camshaft journal holders seated evenly by tightening the camshaft journal holder bolts lightly, in the ascending order of numbers.

NOTE:

** Damage to head or camshaft journal holder thrust surfaces may result if the camshaft journal holders are not drawn down evenly.*

** Each camshaft journal holder is identified with a cast-on letter Ⓕ.*

** The ascending order of numbers are indicated on the camshaft journal holders.*

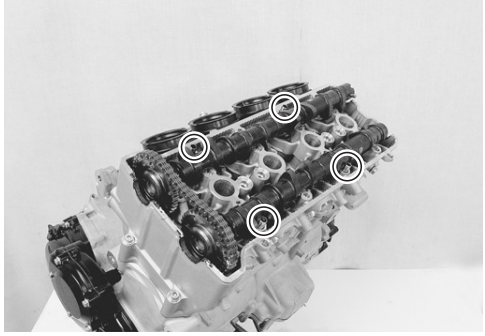

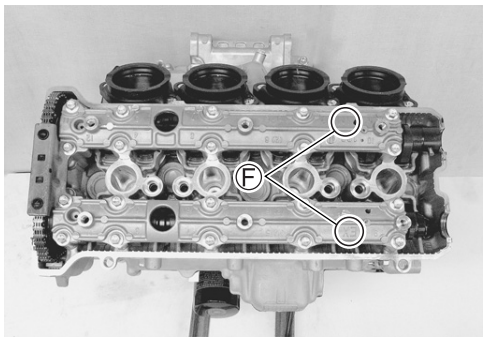

- Tighten the camshaft journal holder bolts in ascending order of numbers to the specified torque.

Camshaft journal holder bolt: 10 N·m (1.0 kgf-m, 7.0 lb-ft)

CAUTION

The camshaft journal holder bolts are made of a special material and much superior in strength, compared with other types of high strength bolts.
Take special care not to use other types of bolts.

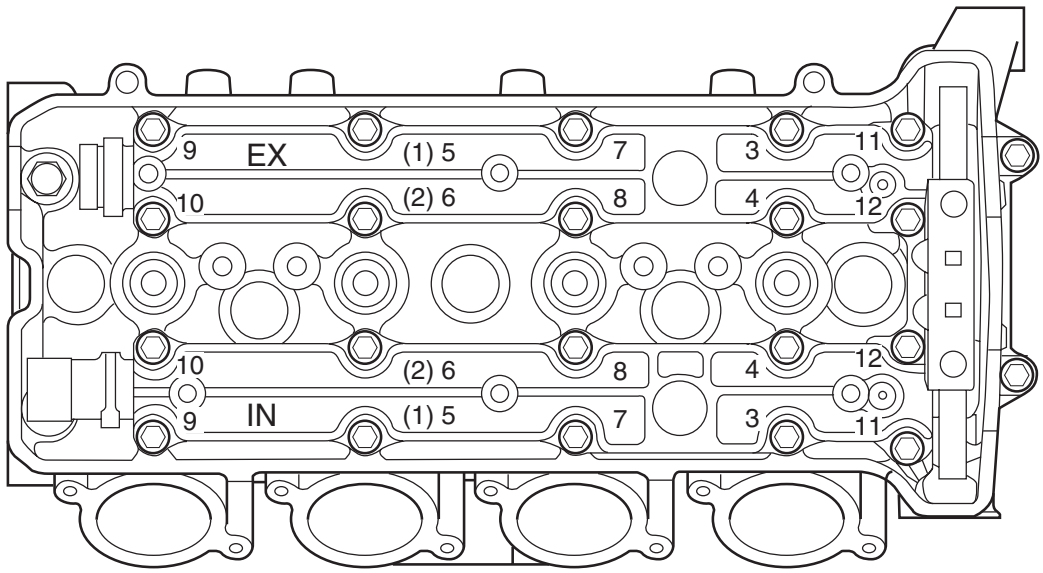

CAM CHAIN TENSION ADJUSTER

- Retract the push rod by pushing the stopper ①.

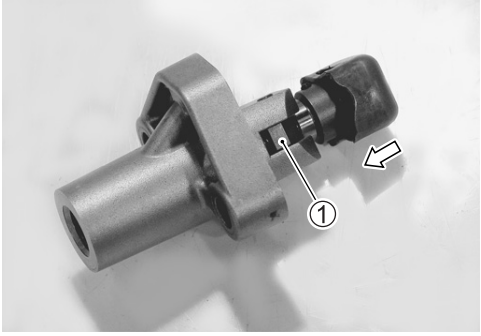

- Fit a new gasket ②.

CAUTION

Use a new gasket to prevent oil leakage.

- Install the cam chain tension adjuster ③ with “UP” mark faced to the top side.

Cam chain tension adjuster mounting bolt:
10 N·m (1.0 kgf-m, 7.0 lb-ft)

- Install the spring ④.

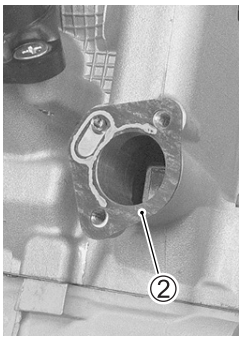

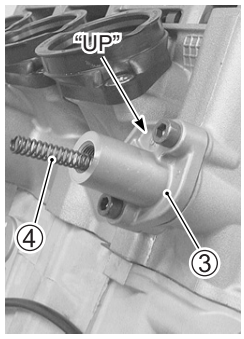

- Install the gasket washer ⑤ and cap bolt ⑥.

NOTE:
Click sound is heard when the cam chain tension adjuster cap bolt is installed.

- Tighten the cam chain tension adjuster cap bolt to the specified torque.

Cam chain tension adjuster cap bolt:
23 N·m (2.3 kgf-m, 16.5 lb-ft)

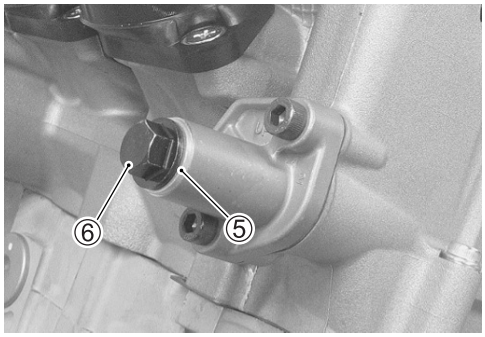

CAUTION

After installing the cam chain tension adjuster, check to be sure that the adjuster works properly by checking the slack of cam chain.

- Remove the wire clamps ⑦.
- After installing the cam chain tension adjuster, rotate the crankshaft (some turns), and recheck the positions of the camshafts. (☞3-103)

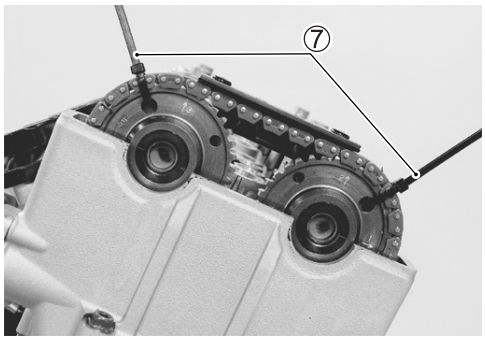

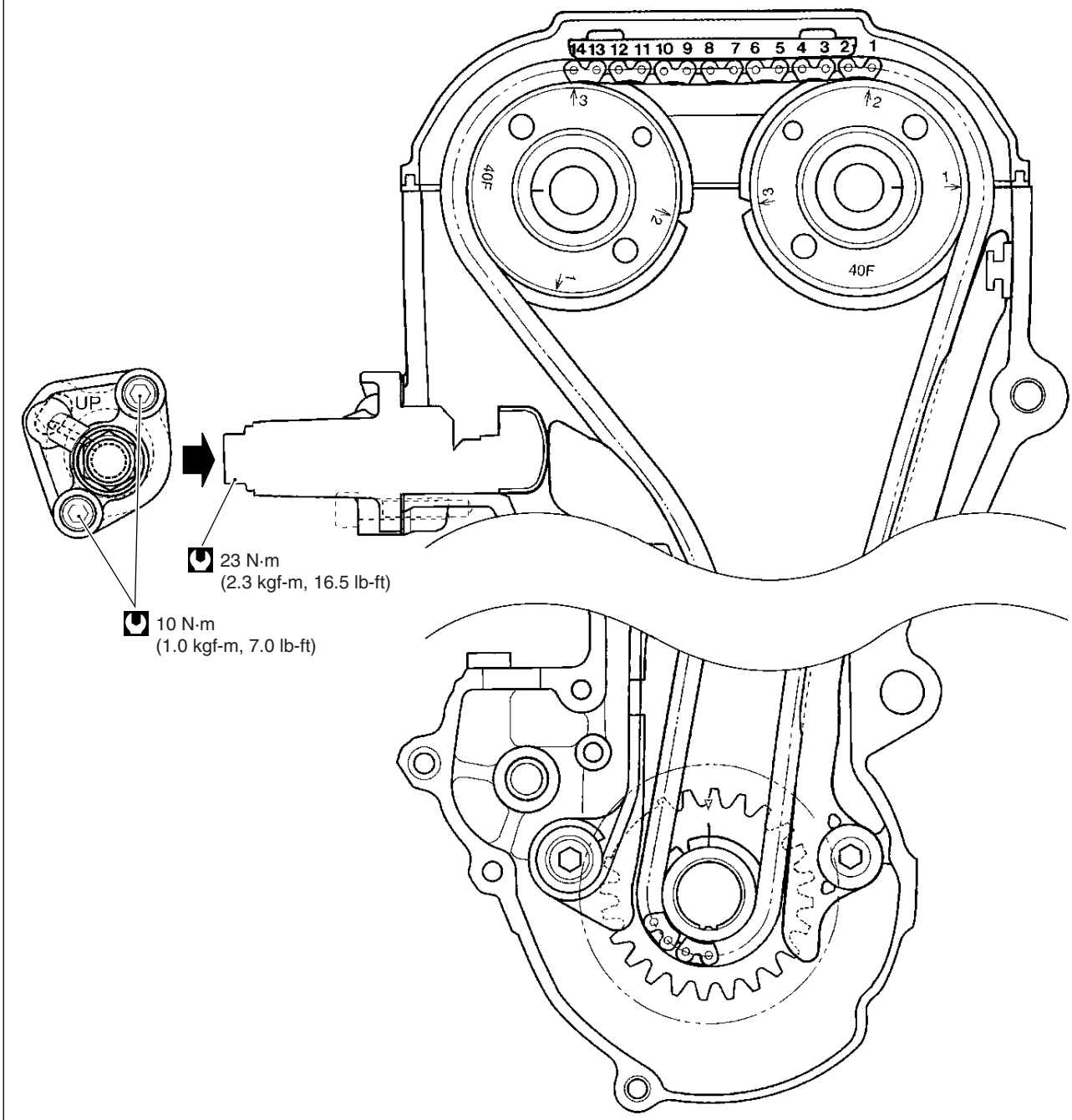
14 13 12 11 10 9 8 7 6 5 4 3 2 1
3
2
40F
2
3
1
40F
UP
23 N·m
(2.3 kgf-m, 16.5 lb-ft)
10 N·m
(1.0 kgf-m, 7.0 lb-ft)

- Tighten the valve timing inspection plug ⑧ to the specified torque.

Valve timing inspection plug: 11 N·m (1.1 kgf-m, 8.0 lb-ft)

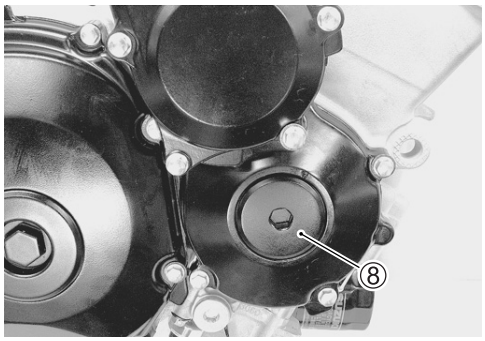

CYLINDER HEAD COVER

- Pour engine oil in each oil pocket in the cylinder head.

NOTE:
Be sure to check the valve clearance. (☞2-7)

- Install the dowel pins.
- Install the O-rings.

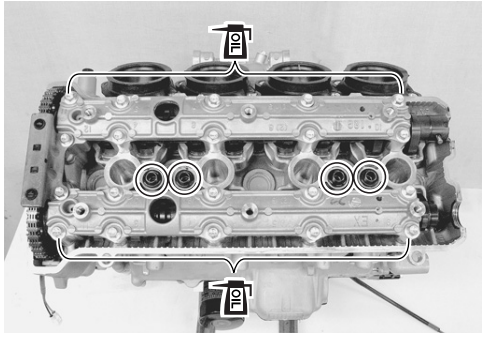

- Install new gaskets to the cylinder head cover.
- Apply bond to the cam end caps of the gaskets as shown.

1207B 99000-31140: SUZUKI BOND "1207B" or equivalent

CAUTION

Use new gaskets to prevent oil leakage.

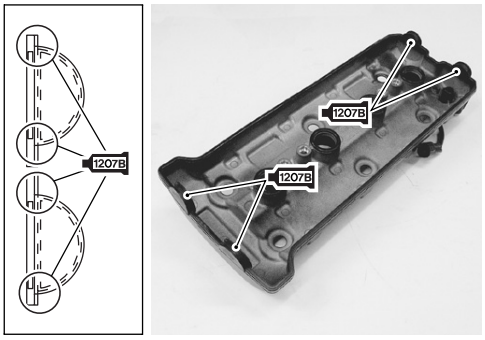

- Place the cylinder head cover on the cylinder head.
- Fit a new gasket ① to each head cover bolt.

CAUTION

Use new gaskets to prevent oil leakage.

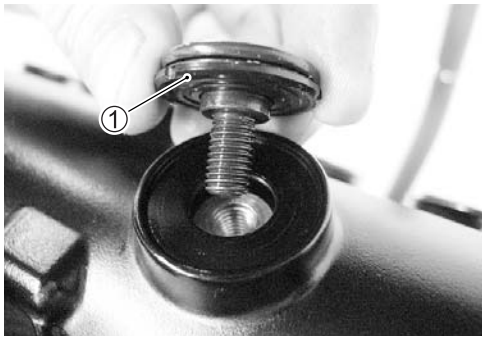

- Tighten the head cover bolts to the specified torque.

Head cover bolt:
Initial: 10 N·m (1.0 kgf-m, 7.0 lb-ft)
Final : 14 N·m (1.4 kgf-m, 10.0 lb-ft)

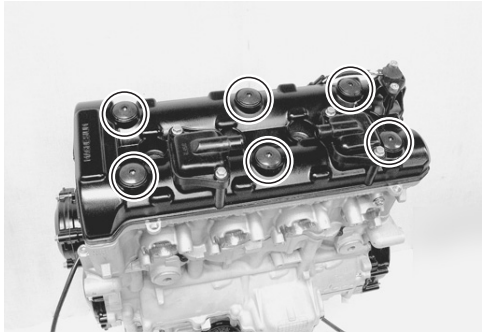

STARTER MOTOR

- Apply grease to the O-ring.

99000-25010: SUZUKI SUPER GREASE "A" or equivalent

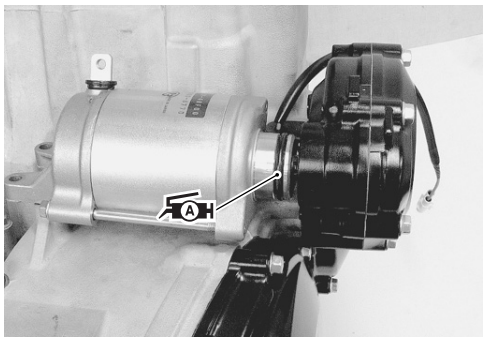

- Install the starter motor ①.

Starter motor mounting bolt: 10 N·m (1.0 kgf-m, 7.0 lb-ft)

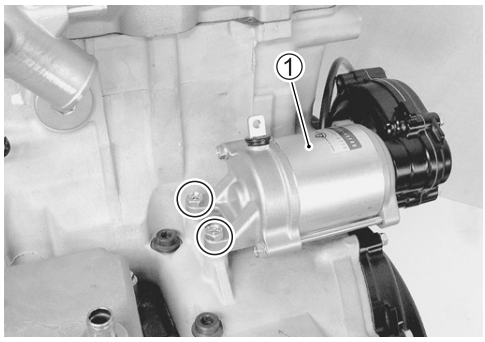

ENGINE COOLANT RESERVOIR BRACKET

- Install the engine coolant reservoir bracket ①.

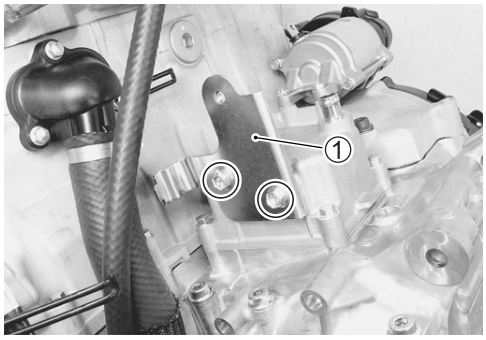

- Install all the spark plugs. (☞2-6)

FI SYSTEM DIAGNOSIS

CONTENTS

PRECAUTIONS IN SERVICING 4- 3
ELECTRICAL PARTS 4- 3
FUSE 4- 4
SWITCH 4- 4
ECM/VARIOUS SENSORS 4- 4
ELECTRICAL CIRCUIT INSPECTION PROCEDURE 4- 6
USING THE MULTI-CIRCUIT TESTER 4- 9
FI SYSTEM TECHNICAL FEATURES 4-10
INJECTION TIME (INJECTION VOLUME) 4-10
COMPENSATION OF INJECTION TIME (VOLUME) 4-11
INJECTION STOP CONTROL 4-11
FI SYSTEM PARTS LOCATION 4-12
FI SYSTEM WIRING DIAGRAM 4-14
ECM TERMINAL 4-15
SELF-DIAGNOSIS FUNCTION 4-17
USER MODE 4-17
DEALER MODE 4-18
TPS ADJUSTMENT 4-21
FAIL-SAFE FUNCTION 4-22
FI SYSTEM TROUBLESHOOTING 4-24
CUSTOMER COMPLAINT ANALYSIS 4-24
VISUAL INSPECTION 4-25
SELF-DIAGNOSTIC PROCEDURES 4-26
SELF-DIAGNOSIS RESET PROCEDURE 4-26
USE OF SDS DIAGNOSTIC PROCEDURES 4-27
USE OF SDS DIAGNOSIS RESET PROCEDURE 4-28
SHOW DATA WHEN TROUBLE
(DISPLAING DATA AT THE TIME OF DTC) 4-29
MALFUNCTION CODE AND DEFECTIVE CONDITION 4-30
“C11” (P0340) CMP SENSOR CIRCUIT MALFUNCTION 4-36
“C12” (P0335) CKP SENSOR CIRCUIT MALFUNCTION 4-38
“C13” (P0105-H/L) IAP SENSOR CIRCUIT MALFUNCTION 4-40
“C14” (P0120-H/L) TP SENSOR CIRCUIT MALFUNCTION 4-45
“C15” (P0115-H/L) ECT SENSOR CIRCUIT MALFUNCTION 4-49
“C21” (P0110-H/L) IAT SENSOR CIRCUIT MALFUNCTION 4-53
“C22” (P1450-H/L) AP SENSOR CIRCUIT MALFUNCTION 4-57
“C23” (P1651-H/L) TO SENSOR CIRCUIT MALFUNCTION 4-62
“C24” (P0351), “C25” (P0352), “C26” (P0353) or
“C27” (P0354) IGNITION SYSTEM MALFUNCTION 4-65
“C28” (P1655) STV ACTUATOR CIRCUIT MALFUNCTION 4-66
“C29” (P1654-H/L) STP SENSOR CIRCUIT MALFUNCTION 4-69
“C31” (P0705) GP SWITCH CIRCUIT MALFUNCTION 4-73
“C32” (P0201), “C33” (P0202), “C34” (P0203) or “C35” (P0204)
PRIMARY FUEL INJECTOR CIRCUIT MALFUNCTION 4-75
“C36” (P1764), “C37” (P1765), “C38” (P1766) or “C39” (P1767)
SECONDARY FUEL INJECTOR CIRCUIT MALFUNCTION 4-77

FI SYSTEM DIAGNOSIS

CONTENTS

"C40" (P0505 or P0506 and P0507) ISC VALVE CIRCUIT MALFUNCTION 4-79
"C41" (P0230-H/L) FP RELAY CIRCUIT MALFUNCTION 4-83
"C41" (P2505) ECM/PCM POWER INPUT SIGNAL MALFUNCTION 4-86
"C42" (P01650) IG SWITCH CIRCUIT MALFUNCTION 4-87
"C44" (P0130/P0135) HO2 SENSOR (HO2S) CIRCUIT MALFUNCTION 4-88
"C46" (P1657-H/L or P1658) EXCV ACTUATOR CIRCUIT MALFUNCTION 4-92
"C49" (P1656) PAIR CONTROL SOLENOID VALVE CIRCUIT MALFUNCTION 4-101
"C60" (P0480) COOLING FAN RELAY CIRCUIT MALFUNCTION 4-103
"C91" (P0500) VEHICLE SPEED SENSOR CIRCUIT MALFUNCTION 4-106
"C93" (P1769) STEERING DAMPER SOLENOID VALVE CIRCUIT MALFUNCTION 4-108
SENSORS 4-111
CMP SENSOR INSPECTION 4-111
CMP SENSOR REMOVAL AND INSTALLATION 4-111
CKP SENSOR INSPECTION 4-111
CKP SENSOR REMOVAL AND INSTALLATION 4-111
IAP SENSOR INSPECTION 4-111
IAP SENSOR REMOVAL AND INSTALLATION 4-111
TP SENSOR INSPECTION 4-111
TP SENSOR REMOVAL AND INSTALLATION 4-111
TPS ADJUSTMENT 4-111
ECT SENSOR INSPECTION 4-112
ECT SENSOR REMOVAL AND INSTALLATION 4-112
IAT SENSOR INSPECTION 4-112
IAT SENSOR REMOVAL AND INSTALLATION 4-112
AP SENSOR INSPECTION 4-112
AP SENSOR REMOVAL AND INSTALLATION 4-112
TO SENSOR INSPECTION 4-112
TO SENSOR REMOVAL AND INSTALLATION 4-112
STP SENSOR INSPECTION 4-113
STP SENSOR REMOVAL AND INSTALLATION 4-113
STP SENSOR ADJUSTMENT 4-113
HO2 SENSOR INSPECTION 4-113
HO2 SENSOR REMOVAL AND INSTALLATION 4-113

PRECAUTIONS IN SERVICING

When handling the component parts or servicing the FI system, observe the following points for the safety of the system.

ELECTRICAL PARTS

CONNECTOR/COUPLER

- When connecting a connector, be sure to push it in until a click is felt.

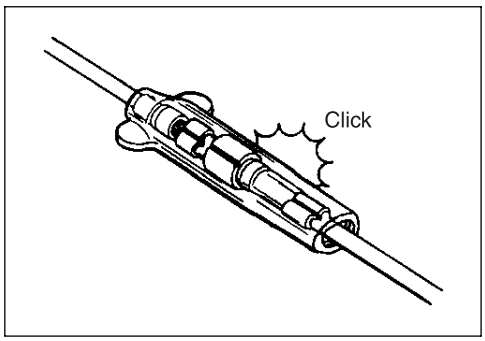

- With a lock type coupler, be sure to release the lock when disconnecting, and push in fully to engage the lock when connecting.
- When disconnecting the coupler, be sure to hold the coupler body and do not pull the lead wires.
- Inspect each terminal on the connector/coupler for looseness or bending.
- Inspect each terminal for corrosion and contamination.
  The terminals must be clean and free of any foreign material which could impede proper terminal contact.

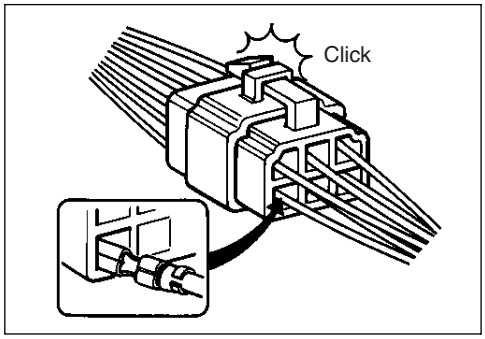

- Inspect each lead wire circuit for poor connection by shaking it by hand lightly. If any abnormal condition is found, repair or replace.

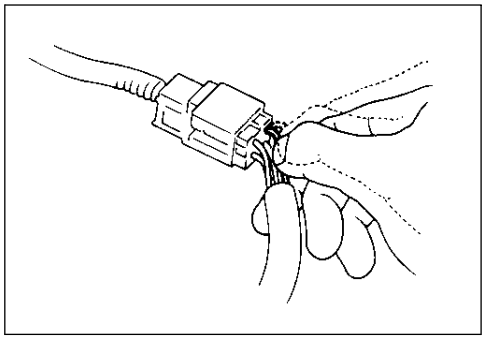

- When taking measurements at electrical connectors using a tester probe, be sure to insert the probe from the wire harness side (backside) of the connector/coupler.

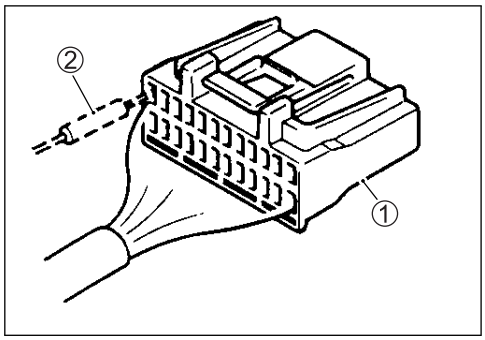

① Coupler
② Probe

- When connecting meter probe from the terminal side of the coupler (where connection from harness side not being possible), use extra care not to force and cause the male terminal to bend or the female terminal to open.
  Connect the probe as shown to avoid opening of female terminal.
  Never push in the probe where male terminal is supposed to fit.
- Check the male connector for bend and female connector for excessive opening. Also check the coupler for locking (looseness), corrosion, dust, etc.

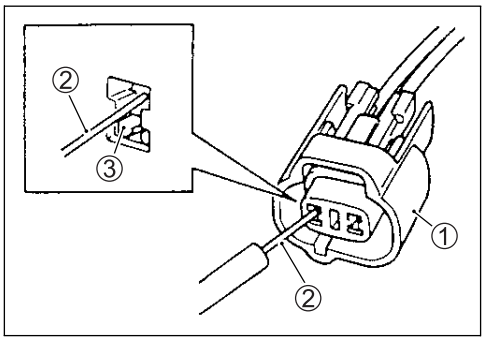

① Coupler
② Probe
③ Where male terminal fits

FUSE

- When a fuse blows, always investigate the cause to correct it and then replace the fuse.
- Do not use a fuse of a different capacity.
- Do not use wire or any other substitute for the fuse.

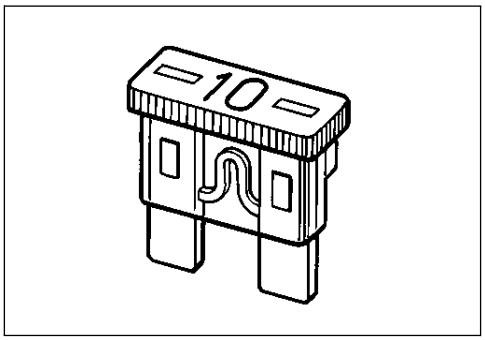

SWITCH

- Never apply grease material to switch contact points to prevent damage.

ECM/VARIOUS SENSORS

- Since each component is a high-precision part, great care should be taken not to apply any sharp impacts during removal and installation.

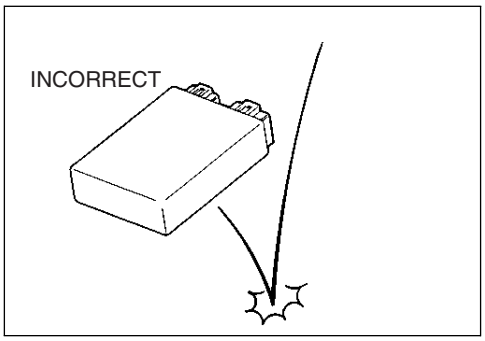

- Be careful not to touch the electrical terminals of the ECM. The static electricity from your body may damage this part.

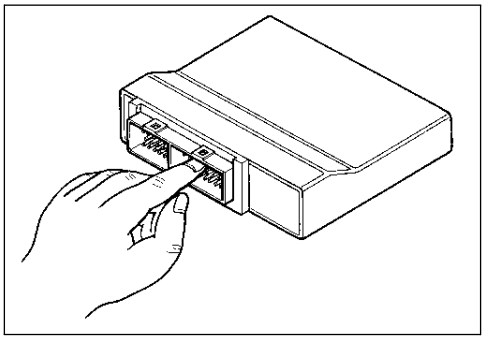

- When disconnecting and connecting the ECM, make sure to turn OFF the ignition switch ①, or electronic parts may get damaged.

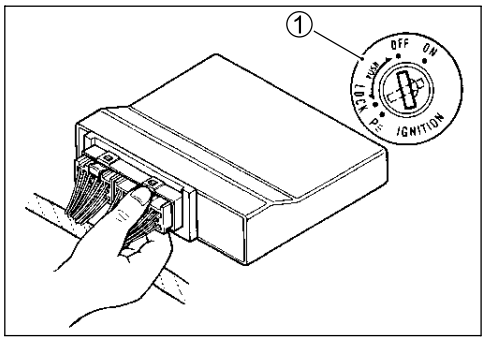

- Battery connection in reverse polarity is strictly prohibited. Such a wrong connection will damage the components of the FI system instantly when reverse power is applied.

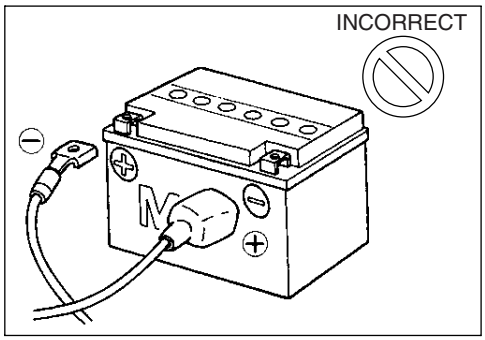

- Removing any battery terminal of a running engine is strictly prohibited.
  The moment such removal is made, damaging counter electromotive force will be applied to the ECM which may result in serious damage.

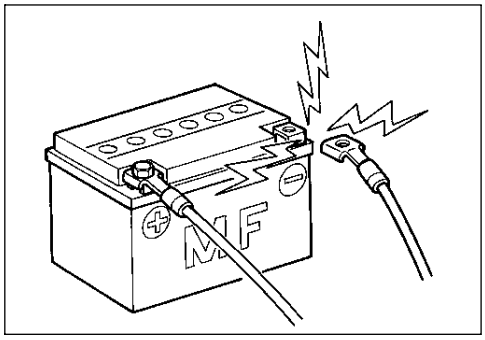

- Before measuring voltage at each terminal, check to make sure that battery voltage is 11 V or higher. Terminal voltage check with a low voltage battery will lead to erroneous diagnosis.

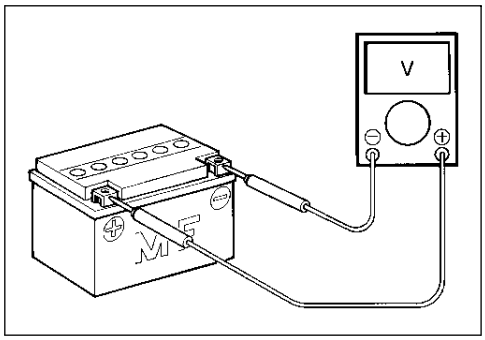

- Never connect any tester (voltmeter, ohmmeter, or whatever) to the ECM when its coupler is disconnected.
  Otherwise, damage to ECM may result.
- Never connect an ohmmeter to the ECM with its coupler connected. If attempted, damage to ECM or sensors may result.
- Be sure to use a specified voltmeter/ohmmeter. Otherwise, accurate measurements may not be obtained and personal injury may result.

ELECTRICAL CIRCUIT INSPECTION PROCEDURE

While there are various methods for electrical circuit inspection, described here is a general method to check for open and short circuit using an ohmmeter and a voltmeter.

OPEN CIRCUIT CHECK

Possible causes for the open circuits are as follows. As the cause can exist in the connector/coupler or terminal, they need to be checked carefully.

- Loose connection of connector/coupler.
- Poor contact of terminal (due to dirt, corrosion or rust, poor contact tension, entry of foreign object etc.).
- Wire harness being open.
- Poor terminal-to-wire connection.

- Disconnect the negative cable from the battery.
- Check each connector/coupler at both ends of the circuit being checked for loose connection. Also check for condition of the coupler lock if equipped.

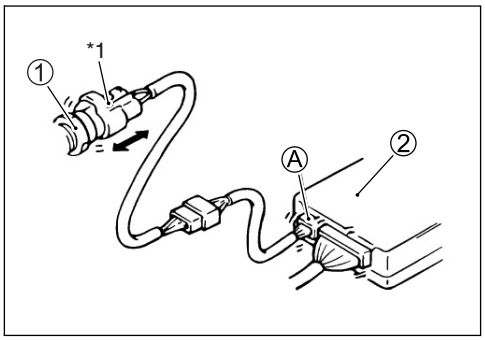

① Sensor
② ECM
*1 Check for loose connection.

- Using a test male terminal, check the female terminals of the circuit being checked for contact tension.
  Check each terminal visually for poor contact (possibly caused by dirt, corrosion, rust, entry of foreign object, etc.). At the same time, check to make sure that each terminal is fully inserted in the coupler and locked.
  If contact tension is not enough, rectify the contact to increase tension or replace.
  The terminals must be clean and free of any foreign material which could impede proper terminal contact.

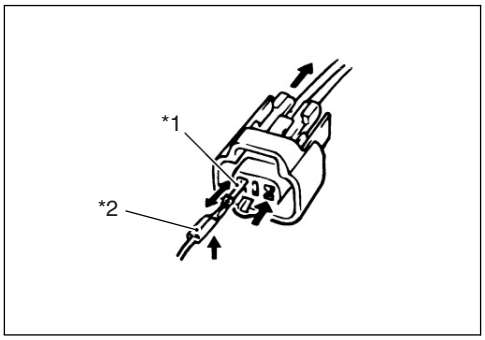

*1 Check contact tension by inserting and removing.
*2 Check each terminal for bend and proper alignment.

- Using continuity inspect or voltage check procedure as described below, inspect the wire harness terminals for open circuit and poor connection. Locate abnormality, if any.

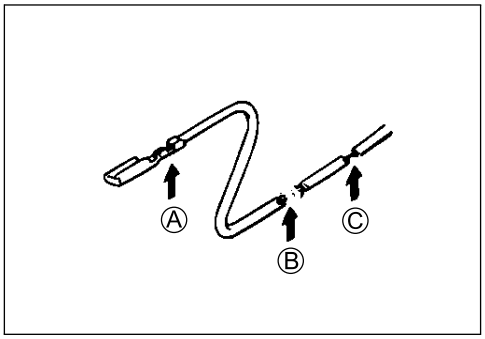

Ⓐ Looseness of crimping
Ⓑ Open
Ⓒ Thin wire (a few strands left)

Continuity check

- Measure resistance across coupler Ⓑ (between Ⓐ and Ⓒ in the figure).
  If no continuity is indicated (infinity or over limit), the circuit is open between terminals Ⓐ and Ⓒ.

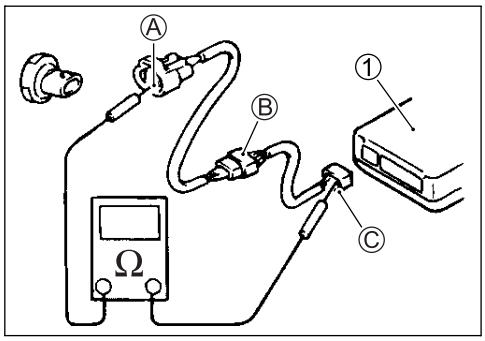

① ECM

- Disconnect the coupler Ⓑ and measure resistance between couplers Ⓐ and Ⓑ.
  If no continuity is indicated, the circuit is open between couplers Ⓐ and Ⓑ. If continuity is indicated, there is an open circuit between couplers Ⓑ' and Ⓒ or an abnormality in coupler Ⓑ' or coupler Ⓒ.

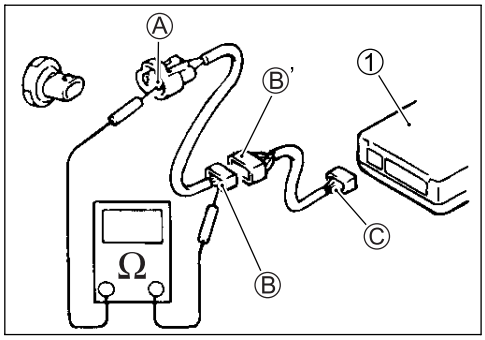

① ECM

VOLTAGE CHECK

If voltage is supplied to the circuit being checked, voltage check can be used as circuit check.

- With all connectors/couplers connected and voltage applied to the circuit being checked, measure voltage between each terminal and body ground.

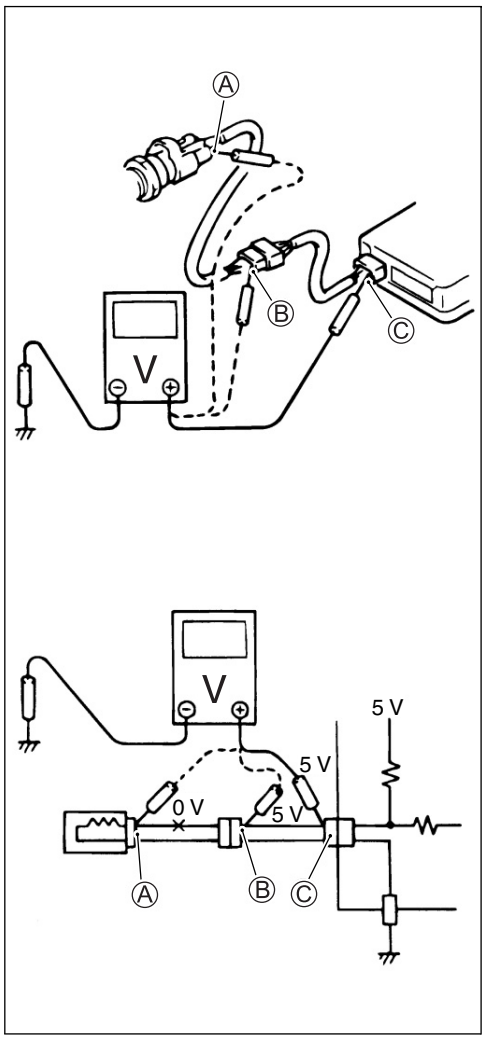

If measurements were taken as shown in the figure at the right and results are as listed below, it means that the circuit is open between terminals Ⓐ and Ⓑ.

Voltage Between:

Ⓒ and body ground: Approx. 5 V
Ⓑ and body ground: Approx. 5 V
Ⓐ and body ground: 0 V

Also, if measured values are as listed below, a resistance (abnormality) exists which causes the voltage drop in the circuit between terminals Ⓐ and Ⓑ.

Voltage Between:

Ⓒ and body ground: Approx. 5 V
Ⓑ and body ground: Approx. 5 V
Ⓐ and body ground: 3 V
2 V voltage drop

SHORT CIRCUIT CHECK (WIRE HARNESS TO GROUND)

- Disconnect the negative cable from the battery.
- Disconnect the connectors/couplers at both ends of the circuit to be checked.

NOTE:
If the circuit to be checked branches to other parts as shown, disconnect all connectors/couplers of those parts. Otherwise, diagnosis will be misled.

- Measure resistance between terminal at one end of circuit (Ⓐ terminal in figure) and body ground. If continuity is indicated, there is a short circuit to ground between terminals Ⓐ and Ⓒ.

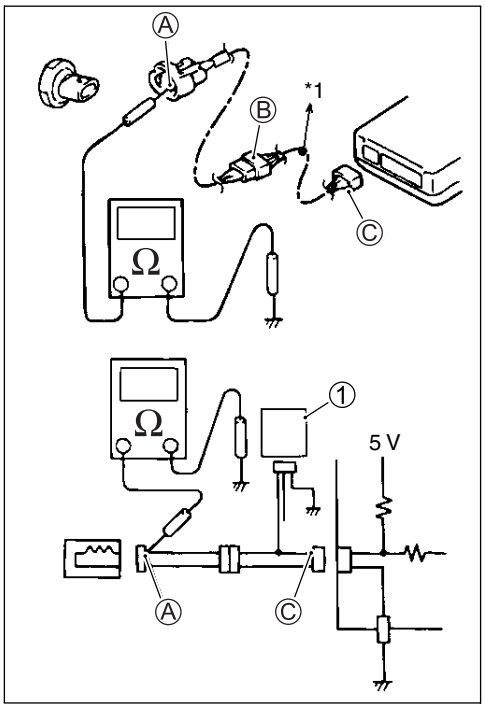

① Other parts
*1 To other parts

- Disconnect the connector/coupler included in circuit (coupler Ⓑ) and measure resistance between terminal Ⓐ and body ground.
  If continuity is indicated, the circuit is shorted to the ground between terminals Ⓐ and Ⓑ.

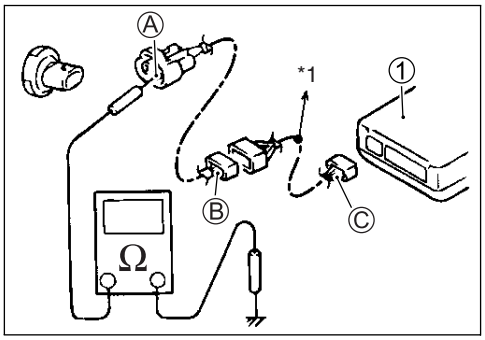

① ECM
*1 To other parts

USING THE MULTI-CIRCUIT TESTER

- Use the Suzuki multi-circuit tester set (09900-25008).
- Use well-charged batteries in the tester.
- Be sure to set the tester to the correct testing range.

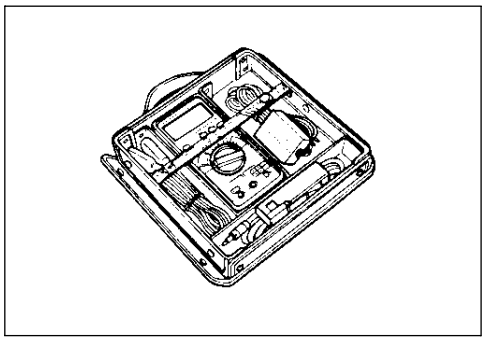

USING THE TESTER

- Incorrectly connecting the ⊕ and ⊖ probes may cause the inside of the tester to burnout.
- If the voltage and current are not known, make measurements using the highest range.
- When measuring the resistance with the multi-circuit tester ①, ∞ will be shown as 10.00 MΩ and "1" flashes in the display.
- Check that no voltage is applied before making the measurement. If voltage is applied the tester may be damaged.
- After using the tester, turn the power off.

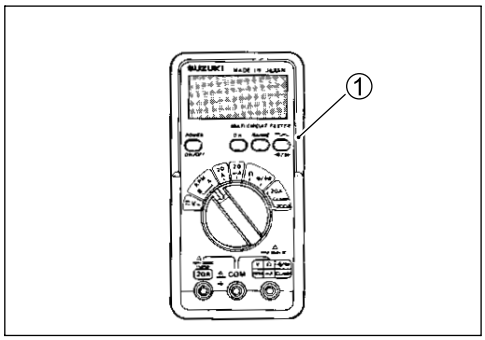

TOOL 09900-25008: Multi-circuit tester set

NOTE:

** When connecting the multi-circuit tester, use the needle pointed probe to the back side of the lead wire coupler and connect the probes of tester to them.*

** Use the needle pointed probe to prevent the rubber of the water proof coupler from damage.*

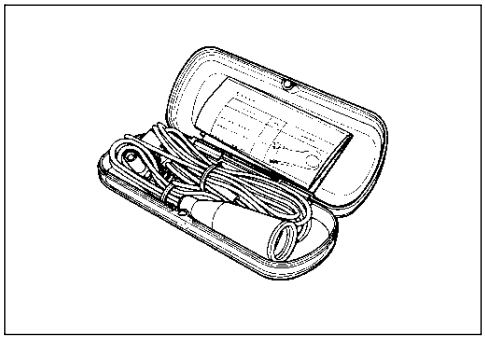

TOOL 09900-25009: Needle pointed probe set

- When using the multi-circuit tester, do not strongly touch the terminal of the ECM coupler with a needle pointed tester probe to prevent the terminal damage or terminal bend.

FI SYSTEM TECHNICAL FEATURES

INJECTION TIME (INJECTION VOLUME)

The factors to determine the injection time include the basic fuel injection time, which is calculated on the basis of intake air pressure, engine speed and throttle opening angle, and various compensations.
These compensations are determined according to the signals from various sensors that detect the engine and driving conditions.

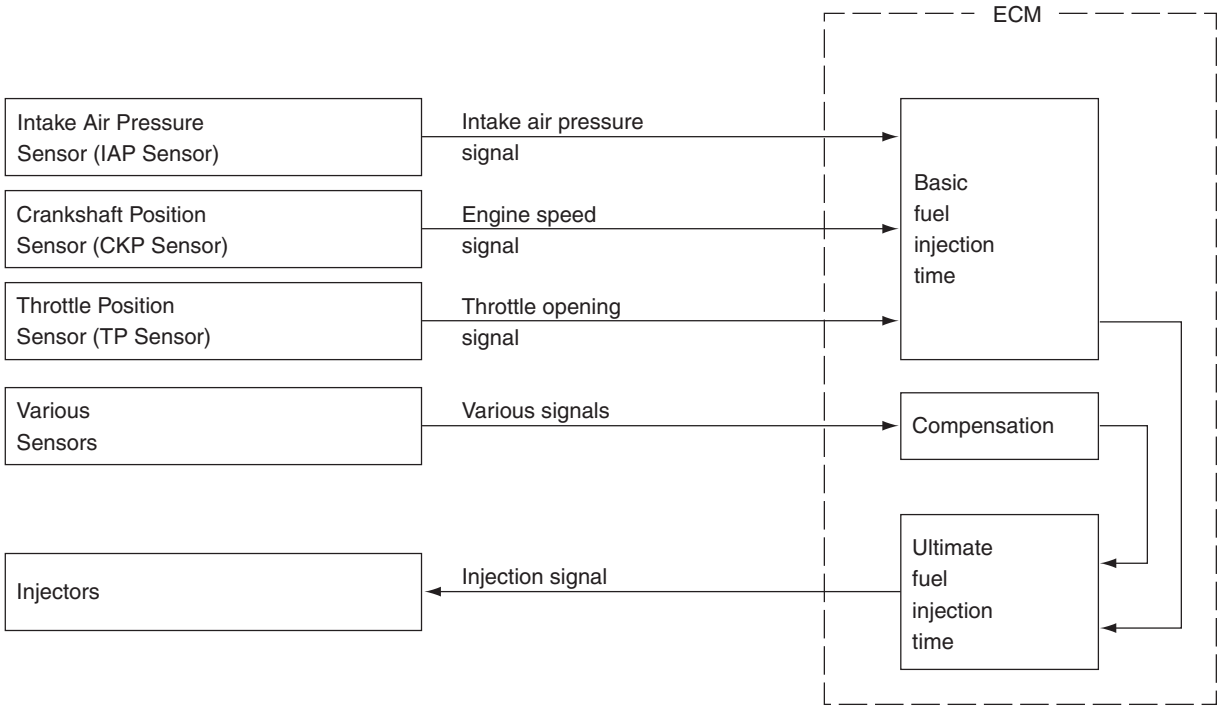

COMPENSATION OF INJECTION TIME (VOLUME)

The following different signals are output from the respective sensors for compensation of the fuel injection time (volume).

SIGNAL	DESCRIPTION
ATMOSPHERIC PRESSURE SENSOR SIGNAL	When atmospheric pressure is low, the sensor sends the signal to the ECM and reduce the injection time (volume).
ENGINE COOLANT TEMPERATURE SENSOR SIGNAL	When engine coolant temperature is low, injection time (volume) is increased.
INTAKE AIR TEMPERATURE SENSOR SIGNAL	When intake air temperature is low, injection time (volume) is increased.
BATTERY VOLTAGE SIGNAL	ECM operates on the battery voltage and at the same time, it monitors the voltage signal for compensation of the fuel injection time (volume). A longer injection time is needed to adjust injection volume in the case of low voltage.
ENGINE RPM SIGNAL	At high speed, the injection time (volume) is increased. This is the compensation of the SRAD.
STARTING SIGNAL	When starting engine, additional fuel is injected during cranking engine.
ACCELERATION SIGNAL/ DECELERATION SIGNAL	During acceleration, the fuel injection time (volume) is increased in accordance with the throttle opening speed and engine rpm. During deceleration, the fuel injection time (volume) is decreased.

INJECTION STOP CONTROL

SIGNAL	DESCRIPTION
TIP-OVER SENSOR SIGNAL (FUEL SHUT-OFF)	When the motorcycle tips over, the tip-over sensor sends a signal to the ECM. Then, this signal cuts OFF current supplied to the fuel pump, fuel injectors and ignition coils.
OVER-REV. LIMITER SIGNAL	The fuel injectors stop operation when engine rpm reaches rev. limit rpm.

FI SYSTEM PARTS LOCATION

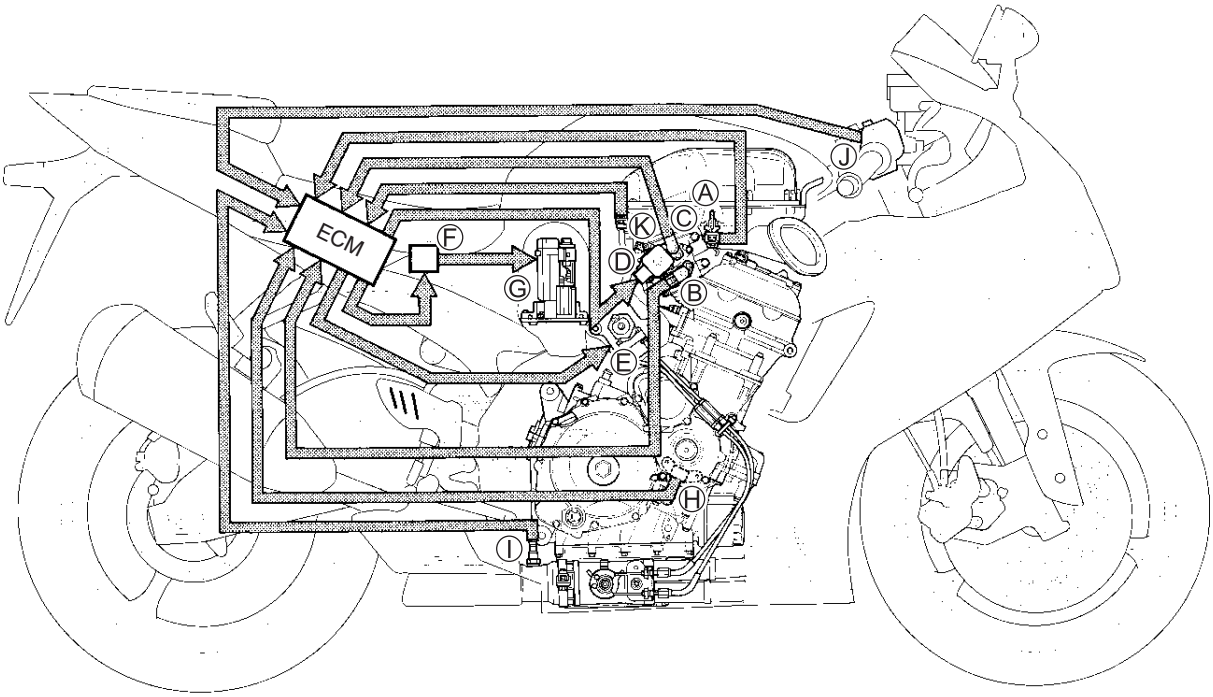

Ⓐ Intake air temperature sensor (IATS)
Ⓑ Throttle position sensor (TPS)
Ⓒ Secondary throttle position sensor (STPS)
Ⓓ Secondary throttle valve actuator (STVA)
Ⓔ Exhaust control valve actuator (EXCVA)
Ⓕ Fuel pump relay (FP relay)
Ⓖ Fuel pump (FP)
Ⓗ Crankshaft position sensor (CKPS)
Ⓘ Heated oxygen sensor (HO2S)
Ⓙ Driving mode selection switch (DMSS)
Ⓚ Intake air pressure sensor (IAPS)

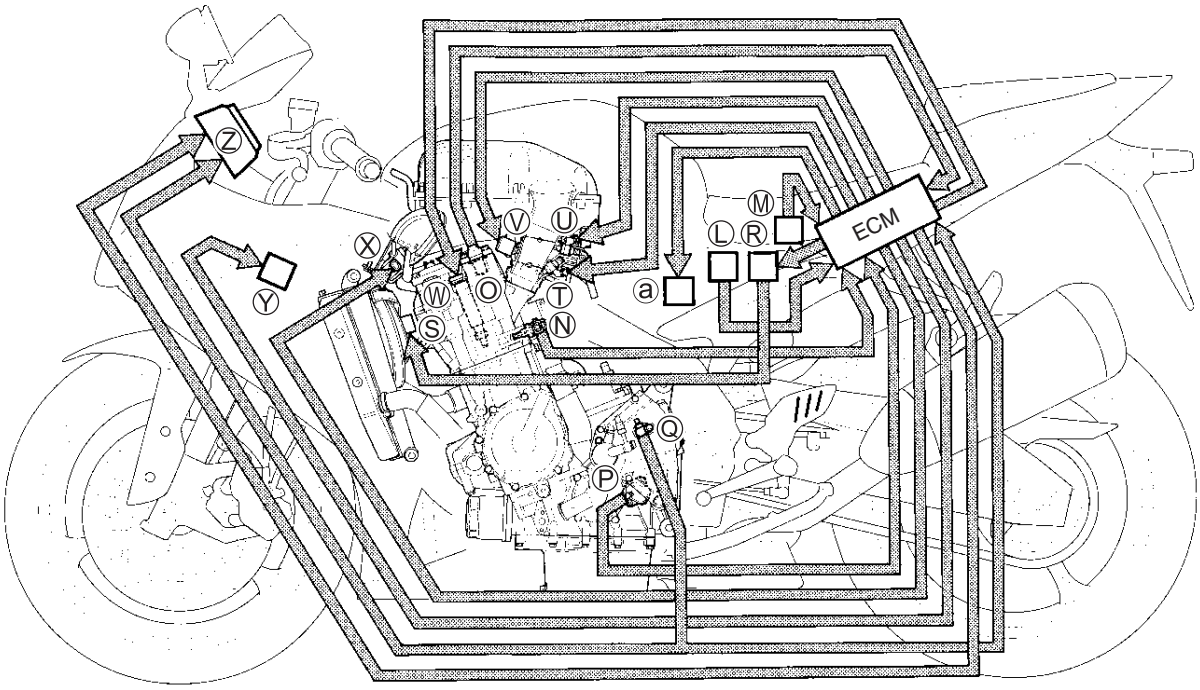

Ⓛ Tip-over sensor (TOS)
Ⓜ Atmospheric pressure sensor (APS)
Ⓝ Engine coolant temperature sensor (ECTS)
Ⓞ Camshaft position sensor (CMPS)
Ⓟ Gear position switch (GP switch)
Ⓠ Speed sensor
Ⓡ Cooling fan relay
Ⓢ Cooling fan
Ⓣ Primary fuel injector
Ⓤ Secondary fuel injector
Ⓥ Idle speed control valve (ISC valve)
Ⓦ Ignition coil (IG coil)
Ⓧ PAIR control solenoid valve
Ⓨ Steering damper solenoid valve
Ⓩ Speedometer
ⓐ EVAP system purge control valve (For E-33)

FI SYSTEM WIRING DIAGRAM

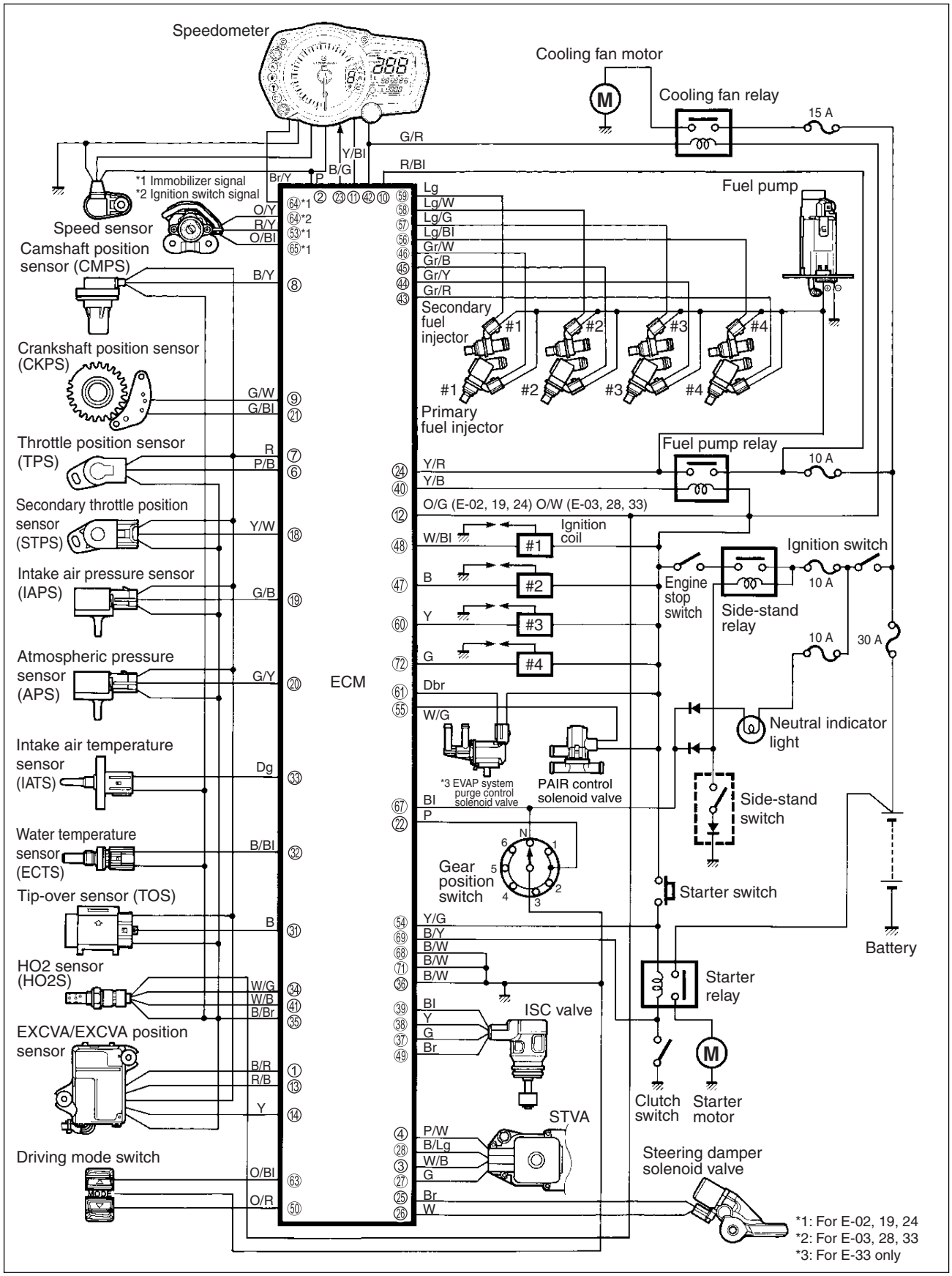

ECM TERMINAL

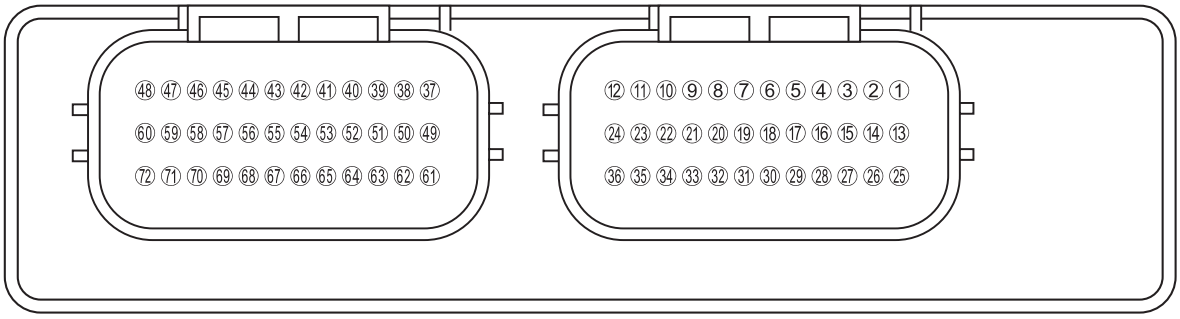

TERMINAL NO.	CIRCUIT	TERMINAL NO.	CIRCUIT
①	EXCVA power (MO+)	⑲	IAP sensor signal (IAPS)
②	Speed sensor signal	⑳	AP sensor signal (APS)
③	STVA signal (STVA 2A)	㉑	CKP sensor signal (CKPS–)
④	STVA signal (STVA 1A)	㉒	Gear position switch signal (GP)
⑤	—	㉓	Serial data for speedometer
⑥	TP sensor signal (TPS)	㉔	Power source for fuel injectors (VM)
⑦	Power source for sensors (VCC)	㉕	Steering damper solenoid (SSO–)
⑧	CMP sensor (CMPS+)	㉖	Steering damper solenoid (SSO+)
⑨	CKP sensor (CKPS+)	㉗	STVA signal (STVA 2B)
⑩	Power source for back-up	㉘	STVA signal (STVA 1B)
⑪	Tachometer	㉙	—
⑫	Power source (+B)	㉚	—
⑬	EXCVA power (MO–)	㉛	TO sensor signal (TOS)
⑭	EXCVA position sensor (MPS)	㉜	ECT sensor signal (ECTS)
⑮	—	㉝	IAT sensor signal (IATS)
⑯	—	㉞	HO2 sensor (HO2S)
⑰	—	㉟	Sensor ground (E2)
⑱	STP sensor (STPS)	㊱	ECU ground (E1)

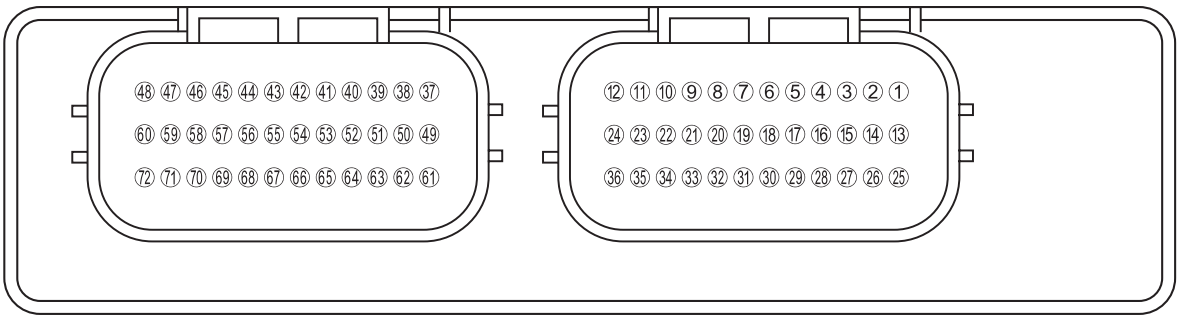

TERMINAL NO.	CIRCUIT	TERMINAL NO.	CIRCUIT
㊲	ISC valve signal (ISC 2A)	㊺	PAIR control solenoid (PAIR)
㊳	ISC valve signal (ISC 1B)	㊻	Secondary injector #4 (#42)
㊴	ISC valve signal (ISC 1A)	㊼	Secondary injector #3 (#32)
㊵	Fuel pump relay (FP relay)	㊽	Secondary injector #2 (#22)
㊶	HO2 sensor heater (HO2H)	㊾	Secondary injector #1 (#12)
㊷	Cooling fan relay (FAR)	㊿	Ignition coil #3
㊸	Primary injector #4 (#41)	61	EVAP system purge control solenoid [For E-33]
㊹	Primary injector #3 (#31)	62	Serial data for self-diagnosis
㊺	Primary injector #2 (#21)	63	Driving mode switch 1 (DMS1)
㊻	Primary injector #1 (#11)	64	Immobilizer indicator [For E-02, 19, 24]/ Ignition switch signal [For E-03, 28, 33]
㊼	Ignition coil #2	65	Immobilizer communication [For E-02, 19, 24]
㊽	Ignition coil #1	66	—
㊾	ISC valve signal (ISC 2B)	67	Neutral signal
㊿	Driving mode switch 2 (DMS2)	68	General ground (E1)
51	—	69	Clutch lever switch
52	—	70	Mode select switch
53	Immobilizer communication [For E-02, 19, 24]	71	Ignition system ground (E3)
54	Starter relay	72	Ignition coil #4

SELF-DIAGNOSIS FUNCTION

The self-diagnosis function is incorporated in the ECM. The function has two modes, “User mode” and “Dealer mode”. The user can only be notified by the LCD (DISPLAY) panel and LED (FI indicator light). To check the function of the individual FI system devices, the dealer mode is provided. In this check, the special tool is necessary to read the code of the malfunction items.

USER MODE

MALFUNCTION		LCD (DISPLAY) INDICATION	FI INDICATOR LIGHT INDICATION	INDICATION MODE
“NO”		Coolant temperature	—	—
“YES”		Coolant temperature and “FI” letters	FI indicator light turns ON.	Each 2 sec. Coolant temperature or “FI” is indicated.
	Engine can start	*1		
	Engine can not start	“FI” letter *2	FI indicator light turns ON and blinks.	“FI” is indicated continuously.

*1
When one of the signals is not received by ECM, the fail-safe circuit works and injection is not stopped. In this case, “FI” and coolant temperature are indicated in the LCD panel and motorcycle can run.
*2
The injection signal is stopped, when the camshaft position sensor signal, crankshaft position sensor signal, tip-over sensor signal, #1, #2, #3 and #4 ignition signals, #1, #2, #3 and #4 injector signals, fuel pump relay signal or ignition switch signal is not sent to ECM. In this case, “FI” is indicated in the LCD panel. Motorcycle does not run.

“CHEC”: The LCD panel indicates “CHEC” when no communication signal from the ECM is received for 5 seconds.

For Example:

The ignition switch is turned ON, and the engine stop switch is turned OFF. In this case, the speedometer does not receive any signal from ECM, and the panel indicates “CHEC”.
If CHEC is indicated, the LCD does not indicate the trouble code. It is necessary to check the wiring harness between ECM and speedometer couplers.
The possible cause of this indication is as follows;
Engine stop switch is in OFF position. Side-stand/ignition inter-lock system is not working. Ignition fuse is burnt.

“Sd”: The LCD panel indicates “Sd” when the steering damper solenoid malfunction, battery abnormal voltage and speed sensor malfunction occured.

NOTE:
Until starting the engine, the FI indicator light turns ON.
The FI indicator light is also turned ON when engine temperature is high or oil pressure is low.

DEALER MODE

The defective function is memorized in the computer. Use the special tool's coupler to connect to the dealer mode coupler. The memorized malfunction code is displayed on LCD (DISPLAY) panel. Malfunction means that the ECM does not receive signal from the devices. These affected devices are indicated in the code form.

TOOL 09930-82720: Mode select switch

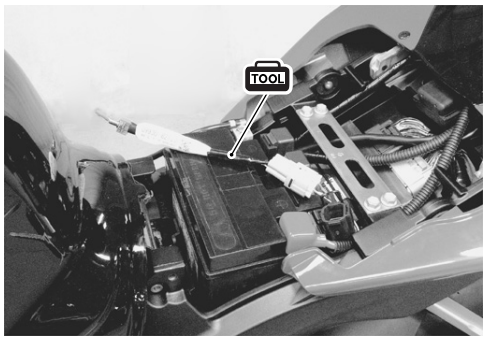

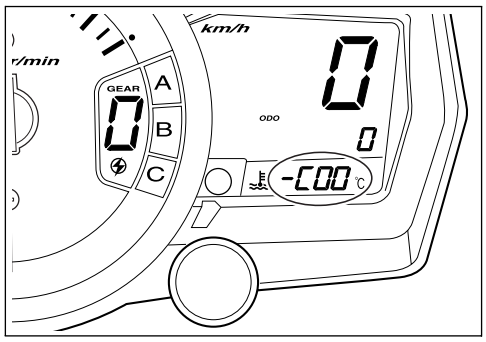

CAUTION

Before checking the malfunction code, do not disconnect the ECM lead wire couplers.
If the couplers from the ECM are disconnected, the malfunction code memory is erased and the malfunction code can not be checked.

MALFUNCTION	LCD (DISPLAY) INDICATION	FI INDICATOR LIGHT INDICATION	INDICATION MODE
"NO"	C00	FI indicator light turns OFF.	—
"YES"	C**code is indicated from small numeral to large one.		For each 2 sec., code is indicated.

CODE	MALFUNCTION PART	REMARKS
C00	None	No defective part
C11	Camshaft position sensor (CMPS)	
C12	Crankshaft position sensor (CKPS)	Pick-up coil signal, signal generator
C13	Intake air pressure sensor (IAPS)	
C14	Throttle position sensor (TPS)	*1
C15	Engine coolant temperature sensor (ECTS)	
C21	Intake air temperature sensor (IATS)	
C22	Atmospheric pressure sensor (APS)	
C23	Tip-over sensor (TOS)	
C24	Ignition signal #1 (IG coil #1)	For #1 cylinder
C25	Ignition signal #2 (IG coil #2)	For #2 cylinder
C26	Ignition signal #3 (IG coil #3)	For #3 cylinder
C27	Ignition signal #4 (IG coil #4)	For #4 cylinder
C28	Secondary throttle valve actuator (STVA)	*2
C29	Secondary throttle position sensor (STPS)	
C31	Gear position signal (GP switch)	
C32	Primary injector signal #1 (FI #1)	For #1 cylinder
C33	Primary injector signal #2 (FI #2)	For #2 cylinder
C34	Primary injector signal #3 (FI #3)	For #3 cylinder
C35	Primary injector signal #4 (FI #4)	For #4 cylinder
C36	Secondary injector signal #1	For #1 cylinder
C37	Secondary injector signal #2	For #2 cylinder
C38	Secondary injector signal #3	For #3 cylinder
C39	Secondary injector signal #4	For #4 cylinder
C40	ISC valve	
C41	Fuel pump control system (FP control system), ECM/PCM power input signal	Fuel pump, Fuel pump relay
C42	Ignition switch signal (Ignition switch/immobilizer for E-02, 19, 24)	Anti-theft
C44	HO2 sensor	
C46	Exhaust control valve actuator (EXCVA)	
C49	PAIR control solenoid valve	
C60	Cooling fan control system	Cooling fan relay
C62	EVAP system purge control solenoid valve (For E-33)	
C91	Vehicle speed sensor	
C93	Steering damper solenoid valve	

DEALER MODE

The defective function is memorized in the computer. Use the special tool's coupler to connect to the dealer mode coupler. The memorized malfunction code is displayed on LCD (DISPLAY) panel. Malfunction means that the ECM does not receive signal from the devices. These affected devices are indicated in the code form.

TOOL 09930-82720: Mode select switch

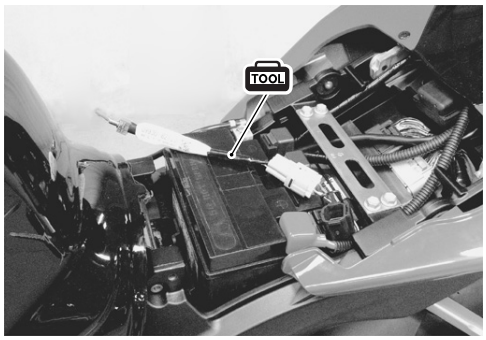

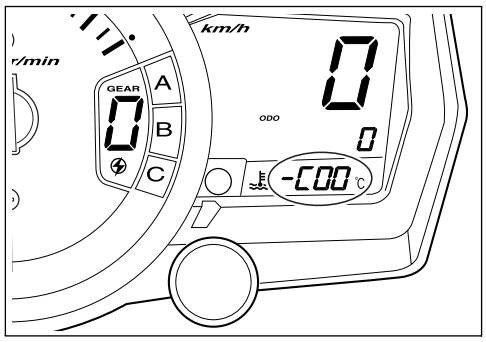

CAUTION

Before checking the malfunction code, do not disconnect the ECM lead wire couplers.
If the couplers from the ECM are disconnected, the malfunction code memory is erased and the malfunction code can not be checked.

MALFUNCTION	LCD (DISPLAY) INDICATION	FI INDICATOR LIGHT INDICATION	INDICATION MODE
"NO"	C00	FI indicator light turns OFF.	—
"YES"	C**code is indicated from small numeral to large one.		For each 2 sec., code is indicated.

TPS ADJUSTMENT

1. Connect the special tool (Mode select switch) to the dealer mode coupler at the wiring harness.

2. If the throttle position sensor adjustment is necessary, loosen the screw and turn the throttle position sensor ① and bring the line to the middle.
3. Then, tighten the screw to fix the throttle position sensor.

TOOL 09930-11950: Torx wrench
09930-82720: Mode select switch

The LCD displays the line for 0.4 sec. at a time, and when such a display repeats two times, it indicates the current position where the sensor is fixed.

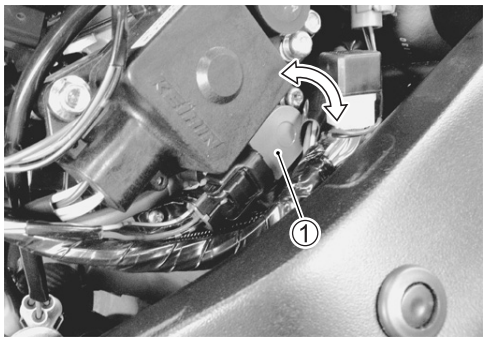

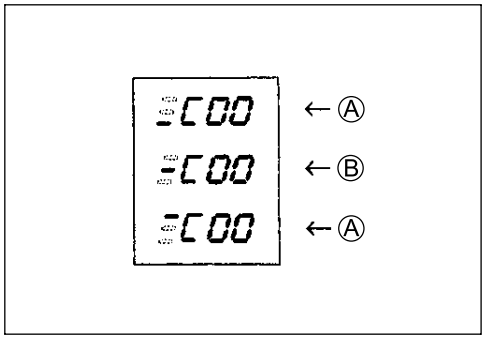

Ⓐ Incorrect
Ⓑ Correct position

FAIL-SAFE FUNCTION

FI system is provided with fail-safe function to allow the engine to start and the motorcycle to run in a minimum performance necessary even under malfunction condition.

ITEM	FAIL-SAFE MODE	STARTING ABILITY	RUNNING ABILITY
CMP sensor	When camshaft position signal has failed during running, the ECM determines the cylinder positions as # to be the same as before occurrence of such a failure.	"NO"	"YES"
		Motorcycle can run, but once engine stops, engine can not start.	
IAP sensor	Intake air pressure is fixed to 101 kPa (760 mmHg).	"YES"	"YES"
TP sensor	The throttle opening is fixed to full open position. Ignition timing is also fixed.	"YES"	"YES"
ECT sensor	Engine coolant temperature value is fixed to 80 °C (176 °F). Cooling fan is fixed on position.	"YES"	"YES"
IAT sensor	Intake air temperature value is fixed to 40 °C (104 °F).	"YES"	"YES"
AP sensor	Atmospheric pressure is fixed to 101 kPa (760 mmHg).	"YES"	"YES"
Ignition signal	#1 ignition-off with #1 fuel-cut (primary side and secondary side)	"YES"	"YES"
		#2, #3 & #4 cylinders can run.	
	#2 ignition-off with #2 fuel-cut (primary side and secondary side)	"YES"	"YES"
		#1, #3 & #4 cylinders can run.	
	#3 ignition-off with #3 fuel-cut (primary side and secondary side)	"YES"	"YES"
		#1, #2 & #4 cylinders can run.	
	#4 ignition-off with #4 fuel-cut (primary side and secondary side)	"YES"	"YES"
		#1, #2 & #3 cylinders can run.	
Primary injection signal	—	"YES"	"YES"
		#2, #3 & #4 cylinders can run.	
	—	"YES"	"YES"
		#1, #3 & #4 cylinders can run.	
	—	"YES"	"YES"
		#1, #2 & #4 cylinders can run.	
	—	"YES"	"YES"
		#1, #2 & #3 cylinders can run.	

ITEM	FAIL-SAFE MODE	STARTING ABILITY	RUNNING ABILITY
Secondary injection signal	—	—	"YES"
		#2, #3 & #4 cylinders can run.	
	—	—	"YES"
		#1, #3 & #4 cylinders can run.	
	—	—	"YES"
		#1, #2 & #4 cylinders can run.	
	—	—	"YES"
		#1, #2 & #3 cylinders can run.	
STV actuator	Secondary throttle valve is fixed to full close position. When motor disconnection or lock occurs, power from ECM is shut off.	"YES"	"YES"
STP sensor	Secondary throttle valve is fixed to full close position.	"YES"	"YES"
Gear position signal	Gear position signal is fixed to 6th gear.	"YES"	"YES"
HO2 sensor	Feedback compensation is inhibited. (Air/fuel ratio is fixed to normal.)	"YES"	"YES"
PAIR control solenoid valve	ECM stops controlling PAIR control solenoid valve.	"YES"	"YES"
EXCV actuator	EXCV actuator is fixed to full open position. When motor disconnection or lock occurs, power from ECM is shut off.	"YES"	"YES"
ISC valve	When motor disconnection or lock occurs, power from ECM is shut off.	"YES"	"YES"
EVAP system purge control solenoid valve (For E-33)	ECM stops controlling EVAP system purge control solenoid valve.	"YES"	"YES"
Vehicle speed sensor	ECM stops controlling steering damper solenoid valve.	"YES"	"YES"
Steering damper solenoid valve	ECM stops controlling steering damper solenoid valve.	"YES"	"YES"

The engine can start and can run even if the above signal is not received from each sensor. But, the engine running condition is not complete, providing only emergency help (by fail-safe circuit). In this case, it is necessary to bring the motorcycle to the workshop for complete repair.
When two ignition signals or two injector signals are not received by ECM, the fail-safe circuit can not work and ignition/injection is stopped.

FI SYSTEM TROUBLESHOOTING

CUSTOMER COMPLAINT ANALYSIS

Record details of the problem (failure, complaint) and how it occurred as described by the customer. For this purpose, use of such an inspection form such as below will facilitate collecting information required for proper analysis and diagnosis.

EXAMPLE: CUSTOMER PROBLEM INSPECTION FORM

User name:	Model:	VIN:	
Date of issue:	Date Reg.	Date of problem:	Mileage:

Malfunction indicator lamp condition (LED)	☐ Always ON ☐ Sometimes ON ☐ Always OFF ☐ Good condition
Malfunction display/code (LCD)	User mode: ☐ No display ☐ Malfunction display ( )
	Dealer mode: ☐ No code ☐ Malfunction code ( )

PROBLEM SYMPTOMS	
☐ **Difficult Starting**	☐ **Poor Driveability**
☐ No cranking	☐ Hesitation on acceleration
☐ No initial combustion	☐ Back fire/☐ After fire
☐ No combustion	☐ Lack of power
☐ Poor starting at	☐ Surging
(☐ cold ☐ warm ☐ always)	☐ Abnormal knocking
☐ Other _____	☐ Engine rpm jumps briefly
	☐ Other _____
☐ **Poor Idling**	☐ **Engine Stall when**
☐ Poor fast Idle	☐ Immediately after start
☐ Abnormal idling speed	☐ Throttle valve is opened
(☐ High ☐ Low) (r/min)	☐ Throttle valve is closed
☐ Unstable	☐ Load is applied
☐ Hunting (r/min to r/min)	☐ Other _____
☐ Other _____	
☐ OTHERS:	

MOTORCYCLE/ENVIRONMENTAL CONDITION WHEN PROBLEM OCCURS	
Environmental condition	
Weather	☐ Fair ☐ Cloudy ☐ Rain ☐ Snow ☐ Always ☐ Other _____
Temperature	☐ Hot ☐ Warm ☐ Cool ☐ Cold (°C/ °F) ☐ Always
Frequency	☐ Always ☐ Sometimes (times/ day, month) ☐ Only once ☐ Under certain condition
Road	☐ Urban ☐ Suburb ☐ Highway ☐ Mountainous (☐ Uphill ☐ Downhill) ☐ Tarmacadam ☐ Gravel ☐ Other _____
Motorcycle condition	
Engine condition	☐ Cold ☐ Warming up phase ☐ Warmed up ☐ Always ☐ Other at starting ☐ Immediately after start ☐ Racing without load ☐ Engine speed (r/min)
Motorcycle condition	During driving: ☐ Constant speed ☐ Accelerating ☐ Decelerating ☐ Right hand corner ☐ Left hand corner ☐ At stop ☐ Motorcycle speed when problem occurs (km/h, mile/h) ☐ Other _____

NOTE:
The above form is a standard sample. The form should be modified according to conditions and characteristics of each market.

VISUAL INSPECTION

- Prior to diagnosis using the mode select switch or SDS, perform the following visual inspections. The reason for visual inspection is that mechanical failures (such as oil leakage) cannot be displayed on the screen with the use of mode select switch or SDS.

* Engine oil level and leakage (☞2-12)
* Engine coolant level and leakage (☞2-18)
* Fuel level and leakage (☞2-14 and 9-32)
* Clogged air cleaner element (☞2-4)
* Battery condition (☞9-42)
* Throttle cable play (☞2-15)
* Vacuum hose looseness, bend and disconnection
* Broken fuse
* FI indicator light operation (☞4-17 and 9-30)
* Each warning light operation (☞9-30)
* Speedometer operation (☞9-33)
* Exhaust gas leakage and noise (☞2-29)
* Each coupler disconnection
* Clogged radiator fins (☞7-4)

SELF-DIAGNOSTIC PROCEDURES

NOTE:

* *Do not disconnect the couplers from ECM, battery cable from battery, ECM ground wire from engine or main fuse before confirming the DTC (Diagnostic Trouble Code) stored in memory. Such disconnection will erase the memorized information in ECM memory.*
* *DTC stored in ECM memory can be checked by the special tool.*
* *Before checking DTC, read SELF-DIAGNOSIS FUNCTION "USER MODE and DEALER MODE" (☞4-17 and -18 carefully to have good understanding as to what functions are available and how to use it.*
* *Be sure to read "PRECAUTIONS IN SERVICING" (☞4-3) before inspection and observe what is written there.*

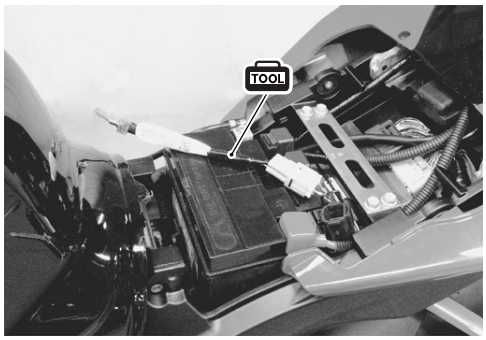

- Remove the front seat. (☞8-8)
- Connect the special tool to the dealer mode coupler at the wiring harness, and start the engine or crank the engine for more than 4 seconds.
- Turn the special tool's switch ON and check the malfunction code to determine the malfunction part.

TOOL 09930-82720: Mode select switch

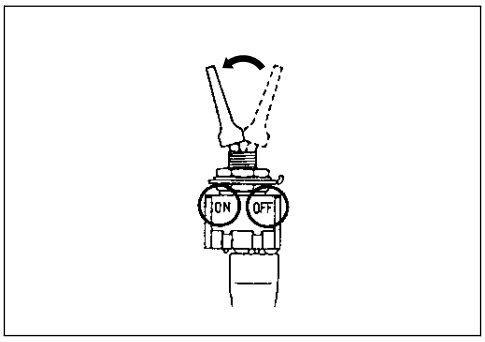

SELF-DIAGNOSIS RESET PROCEDURE

- After repairing the trouble, turn OFF the ignition switch and turn ON again.
- If the LCD indicates (C00), the malfunction is cleared.
- Disconnect the special tool from the dealer mode coupler.

NOTE:

* *Even though the Current DTC is cleared, Past DTC (previous malfunction history code) still remains stored in the ECM. Therefore, erase the Past DTC memorized in the ECM using SDS.*
* *DTC is memorized in the ECM also when the wire coupler of any sensor is disconnected. Therefore, when a wire coupler has been disconnected at the time of diagnosis, erase the stored DTC (Past DTC) using SDS.*

USE OF SDS DIAGNOSTIC PROCEDURES

** Do not disconnect the couplers from ECM, battery cable from battery, ECM ground wire from the engine or main fuse before confirming the DTC (Diagnostic Trouble Code) stored in memory. Such disconnection will erase the memorized information in ECM memory.*

** DTC stored in ECM memory can be checked by SDS.*

** Be sure to read "PRECAUTIONS IN SERVICING" (☞4-3) before inspection and observe what is written there.*

- Remove the front seat. (☞8-8)
- Set up the SDS tool. (Refer to the SDS operation manual for further details.)
- Read the DTC (Diagnostic Trouble Code) and show data when trouble (displaying data at the time of DTC) according to instructions displayed on SDS.
- SDS is not only used for detecting DTC but also for reproducing and checking on screen the failure condition as described by customers using the trigger.
- How to use trigger, refer to the SDS operation manual for further details.

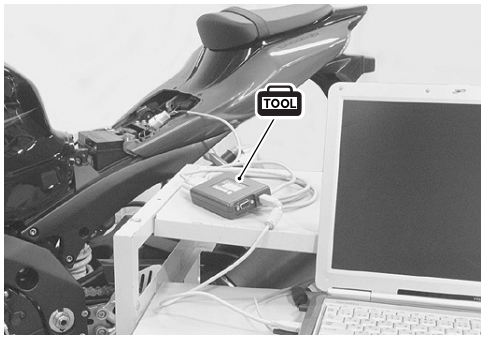

TOOL 09904-41010: SDS set tool
99565-01010-010: CD-ROM Ver.10

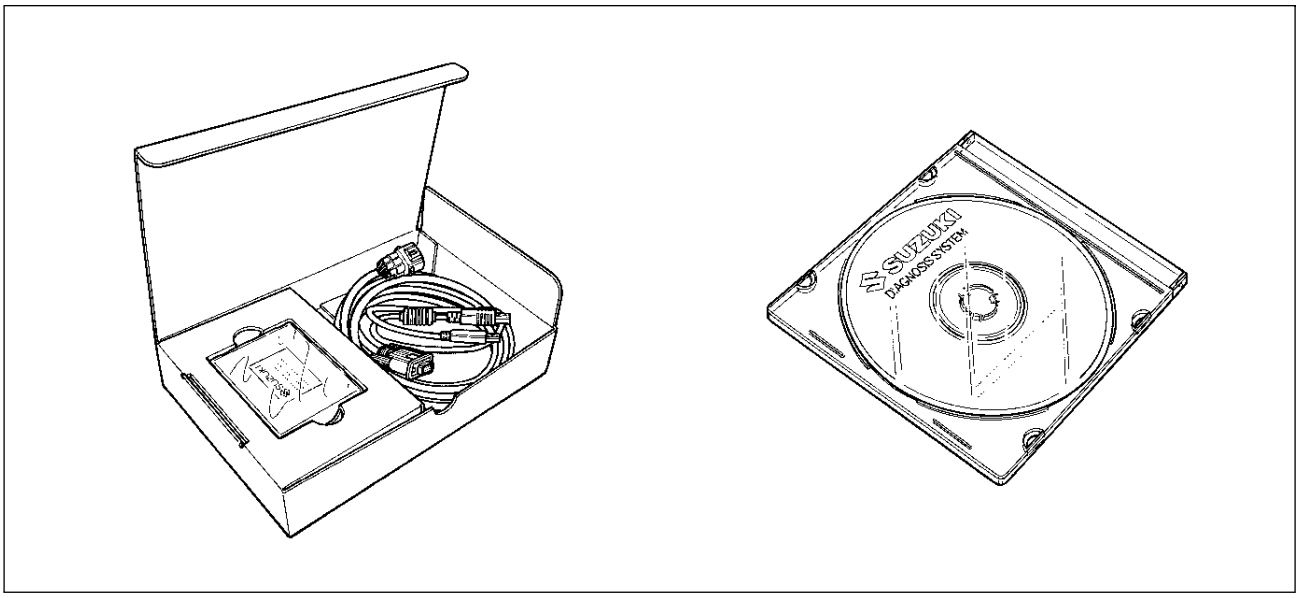

USE OF SDS DIAGNOSIS RESET PROCEDURE

- After repairing the trouble, turn OFF the ignition switch and turn ON again.
- Click the DTC inspection button ①.
- Check the DTC.
- The previous malfunction history code (Past DTC) still remains stored in the ECM. Therefore, erase the history code memorized in the ECM using SDS tool.

NOTE:
The malfunction code is memorized in the ECM also when the wire coupler of any sensor is disconnected. Therefore, when a wire coupler has been disconnected at the time of diagnosis, erase the stored malfunction history code using SDS.

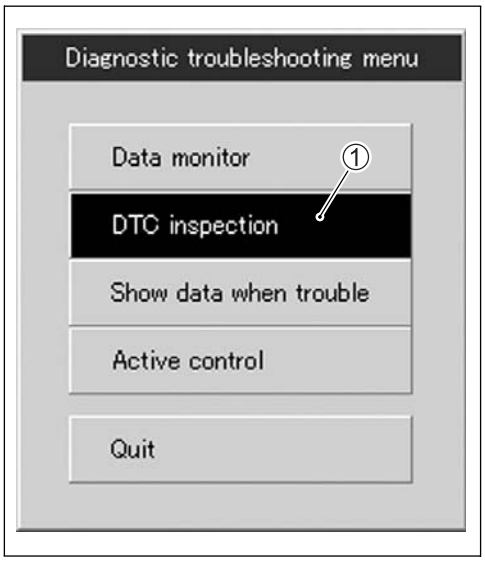

- Click “Clear” ② to delete history code (Past DTC).

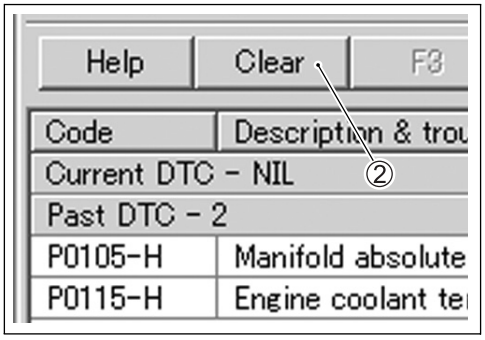

- Follow the displayed instructions.

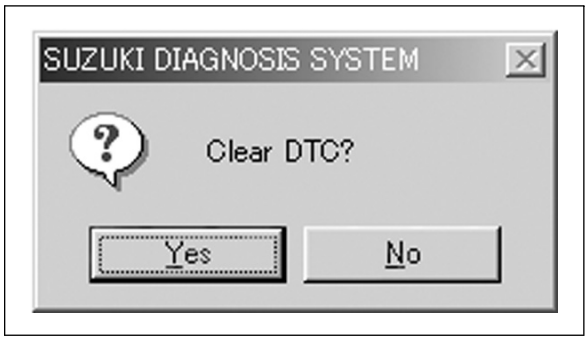

- Check that both “Current DTC” ③ and “Past DTC” ④ are deleted (NIL).

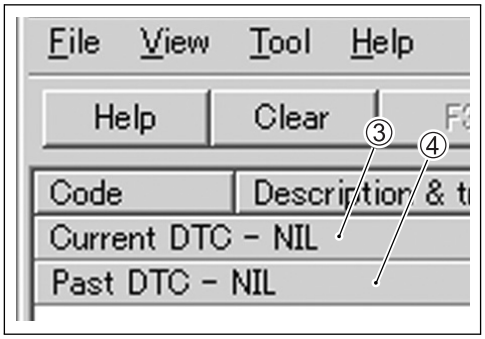

SHOW DATA WHEN TROUBLE (DISPLAING DATA AT THE TIME OF DTC)

ECM stores the engine and driving conditions (in the form of data as shown in the figure) at the moment of the detection of a malfunction in its memory. This data is called “Show data when trouble”.
Therefore, it is possible to know engine and driving conditions (e.g., whether the engine was warm or not, where the motorcycle was running or stopped) when a malfunction was detected by checking the show data when trouble. This show data when trouble function can record the maximum of two Diagnostic Trouble Codes in the ECM.
Also, ECM has a function to store each show data when trouble for two different malfunctions in the order as the malfunction is detected. Utilizing this function, it is possible to know the order of malfunctions that have been detected. Its use is helpful when rechecking or diagnosing a trouble.

Failure #1

P0105-H Manifold absolute pressure circuit malfunction 1

Item	Pre-detect	Detect poi...	Post-dete...
Engine speed	0	0	0
Throttle position	28.9	28.9	28.9
Manifold absolute pressure 1	135.2	144.3	145.6
Engine coolant / oil temperature	24.0	24.0	24.0
Gear position	N	N	N
Secondary throttle actuator position sensor	96.1	96.1	98.4

- Click “Show data when trouble” ① to display the data. By clicking the drop down button ②, either “Failure #1” or “Failure #2” can be selected.

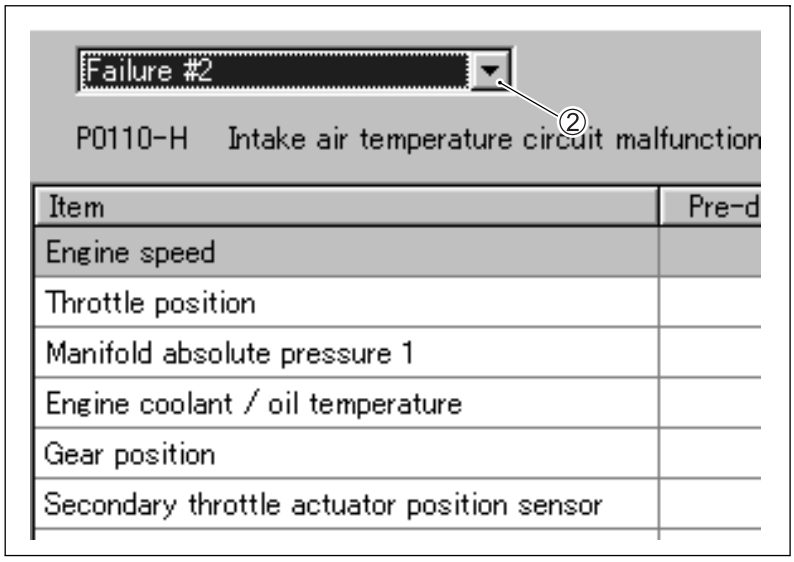

MALFUNCTION CODE AND DEFECTIVE CONDITION

DTC No.		DETECTED ITEM	DETECTED FAILURE CONDITION	CHECK FOR
C00		NO FAULT	————	————
C11		CMP sensor	The signal does not reach ECM for 3 sec. or more, after receiving the starter signal.	CMP sensor wiring and mechanical parts CMP sensor, intake cam pin, wiring/coupler connection
P0340				
C12		CKP sensor	The signal does not reach ECM for 3 sec. or more, after receiving the starter signal.	CKP sensor wiring and mechanical parts CKP sensor, lead wire/coupler connection
P0335				
C13		IAP sensor	The sensor should produce following voltage. 0.5 V ≦ sensor voltage < 4.85 V In other than the above range, C13 (P0105) is indicated.	IAP sensor, lead wire/coupler connection
P0105	H		Sensor voltage is higher than specified value.	IAP sensor circuit shorted to VCC or ground circuit open
	L		Sensor voltage is lower than specified value.	IAP sensor circuit open or shorted to ground or VCC circuit open
C14		TP sensor	The sensor should produce following voltage. 0.2 V ≦ sensor voltage < 4.80 V In other than the above range, C14 (P0120) is indicated.	TP sensor, lead wire/coupler connection
P0120	H		Sensor voltage is higher than specified value.	TP sensor circuit shorted to VCC or ground circuit open
	L		Sensor voltage is lower than specified value.	TP sensor circuit open or shorted to ground or VCC circuit open
C15		ECT sensor	The sensor voltage should be the following. 0.15 V ≦ sensor voltage < 4.85 V In other than the above range, C15 (P0115) is indicated.	ECT sensor, lead wire/coupler connection
P0115	H		Sensor voltage is higher than specified value.	ECT sensor circuit open or ground circuit open
	L		Sensor voltage is lower than specified value.	ECT sensor circuit shorted to ground

DTC No.		DETECTED ITEM	DETECTED FAILURE CONDITION	CHECK FOR
C21		IAT sensor	The sensor voltage should be the following. 0.15 V ≦ sensor voltage < 4.85 V In other than the above range, C21 (P0110) is indicated.	IAT sensor, lead wire/coupler connection
P0110	H		Sensor voltage is higher than specified value.	IAT sensor circuit open or ground circuit open
	L		Sensor voltage is lower than specified value.	IAT sensor circuit shorted to ground
C22		AP sensor	The sensor voltage should be the following. 0.5 V ≦ sensor voltage < 4.85 V In other than the above range, C22 (P1450) is indicated.	AP sensor, wiring/coupler connection
P1450	H		Sensor voltage is higher than specified value.	AP sensor circuit shorted to VCC or ground circuit open
	L		Sensor voltage is lower than specified value.	AP sensor circuit open or shorted to ground or VCC circuit open
C23		TO sensor	The sensor voltage should be the following for 2 sec. and more, after ignition switch is turned ON. 0.2 V ≦ sensor voltage < 4.8 V In other than the above value, C23 (P1651) is indicated.	TO sensor, lead wire/coupler connection
P1651	H		Sensor voltage is higher than specified value.	TO sensor circuit shorted to VCC or ground circuit open
	L		Sensor voltage is lower than specified value.	TO sensor circuit open or shorted to ground or VCC circuit open
C24/C25 C26/C27		Ignition signal	CKP sensor (pick-up coil) signal is produced, but signal from ignition coil is interrupted 8 times or more continuously. In this case, the code C24 (P0351), C25 (P0352), C26 (P0353) or C27 (P0354) is indicated.	Ignition coil, wiring/coupler connection, power supply from the battery
P0351/P0352 P0353/P0354				
C28		STV actuator	When no actuator control signal is supplied from the ECM, communication signal does not reach ECM or operation voltage does not reach STVA motor, C28 (P1655) is indicated. STVA can not operate.	STVA motor, STVA lead wire/coupler
P1655				

DTC No.		DETECTED ITEM	DETECTED FAILURE CONDITION	CHECK FOR
C29		STP sensor	The sensor should produce following voltage. 0.15 V ≦ sensor voltage < 4.85 V In other than the above range, C29 (P1654) is indicated.	STP sensor, lead wire/coupler connection
P1654	H		Sensor voltage is higher than specified value.	STP sensor circuit shorted to VCC or ground circuit open
	L		Sensor voltage is lower than specified value.	STP sensor circuit open or shorted to ground or VCC circuit open
C31		Gear position signal	Gear position signal voltage should be higher than the following for 3 seconds and more. Gear position signal voltage ≧ 0.6 V If lower than the above value, C31 (P0705) is indicated.	GP switch, wiring/coupler connection, gearshift cam, etc.
P0705				
C32/C33 C34/C35		Primary fuel injector	CKP sensor (pickup coil) signal is produced, but fuel injector signal is interrupted 4 times or more continuously. In this case, the code C32 (P0201), C33 (P0202), C34 (P0203) or C35 (P0204) is indicated.	Primary fuel injector, wiring/coupler connection, power supply to the injector
P0201/P0202 P0203/P0204				
C36/C37 C38/C39		Secondary fuel injector	Some failure exists in the fuel injector signal in a high load, high revolution condition.In this case, the code C36 (P1764), C37 (P1765), C38 (P1766) or C39 (P1767) is indicated.	Secondary fuel injector, wiring/coupler connection, power supply to the injector
P1764/P1765 P1766/P1767				
C40 (P0505)		ISC valve	The circuit voltage of motor drive is unusual.	ISC valve circuit open or shorted to ground Power source circuit open
C40 (P0506)			Idle speed is lower than the desired idle speed.	Air passage clogged ISC valve is fixed ISC valve pre-set position is incorrect
C40 (P0507)			Idle speed is higher than the desired idle speed.	ISC valve hose connection ISC valve is fixed ISC valve pre-set position is incorrect

DTC No.		DETECTED ITEM	DETECTED FAILURE CONDITION	CHECK FOR
C41 (P0230)		FP relay	No voltage is applied to the fuel pump, although fuel pump relay is turned ON, or voltage is applied to fuel pump although fuel pump relay is turned OFF.	Fuel pump relay, lead wire/coupler connection, power source to fuel pump relay and fuel injectors
P0230	H		Voltage is applied to fuel pump although fuel pump relay is turned OFF.	Fuel pump relay switch circuit shorted to power source Fuel pump relay (switch side)
	L		No voltage is applied to the fuel pump, although fuel pump relay is turned ON.	Fuel pump relay circuit open or short Fuel pump relay (coil side).
C41 (P2505)		ECM/PCM power input signal	No voltage is applied to the ECM, although the ignition switch is turned ON. No voltage is applied to the speedometer when turning the ignition switch ON.	Lead wire/coupler connection of ECM terminal to fuel fuse, fuel fuse, power source of speedometer shorted to ground or open
C42		Ignition switch	Ignition switch signal is not input to the ECM. * When the I.D. agreement is not verified. * ECM does not receive communication signal from the immobilizer antenna.	Ignition switch, lead wire/coupler, etc. * Immobilizer/anti-theft system
P1650				
C44		HO2 sensor	HO2 sensor output voltage is not input to ECM during engine operation and running condition. (Sensor voltage < 1.0 V) In other than the above value, C44 (P0130) is indicated.	HO2 sensor circuit open
P0130				
C44			The Heater can not operate so that heater operation voltage is not supply to the oxygen heater circuit, C44 (P0135) is indicated.	HO2 sensor lead wire/coupler connection Battery voltage supply to the HO2 sensor
P0135				

* : Immobilizer system equipped model only. (E-02, 19, 24)

DTC No.		DETECTED ITEM	DETECTED FAILURE CONDITION	CHECK FOR
C46		EXCV actuator	EXCVA position sensor produces following voltage. 0.1 V ≦ sensor voltage < 4.9 V In other than the above range, C46 (P1675) is indicated. When no actuator control signal is supplied from the ECM, communication signal does not reach ECM or operation voltage does not reach EXCVA motor, C46 (P1658) is indicated. EXCVA can not operate.	EXCVA, EXCVA lead wire/coupler
P1657	H		EXCVA position sensor voltage is higher than specified value.	EXCVA position sensor circuit shorted to VCC or ground circuit open
	L		EXCVA position sensor voltage is lower than specified value.	EXCVA position sensor circuit open or shorted to ground or VCC circuit open
P1658			When no actuator control signal is supplied from the ECM, communication signal does not reach ECM or operation voltage does not reach EXCVA motor, C46 (P1658) is indicated. EXCVA motor can not operate.	EXCVA, EXCVA motor lead wire/coupler
C49		PAIR control solenoid valve	PAIR control solenoid valve voltage is not input to ECM.	PAIR control solenoid valve, lead wire/coupler
P1656				
C60		Cooling fan relay	Cooling fan relay signal is not input to ECM.	Cooling fan relay, lead wire/coupler connection
P0480				
C62		EVAP system purge control solenoid valve (For E-33)	EVAP system purge control solenoid valve voltage is not input to ECM.	EVAP system purge control solenoid valve, lead wire/coupler
P0443				
C91		Vehicle speed sensor	Speedometer does not recieve signal from the vehicle speed sensor for more than 6 sec. when the motorcycle is running. ECM does not receive signal from the vehicle speed sensor for more than 6 sec. when the motorcycle is running. Failure in communication between ECM and speedometer with reference to vehicle speed.	Speed sensor and speedometer wiring/coupler connection, wiring/coupler connection between ECM and speedometer
P0500				

DTC No.		DETECTED ITEM	DETECTED FAILURE CONDITION	CHECK FOR
C93		Steering damper solenoid valve	Steering damper control current does not flow to the solenoid valve. With IG turned ON, ECM detects a failure of internal circuit element. Solenoid current does not converge to the target value. Battery voltage is 10 V or below with the engine running.	Steering damper solenoid valve circuit interrupter element shorted, feedback current convergence failure, low battery voltage
P1769	H		Steering damper control current is higher than specified value. An abnormal current is detected during the vehicle standstill. Solenoid current is 0.7 A or above.	Steering damper solenoid valve circuit shorted to VCC
	L		Steering damper control current is lower than specified value. With IG turned ON, ECM detects a discontinuity. An abnormal current is detected during the vehicle standstill.	Steering damper solenoid valve circuit open or shorted

"C11" (P0340) CMP SENSOR CIRCUIT MALFUNCTION

DETECTED CONDITION	POSSIBLE CAUSE
The signal does not reach ECM for 3 sec. or more, after receiving the starter signal.	• CMP sensor circuit open or short • CMP sensor malfunction • ECM malfunction

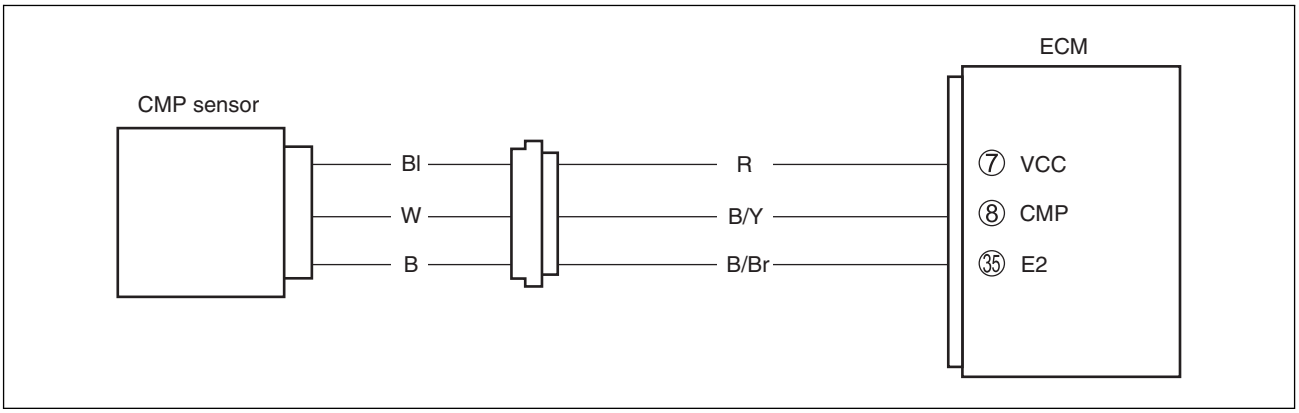

CAUTION

When using the multi-circuit tester, do not strongly touch the terminal of the ECM coupler with a needle pointed tester probe to prevent the terminal damage or terminal bend.

INSPECTION

1) Turn the ignition switch OFF.
2) Lift and support the fuel tank. (☞5-3)
3) Remove the air cleaner box. (☞5-14)
4) Check the CMP sensor coupler ① for loose or poor contacts. If OK, remove the CMP sensor. (☞3-29)

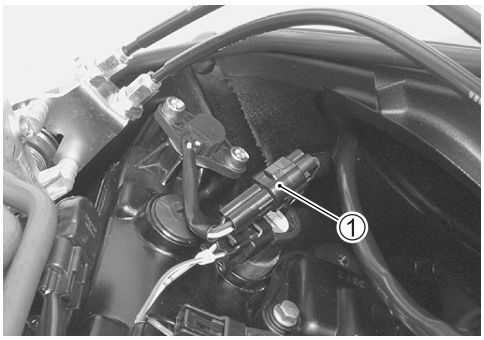

5) Connect 3 new 1.5 V batteries in series, 1 kΩ resistor and the multi-circuit tester as shown in the illustration.

TOOL 09900-25008: Multi-circuit tester set

Tester knob indication: Voltage (⎓)

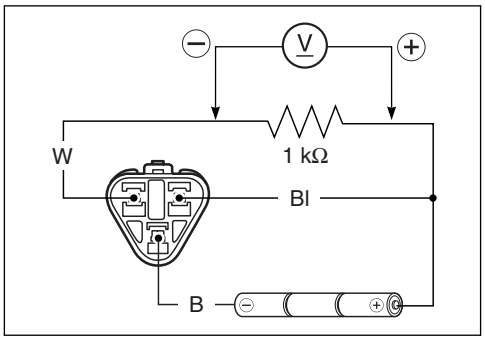

6) Under this condition, if a suitable screwdriver touching the pick-up surface of the CMP sensor is moved, the tester reading voltage changes (0.8 V and less ↔ 4.3 V and more).

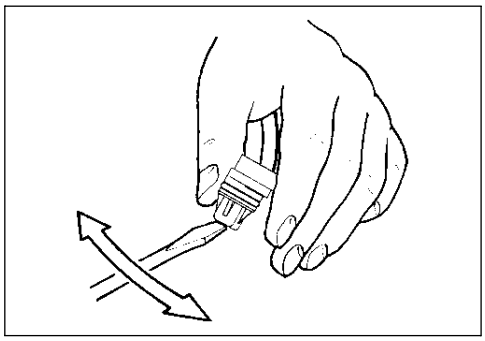

Is the voltage OK?

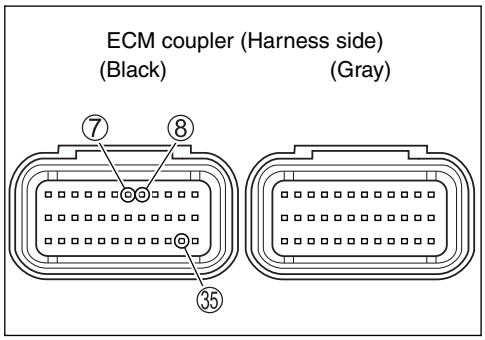

YES	• B/Y, R or B/Br wire open or shorted to ground • Loose or poor contacts on the CKP sensor coupler or ECM coupler (terminal ⑧, ⑦ or ㉟) • If wires and connection are OK, intermittent trouble or faulty ECM. • Recheck each terminal and wire harness for open circuit and poor connection. • Replace the ECM with a known good one, and inspect it again.
NO	• Inspect that metal particles or foreign material stuck on the CMP sensor and camshaft tip. • If there are no metal particles and foreign material, then replace the CMP sensor with a new one.

7) After repairing the trouble, clear the DTC using SDS tool. (☞4-28)

"C12" (P0335) CKP SENSOR CIRCUIT MALFUNCTION

DETECTED CONDITION	POSSIBLE CAUSE
The signal does not reach ECM for 3 sec. or more, after receiving the starter signal.	• Metal particles or foreign material being stuck on the CKP sensor and rotor tip • CKP sensor circuit open or short • CKP sensor malfunction • ECM malfunction

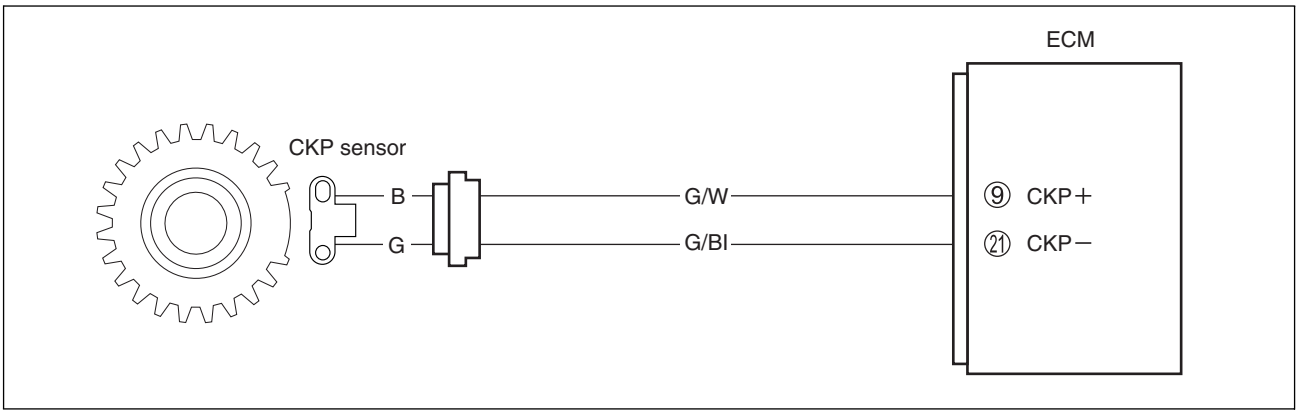

CAUTION

When using the multi-circuit tester, do not strongly touch the terminal of the ECM coupler with a needle pointed tester probe to prevent the terminal damage or terminal bend.

INSPECTION

Step 1

1) Turn the ignition switch OFF.
2) Lift and support the fuel tank. (☞5-3)
3) Check the CKP sensor coupler ① for loose or poor contacts. If OK, then measure the CKP sensor resistance.

4) Disconnect the CKP sensor coupler and measure the resistance.

DATA **CKP sensor resistance: 142 – 194 Ω (B – G)**

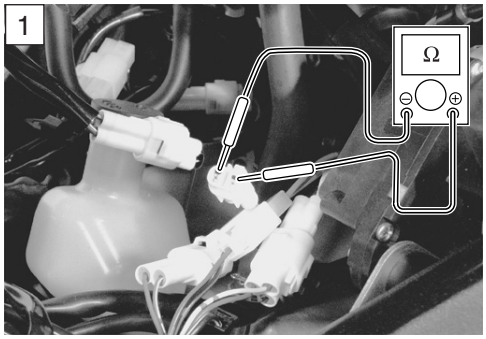

5) If OK, then check the continuity between each terminal and ground.

DATA CKP sensor continuity: ∞ Ω (Infinity)
(B – Ground)
(G – Ground)

TOOL 09900-25008: Multi-circuit tester set

Tester knob indication: Resistance (Ω)

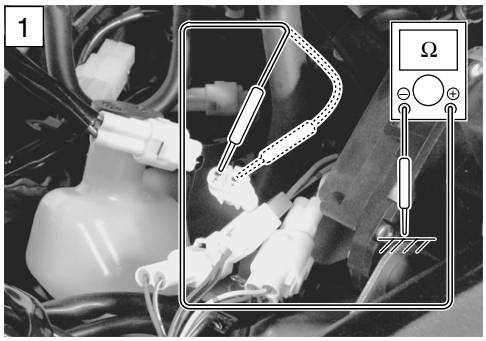

Are the resistance and continuity OK?

YES	Go to Step 2.
NO	Replace the CKP sensor with a new one.

6) After repairing the trouble, clear the DTC using SDS tool. (☞4-28)

Step 2

1) Crank the engine a few seconds with the starter motor, and measure the CKP sensor peak voltage at the CKP sensor coupler and ECM coupler.
2) Repeat the above test procedure a few times and measure the highest peak voltage.

DATA CKP sensor peak voltage: 0.5 V and more (⊕ B – ⊖ G)

① Peak volt adaptor

TOOL 09900-25008: Multi-circuit tester set

Tester knob indication: Voltage (⎓)

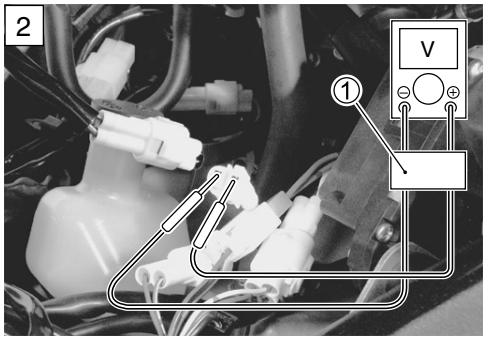

Is the voltage OK?

YES	• G/W or G/Bl wire open or shorted to ground. • Loose or poor contacts on the CKP sensor coupler or ECM coupler (terminal ⑨ or ㉑). • If wire and connection are OK, intermittent trouble or faulty ECM. • Recheck each terminal and wire harness for open circuit and poor connection. • Replace the ECM with a known good one, and inspect it again.
NO	• Inspect that metal particles or foreign material stuck on the CKP sensor and rotor tip. • If there are no metal particles and foreign material, then replace the CKP sensor with a new one.

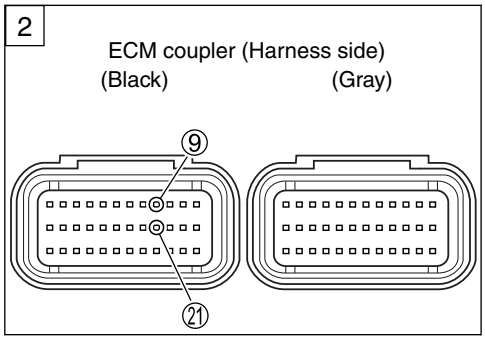

3) After repairing the trouble, clear the DTC using SDS tool. (☞4-28)

“C13” (P0105-H/L) IAP SENSOR CIRCUIT MALFUNCTION

		DETECTED CONDITION	POSSIBLE CAUSE
C13		IAP sensor voltage is not within the following range. 0.5 V ≦ Sensor voltage < 4.85 V *NOTE:* *Note that atmospheric pressure varies depending on weather conditions as well as altitude.* *Take that into consideration when inspecting voltage.*	• Clogged vacuum passage between throttle body and IAP sensor. • Air being drawn from vacuum passage between throttle body and IAP sensor. • IAP sensor circuit open or shorted to ground. • IAP sensor malfunction. • ECM malfunction.
P0105	H	Sensor voltage is higher than specified value.	• IAP sensor circuit shorted to VCC or ground circuit open. • IAP sensor circuit open or shorted to ground or VCC circuit open.
	L	Sensor voltage is lower than specified value.	

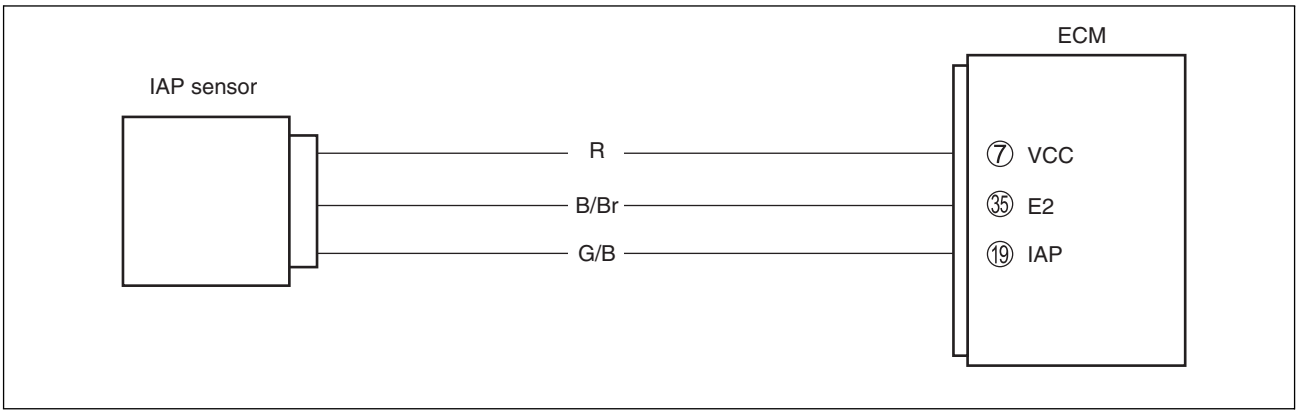

CAUTION

When using the multi-circuit tester, do not strongly touch the terminal of the ECM coupler with a needle pointed tester probe to prevent the terminal damage or terminal bend.

INSPECTION

Step 1 (When indicating C13:)

1) Turn the ignition switch OFF.
2) Lift and support the fuel tank. (☞5-3)
3) Check the IAP sensor coupler ① for loose or poor contacts.
   If OK, then measure the IAP sensor input voltage.

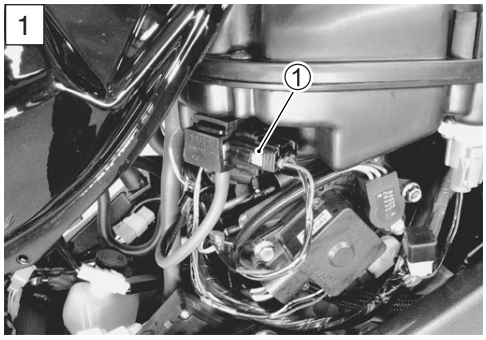

4) Disconnect the IAP sensor coupler.
5) Turn the ignition switch ON.
6) Insert the needle pointed probes to the lead wire coupler.
7) Measure the voltage at the R wire and ground.
8) If OK, then measure the voltage at the R wire and B/Br wire.

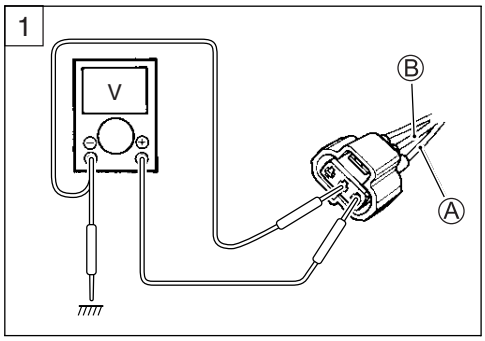

DATA IAP sensor input voltage: 4.5 – 5.5 V
(⊕ R – ⊖ Ground)
(⊕ R – ⊖ B/Br)

TOOL 09900-25008: Multi-circuit tester set
09900-25009: Needle pointed probe set

Tester knob indication: Voltage (⎓)

Is the voltage OK?

YES	Go to Step 2.
NO	• Loose or poor contacts on the ECM coupler (terminal ⑦ or ㉟). • Open or short circuit in the R wire or B/Br wire.

Step 1 (When indicating P0105-H:)
1) Turn the ignition switch OFF.
2) Lift and support the fuel tank. (☞5-3)
3) Check the IAP sensor coupler ① for loose or poor contacts.
If OK, then check the IAP sensor lead wire continuity.

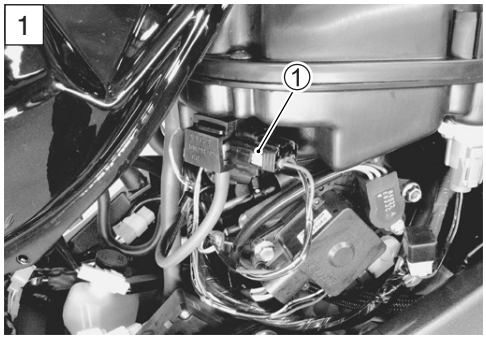

4) Disconnect the IAP sensor coupler.
5) Check the continuity between R wire Ⓐ and G/B wire Ⓒ.
If the sound is not heard from the tester, the circuit condition is OK.

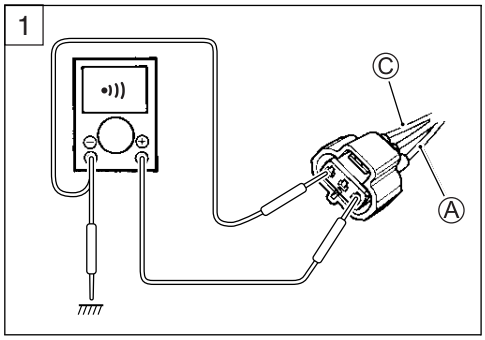

6) Disconnect the ECM coupler.
7) Check the continuity between G/B wire Ⓒ and terminal ⑲.
8) If OK, then check the continuity between B/Br wire Ⓑ and terminal ㉟.

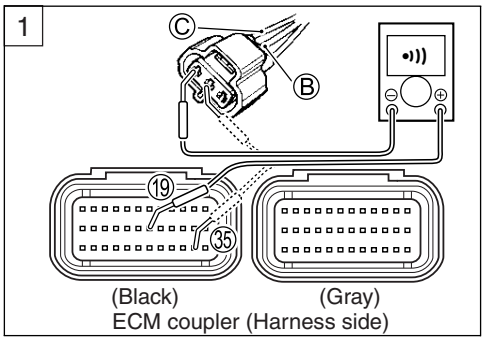

DATA IAPS lead wire continuity: Continuity (•)))

TOOL 09900-25008: Multi-circuit tester set
09900-25009: Needle pointed probe set

Tester knob indication: Continuity test (•)))

Is the continuity OK?

YES	Go to Step 2.
NO	G/B wire shorted to VCC, or B/Br wire open.

9) After repairing the trouble, clear the DTC using SDS tool. (☞4-28)

Step 1 (When indicating P0105-L:)
1) Turn the ignition switch OFF.
2) Lift and support the fuel tank. (☞5-3)
3) Check the IAP sensor coupler ① for loose or poor contacts. If OK, then check the IAP sensor lead wire continuity.

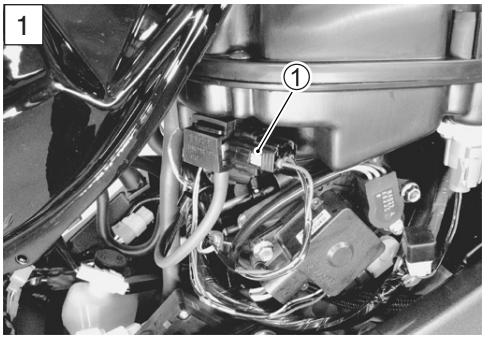

4) Disconnect the IAP sensor coupler.
5) Check the continuity between G/B wire Ⓒ and ground.
6) Also, check the continuity between G/B wire Ⓒ and B/Br wire Ⓑ. If the sound is not heard from the tester, the circuit condition is OK.

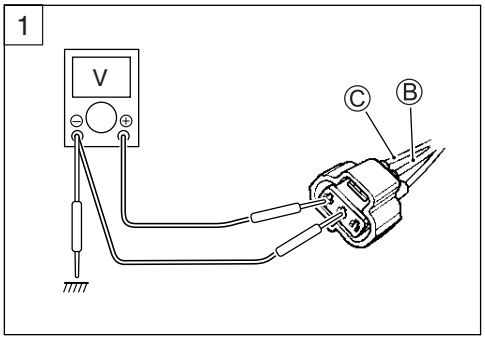

7) Disconnect the ECM coupler.
8) Check the continuity between R wire Ⓐ and terminal ⑦.
9) Also, check the continuity between G/B wire Ⓒ and terminal ⑲.

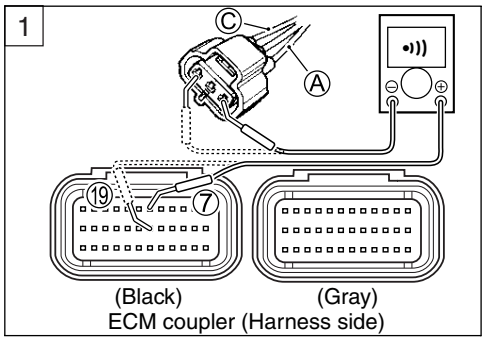

DATA IAPS lead wire continuity: Continuity (•)))

TOOL 09900-25008: Multi-circuit tester set
09900-25009: Needle pointed probe set

Tester knob indication: Continuity test (•)))

Is the continuity OK?

YES	Go to Step 1 (☞4-40) and go to Step 2.
NO	R wire or G/B wire open, or G/B wire shorted to ground

10) After repairing the trouble, clear the DTC using SDS tool. (☞4-28)

Step 2

1) Connect the IAP sensor coupler and ECM coupler.
2) Insert the needle pointed probes to the lead wire coupler.
3) Start the engine at idle speed and measure the IAP sensor output voltage at the wire side coupler (between G/B and B/Br wires).

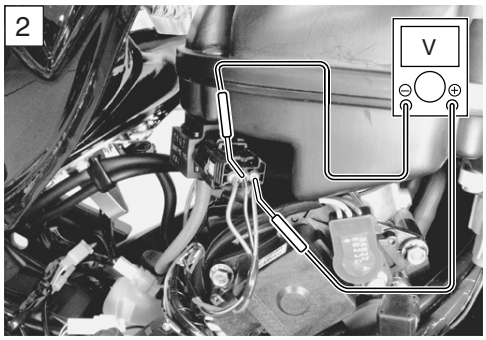

DATA IAP sensor output voltage: Approx. 2.6 V at idle speed (⊕ G/B – ⊖ B/Br)

TOOL 09900-25008: Multi-circuit tester set
09900-25009: Needle pointed probe set

Tester knob indication: Voltage (⎓)

Is the voltage OK?

YES	Go to Step 3.
NO	• Check the vacuum hose for crack or damage. • Open or short circuit in the G/B wire • If vacuum hose and wire are OK, replace the IAP sensor with a new one.

4) After repairing the trouble, clear the DTC using SDS tool. (☞4-28)

Step 3

1) Turn the ignition switch OFF.
2) Remove the IAP sensor.
3) Connect the vacuum pump gauge to the vacuum port of the IAP sensor.
   Arrange 3 new 1.5 V batteries in series ① (check that total - voltage is 4.5 – 5.0 V) and connect ⊖ terminal to the ground - terminal ② and ⊕ terminal to the VCC terminal ③.
4) Check the voltage between Vout ④ and ground. Also, check if voltage reduces when vacuum is applied up to 530 kPa (400 mmHg) by using vacuum pump gauge. (☞Below)

TOOL 09917-47011: Vacuum pump gauge
09900-25008: Multi-circuit tester set

Tester knob indication: Voltage (⎓)

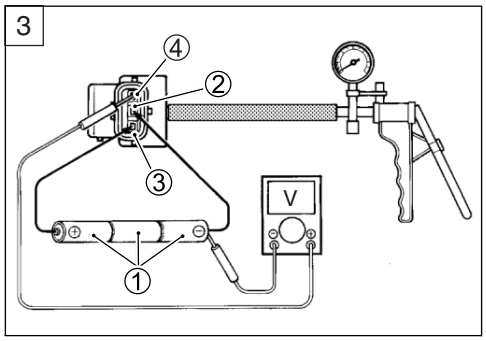

Is the voltage OK?

YES	• G/B, R or B/Br wire open or shorted to ground, or poor ⑲, ⑦ or ㉟ connection • If wire and connection are OK, intermittent trouble or faulty ECM. • Recheck each terminal and wire harness for open circuit and poor connection. • Replace the ECM with a known good one, and inspect it again.
NO	If check result is not satisfactory, replace the IAP sensor with a new one.

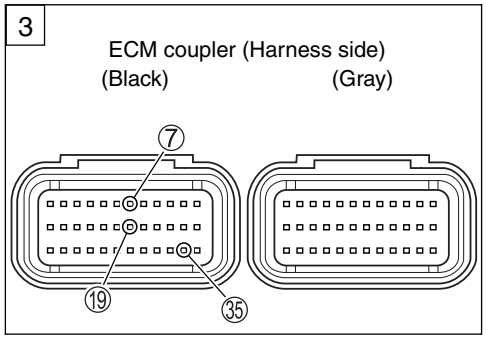

5) After repairing the trouble, clear the DTC using SDS tool. (☞4-28)

Output voltage (VCC voltage 4.5 – 5.0 V, ambient temp. 20 – 30 °C, 68 – 86 °F)

ALTITUDE (Reference)		ATMOSPHERIC PRESSURE		OUTPUT VOLTAGE
(ft)	(m)	(mmHg)	kPa	(V)
0	0	760	100	3.1 – 3.6
|	|	|	|	
2 000	610	707	94	
2 001	611	707	94	2.8 – 3.4
|	|	|	|	
5 000	1 524	634	85	
5 001	1 525	634	85	2.6 – 3.1
|	|	|	|	
8 000	2 438	567	76	
8 001	2 439	567	76	2.4 – 2.9
|	|	|	|	
10 000	3 048	526	70	

"C14" (P0120-H/L) TP SENSOR CIRCUIT MALFUNCTION

DETECTED CONDITION			POSSIBLE CAUSE
C14		Output voltage is not within the following range. Difference between actual throttle opening and opening calculated by ECM is larger than specified value. 0.2 V ≦ Sensor voltage < 4.8 V	• TP sensor maladjusted • TP sensor circuit open or short • TP sensor malfunction • ECM malfunction
P0120	H	Sensor voltage is higher than specified value.	• TP sensor circuit shorted to VCC or ground circuit open • TP sensor circuit open or shorted to ground or VCC circuit open
	L	Sensor voltage is lower than specified value.	

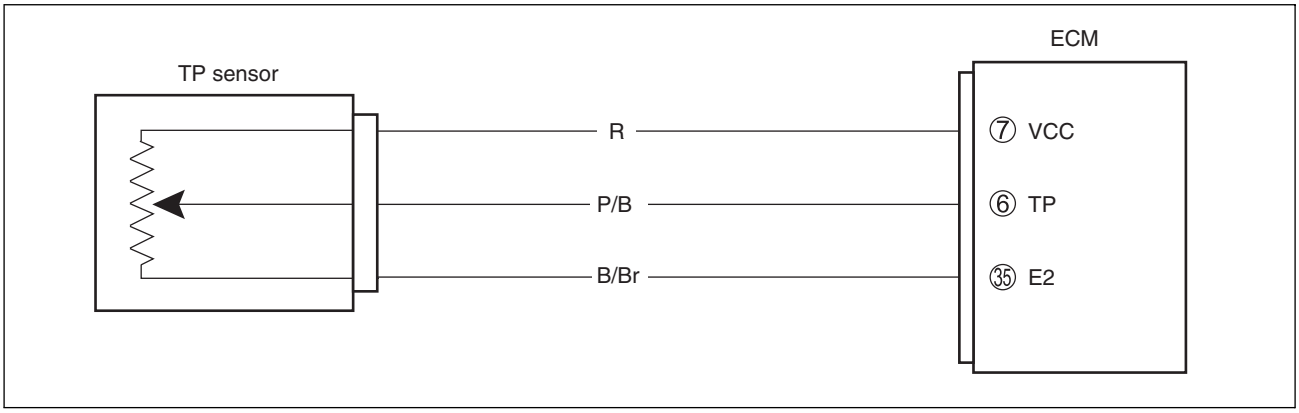

CAUTION

When using the multi-circuit tester, do not strongly touch the terminal of the ECM coupler with a needle pointed tester probe to prevent the terminal damage or terminal bend.

INSPECTION

Step 1 (When indicating C14:)

1) Turn the ignition switch OFF.
2) Lift and support the fuel tank. (☞5-3)
3) Check the TP sensor coupler ① for loose or poor contacts.
   If OK, then measure the TP sensor input voltage.
4) Disconnect the TP sensor coupler.
5) Turn the ignition switch ON.
6) Measure the voltage at the R wire Ⓑ and ground.
7) If OK, then measure the voltage at the R wire Ⓑ and B/Br wire Ⓒ.

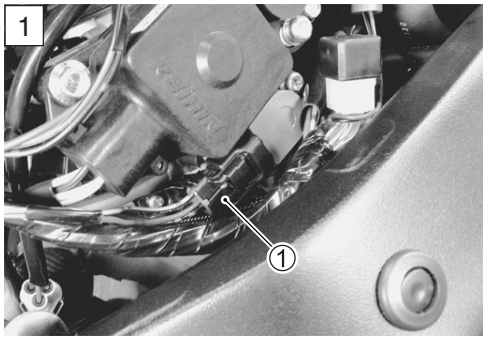

DATA TP sensor input voltage: 4.5 – 5.5 V
(⊕ R – ⊖ Ground)
(⊕ R – ⊖ B/Br)

TOOL 09900-25008: Multi-circuit tester set

Tester knob indication: Voltage (⎓)

Is the voltage OK?

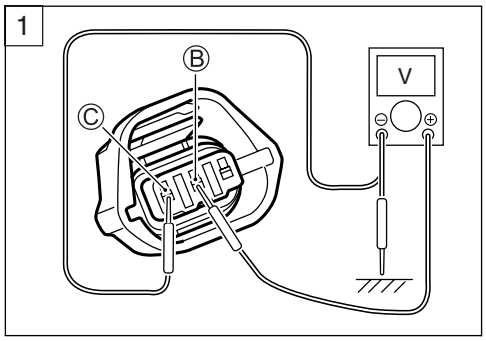

YES	Go to Step 2.
NO	• Loose or poor contacts on the ECM coupler (terminal ⑦ or ㉟). • Open or short circuit in the R wire or B/Br wire.

Step 1 (When indicating P0120-H:)

1) Turn the ignition switch OFF.
2) Lift and support the fuel tank. (☞5-3)
3) Check the TP sensor coupler ① for loose or poor contacts. If OK, then check the TP sensor lead wire continuity.

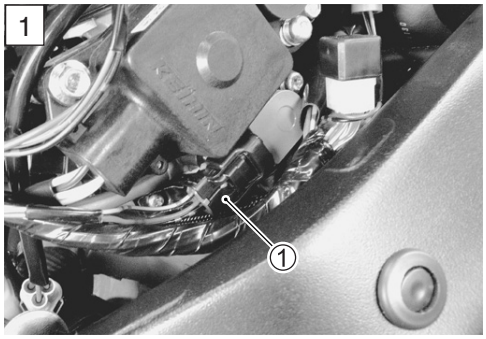

4) Disconnect the TP sensor coupler.
5) Check the continuity between P/B wire Ⓐ and R wire Ⓑ. If the sound is not heard from the tester, the circuit condition is OK.

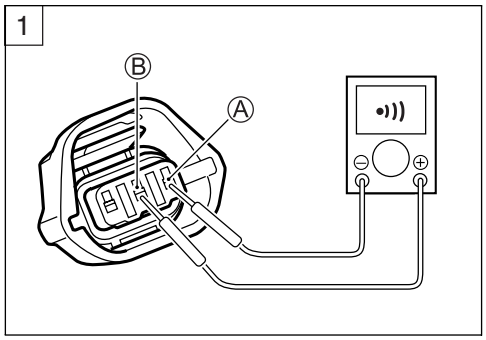

6) Disconnect the ECM coupler.
7) Check the continuity between P/B wire Ⓐ and terminal ⑥.
8) Also, check the continuity between B/Br wire Ⓒ and terminal ㉟.

DATA TPS lead wire continuity: Continuity (•)))

TOOL 09900-25008: Multi-circuit tester set
09900-25009: Needle pointed probe set

Tester knob indication: Continuity test (•)))

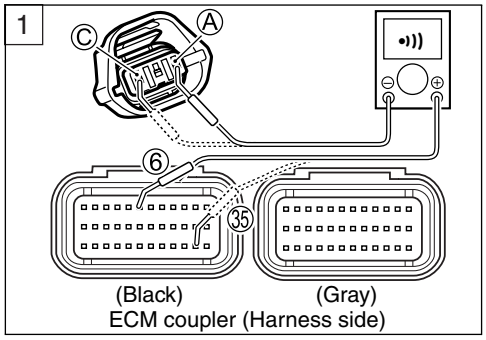

Is the continuity OK?

YES	Go to Step 2.
NO	P/B wire shorted to VCC, or B/Br wire open

9) After repairing the trouble, clear the DTC using SDS tool. (☞4-28)

Step 1 (When indicating P0120-L:)

1) Turn the ignition switch OFF.
2) Lift and support the fuel tank. (☞5-3)
3) Check the TP sensor coupler ① for loose or poor contacts.
   If OK, then check the TP sensor lead wire continuity.

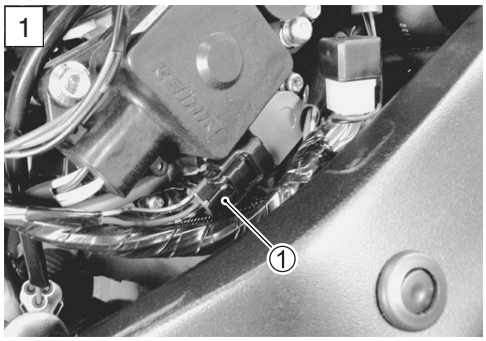

4) Disconnect the TP sensor coupler.
5) Check the continuity between P/B wire Ⓐ and ground.
6) Also, check the continuity between P/B wire Ⓐ and B/Br wire Ⓒ. If the sound is not heard from the tester, the circuit condition is OK.

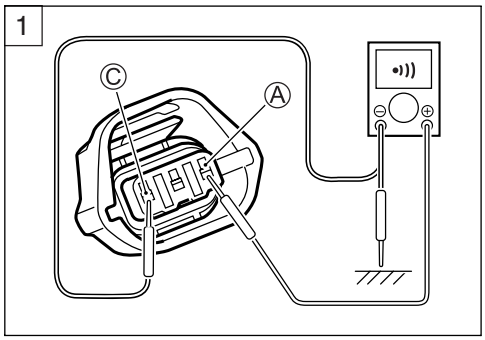

7) Disconnect the ECM coupler.
8) Check the continuity between P/B wire Ⓐ and terminal ⑥.
9) Also, check the continuity between R wire Ⓑ and terminal ⑦.

DATA TPS lead wire continuity: Continuity (•)))

TOOL 09900-25008: Multi-circuit tester set
09900-25009: Needle pointed probe set

Tester knob indication: Continuity test (•)))

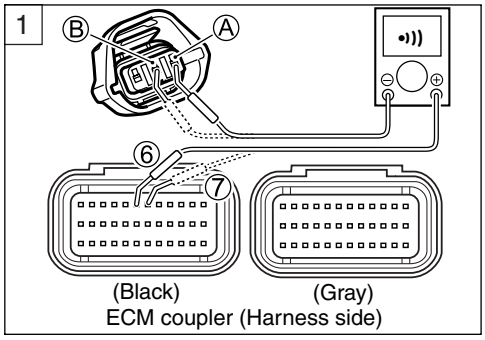

Is the continuity OK?

YES	Go to Step 1 (☞4-xx) and go to Step 2.
NO	R wire or P/B wire open, or P/B wire shorted to ground

10) After repairing the trouble, clear the DTC using SDS tool. (☞4-45)

Step 2

1) Connect the special tool between TP sensor and its coupler.
2) Turn the ignition switch ON.
3) Measure the TP sensor output voltage at the terminals (between ⊕ P/B and ⊖ B/Br) by turning the throttle grip.

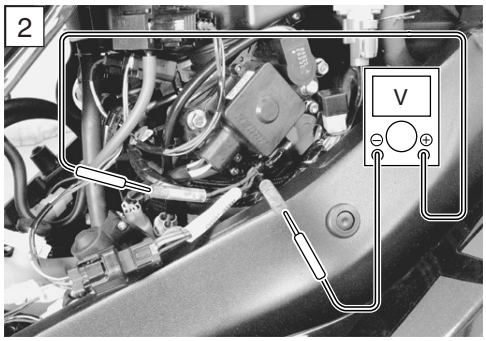

DATA TP sensor output voltage
Throttle valve is closed: Approx. 1.1 V
Throttle valve is opened: Approx. 4.3 V

TOOL 09900-25008: Multi-circuit tester set
09900-28630: TPS test wire harness

Tester knob indication: Voltage (⎓)

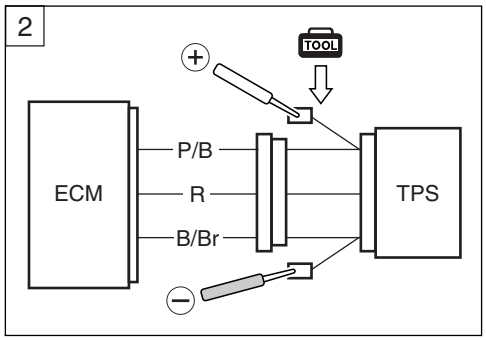

Is the voltage OK?

YES	• P/B, R or B/Br wire open or shorted to ground, or poor ⑥, ⑦ or ㉟ connection • If wire and connection are OK, intermittent trouble or faulty ECM. • Recheck each terminal and wire harness for open circuit and poor connection. • Replace the ECM with a known good one, and inspect it again.
NO	If check result is not satisfactory, replace TP sensor with a new one.

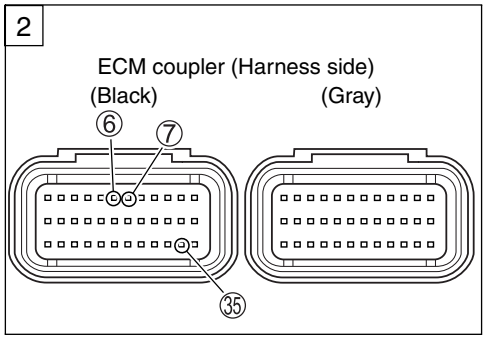

4) After repairing the trouble, clear the DTC using SDS tool. (☞4-28)

“C15” (P0115-H/L) ECT SENSOR CIRCUIT MALFUNCTION

DETECTED CONDITION			POSSIBLE CAUSE
C15		Output voltage is not within the following range. 0.15 V ≦ Sensor voltage < 4.85 V	• ECT sensor circuit open or short • ECT sensor malfunction • ECM malfunction
P0115	H	Sensor voltage is higher than specified value.	• ECT sensor circuit open or ground circuit open
	L	Sensor voltage is lower than specified value.	• ECT sensor circuit shorted to ground

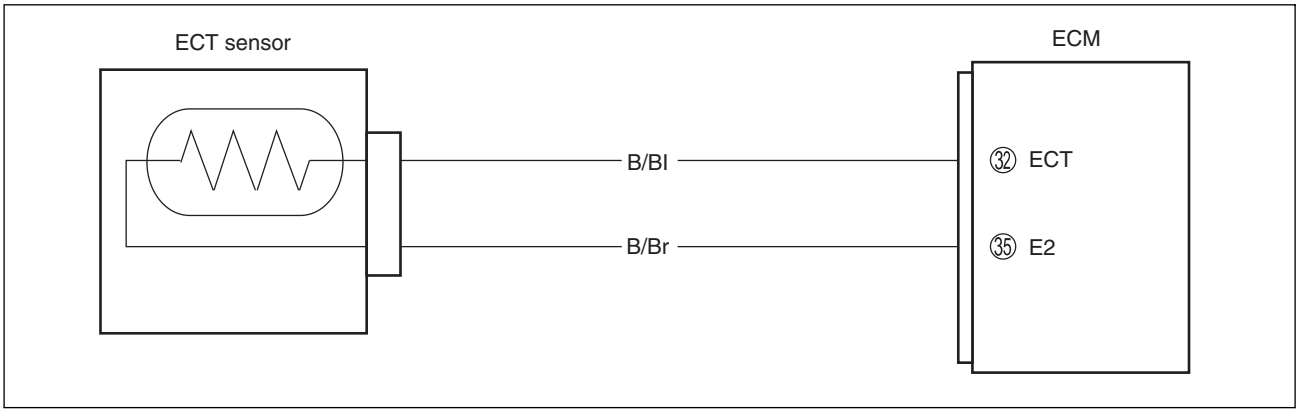

CAUTION

When using the multi-circuit tester, do not strongly touch the terminal of the ECM coupler with a needle pointed tester probe to prevent the terminal damage or terminal bend.

INSPECTION

Step 1 (When indicating C15:)

1) Turn the ignition switch OFF.
2) Lift and support the fuel tank. (☞5-3)
3) Check the ECT sensor coupler ① for loose or poor contacts. If OK, then measure the ECT sensor voltage at the wire side coupler.
4) Disconnect the coupler and turn the ignition switch ON.
5) Measure the voltage between B/Bl wire terminal Ⓐ and ground.
6) If OK, then measure the voltage between B/Bl wire terminal Ⓐ and B/Br wire terminal Ⓑ.

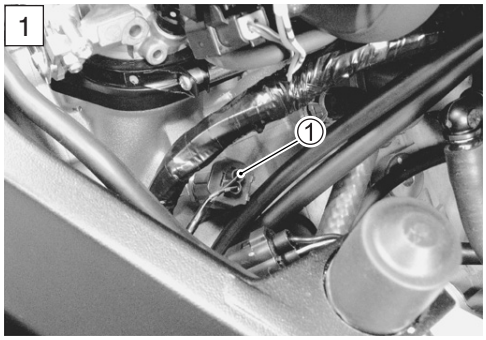

DATA ECT sensor voltage: 4.5 – 5.5 V
(⊕ B/Bl – ⊖ Ground)
(⊕ B/Bl – ⊖ B/Br)

TOOL 09900-25008: Multi-circuit tester set

Tester knob indication: Voltage (⎓)

Is the voltage OK?

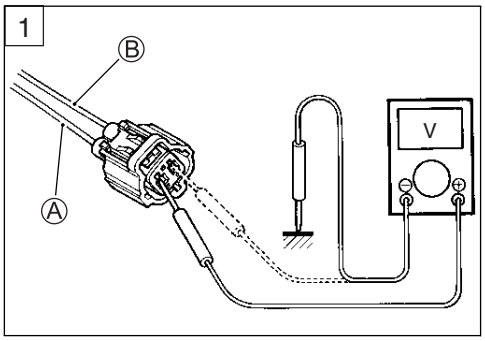

YES	Go to Step 2.
NO	• Loose or poor contacts on the ECM coupler (terminal ㉜ or ㉟). • Open or short circuit in the B/Bl wire or B/Br wire

Step 1 (When indicating P0115-H:)

1) Turn the ignition switch OFF.
2) Lift and support the fuel tank. (☞5-3)
3) Check the ECT sensor coupler ① for loose or poor contacts. If OK, then check the ECT sensor lead wire continuity.

4) Disconnect the ECT sensor coupler and ECM coupler.
5) Check the continuity between B/Bl wire Ⓐ and terminal ㉜.
6) Also, check the continuity between B/Br wire Ⓑ and terminal ㉟.

DATA ECTS lead wire continuity: Continuity (•)))

TOOL 09900-25008: Multi-circuit tester set
09900-25009: Needle pointed probe set

Tester knob indication: Continuity test (•)))

Is the continuity OK?

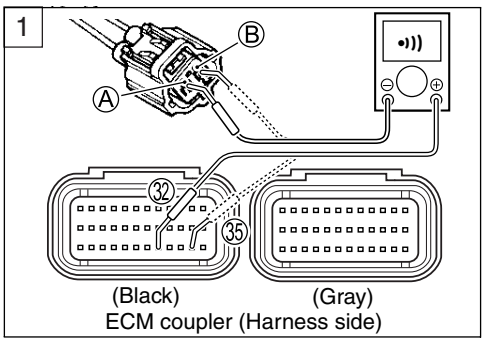

YES	Go to Step 2.
NO	B/Bl or B/Br wire open

7) After repairing the trouble, clear the DTC using SDS tool. (☞4-28)

Step 1 (When indicating P0115-L:)

1) Turn the ignition switch OFF.
2) Lift and support the fuel tank. (☞5-3)
3) Check the ECT sensor coupler ① for loose or poor contacts. If OK, then measure the output voltage.

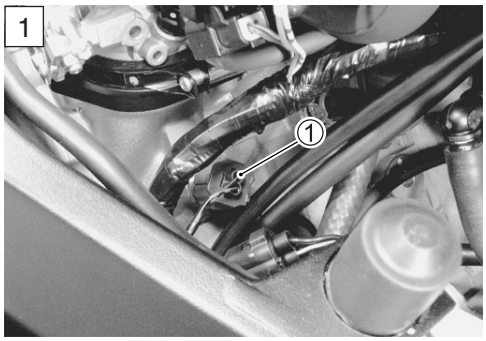

4) Disconnect the ECT sensor coupler.
5) Check the continuity between B/Bl wire Ⓐ and ground. If the sound is not heard from the tester, the circuit condition is OK.

Tester knob indication: Continuity test (•)))

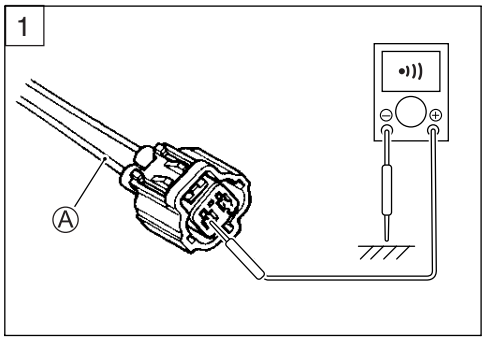

6) Connect the ECT sensor coupler and turn the ignition switch ON.
7) Measure the voltage between B/Bl wire Ⓐ and ground.

DATA ECT sensor output voltage: 0.15 – 4.85 V (⊕ B/Bl – ⊖ Ground)

TOOL 09900-25008: Multi-circuit tester set
09900-25009: Needle pointed probe set

Tester knob indication: Voltage (⎓)

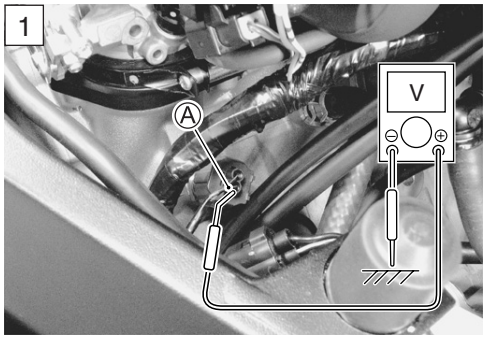

Are the continuity and voltage OK?

YES	Go to Step 2.
NO	• B/Bl wire shorted to ground • If wire is OK, go to Step 2.

8) After repairing the trouble, clear the DTC using SDS tool. (☞4-28)

Step 2

1) Turn the ignition switch OFF.
2) Disconnect the ECT sensor coupler.
3) Measure the ECT sensor resistance.

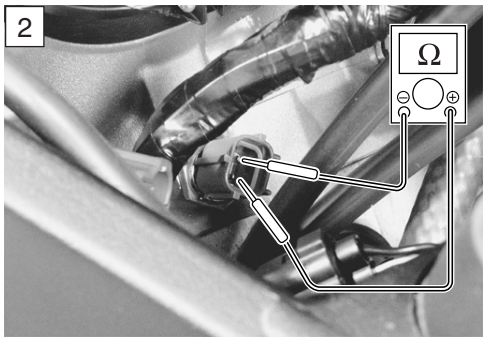

DATA ECT sensor resistance:

Approx. 2.45 kΩ at 20 °C (68 °F)
(Terminal – Terminal)

TOOL 09900-25008: Multi-circuit tester set

Tester knob indication: Resistance (Ω)

Refer to page 7-7 for details.

Is the resistance OK?

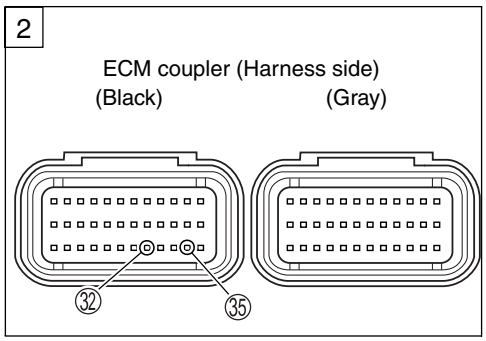

YES	• B/Bl or B/Br wire open or shorted to ground, or poor 32 or 35 connection. • If wire and connection are OK, intermittent trouble or faulty ECM. • Recheck each terminal and wire harness for open circuit and poor connection. • Replace the ECM with a known good one, and inspect it again.
NO	Replace the ECT sensor with a new one.

4) After repairing the trouble, clear the DTC using SDS tool. (☞4-28)

DATA ECT sensor specification

Engine Coolant Temp	Resistance
20 °C (68 °F)	Approx. 2.45 kΩ
50 °C (122 °F)	Approx. 0.811 kΩ
80 °C (176 °F)	Approx. 0.318 kΩ
110 °C (230 °F)	Approx. 0.142 kΩ

“C21” (P0110-H/L) IAT SENSOR CIRCUIT MALFUNCTION

DETECTED CONDITION			POSSIBLE CAUSE
C21		Output voltage is not within the following range. 0.15 V ≦ Sensor voltage < 4.85 V	• IAT sensor circuit open or short • IAT sensor malfunction • ECM malfunction
P0110	H	Sensor voltage is higher than specified value.	• IAT sensor circuit open or ground circuit open
	L	Sensor voltage is lower than specified value.	• IAT sensor circuit shorted to ground

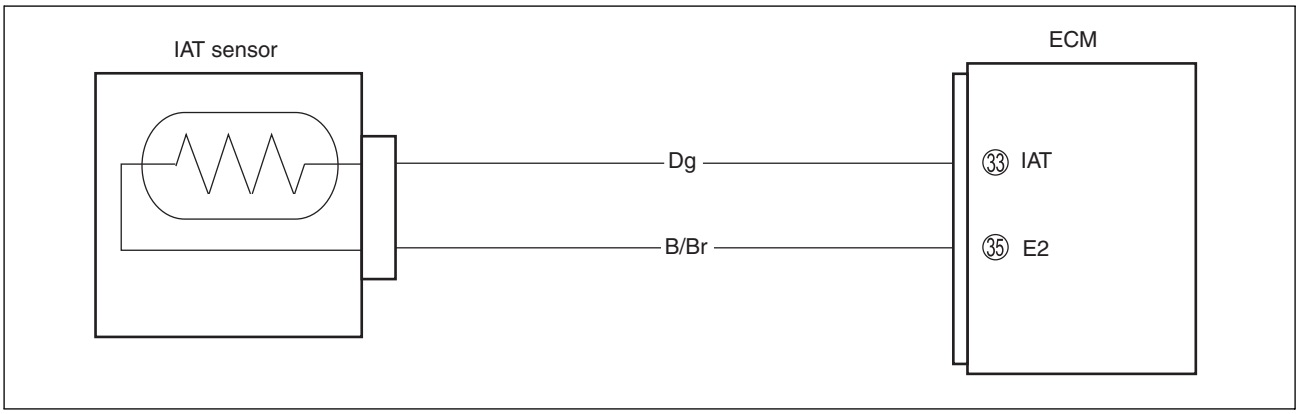

CAUTION

When using the multi-circuit tester, do not strongly touch the terminal of the ECM coupler with a needle pointed tester probe to prevent the terminal damage or terminal bend.

INSPECTION

Step 1 (When indicating C21:)

1) Turn the ignition switch OFF.
2) Lift and support the fuel tank. (☞5-3)
3) Check the IAT sensor coupler ① for loose or poor contacts.
   If OK, then measure the IAT sensor voltage at the wire side coupler.
4) Disconnect the coupler and turn the ignition switch ON.

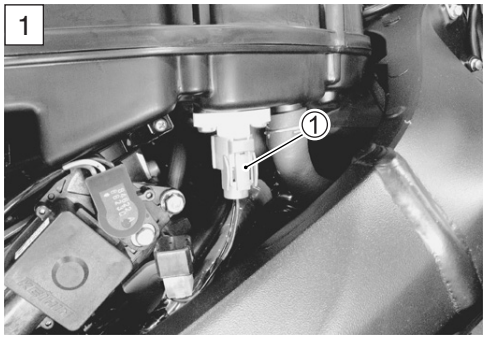

5) Measure the voltage between Dg wire terminal Ⓐ and ground.
6) If OK, then measure the voltage between Dg wire terminal Ⓐ and B/Br wire terminal Ⓑ.

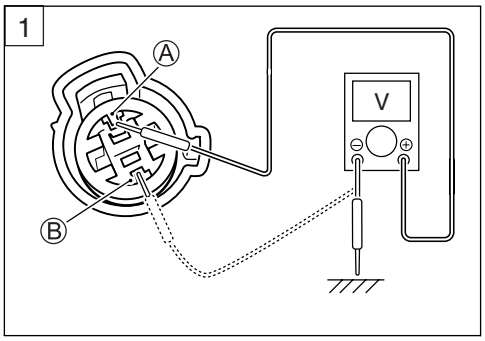

DATA IAT sensor input voltage: 4.5 – 5.5 V
(⊕ Dg – ⊖ Ground)
(⊕ Dg – ⊖ B/Br)

TOOL 09900-25008: Multi-circuit tester set

Tester knob indication: Voltage (⎓)

Is the voltage OK?

YES	Go to Step 2.
NO	• Loose or poor contacts on the ECM coupler (terminal ㉝ or ㉟) • Open or short circuit in the Dg wire or B/Br wire

Step 1 (When indicating P0110-H:)
1) Turn the ignition switch OFF.
2) Lift and support the fuel tank. (☞5-3)
3) Check the IAT sensor coupler ① for loose or poor contacts. If OK, then check the IAT sensor lead wire continuity.

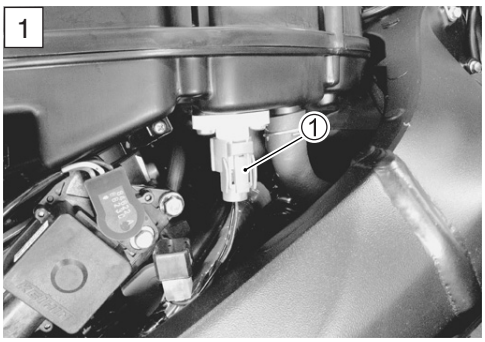

4) Disconnect the IAT sensor coupler and ECM coupler.
5) Check the continuity between Dg wire Ⓐ and terminal ㉝.
6) Also, check the continuity between B/Br wire Ⓑ and terminal ㉟.

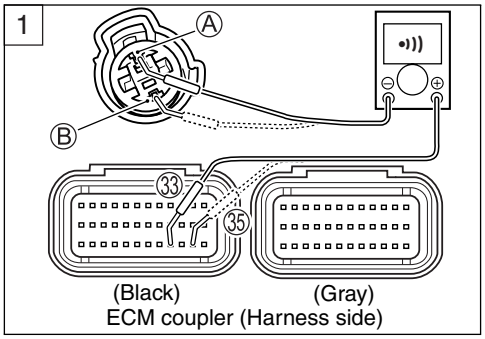

DATA IATS lead wire continuity: Continuity (•)))

TOOL 09900-25008: Multi-circuit tester set
09900-25009: Needle pointed probe set

Tester knob indication: Continuity test (•)))

Is the continuity OK?

YES	Go to Step 2.
NO	Dg wire or B/Br wire open

7) After repairing the trouble, clear the DTC using SDS tool. (☞4-28)

Step 1 (When indicating P0110-L:)

1) Turn the ignition switch OFF.
2) Lift and support the fuel tank. (☞5-3)
3) Check the IAT sensor coupler ① for loose or poor contacts. If OK, then check the IAT sensor lead wire continuity.

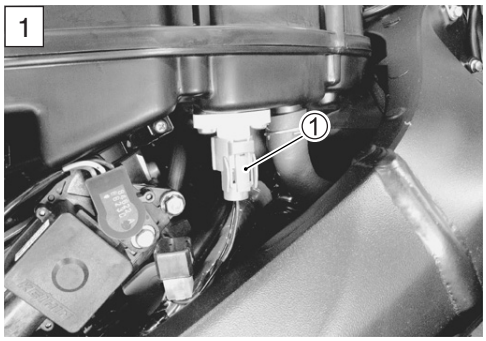

4) Disconnect the IAT sensor coupler.
5) Check the continuity between Dg wire Ⓐ and ground. If the sound is not heard from the tester, the circuit condition is OK.

Tester knob indication: Continuity test (•)))

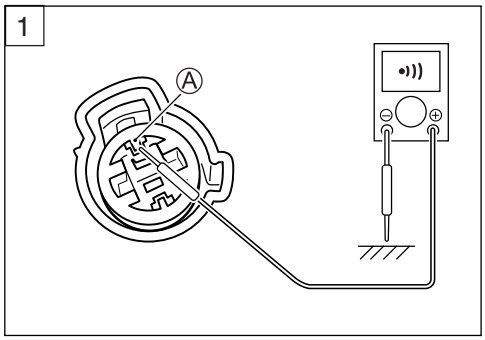

6) Connect the IAT sensor coupler and turn the ignition switch ON.
7) Measure the voltage between Dg wire Ⓐ and ground.

DATA IAT sensor output voltage: 0.15 – 4.85 V
(⊕ Dg – ⊖ Ground)

TOOL 09900-25008: Multi-circuit tester set
09900-25009: Needle pointed probe set

Tester knob indication: Voltage (⎓)

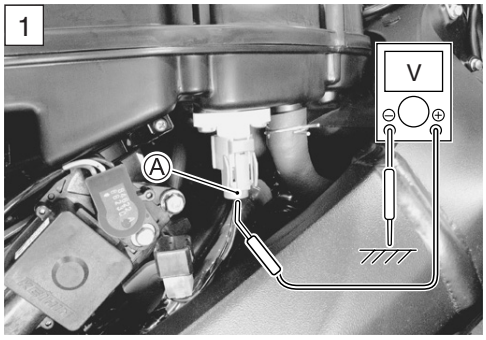

Are the continuity and voltage OK?

YES	Go to Step 2.
NO	• Dg wire shorted to ground • If wire is OK, go to Step 2.

8) After repairing the trouble, clear the DTC using SDS tool. (☞4-28)

Step 2

1) Turn the ignition switch OFF.
2) Measure the IAT sensor resistance.

DATA IAT sensor resistance: Approx. 2.58 kΩ at 20 °C (68 °F) (Terminal – Terminal)

TOOL 09900-25008: Multi-circuit tester set

Tester knob indication: Resistance (Ω)

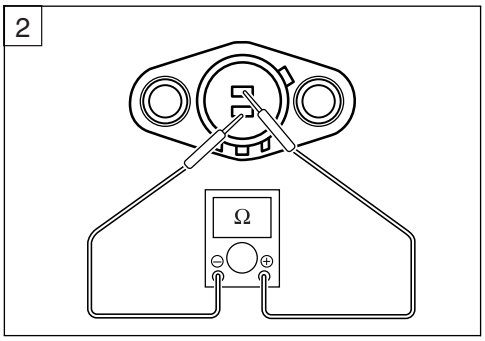

Is the resistance OK?

YES	• Dg or B/Br wire open or shorted to ground, or poor ㉝ or ㉟ connection • If wire and connection are OK, intermittent trouble or faulty ECM. • Recheck each terminal and wire harness for open circuit and poor connection. • Replace the ECM with a known good one, and inspect it again.
NO	Replace the IAT sensor with a new one.

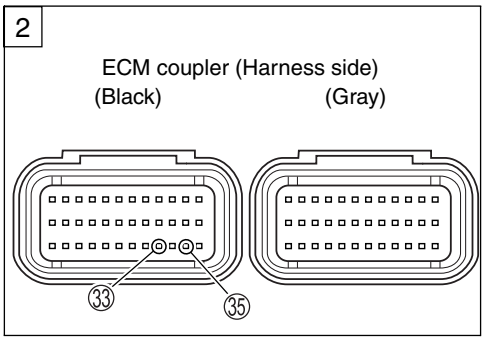

DATA IAT sensor specification

Intake Air Temp	Resistance
0 °C (32 °F)	Approx. 6.54 kΩ
20 °C (68 °F)	Approx. 2.58 kΩ
40 °C (104 °F)	Approx. 1.14 kΩ
80 °C (140 °F)	Approx. 0.28 kΩ

NOTE:
IAT sensor resistance measurement method is the same way as that of the ECT sensor. Refer to page 7-7 for details.

“C22” (P1450-H/L) AP SENSOR CIRCUIT MALFUNCTION

		DETECTED CONDITION	POSSIBLE CAUSE
C22		AP sensor voltage is not within the following range. 0.5 V ≦ Sensor voltage < 4.85 V *NOTE:* *Note that atmospheric pressure varies depending on weather conditions as well as altitude.* *Take that into consideration when inspecting voltage.*	• Clogged air passage with dust • AP sensor circuit open or shorted to ground • AP sensor malfunction • ECM malfunction
P1450	H	Sensor voltage is higher than specified value.	• AP sensor circuit shorted to VCC or ground circuit open
	L	Sensor voltage is lower than specified value.	• AP sensor circuit open or shorted to ground or VCC circuit open

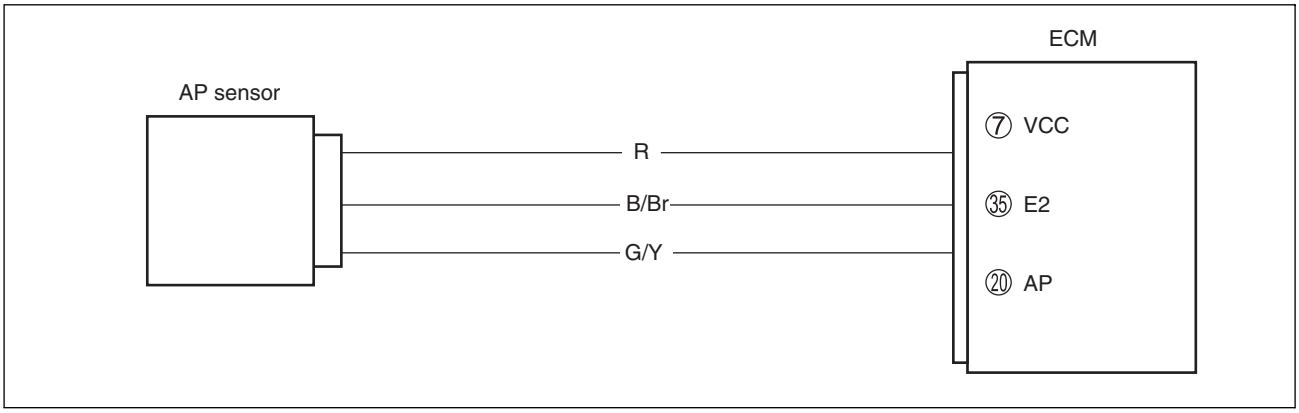

CAUTION

When using the multi-circuit tester, do not strongly touch the terminal of the ECM coupler with a needle pointed tester probe to prevent the terminal damage or terminal bend.

INSPECTION

Step 1 (When indicating C22:)

1) Turn the ignition switch OFF.
2) Remove the front seat. (☞8-8)
3) Check the AP sensor coupler ① for loose or poor contacts.
   If OK, then measure the AP sensor input voltage.

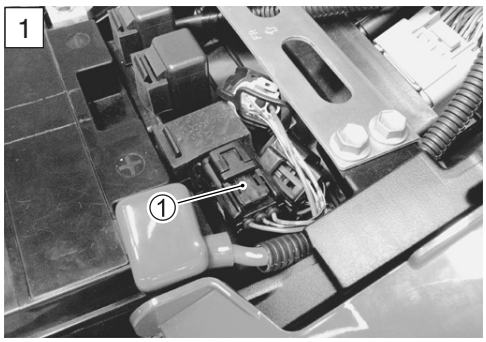

4) Disconnect the AP sensor coupler.
5) Turn the ignition switch ON.
6) Measure the voltage at the R wire and ground.
7) If OK, then measure the voltage at the R wire Ⓐ and B/Br wire Ⓑ.

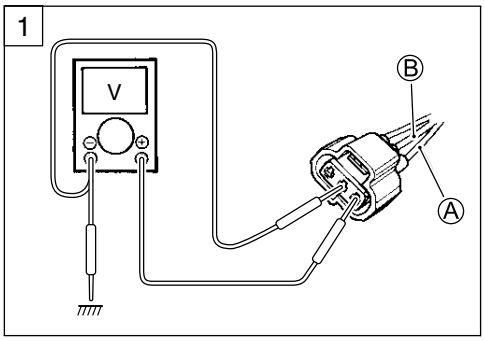

DATA AP sensor input voltage: 4.5 – 5.5 V
(⊕ R – ⊖ Ground)
(⊕ R – ⊖ B/Br)

TOOL 09900-25008: Multi-circuit tester set

Tester knob indication: Voltage (⎓)

Is the voltage OK?

YES	Go to Step 2.
NO	• Loose or poor contacts on the ECM coupler (terminal ⑦ or ㉟) • Open or short circuit in the R wire or B/Br wire

Step 1 (When indicating P1450-H:)
1) Turn the ignition switch OFF.
2) Remove the front seat. (☞8-8)
3) Check the AP sensor coupler ① for loose or poor contacts. If OK, then check the AP sensor lead wire continuity.

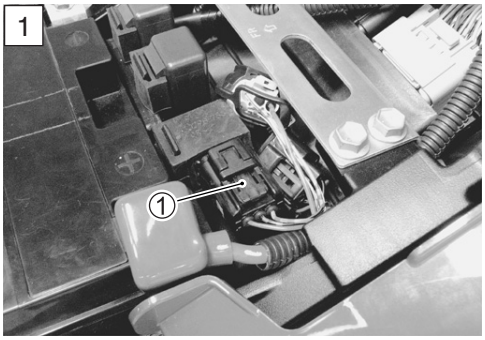

4) Disconnect the AP sensor coupler.
5) Check the continuity between R wire Ⓐ and G/Y wire Ⓒ. If the sound is not heard from the tester, the circuit condition is OK.

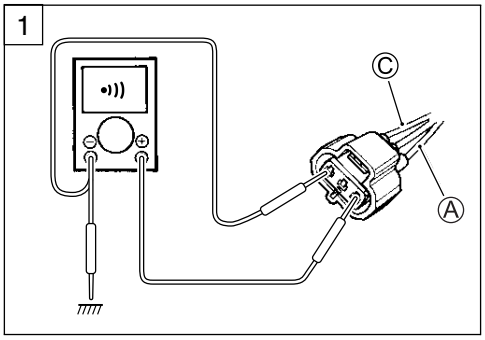

6) Disconnect the ECM coupler.
7) Check the continuity between G/Y wire Ⓒ and terminal ⑳.
8) If OK, then check the continuity between B/Br wire Ⓑ and terminal ㉟.

DATA APS lead wire continuity: Continuity (•)))

TOOL 09900-25008: Multi-circuit tester set
09900-25009: Needle pointed probe set

Tester knob indication: Continuity test (•)))

Is the continuity OK?

YES	Go to Step 2.
NO	G/Y wire shorted to VCC, or B/Br wire open

9) After repairing the trouble, clear the DTC using SDS tool. (☞4-28)

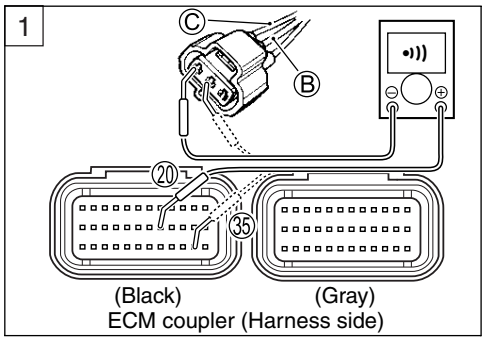

Step 1 (When indicating P1450-L:)
1) Turn the ignition switch OFF.
2) Remove the front seat. (☞8-8)
3) Check the AP sensor coupler ① for loose or poor contacts. If OK, then check the AP sensor lead wire continuity.

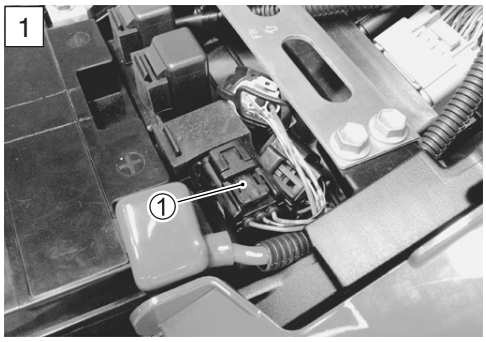

4) Disconnect the AP sensor coupler.
5) Check the continuity between G/Y wire Ⓒ and ground.
6) Also, check the continuity between G/Y wire Ⓒ and B/Br wire Ⓑ. If the sound is not heard from the tester, the circuit condition is OK.

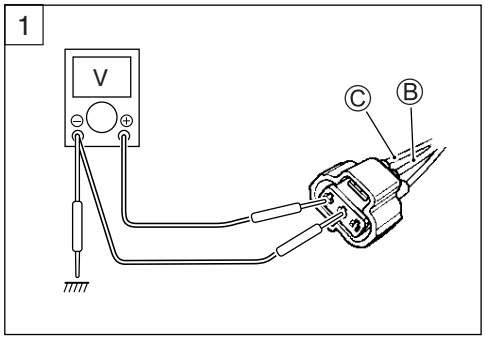

7) Disconnect the ECM coupler.
8) Check the continuity between R wire Ⓐ and terminal ⑦.
9) If OK, then check the continuity between G/Y wire Ⓒ and terminal ⑳.

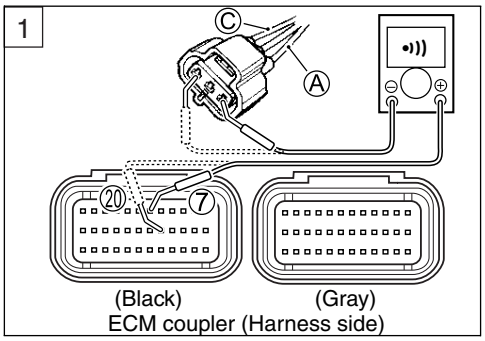

DATA APS lead wire continuity: Continuity (•)))

TOOL 09900-25008: Multi-circuit tester set
09900-25009: Needle pointed probe set

Tester knob indication: Continuity test (•)))

Is the continuity OK?

YES	Go to Step 1 (☞4-57) and go to Step 2.
NO	R or G/Y wire open, or G/Y wire shorted to ground

10) After repairing the trouble, clear the DTC using SDS tool. (☞4-28)

Step 2

1) Connect the AP sensor coupler and ECM coupler.
2) Insert the needle pointed probes to the lead wire coupler. Turn the ignition switch ON.
3) Measure the AP sensor output voltage at the wire side coupler (between G/Y and B/Br wires).

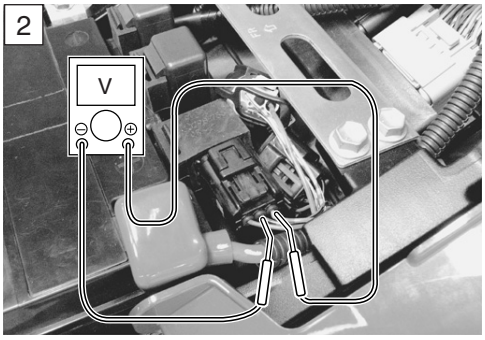

DATA AP sensor output voltage: Approx. 2.6 V at 100 kPa (760 mmHg) (⊕ G/Y – ⊖ B/Br)

TOOL 09900-25008: Multi-circuit tester set
09900-25009: Needle pointed probe set

Tester knob indication: Voltage (⎓)

YES	Go to Step 3.
NO	• Check the air passage for clogging. • Open or short circuit in the G/Y wire • Replace the AP sensor with a new one.

4) After repairing the trouble, clear the DTC using SDS tool. (☞4-28)

Step 3

1) Remove the AP sensor.
2) Connect the vacuum pump gauge to the vacuum port of the AP sensor.
   Arrange 3 new 1.5 V batteries in series ① (check that total voltage is 4.5 – 5.0 V) and connect ⊖ terminal to the ground terminal ② and ⊕ terminal to the VCC terminal ③.
3) Check the voltage between Vout ④ and ground. Also, check if voltage reduces when vacuum is applied up to 53 kPa (400 mmHg) by using vacuum pump gauge. (☞Below)

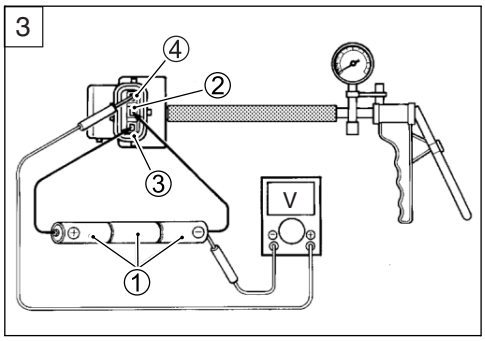

TOOL 09917-47011: Vacuum pump gauge
09900-25008: Multi-circuit tester set

Tester knob indication: Voltage (⎓)

Is the voltage OK?

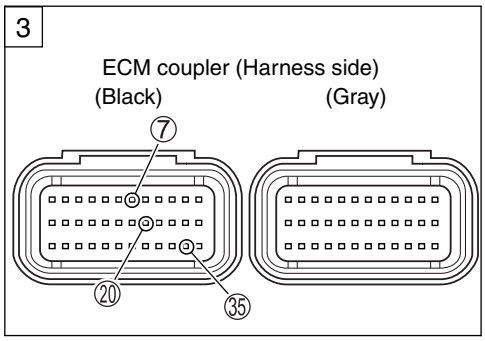

YES	• R, G/Y or B/Br wire open or shorted to ground, or poor ⑦, ⑳ or ㉟ connection. • If wire and connection are OK, intermittent trouble or faulty ECM. • Recheck each terminal and wire harness for open circuit and poor connection. • Replace the ECM with a known good one, and inspect it again.
NO	If check result is not satisfactory, replace AP sensor with a new one.

4) After repairing the trouble, clear the DTC using SDS tool. (☞4-28)

Output voltage (VCC voltage 4.5 – 5.0 V, ambient temp. 20 – 30 °C, 68 – 86 °F)

ALTITUDE (Reference)		ATMOSPHERIC PRESSURE		OUTPUT VOLTAGE
(ft)	(m)	(mmHg)	kPa	(V)
0	0	760	100	3.1 – 3.6
|	|	|	|	
2 000	610	707	94	
2 001	611	707	94	2.8 – 3.4
|	|	|	|	
5 000	1 524	634	85	
5 001	1 524	634	85	2.6 – 3.1
|	|	|	|	
8 000	2 438	567	76	
8 001	2 439	567	76	2.4 – 2.9
|	|	|	|	
10 000	3 048	526	70	

“C23” (P1651-H/L) TO SENSOR CIRCUIT MALFUNCTION

DETECTED CONDITION			POSSIBLE CAUSE
C23		The sensor voltage should be the following for 2 sec. and more, after ignition switch is turned ON. 0.2 V ≦ Sensor voltage < 4.8 V	• TO sensor circuit open or short • TO sensor malfunction • ECM malfunction
P1651	H	Sensor voltage is higher than specified value.	• TO sensor circuit shorted to VCC or ground circuit open • TO sensor circuit open or shorted to ground or VCC circuit open
	L	Sensor voltage is lower than specified value.	

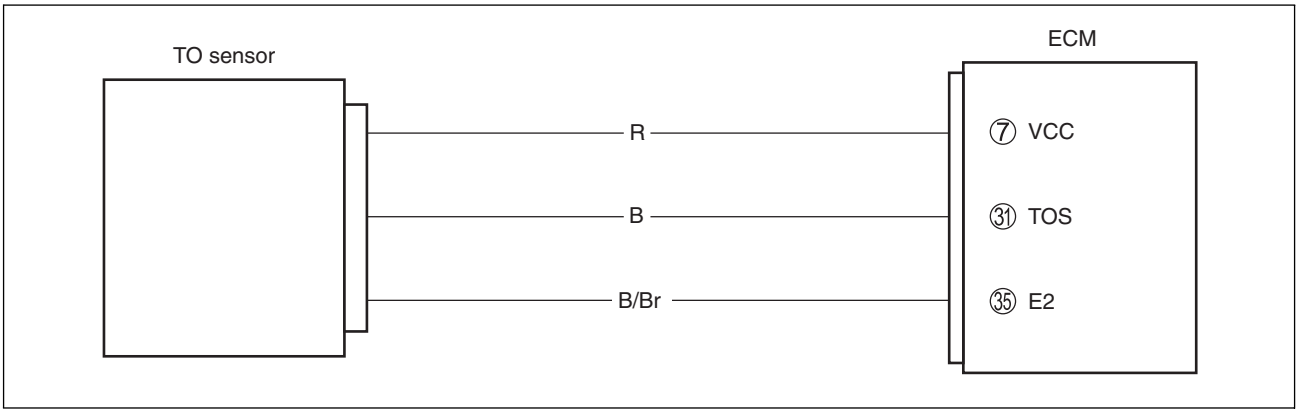

CAUTION

When using the multi-circuit tester, do not strongly touch the terminal of the ECM coupler with a needle pointed tester probe to prevent the terminal damage or terminal bend.

INSPECTION

Step 1 (When indicating C23:)

1) Turn the ignition switch OFF.
2) Lift and support the fuel tank. (☞5-3)
3) Check the TO sensor coupler ① for loose or poor contacts.
   If OK, then measure the TO sensor resistance.
4) Disconnect the TO sensor coupler.

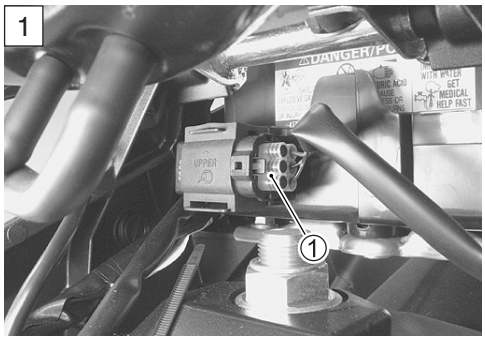

5) Measure the resistance between terminal Ⓐ and terminal Ⓒ.

DATA TO sensor resistance: 16.5 – 22.3 kΩ
(Terminal Ⓐ – Terminal Ⓒ)

TOOL 09900-25008: Multi-circuit tester set

Tester knob indication: Resistance (Ω)

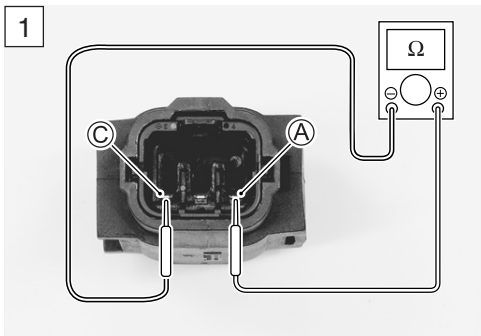

Is the resistance OK?

YES	Go to Step 2.
NO	Replace the TO sensor with a new one.

Step 1 (When indicating P1651-H:)

1) Turn the ignition switch OFF.
2) Lift and support the fuel tank. (☞5-3)
3) Check the TO sensor coupler ① for loose or poor contacts.
   If OK, then check the TO sensor lead wire continuity.

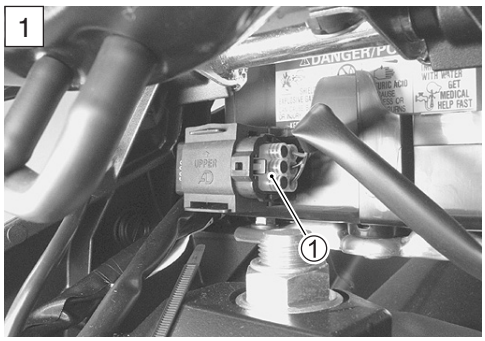

4) Disconnect the TO sensor coupler.
5) Check the continuity between R wire Ⓐ and B wire Ⓑ.
   If the sound is not heard from the tester, the circuit condition is OK.

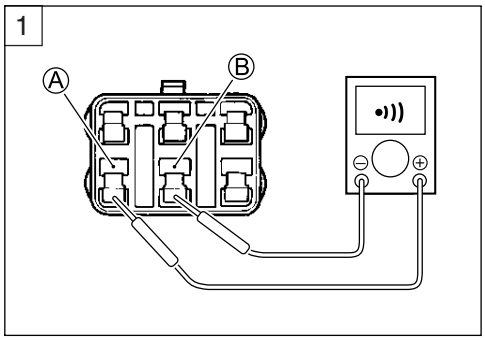

6) Disconnect the ECM coupler.
7) Check the continuity between B wire Ⓑ and terminal ㉛.
8) Also, check the continuity between B/Br wire Ⓒ and terminal ㉟.

DATA TOS lead wire continuity: Continuity (•)))

TOOL 09900-25008: Multi-circuit tester set
09900-25009: Needle pointed probe set

Tester knob indication: Continuity test (•)))

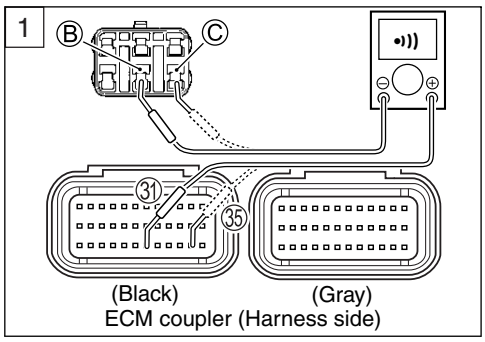

Is the continuity OK?

YES	Go to Step 2.
NO	B wire shorted to VCC, or B/Br wire open.

9) After repairing the trouble, clear the DTC using SDS tool. (☞4-28)

Step 1 (When indicating P1651-L:)

1) Turn the ignition switch OFF.
2) Lift and support the fuel tank. (☞5-3)
3) Check the TO sensor coupler ① for loose or poor contacts. If OK, then check the TO sensor lead wire continuity.

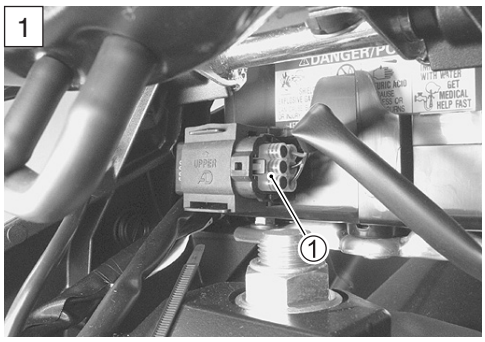

4) Disconnect the TO sensor coupler.
5) Check the continuity between B wire Ⓑ and ground.
6) Also, check the continuity between B wire Ⓑ and B/Br wire Ⓒ. If the sound is not heard from the tester, the circuit condition is OK.

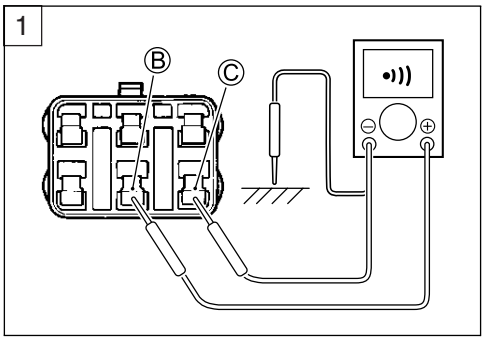

7) Disconnect the ECM coupler.
8) Check the continuity between R wire Ⓐ and terminal ⑦.
9) Also, then check the continuity between B wire Ⓑ and terminal ㉛.

DATA TOS lead wire continuity: Continuity (•)))

TOOL 09900-25008: Multi-circuit tester set
09900-25009: Needle pointed probe set

Tester knob indication: Continuity test (•)))

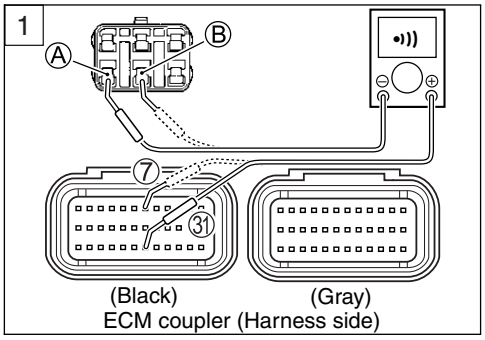

Is the continuity OK?

YES	Go to Step 2.
NO	R or B wire open, or B wire shorted to ground.

10) After repairing the trouble, clear the DTC using SDS tool. (☞4-28)

Step 2

1) Connect the TO sensor coupler and ECM coupler.
2) Insert the needle pointed probes to the lead wire coupler.
3) Turn the ignition switch ON.
4) Measure the voltage at the wire side coupler between B and B/Br wires.

DATA TO sensor voltage (Normal): 0.4 – 1.4 V
(⊕ B – ⊖ B/Br)

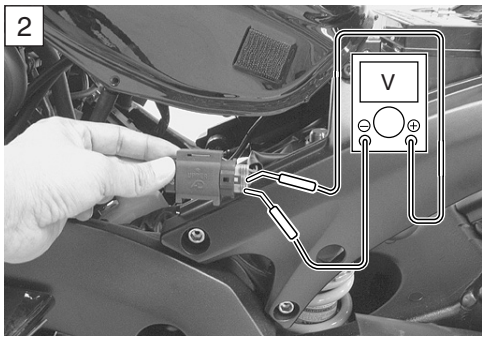

Also, measure the voltage when leaning the motorcycle.

5) Dismount the TO sensor from its bracket and measure the voltage when it is leaned 65° and more, left and right, from the horizontal level.

DATA TO sensor voltage (Leaning): 3.7 – 4.4 V
(⊕ B – ⊖ B/Br)

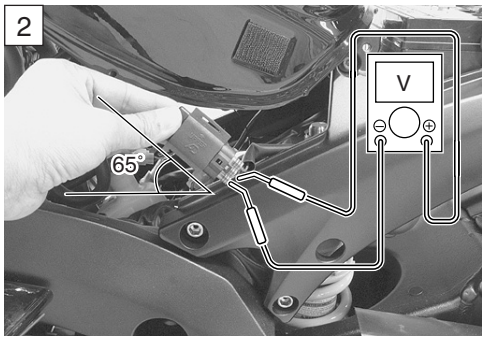

TOOL 09900-25008: Multi-circuit tester set
09900-25009: Needle pointed probe set

Tester knob indication: Voltage (⎓)

Is the voltage OK?

YES	• R, B or B/Br wire open or shorted to ground, or poor ⑦, ㉛ or ㉟ connection • If wire and connection are OK, intermittent trouble or faulty ECM. • Recheck each terminal and wire harness for open circuit and poor connection. • Replace the ECM with a known good one, and inspect it again.
NO	• Loose or poor contacts on the ECM coupler • Open or short circuit • Replace the TO sensor with a new one.

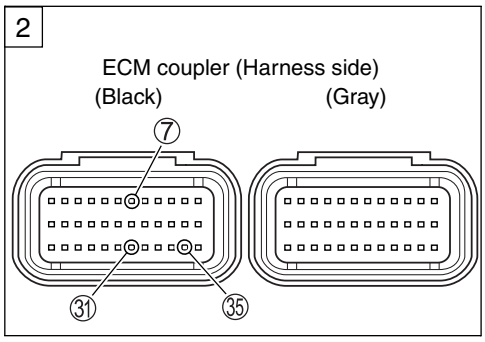

6) After repairing the trouble, clear the DTC using SDS tool. (☞4-28)

"C24" (P0351), "C25" (P0352), "C26" (P0353) or "C27" (P0354) IGNITION SYSTEM MALFUNCTION

*** Refer to the IGNITION SYSTEM for details. (☞9-20)**

"C28" (P1655) STV ACTUATOR CIRCUIT MALFUNCTION

DETECTED CONDITION	POSSIBLE CAUSE
The operation voltage does not reach the STVA. ECM does not receive communication signal from the STVA.	• STVA malfunction • STVA circuit open or short • STVA motor malfunction

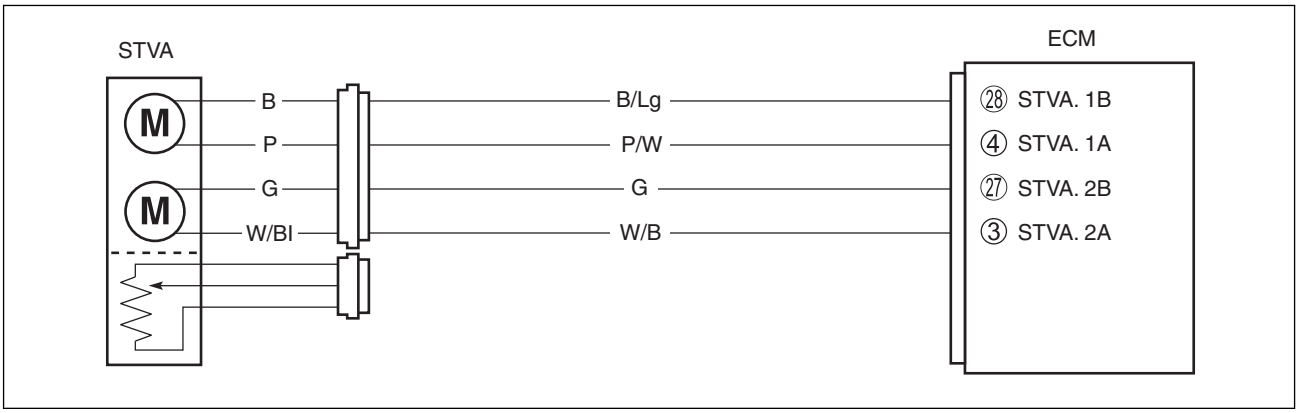

CAUTION

When using the multi-circuit tester, do not strongly touch the terminal of the ECM coupler with a needle pointed tester probe to prevent the terminal damage or terminal bend.

INSPECTION

Step 1

1) Lift and support the fuel tank. (☞5-3)
2) Remove the air cleaner cover. (☞2-4)
3) Check the STVA lead wire coupler ① for loose or poor contacts.

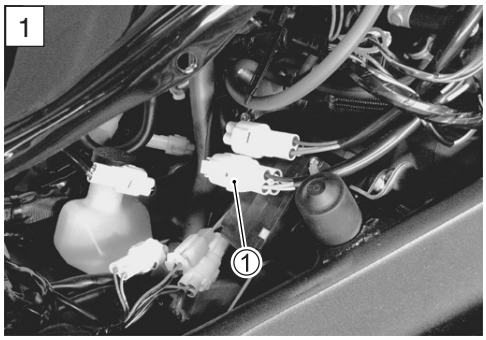

4) Turn the ignition switch ON to check the STV operation. (STV operating order: Open → Close)

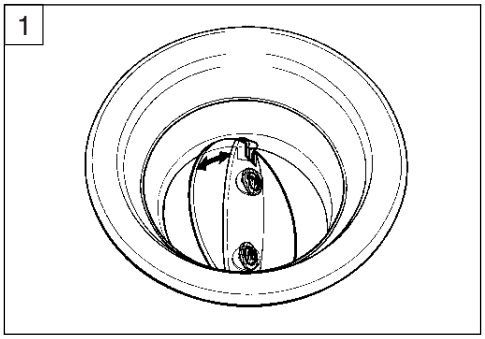

Is the operating OK?

YES	Go to Step 2.
NO	• Loose or poor contacts on the STVA coupler • Open or short circuit in the B/Lg, P/W, W/B or G wires • If wire and connection are OK, go to Step 2.

5) After repairing the trouble, clear the DTC using SDS tool. (☞4-28)

Step 2

1) Turn the ignition switch OFF.
2) Disconnect the STVA lead wire coupler.
3) Check the continuity between each terminal and ground.

DATA STVA continuity: ∞ Ω (Infinity)
(Terminal – Ground)

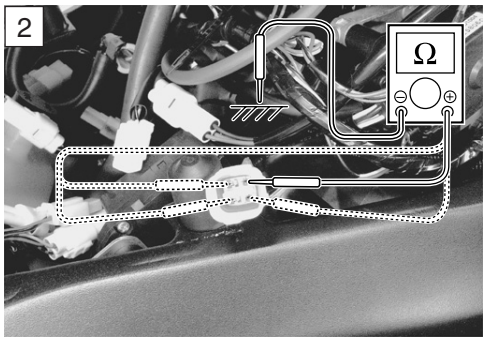

4) If OK, then measure the STVA resistance (between B wire Ⓐ and P wire Ⓑ) and (between G wire Ⓒ and W/Bl wire Ⓓ).

DATA STVA resistance: Approx. 6.5 Ω
(B Ⓐ – P Ⓑ)
(G Ⓒ – W/Bl Ⓓ)

TOOL 09900-25008: Multi-circuit tester set

Tester knob indication: Resistance (Ω)

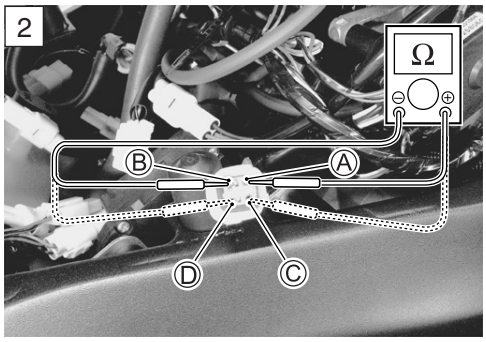

Is the resistance OK?

YES	• W/B, P/W, G and B/Lg wire open or shorted to ground, or poor ③, ④, ㉗ and ㉘ connection • If wire and connection are OK, intermittent trouble or faulty ECM. • Recheck each terminal and wire harness for open circuit and poor connection. • Replace the ECM with a known good one, and inspect it again.
NO	• Loose or poor contacts on the ECM coupler. • Replace the STVA with a new one.

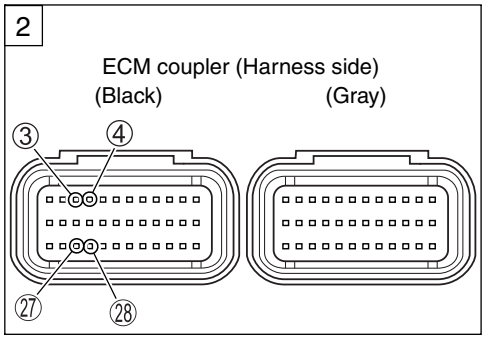

5) After repairing the trouble, clear the DTC using SDS tool. (☞4-28)

ACTIVE CONTROL INSPECTION

1) Set up the SDS tool. (Refer to the SDS operation manual for further details.)
2) Turn the ignition switch ON.
3) Click “Secondary throttle operating control” ①.

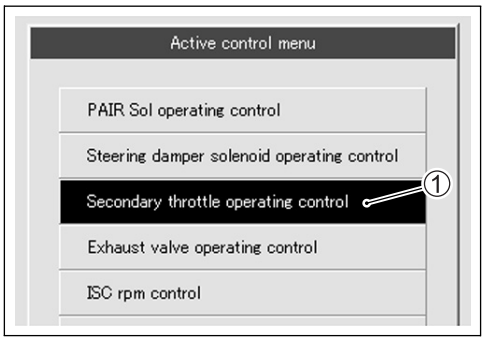

4) Click each button ②.
   At this time, if an operation sound is heard from the STVA, the function is normal.

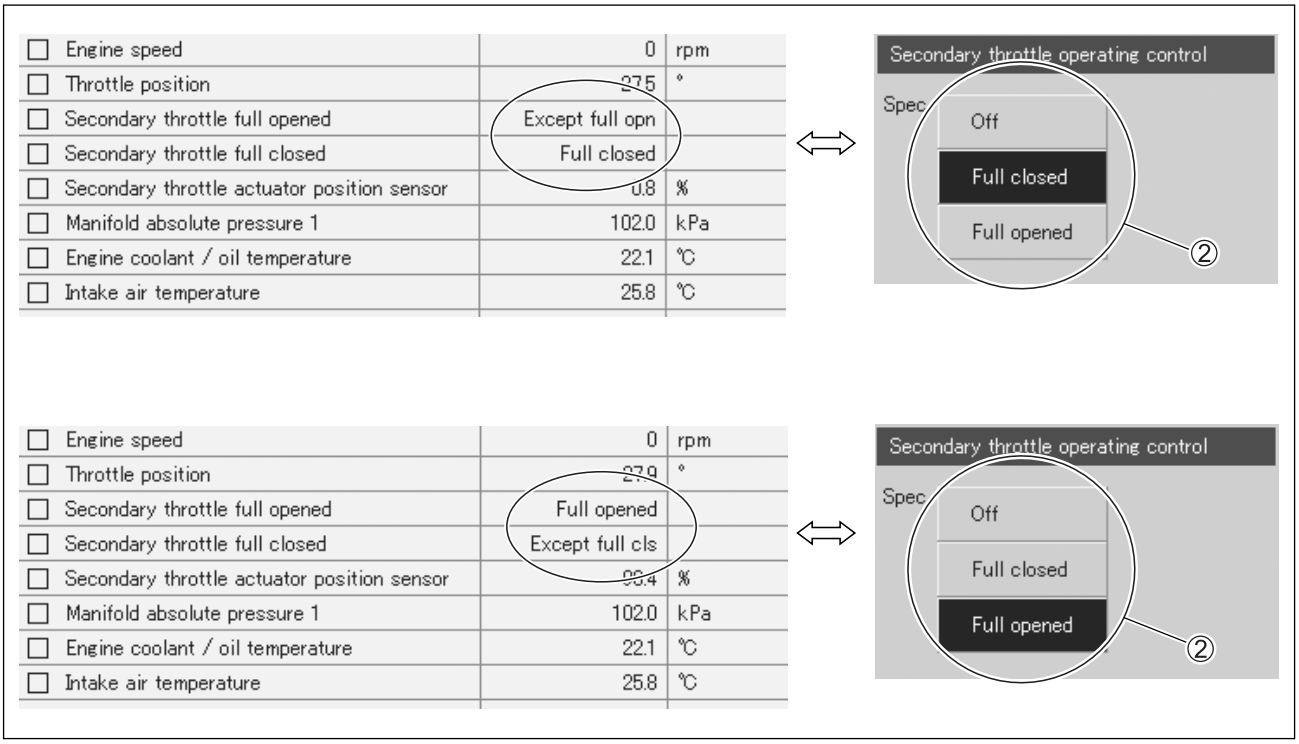

"C29" (P1654-H/L) STP SENSOR CIRCUIT MALFUNCTION

DETECTED CONDITION			POSSIBLE CAUSE
C29		Signal voltage is not within the following range. Difference between actual throttle opening and opening calculated by ECM is larger than specified value. 0.15 V ≦ Sensor voltage < 4.85 V	• STP sensor maladjusted • STP sensor circuit open or short • STP sensor malfunction • ECM malfunction
P1654	H	Sensor voltage is higher than specified value.	• STP sensor circuit shorted to VCC or ground circuit open • STP sensor circuit open or shorted to ground or VCC circuit open
	L	Sensor voltage is lower than specified value.	

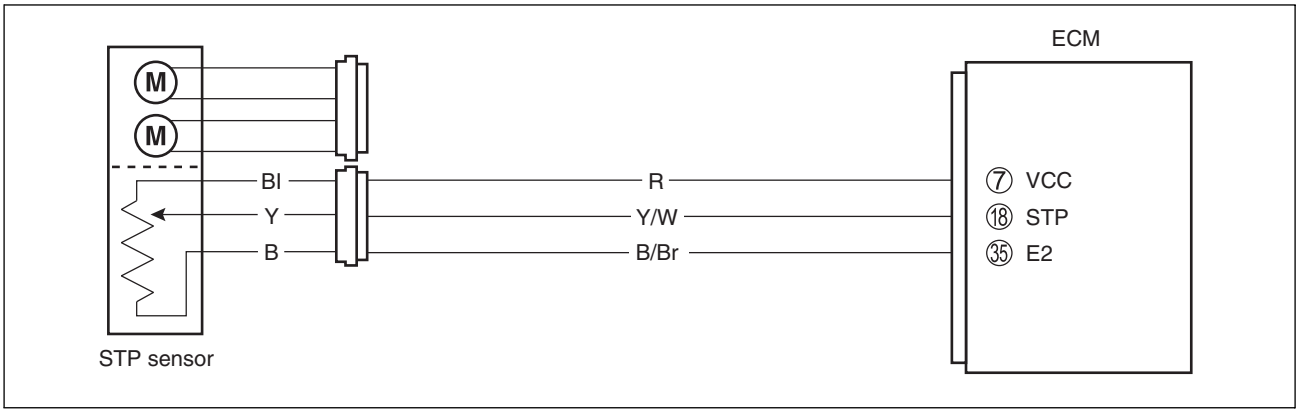

CAUTION

When using the multi-circuit tester, do not strongly touch the terminal of the ECM coupler with a needle pointed tester probe to prevent the terminal damage or terminal bend.

INSPECTION

Step 1 (When indicating C29:)

1) Turn the ignition switch OFF.
2) Lift and support the fuel tank. (☞5-3)
3) Check the STP sensor coupler ① for loose or poor contacts.
   If OK, then measure the STP sensor input voltage.
4) Disconnect the STP sensor coupler.
5) Turn the ignition switch ON.
6) Measure the voltage at the R wire Ⓐ and ground.
7) Also, measure the voltage at the R wire Ⓐ and B/Br wire Ⓒ.

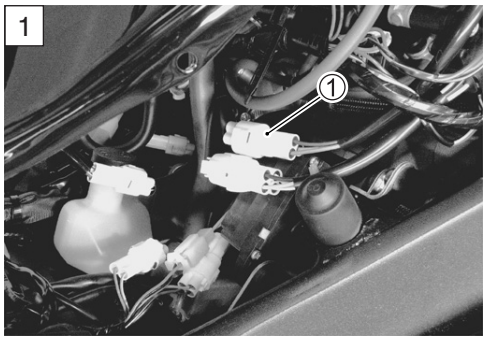

DATA STP sensor input voltage: 4.5 – 5.5 V
(⊕ R – ⊖ Ground)
(⊕ R – ⊖ B/Br)

TOOL 09900-25008: Multi-circuit tester set

Tester knob indication: Voltage (⎓)

Is the voltage OK?

YES	Go to Step 2.
NO	• Loose or poor contacts on the ECM coupler (terminal ⑦ or ㉟) • Open or short circuit in the R wire or B/Br wire

Step 1 (When indicating P1654-H:)

1) Turn the ignition switch OFF.
2) Lift and support the fuel tank. (☞5-3)
3) Check the STP sensor coupler ① for loose or poor contacts. If OK, then check the STP sensor lead wire continuity.

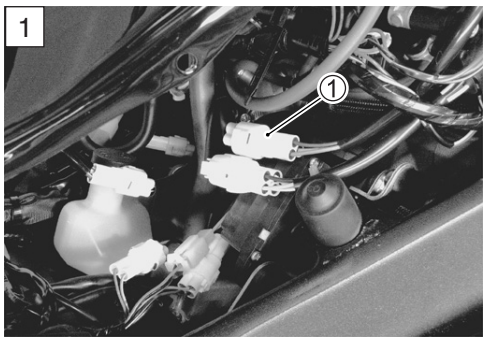

4) Disconnect the STP sensor coupler.
5) Check the continuity between Y/W wire Ⓑ and R wire Ⓐ. If the sound is not heard from the tester, the circuit condition is OK.

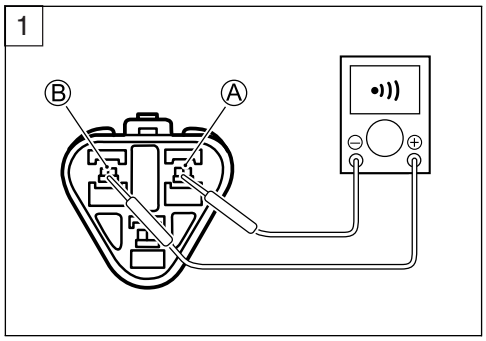

6) Disconnect the ECM coupler.
7) Check the continuity between Y/W wire Ⓑ and terminal ⑱.
8) Also, check the continuity between B/Br wire Ⓒ and terminal ㉟.

DATA STPS lead wire continuity: Continuity (•)))

TOOL 09900-25008: Multi-circuit tester set
09900-25009: Needle pointed probe set

Tester knob indication: Continuity test (•)))

Is the continuity OK?

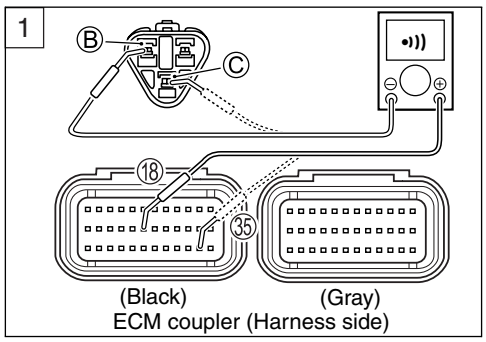

YES	Go to Step 2.
NO	Y/W wire shorted to VCC, or B/Br wire open

9) After repairing the trouble, clear the DTC using SDS tool. (☞4-28)

Step 1 (When indicating P1654-L:)

1) Turn the ignition switch OFF.
2) Lift and support the fuel tank. (☞5-3)
3) Check the STP sensor coupler ① for loose or poor contacts. If OK, then check the STP sensor lead wire continuity.

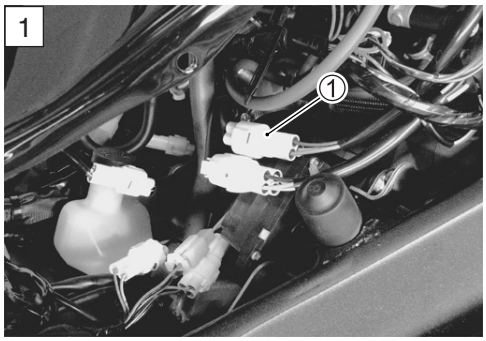

4) Disconnect the STP sensor coupler.
5) Check the continuity between Y/W wire Ⓑ and ground.
6) Also, check the continuity between Y/W wire Ⓑ and B/Br wire Ⓒ. If the sound is not heard from the tester, the circuit condition is OK.

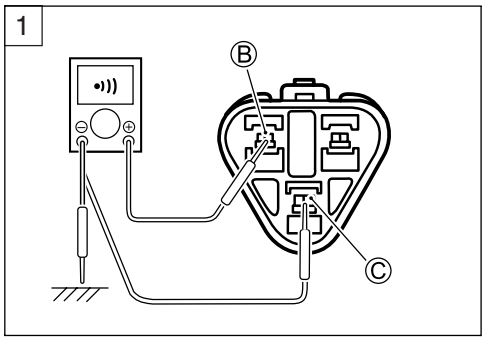

7) Disconnect the ECM coupler.
8) Check the continuity between Y/W wire Ⓑ and terminal ⑱.
9) Also, check the continuity between R wire Ⓐ and terminal ⑦.

DATA STPS lead wire continuity: Continuity (•)))

TOOL 09900-25008: Multi-circuit tester set
09900-25009: Needle pointed probe set

Tester knob indication: Continuity test (•)))

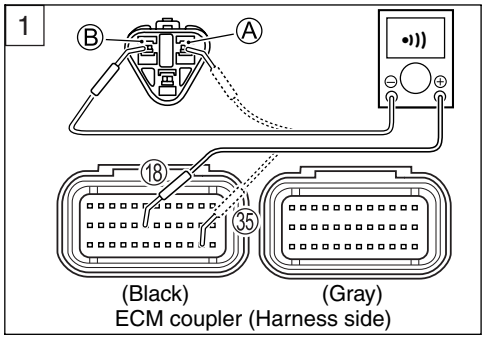

Is the continuity OK?

YES	Go to Step 1 (☞4-69) and go to Step 2.
NO	R or Y/W wire open, or Y/W wire shorted to ground

10) After repairing the trouble, clear the DTC using SDS tool. (☞4-28)

Step 2

1) Turn the ignition switch OFF.
2) Connect the STP sensor coupler.
3) Insert the needle pointed probes to the STP sensor coupler.
4) Disconnect the STVA lead wire coupler.
5) Turn the ignition switch ON.
6) Measure the STP sensor output voltage at the coupler (between ⊕ Y wire and ⊖ B wire) by turning the secondary throttle valve (close and open) with a finger.

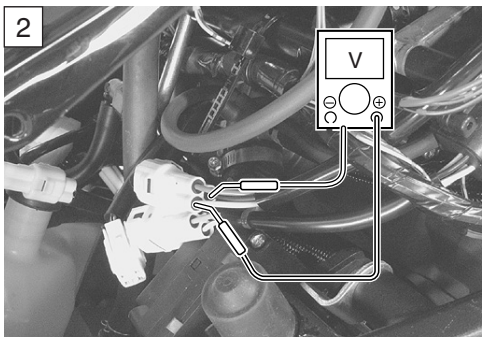

DATA STP sensor output voltage
Secondary throttle valve is closed : Approx. 0.5 V
Secondary throttle valve is opened: Approx. 3.9 V

TOOL 09900-25008: Multi-circuit tester set
09900-25009: Needle pointed probe set

Tester knob indication: Voltage (⎓)

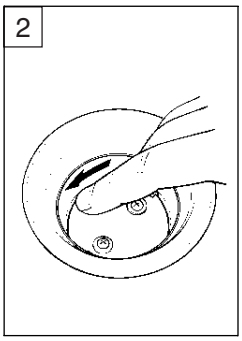

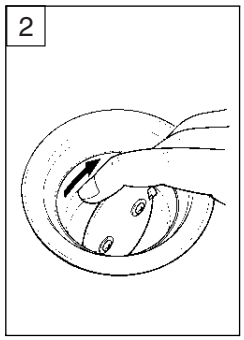

Is the voltage OK?

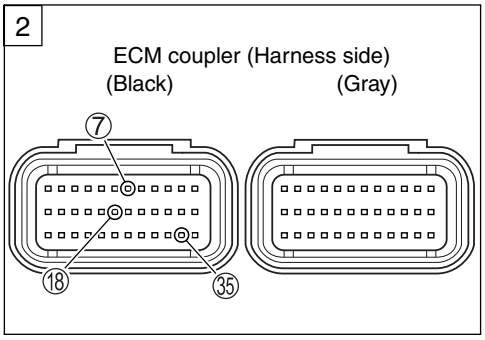

YES	• R, Y/W or B/Br wire open or shorted to ground, or poor ⑦, ⑱ or ㉟ connection • If wire and connection are OK, intermittent trouble or faulty ECM. • Recheck each terminal and wire harness for open circuit and poor connection. • Replace the ECM with a known good one, and inspect it again.
NO	If check result is not satisfactory, replace STP sensor with a new one.

After repairing the trouble, clear the DTC using SDS tool. (☞4-28)

“C31” (P0705) GP SWITCH CIRCUIT MALFUNCTION

DETECTED CONDITION	POSSIBLE CAUSE
No GP switch voltage GP switch voltage is not within the following range. GP switch voltage ≧ 0.6 V	• GP switch circuit open or short • GP switch malfunction • ECM malfunction

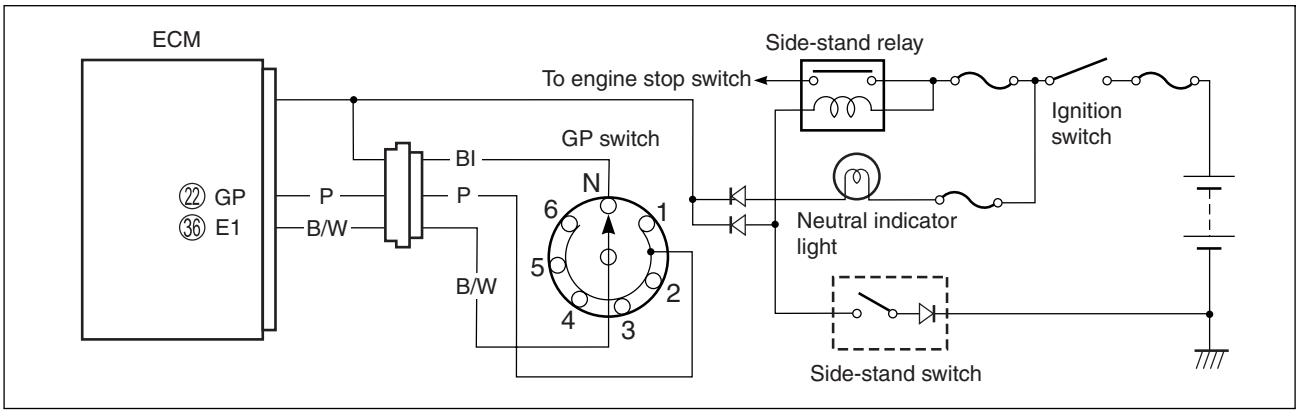

CAUTION

When using the multi-circuit tester, do not strongly touch the terminal of the ECM coupler with a needle pointed tester probe to prevent the terminal damage or terminal bend.

INSPECTION

Step 1

1) Turn the ignition switch OFF.
2) Lift and support the fuel tank. (☞5-3)
3) Check the GP switch coupler ① for loose or poor contacts.
   If OK, then measure the GP switch voltage.

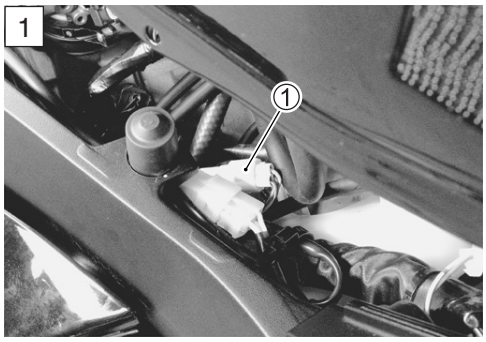

4) Support the motorcycle with a jack.
5) Fold the side-stand to up position.
6) Make sure the engine stop switch is in the “RUN” position.
7) Insert the needle pointed probe to the lead wire coupler.
8) Turn the ignition switch ON.
9) Measure the voltage at the wire side coupler between P wire and B/W wire, when shifting the gearshift lever from 1st to Top.

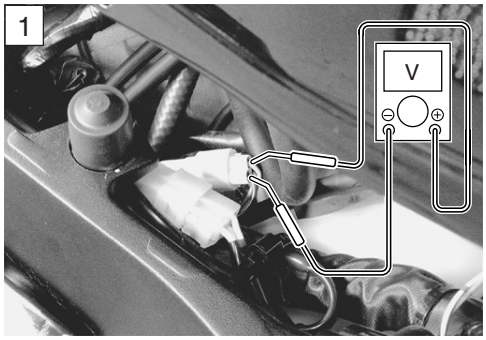

DATA GP switch voltage: 0.6 V and more
(⊕ P – ⊖ B/W)

TOOL 09900-25008: Multi-circuit tester set
09900-25009: Needle pointed probe set

Tester knob indication: Voltage (⎓)

Is the voltage OK?

YES	• P wire open or shorted to ground • If wire and connection are OK, intermittent trouble or faulty ECM. • Recheck each terminal and wire harness for open circuit and poor connection. • Replace the ECM with a known good one, and inspect it again.
NO	• P or B/W wire open, or P wire shorted to ground • Loose or poor contacts on the ECM coupler (terminal ㉒ or ㊱) • If wire and connection are OK, replace the GP switch with a new one.

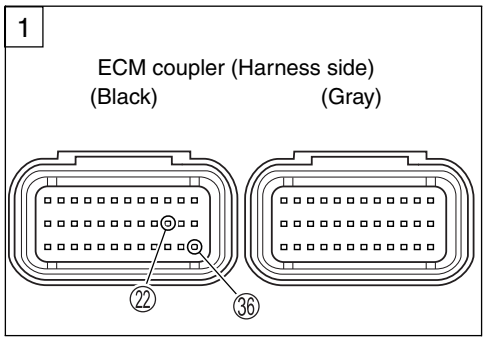

10)After repairing the trouble, clear the DTC using SDS tool. (☞4-28)

"C32" (P0201), "C33" (P0202), "C34" (P0203) or "C35" (P0204) PRIMARY FUEL INJECTOR CIRCUIT MALFUNCTION

DETECTED CONDITION	POSSIBLE CAUSE
CKP signal is produced but fuel injector signal is interrupted by 4 times or more continuously.	• Injector circuit open or short • Injector malfunction • ECM malfunction

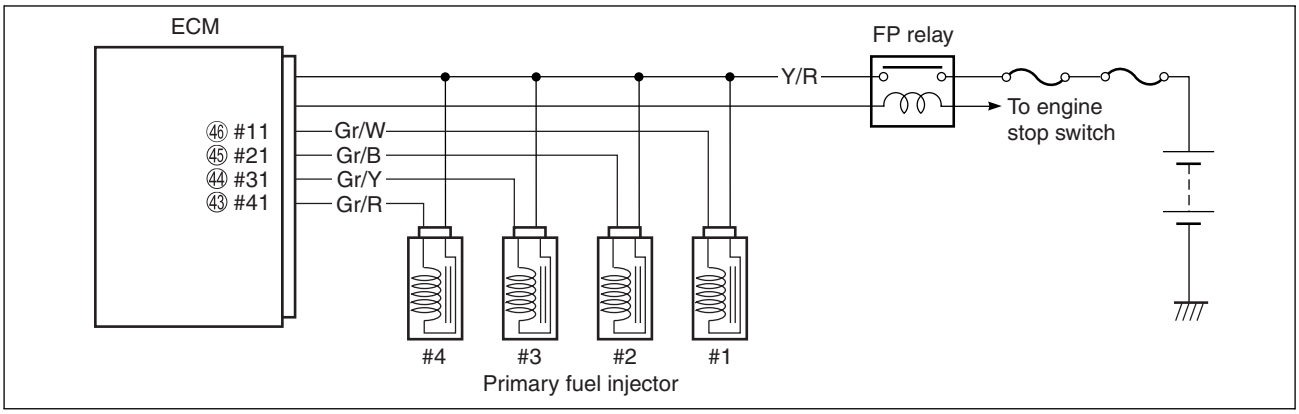

CAUTION

When using the multi-circuit tester, do not strongly touch the terminal of the ECM coupler with a needle pointed tester probe to prevent the terminal damage or terminal bend.

INSPECTION

Step 1

1) Turn the ignition switch OFF.
2) Lift and support the fuel tank (☞5-3)
3) Check the primary injector coupler ① for loose or poor contacts.
   If OK, then measure the primary injector resistance.

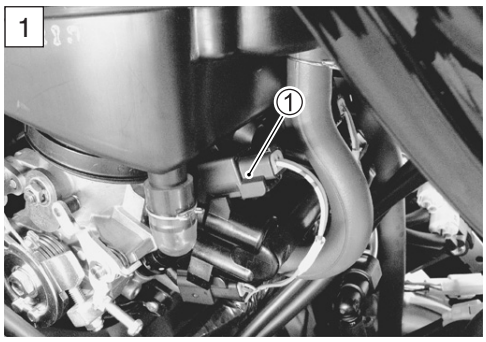

4) Disconnect the primary injector coupler and measure the resistance between terminals.

DATA Primary injector resistance: 11 – 13 Ω at 20 °C (68 °F) (Terminal – Terminal)

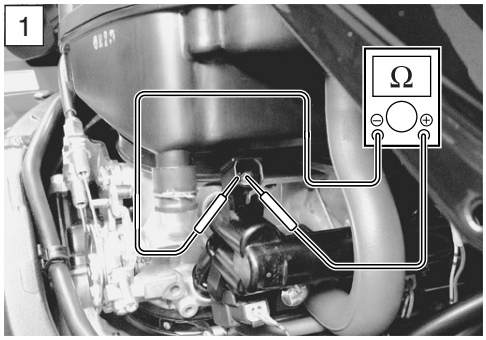

5) If OK, then check the continuity between each terminal and ground.

DATA Primary injector continuity: ∞ Ω (Infinity)

TOOL 09900-25008: Multi-circuit tester set

Tester knob indication: Resistance (Ω)

Are the resistance and continuity OK?

YES	Go to Step 2.
NO	Replace the primary injector with a new one. (☞5-24)

6) After repairing the trouble, clear the DTC using SDS tool. (☞4-28)

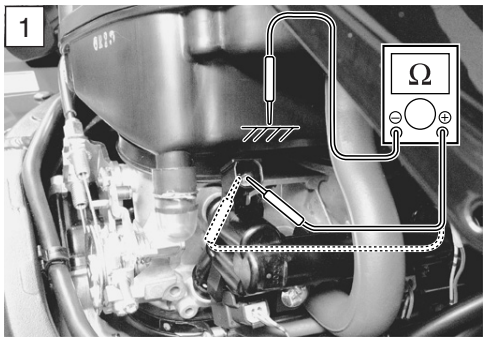

Step 2

1) Turn the ignition switch ON.
2) Measure the primary injector voltage between Y/R wire and ground.

DATA Primary injector voltage: Battery voltage (⊕ Y/R – ⊖ Ground)

NOTE:
Injector voltage can be detected only for 3 seconds after ignition switch is turned ON.

TOOL 09900-25008: Multi-circuit tester set

Tester knob indication: Voltage (⎓)

Is the voltage OK?

YES	• Gr/W wire open or shorted to ground, or poor ㊻ connection (#1 cylinder side) • Gr/B wire open or shorted to ground, or poor ㊺ connection (#2 cylinder side) • Gr/Y wire open or shorted to ground, or poor ㊹ connection (#3 cylinder side) • Gr/R wire open or shorted to ground, or poor ㊸ connection (#4 cylinder side) • If wire and connection are OK, intermittent trouble or faulty ECM. • Recheck each terminal and wire harness for open circuit and poor connection. • Replace the ECM with a known good one, and inspect it again.
NO	Open circuit in the Y/R wire

3) After repairing the trouble, clear the DTC using SDS tool. (☞4-28)

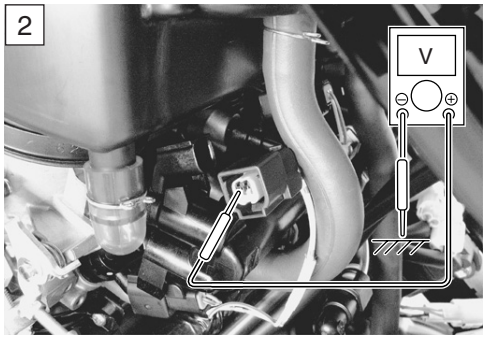

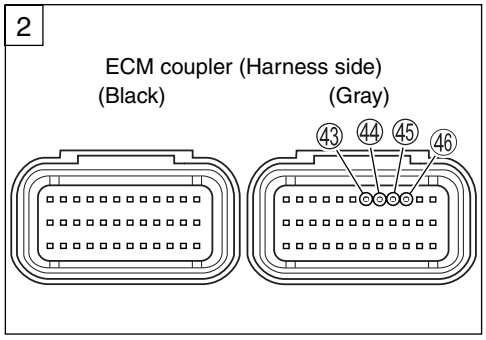

"C36" (P1764), "C37" (P1765), "C38" (P1766) or "C39" (P1767) SECONDARY FUEL INJECTOR CIRCUIT MALFUNCTION

DETECTED CONDITION	POSSIBLE CAUSE
Some failure exists in the fuel injector signal in a high load, high revolution condition.	• Injector circuit open or short • Injector malfunction • ECM malfunction

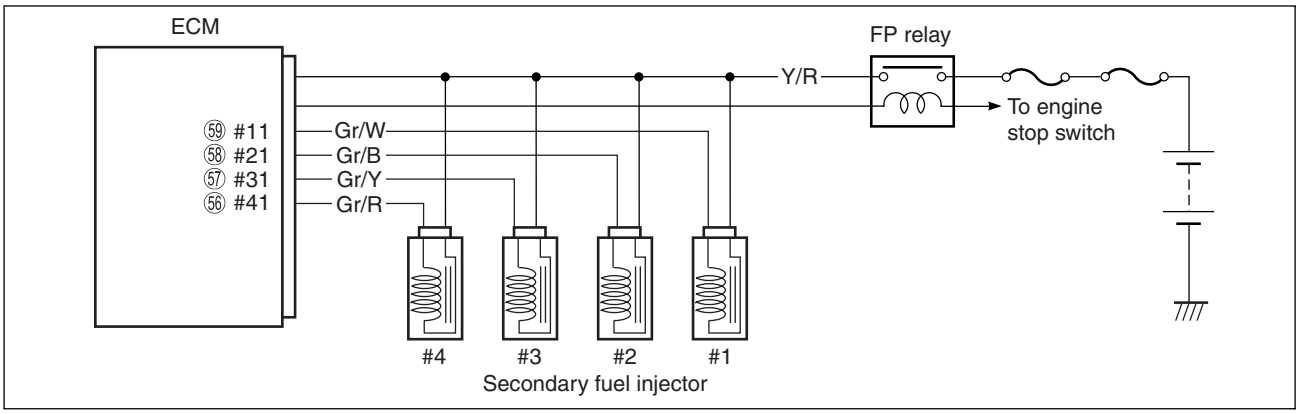

CAUTION

When using the multi-circuit tester, do not strongly touch the terminal of the ECM coupler with a needle pointed tester probe to prevent the terminal damage or terminal bend.

INSPECTION

Step 1

1) Turn the ignition switch OFF.
2) Lift and support the fuel tank. (☞5-3)
3) Check the secondary injector coupler ① for loose or poor contacts.
   If OK, then measure the secondary injector resistance.

4) Disconnect the secondary injector coupler and measure the resistance between terminals.

DATA Secondary injector resistance:
11 – 13 Ω at 20 °C (68 °F)
(Terminal – Terminal)

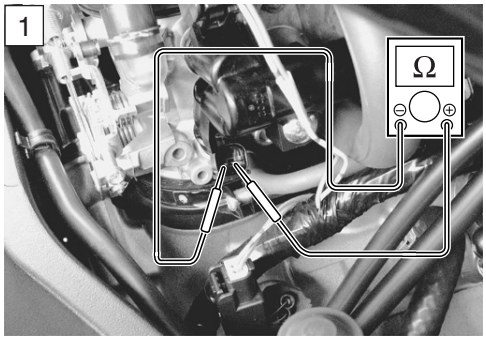

5) If OK, then check the continuity between each terminal and ground.

DATA Secondary injector continuity: ∞ Ω (Infinity)

TOOL 09900-25008: Multi-circuit tester set

Tester knob indication: Resistance (Ω)

Are the resistance and continuity OK?

YES	Go to Step 2.
NO	Replace the secondary injector with a new one. (☞5-24)

6) After repairing the trouble, clear the DTC using SDS tool. (☞4-28)

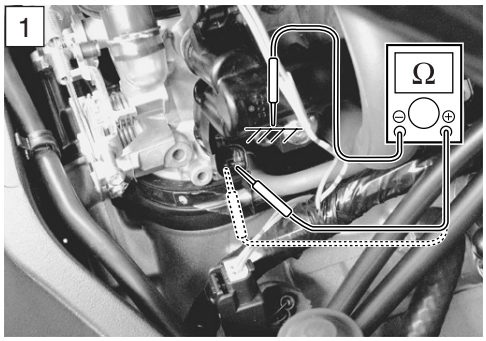

Step 2

1) Turn the ignition switch ON.
2) Measure the secondary injector voltage between Y/R wire and ground.

DATA Secondary injector voltage: Battery voltage (⊕ Y/R – ⊖ Ground)

NOTE:
Injector voltage can be detected only for 3 seconds after ignition switch is turned ON.

TOOL 09900-25008: Multi-circuit tester set

Tester knob indication: Voltage (⎓)

Is the voltage OK?

YES	• Lg wire open or shorted to ground, or poor ⑤⑨ connection (#1 cylinder side) • Lg/W wire open or shorted to ground, or poor ⑤⑧ connection (#2 cylinder side) • Lg/G wire open or shorted to ground, or poor ⑤⑦ connection (#3 cylinder side) • Lg/Bl wire open or shorted to ground, or poor ⑤⑥ connection (#4 cylinder side) • If wire and connection are OK, intermittent trouble or faulty ECM. • Recheck each terminal and wire harness for open circuit and poor connection. • Replace the ECM with a known good one, and inspect it again.
NO	Open circuit in the Y/R wire.

3) After repairing the trouble, clear the DTC using SDS tool. (☞4-28)

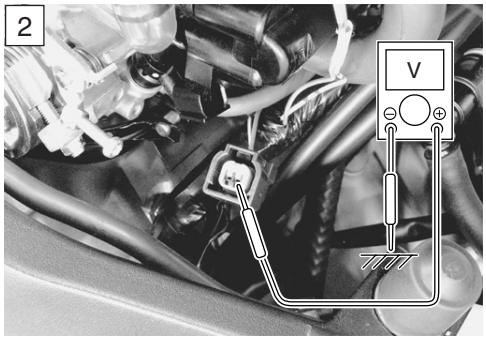

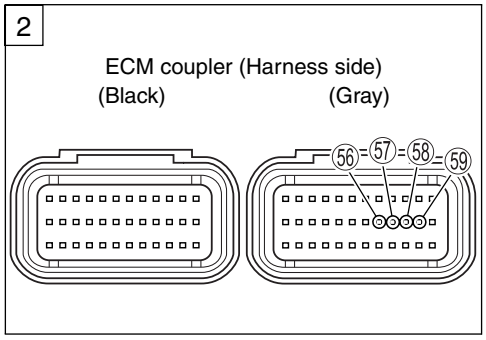

“C40” (P0505 or P0506 and P0507) ISC VALVE CIRCUIT MALFUNCTION

DETECTED CONDITION		POSSIBLE CAUSE
C40 (P0505)	The circuit voltage of motor drive is unusual.	• ISC valve circuit open or shorted to ground • Power source circuit open • Air passage clogged • ISC valve is fixed • ISC valve pre-set position is incorrect
C40 (P0506)	Idle speed is lower than the desired idle speed.	
C40 (P0507)	Idle speed is higher than the desired idle speed.	• Disconnected ISC valve hose • ISC valve is fixed • ISC valve pre-set position is incorrect

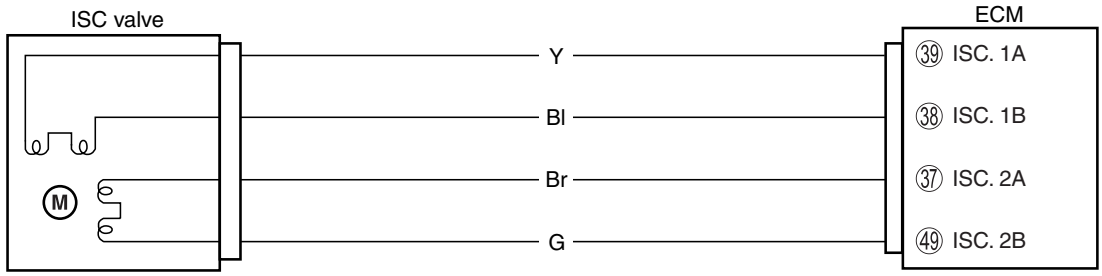

CAUTION

- **Be careful not to disconnect the ISC valve coupler at least 5 seconds after ignition switch is turned OFF.**
  If the ECM coupler or ISC valve coupler is disconnected within 5 seconds after ignition switch is turned OFF, there is a possibility of an unusual valve position being written in ECM and causing an error of ISC valve operation.
- **When using the multi-circuit tester, do not strongly touch the terminal of the ECM coupler with a needle pointed tester probe to prevent the terminal damage or terminal bend.**

INSPECTION
Step 1
1) Turn the ignition switch OFF.
2) Remove the air cleaner box. (☞5-14)
3) Check the ISC valve coupler ① for loose or poor contacts.
   If OK, then check the ISC valve lead wire continuity.

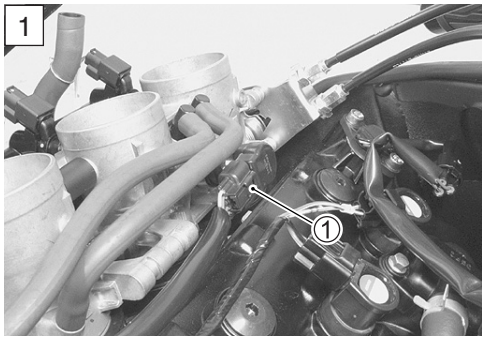

4) Disconnect the ISC valve coupler and ECM couplers.
5) Check the continuity between terminals Ⓐ (Y) and ㊴, terminals Ⓑ (Bl) and ㊳, terminals Ⓒ (Br) and ㊲, terminals Ⓓ (G) and ㊾.

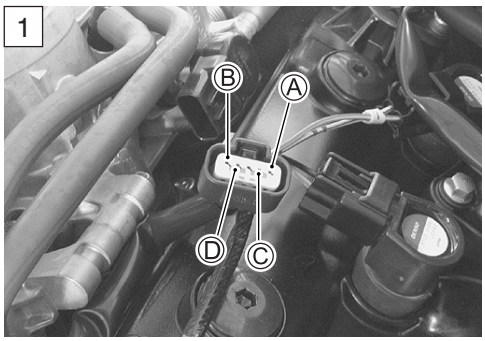

DATA ISC valve continuity: Continuity (•)))

TOOL 09900-25008: Multi-circuit tester set
09900-25009: Needle pointed probe set

Tester knob indication: Continuity test (•)))

Is the continuity OK?

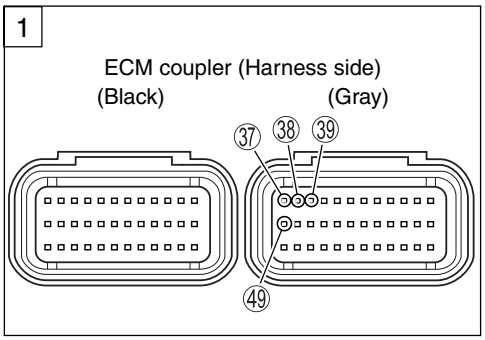

YES	Go to Step 2.
NO	Y, Bl, Br or G wire open.

6) After repairing the trouble, clear the DTC using SDS tool. (☞4-28)

Step 2

1) Measure the resistance between terminals Ⓐ and Ⓑ, terminals Ⓒ and Ⓓ.

DATA ISC valve resistance: Approx. 80 Ω at 20 °C (68 °F)
(Terminal Ⓐ – Terminal Ⓑ)
(Terminal Ⓒ – Terminal Ⓓ)

Is the resistance OK?

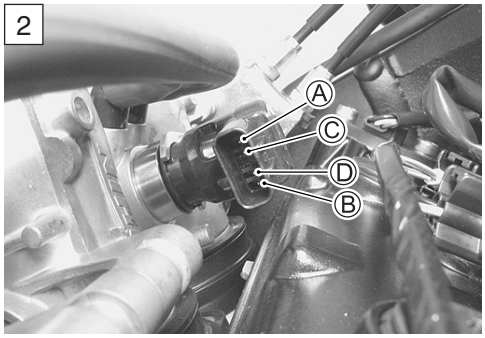

YES	If wire is OK, intermittent trouble or faulty ECM.
NO	Replace the throttle body with a new one.

2) After repairing the trouble, clear the DTC using SDS tool. (☞4-28)

ACTIVE CONTROL INSPECTION (ISC RPM CONTROL)

Check 1

1) Set up the SDS tool. (Refer to the SDS operation manual for further details.)
2) Check that the engine is running.
3) Click the “Active control”.
4) Click the “ISC rpm control” ①.

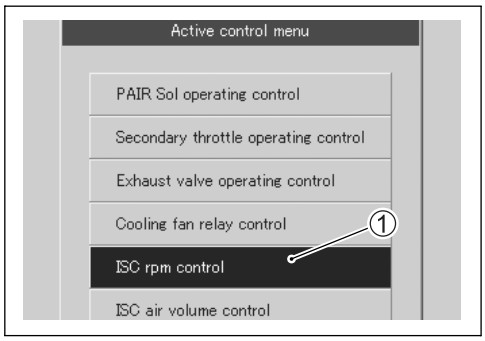

5) Check that the “Spec” ② is idle speed 1 150 ± 100 rpm.
6) Check that the “Desired idle speed” ③ is within the specified idle rpm.

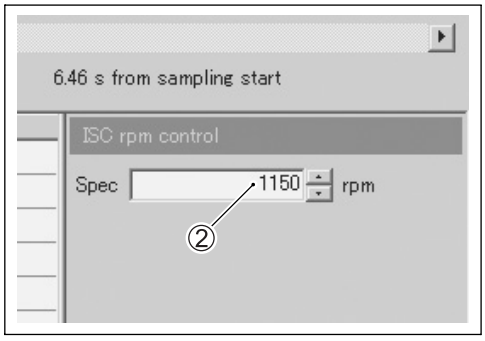

Item	Value	Unit
Engine speed	1197	rpm
Throttle position	27.9	°
Secondary throttle actuator position sensor	4.3	%
Manifold absolute pressure 1	68.7	kPa
Engine coolant / oil temperature	80.4	°C
Battery voltage	13.6	V
Desired idle speed	③ 1155	rpm
ISC valve position	33	step
Ignition switch signal	Normal	
Starter signal	Off	

Check 2

1) Click the button ① and decrease the “Spec” ② to 1 050 rpm slowly.
2) Check that the “Desired idle speed” ③ is nearly equal to the “Spec” ②. At the same time, check that the number of steps in the ISC valve position decreases.
3) Click the button ④ and increase the “Spec” ② slowly.
4) Check that the “Desired idle speed” ③ is nearly equal to the “Spec” ②. Also, check that the number of steps ⑤ in the ISC valve position increases.

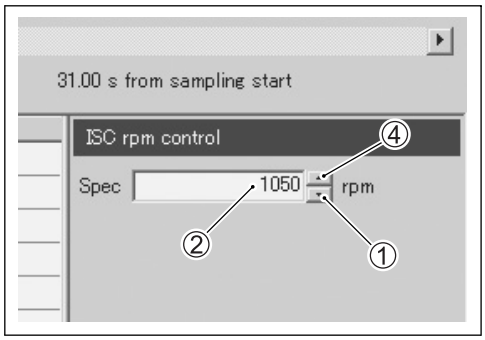

Item	Value	Unit
Engine speed	1095	rpm
Throttle position	27.9	°
Secondary throttle actuator position sensor	4.3	%
Manifold absolute pressure 1	70.0	kPa
Engine coolant / oil temperature	104.3	°C
Battery voltage	13.6	V
Desired idle speed	③ 1054	rpm
ISC valve position	⑤ 25	step
Ignition switch signal	Normal	
Starter signal	Off	

Check 3

1) Click the button ① and increase the “Spec” ② to 1 500 rpm slowly.
2) Check that the “Desired idle speed” ③ is nearly equal to the “Spec” ②. Also, check that the number of steps ④ in the ISC valve position increases.

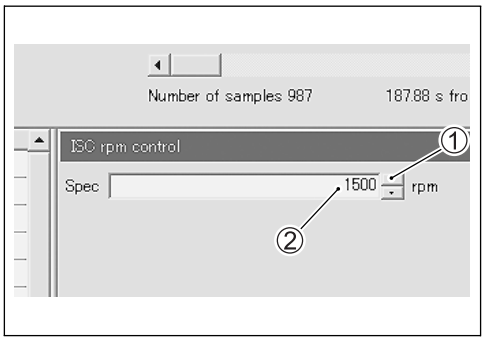

Item	Value	Unit
Vehicle speed	0.0	km/h
Engine speed	1488	rpm
Engine coolant / oil temperature	64.7	°C
Throttle position	27.9	°
Desired idle speed	③ 1506	rpm
ISC valve position	④ 80	step
Manifold absolute pressure 1	71.5	kPa
Intake air temperature	24.6	°C

Check 4

1) Increase the “Spec” ① to 1 900 rpm.
2) Check that the “Desired idle speed” ② is approx. 1 900 rpm.
3) Check that the “Engine speed” ③ is close to 1 900 rpm.

NOTE:
Be careful not to increase the “Spec” to more than 2 000 rpm, or the “Engine speed” may reach the upper limit.

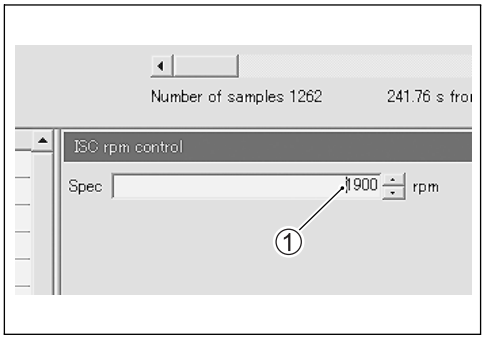

Item	Value	Unit
Vehicle speed	0.0	km/h
Engine speed	③ 1896	rpm
Engine coolant / oil temperature	77.9	°C
Throttle position	27.9	°
Desired idle speed	② 1907	rpm
ISC valve position	94	step
Manifold absolute pressure 1	65.0	kPa
Intake air temperature	24.6	°C

If the ISC valve does not function properly, inspect the ISC valve (☞4-79) or replace if necessry (☞5-25).

“C41” (P0230-H/L) FP RELAY CIRCUIT MALFUNCTION

DETECTED CONDITION			POSSIBLE CAUSE
C41		No voltage is applied to fuel pump although FP relay is turned ON, or voltage is applied to fuel pump, although FP relay is turned OFF.	• FP relay circuit open or short • FP relay malfunction • ECM malfunction
P0230	H	Voltage is applied to fuel pump although FP relay is turned OFF.	• FP relay switch circuit shorted to power source • Faulty FP relay (switch side)
	L	No voltage is applied to fuel pump although FP relay is turned ON.	• FP relay coil circuit open or short • Faulty FP relay (coil side)

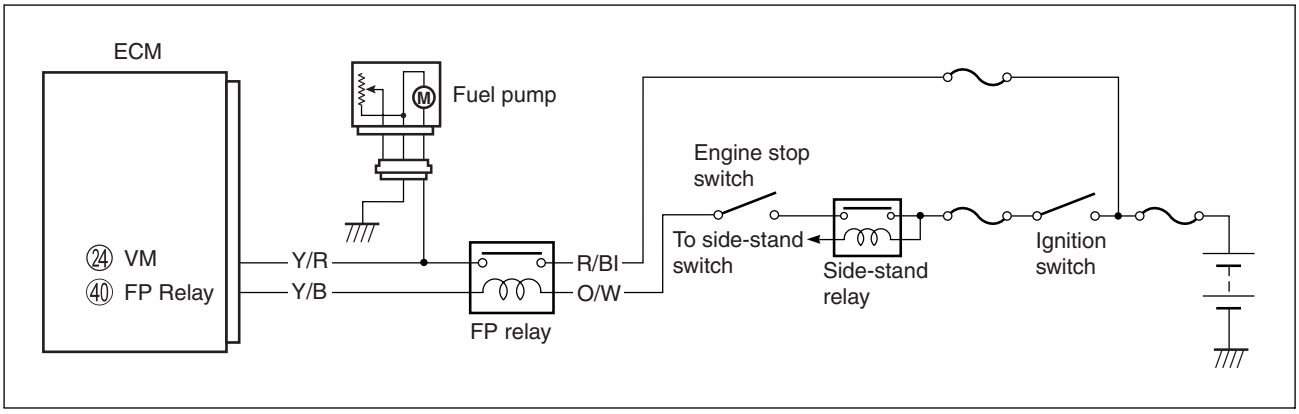

CAUTION

When using the multi-circuit tester, do not strongly touch the terminal of the ECM coupler with a needle pointed tester probe to prevent the terminal damage or terminal bend.

INSPECTION

Step 1 (When indicating C41:)

1) Turn the ignition switch OFF.
2) Remove the front seat. (☞8-8)
3) Check the FP relay coupler for loose or poor contacts.
   If OK, then check the FP relay. (☞5-7)

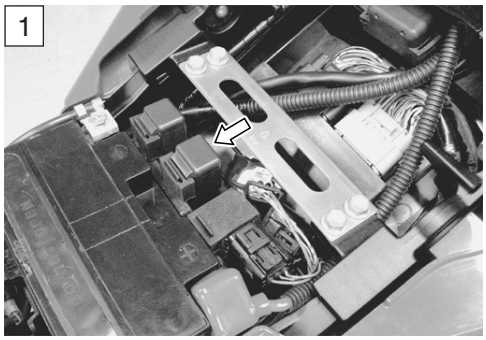

Is the FP relay OK?

YES	• Y/B or O/W wire open or short or poor ㊵ connection • Y/R or R/Bl wire open, shorted or poor ㉔ connection • If wire and connection are OK, intermittent trouble or faulty ECM. • Recheck each terminal and wire harness for open circuit and poor connection. • Replace the ECM with a known good one, and inspect it again.
NO	Replace the FP relay with a new one.

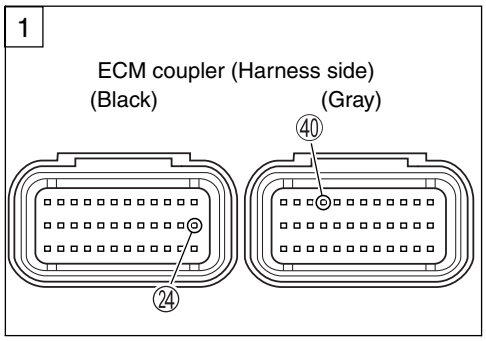

Step 1 (When indicating P0230-H:)

1) Turn the ignition switch OFF.
2) Remove the front seat. (☞8-8)
3) Check the FP relay coupler for loose or poor contacts.
   If OK, then check the FP relay. (☞5-7)

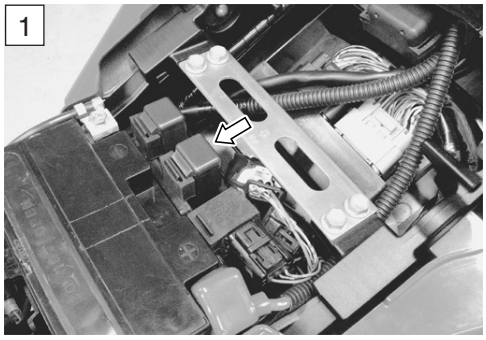

Is the FP relay OK?

YES	• Y/R wire shorted to power source • Y/B wire shorted to ground • If wire and connection are OK, intermittent trouble or faulty ECM. • Recheck each terminal and wire harness for open circuit and poor connection. • Replace the ECM with a known good one, and inspect it again.
NO	Replace the FP relay with a new one.

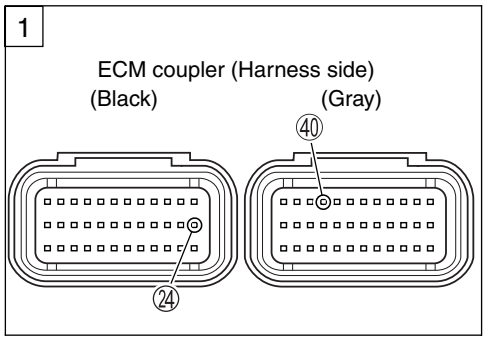

4) After repairing the trouble, clear the DTC using SDS tool. (☞4-28)

Step 1 (When indicating P0230-L:)

1) Turn the ignition switch OFF.
2) Remove the front seat. (☞8-8)
3) Check the FP relay coupler for loose or poor contacts.
   If OK, then check the FP relay. (☞5-7)

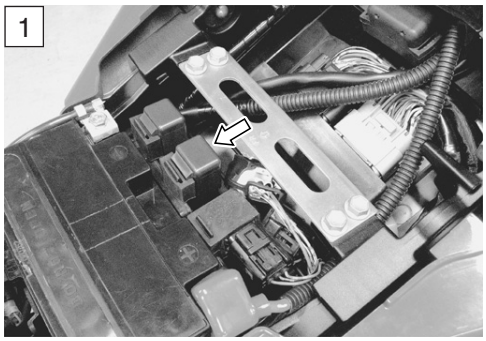

Is the FP relay OK?

YES	• Y/B wire open or poor ㊵ connection • O/W wire open or shorted to ground • R/Bl or Y/R wire open or shorted to ground or poor ㉔ connection • If wire and connection are OK, intermittent trouble or faulty ECM. • Recheck each terminal and wire harness for open circuit and poor connection. • Replace the ECM with a known good one, and inspect it again.
NO	Replace the FP relay with a new one.

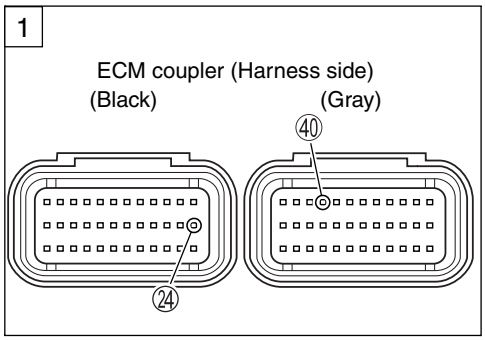

4) After repairing the trouble, clear the DTC using SDS tool. (☞4-28)

"C41" (P2505) ECM/PCM POWER INPUT SIGNAL MALFUNCTION

DETECTED CONDITION		POSSIBLE CAUSE
C41 (P2505)	No voltage is applied to the ECM, although the ignition switch is turned ON. No voltage is applied to the speedometer when turning the ignition switch ON.	• Lead wire/coupler connection of ECM terminal to fuel fuse • Fuel fuse • Power source of speedometer shorted to ground or open

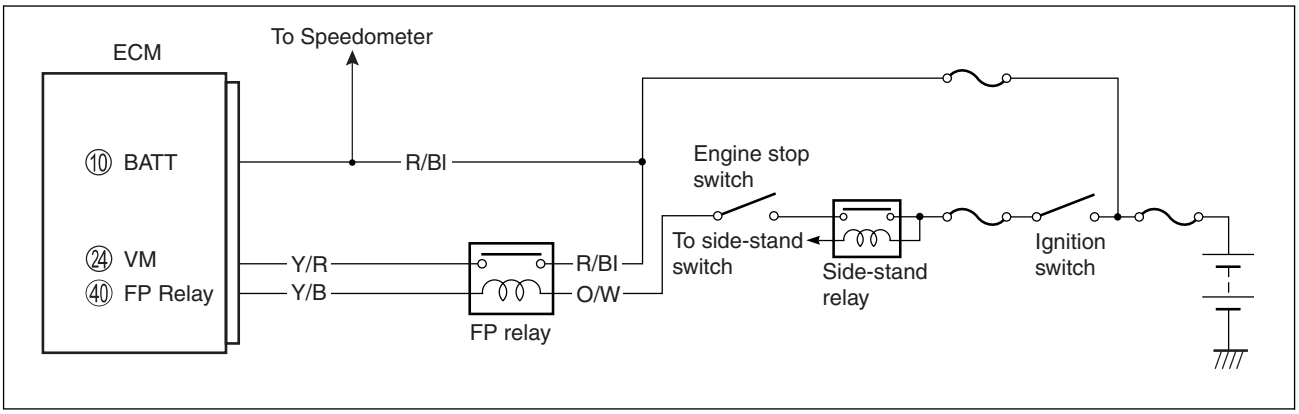

CAUTION

When using the multi-circuit tester, do not strongly touch the terminal of the ECM coupler with a needle pointed tester probe to prevent the terminal damage or terminal bend.

INSPECTION

Step 1 (When indicating C41:)

1) Turn the ignition switch OFF.
2) Remove the front seat. (☞8-8)
3) Check the ECM couplers for loose or poor contacts.
   If OK, then measure the ECM input voltage.

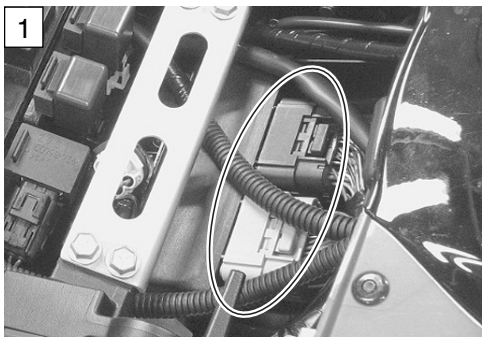

4) Disconnect the ECM couplers.
5) Measure the voltage between terminal ⑩ and ground.

DATA ECM input voltage: Battery voltage

TOOL 09900-25008: Multi-circuit tester set
09900-25009: Needle pointed probe set

Tester knob indication: Voltage (⎓)

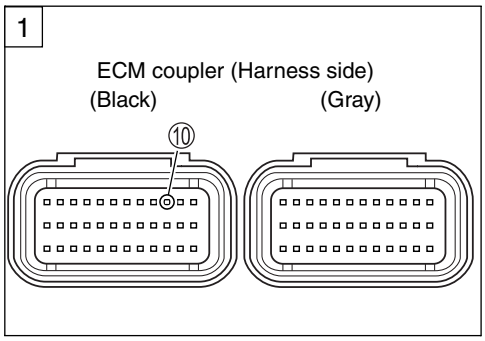

Is the voltage OK?

YES	• Fuel pump related circuit malfanction. • R/Bl wire open or shorted or poor terminal ⑩ connection. • Power source of speedometer shorted to ground or open. • If the wire and connection are OK, intermittent trouble or faulty ECM. • Recheck each terminal and wire harness for open circuit and poor connection. • Replace the ECM with a known good one, and inspect it again.
NO	• Open or short circuit in the R/Bl wire.

"C42" (P01650) IG SWITCH CIRCUIT MALFUNCTION

DETECTED CONDITION	POSSIBLE CAUSE
Ignition switch signal is not input to the ECM.	• Ignition system circuit open or short • ECM malfunction
When the ID agreement is not verified. ECM does not receive communication signal from the immobilizer antenna. (For E-02, 19, 24)	• Immobilizer system malfunction (For E-02, 19, 24)

INSPECTION
*** Refer to the IGNITION SWITCH INSPECTION for details. (☞9-41)**

"C44" (P0130/P0135) HO2 SENSOR (HO2S) CIRCUIT MALFUNCTION

DETECTED CONDITION		POSSIBLE CAUSE
C44 (P0130)	HO2 sensor output voltage is not input to ECM during engine operation and running condition. (Sensor voltage < 1.0 V) In other than the above value, C44 (P0130) is indicated.	• HO2 sensor circuit open
C44 (P0135)	The heater can not operate so that heater operation voltage is not supplied to the oxygen heater circuit.	• HO2 sensor lead wire/coupler connection • Battery voltage supply to the HO2 sensor.

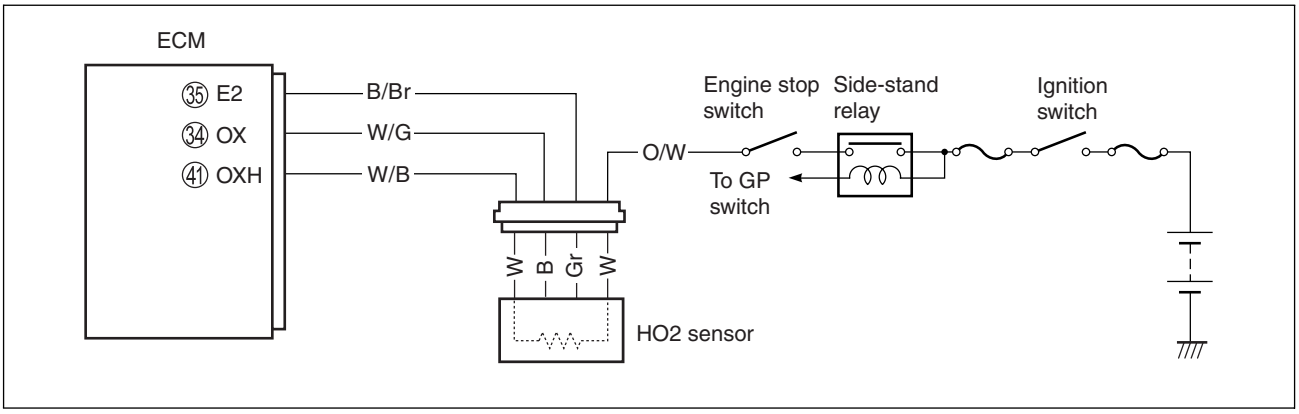

CAUTION

When using the multi-circuit tester, do not strongly touch the terminal of the ECM coupler with a needle pointed tester probe to prevent the terminal damage or terminal bend.

INSPECTION

Step 1 (When indicating C44/P0130:)

1) Turn the ignition switch OFF.
2) Remove the left under cowling. (☞8-5)
3) Check the HO2 sensor coupler ① for loose or poor contacts. If OK, then check the HO2 sensor lead wire continuity.

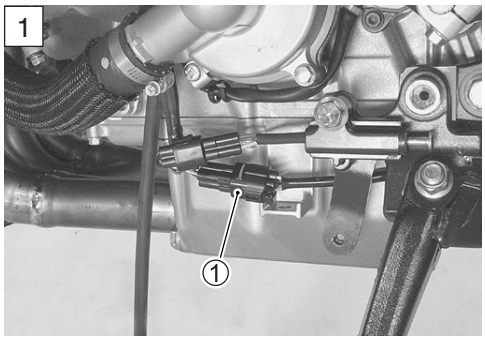

4) Disconnect the HO2 sensor coupler.
5) Check the continuity between W/G wire Ⓐ and ground.
6) Also, check the continuity between W/G wire Ⓐ and B/Br wire Ⓑ. If the sound is not heard from the tester, the circuit condition is OK.

TOOL 09900-25008: Multi-circuit tester set

Tester knob indication: Continuity test (•))))

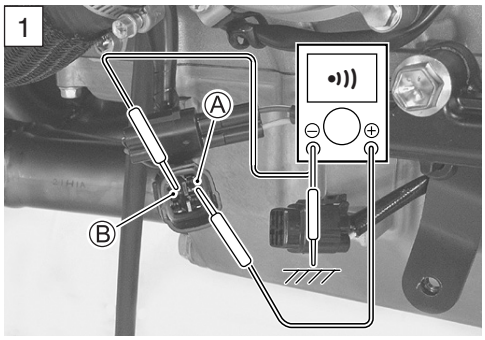

7) Disconnect the ECM coupler.
8) Check the continuity between W/G wire Ⓐ and terminal ㉞.
9) Also, check the continuity between B/Br wire Ⓑ and terminal ㉟.

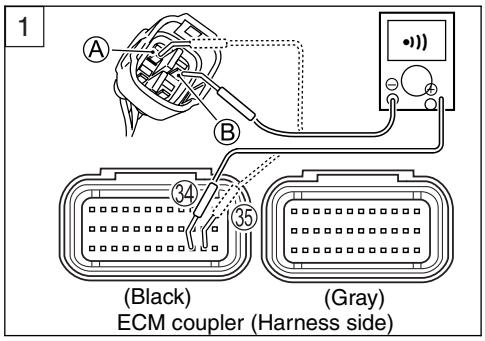

DATA HO2S lead wire continuity: Continuity (•)))

TOOL 09900-25008: Multi-circuit tester set
09900-25009: Needle pointed probe set

Tester knob indication: Continuity test (•)))

Is the continuity OK?

YES	Go to Step 2. (When indicating C44/P0130:)
NO	W/G wire shorted to ground, or W/G or B/Br wire open.

10) After repairing the trouble, clear the DTC using SDS tool. (☞4-28)

Step 2 (When indicating C44/P0130:)
1) Connect the ECM couplers and HO2 sensor coupler.
2) Warm up the engine enough.
3) Measure the HO2 sensor output voltage between W/G wire and B/Br wire, when idling condition.

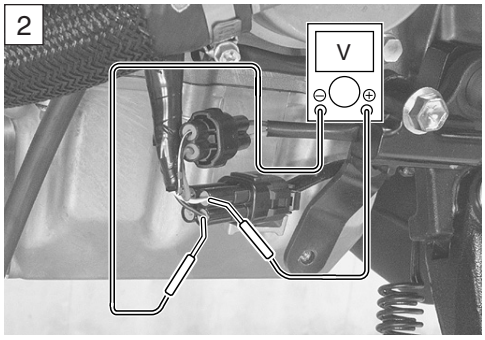

DATA HO2 sensor output voltage at idle speed:
0.3 V and less (⊕ W/G – ⊖ B/Br)

4) If OK, then remove the air cleaner box (☞5-14) and pinch the PAIR hoses ① with proper hose clamps.
5) Measure the HO2 sensor output voltage while holding the engine speed at 5 000 r/min.

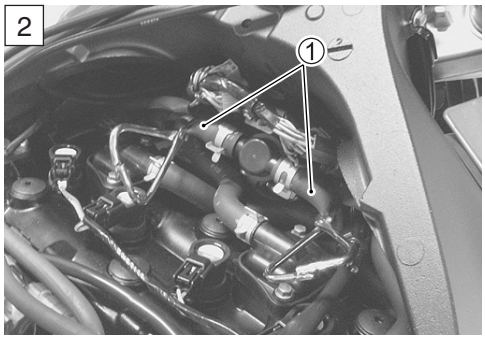

DATA HO2 sensor output voltage at 5 000 r/min:
0.6 V and more (⊕ W/G – ⊖ B/Br)

TOOL 09900-25008: Multi-circuit tester set
09900-25009: Needle pointed probe set

Tester knob indication: Voltage (⎓)

Is the voltage OK?

YES	• W/G wire or B/Br wire open or shorted to ground, or poor ㉞ or ㉟ connection. • If wire and connection are OK, intermittent trouble or faulty ECM. • Recheck each terminal and wire harness for open circuit and poor connection. • Replace the ECM with a known good one, and inspect it again.
NO	Replace the HO2 sensor with a new one.

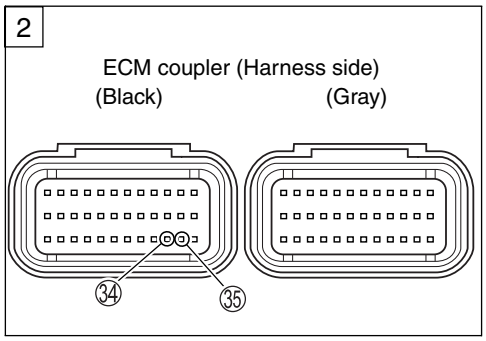

6) After repairing the trouble, clear the DTC using SDS tool. (☞4-28)

Step 1 (When indicating C44/P0135:)

1) Turn the ignition switch OFF.
2) Remove the left under cowling. (☞8-5)
3) Check the HO2 sensor coupler ① for loose or poor contacts. If OK, then measure the HO2 sensor resistance.

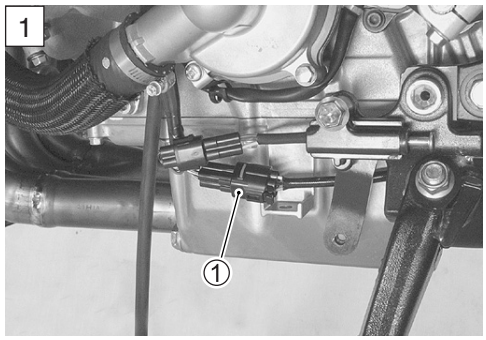

4) Disconnect the HO2 sensor coupler and measure the resistance between terminals.

DATA HO2 heater resistance: Approx. 8 Ω at 23 °C (73 °F) (W – W)

NOTE:

** Temperature of the sensor affects resistance value largely.*

** Make sure that the sensor heater is at correct temperature.*

TOOL 09900-25008: Multi-circuit tester set

Tester knob indication: Resistance (Ω)

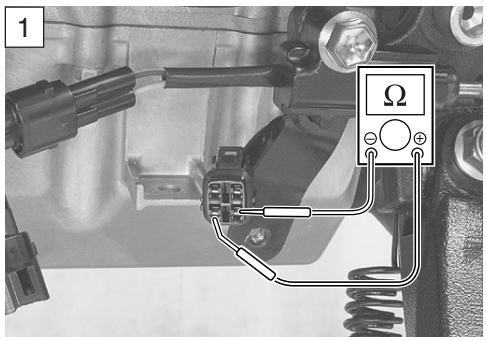

Is the voltage OK?

YES	Go to Step 2.
NO	Replace the HO2 sensor with a new one.

5) After repairing the trouble, clear the DTC using SDS tool. (☞4-28)

Step 2 (When indicating C44/P0135:)

1) Connect the HO2 sensor coupler.
2) Insert the needle pointed probe to the HO2 sensor coupler.
3) Turn the ignition switch ON and measure the heater voltage between W (O/W) wire and ground.
4) If the tester voltage indicates the battery voltage, it is good condition.

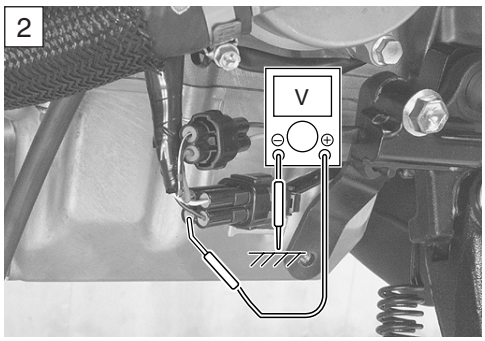

DATA Heater voltage: Battery voltage
(⊕ W – ⊖ Ground)

NOTE:
Battery voltage can be detected only before starting the engine.

TOOL 09900-25008: Multi-circuit tester set
09900-25009: Needle pointed probe set

Tester knob indication: Voltage (⎓)

Is the voltage OK?

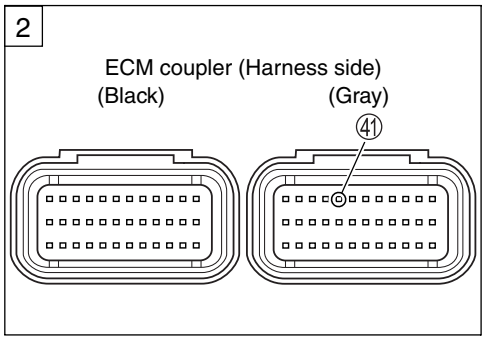

YES	• O/W or W wire open or shorted to ground, or poor ㊶ connection. • Recheck each terminal and wire harness for open circuit and poor connection. • If wire and connection are OK, intermittent trouble or faulty ECM. • Replace the ECM with a known good one, and inspect it again.
NO	• Open or short circuit in the W/B wire or O/W wire. • Loose or poor contacts on the ECM coupler (Terminal ㊶) or HO2 sensor coupler.

5) After repairing the trouble, clear the DTC using SDS tool. (☞4-28)

"C46" (P1657-H/L or P1658) EXCV ACTUATOR CIRCUIT MALFUNCTION

DETECTED CONDITION			POSSIBLE CAUSE
C46		The operation signal does not reach the EXCV actuator. EXCVA position sensor voltage low or high 0.1 V ≦ Sensor voltage < 4.9 V (without the above range)	• EXCVA maladjusted • EXCVA circuit open or short • EXCVA motor malfunction • EXCVA position sensor malfunction
P1657	H	Sensor voltage is higher than specified value.	• EXCVA position sensor circuit shorted to VCC or ground circuit open
	L	Sensor voltage is lower than specified value.	• EXCVA position sensor circuit open or shorted to ground or VCC circuit open
P1658		The operation signal does not reach the EXCVA motor. ECM does not receive communication signal from the STVA motor.	• EXCVA motor circuit open or short • EXCVA motor malfunction

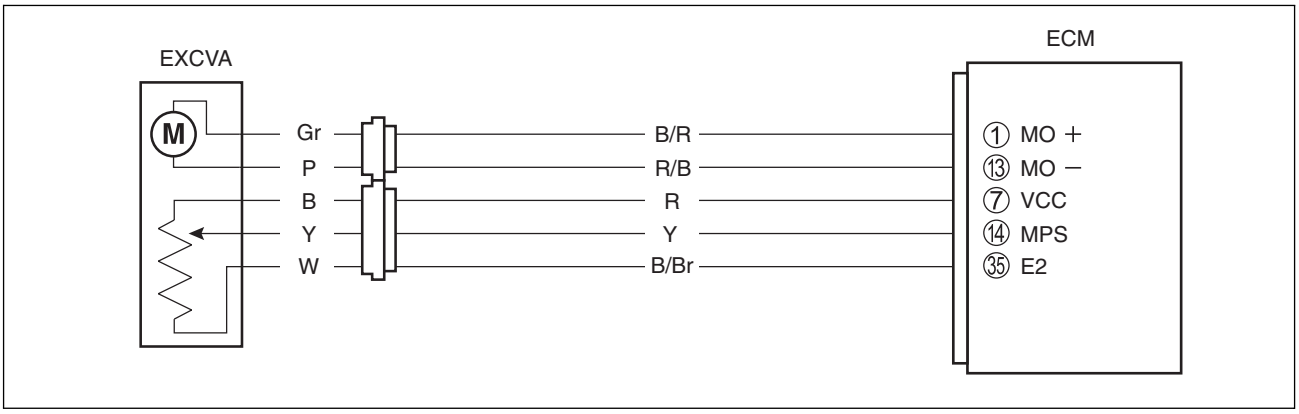

CAUTION

When using the multi-circuit tester, do not strongly touch the terminal of the ECM coupler with a needle pointed tester probe to prevent the terminal damage or terminal bend.

INSPECTION

Step 1 (When indicating C46:)

1) Turn the ignition switch OFF.
2) Lift and support the fuel tank. (☞5-3)
3) Check the EXCVA position sensor coupler ① and EXCVA motor coupler ② for loose or poor contacts.

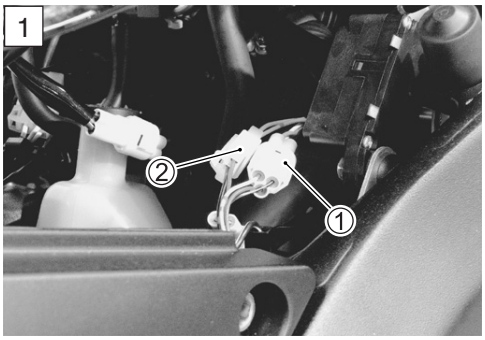

4) Turn the ignition switch ON.
5) Check the operation of the EXCVA ③.
   (EXCVA operating order: Full close → Full open → 30% open)

   Is the operation OK?

YES	Go to Step 2.
NO	Go to Step 6.

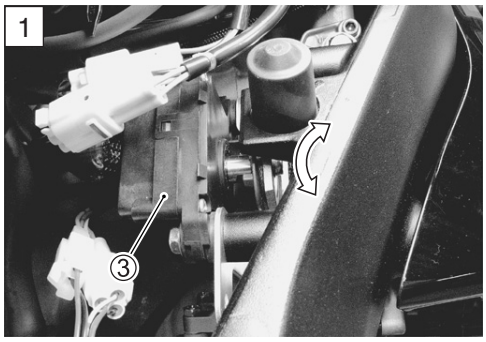

Step 1 (When indicating P1657-H:)
1) Turn the ignition switch OFF.
2) Lift and support the fuel tank. (☞5-3)
3) Check the EXCVA position sensor coupler ① for loose or poor contacts.
   If OK, then check the EXCVA position sensor lead wire continuity.

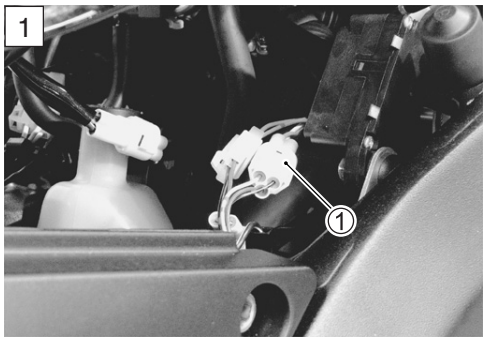

4) Disconnect the EXCVA position sensor coupler.
5) Check the continuity between R wire Ⓒ and Y wire Ⓐ.
   If the sound is not heard from the tester, the circuit condition is OK.

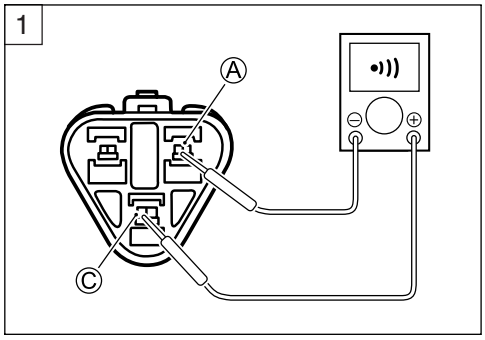

6) Disconnect the ECM coupler.
7) Check the continuity between Y wire Ⓐ and terminal ⑭.
8) Also, check the continuity between B/Br wire Ⓑ and terminal ㉟.

DATA EXCVA lead wire continuity: Continuity (•)))

TOOL 09900-25008: Multi-circuit tester set
09900-25009: Needle pointed probe set

Tester knob indication: Continuity test (•)))

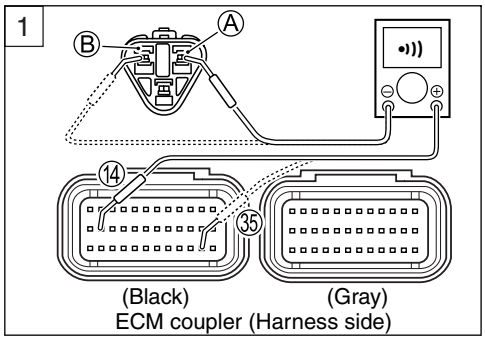

   Is the continuity OK?

YES	Go to Step 4.
NO	Y wire shorted to VCC, or B/Br wire open

9) After repairing the trouble, clear the DTC using SDS tool. (☞4-28)

Step 1 (When indicating P1657-L:)

1) Turn the ignition switch OFF.
2) Lift and support the fuel tank. (☞5-3)
3) Check the EXCVA position sensor coupler ① for loose or poor contacts.
   If OK, then check the EXCVA position sensor lead wire continuity.

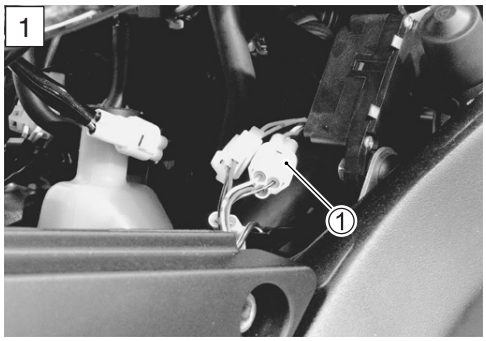

4) Disconnect the EXCVA position sensor coupler.
5) Check the continuity between Y wire Ⓐ and ground.
6) Also, check the continuity between Y wire Ⓐ and B/Br wire Ⓑ. If the sound is not heard from the tester, the circuit condition is OK.

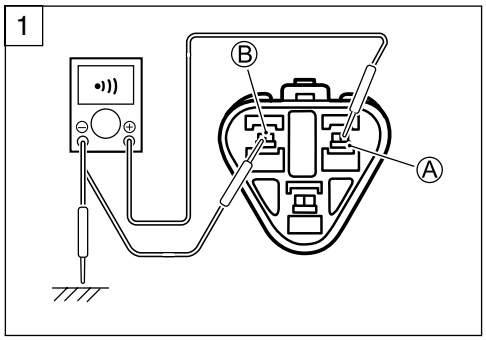

7) Disconnect the ECM coupler.
8) Check the continuity between Y wire Ⓐ and terminal ⑭.
9) Also, check the continuity between R wire Ⓒ and terminal ⑦.

DATA EXCVA lead wire continuity: Continuity (•ı))

TOOL 09900-25008: Multi-circuit tester set
09900-25009: Needle pointed probe set

Tester knob indication: Continuity test (•ı))

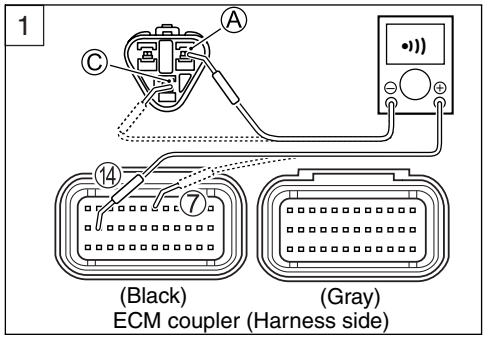

Is the continuity OK?

YES	Go to Step 2 and Go to Step 4.
NO	R or Y wire open, or Y wire shorted to ground

10) After repairing the trouble, clear the DTC using SDS tool. (☞4-28)

Step 1 (When indicating P1658:)

1) Turn the ignition switch OFF.
2) Lift and support the fuel tank. (☞5-3)
3) Check the EXCVA motor coupler ② for loose or poor contacts.

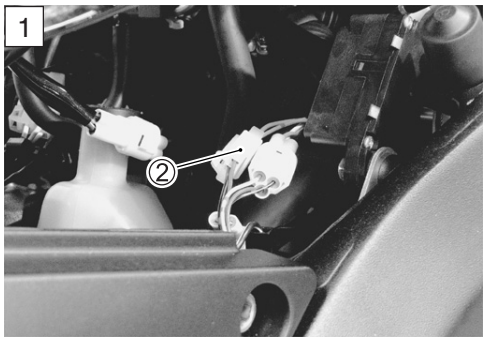

Is the contacting OK?

YES	Go to Step 6.
NO	Loose or poor contacts on the EXCV motor coupler

4) After repairing the trouble, clear the DTC using SDS tool. (☞4-28)

Step 2

1) Turn the ignition switch OFF.
2) Remove the right under cowling. (☞8-5)
3) Check the installation of EXCV cables. (☞6-9)
   If it is necessary, adjust the EXCV cables. (☞6-8)

4) Disconnect the EXCVA position sensor coupler ①.
5) Turn the ignition switch ON.
6) Measure the voltage between the R wire terminal Ⓒ and ground.
7) If OK, then measure the voltage between the R wire terminal Ⓒ and B/Br wire terminal Ⓑ.

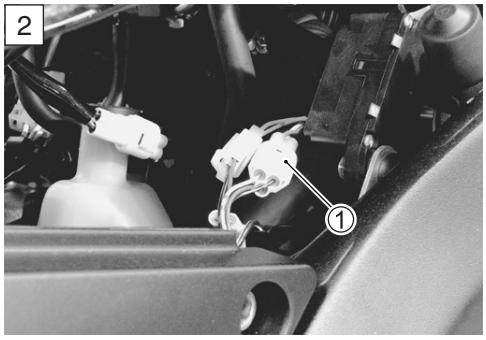

DATA EXCVA position sensor input voltage: 4.5 – 5.5 V
(⊕ R – ⊖ Ground)
(⊕ R – ⊖ B/Br)

TOOL 09900-25008: Multi circuit tester set

Tester knob indication: Voltage (⎓)

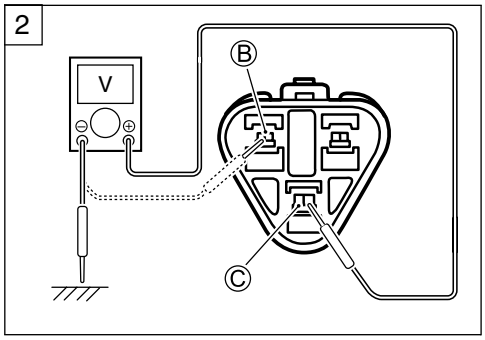

Is the voltage OK?

YES	Go to Step 3.
NO	• Loose or poor contacts on the ECM coupler (terminal ⑦ or ㉟) • Open or short circuit in the R wire or B/Br wire

8) After repairing the trouble, clear the DTC using SDS tool. (☞4-28)

Step 3

1) Turn the ignition switch OFF.
2) Check the continuity between Y wire and ground.

DATA EXCVA position sensor continuity: ∞ Ω (Infinity)

3) If OK, then measure the EXCVA position sensor resistance.

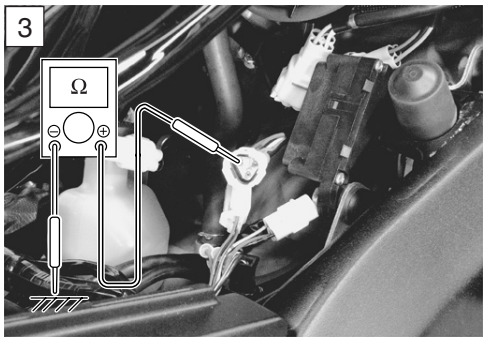

4) Connect the EXCVA position sensor coupler.
5) Set the EXCVA to adjustment position. (☞6-4)

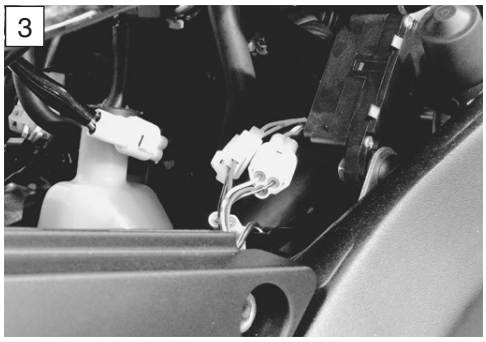

6) Disconnect the EXCVA position sensor coupler and measure the resistance. (between Y and W wires)

DATA EXCVA position sensor resistance at adjustment position: Approx. 3.1 kΩ (⊕ Y – ⊖ W)

TOOL 09900-25008: Multi circuit tester set

Tester knob indication: Resistance (Ω)

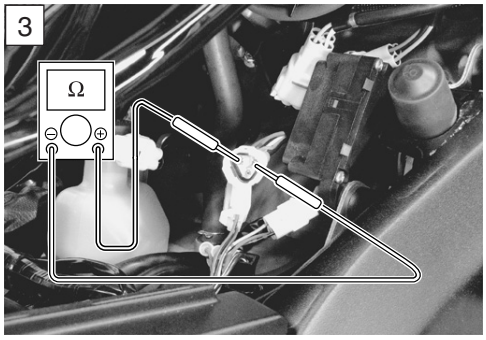

Is the resistance OK?

YES	Go to Step 4.
NO	Replace the EXCVA with a new one.

Step 4

1) Turn the ignition switch OFF.
2) Connect the position sensor coupler ①.
3) Measure the EXCVA position sensor output voltage at EXCV fully closed position and fully opened position.
4) Insert the needle pointed probes to the back side of the EXCVA position sensor coupler. (⊕ Y – ⊖ B/Br)
5) Disconnect the EXCVA motor coupler ②.
6) To set the EXCV to fully closed position, apply 12 V to Ⓐ and Ⓑ terminals.
   Positive wire – Ⓐ (P wire) terminal
   Negative wire – Ⓑ (Gr wire) terminal
7) Turn the ignition switch ON.
8) Measure the EXCVA position sensor output voltage at EXCV fully closed position.
9) Then, to set the EXCV to fully opened position, apply 12 V to Ⓑ and Ⓐ terminals.
   Positive wire – Ⓑ (Gr wire) terminal
   Negative wire – Ⓐ (P wire) terminal
10) Measure the EXCVA position sensor output voltage at EXCV fully opened position.

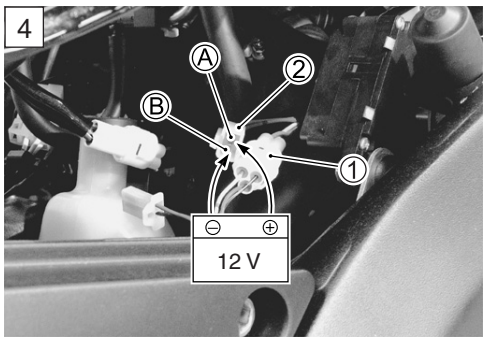

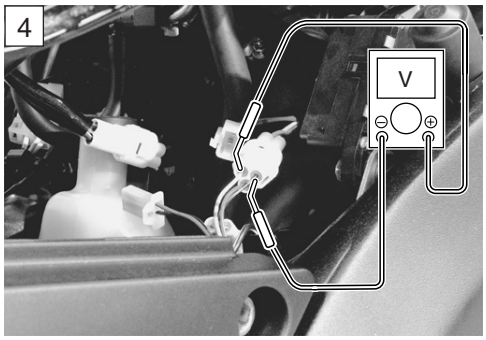

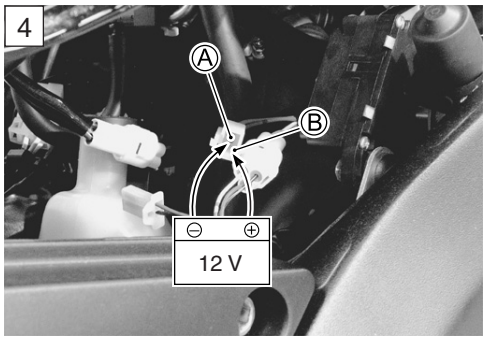

DATA EXCVA position sensor output voltage
EXCV is fully closed: 0.5 – 1.3 V
EXCV is fully opened: 3.7 – 4.5 V
(⊕ Y – ⊖ W)

TOOL 09900-25008: Multi circuit tester set
09900-25009: Needle pointed probe set

Tester knob indication: Voltage (⎓)

Is the voltage OK?

YES	Replace the ECM with a known good one, and inspect it again.
NO	Go to Step 5.

11) After repairing the trouble, clear the DTC using SDS tool. (☞4-28)

Step 5

1) If the EXCVA position sensor output voltage is 0.5 V and less at EXCV fully closed position, adjust the output voltage to the specified value by turning out the No.1 cable adjuster ④.
2) Repeat the above procedure (Step 4) until the output voltage becomes specified value. (If C46/P1657 code is indicated after adjusting the voltage, increase the voltage to 0.4 V.)

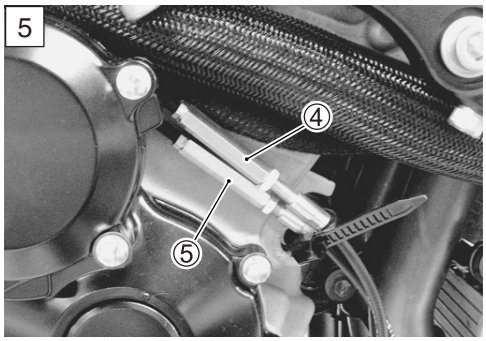

CAUTION

- **Adjusting the cable with the EXCV fully opened or fully closed can damage the EXCVA. Be sure to adjust the cable with the EXCV set in adjustment position. (☞6-4)**
- **Do not turn the EXCVA pulley using the wrench.**

3) If the EXCVA position sensor output voltage is 4.5 V and more at EXCV fully opened position, adjust the output voltage to the specified value by turning out the No.2 cable adjuster ⑤.
   Repeat the above procedure (Step 4) until the output voltage is within the specified value.

DATA EXCVA position sensor output voltage
EXCV is fully closed : 0.5 ≦ Output Voltage ≦ 1.3
EXCV is fully opened: 3.7 ≦ Output Voltage ≦ 4.5

Is the voltage OK?

YES	Replace the ECM with a known good one, and inspect it again.
NO	Replace the EXCVA with a new one.

4) After repairing the trouble, clear the DTC using SDS tool. (☞4-28)

Step 6

1) Turn the ignition switch OFF.
2) Disconnect the EXCVA motor coupler ②.

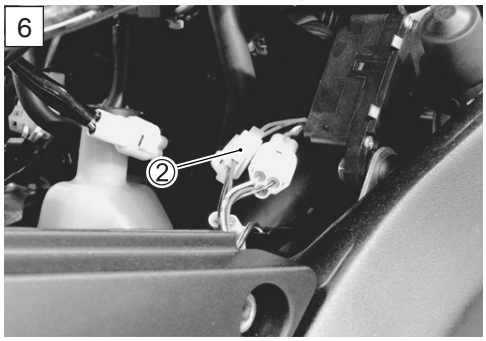

3) Apply 12 V to the terminals and check the operation of EXCVA.

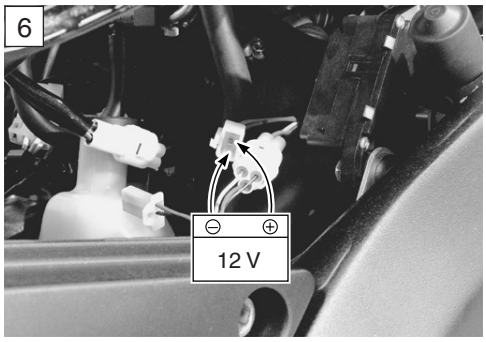

4) Then, switch the wires supplied 12 V and check the operation of EXCVA.
(Check the operation of EXCVA in both way.)

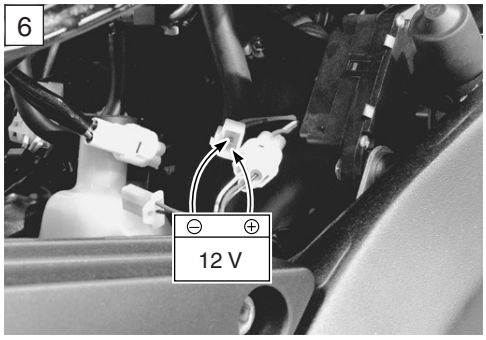

Is the operation OK?

YES	• Loose or poor contacts on the EXCVA or ECM coupler (terminal ⑬ or ①) • Open or short circuit in the B/R wire or R/B wire • If wire and connection are OK, intermittent trouble or faulty ECM. • Recheck each terminal and wire harness for open circuit and poor connection. • Replace the ECM with a known good one, and inspect it again.
NO	• Replace the EXCVA with a new one. • Inspect that the EXCV and two cables move smoothly. (☞6-14)

5) After repairing the trouble, clear the DTC using SDS tool. (☞4-28)

ACTIVE CONTROL INSPECTION

1) Set up the SDS tool. (Refer to the SDS operation manual for further details.)
2) Turn the ignition switch ON.
3) Click “Exhaust valve operating control” ①.

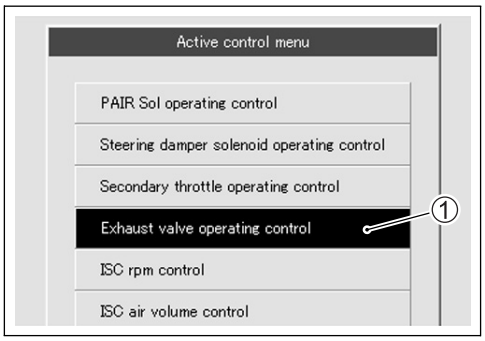

4) Click each button ②.
   At this time, if an operation sound is heard from the EXCVA, the function is normal.

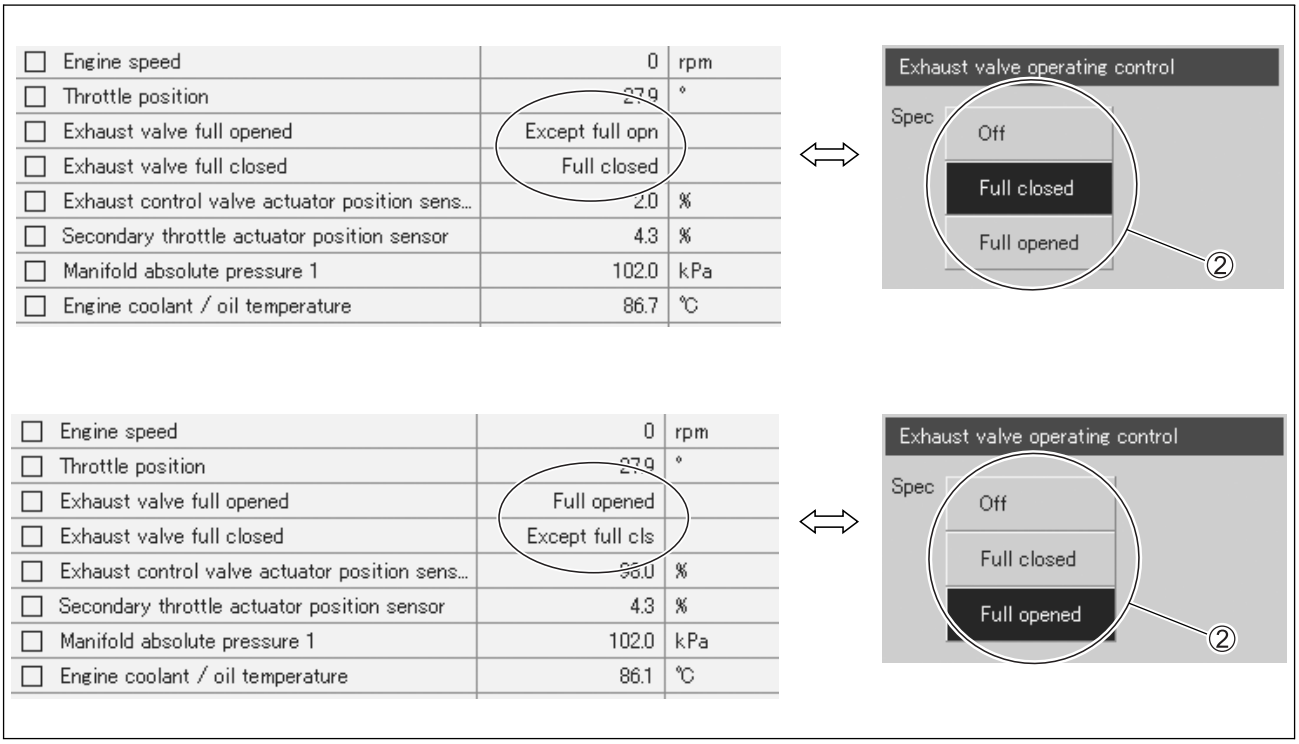

"C49" (P1656) PAIR CONTROL SOLENOID VALVE CIRCUIT MALFUNCTION

DETECTED CONDITION	POSSIBLE CAUSE
PAIR control solenoid valve voltage is not input to ECM.	• PAIR control solenoid valve circuit open or short • PAIR control solenoid valve malfunction • ECM malfunction

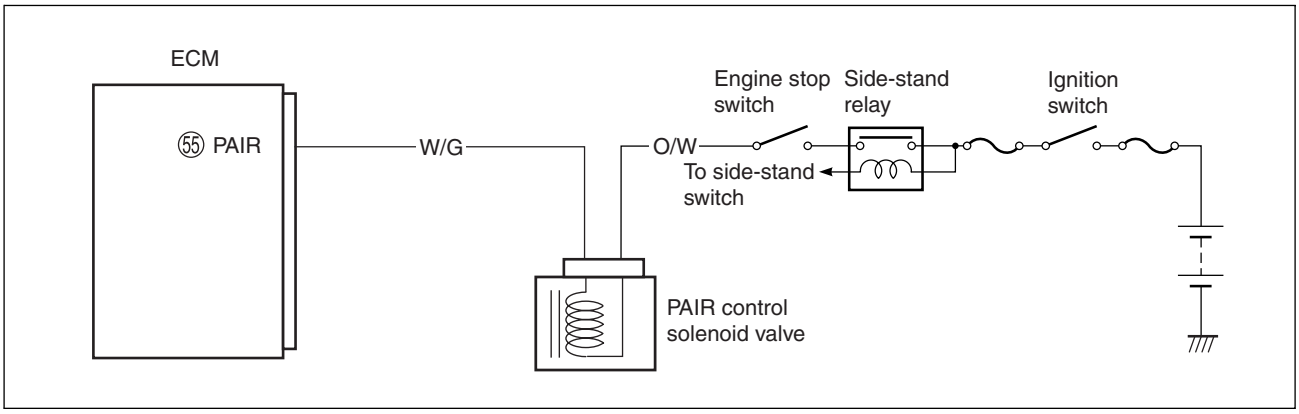

INSPECTION

Step 1

1) Turn the ignition switch OFF.
2) Remove the air cleaner box. (☞5-14)
3) Check the PAIR control solenoid valve coupler ① for loose or poor contacts.
   If OK, then measure the PAIR control solenoid valve resistance.

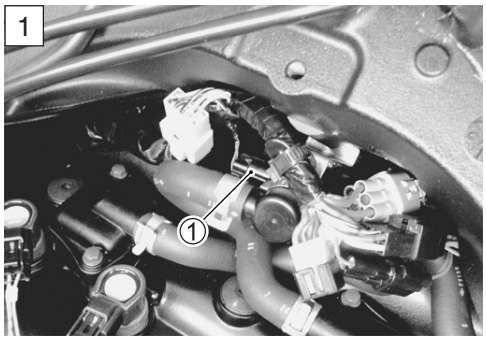

4) Remove the PAIR control solenoid valve. (☞11-6)
5) Measure the resistance between terminals.

DATA PAIR valve resistance: 18 – 22 Ω at 20 – 30 °C (68 – 86 °F) (Terminal – Terminal)

TOOL 09900-25008: Multi-circuit tester set

Tester knob indication: Resistance (Ω)

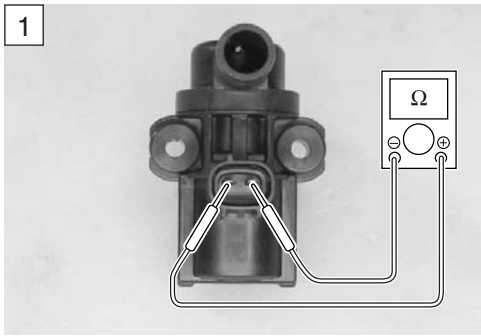

Is the resistance OK?

YES	Go to Step 2.
NO	Replace the PAIR control solenoid valve with a new one.

6) After repairing the trouble, clear the DTC using SDS tool. (☞4-28)

Step 2

1) Turn the ignition switch ON.
2) Measure the voltage between O/W wire and ground.

DATA PAIR valve voltage: Battery voltage
(⊕ O/W – ⊖ Ground)

TOOL 09900-25008: Multi-circuit tester set

Tester knob indication: Voltage (⎓)

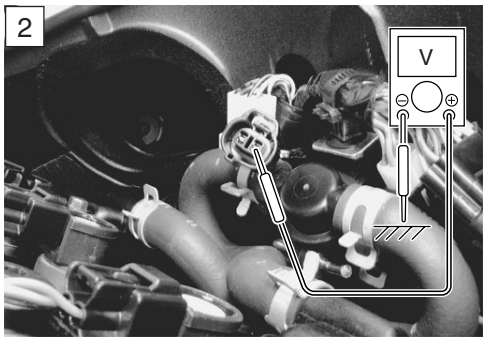

Is the voltage OK?

YES	• W/G wire open or shorted to ground, or poor ⑤⑤ connection failure. • If wire and connection are OK, intermittent trouble or faulty ECM. • Recheck each terminal and wire harness for open circuit and poor connection. • Replace the ECM with a known good one, and inspect it again.
NO	Open or short circuit in the O/W wire.

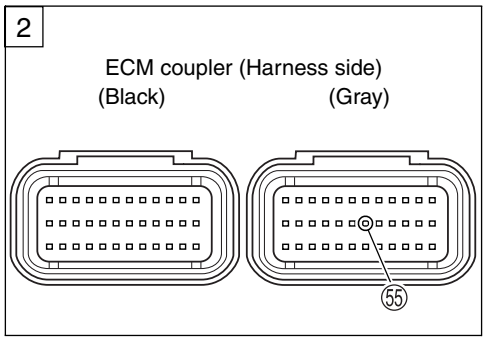

3) After repairing the trouble, clear the DTC using SDS tool. (☞4-28)

ACTIVE CONTROL INSPECTION

1) Set up the SDS tool. (Refer to the SDS operation manual for further details.)
2) Turn the ignition switch ON.
3) Click “PAIR Sol operating control” ①.

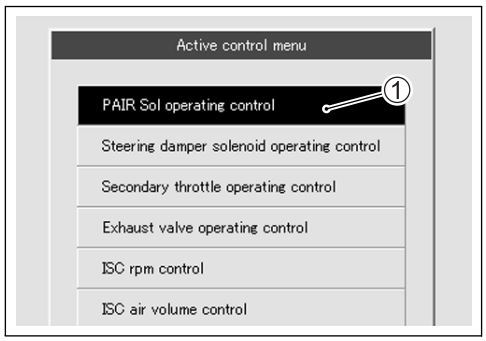

4) Click each button ②.
At this time, if an operation sound is heard from the PAIR control solenoid valve, the function is normal.

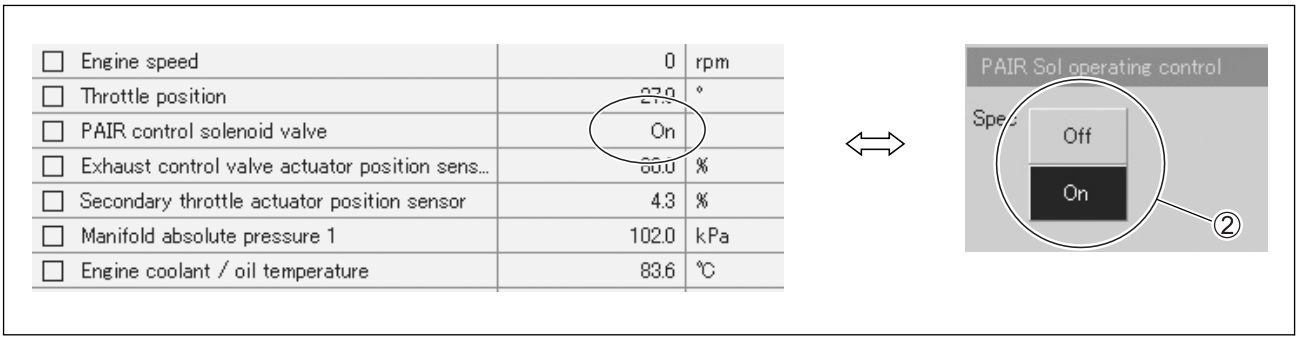

"C60" (P0480) COOLING FAN RELAY CIRCUIT MALFUNCTION

DETECTED CONDITION	POSSIBLE CAUSE
Cooling fan relay signal is not input to ECM.	• Cooling fan relay circuit open or short • ECM malfunction

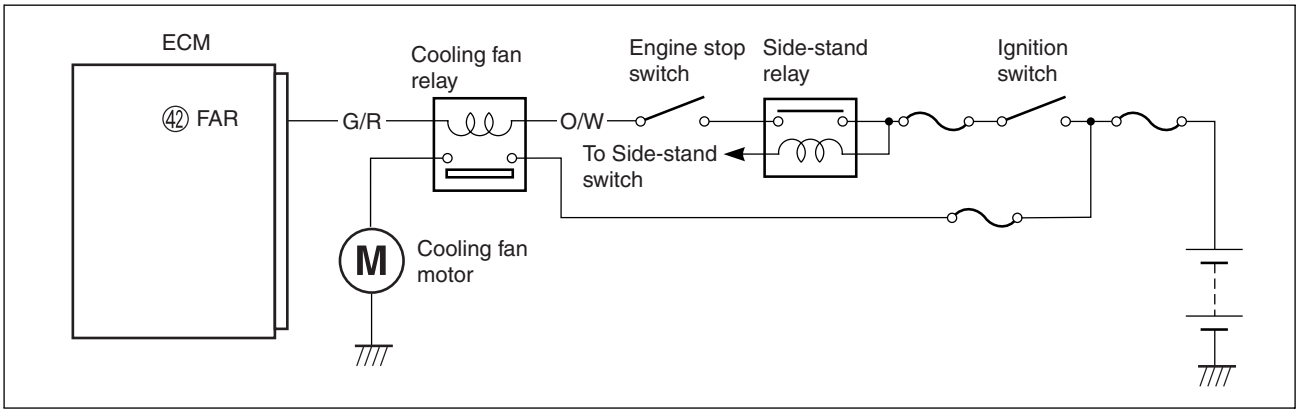

INSPECTION

Step 1

1) Turn the ignition switch OFF.
2) Remove the front seat. (☞8-8)
3) Check the cooling fan relay coupler for loose or poor contacts. If OK, then inspection the cooling fan relay. (☞7-7)

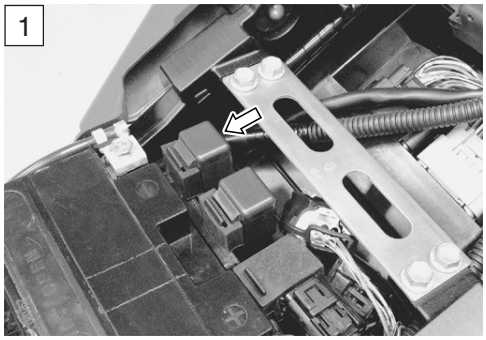

Is the cooling fan relay OK?

YES	• O/W and G/R wire open or shorted to ground, or poor ㊷ connection • If wire and connection are OK, intermittent trouble or faulty ECM. • Recheck each terminal and wire harness for open circuit and poor connection. • Replace the ECM with a known good one, and inspect it again.
NO	Replace the cooling fan relay with a new one.

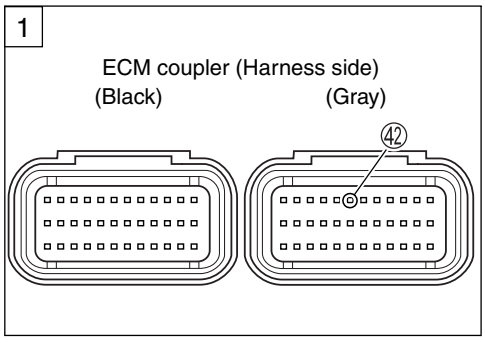

4) After repairing the trouble, clear the DTC using SDS tool. (☞4-28)

ACTIVE CONTROL INSPECTION

1) Set up the SDS tool. (Refer to the SDS operation manual for further details.)
2) Start the engine and run it idling condition.
3) Click “Cooling fan relay control” ①.

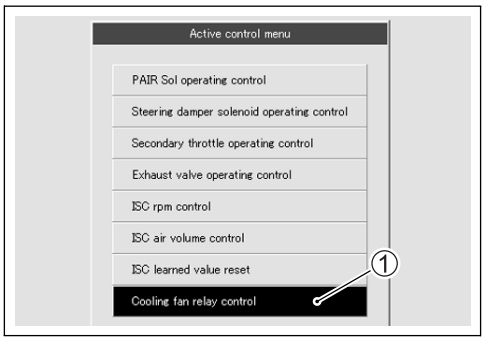

4) Click the “Operate” ②.
   At this time, if an operation sound is heard from the cooling fan relay and cooling fan motor is operated, the function is normal.

NOTE:
The cooling fan relay and cooling fan motor inspection is operational at any engine coolant temperature until reaching 100 °C (212 °F). In a hot engine condition with the intake air temperature exceeding 40 °C (104 °F), however, the engine coolant temperature at which the inspection is operational will be restricted to 95 °C (203 °F).

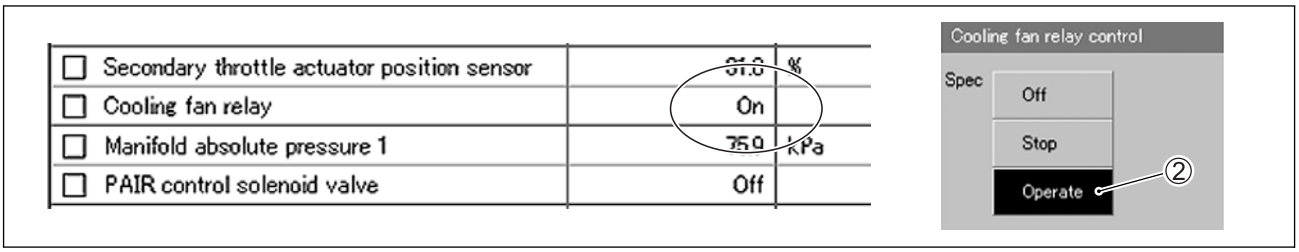

5) Click the “Stop” ③ to check the operation properly.

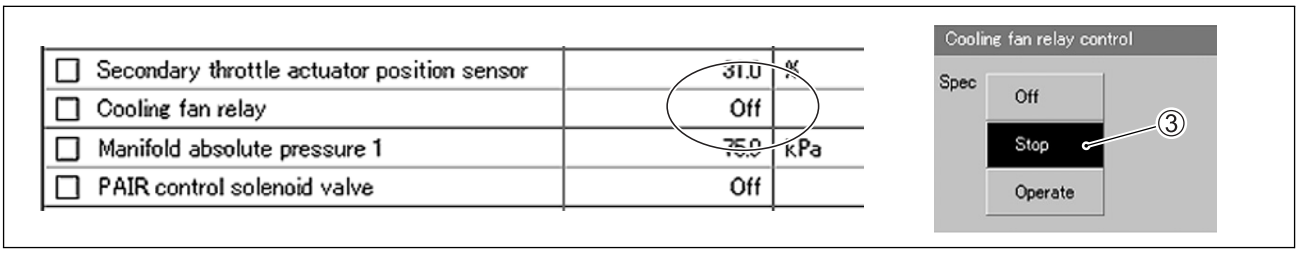

6) Click the “Off” ④ to check the cooling fan relay and cooling fan motor operation.

NOTE:
This inspection should be begun from when the engine coolant temperature is below 50 °C (122 °F).
Check that the cooling fan relay operates for a few seconds as the engine coolant temperature arrives each at 50 °C (122 °F), 70 °C (158 °F) and 90 °C (194 °F)/above 4 000 r/min. It is cooling fan motor malfunction or its circuit failure when the motor would not run even if the relay turns ON.

NOTE:
There is a tolerance of operating temperature of cooling fan relay.

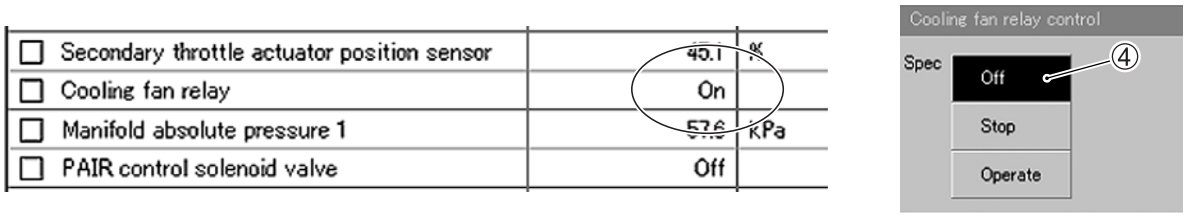

"C91" (P0500) VEHICLE SPEED SENSOR CIRCUIT MALFUNCTION

DETECTED CONDITION	POSSIBLE CAUSE
Speedometer does not recieve signal from the vehicle speed sensor for more than 6 sec. when the motorcycle is running. ECM does not receive signal from the vehicle speed sensor for more than 6 sec. when the motorcycle is running. Failure in communication between ECM and speedometer with reference to vehicle speed.	• Speed sensor circuit open or short • Speed sensor malfunction • Speedometer malfunction • ECM malfunction

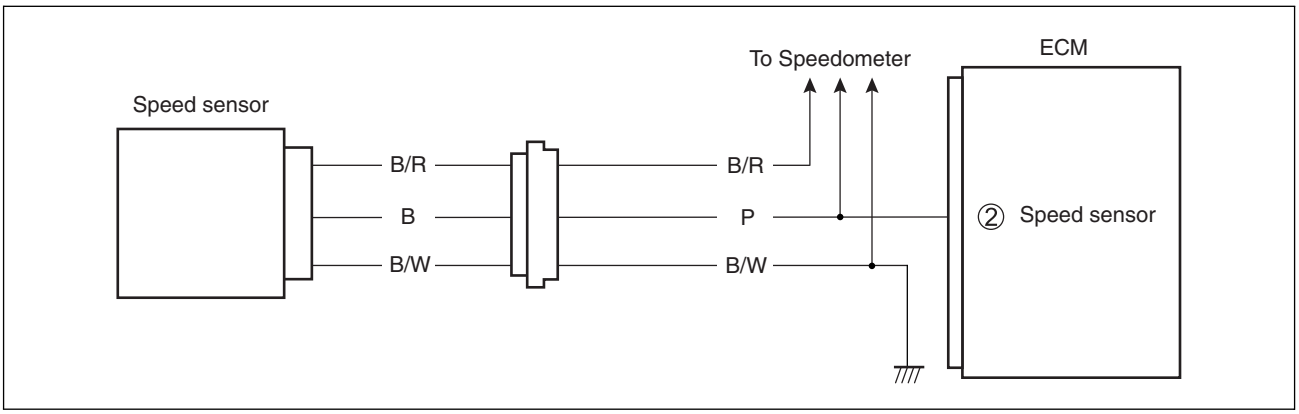

CAUTION

When using the multi-circuit tester, do not strongly touch the terminal of the ECM coupler with a needle pointed tester probe to prevent the terminal damage or terminal bend.

INSPECTION

1) Turn the ignition switch OFF.
2) Lift and support the fuel tank. (☞5-3)
3) Check the speed sensor coupler ① for loose or poor contacts.
   If OK, remove the speed sensor. (☞9-33)

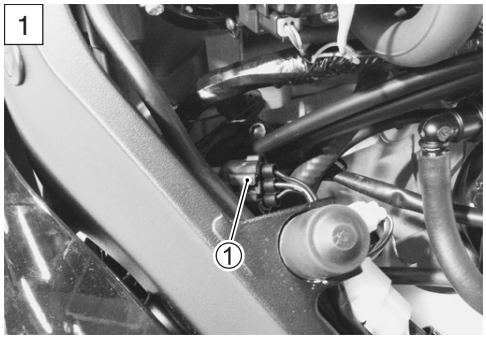

4) Connect 12 V battery, 10 kΩ resistor and the multi-circuit tester as shown in the right illustration.

TOOL 09900-25008: Multi-circuit tester set

Tester knob indication: Voltage (⎓)

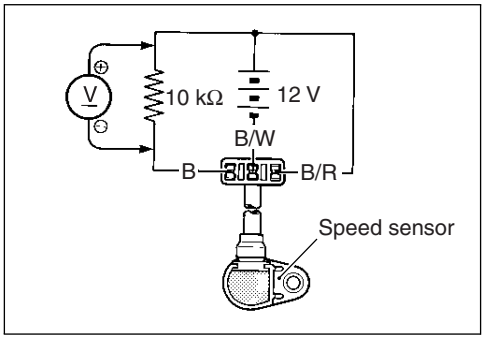

5) Under this condition, if a suitable screwdriver touching the pick-up surface of the speed sensor is moved, the tester reading voltage changes (0 V → 12 V or 12 V → 0 V). If the tester reading voltage does not change, replace the speedometer sensor with a new one.

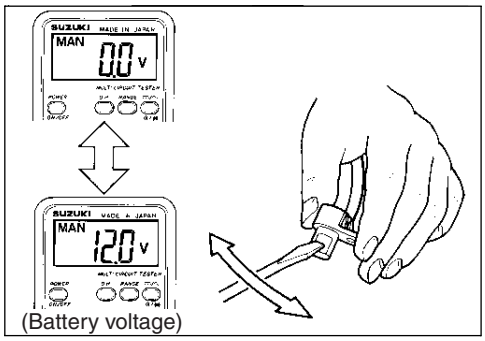

Is the voltage OK?

YES	• P wire open or shorted to ground • Loose or poor contacts on the speed sensor coupler or ECM coupler (terminal ②) • If wires and connection are OK, intermittent trouble or faulty ECM. • Recheck each terminal and wire harness for open circuit and poor connection. • Replace the ECM with a known good one, and inspect it again.
NO	• Inspect that metal particles or foreign material stuck on the speed sensor and rotor tip. • If there are no metal particles and foreign material, then replace the speed sensor with a new one.

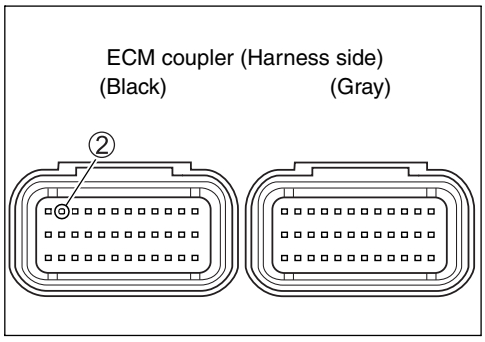

6) After repairing the trouble, clear the DTC using SDS tool. (☞4-28)

"C93" (P1769) STEERING DAMPER SOLENOID VALVE CIRCUIT MALFUNCTION

DETECTED CONDITION			POSSIBLE CAUSE
C93		Steering damper control current does not flow to the solenoid valve. With IG turned ON, ECM detects a failure of internal circuit element. Solenoid current does not converge to the target value. Battery voltage is 10 V or below with the engine running.	• Steering damper solenoid valve circuit interrupter element shorted • Feedback current convergence failure • Low battery voltage • ECM malfunction
P1769	H	Steering damper control current is higher than specified value. An abnormal current is detected during the vehicle standstill. Solenoid current is 0.7 A or above.	• Steering damper solenoid valve circuit shorted to VCC
	L	Steering damper control current is lower than specified value. With IG turned ON, ECM detects a discontinuity. An abnormal current is detected during the vehicle standstill.	• Steering damper solenoid valve circuit open • Steering damper solenoid valve circuit shorted

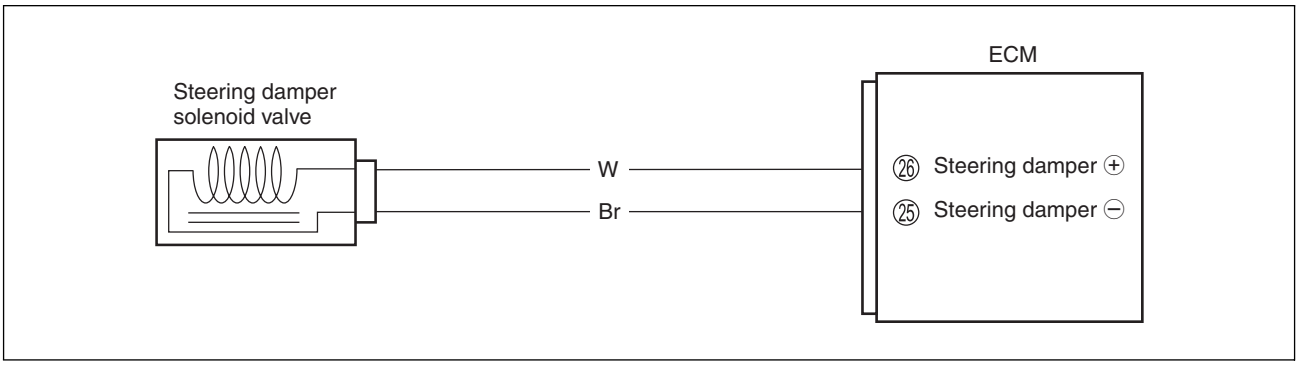

INSPECTION

Step 1

1) Turn the ignition switch OFF.
2) Check the steering damper solenoid valve coupler ① for loose or poor contacts.
   If OK, then measure the steering damper solenoid valve resistance.

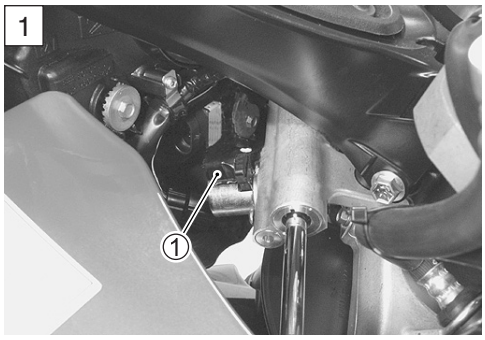

3) Disconnect the steering damper solenoid valve coupler.
4) Measure the steering damper solenoid valve resistance.

DATA Steering damper solenoid valve resistance:
Approx 12.5 Ω at 20 °C (68 °F)

TOOL 09900-25008: Multi-circuit tester set

Tester knob indication: Resistance (Ω)

Is the resistance OK?

YES	Go to Step 2.
NO	Replace the steering damper with a new one.

5) After repairing the trouble, clear the DTC using SDS tool. (☞4-28)

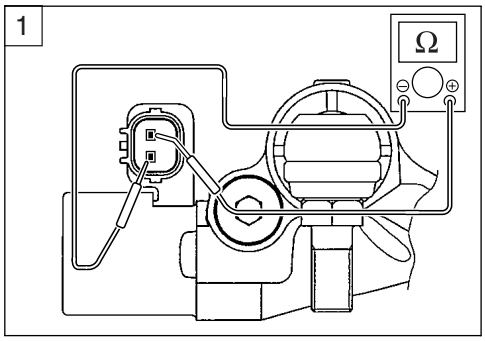

Step 2
1) Turn the ignition switch ON.
2) Measure the voltage between W wire and ground.

DATA Steering damper solenoid valve voltage:
Approx. 10 V when battery is fully charged condition
(⊕ W – ⊖ Ground)

TOOL 09900-25008: Multi-circuit tester set

Tester knob indication: Voltage (⎓)

Is the voltage OK?

YES	• W wire shorted to VCC, or poor ㉖ connection failure. • Br wire open or shorted to ground, or poor ㉕ connection failure. • If wire and connection are OK, intermittent trouble or faulty ECM. • Recheck each terminal and wire harness for open circuit and poor connection. • Replace the ECM with a known good one, and inspect it again.
NO	• Low battery voltage or fuse is blown. • W wire open or shorted to ground, or poor ㉖ connection failure. • If wire and connection are OK, intermittent trouble or faulty ECM. • Recheck each terminal and wire harness for open circuit and poor connection. • Replace the ECM with a known good one, and inspect it again.

3) After repairing the trouble, clear the DTC using SDS tool. (☞4-28)

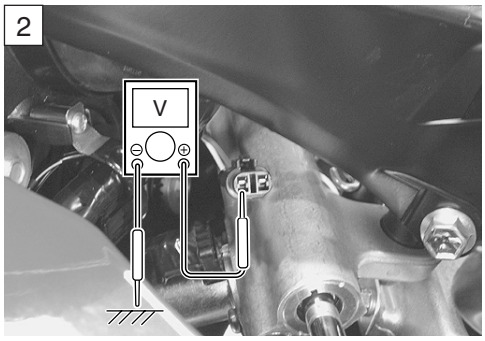

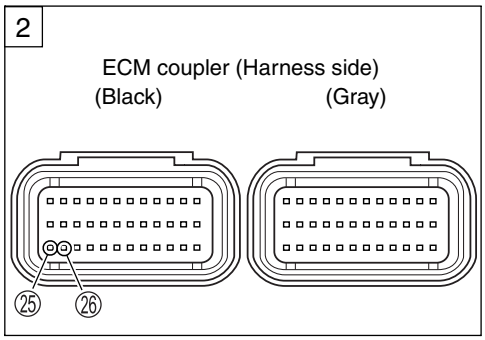

ACTIVE CONTROL INSPECTION

1) Set up the SDS tool. (Refer to the SDS operation manual for further details.)
2) Raise the front wheel off the ground.
3) Turn the ignition switch ON.
4) Click “Steering damper solenoid operating control” ①.

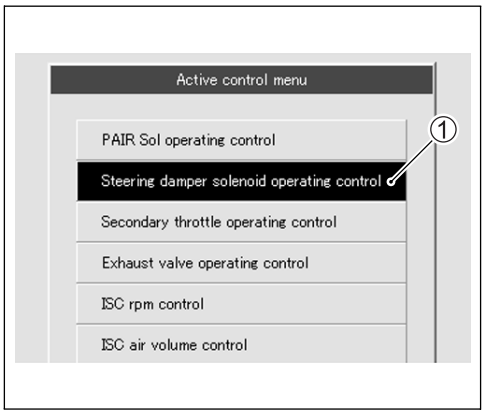

5) Click each button ② ON/OFF while turning the handlebars left and right.

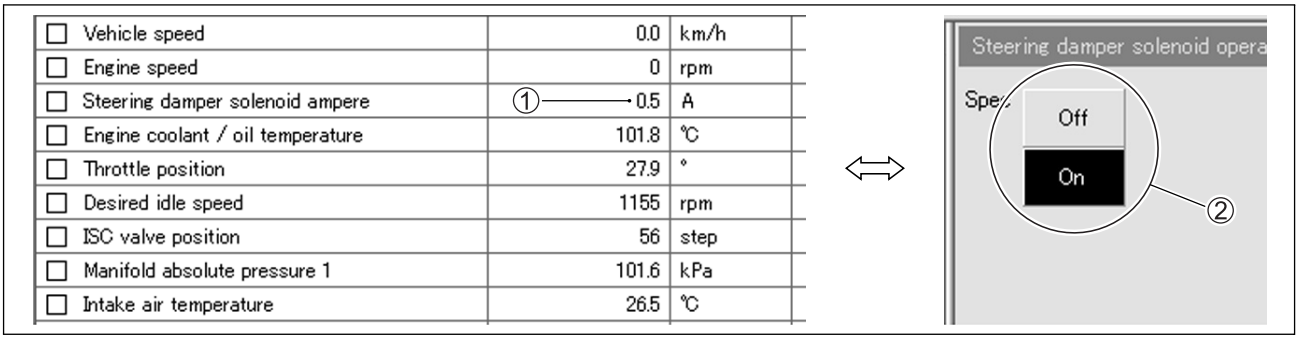

At this time, if the steering damping resistance changes from light to heavy by switching ON/OFF, the function is normal.

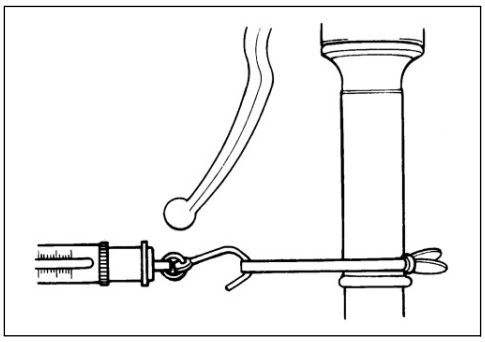

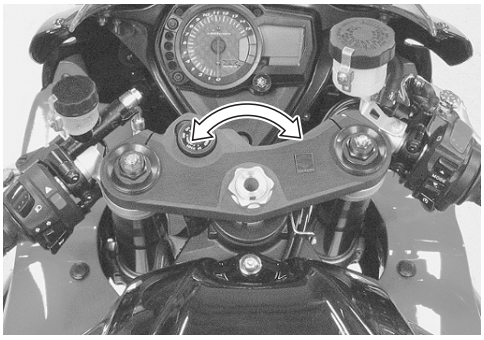

SENSORS

CMP SENSOR INSPECTION

The camshaft position sensor is installed on the cylinder head cover. (☞4-36)

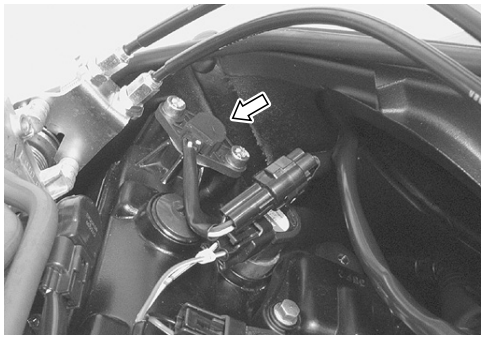

CMP SENSOR REMOVAL AND INSTALLATION

- Remove the CMP sensor. (☞3-29)
- Install the CMP sensor in the reverse order of removal.

CKP SENSOR INSPECTION

The crankshaft position sensor is installed on the right side of middle crankcase cover. (☞4-38)

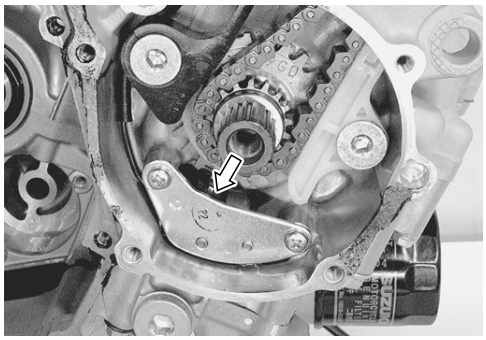

CKP SENSOR REMOVAL AND INSTALLATION

- Remove the starter clutch cover. (☞3-18)
- Install the starter clutch cover in the reverse order of removal.

IAP SENSOR INSPECTION

The intake air pressure sensor is installed at the rear side of the air cleaner box. (☞4-40)

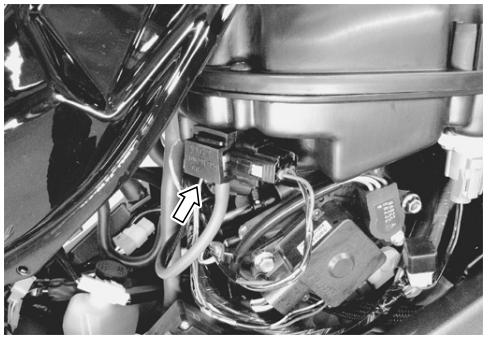

IAP SENSOR REMOVAL AND INSTALLATION

- Lift and support the fuel tank. (☞5-3)
- Remove the IAP sensor from the air cleaner box.
- Install the IAP sensor in the reverse order of removal.

TP SENSOR INSPECTION

The throttle position sensor is installed at the right side of the No.4 throttle body. (☞4-45)

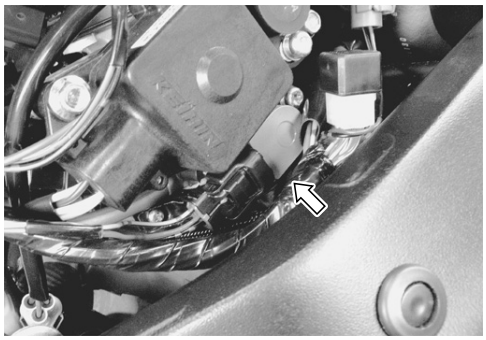

TP SENSOR REMOVAL AND INSTALLATION

- Remove the TP sensor. (☞5-17)
- Install the TP sensor in the reverse order of removal.

TPS ADJUSTMENT

- Adjust the TP sensor. (☞4-21)

ECT SENSOR INSPECTION

The engine coolant temperature sensor is installed at the cylinder head. (☞4-49)

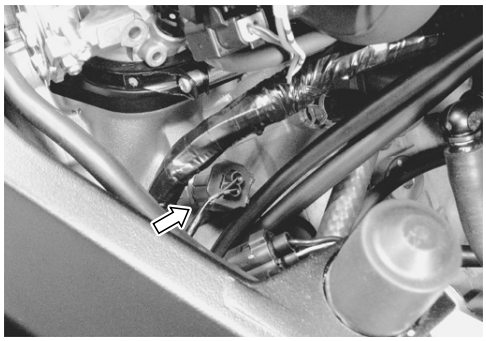

ECT SENSOR REMOVAL AND INSTALLATION

- Remove the ECT sensor. (☞7-7)
- Install the ECT sensor in the reverse order of removal.

ECT sensor: 18 N·m (1.8 kgf-m, 13.0 lb-ft)

IAT SENSOR INSPECTION

The intake air temperature sensor is installed on the right side of the air cleaner box. (☞4-53)

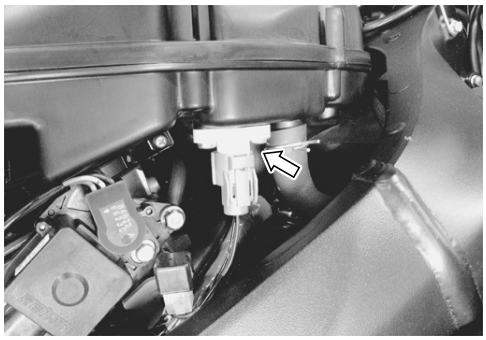

IAT SENSOR REMOVAL AND INSTALLATION

- Remove the air cleaner box. (☞5-14)
- Remove the IAT sensor from the air cleaner box.
- Install the IAT sensor in the reverse order of removal.

IAT sensor: 3 N·m (0.3 kgf-m, 2.0 lb-ft)

AP SENSOR INSPECTION

The AP sensor is located under the front seat. (☞4-57)

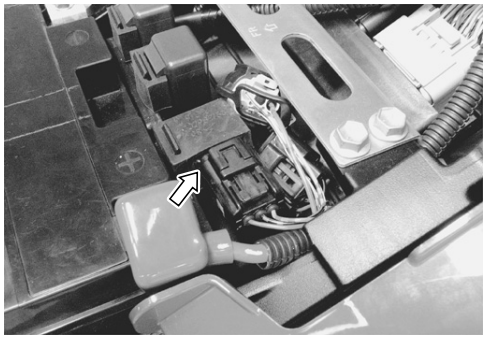

AP SENSOR REMOVAL AND INSTALLATION

- Remove the AP sensor from the frame.
- Install the AP sensor in the reverse order of removal.

TO SENSOR INSPECTION
TO SENSOR REMOVAL AND INSTALLATION

The tip-over sensor is located in front of the battery case. (☞4-62)

- Lift and support the fuel tank. (☞5-3)
- Remove the TO sensor from the battery case.
- Install the TO sensor in the reverse order of removal.

NOTE:
When installing the TO sensor, the arrow mark Ⓐ must be pointed upward.

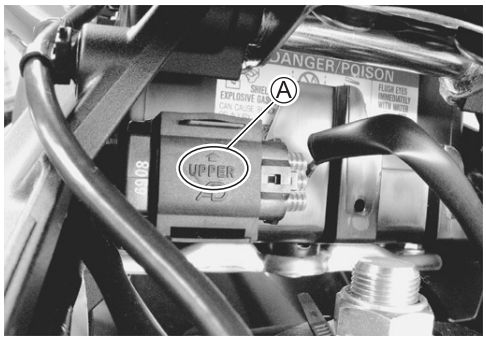

STP SENSOR INSPECTION

The secondary throttle position sensor is installed at the right side of the No.4 throttle body. (☞4-69)

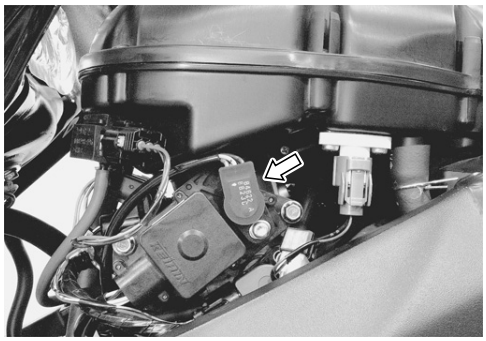

STP SENSOR REMOVAL AND INSTALLATION

- Remove the STP sensor. (☞5-17)
- Install the STP sensor in the reverse order of removal.

STP SENSOR ADJUSTMENT

- Adjust the STP sensor. (☞5-23)

HO2 SENSOR INSPECTION

The heated oxygen sensor is installed to the muffler chamber. (☞4-88)

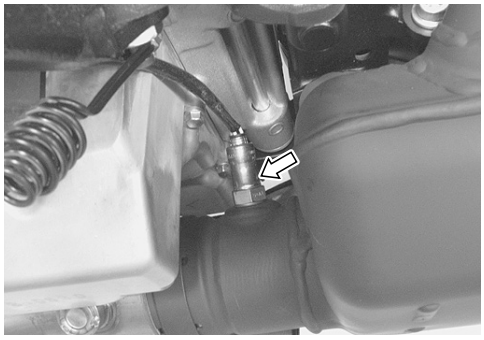

HO2 SENSOR REMOVAL AND INSTALLATION

- Remove the left under cowling. (☞8-5)
- Disconnect the HO2 sensor coupler ①.
- Remove the muffler chamber. (☞6-13)
- Remove the HO2 sensor ②.

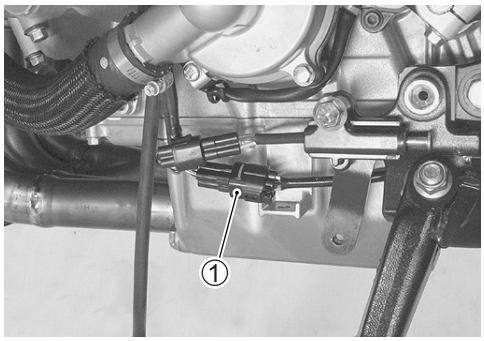

⚠ WARNING

Do not remove the HO2 sensor while it is hot.

CAUTION

*** Be careful not to expose it to excessive shock.**
*** Do not use an impact wrench while removing or installing the HO2 sensor.**
*** Be careful not to twist or damage the sensor lead wires.**

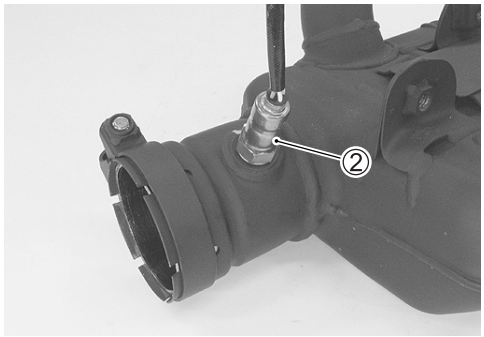

- Installation is in the reverse order of removal.

CAUTION

Do not apply oil or other materials to the sensor air hole.

- Tighten the HO2 sensor to the specified torque.

HO2 sensor: 25 N·m (2.5 kgf-m, 18.0 lb-ft)

FUEL SYSTEM AND THROTTLE BODY

CONTENTS

FUEL DELIVERY SYSTEM 5- 2
FUEL SYSTEM 5- 3
FUEL TANK LIFT-UP 5- 3
FUEL TANK REMOVAL 5- 4
FUEL TANK INSTALLATION 5- 4
FUEL PRESSURE INSPECTION 5- 5
FUEL PUMP INSPECTION 5- 6
FUEL DISCHARGE AMOUNT INSPECTION 5- 6
FUEL PUMP RELAY INSPECTION 5- 7
FUEL PUMP AND FUEL FILTER REMOVAL 5- 8
FUEL MESH FILTER INSPECTION AND CLEANING 5-10
FUEL PUMP AND FUEL MESH FILTER INSTALLATION 5-11
THROTTLE BODY 5-13
CONSTRUCTION 5-13
AIR CLEANER BOX REMOVAL 5-14
THROTTLE BODY REMOVAL 5-15
THROTTLE BODY DISASSEMBLY 5-16
THROTTLE BODY CLEANING 5-19
INSPECTION 5-19
THROTTLE BODY REASSEMBLY 5-20
THROTTLE BODY INSTALLATION 5-22
STP SENSOR ADJUSTMENT 5-23
FUEL INJECTOR REMOVAL 5-24
FUEL INJECTOR INSPECTION 5-24
FUEL INJECTOR INSTALLATION 5-24
ISC VALVE REMOVAL 5-25
ISC VALVE INSPECTION 5-25
ISC VALVE INSTALLATION 5-25
ISC VALVE PRE-SET 5-26
THROTTLE VALVE SYNCHRONIZATION 5-27

⚠ WARNING

Gasoline must be handled carefully in an area well ventilated and away from fire or sparks.

FUEL DELIVERY SYSTEM

The fuel delivery system consists of the fuel tank, fuel pump, fuel filters, fuel feed hose, fuel delivery pipe (including fuel injectors) and fuel pressure regulator. There is no fuel return hose. The fuel in the fuel tank is pumped up by the fuel pump and pressurized fuel flows into the injectors installed in the fuel delivery pipe. Fuel pressure is regulated by the fuel pressure regulator. As the fuel pressure applied to the fuel injectors (the fuel pressure in the fuel delivery pipe) is always kept at absolute fuel pressure of 300 kPa (3.0 kgf/cm^2, 43 psi), the fuel is injected into the throttle body in conic dispersion when the injector opens according to the injection signal from the ECM.
The fuel relieved by the fuel pressure regulator flows back to the fuel tank.

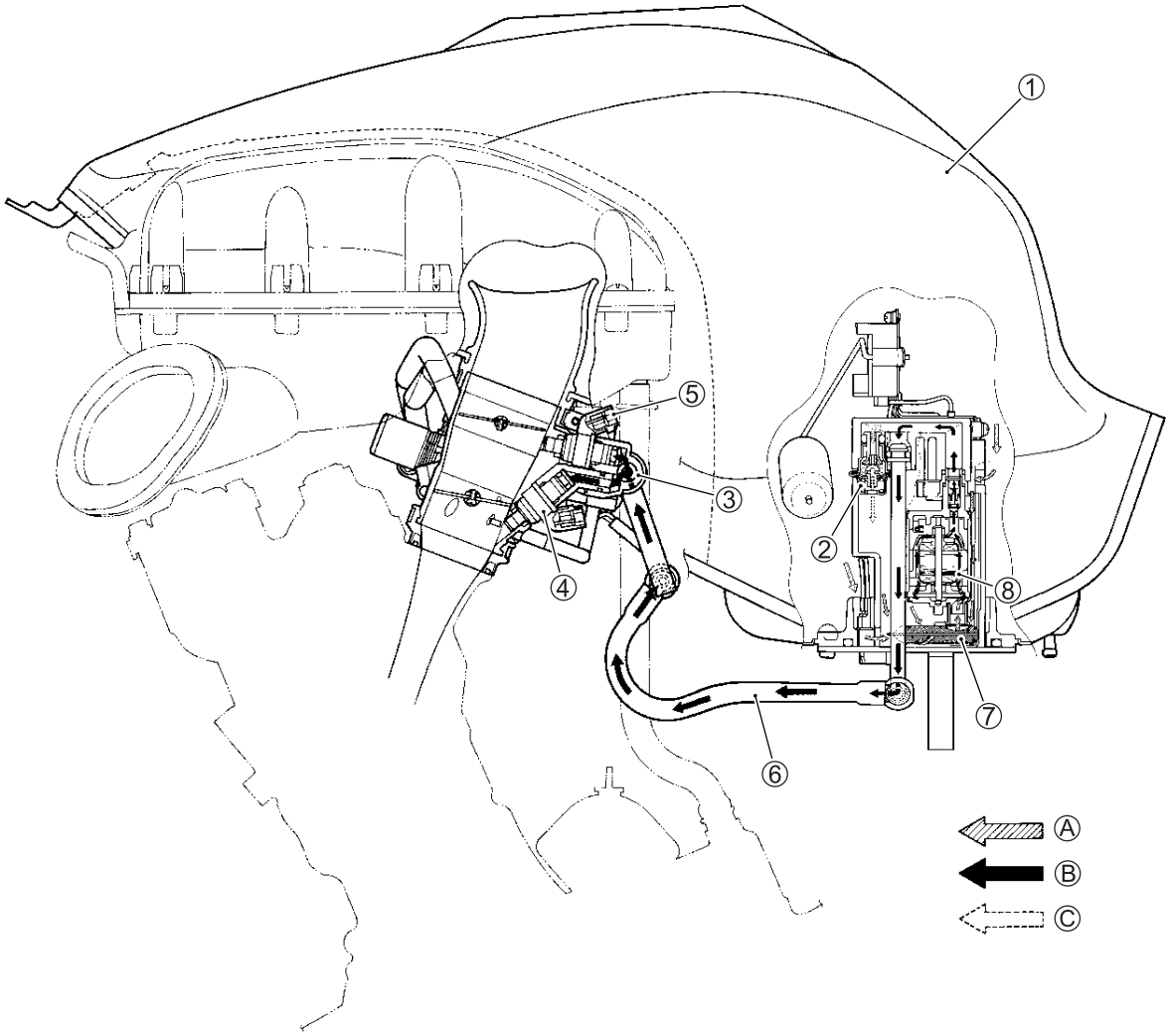

①	Fuel tank	⑦	Fuel mesh filter (For low pressure)
②	Fuel pressure regulator	⑧	Fuel pump
③	Fuel delivery pipe	Ⓐ	Before-pressurized fuel
④	Primary fuel injector	Ⓑ	Pressurized fuel
⑤	Secondary fuel injector	Ⓒ	Relieved fuel
⑥	Fuel feed hose		

FUEL SYSTEM

FUEL TANK LIFT-UP

- Remove the seats. (☞8-8 and -9)
- Remove the fuel tank side covers. (☞8-8)
- Take out the fuel tank prop stay ①.

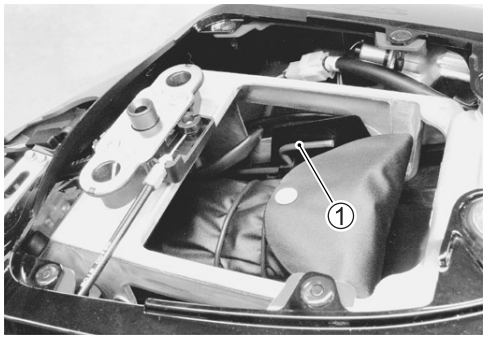

- Remove the fuel tank bolt.

- Lift and support the fuel tank with the fuel tank prop stay.

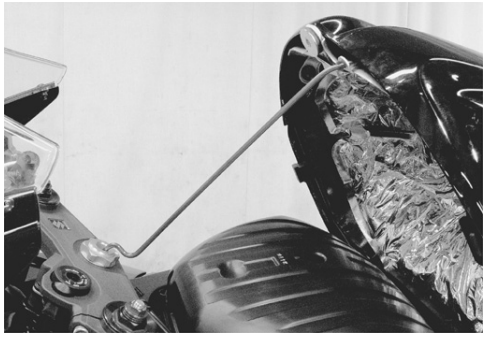

FUEL TANK REMOVAL

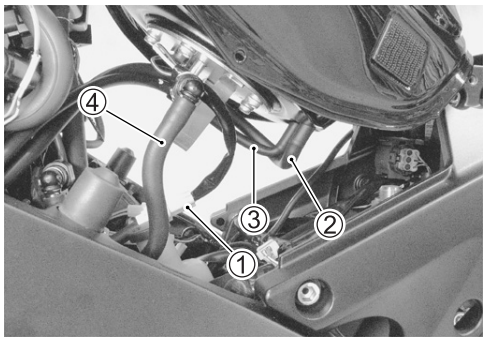

- Lift and support the fuel tank. (☞5-3)
- Disconnect the fuel pump lead wire coupler ①.
- Disconnect the fuel tank drain hose ② and fuel tank breather hose ③ (Except for E-33).
- Place a rag under the fuel feed hose ④ and disconnect the fuel feed hose from the fuel tank.

CAUTION

When removing the fuel tank, do not leave the fuel feed hose ④ on the fuel tank side.

⚠ WARNING

Gasoline is highly flammable and explosive.
Keep heat, spark and flame away.

- Remove the fuel tank by removing the mounting bolt.

FUEL TANK INSTALLATION

- Installation is in the reverse order of removal.

FUEL PRESSURE INSPECTION

- Lift and support the fuel tank. (☞5-3)
- Place a rag under the fuel feed hose ①.
- Remove the fuel feed hose.

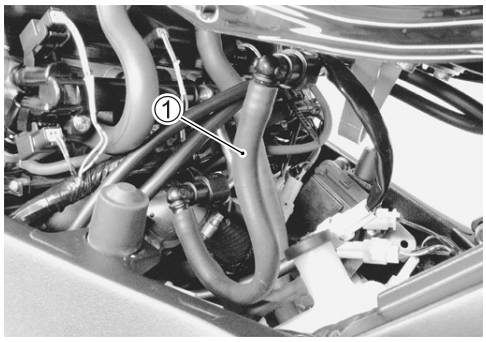

- Install the special tools between the fuel tank and fuel delivery pipe.

TOOL 09940-40211: Fuel pressure gauge adaptor
09940-40220: Fuel pressure gauge hose attachment
09915-77331: Oil pressure gauge
09915-74521: Oil pressure gauge hose

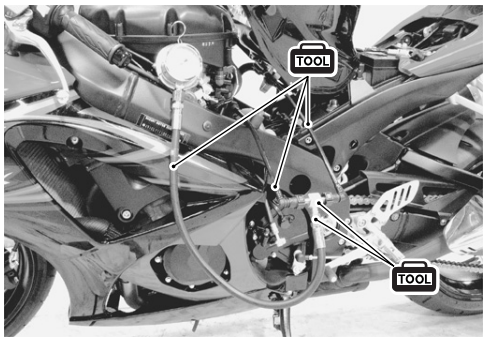

Turn the ignition switch ON and check the fuel pressure.

DATA Fuel pressure: Approx. 300 kPa (3.0 kgf/cm², 43 psi)

If the fuel pressure is lower than the specification, inspect the following items:
* Fuel hose leakage
* Clogged fuel filter
* Pressure regulator
* Fuel pump

If the fuel pressure is higher than the specification, inspect the following items:
* Fuel pump check valve
* Pressure regulator

⚠ WARNING

*** Before removing the special tools, turn the ignition switch OFF position and release the fuel pressure slowly.**
*** Gasoline is highly flammable and explosive. Keep heat, sparks and flame away.**

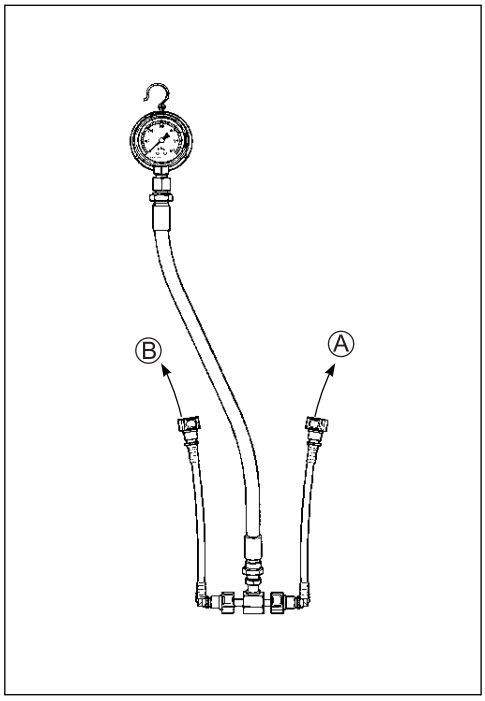

Ⓐ To fuel tank
Ⓑ To fuel delivery pipe

FUEL PUMP INSPECTION

Turn the ignition switch ON and check that the fuel pump operates for few seconds.
If the fuel pump motor does not make operating sound, inspect the fuel pump circuit connections or inspect the fuel pump relay and tip-over sensor.
If the fuel pump relay, tip-over sensor and fuel pump circuit connections are OK, the fuel pump may be faulty, replace the fuel pump with a new one.

FUEL DISCHARGE AMOUNT INSPECTION

⚠ WARNING

Gasoline is highly flammable and explosive.
Keep heat, spark and flame away.

- Lift and support the fuel tank. (☞5-3)
- Place a rag under the fuel feed hose ① and disconnect the fuel feed hose from the fuel pump.

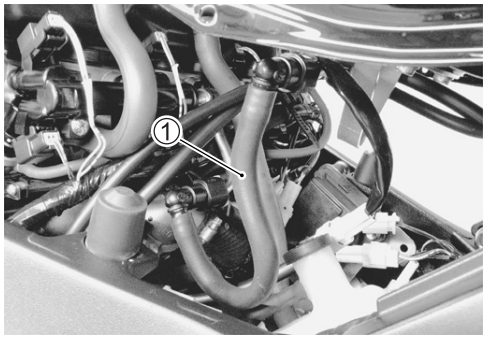

- Connect a proper fuel hose ② to the fuel pump.
- Place the measuring cylinder and insert the fuel hose end into it.

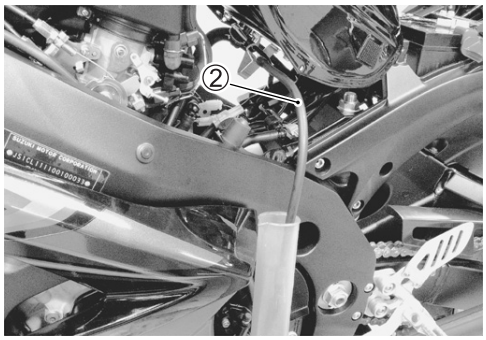

- Disconnect the fuel pump lead wire coupler ③.

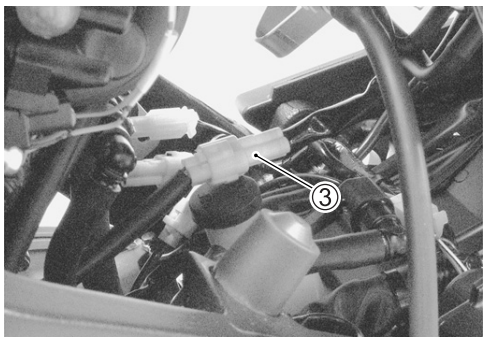

- Connect proper lead wires to the fuel pump lead wire coupler (fuel pump side) and apply 12 V to the fuel pump (between Y/R wire and B/W wire) for 10 seconds and measure the amount of fuel discharged.
  Battery ⊕ terminal ——— Y/R terminal
  Battery ⊖ terminal ——— B/W terminal

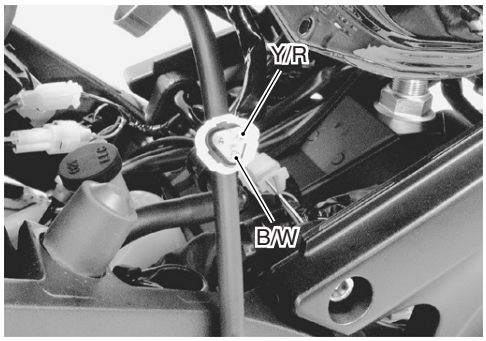

If the pump does not discharge the amount specified, it means that the fuel pump is defective or that the fuel filter is clogged.

DATA Fuel discharge amount:
220 ml (7.4/7.7 US/Imp oz) and more/10 sec.

NOTE:
The battery must be in fully charged condition.

FUEL PUMP RELAY INSPECTION

Fuel pump relay is located in back of the battery.

- Remove the front seat. (☞8-8)
- Remove the fuel pump relay ①.

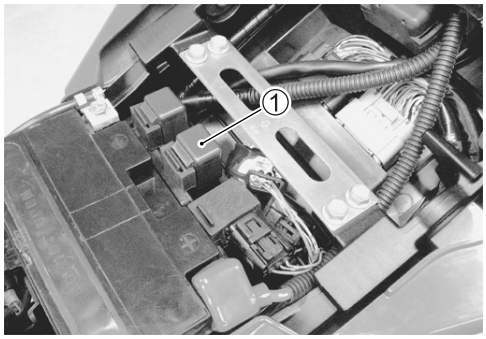

First, check the insulation between Ⓐ and Ⓑ terminals with the multi-circuit tester. Then apply 12 V to Ⓒ and Ⓓ terminals, ⊕ to Ⓒ and ⊖ to Ⓓ, and check the continuity between Ⓐ and Ⓑ.
If there is no continuity, replace the fuel pump relay with a new one.

TOOL 09900-25008: Multi-circuit tester set

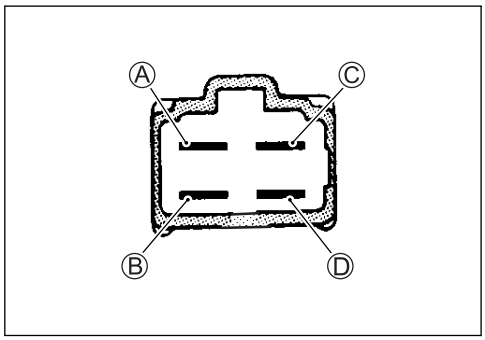

FUEL PUMP AND FUEL FILTER REMOVAL

CONSTRUCTION

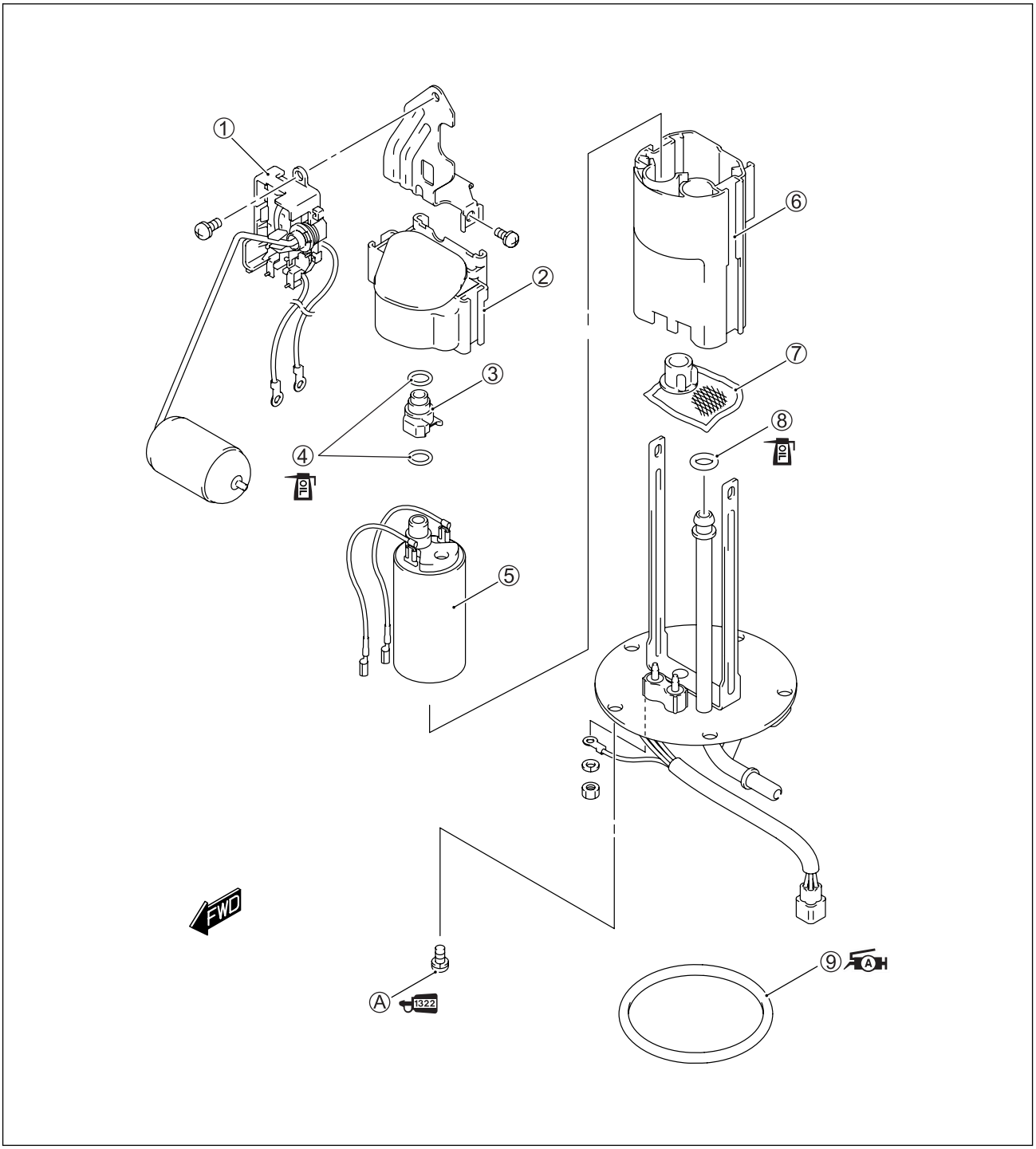

①	Fuel level gauge	⑥	Fuel pump case
②	Fuel filter cartridge	⑦	Fuel mesh filter
③	Fuel outlet joint	⑧	O-ring
④	O-ring	⑨	O-ring
⑤	Fuel pump	Ⓐ	Fuel pump mounting bolt

ITEM	N·m	kgf-m	lb-ft
Ⓐ	10	1.0	7.0

REMOVAL

- Remove the fuel tank. (☞5-4)
- Remove the fuel pump assembly by removing its mounting bolts diagonally.

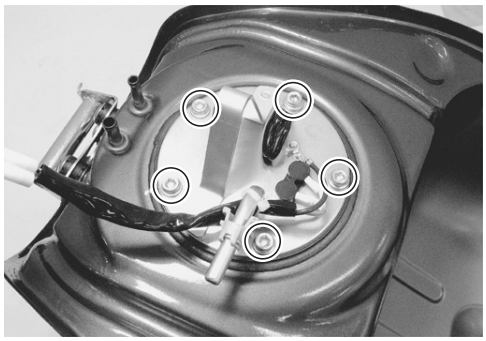

⚠ WARNING

Gasoline is highly flammable and explosive.
Keep heat, spark and flame away.

- Disconnect the lead wires (R and B).

- Remove the fuel level gauge ①.

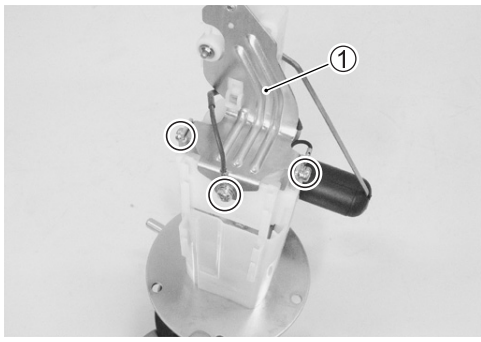

- Remove the fuel filter cartridge ②.

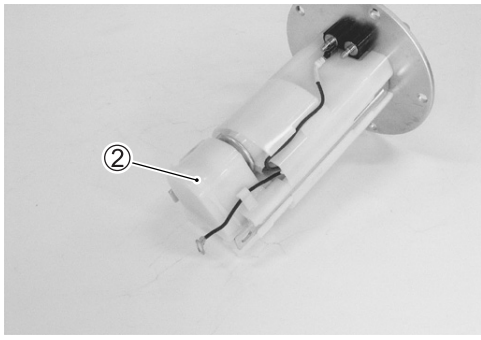

- Remove the fuel outlet joint ③.
- Remove the O-rings ④.

CAUTION

Never remove the fuel pressure regulator ⑤ from the cartridge.

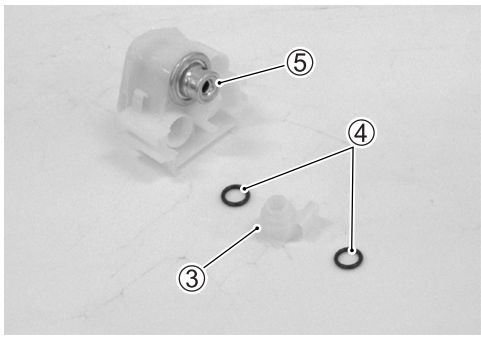

- Remove the O-ring ⑥.

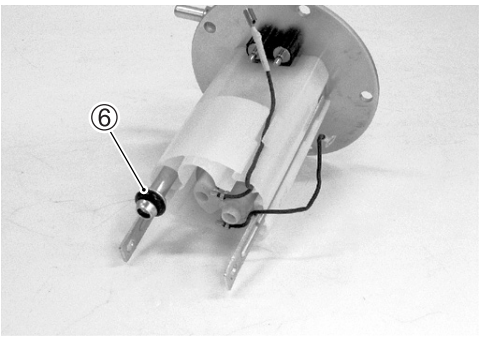

- Remove the nut ⑦.
- Remove the fuel pump plate ⑧.

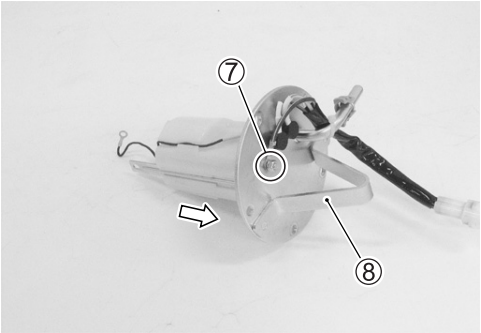

- Remove the fuel mesh filter ⑨.
- Remove the fuel pump ⑩ from the case.

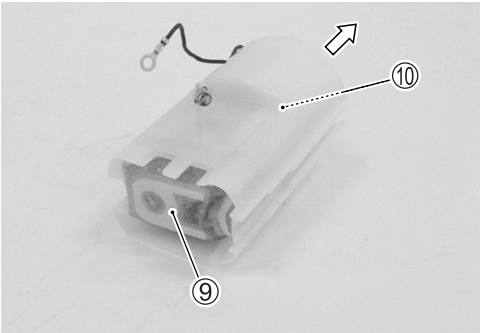

FUEL MESH FILTER INSPECTION AND CLEANING

If the fuel mesh filter is clogged with sediment or rust, fuel will not flow smoothly and loss in engine power may result.
Blow the fuel mesh filter with compressed air.

NOTE:
If the fuel mesh filter is clogged with many sediment or rust, replace the fuel filter cartridge with a new one.

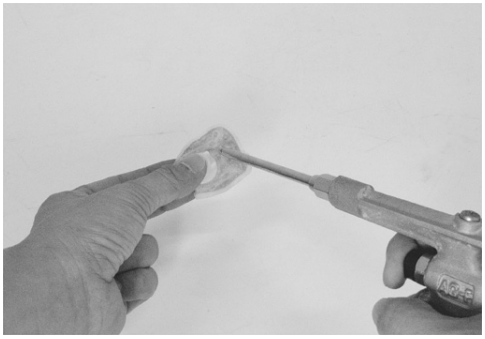

FUEL PUMP AND FUEL MESH FILTER INSTALLATION

Install the fuel pump and fuel mesh filter in the reverse order of removal. Pay attention to the following points:

- Replace the O-rings with new ones.

CAUTION

Use new O-rings to prevent fuel leakage.

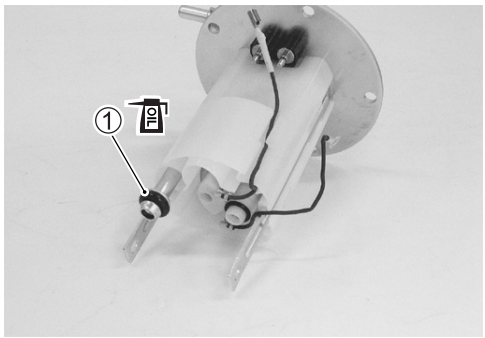

- Apply thin coat of engine oil to the O-ring ①.

- Set the fuel outlet joint ② as shown.

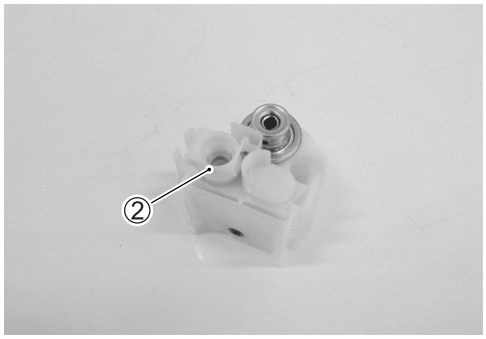

- Be sure to connect the wires to the proper terminals.

Ⓐ (B)..... ⊕ terminal for fuel pump
Ⓑ (R)..... ⊕ terminal for fuel level gauge

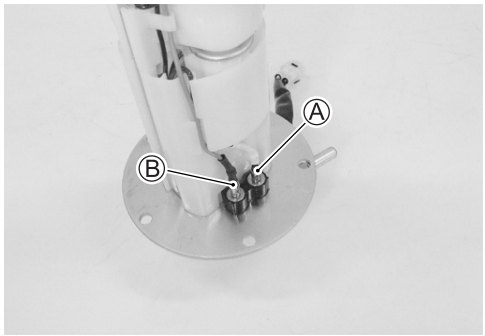

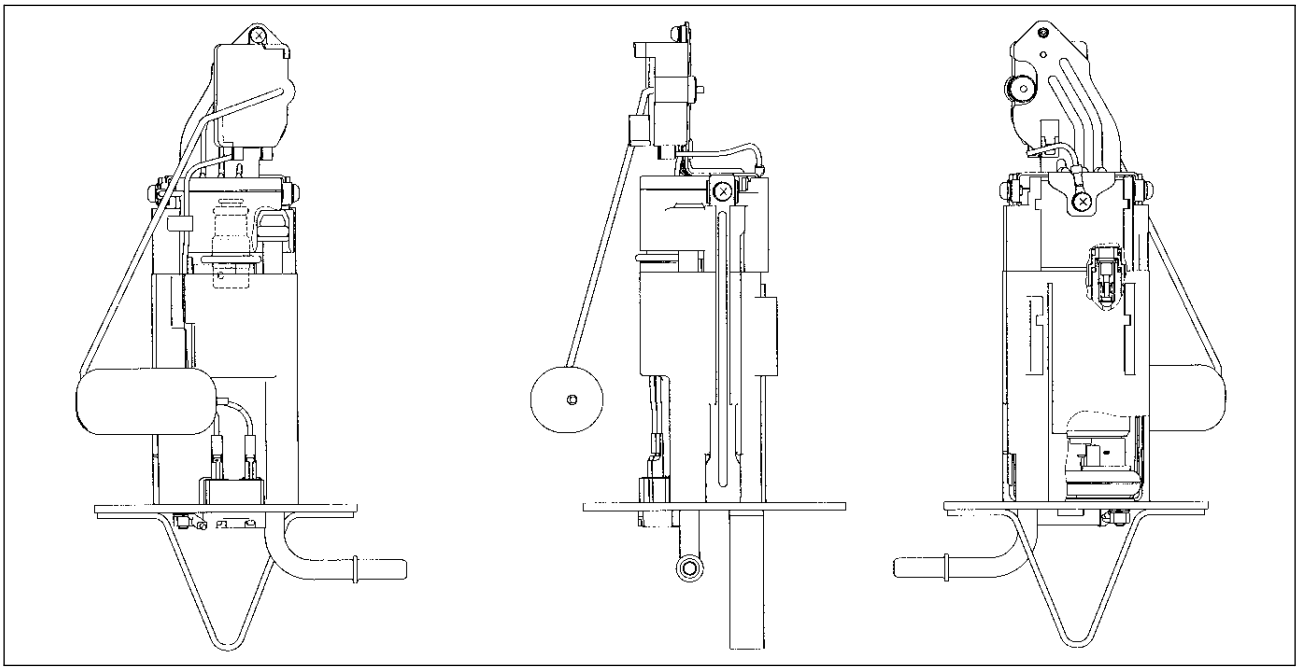

- Install a new O-ring and apply grease to it.

99000-25010: SUZUKI SUPER GREASE "A"
or equivalent

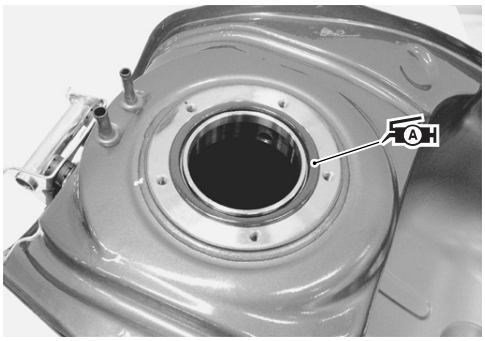

WARNING

The O-ring must be replaced with a new one to prevent fuel leakage.

- Install the clamp to the bolt ⑤.
- When installing the fuel pump assembly, first tighten all the fuel pump mounting bolts lightly and then to the specified torque, in the ascending order of numbers.

Fuel pump mounting bolt: 10 N·m (1.0 kgf-m, 7.0 lb-ft)

NOTE:
Apply a small quantity of the THREAD LOCK SUPER to the thread portion of fuel pump mounting bolts.

99000-32110: THREAD LOCK SUPER "1322"
or equivalent

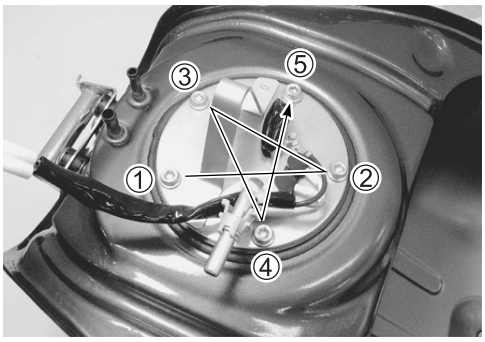

THROTTLE BODY
CONSTRUCTION

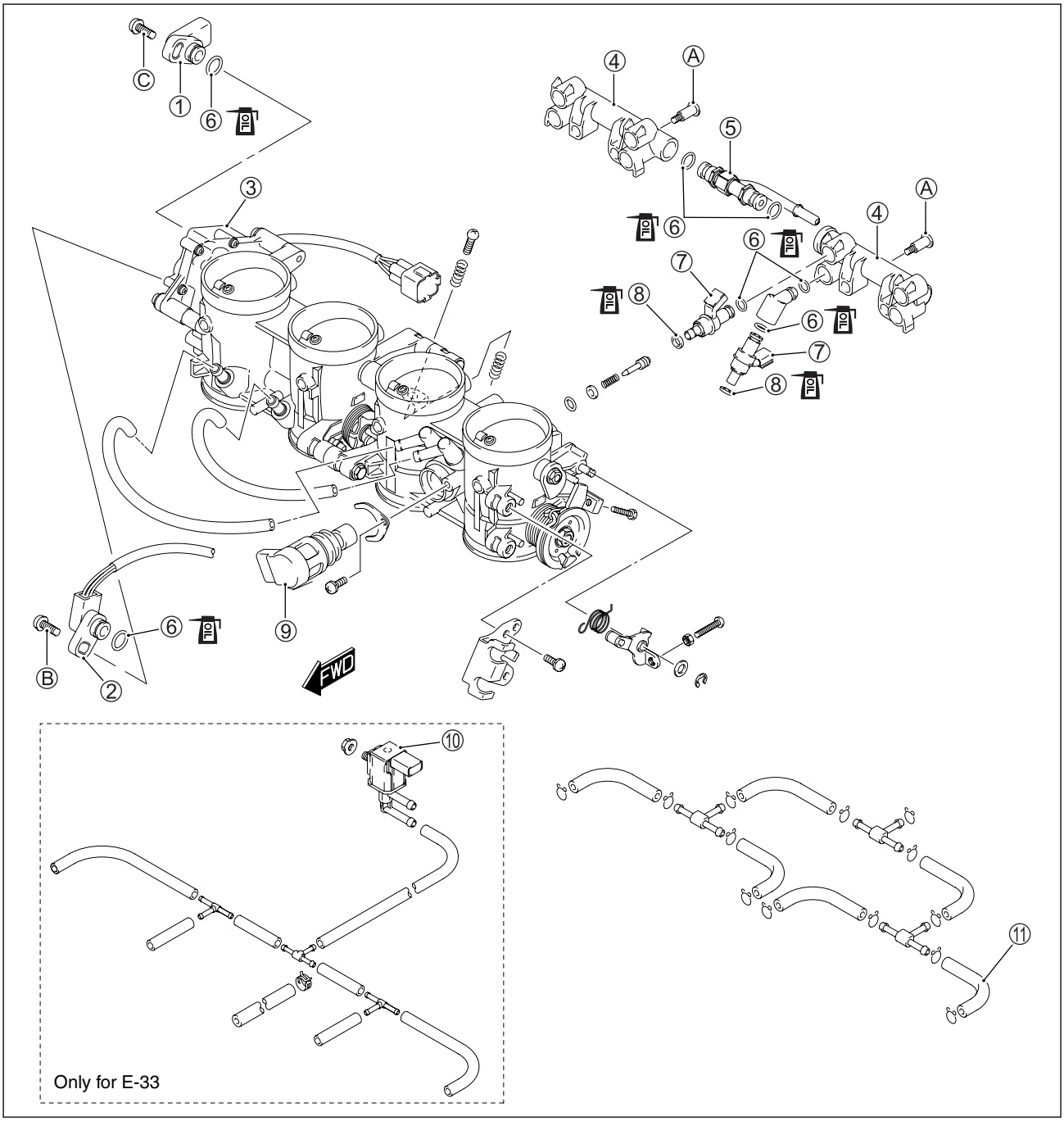

①	TP sensor	⑧	Cushion seal
②	STP sensor	⑨	ISC valve
③	STVA	⑩	EVAP purge control solenoid valve
④	Fuel delivery pipe	⑪	Vacuum hose
⑤	Fuel delivery pipe joint	Ⓐ	Fuel delivery pipe mounting screw
⑥	O-ring	Ⓑ	STP sensor mounting screw
⑦	Fuel injector	Ⓒ	TP sensor mounting screw

ITEM	N·m	kgf-m	lb-ft
Ⓐ	3.5	0.35	2.5
Ⓑ	3.5	0.35	2.5
Ⓒ	3.5	0.35	2.5

AIR CLEANER BOX REMOVAL

- Lift and support the fuel tank. (☞5-3)
- Disconnect the PAIR hose ①, IAT sensor lead wire coupler ② and IAP sensor ③.
- Loosen the throttle body clamp screw (RH).

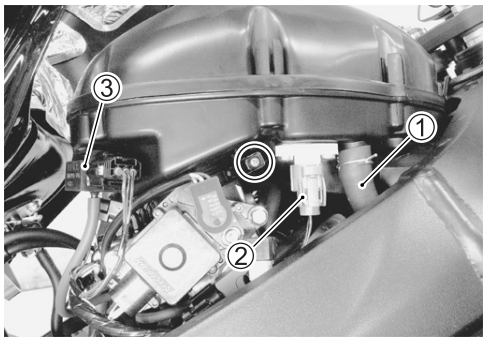

- Disconnect the PCV hose ④ and ISC valve hose ⑤.

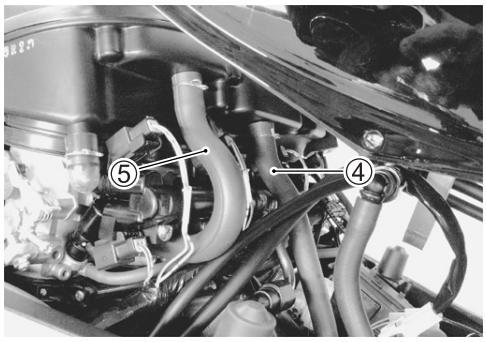

- Loosen the throttle body clamp screw (LH).

- Remove the air cleaner box mounting bolt.
- Remove the air cleaner box ⑥.

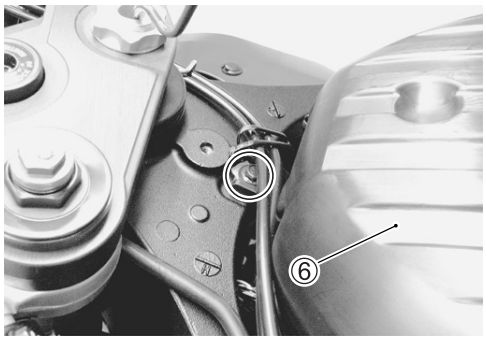

THROTTLE BODY REMOVAL

- Remove the air cleaner box. (☞5-14)
- Disconnect the throttle cables from their drum.

CAUTION

After disconnecting the throttle cables, do not snap the throttle valve from full open to full close. It may cause damage to the throttle valve and throttle body.

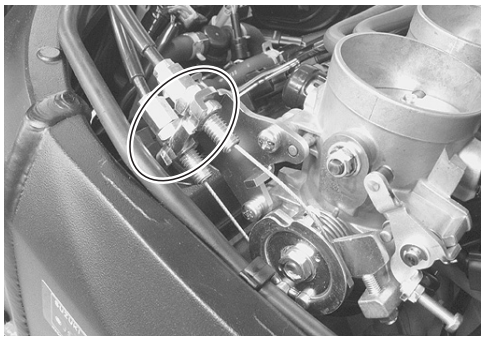

- Place a rag under the fuel feed hose ① and disconnect the fuel feed hose from the fuel pump.

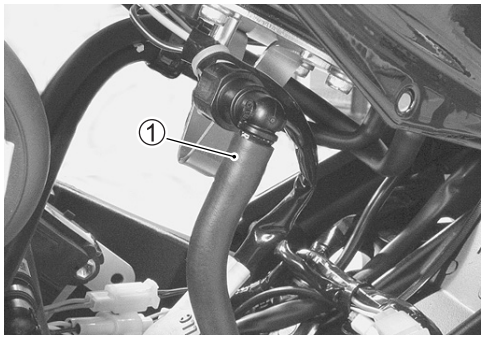

- Disconnect the STVA lead wire coupler ②, STP sensor lead wire coupler ③, TP sensor lead wire coupler ④ and IAP sensor hose ⑤.

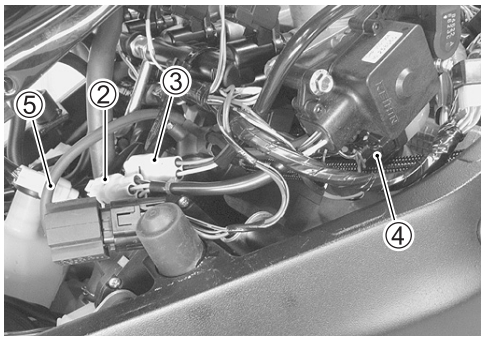

- Remove the wire clamp ⑥.
- Disconnect all the fuel injector lead wire couplers ⑦.

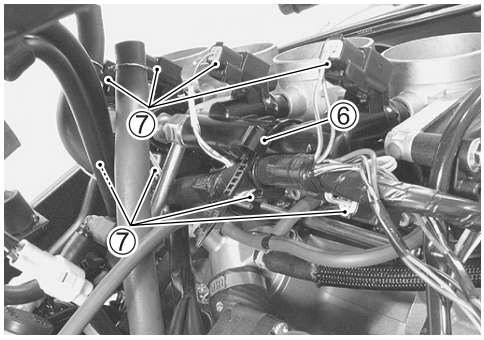

- Disconnect the ISC valve coupler ⑧.

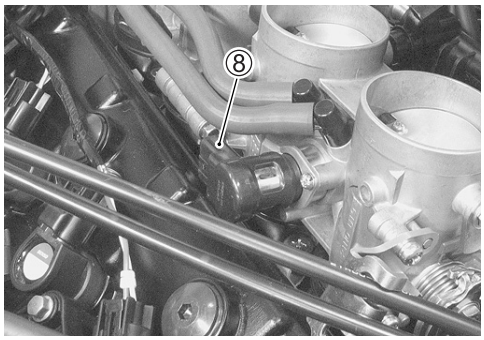

- Remove the fasteners on the main frame. (LH and RH)
- Loosen the throttle body clamp screws at the intake pipe side.
- Remove the throttle body assembly.

THROTTLE BODY DISASSEMBLY

CAUTION

Identify the position of each removed part. Organize the parts in their respective groups so that they can be reinstalled in their original positions.

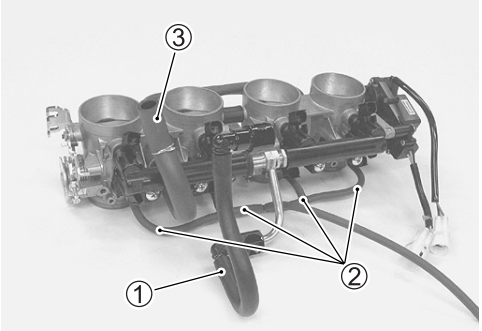

- Disconnect the fuel feed hose ①.
- Disconnect the respective vacuum hoses ② from each throttle body.
- Disconnect the ISC valve hose ③.

- Remove the fuel delivery pipe joint assembly ④.

CAUTION

Be careful not to twist the fuel delivery pipe T-joint when removing the fuel delivery pipes, or joint part Ⓐ of the fuel delivery pipe get damage.

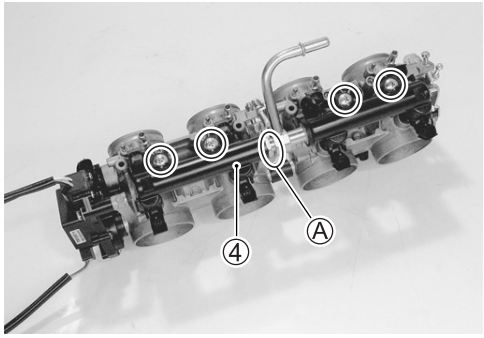

- Remove the primary fuel injectors ⑤ and secondary injectors ⑥ from the fuel delivery pipe.

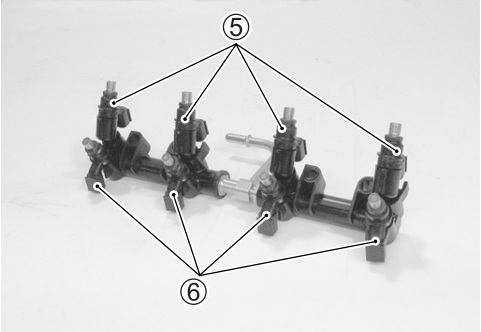

- Remove the fuel pipe ⑦ from the primary injectors.

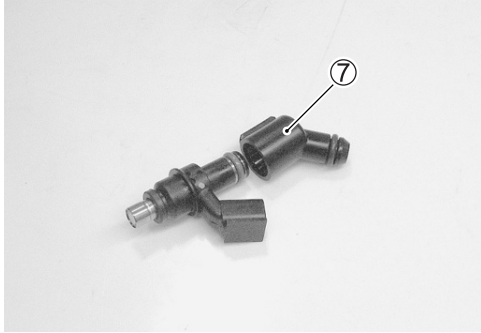

- Disassemble the fuel delivery pipe assembly.

- Remove the ISC valve hoses ⑧.
- Remove the ISC valve ⑨.

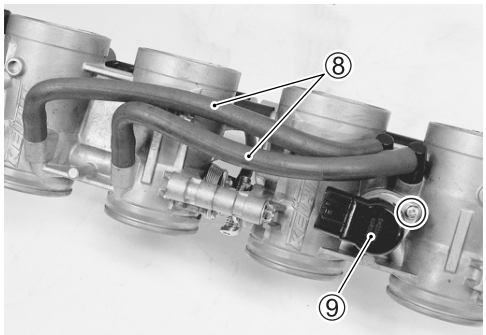

- Remove the TP sensor ⑩ and STP sensor ⑪ with the special tool.

TOOL 09930-11950: Torx wrench

NOTE:
Prior to disassembly, mark the each sensor's original position with a paint or scribe for accurate reinstallation.

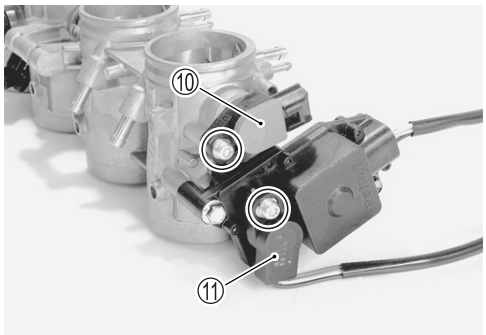

CAUTION

Never remove the STVA ⑫ from the throttle body.

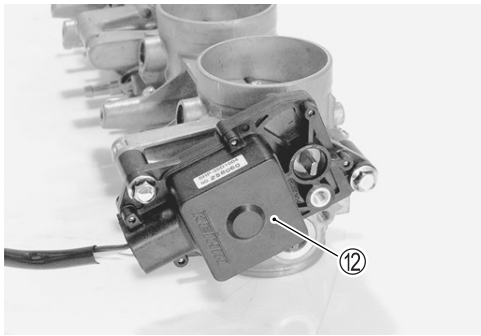

CAUTION

Never remove the secondary throttle valves ⑬ and throttle valves ⑭.

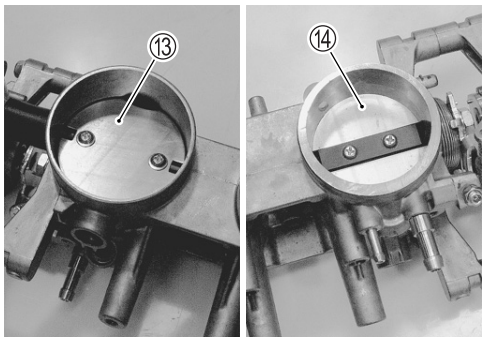

CAUTION

*** These adjusting screws (⑮, ⑯, ⑰, ⑱) are factory-adjusted at the time of delivery and do not turn or remove them.**
*** Do not separate the throttle body.**

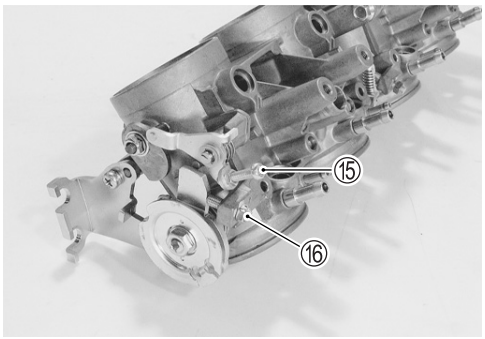

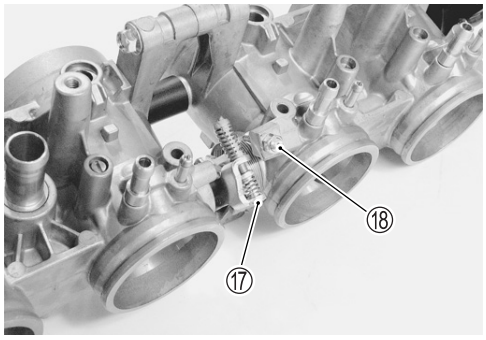

THROTTLE BODY CLEANING

⚠ WARNING

Some carburetor cleaning chemicals, especially dip-type soaking solutions, are very corrosive and must be handled carefully. Always follow the chemical manufacturer's instructions on proper use, handling and storage.

- Clean passageways (except for main bore) with a spray-type carburetor cleaner and blow dry with compressed air.

CAUTION

Do not use wire to clean passageways. Wire can damage passageways. If the components cannot be cleaned with a spray cleaner it may be necessary to use a dip-type cleaning solution and allow them to soak. Always follow the chemical manufacturer's instructions for proper use and cleaning of the throttle body components. Do not apply carburetor cleaning chemicals to the rubber and plastic materials.

INSPECTION

- Check following items for any damage or clogging.

* O-rings
* Throttle valves
* Secondary throttle valves
* Vacuum hoses
* ISC valve hoses
* Fuel delivery pipes
* Cushion seals
* Fuel injectors (☞4-75, -77 and 5-24)
* ISC valve (☞4-79 and 5-25)

THROTTLE BODY REASSEMBLY

Reassemble the throttle body in the reverse order of disassembly. Pay attention to the following points:

- With the secondary throttle valves fully opened, install the STP sensor ① and tighten the STP sensor mounting screw to the specified torque.

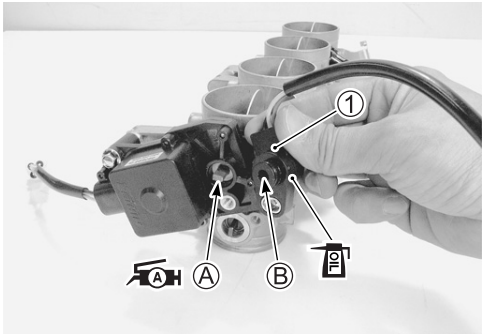

NOTE:

** Apply thin coat of engine oil to the O-ring.*

** Align the secondary throttle shaft end Ⓐ with the groove Ⓑ of STP sensor.*

** Apply grease to the secondary throttle shaft end Ⓐ if necessary.*

99000-25010: SUZUKI SUPER GREASE "A" or equivalent

09930-11950: Torx wrench

STP sensor mounting screw: 3.5 N·m (0.35 kgf-m, 2.5lb-ft)

NOTE:

** Make sure the secondary throttle valves smoothly open and close.*

** If the STP sensor adjustment is necessary, refer to page 5-23 for STP sensor setting procedure.*

- With the throttle valves fully closed, install the TP sensor ② and tighten the TP sensor mounting screw to the specified torque.

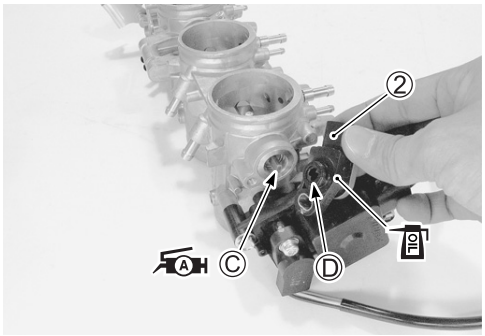

NOTE:

** Apply thin coat of engine oil to the O-ring.*

** Align the throttle shaft end Ⓒ with the groove Ⓓ of TP sensor.*

** Apply grease to the throttle shaft end Ⓒ if necessary.*

99000-25010: SUZUKI SUPER GREASE "A" or equivalent

09930-11950: Torx wrench

TP sensor mounting screw: 3.5 N·m (0.35 kgf-m, 2.5lb-ft)

NOTE:

** Make sure the throttle valves smoothly open and close.*

** TP sensor setting procedure. (☞4-21)*

- Apply thin coat of engine oil to the new O-rings ③ and cushion seals ④.

CAUTION

Replace the O-rings and cushion seals with new ones.

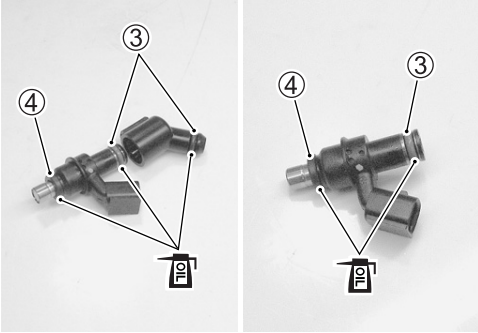

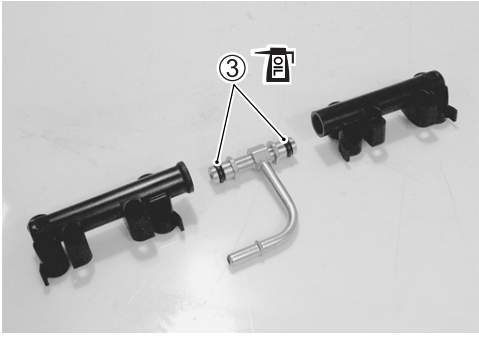

- Assemble the fuel delivery pipes as shown.

CAUTION

Be careful not to twist the fuel delivery pipe T-joint when installing the fuel delivery pipes, or joint part Ⓔ of the fuel delivery pipe may get damage.

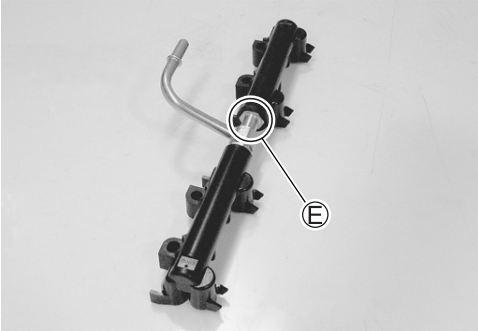

- Install each fuel injector by pushing it straight to the delivery pipe.
- Install the fuel delivery pipe assembly to the throttle body.

CAUTION

Never turn the injector while pushing it.

- Tighten the fuel delivery pipe mounting screws to the specified torque.

Fuel delivery pipe mounting screw:
3.5 N·m (0.35 kgf-m, 2.5lb-ft)

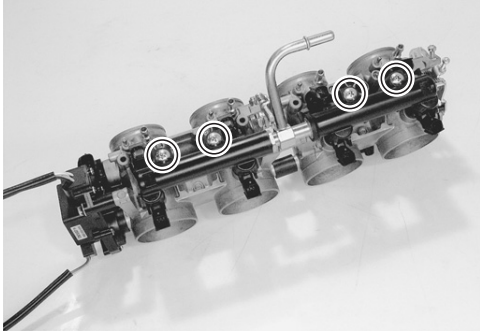

THROTTLE BODY INSTALLATION

Installation is in the reverse order of removal. Pay attention to the following points:

- Connect the fuel injector couplers to the fuel injectors. Make sure that each coupler is installed in the correct position. The color on each lead wire refers to the appropriate fuel injector.

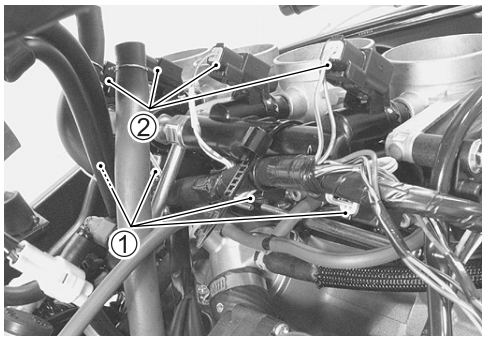

	① Primary injector	② Secondary injector
#1	Y/R and Gr/W	Y/R and Lg
#2	Y/R and Gr/B	Y/R and Lg/W
#3	Y/R and Gr/Y	Y/R and Lg/G
#4	Y/R and Gr/R	Y/R and Lg/Bl

- Connect the throttle pulling cable ③ and throttle returning cable ④ to the throttle cable drum.

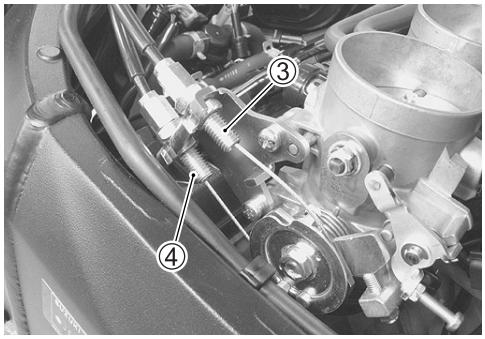

- Loosen each throttle cable lock-nut.
- Turn in each throttle cable adjuster fully and locate each outer cable so that the clearance is 0 mm (0 in).
- Tighten each lock-nut.
- Adjust the throttle cable play. (☞2-15)

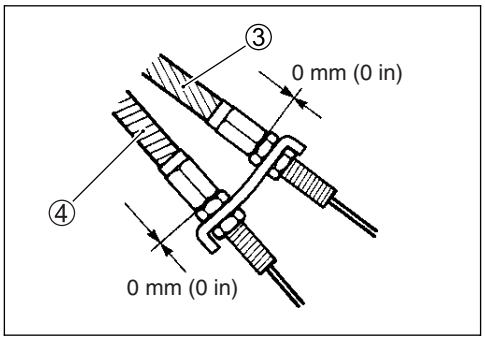

STP SENSOR ADJUSTMENT

If the STP sensor adjustment is necessary, measure the sensor output voltage and adjust the STP sensor position as follows:

- Disconnect the STVA lead wire coupler.
- Remove the air cleaner box cover. (☞2-4)
- Insert the needle pointed probes to the STP sensor coupler.
- Turn the ignition switch ON.
- Close the secondary throttle valve by finger, and measure the STP sensor output voltage.

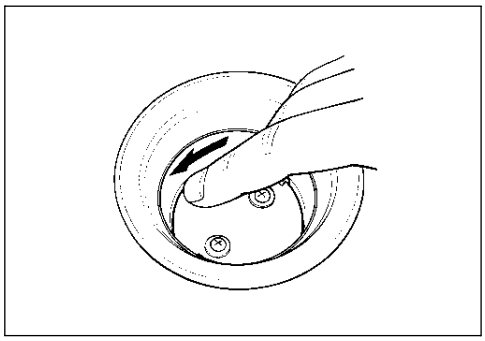

DATA STP sensor output voltage
ST valve is fully closed: 0.48 – 0.52 V (⊕ Y – ⊖ B)

TOOL 09900-25008: Multi-circuit tester set
09900-25009: Needle pointed probe set

Tester knob indication: Voltage (⎓)

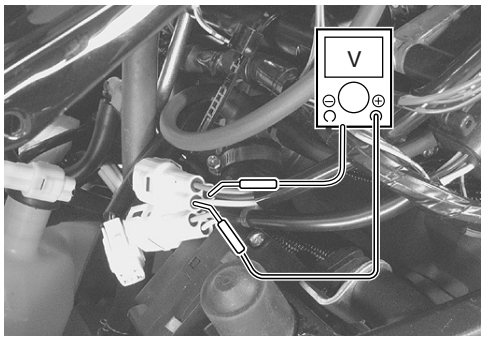

- Loosen the STP sensor mounting screw.
- Adjust the STP sensor ① until the output voltage comes within the specified value and tighten the STP sensor mounting screw.

TOOL 09930-11950: Torx wrench

STP sensor mounting screw: 3.5 N·m (0.35 kgf-m, 2.5 lb-ft)

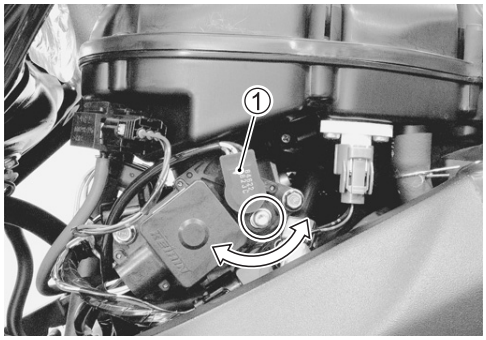

FUEL INJECTOR REMOVAL

- Remove the air cleaner box. (☞5-14)
- With battery negative cable disconnected, disconnect the injector couplers.
- Remove the fuel delivery pipe assemblies. (☞5-16)
- Remove the primary and secondary fuel injectors #1, #2, #3 and #4. (☞5-16)

FUEL INJECTOR INSPECTION

Check fuel injector filter for evidence of dirt and contamination. If present, clean and check for presence of dirt in the fuel lines and fuel tank.

NOTE:
The fuel injector can be checked without removing it from the throttle body. (☞*4-75 and -77)*

FUEL INJECTOR INSTALLATION

- Install the fuel injector. (☞5-21)

ISC VALVE REMOVAL

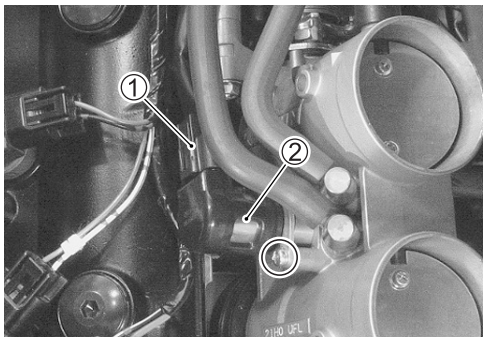

- Remove the air cleaner box. (☞5-14)
- Disconnect the ISC valve coupler ①.

CAUTION

Be careful not to disconnect the ISC valve coupler at least 5 seconds after ignition switch is turned OFF.
If the ECM coupler or ISC valve coupler is disconnected within 5 seconds after ignition switch is turned OFF, there is a possibility of an unusual valve position being written in ECM and causing an error of ISC valve operation.

- Remove the ISC valve ②.

ISC VALVE INSPECTION

- Inspect the ISC valve for wear, damage or carbon deposition.
- Replace it with a new one if necessary.

CAUTION

Normally, O-ring must be replaced with a new one. However, this O-ring is not available for the spare parts. If it is found to be damaged, replace the ISC valve with new one.

NOTE:
The ISC valve can be checked without removing it. (☞4-79)

If the resistance is not within the standard range, replace the ISC valve assembly with a new one.

ISC VALVE INSTALLATION

Install the ISC valve in the reverse order of removal.

NOTE:
When removing or replacing, the ISC valve must be set to the PRE-SET position. (☞5-26)

ISC VALVE PRE-SET

When removing or replacing the ISC valve, set the ISC valve in the following procedures:

1) Turn the ignition switch ON position.
2) Set up the SDS tool. (☞4-27)
3) Click “Active control”.
4) Click “ISC learned value reset” ①.

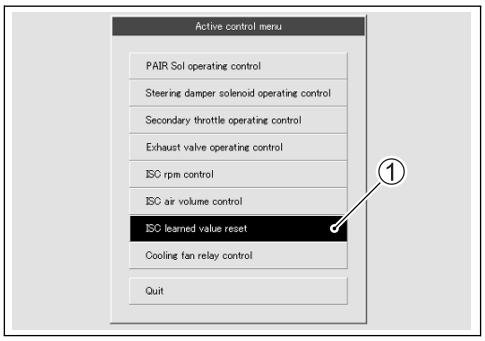

5) Click “Reset” button ② to clear the ISC learned value.

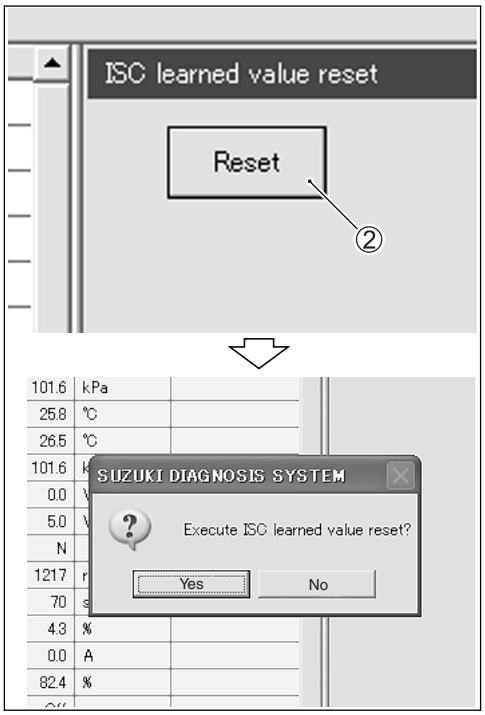

NOTE:
The learned value of the ISC valve is set at PRE-SET position.

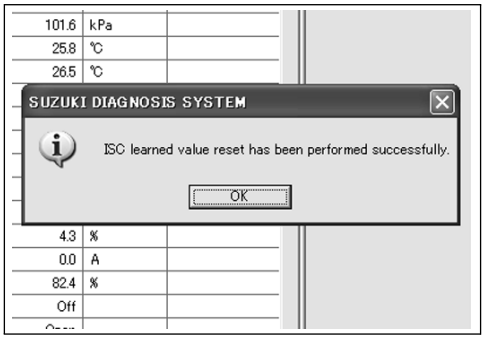

6) Close the SDS tool.
7) Turn the ignition switch OFF position.

NOTE:
The ISC valve opening initialization is automatically started after the ignition switch is turned OFF.

THROTTLE VALVE SYNCHRONIZATION

USE OF SDS TOOL

Check and adjust the throttle valve synchronization among four cylinders.

Step 1

- Lift and support the fuel tank. (☞5-3)
- Disconnect the respective vacuum hoses ① from each vacuum nipple.

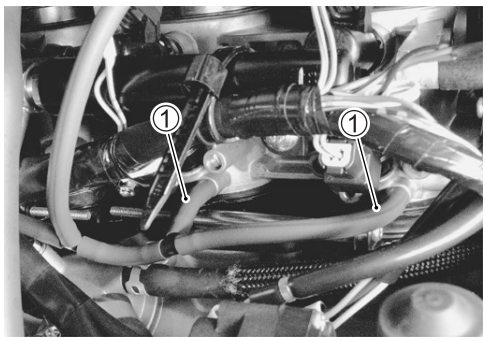

- Disconnect the IAP sensor coupler ②.

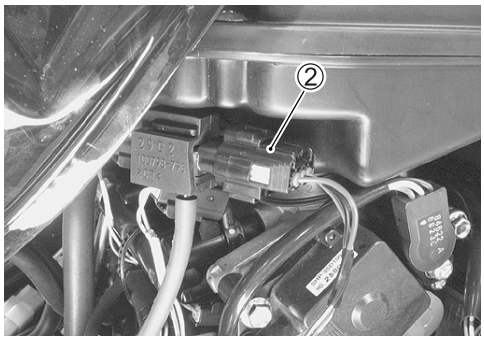

- Connect the respective vacuum tester hoses to each nipple on the throttle body.

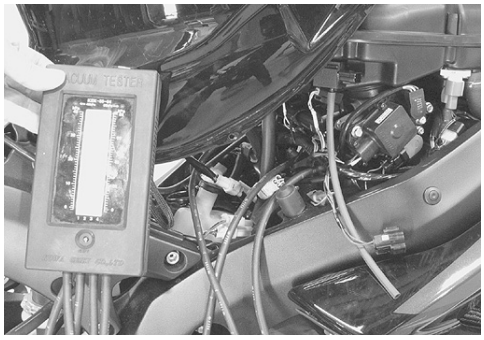

Step 2

- Set up the SDS tool. (☞4-27)
- Start the engine.
- Click “Data monitor”.
- Warm up the engine (Water temp. more than 70 °C (158 °F).

Item	Value	Unit
☐ Engine speed	1380	rpm
☐ Throttle position	27.9	°
☐ Manifold absolute pressure 1	65.9	kPa
☐ Engine coolant / oil temperature	88.0	℃
☐ Intake air temperature	39.0	℃
☐ Battery voltage	14.5	V
☐ O2 sensor	0.0	V

- Click “Active control”.
- Click “ISC air volume control” ①.
- Click “ON” ② to fix the ISC air volume of four cylinders.

NOTE:
When making this synchronization, be sure that the water temperature is within 70 – 100 °C (158 – 212 °F).

Ⓐ Engine speed: Approx. 1 150 rpm
Ⓑ ISC valve position: Approx. 60 step

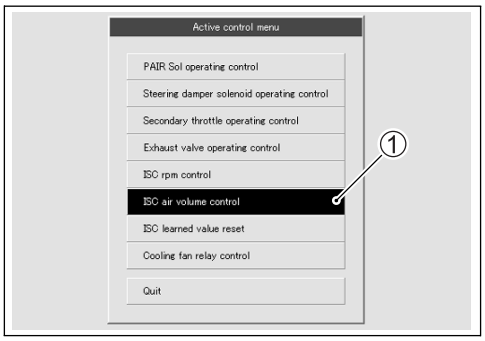

Item	Value	Unit
☐ Steering damper solenoid ampere	0.0	A
☐ Desired idle speed	Ⓐ 1155	rpm
☐ ISC valve position	Ⓑ 60	step
☐ Engine speed	1158	rpm
☐ Vehicle speed	0.0	km/h
☐ Gear position	N	
☐ Driving mode selection 1	Open	
☐ Driving mode selection 2	Open	
☐ Engine coolant / oil temperature	77.9	°C

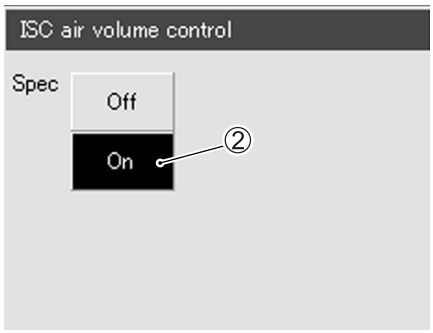

- Check for the synchronization of vacuum from #1 to #4 cylinders.

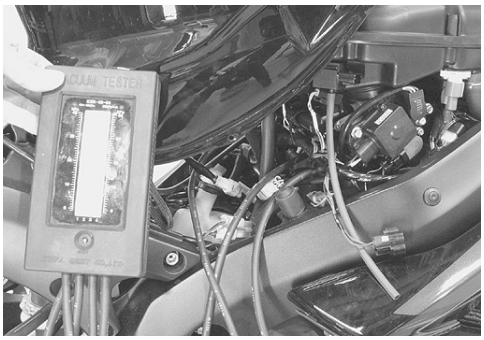

- Equalize the vacuum of the cylinders by turning each air screw ③ and keep it running at idling speed.

NOTE:
Always set the engine rpm at idle rpm.

- If the adjustment is not yet correct, remove each air screw and clean them with a spray-type carburetor cleaner and blow dry with a compressed air. Also, clean the air screw passageways.

NOTE:
** Slowly turn the air screw clockwise and count the number of turns until the screw is lightly seated.*
** Make a note of how many turns were made so the screw can be reset correctly after cleaning.*

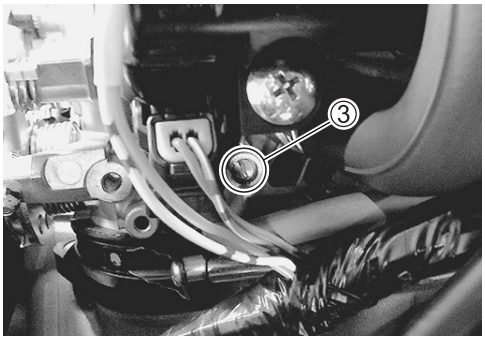

- Repeat the procedures of Step 2.
- Disconnect the vacuum tester and install the removed parts.
- After completing the throttle valve synchronization, clear the DTC and reset the ISC learned value using SDS tool. (☞4-28 and 5-26)

USE OF MODE SELECT SWITCH

The following procedure discribes only defference between use of SDS tool and use of mode select switch.

Step 1

- Step 1 is the same as the use of SDS tool.

Step 2

- Connect the special tool (mode select swich) and turn it ON.
- Start the engine and warm it up.
  * Summer: Approx. 5 min. at idle speed
  * Winter: Approx. 8 min. at idle speed

NOTE:

** The ISC valve is automatically set at synchronization mode.*

** Water temperature should be more than 80 °C (176 °F) and then wait 30 seconds.*

- Other procedures are the same as the Step 2 of using SDS tool.

EXHAUST SYSTEM

CONTENTS

EXHAUST SYSTEM 6- 2
EXHAUST CONTROL SYSTEM 6- 2
OPERATION 6- 3
EXCVA (EXHAUST CONTROL VALVE ACTUATOR) AND
EXCV (EXHAUST CONTROL VALVE) 6- 4
EXCVA REMOVAL 6- 4
EXCVA PULLEY INSPECTION 6- 5
EXCVA INSTALLATION 6- 6
EXCVA INSPECTION 6- 7
EXCV CABLE REPLACEMENT 6- 7
EXCVA ADJUSTMENT 6-10
MUFFLER, MUFFLER CHAMBER AND
EXCV/EXHAUST PIPE REMOVAL 6-12
EXCV INSPECTION 6-15
MUFFLER, MUFFLER CHAMBER AND
EXCV/EXHAUST PIPE INSTALLATION 6-16

EXHAUST SYSTEM

EXHAUST CONTROL SYSTEM

The exhaust control system (EXCS) consists of the exhaust control valve (EXCV), exhaust control valve actuator (EXCVA) and exhaust control valve cables (EXCV cables).
EXCV is installed in the exhaust pipe. EXCVA is mounted inside of the right frame. The EXCV is operated by the EXCVA via the cables. This system is designed to improve the engine torque at low engine rpm.

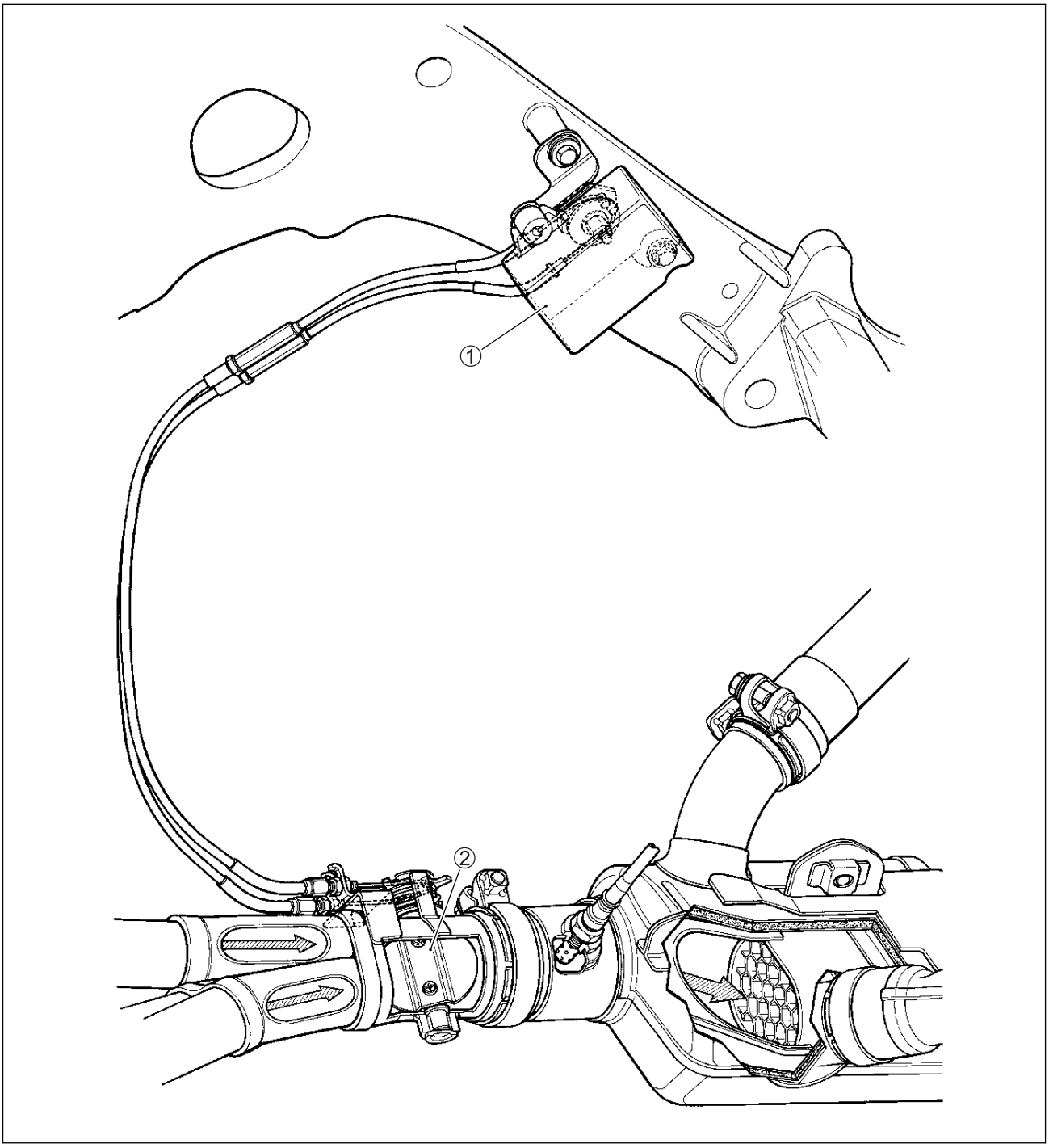

①	Exhaust control valve actuator (EXCVA)	②	Exhaust control valve (EXCV)

OPERATION

The EXCS is operated by the signal supplied from the ECM.

The open/close operation of the EXCV is performed by the EXCVA which is controlled by the ECM by changing the current direction of the actuator motor. The position sensor (incorporated in the EXCVA) detects the EXCVA movement by measuring the voltage and then the ECM determines the EXCV opening angle based on the engine rpm and gear positions.

Every time the ignition switch is turned ON, the EXCVA automatically drives the EXCV and detects full close/open position voltages and sets the EXCV to middle position.

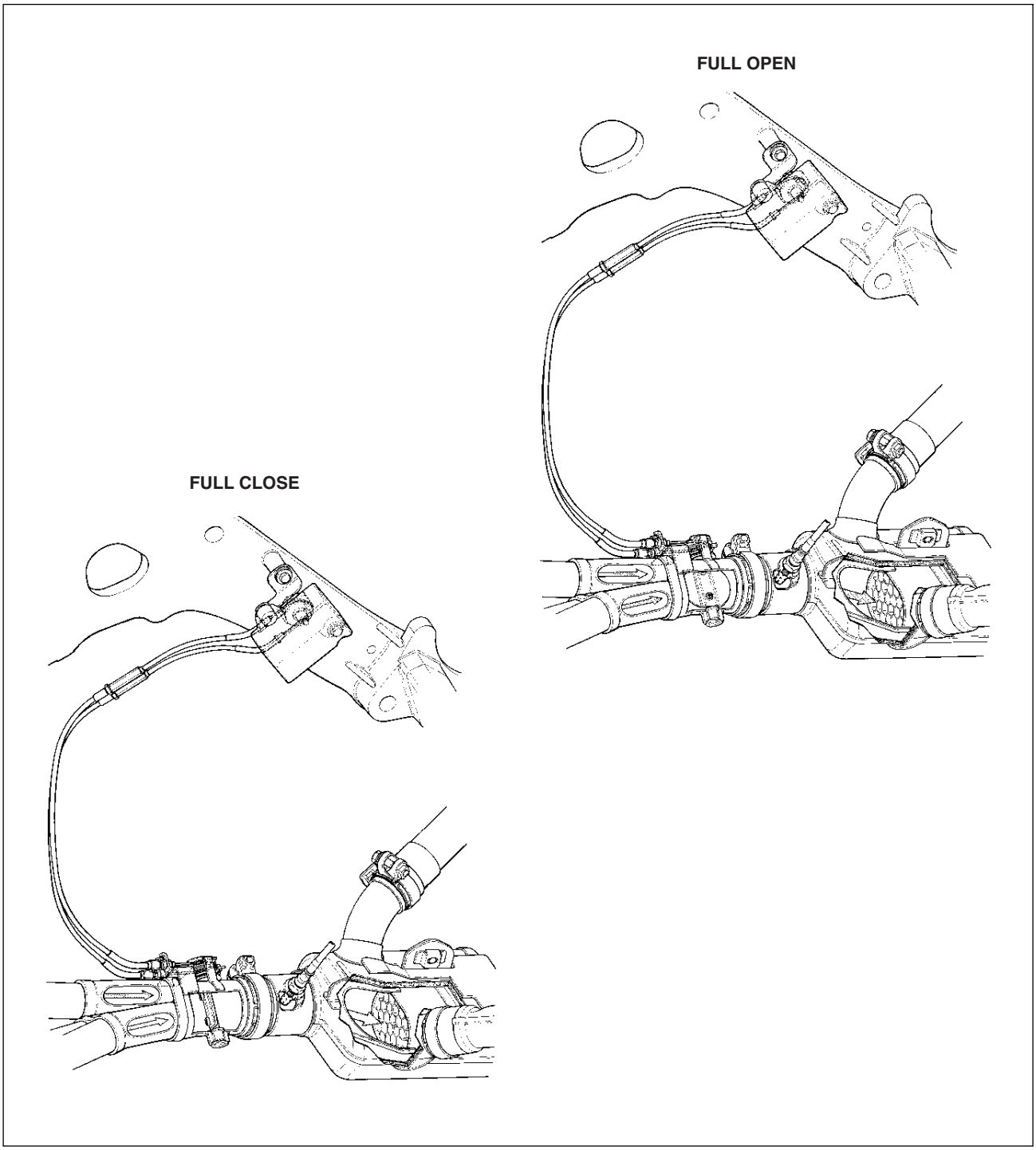

EXCVA (EXHAUST CONTROL VALVE ACTUATOR) AND EXCV (EXHAUST CONTROL VALVE)

EXCVA REMOVAL

- Turn the ignition switch OFF.
- Lift and support the fuel tank. (☞5-3)
- Remove the right under cowling. (☞8-5)
- Connect the special tool (Mode select switch) to the dealer mode coupler. (☞4-26)
- After turning the special tool's switch ON, turn the ignition switch ON.

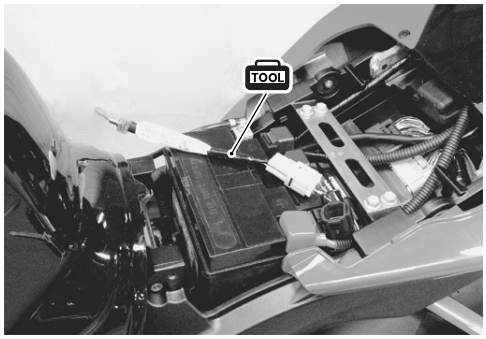

TOOL 09930-82720: Mode select switch

- Check the cable slots Ⓐ of the EXCVA pulley facing upward (adjustment position) as shown.
- Turn the ignition switch OFF.

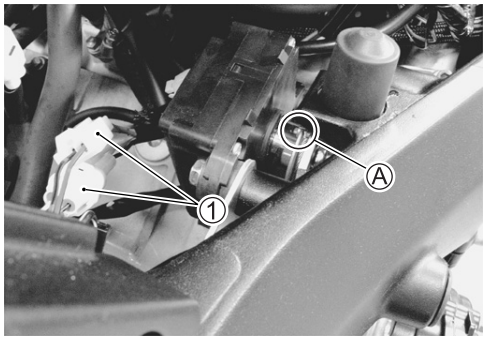

CAUTION

Before removing the EXCVA, be sure to set the EXCVA pulley to the adjustment position.

- Disconnect the EXCVA lead wire couplers ①.

- Measure the thread lengths Ⓑ and Ⓒ, before disconnecting the No.1 and No.2 cables.
- Loosen the lock-nut ② on the No.2 cable ④ and turn in the cable adjuster ③ fully.
- Loosen the lock-nut ⑤ on the No.1 cable ⑦ and turn in the cable adjuster ⑥ fully.

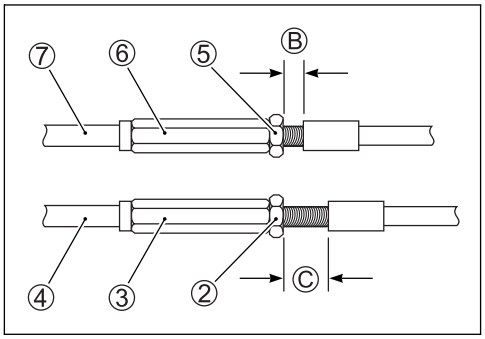

- Remove the EXCVA mounting bolts.

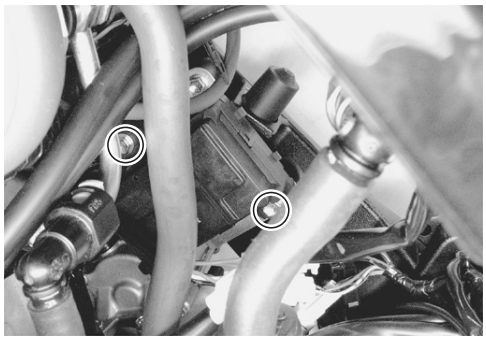

- Disconnect the No.2 cable ④ and then No.1 cable ⑦ from the pulley.
- Remove the EXCVA.

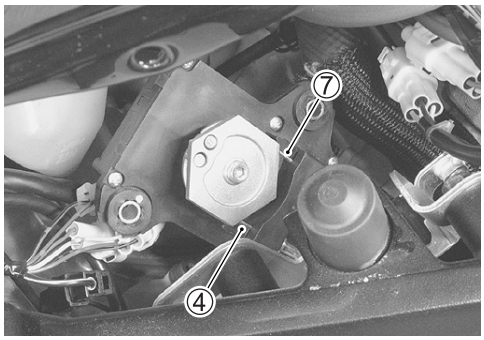

- Hold the EXCVA pulley with an adjustable wrench, and loosen the pulley mounting bolt.

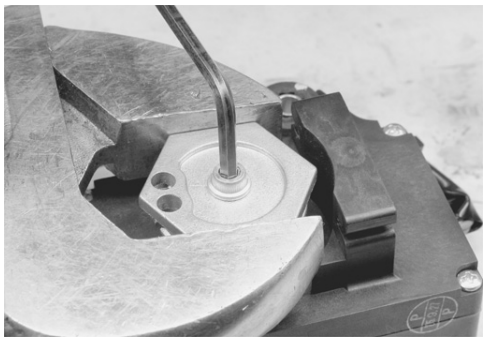

CAUTION

> *** When loosening or tightening the pulley bolt, be sure to fix the pulley with an adjustable wrench, or EXCVA may get damaged.**
> *** Do not use the adjustable wrench to turn EXCVA pulley so as not to cause damage to the internal gear of EXCVA.**

- Remove the EXCVA pulley from the EXCVA body.

EXCVA PULLEY INSPECTION

- Inspect the EXCVA pulley groove for wear and damage.
- If any defects are found, replace the EXCVA pulley with a new one.

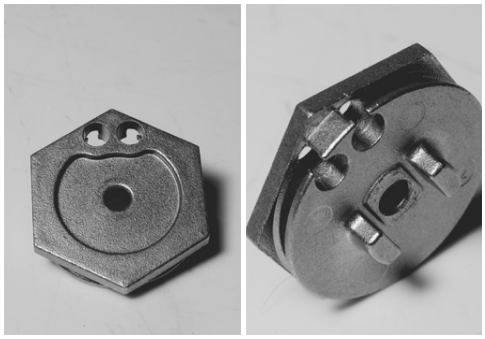

EXCVA INSTALLATION

- Install the EXCVA pulley to the shaft.

NOTE:
Align the shaft's line Ⓐ and cable slots Ⓑ as shown.

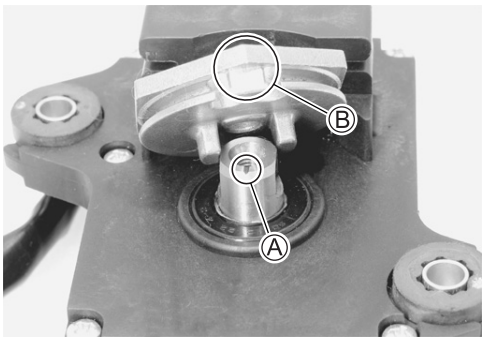

- Hold the EXCVA pulley with an adjustable wrench, and then tighten the EXCVA pulley mounting bolt to the specified torque.

EXCVA pulley mounting bolt: 5 N·m (0.5 kgf-m, 3.5 lb-ft)

CAUTION

When loosening or tightening the pulley bolt, be sure to fix the pulley with an adjustable wrench, or EXCVA may get damaged.

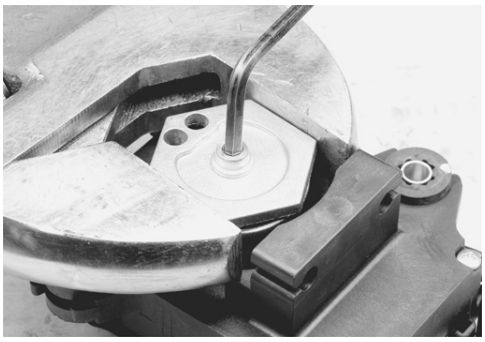

- Connect the No.1 cable ① (21H0CL) and No.2 cable ② (21H0OP) to the EXCVA pulley.

CAUTION

The cable slots of EXCVA pulley must be located adjustment position. (☞6-4)

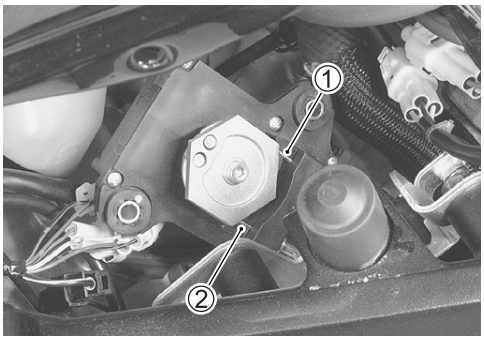

- Tighten the EXCVA mounting bolts to the specified torque.

EXCVA mounting bolt: 10 N·m (1.0 kgf-m, 7.0 lb-ft)

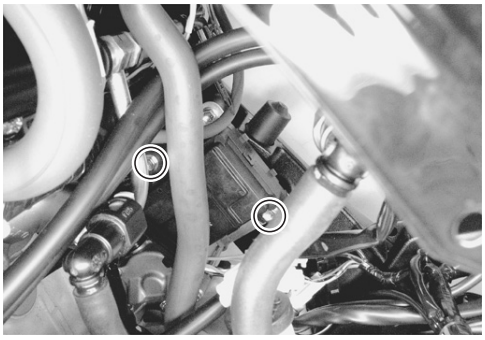

- Turn the adjuster ④ in or out until the thread length Ⓒ becomes the measured value before disconnecting the No.1 cable ①.
- Tighten the lock-nut ③.
- Turn the adjuster ⑥ in or out until the thread length Ⓓ becomes the measured value before disconnecting the No.2 cable ②.
- Tighten the lock-nut ⑤.

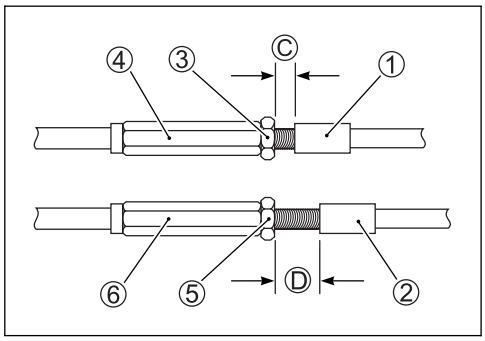

- Connect the EXCVA lead wire couplers ⑥.

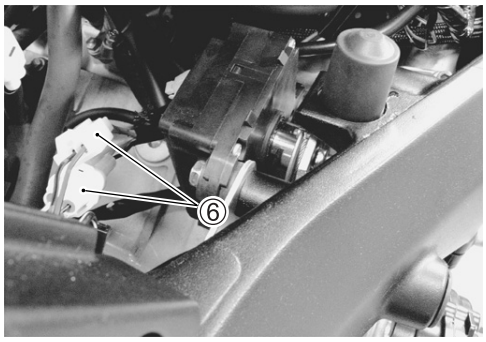

EXCVA INSPECTION

☞4-66

EXCV CABLE REPLACEMENT

- Turn the ignition switch OFF.
- Lift and support the fuel tank. (☞5-3)
- Remove the right under cowling. (☞8-5)
- Disconnect the EXCV cables from the EXCVA pulley. (☞6-4)

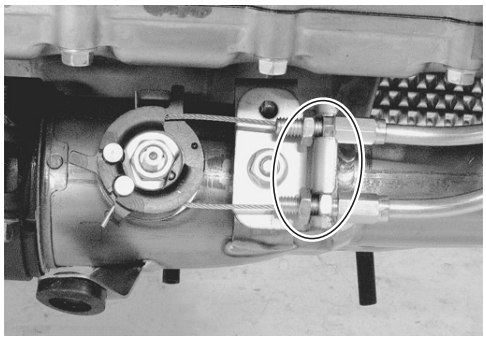

CAUTION

Before disconnecting the EXCV cables, be sure to set the EXCVA to the ADJUSTMENT setting position. (☞6-4)

- Disconnect the EXCV cables from the EXCV pulley.

NOTE:
The EXCV cables are identified by the letters.
No.1 cable ①: 21H0CL
No.2 cable ②: 21H0OP

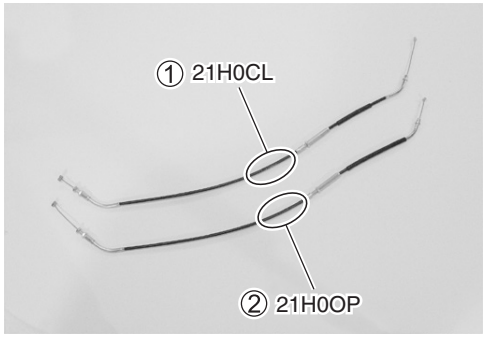

- Connect the EXCV cables (No.1 and No.2) temporarily to the EXCV pulley.
- Make the No. 1 cable (21H0CL) ① straight and turn the No. 1 cable adjuster ③ in or out until the inner cable length Ⓐ becomes 44 – 45 mm (1.73 – 1.77 in).
- After adjusting the inner cable length Ⓐ, tighten the lock-nut ④.

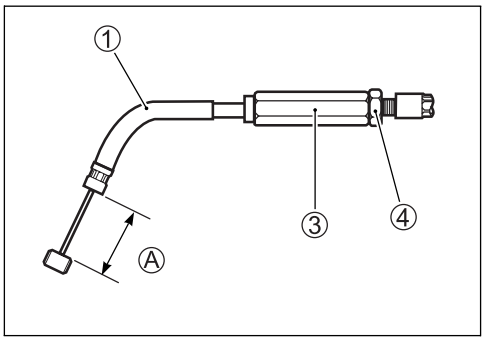

- Make the No. 2 cable (21H0OP) ② straight and turn in the cable adjuster ⑤ fully.
- Loosen the lock-nuts ⑥ and turn the No.2 cable adjuster ⑦ in or out until the inner cable length Ⓑ becomes 60 – 61 mm (2.36 – 2.40 in).
- After adjusting the inner cable length Ⓑ, tighten the lock-nuts ⑥.

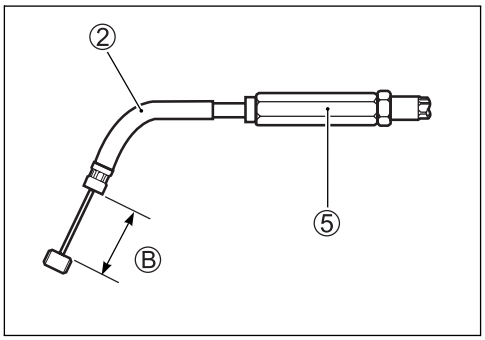

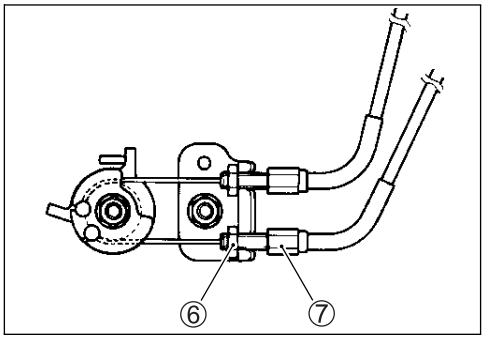

- Connect the No. 1 cable ① and No. 2 cable ② to the EXCVA pulley. (☞6-6)

CAUTION

The cable slots of EXCVA pulley must be located adjustment position. (☞6-4)

- Install the EXCVA. (☞6-6)

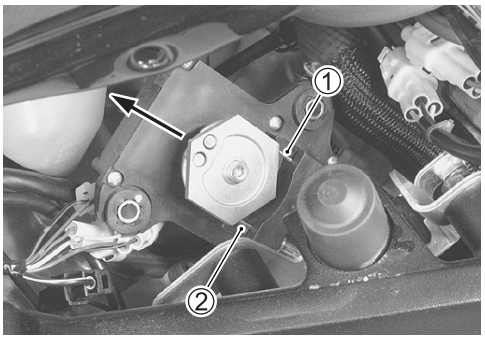

- After connecting the No. 2 cable ②, loosen the lock-nut ⑧ and turn the adjuster ⑤ in or out until 11 – 12 mm (0.43 – 0.47 in) of the thread length Ⓒ on the cable adjuster can be provided and tighten the lock-nut ⑧.

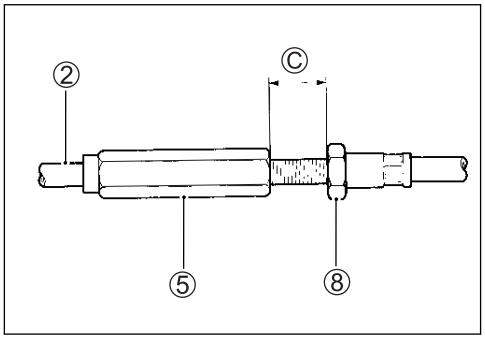

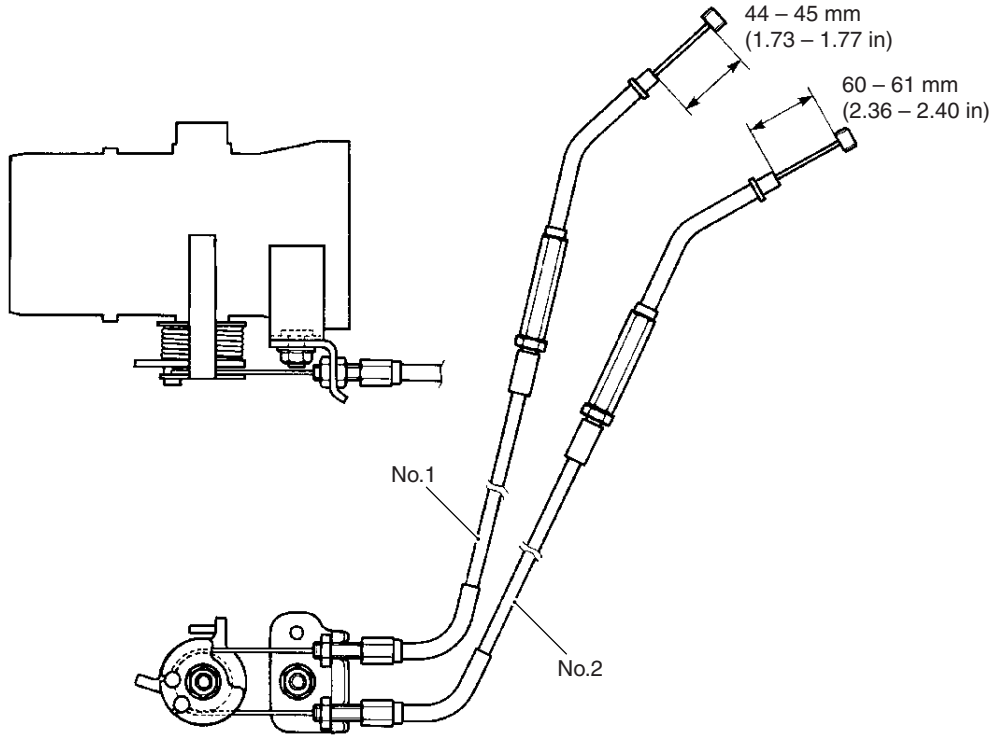

CAUTION

- **When adjusting the No.1 and No.2 cables, the cable slots of EXCVA pulley must be located to adjustment position.**
- **Do not use the adjustable wrench to turn EXCVA pulley so as not to cause damage to the internal gear of EXCVA.**

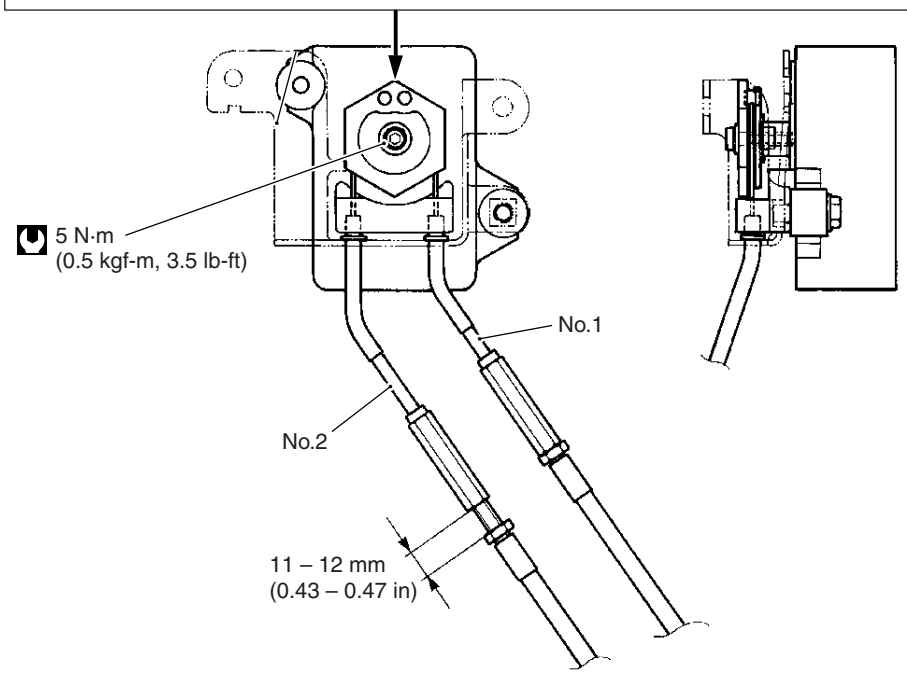

EXCVA ADJUSTMENT

1st step:

- Set the EXCVA to adjustment position. (☞6-4)

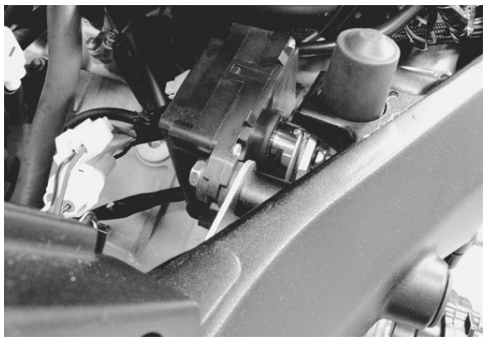

2nd step:

- Turn the mode select switch OFF.
- Turn the ignition switch ON to check the EXCVA operation.
- Turn the mode select switch ON.
- If C46 is not indicated on the LCD (DISPLAY), the adjustment is correctly completed. In this case, it is unnecessary to proceed to 3rd step.
- If C46 is indicated, repeat the adjustment procedure from 3rd and 4th step.

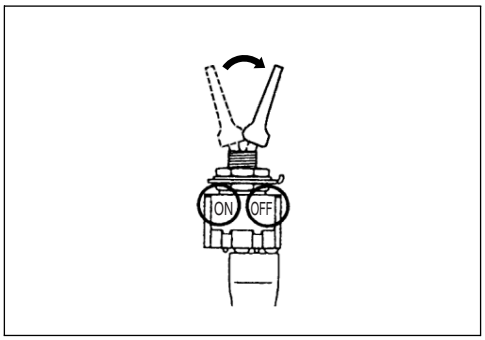

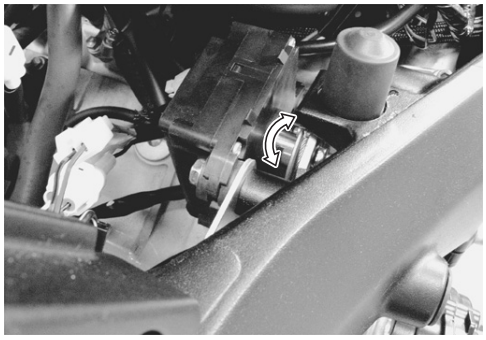

3rd step:

- This procedure is only required when C46 is indicated.
- Turn the ignition switch OFF.
- Insert the needle pointed probes into the back side of the EXCVA position sensor coupler ①.
- Disconnect the EXCVA motor coupler ②.

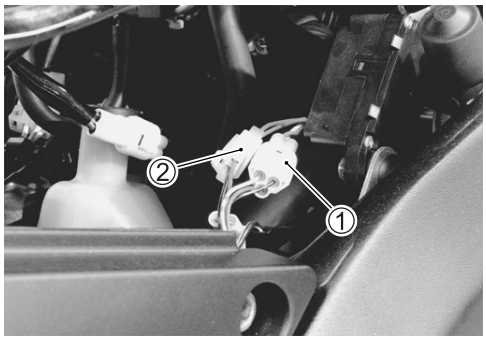

- To set the EXCV to fully closed position, apply 12 V to Ⓐ and Ⓑ terminals.
  Positive wire — Ⓐ (P wire) terminal
  Negative wire — Ⓑ (G wire) terminal

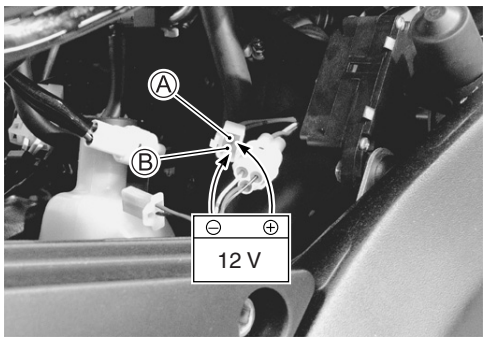

CAUTION

To prevent the motor damage, stop applying 12 V as soon as the EXCV reaches fully closed position.

- Turn the ignition switch ON.
- Measure the EXCVA position sensor output voltage at fully closed position.

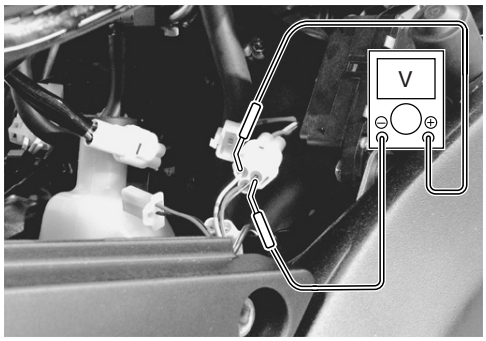

DATA Position sensor output voltage:
EXCV is fully closed: 0.45 ≦ output voltage ≦ 1.4 V
(⊕ Y – ⊖ B/Br)

TOOL 09900-25008: Multi circuit tester set
09900-25009: Needle pointed probe set

Tester knob indication: Voltage (⎓)

If the measured voltage is less than specification, adjust the No.1 cable adjuster as follows:

- Set the EXCVA to adjustment position. (☞6-4)

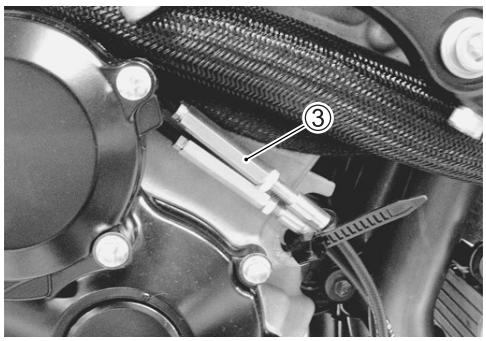

CAUTION

> **Adjusting the No.1 cable with the EXCV fully closed can damage the EXCVA. Be sure to adjust the No.1 cable with the EXCV set in adjustment position.**

- Turn out the No.1 cable adjuster ③.
- Repeat the above procedure until the output voltage becomes specified value.
- Go to 4th step.

NOTE:
If C46 code is indicated after adjusting the voltage, increase the voltage to 0.9 V.

4th step:
To set the EXCV to fully opened position, apply 12 V to Ⓐ and Ⓑ terminals.

Positive wire — Ⓑ (G wire) terminal
Negative wire — Ⓐ (P wire) terminal

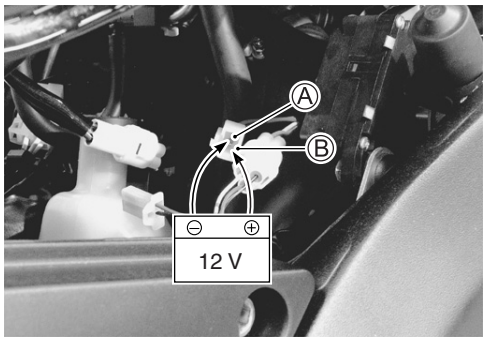

CAUTION

> **To prevent the motor damage, stop applying 12 V as soon as the EXCV reaches fully opened position.**

Measure the position sensor output voltage at fully opened position.

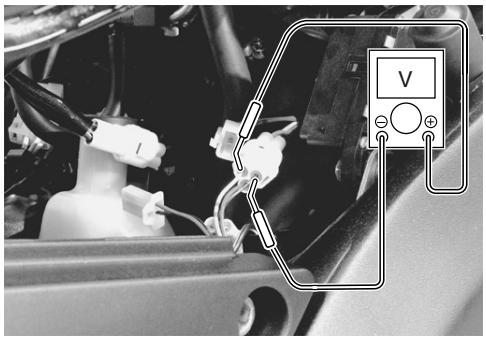

DATA Position sensor output voltage:
EXCV is fully opened: 3.6 ≦ output voltage ≦ 4.55 V
(⊕ Y – ⊖ B/Br)

If the measured voltage is more than specification, adjust the No.2 cable adjuster as follows:

- Set the EXCVA to adjustment position. (☞6-4)

CAUTION

Adjusting the No.2 cable with the EXCV fully opened can damage the EXCVA. Be sure to adjust the No.2 cable with the EXCV set in adjustment position.

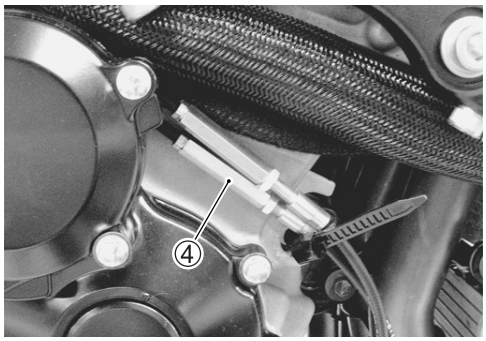

- Turn out the No.2 cable adjuster ④.
- Repeat the previous procedure until the output voltage comes within the specified value.
- After adjusting the EXCV cables, perform 2nd step to confirm C46 is not indicated.

MUFFLER, MUFFLER CHAMBER AND EXCV/EXHAUST PIPE REMOVAL

- Remove the No.2 muffler joint cover ①. (RH only)

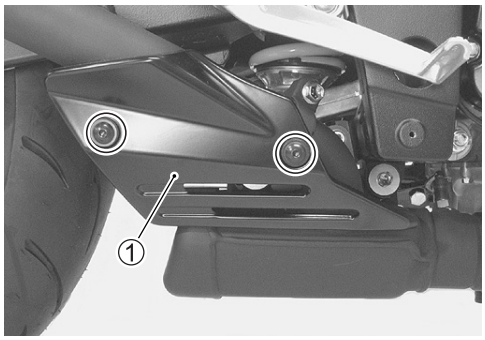

- Loosen the muffler chamber connecting bolt. (LH/RH)

NOTE:
The left and right mufflers are installed symmetrically and therefore the removal procedure for one side is the same as that for the other side.

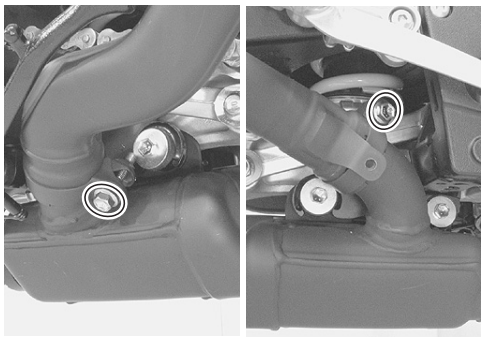

- Remove the muffler ②.

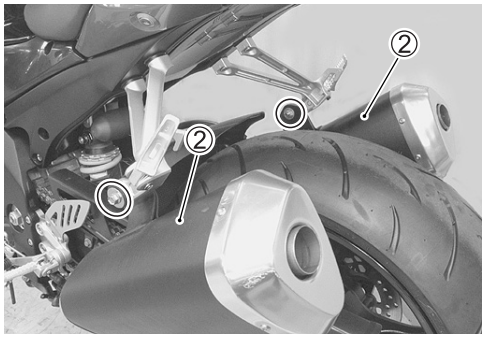

- Remove the No.1 muffler joint cover ③.
- Separate the muffler and muffler joint ④.

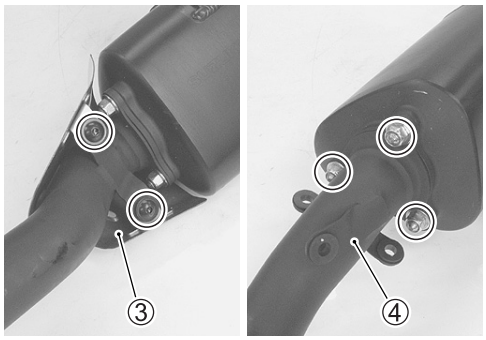

- Remove the gasket ⑤ and O-rings from the muffler.

- Remove the under cowlings. (☞8-5)
- Disconnect the HO2 sensor lead wire coupler ⑥.

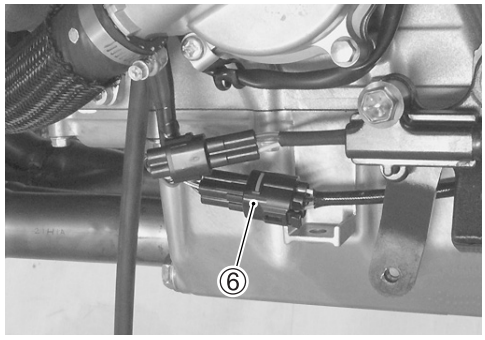

- Loosen the muffler chamber connecting bolt ⑦.
- Remove the muffler chamber ⑧ by removing the mounting bolts.

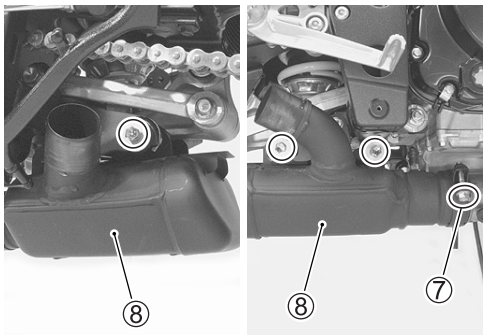

- Remove the HO2 sensor ⑨.

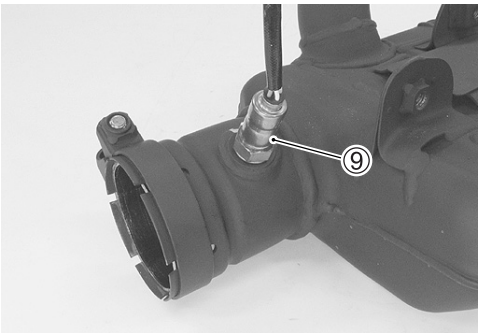

- Remove the EXCV cable bracket nut.
- Disconnect the EXCV cables from the EXCV pulley.

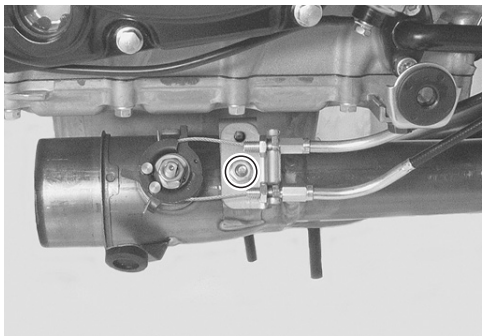

- Remove the side cowlings. (☞8-6)
- Move the radiator and oil cooler forward.
- Disconnect one of the oil cooler hose ⑩ from the oil cooler.

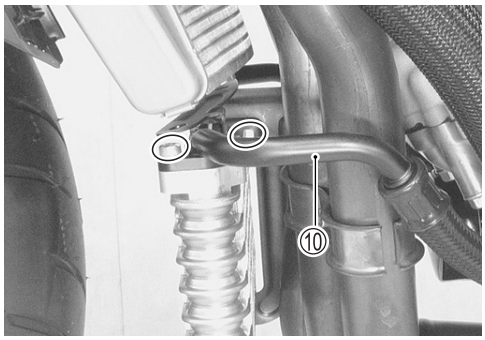

- Remove the exhaust pipe bolts.
- Remove the exhaust pipe assembly.

CAUTION

Be careful not to bend the radiator fins.

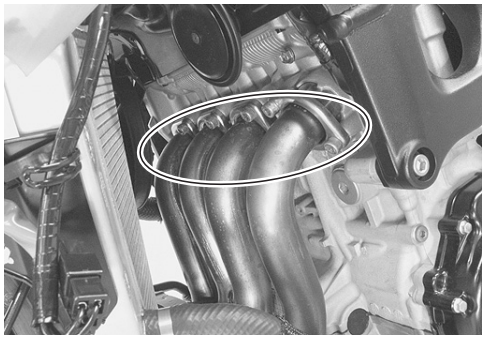

- Remove the exhaust pipe gaskets ⑪.

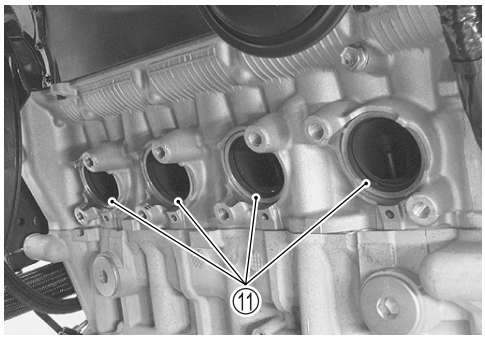

EXCV INSPECTION

- Turn the EXCV by hand and check that it moves smoothly.
- If it does not move smoothly, replace the EXCV together with the exhaust pipe assembly.
- Decarbonize the EXCV if necessary.

CAUTION

*** Do not attempt to disassemble the EXCV.**
*** The EXCV is available only as the exhaust pipe assembly.**

MUFFLER, MUFFLER CHAMBER AND EXCV/EXHAUST PIPE INSTALLATION

Install the EXCV/exhaust pipe, muffler chamber and mufflers in the reverse order of removal.
Pay attention to the following points:

CAUTION

Replace the gaskets, connectors and O-rings with new ones.

- Tighten each bolt/nut to the specified torque.

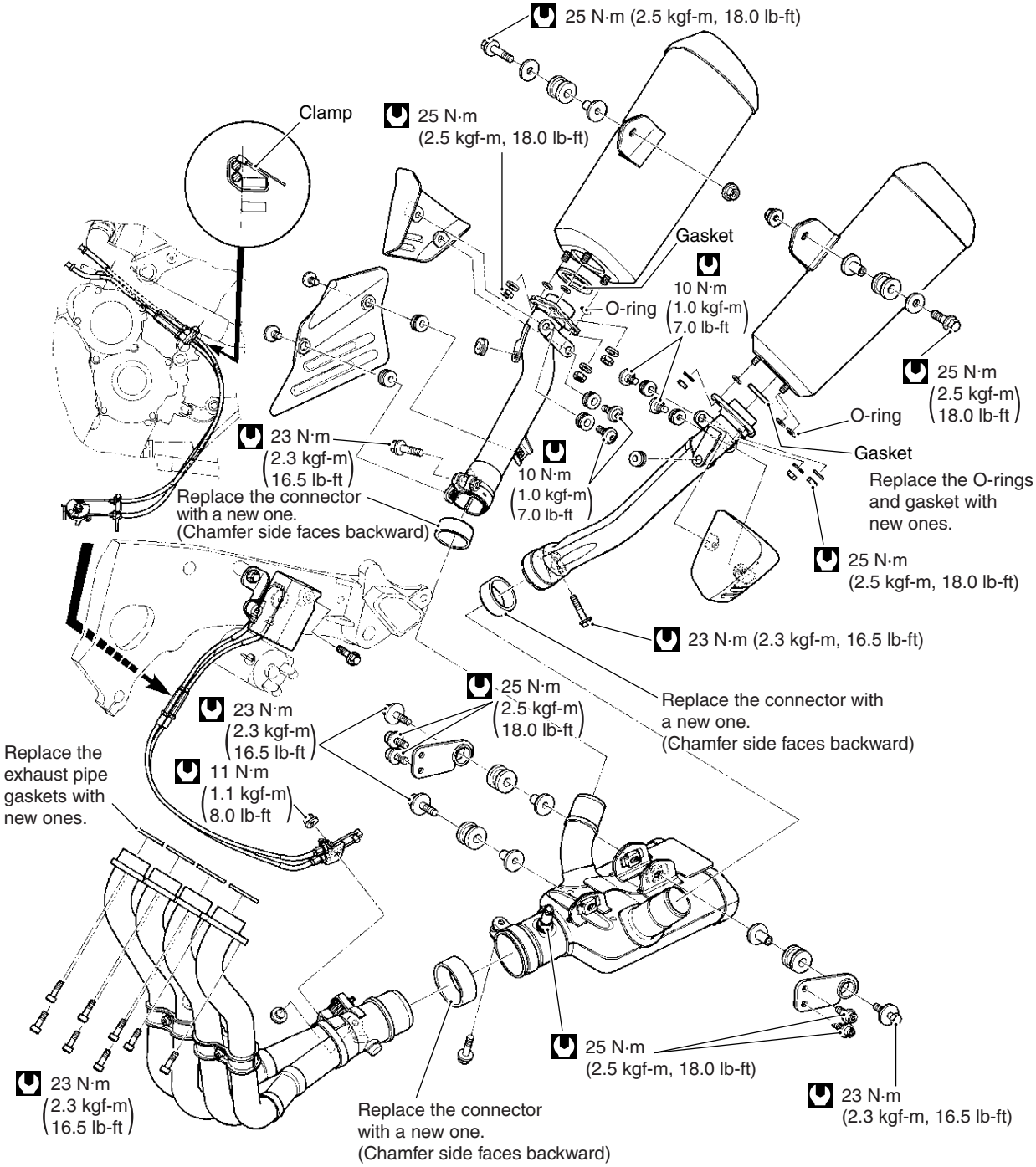

COOLING AND LUBRICATION SYSTEM

CONTENTS

ENGINE COOLANT 7- 2
COOLING CIRCUIT 7- 3
COOLING CIRCUIT INSPECTION 7- 3
RADIATOR AND WATER HOSES 7- 4
RADIATOR REMOVAL 7- 4
RADIATOR CAP INSPECTION 7- 4
RADIATOR INSPECTION AND CLEANING 7- 4
RADIATOR INSTALLATION 7- 5
WATER HOSE INSPECTION 7- 5
COOLING FAN 7- 6
REMOVAL 7- 6
INSPECTION 7- 6
INSTALLATION 7- 6
COOLING FAN RELAY INSPECTION 7- 7
ECT SENSOR 7- 7
REMOVAL 7- 7
INSPECTION 7- 7
INSTALLATION 7- 8
THERMOSTAT 7- 9
REMOVAL 7- 9
INSPECTION 7- 9
INSTALLATION 7-10
WATER PUMP 7-11
REMOVAL AND DISASSEMBLY 7-11
INSPECTION 7-13
REASSEMBLY AND INSTALLATION 7-14
LUBRICATION SYSTEM 7-17
OIL PRESSURE 7-17
OIL FILTER 7-17
OIL PRESSURE REGULATOR 7-17
OIL STRAINER 7-17
OIL JET 7-17
OIL PUMP 7-17
OIL PRESSURE SWITCH 7-17
OIL COOLER 7-17
ENGINE LUBRICATION SYSTEM CHART 7-19
ENGINE LUBRICATION SYSTEM 7-20

ENGINE COOLANT

At the time of manufacture, the cooling system is filled with a 50:50 mixture of distilled water and ethylene glycol anti-freeze. This 50:50 mixture will provide the optimum corrosion protection and excellent heat protection, and will protect the cooling system from freezing at temperatures above –31 °C (–24 °F).
If the motorcycle is to be exposed to temperatures below –31 °C (–24 °F), this mixing ratio should be increased up to 55% or 60% according to the figure.

Anti-freeze density	Freezing point
50%	–30 °C (–24 °F)
55%	–40 °C (–44 °F)
60%	–55 °C (–67 °F)

CAUTION

- **Use a high quality ethylene glycol base anti-freeze, mixed with distilled water. Do not mix an alcohol base anti-freeze and different brands of anti-freeze.**
- **Do not put in 60% and more anti-freeze or 50% and less. (Refer to below figure.)**
- **Do not use a radiator anti-leak additive.**

50% Engine coolant including reserve tank capacity

Anti-freeze	1 250 ml (2.6/2.2 US/Imp.pt)
Water	1 250 ml (2.6/2.2 US/Imp.pt)

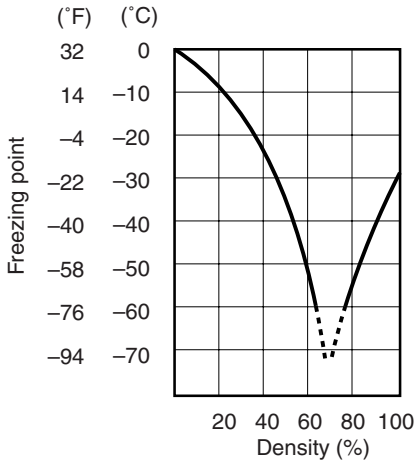

Fig. 1 Engine coolant density-freezing point curve

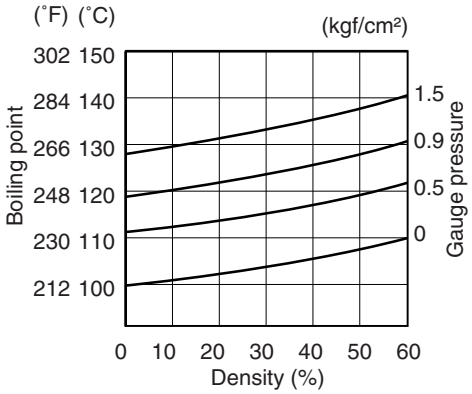

Fig. 2 Engine coolant density-boiling point curve

⚠ WARNING

- **You can be injured by scalding fluid or steam if you open the radiator cap when the engine is hot. After the engine cools, wrap a thick cloth around cap and carefully remove the cap by turning it a quarter turn to allow pressure to escape and then turn the cap all the way off.**
- **The engine must be cool before servicing the cooling system.**
- **Coolant is harmful;**
  - **If it comes in contact with skin or eyes, flush with water.**
  - **If swallowed accidentally, induce vomiting and call physician immediately.**
  - **Keep it away from children.**

COOLING CIRCUIT

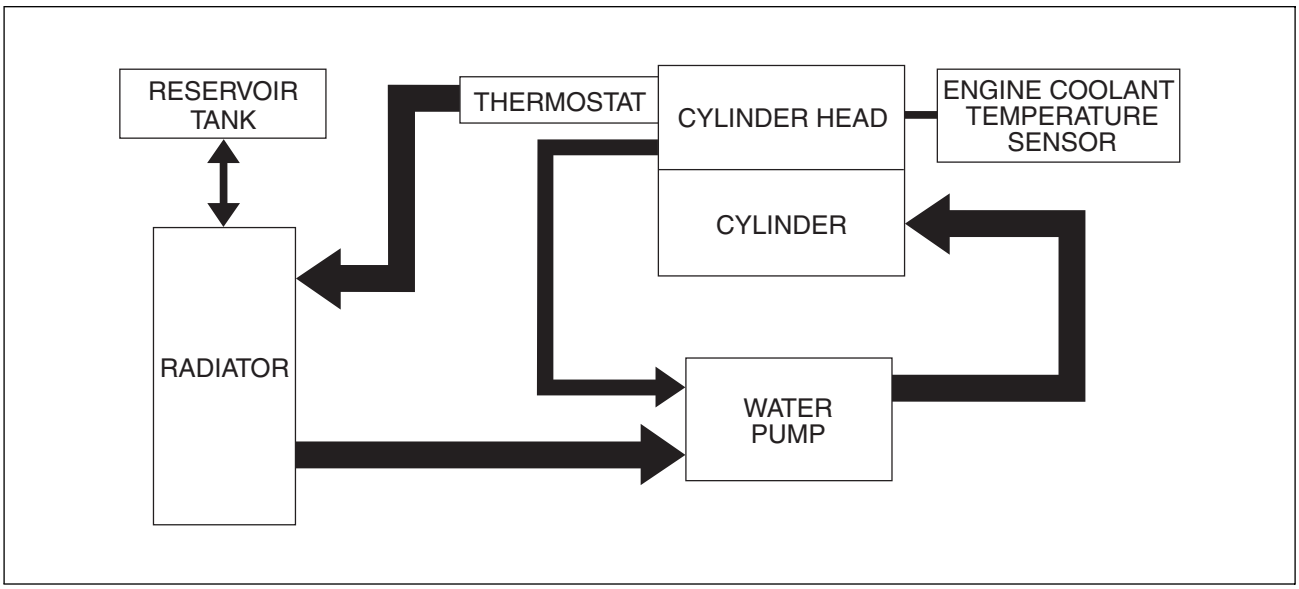

COOLING CIRCUIT INSPECTION

Before removing the radiator and draining the engine coolant, inspect the cooling circuit for tightness.

- Remove the right under cowling. (☞8-5)
- Remove the radiator cap ① and connect the tester ② to the filler.

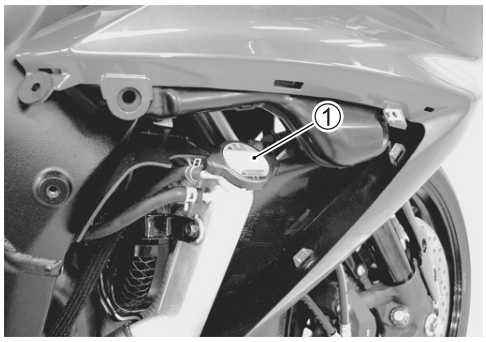

⚠ WARNING

Do not remove the radiator cap when the engine is hot.

- Give a pressure of about 120 kPa (1.2 kgf/cm², 17 psi) and see if the system holds this pressure for 10 seconds.
- If the pressure should fall during this 10-second interval, it means that there is a leaking point in the system. In such a case, inspect the entire system and replace the leaking component or part.

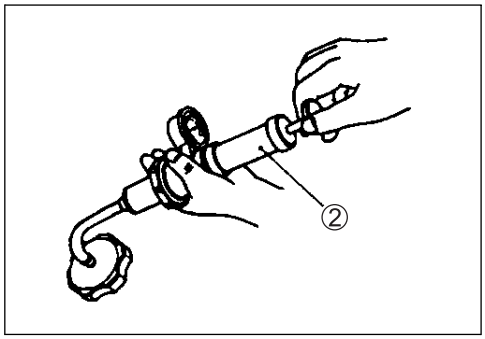

⚠ WARNING

When removing the radiator cap tester, put a rag on the filler to prevent spouting of engine coolant.

CAUTION

Do not allow the pressure to exceed the radiator cap release pressure, or the radiator can be damaged.

RADIATOR AND WATER HOSES

RADIATOR REMOVAL

- Remove the under cowlings. (☞8-5)
- Drain the engine coolant. (☞2-18)
- Remove the radiator assembly. (☞3-4)
- Remove the cooling fan ① from the radiator.

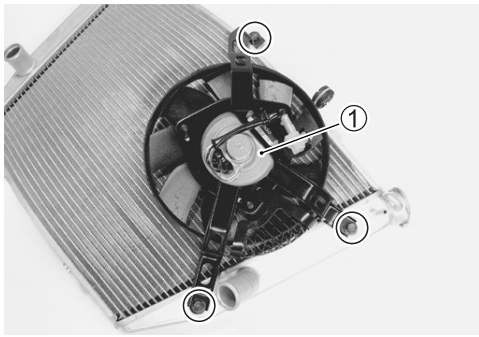

RADIATOR CAP INSPECTION

- Fit the cap ① to the radiator cap tester ②.
- Build up pressure slowly by operating the tester. Make sure that the pressure build-up stops at 93 – 123 kPa (0.93 – 1.23 kgf/cm², 13.2 – 17.5 psi) and that, with the tester held stand-still, the cap is capable of holding that pressure for at least 10 seconds.
- Replace the cap if it is found not to satisfy either of these two requirements.

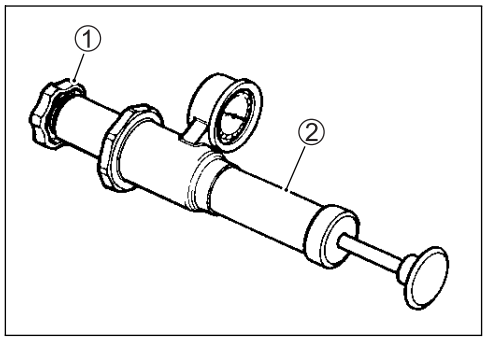

DATA Radiator cap valve opening pressure:
Standard: 93 – 123 kPa
(0.93 – 1.23 kgf/cm², 13.2 – 17.5 psi)

RADIATOR INSPECTION AND CLEANING

- Road dirt or trash stuck on the fins must be removed.
- Use of compressed air is recommended for this cleaning.

- Fins bent down or dented can be repaired by straightening them with the blade of a small screwdriver.

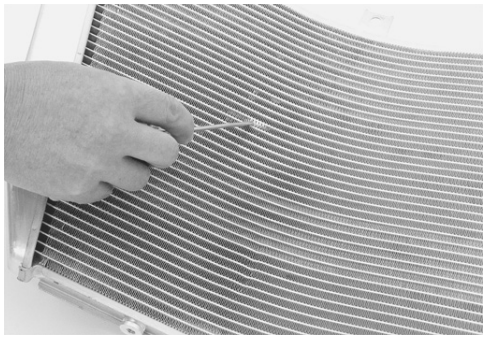

RADIATOR INSTALLATION

- Install the cooling fan.

Cooling fan mounting bolt: 8 N·m (0.8 kgf-m, 6.0 lb-ft)

- Install the radiator.
- Route the radiator hoses properly. (☞10-20)
- Pour engine coolant. (☞2-18)
- Bleed air from the cooling circuit. (☞2-19)
- Install the under cowlings. (☞8-5)

WATER HOSE INSPECTION

- Remove the under cowlings. (☞8-5)
- Lift and support the fuel tank. (☞5-3)
- Remove the sprocket cover bolts.
- Any water hose found in a cracked condition or flattened must be replaced.
- Any leakage from the connecting section should be corrected by proper tightening.

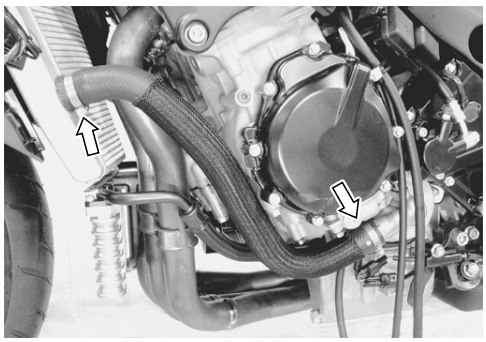

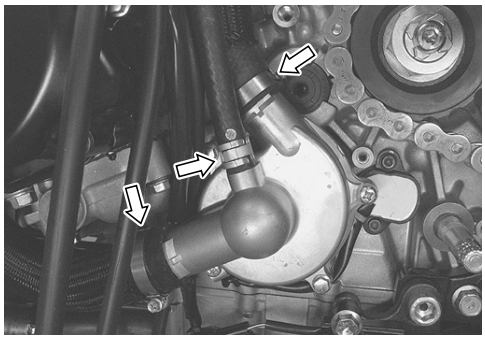

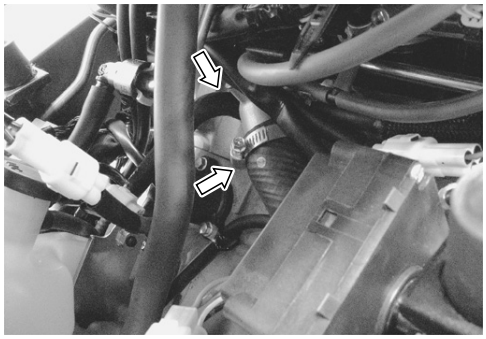

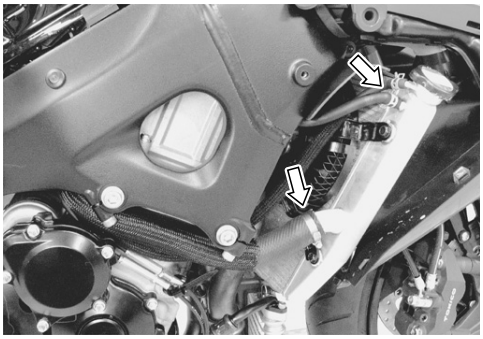

COOLING FAN

REMOVAL

- Remove the cooling fan. (☞7-4)

INSPECTION

- Remove the right under cowling. (☞8-5)
- Disconnect the cooling fan coupler ①.
- Test the cooling fan motor for load current with an ammeter connected as shown in the illustration.

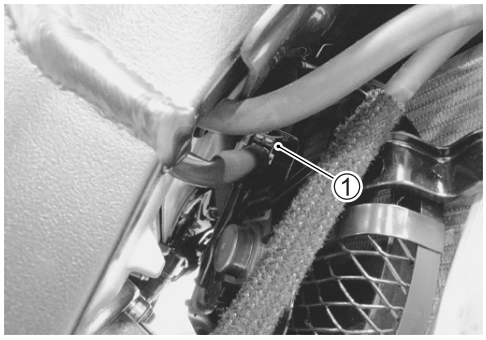

- The voltmeter is for making sure that the battery ② applies 12 V to the cooling fan motor ③. With the cooling fan motor with electric motor fan running at full speed, the ammeter ④ should be indicating not 5 A and more.
- If the fan motor does not turn, replace the motor assembly with a new one.

NOTE:
When making above test, it is not necessary to remove the cooling fan.

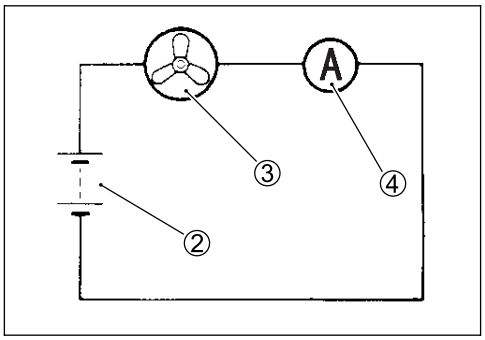

INSTALLATION

- Install the cooling fan. (☞7-5)

COOLING FAN RELAY INSPECTION

Cooling fan relay is located under the front seat.

- Remove the front seat. (☞8-8)
- Remove the cooling fan relay ①.

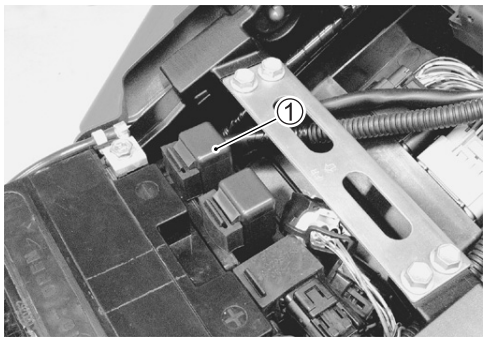

First check the insulation between Ⓐ and Ⓑ terminals with tester. Then apply 12 V to Ⓒ and Ⓓ terminals, ⊕ to Ⓒ and ⊖ to Ⓓ, and check the continuity between Ⓐ and Ⓑ.
If there is no continuity, replace it with a new one.

TOOL 09900-25008: Multi-circuit tester set

Tester knob indication: Continuity test (•)))

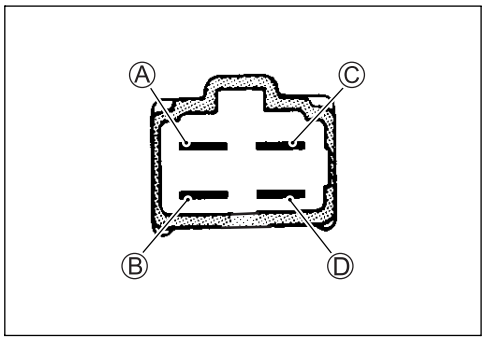

ECT SENSOR

REMOVAL

- Keep the motorcycle upright.
- Lift and support the fuel tank. (☞5-3)
- Disconnect the ECT sensor coupler ①.
- Place a rag under the ECT sensor and remove the ECT sensor.

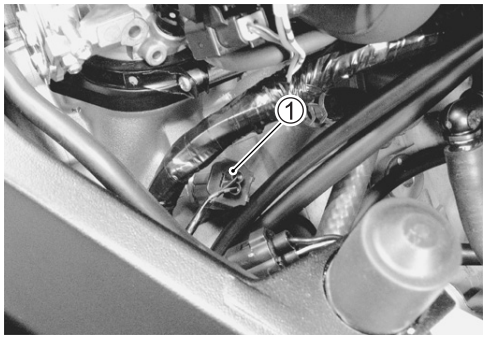

INSPECTION

- Check the ECT sensor by testing it at the bench as shown in the figure. Connect the ECT sensor ① to a circuit tester and place it in the oil ② contained in a pan, which is placed on a stove.
- Heat the oil to raise its temperature slowly and read the column thermometer ③ and the ohmmeter.

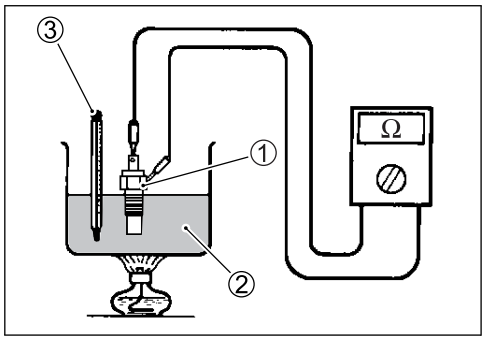

- If the ECT sensor ohmic value does not change in the proportion indicated, replace it with a new one.

DATA Temperature sensor specification

Temperature	Standard resistance
20 °C (68 °F)	Approx. 2.45 kΩ
50 °C (122 °F)	Approx. 0.811 kΩ
80 °C (176 °F)	Approx. 0.318 kΩ
110 °C (230 °F)	Approx. 0.142 kΩ

DATA Cooling fan operating temperature:

Standard (OFF→ON): Approx. 105 °C (221 °F)
(ON→OFF): Approx. 100 °C (212 °F)

Intake air temperature at or above 40 °C (104 °F)
(OFF→ON): Approx. 100 °C (212 °F)
(ON→OFF): Approx. 95 °C (203 °F)

NOTE:
As coolant temperature rises, the cooling fan operates for 5 seconds when the temperature arrives each at 50 °C (122 °F), 70 °C (158 °F) and 90 °C (194 °F)/4 000 r/min and more.

If the resistance is noted to show infinity or too much different resistance value, replace the ECT sensor with a new one.

CAUTION

*** Take special care when handling the ECT sensor. It may cause damage if it gets a sharp impact.**
*** Do not contact the ECT sensor and the column thermometer with a pan.**

INSTALLATION

- Tighten the ECT sensor to the specified torque.

ECT sensor: 18 N·m (1.8 kgf-m, 13.0 lb-ft)

CAUTION

Take special care when handling the ECT sensor. It may cause damage if it gets a sharp impact.

- Pour engine coolant. (☞2-18)
- Bleed air from the cooling circuit. (☞2-19)

THERMOSTAT

REMOVAL

- Remove the right under cowling. (☞8-5)
- Lift and support the fuel tank. (☞5-3)
- Place a rag under the thermostat cover.
- Remove the thermostat cover ①.

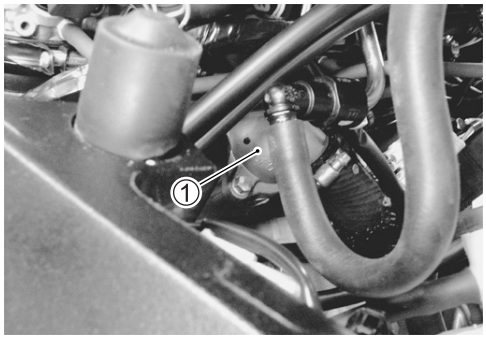

- Remove the thermostat ②.

INSPECTION

Inspect the thermostat pellet for signs of cracking.
Test the thermostat at the bench for control action, in the following manner.

- Pass a string ① between flange ② of thermostat, as shown.
- Immerse the thermostat in the water contained in a beaker, as shown in the illustration. Note that the immersed thermostat is in suspension. Heat the water ③ by placing the beaker on a stove ④ and observe the rising temperature on a thermometer ⑤.
- Read the thermometer just when opening the thermostat. This reading, which is the temperature level at which the thermostat valve begins to open, should satisfy the standard value.

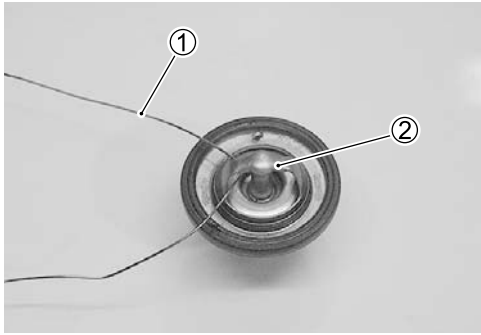

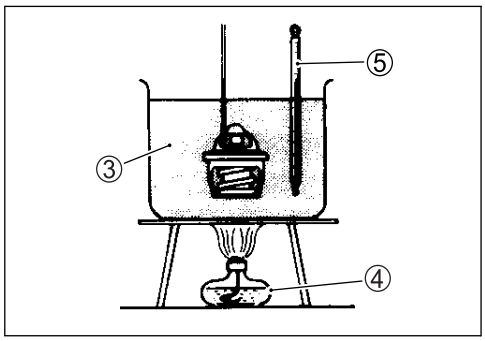

DATA Thermostat valve opening temperature:
Standard: Approx. 82 °C (180 °F)

- Keep on heating the water to raise its temperature.
- Just when the water temperature reaches specified value, the thermostat valve should have lifted by at least 8 mm (0.31 in).

DATA Thermostat valve lift Ⓐ:
Standard:
8.0 mm and over at 95 °C (0.31 in and over at 203 °F)

- A thermostat failing to satisfy either of the two requirements (start-to-open temperature and valve lift) must be replaced.

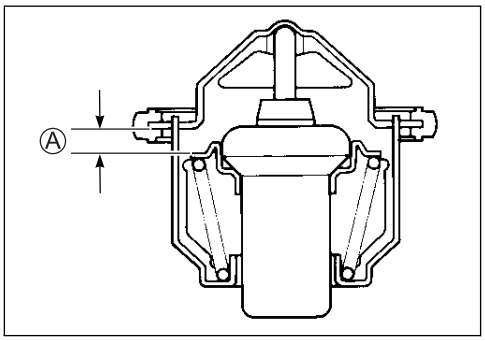

INSTALLATION

- Install the thermostat.

NOTE:
The jiggle valve Ⓐ of the thermostat faces upside.

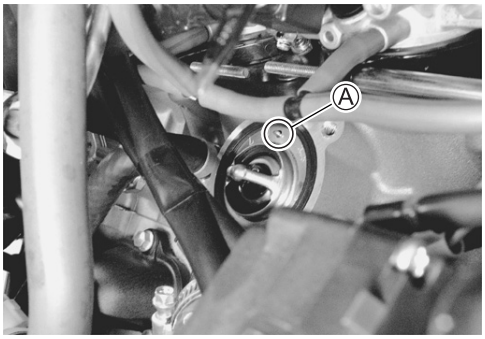

- Install the thermostat cover ①.
- Tighten the thermostat cover bolts to the specified torque.

Thermostat cover bolt: 10 N·m (1.0 kgf-m, 7.0 lb-ft)

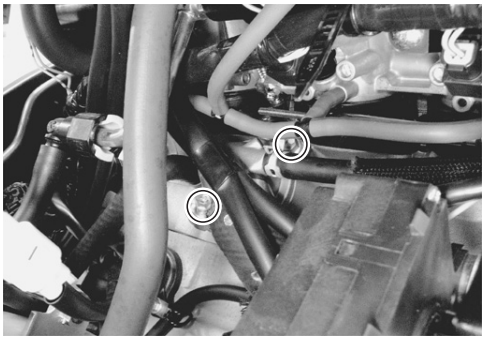

- Pour engine coolant. (☞2-18)
- Bleed air from the cooling circuit. (☞2-19)
- Install the fuel tank. (☞5-4)
- Install the right under cowling. (☞8-5)

WATER PUMP

REMOVAL AND DISASSEMBLY

NOTE:
Before draining engine oil and engine coolant, inspect engine oil and coolant leakage between the water pump and crankcase. If engine oil is leaking, visually inspect the oil seal and O-ring. If engine coolant is leaking, visually inspect the mechanical seal and seal washer. (☞7-13)

- Remove the under cowlings. (☞8-5)
- Drain the engine coolant. (☞2-18)
- Drain the engine oil. (☞2-12)

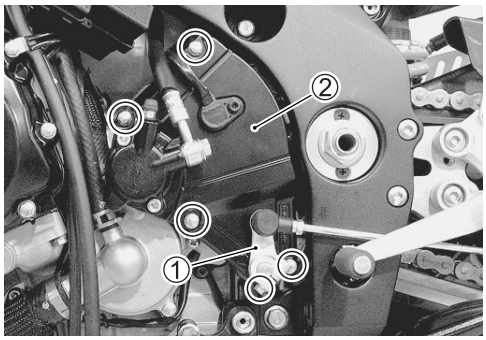

- Remove the gearshift lever ①.
- Remove the engine sprocket cover ②.

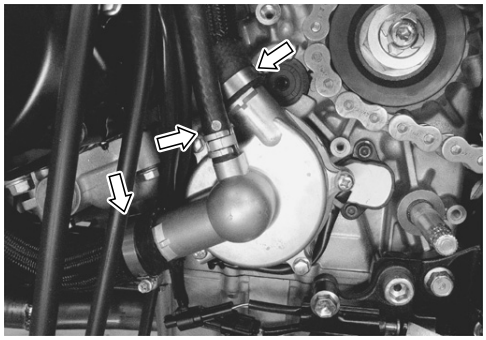

- Disconnect the water hoses.

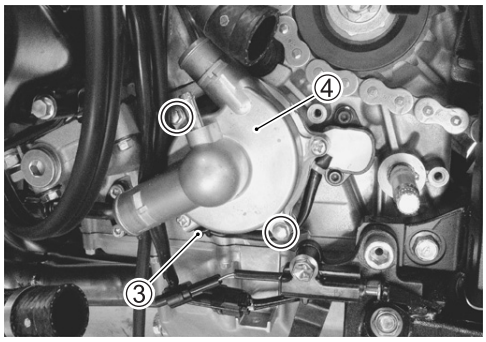

- Release the gear position switch lead wire from the clamp ③.
- Remove the water pump ④.

- Remove the water pump cover ⑤ and clamp ⑥.

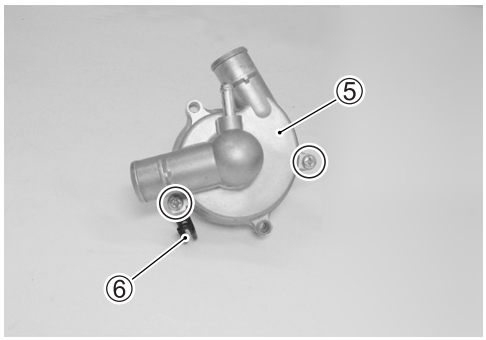

- Holding the impeller with water pump pliers, remove the impeller securing bolt.

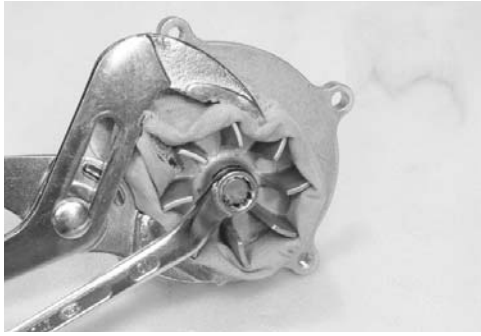

- Remove the mechanical seal ring ⑦ and rubber seal ⑧ from the impeller.

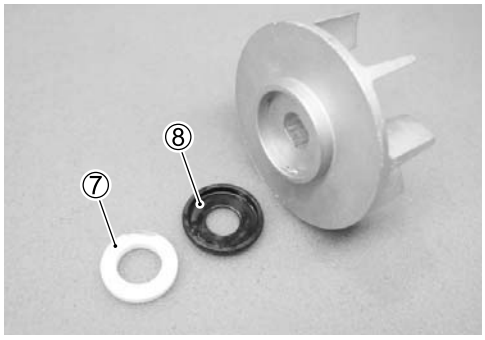

- Remove the impeller shaft ⑨ and washer ⑩.

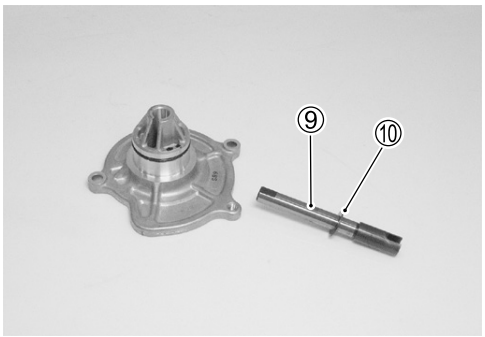

- Remove the mechanical seal with the special tool.

TOOL 09921-20240: Bearing remover set (12 mm)

NOTE:
If there is no abnormal condition, the mechanical seal removal is not necessary.

CAUTION

The removed mechanical seal must be replaced with a new one.

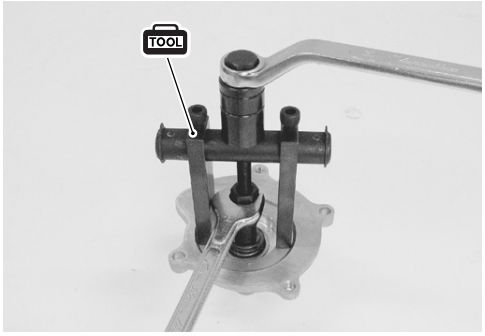

- Remove the oil seal ⑪.

NOTE:
If there is no abnormal condition, the oil seal removal is not necessary.

CAUTION

The removed oil seal must be replaced with a new one.

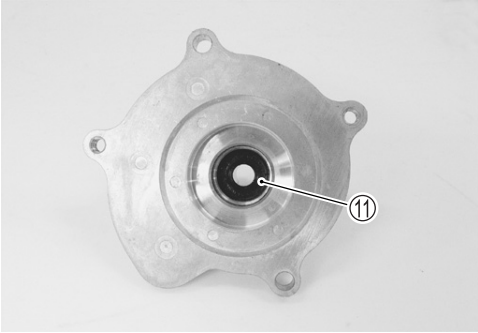

INSPECTION

MECHANICAL SEAL

- Visually inspect the mechanical seal for damage, with particular attention given to the sealing face.
- Replace the mechanical seal that shows indications of leakage. Also replace the seal ring if necessary.

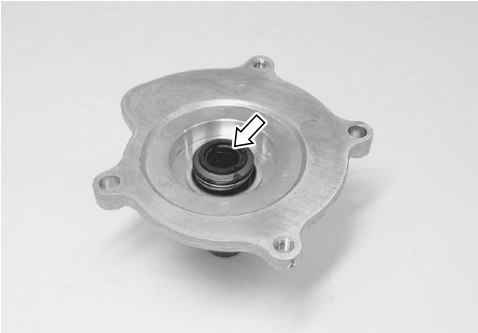

OIL SEAL

- Visually inspect the oil seal for damage, with particular attention given to the lip.
- Replace the oil seal that shows indications of leakage.

IMPELLER SHAFT JOURNAL

- Visually inspect the journal for damage or scratch.
- Replace the water pump body if necessary.

SEAL WASHER

- Visually inspect the seal washer for damage, with particular attention given to the sealing face.
- Replace the seal washer that shows indications of leakage.

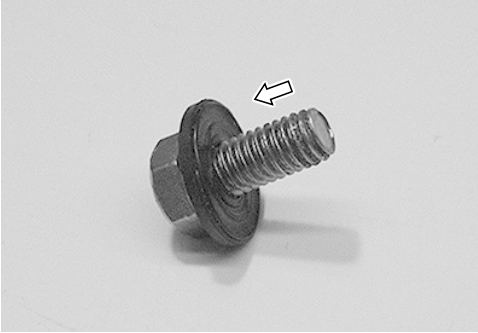

REASSEMBLY AND INSTALLATION

- Install the oil seal with the special tool.

TOOL 09913-70210: Bearing installer set (ϕ22)

NOTE:
The stamped mark on the oil seal faces mechanical seal side.

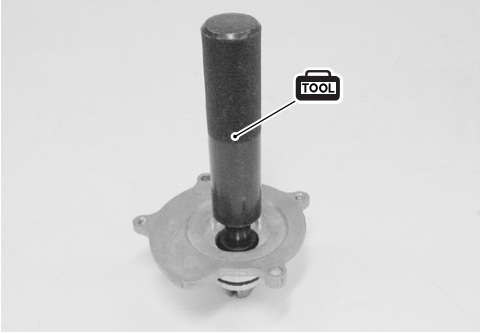

- Apply a small quantity of the grease to the oil seal lip.

Ⓐ 99000-25010: SUZUKI SUPER GREASE "A" or equivalent

- Install the new mechanical seal using a suitable size socket wrench.

NOTE:
On the new mechanical seal, the sealer Ⓐ has been applied.

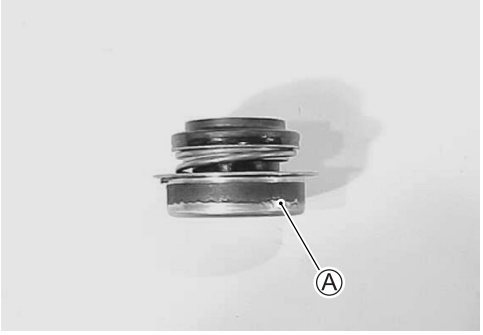

- Apply grease to the impeller shaft.

Ⓐ 99000-25010: SUZUKI SUPER GREASE "A" or equivalent

- Install the impeller shaft to the water pump body.

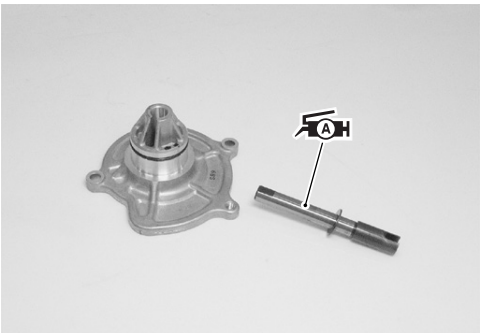

- Install the rubber seal ① into the impeller.
- After wiping off the oily or greasy matter from the mechanical seal ring, install it into the impeller.

NOTE:
The paint marked side Ⓑ of mechanical seal ring faces the rubber seal.

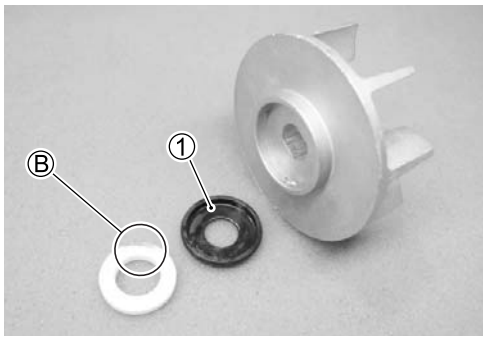

- Install the washer ② and seal washer ③ onto the impeller securing bolt ④.

NOTE:
The metal side Ⓒ of seal washer and the curved side Ⓓ of washer face the impeller securing bolt head.

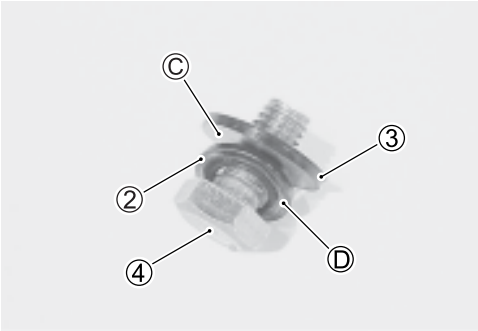

- Install the impeller ⑤ and its securing bolt onto the shaft.
- Tighten the impeller securing bolt to the specified torque.

Impeller securing bolt: 8 N·m (0.8 kgf-m, 6.0 lb-ft)

NOTE:
Before installing the impeller securing bolt, apply a small quantity of the thread lock to it.

1322 99000-32110: THREAD LOCK SUPER "1322" or equivalent

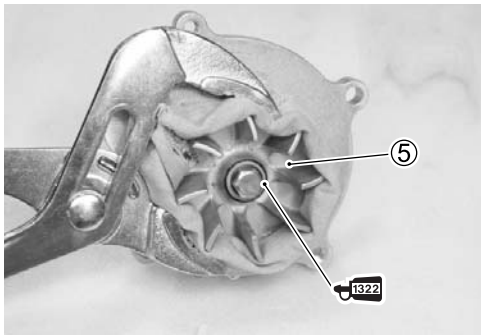

- Install the new O-rings ⑥ and ⑦.

CAUTION

Use the new O-rings to prevent engine coolant leakage.

NOTE:
** Apply engine coolant to the O-ring ⑥.*
** Apply grease to the O-ring ⑦.*

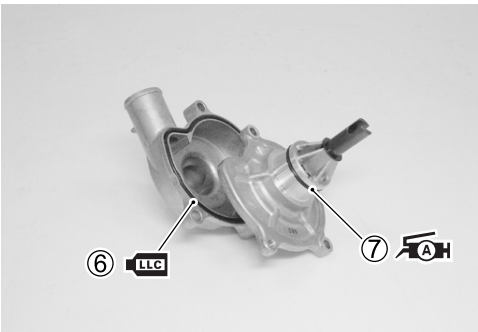

A 99000-25010: SUZUKI SUPER GREASE "A" or equivalent

- Tighten the water pump cover screws to the specified torque.

Water pump cover screw: 5 N·m (0.5 kgf-m, 3.5 lb-ft)

NOTE:
Fit the clamp Ⓔ to the water pump cover screw.

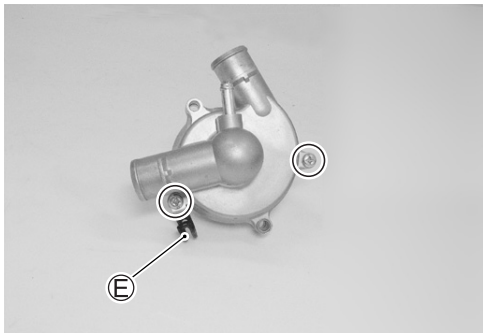

- Install the water pump.

NOTE:
Set the water pump shaft end Ⓕ to the oil pump shaft Ⓖ as shown.

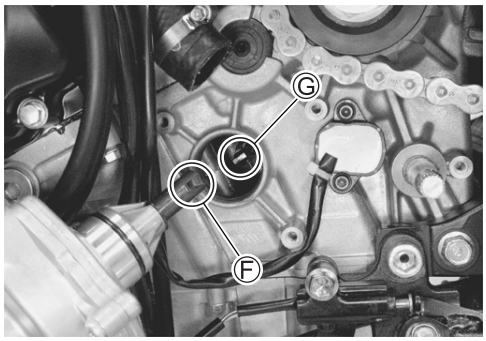

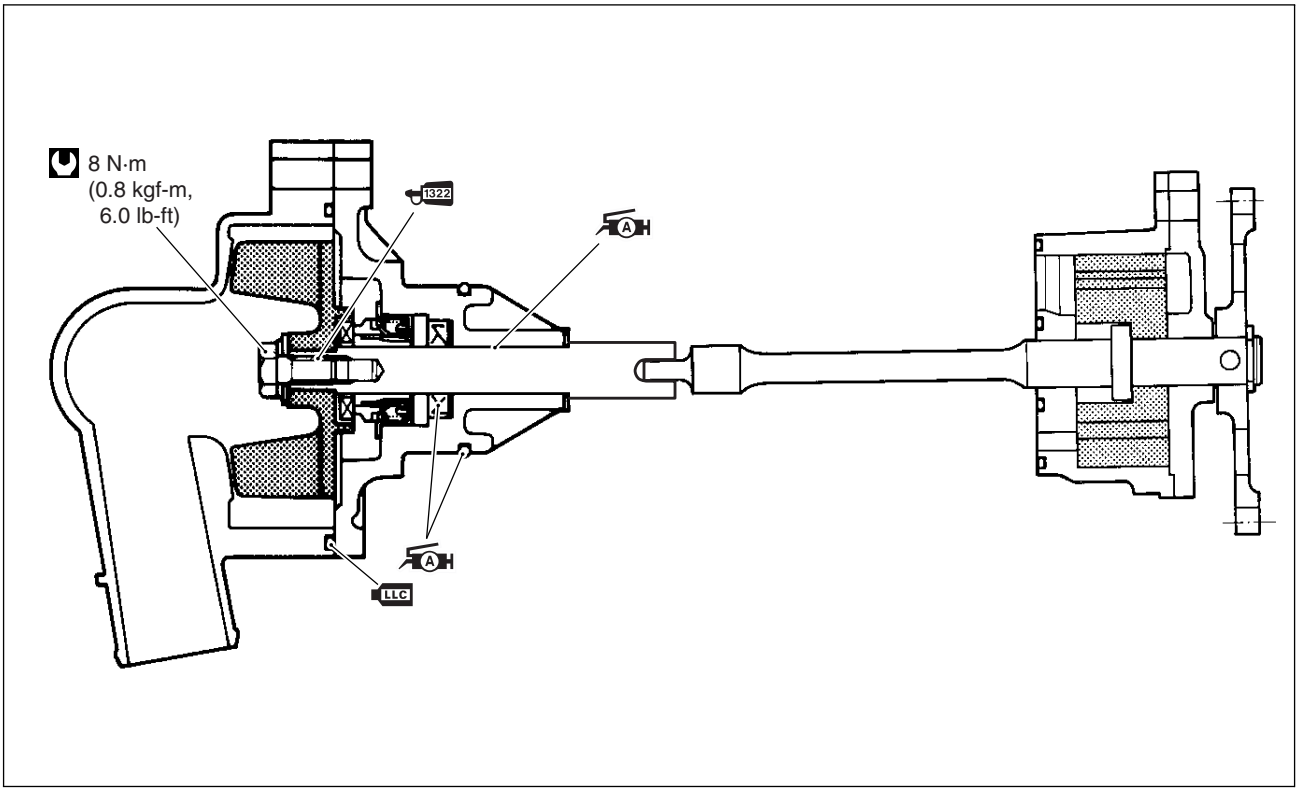

- Tighten the water pump mounting bolts to the specified torque.

Water pump mounting bolt: 10 N·m (1.0 kgf-m, 7.0 lb-ft)

NOTE:
Pass the gear position switch lead wire ⑧ under the water pump lib.

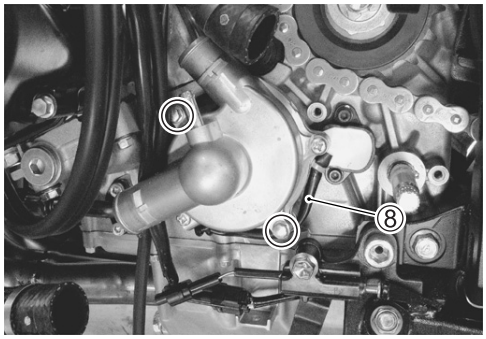

- Connect the water hoses. (☞10-20)
- Install the engine sprocket cover.
- Install the gearshift lever. (☞10-34)
- Pour engine coolant. (☞2-18)
- Pour engine oil. (☞2-12)
- Install the under cowlings. (☞8-5)

LUBRICATION SYSTEM

OIL PRESSURE

☞2-33

OIL FILTER

☞2-13

OIL PRESSURE REGULATOR

☞3-47

OIL STRAINER

☞3-47

OIL JET

☞3-59

OIL PUMP

☞3-44

OIL PRESSURE SWITCH

☞9-34

OIL COOLER

REMOVAL

- Remove the under cowlings. (☞8-5)
- Drain the engine oil. (☞2-12)
- Remove the oil cooler. (☞3-4)

INSPECTION AND CLEANING

- Road dirt or trash stuck to the fins must be removed.
- Use of compressed air is recommended for this cleaning.

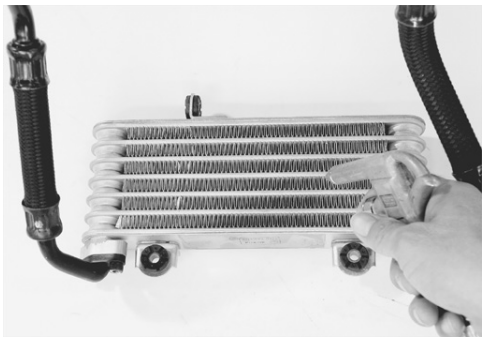

- Fins bent down or dented can be repaired by straightening them with the blade of a small screwdriver.

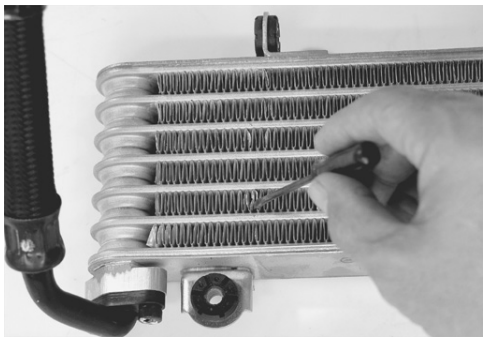

INSTALLATION

- Install a new O-ring ①.

CAUTION

Use the new O-rings to prevent engine oil leakage.

NOTE:
Apply engine oil to the O-ring ①.

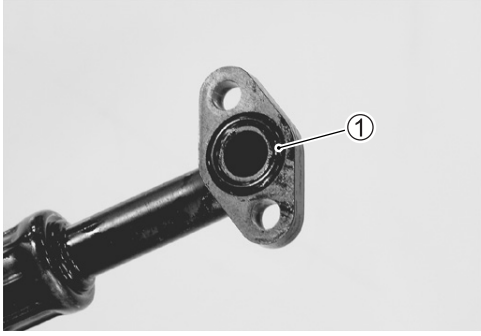

- Tighten the oil cooler hose bolts to the specified torque.

Oil cooler hose bolt: 10 N·m (1.0 kgf-m, 7.0 lb-ft)

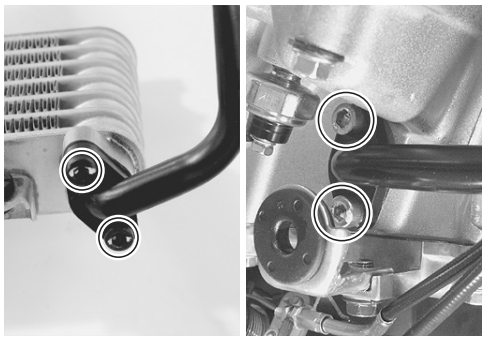

ENGINE LUBRICATION SYSTEM CHART

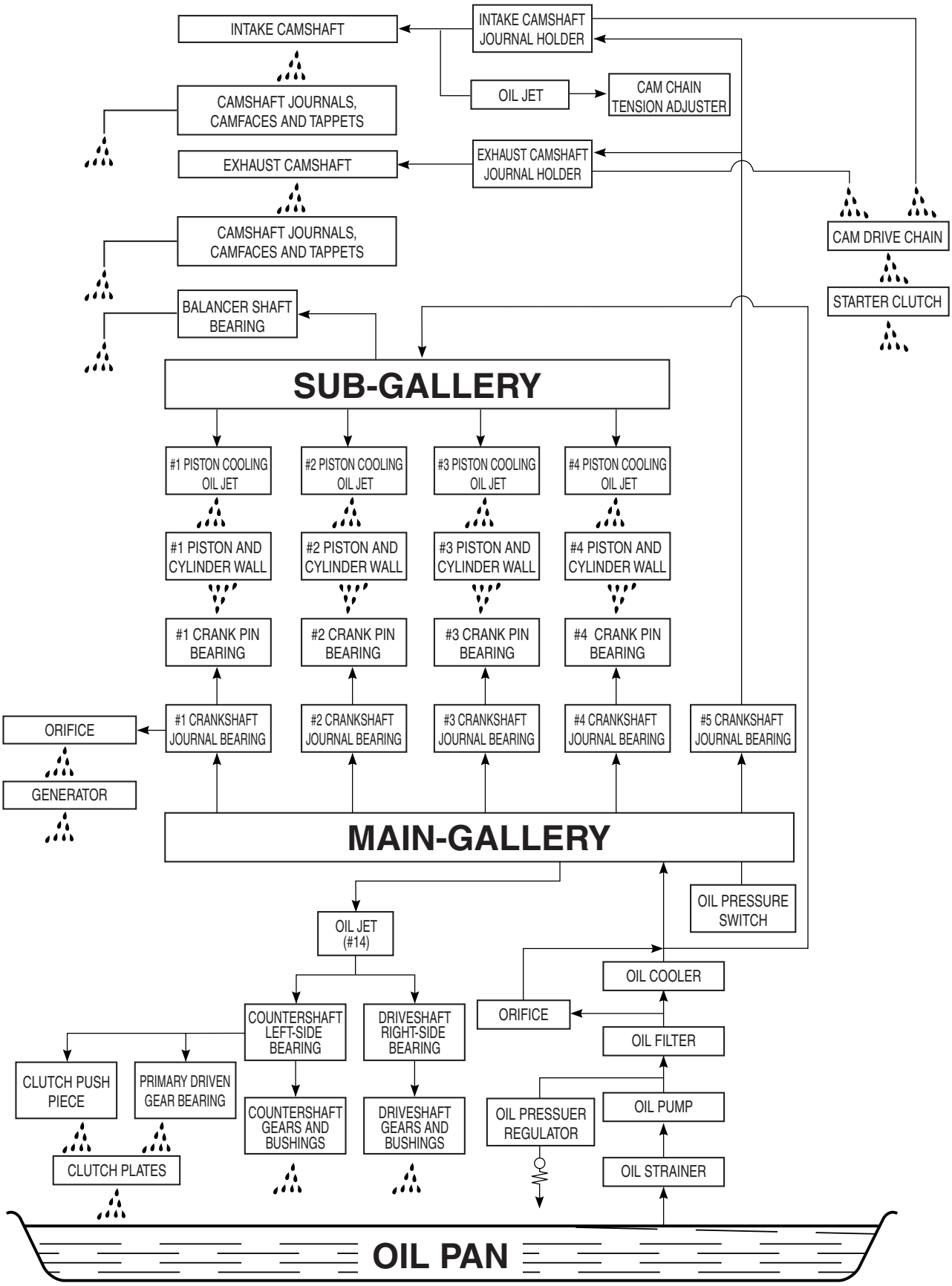

ENGINE LUBRICATION SYSTEM

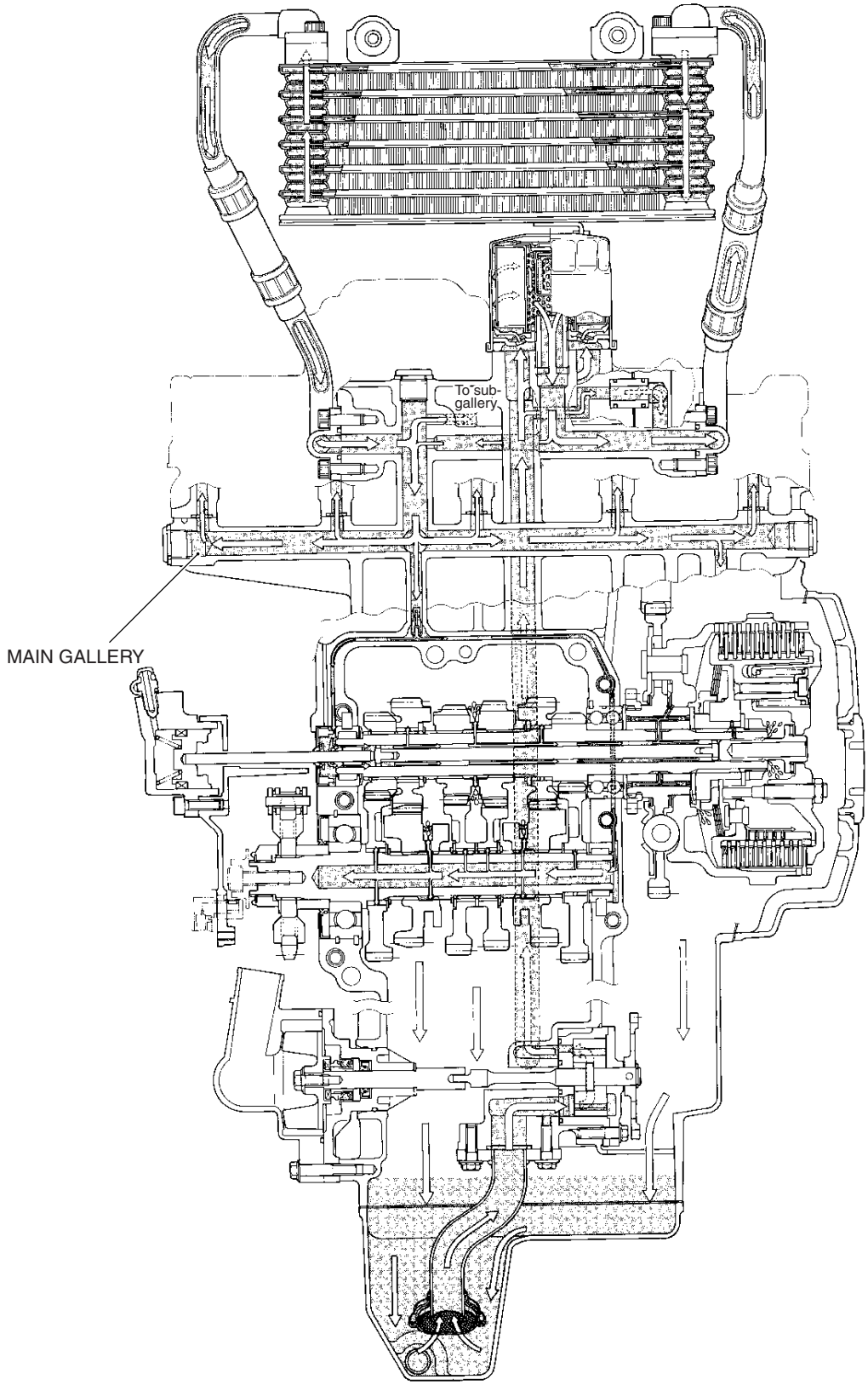

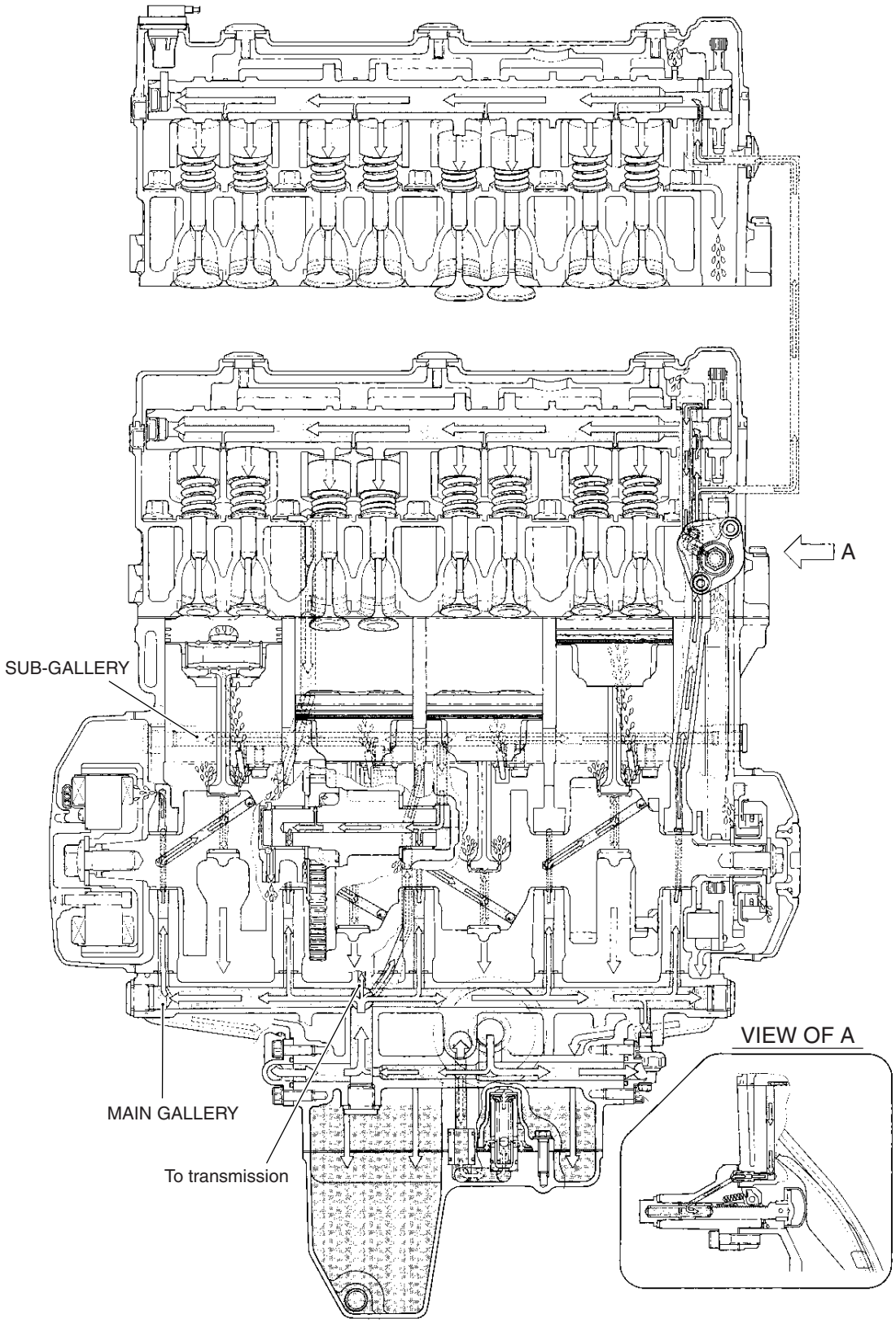
A
SUB-GALLERY
MAIN GALLERY
To transmission
VIEW OF A

CHASSIS

CONTENTS

EXTERIOR PARTS 8- 3
FASTENER REMOVAL AND INSTALLATION 8- 3
LOWER BRACKET COVER 8- 5
UNDER COWLING 8- 5
SIDE COWLING 8- 6
BODY COWLING COVER 8- 6
SCREEN 8- 7
BODY COWLING 8- 7
AIR INTAKE PIPE 8- 8
COWLING BRACE 8- 8
FRONT SEAT 8- 8
FUEL TANK LOWER SIDE COVER 8- 8
REAR SEAT/SEAT TAIL COVER 8- 9
FRAME COVER 8- 9
FRONT WHEEL 8-10
CONSTRUCTION 8-10
REMOVAL 8-11
INSPECTION AND DISASSEMBLY 8-12
REASSEMBLY AND INSTALLATION 8-14
FRONT FORK 8-18
CONSTRUCTION 8-18
REMOVAL AND DISASSEMBLY 8-19
INSPECTION 8-22
REASSEMBLY 8-23
INSTALLATION 8-27
FRONT SUSPENSION SETTING 8-28
STEERING DAMPER 8-29
CONSTRUCTION 8-29
REMOVAL 8-30
INSPECTION 8-30
INSTALLATION 8-31
STEERING 8-32
CONSTRUCTION 8-32
REMOVAL 8-33
INSPECTION AND DISASSEMBLY 8-34
REASSEMBLY 8-35
INSTALLATION 8-35
STEERING TENSION ADJUSTMENT 8-37
HANDLEBARS 8-38
CONSTRUCTION 8-38
REMOVAL 8-38
INSTALLATION 8-40
REAR WHEEL 8-42
CONSTRUCTION 8-42
REMOVAL 8-43
INSPECTION AND DISASSEMBLY 8-44
REASSEMBLY AND INSTALLATION 8-46
REAR SHOCK ABSORBER 8-50
CONSTRUCTION 8-50
REMOVAL 8-51
INSPECTION 8-51
REAR SHOCK ABSORBER DISPOSAL 8-52
INSTALLATION 8-53
REAR SUSPENSION SETTING 8-53

CHASSIS

CONTENTS

REAR SUSPENSION 8-55
CONSTRUCTION 8-55
REMOVAL 8-56
INSPECTION AND DISASSEMBLY 8-58
REASSEMBLY 8-61
INSTALLATION 8-63
FINAL INSPECTION AND ADJUSTMENT 8-64
FRONT BRAKE 8-65
CONSTRUCTION 8-65
BRAKE PAD REPLACEMENT 8-66
BRAKE FLUID REPLACEMENT 8-67
CALIPER REMOVAL 8-68
CALIPER DISASSEMBLY 8-68
CALIPER INSPECTION 8-69
CALIPER REASSEMBLY 8-70
CALIPER INSTALLATION 8-71
BRAKE DISC INSPECTION 8-71
MASTER CYLINDER REMOVAL AND DISASSEMBLY 8-72
MASTER CYLINDER INSPECTION 8-73
MASTER CYLINDER REASSEMBLY 8-74
MASTER CYLINDER INSTALLATION 8-75
REAR BRAKE 8-76
CONSTRUCTION 8-76
BRAKE PAD REPLACEMENT 8-77
BRAKE FLUID REPLACEMENT 8-78
CALIPER REMOVAL AND DISASSEMBLY 8-78
CALIPER INSPECTION 8-80
CALIPER REASSEMBLY 8-81
CALIPER INSTALLATION 8-82
MASTER CYLINDER REMOVAL 8-82
MASTER CYLINDER DISASSEMBLY 8-83
MASTER CYLINDER INSPECTION 8-83
MASTER CYLINDER REASSEMBLY 8-84
MASTER CYLINDER INSTALLATION 8-84
CLUTCH RELEASE CYLINDER AND MASTER CYLINDER 8-85
CONSTRUCTION 8-85
CLUTCH FLUID REPLACEMENT 8-86
CLUTCH RELEASE CYLINDER REMOVAL AND DISASSEMBLY 8-87
CLUTCH RELEASE CYLINDER INSPECTION 8-87
CLUTCH RELEASE CYLINDER REASSEMBLY AND REMOUNTING 8-88
CLUTCH MASTER CYLINDER REMOVAL AND DISASSEMBLY 8-89
CLUTCH MASTER CYLINDER INSPECTION 8-90
CLUTCH MASTER CYLINDER REASSEMBLY AND REMOUNTING 8-91
TIRE AND WHEEL 8-93
TIRE REMOVAL 8-93
INSPECTION 8-93
VALVE INSPECTION 8-94
TIRE INSTALLATION 8-95
BALANCER WEIGHT INSTALLATION 8-96
DRIVE CHAIN 8-97
DRIVE CHAIN CUTTING 8-97
DRIVE CHAIN CONNECTING 8-98

EXTERIOR PARTS

FASTENER REMOVAL AND INSTALLATION

FASTENER (Type A)

Removal

- Depress the head of fastener center piece ①.
- Pull out the fastener ⓐ.

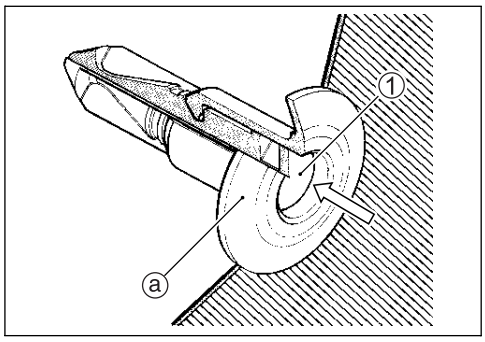

Installation

- Let the center piece stick out toward the head so that the pawls ② close.
- Insert the fastener into the installation hole.

NOTE:
To prevent the pawl ② from damage, insert the fastener all the way into the installation hole.

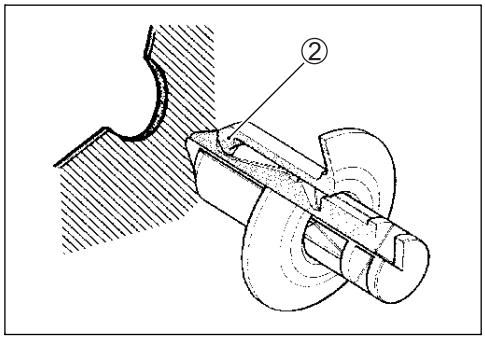

- Push in the head of center piece until it becomes flush with the fastener outside face.

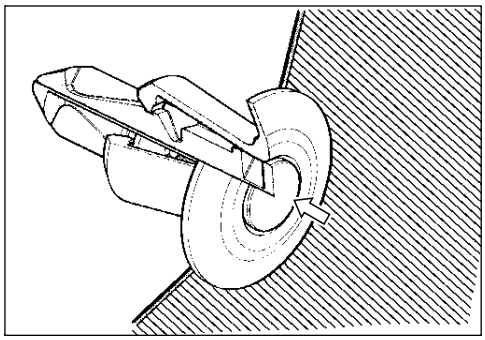

FASTENER (Type B)

Removal

- Pry up the head of fastener center piece ① with a screw driver.
- Pull out the fastener ⓐ.

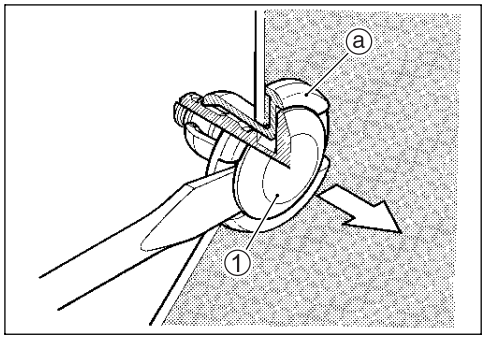

Installation

- Insert the fastener into the installation hole.

NOTE:
To prevent the pawl ② from damage, insert the fastener all the way into the installation hole.

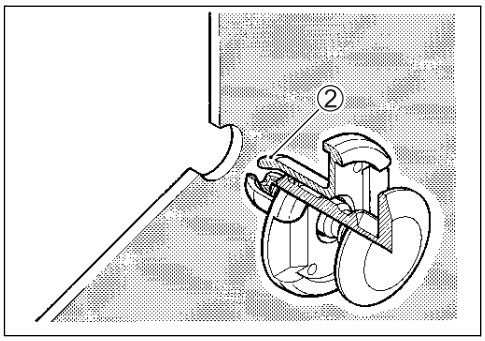

- Push in the head of center piece.

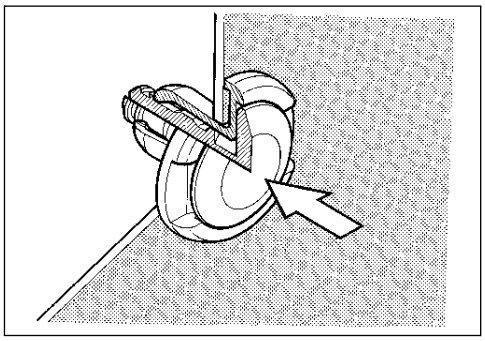

LOWER BRACKET COVER

REMOVAL

- Remove the lower bracket cover ① by removing the bolts.

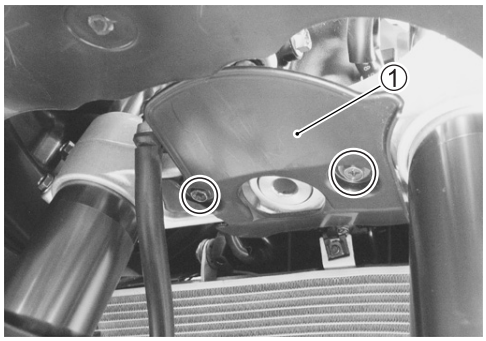

INSTALLATION

- Install the lower bracket cover in the reverse order of removal.

UNDER COWLING

REMOVAL

- Remove the fasteners and bolts.

- Remove the under cowlings ①. (LH/RH)
- Remove the under cowling ②. (Center)

NOTE:
"☆" indicates hook location.
"★" indicates engagement location.

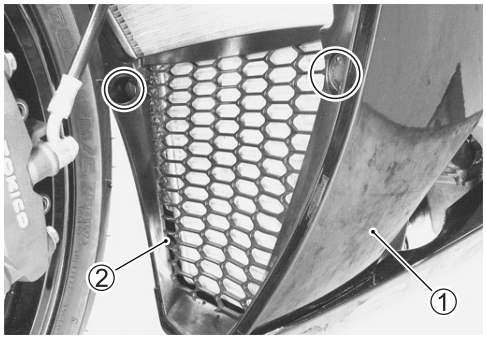

INSTALLATION

- Install the under cowlings in the reverse order of removal.

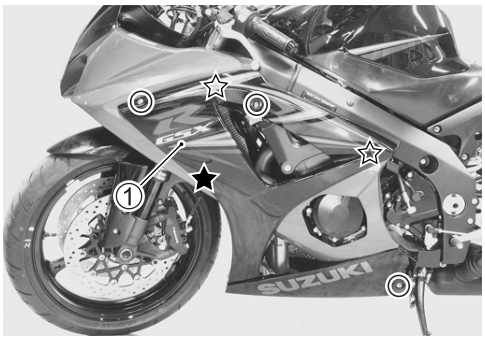

SIDE COWLING

REMOVAL

NOTE:

The left and right side cowlings are installed symmetrically and therefore the removal procedure for one side is the same as that for the other side.

- Remove the under cowling. (☞8-5)
- Remove the body cowling cover fasteners ① and ②.

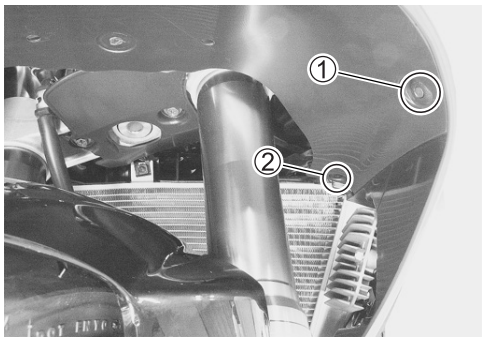

- Bend the body cowling cover and remove the side cowling fastener ③.

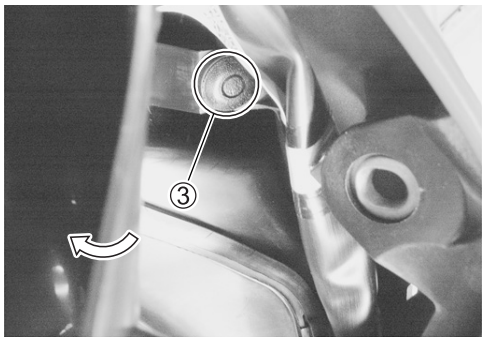

- Remove the side cowling ④. (LH/RH)

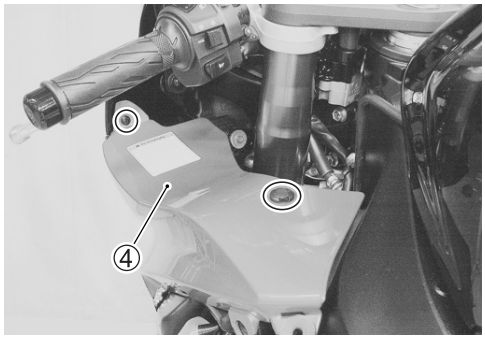

INSTALLATION

- Install the side cowling in the reverse order of removal.

BODY COWLING COVER

REMOVAL

- Remove the fasteners.
- Remove the side cowlings. (☞Above)

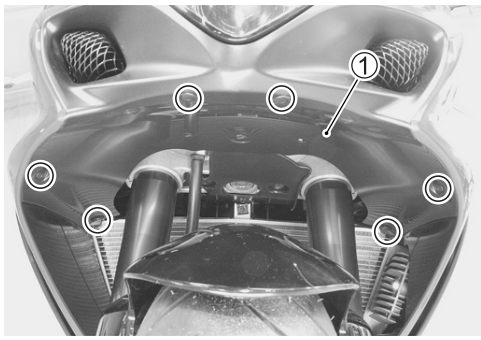

- Remove the body cowling cover ①.

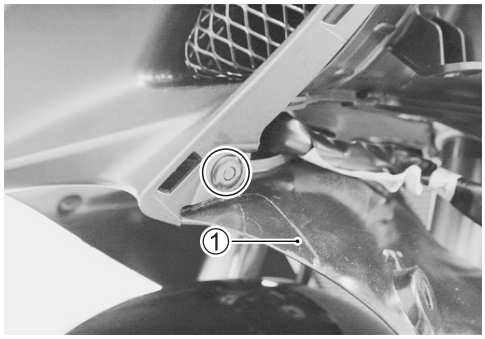

INSTALLATION

- Install the body cowling cover in the reverse order of removal.

SCREEN

REMOVAL

- Remove the screws.

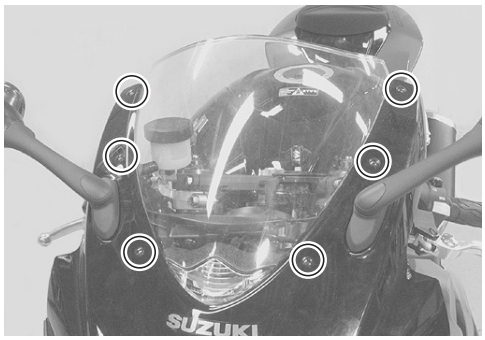

- Remove the combination meter ①. (☞9-29)
- Disconnect the turnsignal lead wire couplers.
- Remove the rear view mirrors/turn signals ②.
- Remove the screen ③.

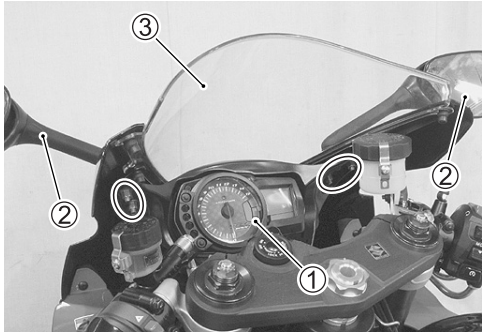

INSTALLATION

- Install the screen in the reverse order of removal.
- Refer to the rear view mirrors/turn signals cable routing. (☞10-37)

BODY COWLING

REMOVAL

- Remove the under cowlings. (☞8-5)
- Remove the screen. (☞Above)
- Remove the screws.

- Disconnect the steering damper solenoid valve coupler ①.

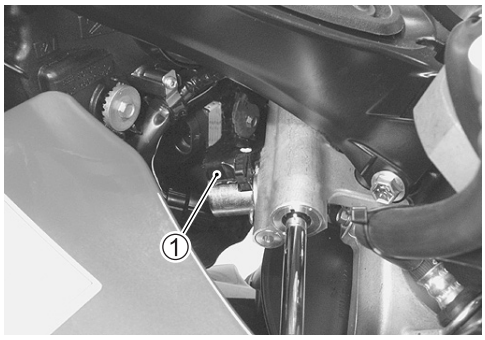

- Disconnect the lead wire couplers ② and release the wire clamp ③.
- Remove the body cowling.

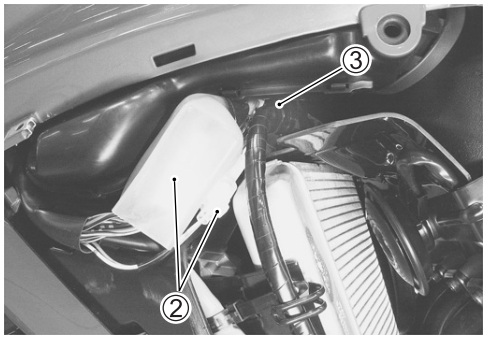

INSTALLATION

- Install the body cowling in the reverse order of removal.
- Refer to the turn signal harness routing. (☞10-37)

AIR INTAKE PIPE

REMOVAL

- Remove the body cowling. (☞8-7)
- Remove the side cowling (-s) ①. (☞8-6)

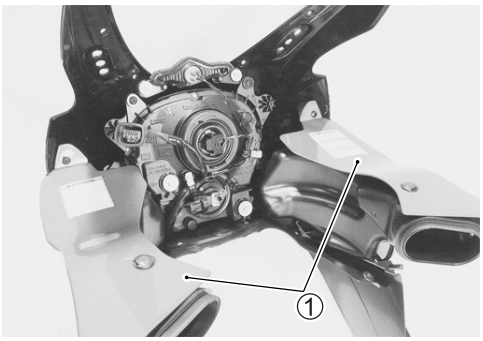

- Remove the air intake pipe (-s) ②. (LH/RH)

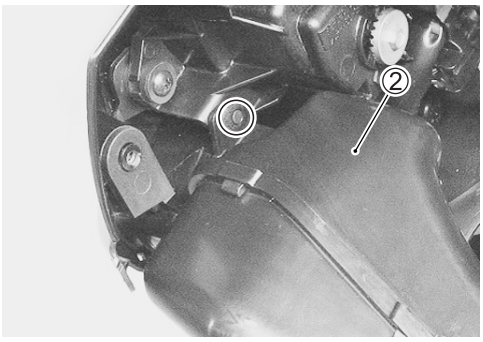

INSTALLATION

- Install the air intake pipe (-s) in the reverse order of removal.

COWLING BRACE

REMOVAL

- Remove the body cowling. (☞8-7)
- Remove the cowling brace ①.

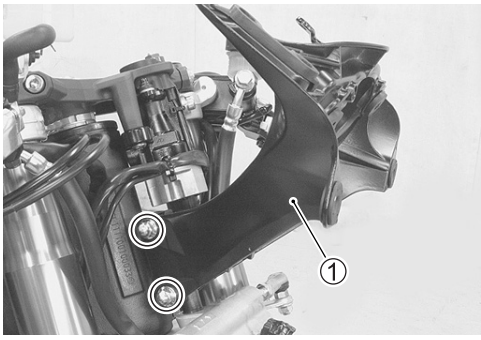

INSTALLATION

- Install the cowling brace in the reverse order of removal.
- Tighten the cowling brace bolts.

Cowling brace bolt: 23 N·m (2.3 kgf-m, 16.5 lb-ft)

FRONT SEAT

REMOVAL

- Remove the front seat by removing the bolts.

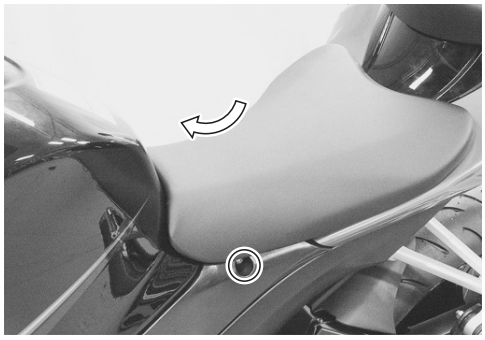

INSTALLATION

- Install the front seat in the reverse order of removal.

FUEL TANK LOWER SIDE COVER

REMOVAL

- Remove the front seat. (☞Above)
- Remove the fuel tank lower side cover (-s) ①. (LH/RH)

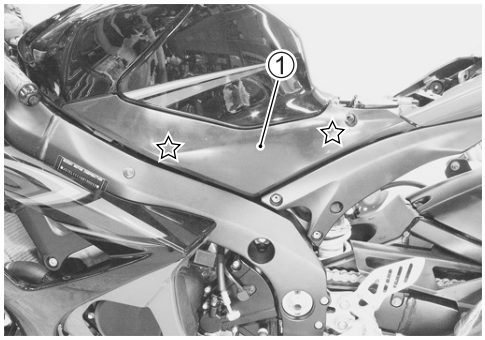

NOTE:
"☆" indicates hook location.

INSTALLATION

- Install the fuel tank lower side cover (-s) in the reverse order of removal.

REAR SEAT/SEAT TAIL COVER

REMOVAL

- Remove the rear seat (seat tail cover) using the ignition key.

INSTALLATION

- Insert the seat hook to the guide and push down the seat (seat tail cover) firmly until the seat (seat tail cover) snaps into the locked position.

FRAME COVER

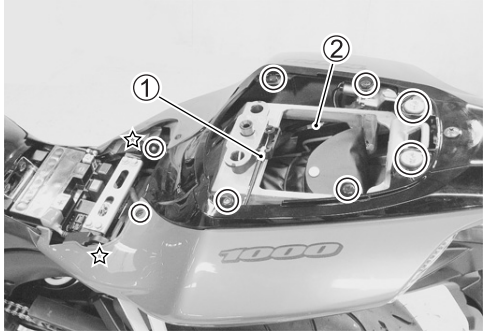

REMOVAL

- Remove the front and rear seats. (☞8-8 and above)
- Remove the fasteners and bolts.
- Disconnect the seat lock cable ①.
- Disconnect the rear combination light lead wire coupler ②.
- Remove the frame cover.

NOTE:
"☆" indicates hook location.

INSTALLATION

Install the frame cover in the reverse order of removal.

FRONT WHEEL
CONSTRUCTION

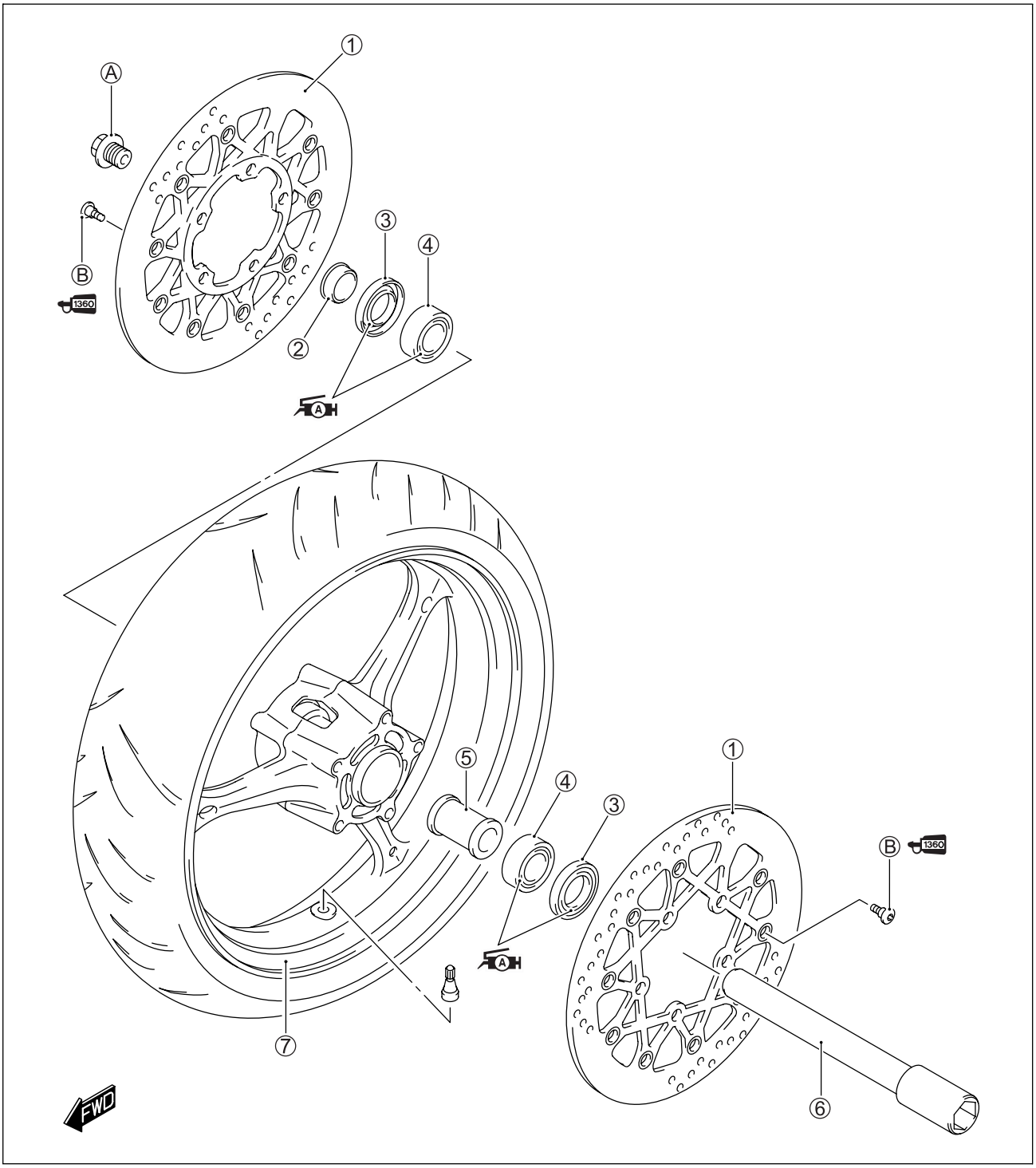

①	Brake disc	⑥	Front axle
②	Collar	⑦	Front wheel
③	Dust seal	Ⓐ	Front axle bolt
④	Bearing	Ⓑ	Brake disc bolt
⑤	Spacer		

ITEM	N·m	kgf-m	lb-ft
Ⓐ	100	10.0	72.5
Ⓑ	23	23.0	16.5

REMOVAL

- Remove the brake calipers. (LH and RH)

CAUTION

Do not operate the brake lever with the caliper removed.

- Loosen two axle pinch bolts ① on the right front fork leg.
- Remove the front axle bolt ②.

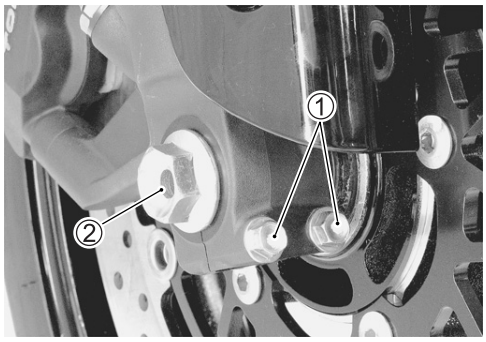

- Loosen two axle pinch bolts ③ on the left front fork leg.
- Raise the front wheel off the ground and support the motorcycle with a jack or a wooden block.

CAUTION

*** Do not carry out the work with the motorcycle resting on the side-stand.**
*** Do not support the motorcycle with the exhaust pipes.**
*** Make sure that the motorcycle is supported securely.**

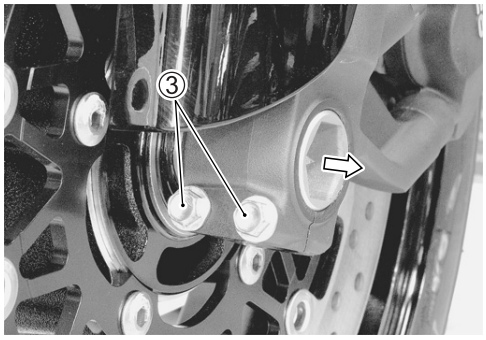

- Draw out the front axle and remove the front wheel.

NOTE:
After removing the front wheel, fit the calipers temporarily to the original positions.

- Remove the collar ④. (RH only)

INSPECTION AND DISASSEMBLY

- Remove the brake discs. (LH and RH)

TIRE INSPECTION (☞2-27 and 8-93)
BRAKE DISC INSPECTION (☞8-71)

- Remove the dust seals on both sides with the special tool.

TOOL 09913-50121: Oil seal remover

CAUTION

> **The removed dust seals must be replaced with new ones.**

AXLE SHAFT

- Using a dial gauge, check the axle shaft for runout and replace it if the runout exceeds the limit.

TOOL 09900-20607: Dial gauge (1/100)
09900-20701: Magnetic stand
09900-21304: V-block set (100 mm)

DATA Axle shaft runout:
Service Limit: 0.25 mm (0.010 in)

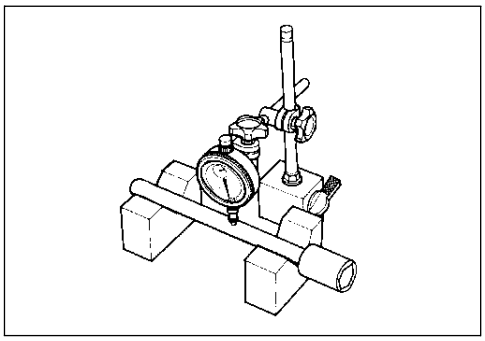

WHEEL

- Make sure that the wheel runout checked as shown does not exceed the service limit. An excessive runout is usually due to worn or loosened wheel bearings and can be reduced by replacing the bearings. If bearing replacement fails to reduce the runout, replace the wheel.

DATA Wheel runout:
Service Limit (Axial and Radial): 2.0 mm (0.08 in)

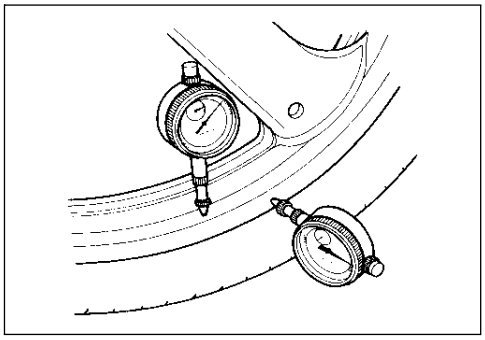

WHEEL BEARINGS

- Inspect the play of the wheel bearings by finger while they are in the wheel. Rotate the inner race by finger to inspect for abnormal noise and smooth rotation.
- Replace the bearing in the following procedure if there is anything unusual.

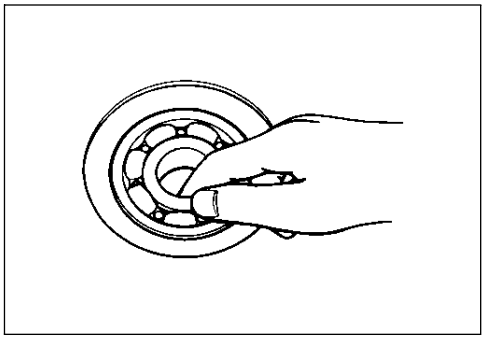

- Remove the wheel bearings with the special tool.

TOOL 09921-20240: Bearing remover set

CAUTION

The removed bearings must be replaced with new ones.

- Remove the spacer ⑤.

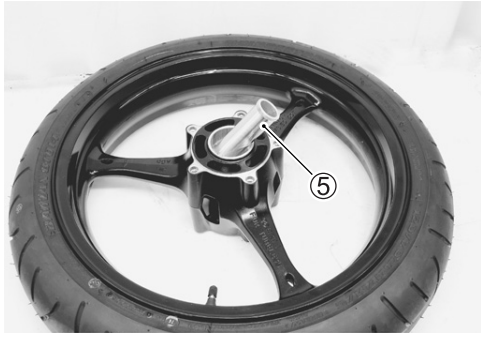

REASSEMBLY AND INSTALLATION

Pay attention to the following points:

(a)	100 N·m (10.0 kgf-m, 72.5 lb-ft)
(b)	23 N·m (2.3 kgf-m, 16.5 lb-ft)
(c)	39 N·m (3.9 kgf-m, 28.0 lb-ft)
(d)	23 N·m (2.3 kgf-m, 16.5 lb-ft)

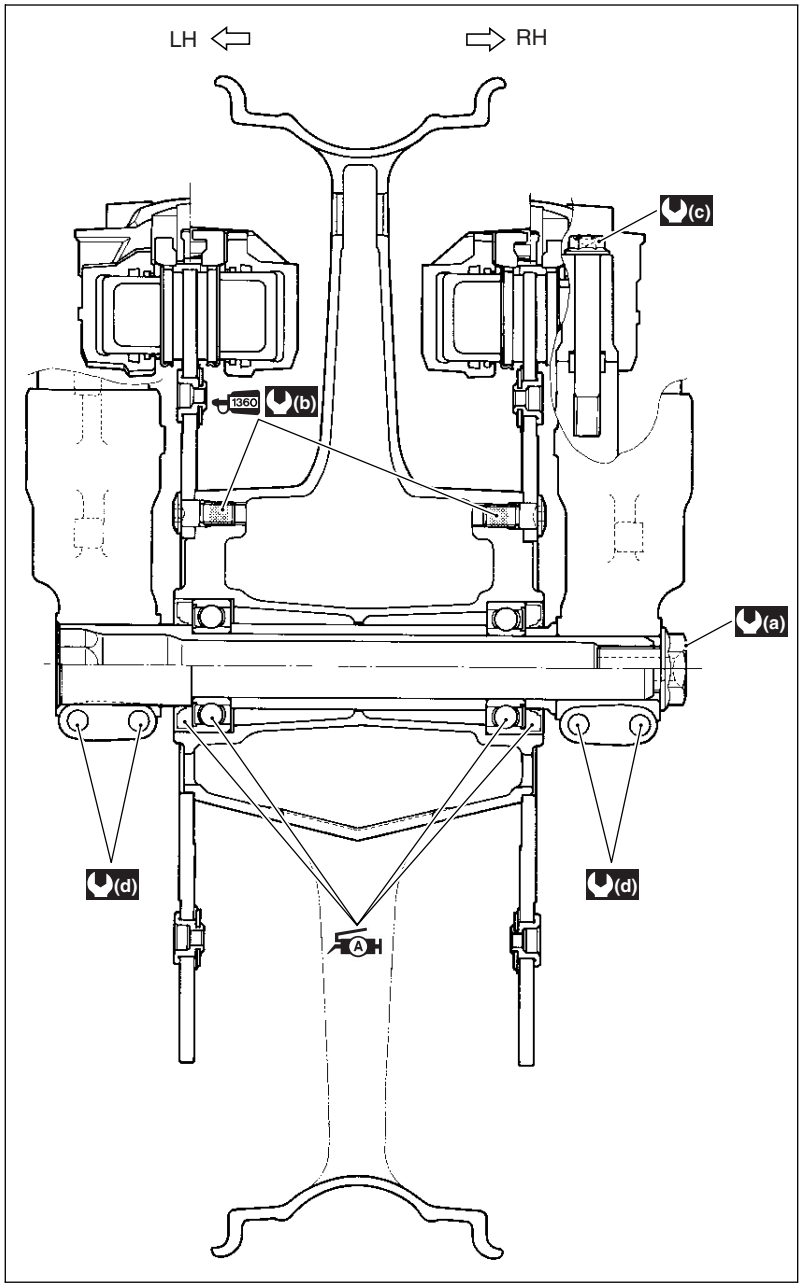

WHEEL BEARING

- Apply grease to the wheel bearings.

A 99000-25010: SUZUKI SUPER GREASE "A" or equivalent

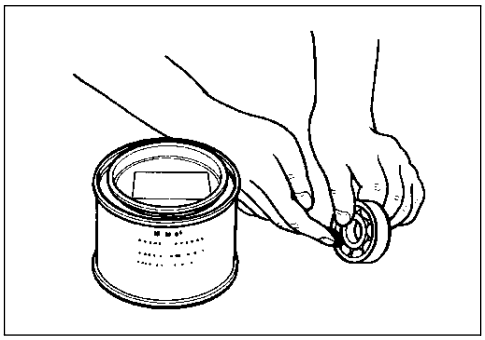

- Install the wheel bearings with the special tools as follows.

TOOL 09924-84510: Bearing installer set

CAUTION

> **First install the right wheel bearing, then install the spacer and left wheel bearing.**
> **The sealed cover of the bearing must face outside.**

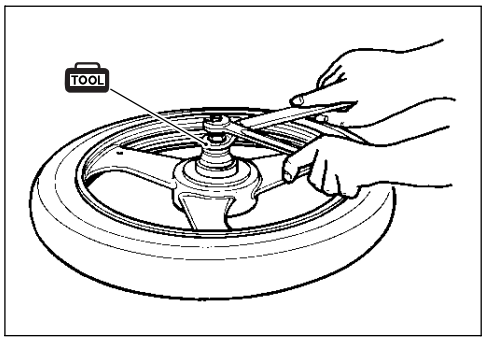

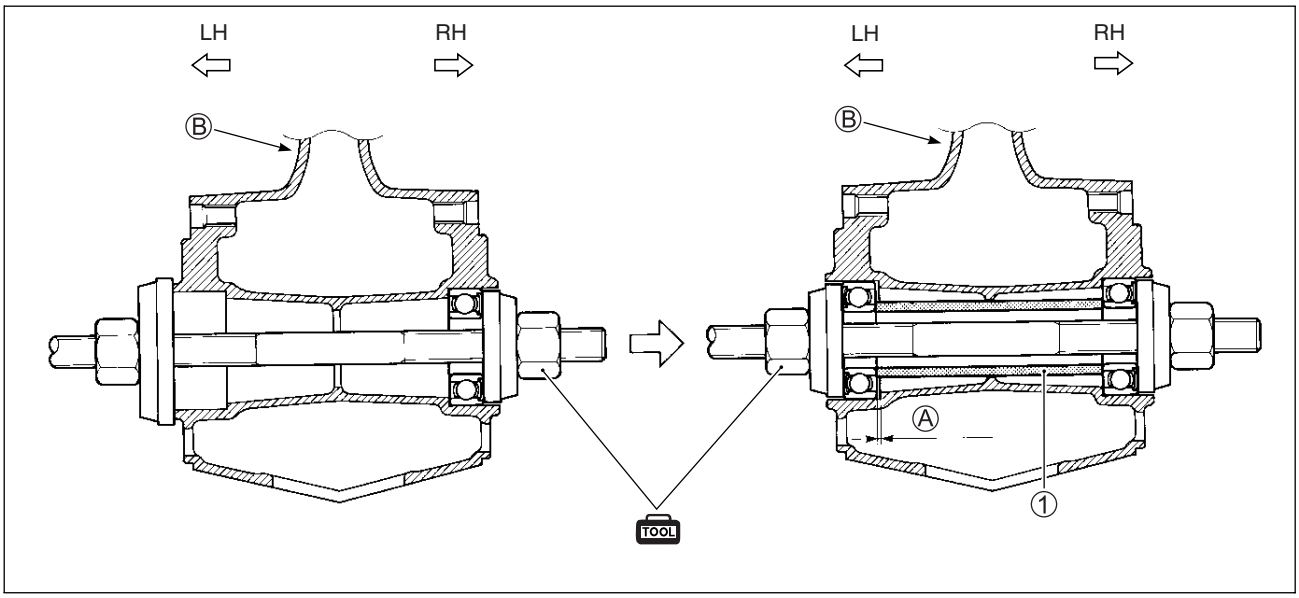

① Spacer Ⓐ Clearance Ⓑ Directional arrow mark

- Install the dust seal with the special tool.

TOOL 09913-70210: Bearing installer set

- Apply grease to the dust seal lip.

99000-25010: SUZUKI SUPER GREASE "A" or equivalent

BRAKE DISC

- Make sure that the brake disc is clean and free of any greasy matter.
- Apply THREAD LOCK to the disc mounting bolts and tighten them to the specified torque.

Brake disc bolt (Front): 23 N·m (2.3 kgf-m, 16.5 lb-ft)

1360 99000-32130: THREAD LOCK SUPER "1360" or equivalent

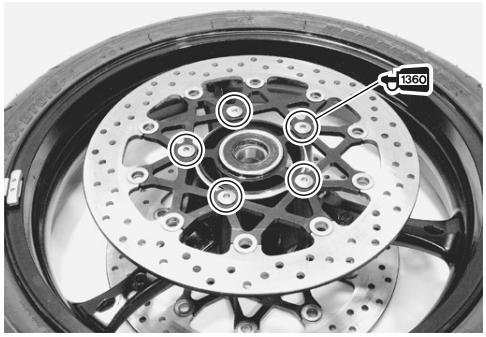

- Install the collar ① to the right side of wheel.

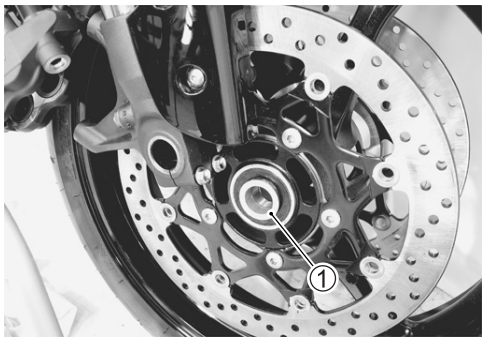

WHEEL

- Install the front wheel with the front axle and hand-tighten the front axle bolt temporarily.

⚠ WARNING

The directional arrow mark on the tire should point to the wheel rotation, when remounting the wheel.

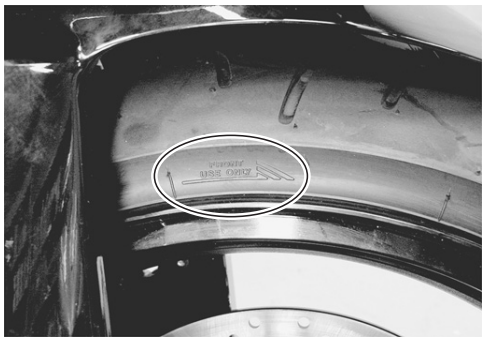

BRAKE CALIPER

- Install the brake calipers (LH and RH).
- Tighten the brake caliper mounting bolts to the specified torque.

Front brake caliper mounting bolt:
39 N·m (3.9 kgf-m, 28.0 lb-ft)

⚠ WARNING

After install the brake calipers, front brake should be efficient by pumping the front brake lever.

FRONT AXLE

- Hold the front axle with the special tool and tighten the front axle bolt ① to the specified torque.

TOOL 09900-18740: Heaxagon socket (24 mm)

Front axle bolt: 100 N·m (10.0 kgf-m, 72.5 lb-ft)

- Tighten two axle pinch bolts ② on the right fork leg to the specified torque.

Front axle pinch bolt: 23 N·m (2.3 kgf-m, 16.5 lb-ft)

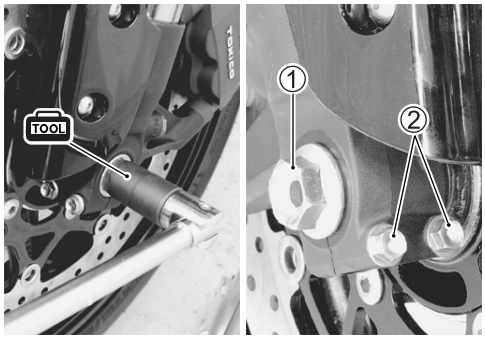

- Move the front fork up and down 4 or 5 times.

- Tighten two axle pinch bolts ③ on the left front fork leg to the specified torque.

Front axle pinch bolt: 23 N·m (2.3 kgf-m, 16.5 lb-ft)

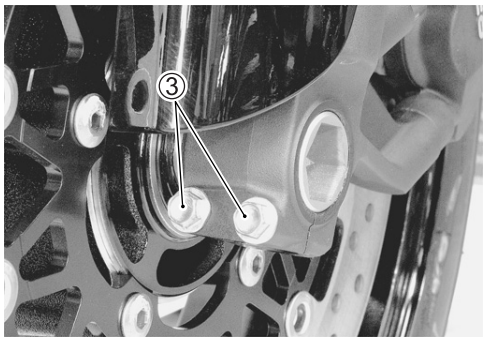

FRONT FORK
CONSTRUCTION

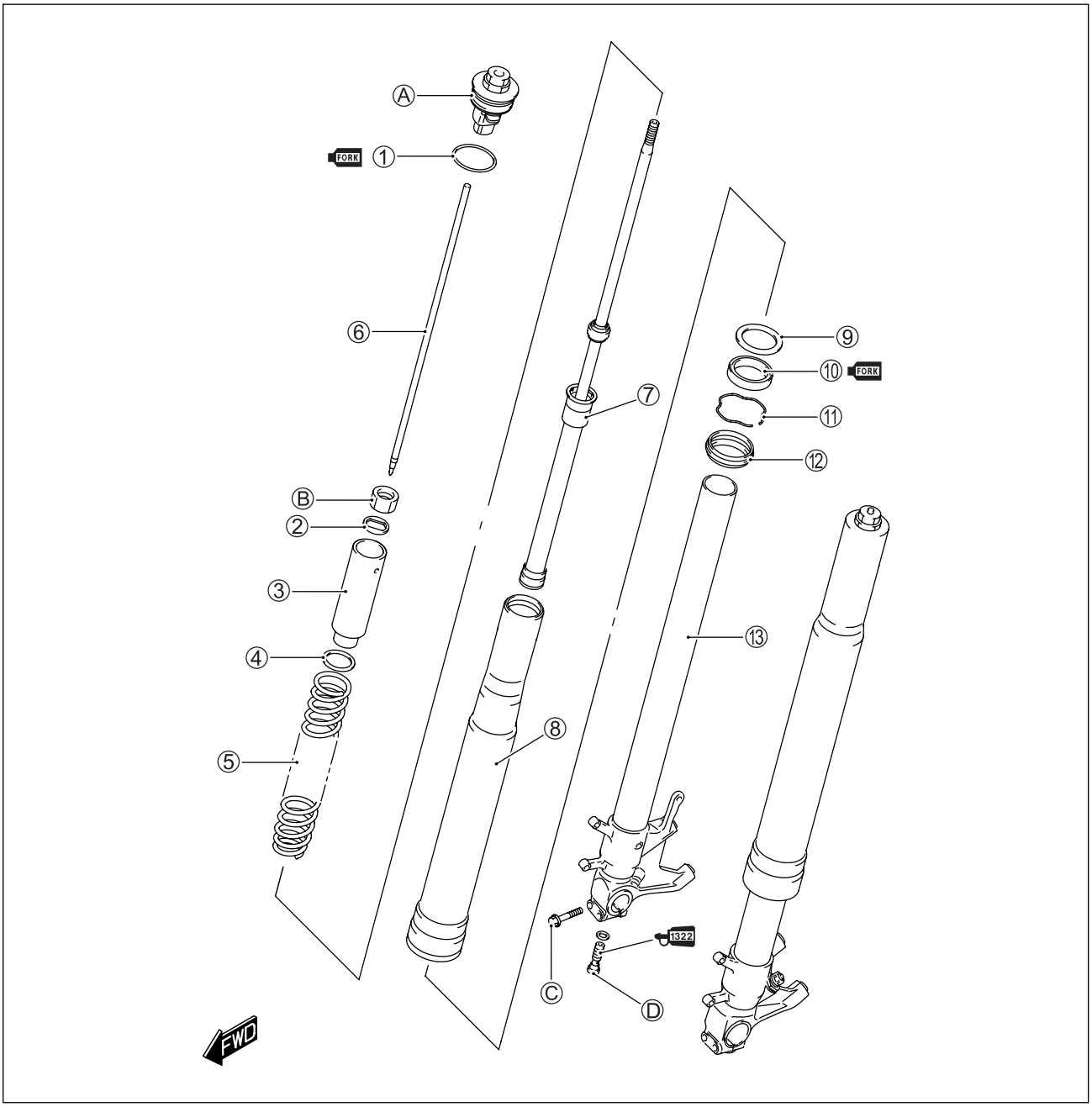

①	O-ring	⑩	Oil seal
②	Spring retainer	⑪	Oil seal stopper ring
③	Spacer	⑫	Dust seal
④	Washer	⑬	Inner tube
⑤	Spring	Ⓐ	Front fork cap bolt
⑥	Adjuster rod	Ⓑ	Lock-nut
⑦	Inner rod/Damper rod (cartridge)	Ⓒ	Front axle pinch bolt
⑧	Outer tube	Ⓓ	Damper rod bolt
⑨	Oil seal retainer		

ITEM	N·m	kgf-m	lb-ft
Ⓐ	23	2.3	16.5
Ⓑ	15	1.5	11.0
Ⓒ	23	2.3	16.5
Ⓓ	23	2.3	16.5

REMOVAL AND DISASSEMBLY

NOTE:

** The left and right front forks are installed symmetrically and therefore the removal procedure for one side is the same as that for the other side.*

** When the brake caliper is removed, care must be used so as not to cause stress to the brake hose. (Hang the brake caliper on the frame with a string, etc.)*

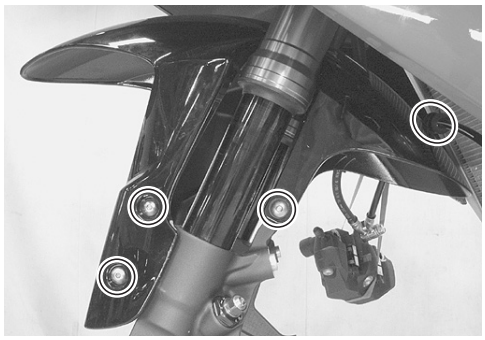

- Remove the front wheel. (☞8-11)
- Disconnect the brake hose from the brake hose guides on the front fender.
- Remove the front fender.

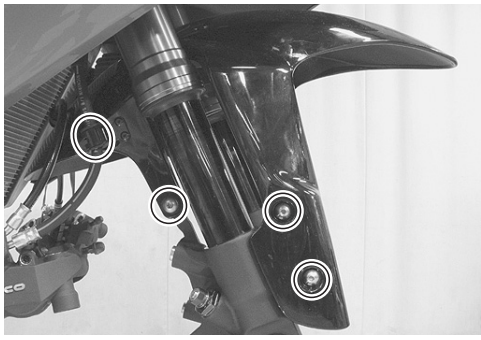

- Loosen the front fork upper clamp bolt ①.
- Loosen the handlebar clamp bolt ②.

NOTE:

** Slightly loosen the front fork cap bolt ③ before loosening the lower clamp bolts to facilitate later disassembly.*

** Be sure to adjust the rebound damping force adjuster ④ to the softest position before removing the front fork.*

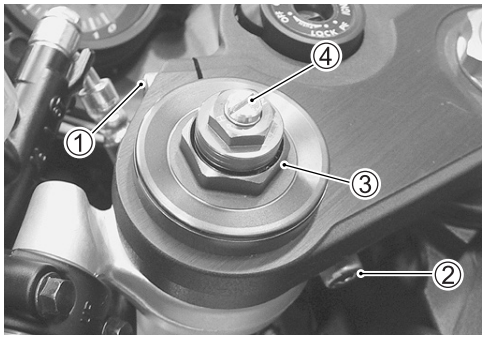

- Loosen the front fork lower clamp bolts.
- Remove the front fork. (LH/RH)

NOTE:

Hold the front fork by the hand to prevent it sliding out of the steering stem.

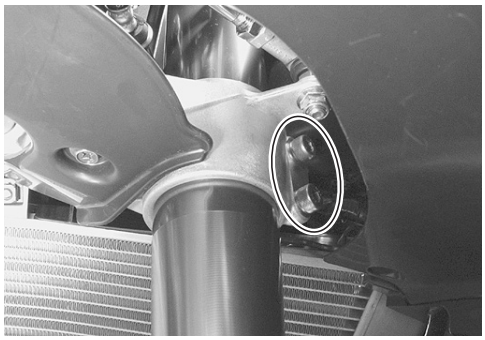

- Separate the front fork cap bolt from the front fork.
- Compress the front fork spring with the special tool Ⓐ and insert the special tool Ⓑ between the lock-nut and the spring retainer.

TOOL 09940-94930: Front fork spacer holder Ⓐ
09940-94922: Stopper plate Ⓑ

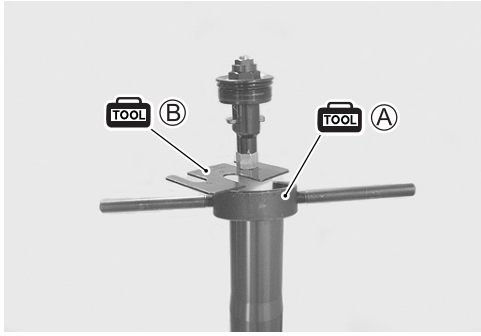

- Remove the front fork cap bolt from the inner rod by loosening the lock-nut.
- Compress the fork spring with the special tool Ⓐ and remove the special tools Ⓐ and Ⓑ.

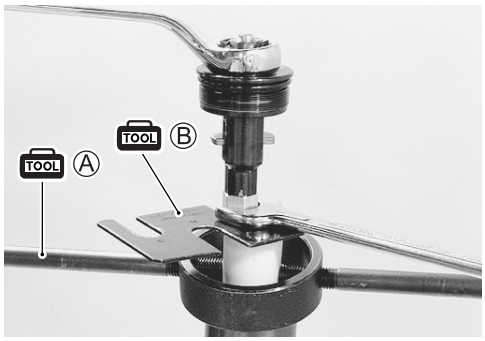

- Remove the front fork cap bolt ⑤, adjuster rod ⑥, spring retainer ⑦, spacer ⑧, washer ⑨ and spring ⑩.

CAUTION

*** Do not disassemble the front fork cap bolt ⑤.**
*** After removing the front fork cap bolt ⑤, avoid holding the outer tube vertically by hand to prevent the inner tube from falling and damaged.**

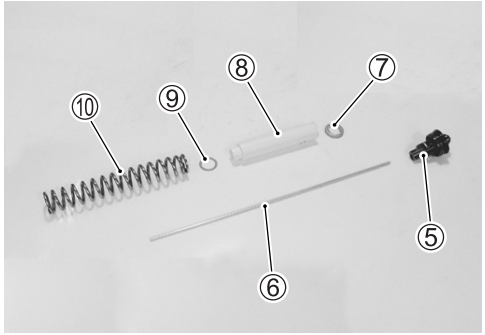

- Invert the front fork and stroke the inner rod several times to let out fork oil.
- Under the inverted condition of front fork, drain oil completely by holding the fork for a while.

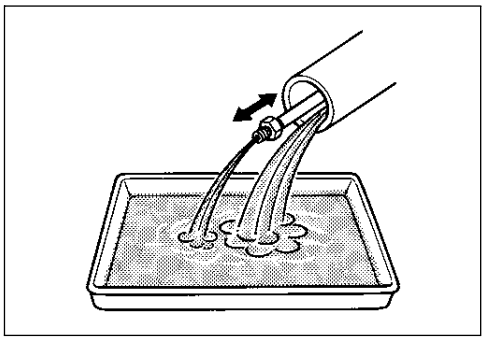

- Remove the front axle pinch bolts ⑪.

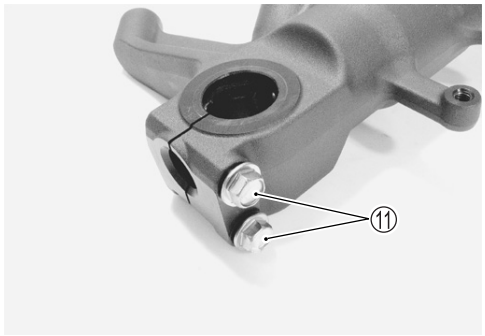

- Remove the damper rod bolt with the special tool.

TOOL 09940-30221: Front fork assembling tool

- Remove the inner rod/damper rod (cartridge) ⑫.

CAUTION

Do not disassemble the inner rod/damper rod (cartridge).

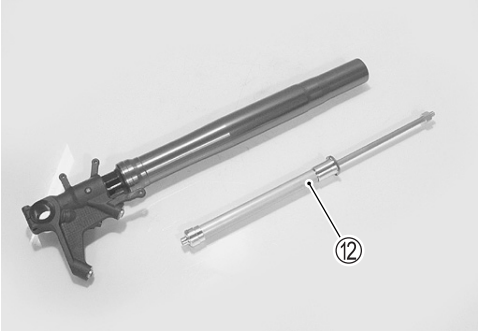

- Slide the outer tube to remove it from the inner tube.

NOTE:
Be careful not to damage the "ANTI-FRICTION" metals.

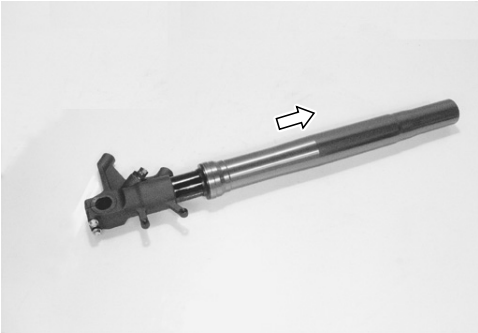

- Remove the dust seal ⑬ and oil seal stopper ring ⑭.

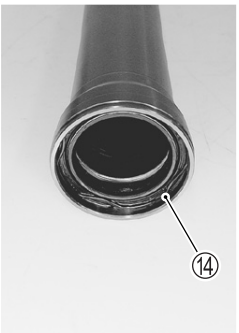

- Remove the oil seal with the special tool.

TOOL 09913-50121: Oil seal remover

CAUTION

The removed oil seal must be replaced with a new one.

- Remove the oil seal retainer ⑮.

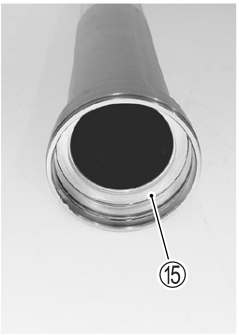

INSPECTION

INNER AND OUTER TUBES

- Inspect the inner tube outer surface and outer tube inner surface for scratches.
- Inspect the “ANTI-FRICTION” metal surfaces for scratches.
- If any defects are found, replace them with the new ones.

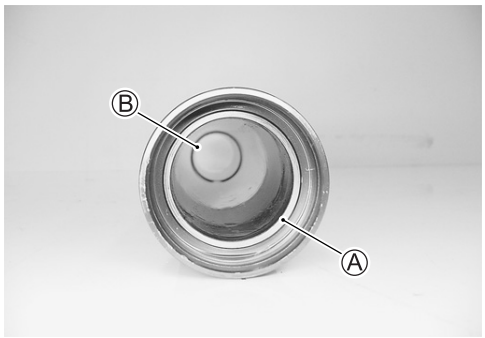

CAUTION

Do not remove the “ANTI-FRICTION” metals, Ⓐ and Ⓑ.

FORK SPRING

- Measure the fork spring free length.
- If it is shorter than the service limit, replace it with a new one.

DATA **Front fork spring free length:**
Service Limit: 233 mm (9.17 in)

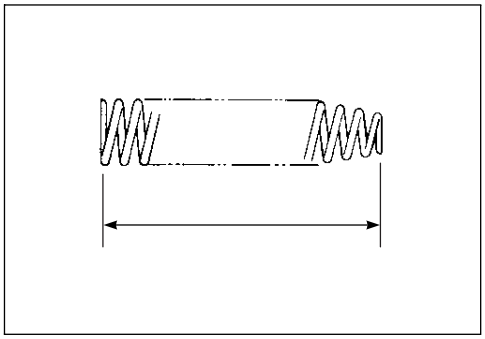

DAMPER ROD

- Move the inner rod by hand to examine it for smoothness.
- If any defects are found, replace inner rod/damper rod (cartridge) with a new one.

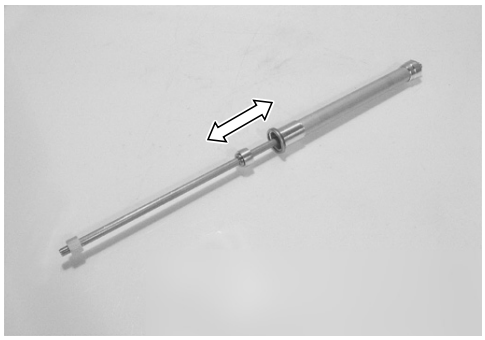

REASSEMBLY

Reassemble the front fork in the reverse order of disassembly. Pay attention to the following points:

OIL SEAL AND DUST SEAL

- Install the dust seal, oil seal stopper ring, oil seal and oil seal retainer onto the inner tube.

① Dust seal
② Oil seal stopper ring
③ Oil seal
④ Oil seal retainer

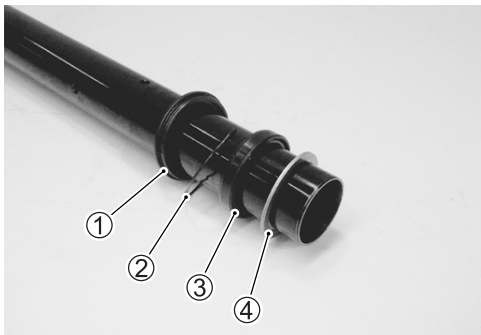

CAUTION

*** When installing the oil seal to outer tube, be careful not to damage the oil seal lip.**
*** Avoid using solvents for washing to prevent oil seal damage.**
*** Apply fork oil to the Anti-friction metals and lip of the oil seal.**
*** Make sure that the oil seal stopper ring has been fitted securely.**

- Insert the inner tube into the outer tube and fit the oil seal and dust seal with the special tool.

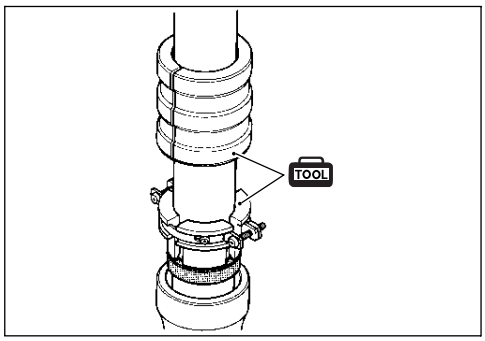

TOOL 09940-52861: Front fork oil seal installer

NOTE:
Stamped mark on the oil seal should face outside.

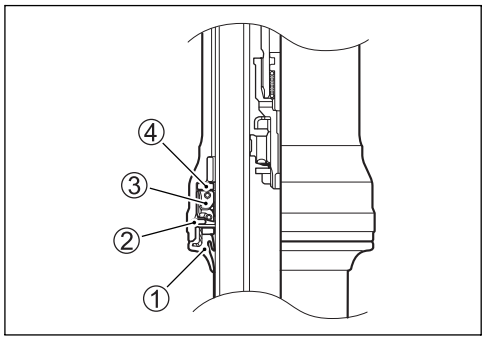

DAMPER ROD BOLT

- Insert the inner rod/damper rod (cartridge) into the inner tube.
- Apply thread lock to the damper rod bolt and tighten it to the specified torque with the special tool.

1322 99000-32110: THREAD LOCK SUPER "1322" or equivalent

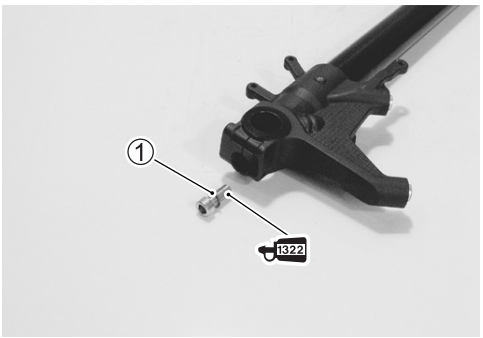

CAUTION

Use a new damper rod bolt gasket ① to prevent oil leakage.

TOOL 09940-30221: Front fork assembling tool

Damper rod bolt: 23 N·m (2.3 kgf-m, 16.5 lb-ft)

FORK OIL

- Place the front fork vertically without spring.
- Compress it fully.
- Pour specified front fork oil up to the top level of the outer tube.

DATA Capacity (each leg): 512 ml (17.3/18.0 US/Imp oz)

FORK 99000-99044-L01: SUZUKI FORK OIL L01 or equivalent

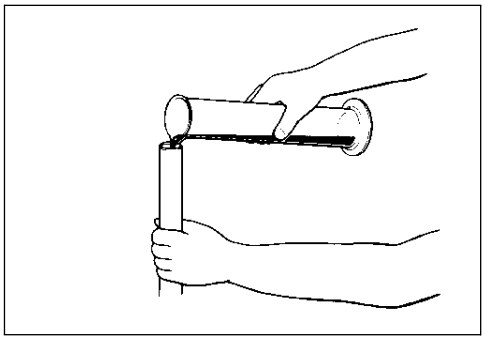

- Move the inner rod slowly with the special tool ten times and more until no more bubbles come out from the oil.

TOOL 09940-50120: Inner rod holder

NOTE:
Refill front fork oil up to the top of the outer tube so that bubbles are visible while bleeding air.

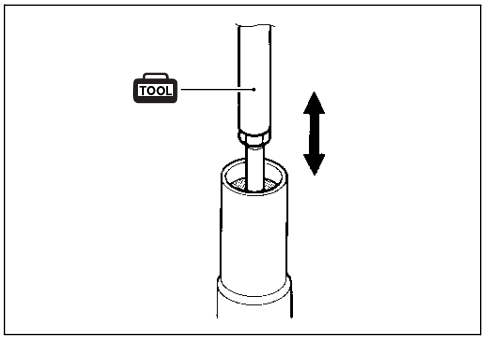

- Refill specified front fork oil up to the top level of the outer tube again. Move the outer tube up and down several strokes until no more bubbles come out from the oil.
- Keep the front fork vertically and wait 5 – 6 minutes.

NOTE:
** Always keep oil level over the cartridge top end, or air may enter the cartridge during this procedure.*
** Take extreme care so as to pump out air completely.*

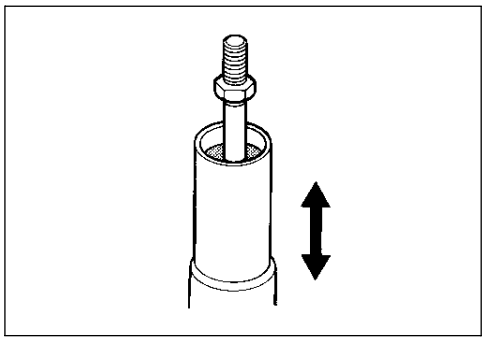

- Hold the front fork vertically and adjust fork oil level with the special tool.

NOTE:
When adjusting the fork oil level, compress the outer tube fully without the fork spring.

DATA Fork oil level: 124 mm (4.88 in)

TOOL 09943-74111: Front fork oil level gauge

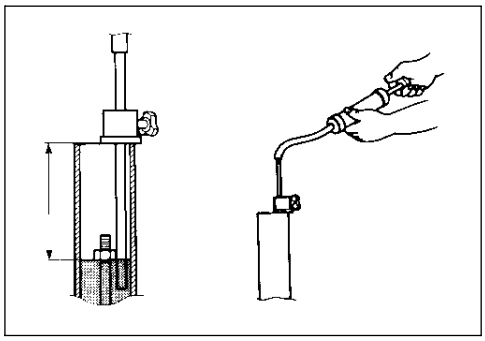

FRONT FORK INNER ROD LOCK-NUT

- Adjust the height Ⓗ of the inner rod threads by turning the lock-nut ① as shown in illustration.

Ⓗ: 11 mm (0.43 in)

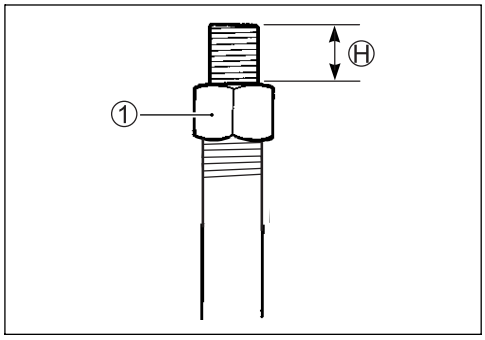

FORK SPRING

- Install the fork spring as shown in the illustration.

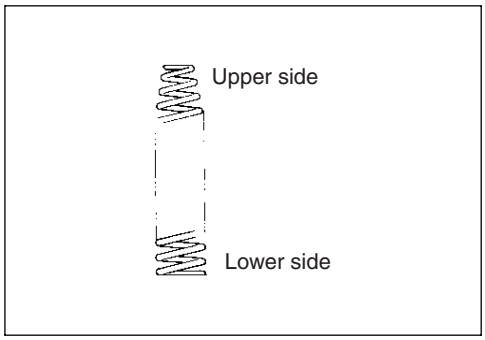

- Install the spring ①, washer ②, spacer ③ and spring retainer ④.

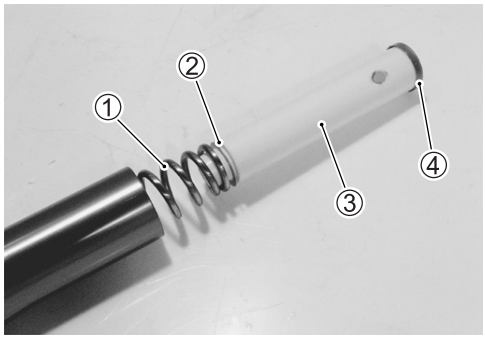

FRONT FORK CAP BOLT

- Pull up the inner rod with the special tool Ⓐ.
- Compress the spring with the special tool Ⓑ and then insert the special tool Ⓒ between the lock-nut and the spacer.

TOOL 09940-52841: Inner rod holder Ⓐ
09940-94930: Front fork spacer holder Ⓑ
09940-94922: Stopper plate Ⓒ

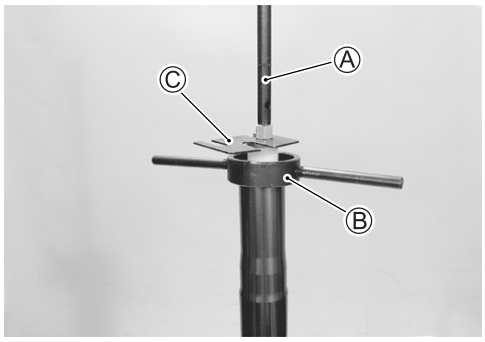

- Make sure that the height Ⓗ of the inner rod threads is as follows.

Ⓗ: 11 mm (0.43 in)

- Slowly turn the cap bolt completely by hand until the end of the cap bolt seats on the lock-nut.
- Apply fork oil to the O-ring.

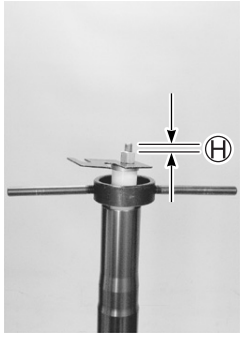

CAUTION

Make sure that the rebound damping force adjuster ① to the softest position before installing the cap bolt.

- Insert the adjuster rod in to the inner rod.
- Hold the cap bolt ② and tighten the lock-nut ③ to the specified torque.

Inner rod lock-nut: 15 N·m (1.5 kgf-m, 11.0 lb-ft)

- Remove the special tools.
- Tighten the front fork cap bolt to the outer tube temporarily.

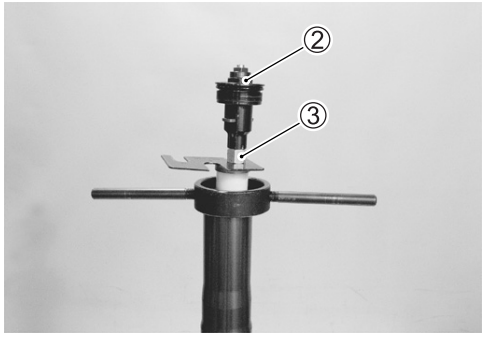

INSTALLATION

Install the front fork in the reverse order of removal. Pay attention to the following points:

- Set the upper surface of the outer tube height Ⓐ at 7.0 mm (0.276 in) from the upper surface of the steering stem upper bracket and tighten the front fork lower clamp bolts ① to the specified torque.

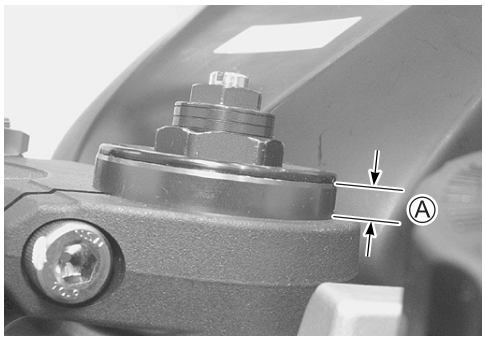

Front fork lower clamp bolt: 23 N·m (2.3 kgf-m, 16.5 lb-ft)

- Tighten the front fork cap bolt ② to the specified torque and recheck the front fork outer tube upper surface height Ⓐ from the upper surface of the steering stem upper bracket.

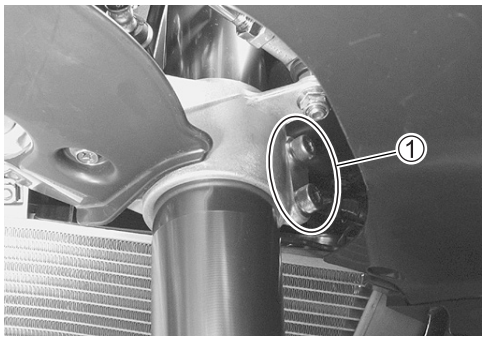

Front fork cap bolt: 23 N·m (2.3 kgf-m, 16.5 lb-ft)

- Position the handlebars on the upper bracket. (☞8-40)

- Tighten the front fork upper clamp bolt ③ and handlebar clamp bolt ④.

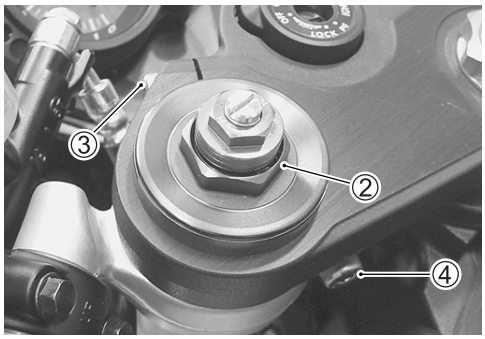

Front fork upper clamp bolt: 23 N·m (2.3 kgf-m, 16.5 lb-ft)
Handlebar clamp bolt: 23 N·m (2.3 kgf-m, 16.5 lb-ft)

- Remount the front wheel. (☞8-14)
- Cable routing (☞10-17)
- Front brake hose routing (☞10-21)

FRONT SUSPENSION SETTING

After installing the front fork, adjust the spring pre-load and three kinds of damping force as follows.

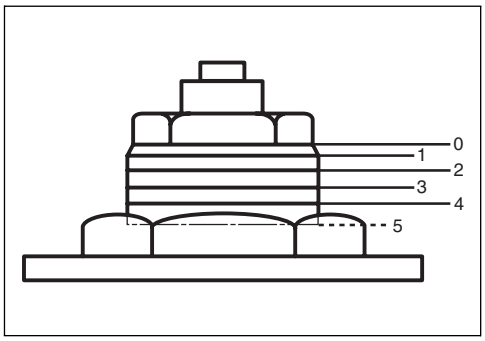

SPRING PRE-LOAD ADJUSTMENT

There are five grooved lines on the side of the spring adjuster. Position 0 provides the maximum spring pre-load and position 5 provides the minimum spring pre-load.

DATA STD position: 3-1/2

DAMPING FORCE ADJUSTMENT

NOTE:
Make sure to check the 1st click position by the last click sound when turning in the adjuster.

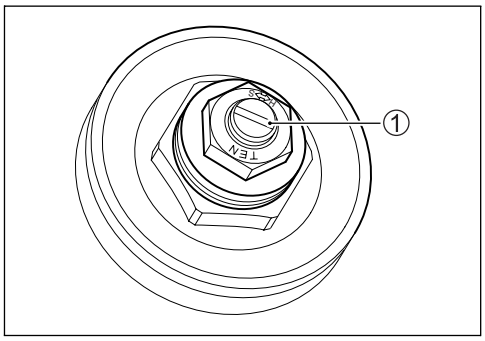

Rebound damping force

Fully turn the damping force adjuster ① clockwise. From that position (stiffest), turn it out to standard setting position.

DATA STD position: 6 clicks out from stiffest position

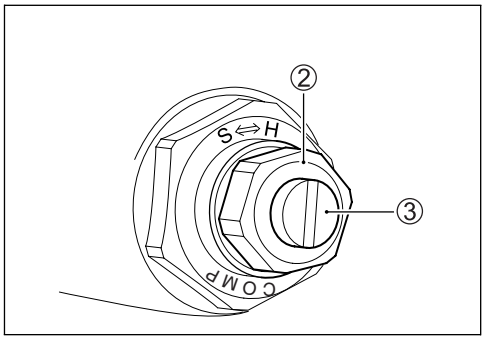

Compression damping force (High speed)

Fully turn the compression damping force (High speed) adjuster ② clockwise. From that position (stiffest), turn it out to the standard setting position.

DATA STD position: 3 turns out from stiffest position

Compression damping force (Low speed)

Fully turn the compression damping force (Low speed) adjuster ③ clockwise. From that position (stiffest), turn it out to the standard setting position.

DATA STD position: 14 clicks out from stiffest position

STANDARD FRONT SUSPENSION SETTING

	FRONT			
	Spring pre-load adjuster	Damping force adjuster		
		Rebound	Compression (High speed)	Compression (Low speed)
Solo and dual riding	Position 3-1/2	6 clicks out from stiffest position	3 turns out from stiffest position	14 clicks out from stiffest position

⚠ WARNING

Be sure to adjust the spring pre-load and damping force on both front fork legs equally.

STEERING DAMPER
CONSTRUCTION

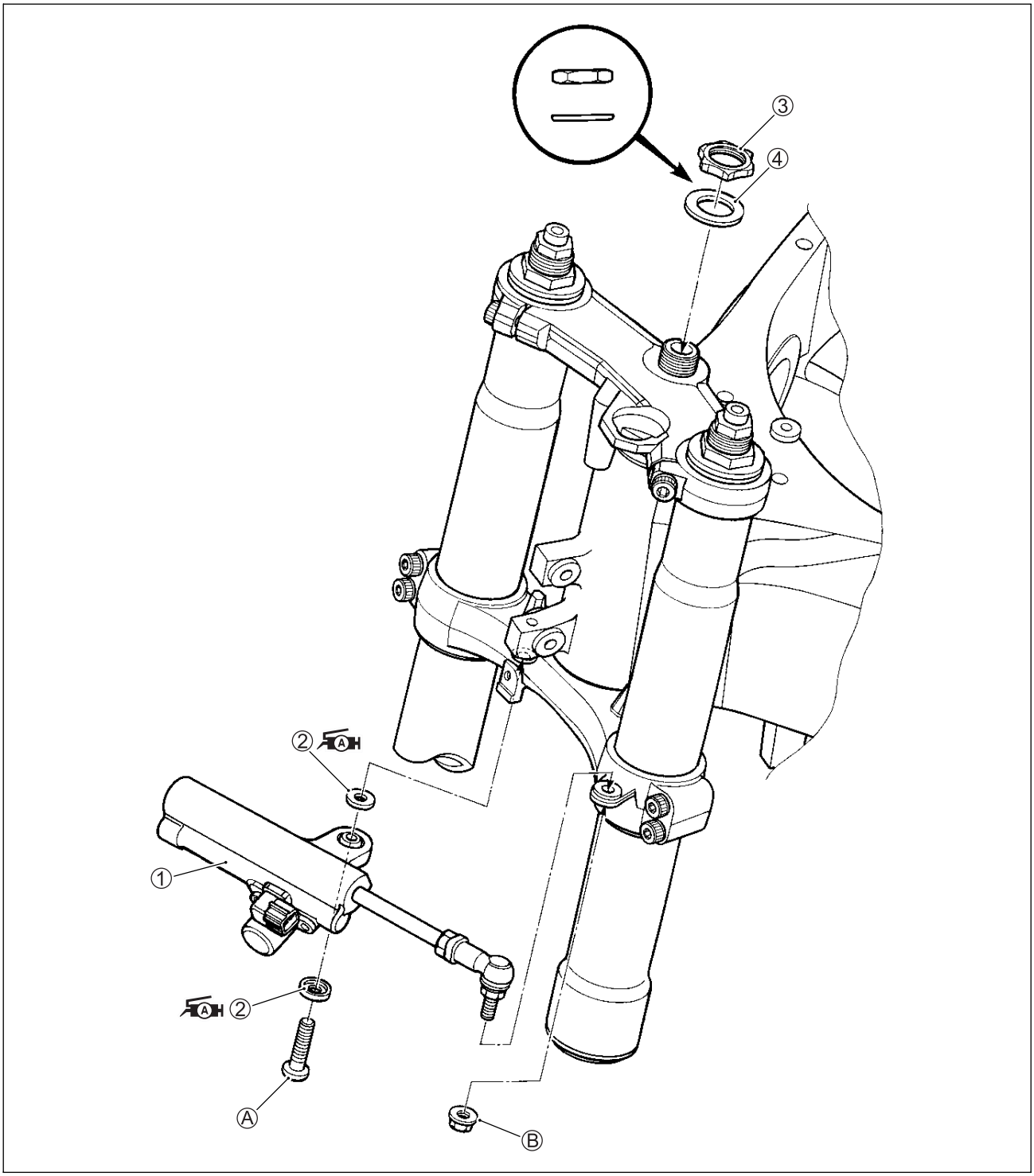

①	Steering damper	④	Convex curve side of the washer faces down side.
②	Dust seal		
③	Steering stem head nut	Ⓐ	Damper rod bolt
		Ⓑ	Damper rod nut

ITEM	N·m	kgf-m	lb-ft
ⒶⒷ	23	2.3	16.5
③	90	9.0	65.0

REMOVAL

- Turn the ignition switch OFF.
- Disconnect the steering damper solenoid coupler ①.

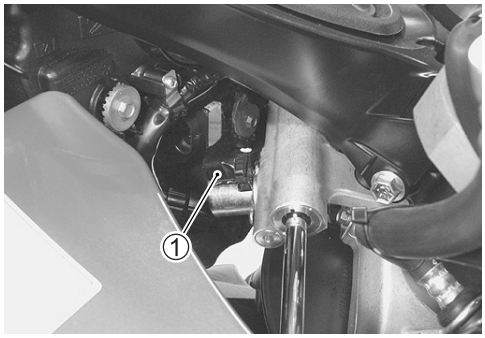

- Remove the lower bracket cover. (☞8-5)
- Remove the nut ② by holding the nut ③.
- Remove the bolt ④.
- Remove the steering damper.

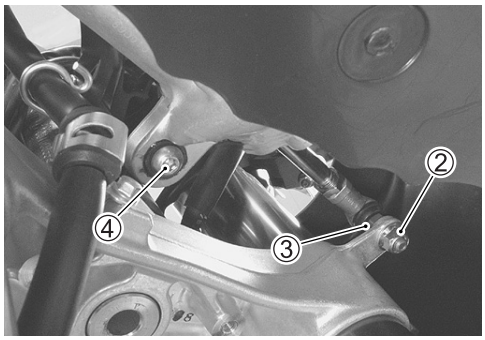

INSPECTION

- Inspect the steering damper body, bearing and oil seal for damage and oil leaking.
- Move the steering damper rod by hand to inspect for a smooth movement.
- If any defects are found, replace the steering damper with a new one.

NOTE:
The steering damper operation can be checked without removing it. (☞4-108)

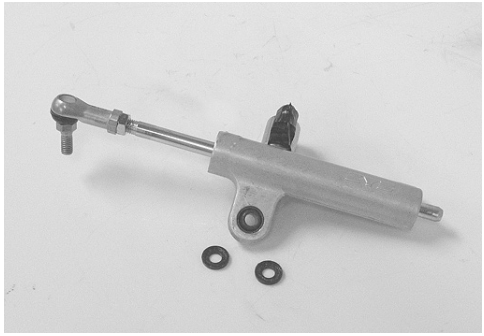

INSTALLATION

Install the steering damper in the reverse order of removal. Pay attention to the following points:

- Apply grease to the bearings and dust seals.

99000-25010: SUZUKI SUPER GREASE "A" or equivalent

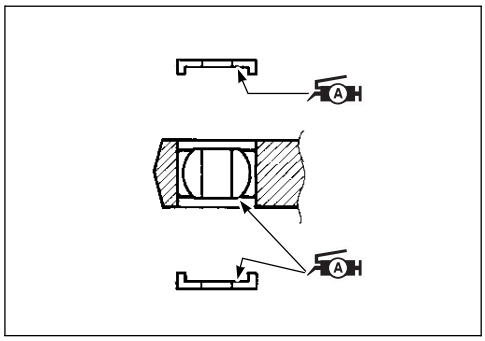

- Install the steering damper and tighten the bolt ① and nut ②.

Steering damper bolt and nut: 23 N·m (2.3 kgf-m, 16.5 lb-ft)

- Install the lower bracket cover. (☞8-5)

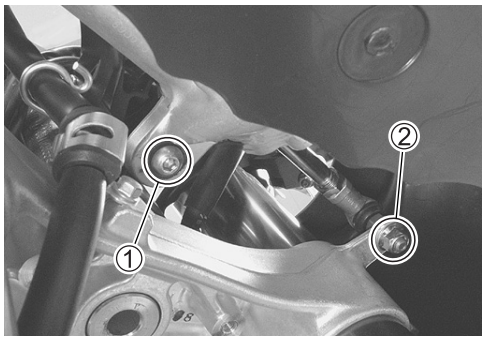

STEERING
CONSTRUCTION

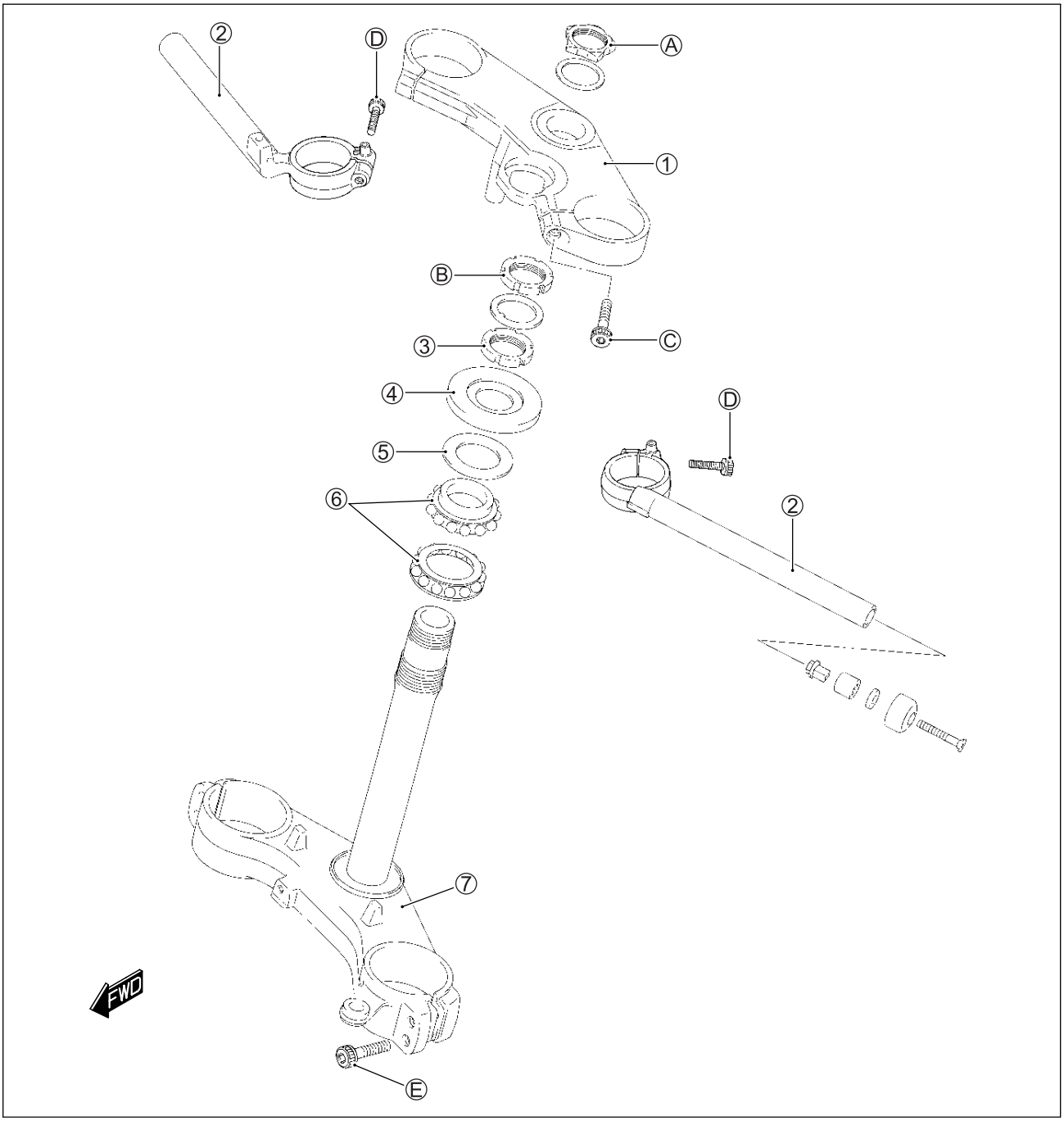

①	Steering stem upper bracket	⑦	Steering stem lower bracket
②	handlebars	Ⓐ	Steering stem head nut
③	Steering stem nut	Ⓑ	Steering stem lock-nut
④	Dust seal cover	Ⓒ	Front fork upper clamp bolt
⑤	Dust seal	Ⓓ	Handlebar clamp bolt
⑥	Bearing	Ⓔ	Front fork lower clamp bolt

ITEM	N·m	kgf-m	lb-ft
Ⓐ	90	9.0	65.0
Ⓑ	90	9.0	65.0
Ⓒ	23	2.3	16.5
Ⓓ	23	2.3	16.5
Ⓔ	23	2.3	16.5

REMOVAL

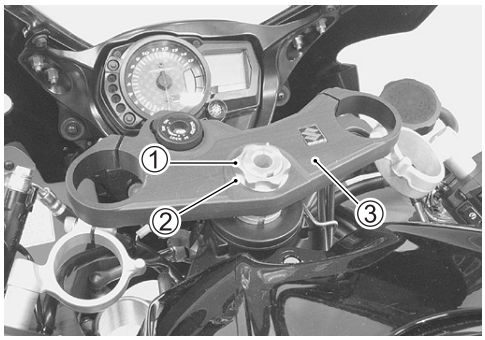

- Remove the under cowlings. (☞8-5)
- Support the motorcycle with a jack or a wooden block.

CAUTION

> *** Do not work by using side-stand.**
> *** Do not support the motorcycle with the exhaust pipes.**
> *** Make sure that the motorcycle is supported securely.**

- Remove the front wheel. (☞8-11)
- Remove the front forks. (☞8-19)
- Remove the steering damper. (☞8-30)
- Remove the steering stem head nut ① and washer ②.
- Remove the steering stem upper bracket ③.

NOTE:
** Place a rag under the steering stem upper bracket to prevent scratching the fuel tank and under cowlings.*
** It is not necessary to remove the ignition switch when replacing only the steering stem lower bracket and bearings. (Ignition switch removal: ☞9-38)*

- Remove the brake hose clamp bolt.

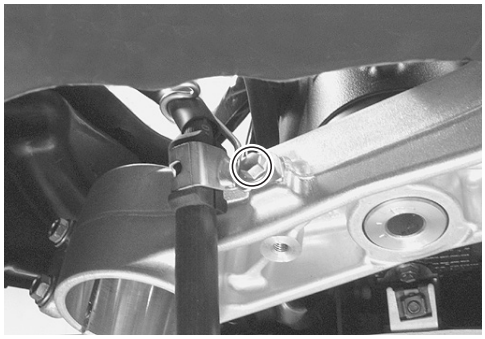

- Remove the steering stem lock-nut, washer and steering stem nut with the special tools.

TOOL 09940-14911: Steering stem nut wrench
09940-14960: Steering stem nut wrench socket

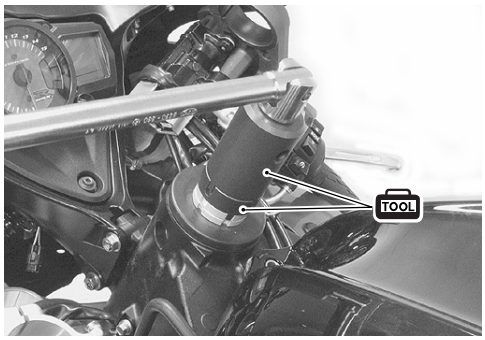

- Draw out the steering stem lower bracket.

NOTE:
Hold the steering stem lower bracket by hand to prevent it from falling.

- Remove the dust seal cover ④, dust seal ⑤, steering stem upper bearing inner race ⑥ and bearing ⑦.

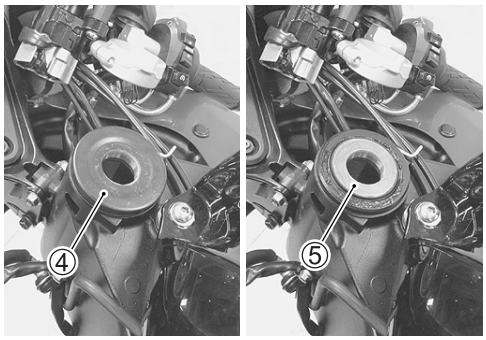

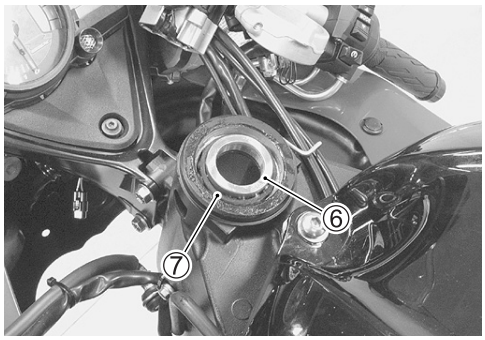

INSPECTION AND DISASSEMBLY

Inspect the removed parts for the following abnormalities.

* Handlebar distortion
* Race wear and brinelling
* Bearing wear or damage
* Abnormal noise of bearing

If any abnormal points are found, replace defective parts with new ones.

- Remove the steering stem lower bearing inner race with a chisel.

CAUTION

The removed bearing inner race must be replaced with a new one.

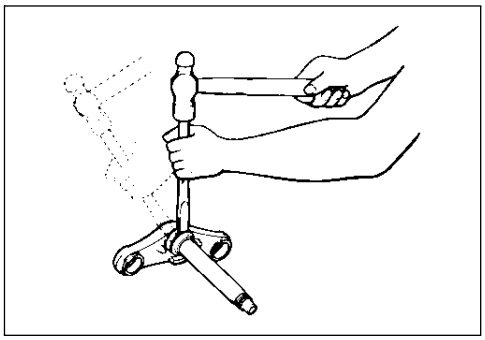

- Drive out the steering stem bearing outer races (upper and lower) using the steel rod.

CAUTION

The removed bearing outer race must be replaced with a new one.

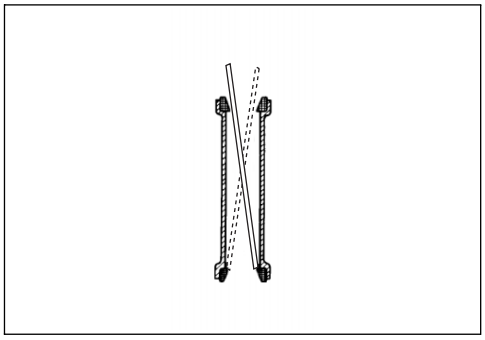

REASSEMBLY

Reassemble the steering stem in the reverse order of disassembly. Pay attention to the following points:

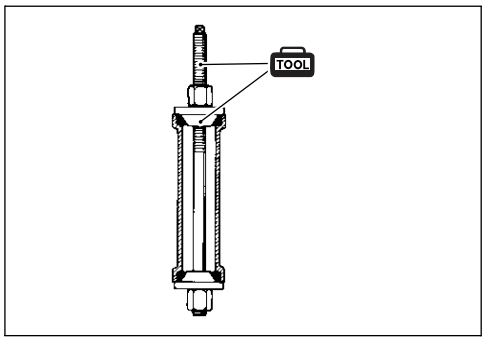

OUTER RACE

- Press in the upper and lower bearing outer races with the special tools.

TOOL 09941-34513: Steering outer race installer set
09913-70210: Bearing installer set (ϕ55)

INNER RACE

- Press in the lower bearing inner race with the special tool.

TOOL 09925-18011: Steering bearing installer

INSTALLATION

Install the steering stem in the reverse order of removal. Pay attention to the following points:

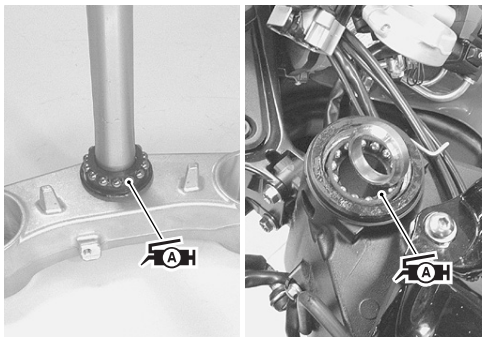

BEARING

- Apply grease to the bearings and bearing races.

A 99000-25010: SUZUKI SUPER GREASE "A" or equivalent

- Install the lower bearing to the steering stem lower bracket.
- Install the upper bearing and bearing inner race.

STEM NUT

- Install the dust seal and dust seal cover.
- Tighten the steering stem nut to the specified torque with the special tools.

TOOL 09940-14911: Steering stem nut wrench
09940-14960: Steering stem nut wrench socket

Steering stem nut: 45 N·m (4.5 kgf-m, 32.5 lb-ft)

- Turn the steering stem lower bracket about five or six times to the left and right so that the angular ball bearings will be seated properly.
- Loosen the stem nut by 1/4 – 1/2 turn.

NOTE:
This adjustment will vary from motorcycle to motorcycle.

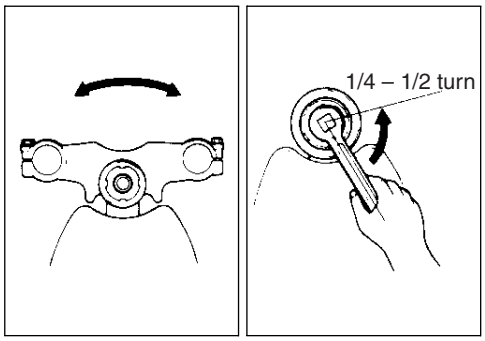

NOTE:
When installing the washer, align the stopper lug to the groove of steering stem.

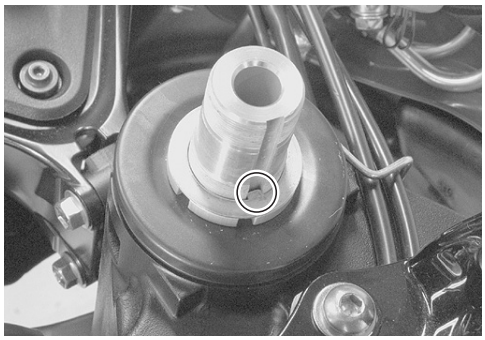

- Install the steering stem lock-nut and tighten it to the specified torque with the special tools.

TOOL 09940-14911: Steering stem nut wrench
09940-14960: Steering stem nut wrench socket

Steering stem lock-nut: 90 N·m (9.0 kgf-m, 65.0 lb-ft)

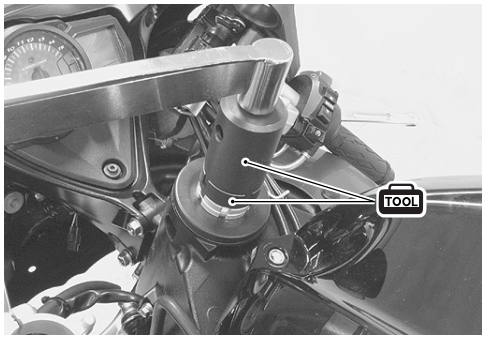

FRONT FORK AND STEERING STEM UPPER BRACKET

Install the front fork and steering stem upper bracket in the following steps:

1) Install the upper bracket, washer ① and steering stem head nut ② temporarily.

NOTE:
Pay attention to the direction of the washer.

2) Position the handlebars on the front forks and tighten the steering stem head nut ②.

Steering stem head nut: 90 N·m (9.0 kgf-m, 65.0 lb-ft)

3) Tighten the front fork upper and lower clamp bolts. (☞8-27)

- Install the steering damper. (☞8-31)
- Install the front wheel. (☞8-14)
- Cable routing (☞10-17)

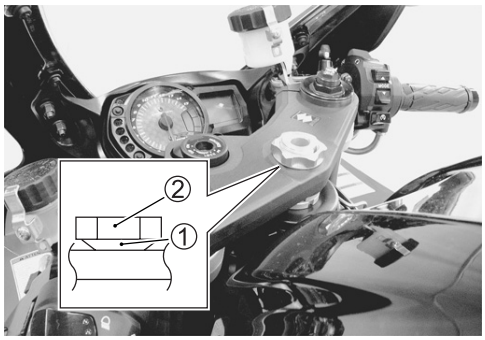

STEERING TENSION ADJUSTMENT

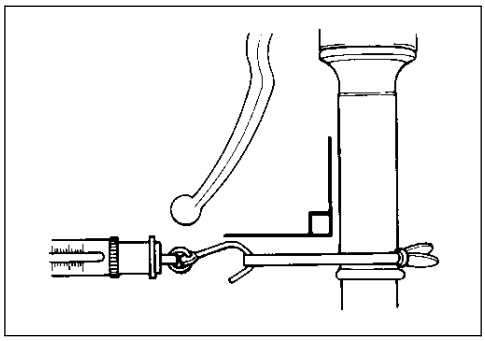

Check the steering movement in the following procedure.

- By supporting the motorcycle with a jack, lift the front wheel until it is off the floor by 20 – 30 mm (0.8 – 1.2 in).
- Remove the steering damper. (☞8-30)
- Check to make sure that the cables and wire harnesses are properly routed.
- With the front wheel in the straight ahead state, hitch the spring scale (special tool) on one handlebar grip end as shown in the figure and read the graduation when the handlebar starts moving. Do the same on the other grip end.

DATA Initial force: 200 – 500 grams

TOOL 09940-92720: Spring scale

- If the initial force read on the scale when the handlebar starts turning is either too heavy or too light, adjust it till it satisfies the specification.

1) First, loosen the front fork upper clamp bolts, handlebar clamp bolts, steering stem head nut and steering stem lock-nut, and then adjust the steering stem nut by loosening or tightening it.
2) Tighten the steering stem lock-nut, stem head nut, handlebar clamp bolts and front fork upper clamp bolts to the specified torque and re-check the initial force with the spring scale according to the previously described procedure.
3) If the initial force is found within the specified range, adjustment has been completed.

NOTE:
Hold the front fork legs, move them back and forth and make sure that the steering is not loose.

HANDLEBARS
CONSTRUCTION

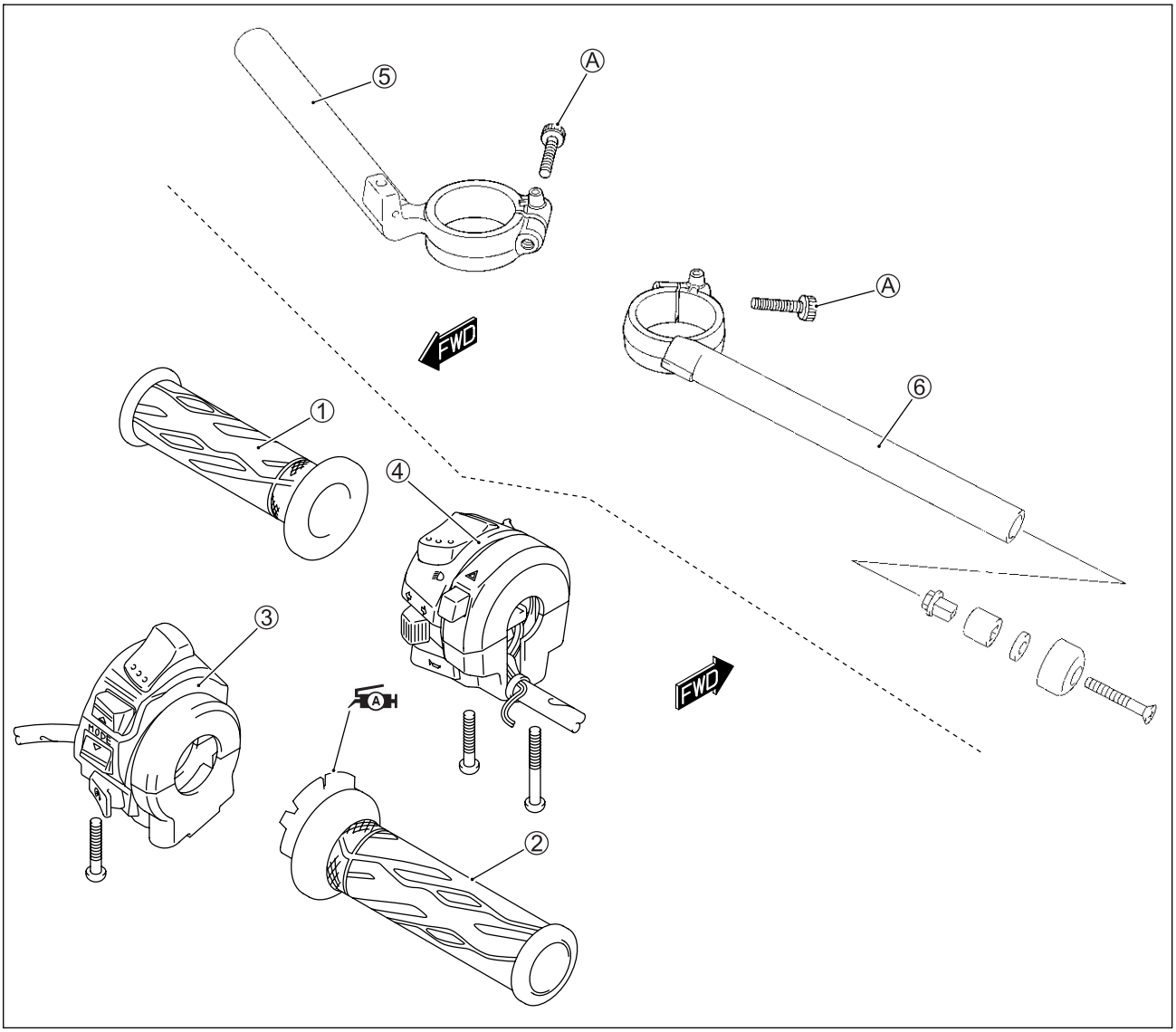

①	Left handle grip	⑤	Handlebar (RH)
②	Throttle grip	⑥	Handlebar (LH)
③	Left handle switch	Ⓐ	Handlebar clamp bolt
④	Right handle switch		

ITEM	N·m	kgf-m	lb-ft
Ⓐ	23	2.3	16.5

REMOVAL
- Remove the front brake master cylinder ①.
- Remove the right handle switch ②.
- Remove the handle balancer ③.
- Remove the throttle grip ④.

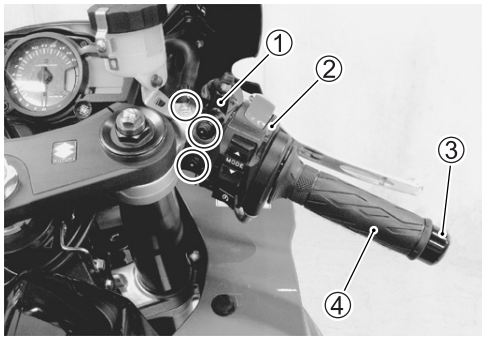

- Remove the clutch master cylinder ⑤. (☞8-89)
- Remove the left handle switch ⑥.
- Remove the handle balancer ⑦.

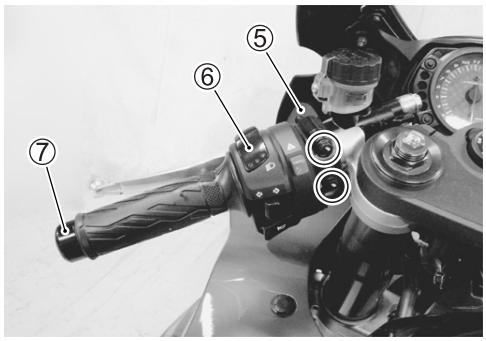

- Loosen the handlebar clamp bolts and front fork upper clamp bolts. (LH and RH)

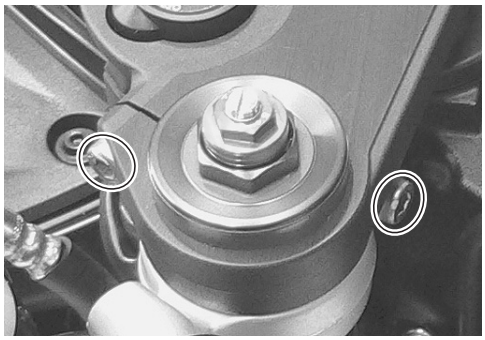

- Remove the steering stem head nut ⑧.
- Remove the steering stem upper bracket ⑨ along with the ignition switch.

NOTE:

** Place a rag under the steering stem upper bracket to prevent scratching the fuel tank and under cowlings.*

** It is not necessary to remove the ignition switch, when replacing only the steering stem lower bracket and bearings. (Ignition switch removal: ☞9-38)*

- Remove the handlebars ⑩.

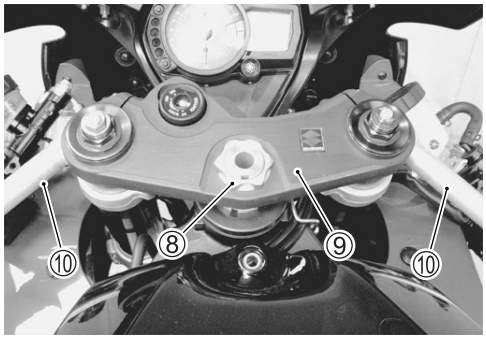

- Remove the handle grip ⑪ from the left handlebar.

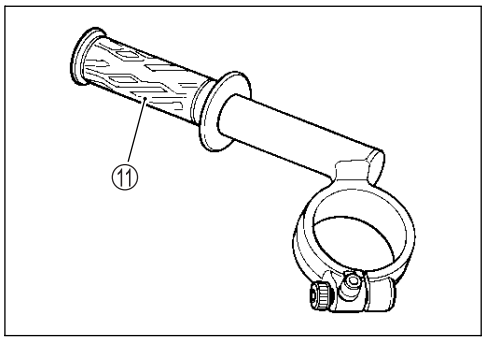

INSTALLATION

Install the handlebars in the reverse order of removal. Pay attention to the following points:

- Install the handlebars temporarily.
- Install the steering stem upper bracket, washer and head nut. (☞8-36)

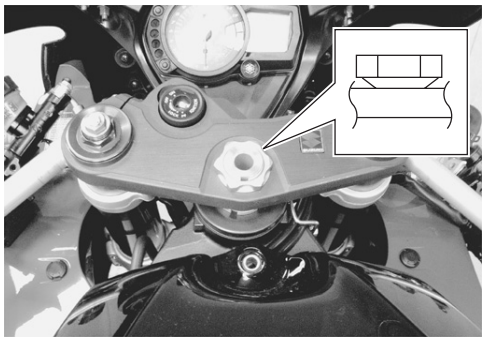

- Insert the protrusion Ⓐ of the handlebars into the hole Ⓑ of the steering stem upper bracket. (LH and RH)

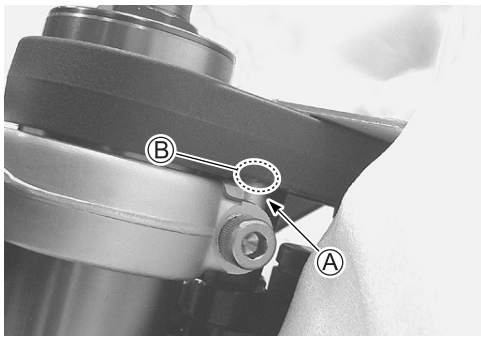

- Tighten the front fork upper clamp bolts ① and handlebar clamp bolts ② to the specified torque. (LH and RH)

Front fork upper clamp bolt: 23 N·m (2.3 kgf-m, 16.5 lb-ft)
Handlebar clamp bolt: 23 N·m (2.3 kgf-m, 16.5 lb-ft)

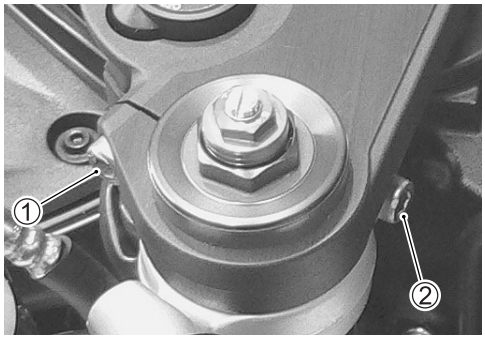

- Apply handle grip bond onto the left handlebar before installing the handlebar grip.

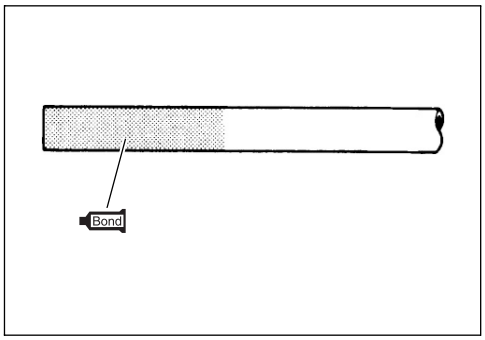

- When installing the clutch master cylinder onto the left handlebar, align the master cylinder holder's mating surface with punch mark Ⓒ on the handlebar and tighten the upper clamp bolt ③ first as shown.

Clutch master cylinder mounting bolt:
10 N·m (1.0 kgf-m, 7.0 lb-ft)

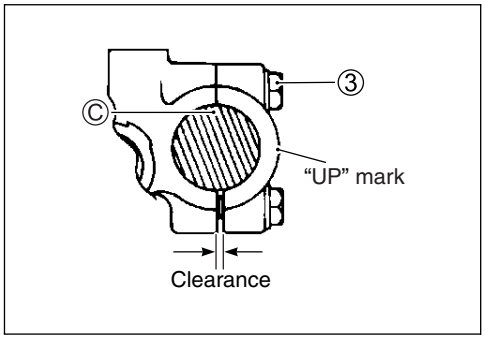

- Apply grease onto the right handlebar before installing the throttle grip.

99000-25010: SUZUKI SUPER GREASE "A" or equivalent

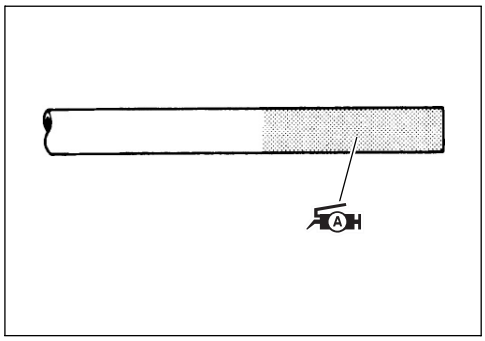

- Apply grease to the throttle cables and cable drum.

99000-25010: SUZUKI SUPER GREASE "A" or equivalent

- When remounting the right and left handle switches, engage the stopper with the handlebar hole.

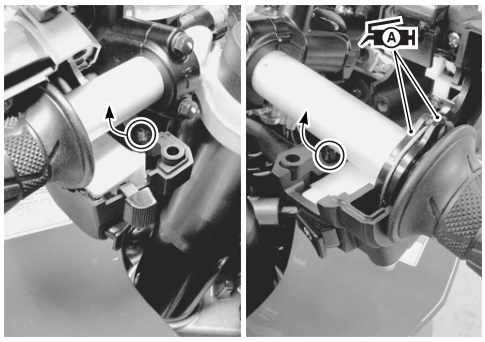

After installing the steering, the following adjustments are required before driving.

- Cable routing (☞10-17)
- Throttle cable play (☞2-15)

REAR WHEEL
CONSTRUCTION

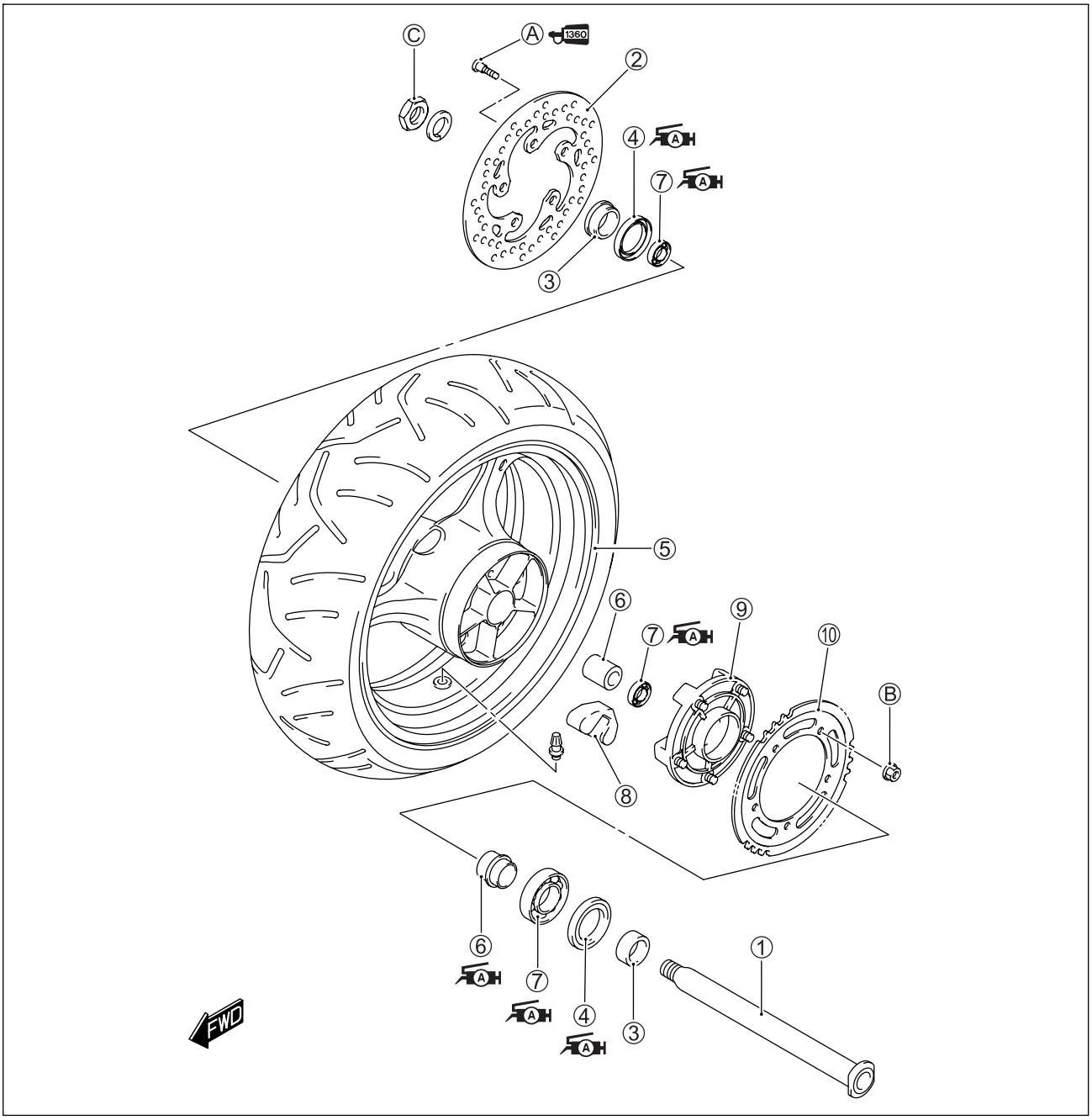

①	Rear axle	⑧	Wheel damper
②	Brake disc	⑨	Sprocket mounting drum
③	Collar	⑩	Sprocket
④	Dust seal	Ⓐ	Brake disc bolt
⑤	Rear wheel	Ⓑ	Rear sprocket nut
⑥	Spacer	Ⓒ	Rear axle nut
⑦	Bearing		

ITEM	N·m	kgf-m	lb-ft
Ⓐ	35	3.5	25.5
Ⓑ	60	6.0	43.5
Ⓒ	100	10.0	72.5

REMOVAL

- Loosen the axle nut ①.
- Raise the rear wheel off the ground and support the motorcycle with a jack or wooden block.
- Remove the axle nut and draw out the rear axle.

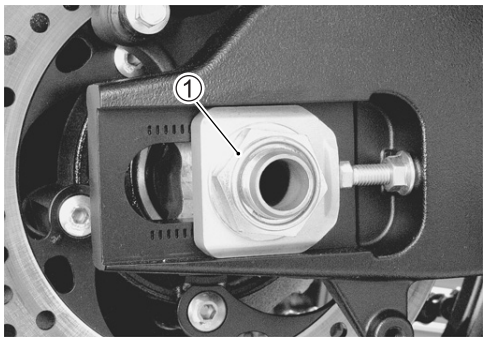

- Remove the rear wheel by disengaging the drive chain.

CAUTION

Do not operate the brake pedal with the rear wheel removed.

- Remove the collar ②.
- Remove the brake disc ③.

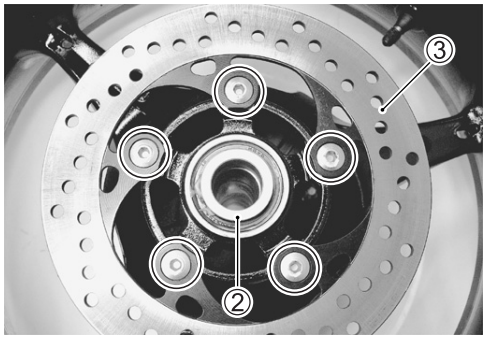

- Remove the collar ④.
- Loosen the rear sprocket mounting bolt and separate the rear sprocket ⑤ from its mounting drum ⑥.
- Draw out the rear sprocket mounting drum ⑥ from the wheel hub.

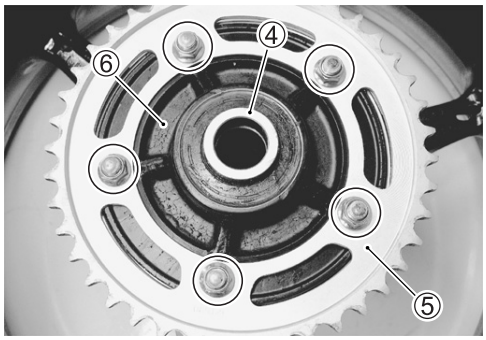

- Remove the rear sprocket mounting drum retainer ⑦.

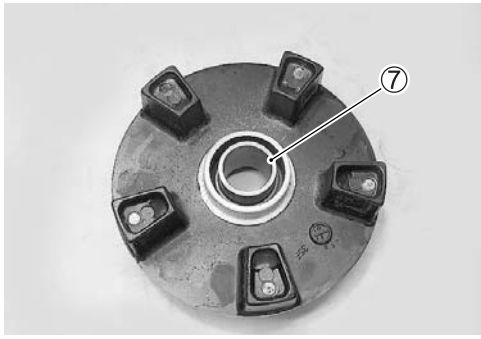

- Remove the dust seal with the special tool.

TOOL 09913-50121: Oil seal remover

CAUTION

The removed dust seal must be replaced with a new one.

- Remove the dust seal with the special tool.

TOOL 09913-50121: Oil seal remover

CAUTION

The removed dust seal must be replaced with a new one.

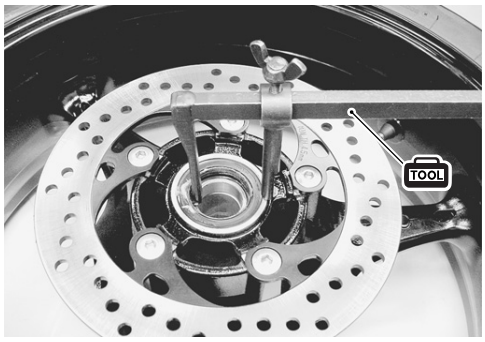

INSPECTION AND DISASSEMBLY

TIRE INSPECTION (☞2-27 and 8-93)
WHEEL INSPECTION (☞8-93)

REAR AXLE

- Using the dial gauge, check the rear axle for runout.
- If the runout exceeds the limit, replace the rear axle with a new one.

DATA Axle shaft runout:
Service Limit: 0.25 mm (0.010 in)

TOOL 09900-20607: Dial gauge (1/100 mm)
09900-20701: Magnetic stand
09900-21304: V-block set (100 mm)

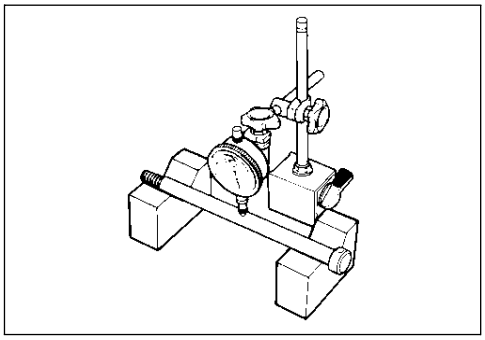

WHEEL DAMPER

- Inspect the damper for wear and damage.
- Replace the damper if there is anything unusual.

SPROCKET

- Inspect the sprocket teeth for wear.
- If they are worn as shown, replace the two sprockets and drive chain as a set.

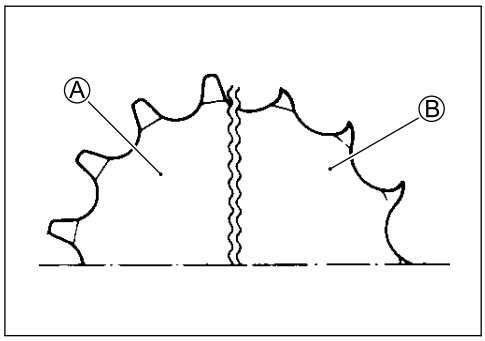

Ⓐ Normal wear
Ⓑ Excessive wear

BEARINGS

- Inspect the play of the wheel bearing and sprocket mounting drum bearing by hand while they are installed in place. Rotate the inner race by hand to inspect for abnormal noise and smooth rotation.
- Replace the bearing if there is anything unusual.

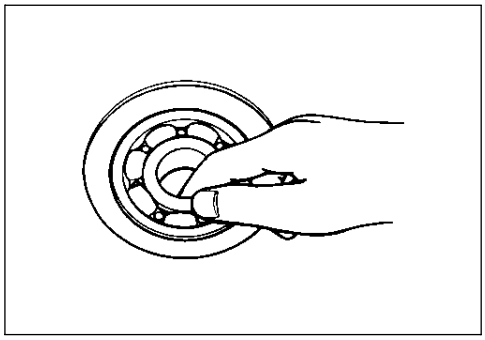

- Remove the sprocket mounting drum bearing ① and wheel bearing ② with the special tool.

TOOL 09921-20240: Bearing remover set (① 30 mm)
(② 28 mm)

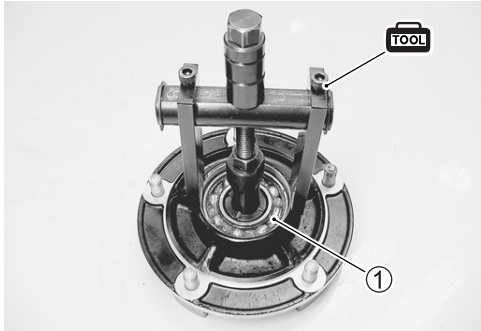

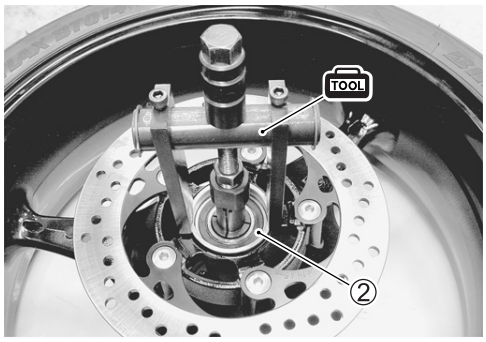

CAUTION

The removed bearings must be replaced with new ones.

REASSEMBLY AND INSTALLATION

Reassemble and install the rear wheel in the reverse order of removal and disassembly. Pay attention to the following points:

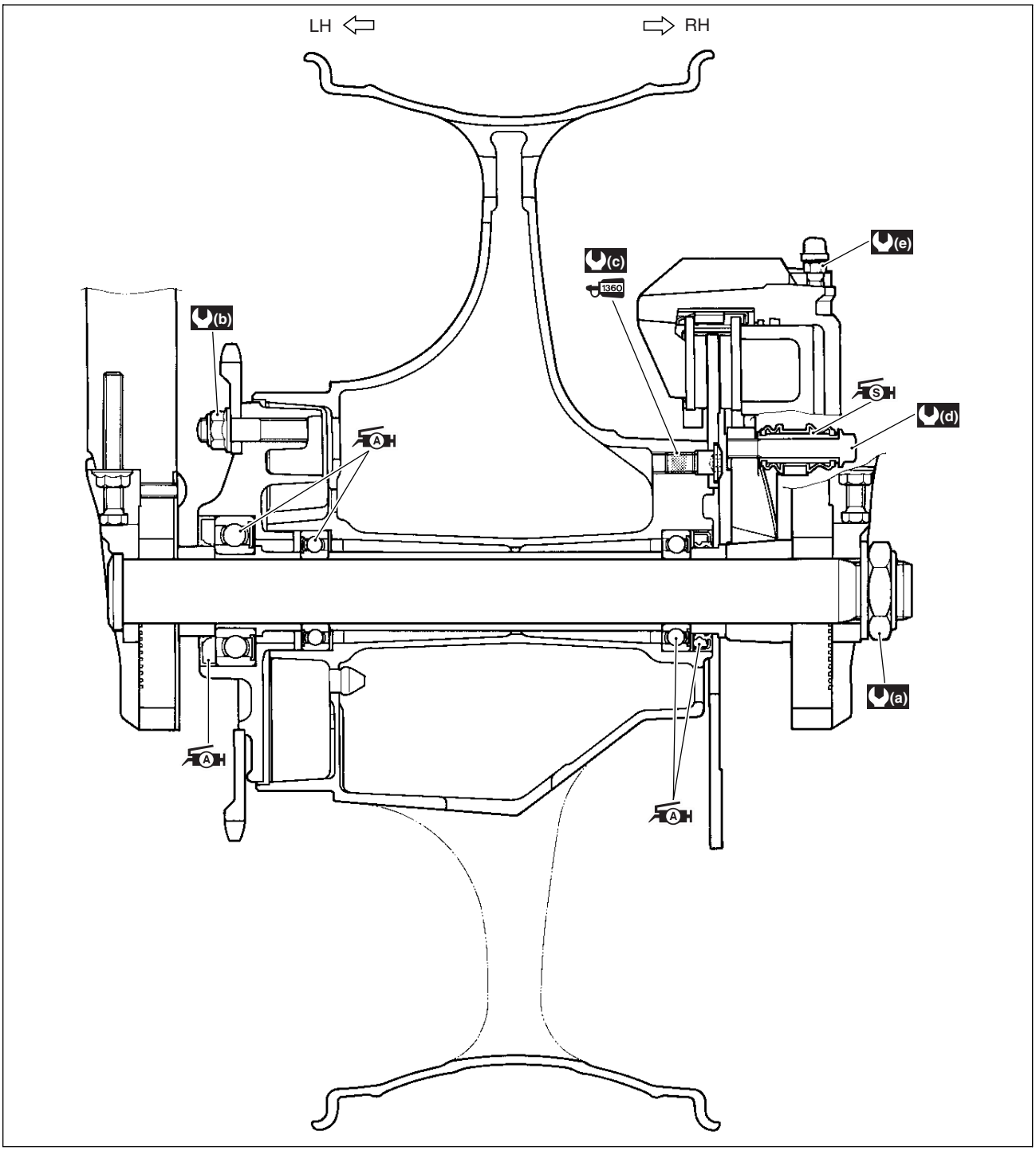

(a)	100 N·m (10.0 kgf-m, 72.5 lb-ft)	(d)	33 N·m (3.3 kgf-m, 24.0 lb-ft)
(b)	60 N·m (6.0 kgf-m, 43.5 lb-ft)	(e)	7.5 N·m (0.75 kgf-m, 5.5 lb-ft)
(c)	35 N·m (3.5 kgf-m, 25.5 lb-ft)		

BEARINGS

- Apply grease to the bearings before installing them.

99000-25010: SUZUKI SUPER GREASE "A" or equivalent

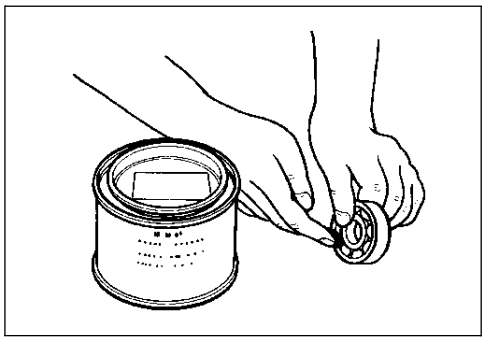

- Install a new bearing to the sprocket mounting drum with the special tool.

09924-84510: Bearing installer set

- First install the right wheel bearing, then install the left one with the special tools.

09941-34513: Steering race installer
09924-84510: Bearing installer set

CAUTION

The sealed cover of the bearing must face outside.

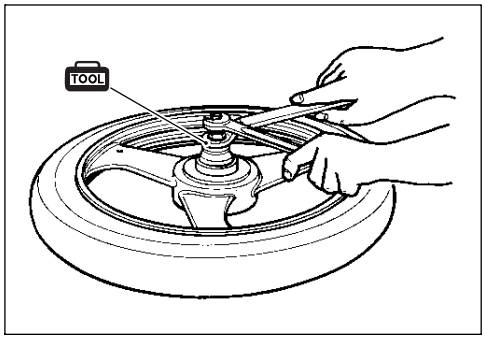

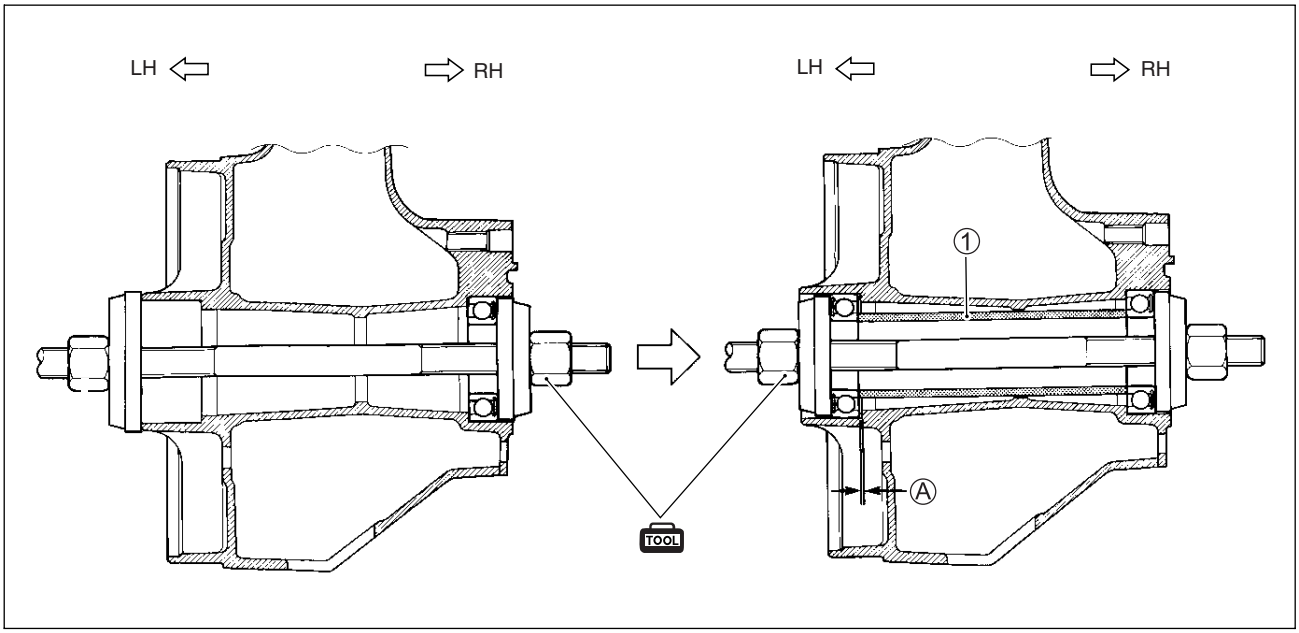

① Spacer Ⓐ Clearance

WHEEL DAMPER

- To install the wheel dampers, apply a special tire lubricant or neutral soapy liquid to the damper surface.

CAUTION

> *** Three protrusions Ⓐ on the damper must face outside.**
> *** Never use oil, grease or gasoline on the damper in place of the tire lubricant.**

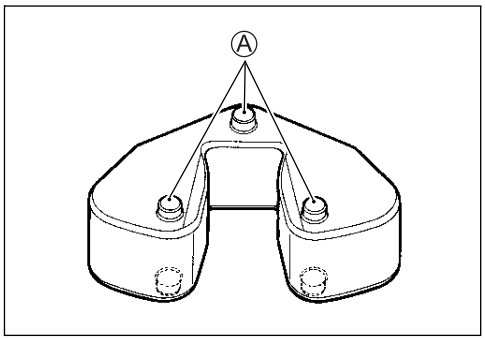

DUST SEALS

- Install new dust seal with the special tool.

TOOL 09913-70210: Bearing installer set

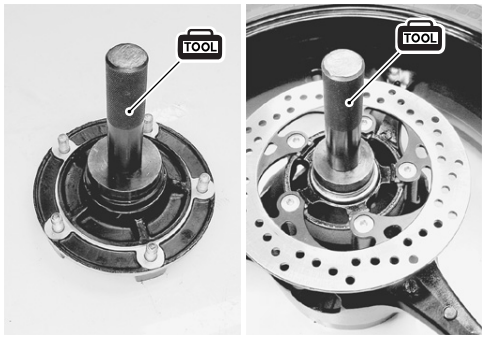

- Apply grease to the dust seal lip before assembling rear wheel.

A H 99000-25010: SUZUKI SUPER GREASE "A" or equivalent

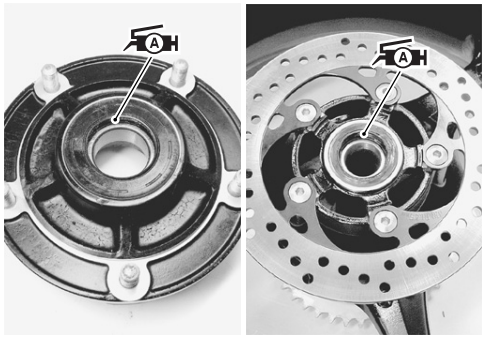

REAR SPROCKET AND SPROCKET MOUNTING DRUM

- Install the rear sprocket mounting drum spacer ①.
- Install the rear sprocket mounting drum to the rear wheel.

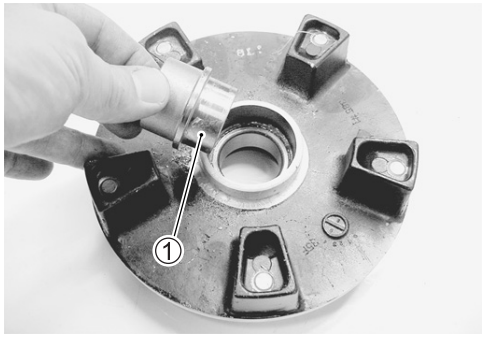

- Tighten the sprocket mounting nuts to the specified torque.

Rear sprocket nut: 60 N·m (6.0 kgf-m, 43.5 lb-ft)

NOTE:
Stamped mark Ⓐ on the sprocket should face outside.

- Install the collar ②.

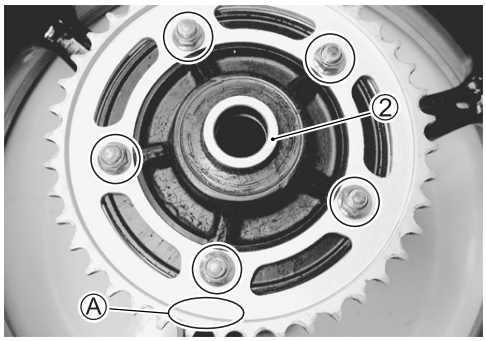

BRAKE DISC

- Apply THREAD LOCK to the disc bolts and tighten them to the specified torque.

NOTE:
Make sure that the brake disc is clean and free of any greasy matter.

1360 99000-32130: THREAD LOCK SUPER "1360" or equivalent

Brake disc bolt: 35 N·m (3.5 kgf-m, 25.5 lb-ft)

- Install the collar ①.

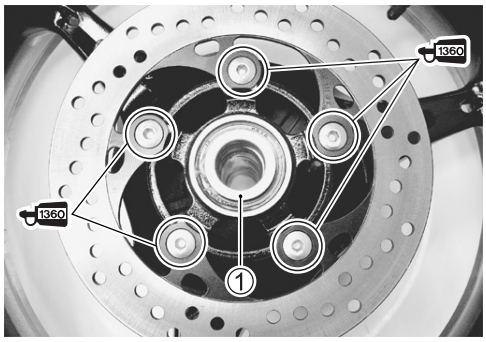

REAR AXLE

- Remount the rear wheel, rear axle shaft and rear axle nut.
- Adjust the chain slack after rear wheel installation. (☞2-22)

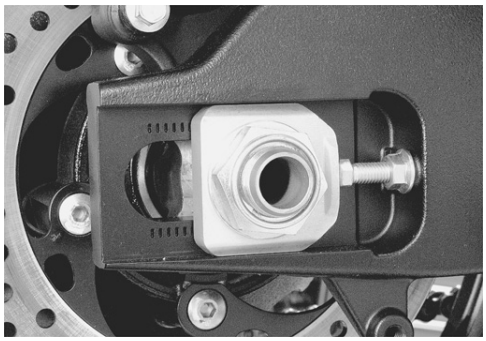

REAR SHOCK ABSORBER
CONSTRUCTION

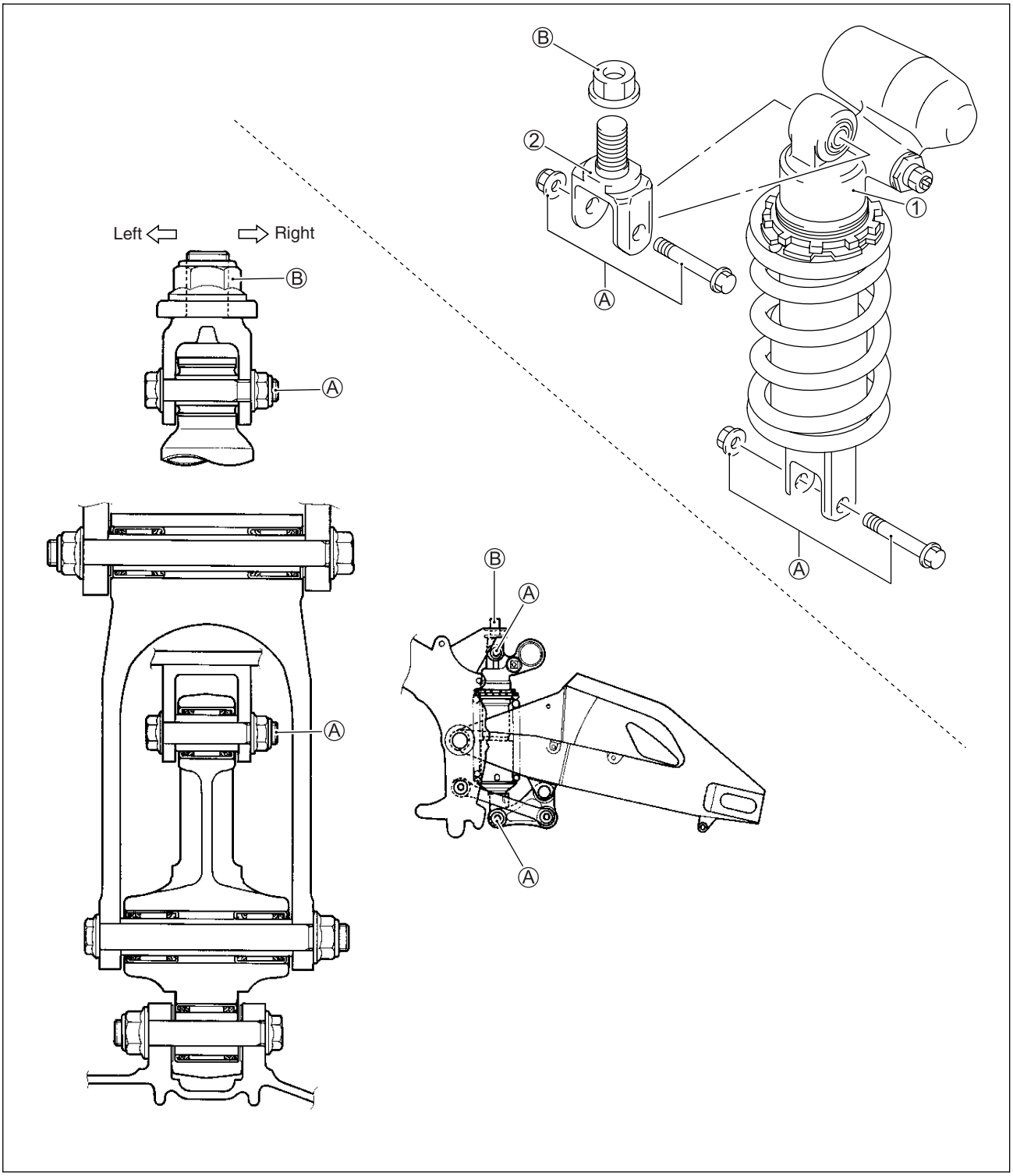

①	Rear shock absorber	Ⓐ	Rear shock absorber mounting bolt/nut
②	Rear shock absorber bracket	Ⓑ	Rear shock absorber bracket nut

ITEM	N·m	kgf-m	lb-ft
Ⓐ	50	5.0	36.0
Ⓑ	115	11.5	83.0

REMOVAL

- Remove the mufflers and muffler chamber. (☞6-12)
- Support the motorcycle with a jack to relieve load on the rear shock absorber.
- Remove the muffler chamber brackets ①.

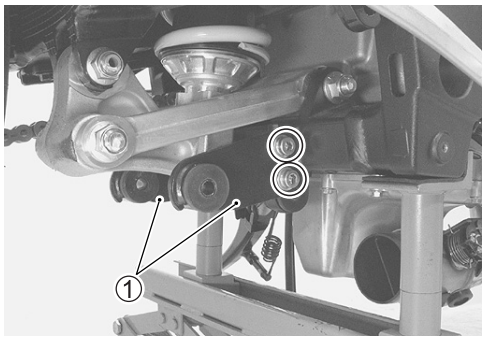

- Remove the rear shock absorber upper and lower mounting bolts and nuts.

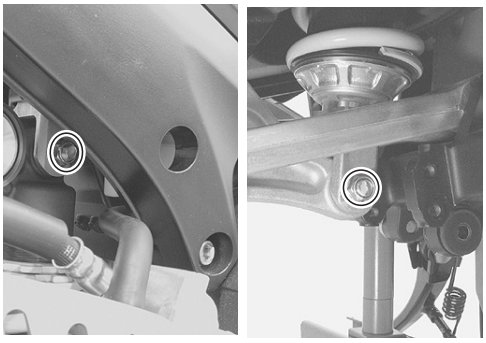

- Take out the rear shock absorber.

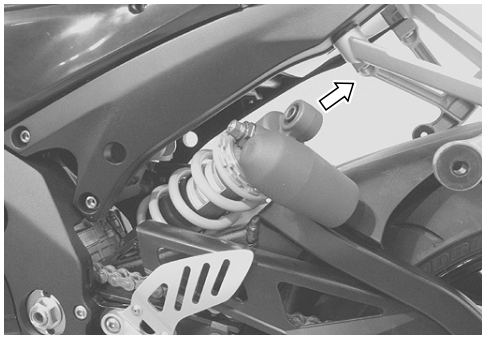

INSPECTION

Inspect the shock absorber body and bushing for damage and oil leakage.
If any defects are found, replace the shock absorber with a new one.

CAUTION

Do not attempt to disassemble the rear shock absorber unit. It is unserviceable.

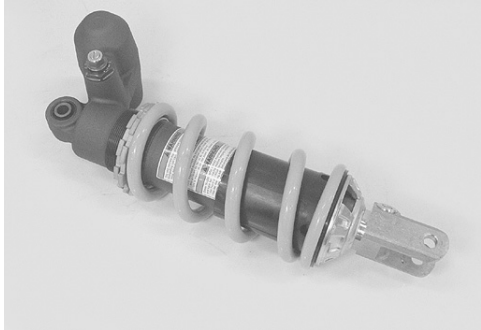

REAR SHOCK ABSORBER DISPOSAL

⚠ WARNING

- **The rear shock absorber unit contains high-pressure nitrogen gas.**
- **Mishandling can cause explosion.**
- **Keep away from fire and heat. High gas pressure caused by heat can cause an explosion.**
- **Release gas pressure before disposing.**

GAS PRESSURE RELEASE

The rear cushion damper unit contains high-pressure nitrogen gas. Make sure to observe the following precautions.

⚠ WARNING

- **Never apply heat or disassemble the damper unit since it can explode or oil can splash hazardously.**
- **When discarding the rear cushion unit, be sure to release gas pressure from the unit following the procedures below.**

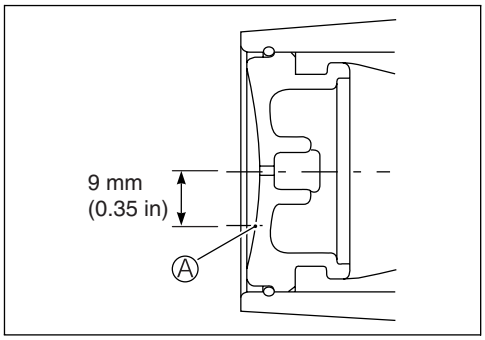

Mark the drill center at the location Ⓐ using a center punch.
Wrap the rear cushion unit with a vinyl bag and fix it on a vise as shown.
Drill a 2 – 3 mm (0.08 – 0.12 in) hole at the marked drill center using a drilling machine and let out gas while taking care not to get the vinyl bag entangled with the drill bit.

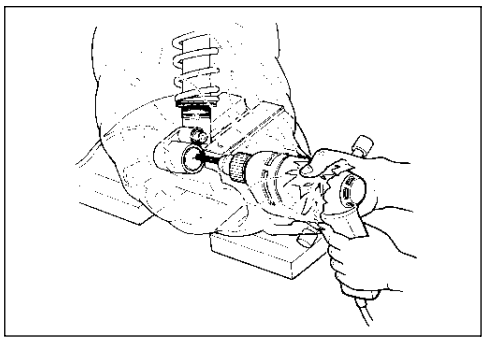

⚠ WARNING

- **Be sure to wear protective glasses since drilling chips and oil may fly off with blowing gas when the drill bit has penetrated through the body.**
- **Make sure to drill at the specified position. Otherwise, pressurized oil may spout out forcefully.**

INSTALLATION

Remount the rear shock absorber in the reverse order of removal. Pay attention to the following points:

- Install the rear shock absorber and tighten the rear shock absorber upper/lower mounting bolts and nuts.

Rear shock absorber mounting nut:
50 N·m (5.0 kgf-m, 36.0 lb-ft)

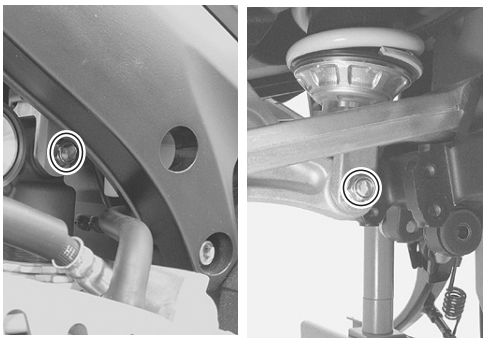

- Install the muffler chamber and mufflers . (☞6-16)

REAR SUSPENSION SETTING

Adjust the spring pre-load and three kinds of damping force as follows.

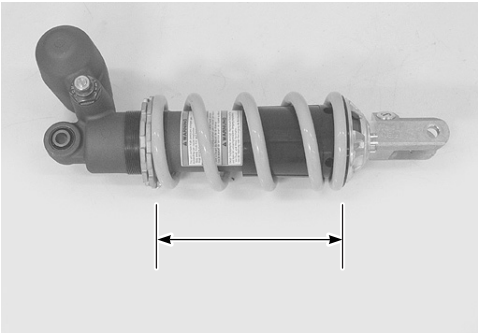

SPRING PRE-LOAD ADJUSTMENT

The set length 156.0 mm (6.14 in) provides the maximum spring pre-load.
The set length 166.0 mm (6.54 in) provides the minimum spring pre-load.

DATA STD length: 161.0 mm (6.34 in)

DAMPING FORCE ADJUSTMENT

NOTE:
** Make sure to check the 1st click position by the last click sound when turning in the adjuster.*
** Fine-tune the adjusters by turning it slightly until two punch marks align.*

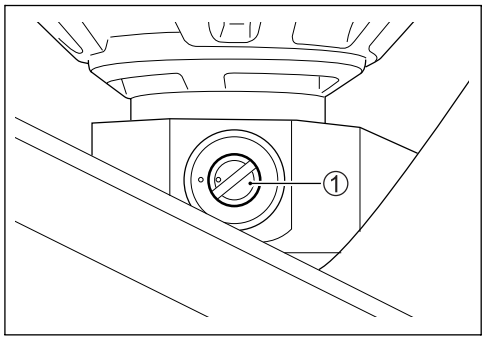

Rebound damping force

Fully turn the damping force adjuster ① clockwise. From that position (stiffest), turn it out to standard setting position.

DATA STD position: 11 clicks out from stiffest position (E-02, 19)
12 clicks out from stiffest position (E-03, 24, 28, 33)

Compression damping force (High speed)
Fully turn the compression damping force (High speed) adjuster ② clockwise. From that position (stiffest), turn it out to the standard setting position.

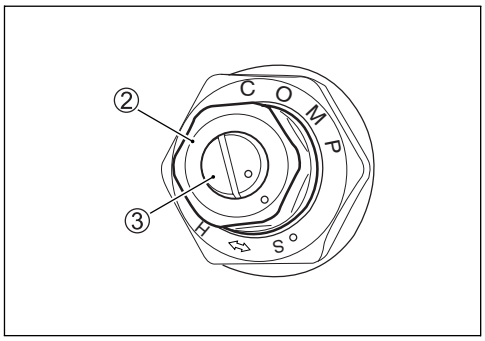

DATA STD position: 3 turns out from stiffest position

Compression damping force (Low speed)
Fully turn the compression damping force (Low speed) adjuster ③ clockwise. From that position (stiffest), turn it out to the standard setting position.

DATA STD position: 14 clicks out from stiffest position (E-02, 19)
13 clicks out from stiffest position (E-03, 24, 28, 33)

STANDARD REAR SUSPENSION SETTING (E-02, 19)

	REAR			
	Spring set length	Damping force adjuster		
		Rebound	Compression (High speed)	Compression (Low speed)
Solo and dual riding	161.0 mm (6.34 in)	11 clicks out from stiffest position	3 turns out from stiffest position	14 clicks out from stiffest position

STANDARD REAR SUSPENSION SETTING (E-03, 24, 28, 33)

	REAR			
	Spring set length	Damping force adjuster		
		Rebound	Compression (High speed)	Compression (Low speed)
Solo and dual riding	161.0 mm (6.34 in)	12 clicks out from stiffest position	3 turns out from stiffest position	13 clicks out from stiffest position

REAR SUSPENSION
CONSTRUCTION

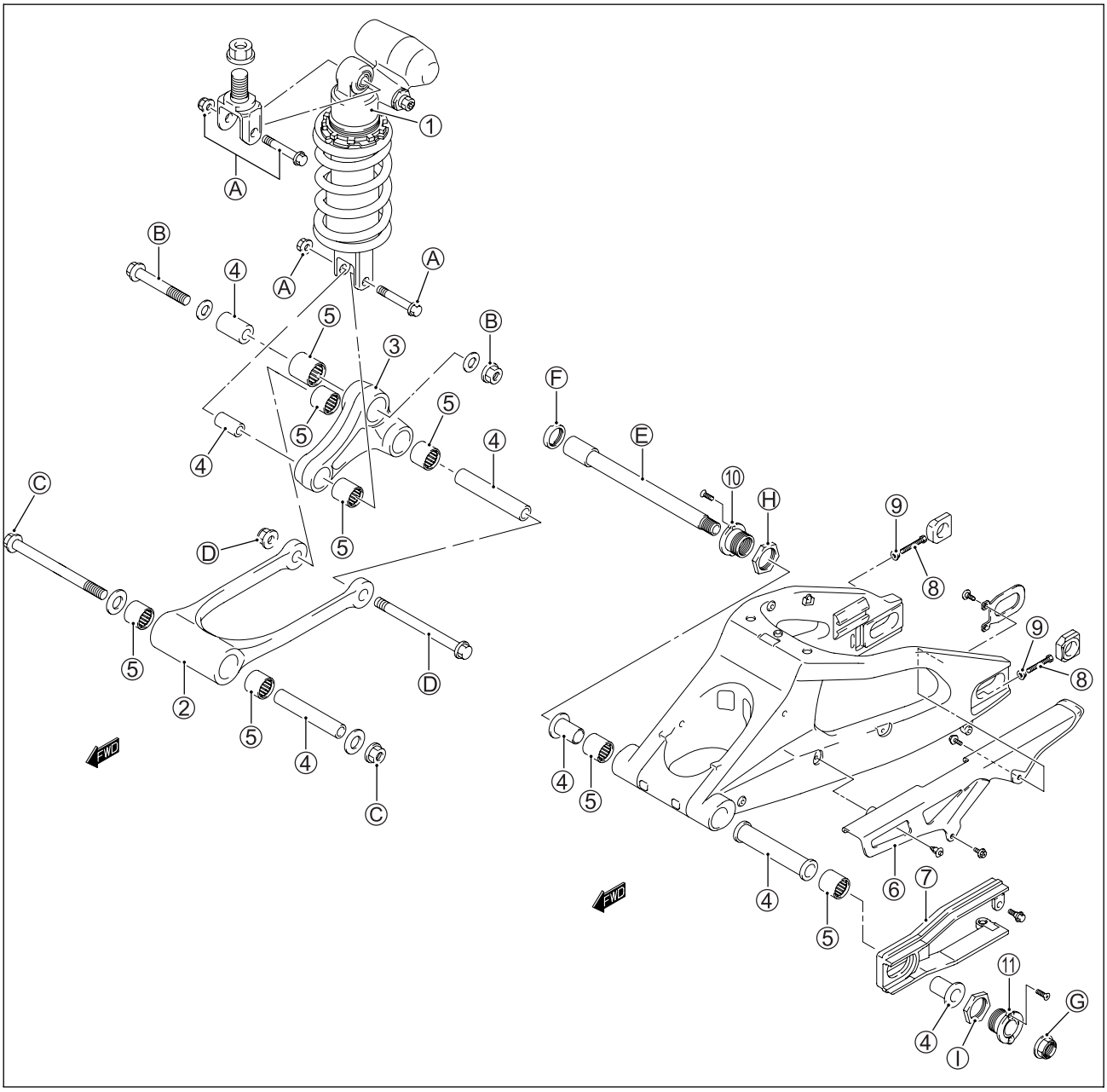

①	Rear shock absorber	⑪	Swingarm pivot boss (LH)
②	Rear cushion rod	Ⓐ	Rear shock absorber mounting bolt/nut
③	Rear cushion lever		
④	Spacer	Ⓑ	Rear cushion lever bolt/nut
⑤	Bearing	Ⓒ	Rear cushion rod bolt/nut
⑥	Chain case	Ⓓ	Swingarm pivot shaft
⑦	Chain buffer	Ⓔ	Swingarm pivot lock-nut
⑧	Chain adjuster	Ⓕ	Swingarm pivot nut
⑨	Chain adjuster lock-nut	Ⓖ	Swingarm pivot boss nut (RH)
⑩	Swingarm pivot boss (RH)	Ⓗ	Swingarm pivot boss nut (LH)

ITEM	N·m	kgf-m	lb-ft
Ⓐ	50	5.0	36.0
ⒷⒸ	98	9.8	71.0
Ⓓ	78	7.8	56.5
Ⓔ	15	1.5	11.0
Ⓕ	90	9.0	65.0
Ⓖ	100	10.0	72.5
ⒽⒾ	65	6.5	47.0

REMOVAL

- Cut the drive chain. (☞8-97)

NOTE:
It is not necessary to cut the drive chain, unless replacing drive chain or swingarm.

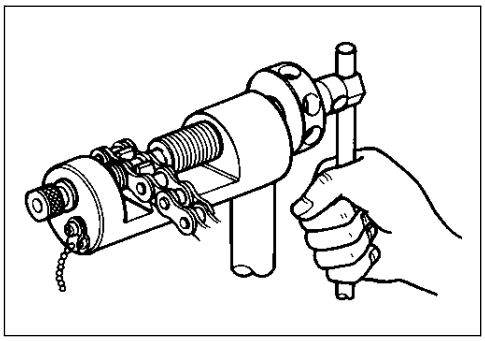

- Remove the rear wheel. (☞8-43)
- Remove the brake hose guide ①.
- Remove the brake caliper from the swingarm.

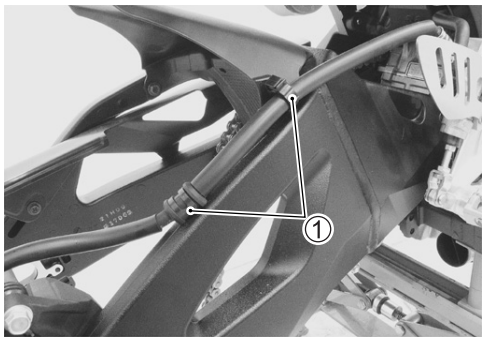

- Remove the rear shock absorber. (☞8-51)
- Remove the cushion lever ②. and washers.
- Remove the cushion rod ③ and washers.

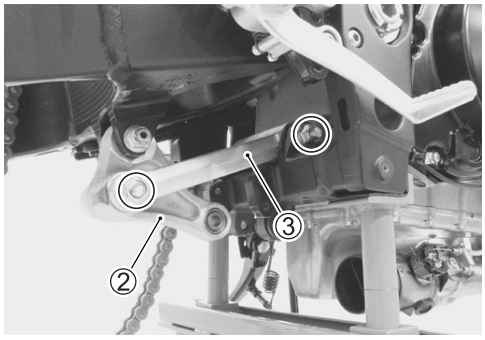

- Remove the swingarm pivot shaft lock-nut with the special tool.

TOOL 09940-14940: Swingarm pivot thrust adjuster socket wrench

- Hold the swingarm pivot shaft ④ and remove the swingarm pivot nut ⑤.

TOOL 09944-28320: Hexagon socket (19 mm)

- Remove the swingarm pivot shaft.
- Remove the swingarm.

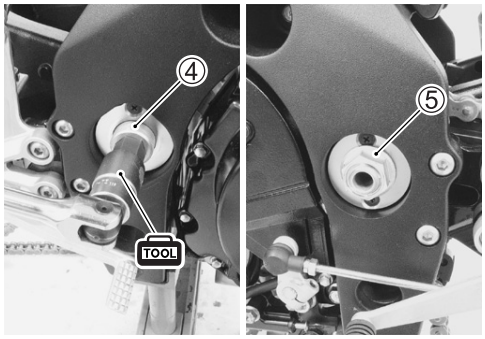

- Remove the rear fender (lower) ⑥.
- Remove the chain case ⑦.
- Remove the chain buffer ⑧.

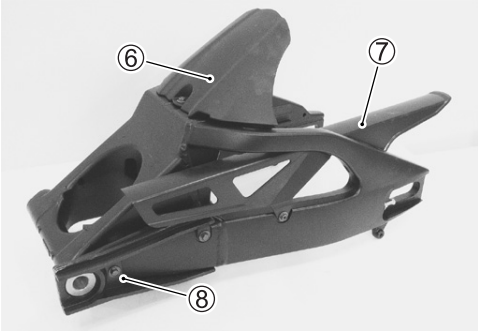

SWINGARM PIVOT BOSS REMOVAL AND INSTALLATION

- Remove the swingarm. (☞8-56)
- Remove the swingarm pivot boss nut ①.

NOTE:
Remove the swingarm pivot boss when only replacing it.

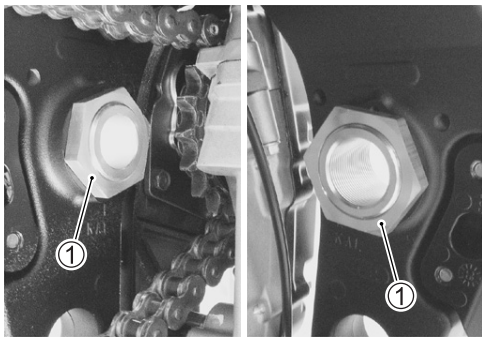

- Remove the swingarm pivot boss ② by removing its set screws.

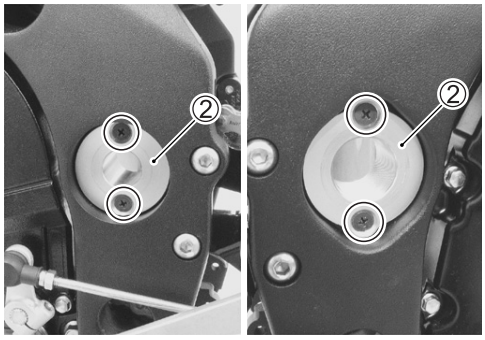

- Set the swingarm pivot boss by its set screws.

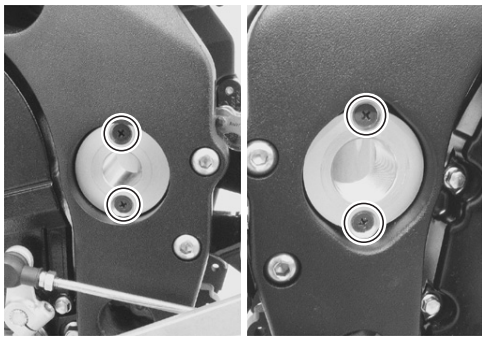

- Tighten the swingarm boss nut to the specified torque.

Swingarm pivot boss nut: 65 N·m (6.5 kgf-m, 47.0 lb-ft)

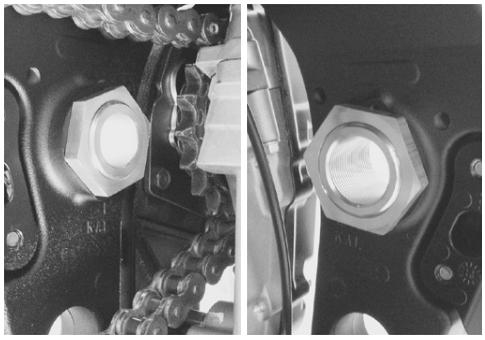

INSPECTION AND DISASSEMBLY

SPACER

- Remove the spacers from swingarm.
- Remove the spacers from the cushion lever and cushion rod.
- Inspect the spacers for any flaws or other damage. If any defects are found, replace the spacers with new ones.

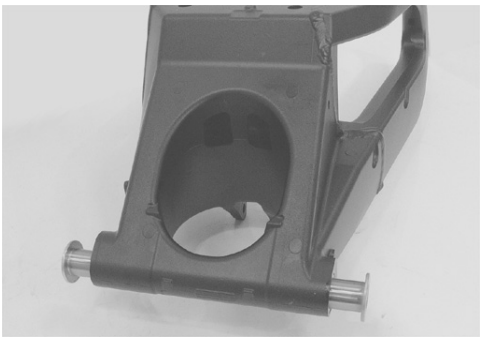

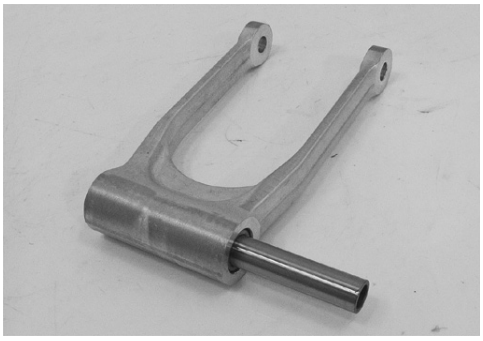

SWINGARM BEARING

- Insert the spacer into bearing and check the play when moving the spacer up and down.
- If excessive play is noted, replace the bearing with a new one.

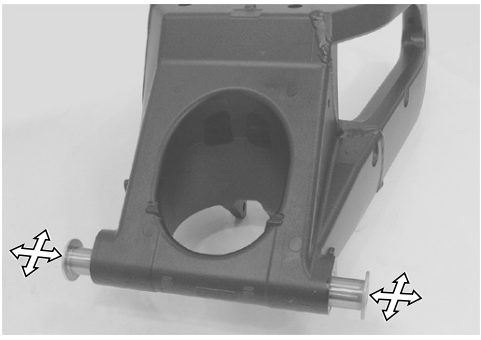

- Remove the swingarm pivot bearings with the special tool.

TOOL 09921-20240: Bearing remover set (① 28 mm)

CAUTION

The removed bearings must be replaced with new ones.

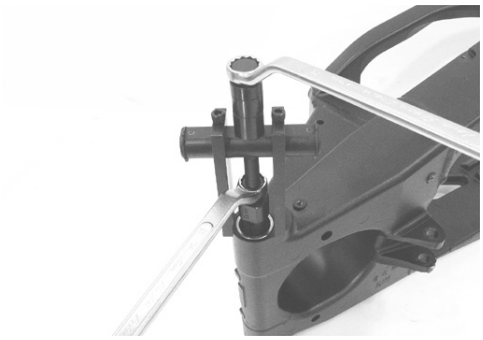

- Remove the center spacer ①.

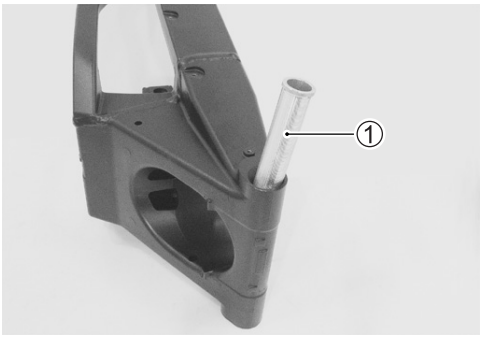

CUSHION LEVER BEARING

- Insert the spacer into bearing and check the play when moving the spacer up and down.
- If excessive play is noted, replace the bearing with a new one.

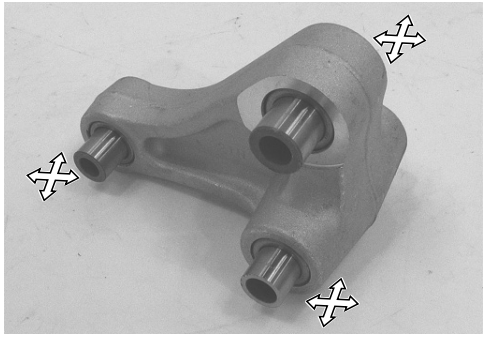

- Remove the cushion lever bearings with the special tool.

TOOL 09921-20240: Bearing remover set (① 20 mm)
(② 17 mm)

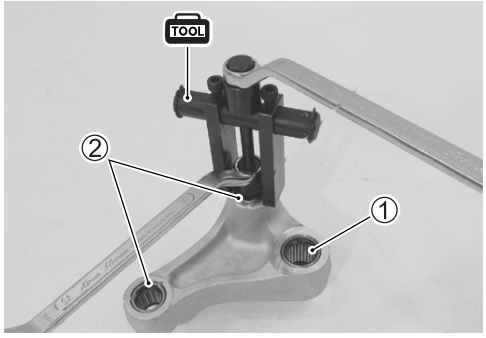

CAUTION

> **The removed bearings must be replaced with new ones.**

CUSHION ROD BEARING

- Insert the spacer into bearing and check the play when moving the spacer up and down.
- If excessive play is noted, replace the bearing with a new one.

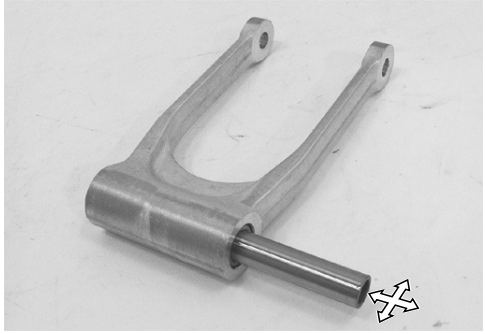

- Remove the cushion rod bearings with the special tool.

TOOL 09921-20240: Bearing remover set (17 mm)

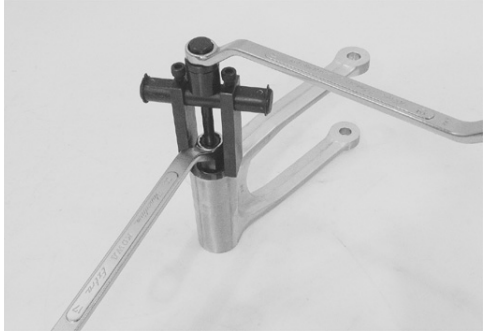

CAUTION

> **The removed bearings must be replaced with new ones.**

SWINGARM PIVOT SHAFT

- Using a dial gauge, check the pivot shaft runout and replace it if the runout exceeds the limit.

DATA Swingarm pivot shaft runout:
Service limit: 0.3 mm (0.01 in)

TOOL 09900-20607: Dial gauge (1/100 mm, 10 mm)
09900-20701: Magnetic stand
09900-21304: V-block set (100 mm)

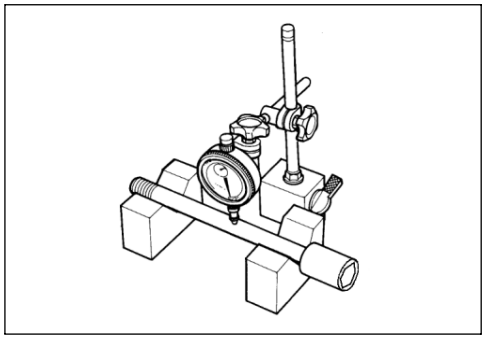

CHAIN BUFFER

- Inspect the chain buffer for wear and damage.
- If any defects are found, replace the chain buffer with a new one.

PLATE

- Inspect the plate for damage and excessive bend.

REASSEMBLY

Reassemble the swingarm in the reverse order of disassembly and removal.
Pay attention to the following points:

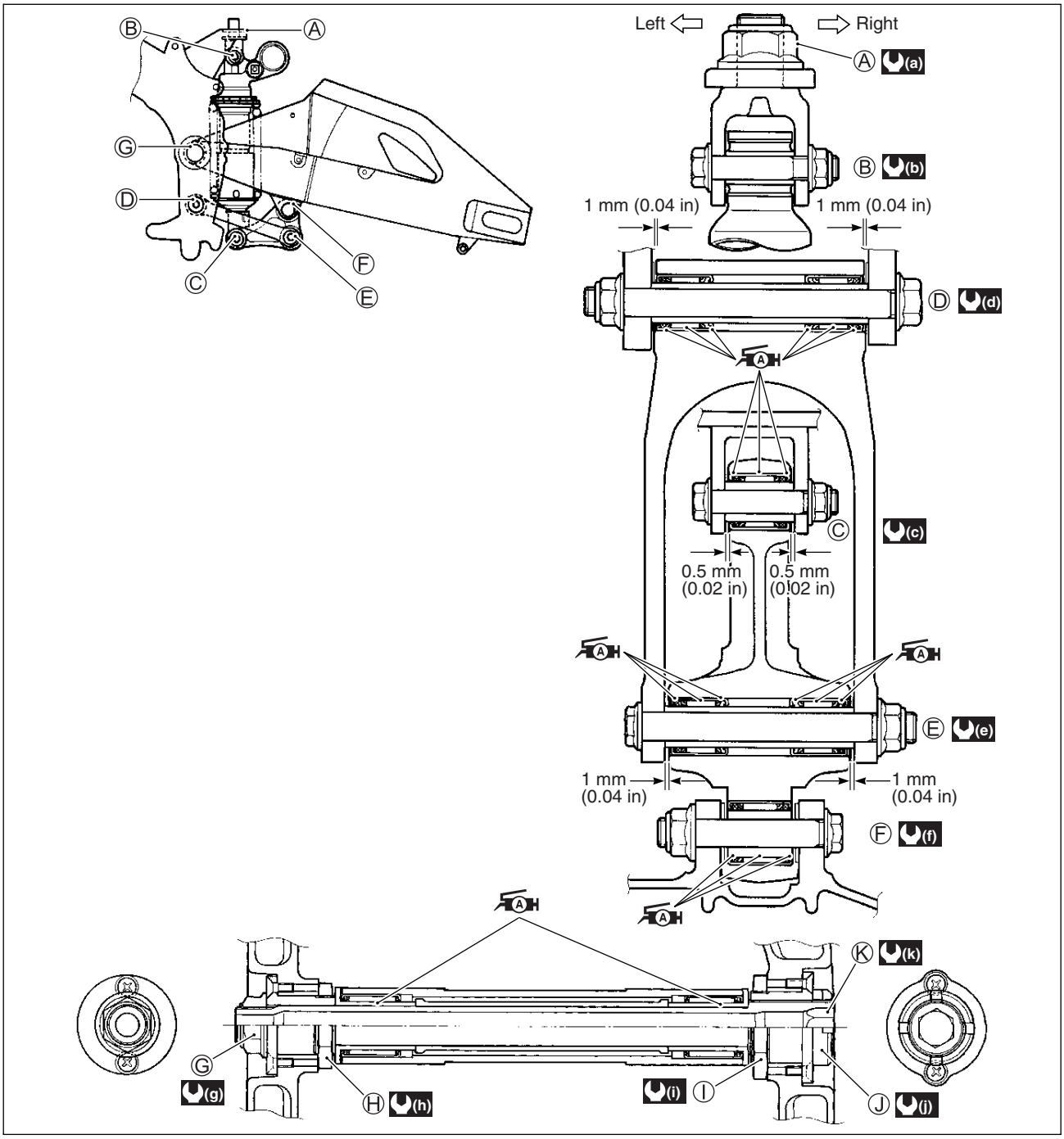

(a)	115 N·m (11.5 kgf-m, 83.0 lb-ft)	(g)	100 N·m (10.0 kgf-m, 72.5 lb-ft)	A	Apply SUZUKI SUPER GREASE "A" or equivalent one to the bearings, washers and dust seals.
(b)	50 N·m (5.0 kgf-m, 36.0 lb-ft)	(h)	65 N·m (6.5 kgf-m, 47.0 lb-ft)		
(c)	50 N·m (5.0 kgf-m, 36.0 lb-ft)	(i)	65 N·m (6.5 kgf-m, 47.0 lb-ft)		
(d)	98 N·m (9.8 kgf-m, 71.0 lb-ft)	(j)	90 N·m (9.0 kgf-m, 65.0 lb-ft)	*NOTE:* *When installing the bearing, stamped mark on the bearing must face outside.*	
(e)	78 N·m (7.8 kgf-m, 56.5 lb-ft)	(k)	15 N·m (1.5 kgf-m, 11.0 lb-ft)		
(f)	98 N·m (9.8 kgf-m, 71.0 lb-ft)				

SWINGARM BEARING

- Install the center spacer.
- Press the bearings into the swingarm pivot with the special tool and suitable size socket wrench.

TOOL 09941-34513: Steering race installer

NOTE:
When installing the bearing, stamped mark on the bearing must face outside.

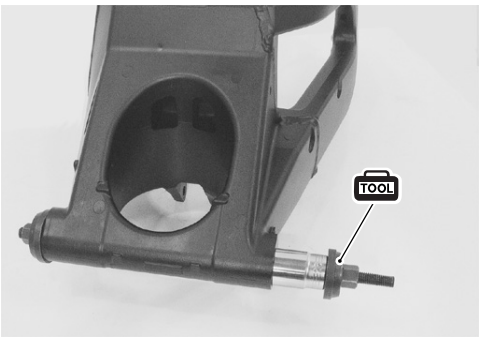

CUSHION LEVER BEARING

- Press the bearings into the cushion lever at 1 mm (0.04 in) depth Ⓐ and 0.5 mm (0.02 in) depth Ⓑ from the cushion lever surface with the special tool and suitable size socket wrench. (☞8-61)

TOOL 09924-84521: Bearing installer set

NOTE:
When installing the bearing, stamped mark on the bearing must face outside.

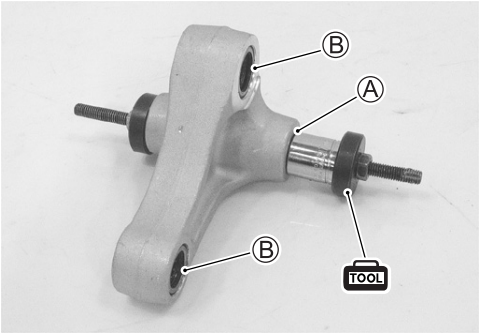

CUSHION ROD BEARING

- Press the bearings into the cushion rod at 1 mm (0.04 in) depth Ⓒ from the cushion rod surface with the special tool and suitable size socket wrench. (☞8-61)

TOOL 09924-84521: Bearing installer set

NOTE:
When installing the bearing, stamped mark on the bearing must face outside.

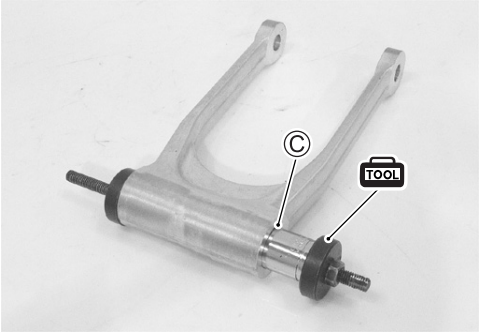

- Apply grease to the bearings, spacers.

A H 99000-25010: SUZUKI SUPER GREASE "A" or equivalent

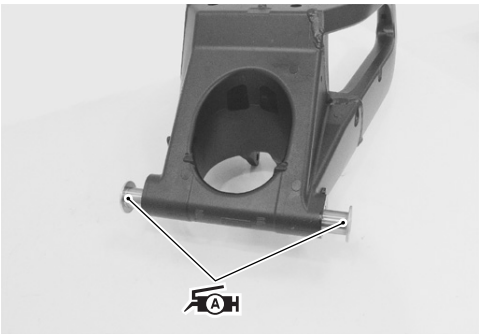

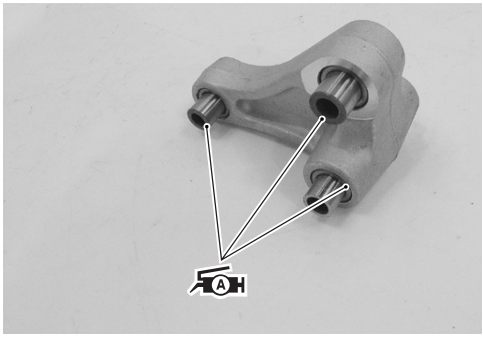

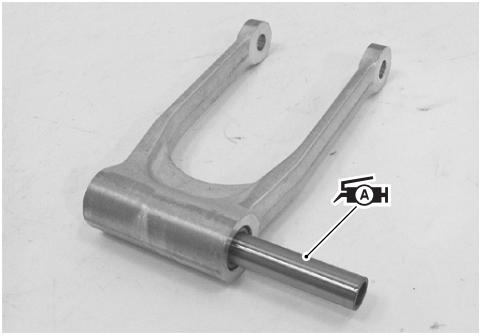

- Install the chain case ① chain buffer ② and rear fender ③.

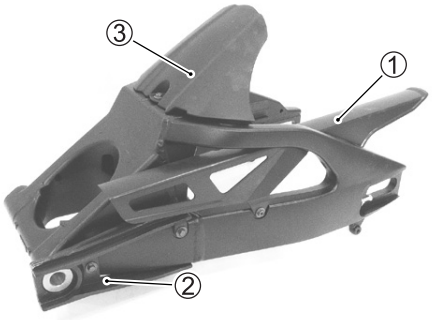

INSTALLATION

Install the swingarm in the reverse order of disassembly and removal, and pay attention to the following points:

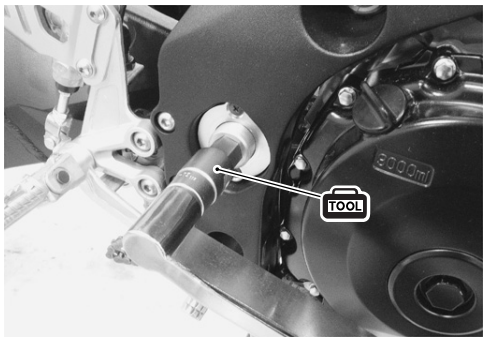

SWINGARM PIVOT THRUST CLEARANCE ADJUSTMENT

Adjust swingarm pivot thrust clearance in the following procedure.

- Insert the swingarm pivot shaft and tighten it to the specified torque.

TOOL 09944-28320: Hexagon socket (19 mm)

Swingarm pivot shaft: 15 N·m (1.5 kgf-m, 11.0 lb-ft)

- Hold the swingarm pivot shaft and tighten the swingarm pivot nut to the specified torque.

Swingarm pivot nut: 100 N·m (10.0 kgf-m, 72.5 lb-ft)

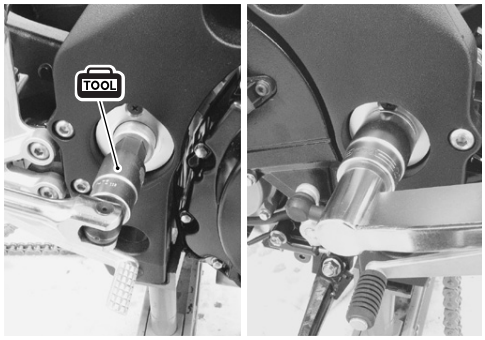

- Tighten the swingarm pivot lock-nut to the specified torque with the special tool.

TOOL 09940-14940: Swingarm pivot thrust adjuster socket wrench

Swingarm pivot lock-nut: 90 N·m (9.0 kgf-m, 65.0 lb-ft)

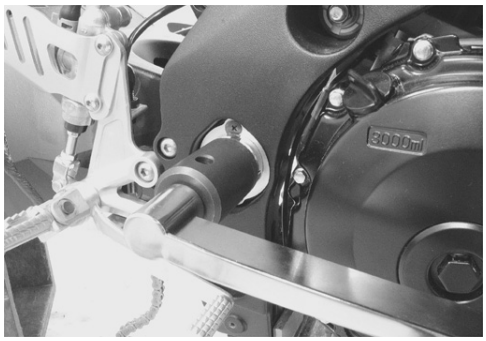

CUSHION LEVER, CUSHION ROD AND REAR SHOCK ABSORBER

- Install the cushion lever and washers.
- Install the cushion rod and washers.
- Tighten each nut to the specified torque.

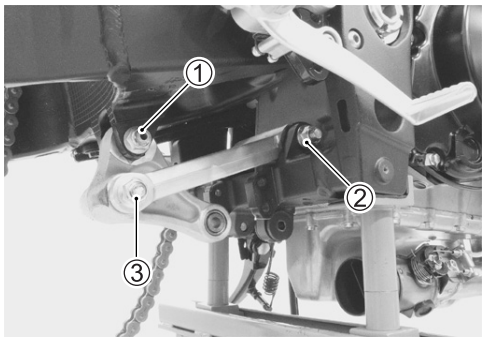

Cushion lever mounting nut ①:
98 N·m (9.8 kgf-m, 71.0 lb-ft)

Cushion rod mounting nut ② (Front side):
98 N·m (9.8 kgf-m, 71.0 lb-ft)
③ (Rear side):
78 N·m (7.8 kgf-m, 56.5 lb-ft)

- Install the rear shock absorber. (☞8-53)
- Route the rear brake hose properly (☞10-22) and install the brake hose guides.
- Install the rear wheel. (☞8-49)
- Connect the drive chain. (☞8-98)

FINAL INSPECTION AND ADJUSTMENT

After installing the rear suspension and wheel, the following adjustments are required before driving.

* Drive chain (☞2-21)
* Tire pressure (☞2-27)

FRONT BRAKE
CONSTRUCTION

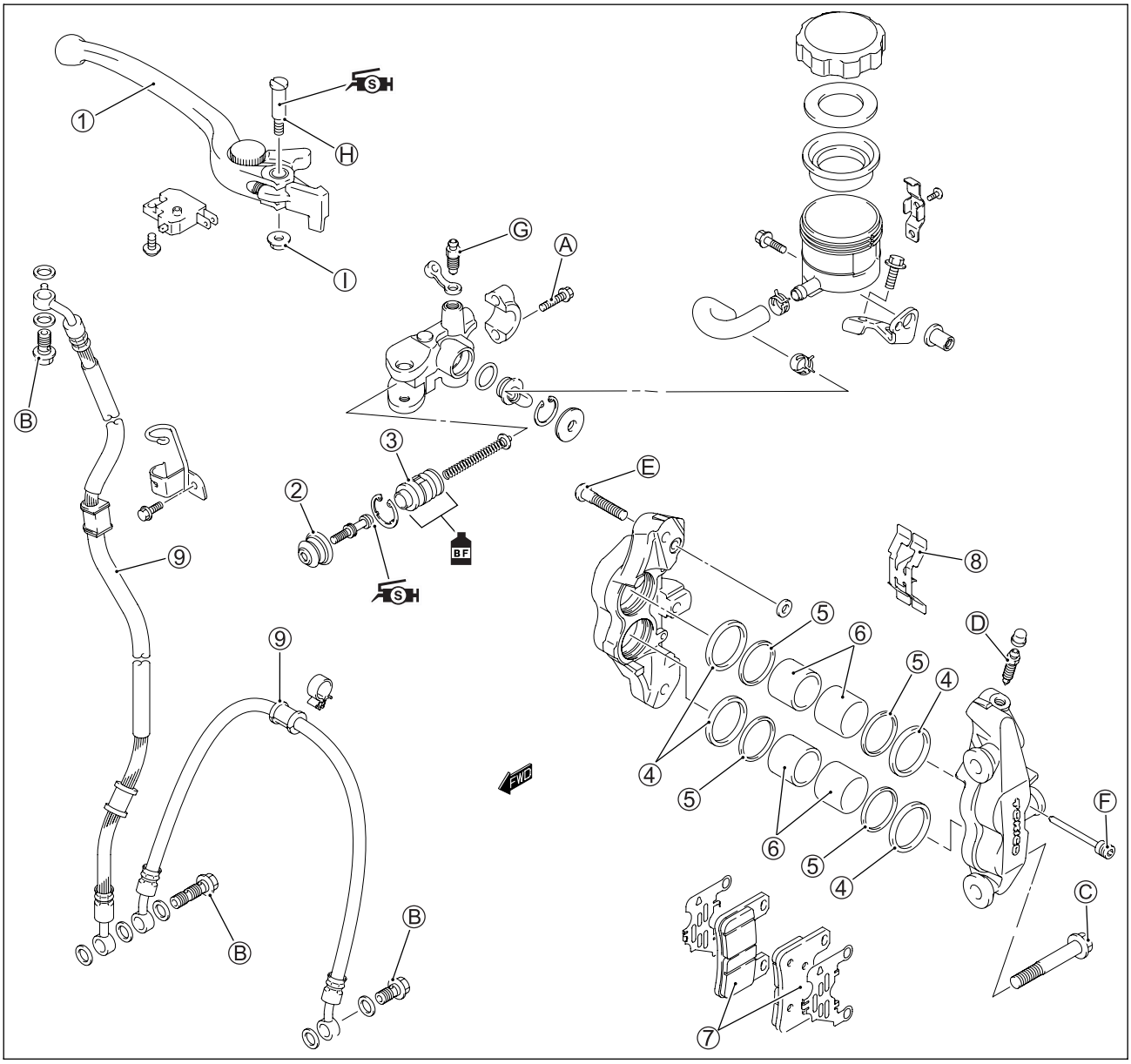

①	Front brake lever	⑨	Front brake hose
②	Dust boot	Ⓐ	Master cylinder mounting bolt
③	Piston set	Ⓑ	Brake hose union bolt
④	Piston seal	Ⓒ	Caliper mounting bolt
⑤	Dust seal	Ⓓ	Caliper air bleeder valve
⑥	Brake caliper piston	Ⓔ	Caliper housing bolt
⑦	Brake pad	Ⓕ	Brake pad mounting pin
⑧	Brake pad spring	Ⓖ	Master cylinder air bleeder valve

ITEM	N·m	kgf-m	lb-ft
Ⓐ	10	1.0	7.0
Ⓑ	23	2.3	16.5
Ⓒ	39	3.9	28.0
Ⓓ	7.5	0.75	5.5
Ⓔ	22	2.2	16.0
Ⓕ	15	1.5	11.0
Ⓖ	6.0	0.6	4.5
Ⓗ	1.0	0.1	0.7
Ⓘ	6.0	0.6	4.5

⚠ WARNING

- **This brake system is filled with an ethylene glycol-based DOT 4 brake fluid. Do not use mix different types of fluid such as silicone-based or petroleum-based.**
- **Do not use any brake fluid taken from old, used or unsealed containers. Never reuse brake fluid left over from the last servicing or stored for long periods.**
- **When storing the brake fluid, seal the container completely and keep away from children.**
- **When replenishing brake fluid, take care not to get dust into fluid.**
- **When washing brake components, use fresh brake fluid. Never use cleaning solvent.**
- **A contaminated brake disc or brake pad reduces braking performance. Discard contaminated pads and clean the disc with high quality brake cleaner or neutral detergent.**

CAUTION

Handle brake fluid with care: The fluid reacts chemically with paint, plastics, rubber materials etc. and will damage then severely.

BRAKE PAD REPLACEMENT

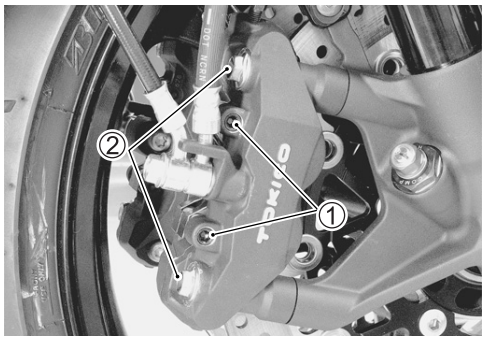

- Loosen the pad mounting pins ①.
- Remove the brake caliper by removing the caliper mounting bolts ②.
- Remove the pad mounting pins ①, brake pads and spring.

CAUTION

- **Do not operate the brake lever with the pads removed.**
- **Replace the brake pads as a set, otherwise braking performance will be adversely affected.**

NOTE:

- *When the brake caliper is removed, care must be used so as not to cause stress to the brake hose. (Hang the brake caliper on the frame with a string, etc.)*
- *When removing the pad spring, push the piston all the way into the brake caliper.*

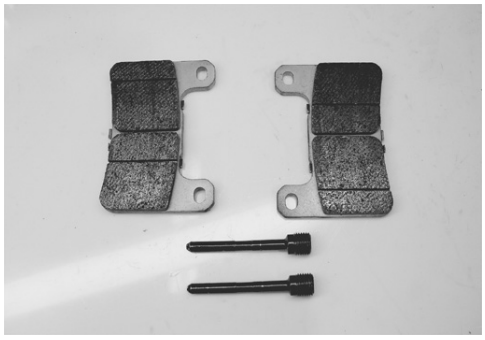

- Inspect the pad mounting pins for bent or damage. If any defects are found, replace the pad mounting pins with the new ones.

- Install the spring to the caliper, bring its wider side of pawl Ⓐ facing top.

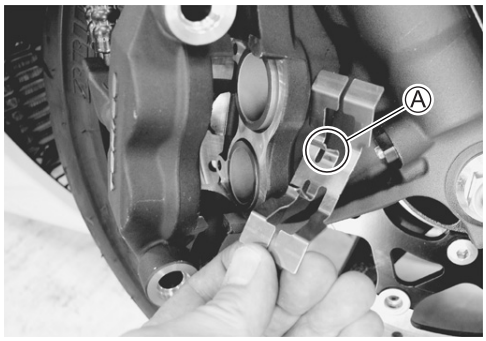

- Install the new brake pads.
- Install the brake caliper.
- Tighten each bolt to the specified torque.

Pad mounting pin ①: 16 N·m (1.6 kgf-m, 11.5 lb-ft)
Front brake caliper mounting bolt ②:
39 N·m (3.9 kgf-m, 28.0 lb-ft)

NOTE:

* *After replacing the brake pads, pump the brake lever a few times to check for proper brake operation and then check the brake fluid level.*

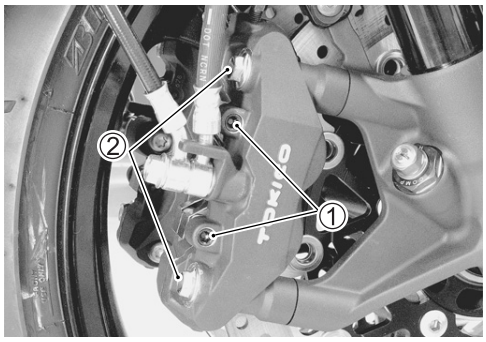

BRAKE FLUID REPLACEMENT

- Place the motorcycle on a level surface and keep the handlebars straight.
- Remove the brake fluid reservoir cap ① and diaphragm.
- Suck up the old brake fluid as much as possible.
- Fill the reservoir with new brake fluid.

- Connect a clear hose to the caliper air bleeder valve and insert the other end of hose into a receptacle.
- Loosen the air bleeder valve and pump the brake lever until old brake fluid flows out of the bleeder system.
- Close the caliper air bleeder valve and disconnect a clear hose. Fill the reservoir with new fluid to the upper mark of the reservoir.

Specification and classification: DOT 4

CAUTION

Bleed air from the brake system. (☞2-26)

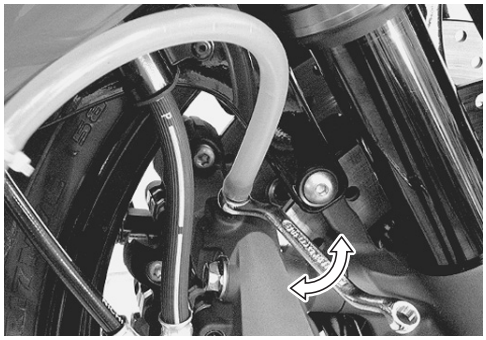

CALIPER REMOVAL

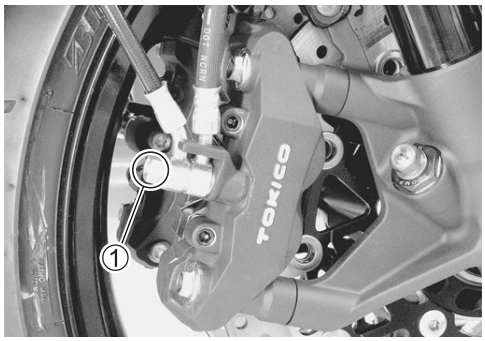

NOTE:

** The left and right front brake calipers are installed symmetrically and therefore the removal procedure for one side is the same as that for the other side.*

** Place a rag underneath the union bolt on the brake caliper to catch any split brake fluid.*

- Remove the brake hose from the caliper by removing the union bolt ① and catch the brake fluid in a suitable receptacle.
- Remove the brake pads and spring. (☞8-66)

CAUTION

Never reuse the brake fluid left over from previous servicing and stored for long periods of time.

⚠ WARNING

Brake fluid, if it leaks, will interfere with safe running and discolor painted surfaces. Check the brake hose and hose joints for cracks and fluid leakage.

CALIPER DISASSEMBLY

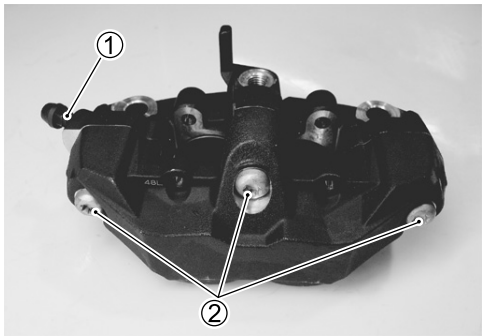

- Remove the caliper air bleeder valve ①.
- Separate the caliper halves by removing the caliper housing bolts ② with the special tools.

TOOL 09930-11920: Torx bit JT40H
09930-11940: Bit holder

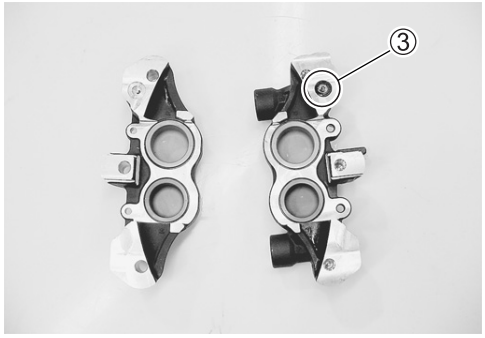

- Remove the O-ring ③.

CAUTION

Replace the O-ring with a new one.

- Place a rag over the pistons to prevent it from popping out and then force out the pistons using compressed air.

CAUTION

Avoid using high pressure air to prevent piston damage.

- Remove the dust seals ④ and piston seals ⑤.

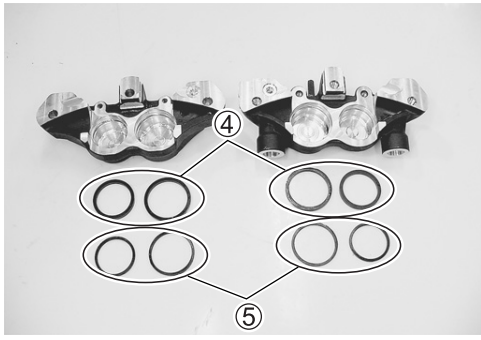

CAUTION

Avoid reusing the dust seals and piston seals to prevent fluid leakage.

CALIPER INSPECTION

BRAKE CALIPER

- Inspect the brake caliper cylinder wall for nicks, scratches or other damage.

BRAKE CALIPER PISTON

- Inspect the brake caliper piston surface for any scratches or other damage.

CALIPER REASSEMBLY

Reassemble the caliper in the reverse order of disassembly. Pay attention to the following points:

- Clean the caliper bores and pistons with specified brake fluid, especially the dust seal grooves and piston seal grooves.

Specification and classification: DOT 4

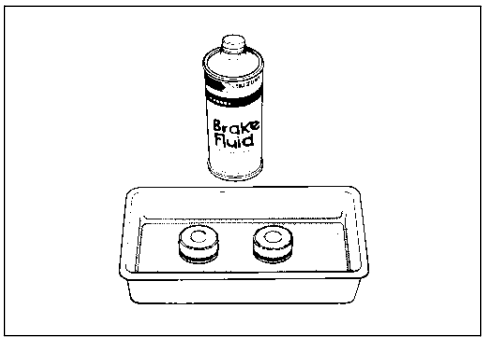

CAUTION

*** Clean the caliper components with fresh brake fluid before reassembly. Never use cleaning solvent or gasoline to clean them.**
*** Do not wipe the brake fluid off after cleaning the components.**
*** When cleaning the components, use the specified brake fluid. Never use different types of fluid or cleaning solvent such as gasoline, kerosine or others.**
*** Replace the piston seals and dust seals with the new ones when reassembly. Apply the brake fluid to both seals when installing them.**

PISTON SEAL

- Install the piston seals as shown in the illustration.

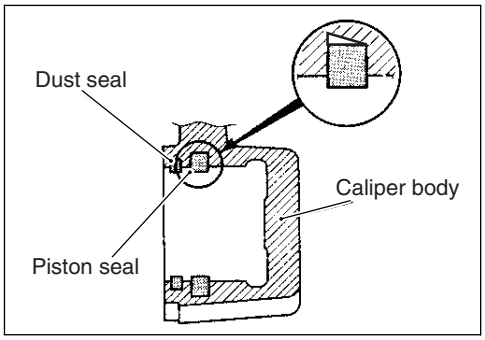

O-RING

- Install the new O-ring ① and reassemble caliper halves.

CAUTION

Replace the O-ring with a new one.

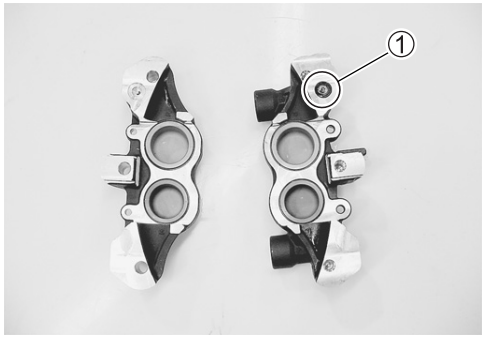

- Temporarily tighten the air bleeder valve ②.
- Tighten each bolt to the specified torque.

Front brake caliper housing bolt ③:
22 N·m (2.2 kgf-m, 16.0 lb-ft)

TOOL 09930-11920: Torx bit JT40H
09930-11940: Bit holder

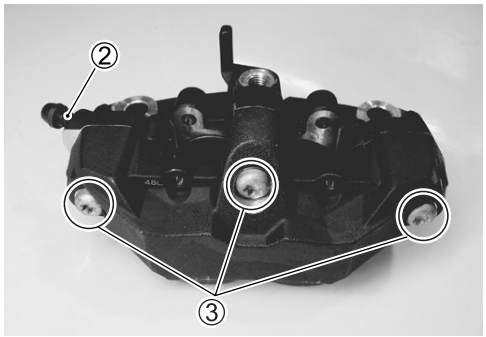

CALIPER INSTALLATION

Install the caliper in the reverse order of removal. Pay attention to the following points:

- Install the spring and brake pads. (☞8-67)
- Install the brake caliper. (☞8-67)
- Tighten each bolt to the specified torque.

Front brake hose union bolt:
23 N·m (2.3 kgf-m, 16.5 lb-ft)

CAUTION

*** The seal washers should be replaced with the new ones to prevent fluid leakage.**
*** Bleed air from the system after reassembling the caliper. (☞2-26)**

BRAKE DISC INSPECTION

- Visually check the brake disc for damage or cracks.
- Measure the thickness with a micrometer.
- Replace the disc if the thickness is less than the service limit or if damage is found.

DATA Front disc thickness:
Service Limit: 5.0 mm (0.20 in)

TOOL 09900-20205: Micrometer (0 – 25 mm)

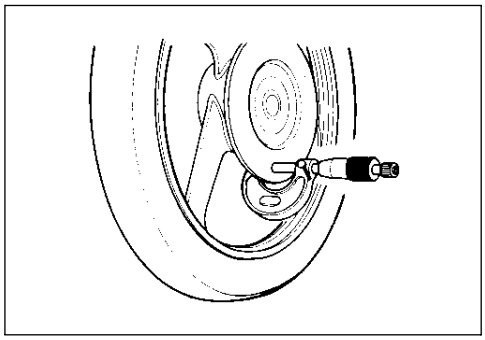

- Remove the brake calipers. (☞8-11)
- Measure the runout with a dial gauge.
- Replace the disc if the runout exceeds the service limit.

DATA Front disc runout:
Service Limit: 0.30 mm (0.012 in)

TOOL 09900-20607: Dial gauge (1/100 mm)
09900-20701: Magnetic stand

*** Brake disc removal (☞8-12)**
*** Brake disc installation (☞8-15)**

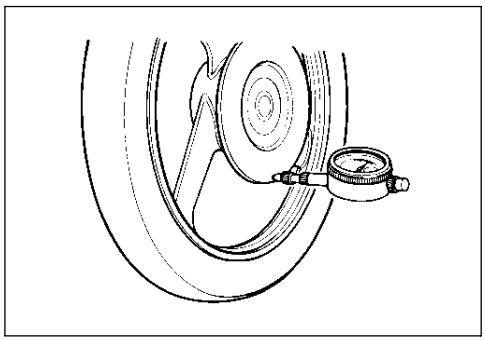

MASTER CYLINDER REMOVAL AND DISASSEMBLY

- Drain the brake fluid. (☞8-67)
- Disconnect the front brake light switch lead wires ①.
- Place a rag underneath the union bolt ② on the master cylinder to catch any split brake fluid. Remove the union bolt and disconnect the brake hose.

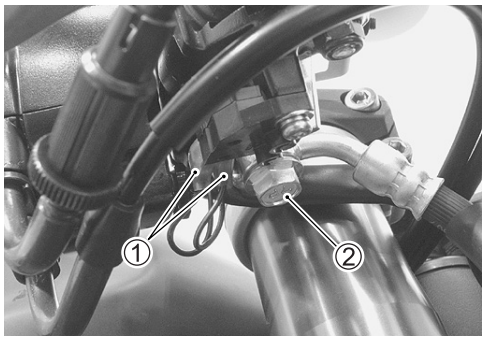

CAUTION

Immediately and completely wipe off any brake fluid contacting any part of the motorcycle. The fluid reacts chemically with paint, plastics and rubber materials, etc. and will damage them severely.

- Remove the master cylinder by removing the master cylinder bolts.

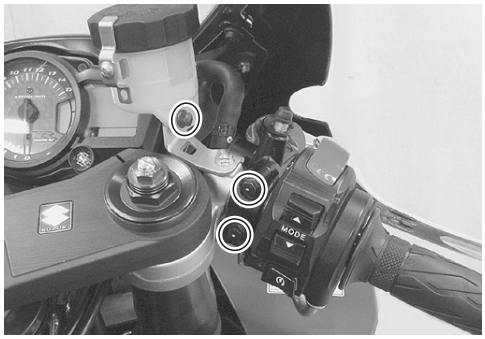

- Remove the reservoir cap ③, insulator ④, diaphragm ⑤ and reservoir tank ⑥.

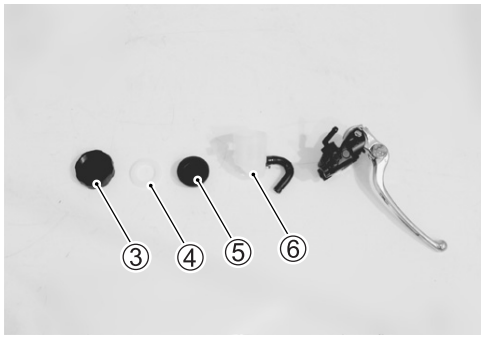

- Remove the brake switch ⑦ and brake lever ⑧.

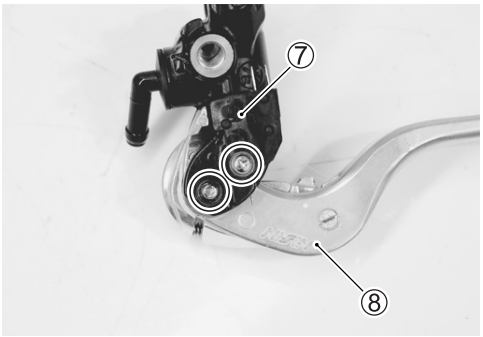

- Remove the dust boot ⑨ push rod ⑩ and snap ring ⑪.

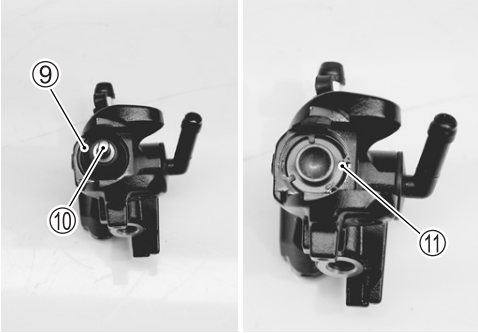

- Remove the following parts.

⑫ Secondary cup
⑬ Piston
⑭ Primary cup
⑮ Return spring
⑯ Return spring guide
⑰ Air bleeder valve

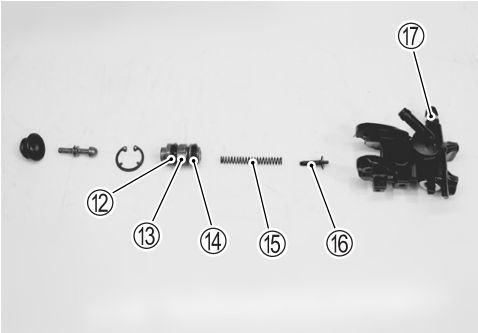

- Remove the dust rubber ⑱ and snap ring ⑲.

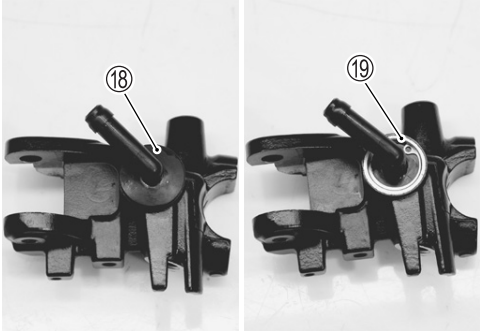

- Remove the connector ⑳ and O-ring ㉑.

MASTER CYLINDER INSPECTION

- Inspect the master cylinder bore for any scratches or other damage.

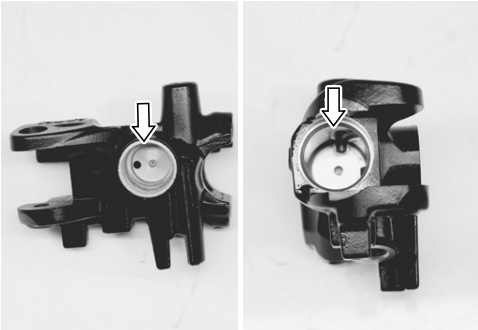

- Inspect the piston surface for any scratches or other damage.
- Inspect the primary cup, secondary cup and dust seal for wear or damage.

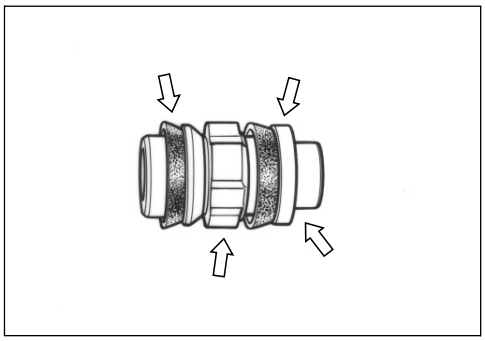

MASTER CYLINDER REASSEMBLY

Reassemble the master cylinder in the reverse order of disassembly. Pay attention to the following points:

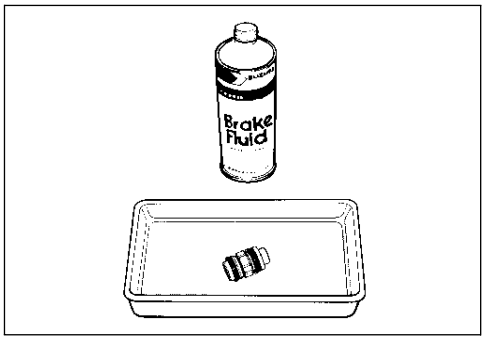

CAUTION

*** Clean the master cylinder components with fresh brake fluid before reassembly. Never use cleaning solvent or gasoline to clean them.**
*** Do not wipe the components with a rag.**
*** Apply brake fluid to the cylinder bore and all the component to be inserted into the bore.**

BF Specification and classification: DOT 4

- Install the O-ring to the brake hose connector.

CAUTION

Use a new O-ring to prevent the fluid leakage.

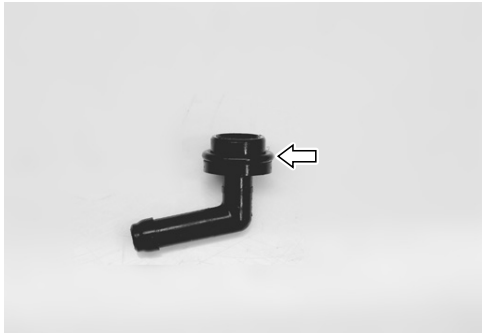

- Apply SUZUKI SILICONE GREASE to the push rod.

SH 99500-25100: SUZUKI SILICONE GREASE or equivalent

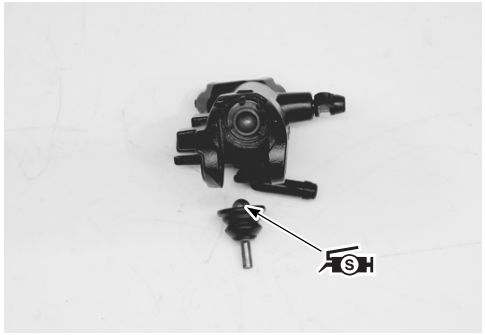

- Apply SUZUKI SILICONE GREASE to the brake lever pivot bolt.

99000-25100: SUZUKI SILICONE GREASE or equivalent

Brake lever pivot bolt: 1.0 N·m (0.1 kgf-m, 0.7 lb-ft)
Brake lever lock-nut: 6.0 N·m (0.6 kgf-m, 4.5 lb-ft)

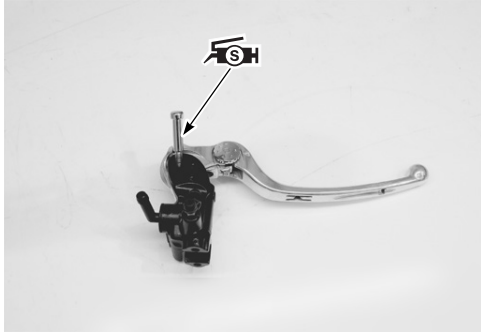

- Align the convex part Ⓐ of brake light switch with the hole Ⓑ of master cylinder when installing the brake light switch.

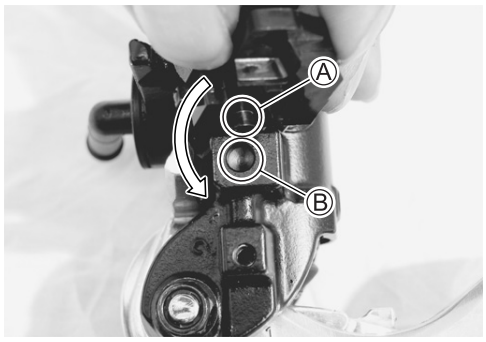

MASTER CYLINDER INSTALLATION

Install the master cylinder in the reverse order of removal. Pay attention to the following points:

- When installing the brake master cylinder ① onto the handlebar ②, align the master cylinder holder's mating surface with punch mark Ⓐ on the handlebar and tighten the upper clamp bolt ③ first as shown.

Front brake master cylinder mounting bolt: 10 N·m (1.0 kgf-m, 7.0 lb-ft)

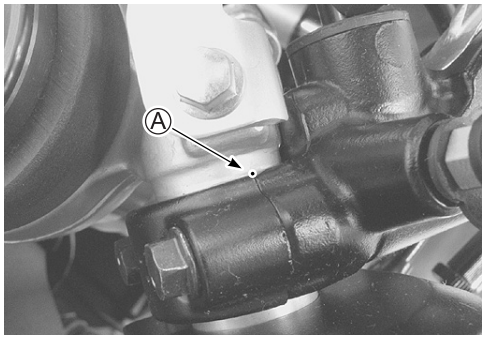

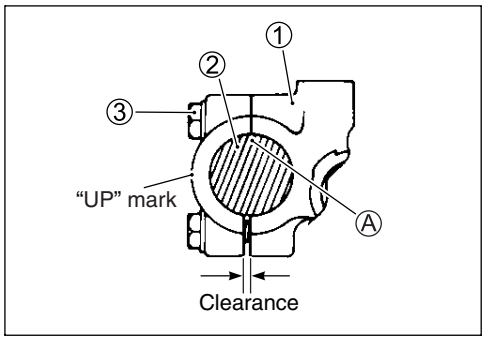

- Tighten the union bolt. (Brake hose routing: ☞10-21)

Brake hose union bolt: 23 N·m (2.3 kgf-m, 16.5 lb-ft)

CAUTION

*** The seal washers should be replaced with the new ones to prevent fluid leakage.**
*** Bleed air from the system after reassembling the master cylinder. (☞2-26)**

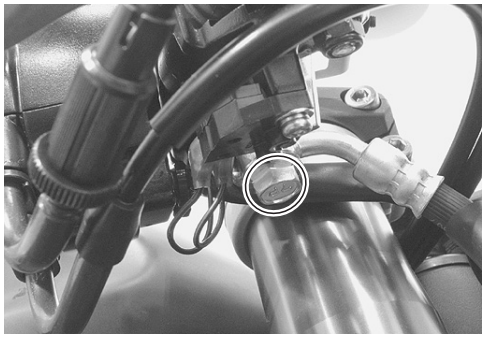

REAR BRAKE
CONSTRUCTION

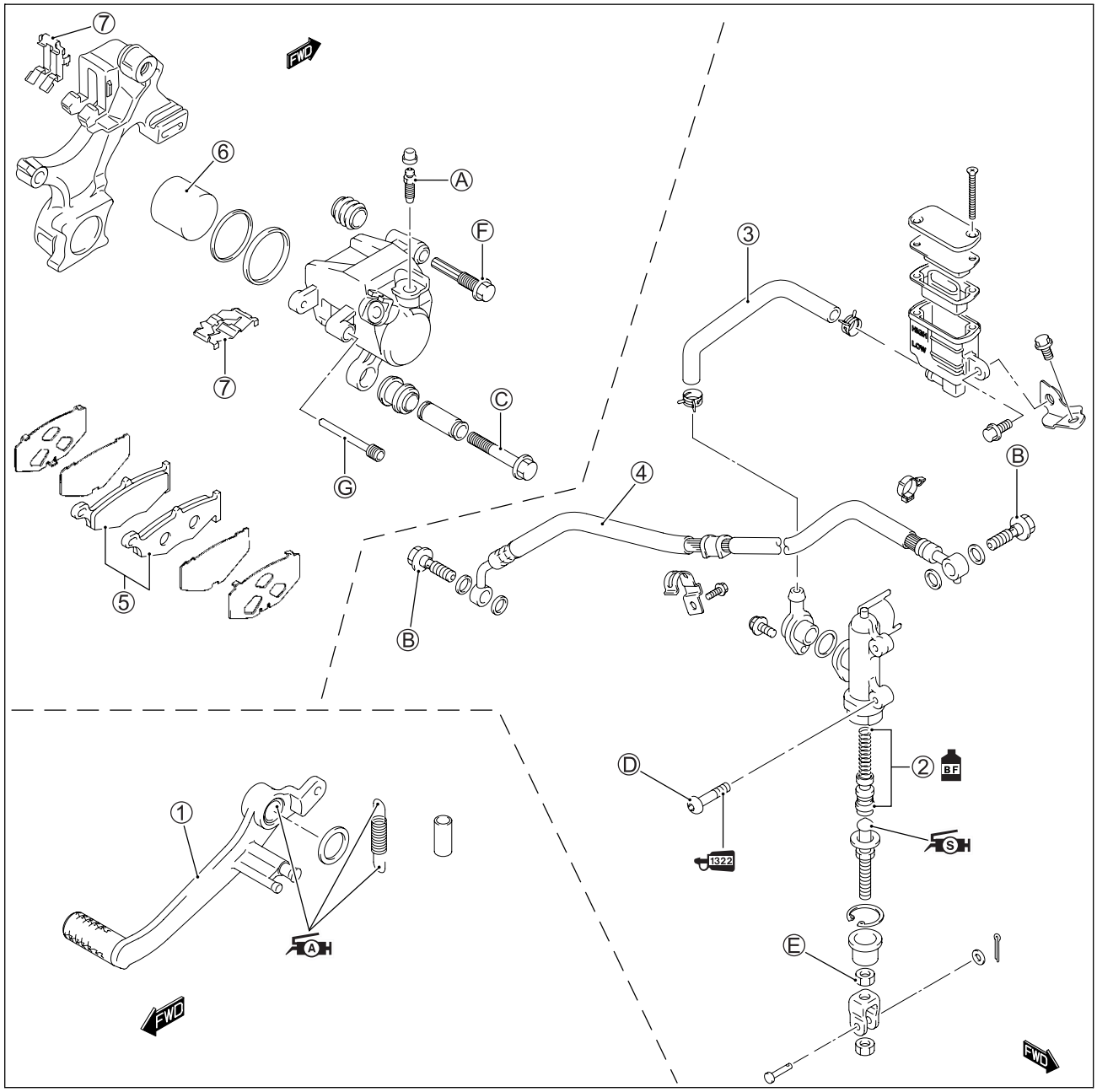

①	Brake pedal	Ⓐ	Caliper air bleeder valve
②	Piston/Cup set	Ⓑ	Brake hose union bolt
③	Reservoir hose	Ⓒ	Brake caliper mounting bolt
④	Brake hose	Ⓓ	Brake master cylinder mounting bolt
⑤	Brake pad	Ⓔ	Brake master cylinder rod lock-nut
⑥	Piston	Ⓕ	Brake caliper sliding pin
⑦	Brake pad spring	Ⓖ	Brake pad mounting pin

ITEM	N·m	kgf-m	lb-ft
Ⓐ	7.5	0.75	5.5
Ⓑ	23	2.3	16.5
Ⓒ	18	1.8	13.0
Ⓓ	10	1.0	7.0
Ⓔ	18	1.8	13.0
Ⓕ	33	3.3	24.0
Ⓖ	16	1.6	11.5

⚠ WARNING

- **This brake system is filled with an ethylene glycol-based DOT 4 brake fluid. Do not use mix different types of fluid such as silicone-based or petroleum-based.**
- **Do not use any brake fluid taken from old, used or unsealed containers. Never reuse brake fluid left over from the last servicing or stored for long periods.**
- **When storing the brake fluid, seal the container completely and keep away from children.**
- **When replenishing brake fluid, take care not to get dust into fluid.**
- **When washing brake components, use fresh brake fluid. Never use cleaning solvent.**
- **A contaminated brake disc or brake pad reduces braking performance. Discard contaminated pads and clean the disc with high quality brake cleaner or neutral detergent.**

CAUTION

Handle brake fluid with care: The fluid reacts chemically with paint, plastics, rubber materials etc. and will damage then severely.

BRAKE PAD REPLACEMENT

- Remove the pad mounting pin ①.
- Remove the caliper mounting bolt ②.

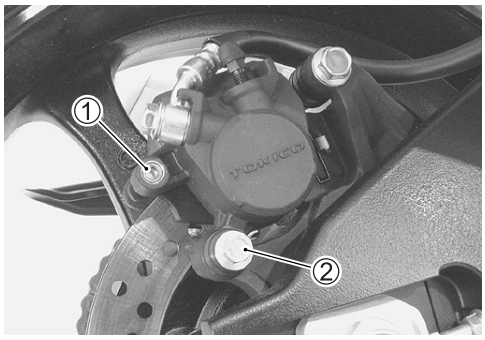

- Remove the brake pads with the rear caliper pivoted up.
- Clean up the caliper especially around the caliper piston.

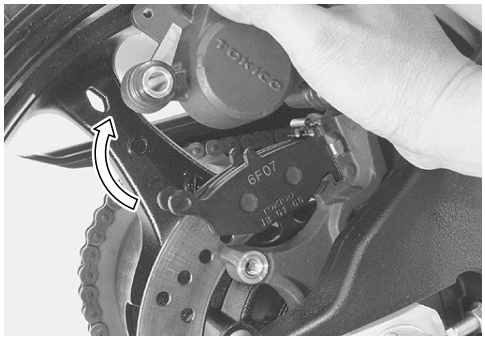

CAUTION

- **Do not operate the brake pedal with the pads removed.**
- **Replace the brake pads as a set, otherwise braking performance will be adversely affected.**

- Install the new brake pads.

Pad mounting pin: 16 N·m (1.6 kgf-m, 11.5 lb-ft)
Brake caliper mounting bolt: 18 N·m (1.8 kgf-m, 13.0 lb-ft)

NOTE:
After replacing the brake pads, pump the brake pedal a few times to set the brake parts correctly and then check the brake fluid level.

BRAKE FLUID REPLACEMENT

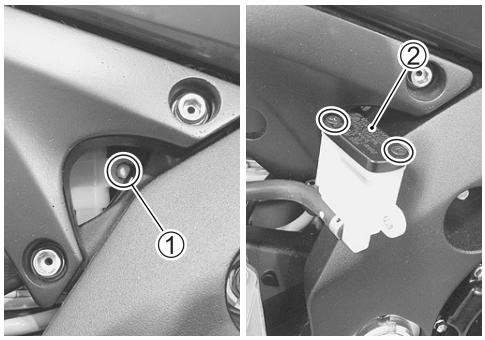

- Remove the brake fluid reservoir mounting bolt ①.
- Place a rag underneath the brake fluid reservoir to catch any split brake fluid. Remove the brake fluid reservoir cap ②.
- Replace the brake fluid in the same manner as the front brake. (☞8-67)

Specification and classification: DOT 4

CAUTION

Bleed air from the brake system. (☞2-26)

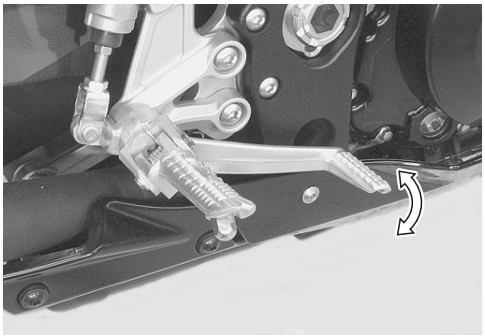

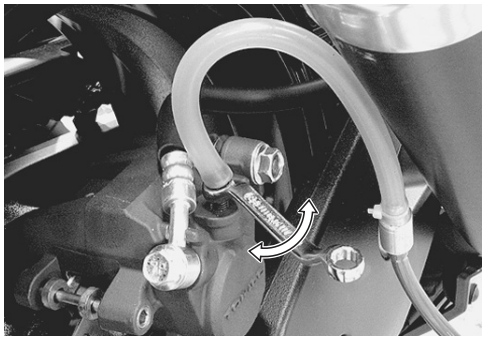

CALIPER REMOVAL AND DISASSEMBLY

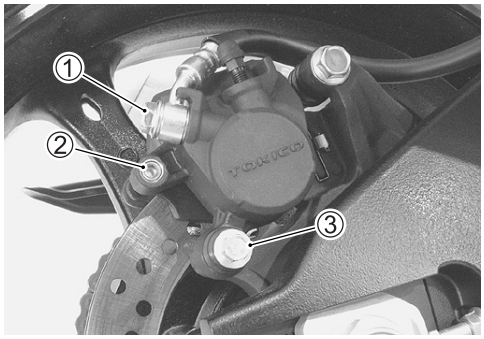

- Drain the brake fluid.
- Remove the brake hose from the caliper by removing the union bolt ① and catch the brake fluid in a suitable receptacle.

NOTE:
Place a rag underneath the union bolt on the brake caliper to catch any split brake fluid.

- Remove the pad mounting pin ②.
- Remove the caliper mounting bolt ③.
- Remove the brake caliper.

CAUTION

Never reuse the brake fluid left over from previous servicing and stored for long periods.

⚠ WARNING

Brake fluid, if it leaks, will interfere with safe running and discolor painted surfaces. Check the brake hose and hose joints for cracks and fluid leakage.

- Remove the brake pad spring.
- Remove the caliper air bleeder valve ④.
- Remove the spacer ⑤ and rubber boot ⑥ from the caliper.

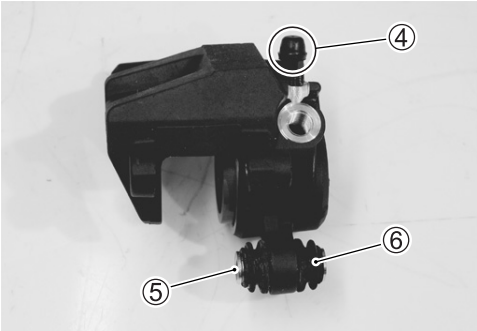

- Place a rag over the piston to prevent it from popping out and then force out the pistons using compressed air.

CAUTION

Avoid using high pressure air to prevent piston damage.

- Remove the dust seal ⑦ and piston seal ⑧.

CAUTION

Avoid reusing the dust seals and piston seals to prevent fluid leakage.

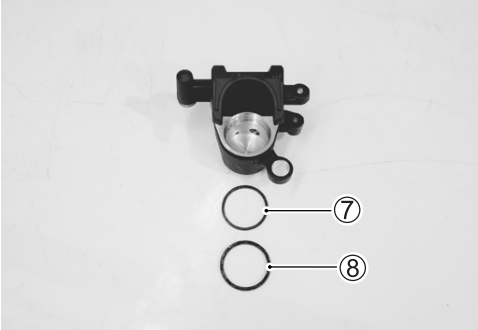

CALIPER INSPECTION

BRAKE CALIPER AND BRAKE CALIPER PISTON

- Inspect the brake caliper cylinder wall for nicks, scratches and other damage. If any damage is found, replace the caliper with a new one.
- Inspect the brake caliper piston surface for any scratches and other damage. If any damage is found, replace the caliper with a new one.

BRAKE PAD SPRING BOOTS AND SPACER

- Inspect the brake pad spring for damage and excessive bend. If any damage is found, replace the brake pad spring with a new one.
- Inspect the boot and spacer for damage and wear. If any damage is found, replace boot and spacer with new ones.

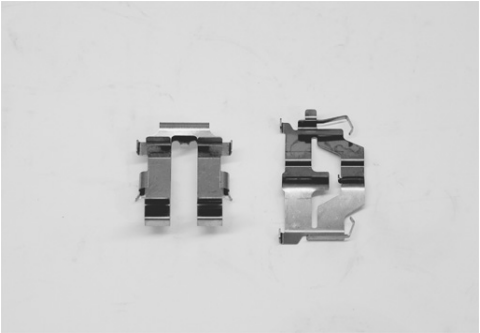

BRAKE DISC INSPECTION

- Inspect the rear brake disc in the same manner as the front brake disc. (☞8-71)

DATA Service Limit

Rear disc thickness: 4.5 mm (0.18 in)
Rear disc runout: 0.30 mm (0.012 in)

CALIPER REASSEMBLY

Reassemble the caliper in the reverse order of disassembly. Pay attention to the following points:

- Clean the caliper bores and pistons with specified brake fluid, especially the dust seal grooves and piston seal grooves.

Specification and classification: DOT 4

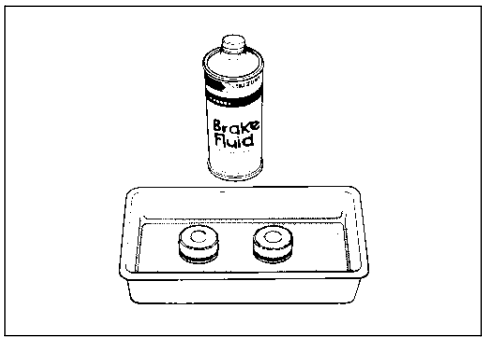

CAUTION

- **Clean the caliper components with fresh brake fluid before reassembly. Never use cleaning solvent or gasoline to clean them.**
- **Do not wipe the brake fluid off after cleaning the components.**
- **When cleaning the components, use the specified brake fluid. Never use different types of fluid or cleaning solvent such as gasoline, kerosine the others.**
- **Replace the piston seals and dust seals with new ones when reassembly. Apply the brake fluid to both seals when installing them.**

PISTON SEAL

- Install the piston seals as shown in the illustration.

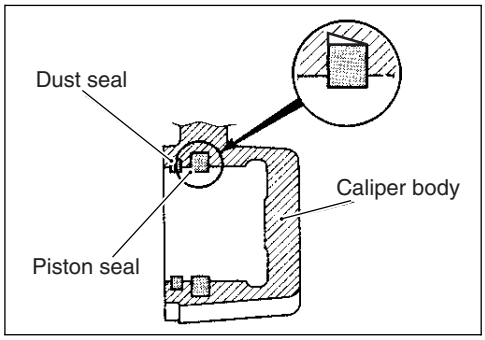

SLIDING PIN

- Install the rubber boot ①.
- Apply SUZUKI SILICONE GREASE to the inside of the boot.

99000-25100: SUZUKI SILICONE GREASE or equivalent

- Install the spacer ②.

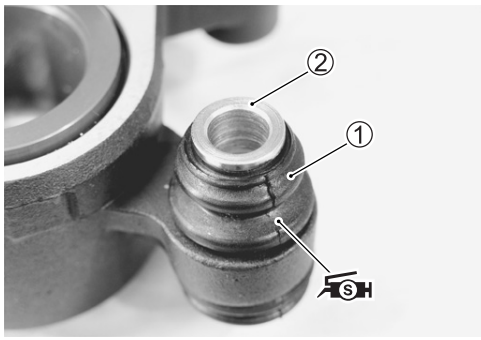

- Install the caliper air bleeder valve.
- Install the brake pad spring.

CALIPER INSTALLATION

Install the caliper in the reverse order of removal. Pay attention to the following points:

- Tighten each bolt to the specified torque.

Brake hose union bolt ①: 23 N·m (2.3 kgf-m, 16.5 lb-ft)
Brake caliper mounting bolt ②: 18 N·m (1.8 kgf-m, 13.0 lb-ft)
Brake caliper sliding pin ③: 33 N·m (3.3 kgf-m, 24.0 lb-ft)

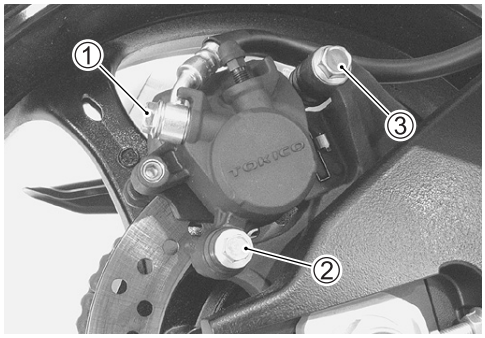

- Adjust the chain slack. (☞2-22)

CAUTION

Bleed air from the system after reassembling the caliper. (☞2-26)

MASTER CYLINDER REMOVAL

- Remove the brake fluid reservoir mounting bolt ①.
- Place a rag underneath the brake fluid reservoir to catch any split brake fluid. Remove the brake fluid reservoir cap ②.
- Drain the brake fluid.

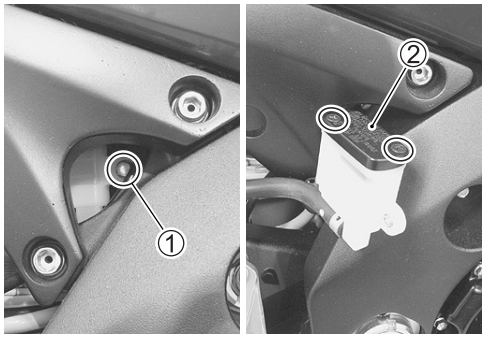

- Place a rag underneath the union bolt on the master cylinder to catch spilled drops of brake fluid. Remove the union bolt ③ and disconnect the brake hose.
- Loosen the lock-nut ④.
- Remove the mounting bolts ⑤.

CAUTION

Immediately and completely wipe off any brake fluid contacting any parts of the motorcycle. The fluid reacts chemically with paint, plastic and rubber materials, etc. and will damage them severely.

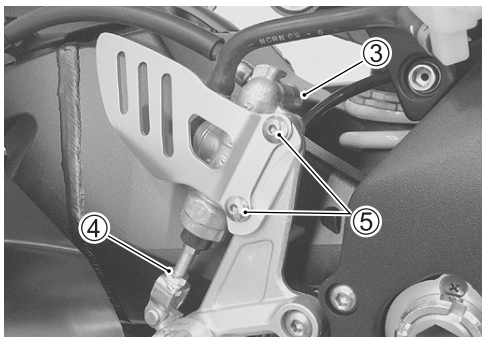

- Disconnect the reservoir hose.
- Remove the master cylinder by turning the master cylinder rod ⑥.

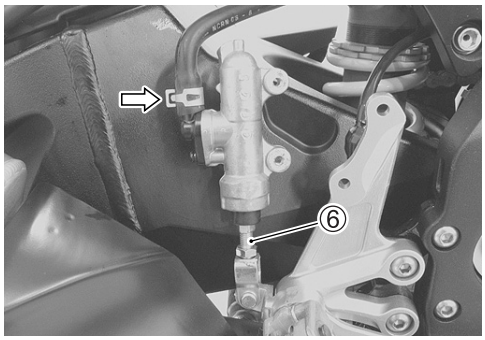

MASTER CYLINDER DISASSEMBLY

- Remove the reservoir cap, insulator ①, diaphragm ② and reservoir tank ③.

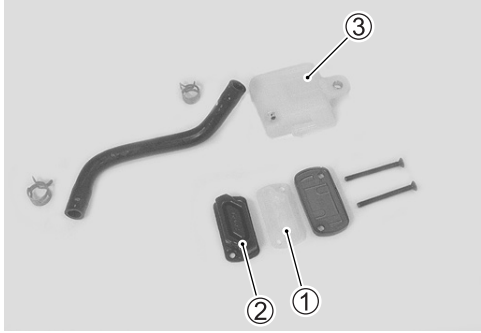

- Remove the connector ④ by removing the screw.
- Remove the O-ring ⑤.

CAUTION

Replace the O-ring with a new one.

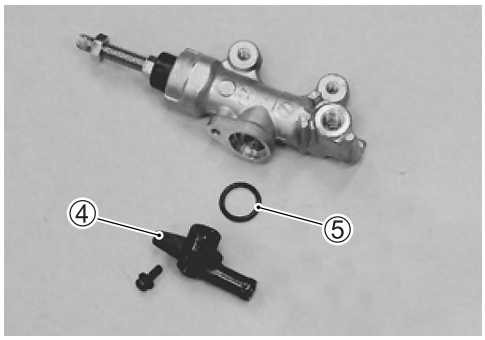

- Pull out the dust boot ⑥, then remove the snap ring ⑦.

TOOL 09900-06108: Snap ring pliers

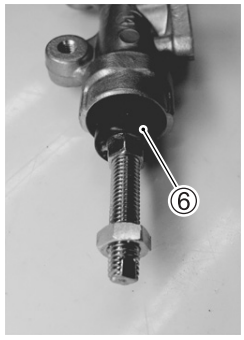

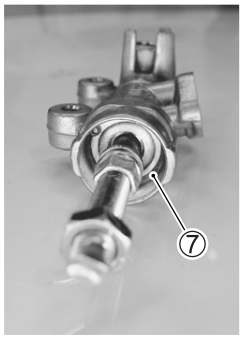

- Remove the push rod ⑧, piston/primary cup ⑨ and spring ⑩.

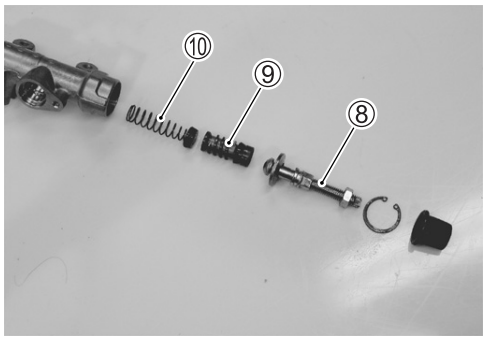

MASTER CYLINDER INSPECTION

CYLINDER, PISTON AND CUP SET

- Inspect the cylinder bore wall for any scratches or other damage.
- Inspect the cup set and each rubber part for damage.

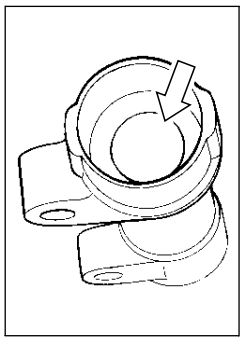

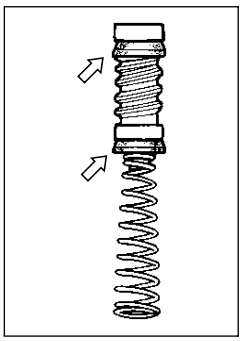

MASTER CYLINDER REASSEMBLY

Reassemble the master cylinder in the reverse order of disassembly. Pay attention to the following points:

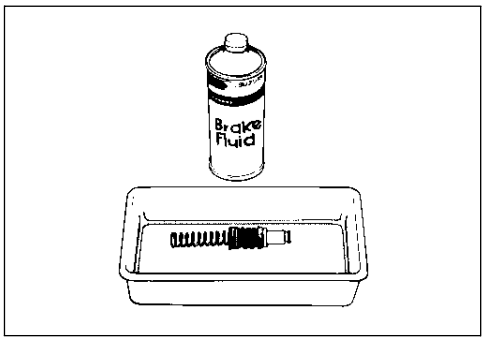

CAUTION

- **Clean the master cylinder components with fresh brake fluid before reassembly. Never use cleaning solvent or gasoline to clean them.**
- **Do not wipe the components with a rag.**
- **Apply brake fluid to the cylinder bore and all the component to be inserted into the bore.**

Specification and classification: DOT 4

- Apply SUZUKI SILICONE GREASE to the push rod end.

99000-25100: SUZUKI SILICONE GREASE or equivalent

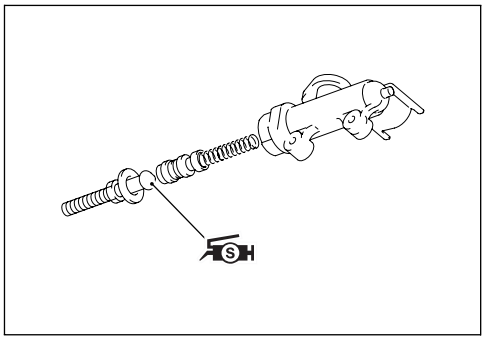

MASTER CYLINDER INSTALLATION

Install the master cylinder in the reverse order of removal. Pay attention to the following points:

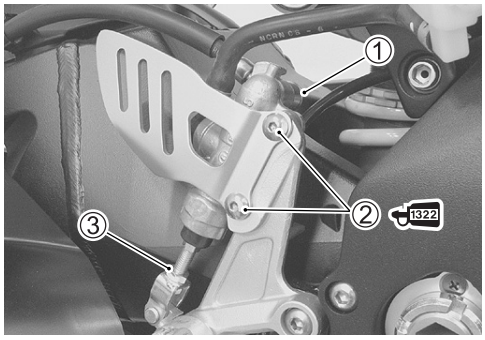

- Apply thread lock to the master cylinder mounting bolts.

99000-32110: THREAD LOCK SUPER "1322" or equivalent

- Tighten each bolt to the specified torque.
  (Brake hose routing: ☞10-22)

Brake hose union bolt ①: 23 N·m (2.3 kgf-m, 16.5 lb-ft)
Master cylinder mounting bolt ②: 10 N·m (1.0 kgf-m, 7.0 lb-ft)
Master cylinder rod lock-nut ③: 18 N·m (1.8 kgf-m, 13.0 lb-ft)

CAUTION

- **The seal washers should be replaced with the new ones to prevent fluid leakage.**
- **Bleed air from the system after reassembling the master cylinder. (☞2-26)**

- Adjust the brake pedal height. (☞2-25)

CLUTCH RELEASE CYLINDER AND MASTER CYLINDER

CONSTRUCTION

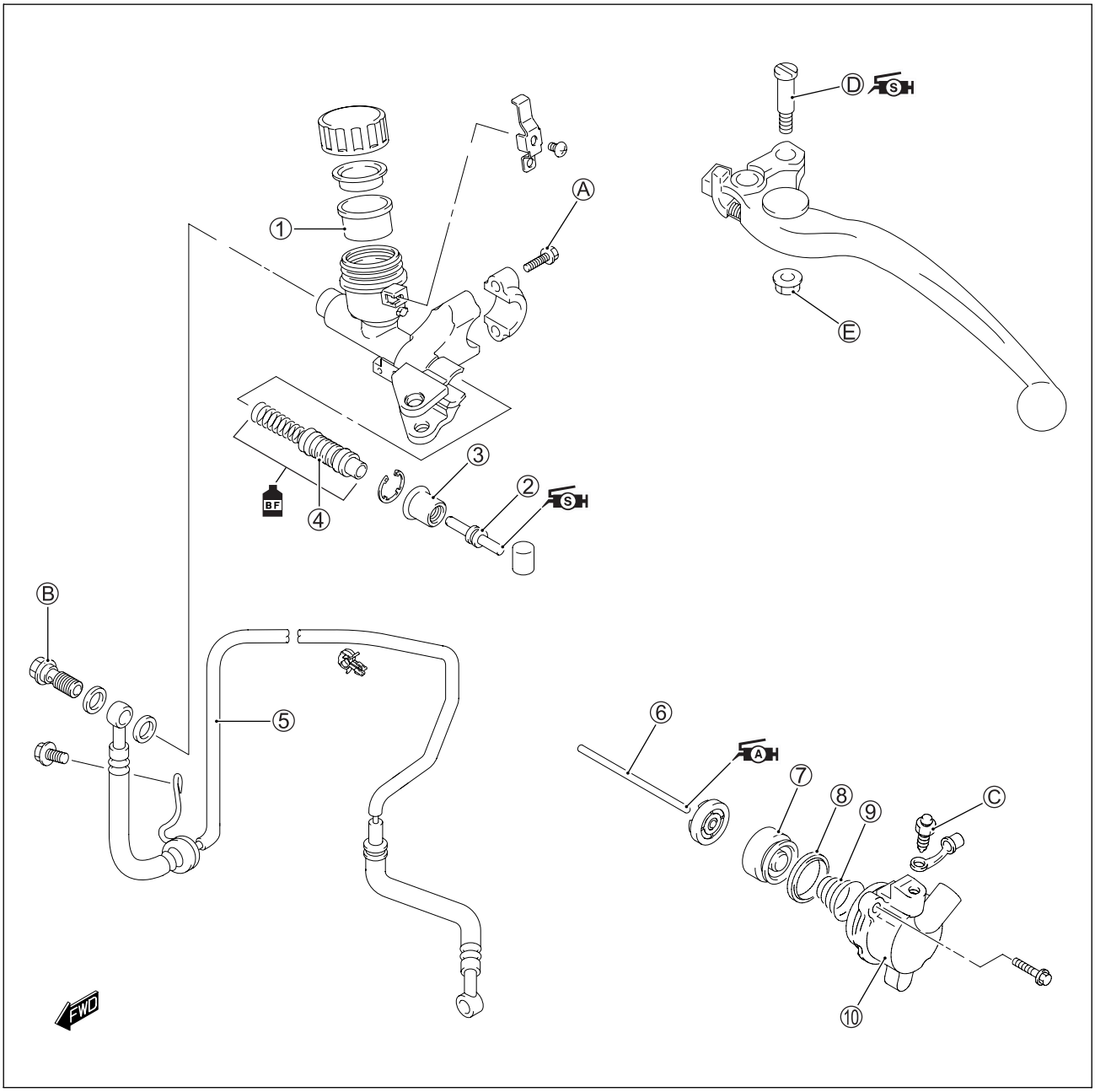

①	Diaphragm	⑨	Spring
②	Push rod	⑩	Clutch release cylinder
③	Dust boot	Ⓐ	Clutch master cylinder mounting bolt
④	Piston/cup set	Ⓑ	Clutch hose union bolt
⑤	Clutch hose	Ⓒ	Air bleeder valve
⑥	Clutch push rod	Ⓓ	Clutch lever bolt
⑦	Piston	Ⓔ	Clutch lever nut
⑧	Piston cup		

ITEM	N·m	kgf-m	lb-ft
Ⓐ	10	1.0	7.0
Ⓑ	23	2.3	16.5
Ⓒ	6.0	0.6	4.5
Ⓓ	1.0	0.1	0.7
Ⓔ	6.0	0.6	4.5

⚠ WARNING

* **This clutch system is filled with an ethylene glycol-based DOT 4 brake fluid. Do not use or mix different types of fluid such as silicone-based or petroleum-based.**
* **Do not use any brake fluid taken from old, used or unsealed containers. Never reuse brake fluid left over from the last servicing or stored for long periods.**
* **When storing the brake fluid, seal the container completely and keep away from children.**
* **When replenishing brake fluid, take care not to get dust into fluid.**
* **When washing brake components, use fresh brake fluid. Never use cleaning solvent.**

CAUTION

Handle brake fluid with care: the fluid reacts chemically with paint, plastics, rubber materials etc. and will damage them severely.

CLUTCH FLUID REPLACEMENT

- Place the motorcycle on a level surface and keep the handlebars straight.
- Remove the clutch master cylinder reservoir cap and diaphragm.
- Suck up the old clutch fluid as much as possible from the reservoir.
- Fill the reservoir with new clutch fluid.

BF Specification and classification: DOT 4

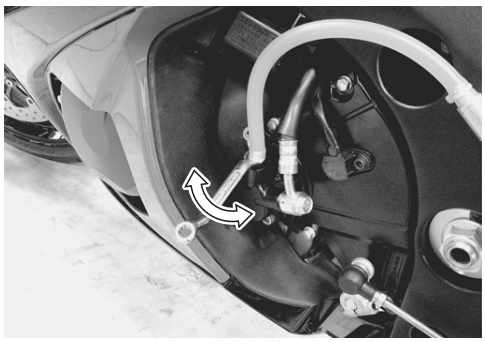

- Connect a clear hose to the clutch release cylinder air bleeder valve and insert the other end of hose into a receptacle.
- Loosen the air bleeder valve and pump the clutch lever until old clutch fluid flows out of the bleeder system.
- Close the clutch release cylinder air bleeder valve, and disconnect a clear hose. Fill the reservoir with fresh brake fluid to the upper level.

CAUTION

Bleed air in the clutch fluid system. (☞2-26)

Air bleeder valve: 6.0 N·m (0.6 kgf-m, 4.5 lb-ft)

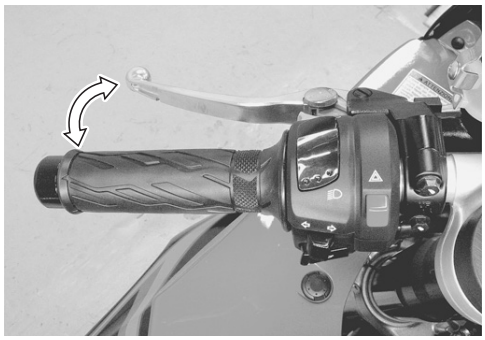

CLUTCH RELEASE CYLINDER REMOVAL AND DISASSEMBLY

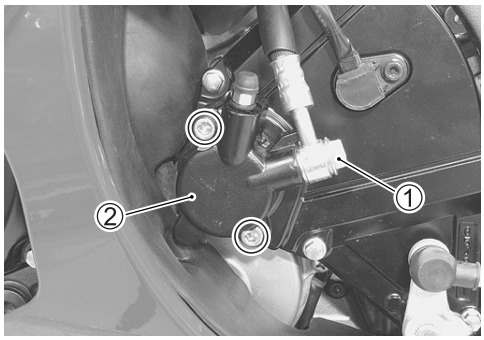

- Drain the clutch fluid. (☞8-86)
- Disconnect the clutch hose by removing the union bolt ①.

NOTE:
Place a rag underneath the union bolt on the release cylinder to catch any spilled brake fluid.

- Remove the clutch release cylinder ②.

CAUTION

Do not reuse the brake fluid left over from previous servicing and stored for long periods of time.

⚠ WARNING

Brake fluid, if it leaks, will interfere with safe running and discolor painted surfaces. Check the brake hose and hose joints for cracks and fluid leakage.

- Place a rag over the piston to prevent it from popping out.
- Force out the piston by using compressed air.

CAUTION

Do not use high pressure air to prevent piston damage.

CLUTCH RELEASE CYLINDER INSPECTION

Inspect the clutch release cylinder bore wall for nicks, scratches or other damage. Inspect the oil seal for damage and wear. Inspect the piston surface for any scratches or other damage.

CLUTCH RELEASE CYLINDER REASSEMBLY AND REMOUNTING

Reassemble the clutch release cylinder in the reverse order of disassembly and by taking the following steps:

CAUTION

- **Wash the clutch cylinder components with fresh brake fluid before reassembly. Never use cleaning solvent or gasoline to wash them.**
- **Do not wipe the components with a rag.**
- **Apply brake fluid to the cylinder bore and piston to be inserted into the bore.**

Specification and classification: DOT 4

① Piston
② Piston cup
③ Spring
④ Air bleeder valve
⑤ Bleeder cap
⑥ Clutch release cylinder body

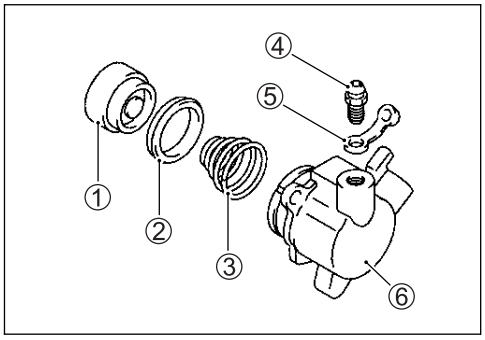

- Apply grease to the clutch push rod end.

99000-25010: SUZUKI SUPER GREASE "A" or equivalent

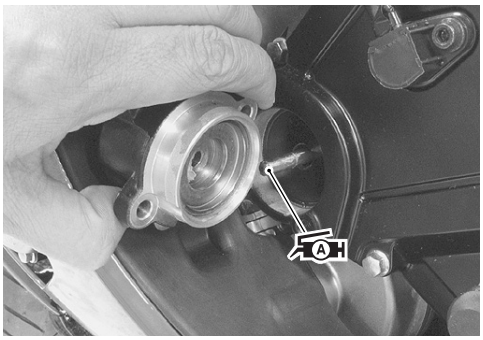

- Remove the clutch release cylinder.
- Tighten each bolt to the specified torque.

Clutch hose union bolt ⑧: 23 N·m (2.3 kgf-m, 16.5 lb-ft)
Air bleeder valve ⑨: 6.0 N·m (0.6 kgf-m, 4.5 lb-ft)

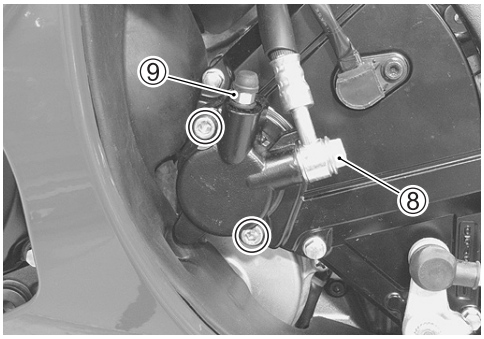

CAUTION

- **The seal washers should be replaced with the new ones to prevent fluid leakage.**
- **Bleed air from the system after reassembling the release cylinder. (☞2-26)**

CLUTCH MASTER CYLINDER REMOVAL AND DISASSEMBLY

- Drain clutch fluid. (☞8-86)
- Disconnect the clutch lever position switch lead wires.
- Place a rag underneath the union bolt on the master cylinder to catch spilled drops of brake fluid. Remove the union bolt and disconnect the clutch hose from the master cylinder.

- Remove the clutch master cylinder.

CAUTION

Completely wipe off any brake fluid adhering to any parts of motorcycle. The fluid reacts chemically with paint, plastics, rubber materials, etc. and will damage them severely.

- Remove the reservoir cap ①, insulator ② and diaphragm ③.

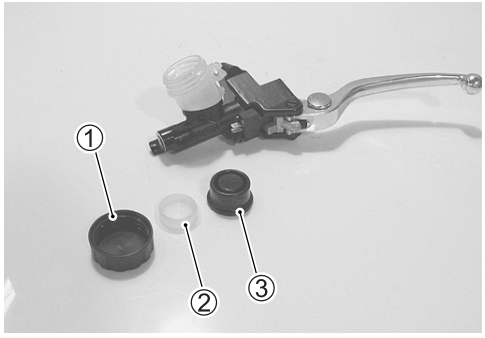

- Remove the clutch lever ④ and clutch lever position switch ⑤.

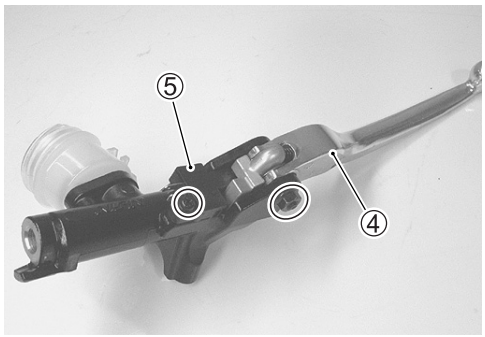

- Remove the reservoir tank ⑥.
- Remove the O-rings ⑦.

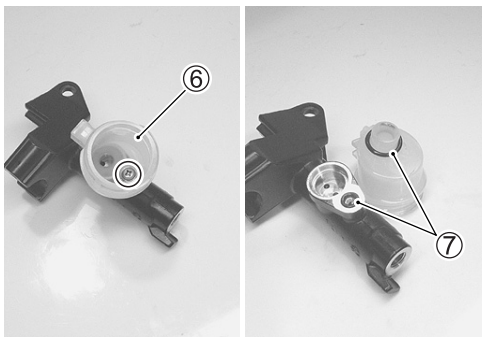

- Remove the dust boot ⑧ and push rod ⑨.
- Remove the snap ring ⑩.

TOOL 09900-06108: Snap ring pliers

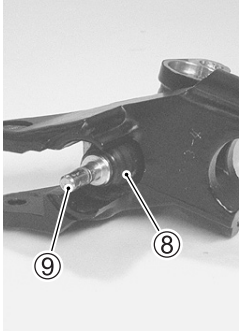

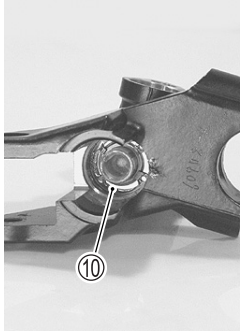

- Remove the piston/cup set.
  ⑪ Secondary cup
  ⑫ Piston
  ⑬ Primary cup
  ⑭ Spring

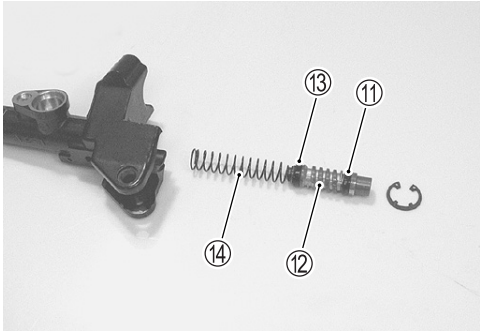

CLUTCH MASTER CYLINDER INSPECTION

- Inspect the piston surface for any scratches or other damage.
- Inspect the primary cup, secondary cup and dust boot for wear or damage.

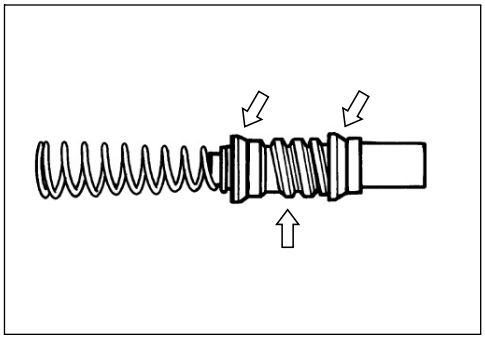

- Inspect the master cylinder bore for any scratches or other damage.

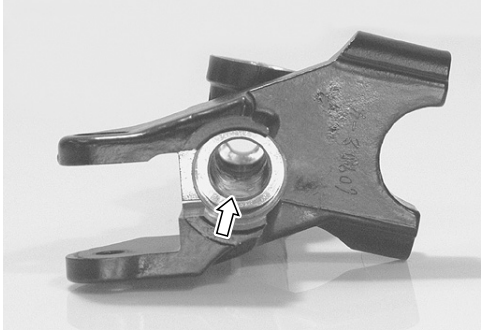

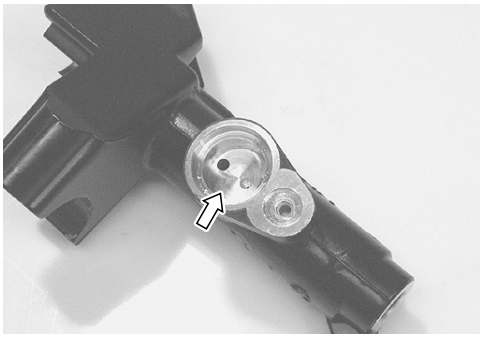

CLUTCH MASTER CYLINDER REASSEMBLY AND REMOUNTING

Reassemble the master cylinder in the reverse order of removal and disassembly. Pay attention to the following points:

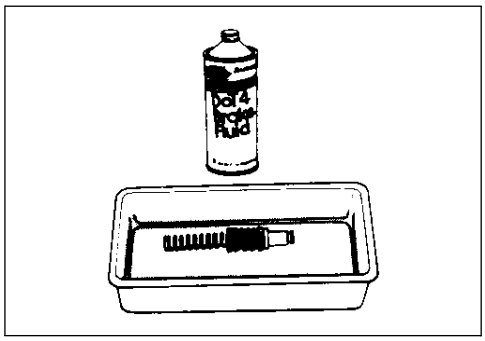

CAUTION

- **Wash the master cylinder components with fresh brake fluid before reassembly. Never use cleaning solvent or gasoline to wash them.**
- **Do not wipe the components with a rag.**
- **Apply brake fluid to the cylinder bore and all the component to be inserted into the bore.**

Specification and classification: DOT 4

- Apply brake fluid to the piston/cup set and install them to the clutch master cylinder.
  ① Spring
  ② Primary cup
  ③ Piston
  ④ Secondary cup
  ⑤ Snap ring

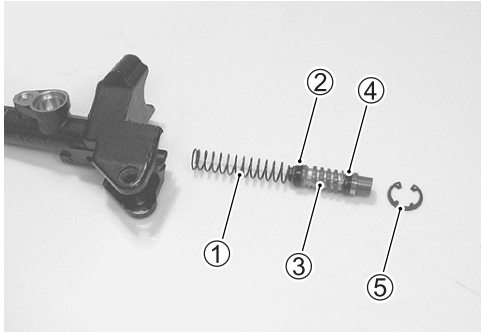

- Install O-rings to the master cylinder and reservoir tank ⑥.
- Install the reservoir tank ⑥.

CAUTION

Use new O-rings to prevent fluid leakage.

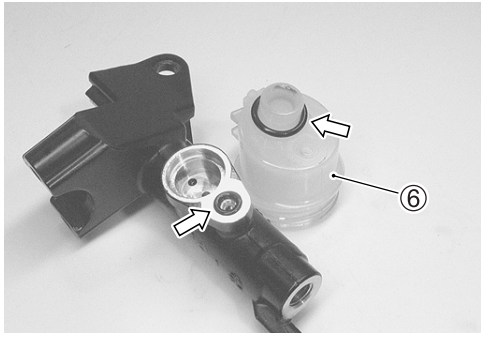

- Apply SUZUKI SILICONE GREASE to the push rod.
- Install the push rod and dust boot.

99500-25100: SUZUKI SILICONE GREASE or equivalent

- Apply SUZUKI SILICONE GREASE to the bushing and clutch lever pivot bolt.

99000-25100: SUZUKI SILICONE GREASE or equivalent

Clutch lever pivot bolt: 1.0 N·m (0.1 kgf-m, 0.7 lb-ft)
Clutch lever lock-nut: 6.0 N·m (0.6 kgf-m, 4.5 lb-ft)

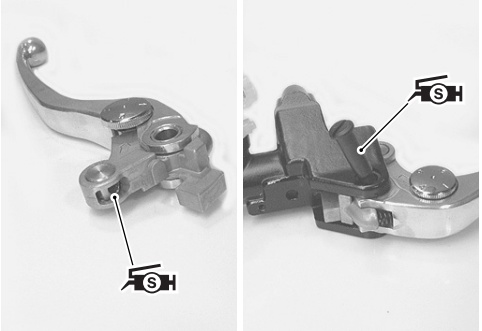

- Align the convex part Ⓐ of clutch switch with the hole Ⓑ of master cylinder when installing the brake light switch.

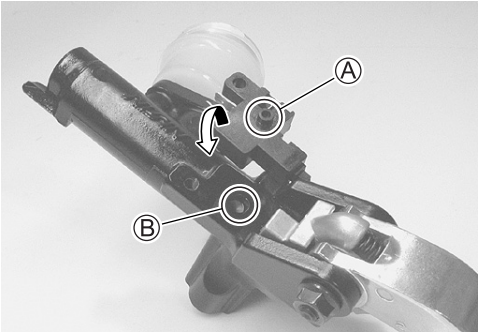

- When remounting the clutch master cylinder onto the handlebar, align the master cylinder holder's mating surface with punch mark Ⓒ on the handlebar and tighten the upper clamp bolt ⑦ first.

Clutch master cylinder mounting bolt: 10 N·m (1.0 kgf-m, 7.0 lb-ft)

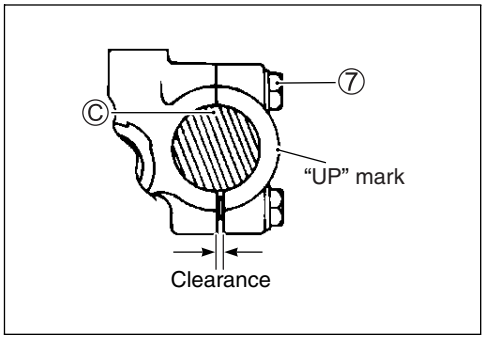

- Tighten the clutch hose union bolt to the specified torque. (Clutch hose routing: ☞10-23)

Clutch hose union bolt: 23 N·m (2.3 kgf-m, 16.5 lb-ft)

- Connect the clutch lever position switch lead wires.

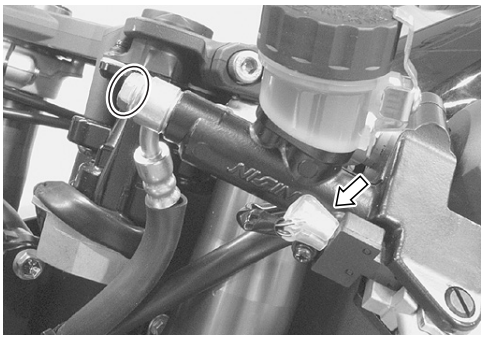

CAUTION

*** The seal washers should be replaced with new ones to prevent fluid leakage.**
*** Bleed air from the system after reassembling the master cylinder. (☞2-17)**

TIRE AND WHEEL

TIRE REMOVAL

The most critical factor of tubeless tire is the seal between the wheel rim and the tire bead. For this reason, it is recommended to use a tire changer that can satisfy this sealing requirement and can make the operation efficient as well as functional.
For operating procedures, refer to the instructions supplied by the tire changer manufacturer.

NOTE:
When removing the tire in the case of repair or inspection, mark the tire with a chalk to indicate the tire position relative to the valve position.
Even though the tire is refitted to the original position after repairing puncture, the tire may have to be balanced again since such a repair can cause imbalance.

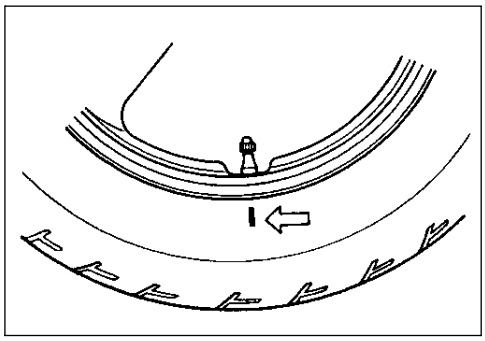

INSPECTION

WHEEL

Wipe the wheel clean and check for the following:
- Distortion and crack
- Any flaws and scratches at the bead seating area.
- Wheel rim runout (☞8-12)

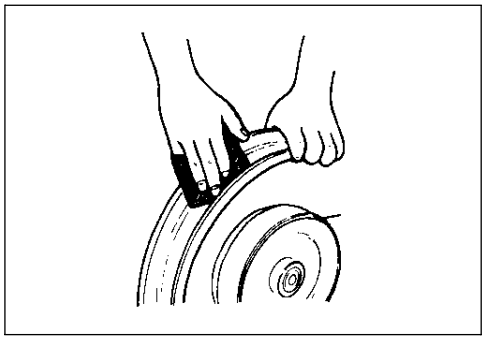

TIRE

Tire must be checked for the following points:
- Nick and rupture on side wall
- Tire tread depth (☞2-27)
- Tread separation
- Abnormal, uneven wear on tread
- Surface damage on bead
- Localized tread wear due to skidding (Flat spot)
- Abnormal condition of inner liner

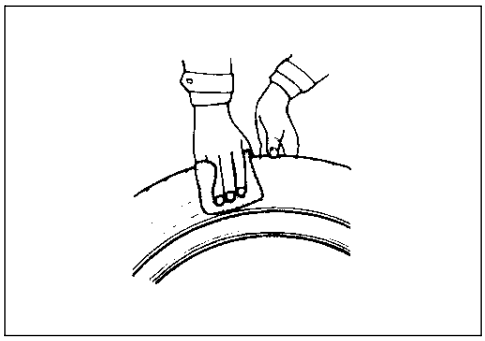

VALVE INSPECTION

- Inspect the valve after the tire is removed from the rim.
- Replace the valve with a new one if the seal Ⓐ rubber is peeling or has damage.

NOTE:
If the external appearance of the valve shows no abnormal condition, removing of the valve is not necessary.
If the seal has abnormal deformation, replace the valve with a new one.

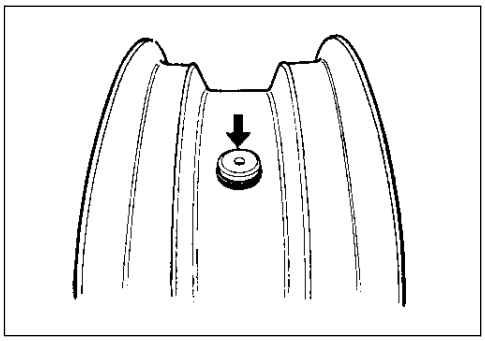

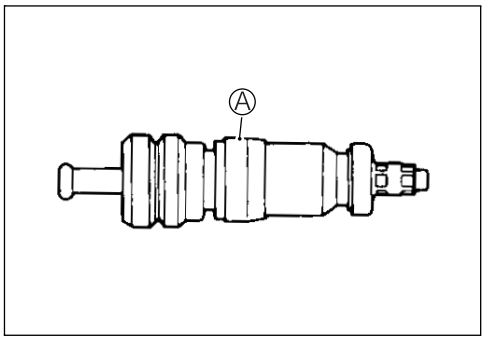

- Any dust or rust around the valve hole Ⓑ must be cleaned off.
- Then install the valve Ⓒ in the rim.

NOTE:
To properly install the valve into the valve hole, apply a special tire lubricant or neutral soapy liquid to the valve.

CAUTION

Be careful not to damage the lip Ⓒ of valve.

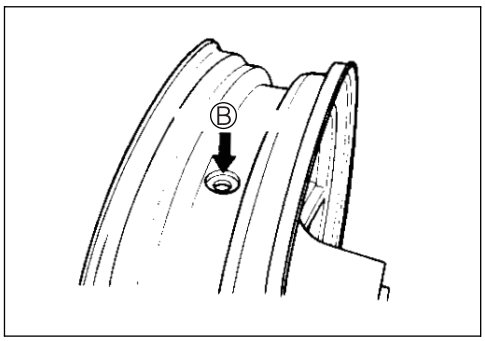

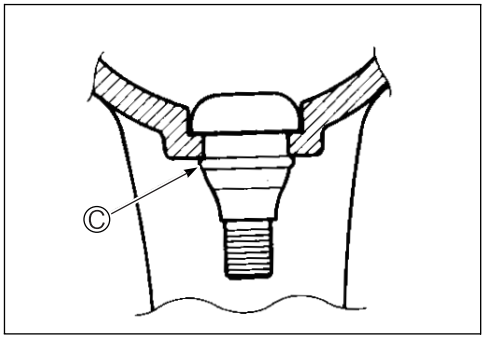

TIRE INSTALLATION

- Apply tire lubricant to the tire bead.
- When installing the tire onto the wheel, observe the following points.

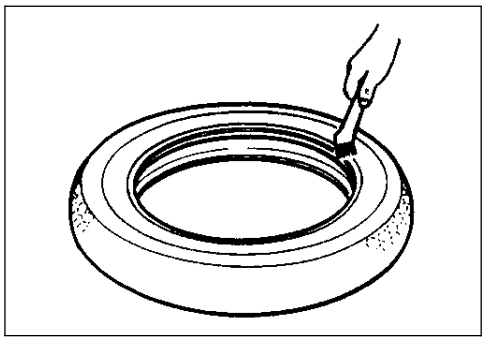

CAUTION

*** Do not reuse the valve which has been once removed.**
*** Never use oil, grease or gasoline on the tire bead in place of tire lubricant.**

- When installing the tire, the arrow Ⓐ on the side wall should point to the direction of wheel rotation.
- Align the chalk mark put on the tire at the time of removal with the valve position.

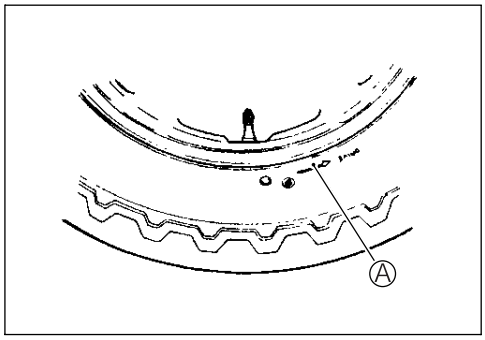

- For installation procedure of tire onto the wheel, follow the instructions given by the tire changer manufacturer.
- Bounce the tire several times while rotating. This makes the tire bead expand outward to contact the wheel, thereby facilitating air inflation.
- Inflate the tire.

⚠ WARNING

*** Do not inflate the tire to more than 400 kPa (4.0 kgf/cm², 57 psi). If inflated beyond this limit, the tire can burst and possibly cause injury. Do not stand directly over the tire while inflating.**
*** In the case of preset pressure air inflator, pay special care for the set pressure adjustment.**

- In this condition, check the “rim line” Ⓑ cast on the tire side walls. The line must be equidistant from the wheel rim all around. If the distance between the rim line and wheel rim varies, this indicates that the bead is not properly seated. If this is the case, deflate the tire completely and unseat the bead for both sides. Coat the bead with lubricant and fit the tire again.
- When the bead has been fitted properly, adjust the pressure to specification.
- As necessary, adjust the tire balance.

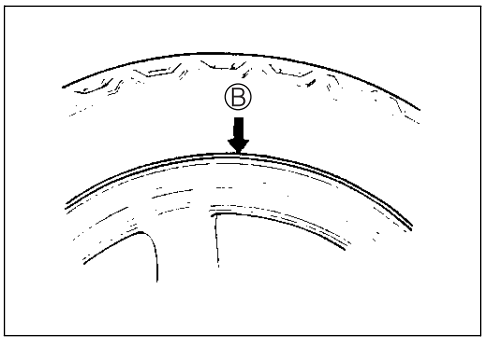

CAUTION

Do not run with a repaired tire at a high speed.

DATA Cold inflation tire pressure

	Front	Rear
Solo riding	250 kPa (2.50 kgf/cm², 36 psi)	290 kPa (2.90 kgf/cm², 42 psi)
Dual riding	250 kPa (2.50 kgf/cm², 36 psi)	290 kPa (2.90 kgf/cm², 42 psi)

BALANCER WEIGHT INSTALLATION

- When installing the balancer weights to the wheel, set the two balancer weights Ⓐ on both sides of wheel rim.

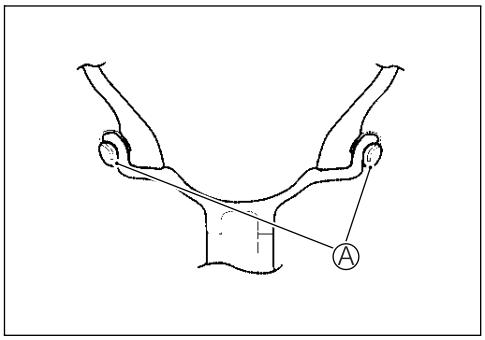

CAUTION

Weight difference between the two balancer weights must be less than 10 g (0.02 lb).

DRIVE CHAIN

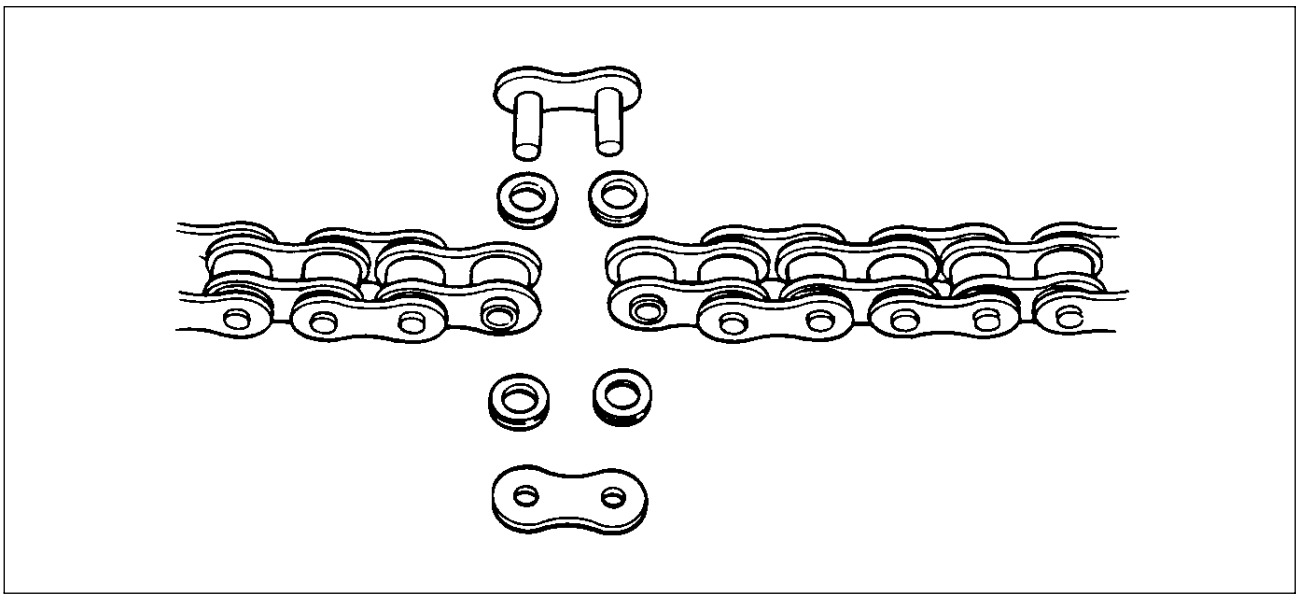

Use the special tool in the following procedures, to cut and rejoin the drive chain.

TOOL 09922-22711: Drive chain cutting and joining tool set

NOTE:
When using the special tool, apply a small quantity of grease to the threaded parts of the special tool.

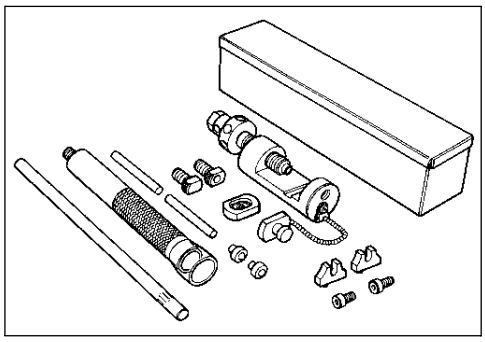

DRIVE CHAIN CUTTING

- Set up the special tool as shown in the illustration.
  ① Tool body
  ② Grip handle
  ③ Pressure bolt “A”
  ④ Pressure bolt “B”
  ⑤ Bar
  ⑥ Adjuster bolt (with through hole)
  ⑦ Pin remover
  ⑧ Chain holder (engraved mark 500) with reamer bolt M5 × 10

NOTE:
The tip of pin remover ⑦ should be positioned inside approximately 5 mm (0.2 in) from the end face of pressure bolt “A” ③ as shown in the illustration.

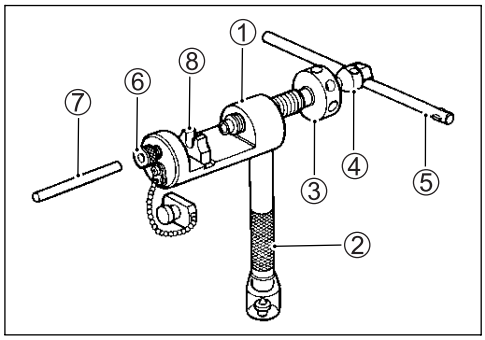

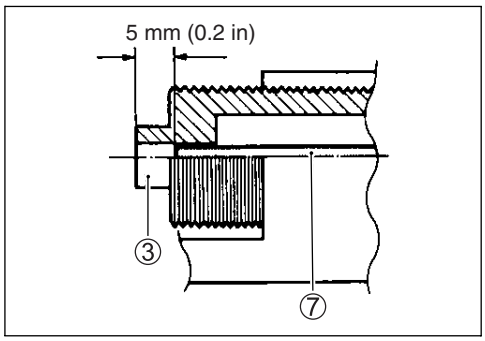

- Place the drive chain link being disjointed on the holder part ⑧ of the tool.
- Turn in both the adjuster bolt ⑥ and pressure bolt "A" ③ so that each of their end hole fits over the chain joint pin properly.
- Tighten the pressure bolt "A" ③ with the bar.

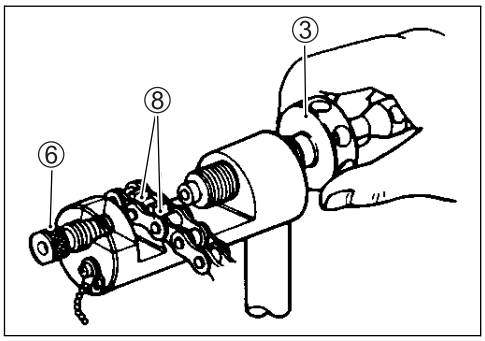

- Turn in the pressure bolt "B" ④ with the bar ⑤ and force out the drive chain joint pin ⑨.

CAUTION

Continue turning in the pressure bolt "B" ④ until the joint pin has been completely pushed out of the chain.

NOTE:
After the joint pin ⑨ is removed, loosen the pressure bolt "B" ④ and then pressure bolt "A" ③.

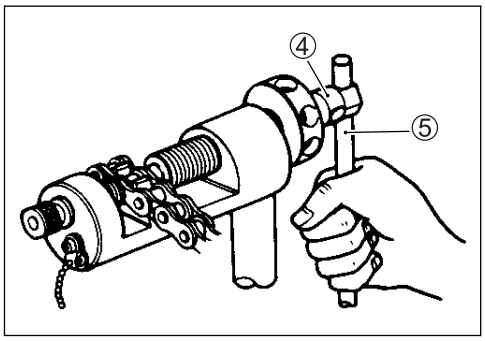

- Remove the joint pin ⑨ of the other side of joint plate.

CAUTION

Never reuse joint pins, O-rings and plates. After joint pins, O-rings and plates have been removed from the drive chain, the removed joint pins, O-rings and plates should be discarded and new joint plate, O-rings and plate must be installed.

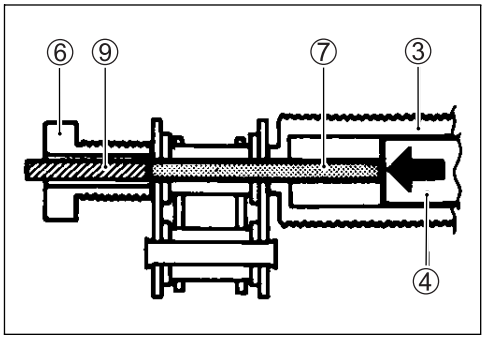

DRIVE CHAIN CONNECTING

JOINT PLATE INSTALLATION

- Set up the special tool as shown in the illustration.
  - ① Tool body
  - ② Grip handle
  - ③ Joint plate holder (engraved mark "F50")
  - ④ Wedge holder & wedge pin
  - ⑤ Adjuster bolt (without hole)
  - ⑥ Pressure bolt "A"
  - ⑦ Bar

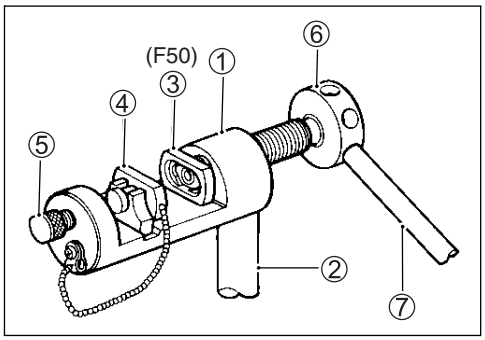

- Connect both ends of the drive chain with the joint pin ⑧ inserted from the wheel side Ⓐ as installed on the motorcycle.
  - ⑨ O-ring … 4 pcs.
  - ⑩ Joint plate

  Joint set part number
  DID: 27620-40F00

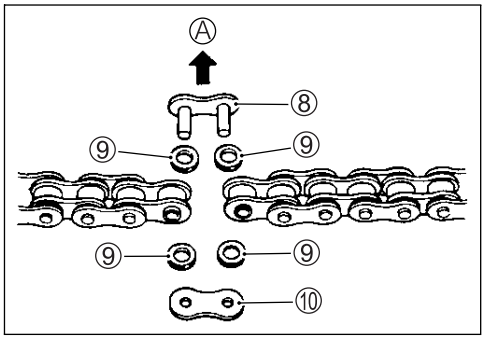

⚠ WARNING

Do not use joint clip type of drive chain. The joint clip may have a chance to drop which may cause severe damage to motorcycle and severe injury.

- Apply grease on the recessed portion of the joint plate holder ③ and set the joint plate ⑩.

NOTE:
When positioning the joint plate ⑩ on the tool, its stamp mark must face the joint plate holder ③ side.

- Set the drive chain on the tool as illustrated and turn in the adjuster bolt ⑤ to secure the wedge holder & wedge pin ④.
- Turn in the pressure bolt "A" ⑥ and align two joint pins ⑪ properly with the respective holes of the joint plate ⑩
- Turn in the pressure bolt "A" ⑥ further using the bar ⑦ to press the joint plate over the joint pins.

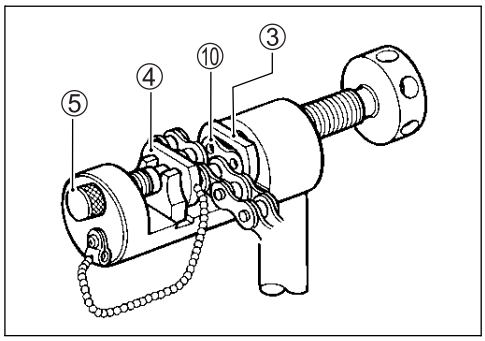

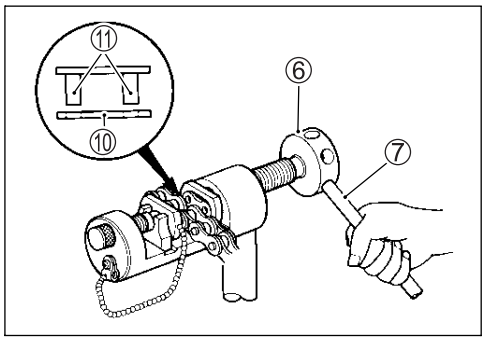

- Continue pressing the joint plate until the distance between the two joint plates come to the specification.

DATA Joint plate distance specification Ⓦ

DID	21.10 – 21.30 mm (0.831 – 0.839 in)

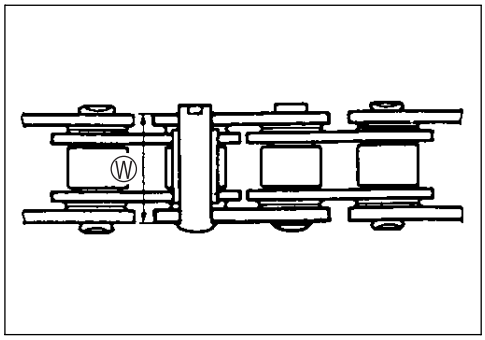

CAUTION

Should pressing of the joint plate be made excessively beyond the specified dimension, the work should be redone using the new joint parts.

JOINT PIN STAKING

- Set up the special tool as shown in the illustration.
  ① Tool body
  ② Grip handle
  ③ Pressure bolt "A"
  ④ Adjuster bolt (without hole)
  ⑤ Staking pin (stowed inside grip handle behind rubber cap)
  ⑥ Bar

NOTE:
Before staking the joint pin, apply a small quantity of grease to the staking pin ⑤.

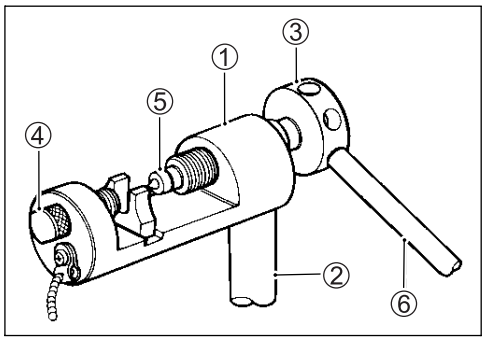

- Stake the joint pin by turning (approximately 7/8 turn) the pressure bolt “A” ③ with the bar until the pin end diameter becomes the specified dimension.

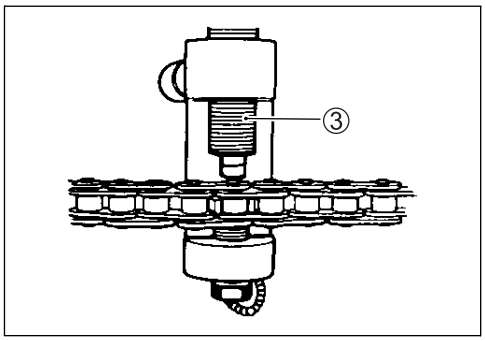

DATA Pin end diameter specification Ⓓ

DID	5.50 – 5.80 mm (0.217 – 0.228 in)

CAUTION

*** After joining of the chain has been completed, check to make sure that the link is smooth and no abnormal condition is found.**
*** Should any abnormal condition be found, reassemble the chain link using the new joint parts.**

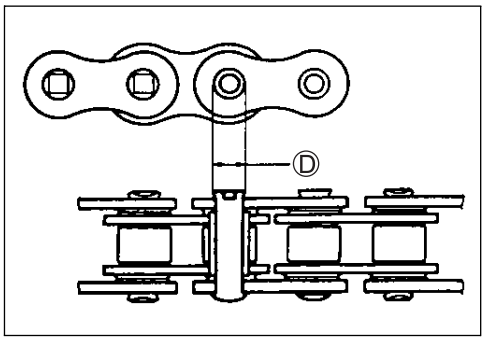

- Adjust the drive chain, after connecting it. (☞2-22)

ELECTRICAL SYSTEM

CONTENTS

CAUTIONS IN SERVICING 9- 3
CONNECTOR 9- 3
COUPLER 9- 3
CLAMP 9- 3
FUSE 9- 3
SWITCH 9- 3
SEMI-CONDUCTOR EQUIPPED PART 9- 4
BATTERY 9- 4
CONNECTING THE BATTERY 9- 4
WIRING PROCEDURE 9- 4
USING THE MULTI-CIRCUIT TESTER 9- 5
LOCATION OF ELECTRICAL COMPONENTS 9- 6
CHARGING SYSTEM 9- 8
TROUBLESHOOTING 9- 8
INSPECTION 9- 9
STARTER SYSTEM AND SIDE-STAND/IGNITION INTERLOCK SYSTEM 9-12
TROUBLESHOOTING 9-12
STARTER MOTOR REMOVAL 9-13
STARTER MOTOR DISASSEMBLY 9-14
STARTER MOTOR INSPECTION 9-14
STARTER MOTOR REASSEMBLY 9-15
STARTER RELAY INSPECTION 9-16
SIDE STAND/IGNITION INTERLOCK SYSTEM PARTS INSPECTION 9-17
IGNITION SYSTEM 9-20
IMMOBILIZER (Except for E-03, 28, 33) 9-21
TROUBLESHOOTING 9-23
INSPECTION 9-25
COMBINATION METER 9-28
DESCRIPTION 9-28
REMOVAL AND DISASSEMBLY 9-29
INSPECTION 9-30
LAMPS 9-35
HEADLIGHT, BRAKE LIGHT/TAILLIGHT, LICENSE PLATE LIGHT AND TURN SIGNAL LIGHT 9-35

ELECTRICAL SYSTEM

CONTENTS

RELAYS 9-37
TURN SIGNAL/SIDE-STAND RELAY 9-37
STARTER RELAY 9-37
FUEL PUMP RELAY 9-37
COOLING FAN RELAY 9-37
SWITCH 9-38
IGNITION SWITCH REMOVAL 9-38
IGNITION SWITCH INSTALLATION 9-38
DRIVING MODE SWITCH 9-39
SWITCH INSPECTION 9-41
BATTERY 9-42
SPECIFICATIONS 9-42
INITIAL CHARGING 9-42
SERVICING 9-44
RECHARGING OPERATION 9-44

CAUTIONS IN SERVICING

CONNECTOR

- When connecting a connector, be sure to push it in until a click is felt.
- Inspect the connector for corrosion, contamination and breakage in its cover.

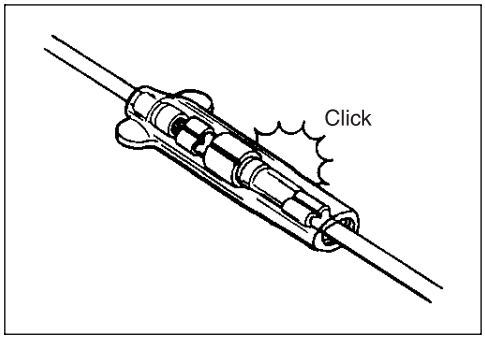

COUPLER

- With a lock type coupler, be sure to release the lock when disconnecting, and push in fully to engage the lock when connecting.
- When disconnecting the coupler, be sure to hold the coupler itself and do not pull the lead wires.
- Inspect each terminal on the coupler for being loose or bent.
- Inspect each terminal for corrosion and contamination.

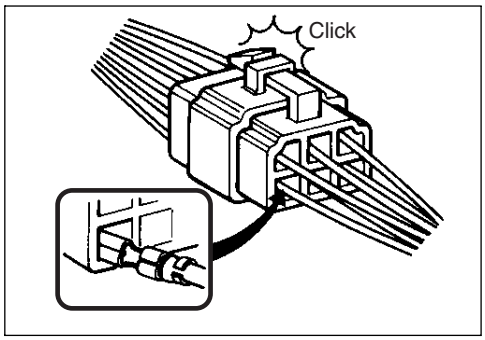

CLAMP

- Clamp the wire harness at such positions as indicated in "WIRING HARNESS ROUTING". (☞10-14 to -16)
- Bend the clamp properly so that the wire harness is clamped securely.
- In clamping the wire harness, use care not to allow it to hang down.
- Do not use wire or any other substitute for the band type clamp.

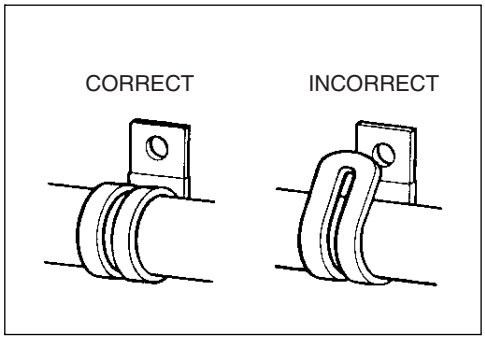

FUSE

- When a fuse blows, always investigate the cause to correct it and then replace the fuse.
- Do not use a fuse of a different capacity.
- Do not use wire or any other substitute for the fuse.

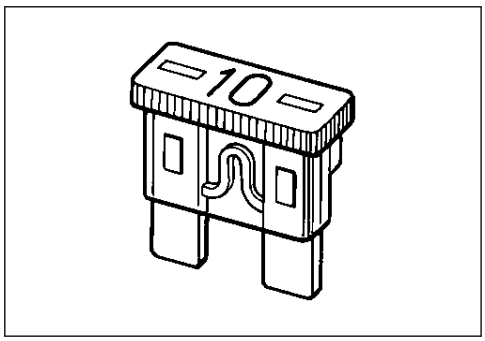

SWITCH

- Never apply grease material to switch contact points to prevent damage.

SEMI-CONDUCTOR EQUIPPED PART

- Be careful not to drop the part with a semi-conductor built in such as a ECM.
- When inspecting this part, follow inspection instruction strictly. Neglecting proper procedure may cause damage to this part.

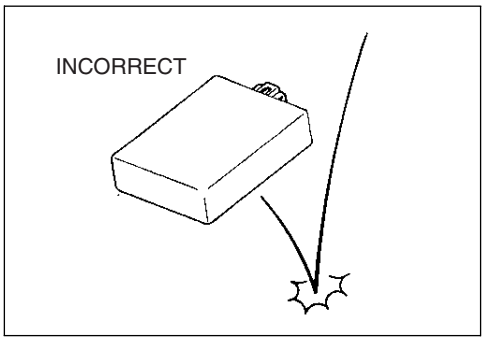

BATTERY

- The MF battery used in this motorcycle does not require maintenance (e.g., electrolyte level inspection, distilled water replenishment).
- During normal charging, no hydrogen gas is produced. However, if the battery is overcharged, hydrogen gas may be produced. Therefore, be sure there are no fire or spark sources (e.g., short circuit) nearby when charging the battery.
- Be sure to recharge the battery in a well-ventilated and open area.
- Note that the charging system for the MF battery is different from that of a conventional battery. Do not replace the MF battery with a conventional battery.

CONNECTING THE BATTERY

- When disconnecting terminals from the battery for disassembly or servicing, be sure to disconnect the ⊖ battery lead wire, first.
- When connecting the battery lead wires, be sure to connect the ⊕ battery lead wire, first.
- If the terminal is corroded, remove the battery, pour warm water over it and clean it with a wire brush.
- After connecting the battery, apply a light coat of grease to the battery terminals.
- Install the cover over the ⊕ battery terminal.

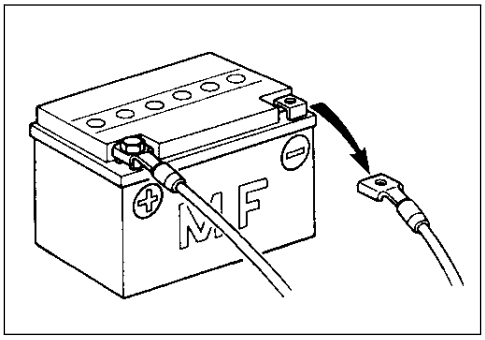

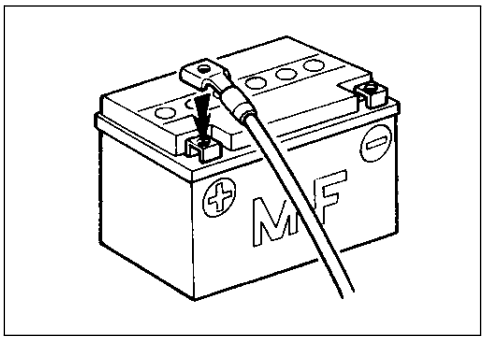

WIRING PROCEDURE

- Properly route the wire harness according to the “WIRING HARNESS ROUTING” section. (☞10-14 to -16)

USING THE MULTI-CIRCUIT TESTER

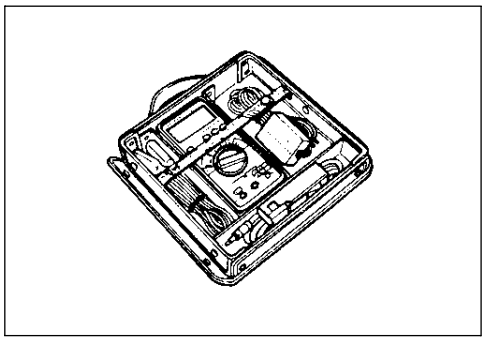

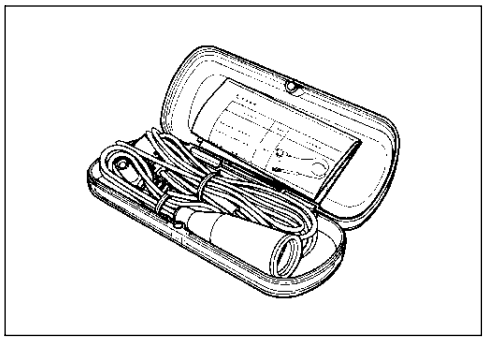

- Properly use the multi-circuit tester ⊕ and ⊖ probes. Improper use can cause damage to the motorcycle and tester.
- If the voltage and current values are not known, begin measuring in the highest range.
- When measuring the resistance, make sure that no voltage is applied. If voltage is applied, the tester will be damaged.
- After using the tester, be sure to turn the switch OFF.

TOOL 09900-25008: Multi-circuit tester set

CAUTION

Before using the multi-circuit tester, read its instruction manual.

NOTE:

** When connecting the multi-circuit tester, use the needle pointed probe to the back side of the lead wire coupler and connect the probes of tester to them.*

** Use the needle pointed probe to prevent the rubber of the water proof coupler from damage.*

TOOL 09900-25009: Needle pointed probe set

- When using the multi-circuit tester, do not strongly touch the terminal of the ECM coupler with a needle pointed tester probe to prevent the terminal damage or terminal bend.

LOCATION OF ELECTRICAL COMPONENTS

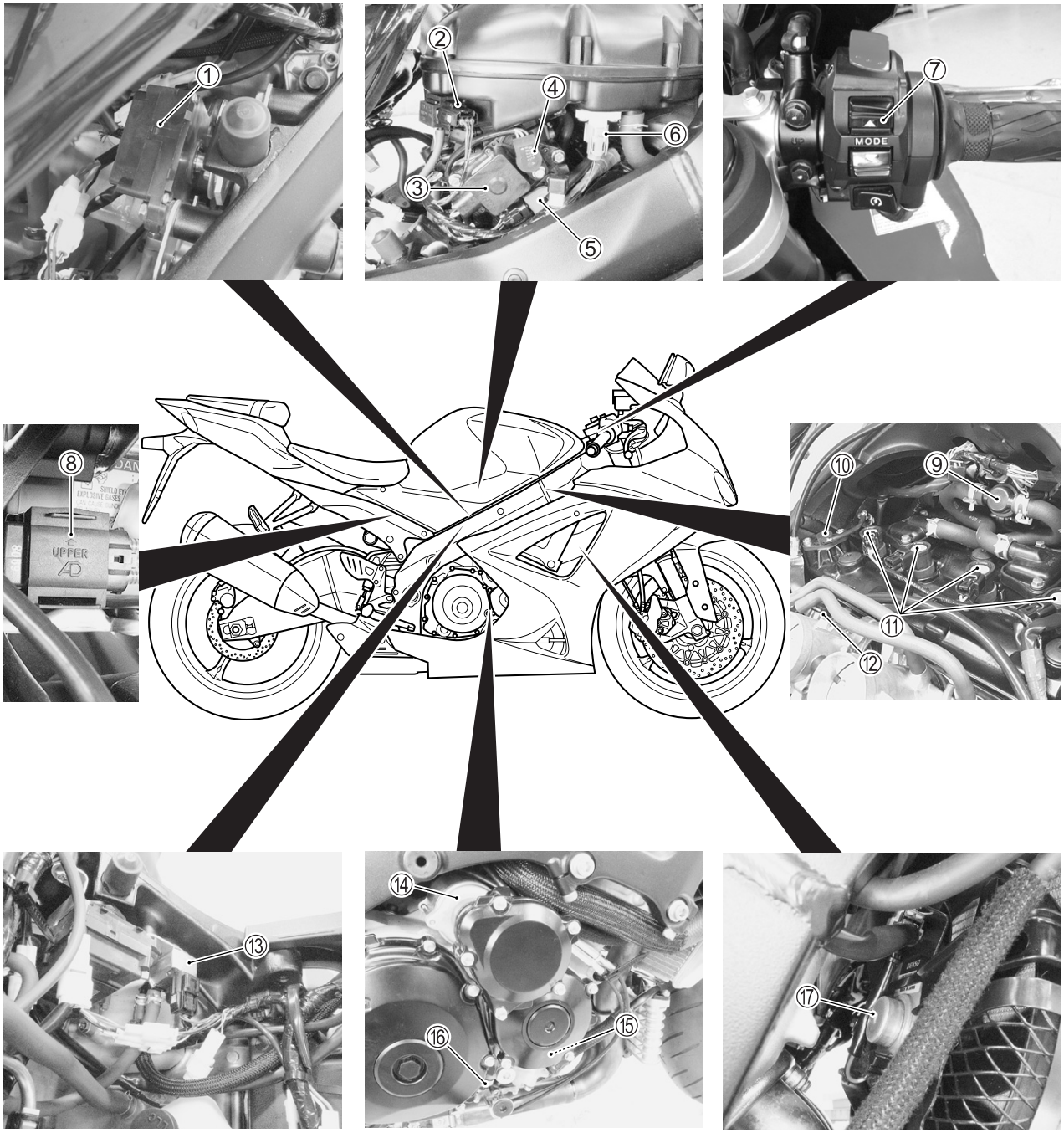

① EXCVA (☞6-10)
② IAP sensor (☞4-40)
③ STV actuator (☞4-66)
④ STP sensor (☞4-69)
⑤ TP sensor (☞4-45)
⑥ IAT sensor (☞4-53)
⑦ Driving mode switch
⑧ TO sensor (☞4-62)
⑨ PAIR control solenoid valve (☞11-6)
⑩ CMP sensor (☞4-36)
⑪ Ignition coil
⑫ ISC valve (☞4-79)
⑬ EVAP system purge control solenoid valve (E-33 only)
⑭ Starter motor
⑮ CKP sensor (☞4-38)
⑯ Oil pressure switch
⑰ Cooling fan

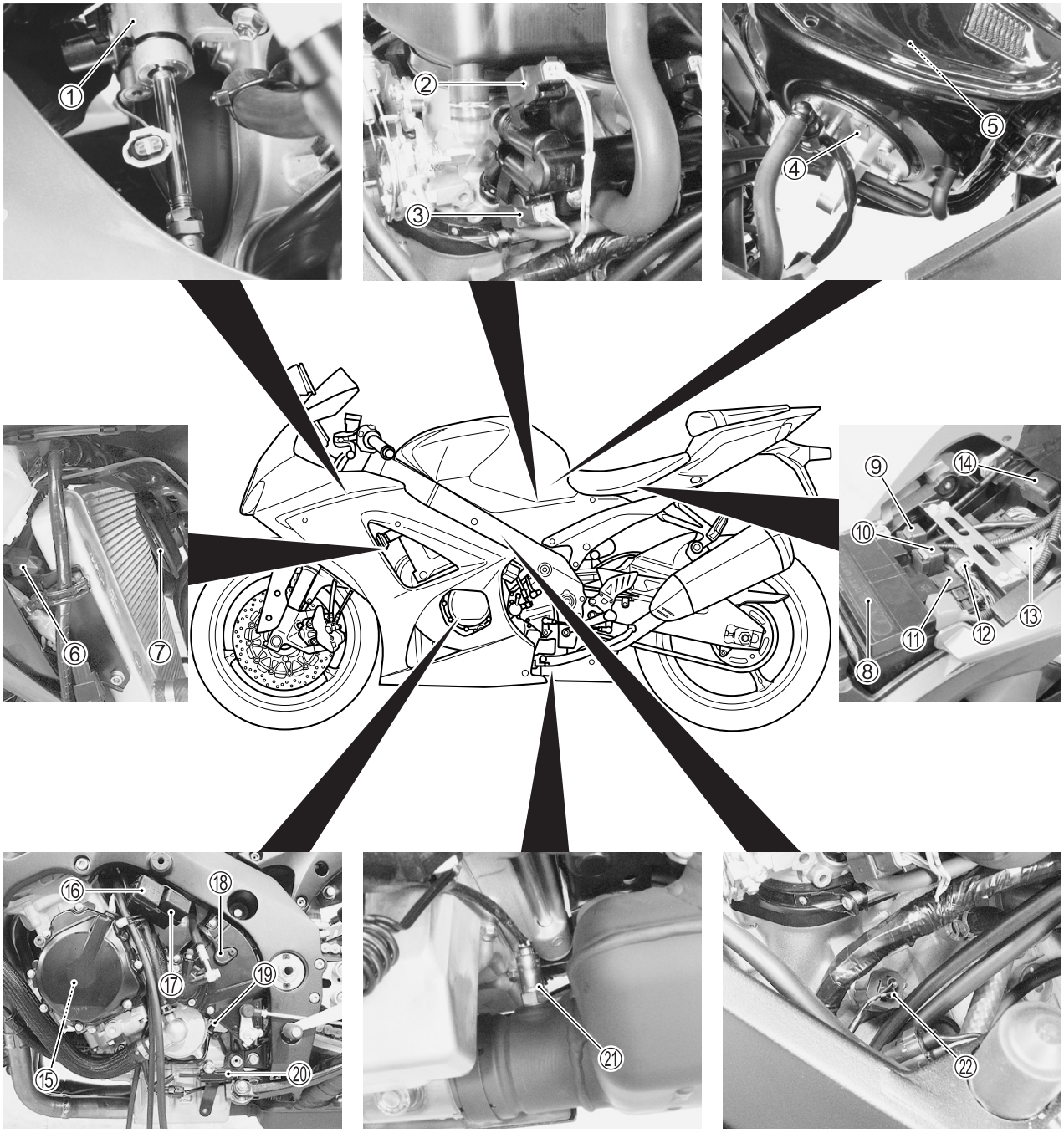

① Steering damper solenoid valve (☞4-108)
② Secondary fuel injector (☞4-77)
③ Primary fuel injector (☞4-75)
④ Fuel pump
⑤ Fuel level gauge
⑥ Regulator/Rectifier
⑦ Horn
⑧ Battery
⑨ Cooling fan relay (☞7-7)
⑩ Fuel pump relay (☞5-7)
⑪ AP sensor (☞4-57)
⑫ Mode select switch coupler
⑬ ECM
⑭ Starter relay/Main fuse
⑮ Generator
⑯ Fuse box
⑰ Turn signal/Side-stand relay
⑱ Speed sensor
⑲ GP switch (☞4-73)
⑳ Side-stand switch
㉑ HO2 sensor (☞4-57)
㉒ ECT sensor (☞7-7)

CHARGING SYSTEM

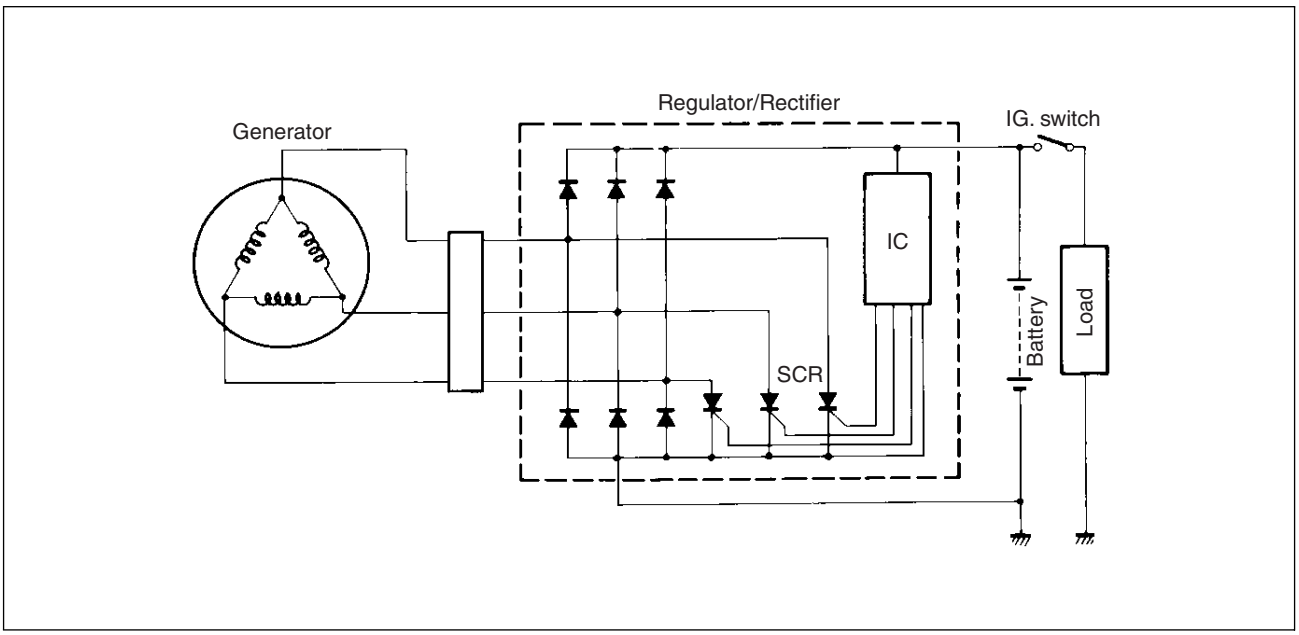

TROUBLESHOOTING

Battery runs down quickly

Step 1

1) Check accessories which use excessive amounts of electricity.
   Are accessories being installed?

YES	Remove accessories.
NO	Go to Step 2.

Step 2

1) Check the battery for current leaks. (☞9-9)
   Is the battery for current leaks OK?

YES	Go to Step 3.
NO	• Short circuit of wire harness • Faulty electrical equipment

Step 3

1) Measure the regulated voltage between the battery terminals. (☞9-10)
   Is the regulated voltage OK?

YES	• Faulty battery • Abnormal driving condition
NO	Go to Step 4.

Step 4

1) Measure the resistance of the generator coil. (☞9-10)
   Is the resistance of generator coil OK?

YES	Go to Step 5.
NO	• Faulty generator coil • Disconnected lead wires

Step 5

1) Measure the generator no-load performance. (☞9-11)
   Is the generator no-load performance OK?

YES	Go to Step 6.
NO	Faulty generator

Step 6

1) Inspect the regulator/rectifier. (☞9-11)
   Is the regulator/rectifier OK?

YES	Go to Step 7.
NO	Faulty regulator/rectifier

Step 7

1) Inspect wirings.
   Is the wirings OK?

YES	Faulty battery
NO	• Short circuit of wire harness • Poor contact of couplers

Battery overcharges

- Faulty regulator/rectifier
- Faulty battery
- Poor contact of generator lead wire coupler

INSPECTION

BATTERY CURRENT LEAKAGE

- Remove the front seat. (☞8-8)
- Turn the ignition switch OFF.
- Disconnect the battery ⊖ lead wire.
- Measure the current between ⊖ battery terminal and the ⊖ battery lead wire using the multi-circuit tester. If the reading exceeds the specified value, leakage is evident.

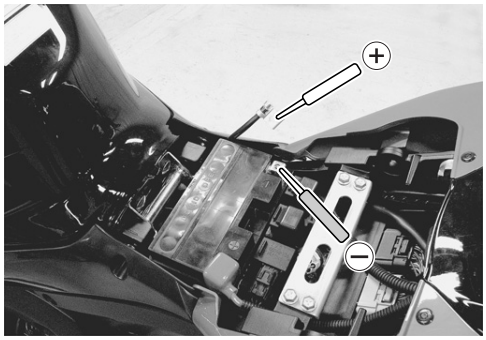

TOOL 09900-25008: Multi-circuit tester set

DATA Battery current (leak): Under 3 mA

Tester knob indication: Current (⎓, 20 mA)

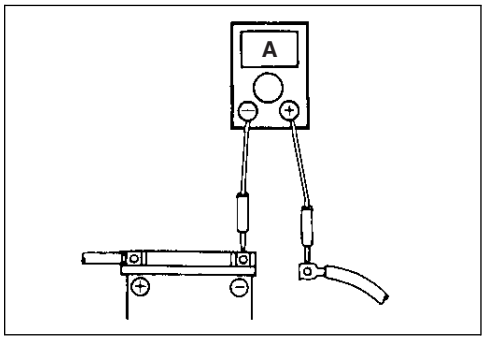

CAUTION

*** In case of a large current leak, turn the tester to high range first to avoid tester damage.**
*** Do not turn the ignition switch ON when measuring current.**

REGULATED VOLTAGE

- Remove the front seat. (☞8-8)
- Start the engine and keep it running at 5 000 r/min with the dimmer switch turned HI position.
- Measure the DC voltage between the ⊕ and ⊖ battery terminals using the multi-circuit tester. If the voltage is not within the specified value, inspect the generator and regulator/rectifier. (☞9-10 and -11)

NOTE:
When making this test, be sure that the battery is in fully-charged condition.

TOOL 09900-25008: Multi-circuit tester set

Tester knob indication: Voltage (⎓)

DATA Regulated voltage (Charging output):
14.0 – 15.5 V at 5 000 r/min

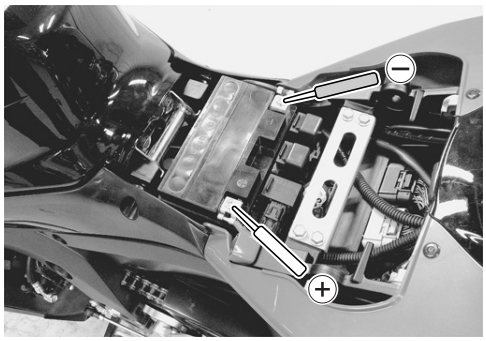

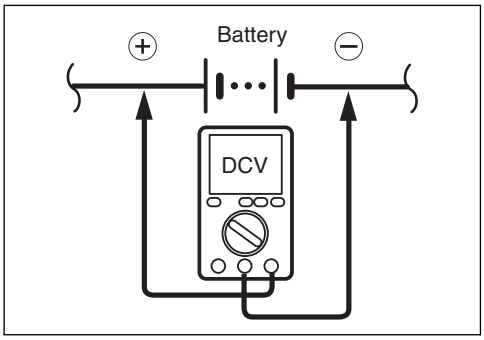

GENERATOR COIL RESISTANCE

- Lift and support the fuel tank. (☞5-3)
- Disconnect the generator coupler ①.
- Measure the resistance between the three lead wires.
  If the resistance is out of specified value, replace the stator with a new one. Also, check that the generator core is insulated properly.

TOOL 09900-25008: Multi-circuit tester set

Tester knob indication: Resistance (Ω)

DATA Generator coil resistance: 0.2 – 0.9 Ω (W – W)
∞ Ω (W – Ground)

NOTE:
When making above test, it is not necessary to remove the generator.

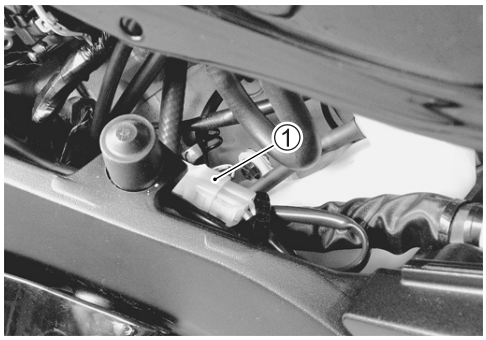

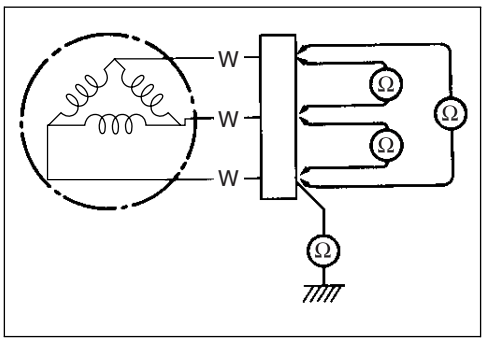

GENERATOR NO-LOAD PERFORMANCE

- Lift and support the fuel tank. (☞5-3)
- Disconnect the generator coupler.
- Start the engine and keep it running at 5 000 r/min.
- Using the multi-circuit tester, measure the voltage between three lead wires.
  If the tester reads under the specified value, replace the generator with a new one.

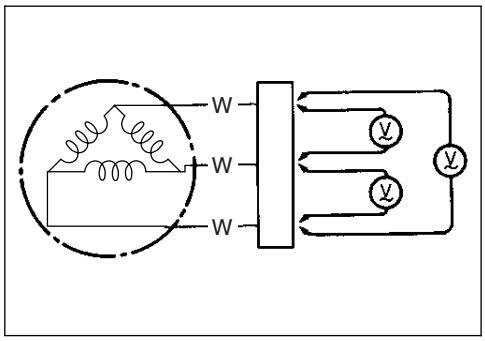

TOOL 09900-25008: Multi-circuit tester set

Tester knob indication: Voltage (~)

DATA Generator no-load performance:
65 V and more at 5 000 r/min (When engine is cold)

REGULATOR/RECTIFIER

- Remove the left under cowling. (☞8-5)
- Disconnect the regulator/rectifier couplers ①.
- Measure the voltage between the lead wires using the multi circuit tester as indicated in the table below. If the voltage is not within the specified value, replace the regulator/rectifier with a new one. (☞10-40)

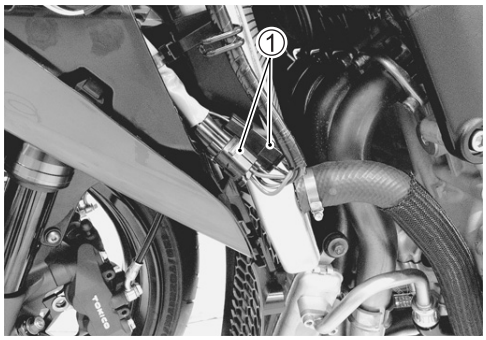

TOOL 09900-25008: Multi-circuit tester set

Tester knob indication: Diode test (⊣◀)

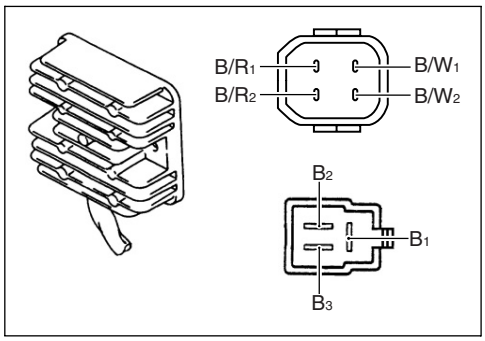

Unit: V

⊖ Probe of tester to:	⊕ Probe of tester to: B/R1	B/R2	B1	B2	B3	B/W1	B/W2
B/R1		0	0.2 – 0.8	0.2 – 0.8	0.2 – 0.8	0.4 – 1.0	0.4 – 1.0
B/R2	0		0.2 – 0.8	0.2 – 0.8	0.2 – 0.8	0.4 – 1.0	0.4 – 1.0
B1	✻	✻		0.6 – 1.2	0.6 – 1.2	0.2 – 0.8	0.2 – 0.8
B2	✻	✻	0.6 – 1.2		0.6 – 1.2	0.2 – 0.8	0.2 – 0.8
B3	✻	✻	0.6 – 1.2	0.6 – 1.2		0.2 – 0.8	0.2 – 0.8
B/W1	✻	✻	0.3 – 1.0	0.3 – 1.0	0.3 – 1.0		0
B/W2	✻	✻	0.3 – 1.0	0.3 – 1.0	0.3 – 1.0	0	

✻1.4 V and more (tester's battery voltage)

NOTE:
If the tester reads 1.4 V and below when the tester probes are not connected, replace its battery.

STARTER SYSTEM AND SIDE-STAND/IGNITION INTERLOCK SYSTEM

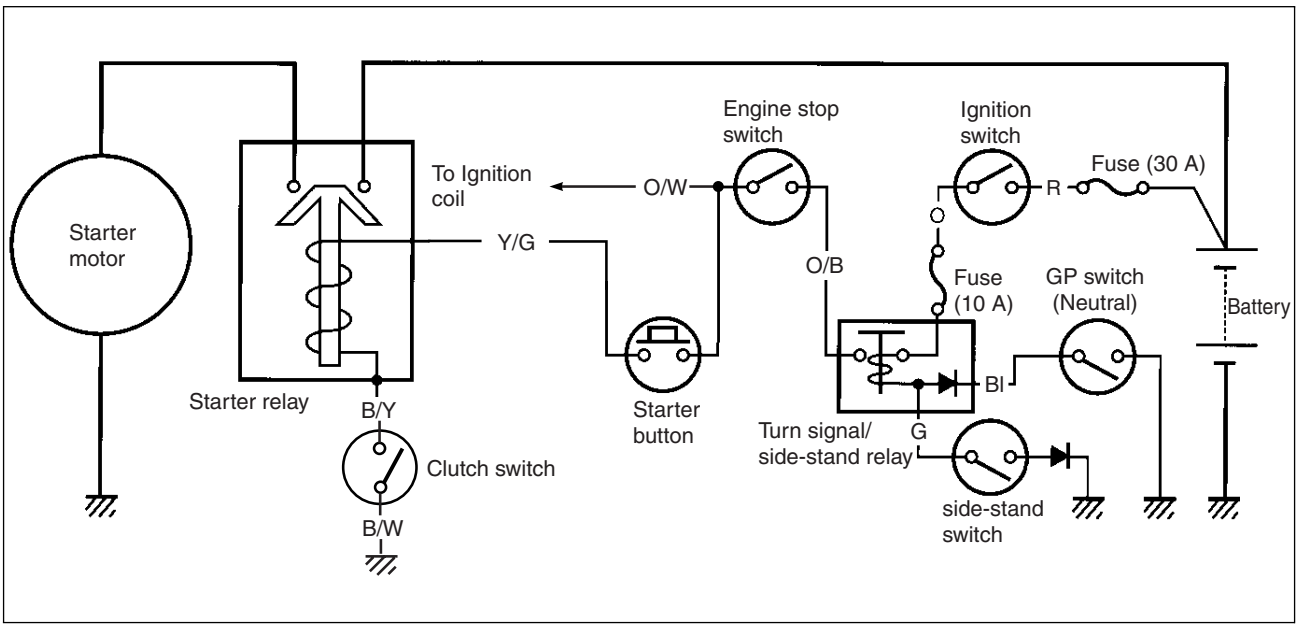

TROUBLESHOOTING

Make sure that the fuses are not blown and the battery is fully-charged before diagnosing.

Starter motor will not run

Step 1

1) Shift the transmission to neutral.
2) Pull the clutch lever, turn on the ignition switch with the engine stop switch in the “RUN” position and listen for a click from the starter relay when the starter button is pushed.
   Is a click sound heard?

YES	Go to Step 2.
NO	Go to Step 3.

Step 2

1) Check if the starter motor runs when its terminal is connected to the battery ⊕ terminal. (Do not use thin “wire” because a large amount of current flows.)
   Does the starter motor run?

YES	• Faulty starter relay • Loose or disconnected starter motor lead wire • Loose or disconnected between starter relay and battery ⊕ terminal
NO	Faulty starter motor

Step 3

1) Measure the starter relay voltage at the starter relay connectors (between Y/G ⊕ and B/Y ⊖) when the starter button is pushed.
   Is a voltage OK?

YES	Go to Step 4.
NO	• Faulty engine stop switch • Faulty clutch switch • Faulty GP switch • Faulty turn signal/side-stand relay • Faulty starter button • Faulty ignition switch • Faulty side-stand switch • Poor contact of connector • Open circuit in wire harness

Step 4

1) Check the starter relay. (☞9-16)
   Is the starter relay OK?

YES	Poor contact of the starter relay
NO	Faulty starter relay

Starter motor runs but does not crank the engine

Step 1

1) The starter motor runs when the transmission is in neutral, but does not run when the transmission is in any position other than neutral, with the side-stand up.
2) Check the side-stand switch. (☞9-17)
   Is the side-stand switch OK?

YES	Go to Step 2.
NO	Faulty side-stand switch

Step 2

1) Check the starter clutch.
   Is the starter clutch OK?

YES	Faulty starter clutch
NO	• Open circuit in wire harness • Poor contact of connector

STARTER MOTOR REMOVAL

- Disconnect the battery ⊖ lead wire.
- Lift and support the fuel tank.
- Disconnect the starter motor lead wire ①.
- Remove the starter motor ②.

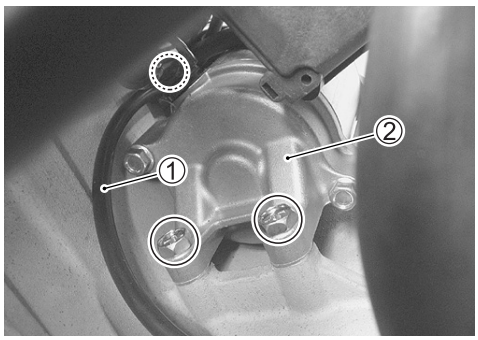

STARTER MOTOR DISASSEMBLY

- Disassemble the starter motor as shown in the illustration.

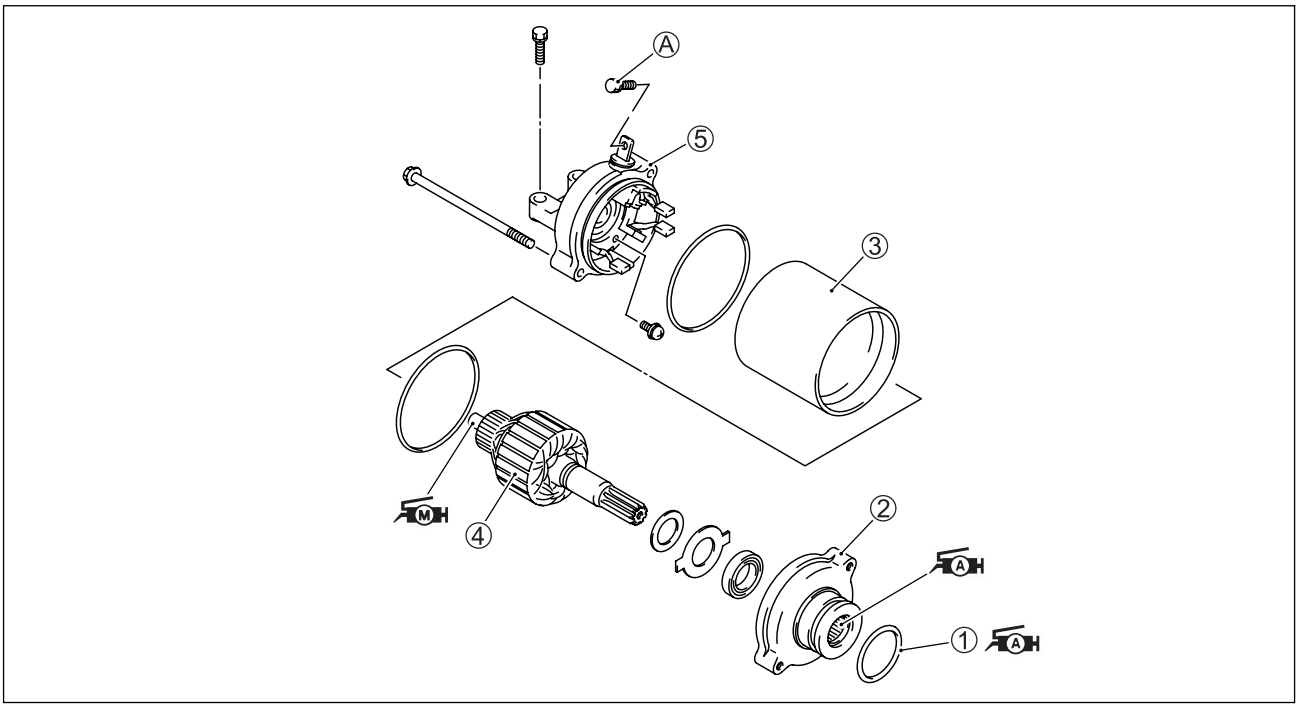

①	O-ring	④	Armature
②	Housing end (inside)	⑤	Housing end (outside)
③	Starter motor case	Ⓐ	Lead wire mounting bolt

ITEM	N·m	kgf-m	lb-ft
Ⓐ	3	0.3	2.0

STARTER MOTOR INSPECTION

CARBON BRUSH

Inspect the brushes for abnormal wear cracks or smoothness in the brush holder and measure the brush length Ⓐ.

If any damages are found, replace the brush assembly with a new one or replace the brushes (housing end with brush) found to have worn down to the limit.

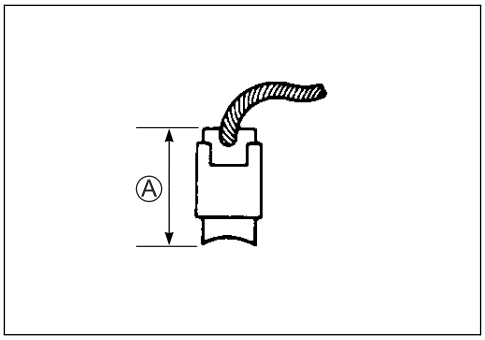

DATA Starter motor brush length:
Service Limit: 3.5 mm (0.14 in)

COMMUTATOR

Inspect the commutator for discoloration, abnormal wear or undercut Ⓐ.

If abnormal wear is found, replace the armature with a new one.

If the commutator surface is discolored, polish it with #400 sand paper and wipe it using a clean dry cloth.

If there is no undercut, scrape out the insulator with a saw blade.

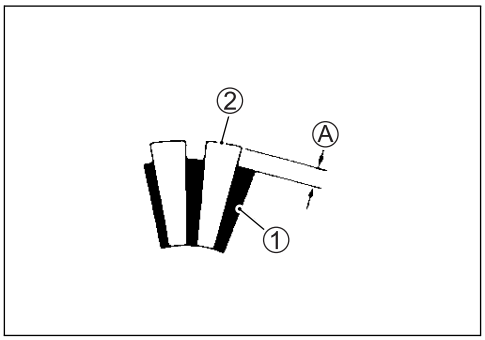

① Insulator
② Segment

ARMATURE COIL INSPECTION

Check for continuity between each segment and between each segment and the armature shaft using the multi-circuit tester.

If there is no continuity between the segments or there is continuity between the segments and shaft, replace the armature with a new one.

09900-25008: Multi-circuit tester set

Tester knob indication: Continuity test (•)))

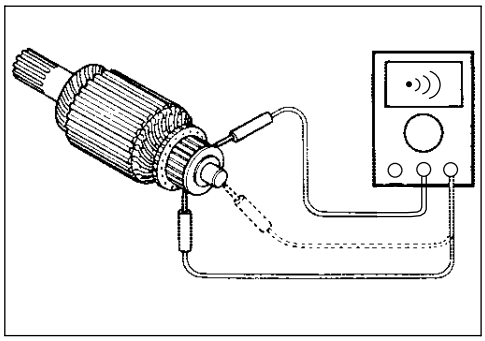

OIL SEAL INSPECTION

Check the oil seal lip for damage or leakage.

If any damage is found, replace the housing end.

STARTER MOTOR REASSEMBLY

Reassemble the starter motor in the reverse order of disassembly. Pay attention to the following points:

- Apply grease to the lip of the oil seal.

99000-25010: SUZUKI SUPER GREASE "A" or equivalent

- Apply a small quantity of SUZUKI MOLY PASTE to the armature shaft.

99000-25140: SUZUKI MOLY PASTE or equivalent

- Fit the projection of the starter motor case to the depression of the housing end.

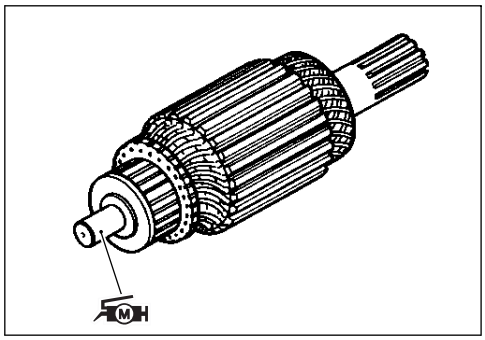

- Apply grease to the O-ring.

99000-25010: SUZUKI SUPER GREASE "A" or equivalent

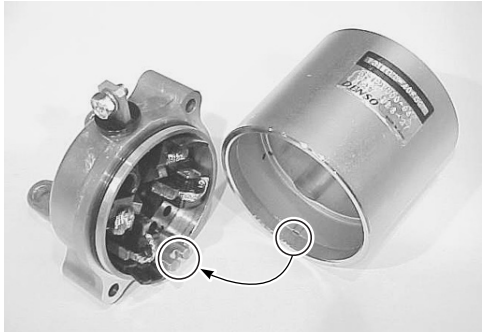

- Install the starter motor to the engine.
- Tighten the starter motor mounting bolts and lead wire bolt. (☞10-16)

Starter motor mounting bolt: 6 N·m (0.6 kgf-m, 4.5 lb-ft)
Starter motor lead wire bolt: 5 N·m (0.5 kgf-m, 3.5 lb-ft)

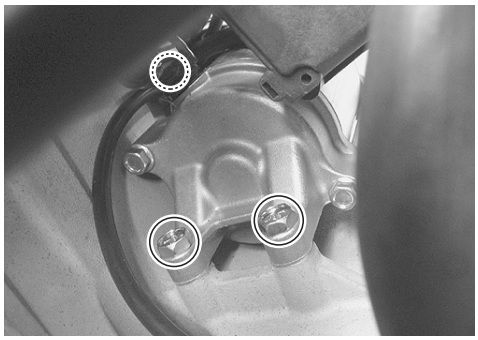

STARTER RELAY INSPECTION

- Remove the front seat. (☞8-8)
- Disconnect the battery ⊖ lead wire from the battery.
- Remove the starter relay cover.
- Disconnect the starter motor lead wire ①, battery lead wire ② and starter relay coupler ③.
- Remove the starter relay ④.
- Apply 12 V to Ⓐ and Ⓑ terminals and check for continuity between the positive and negative terminals using the multi-circuit tester. If the starter relay clicks and continuity is found, the relay is OK.

TOOL 09900-25008: Multi-circuit tester set

Tester knob indication: Continuity test (•))))

CAUTION

Do not apply battery voltage to the starter relay for more than five seconds, since the relay coil may overheat and get damaged.

Measure the relay coil resistance between the terminals using the multi-circuit tester. If the resistance is not within the specified value, replace the starter relay with a new one.

TOOL 09900-25008: Multi-circuit tester set

DATA Starter relay resistance: 3 – 6 Ω

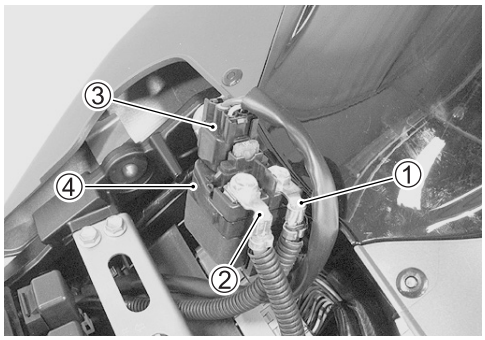

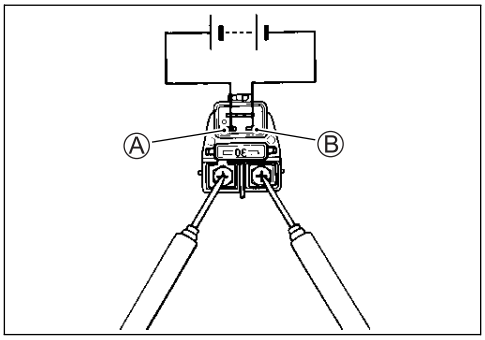

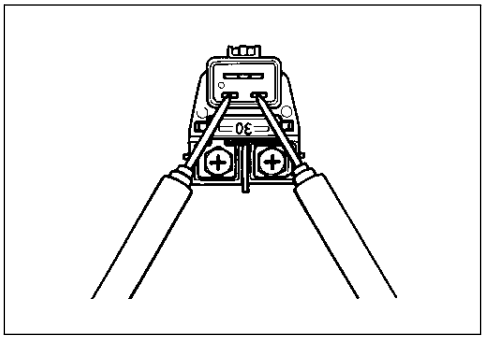

SIDE STAND/IGNITION INTERLOCK SYSTEM PARTS INSPECTION

Check the interlock system for proper operation. If the interlock system does not operate properly, check each component for damage or abnormalities. If any abnormality is found, replace the component with a new one.

SIDE-STAND SWITCH

The side-stand switch coupler is located above the crankcase.

- Remove the left under cowling. (☞8-5)
- Disconnect the side-stand switch coupler ① and measure the voltage between G and B/W lead wires.

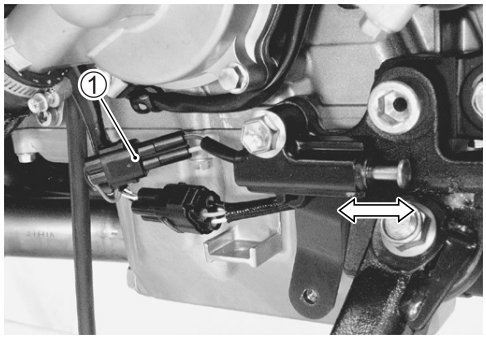

TOOL 09900-25008: Multi-circuit tester set

Tester knob indication: Diode test (⊣◀)

	G (⊕ Probe)	B/W (⊖ Probe)
ON (Side-stand up)	0.4 – 0.6 V	
OFF (Side-stand down)	1.4 V and more (Tester's battery voltage)	

NOTE:
If the tester reads 1.4 V and below when the tester probes are not connected, replace its battery.

GEAR POSITION SENSOR

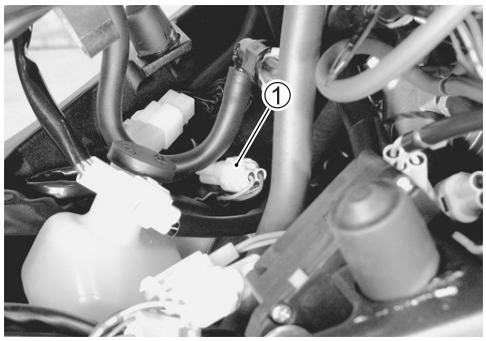

- Lift and support the fuel tank. (☞5-3)
- Disconnect the gear position switch coupler ① and check the continuity between Bl and B/W with the transmission in "NEUTRAL".

TOOL 09900-25008: Multi-circuit tester set

Tester knob indication: Continuity test (•)))

	Bl	B/W
ON (Neutral)	○	○
OFF (Except neutral)		

CAUTION

When disconnecting and connecting the gear position switch coupler, make sure to turn OFF the ignition switch, or electronic parts may get damaged.

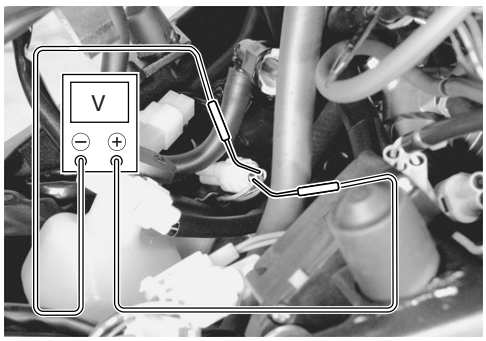

- Connect the gear position switch coupler to the wiring harness.
- Turn the ignition switch ON and side-stand to upright position.
- Measure the voltage between P and B/W lead wires using the multi-circuit tester when shifting the gearshift lever from low to top.

TOOL 09900-25008: Multi-circuit tester set
09900-25009: Needle pointed probe set

Tester knob indication: Voltage (⎓)

DATA Gear position switch voltage: 0.6 V and more
*** Low to top gear position (P ⊕ – B/W ⊖)**
*** Except neutral position (P ⊕ – B/W ⊖)**

CAUTION

Use the special tool, to prevent the rubber of the water proof coupler from damage.

TURN SIGNAL/SIDE-STAND RELAY

The turn signal/side-stand relay is composed of the turn signal relay, side-stand relay and diode.

- Remove the turn signal/side-stand relay ①.

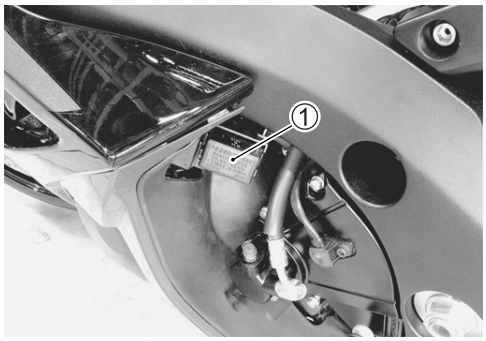

SIDE-STAND RELAY INSPECTION

First check the insulation between Ⓓ and Ⓔ terminals with the tester. Then apply 12 V to terminals Ⓓ and Ⓒ (⊕ to Ⓓ and ⊖ to Ⓒ) and check the continuity between Ⓓ and Ⓔ. If there is no continuity, replace the turn signal/side-stand relay with a new one.

TOOL 09900-25008: Multi-circuit tester set

Tester knob indication: Continuity test (•))))

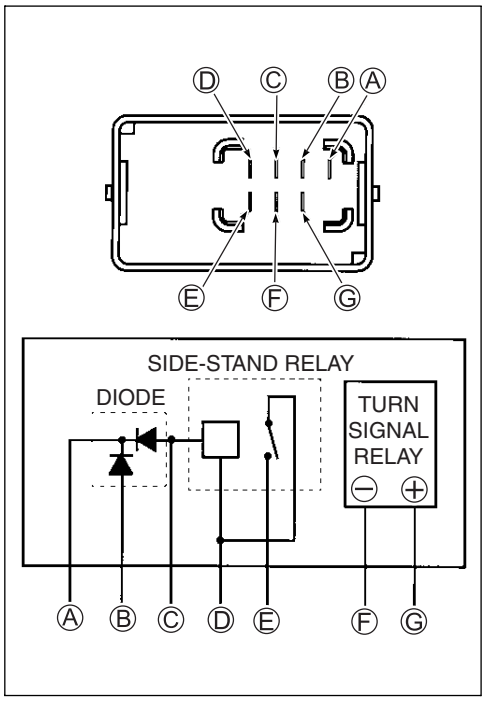

DIODE INSPECTION

Measure the voltage between the terminals using the multi-circuit tester. Refer to the following table.

⊖ Probe of tester to:	⊕ Probe of tester to:		
		Ⓒ, Ⓑ	Ⓐ
	Ⓒ, Ⓑ		1.4 V and more (Tester's battery voltage)
	Ⓐ	0.4 – 0.6 V	

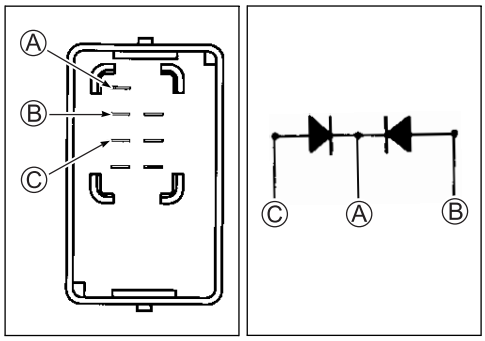

TOOL 09900-25008: Multi-circuit tester set

Tester knob indication: Diode test (⊣◀)

NOTE:

If the multi circuit tester reads 1.4 V and below when the tester probes are not connected, replace its battery.

IGNITION SYSTEM

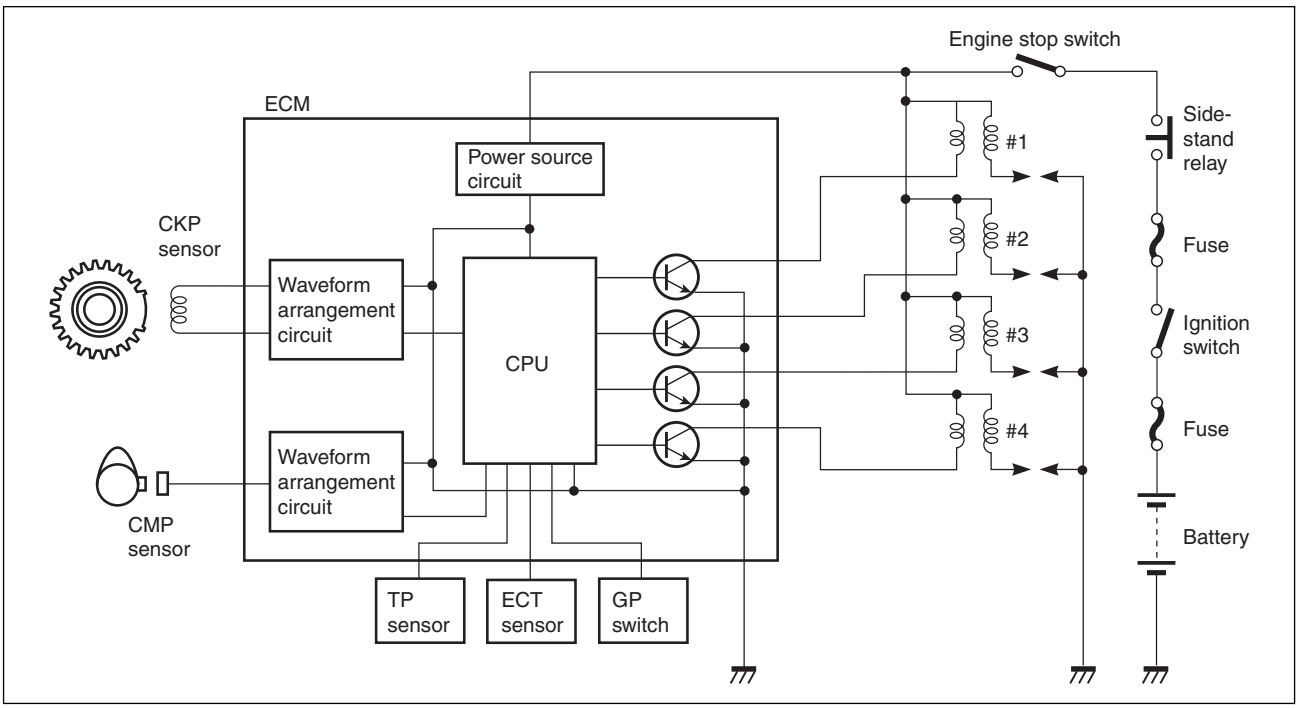

NOTE:
The fuel cut-off circuit is incorporated in this ECM in order to prevent over-running of engine. When engine speed reaches 13 500 r/min, this circuit cuts off fuel at the fuel injector. But under no load, the clutch lever is pulled or the gear position is neutral, this circuit cuts off fuel when engine speed reaches 12 900 r/min.

CAUTION

Under no load, the engine can run over 12 900 r/min though the ignition cut-off circuit is effective, which may possibly cause engine damage. Do not run the engine without load over 12 900 r/min at anytime.

IMMOBILIZER (Except for E-03, 28, 33)

DESCRIPTION

The immobilizer, an anti-theft system, is installed as a standard equipment.

The immobilizer verifies that the key ID agrees with ECM ID by means of radio communication through the immobilizer antenna. When the ID agreement is verified, the system makes the engine ready to start.

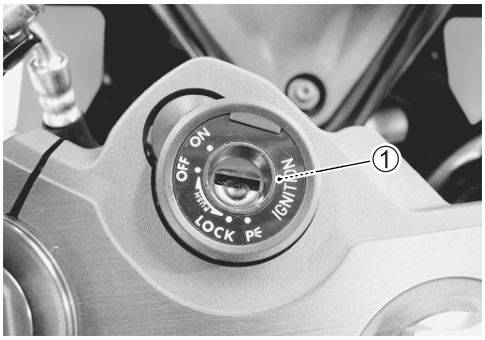

① Immobilizer antenna

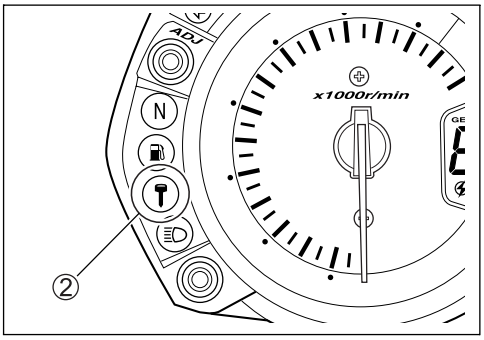

② Indicator light

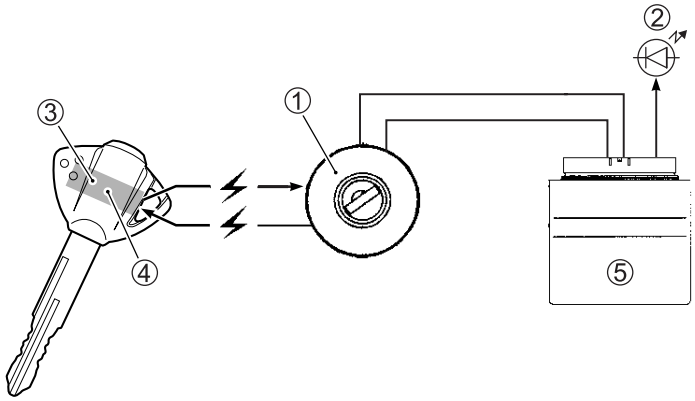

③ Transponder ④ ID ⑤ ECM

Operation

When the ignition switch is turned ON with the engine stop switch in ON, the immobi-antenna and ECM are powered ON.

The ECM transmits a signal to the transponder through the immobi-antenna in order to make comparison between the key ID and ECM ID.

With the signal received, the transponder transmits the key ID signal to ECM so that ECM can make comparison with its own ID, and if it matches, the engine is made ready to start.

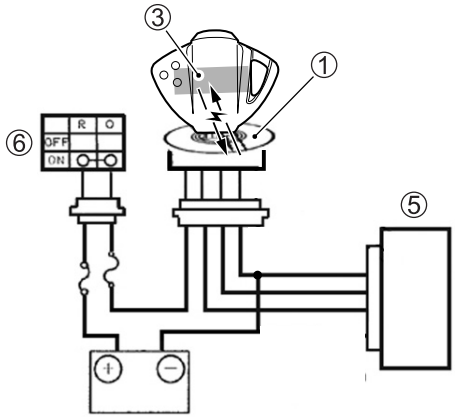

① Immobi-antenna ③ Transponder ⑤ ECM ⑥ Ignition switch

Also, when the ignition switch is turned ON, the indicator light flashes as many as the number of IDs registered in ECM. Thereafter, if the IDs are in agreement, the indicator light turns on for two seconds to notify of completion in successful communication.

If the indicator light (LED) flashes fast, it notifies of communication error or disagreement of ID.

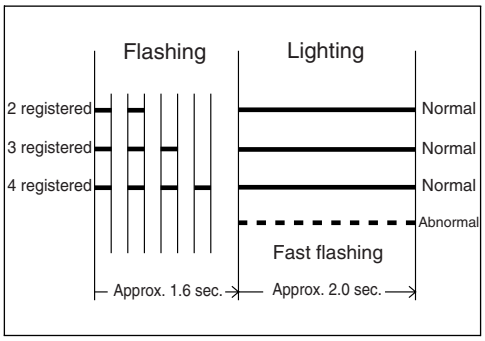

NOTE:

If the indicator light ② flashes fast, turn the ignition switch OFF then ON to make judgment again as there is possible misjudgment due to environmental radio interference.

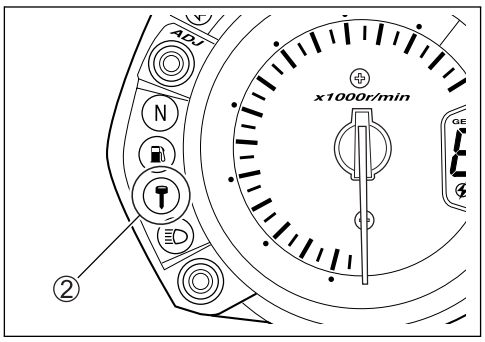

CAUTION

When the battery performance is lowered in winter (low temperature), the system may at times makes a re-judgment at the time of beginning the starter motor operation. In this case, the indicator light operation starts immediately after the starter operation.

NOTE:

In the case that the LED flashes fast, remains lit or unlit, the probable cause of such a failure may be due to abnormal condition in the key, key cylinder, wiring harness or ECM. (If such a failure exists, contact your distributor or dealer.)

TROUBLESHOOTING

No spark or poor spark

NOTE:

** Check that the transmission is in neutral and the engine stop switch is in the RUN position. Grasp the clutch lever.*

** Check that the fuse is not blown and the battery is fully-charged before diagnosing.*

Step 1

1) Check the ignition system couplers for poor connections.
   Is there connection in the ignition system couplers?

YES	Go to Step 2.
NO	Poor connection of couplers

Step 2

1) Measure the battery voltage between input lead wires at the ECM with the ignition switch in ON position. (E-02, 19, 24: O/G and B/W, E-03, 28, 33: O/W and B/W)
   Is the voltage OK?

YES	Go to Step 3.
NO	• Faulty ignition switch • Faulty turn signal/side-stand relay • Faulty engine stop switch • Broken wire harness or poor connection of related circuit couplers

Step 3

1) Measure the ignition coil primary peak voltage. (☞9-25)

NOTE:

This inspection method is applicable only with the multi circuit tester and the peak volt adaptor.

   Is the peak voltage OK?

YES	Go to Step 4.
NO	Go to Step 5.

Step 4

1) Inspect the spark plugs. (☞2-5 to -6)
   Are the spark plugs OK?

YES	Go to Step 5.
NO	Faulty spark plug(-s).

Step 5

1) Inspect the ignition coil/plug caps. (☞9-25)
   Is the ignition coil/plug cap OK?

YES	Go to Step 6.
NO	• Poor connection of the ignition coil/plug cap(-s). • Faulty ignition coil/plug cap(-s).

Step 6

1) Measure the crankshaft position sensor peak voltage and its resistance. (☞9-27)

NOTE:
The crankshaft position sensor peak voltage inspection is applicable only with the multi circuit tester and peak volt adaptor.

Is the peak voltage and resistance OK?

YES	• Faulty ECM • Open or short circuit in wire harness • Poor connection of ignition couplers
NO	• Faulty CKP sensor • Metal particles or foreign material being stuck on the CKP sensor and rotor tip

INSPECTION

IGNITION COIL PRIMARY PEAK VOLTAGE

- Remove the air cleaner box. (☞5-14)
- Disconnect all the ignition coil/plug cap lead wire couplers before removing the ignition coil/plug caps.
- Remove all of the ignition coil/plug caps.

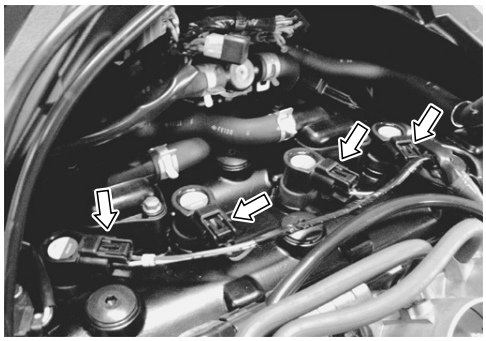

CAUTION

*** Do not remove the ignition coil/plug cap before disconnecting the lead wire coupler, or the lead wire will be damaged.**
*** Do not pry up the ignition coil/plug cap with a screwdriver or a bar to avoid damage.**
*** Be careful not to drop the ignition coil/plug cap as it may open or short in a circuit.**

- Connect the new four spark plugs to each ignition coil/plug cap.
- Connect all the ignition coil/plug cap lead wire couplers to the ignition coil/plug caps respectively, and ground them on the cylinder head (each spark plug hole).

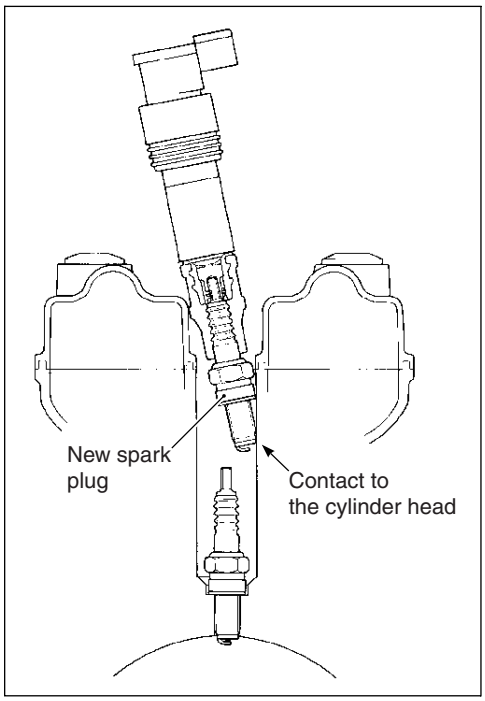

CAUTION

Avoid grounding the spark plugs and suppling the electrical shock to the cylinder head cover (magnesium parts) to prevent the magnesium material from damage.

NOTE:
Be sure that all couplers and spark plugs are connected properly and the battery used is in fully-charged condition.

Inspect each ignition coil primary peak voltage at the ignition coil/plug cap coupler.

- Connect the multi-circuit tester with peak voltage adaptor as follows.
  No.1 ignition coil/plug cap:
  W/Bl wire terminal (⊕ Probe) – Ground (⊖ Probe) terminal
  No.2 ignition coil/plug cap:
  B wire terminal (⊕ Probe) – Ground (⊖ Probe) terminal
  No.3 ignition coil/plug cap:
  Y wire terminal (⊕ Probe) – Ground (⊖ Probe) terminal
  No.4 ignition coil/plug cap:
  G wire terminal (⊕ Probe) – Ground (⊖ Probe) terminal

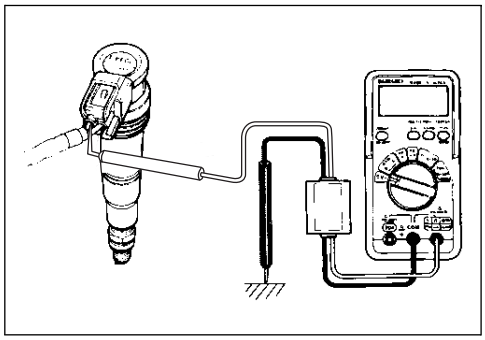

TOOL 09900-25008: Multi-circuit tester set
09900-25009: Needle pointed probe set

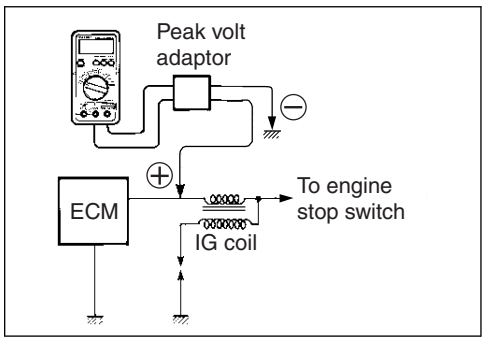

CAUTION

Before using the multi-circuit tester and peak volt adaptor, be sure to refer to the appropriate instruction manual.

NOTE:
Use the special tool, to prevent the rubber of the water proof coupler from damage.

- Shift the transmission into neutral and turn the ignition switch ON.
- Crank the engine a few seconds with the starter motor by depressing starter button and check the ignition coil primary peak voltage.
- Repeat the above inspection a few times and measure the highest peak voltage.

Tester knob indication: voltage (⎓)

DATA Ignition coil primary peak voltage: 80 V and more

⚠ WARNING

Do not touch the tester probes and spark plugs to prevent an electric shock while testing.

If the peak voltage is lower than the standard range, check the ignition coil/plug cap as follow.

IGNITION COIL/PLUG CAP RESISTANCE

- Check the ignition coil/plug cap for resistance in both primary and secondary coils. If the resistance is not within the standard range, replace the ignition coil/plug cap with a new one.

TOOL 09900-25008: Multi-circuit tester set

Tester knob indication: Resistance (Ω)

DATA Ignition coil/plug cap resistance
Primary : 1.1 – 1.9 Ω (⊕ tap – ⊖ tap)
Secondary: 10.8 – 16.2 kΩ (Plug cap – ⊖ tap)

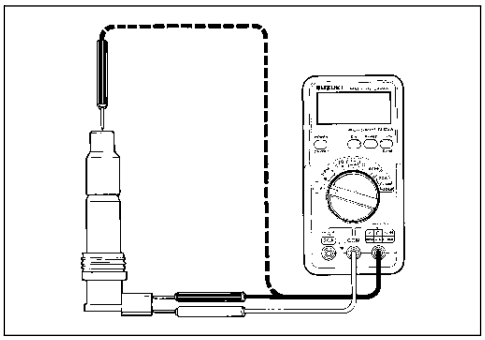

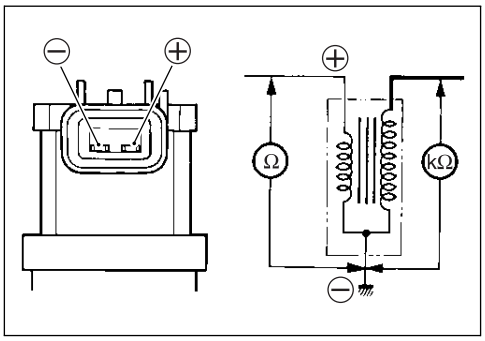

CKP SENSOR PEAK VOLTAGE

NOTE:
Be sure that all couplers are connected properly and the battery used is in fully-charged condition.

- Lift and support the fuel tank. (☞5-3)
- Disconnect the CKP sensor lead wire coupler ① and connect the multi-circuit tester with the peak volt adaptor as follows.

B wire (⊕ Probe) – G wire (⊖ Probe)

TOOL 09900-25008: Multi-circuit tester set
09900-25009: Needle pointed probe set

CAUTION

Before using the multi-circuit tester and peak volt adaptor, be sure to refer to the appropriate instruction manual.

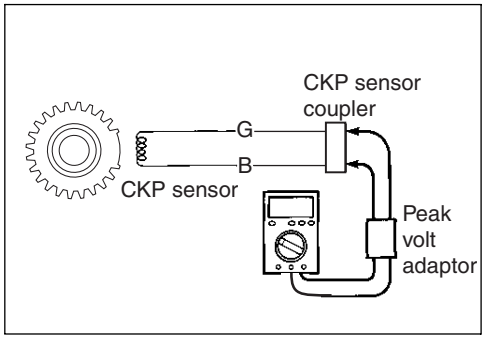

- Shift the transmission into the neutral and turn the ignition switch ON.
- Crank the engine a few seconds with the starter motor by depressing starter button and check the CKP sensor peak voltage at the CKP sensor coupler.
- Repeat the above test procedure a few times and measure the highest peak voltage.
- Measure the CKP sensor peak voltage at the ECM coupler (⑨ and ㉑ terminals). (☞4-39)

Tester knob indication: Voltage (⎓)

DATA CKP sensor peak voltage: 0.5 V and more (G – B)

If the peak voltage is lower than the standard range, check the coupler connection or replace the CKP sensor and inspect it again.

CKP SENSOR RESISTANCE

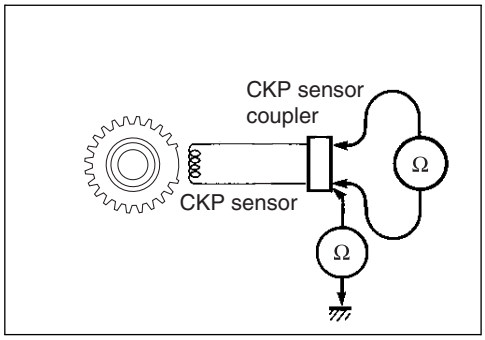

- Measure the resistance between the lead wires and ground. If the resistance is not as specified, the CKP sensor must be replaced.

TOOL 09900-25008: Multi-circuit tester set

Tester knob indication: Resistance (Ω)

DATA CKP sensor resistance:142 – 194 Ω (G – B)
∞ Ω (G – Ground)

COMBINATION METER

DESCRIPTION

This combination meter mainly consists of the stepping motor, LCD (Liquid Crystal Display) and LED (Light Emitting Diode). This combination meter is light, thin and of high response compared to those currently in use because of this composition.

The rpm pointer is driven by the stepping motor.

The LCDs indicate Speed, Odo/Trip1/Trip2/Clock/Fuel reserve's trip and Engine coolant temp./FI (DTC) respectively.

LED (Light Emitting Diode)

LED is used for the illumination light and each indicator light.

LED is maintenance free. LED is less electric-power consuming and stronger to vibration resistance compared to the bulb.

Engine revolution indicator lamp

This speedometer is equipped the engine revolution indicator lamp. The engine revolution indicator lamp is adjustable from 5 000 – 13 750 r/min. (from 5 000 r/min to 10 000 r/min, every 250 r/min and 10 000 r/min to 13 750 r/min, every 50 r/min: Initial setting: 11 000 r/min)

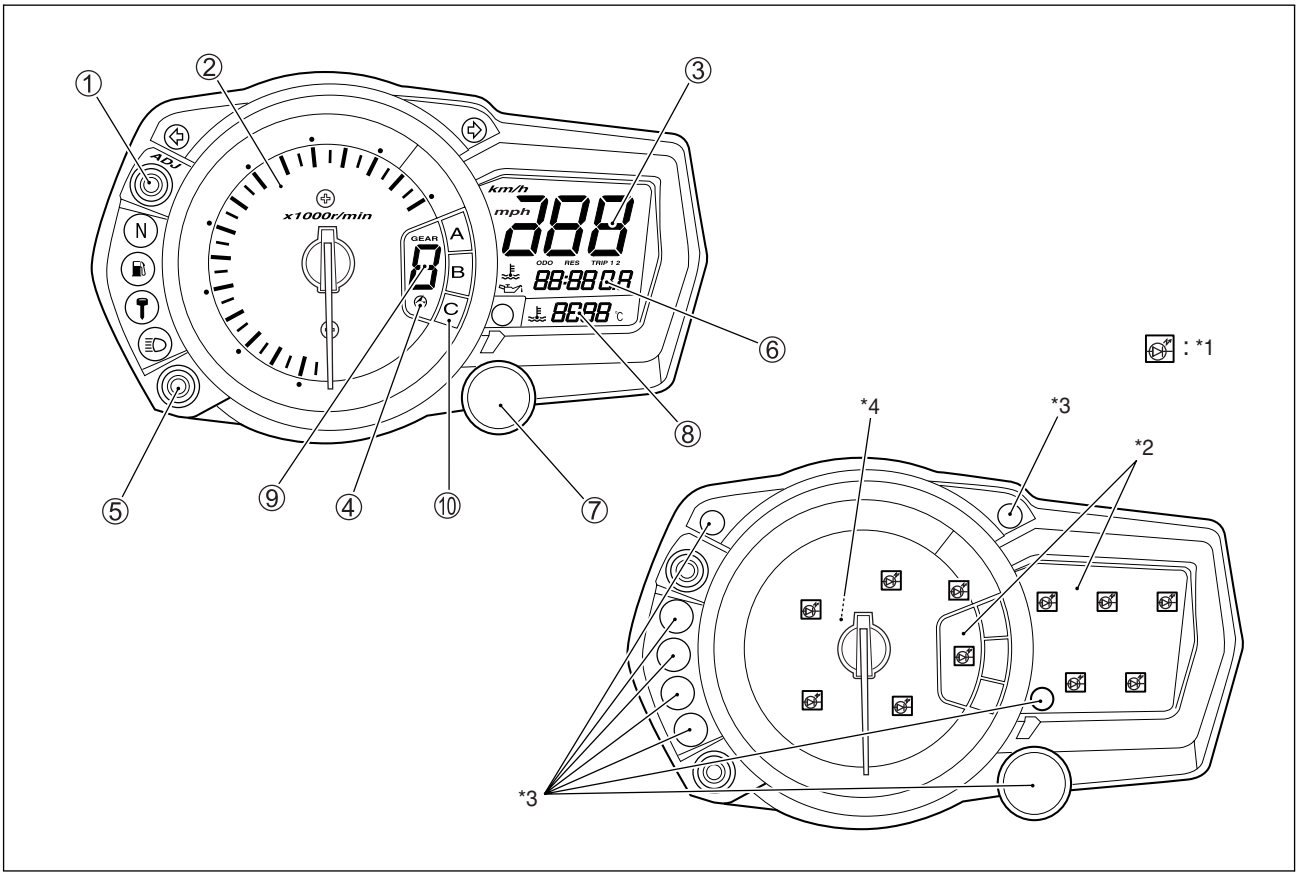

①	Adjust switch (Trip/Clock/Engine revolution)	⑧	Engine coolant temperature/FI (DTC)
②	Tachometer	⑨	Gear position indicator
③	Speedometer	⑩	Driving mode indicator
④	Engine revolution indicator	*1	LED (Combination meter light)
⑤	Select switch	*2	LCD
⑥	Odo/Trip 1/Trip 2/Clock/Fuel reserve's trip	*3	LED
⑦	Engine revolution indicator light	*4	Stepping motor

REMOVAL AND DISASSEMBLY

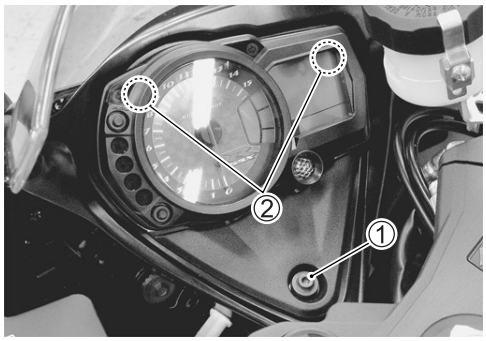

- Remove the screw ①.
- With the hooked parts ② behind the combination meter pulled from the cowling brace, disconnect the combination meter lead wire coupler.
- Remove the combination meter.

CAUTION

When disconnecting and reconnecting the combination meter coupler, make sure to turn OFF the ignition switch, or electronic parts may get damaged.

- Disassemble the combination meter as follows.

CAUTION

Do not attempt to disassemble the combination meter unit ②.

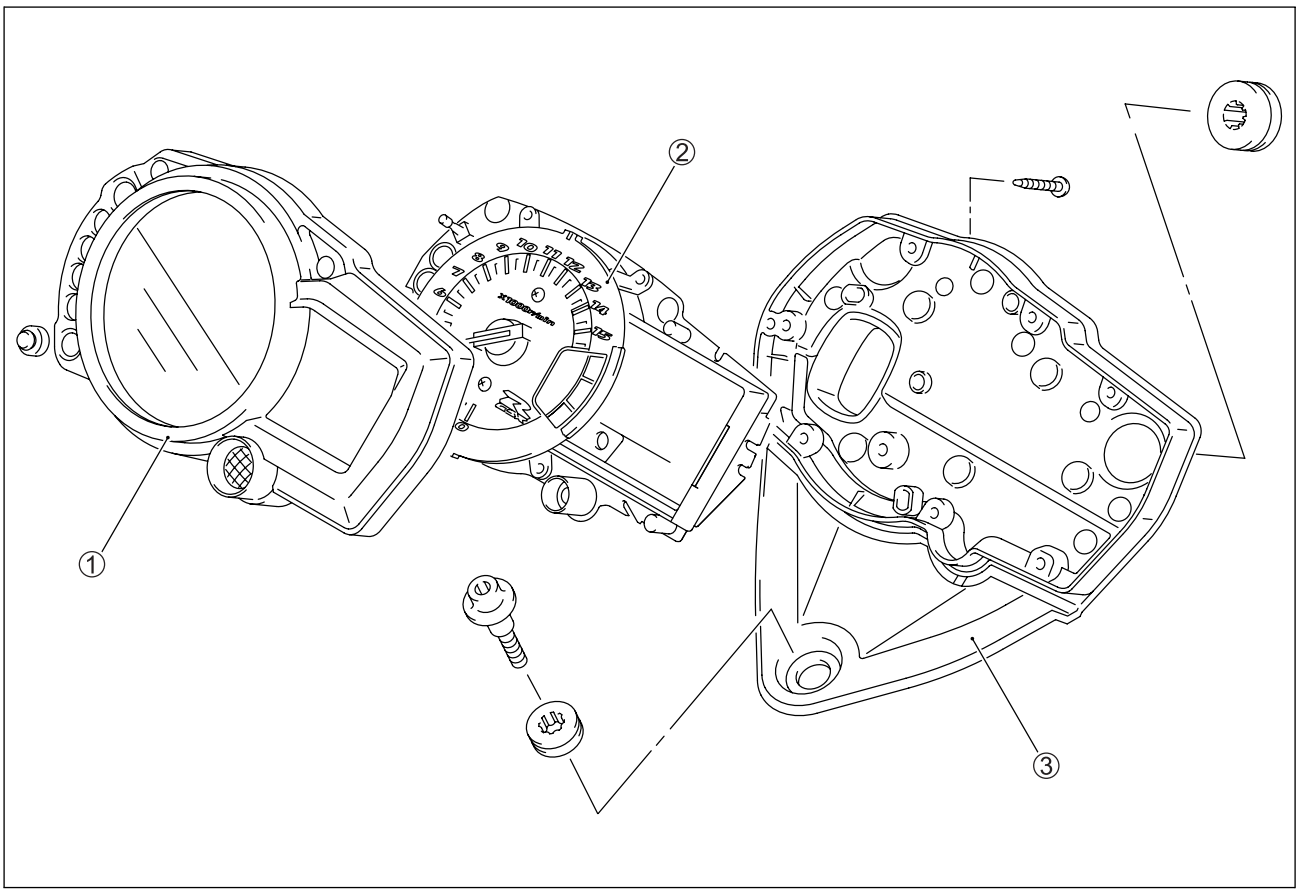

①	Combination meter cover	③	Combination meter case
②	Combination meter unit		

INSPECTION

LED (LIGHT EMITTING DIODE)

Check that the LED lights [FI light, Fuel level indicator light, Engine revolution indicator lamp and immobilizer indicator light (For E-02, 19, 24)] immediately after turning the ignition switch ON. Also, other LED lights (Neutral indicator light, High-beam indicator light and Turn signal indicator light) can be checked by depending on each switch position.

If the LED fails in operation, replace the combination meter unit with a new one after checking its wire harness/coupler.

STEPPING MOTOR

Check that the pointer calibrates itself immediately after turning the ignition switch ON and stops at zero point.

If abnormal condition is found, replace the combination meter unit with a new one after checking its wire harness/coupler.

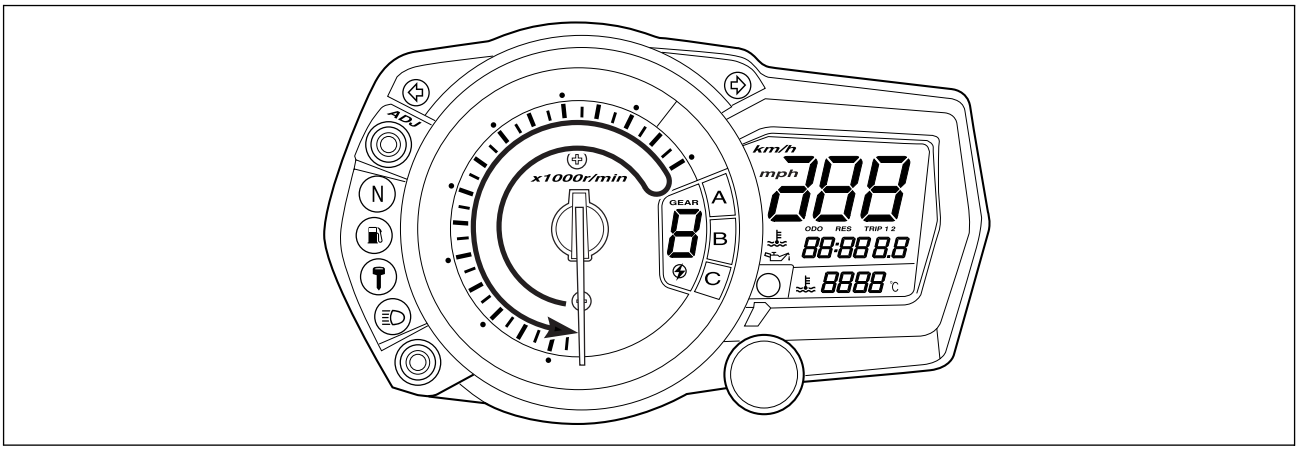

NOTE:

The pointer may not return to the proper position even turning the ignition switch ON *under low temperature condition. In that case, you can reset the pointer to the proper position by following the instruction below:*

1) With the adjuster switch Ⓐ pressed, turn the ignition switch ON.
2) Release the adjuster switch Ⓐ, 3 to 5 seconds after turning the ignition switch ON.
3) Press the adjuster switch Ⓐ twice (within 1 second). →Reset

* Complete the operation within 10 seconds after the ignition switch has been turned ON.

Time	Ignition switch	Adjuster switch Ⓐ
	OFF	PUSH
0	ON	
• •		
3 sec. • 5 sec.		Release
• • • •		Push Push→Reset
10 sec.		

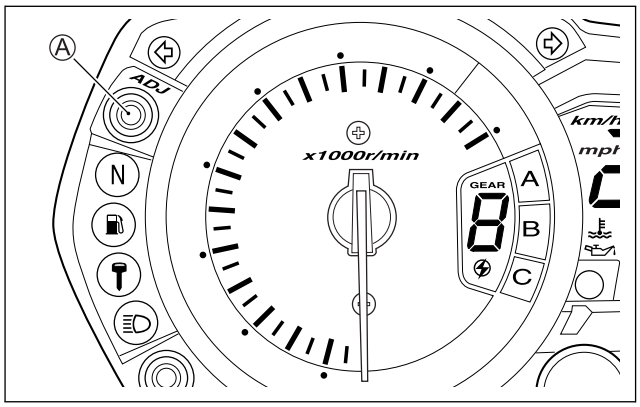

Pointer will return to the starting point right after the completion of the operation. In the case of the pointer not returning to the proper position after doing above, replace the combination meter unit.

ENGINE COOLANT TEMPERATURE METER AND INDICATOR

ECT sensor inspection (☞7-7 to -8)

- Lift and support the fuel tank. (☞5-3)
- Disconnect the ECT sensor coupler ①.

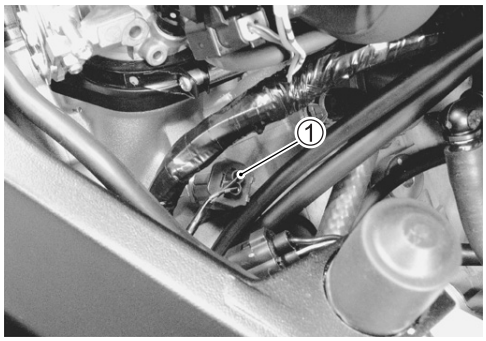

CAUTION

When connecting and disconnecting the engine coolant temperature sensor lead wire coupler, make sure to turn OFF the ignition switch, or electronic parts may get damaged.

- Connect the variable resistor Ⓐ between the terminals.
- Disconnect the oil pressure switch lead wire from the oil pressure switch.

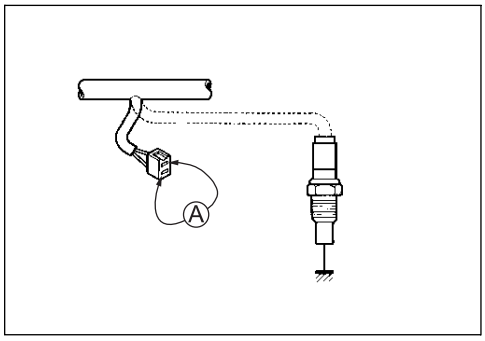

NOTE:
Leave the oil pressure switch lead wire open.

- Turn the ignition switch ON.
- Check the LCD and LED operations when the resistance is adjusted to the specified values.

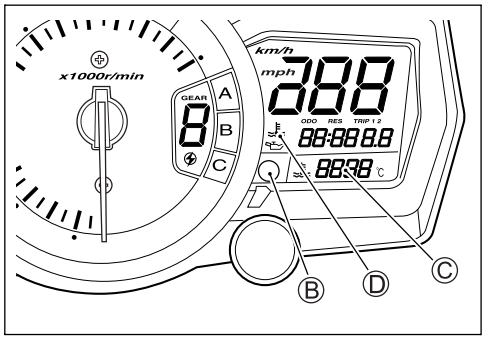

Resistance Ⓐ	LED Ⓑ	LCD Ⓒ	LCD Ⓓ	Water temperature
2.45 kΩ and over	OFF	"---"	—	19 °C (67 °F) and below
Approx. 0.811 kΩ	OFF	"50"	—	Approx. 50 °C (122 °F)
Approx. 0.1 kΩ ON	ON	"120" – "139"	Flicker	120 – 139 °C (248 – 282 °C)
0 Ω (Jumper wire)	ON	"HI"	Flicker	140 °C (283 °F) and over

If either one or all indications are abnormal, replace the combination meter with a new one.

NOTE:
If the engine stop switch is turned OFF or side-stand/ignition inter-lock system is not working while the ignition switch is ON, the LCD displays "CHEC". But it is not a malfunction.
This condition implies that combination meter receives no signal from the ECM.
In that case, they are restored to normal indication by turning the engine stop switch to RUN position.

FUEL LEVEL GAUGE INSPECTION

- Remove the fuel pump assembly. (☞5-9)
- Measure the resistance at each fuel level gauge float position. If the resistance is incorrect, replace the fuel level gauge with a new one.

Float position	Resistance
42.3 mm (1.66 in)	179 – 185 Ω
245.4 mm (9.66 in)	3 – 5 Ω

TOOL 09900-25008: Multi-circuit tester set

Tester knob indication: Resistance (Ω)

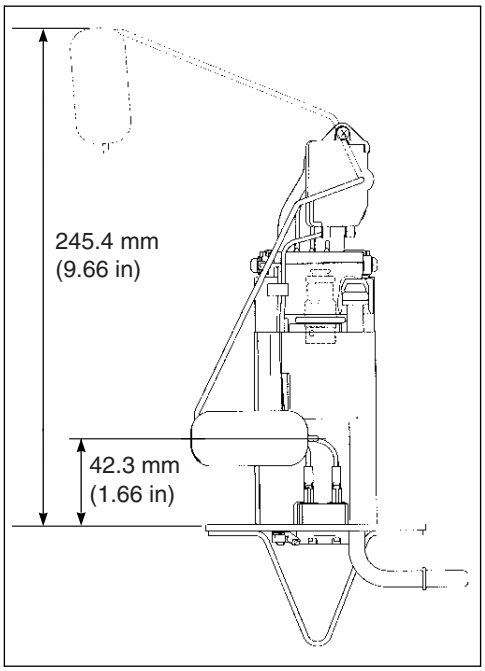

FUEL LEVEL INDICATOR LIGHT INSPECTION

If the fuel level indicator light does not function properly, check the fuel level gauge and its lead wire/coupler.

If the fuel level gauge and its lead wire/coupler are functioning properly, replace the combination meter with a new one.

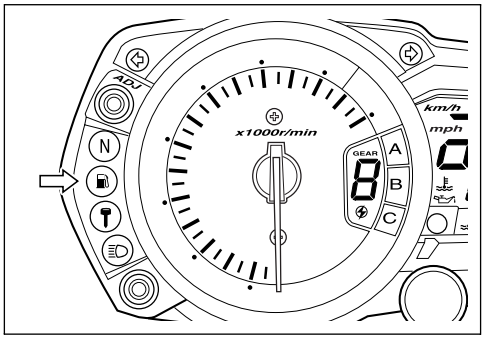

SPEEDOMETER

If the speedometer, odometer or trip meter does not function properly, inspect the speed sensor and connection of couplers. If the speed sensor and connection are functioning properly, replace the meter with a new one.

SPEED SENSOR

- Lift and support the fuel tank. (☞5-3)
- Disconnect speed sensor coupler ①.
- Remove the speed sensor ② by removing its mounting bolt.
- Connect 12 V battery, 10 kΩ resistor and the multi-circuit tester as shown in the right illustration.

TOOL 09900-25008: Multi-circuit tester set

Tester knob indication: Voltage (⎓)

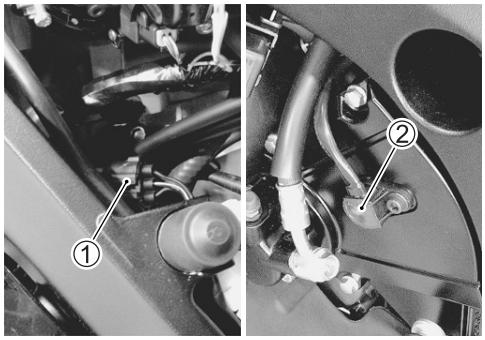

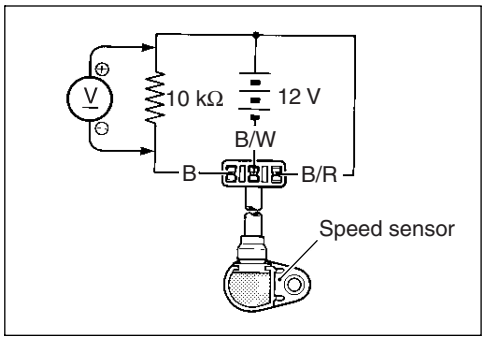

- Under above condition, if a suitable screwdriver touching the pick-up surface of the speed sensor is moved, the tester reading voltage changes (0 V→12 V or 12 V→0 V). If the tester reading voltage does not change, replace the speedometer sensor with a new one.

NOTE:
The highest voltage reading in this test will be the same as that of battery (12 V).

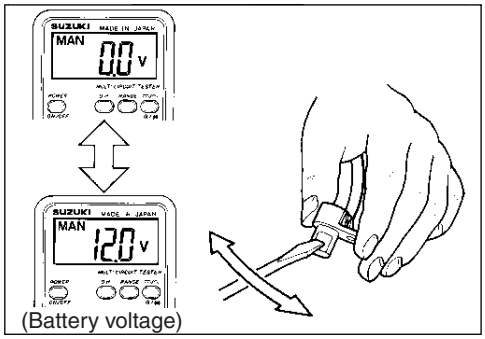

OIL PRESSURE INDICATOR

NOTE:
Before inspecting the oil pressure switch, check if the engine oil level is correct. (☞2-12)

- Remove the right under cowling. (☞8-5)
- Disconnect the oil pressure switch lead wire from the oil pressure switch.
- Turn the ignition switch ON.
- Check if the oil pressure indicator Ⓐ will light and LCD Ⓑ will flicker, when grounding the lead wire.

If any indications are abnormal, replace the combination meter with a new one after checking connection of couplers.

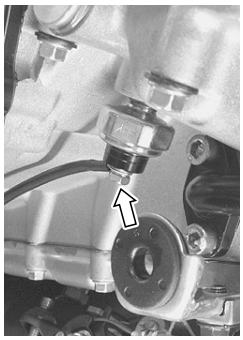

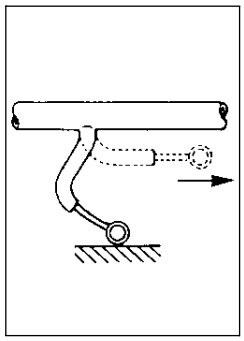

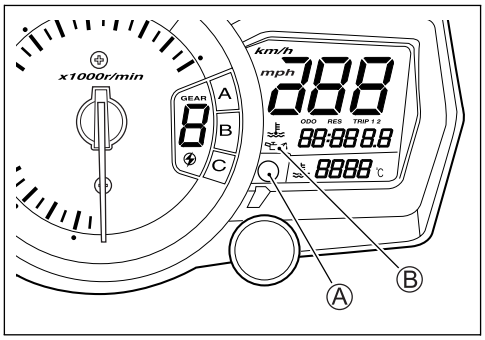

LAMPS

HEADLIGHT, BRAKE LIGHT/TAILLIGHT, LICENSE PLATE LIGHT AND TURN SIGNAL LIGHT

HEADLIGHT
12 V 55 W H7 ①
12 V 65 W H9 ②

POSITION LIGHT ③
12 V 5 W

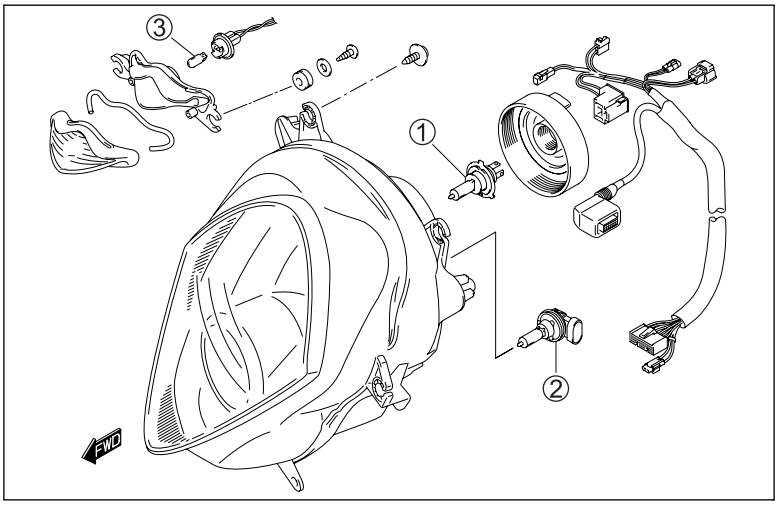

BRAKE LIGHT/TAILLIGHT
LED

LICENCE PLATE LIGHT ④
12 V 5 W

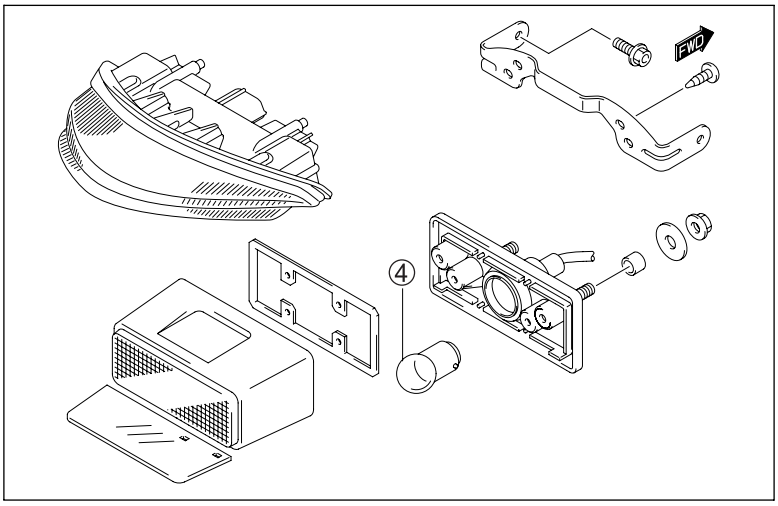

TURN SIGNAL LIGHT ⑤
12 V 21 W × 4

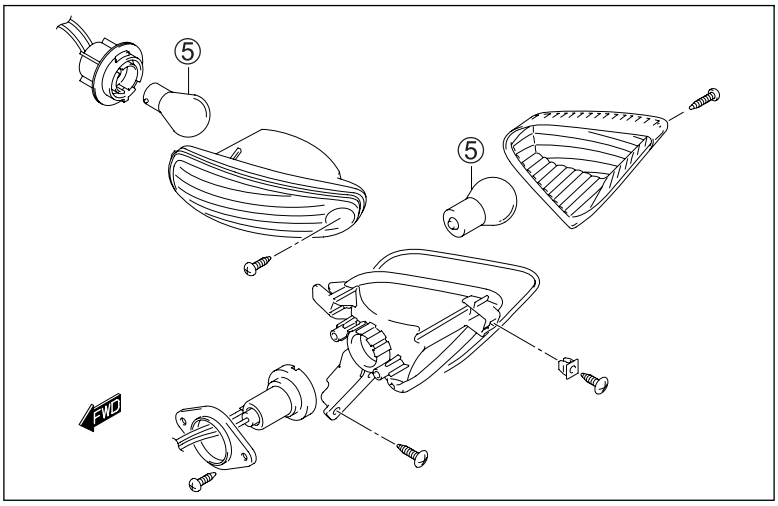

CAUTION

If you have touched and the bulb with your bare hands, clean it with a cloth moistened with alcohol or soapy water to maintain lens clarity.

HEADLIGHT BEAM ADJUSTMENT

- Adjust the headlight beam.

NOTE:

** Use a screw driver ⊕ for adjuster Ⓐ and Ⓑ.*

** To adjust the headlight beam, adjust the beam horizontally first, then adjust vertically.*

Ⓐ: Horizontal adjuster

Ⓑ: Vertical adjuster

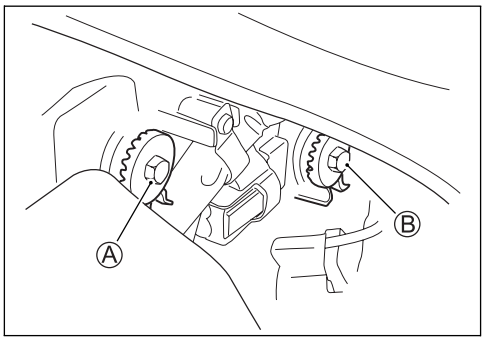

RELAYS

TURN SIGNAL/SIDE-STAND RELAY

The turn signal/side-stand relay is composed of the turn signal relay, side-stand relay and diode.

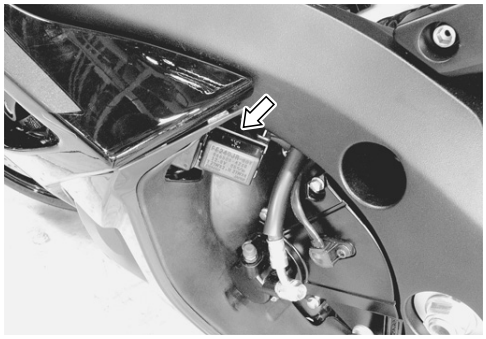

INSPECTION

Before removing the turn signal/side-stand relay, check the operation of the turn signal light.

If the turn signal light does not illuminate, inspect the bulb, turn signal switch and circuit connection.

If the bulb, turn signal switch and circuit connection are OK, the turn signal relay may be faulty. In this case, replace the turn signal/side-stand relay with a new one.

NOTE:

** Make sure that the battery is fully charged.*

** Refer to the page 9-19 for the side-stand relay and diode inspection.*

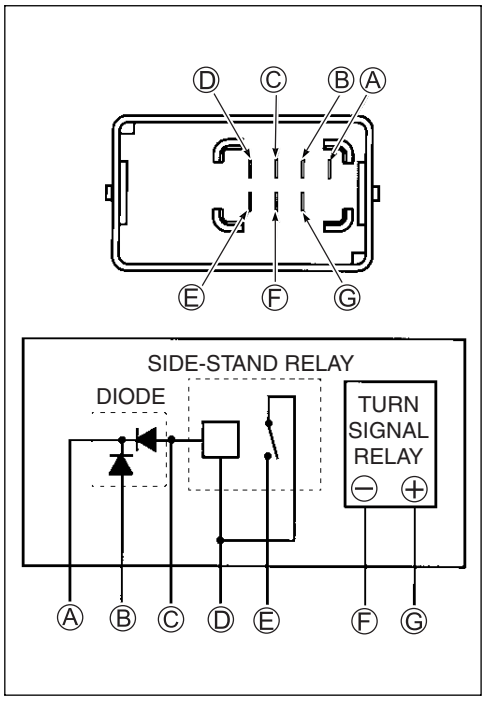

STARTER RELAY

☞9-16

FUEL PUMP RELAY

☞5-7

COOLING FAN RELAY

☞7-7

SWITCH

IGNITION SWITCH REMOVAL

- Remove the air cleaner box. (☞5-14)
- Disconnect the ignition switch lead wire coupler (Green) ①.
- Disconnect the immobilizer lead wire coupler (Black) ②. (For E-02, 19, 24)
- Remove the cable guide ③.

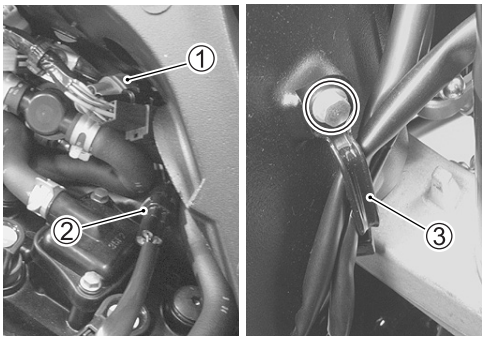

- Remove the steering upper bracket. (☞8-33)
- Using a center punch, remove the ignition switch mounting bolts.
- Remove the ignition switch ④.

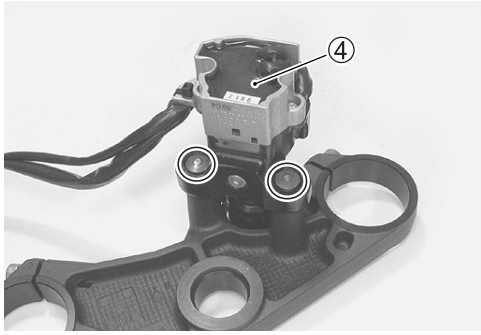

IGNITION SWITCH INSTALLATION

Install the ignition switch in the reverse order of removal. Pay attention to the following points:

- Install the ignition switch and new bolts.
- Tighten each bolt until its head is broken off.

NOTE:
The spare ignition switch comes equipped with the special bolts, however, the bolts are also individually available as spare parts.

- Install the steering upper bracket. (☞8-36)

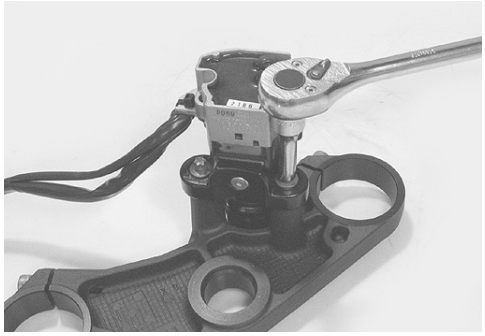

DRIVING MODE SWITCH

DESCRIPTION

Engine power characteristics can be changed in 3 modes by operating the driving mode switch to meet various riding conditions and rider's preference.

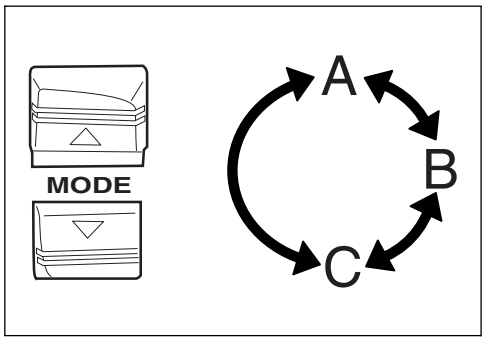

OPERATION

Driving mode is preset at A-mode when the ignition switch and engine stop switch are turned ON. At this time, the driving mode indicator shows nothing. Follow the procedure below to operate the driving mode switch.

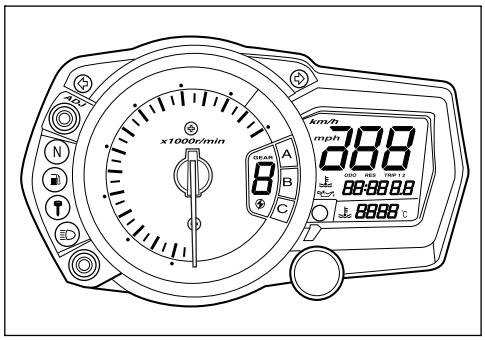

1) Turn on the ignition switch and engine stop switch.
2) Start the engine.
3) Push the driving mode switch for 2 seconds until the driving mode indicator shows A.
4) Push the driving mode switch to change driving mode. Pushing the upper part can change from A to C to B to A. Pushing the lower part can change from A to B to C to A. The driving mode indicator indicates actual driving mode.

NOTE:

* *Operating the driving mode while riding may cause unexpected engine speed change or engine power fluctuation. Stop the motorcycle when operating the driving mode.*
* *The driving mode indicator blinks when driving mode change operation is failed.*
* *Turning off the ignition switch or engine stop switch will return the driving mode to A-mode. Start the engine and reset the driving mode.*

DRIVING MODE

A-mode

A-mode provides sharp throttle response at all throttle opening range to obtain maximum engine power.

B-mode

B-mode provides softer throttle response than A-mode up to middle throttle opening range.

C-mode

C-mode provides soft throttle response at all throttle opening range by reducing engine power.

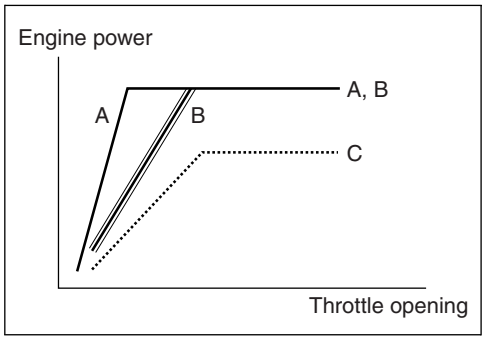

INSPECTION

1) Set up the SDS tool. (Refer to the SDS operation manual for further details.)
2) Turn the ignition switch ON.
3) Click “Data monitor”.
4) Make sure each of “Driving mode selection” on the monitor is indicated “Open”.

Item	Value	Unit
☐ Gear position	N	
☐ Driving mode selection 1	Open	
☐ Driving mode selection 2	Open	
☐ Engine coolant / oil tempera...	55.0	°C

5) Push each of driving mode switch ① and ② (UP and DOWN). At this time, if the indication is changed to “GND”, the function is normal.

Item	Value	Unit
☐ Gear position	N	
☐ Driving mode selection 1	GND	
☐ Driving mode selection 2	Open	
☐ Engine coolant / oil tempera...	55.0	°C

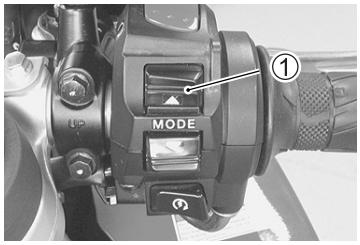

Item	Value	Unit
☐ Gear position	N	
☐ Driving mode selection 1	Open	
☐ Driving mode selection 2	GND	
☐ Engine coolant / oil tempera...	55.0	°C

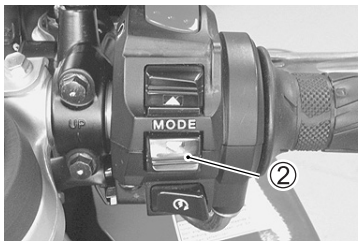

SWITCH INSPECTION

Inspect each switch for continuity with a tester. If any abnormality is found, replace the respective switch assemblies with new ones.

HAZARD SWITCH

Color / Position	B	Lbl	Lg
• (OFF)			
⚠ (ON)	○	○	○

IGNITION SWITCH (For E-02, 19, 24)

Color / Position	R	O	Gr	Br
ON	○	○	○	○
OFF				
LOCK				
P	○			○

IGNITION SWITCH (For E-03, 28, 33)

Color / Position	R	O	O/Y	Gr	Br
ON	○	○	○	○	○
OFF					
LOCK					
P	○				○

DIMMER SWITCH

Color / Position	W	Y	O
HI		○	○
LO	○		○

TURN SIGNAL SWITCH

Color / Position	Lg	Lbl	B
L		○	○
PUSH			
R	○	○	

PASSING LIGHT SWITCH

Color / Position	O	Y
•		
PUSH	○	○

ENGINE STOP SWITCH

Color / Position	O/B	O/W
OFF		
RUN	○	○

STARTER BUTTON

Color / Position	O/W	Y/G	O/R	Y/W
•			○	○
PUSH	○	○		

HORN BUTTON

Color / Position	B/Bl	B/W
•		
PUSH	○	○

FRONT BRAKE SWITCH

Color / Position	B/R	B/Bl
OFF		
ON	○	○

REAR BRAKE SWITCH

Color / Position	O	W/B
OFF		
ON	○	○

CLUTCH SWITCH

Color / Position	B/W	B/Y
OFF		
ON	○	○

OIL PRESSURE SWITCH

Color / Position	G/Y	Ground
ON (engine is at stop)	○	○
OFF (engine is running)		

NOTE:
Before inspecting the oil pressure switch, check if the engine oil level is correct. (☞ 2-12)

WIRE COLOR

B : Black
Br : Brown
Gr : Gray
Lbl : Light blue
Lg : Light green
O : Orange
R : Red
W : White
Y : Yellow
B/Bl : Black with Blue tracer
B/R : Black with Red tracer
B/W : Black with White tracer
B/Y : Black with Yellow tracer
G/Y : Green with Yellow tracer
O/B : Orange with Black tracer
O/R : Orange with Red tracer
O/W : Orange with White tracer
O/Y : Orange with Yellow tracer
W/B : White with Black tracer
Y/G : Yellow with Green tracer
Y/W : Yellow with White tracer

BATTERY

SPECIFICATIONS

Type designation	FT12A-BS
Capacity	12 V, 36 kC (10 Ah)/10 HR

① Upper cover breather
② Cathode plates
③ Stopper
④ Filter
⑤ Terminal
⑥ Safety valve
⑦ Anode plates
⑧ Separator (Fiberglass plate)

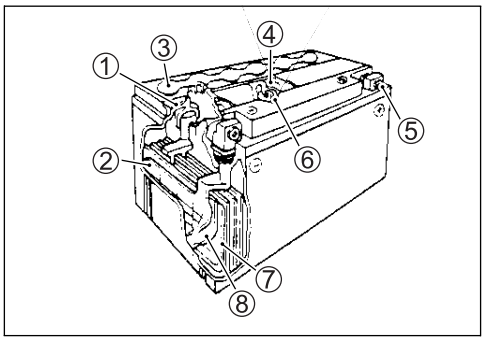

INITIAL CHARGING

Filling electrolyte

- Remove the aluminum tape ① sealing the battery electrolyte filler holes Ⓐ.

NOTE:
When filling electrolyte, the battery must be removed from the vehicle and must be put on the level ground.

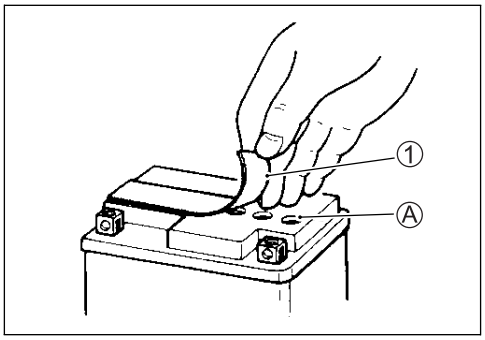

- Remove the caps ②.

NOTE:
** After filling the electrolyte completely, use the removed cap ② as sealing caps of battery-filler holes.*
** Do not remove or pierce the sealed areas ③ of the electrolyte container.*

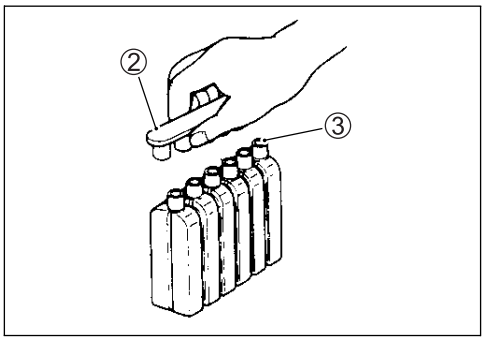

- Insert the nozzles of the electrolyte container ④ into the battery's electrolyte filler holes, holding the container firmly so that it does not fall. Take precaution not to allow any of the fluid to spill.

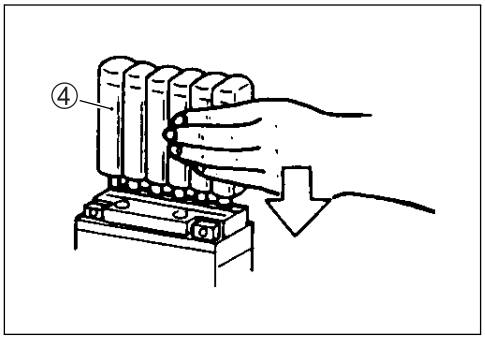

- Make sure air bubbles ⑤ are coming up each electrolyte container, and leave in this position for about more than 20 minutes.

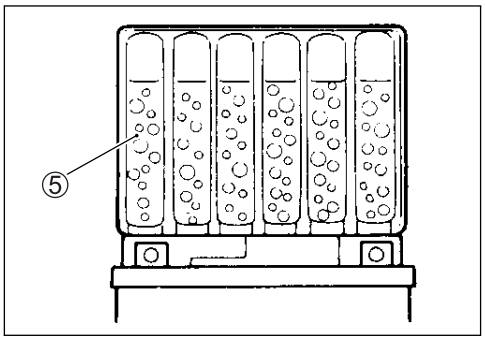

NOTE:
If no air bubbles are coming up from a filler port, tap the bottom of the electrolyte container two or three times.
Never remove the container from the battery.

- After confirming that the electrolyte has entered the battery completely, remove the electrolyte containers from the battery. Wait for about 20 minutes.

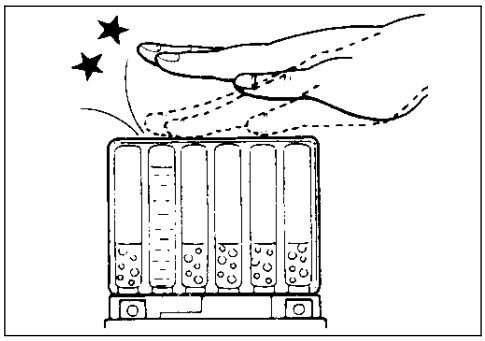

- Insert the caps ⑥ into the filler holes, pressing in firmly so that the top of the caps do not protrude above the upper surface of the battery's top cover.

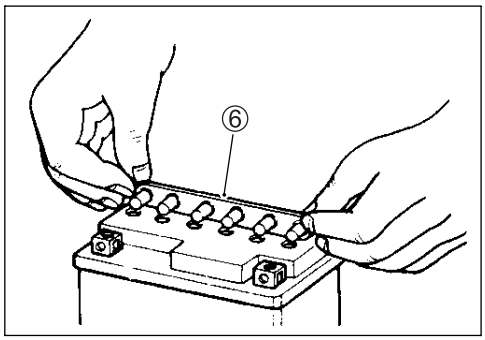

CAUTION

*** Never use anything except the specified battery.**
*** Once the caps have been installed to the battery, do not remove the caps.**
*** Do not tap the caps with a tool such as hammer when installing them.**

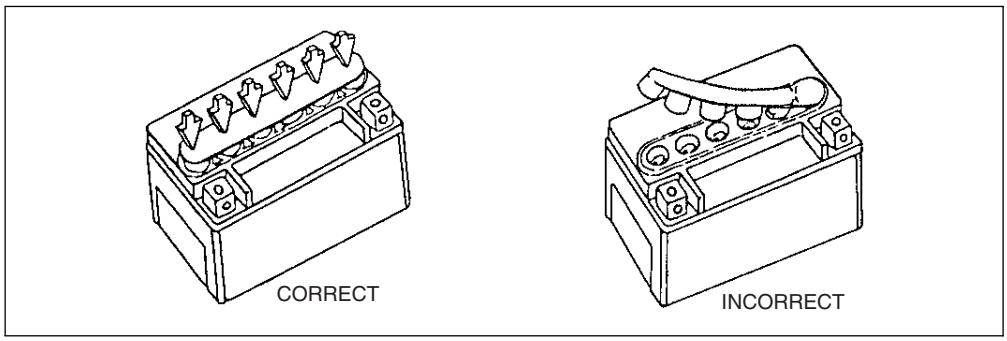

For initial charging, use the charger specially designed for MF battery.

CAUTION

*** For charging the battery, make sure to use the charger specially designed for MF battery. Otherwise, the battery may be overcharged resulting in shortened service life.**
*** Do not remove the cap during charging.**
*** Position the battery with the cap facing upward during charging.**

SERVICING

Visually inspect the surface of the battery container. If any signs of cracking or electrolyte leakage from the sides of the battery have occurred, replace the battery with a new one. If the battery terminals are found to be coated with rust or an acidic white powdery substance, clean the battery terminals with sandpaper.

RECHARGING OPERATION

- Using the multi circuit tester, check the battery voltage. If the voltage reading is the 12.0 V (DC) and less, recharge the battery with a battery charger.

Ⓐ Charging period
Ⓑ Stop charging

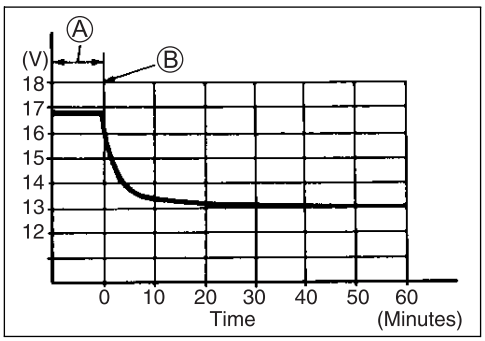

CAUTION

*** When recharging the battery, remove the battery from the motorcycle.**
*** Do not remove the caps on the battery top while recharging.**

Recharging time: 5 A for 1 hour or 1.2 A for 5 to 10 hours

CAUTION

Be careful not to permit the charging current to exceed 5 A at any time.

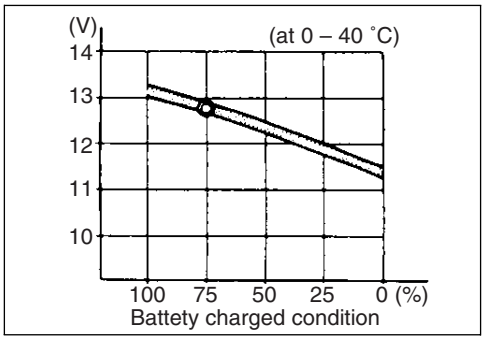

- After recharging, wait for 30 minutes and more and check the battery voltage with a multi circuit tester.
- If the battery voltage is the 12.5 V and less, recharge the battery again.
- If battery voltage is still 12.5 V and less, after recharging, replace the battery with a new one.
- When the motorcycle is not used for a long period, check the battery every 1 month to prevent the battery discharge.

SERVICING INFORMATION

CONTENTS

TROUBLESHOOTING 10- 3
FI SYSTEM MALFUNCTION CODE AND DEFECTIVE CONDITION 10- 3
ENGINE 10- 3
RADIATOR (COOLING SYSTEM) 10- 9
CHASSIS 10-10
BRAKES 10-11
ELECTRICAL 10-12
BATTERY 10-13
WIRING HARNESS, CABLE AND HOSE ROUTING 10-14
WIRING HARNESS ROUTING 10-14
THROTTLE CABLE ROUTING 10-17
THROTTLE BODY HOSE ROUTING 10-18
FUEL TANK DRAIN HOSE ROUTING 10-19
COOLING SYSTEM HOSE ROUTING 10-20
FRONT BRAKE HOSE ROUTING 10-21
REAR BRAKE HOSE ROUTING 10-22
CLUTCH HOSE ROUTING 10-23
PAIR (AIR SUPPLY) SYSTEM HOSE ROUTING 10-24
FUEL TANK INSTALLATION 10-25
FUEL TANK LOWER SIDE COVER CUSHION RUBBER/ FASTENER INSTALLATION 10-26
AIR INTAKE COVER CUSHION RUBBER INSTALLATION 10-26
BODY COWLING CUSHION RUBBER INSTALLATION 10-27
UNDER COWLING HEAT SHIELD INSTALLATION 10-27
FUEL TANK HEAT SHIELD AND FUEL TANK BRACKET CUSHION INSTALLATION 10-28
FUEL TANK COVER CUSHION/VELCRO FASTENING INSTALLATION 10-28
COWLING INSTALLATION 10-29
FRAME COVER INSTALLATION 10-30
SEAT LOCK CABLE ROUTING 10-30
FRONT FENDER INSTALLATION 10-31
REAR FENDER INSTALLATION 10-32
SIDE-STAND INSTALLATION 10-33
GEARSHIFT PEDAL INSTALLATION 10-34
FRONT FOOTREST INSTALLATION 10-35
PILLION FOOTREST INSTALLATION 10-36

SERVICING INFORMATION

CONTENTS

REAR VIEW MIRROR INSTALLATION 10-37
REAR COMBINATION LIGHT INSTALLATION 10-38
REAR COMBINATION LIGHT CUSHION/FASTENER INSTALLATION 10-39
REGULATOR/RECTIFIER INSTALLATION 10-40
SPECIAL TOOLS 10-41
TIGHTENING TORQUE 10-45
ENGINE 10-45
FI SYSTEM AND INTAKE AIR SYSTEM 10-46
COOLING SYSTEM 10-46
CHASSIS 10-47
TIGHTENING TORQUE CHART 10-48
SERVICE DATA 10-49

TROUBLESHOOTING

FI SYSTEM MALFUNCTION CODE AND DEFECTIVE CONDITION

(☞4-30 to -35)

ENGINE

Complaint	Symptom and possible causes	Remedy
Engine will not start or is hard to start.	**Compression too low**	
	1. Valve clearance out of adjustment	Adjust.
	2. Worn valve guides or poor seating of valves	Repair or replace.
	3. Mistiming valves	Adjust.
	4. Excessively worn piston rings	Replace.
	5. Worn-down cylinder bores	Replace.
	6. Too slowly starter motor cranks	See electrical section.
	7. Poor seating of spark plugs	Retighten.
	Plug not sparking	
	1. Fouled spark plugs	Clean.
	2. Wet spark plugs	Clean and dry.
	3. Defective ignition coil	Replace.
	4. Defective CKP sensor	Replace.
	5. Defective ECM	Replace.
	6. Open-circuited wiring connections	Repair or replace.
	No fuel reaching the intake manifold	
	1. Clogged fuel filter or fuel hose	Clean or replace.
	2. Defective fuel pump	Replace.
	3. Defective fuel pressure regulator	Replace.
	4. Defective fuel injector	Replace.
	5. Defective fuel pump relay	Replace.
	6. Defective ECM	Replace.
	7. Open-circuited wiring connections	Check and repair.
	Incorrect fuel/air mixture	
	1. TP sensor out of adjustment	Adjust.
	2. Defective fuel pump	Replace.
	3. Defective fuel pressure regulator	Replace.
	4. Defective TP sensor	Replace.
	5. Defective CKP sensor	Replace.
	6. Defective IAP sensor	Replace.
	7. Defective ECM	Replace.
	8. Defective ECT sensor	Replace.
	9. Defective IAT sensor	Replace.
	10. Defective AP sensor	Replace.
	11. Clogged ISC valve air passage way	Repair or replace.

Complaint	Symptom and possible causes	Remedy
Engine idles poorly.	1. Valve clearance out of adjustment	Adjust.
	2. Poor seating of valves	Replace or repair.
	3. Defective valve guides	Replace.
	4. Worn down camshafts	Replace.
	5. Too wide spark plug gaps	Adjust or replace.
	6. Defective ignition coil/plug caps	Replace.
	7. Defective CKP sensor	Replace.
	8. Defective ECM	Replace.
	9. Defective TP sensor	Replace.
	10. Defective fuel pump	Replace.
	11. Imbalanced throttle valve	Adjust.
	12. Damaged or cracked vacuum hose	Replace.
	13. Damaged or clogged ISC valve	Replace or repair.
	14. ISC bad learning	Reset learned value.
Engine stalls often.	**Incorrect fuel/air mixture**	
	1. Defective IAP sensor or circuit	Repair or replace.
	2. Clogged fuel filter	Clean or replace.
	3. Defective fuel pump	Replace.
	4. Defective fuel pressure regulator	Replace.
	5. Defective ECT sensor	Replace.
	6. Defective thermostat	Replace.
	7. Defective IAT sensor	Replace.
	8. Damaged or cracked vacuum hose	Replace.
	9. Damaged or clogged ISC valve	Replace or repair.
	Fuel injector improperly operating	
	1. Defective fuel injectors	Replace.
	2. No injection signal from ECM	Repair or replace.
	3. Open or short circuited wiring connection	Repair or replace.
	4. Defective battery or low battery voltage	Replace or recharge.
	Control circuit or sensor improperly operating	
	1. Defective ECM	Replace.
	2. Defective fuel pressure regulator	Replace.
	3. Defective TP sensor	Replace.
	4. Defective IAT sensor	Replace.
	5. Defective CMP sensor	Replace.
	6. Defective CKP sensor	Replace.
	7. Defective ECT sensor	Replace.
	8. Defective fuel pump relay	Replace.
	9. Defective ISC valve	Replace.
	10. ISC bad learning	Reset learned value.
	Engine internal parts improperly operating	
	1. Fouled spark plugs	Clean.
	2. Defective CKP sensor or ECM	Replace.
	3. Clogged fuel hose	Clean.
	4. Out of adjustment tappet clearance	Adjust.

Complaint	Symptom and possible causes	Remedy
Noisy engine	**Excessive valve chatter**	
	1. Too large tappet clearance	Adjust.
	2. Weakened or broken valve springs	Replace.
	3. Worn tappet or cam surface	Replace.
	4. Worn and burnt camshaft journal	Replace.
	Noise seems to come from piston	
	1. Worn down pistons or cylinders	Replace.
	2. Carbon combustion chambers fouled with carbon	Clean.
	3. Worn piston pins or piston pin bore	Replace.
	4. Worn piston rings or ring grooves	Replace.
	Noise seems to come from timing chain	
	1. Stretched chain	Replace.
	2. Worn sprockets	Replace.
	3. Tension adjuster not working	Repair or replace.
	Noise seems to come from clutch	
	1. Worn splines of countershaft or hub	Replace.
	2. Worn teeth of clutch plates	Replace.
	3. Distorted clutch plates, driven and drive	Replace.
	4. Worn clutch release bearing	Replace.
	5. Weakened clutch dampers	Replace the primary driven gear.
	6. Worn clutch lifter related parts.	Replace related parts as a set.
	Noise seems to come from crankshaft	
	1. Rattling bearings due to wear	Replace.
	2. Worn and burnt big-end bearings	Replace.
	3. Worn and burnt journal bearings	Replace.
	4. Too large thrust clearance	Replace thrust bearing.
	Noise seems to come from balancer	
	1. Worn and burnt journal bearings	Replace.
	Noise seems to come from transmission	
	1. Worn or rubbing gears	Replace.
	2. Worn splines	Replace.
	3. Worn or rubbing primary gears	Replace.
	4. Worn bearings	Replace.
	Noise seems to come from water pump	
	1. Too much play on pump shaft bearing	Replace.
	2. Worn or damaged impeller shaft	Replace.
	3. Worn or damaged mechanical seal	Replace.
	4. Contact between pump case and impeller	Replace.

Complaint	Symptom and possible causes	Remedy
Engine runs poorly in high speed range.	**Defective engine internal/electrical parts**	
	1. Weakened valve springs	Replace.
	2. Worn camshafts	Replace.
	3. Valve timing out of adjustment	Adjust.
	4. Too narrow spark plug gaps	Adjust.
	5. Ignition not advanced sufficiently due to poorly working timing advance circuit	Replace ECM.
	6. Defective ignition coils	Replace.
	7. Defective CKP sensor	Replace.
	8. Defective ECM	Replace.
	9. Clogged air cleaner element	Clean.
	10. Clogged fuel hose, resulting in inadequate fuel supply to injector	Clean and prime.
	11. Defective fuel pump	Replace.
	12. Defective TP sensor	Replace.
	13. Defective STP sensor or STVA	Replace.
	Defective air flow system	
	1. Clogged air cleaner element	Replace.
	2. Defective throttle valve	Adjust or replace.
	3. Defective secondary throttle valve	Adjust or replace.
	4. Sucking air from throttle body joint	Repair or replace.
	5. Defective ECM	Replace.
	6. Imbalancing throttle valve synchronization	Adjust.
	7. Defective STP sensor or STVA	Replace.
	Defective control circuit or sensor	
	1. Low fuel pressure	Repair or replace.
	2. Defective TP sensor	Replace.
	3. Defective IAT sensor	Replace.
	4. Defective CMP sensor	Replace.
	5. Defective CKP sensor	Replace.
	6. Defective GP sensor	Replace.
	7. Defective IAP sensor	Replace.
	8. Defective ECM	Replace.
	9. TP sensor out of adjustment	Replace.
	10. Defective STP sensor and/or STVA	Replace.
	11. Defective EXCVA	Replace.

Complaint	Symptom and possible causes	Remedy
Engine lacks power.	**Defective engine internal/electrical parts**	
	1. Loss of tappet clearance	Adjust.
	2. Weakened valve springs	Replace.
	3. Valve timing out of adjustment	Adjust.
	4. Worn piston rings or cylinders	Replace.
	5. Poor seating of valves	Repair.
	6. Fouled spark plugs	Clean or replace.
	7. Incorrect spark plugs	Adjust or replace.
	8. Clogged fuel injectors	Replace.
	9. Defective secondary fuel injectors	Replace.
	10. TP sensor out of adjustment	Adjust.
	11. Clogged air cleaner element	Replace.
	12. Imbalancing throttle valve synchronization	Adjust.
	13. Sucking air from throttle valve or vacuum hose	Retighten or replace.
	14. Too much engine oil	Drain out excess oil.
	15. Defective fuel pump or ECM	Replace.
	16. Defective CKP sensor and ignition coils	Replace.
	17. Defective STP sensor or STVA	Replace.
	Defective control circuit or sensor	
	1. Low fuel pressure	Repair or replace.
	2. Defective TP sensor	Replace.
	3. Defective IAT sensor	Replace.
	4. Defective CMP sensor	Replace.
	5. Defective CKP sensor	Replace.
	6. Defective GP sensor	Replace.
	7. Defective IAP sensor	Replace.
	8. Defective ECM	Replace.
	9. Defective AP sensor	Replace.
	10. TP sensor out of adjustment	Adjust.
	11. Defective STP sensor and/or STVA	Replace.
	12. Defective EXCVA	Replace.

Complaint	Symptom and possible causes	Remedy
Engine overheats	**Defective engine internal parts**	
	1. Heavy carbon deposit on piston crowns	Clean.
	2. Not enough oil in the engine	Add oil.
	3. Defective oil pump or clogged oil circuit	Replace or clean.
	4. Sucking air from intake pipes	Retighten or replace.
	5. Use incorrect engine oil	Change.
	6. Defective cooling system	See radiator section.
	Lean fuel/air mixture	
	1. Short-circuited IAP sensor/lead wire	Repair or replace.
	2. Short-circuited IAT sensor/lead wire	Repair or replace.
	3. Sucking air from intake pipe joint	Repair or replace.
	4. Defective fuel injectors	Replace.
	5. Defective ECT sensor	Replace.
	Other factors	
	1. Ignition timing is too advanced due to defective timing advance system (ECT sensor, GP sensor, CKP sensor and ECM).	Replace.
	2. Drive chain is too tight.	Adjust.
	3. ISC bad learning	Reset learned value.
Dirty or heavy exhaust smoke	1. Too much engine oil in the engine	Check with inspection window, drain out excess oil.
	2. Worn piston rings or cylinders	Replace.
	3. Worn valve guides	Replace.
	4. Scored or scuffed cylinder walls	Replace.
	5. Worn valves stems	Replace.
	6. Defective stem seal	Replace.
	7. Worn oil ring side rails	Replace.
Slipping clutch	1. Weakened clutch springs	Replace.
	2. Worn or distorted pressure plates	Replace.
	3. Distorted clutch plates or pressure plates	Replace.
Dragging clutch	1. Some clutch spring weakened while others are not.	Replace.
	2. Distorted pressure plates or clutch plates	Replace.
Leakage of clutch fluid	1. Leakage of clutch fluid from system	Repair or replace.
Excessive clutch lever stroke	1. Air in hydraulic system	Bleed air.
Transmission will not shift.	1. Broken gearshift cam	Replace.
	2. Distorted gearshift forks	Replace.
	3. Worn gearshift pawl	Replace.
Transmission will not shift back.	1. Broken return spring on shift shaft	Replace.
	2. Rubbing or stickily shift shaft	Repair or replace.
	3. Distorted or worn gearshift forks	Replace.

Complaint	Symptom and possible causes	Remedy
Transmission jumps out of gear.	1. Worn shifting gears on driveshaft or countershaft	Replace.
	2. Distorted or worn gearshift forks	Replace.
	3. Weakened stopper spring on gearshift stopper	Replace.
	4. Worn gearshift cam plate	Replace.

RADIATOR (COOLING SYSTEM)

Complaint	Symptom and possible causes	Remedy
Engine overheats	1. Not enough engine coolant	Add coolant.
	2. Radiator core clogged with dirt or scale	Clean.
	3. Faulty cooling fan	Repair or replace.
	4. Defective cooling fan relay, or open- or short-circuited	Repair or replace.
	5. Defective ECM	Replace.
	6. Defective ECT sensor	Replace.
	7. Clogged water passage	Clean.
	8. Air trapped in the cooling circuit	Bleed air.
	9. Defective water pump	Replace.
	10. Use incorrect coolant	Replace.
	11. Defective thermostat	Replace.
	12. Damaged ISC valve	Replace.
	13. ISC bad learning	Reset learned value.
Engine overcools	1. Defective ECT sensor	Replace.
	2. Extremely cold weather	Put on the radiator cover.
	3. Defective thermostat	Replace.
	4. Defective cooling fan relay, or open- or short-circuited	Repair or replace.
	5. Defective ECM	Replace.

CHASSIS

Complaint	Symptom and possible causes	Remedy
Heavy steering	1. Overtightened steering stem nut 2. Broken bearing in steering stem 3. Distorted steering stem 4. Not enough pressure in tires 5. Defective steering damper solenoid	Adjust. Replace. Replace. Adjust. Replace.
Wobbly handlebars	1. Loss of balance between right and left front forks 2. Distorted front fork 3. Distorted front axle or crooked tire 4. Loose steering stem nut 5. Worn or incorrect tire or wrong tire pressure 6. Worn bearing/race in steering stem	Adjust. Repair or replace. Replace. Adjust. Adjust or replace. Replace.
Wobbly front wheel	1. Distorted wheel rim 2. Worn front wheel bearings 3. Defective or incorrect tire 4. Loose axle or axle pinch bolt 5. Incorrect front fork oil level 6. Incorrect front wheel weight balance	Replace. Replace. Replace. Retighten. Adjust. Adjust.
Front suspension too soft	1. Weakened springs 2. Not enough fork oil 3. Wrong weight fork oil 4. Improperly set front fork spring adjuster 5. Improperly set front fork damping force adjuster	Replace. Replenish. Replace. Adjust. Adjust.
Front suspension too stiff	1. Too viscous fork oil 2. Too much fork oil 3. Improperly set front fork spring adjuster 4. Improperly set front fork damping force adjuster 5. Bent front axle	Replace. Drain excess oil. Adjust. Adjust. Replace.
Noisy front suspen-sion	1. Not enough fork oil 2. Loose bolts on suspension	Replenish. Retighten.
Wobbly rear wheel	1. Distorted wheel rim 2. Worn rear wheel bearing or swingarm bearings 3. Defective or incorrect tire 4. Worn swingarm and rear suspension bearings 5. Loose nuts or bolts on rear suspensions	Replace. Replace. Replace. Replace. Retighten.
Rear suspension too soft	1. Weakened spring of shock absorber 2. Leakage of oil or gas shock absorber 3. Improperly set rear spring pre-load adjuster 4. Improperly set damping force adjuster	Replace. Replace. Adjust. Adjust.
Rear suspension too stiff	1. Bent shock absorber shaft 2. Bent swingarm pivot shaft 3. Worn swingarm and rear suspension bearings 4. Improperly set rear spring pre-load adjuster 5. Improperly set damping force adjuster	Replace. Replace. Replace. Adjust. Adjust.
Noisy rear suspen-sion	1. Loose nuts or bolts on rear suspension 2. Worn swingarm and suspension bearings	Retighten. Replace.

BRAKES

Complaint	Symptom and possible causes	Remedy
Insufficient brake power	1. Leakage of brake fluid from hydraulic system 2. Worn pads 3. Oil adhesion of engaging surface of pads/shoe 4. Worn disc 5. Air in hydraulic system 6. Not enough brake fluid in the reservoir	Repair or replace. Replace. Clean disc and pads. Replace. Bleed air. Replenish.
Brake squeaking	1. Carbon adhesion on pad surface 2. Tilted pad 3. Damaged wheel bearing 4. Loosen front wheel axle or rear wheel axle 5. Worn pads 6. Foreign material in brake fluid 7. Clogged return port of master cylinder	Repair surface with sandpaper. Correct pad fitting or replace. Replace. Tighten to specified torque. Replace. Replace brake fluid. Disassemble and clean master cylinder.
Excessive brake lever stroke	1. Air in hydraulic system 2. Insufficient brake fluid 3. Improper quality of brake fluid	Bleed air. Replenish fluid to specified level; bleed air. Replace with correct fluid.
Leakage of brake fluid	1. Insufficient tightening of connection joints 2. Cracked hose 3. Worn piston and/or cup	Tighten to specified torque. Replace. Replace piston and/or cup.
Brake drags	1. Rusty part 2. Insufficient brake lever or brake pedal pivot lubrication	Clean and lubricate. Lubricate.

ELECTRICAL

Complaint	Symptom and possible causes	Remedy
No sparking or poor sparking	1. Defective ignition coils 2. Defective spark plugs 3. Defective CKP sensor 4. Defective ECM 5. Defective TO sensor 6. Open-circuited wiring connections	Replace. Replace. Replace. Replace. Replace. Check and repair.
Spark plug soon become fouled with carbon.	1. Mixture too rich 2. Idling speed set too high 3. Incorrect gasoline 4. Dirty air cleaner element 5. Too cold spark plugs	Inspect FI system. Adjust fast idle or throttle stop screw. Change. Replace. Replace with hot type plug.
Spark plug become fouled too soon.	1. Worn piston rings 2. Worn piston or cylinders 3. Excessive clearance of valve stems in valve guides 4. Worn stem oil seal	Replace. Replace. Replace. Replace.
Spark plug electrodes overheat or burn	1. Too hot spark plugs 2. Overheated the engine 3. Loose spark plugs 4. Too lean mixture	Replace with cold type plugs. Tune up. Retighten. Inspect FI system.
Generator does not charge.	1. Open- or short-circuited lead wires, or loose lead connections 2. Short-circuited, grounded or open generator coil 3. Short-circuited or punctured regulator/rectifier	Repair or replace or retighten. Replace. Replace.
Generator does charge, but charging rate is below the specification.	1. Lead wires tend to get shorted or open-circuited or loosely connected at terminals. 2. Grounded or open-circuited generator coil 3. Defective regulator/rectifier 4. Defective cell plates in the battery	Repair or retighten. Replace. Replace. Replace the battery.
Generator overcharges	1. Internal short-circuit in the battery 2. Damaged or defective regulator/rectifier 3. Poorly grounded regulator/rectifier	Replace the battery. Replace. Clean and tighten ground connection.
Unstable charging	1. Lead wire insulation frayed due to vibration, resulting in intermittent short-circuiting. 2. Internally shorted generator 3. Defective regulator/rectifier	Repair or replace. Replace. Replace.
Starter button is not effective.	1. Run down battery 2. Defective switch contacts 3. Brushes not seating properly on starter motor commutator 4. Defective starter relay/starter interlock switch 5. Defective main fuse	Repair or replace. Replace. Repair or replace. Replace. Replace.

BATTERY

Complaint	Symptom and possible causes	Remedy
"Sulfation", acidic white powdery substance or spots on surface of cell plates	1. Cracked battery case 2. Battery has been left in a run-down condition for a long time.	Replace the battery. Replace the battery.
Battery runs down quickly.	1. Trouble in the charging system 2. Cell plates have lost much of their active material as a result of overcharging. 3. Internal short-circuit in the battery 4. Too low battery voltage 5. Too old battery	Check the generator, regulator/rectifier and circuit connections and make necessary adjustments to obtain specified charging operation. Replace the battery and correct the charging system. Replace the battery. Recharge the battery fully. Replace the battery.
Battery "sulfation"	1. Incorrect charging rate (When not in use batteries should be checked at least once a month to avoid sulfation.) 2. The battery was left unused in a cold climate for too long.	Replace the battery. Replace the battery if badly sulfated.

WIRING HARNESS, CABLE AND HOSE ROUTING
WIRING HARNESS ROUTING

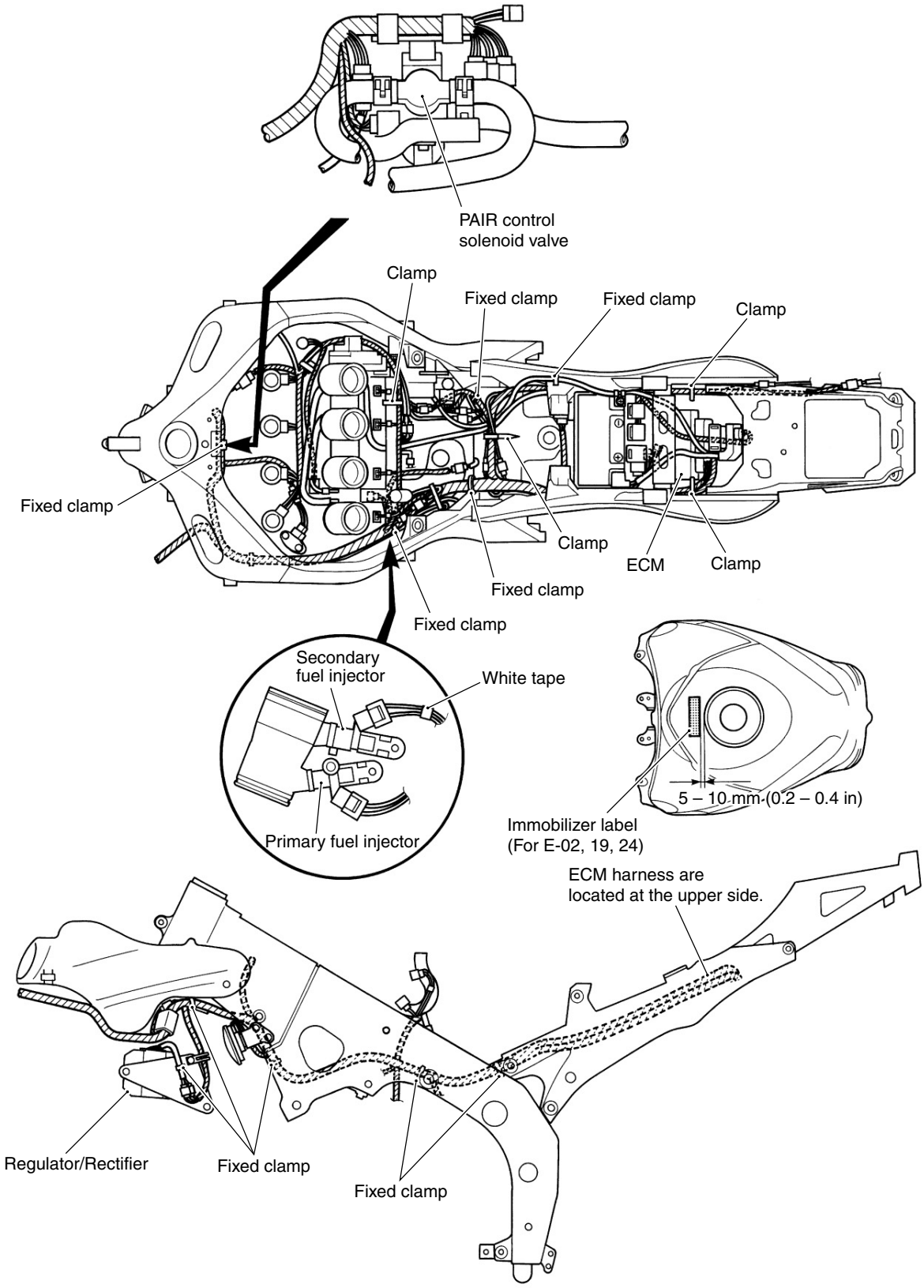

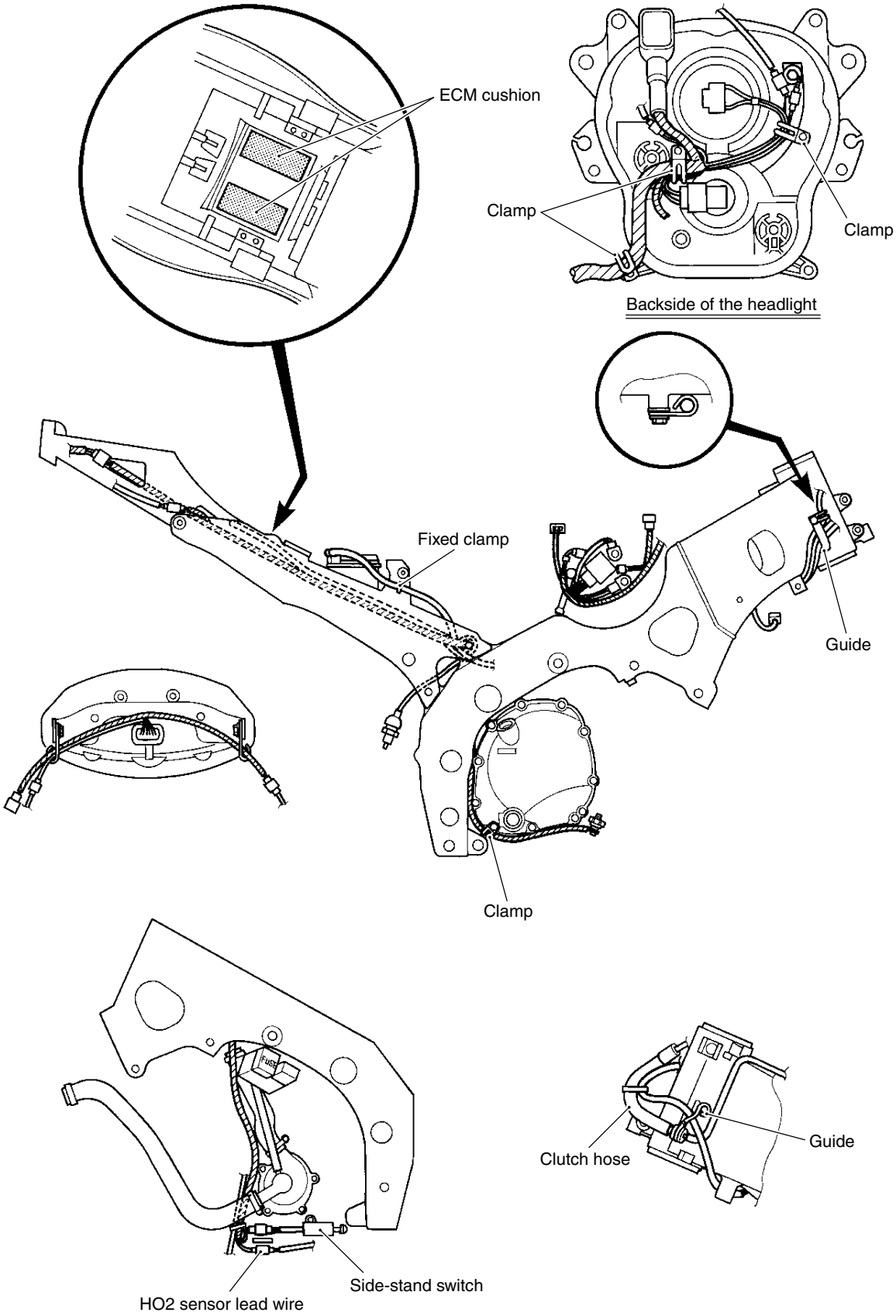
ECM cushion
Clamp
Clamp
Backside of the headlight
Fixed clamp
Guide
Clamp
Clutch hose
Guide
Side-stand switch
HO2 sensor lead wire

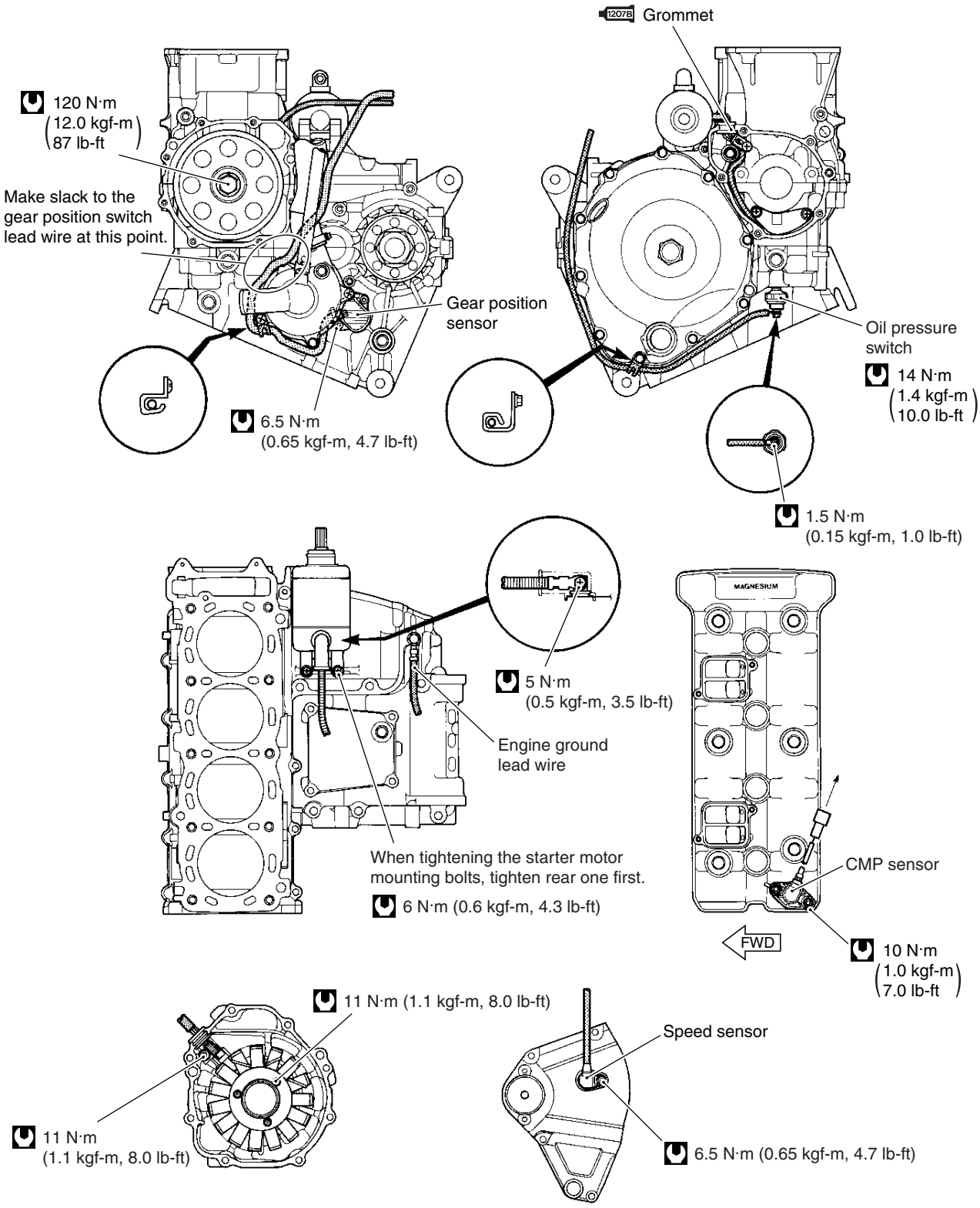
1207B Grommet
120 N·m
(12.0 kgf-m
87 lb-ft)
Make slack to the gear position switch lead wire at this point.
Gear position sensor
6.5 N·m
(0.65 kgf-m, 4.7 lb-ft)
Oil pressure switch
14 N·m
(1.4 kgf-m
10.0 lb-ft)
1.5 N·m
(0.15 kgf-m, 1.0 lb-ft)
5 N·m
(0.5 kgf-m, 3.5 lb-ft)
Engine ground lead wire
When tightening the starter motor mounting bolts, tighten rear one first.
6 N·m (0.6 kgf-m, 4.3 lb-ft)
MAGNESIUM
CMP sensor
FWD
10 N·m
(1.0 kgf-m
7.0 lb-ft)
11 N·m (1.1 kgf-m, 8.0 lb-ft)
11 N·m
(1.1 kgf-m, 8.0 lb-ft)
Speed sensor
6.5 N·m (0.65 kgf-m, 4.7 lb-ft)

THROTTLE CABLE ROUTING

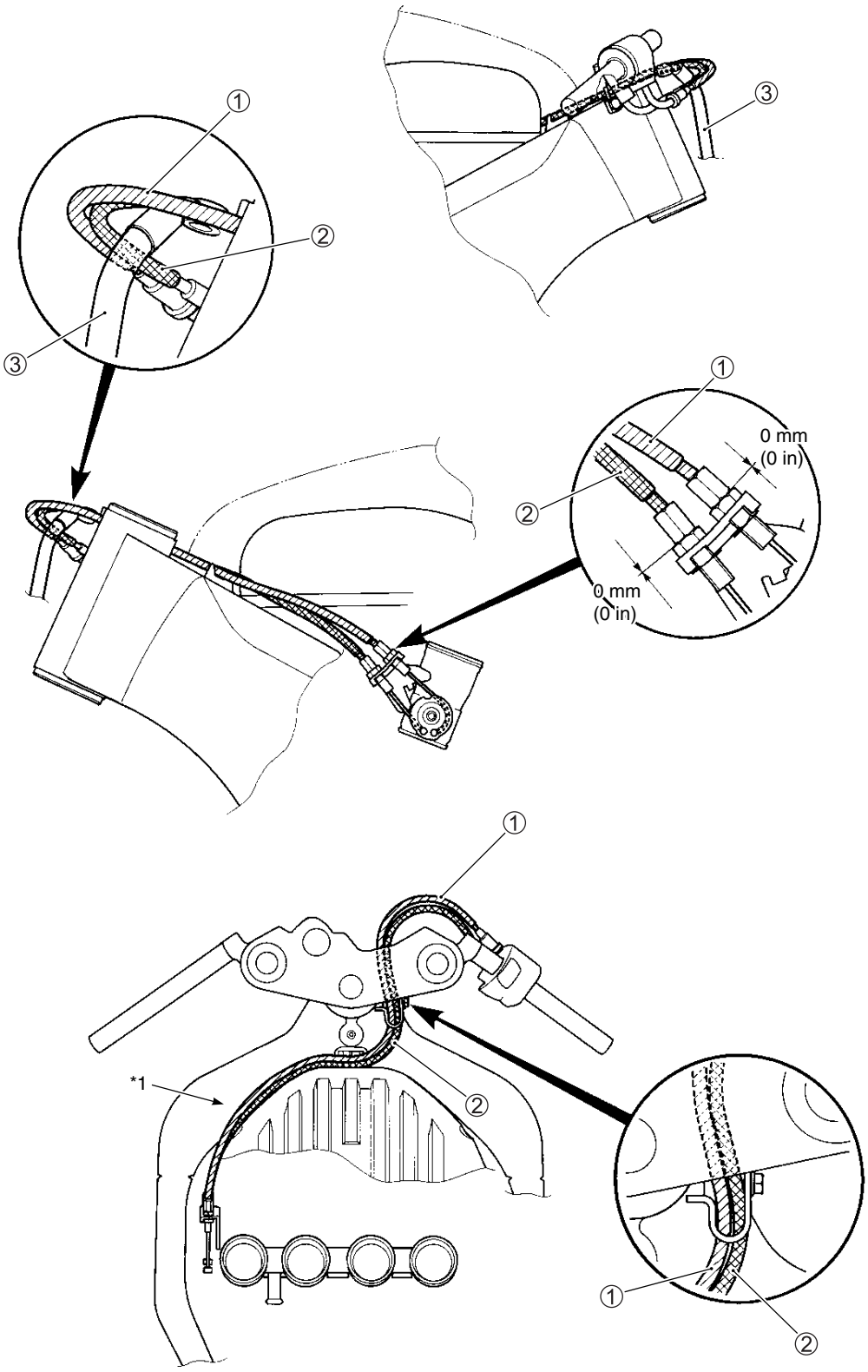

①	Throttle cable No.1	③	Brake hose
②	Throttle cable No.2	*1	Pass the throttle cables along the air cleaner box.

THROTTLE BODY HOSE ROUTING

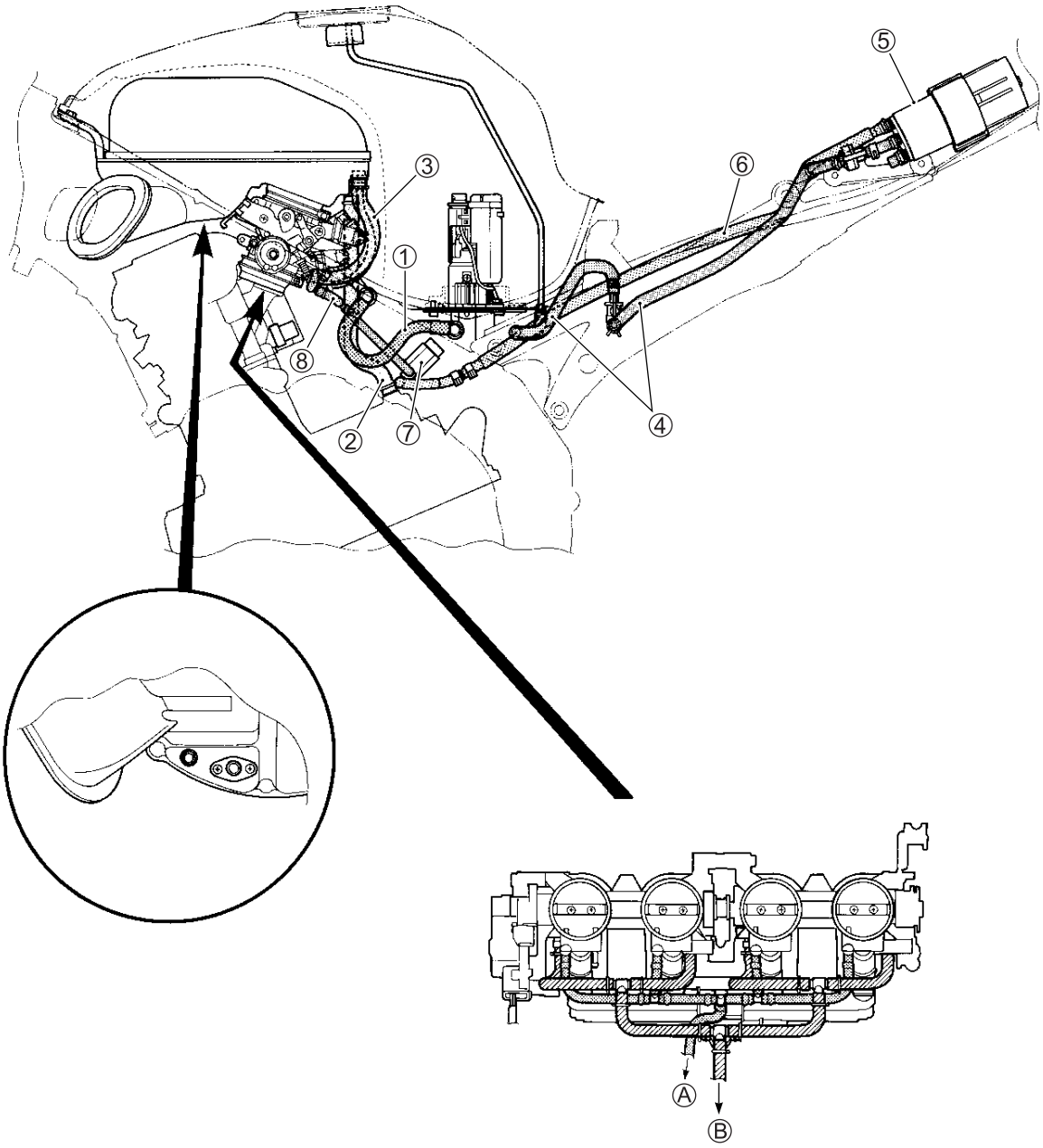

①	Fuel feed hose	⑥	EVAP purge hose (E-33 only)
②	PCV (breather) hose	⑦	EVAP system purge control solenoid valve (E-33 only)
③	ISC valve hose	⑧	EVAP system purge control solenoid valve hose
④	EVAP surge hose (E-33 only)	Ⓐ	To IAP sensor
⑤	EVAP canister (E-33 only)	Ⓑ	To EVAP system purge control solenoid valve

FUEL TANK DRAIN HOSE ROUTING

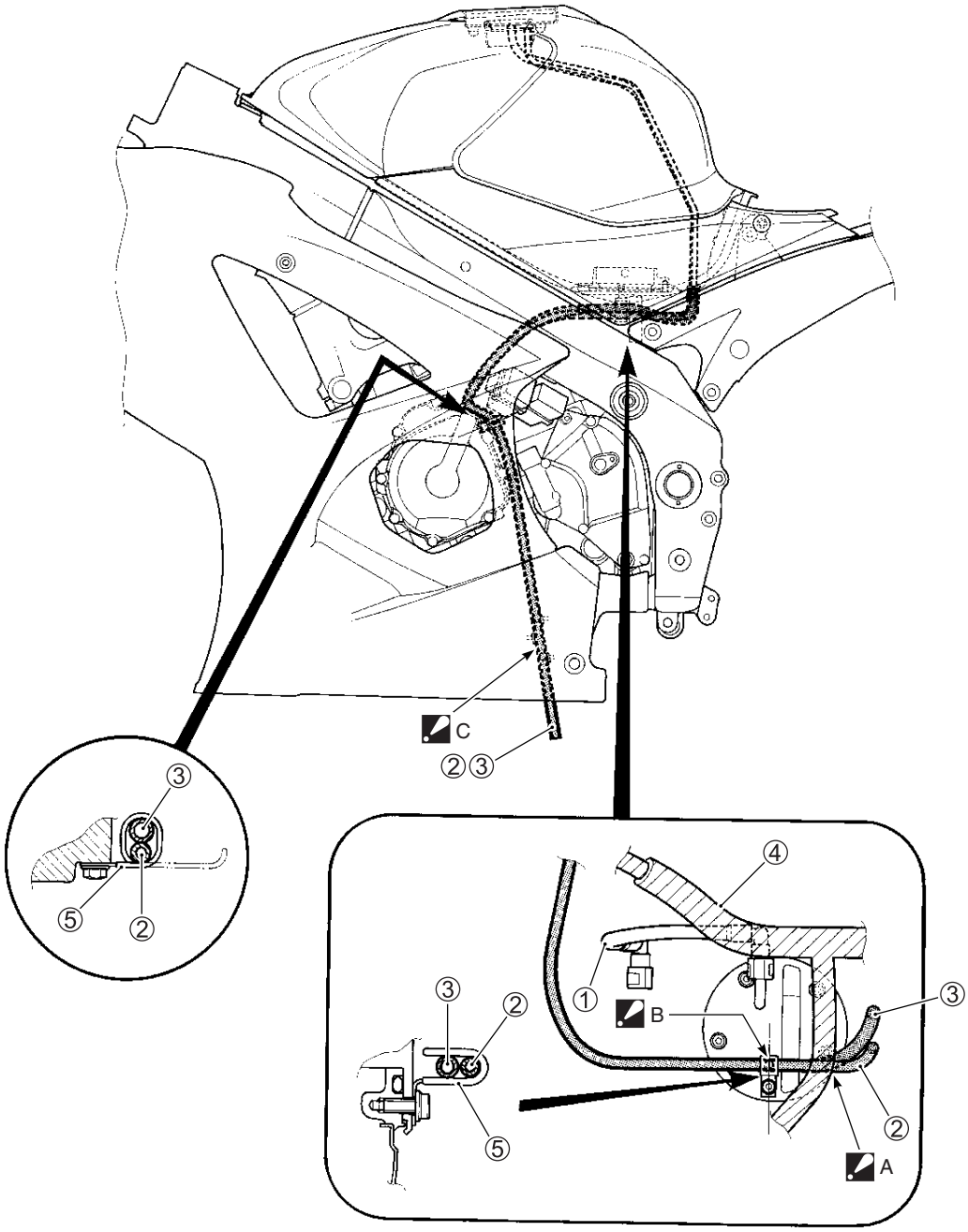

①	Fuel feed hose	A	Pass the breather hose ② and drain hose ③ through over the wiring harness.
②	Breather hose (Except for E-33)	B	Bend the hose clamp at the white painted mark on the breather hose ②.
③	Drain hose	C	Set the breather hose ② and drain hose ③ to the lib of the under cowling.
④	Wiring harness		
⑤	Hose clamp		

COOLING SYSTEM HOSE ROUTING

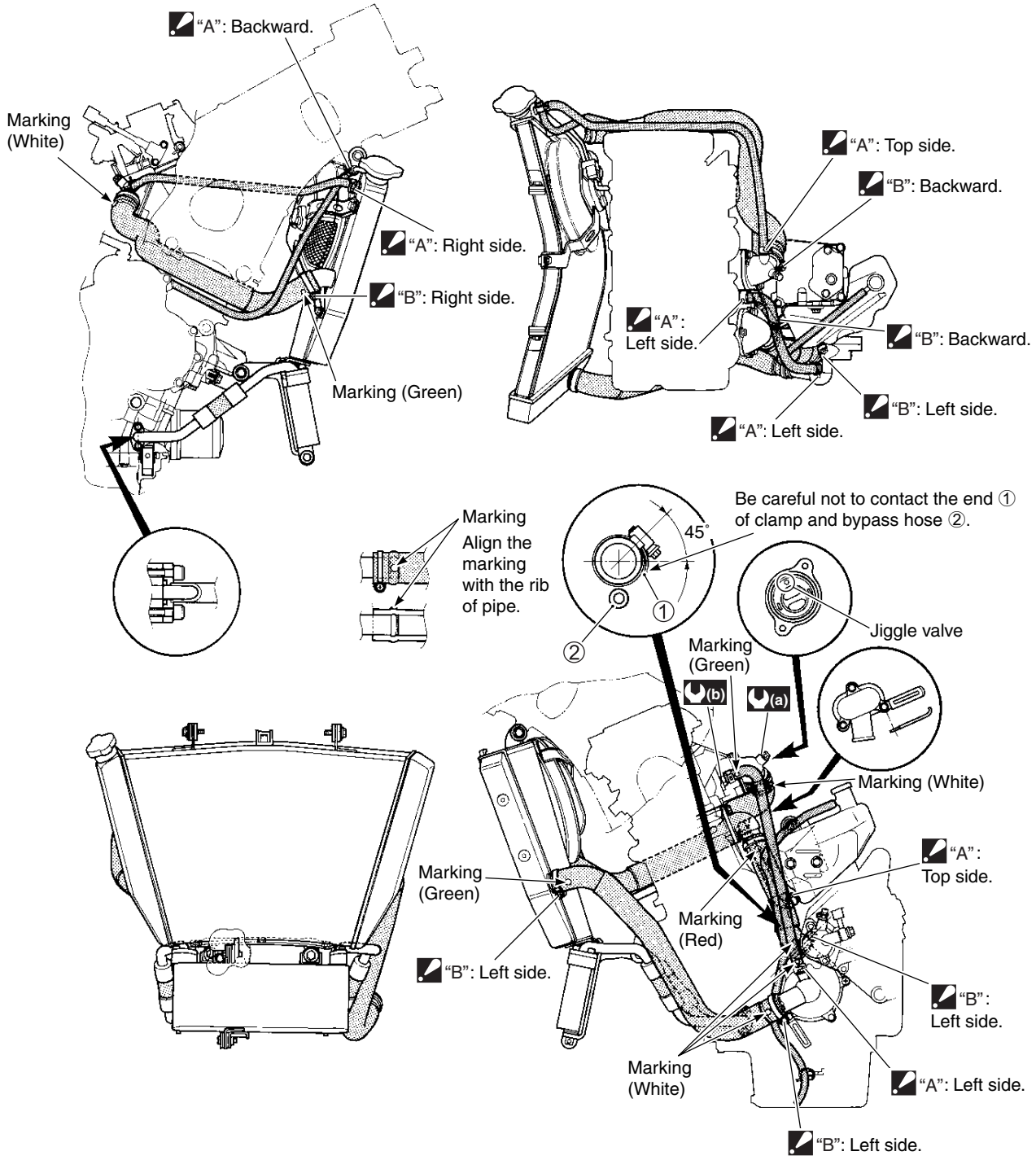

"A"	The ends of the clamp should face.....	(a)	6 N·m (0.6 kgf-m, 4.5 lb-ft)
"B"	The clamp screw head should face.....	(b)	12 N·m (1.2 kgf-m, 8.5 lb-ft)

FRONT BRAKE HOSE ROUTING

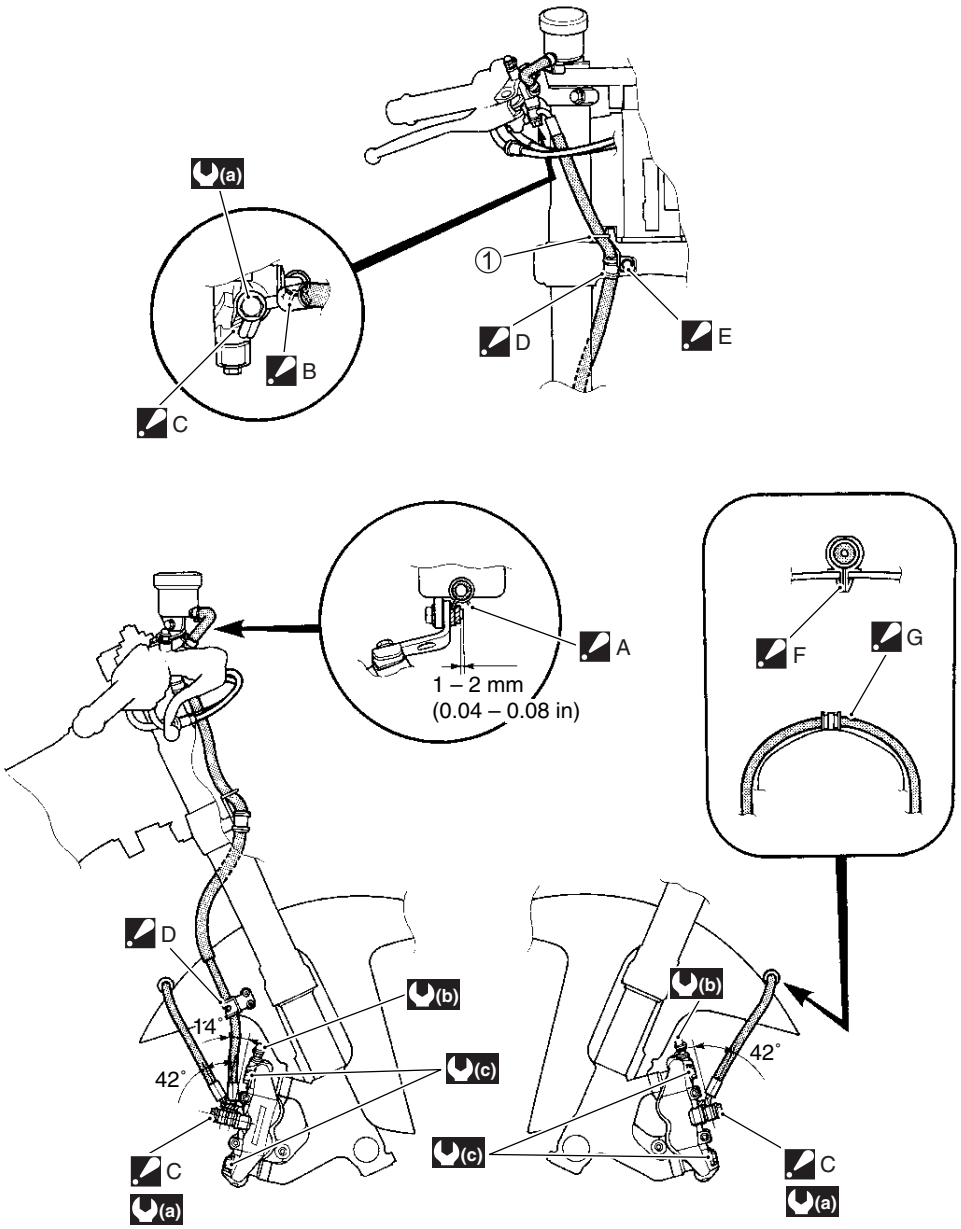

A	Clamp ends should face downward.	G	The green paint is right side and face upside.
B	Clamp ends should face backward.	①	Brake hose guide.
C	After the brake hose union has contacted the stopper, tighten the union bolt.	(a)	23 N·m (2.3 kgf-m, 16.5 lb-ft)
D	Clamp the brake hose firmly.	(b)	7.5 N·m (0.75 kgf-m, 5.5 lb-ft)
E	After positioning the clamp with stopper, tighten the clamp bolt.	(c)	39 N·m (3.9 kgf-m, 28.0 lb-ft)
F	Insert the clamp to the hole of the front fender fully.		

REAR BRAKE HOSE ROUTING

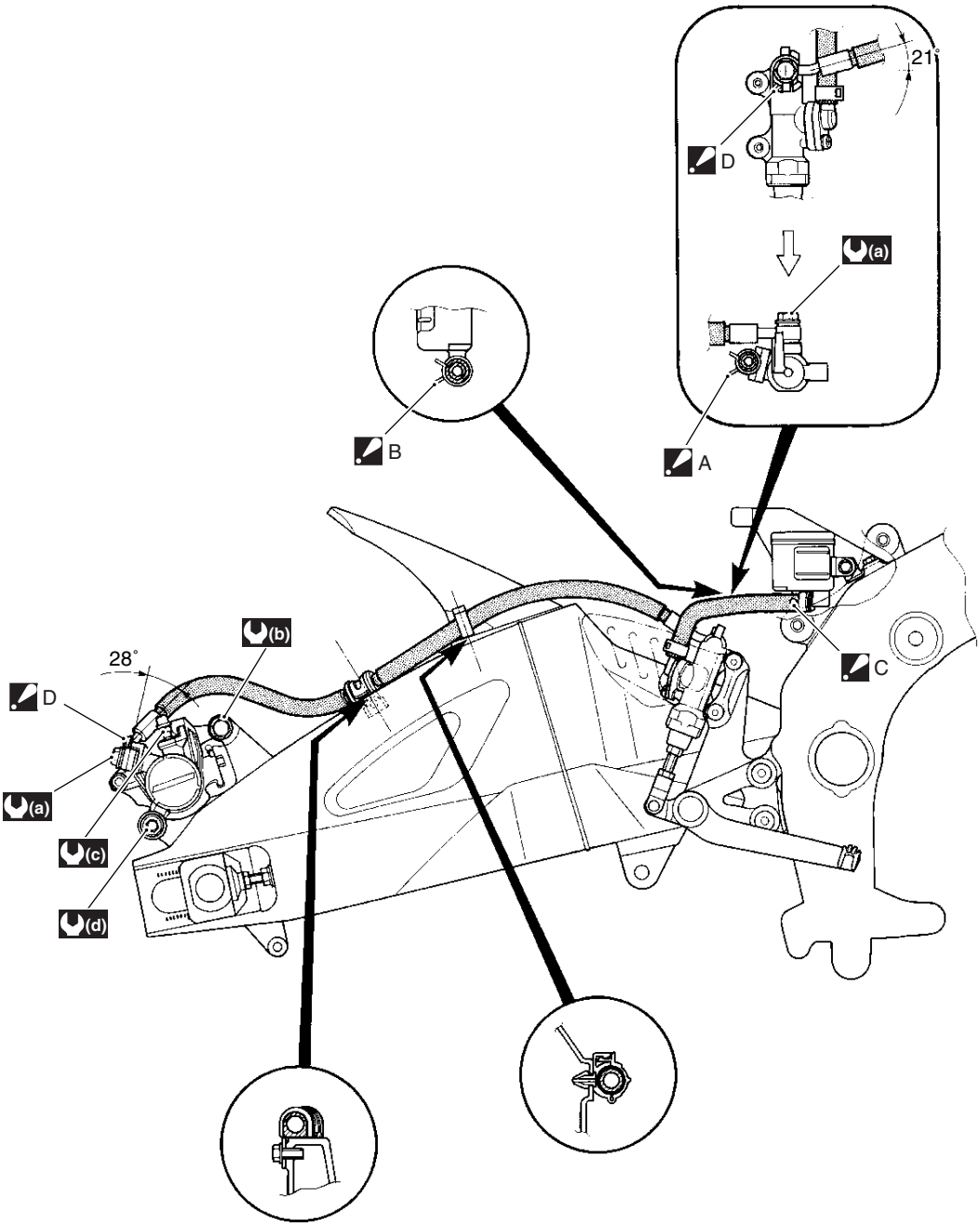

A	Clamp ends should face backward.	(a)	23 N·m (2.3 kgf-m, 16.5 lb-ft)
B	Clamp ends should face inside.	(b)	33 N·m (3.3 kgf-m, 24.0 lb-ft)
C	White paint faces outside.	(c)	7.5 N·m (0.75 kgf-m, 5.5 lb-ft)
D	After the brake hose union has contacted the stopper, tighten the union bolt.	(d)	18 N·m (1.8 kgf-m, 13.0 lb-ft)

CLUTCH HOSE ROUTING

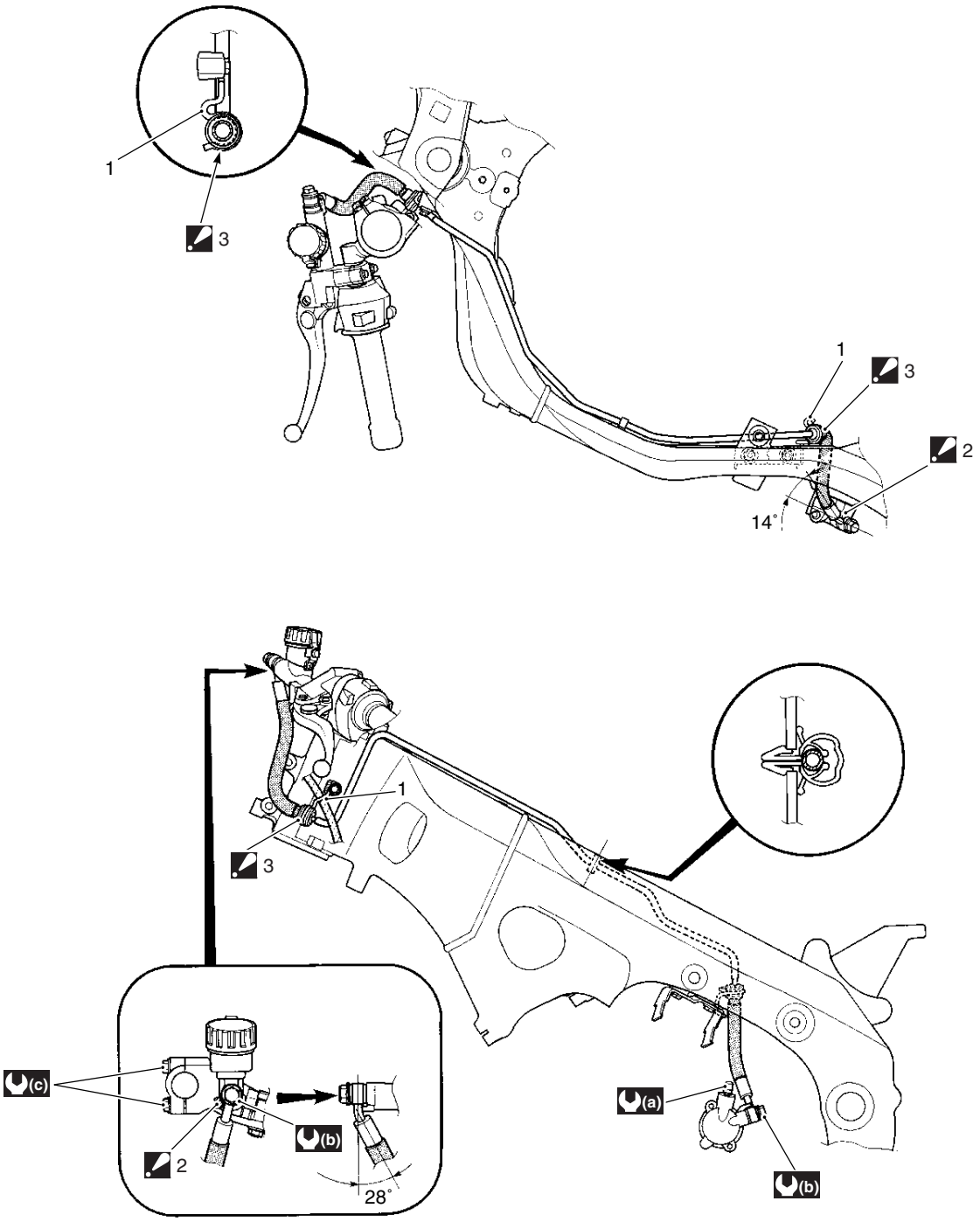

1	Clutch hose guide.	(a)	6 N·m (0.6 kgf-m, 4.3 lb-ft)
2	Stopper: After the clutch hose union has contacted the stopper, tighten the union bolt.	(b)	23 N·m (2.3 kgf-m, 16.5 lb-ft)
3	Grommet: Install the grommet of the clutch hose to the clutch.	(c)	10 N·m (1.0 kgf-m, 7.0 lb-ft)

PAIR (AIR SUPPLY) SYSTEM HOSE ROUTING

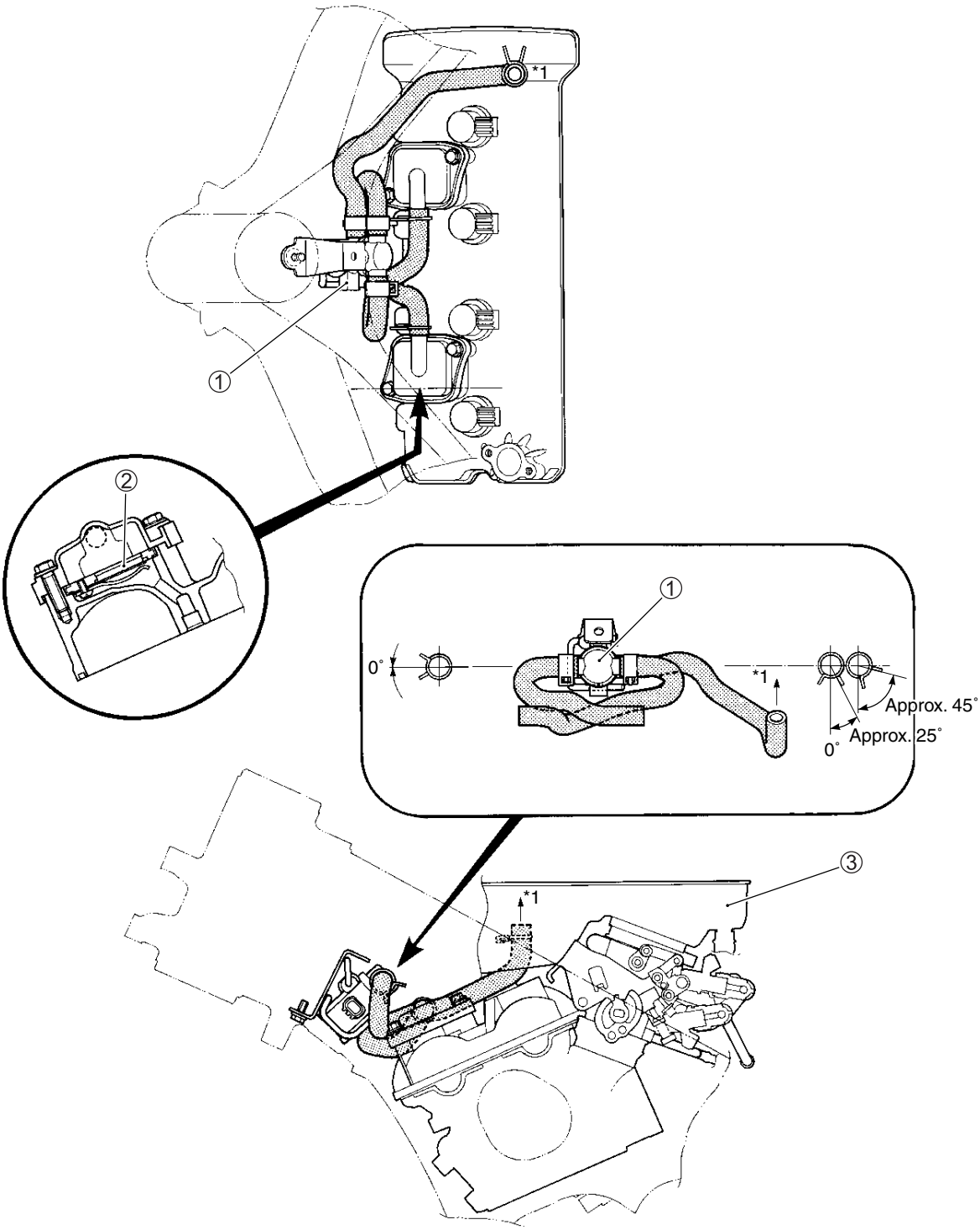

①	PAIR control solenoid valve	③	Air cleaner box
②	PAIR reed valve	*1	To air cleaner box

FUEL TANK INSTALLATION

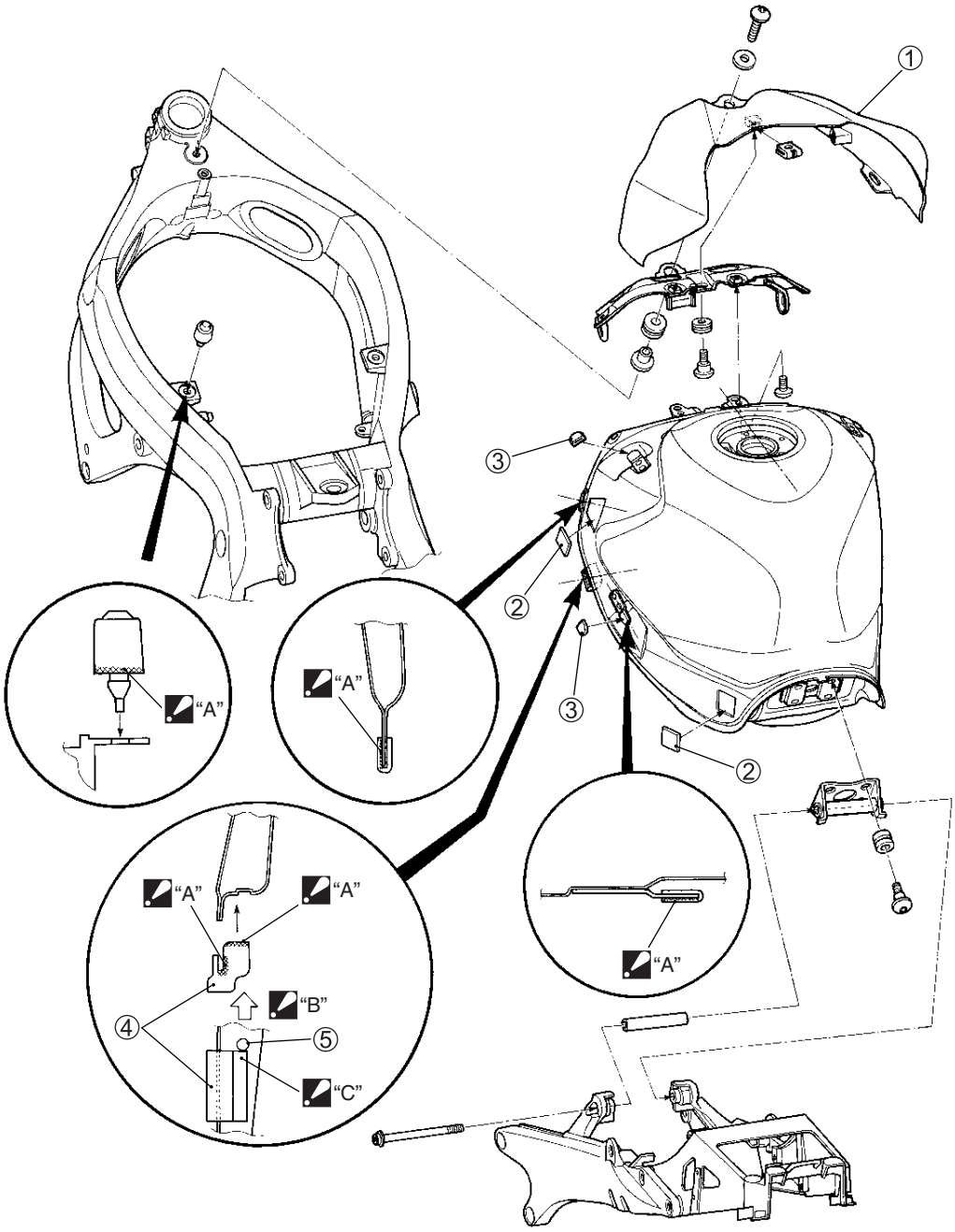

①	Fuel tank cover	"A"	Apply adhesive agent.
②	Velcro fastening	"B"	View from bottom.
③	Frame cover cushion	"C"	Align the fuel tank cushion ④ with the dent mark ⑤.
④	Fuel tank cushion		
⑤	Dent mark		

FUEL TANK LOWER SIDE COVER CUSHION RUBBER/ FASTENER INSTALLATION

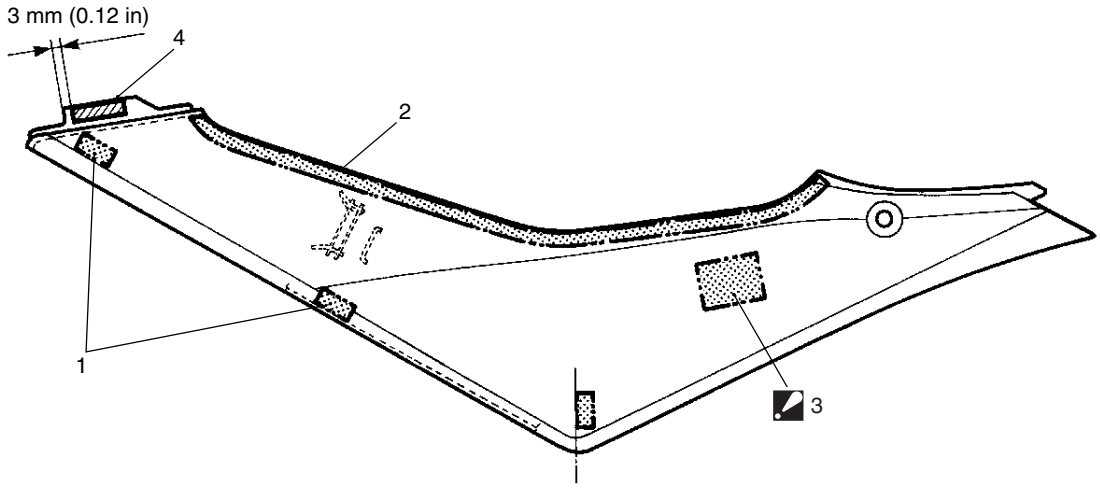

①	Cushion	④	Protective tape
②	Cushion	◪	Align the velcro fastening to the aligned mark. Clean an adhesive surface before adhering the cushion and velcro fastening.
③	Velcro fastening		

AIR INTAKE COVER CUSHION RUBBER INSTALLATION

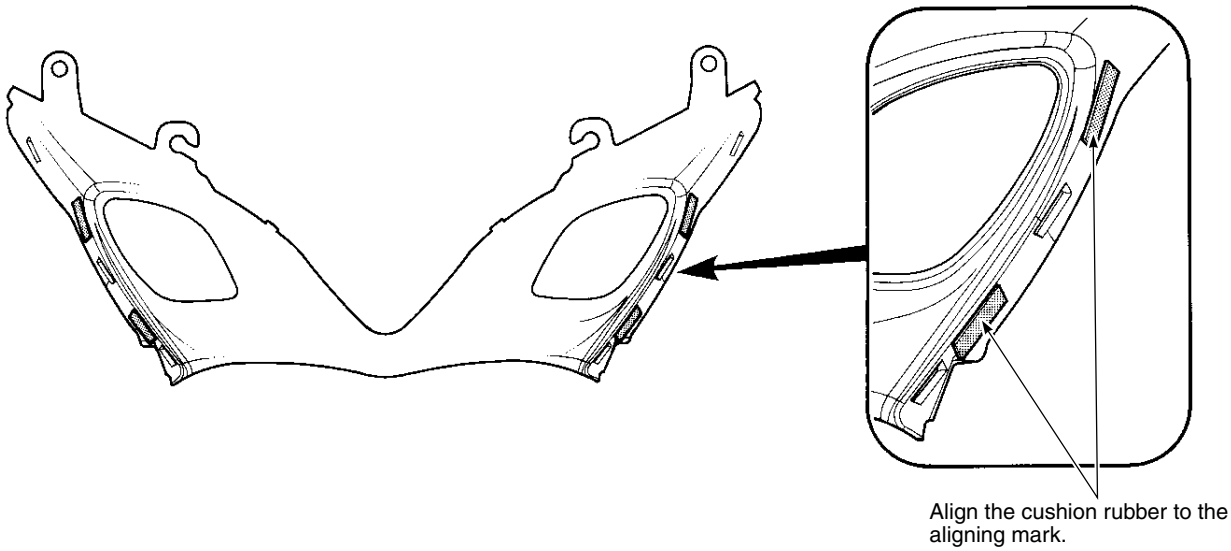

NOTE:
Clean the adhesive surface before adhering the cushion rubber.

BODY COWLING CUSHION RUBBER INSTALLATION

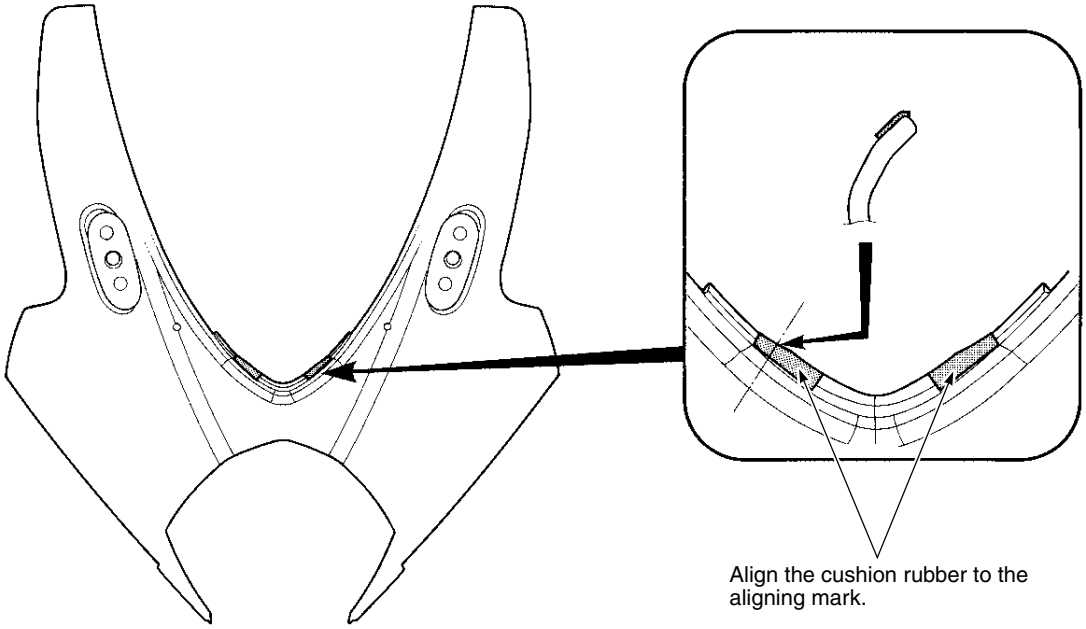

NOTE:
Clean the adhesive surface before adhering the cushion rubber.

UNDER COWLING HEAT SHIELD INSTALLATION

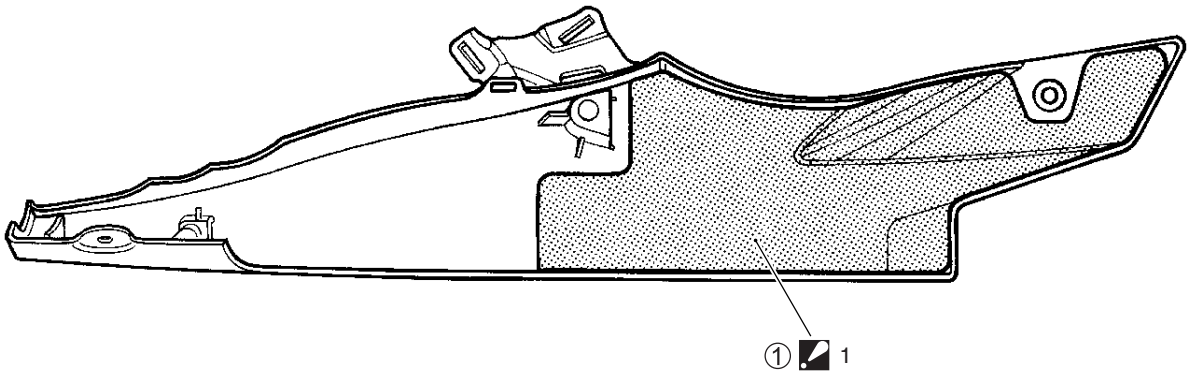

①	Heat shield (RH)	1	Clean the adhesive surface before adhering the heat shield.

NOTE:
Clean an adhesive surface before adhering the heat shield.

FUEL TANK HEAT SHIELD AND FUEL TANK BRACKET CUSHION INSTALLATION

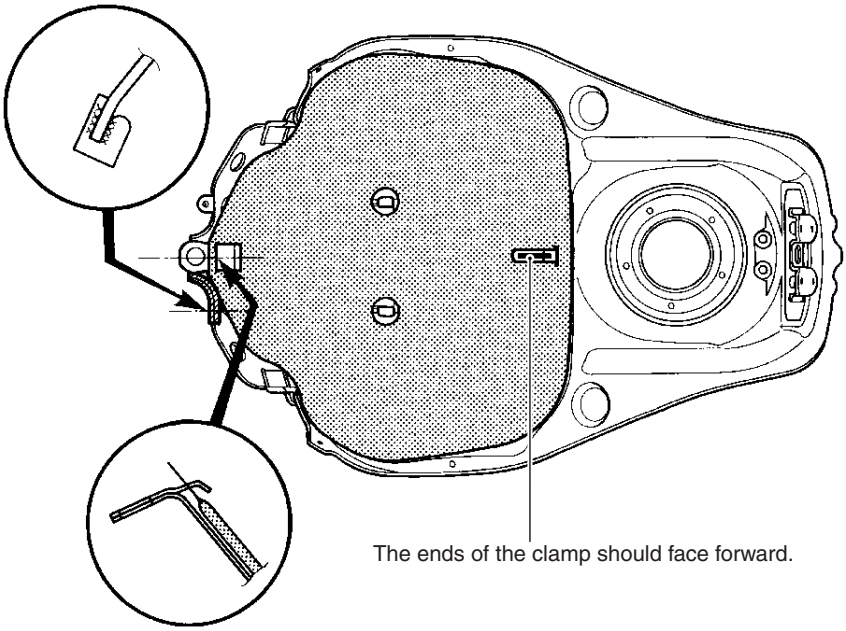

FUEL TANK COVER CUSHION/VELCRO FASTENING INSTALLATION

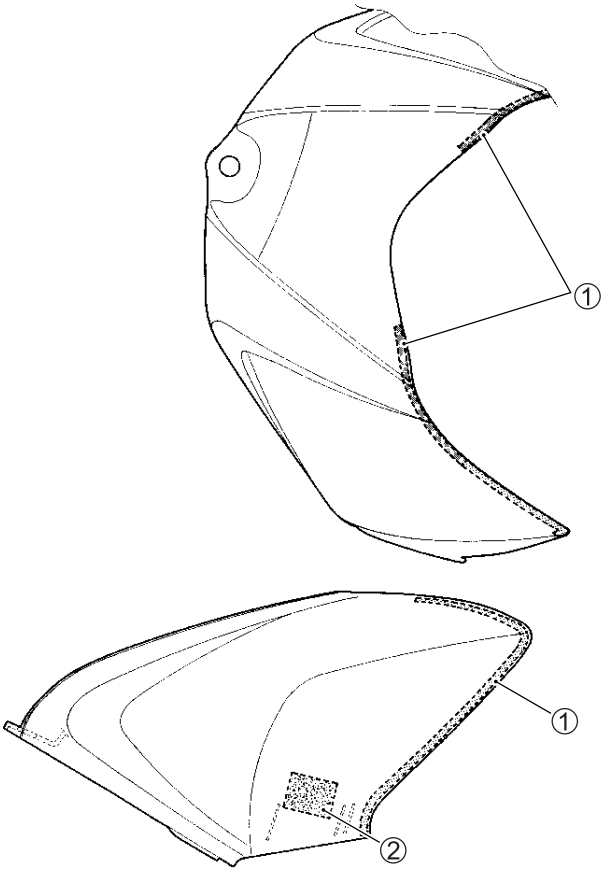

①	Fuel tank cover cushion	②	Velcro fastening

COWLING INSTALLATION

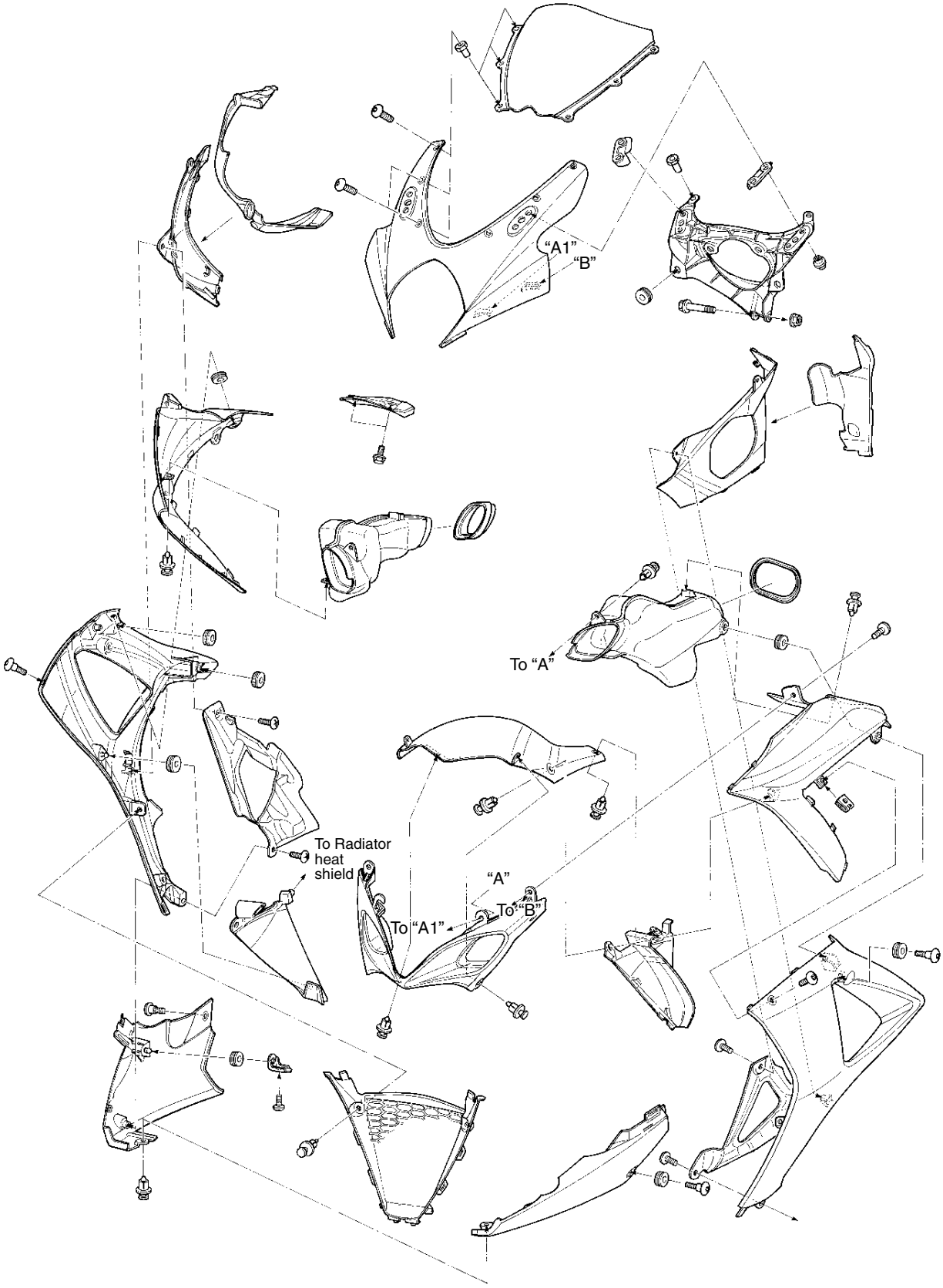

FRAME COVER INSTALLATION

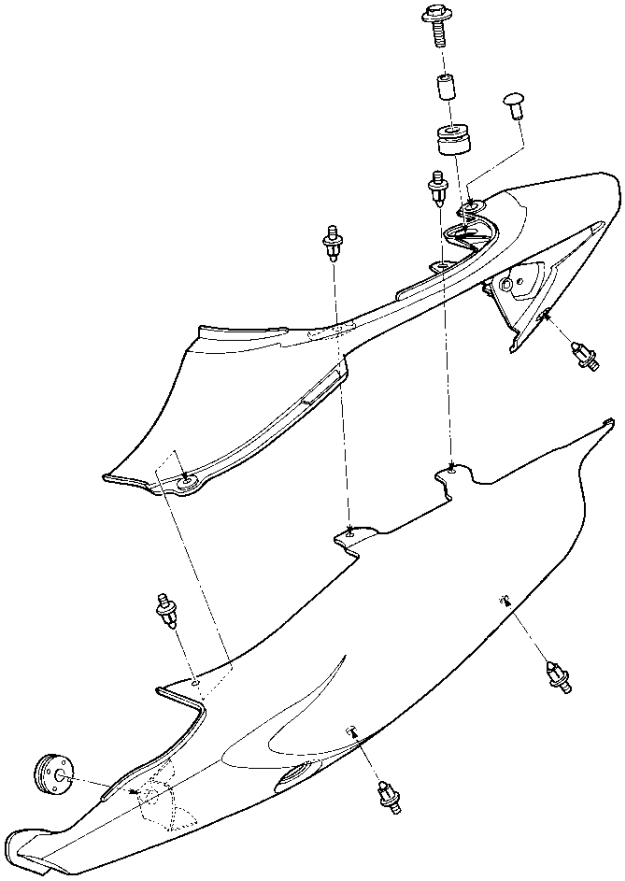

SEAT LOCK CABLE ROUTING

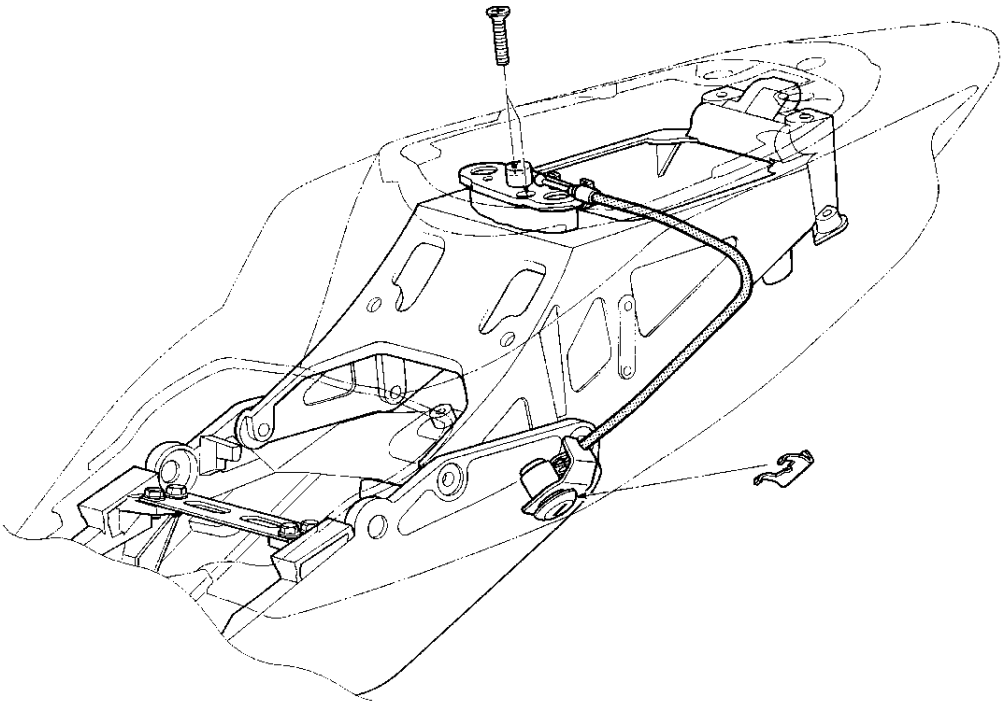

FRONT FENDER INSTALLATION

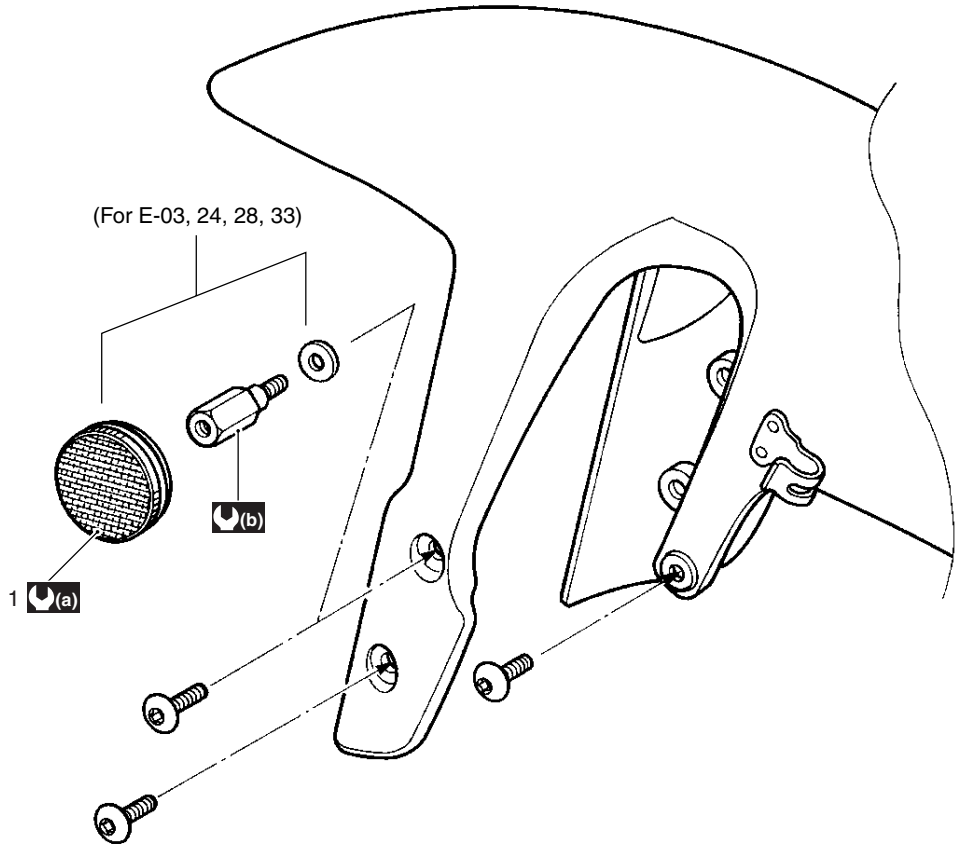

1	Reflex reflector	(a)	1.8 N·m (0.18 kgf-m, 1.3 lb-ft)
		(b)	4.5 N·m (0.45 kgf-m, 3.25 lb-ft)

REAR FENDER INSTALLATION

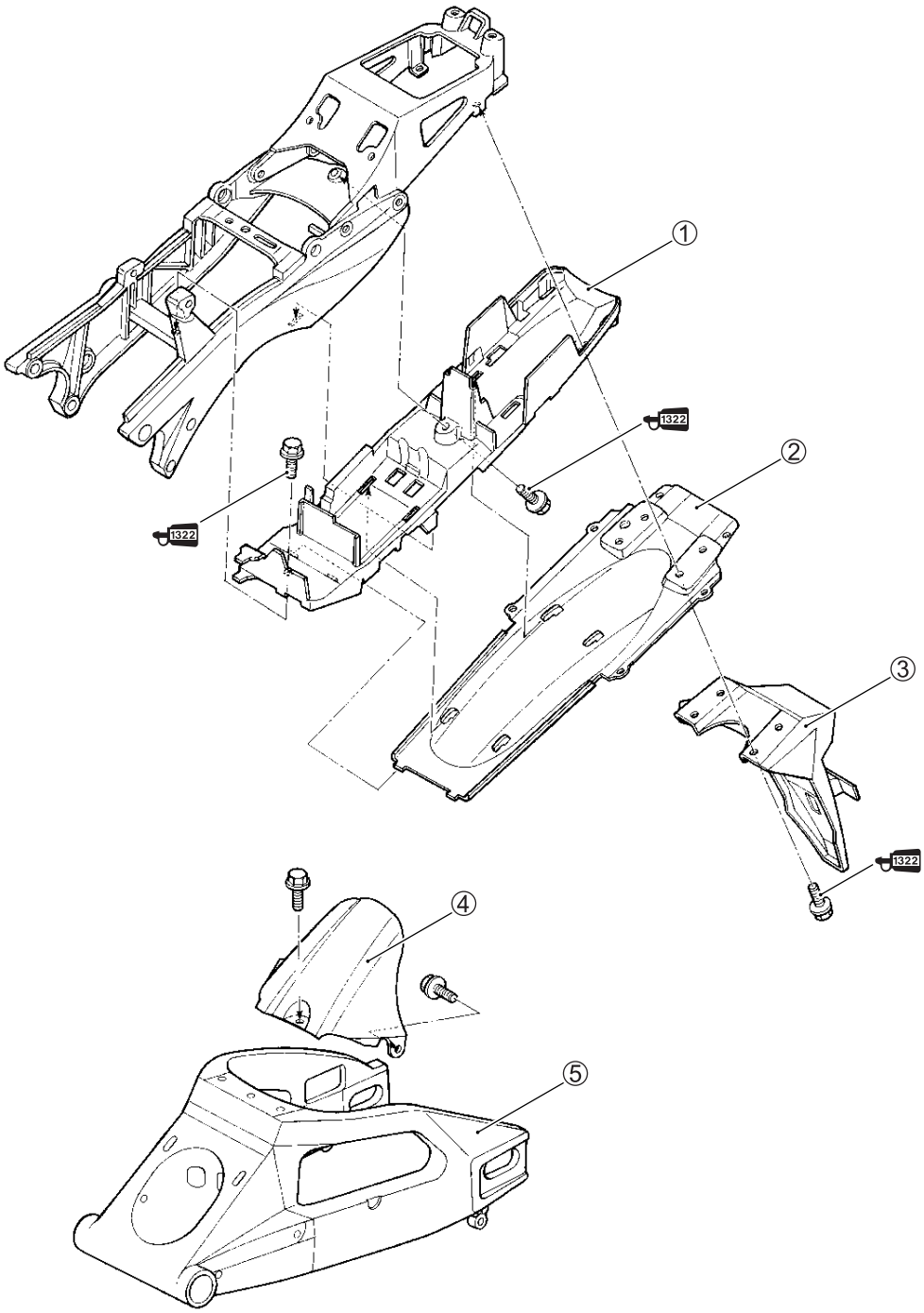

①	Rear fender (front)	④	Rear fender (lower)
②	Rear fender cover (front)	⑤	Swingarm
③	Rear fender (rear)		

SIDE-STAND INSTALLATION

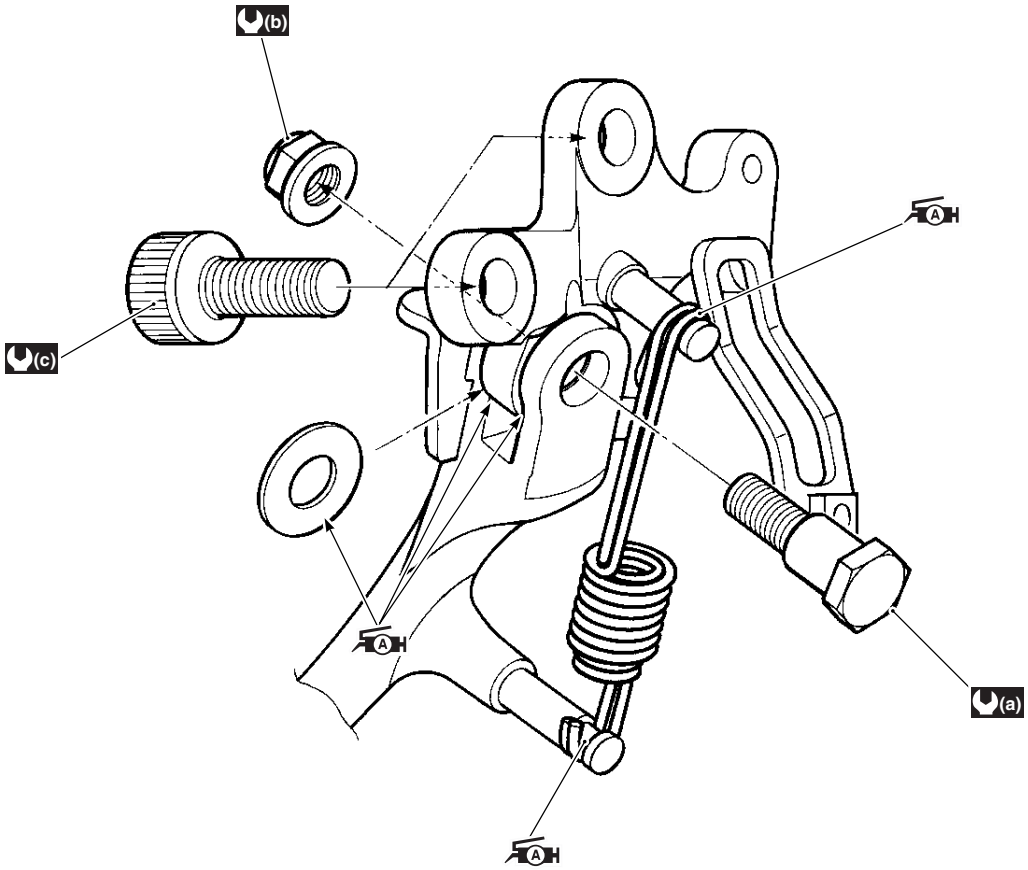

(a)	50 N·m (5.0 kgf-m, 36.0 lb-ft)	(c)	95 N·m (9.5 kgf-m, 68.5 lb-ft)
(b)	40 N·m (4.0 kgf-m, 29.0 lb-ft)	A	Apply grease to sliding surface.

GEARSHIFT PEDAL INSTALLATION

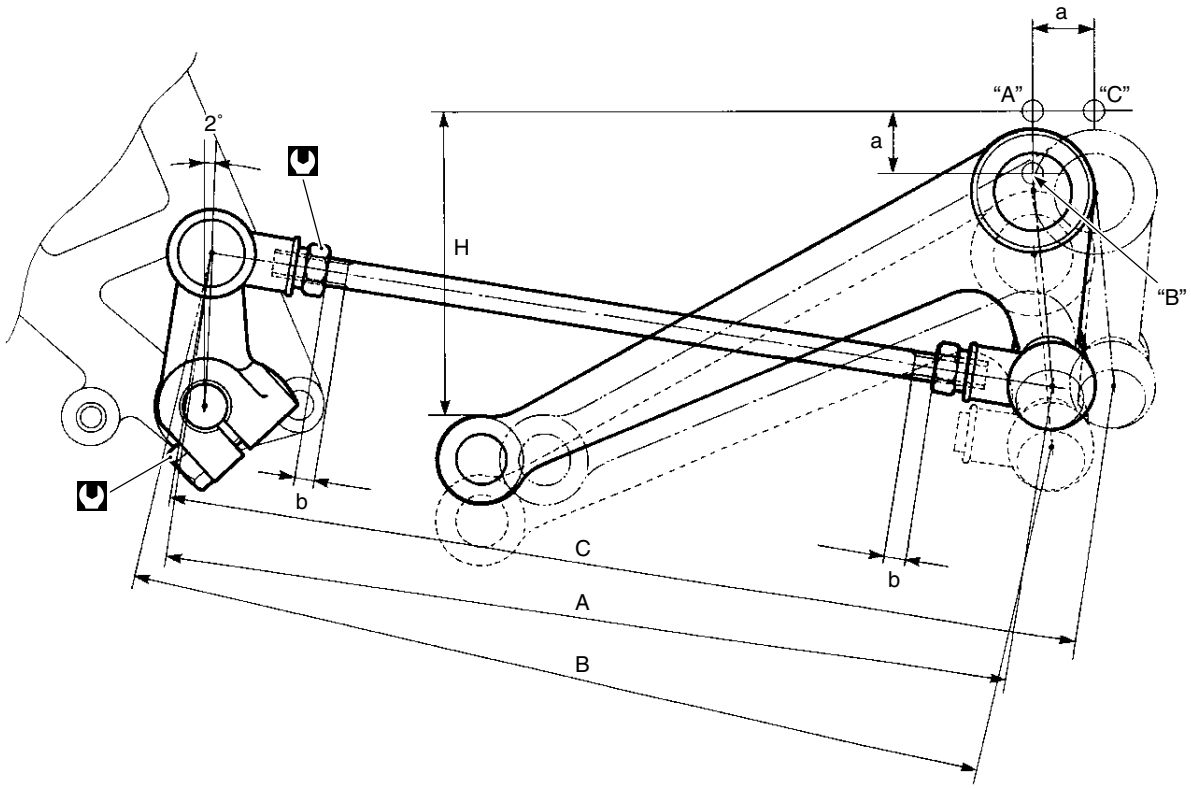

* When adjusting the footrest position to the backside, the optional gearshift rod must be used.

"A"	"STD" footrest top position	A: 195.65 mm (7.70 in)	b	Adjust the thread of each rod end b to equal length.
"B"	"Lower" footrest top position	B: 198.26 mm (7.81 in)	H	70 mm (2.76 in)
"C"	"Back" footrest top position	C: 209.50 mm (8.25 in)		10 N·m (1.0 kgf-m, 7.0 lb-ft)
a	14 mm (0.55 in)			

FRONT FOOTREST INSTALLATION

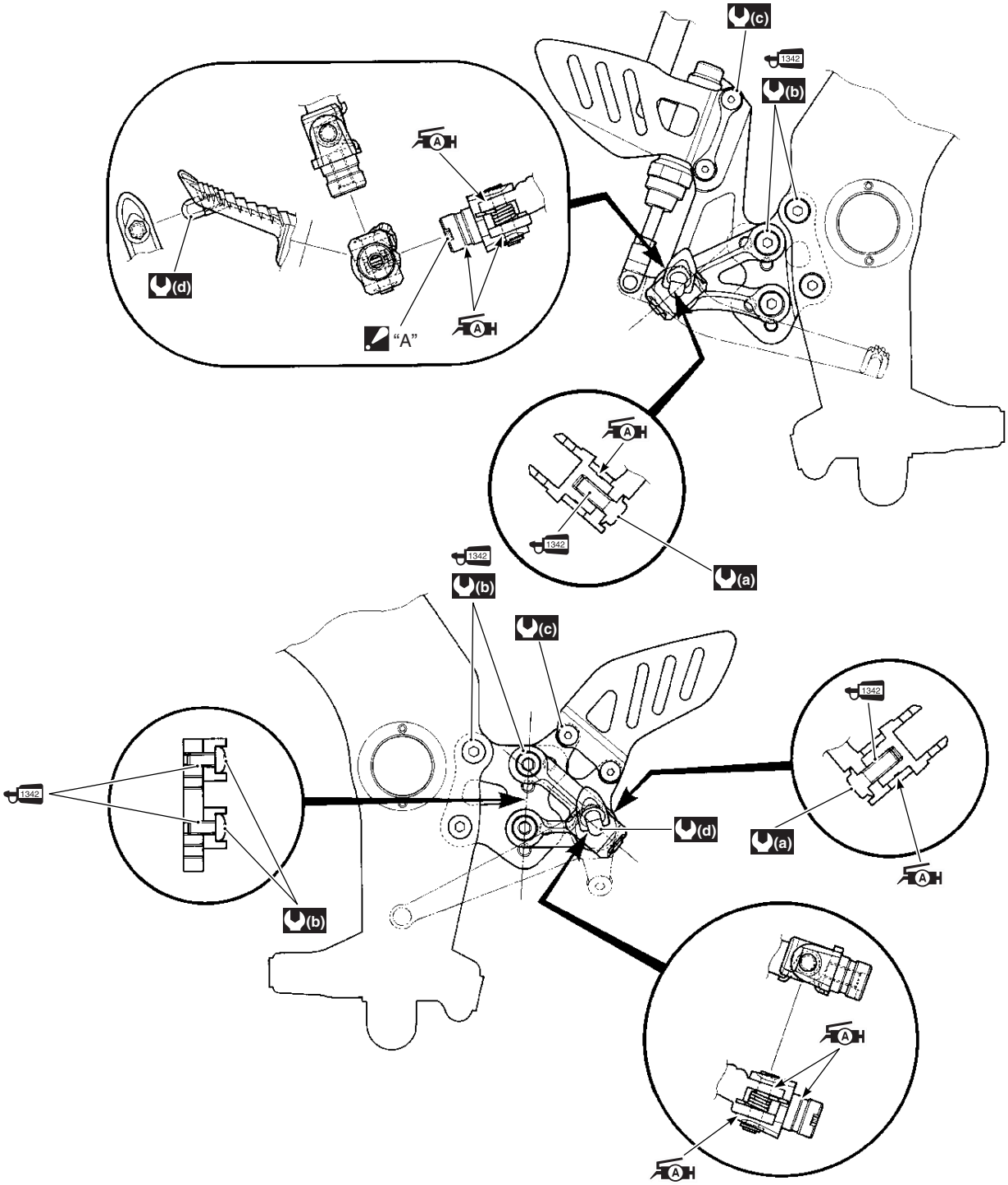

(a)	39 N·m (3.9 kgf-m, 28.0 lb-ft)	(d)	18 N·m (1.8 kgf-m, 13.0 lb-ft)
(b)	23 N·m (2.3 kgf-m, 16.5 lb-ft)	"A"	Align the cutaway when installing.
(c)	10 N·m (1.0 kgf-m, 9.0 lb-ft)		

PILLION FOOTREST INSTALLATION

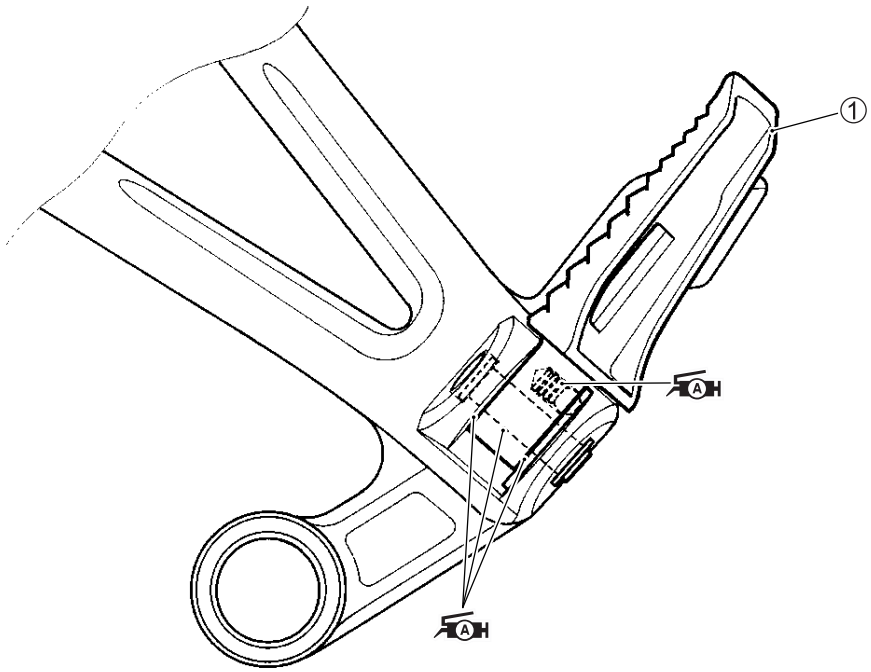

①	Footrest	A	Apply grease to sliding surface.

REAR VIEW MIRROR INSTALLATION

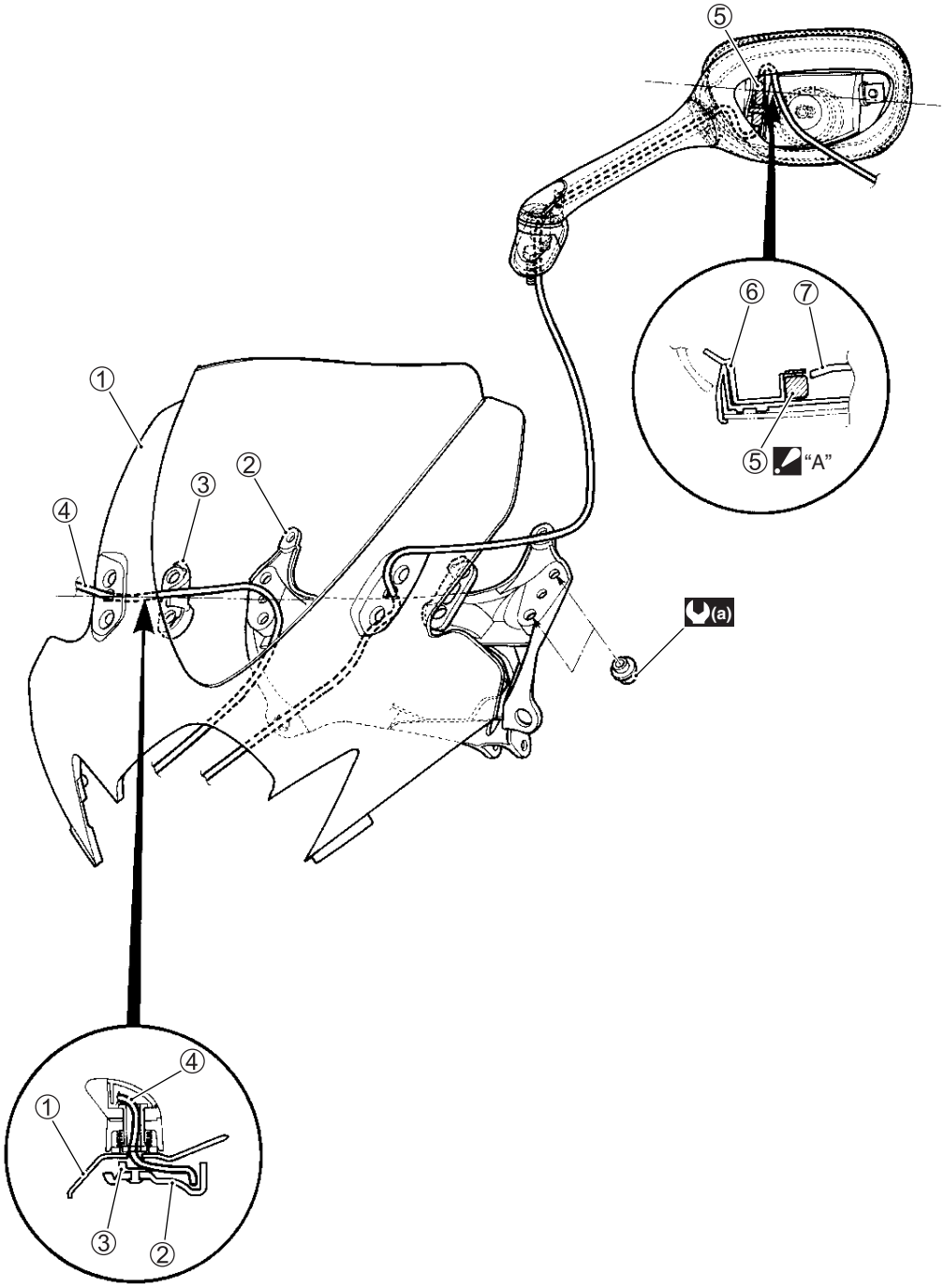

①	Body cowling	⑥	Mirror cover
②	Cowling brace	⑦	Mirror body
③	Cushion	(a)	10 N·m (1.0 kgf-m, 7.0 lb-ft)
④	Turn signal lead wire	"A"	Locate the turn signal lead wire coupler ⑤ between the mirror cover ⑥ and mirror body ⑦.
⑤	Turn signal lead wire coupler		

REAR COMBINATION LIGHT INSTALLATION

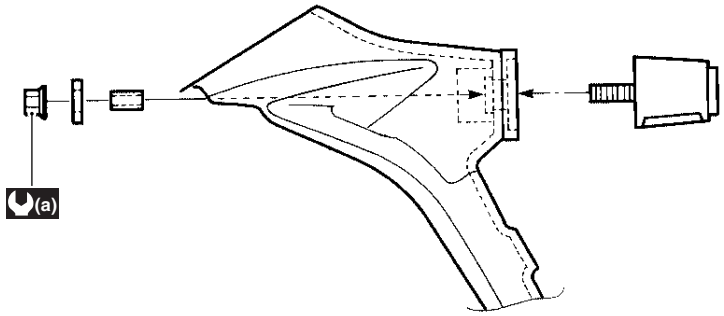

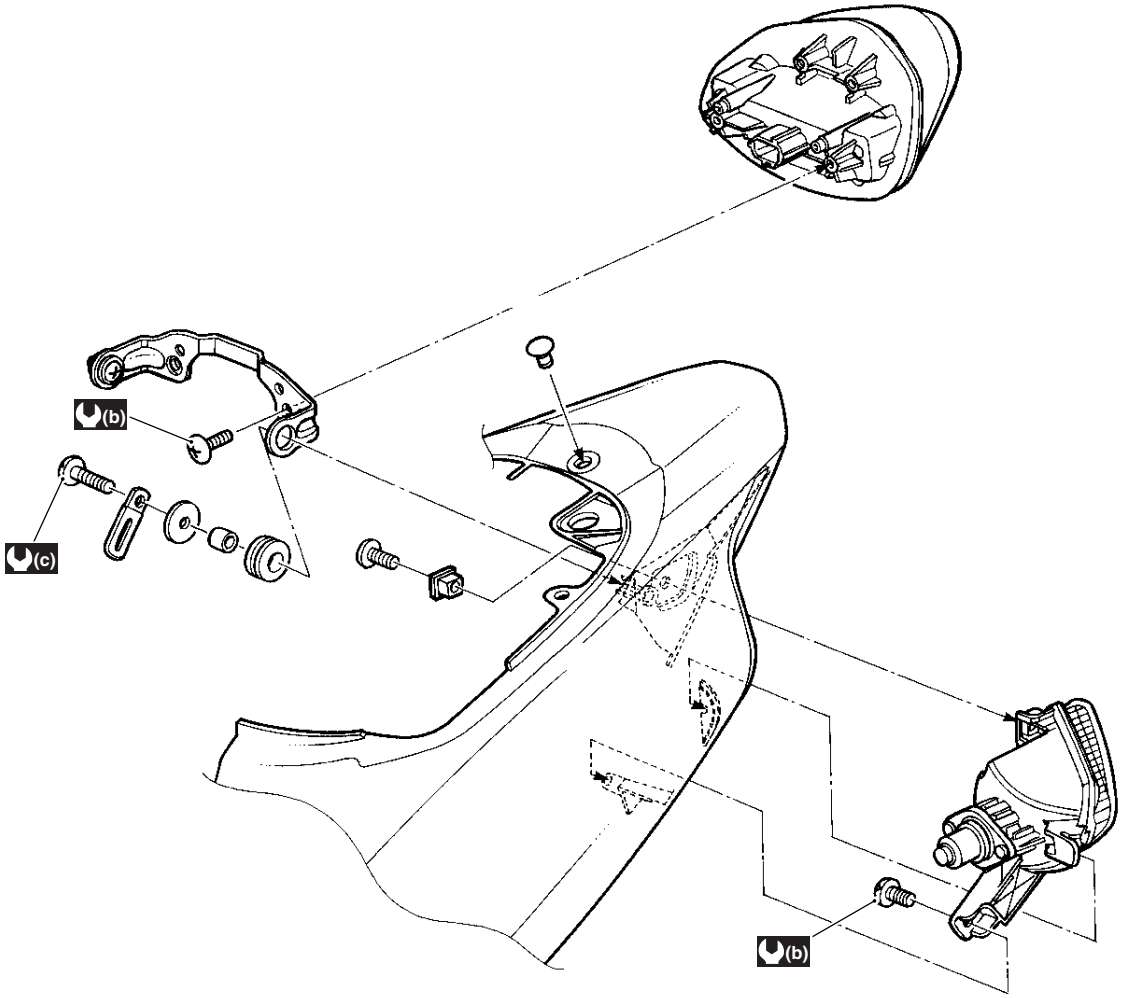

(a)	5 N·m (0.5 kgf-m, 3.5 lb-ft)
(b)	2.75 N·m (0.275 kgf-m, 2.0 lb-ft)
(c)	2.75 N·m (0.275 kgf-m, 2.0 lb-ft)

REAR COMBINATION LIGHT CUSHION/FASTENER INSTALLATION

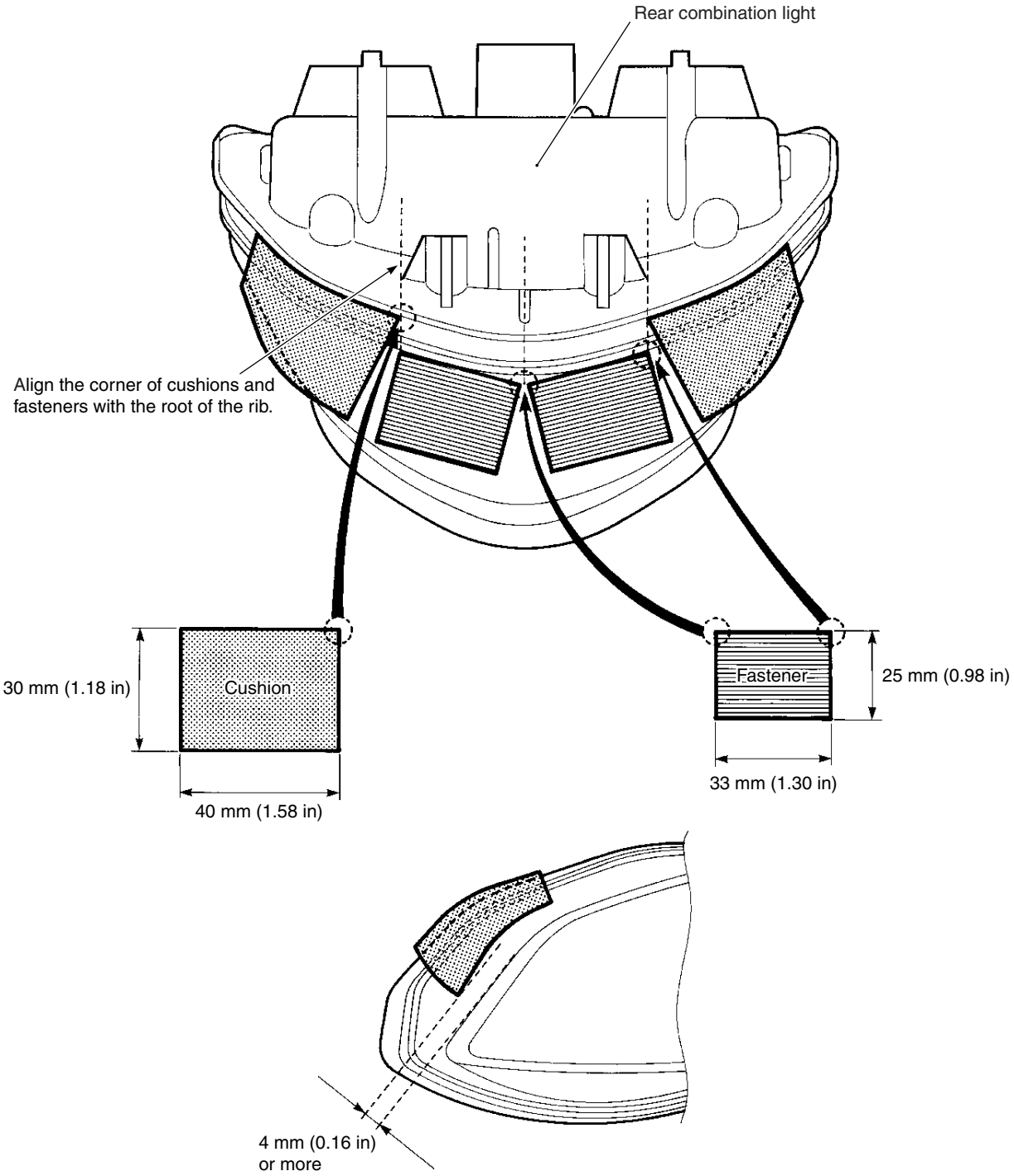

REGULATOR/RECTIFIER INSTALLATION

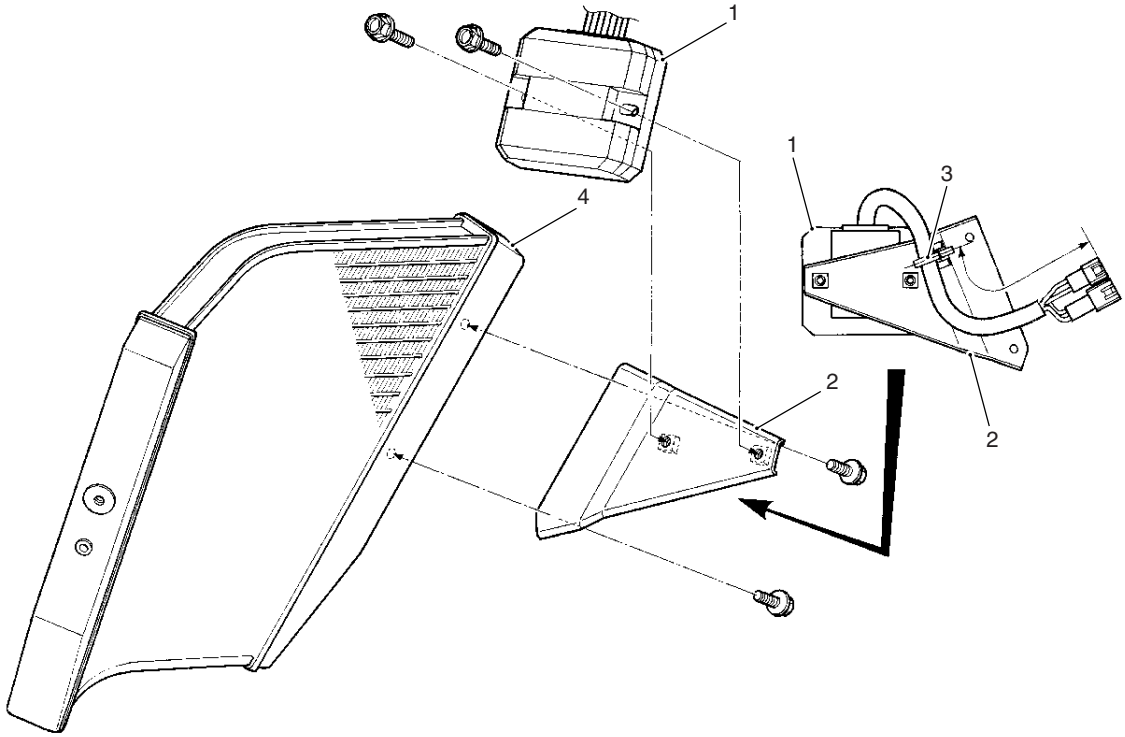

1	Regulator/Rectifier	3	Clamp
2	Bracket	4	Radiator

NOTE:
To remove or install the regulator/rectifier easily, hold its bolt head with an open-end wrench.

SPECIAL TOOLS

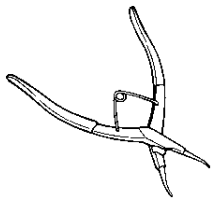 09900-06108 Snap ring pliers	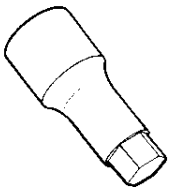 09900-18740 Hexagon socket (24 mm)	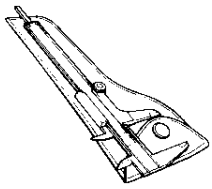 09900-20101 09900-20102 Vernier calipers	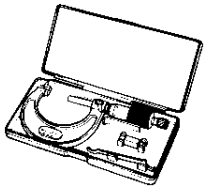 09900-20202 Micrometer (25 – 50 mm)	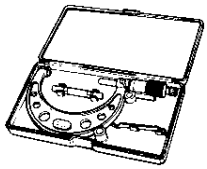 09900-20203 Micrometer (50 – 75 mm)
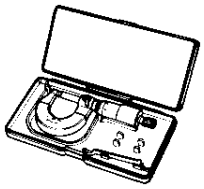 09900-20205 Micrometer (0 – 25 mm)	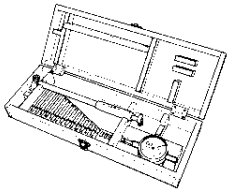 09900-20530 Cylinder gauge set	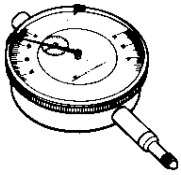 09900-20602 Dial gauge (1/1000 mm, 1 mm)	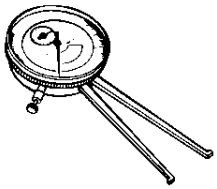 09900-20605 Dial calipers (1/100 mm, 10 – 34 mm)	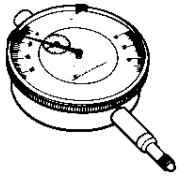 09900-20607 Dial gauge (1/100 mm, 10 mm)
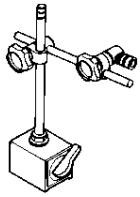 09900-20701 Magnetic stand	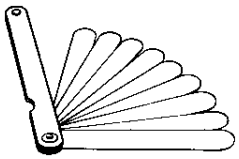 09900-20803 09900-20806 Thickness gauge	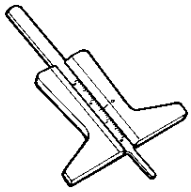 09900-20805 Tire depth gauge	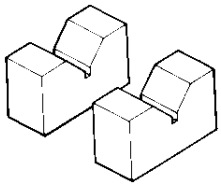 09900-21304 V-block set (100 mm)	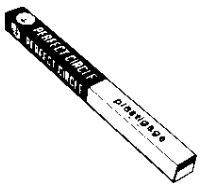 09900-22301 09900-22302 Plastigauge
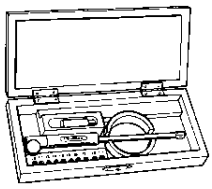 09900-22401 (10 – 18 mm) 09900-22403 (18 – 35 mm) Small bore gauge	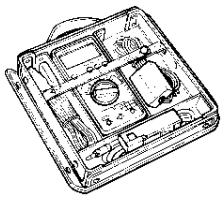 09900-25008 Multi circuit tester set	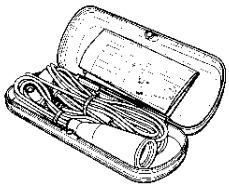 09900-25009 Needle pointed probe set	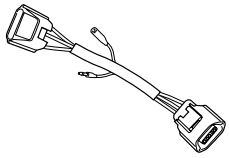 09900-28630 TPS test wire harness	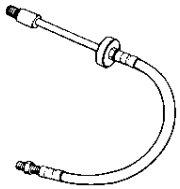 09913-10750 Adapter

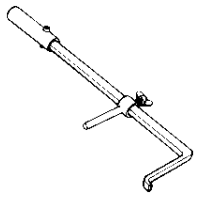 09913-50121 Oil seal remover	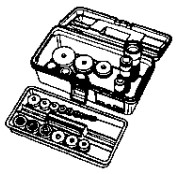 09913-70210 Bearing installer set	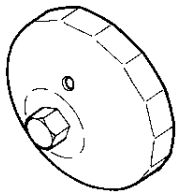 09915-40610 Oil filter wrench	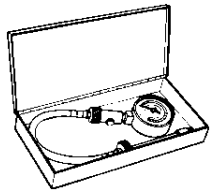 09915-64512 Compression gauge set	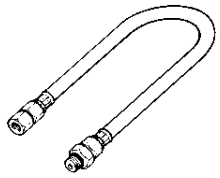 09915-74521 Oil pressure gauge hose
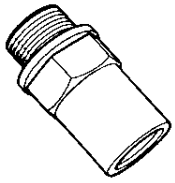 09915-74540 Oil pressure gauge attachment	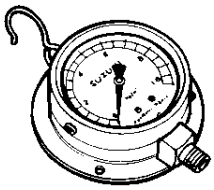 09915-77331 Meter (for high pressure)	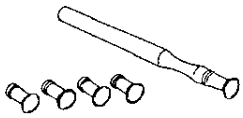 09916-10911 Valve lapper set	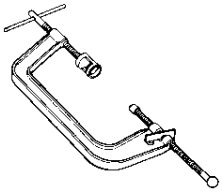 09916-14510 Valve lifter	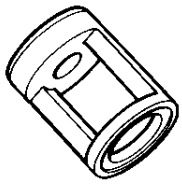 09916-14530 Valve lifter attachment
 09916-33210 Valve guide reamer (4.5 mm)	 09916-33320 Valve guide reamer (9.8 mm)	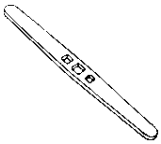 09916-34542 Reamer handle	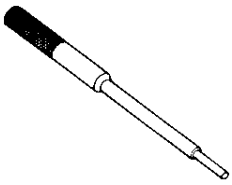 09916-43211 Valve guide remover/installer	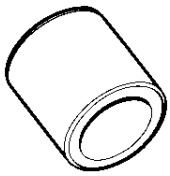 09916-53330 Attachment
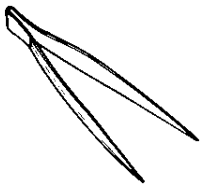 09916-84511 Tweezers	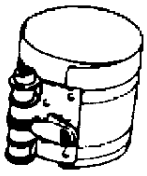 09916-77310 Piston ring compressor	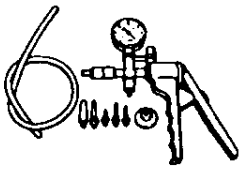 09917-47011 Vacuum pump gauge	 09919-28610 Sleeve protector	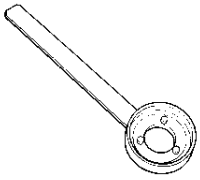 09920-34830 Starter clutch holder

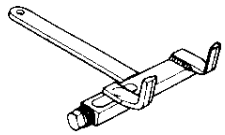 09920-53740 Clutch sleeve hub holder	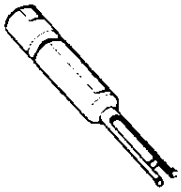 09921-20210 Bearing remover	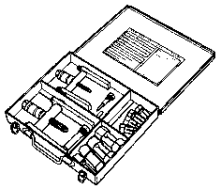 09921-20240 Bearing remover set	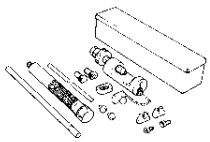 09922-22711 Drive chain cutting and joining tool	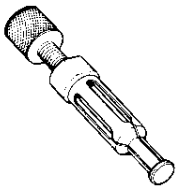 09923-74511 Bearing remover
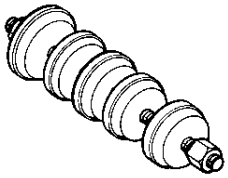 09924-84510 Bearing installer set	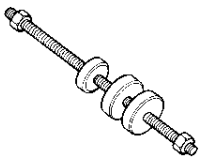 09924-84521 Bearing installer set	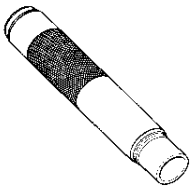 09925-18011 Steering bearing installer	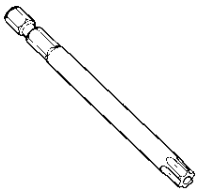 09930-11920 Torx bit JT40H	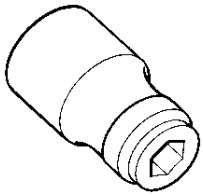 09930-11940 Bit holder
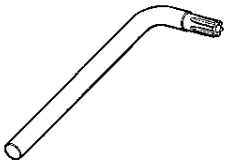 09930-11950 Torx wrench	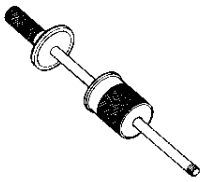 09930-30104 Sliding shaft	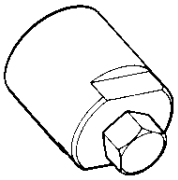 09930-34980 Rotor remover	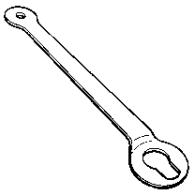 09930-44520 Rotor holder	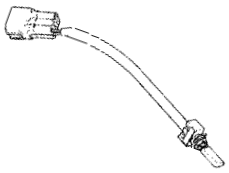 09930-82720 Mode selection switch
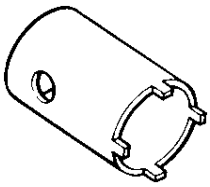 09940-14911 Steering stem nut wrench	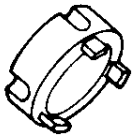 09940-14960 Steering nut wrench socket	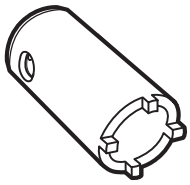 09940-14940 Swingarm pivot thrust adjuster socket wrench	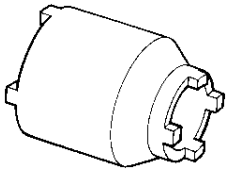 09940-14980 Engine mounting thrust adjuster socket wrench	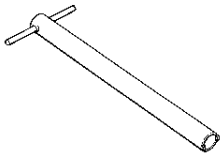 09940-30221 Front fork assembling tool

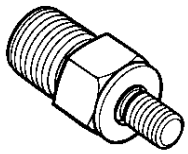 **09940-40211** **Fuel pressure gauge adaptor**	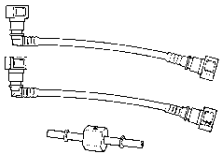 **09940-40220** **Fuel pressure gauge hose attachment**	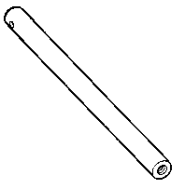 **09940-52841** **Front fork inner rod holder**	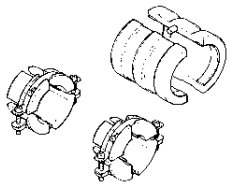 **09940-52861** **Front fork oil seal installer**	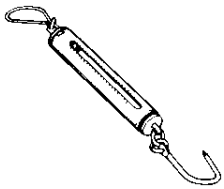 **09940-92720** **Spring scale**
 **09940-94922** **Front fork spring stopper plate**	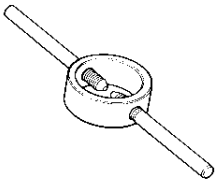 **09940-94930** **Front fork spacer holder**	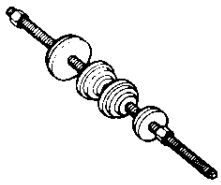 **09941-34513** **Steering race installer**	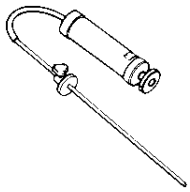 **09943-74111** **Fork oil level gauge**	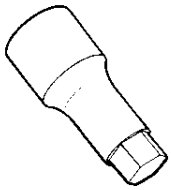 **09944-28320** **Hexagon socket (19 mm)**
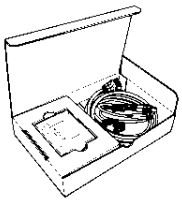 **09904-41010** **SDS Set**	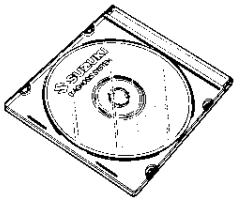 **99565-01010-010** **CD-ROM Ver.10**			

NOTE:
When order the special tool, please confirm whether it is available or not.

TIGHTENING TORQUE
ENGINE

ITEM			N·m	kgf-m	lb-ft
Exhaust pipe bolt			23	2.3	16.5
Muffler connecting bolt			23	2.3	16.5
Muffler mounting bolt			25	2.5	18.0
Muffler chamber bracket bolt			25	2.5	18.0
Muffler chamber mounting bolt			23	2.3	16.5
Muffler joint nut			25	2.5	18.0
Speed sensor rotor bolt			25	2.5	18.0
Speed sensor bolt			6.5	0.65	4.7
Engine sprocket nut			115	11.5	83.0
Engine mounting bolt and nut	(M: 10) Bolt		55	5.5	40.0
	(M: 10) Nut		75	7.5	54.0
Engine mounting thrust adjuster			23	2.3	16.5
Engine mounting thrust adjuster lock-nut			45	4.5	32.5
Engine mounting pinch bolt			23	2.3	16.5
Cylinder head cover bolt			14	1.4	10.0
Spark plug			11	1.1	8.0
Cam chain guide No. 1 bolt			23	2.3	16.5
Camshaft journal holder bolt			10	1.0	7.0
Cam chain tension adjuster cap bolt			23	2.3	16.5
Cam chain tension adjuster mounting bolt			10	1.0	7.0
Cam chain tensioner bolt			23	2.3	16.5
Cylinder head bolt	(M: 10)	Step 1/step 3	31	3.1	22.5
		Final step	60°		
	(M: 6)		10	1.0	7.0
PAIR reed valve cover bolt			10	1.0	7.0
Water jacket plug			9.5	0.95	6.9
Water inlet cover bolt			10	1.0	7.0
Clutch cover bolt			10	1.0	7.0
Clutch sleeve hub nut			95	9.5	68.5
Clutch spring set bolt			10	1.0	7.0
Clutch lifter adjuster lock-nut			23	2.3	16.5
Starter clutch cover bolt			10	1.0	7.0
Starter idle gear cover bolt			10	1.0	7.0
Valve timing inspection plug			11	1.1	8.0
Starter clutch bolt			55	5.5	40.0
Generator cover bolt			10	1.0	7.0
Generator rotor bolt			120	12.0	87.0
Generator stator set bolt			11	1.1	8.0
Gearshift cam stopper bolt			10	1.0	7.0
Gearshift cam stopper plate bolt			13	1.3	9.5
Gearshift fork shaft retainer bolt			10	1.0	7.0
Gear position switch bolt			6.5	0.65	4.7
Oil pressure switch			14	1.4	10.0
Oil filter			20	2.0	14.5

ITEM			N·m	kgf-m	lb-ft
Crankcase bolt	(M: 6)	(Initial)	6	0.6	4.5
		(Final)	11	1.1	8.0
	(M: 8)	(Initial)	15	1.5	11.0
		(Final)	26	2.6	19.0
Crankshaft journal bolt	(M: 9)	(Initial)	18	1.8	13.0
		(Final)	50°		
Oil gallery plug	(M: 6)		10	1.0	7.0
	(M: 8)		18	1.8	13.0
	(M: 10)		18	1.8	13.0
	(M: 16)		35	3.5	25.5
Oil drain plug			23	2.3	16.5
Piston cooling oil jet bolt			10	1.0	7.0
Oil pump mounting bolt			10	1.0	7.0
Conrod bearing cap bolt	(Initial)		37	3.7	27.0
	(Final)		60° (1/6 turn)		
Bearing retainer screw			10	1.0	7.0
Breather cover bolt			10	1.0	7.0
Oil strainer bolt			11	1.1	8.0
Oil pan bolt			10	1.0	7.0
Oil cooler mounting bolt			10	1.0	7.0
Oil cooler union bolt			10	1.0	7.0
Water bypass union			12	1.2	8.5
Starter motor mounting bolt			6	0.6	4.3

FI SYSTEM AND INTAKE AIR SYSTEM

ITEM	N·m	kgf-m	lb-ft
CMP sensor mounting bolt	10	1.0	7.0
CKP sensor mounting bolt	8	0.8	6.0
IAT sensor mounting screw	3	0.3	2.0
Fuel delivery pipe mounting screw	3.5	0.35	2.5
Fuel pump mounting bolt	10	1.0	7.0
TPS and STPS mounting screw	3.5	0.35	2.5
EXCVA mounting bolt	10	1.0	7.0
EXCVA pulley mounting bolt	5	0.5	3.5

COOLING SYSTEM

ITEM	N·m	kgf-m	lb-ft
Impeller securing bolt	8	0.8	6.0
Water pump cover screw	5	0.5	3.5
Water pump mounting bolt	10	1.0	7.0
Cooling fan mounting bolt	8	0.8	6.0
ECT sensor	18	1.8	13.0
Thermostat cover bolt	10	1.0	7.0
Thermostat air bleeder bolt	6	0.6	4.5

CHASSIS

ITEM	N·m	kgf-m	lb-ft
Steering stem head nut	90	9.0	65.0
Steering stem lock-nut	80	8.0	58.0
Steering damper bolt and nut	23	2.3	16.5
Front fork upper clamp bolt	23	2.3	16.5
Front fork lower clamp bolt	23	2.3	16.5
Front fork cap bolt	23	2.3	16.5
Front fork inner rod lock-nut	15	1.5	11.0
Front fork damper rod bolt	23	2.3	16.5
Front axle bolt	100	10.0	72.5
Front axle pinch bolt	23	2.3	16.5
Handlebar clamp bolt	23	2.3	16.5
Front brake master cylinder mounting bolt	10	1.0	7.0
Front brake caliper mounting bolt	39	3.9	28.0
Front brake caliper housing bolt	22	2.2	16.0
Front brake pad mounting pin	16	1.6	11.5
Brake hose union bolt	23	2.3	16.5
Clutch lever holder mounting bolt	10	1.0	7.0
Air bleeder valve (Front and Rear brake caliper)	7.5	0.75	5.5
Air breeder valve (Front master cylinder)	6.0	0.6	4.5
Air breeder valve (Clutch release cylinder)	6.0	0.6	4.5
Brake disc bolt (Front)	23	2.3	16.5
Brake disc bolt (Rear)	35	3.5	25.5
Rear brake caliper mounting bolt	18	1.8	13.0
Rear brake caliper sliding pin	33	3.3	24.0
Rear brake pad mounting pin	16	1.6	11.5
Rear brake master cylinder mounting bolt	10	1.0	7.0
Rear brake master cylinder rod lock-nut	18	1.8	13.0
Front footrest bracket mounting bolt	23	2.3	16.5
Swingarm pivot shaft	15	1.5	11.0
Swingarm pivot nut	100	10.0	72.5
Swingarm pivot lock-nut	90	9.0	65.0
Swingarm pivot boss nut	65	6.5	47.0
Cushion lever mounting nut	98	9.8	71.0
Cushion rod nut (Front side)	98	9.8	71.0
Cushion rod nut (Rear side)	78	7.8	56.5
Rear shock absorber mounting bolt and nut (Upper and Lower)	50	5.0	36.0
Rear axle nut	100	10.0	72.5
Rear sprocket nut	60	6.0	43.5
Side-stand mounting bracket bolt	95	9.5	68.5
Cowling brace bolt and nut	23	2.3	16.5
Rear shock absorber bracket nut	115	11.5	83.0
Seat rail bolt	50	5.0	36.0
Rear view mirror nut	10	1.0	7.0

TIGHTENING TORQUE CHART

For other nuts and bolts not listed in the preceding page, refer to this chart:

Bolt Diameter Ⓐ (mm)	Conventional or "4" marked bolt			"7" marked bolt		
	N·m	kgf-m	lb-ft	N·m	kgf-m	lb-ft
4	1.5	0.15	1.0	2.3	0.23	1.5
5	3	0.3	2.0	4.5	0.45	3.0
6	5.5	0.55	4.0	10	1.0	7.0
8	13	1.3	9.5	23	2.3	16.5
10	29	2.9	21.0	50	5.0	36.0
12	45	4.5	32.5	85	8.5	61.5
14	65	6.5	47.0	135	13.5	97.5
16	105	10.5	76.0	210	21.0	152.0
18	160	16.0	115.5	240	24.0	173.5

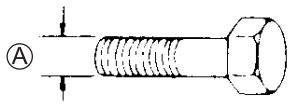

Conventional bolt

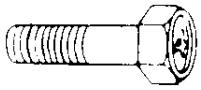

"4" marked bolt

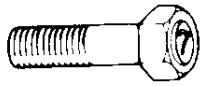

"7" marked bolt

SERVICE DATA

VALVE + VALVE GUIDE

Unit: mm (in)

ITEM	STANDARD		LIMIT
Valve diam.	IN.	30 (1.18)	—
	EX.	24 (0.94)	—
Valve clearance (when cold)	IN.	0.08 – 0.18 (0.003 – 0.007)	—
	EX.	0.18 – 0.28 (0.007 – 0.011)	—
Valve guide to valve stem clearance	IN.	0.010 – 0.037 (0.0004 – 0.0015)	—
	EX.	0.030 – 0.057 (0.0012 – 0.0022)	—
Valve guide I.D.	IN. & EX.	4.500 – 4.512 (0.1772 – 0.1776)	—
Valve stem O.D.	IN.	4.475 – 4.490 (0.1762 – 0.1768)	—
	EX.	4.455 – 4.470 (0.1754 – 0.1760)	—
Valve stem deflection	IN. & EX.	—	0.25 (0.010)
Valve stem runout	IN. & EX.	—	0.05 (0.002)
Valve seat width	IN. & EX.	0.9 – 1.1 (0.035 – 0.043)	—
Valve head radial runout	IN. & EX.	—	0.03 (0.001)
Valve spring free length	IN. & EX.	—	38.0 (1.50)
Valve spring tension	IN. & EX.	Approx. 163 N (16.6 kgf, 36.6 lbs) at length 33.55 mm (1.32 in)	—

CAMSHAFT + CYLINDER HEAD

Unit: mm (in)

ITEM	STANDARD		LIMIT
Cam height	IN.	37.58 – 37.63 (1.480 – 1.481)	37.28 (1.468)
	EX.	36.88 – 36.93 (1.452 – 1.454)	36.58 (1.440)
Camshaft journal oil clearance	IN. & EX.	0.032 – 0.066 (0.0013 – 0.0026)	0.150 (0.0059)
Camshaft journal holder I.D.	IN. & EX.	24.012 – 24.025 (0.9454 – 0.9459)	—
Camshaft journal O.D.	IN. & EX.	23.959 – 23.980 (0.9433 – 0.9441)	—
Camshaft runout	—		0.10 (0.004)
Cam chain pin (at arrow “3”)	14th pin		—
Cylinder head distortion	—		0.20 (0.008)

CYLINDER + PISTON + PISTON RING

Unit: mm (in)

ITEM	STANDARD			LIMIT
Compression pressure	1 300 – 1 700 kPa (13 – 17 kgf/cm², 185 – 242 psi)			1 000 kPa (10 kgf/cm², 142 psi)
Compression pressure difference	—			200 kPa (2 kgf/cm², 28 psi)
Piston to cylinder clearance	0.035 – 0.045 (0.0014 – 0.0018)			0.120 (0.0047)
Cylinder bore	73.400 – 73.415 (2.8900 – 2.8903)			Nicks or Scratches
Piston diam.	73.360 – 73.375 (2.8882 – 2.8888) Measure at 10 mm (0.39 in) from the skirt end.			73.280 (2.8850)
Cylinder distortion	—			0.02 (0.008)
Piston ring free end gap	1st		Approx. 6.5 (0.26)	5.2 (0.20)
	2nd	T	Approx. 8.0 (0.31)	6.4 (0.25)
Piston ring end gap	1st		0.06 – 0.18 (0.002 – 0.007)	0.50 (0.020)
	2nd	T	0.06 – 0.18 (0.002 – 0.007)	0.50 (0.020)
Piston ring to groove clearance	1st		—	0.180 (0.0071)
	2nd		—	0.150 (0.0059)
Piston ring groove width	1st		0.83 – 0.85 (0.0327 – 0.0335) 1.30 – 1.32 (0.0512 – 0.0520)	—
	2nd		0.81 – 0.83 (0.0319 – 0.0327)	—
	Oil		1.51 – 1.53 (0.0594 – 0.0602)	—
Piston ring thickness	1st		0.76 – 0.81 (0.0299 – 0.0319) 1.08 – 1.10 (0.0425 – 0.0433)	—
	2nd		0.77 – 0.79 (0.0303 – 0.0311)	—
Piston pin bore I.D.	15.002 – 15.008 (0.5906 – 0.5909)			15.030 (0.5917)
Piston pin O.D.	14.995 – 15.000 (0.5903 – 0.5906)			14.980 (0.5898)

CONROD + CRANKSHAFT

Unit: mm (in)

ITEM	STANDARD		LIMIT
Conrod small end I.D.	15.010 – 15.018 (0.5909 – 0.5913)		15.040 (0.5921)
Conrod big end side clearance	0.10 – 0.20 (0.004 – 0.008)		0.30 (0.012)
Conrod big end width	19.95 – 20.00 (0.7854 – 0.7874)		—
Crank pin width	20.10 – 20.15 (0.7913 – 0.7933)		—
Conrod big end oil clearance	0.032 – 0.056 (0.0013 – 0.0022)		0.080 (0.0031)
Crank pin O.D.	34.976 – 35.000 (1.3770 – 1.3780)		—
Crankshaft journal oil clearance	0.010 – 0.028 (0.0004 – 0.0011)		0.080 (0.0031)
Crankshaft journal O.D.	34.982 – 35.000 (1.3772 – 1.3780)		—
Crankshaft thrust bearing thickness	Right side	2.420 – 2.440 (0.0953 – 0.0961)	—
	Left side	2.360 – 2.500 (0.0929 – 0.0984)	—
Crankshaft thrust clearance	0.060 – 0.110 (0.0024 – 0.0043)		—
Crankshaft runout	—		0.05 (0.002)

BALANCER

Unit: mm (in)

ITEM	STANDARD	LIMIT
Balancer shaft journal oil clearance	0.028 – 0.052 (0.0011 – 0.0020)	0.080 (0.0031)
Balancer shaft journal O.D.	22.976 – 22.992 (0.9046 – 0.9052)	—

OIL PUMP

ITEM	STANDARD	LIMIT
Oil pressure (at 60 °C, 140 °F)	100 – 400 kPa (1.0 – 4.0 kgf/cm², 14 – 57 psi) at 3 000 r/min	—

CLUTCH

Unit: mm (in)

ITEM	STANDARD		LIMIT
Drive plate thickness	No. 1, 2 and 3	2.72 – 2.88 (0.107 – 0.113)	2.42 (0.095)
Drive plate claw width	No. 1, 2 and 3	13.85 – 13.96 (0.5453 – 0.5496)	13.05 (0.5138)
Driven plate distortion	No. 1, 2 and 3	—	0.10 (0.004)
Clutch spring free length	57.01 (2.244)		54.2 (2.134)
Clutch lifter adjusting pin screw height	0.2 – 0.4 (0.008 – 0.016)		—
Wave spring washer height	—		4.30 (0.169)
Clutch master cylinder bore	12.700 – 12.743 (0.5000 – 0.5017)		—
Clutch master cylinder piston diam.	12.657 – 12.684 (0.4983 – 0.4994)		—
Clutch release cylinder bore	35.700 – 35.762 (1.4055 – 1.4079)		—
Clutch release cylinder piston diam.	35.650 – 35.675 (1.4035 – 1.4045)		—
Clutch fluid type	DOT 4		—

TRANSMISSION + DRIVE CHAIN

Unit: mm (in) Except ratio

ITEM		STANDARD		LIMIT
Primary reduction ratio		1.553 (73/47)		—
Final reduction ratio		2.529 (43/17)		—
Gear ratios	Low	2.562 (41/16)		—
	2nd	2.052 (39/19)		—
	3rd	1.714 (36/21)		—
	4th	1.500 (36/24)		—
	5th	1.360 (34/25)		—
	Top	1.269 (33/26)		—
Shift fork to groove clearance		0.10 – 0.30 (0.004 – 0.012)		0.50 (0.020)
Shift fork groove width		5.0 – 5.1 (0.197 – 0.201)		—
Shift fork thickness		4.8 – 4.9 (0.189 – 0.193)		—
Drive chain		Type	DID530 VA9	—
		Links	112 links	—
		20-pitch length	—	319.4 (12.57)
Drive chain slack (on side-stand)		20 – 30 (0.79 – 1.18)		—
Gearshift lever height		65 – 75 (2.6 – 3.0)		—

THERMOSTAT + RADIATOR + FAN + COOLANT

ITEM	STANDARD/SPECIFICATION		NOTE
Thermostat valve opening temperature	Approx. 82 °C (180 °F)		—
Thermostat valve lift	8 mm (0.31 in) and over at 95 °C (203 °F)		—
ECT sensor resistance	20 °C (68 °F)	Approx. 2.45 kΩ	—
	50 °C (122 °F)	Approx. 0.811 kΩ	—
	80 °C (176 °F)	Approx. 0.318 kΩ	—
	110 °C (230 °F)	Approx. 0.142 kΩ	—
Radiator cap valve opening pressure	93 – 123 kPa (0.93 – 1.23 kgf/cm², 13.2 – 17.5 psi)		—
Cooling fan operating temperature	OFF→ON	Approx. 105 °C (221 °F)	—
	ON→OFF	Approx. 100 °C (212 °F)	—
Engine coolant type	Use an antifreeze/coolant compatible with aluminum radiator, mixed with distilled water only, at the ratio of 50:50.		—
Engine coolant	Reserve tank side	Approx. 250 ml (0.3/0.2 US/Imp qt)	—
	Engine side	Approx. 2 250 ml (2.3 – 1.9 US/Imp qt)	—

INJECTOR + FUEL PUMP + FUEL PRESSURE REGULATOR

ITEM	SPECIFICATION	NOTE
Injector resistance (primary and secondary)	11 – 13 Ω at 20 °C (68 °F)	
Fuel pump discharge amount	220 ml (5.7/5.9 US/Imp oz) and more/10 sec.	
Fuel pressure regulator operating set pressure	Approx. 300 kPa (3.0 kgf/cm², 43 psi)	

FI SENSORS

ITEM	SPECIFICATION		NOTE
CKP sensor resistance	142 – 194 Ω		
CKP sensor peak voltage	0.5 V and more		When cranking
IAP sensor input voltage	4.5 – 5.5 V		
IAP sensor output voltage	Approx. 2.6 V at idle speed		
TP sensor input voltage	4.5 – 5.5 V		
TP sensor output voltage	Closed	Approx. 1.1 V	
	Opened	Approx. 4.3 V	
ECT sensor input voltage	4.5 – 5.5 V		
ECT sensor output voltage	0.15 – 4.85 V		
ECT sensor resistance	Approx. 2.45 kΩ at 20 °C (68 °F)		
IAT sensor input voltage	4.5 – 5.5 V		
IAT sensor output voltage	0.15 – 4.85 V		
IAT sensor resistance	Approx. 2.45 kΩ at 20 °C (68 °F)		
AP sensor input voltage	4.5 – 5.5 V		
AP sensor output voltage	Approx. 2.6 V at 100 kPa (760 mmHg)		
TO sensor resistance	16.5 – 22.3 kΩ		
TO sensor voltage	Normal	0.4 – 1.4 V	
	Leaning	3.7 – 4.4 V	When leaning 65°
GP switch voltage	0.6 V and more		From 1st to Top
Injector voltage	Battery voltage		
Ignition coil primary peak voltage	80 V and more		When cranking
STP sensor input voltage	4.5 – 5.5 V		
STP sensor output voltage	Closed	Approx. 0.5 V	
	Opened	Approx. 3.9 V	
STV actuator resistance	Approx. 6.5 Ω		
EXCVA position sensor input voltage	4.5 – 5.5 V		
EXCVA position sensor resistance	Approx. 3.1 kΩ		At adjustment position
EXCVA position sensor output voltage	Closed	0.5 – 1.3 V	
	Opened	3.7 – 4.5 V	
PAIR control solenoid valve resistance	18 – 22 Ω at 20 – 30 °C (68 – 86 °F)		
Steering damper solenoid valve resistance	Approx. 12.5 Ω at 20 °C (68 °F)		
EVAP purge control solenoid valve resistance	32 Ω at 20 – 30 °C (68 – 86 °F)		E-33
HO2 sensor output voltage	0.3 V and less at idle speed		
	0.6 V and more at 5 000 r/min		
HO2 sonsor resistance	Approx. 8 Ω at 23 °C		

THROTTLE BODY

ITEM	SPECIFICATION
Bore size	44 mm (1.73 in)
I.D. No.	21G1 (For E-33), 21G0 (For the others)
Idle r/min	1 150 ± 100 r/min
Throttle cable play	2.0 – 4.0 mm (0.08 – 0.16 in)

ELECTRICAL

Unit: mm (in)

ITEM			SPECIFICATION		NOTE
Firing order			1.2.4.3		
Spark plug			Type	NGK: CR9EIA-9 DENSO: IU27D	
			Gap	0.8 – 0.9 (0.031 – 0.035)	
Spark performance			Over 8 (0.3) at 1 atm.		
CKP sensor resistance			142 – 194 Ω		
CKP sensor peak voltage			0.5 V and more		
Ignition coil resistance			Primary	1.1 – 1.9 Ω	Terminal – Terminal
			Secondary	10.8 – 16.2 kΩ	Plug cap – Terminal
Ignition coil primary peak voltage			80 V and more		
Generator coil resistance			0.2 – 0.9 Ω		
Generator no-load voltage (When engine is cold)			65 V (AC) and more at 5 000 r/min		
Starter motor brush length			Standard	7 (0.28)	
			Limit	3.5 (0.14)	
Regulated voltage			14.0 – 15.5 V at 5 000 r/min		
Starter relay resistance			3 – 6 Ω		
GP switch voltage			0.6 V and more (From 1st to Top)		
Battery	Type designation		FT12A-BS		
	Capacity		12 V 36 kC (10 Ah)/10 HR		
Fuse size	Headlight	HI	10 A		
		LO	10 A		
	Signal		15 A		
	Ignition		10 A		
	Fuel		10 A		
	Fan		15 A		
	Main		30 A		

WATTAGE

Unit: W

ITEM		STANDARD/SPECIFICATION	
		E-03, 28, 33	Others
Headlight	HI	65	←
	LO	55	←
Position/Parking light		5	←
Brake light/Taillight		LED	←
Turn signal light		21 × 4	←
License plate light		5	←
Combination meter light		LED	←
Turn signal indicator light		LED	←
High beam indicator light		LED	←
Neutral indicator light		LED	←
FI indicator light/Oil pressure indicator light/Engine coolant temp. indicator light		LED	←
Fuel level indicator light		LED	←
Engine RPM indicator light		LED	←
Immobilizer indicator light			LED

BRAKE + WHEEL

Unit: mm (in)

ITEM	STANDARD			LIMIT
Rear brake pedal height	65 – 75 (2.6 – 3.0)			—
Brake disc thickness	Front	5.3 – 5.7 (0.209 – 0.224)		5.0 (0.20)
	Rear	4.8 – 5.2 (0.189 – 0.205)		4.5 (0.18)
Brake disc runout	—			0.30 (0.012)
Brake master cylinder bore	Front	19.050 – 19.093 (0.7500 – 0.7517)		—
	Rear	14.000 – 14.043 (0.5512 – 0.5529)		—
Brake master cylinder piston diam.	Front	19.018 – 19.034 (0.7487 – 0.7494)		—
	Rear	13.957 – 13.984 (0.5495 – 0.5506)		—
Brake caliper cylinder bore	Front	Leading	30.280 – 30.356 (1.1921 – 1.1951)	—
		Trailing	34.010 – 34.086 (1.3390 – 1.3420)	—
	Rear	38.180 – 38.256 (1.5031 – 1.5062)		—
Brake caliper piston diam.	Front	Leading	30.150 – 30.200 (1.1870 – 1.1890)	—
		Trailing	33.884 – 33.934 (1.3340 – 1.3360)	—
	Rear	38.098 – 38.148 (1.4999 – 1.5019)		—
Brake fluid type	DOT 4			—

ITEM	STANDARD		LIMIT
Wheel rim runout	Axial	—	2.0 (0.08)
	Radial	—	2.0 (0.08)
Wheel rim size	Front	17 M/C × MT 3.50	—
	Rear	17 M/C × MT 6.00	—
Wheel axle runout	Front	—	0.25 (0.010)
	Rear	—	0.25 (0.010)

TIRE

ITEM	STANDARD		LIMIT
Cold inflation tire pressure (Solo riding)	Front	250 kPa (2.50 kgf/cm², 36 psi)	—
	Rear	290 kPa (2.90 kgf/cm², 42 psi)	—
Cold inflation tire pressure (Dual riding)	Front	250 kPa (2.50 kgf/cm², 36 psi)	—
	Rear	290 kPa (2.90 kgf/cm², 42 psi)	—
Tire size	Front	120/70 ZR17 M/C (58 W)	—
	Rear	190/50 ZR17 M/C (73 W)	—
Tire type	Front	BRIDGESTONE BT015F N	—
	Rear	BRIDGESTONE BT015R G	—
Tire tread depth (Recommended depth)	Front	—	1.6 (0.06)
	Rear	—	2.0 (0.08)

SUSPENSION

Unit: mm (in)

ITEM	STANDARD		LIMIT
Front fork stroke	125 (4.92)		—
Front fork spring free length	238.5 (9.39)		233 (9.17)
Front fork oil level (without spring, outer tube fully compressed)	124 (4.88)		—
Front fork oil type	SUZUKI FORK OIL L01 or an equivalent fork oil		—
Front fork oil capacity (each leg)	512 ml (17.3/18.0 US/Imp oz)		—
Front fork inner tube O.D.	43 (1.69)		
Front fork spring pre-load adjuster	3-1/2 groove from top		—
Front fork damping force adjuster	Rebound	6 clicks out from stiffest position	—
	Compression	Hi: 3 turns out from stiffest position	—
		Lo: 14 clicks out from stiffest position	—
Rear shock absorber spring set length	161 (6.34)		—
Rear shock absorber damping force adjuster (For E-02, 19)	Rebound	11 clicks out from stiffest position	—
	Compression	Hi: 3 turns out from stiffest position	—
		Lo: 14 clicks out from stiffest position	—
Rear shock absorber damping force adjuster (For E-03, 24, 28, 33)	Rebound	12 clicks out from stiffest position	—
	Compression	Hi: 3 turns out from stiffest position	—
		Lo: 13 clicks out from stiffest position	—
Rear wheel travel	135 (5.3)		—
Swingarm pivot shaft runout	—		0.3 (0.01)

FUEL + OIL

ITEM	SPECIFICATION		NOTE
Fuel type	Use only unleaded gasoline of at least 90 pump octane (R/2 + M/2). Gasoline containing MTBE (Methyl Tertiary Butyl Ether), less than 10% ethanol, or less than 5% methanol with appropriate cosolvents and corrosion inhibitor is permissible.		E-03, 28, 33
	Gasoline used should be graded 95 octane or higher. An unleaded gasoline is recommended.		Others
Fuel tank capacity	Including reserve	16.5 L (4.4/3.6 US/Imp gal)	E-33
		17.5 L (4.6/3.8 US/Imp gal)	Others
	Fuel level indicator light lighting	Approx. 4.0 L (1.1/0.9 US/Imp gal)	
Engine oil type	SAE 10W-40, API SF/SG or SH/SJ with JASO MA		
Engine oil capacity	Change	3.0 L (3.2/2.6 US/Imp qt)	
	Filter change	3.3 L (3.5/2.9 US/Imp qt)	
	Overhaul	3.6 L (3.8/3.2 US/Imp qt)	

EMISSION CONTROL INFORMATION

CONTENTS

EMISSION CONTROL SYSTEMS 11- 2
FUEL INJECTION SYSTEM 11- 2
CRANKCASE EMISSION CONTROL SYSTEM 11- 3
EXHAUST EMISSION CONTROL SYSTEM 11- 4
HO2 SENSOR INSPECTION 11- 5
HO2 SENSOR REMOVAL AND INSTALLATION 11- 5
NOISE EMISSION CONTROL SYSTEM 11- 5
PAIR (AIR SUPPLY) SYSTEM AND EMISSION CONTROL SYSTEM INSPECTION 11- 6
PAIR HOSES 11- 6
PAIR REED VALVE 11- 6
PCV HOSE 11- 6
PAIR CONTROL SOLENOID VALVE 11- 6
PAIR (AIR SUPPLY) SYSTEM DIAGRAM 11- 8
PAIR (AIR SUPPLY) SYSTEM HOSE ROUTING 11- 8

EMISSION CONTROL SYSTEMS

FUEL INJECTION SYSTEM

GSX-R1000 motorcycles are equipped with a fuel injection system for emission level control.
This fuel injection system is precision designed, manufactured and adjusted to comply with the applicable emission limits. With varying engine conditions, all of the fuel injection volumes are precisely controlled by the programmed injection maps in the ECM to reduce CO, NOX and HC. Adjusting, interfering with, improper replacement, or resetting of any of the fuel injection components may adversely affect injection performance and cause the motorcycle to exceed the exhaust emission level limits.

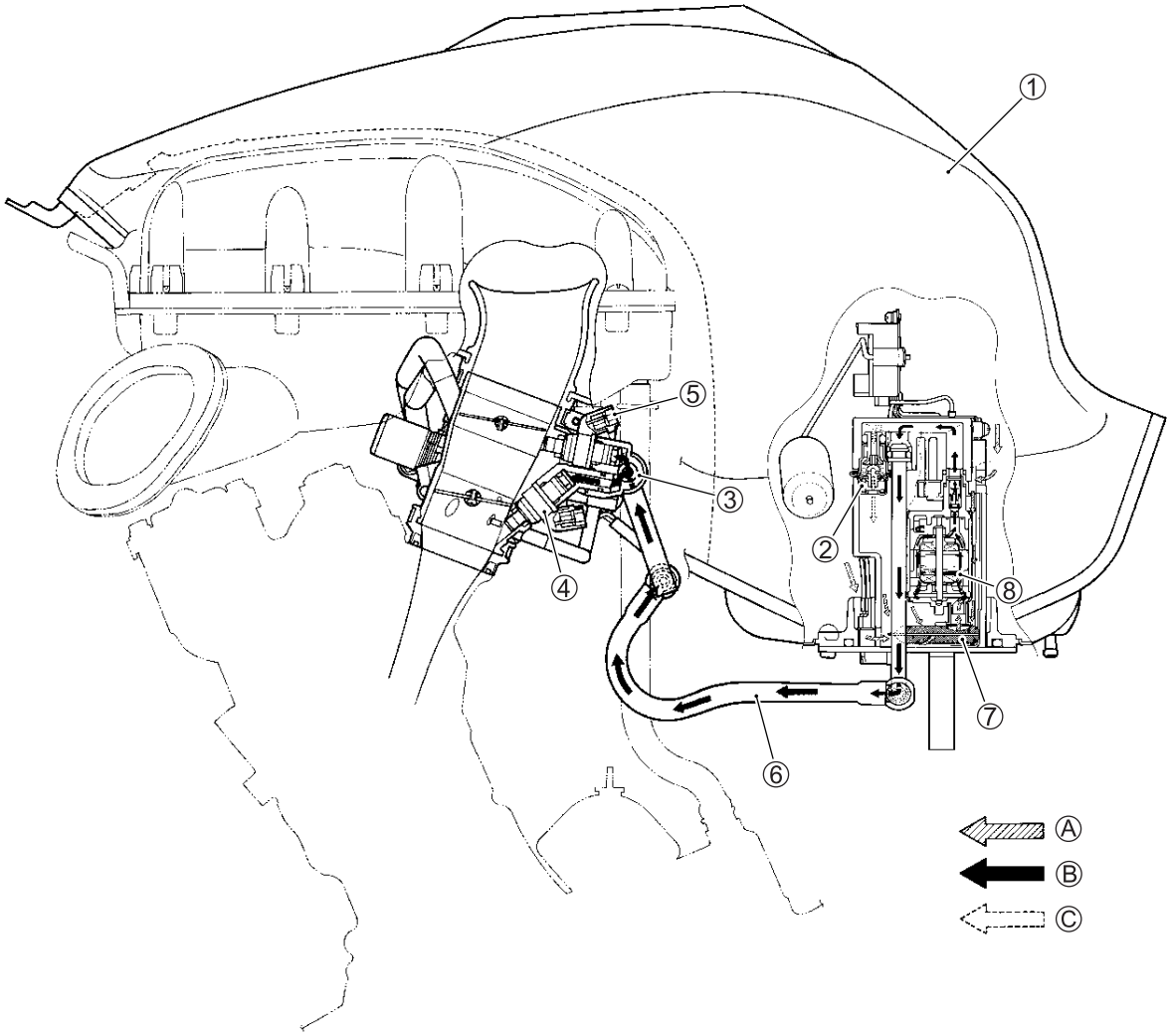

①	Fuel tank	⑦	Fuel mesh filter (For low pressure)
②	Fuel pressure regulator	⑧	Fuel pump
③	Fuel delivery pipe	Ⓐ	Before-pressurized fuel
④	Primary fuel injector	Ⓑ	Pressurized fuel
⑤	Secondary fuel injector	Ⓒ	Relieved fuel
⑥	Fuel feed hose		

CRANKCASE EMISSION CONTROL SYSTEM

The engine is equipped with a PCV system to prevent discharging crankcase emissions into the atomosphere. Blow-by gas in the engine is constantly drawn into the crankcase, which is returned to the combustion chamber through the PCV (breather) hose, air cleaner and throttle body.

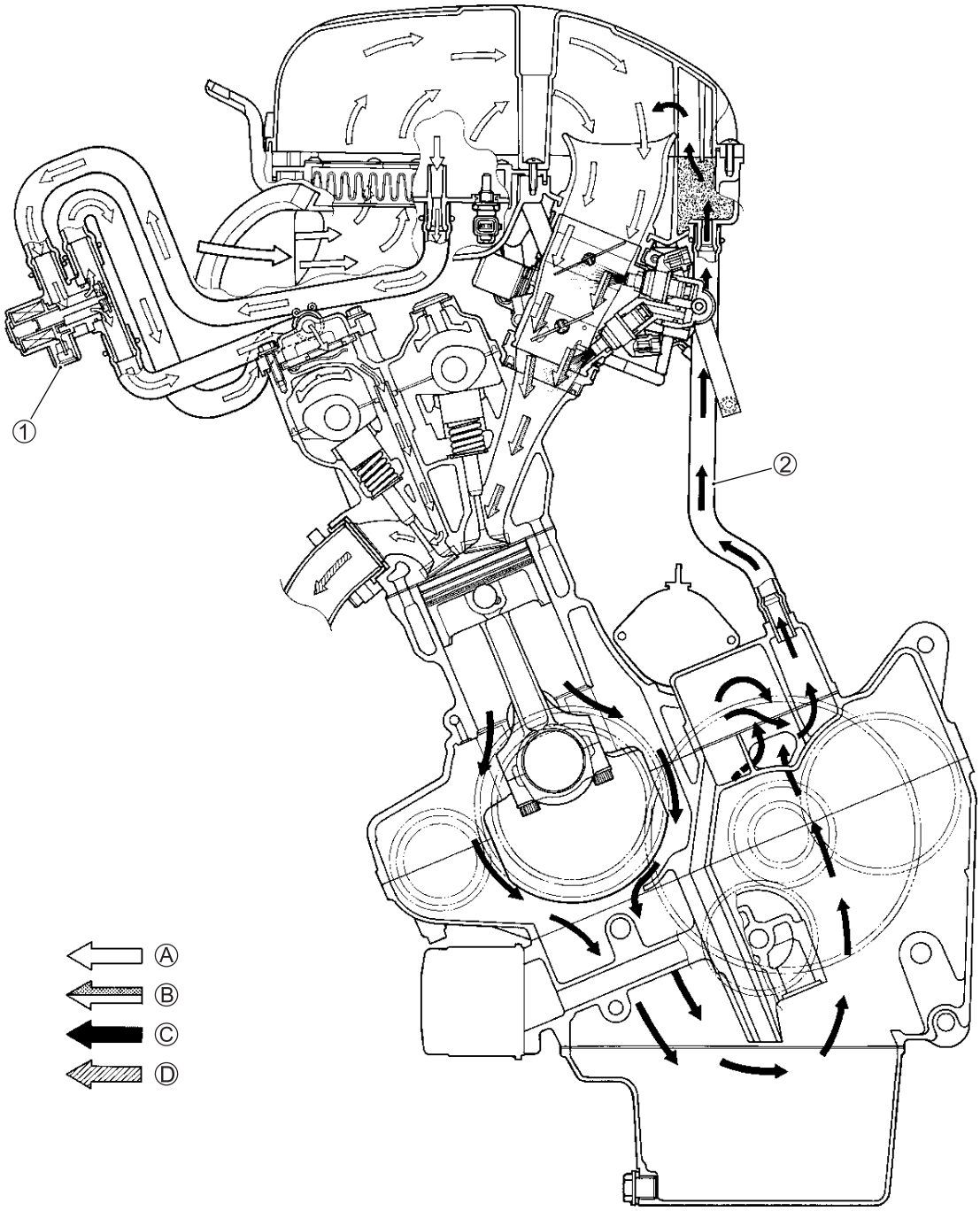

①	PAIR control solenoid valve	Ⓑ	FUEL/AIR MIXTURE
②	PCV hose	Ⓒ	BLOW-BY GAS
Ⓐ	FRESH AIR	Ⓓ	EXHAUST GAS

EXHAUST EMISSION CONTROL SYSTEM

The exhaust emission control system is composed of the PAIR system, exhaust control system, three-way catalyst system and ISC system. The fresh air is drawn into the exhaust port through the PAIR control solenoid valve and PAIR reed valve. The PAIR control solenoid valve is operated by the ECM, which is controlled according to the signals from TPS, ECTS, IATS, IAPS and CKPS. The exhaust gas flow is performed by the exhaust control valve actuator which is controlled by the ECM by changing the exhaust control valve angle. ISC valve adjusts the bypass air volume of the throttle body to control engine idling speed with various sensor signals by varying engine running conditions and the idling control contributes to reduce exhaust emission level.

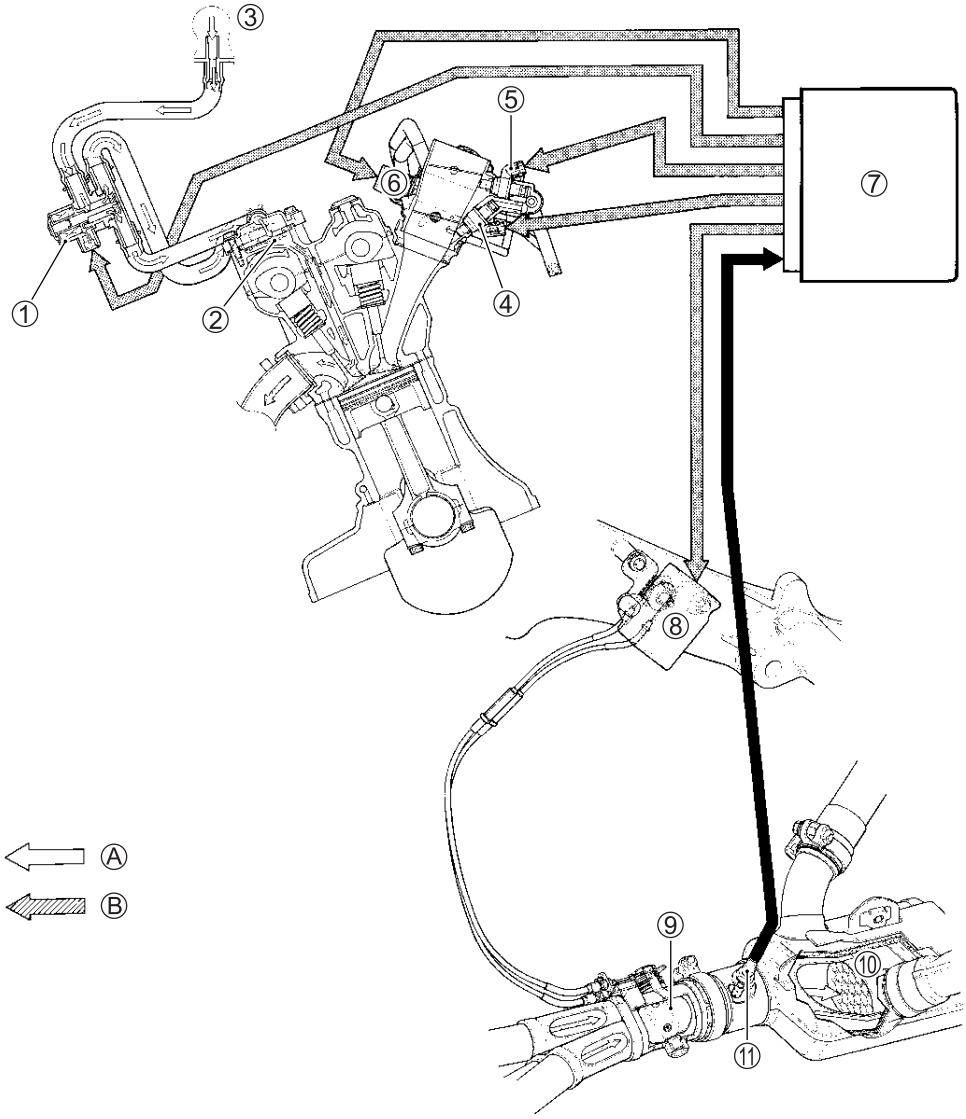

①	PAIR control solenoid valve	⑧	Exhaust control valve actuator
②	PAIR reed valve	⑨	Exhaust control valve
③	Air cleaner box	⑩	Three-way catalyst
④	Primary fuel injector	⑪	HO2 sensor
⑤	Secondary fuel injector	Ⓐ	FRESH AIR
⑥	ISC valve	Ⓑ	EXHAUST GAS
⑦	ECM		

HO2 SENSOR INSPECTION

(☞4-88)

HO2 SENSOR REMOVAL AND INSTALLATION

(☞4-113)

NOISE EMISSION CONTROL SYSTEM

TAMPERING WITH THE NOISE CONTROL SYSTEM PROHIBITED: Local law or federal law prohibits the following acts or the causing thereof:

1. The removal or rendering inoperative by any person, other than for purposes of maintenance, repair or replacement, of any device or element of design incorporated into any new vehicle for the purpose of noise control prior to its sale or delivery to the ultimate purchaser or while it is in use, or
2. The use of the vehicle after such device or element of design has been removed or rendered inoperative by any person.

AMONG THOSE ACTS PRESUMED TO CONSTITUTE TAMPERING ARE THE ACTS LISTED BELOW:

- Removing or puncturing the muffler, baffles, header pipes, screen type spark arrester (if equipped) or any other component which conducts exhaust gases.
- Removing or puncturing the air cleaner case, air cleaner cover, baffles or any other component which conducts intake air.
- Replacing the exhaust system or muffler with a system or muffler not marked with the same model specific code as the code listed on the Motorcycle Noise Emission Control Information label.

PAIR (AIR SUPPLY) SYSTEM AND EMISSION CONTROL SYSTEM INSPECTION

PAIR HOSES

- Inspect the PAIR hoses for wear or damage.
- Inspect the PAIR hoses for secure connection.

PAIR REED VALVE

- Lift and support the fuel tank. (☞5-3)
- Remove the PAIR reed valve cover. (☞3-29)
- Inspect the reed valve for the carbon deposit.
- If the carbon deposit is found in the reed valve, replace the PAIR reed valve with a new one.

PCV HOSE

- Remove the PCV hose from the crankcase breather cover.
- Inspect the PCV hose for wear and damage.
- If it is worn or damaged, replace the PCV hose with a new one.

PAIR CONTROL SOLENOID VALVE

REMOVAL

- Remove the air cleaner box. (☞5-14)
- Disconnect the PAIR control solenoid valve lead wire coupler ① and PAIR hoses.
- Remove the PAIR control solenoid valve ②.

NOTE:
PAIR control solenoid valve can be checked without removing it from the frame. (☞4-101)

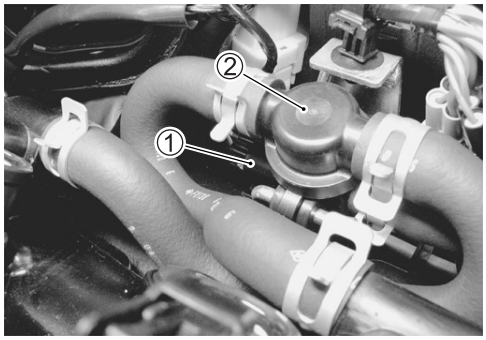

INSPECTION

- Check that air flows through the air inlet port to the air outlet port.
- If air does not flow out, replace the PAIR control solenoid valve with a new one.

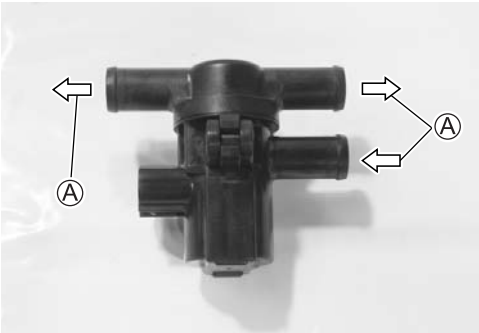

Ⓐ Air flow

- Connect the 12 V battery to the PAIR control solenoid valve terminals and check the air flow.
- If air does not flow out, the solenoid valve is in normal condition.

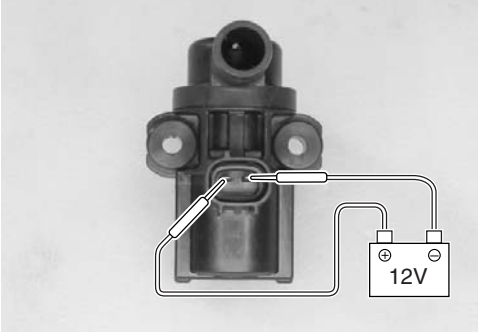

- Check the resistance between the terminals of the PAIR control solenoid valve.

DATA Resistance: 18 – 22 Ω at 20 – 30 °C (68 – 86 °F)

TOOL 09900-25008: Multi-circuit tester set

Tester knob indication: Resistance (Ω)

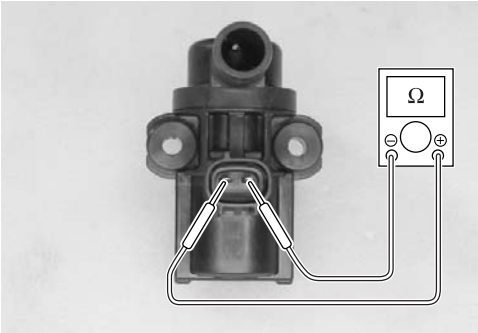

INSTALLATION

If the resistance is not within the standard range, replace the PAIR control solenoid valve with a new one.

Installation is in the reverse order of removal.

- Connect the PAIR control solenoid valve lead wire coupler and PAIR hoses securely. (☞10-24)

PAIR (AIR SUPPLY) SYSTEM DIAGRAM

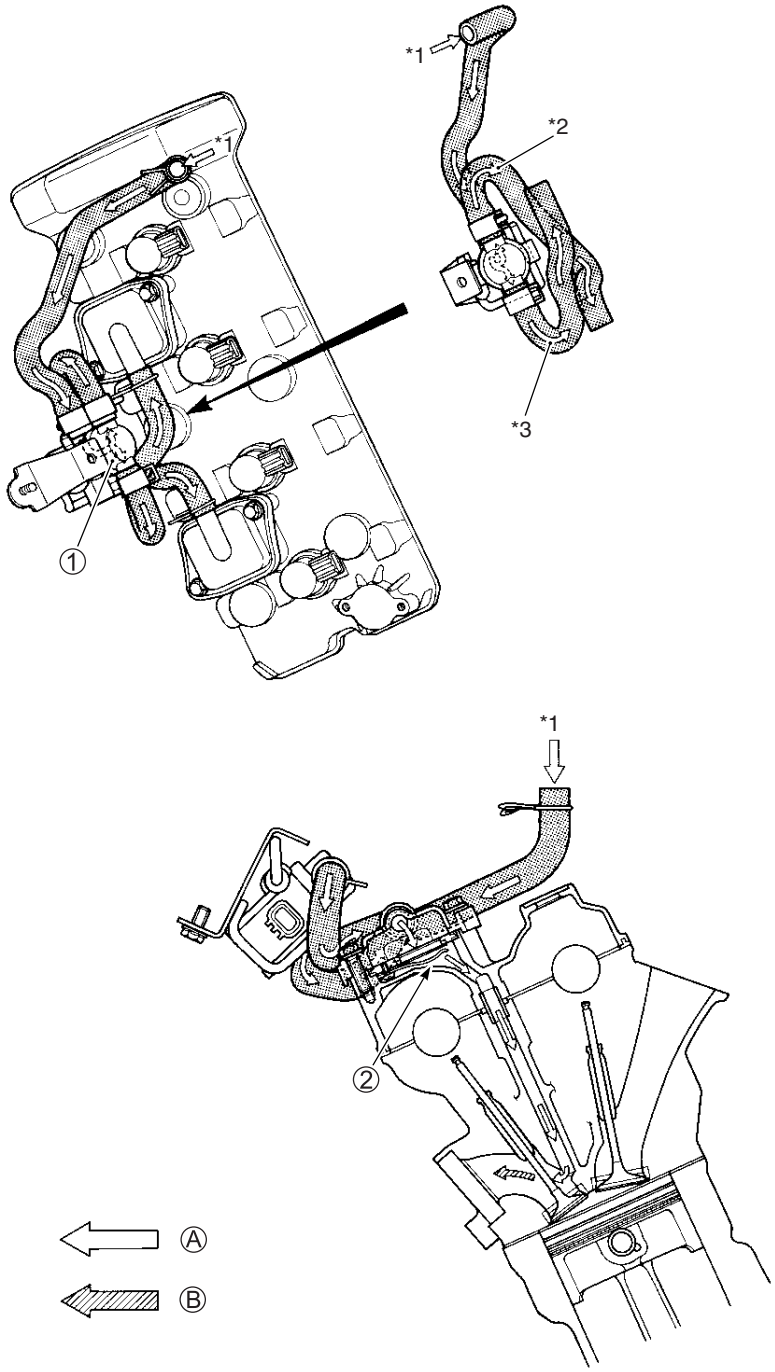

①	PAIR control solenoid valve	*1	From air cleaner
②	PAIR reed valve	*2	To #1 and #2 cylinders
Ⓐ	FRESH AIR	*3	To #3 and #4 cylinders
Ⓑ	EXHAUST GAS		

PAIR (AIR SUPPLY) SYSTEM HOSE ROUTING

(☞10-24)

WIRING DIAGRAM

E-02, 19, 24

Wiring diagrams wire color, refer to section “WIRE COLOR”.

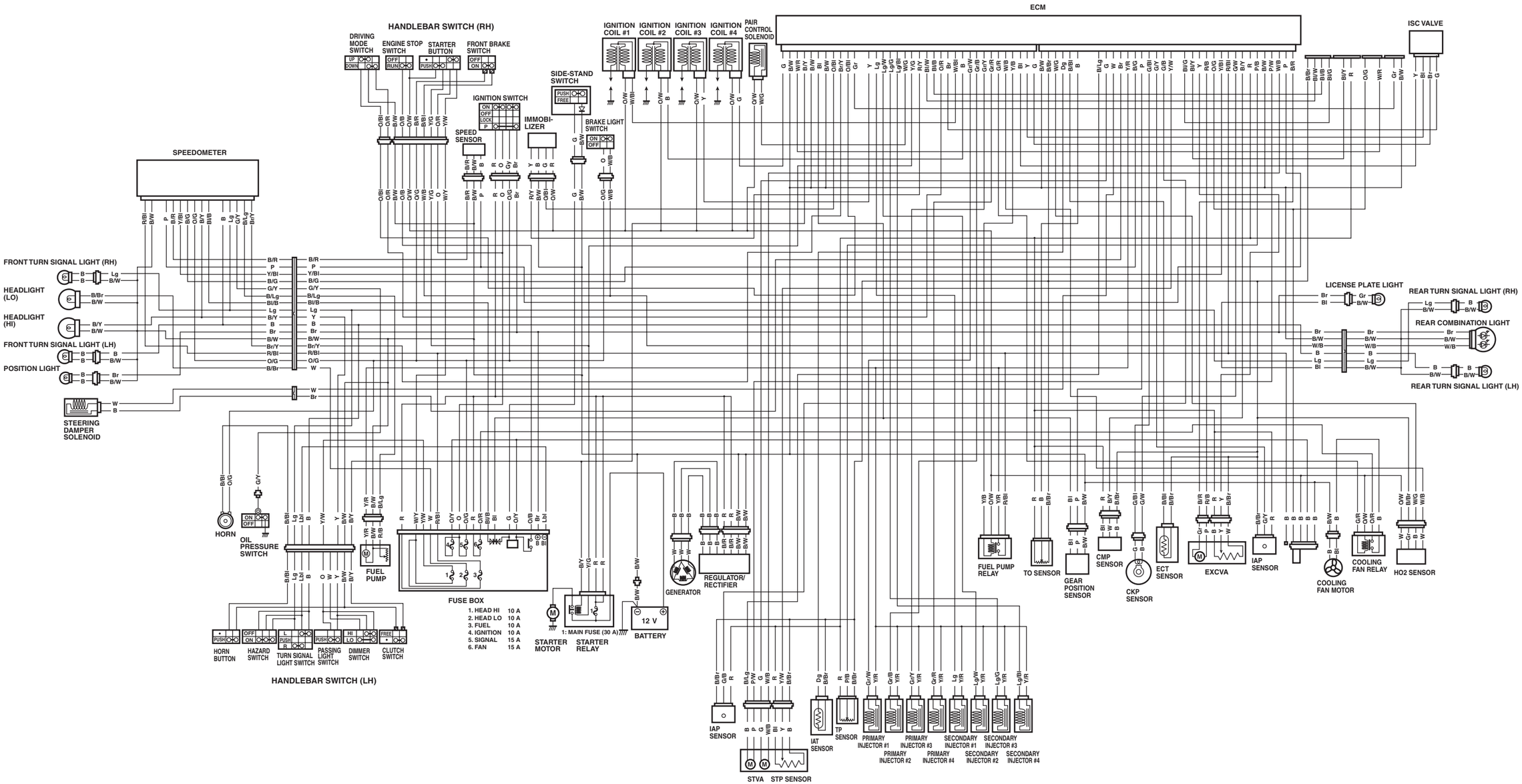

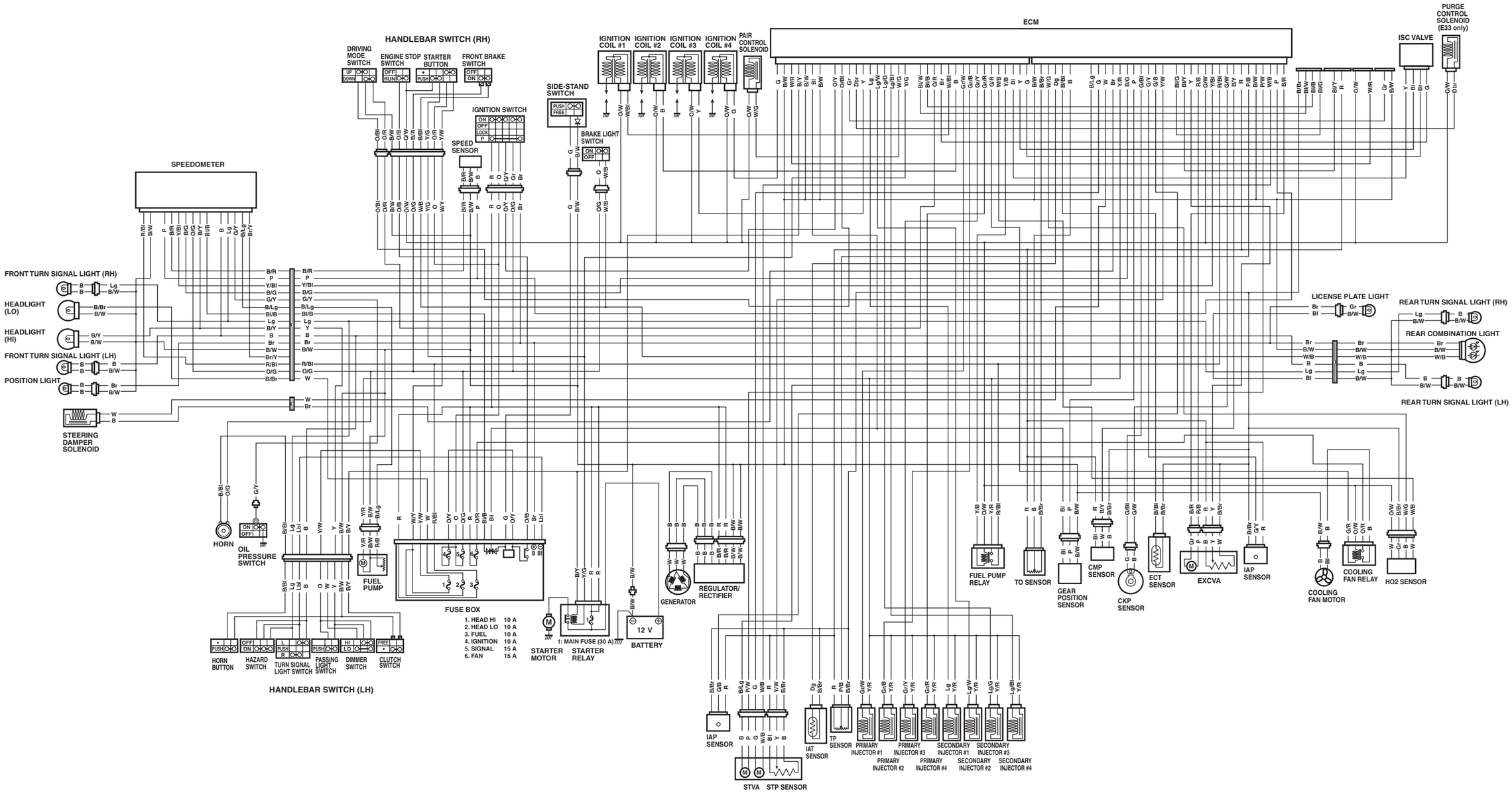
ECM
PURGE CONTROL SOLENOID (E33 only)
ISC VALVE
PAIR CONTROL SOLENOID
IGNITION COIL #1
IGNITION COIL #2
IGNITION COIL #3
IGNITION COIL #4
HANDLEBAR SWITCH (RH)
DRIVING MODE SWITCH
ENGINE STOP SWITCH
STARTER BUTTON
FRONT BRAKE SWITCH
SIDE-STAND SWITCH
IGNITION SWITCH
SPEED SENSOR
BRAKE LIGHT SWITCH
SPEEDOMETER
FRONT TURN SIGNAL LIGHT (RH)
HEADLIGHT (LO)
HEADLIGHT (HI)
FRONT TURN SIGNAL LIGHT (LH)
POSITION LIGHT
STEERING DAMPER SOLENOID
LICENSE PLATE LIGHT
REAR TURN SIGNAL LIGHT (RH)
REAR COMBINATION LIGHT
REAR TURN SIGNAL LIGHT (LH)
HORN
OIL PRESSURE SWITCH
FUEL PUMP
FUSE BOX
1. HEAD HI 10 A
2. HEAD LO 10 A
3. FUEL 10 A
4. IGNITION 10 A
5. SIGNAL 15 A
6. FAN 15 A
1: MAIN FUSE (30 A)
STARTER MOTOR
STARTER RELAY
BATTERY
12 V
GENERATOR
REGULATOR/ RECTIFIER
HORN BUTTON
HAZARD SWITCH
TURN SIGNAL LIGHT SWITCH
PASSING LIGHT SWITCH
DIMMER SWITCH
CLUTCH SWITCH
HANDLEBAR SWITCH (LH)
FUEL PUMP RELAY
TO SENSOR
GEAR POSITION SENSOR
CMP SENSOR
CKP SENSOR
ECT SENSOR
EXCVA
IAP SENSOR
COOLING FAN MOTOR
COOLING FAN RELAY
HO2 SENSOR
IAP SENSOR
IAT SENSOR
TP SENSOR
PRIMARY INJECTOR #1
PRIMARY INJECTOR #2
PRIMARY INJECTOR #3
PRIMARY INJECTOR #4
SECONDARY INJECTOR #1
SECONDARY INJECTOR #2
SECONDARY INJECTOR #3
SECONDARY INJECTOR #4
STVA
STP SENSOR

Prepared by

SUZUKI MOTOR CORPORATION

January, 2007

Part No. 99500-39310-01E

Printed in Japan

SUZUKI MOTOR CORPORATION

Printed in Japan TK
K7