YAMAHA 2006

FJR1300A(V)

SERVICE MANUAL

3P6-28197-E0

EAS20040

FJR1300A(V) 2006
SERVICE MANUAL
©2006 by Yamaha Motor Co., Ltd.
First edition, January 2006
All rights reserved.
Any reproduction or unauthorized use
without the written permission of
Yamaha Motor Co., Ltd.
is expressly prohibited.

EAS20070

NOTICE

This manual was produced by the Yamaha Motor Company, Ltd. primarily for use by Yamaha dealers and their qualified mechanics. It is not possible to include all the knowledge of a mechanic in one manual. Therefore, anyone who uses this book to perform maintenance and repairs on Yamaha vehicles should have a basic understanding of mechanics and the techniques to repair these types of vehicles. Repair and maintenance work attempted by anyone without this knowledge is likely to render the vehicle unsafe and unfit for use.

Yamaha Motor Company, Ltd. is continually striving to improve all of its models. Modifications and significant changes in specifications or procedures will be forwarded to all authorized Yamaha dealers and will appear in future editions of this manual where applicable.

NOTE:

Designs and specifications are subject to change without notice.

EAS20080

IMPORTANT MANUAL INFORMATION

Particularly important information is distinguished in this manual by the following.

⚠	The Safety Alert Symbol means ATTENTION! BECOME ALERT! YOUR SAFETY IS INVOLVED!
⚠ WARNING	Failure to follow WARNING instructions could result in severe injury or death to the vehicle operator, a bystander or a person checking or repairing the vehicle.
CAUTION:	A CAUTION indicates special precautions that must be taken to avoid damage to the vehicle.
NOTE:	A NOTE provides key information to make procedures easier or clearer.

EAS20090

HOW TO USE THIS MANUAL

This manual is intended as a handy, easy-to-read reference book for the mechanic. Comprehensive explanations of all installation, removal, disassembly, assembly, repair and check procedures are laid out with the individual steps in sequential order.

- The manual is divided into chapters and each chapter is divided into sections. The current section title “1” is shown at the top of each page.
- Sub-section titles “2” appear in smaller print than the section title.
- To help identify parts and clarify procedure steps, there are exploded diagrams “3” at the start of each removal and disassembly section.
- Numbers “4” are given in the order of the jobs in the exploded diagram. A number indicates a disassembly step.
- Symbols “5” indicate parts to be lubricated or replaced.
  Refer to “SYMBOLS”.
- A job instruction chart “6” accompanies the exploded diagram, providing the order of jobs, names of parts, notes in jobs, etc.
- Jobs “7” requiring more information (such as special tools and technical data) are described sequentially.

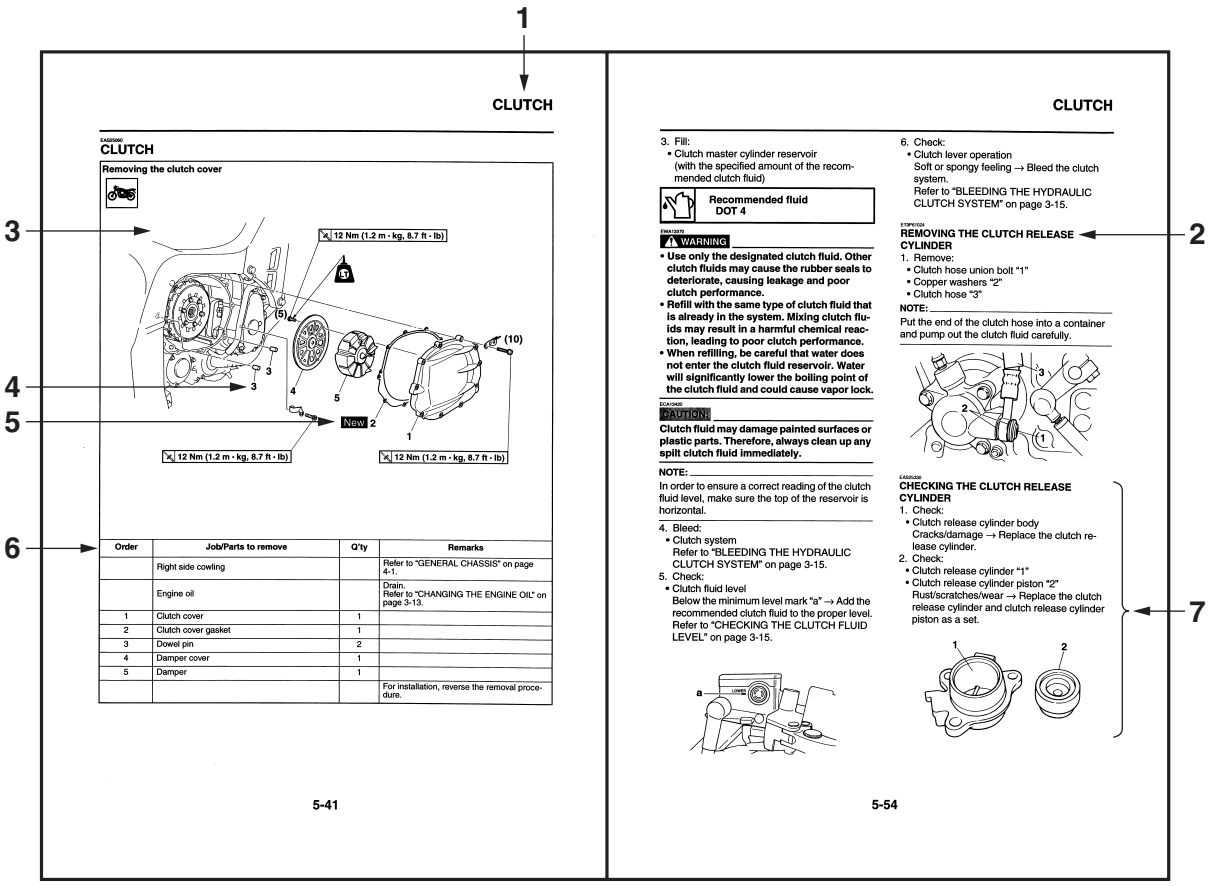

EAS20100

SYMBOLS

The following symbols are used in this manual for easier understanding.

NOTE:

The following symbols are not relevant to every vehicle.

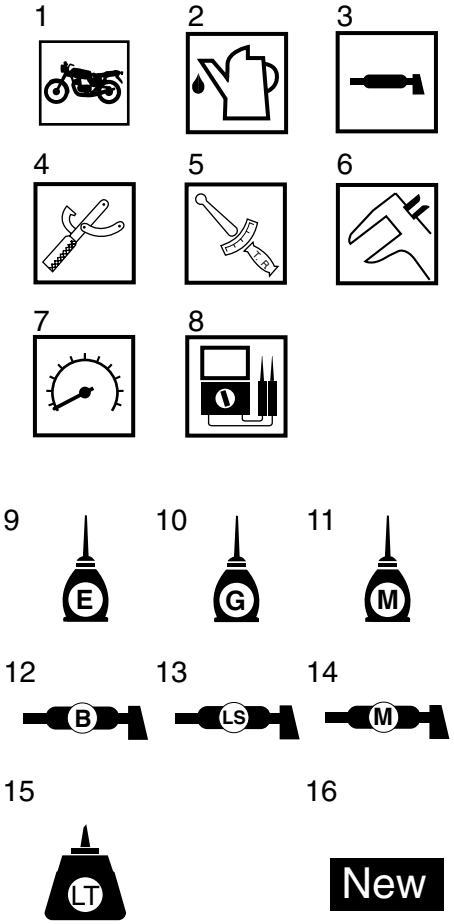

1. Serviceable with engine mounted
2. Filling fluid
3. Lubricant
4. Special tool
5. Tightening torque
6. Wear limit, clearance
7. Engine speed
8. Electrical data
9. Engine oil
10. Gear oil
11. Molybdenum-disulfide oil
12. Wheel-bearing grease
13. Lithium-soap-based grease
14. Molybdenum-disulfide grease
15. Apply locking agent (LOCTITE®)
16. Replace the part

EAS20110

TABLE OF CONTENTS

GENERAL INFORMATION	1
SPECIFICATIONS	2
PERIODIC CHECKS AND ADJUSTMENTS	3
CHASSIS	4
ENGINE	5
COOLING SYSTEM	6
FUEL SYSTEM	7
ELECTRICAL SYSTEM	8
TROUBLESHOOTING	9

GENERAL INFORMATION

IDENTIFICATION 1-1
VEHICLE IDENTIFICATION NUMBER 1-1
MODEL LABEL 1-1

FEATURES 1-2
OUTLINE OF THE FI SYSTEM 1-2
FI SYSTEM 1-3
OUTLINE OF THE UNIFIED BRAKE SYSTEM 1-4
OUTLINE OF THE ABS 1-5
ABS COMPONENT FUNCTIONS 1-10
ABS OPERATION 1-16
ABS SELF-DIAGNOSIS FUNCTION 1-20
ABS WARNING LIGHT AND OPERATION 1-22
INSTRUMENT FUNCTIONS 1-24

IMPORTANT INFORMATION 1-30
PREPARATION FOR REMOVAL AND DISASSEMBLY 1-30
REPLACEMENT PARTS 1-30
GASKETS, OIL SEALS AND O-RINGS 1-30
LOCK WASHERS/PLATES AND COTTER PINS 1-30
BEARINGS AND OIL SEALS 1-31
CIRCLIPS 1-31

CHECKING THE CONNECTIONS 1-32

SPECIAL TOOLS 1-33

EAS20130
IDENTIFICATION

EAS20140
VEHICLE IDENTIFICATION NUMBER
The vehicle identification number “1” is stamped into the right side of the steering head pipe.

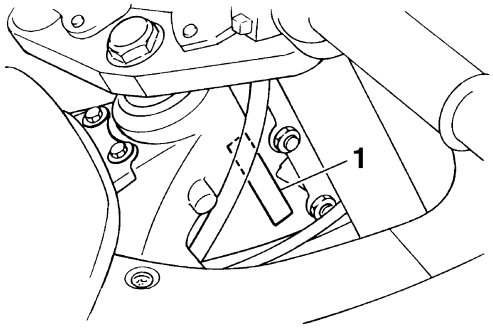

EAS20150
MODEL LABEL
The model label “1” is affixed to the frame. This information will be needed to order spare parts.

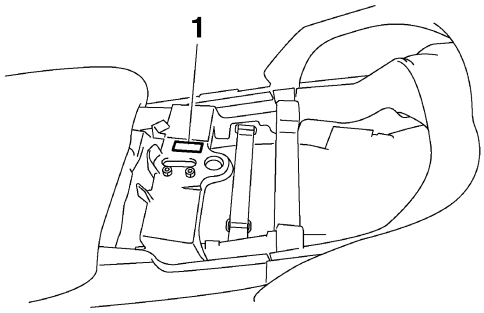

EAS20170
FEATURES

ET2C01025
OUTLINE OF THE FI SYSTEM

The main function of a fuel supply system is to provide fuel to the combustion chamber at the optimum air-fuel ratio in accordance with the engine operating conditions and the atmospheric temperature. In the conventional carburetor system, the air-fuel ratio of the mixture that is supplied to the combustion chamber is created by the volume of the intake air and the fuel that is metered by the jet used in the respective carburetor.

Despite the same volume of intake air, the fuel volume requirement varies by the engine operating conditions, such as acceleration, deceleration, or operating under a heavy load. Carburetors that meter the fuel through the use of jets have been provided with various auxiliary devices, so that an optimum air-fuel ratio can be achieved to accommodate the constant changes in the operating conditions of the engine.

As the requirements for the engine to deliver more performance and cleaner exhaust gases increase, it becomes necessary to control the air-fuel ratio in a more precise and finely tuned manner. To accommodate this need, this model has adopted an electronically controlled fuel injection (FI) system, in place of the conventional carburetor system. This system can achieve an optimum air-fuel ratio required by the engine at all times by using a microprocessor that regulates the fuel injection volume according to the engine operating conditions detected by various sensors.

The adoption of the FI system has resulted in a highly precise fuel supply, improved engine response, better fuel economy, and reduced exhaust emissions. Furthermore, the air induction system (AI system) has been placed under computer control together with the FI system in order to realize cleaner exhaust gases.

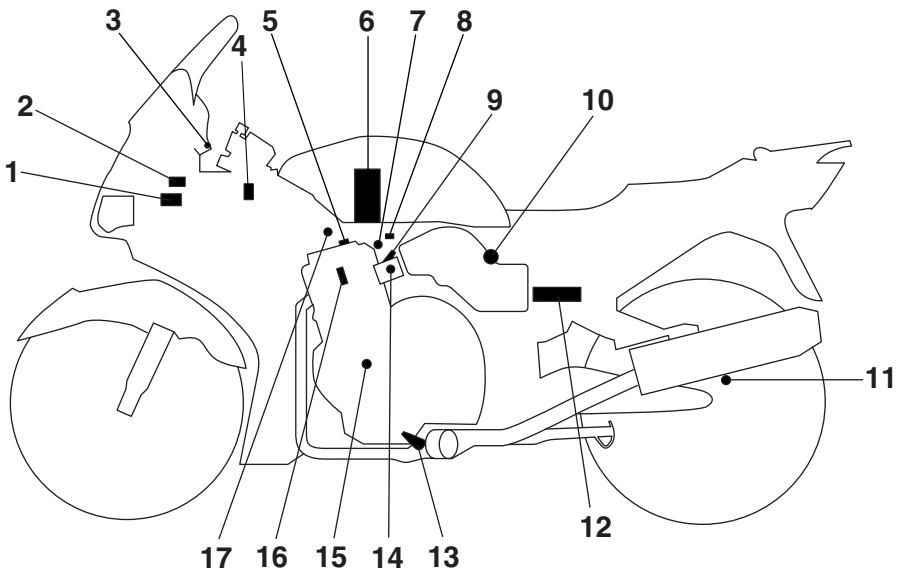

1. Relay unit (fuel pump relay)
2. Lean angle sensor
3. Engine trouble warning light
4. Ignition coil
5. Cylinder identification sensor
6. Fuel pump
7. Air induction system solenoid
8. Intake air pressure sensor
9. Injector
10. Intake air temperature sensor
11. Rear wheel sensor
12. ECU (engine control unit)
13. O_2 sensor
14. Throttle position sensor
15. Crankshaft position sensor
16. Spark plug
17. Coolant temperature sensor

ET3P61042

FI SYSTEM

The fuel pump delivers fuel to the fuel injector via the fuel filter. The pressure regulator maintains the fuel pressure that is applied to the fuel injector at only 324 kPa (3.24 kg/cm², 46.1 psi). Accordingly, when the energizing signal from the ECU energizes the fuel injector, the fuel passage opens, causing the fuel to be injected into the intake manifold only during the time the passage remains open. Therefore, the longer the length of time the fuel injector is energized (injection duration), the greater the volume of fuel that is supplied. Conversely, the shorter the length of time the fuel injector is energized (injection duration), the lesser the volume of fuel that is supplied.

The injection duration and the injection timing are controlled by the ECU. Signals that are input from the throttle position sensor, coolant temperature sensor, cylinder identification sensor, lean angle sensor, crankshaft position sensor, intake air pressure sensor, intake air temperature sensor, rear wheel sensor and O_2 sensor enable the ECU to determine the injection duration. The injection timing is determined through the signals from the crankshaft position sensor. As a result, the volume of fuel that is required by the engine can be supplied at all times in accordance with the driving conditions.

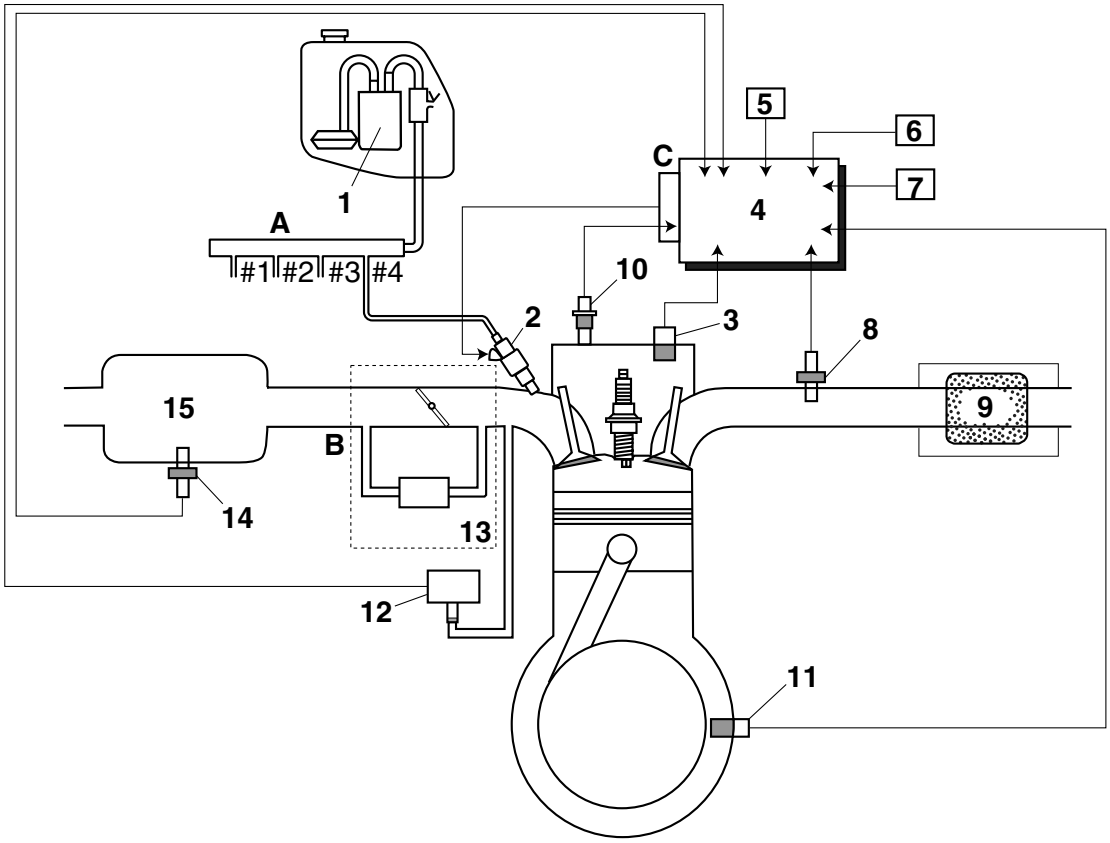

1. Fuel pump
2. Injector
3. Cylinder identification sensor
4. ECU (engine control unit)
5. Throttle position sensor
6. Rear wheel sensor
7. Lean angle sensor
8. O_2 sensor
9. Catalytic converter
10. Coolant temperature sensor
11. Crankshaft position sensor
12. Intake air pressure sensor
13. Throttle body
14. Intake air temperature sensor
15. Air filter case

A. Fuel system
B. Air system
C. Control system

ET3P61050

OUTLINE OF THE UNIFIED BRAKE SYSTEM

The Yamaha unified brake system is a system that operates one set of pistons in the front brakes together with the rear brake when the brake pedal is depressed. Compared to conventional brake systems, the ability to slow the vehicle using the simple operation of the brake pedal is improved.

Unified brake system block diagram

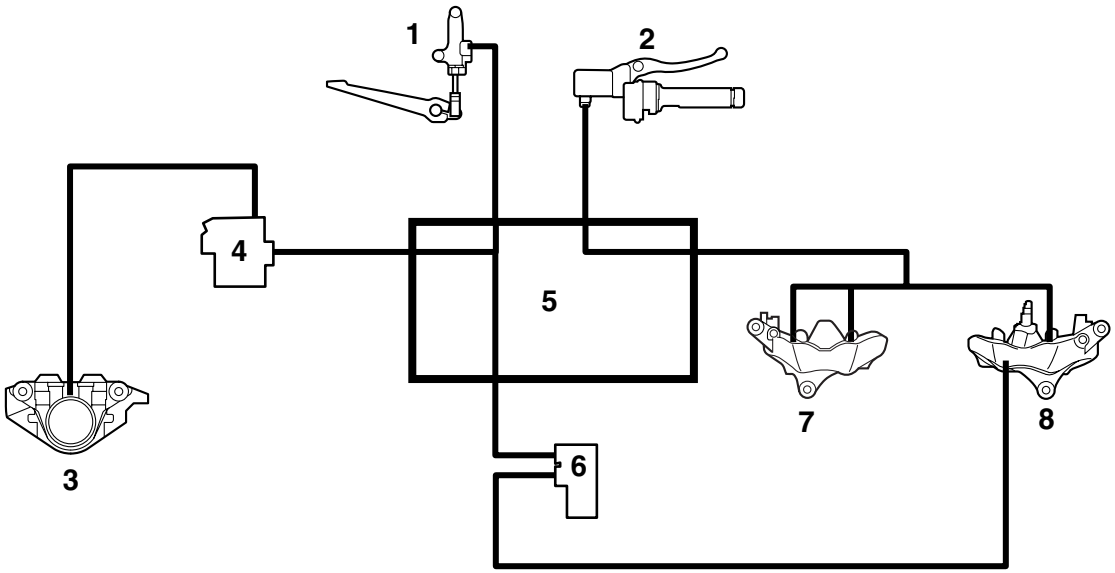

1. Rear brake master cylinder
2. Front brake master cylinder
3. Rear brake caliper
4. Proportioning valve
5. Hydraulic unit
6. Metering valve
7. Left front brake caliper
8. Right front brake caliper

When the brake lever is squeezed, both sets of pistons in the left front brake caliper are operated, but only one set of pistons in the right front brake caliper is operated. When the brake pedal is depressed, the rear brake caliper and one set of pistons in the right front brake caliper are operated. The brake line from the rear brake master cylinder is split at the hydraulic unit to transmit brake fluid pressure to both the rear brake caliper and part of the right front brake caliper in the unified brake system. The brake fluid pressure transmitted to the rear brake caliper and part of the right front brake caliper is controlled by the proportioning valve and metering valve respectively. The operation of these two valves ensures that the braking feeling of conventional brakes is maintained when a small amount of force is applied to the brake pedal, such as when making U-turns, and prevents early locking of the rear wheel when a large amount of force is applied.

Brake pedal input force and braking force at each wheel

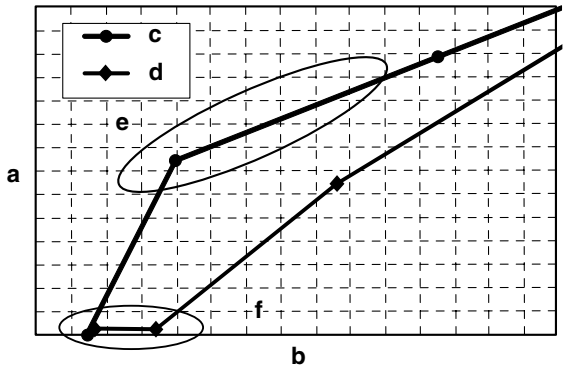

a. Brake force
b. Brake pedal force
c. Rear brake force
d. Front brake force (unified brake system)
e. Proportioning valve operation
f. Metering valve operation

Metering valve

This valve prevents the brake fluid pressure that is transmitted to the right front brake caliper from increasing until the pressure exceeds a set level. Only the rear brake caliper is operated when there is an extremely low amount of brake pedal input.

Proportioning valve

This valve reduces the increase in brake fluid pressure that is transmitted to the rear brake caliper when the pressure exceeds a set level. The increase in brake fluid pressure to the rear brake caliper is controlled when there is a high amount of brake pedal input.

EC3P61017

CAUTION:

- **The unified brake system is a system to assist the brake operation. However, both the brake lever and the brake pedal must be operated for maximum braking effect.**
- **Because the balance between the right front brake caliper and the rear brake caliper in the unified brake system is determined mechanically, be sure to use the specified brake pads.**
- **Each set of brake pads should be checked individually and replaced if necessary.**

ET3P61019

OUTLINE OF THE ABS

1. The Yamaha ABS (anti-lock brake system) features an electronic control system, which acts on the front and rear brakes independently. However, one set of pistons in the right front brake caliper is operated together with the rear brake and this set of pistons is operated only if the force used to depress the brake pedal exceeds a preset level.
2. The ABS features a compact and lightweight design to help maintain the basic maneuverability of the vehicle.
3. The hydraulic unit, which is the main component of the ABS, is centrally located on the vehicle to increase mass centralization.

ABS layout

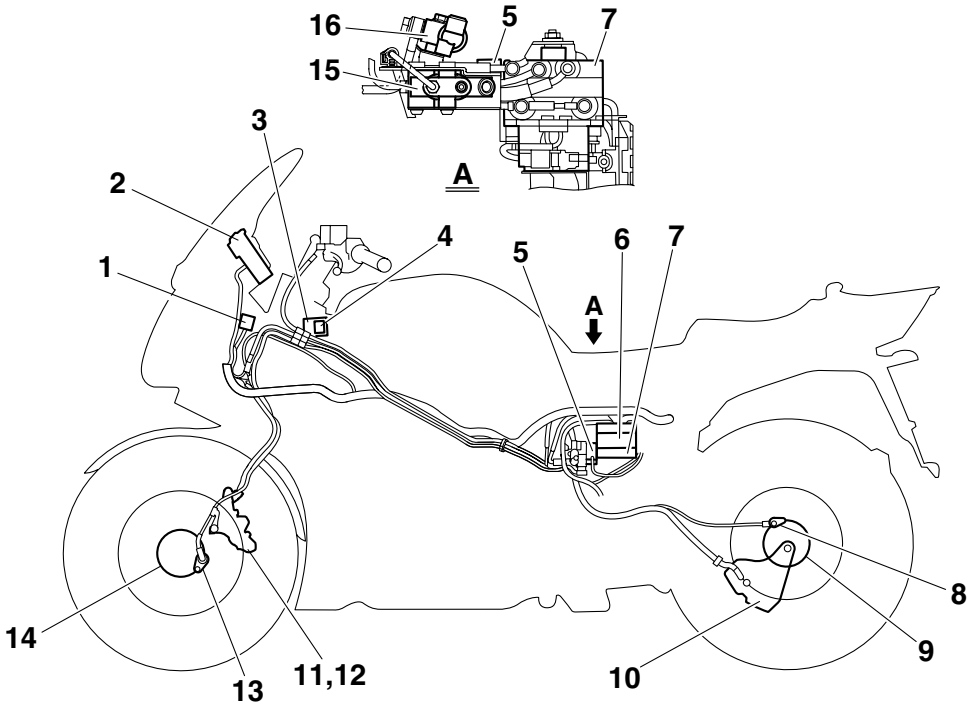

1. ABS test coupler
2. ABS warning light
3. ABS ECU fuse
4. ABS motor fuse
5. ABS motor relay
6. ABS ECU (electronic control unit)
7. Hydraulic unit (HU)
8. Rear wheel sensor
9. Rear wheel sensor rotor
10. Rear brake caliper
11. Left front brake caliper
12. Right front brake caliper (partially operated together with the rear brake)
13. Front wheel sensor
14. Front wheel sensor rotor
15. Proportioning valve
16. Metering valve

ABS

The operation of the Yamaha ABS brakes is the same as conventional brakes on other vehicles, with a brake lever for operating the front brake and a brake pedal for operating the rear brake. However, part of the front brake is operated together with rear brake.

When wheel lock is detected during emergency braking, hydraulic control is performed by the hydraulic system on the front and rear brakes independently.

Useful terms

- Wheel speed:
  The rotation speed of the front and rear wheels.
- Chassis speed:
  The speed of the chassis.
  When the brakes are applied, wheel speed and chassis speed are reduced. However, the chassis travels forward by its inertia even though the wheel speed is reduced.
- Brake force:
  The force applied by braking to reduce the wheel speed.
- Wheel lock:
  A condition that occurs when the rotation of one or both of the wheels has stopped, but the vehicle continues to travel.
- Side force:
  The force on the tires which supports the vehicle when cornering.

- Slip ratio:
  When the brakes are applied, slipping occurs between the tires and the road surface. This causes a difference between the wheel speed and the chassis speed.
  Slip ratio is the value that shows the rate of wheel slippage and is defined by the following formula.

$$\text{Slip ratio} = \frac{\text{Chassis speed} - \text{Wheel speed}}{\text{Chassis speed}} \times 100\ (\%)$$

  0%: There is no slipping between the wheel and the road surface. The chassis speed is equal to the wheel speed.
  100%: The wheel speed is “0”, but the chassis is moving (i.e., wheel lock).

Brake force and vehicle stability

When the brake pressure is increased, wheel speed is reduced. Slipping occurs between the tire and the road surface and brake force is generated. The limit of this brake force is determined by the friction force between the tire and the road surface and is closely related to wheel slippage. Wheel slippage is represented by the slip ratio.
Side force is also closely related to wheel slippage. See figure A. If the brakes are applied while keeping the proper slip ratio, it is possible to obtain the maximum brake force without losing much side force.
ABS allows full use of the tires’ capabilities even on slippery road surfaces or less slippery road surfaces. See figure B.

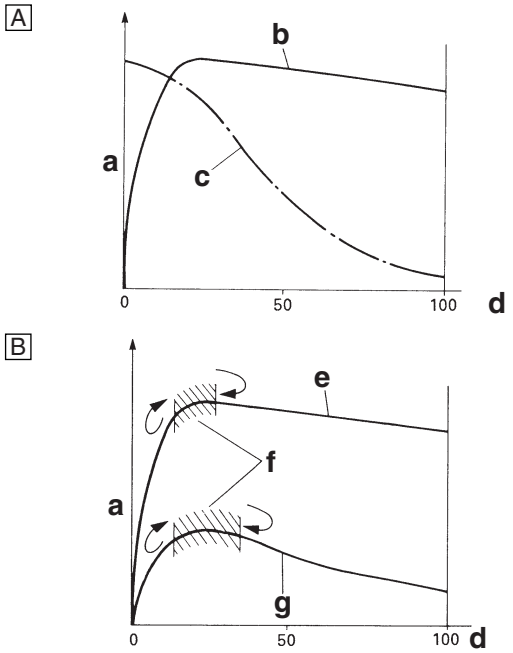

a. Friction force between the tire and road surface
b. Brake force
c. Side force
d. Slip ratio (%)
e. Less slippery road surface
f. Controlling zone
g. Slippery road surface

Wheel slip and hydraulic control

The ABS ECU calculates the wheel speed of each wheel according to the rotation signal received from the front and rear wheel sensors. In addition, the ABS ECU calculates the vehicle chassis speed and the rate of speed reduction based on the wheel speed values.

The difference between the chassis speed and the wheel speed calculated in the slip ratio formula is equal to the wheel slip. When the wheel speed is suddenly reduced, the wheel has a tendency to lock. When the wheel slip and the wheel speed reduction rate exceed the preset values, the ABS ECU determines that the wheel has a tendency to lock.
If the slip is large and the wheel has a tendency to lock (point A in the following figure), the ABS ECU reduces the brake fluid pressure in the brake caliper. The ABS ECU increases the pressure of the brake fluid in the brake caliper when the tendency to lock has diminished (point B in the following figure).

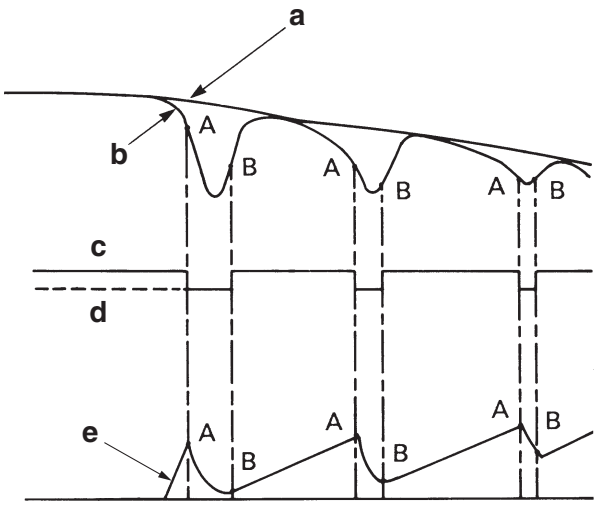

a. Chassis speed
b. Wheel speed
c. Pressurized
d. Depressurized
e. Brake force

ABS operation and vehicle control
If the ABS starts operating, there is a tendency of the wheel to lock, and the vehicle is approaching the limit of control. To make the rider aware of this condition, the ABS has been designed to generate a reaction-force pulsating action in the brake lever and brake pedal independently.

NOTE:

When the ABS is activated, a pulsating action may be felt at the brake lever or brake pedal, but this does not indicate a malfunction.

The higher the side force on a tire, the less traction there is available for braking. This is true whether the vehicle is equipped with ABS or not. Therefore, sudden braking while cornering is not recommended. Excessive side force, which ABS cannot prevent, could cause the tire to slip sideways.

EW3P61003

WARNING

The braking of the vehicle, even in the worst case, is principally executed when the vehicle is advancing straight ahead. During a turn, sudden braking is liable to cause a loss of traction of the tires. Even in vehicles equipped with ABS, overturning of the vehicle cannot be prevented if it is braked suddenly.

The ABS functions to prevent the tendency of the wheel to lock by controlling the brake fluid pressure. However, if there is a tendency of the wheel to lock on a slippery road surface, due to engine braking, the ABS may not be able to prevent the wheel from locking.

EWA13870

WARNING

The ABS controls only the tendency of the wheel to lock caused by applying the brakes. The ABS cannot prevent wheel lock on slippery surfaces, such as ice, when it is caused by engine braking, even if the ABS is operating.

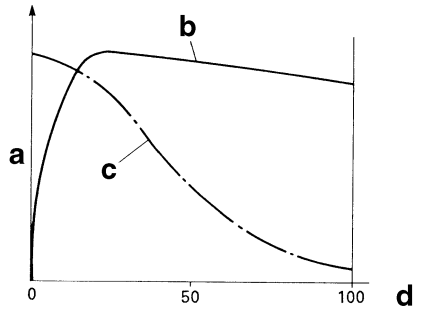

a. Friction force between the tire and road surface
b. Brake force
c. Side force
d. Slip ratio (%)

Electronic ABS features

The Yamaha ABS (anti-lock brake system) has been developed with the most advanced electronic technology.
The ABS control is processed with good response under various vehicle travel conditions.
The ABS also includes a highly developed self-diagnosis function. The ABS detects any problem condition and allows normal braking even if the ABS is not operating properly.
When this occurs, the ABS warning light on the meter assembly comes on.
The ABS stores the malfunction codes in the memory of the ABS ECU for easy problem identification and troubleshooting.

ABS block diagram

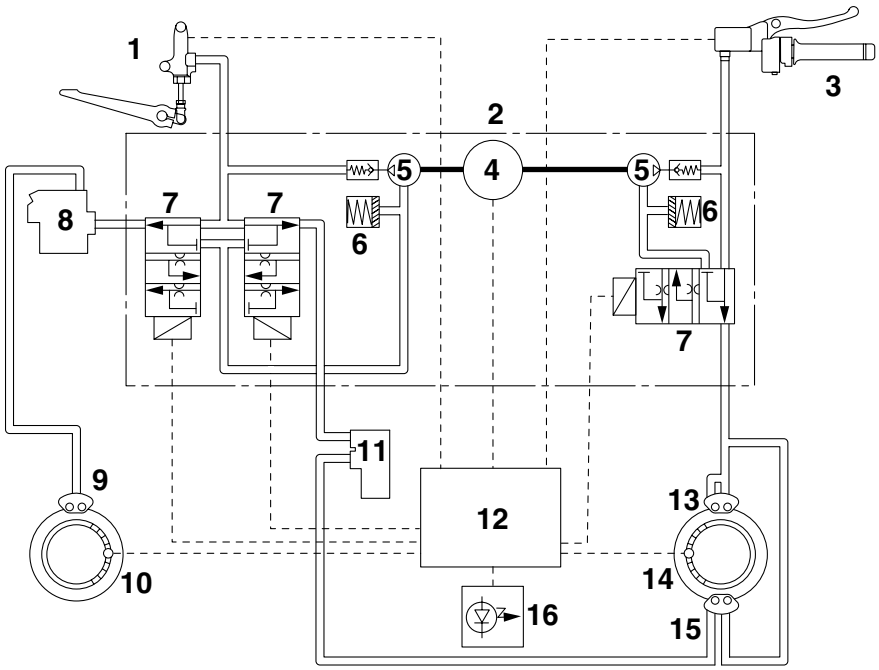

1. Rear brake master cylinder
2. Hydraulic unit
3. Front brake master cylinder
4. ABS motor
5. Hydraulic pump
6. Buffer chamber
7. Hydraulic control valve
8. Proportioning valve
9. Rear brake caliper
10. Rear wheel sensor
11. Metering valve
12. ABS ECU
13. Left front brake caliper
14. Front wheel sensor
15. Right front brake caliper
16. ABS warning light

ET3P61051

ABS COMPONENT FUNCTIONS

Wheel sensors and wheel sensor rotors

Wheel sensors “1” detect the wheel speed and transmit the rotation signal to the ABS ECU.
Each wheel sensor is composed of a permanent magnet and a coil. The wheel sensors are installed in the sensor housing for each wheel. Sensor rotors “2” are pressed in the inner side of the front and rear wheel hubs and rotate with the wheels. The wheel sensor rotors have 42 serrations inside and are installed close to the wheel sensors. As the distance changes between the top and bottom of the serrations with the rotation of the wheels, inductive electromotive force is generated in the wheel sensors. Wheel speed is detected based on the frequency of this alternating voltage.

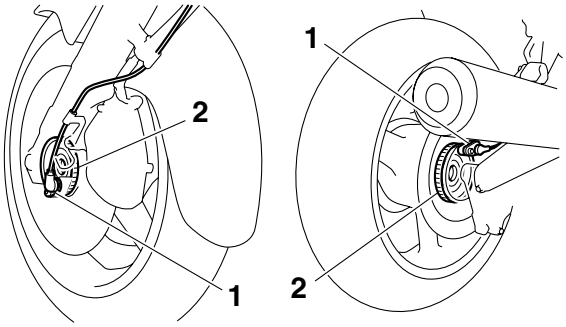

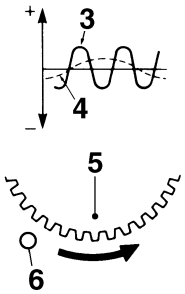

3. At high speed
4. At low speed
5. Wheel sensor rotor
6. Wheel sensor

ABS warning light

The ABS warning light “1” comes on to warn the rider if a malfunction in the ABS occurs.
When the main switch is turned to “ON”, the ABS warning light comes on for 2 seconds, then goes off, so that the rider can check if the ABS warning light is disconnected and check if the ABS is operating properly.

EC3P61009

CAUTION:

If the rear wheel is raced with the vehicle on the centerstand, the ABS warning light may flash or come on. If this occurs, turn the main switch to “OFF”, then back to “ON”. The ABS operation is normal if the ABS warning light comes on for 2 seconds, then goes off.

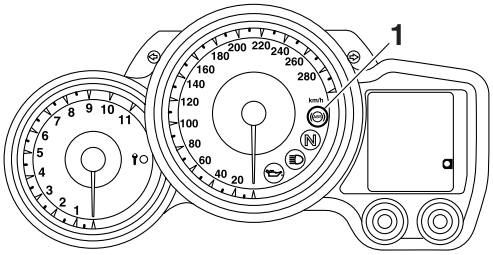

Hydraulic unit

The hydraulic unit “1” is composed of three hydraulic control valves (each with a solenoid valve and flow control valve), two buffer chambers, two hydraulic pumps, and an ABS motor. The hydraulic unit adjusts the front and rear wheel brake fluid pressure to control the wheel speed according to signals transmitted from the ABS ECU.

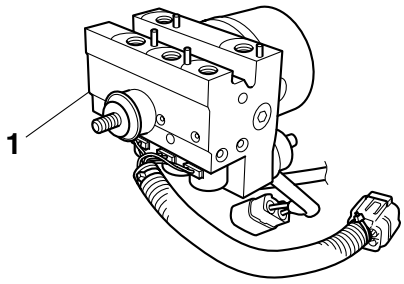

- **Hydraulic control valve**
  The hydraulic control valve is composed of a flow control valve and solenoid valve.

When the ABS is activated, the flow control valve regulates the flow of brake fluid to the brake and the solenoid valve decreases and increases the brake fluid pressure.

1. When the brakes are operated normally, the solenoid valve “2” is closed, the spool “3” of the flow control valve does not move, and the hydraulic line between the brake master cylinder and brake caliper is open.
2. When the ABS is activated, the solenoid valve “2” is opened by the power supplied from the ABS ECU signals to decrease the brake fluid pressure and the spool “3” of the flow control valve is moved toward the solenoid valve.
3. When the ABS ECU stops transmitting signals to decrease the brake fluid pressure, the solenoid valve “2” closes and the brake fluid is pressurized again. Pressurizing the brake fluid again, while the ABS is activated, limits the flow of the brake fluid with the movement of the flow control valve spool “3” and provides a gradual pressure increase.

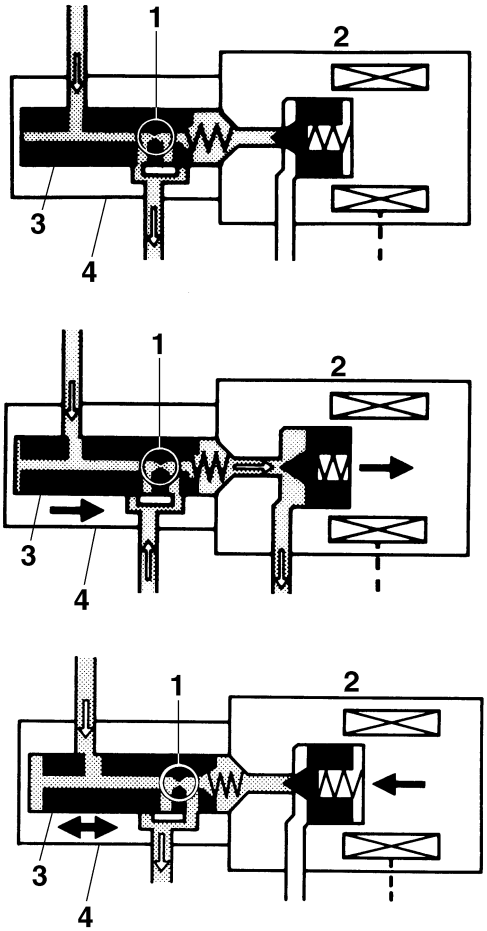

1. Orifice
2. Solenoid valve
3. Spool
4. Flow control valve

• **Buffer chamber**

The buffer chamber accumulates the brake fluid that is depressurized while the ABS is operating.

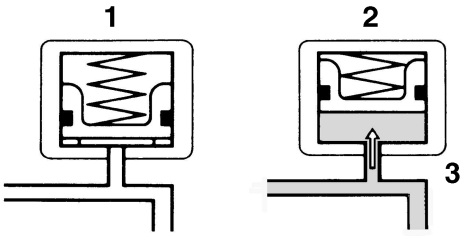

1. Buffer chamber (pressurized)
2. Buffer chamber (depressurized)
3. Raised piston

ABS ECU (electronic control unit)

The ABS ECU “1” controls the ABS and is installed under the storage compartment. To protect the ABS ECU from water damage, it is protected by a cover “2”.

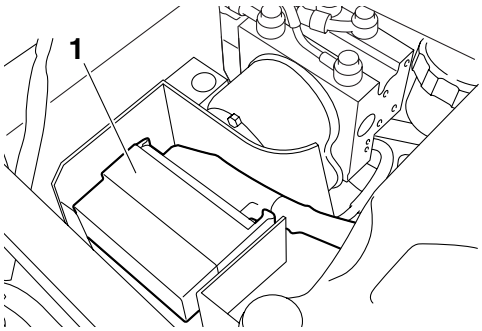

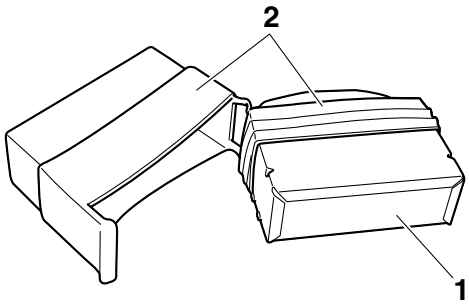

As shown in the block following diagram, the ABS ECU receives wheel sensor signals from the front and rear wheels and also receives signals from other monitor circuits.

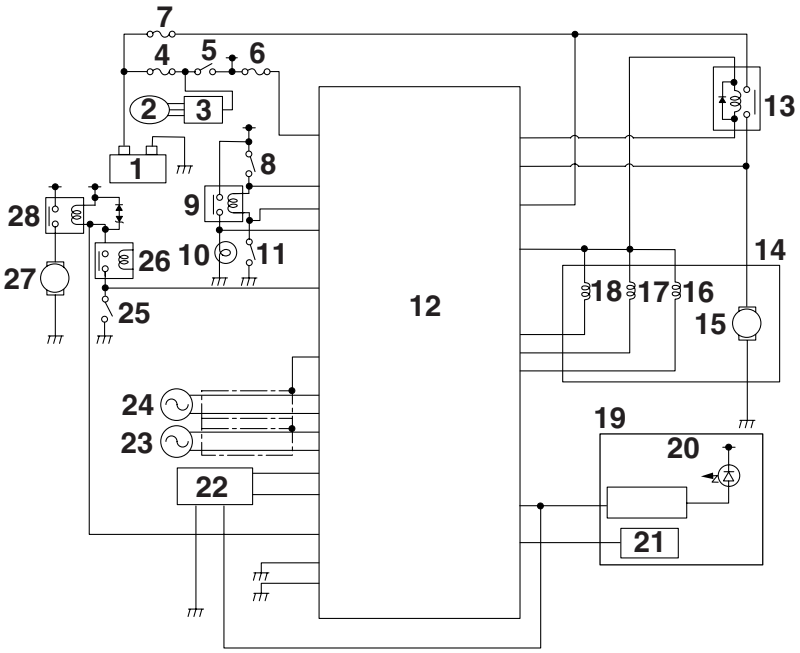

1. Battery
2. AC magneto
3. Rectifier/regulator
4. Main fuse
5. Main switch
6. ABS fuse
7. ABS motor fuse
8. Front brake light switch
9. Brake light relay
10. Tail/brake light
11. Rear brake light switch
12. ABS ECU
13. ABS motor relay
14. Hydraulic unit
15. ABS motor
16. Unified brake system solenoid
17. Rear brake solenoid
18. Front brake solenoid
19. Meter assembly
20. ABS warning light
21. Speedometer
22. ABS test coupler
23. Rear wheel sensor
24. Front wheel sensor
25. Start switch
26. Starting circuit cut-off relay
27. Starter motor
28. Starter relay

The necessary actions are confirmed using the monitor circuit and control signals are transmitted to the hydraulic unit and ABS motor relay.

ABS control operation

The ABS control operation performed in the ABS ECU is divided into the following two parts.

- Hydraulic control
- Self-diagnosis

These operations are performed once every 8/1000th of a second. When a malfunction is detected in the ABS, a malfunction code is stored in the memory of the ABS ECU for easy problem identification and troubleshooting.

NOTE:

Some types of malfunctions are not recorded in the memory of the ABS ECU (e.g., a drop in battery voltage).

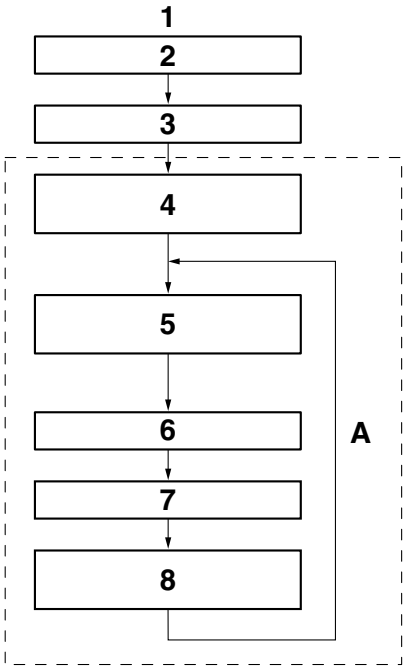

1. Software operation flow
2. Main switch “ON”
3. Initialize
4. Self-diagnosis (when static)
5. Self-diagnosis (when riding)
6. Receive signals
7. Control operation
8. Depressurize/pressurize

A. 8/1000th of a second

ABS motor relay

The ABS motor relay “1” controls the power supply of the hydraulic unit and is located beside the hydraulic unit.

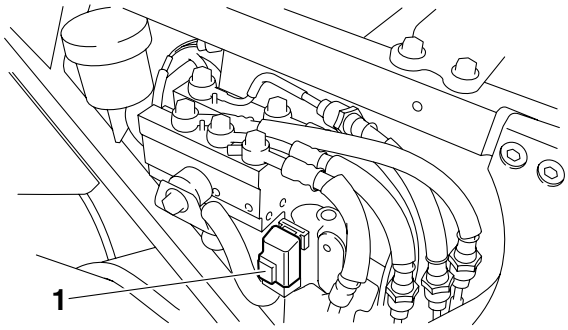

Composition and operation

The ABS motor relay is activated by signals transmitted from the ABS ECU and the ABS motor operates when the ABS starts to reduce the hydraulic pressure of the brake fluid.

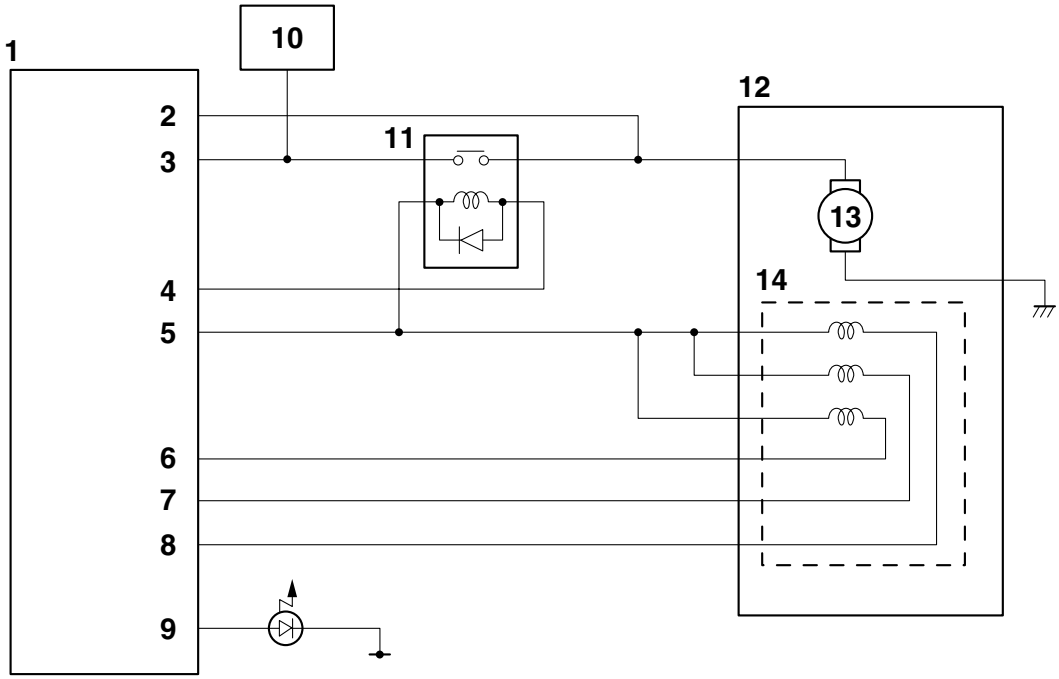

1. ABS ECU
2. Pump motor monitor
3. Power supply
4. Pump motor relay coil
5. Power supply
6. Front brake solenoid
7. Rear brake solenoid
8. Unified brake system solenoid
9. ABS warning light
10. Battery
11. ABS motor relay
12. Hydraulic unit
13. ABS motor
14. Solenoid valves

ET3P61052

ABS OPERATION

The ABS hydraulic circuit consists of two systems: the front wheel, and rear wheel. The following describes the system for the front wheel only, excluding the unified brake system.

Normal braking (ABS not activated)

When the ABS is not activated, port D “11” of the solenoid valve is closed because a control signal has not been transmitted from the ABS ECU and port A “7” and port B “9” of the flow control valve are open. Therefore, when the brake lever is squeezed, the hydraulic pressure in the brake master cylinder increases and the brake fluid is sent to the brake caliper via port A and port B.

At this time, the inlet and outlet check valves of the hydraulic pump are closed, preventing the brake fluid from flowing through the pump. As a result, the brake master cylinder directly pressurizes the brake caliper during normal braking. When the brake lever is released, the brake fluid in the brake caliper returns to the brake master cylinder via port A and port B.

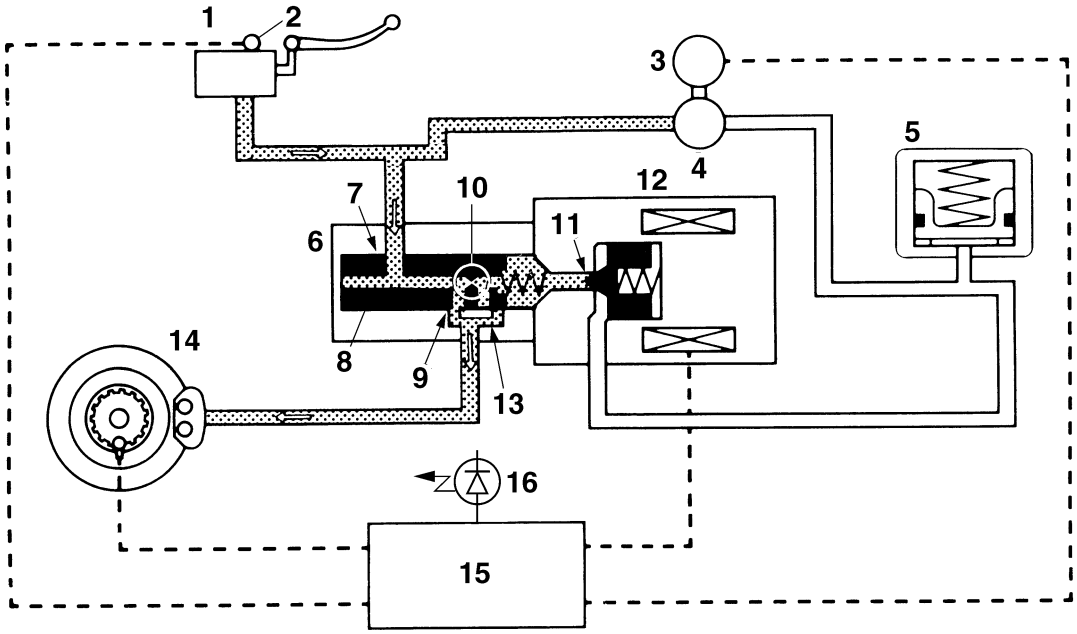

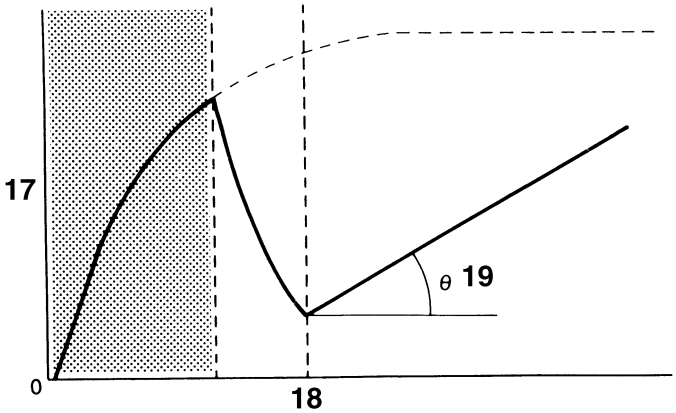

1. Brake master cylinder
2. Brake light switch
3. ABS motor
4. Hydraulic pump
5. Buffer chamber
6. Flow control valve
7. Port A
8. Spool
9. Port B
10. Orifice
11. Port D
12. Solenoid valve
13. Port C
14. Brake caliper
15. ABS ECU
16. ABS warning light
17. Brake fluid pressure
18. Time
19. Repressurizing

Emergency braking (ABS activated)

1. Depressurized state
   When the front wheel is about to lock, port D “11” of the solenoid valve is opened by the “depressurization” signal transmitted from the ABS ECU. When this occurs, the spool of the flow control valve compresses the return spring and closes port B “9”. Brake fluid that has entered through port A “7” is restricted by the orifice “10” and the brake fluid is sent to the brake caliper via port C “13” and to the buffer chamber via port D “11”. As a result, the hydraulic pressure in the brake caliper is reduced. The brake fluid stored in the buffer chamber is pumped back to the brake master cylinder by the hydraulic pump linked to the ABS motor.

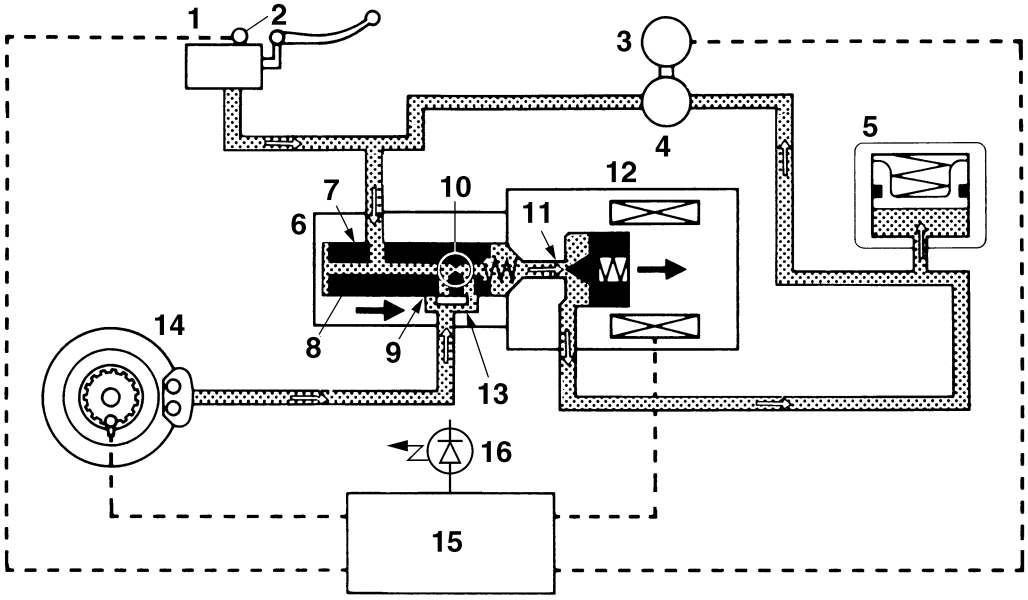

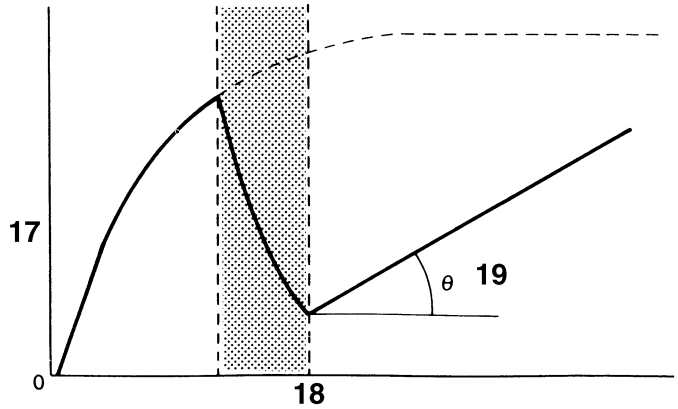

1. Brake master cylinder
2. Brake light switch
3. ABS motor
4. Hydraulic pump
5. Buffer chamber
6. Flow control valve
7. Port A
8. Spool
9. Port B
10. Orifice
11. Port D
12. Solenoid valve
13. Port C
14. Brake caliper
15. ABS ECU
16. ABS warning light
17. Brake fluid pressure
18. Time
19. Repressurizing

2. Pressurized state
   Port D “11” is closed by the “pressurization” signal transmitted from the ABS ECU. Before this occurs, the spool of the flow control valve has compressed the return spring and closed port B “9”. Brake fluid that has entered through port A “7” is further restricted by the orifice “10” and the brake fluid is sent to the brake caliper via port A “7” and port C “13”. At this time, the brake is pressurized at a constant rate regardless of the brake fluid pressure level since the restriction of port A “7” changes so that a constant pressure difference is maintained between chamber A “20” and chamber B “21” of the flow control valve.

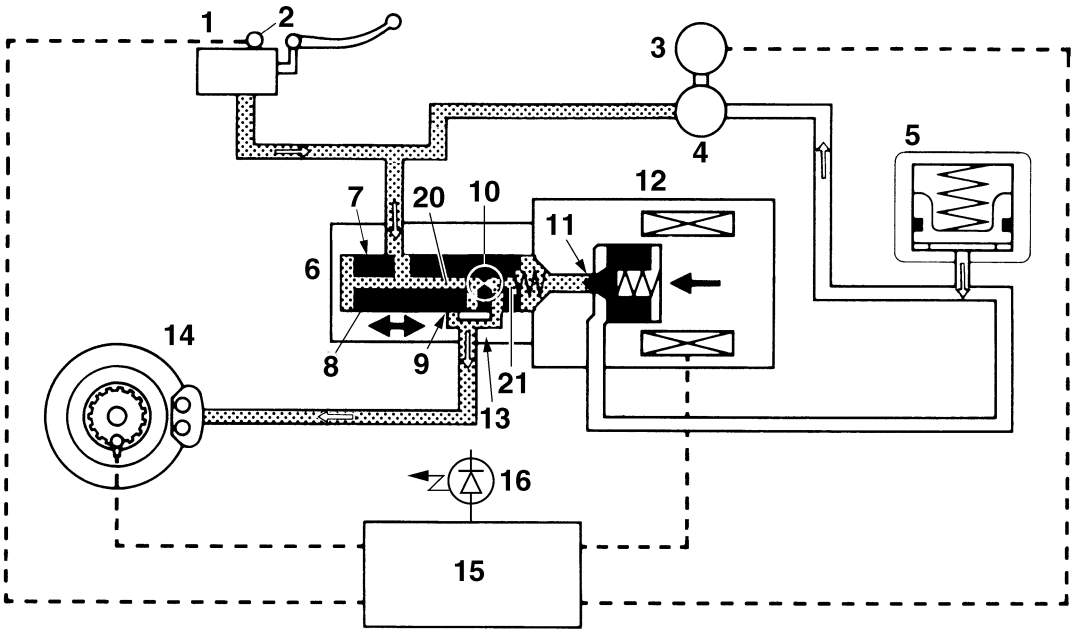

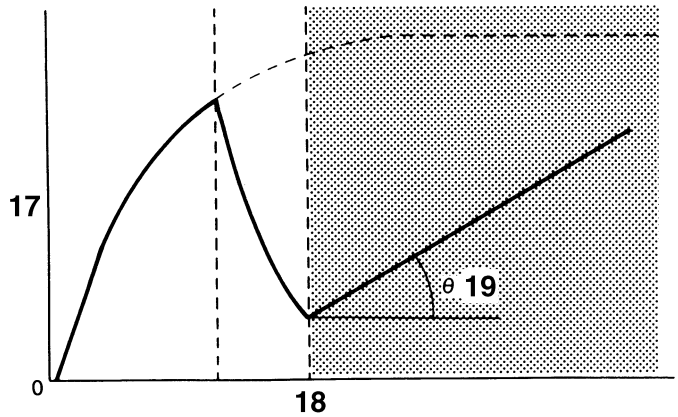

1. Brake master cylinder
2. Brake light switch
3. ABS motor
4. Hydraulic pump
5. Buffer chamber
6. Flow control valve
7. Port A
8. Spool
9. Port B
10. Orifice
11. Port D
12. Solenoid valve
13. Port C
14. Brake caliper
15. ABS ECU
16. ABS warning light
17. Brake fluid pressure
18. Time
19. Repressurizing
20. Chamber A
21. Chamber B

ET3P61053

ABS SELF-DIAGNOSIS FUNCTION

ABS warning light

The ABS warning light “1” comes on when a malfunction is detected by the ABS self-diagnosis. It is located in the meter assembly.

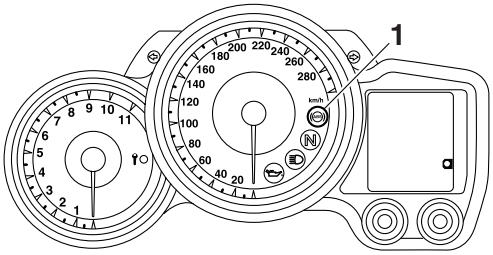

Instances when the ABS warning light comes on

1. The ABS warning light comes on when the main switch is turned to “ON”.
   The ABS warning light comes on for 2 seconds while the ABS is performing a self-diagnosis, then goes off if there are no problems.

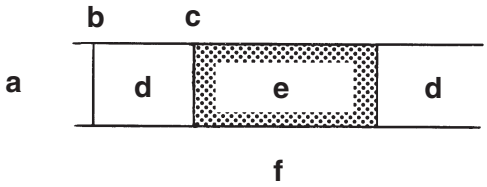

a. ABS warning light
b. Main switch “OFF”
c. Main switch “ON”
d. Goes off
e. Comes on for 2 seconds
f. ABS self-diagnosis

2. The ABS warning light comes on while the start switch is being pushed.
   When the engine is being started, the ABS warning light comes on while the start switch is being pushed. (Refer to “ELECTRIC STARTING SYSTEM” on page 8-9.)

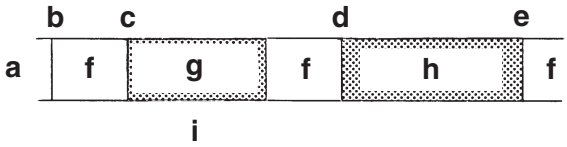

a. ABS warning light
b. Main switch “OFF”
c. Main switch “ON”
d. Start switch “ON”
e. Start switch “OFF”
f. Goes off
g. Comes on for 2 seconds
h. Comes on while the start switch is being pushed
i. ABS self-diagnosis

3. The ABS warning light comes on while riding.
   If the ABS warning light comes on while riding, a malfunction has been detected in the ABS. The ABS hydraulic control will not be performed. The ABS will have recourse to manual braking if this occurs.

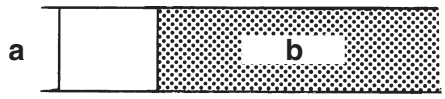

a. ABS warning light
b. Comes on

4. The ABS warning light flashes while riding.
   If the ABS warning light flashes while riding, there is no problem with the function of the ABS. However, the ABS ECU input has unstable factors. (For details, refer to “ABS TROUBLESHOOTING OUTLINE” on page 8-121.)

NOTE:

The ABS warning light comes on or flashes if the vehicle is ridden with the test coupler adapter connected to the ABS test coupler.

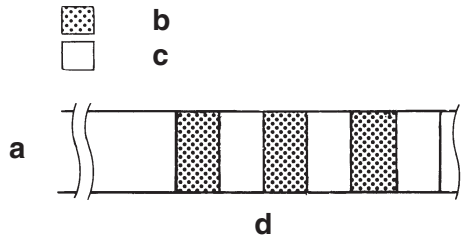

a. ABS warning light
b. Comes on
c. Goes off
d. Unstable ABS ECU input

5. The ABS warning light “1” flashes and a malfunction code “2” is indicated on the multi-function display when the test coupler adapter “3” is connected to the ABS test coupler “4” for troubleshooting the ABS.
   The ABS test coupler can be accessed by removing front cowling right inner panel 1.
   When the test coupler adapter is connected to the ABS test coupler, the ABS warning light starts flashing and the multi-function display indicates all the malfunction codes recorded in the ABS ECU.

	Test coupler adapter **90890-03149**

NOTE:

The ABS warning light comes on or flashes if the vehicle is ridden with the test coupler adapter connected to the ABS test coupler.

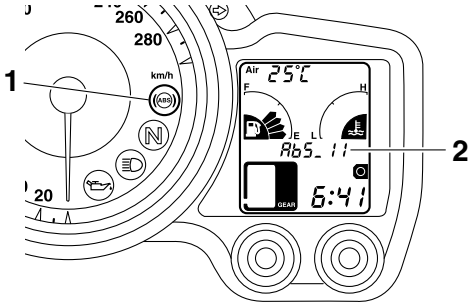

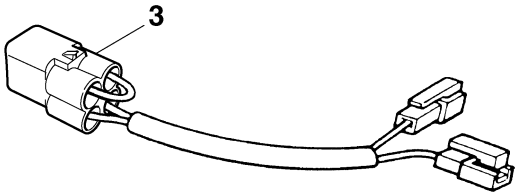

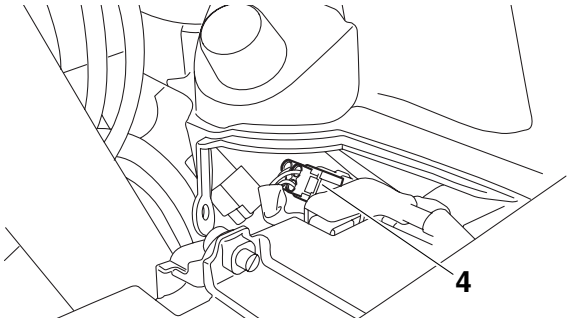

ET3P61054

ABS WARNING LIGHT AND OPERATION

ABS warning light

- When the main switch is turned to “ON”, the ABS warning light comes on for 2 seconds, then goes off.
- The ABS warning light comes on while the start switch is being pushed.
- If the ABS warning light comes on while riding, stop the vehicle, and then turn the main switch to “OFF”, then back to “ON”. The ABS operation is normal if the ABS warning light comes on for 2 seconds, then goes off.
- If the rear wheel is raced with the vehicle on the centerstand, the ABS warning light may flash or come on. If this occurs, turn the main switch to “OFF”, then back to “ON”. The ABS operation is normal if the ABS warning light comes on for 2 seconds, then goes off.
- The ABS operation is normal if the ABS warning light flashes.
- Even if the ABS warning light remains on and does not go off, or if it comes on after riding, conventional braking performance of the vehicle is maintained.

ABS function

- When hydraulic control is performed by the ABS, the brake system alerts the rider that the wheels have a tendency to lock by generating a reaction-force pulsating action in the brake lever or brake pedal. When the ABS is activated, the grip between the road surface and tires is close to the limit. The ABS cannot prevent wheel lock* on slippery surfaces, such as ice, when it is caused by engine braking, even if the ABS is activated.
- The ABS is not designed to shorten the braking distance or improve the cornering performance.

- Depending on the road conditions, the braking distance may be longer compared to that of vehicles not equipped with ABS. Therefore, ride at a safe speed and keep a safe distance between yourself and other vehicles.
- The braking of the vehicle, even in the worst case, is principally executed when the vehicle is advancing straight ahead. During a turn, sudden braking is liable to cause a loss of traction of the tires. Even vehicles equipped with ABS cannot be prevented from falling over if braked suddenly.
- The ABS does not work when the main switch is turned to “OFF”. The conventional braking function can be used.

* Wheel lock: A condition that occurs when the rotation of one or both of the wheels has stopped, but the vehicle continues to travel.

ET3P61043

INSTRUMENT FUNCTIONS

Speedometer

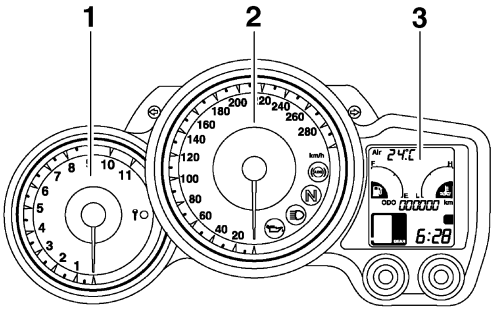

1. Tachometer
2. Speedometer
3. Multi-function display

The speedometer shows the riding speed.
When the key is turned to “ON”, the speedometer needle will sweep once across the speed range and then return to zero in order to test the electrical circuit.

Tachometer

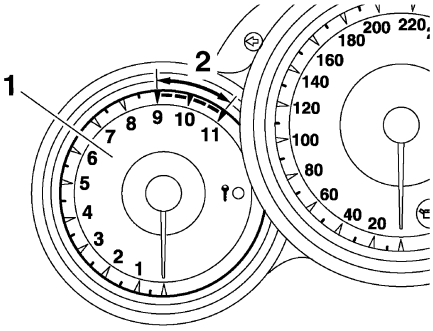

1. Tachometer
2. Tachometer red zone

The electric tachometer allows the rider to monitor the engine speed and keep it within the ideal power range.
When the key is turned to “ON”, the tachometer needle will sweep once across the r/min range and then return to zero r/min in order to test the electrical circuit.

EC3P61039

CAUTION:

Do not operate the engine in the tachometer red zone.
Red zone: 9000 r/min and above

Multi-function display

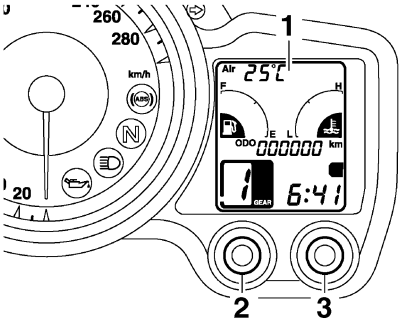

1. Multi-function display
2. “SELECT” button
3. “RESET” button

EW3P61020

WARNING

Be sure to stop the vehicle before making any setting changes to the multi-function display.

The multi-function display is equipped with the following:
- an odometer (which shows the total distance traveled)
- two tripmeters (which show the distance traveled since they were last set to zero)
- a fuel reserve tripmeter (which shows the distance traveled on the fuel reserve)
- a clock
- a fuel meter
- a coolant temperature meter
- a transmission gear display
- an ambient temperature display
- two fuel consumption displays (instantaneous and average)
- a self-diagnosis device

NOTE:

Be sure to turn the key to “ON” before using the “SELECT” and “RESET” buttons.

Odometer and tripmeter modes

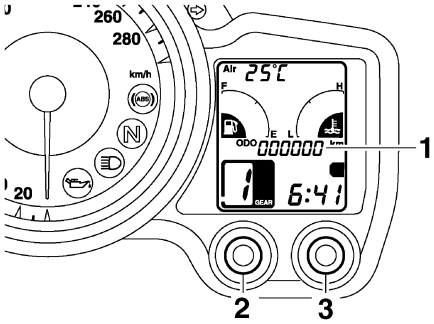

1. Odometer/tripmeter/fuel reserve tripmeter
2. “SELECT” button
3. “RESET” button

Pushing the “SELECT” button switches the display between the odometer mode “ODO” and the tripmeter modes “TRIP 1” and “TRIP 2” in the following order:
ODO → TRIP 1 → TRIP 2 → ODO

NOTE:

When selecting “TRIP 1” or “TRIP 2”, the display flashes for five seconds.

When approximately 5.5 L (1.45 US gal) (1.21 Imp.gal) of fuel remains in the fuel tank, the display will automatically change to the fuel reserve tripmeter mode “F-TRIP” and start counting the distance traveled from that point. In that case, pushing the “SELECT” button switches the display between the various tripmeter and odometer modes in the following order:
F-TRIP → TRIP 1 → TRIP 2 → ODO → F-TRIP
To reset a tripmeter, select it by pushing the “SELECT” button, and then push the “SELECT” button for at least one second. If you do not reset the fuel reserve tripmeter manually, it will reset itself automatically and the display will return to the prior mode after refueling and traveling 5 km (3 mi).

Clock

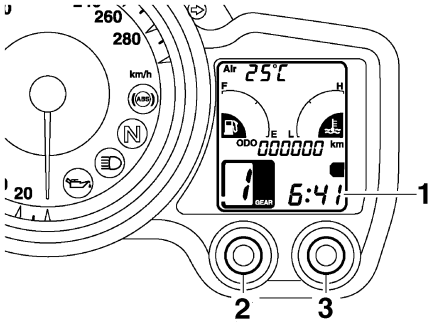

1. Clock
2. “SELECT” button
3. “RESET” button

To set the clock:
1. Push the “SELECT” button and “RESET” button together for at least two seconds.
2. When the hour digits start flashing, push the “RESET” button to set the hours.
3. Push the “SELECT” button, and the minute digits will start flashing.
4. Push the “RESET” button to set the minutes.
5. Push the “SELECT” button and then release it to start the clock.

Fuel meter

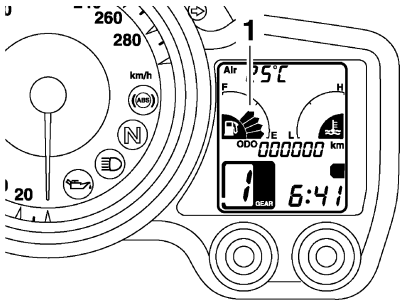

1. Fuel meter

The fuel meter indicates the amount of fuel in the fuel tank. The display segments of the fuel meter disappear towards “E” (Empty) as the fuel level decreases. When the last segment starts flashing, refuel as soon as possible. When the key is turned to “ON”, all of the display segments of the fuel meter will appear one after the other and then disappear in order to test the electrical circuit.

NOTE:

This fuel meter is equipped with a self-diagnosis system. If the electrical circuit is defective, all the display segments will start flashing. If this occurs, check the electrical circuit.
Refer to “SIGNALING SYSTEM” on page 8-27.

Coolant temperature meter

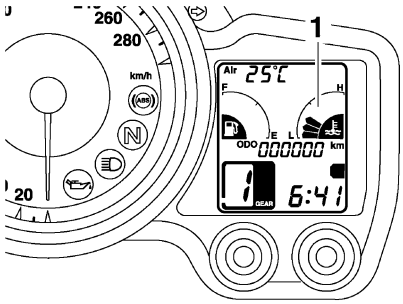

1. Coolant temperature meter

With the key in the “ON” position, the coolant temperature meter indicates the temperature of the coolant. When the key is turned to “ON”, all of the display segments of the coolant temperature meter will appear one after the other and then disappear in order to test the electrical circuit. The coolant temperature varies with changes in the weather and engine load. If the top segment flashes, stop the vehicle and let the engine cool.

EC3P61040

CAUTION:

Do not operate the engine if it is overheated.

Transmission gear display

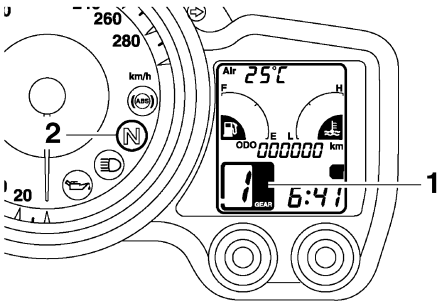

1. Transmission gear display
2. Neutral indicator light “ **N** ”

This display shows the selected gear. The neutral position, however, is not displayed, it is indicated by the neutral indicator light.

Ambient temperature, instantaneous fuel consumption and average fuel consumption modes (except for the UK)

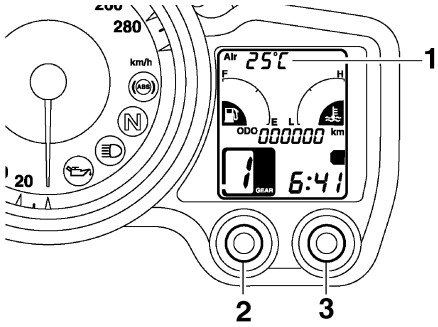

1. Ambient temperature/instantaneous fuel consumption/average fuel consumption
2. “SELECT” button
3. “RESET” button

Push the “RESET” button to switch the display between the ambient temperature mode and the fuel consumption modes in the following order: Air (ambient temperature) → km/L or L/100 km (instantaneous fuel consumption) → AV_ _ km/L or AV_ _ L/100 km (average fuel consumption) → Air (ambient temperature)

Ambient temperature mode

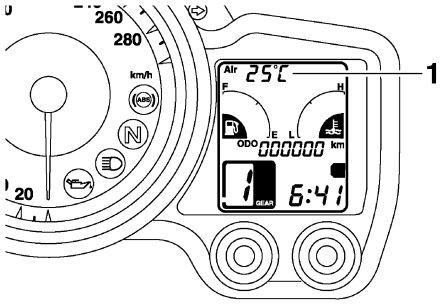

1. Ambient temperature

This display shows the ambient temperature from -9 °C to 50 °C in 1 °C increments. The temperature displayed may vary from the ambient temperature.

NOTE:

- If the ambient temperature falls below -9 °C, a lower temperature than -9 °C will not be displayed.
- If the ambient temperature climbs above 50 °C, a higher temperature than 50 °C will not be displayed.
- The accuracy of the temperature reading may be affected when riding slowly (approximately under 20 km/h) or when stopped at traffic signals, railroad crossings, etc.

Instantaneous fuel consumption mode

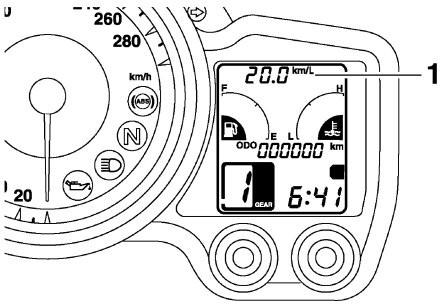

1. Instantaneous fuel consumption mode

The instantaneous fuel consumption display can be set to either “km/L” or “L/100 km”.

- When the display is set to “km/L”, the distance that can be traveled on 1.0 L of fuel under the current riding conditions is shown.
- When the display is set to “L/100 km”, the amount of fuel necessary to travel 100 km under the current riding conditions is shown.

NOTE:

- To switch between the two instantaneous fuel consumption displays, push the “RESET” button for 1 second when either display is shown.
- If traveling at speeds under 10 km/h, “_ _” will be displayed.

Average fuel consumption mode

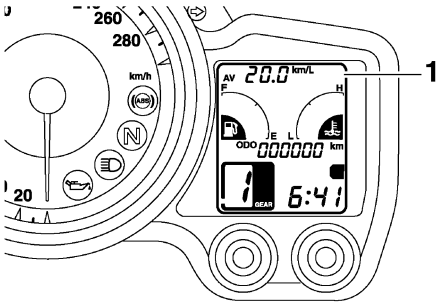

1. Average fuel consumption

This display shows the average fuel consumption since it was last reset.
The average fuel consumption display can be set to either “AV _ _ km/L” or “AV _ _ L/100 km”. When the average fuel consumption mode is selected, the display flashes for five seconds, and then, depending on the unit set, “AV _ _ km/L” (average distance that can be traveled using 1.0 L of fuel) or “AV _ _ L/100 km” (average amount of fuel necessary to travel 100 km) is displayed. To reset the average fuel consumption display, push the “RESET” button to select the mode again, and then push the “RESET” button for 1 second while the display is flashing.

NOTE:

- To switch between the two average fuel consumption displays, push the “RESET” button for 1 second when either display is shown.
- After resetting an average fuel consumption display, “_ _” will be shown for that display until the vehicle has traveled 1 km.

EC3P61041

CAUTION:

If there is a malfunction, “– –” will be displayed. Replace the meter assembly.

Ambient temperature, instantaneous fuel consumption and average fuel consumption modes (for the UK only)

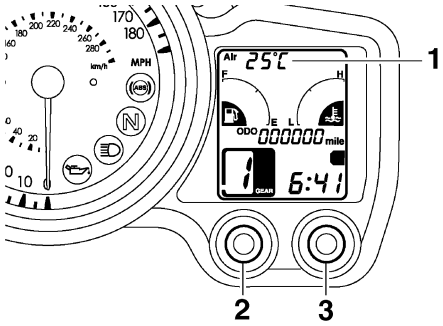

1. Ambient temperature/instantaneous fuel consumption/average fuel consumption
2. “SELECT” button
3. “RESET” button

Push the “RESET” button to switch the display between the ambient temperature mode and the fuel consumption modes in the following order: Air (ambient temperature) → MPG (instantaneous fuel consumption) → AV_ _ MPG (average fuel consumption) → Air (ambient temperature)

Ambient temperature mode

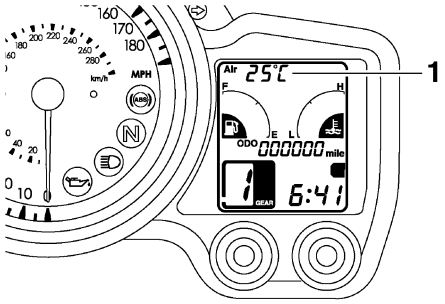

1. Ambient temperature

This display shows the ambient temperature from -9 °C to 50 °C in 1 °C increments. The temperature displayed may vary from the ambient temperature.

NOTE:

- If the ambient temperature falls below -9 °C, a lower temperature than -9 °C will not be displayed.
- If the ambient temperature climbs above 50 °C, a higher temperature than 50 °C will not be displayed.
- The accuracy of the temperature reading may be affected when riding slowly [approximately under 20 km/h (12.5 mi/h)] or when stopped at traffic signals, railroad crossings, etc.

Instantaneous fuel consumption mode

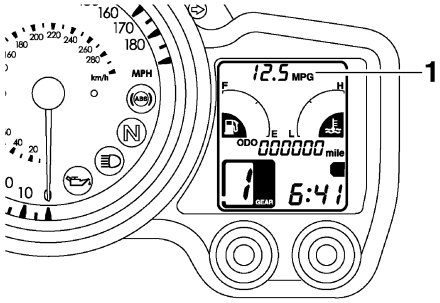

1. Instantaneous fuel consumption mode

This display shows the distance that can be traveled on 1.0 Imp.gal of fuel under the current riding conditions.

NOTE:

If traveling at speeds under 10 km/h (6.0 mi/h), "_ _" will be displayed.

Average fuel consumption mode

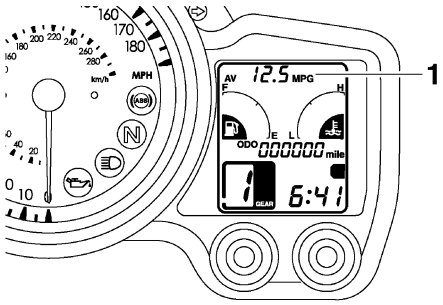

1. Average fuel consumption

This display shows the average fuel consumption since it was last reset.
When the average fuel consumption mode is selected, the display flashes for five seconds, and then "AV _ _ MPG" (average distance that can be traveled using 1.0 Imp.gal of fuel) is displayed.

NOTE:

- To reset the average fuel consumption display, push the "RESET" button to select the mode again, and then push the "RESET" button for 1 second while the display is flashing.
- After resetting the average fuel consumption display, "_ _" will be shown for that display until the vehicle has traveled 1 km (0.6 mi).

EC3P61041

CAUTION:

If there is a malfunction, "– –" will be displayed. Replace the meter assembly.

Self-diagnosis device

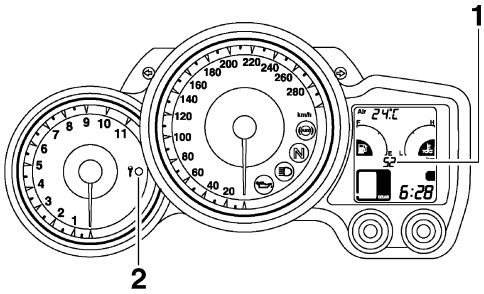

1. Fault code display
2. Immobilizer system indicator light

This model is equipped with a self-diagnosis device for various electrical circuits.
If any of those circuits are defective, the multi-function display will indicate a two-digit fault code (e.g., 11, 12, 13).
If the multi-function display indicates such an fault code, note the code number, and check the vehicle.
Refer to "FUEL INJECTION SYSTEM" on page 8-41.

EC3P61042

CAUTION:

If the multi-function display indicates an fault code, the vehicle should be checked as soon as possible in order to avoid engine damage.

This model is also equipped with a self-diagnosis device for the immobilizer system.
If any of the immobilizer system circuits are defective, the immobilizer system indicator light will flash, and then the multi-function display will indicate a two-digit fault code (e.g., 51, 52, 53) when the key is turned to "ON".

NOTE:

If the multi-function display indicates fault code 52, this could be caused by transponder interference. If this fault code appears, try the following.

1. Use the code re-registering key to start the engine.

NOTE:

Make sure there are no other immobilizer keys close to the main switch, and do not keep more than one immobilizer key on the same key ring! Immobilizer system keys may cause signal interference, which may prevent the engine from starting.

2. If the engine starts, turn it off, and try starting the engine with the standard keys.
3. If one or both of the standard keys do not start the engine, re-register the standard keys.

If the multi-function display indicates any fault codes, note the code number, and then check the vehicle.
Refer to “IMMOBILIZER SYSTEM” on page 8-99.

EAS20180
IMPORTANT INFORMATION

EAS20190
PREPARATION FOR REMOVAL AND DISASSEMBLY

1. Before removal and disassembly, remove all dirt, mud, dust and foreign material.

2. Use only the proper tools and cleaning equipment.
   Refer to “SPECIAL TOOLS” on page 1-33.
3. When disassembling, always keep mated parts together. This includes gears, cylinders, pistons and other parts that have been “mated” through normal wear. Mated parts must always be reused or replaced as an assembly.

4. During disassembly, clean all of the parts and place them in trays in the order of disassembly. This will speed up assembly and allow for the correct installation of all parts.
5. Keep all parts away from any source of fire.

EAS20200
REPLACEMENT PARTS

Use only genuine Yamaha parts for all replacements. Use oil and grease recommended by Yamaha for all lubrication jobs. Other brands may be similar in function and appearance, but inferior in quality.

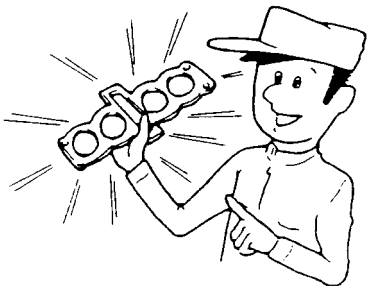

EAS20210
GASKETS, OIL SEALS AND O-RINGS

1. When overhauling the engine, replace all gaskets, seals and O-rings. All gasket surfaces, oil seal lips and O-rings must be cleaned.
2. During reassembly, properly oil all mating parts and bearings and lubricate the oil seal lips with grease.

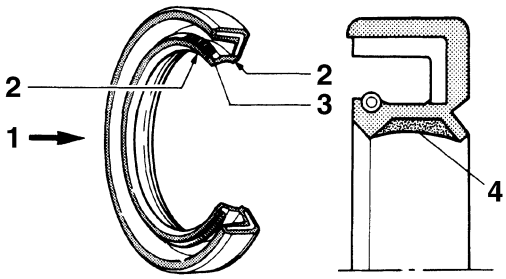

1. Oil
2. Lip
3. Spring
4. Grease

EAS20220
LOCK WASHERS/PLATES AND COTTER PINS

After removal, replace all lock washers/plates “1” and cotter pins. After the bolt or nut has been tightened to specification, bend the lock tabs along a flat of the bolt or nut.

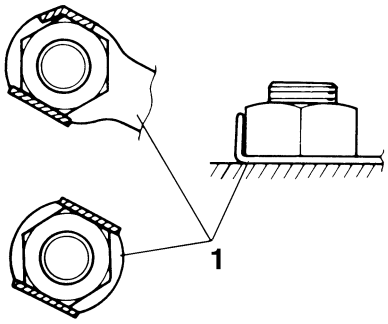

EAS20230
BEARINGS AND OIL SEALS
Install bearings “1” and oil seals “2” so that the manufacturer’s marks or numbers are visible. When installing oil seals, lubricate the oil seal lips with a light coat of lithium-soap-based grease. Oil bearings liberally when installing, if appropriate.

ECA13300
CAUTION:

Do not spin the bearing with compressed air because this will damage the bearing surfaces.

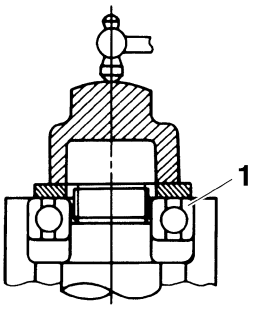

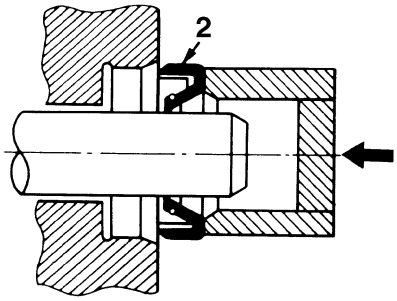

EAS20240
CIRCLIPS
Before reassembly, check all circlips carefully and replace damaged or distorted circlips. Always replace piston pin clips after one use. When installing a circlip “1”, make sure the sharp-edged corner “2” is positioned opposite the thrust “3” that the circlip receives.

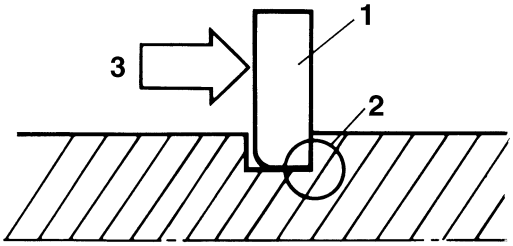

EAS20250

CHECKING THE CONNECTIONS

Check the leads, couplers, and connectors for stains, rust, moisture, etc.

1. Disconnect:
   - Lead
   - Coupler
   - Connector
2. Check:
   - Lead
   - Coupler
   - Connector
     Moisture → Dry with an air blower.
     Rust/stains → Connect and disconnect several times.

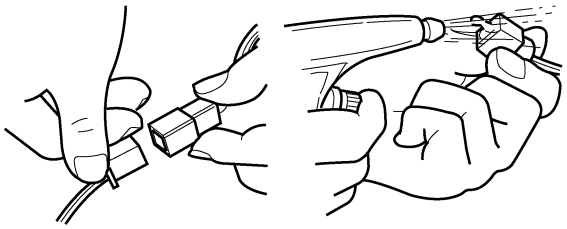

3. Check:
   - All connections
     Loose connection → Connect properly.

NOTE:

If the pin "1" on the terminal is flattened, bend it up.

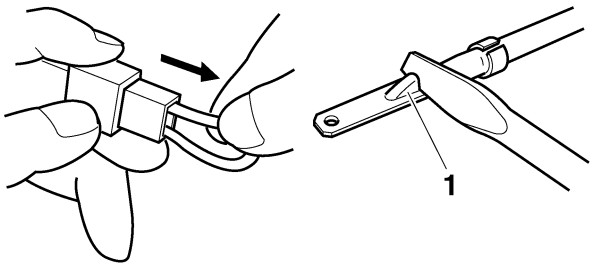

4. Connect:
   - Lead
   - Coupler
   - Connector

NOTE:

Make sure all connections are tight.

5. Check:
   - Continuity
     (with the pocket tester)

Pocket tester
90890-03112
Analog pocket tester
YU-03112-C

NOTE:

- If there is no continuity, clean the terminals.
- When checking the wire harness, perform steps (1) to (3).
- As a quick remedy, use a contact revitalizer available at most part stores.

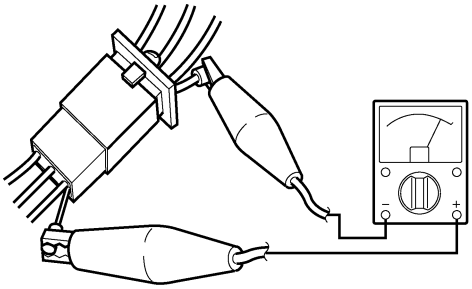

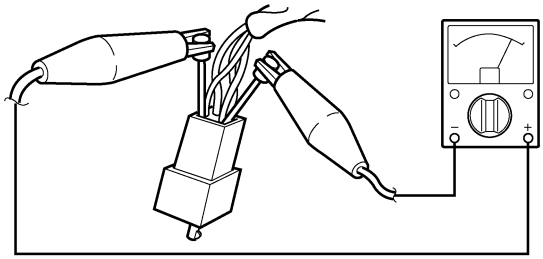

EAS20260

SPECIAL TOOLS

The following special tools are necessary for complete and accurate tune-up and assembly. Use only the appropriate special tools as this will help prevent damage caused by the use of inappropriate tools or improvised techniques. Special tools, part numbers or both may differ depending on the country. When placing an order, refer to the list provided below to avoid any mistakes.

NOTE:

- For U.S.A. and Canada, use part number starting with “YM-”, “YU-”, or “ACC-”.
- For others, use part number starting with “90890-”.

Tool name/Tool No.	Illustration	Reference pages
Test coupler adapter 90890-03149		1-21, 4-56, 4-58
Pocket tester 90890-03112 Analog pocket tester YU-03112-C	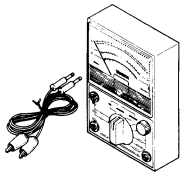	1-32, 4-16, 5-39, 8-120, 8-121, 8-143, 8-144, 8-151, 8-152, 8-153, 8-157, 8-159, 8-160, 8-161, 8-162, 8-163, 8-164, 8-165, 8-166, 8-167, 8-168, 8-169
Valve lapper 90890-04101 Valve lapping tool YM-A8998		3-4
Vacuum gauge 90890-03094 Carburetor synchronizer YU-44456	90890-03094 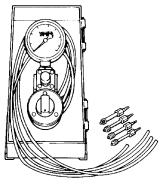 YU-44456 	3-6
Timing light 90890-03141 Inductive clamp timing light YU-03141	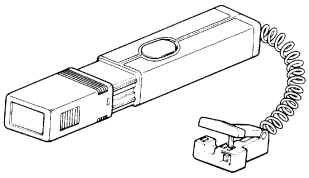	3-10

Tool name/Tool No.	Illustration	Reference pages
Compression gauge 90890-03081 Engine compression tester YU-33223	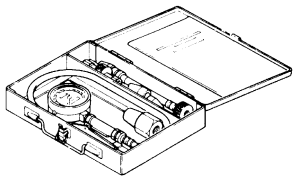	3-11
Oil filter wrench 90890-01426 YU-38411	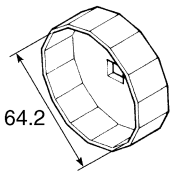	3-13
Oil pressure gauge set 90890-03120	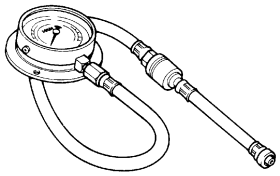	3-14
Oil pressure adapter B 90890-03124	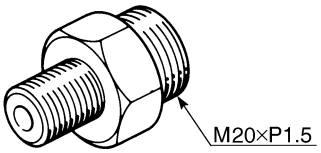	3-14
Steering nut wrench 90890-01403 Spanner wrench YU-33975	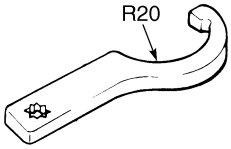	3-26, 4-77
Damper rod holder 90890-01447 YM-01447	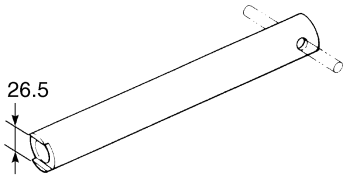	4-69, 4-70
Slide metal installer 90890-01508	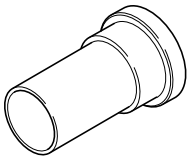	4-71
Fork seal driver 90890-01502 YM-A0948	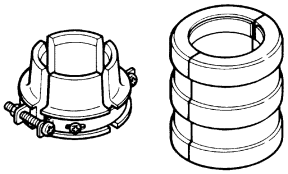	4-71, 4-72
Final gear backlash band 90890-01511	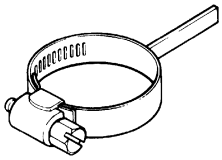	4-93

Tool name/Tool No.	Illustration	Reference pages
Coupling gear/middle shaft tool 90890-01229 Gear holder YM-01229	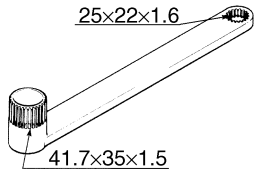	4-95, 4-98
Bearing retainer wrench 90890-04050 Pinion bearing retainer & remover YM-04050	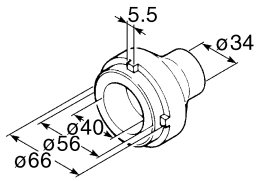	4-95, 4-98
Fork seal driver weight 90890-01184		4-100
Fork seal driver attachment 90890-01186 Replacement 27 mm YM-A9409-1	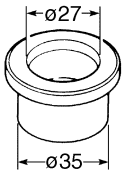	4-100
Pivot shaft wrench 90890-01471 Frame spanner socket YM-01471	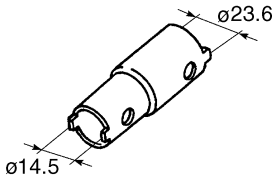	5-6, 5-7
Pivot shaft wrench adapter 90890-01476	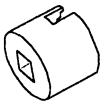	5-6, 5-7
Rotor holding tool 90890-01235 Universal magneto & rotor holder YU-01235	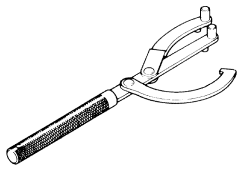	5-11, 5-14
Yamaha bond No. 1215 90890-85505 (Three Bond No.1215®)	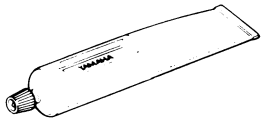	5-16, 5-32, 5-35, 5-79, 6-13
Valve spring compressor 90890-04019 YM-04019	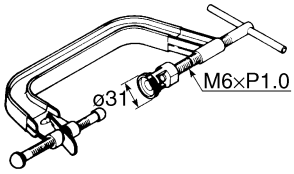	5-22, 5-27

Tool name/Tool No.	Illustration	Reference pages
Valve spring compressor attachment 90890-04114 Valve spring compressor adapter 19.5 mm YM-04114	90890-04114 ø19 YM-04114 ø19.5	5-22, 5-27
Valve guide remover (ø5) 90890-04097 Valve guide remover (5.0 mm) YM-04097	ø5	5-23
Valve guide installer (ø5) 90890-04098 Valve guide installer (5.0 mm) YM-04098		5-23
Valve guide reamer (ø5) 90890-04099 Valve guide reamer (5.0 mm) YM-04099	ø5	5-23
Sheave holder 90890-01701 Primary clutch holder YS-01880-A		5-31, 5-32, 5-35
Flywheel puller 90890-01362 Heavy duty puller YU-33270-B		5-31
Universal clutch holder 90890-04086 YM-91042	90890-04086 M8×P1.25 30 119 156 YM-91042	5-48, 5-51

Tool name/Tool No.	Illustration	Reference pages
Thickness gauge 90890-03180 Feeler gauge set YU-26900-9	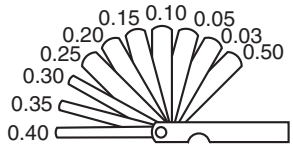	5-49
Bearing retainer wrench 90890-04137 Middle drive shaft bearing retainer wrench YM-04137	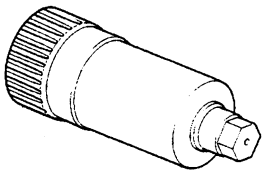	5-67, 5-69
Damper spring compressor 90890-04090	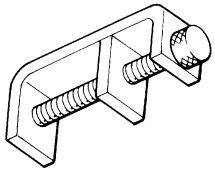	5-67, 5-68
Bearing retainer wrench 90890-04140 Middle drive shaft bearing retainer wrench YM-04140	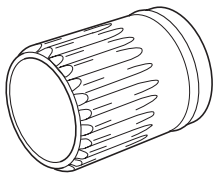	5-68
Gear lash measurement tool 90890-01467 YM-01467	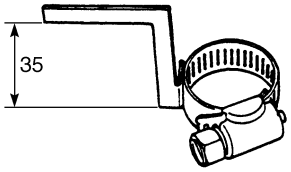	5-71
Piston pin puller set 90890-01304 Piston pin puller YU-01304	90890-01304 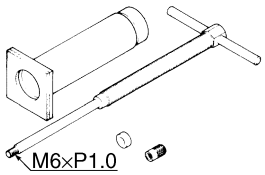 YU-01304 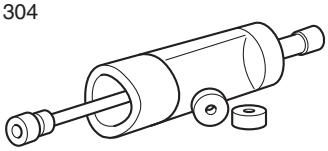	5-83
Piston ring compressor 90890-05158 YM-08037	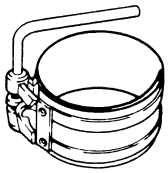	5-88
Slide hammer bolt 90890-01083 Slide hammer bolt 6 mm YU-01083-1	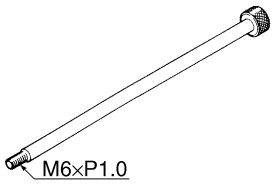	5-99

Tool name/Tool No.	Illustration	Reference pages
Weight 90890-01084 YU-01083-3	90890-01084 ø8.5 YU-01083-3	5-99
Radiator cap tester 90890-01325 Radiator pressure tester YU-24460-01	90890-01325 ø38 YU-24460-01	6-3
Radiator cap tester adapter 90890-01352 Radiator pressure tester adapter YU-33984	90890-01352 ø31.4 ø38 ø41 ø28 YU-33984	6-3
Mechanical seal installer 90890-04078 Water pump seal installer YM-33221-A	ø35 ø14 ø27.5	6-13
Middle driven shaft bearing driver 90890-04058 Bearing driver 40 mm YM-04058	ø28 ø40	6-13
Pressure gauge 90890-03153 YU-03153		7-7

Tool name/Tool No.	Illustration	Reference pages
Fuel pressure adapter 90890-03176 YM-03176	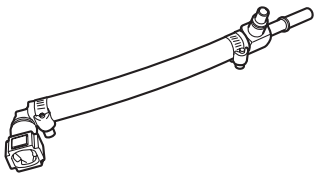	7-7
Digital circuit tester 90890-03174 Model 88 Multimeter with tachometer YU-A1927	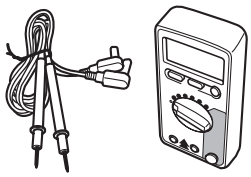	7-8
Ignition checker 90890-06754 Opama pet-4000 spark checker YM-34487	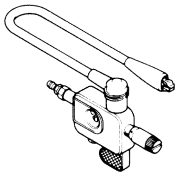	8-162

SPECIFICATIONS

GENERAL SPECIFICATIONS 2-1

ENGINE SPECIFICATIONS 2-2

CHASSIS SPECIFICATIONS 2-9

ELECTRICAL SPECIFICATIONS 2-12

TIGHTENING TORQUES 2-15
- GENERAL TIGHTENING TORQUE SPECIFICATIONS 2-15
- ENGINE TIGHTENING TORQUES 2-16
- CHASSIS TIGHTENING TORQUES 2-20

LUBRICATION POINTS AND LUBRICANT TYPES 2-25
- ENGINE 2-25
- CHASSIS 2-27

LUBRICATION SYSTEM CHART AND DIAGRAMS 2-29
- ENGINE OIL LUBRICATION CHART 2-29
- LUBRICATION DIAGRAMS 2-31

COOLING SYSTEM DIAGRAMS 2-41

CABLE ROUTING 2-45

EAS20280

GENERAL SPECIFICATIONS

Model	
Model	3P61 (Europe except (B) and (F)) (ZA) 3P62 (B) (F) 3P63 (AUS)
Dimensions	
Overall length	2230 mm (87.8 in)
Overall width	750 mm (29.5 in)
Overall height	1450 mm (57.1 in)
Seat height	800 mm (31.5 in)
Wheelbase	1545 mm (60.8 in)
Ground clearance	130 mm (5.12 in)
Minimum turning radius	3100 mm (122.0 in)
Weight	
With oil and fuel	291.0 kg (642 lb)
Maximum load	212 kg (467 lb)

EAS20290
ENGINE SPECIFICATIONS

Engine	
Engine type	Liquid cooled 4-stroke, DOHC
Displacement	1298.0 cm^3 (79.20 cu.in)
Cylinder arrangement	Forward-inclined parallel 4-cylinder
Bore × stroke	79.0 × 66.2 mm (3.11 × 2.61 in)
Compression ratio	10.80 :1
Standard compression pressure (at sea level)	1600 kPa/400 r/min (228 psi/400 r/min) (16.0 kgf/cm^2/400 r/min)
Minimum–maximum	1390–1790 kPa (198–255 psi) (13.9–17.9 kgf/cm^2)
Starting system	Electric starter
Fuel	
Recommended fuel	Regular unleaded gasoline only (Europe) (ZA) Unleaded gasoline only (AUS)
Fuel tank capacity	25.0 L (6.61 US gal) (5.50 Imp.gal)
Fuel reserve amount	5.5 L (1.45 US gal) (1.21 Imp.gal)
Engine oil	
Lubrication system	Wet sump
Type	SAE20W40
Recommended engine oil grade	API service SE, SF, SG type or higher
Engine oil quantity	
Total amount	4.90 L (5.18 US qt) (4.31 Imp.qt)
Without oil filter cartridge replacement	3.80 L (4.02 US qt) (3.34 Imp.qt)
With oil filter cartridge replacement	4.00 L (4.23 US qt) (3.52 Imp.qt)
Oil pressure (hot)	30.0 kPa/1000 r/min (4.4 psi/1000 r/min) (0.30 kgf/cm^2/1000 r/min)
Final gear oil	
Type	Shaft drive gear oil (Part No.: 9079E-SH001-00)
Quantity	0.20 L (0.21 US qt) (0.18 Imp.qt)
Oil pump	
Oil pump type	Trochoid
Inner-rotor-to-outer-rotor-tip clearance	Less than 0.12 mm (0.0047 in)
Limit	0.20 mm (0.0079 in)
Outer-rotor-to-oil-pump-housing clearance	0.09–0.15 mm (0.0035–0.0059 in)
Limit	0.22 mm (0.0087 in)
Oil-pump-housing-to-inner-and-outer-rotor clearance	0.03–0.08 mm (0.0012–0.0032 in)
Limit	0.15 mm (0.0059 in)
Bypass valve opening pressure	78.4–117.6 kPa (11.4–17.1 psi) (0.78–1.18 kgf/cm^2)
Relief valve operating pressure	480.0–560.0 kPa (69.6–81.2 psi) (4.80–5.60 kgf/cm^2)
Cooling system	
Radiator capacity (including all routes)	2.60 L (2.75 US qt) (2.29 Imp.qt)
Radiator capacity	0.65 L (0.69 US qt) (0.57 Imp.qt)

Coolant reservoir capacity (up to the maximum level mark)	0.25 L (0.26 US qt) (0.22 Imp.qt)
Radiator cap opening pressure	93.3–122.7 kPa (13.5–17.8 psi) (0.93–1.23 kgf/cm²)
Valve relief pressure	4.9 kPa (0.7 psi) (0.05 kgf/cm²)
Thermostat	
Model/manufacturer	4FM/NIPPON THERMOSTAT
Valve opening temperature	69.0–73.0 °C (156.20–163.40 °F)
Valve full open temperature	85.0 °C (185.00 °F)
Valve lift (full open)	8.0 mm (0.31 in)
Radiator core	
Width	360.0 mm (14.17 in)
Height	273.8 mm (10.78 in)
Depth	22.0 mm (0.87 in)
Water pump	
Water pump type	Single suction centrifugal pump
Reduction ratio	75/48 × 25/28 (1.395)
Impeller shaft tilt limit	0.15 mm (0.006 in)

Spark plug (s)

Manufacturer/model	NGK/CR8E
Manufacturer/model	DENSO/U24ESR-N
Spark plug gap	0.7–0.8 mm (0.028–0.031 in)

Cylinder head

Volume	22.74–23.34 cm³ (1.39–1.42 cu.in)
Warpage limit	0.10 mm (0.0039 in)

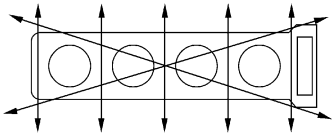

Camshaft

Drive system	Chain drive (right)
Camshaft cap inside diameter	24.500–24.521 mm (0.9646–0.9654 in)
Camshaft journal diameter	24.459–24.472 mm (0.9630–0.9635 in)
Camshaft-journal-to-camshaft-cap clearance	0.028–0.062 mm (0.0011–0.0024 in)
Camshaft lobe dimensions	
Intake A	33.050–33.150 mm (1.3012–1.3051 in)
Limit	32.050 mm (1.2618 in)
Intake B	24.997–25.097 mm (0.9841–0.9881 in)
Limit	23.997 mm (0.9448 in)
Exhaust A	33.050–33.150 mm (1.3012–1.3051 in)
Limit	32.950 mm (1.2972 in)
Exhaust B	24.997–25.097 mm (0.9841–0.9881 in)

Limit	24.897 mm (0.9802 in)

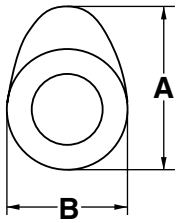

Camshaft runout limit	0.030 mm (0.0012 in)

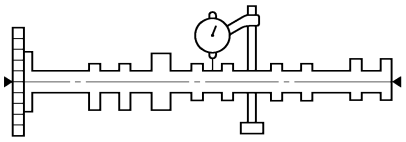

Timing chain

Model/number of links	92RH2015/136
Tensioning system	Automatic

Valve, valve seat, valve guide

Valve clearance (cold)	
Intake	0.15–0.22 mm (0.0059–0.0087 in)
Exhaust	0.18–0.25 mm (0.0071–0.0098 in)
Valve dimensions	
Valve head diameter A (intake)	29.90–30.10 mm (1.1772–1.1850 in)
Valve head diameter A (exhaust)	25.90–26.10 mm (1.0197–1.0276 in)

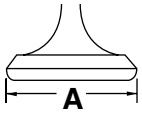

Valve seat width C (intake)	0.90–1.10 mm (0.0354–0.0433 in)
Valve seat width C (exhaust)	0.90–1.10 mm (0.0354–0.0433 in)

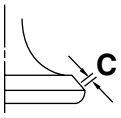

Valve margin thickness D (intake)	0.80–1.20 mm (0.0315–0.0472 in)
Valve margin thickness D (exhaust)	0.50–0.90 mm (0.0197–0.0354 in)

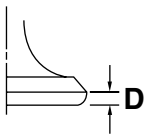

Valve stem diameter (intake)	4.975–4.990 mm (0.1959–0.1965 in)
Valve stem diameter (exhaust)	4.965–4.980 mm (0.1955–0.1960 in)
Valve guide inside diameter (intake)	5.000–5.012 mm (0.1969–0.1973 in)
Limit	5.050 mm (0.1988 in)
Valve guide inside diameter (exhaust)	5.000–5.012 mm (0.1969–0.1973 in)
Limit	5.050 mm (0.1988 in)

Valve-stem-to-valve-guide clearance (intake)	0.010–0.037 mm (0.0004–0.0015 in)
Limit	0.080 mm (0.0032 in)
Valve-stem-to-valve-guide clearance (exhaust)	0.020–0.047 mm (0.0008–0.0019 in)
Limit	0.105 mm (0.0041 in)
Valve stem runout	0.010 mm (0.0004 in)

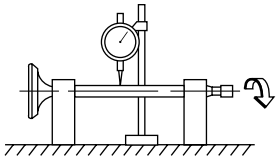

Cylinder head valve seat width (intake)	0.90–1.10 mm (0.0354–0.0433 in)
Cylinder head valve seat width (exhaust)	0.90–1.10 mm (0.0354–0.0433 in)

Valve spring

Free length (intake)	39.73 mm (1.56 in)
Limit	37.74 mm (1.49 in)
Free length (exhaust)	39.73 mm (1.56 in)
Limit	37.74 mm (1.49 in)
Installed length (intake)	33.00 mm (1.30 in)
Installed length (exhaust)	33.00 mm (1.30 in)
Spring rate K1 (intake)	21.85 N/mm (124.76 lb/in) (2.23 kgf/mm)
Spring rate K2 (intake)	28.34 N/mm (161.82 lb/in) (2.89 kgf/mm)
Spring rate K1 (exhaust)	21.85 N/mm (124.76 lb/in) (2.23 kgf/mm)
Spring rate K2 (exhaust)	28.34 N/mm (161.82 lb/in) (2.89 kgf/mm)
Installed compression spring force (intake)	136.00–158.00 N (30.57–35.52 lb) (13.87–16.11 kgf)
Installed compression spring force (exhaust)	136.00–158.00 N (30.57–35.52 lb) (13.87–16.11 kgf)
Spring tilt (intake)	2.5°/1.7 mm (2.5°/0.067 in)
Spring tilt (exhaust)	2.5°/1.7 mm (2.5°/0.067 in)

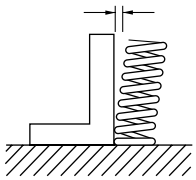

Winding direction (intake)	Clockwise
Winding direction (exhaust)	Clockwise

Cylinder

Bore	79.000–79.010 mm (3.1102–3.1106 in)
Taper limit	0.050 mm (0.0020 in)
Out of round limit	0.050 mm (0.0020 in)

Piston

Piston-to-cylinder clearance	0.020–0.045 mm (0.0008–0.0018 in)
Limit	0.12 mm (0.0047 in)
Diameter D	78.965–78.980 mm (3.1089–3.1094 in)

Height H	5.0 mm (0.20 in)

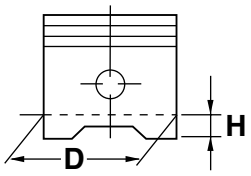

Offset	0.50 mm (0.0197 in)
Offset direction	Intake side
Piston pin bore inside diameter	19.004–19.015 mm (0.7482–0.7486 in)
Limit	19.045 mm (0.7498 in)
Piston pin outside diameter	18.991–19.000 mm (0.7477–0.7480 in)
Limit	18.971 mm (0.7469 in)
Piston-pin-to-piston-pin-bore clearance	0.004–0.024 mm (0.00016–0.00094 in)

Piston ring

Top ring	
Ring type	Barrel
Dimensions (B × T)	1.00 × 2.80 mm (0.04 × 0.11 in)

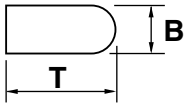

End gap (installed)	0.35–0.45 mm (0.0138–0.0177 in)
Limit	0.70 mm (0.0276 in)
Ring side clearance	0.030–0.070 mm (0.0012–0.0028 in)
Limit	0.120 mm (0.0047 in)
2nd ring	
Ring type	Taper
Dimensions (B × T)	1.00 × 2.90 mm (0.04 × 0.11 in)

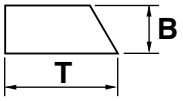

End gap (installed)	0.75–0.85 mm (0.0295–0.0335 in)
Limit	1.20 mm (0.0472 in)
Ring side clearance	0.020–0.060 mm (0.0008–0.0024 in)
Limit	0.120 mm (0.0047 in)
Oil ring	
Dimensions (B × T)	2.00 × 2.50 mm (0.08 × 0.10 in)

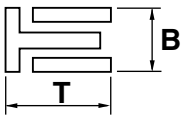

End gap (installed)	0.20–0.60 mm (0.0079–0.0236 in)
Ring side clearance	0.060–0.150 mm (0.0024–0.0059 in)

Connecting rod	
Oil clearance (using plastigauge®)	0.031–0.048 mm (0.0012–0.0019 in)
Bearing color code	1.Blue 2.Black 3.Brown 4.Green 5.Yellow 6.Pink
Small end inside diameter	19.005–19.018 mm (0.7482–0.7487 in)
Crankshaft	
Width A	61.60–63.20 mm (2.425–2.488 in)
Width B	325.10–326.30 mm (12.80–12.85 in)
Runout limit C	0.030 mm (0.0012 in)
Big end side clearance D	0.160–0.262 mm (0.0063–0.0103 in)

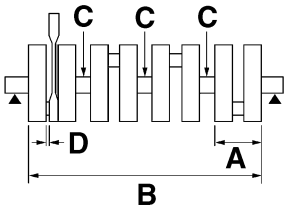

Journal oil clearance (using plastigauge®)	0.027–0.045 mm (0.0011–0.0018 in)
Bearing color code	2.Black 3.Brown 4.Green 5.Yellow 6.Pink 7.Red 8.White
Balancer	
Balancer drive method	Gear
Clutch	
Clutch type	Wet, multiple-disc
Clutch release method	Hydraulic inner push
Clutch lever free play	1.9–20.7 mm (0.07–0.81 in)
Friction plate thickness	2.90–3.10 mm (0.114–0.122 in)
Wear limit	2.80 mm (0.110 in)
Plate quantity	9 pcs
Clutch plate thickness	1.90–2.10 mm (0.075–0.083 in)
Plate quantity	8 pcs
Warpage limit	0.10 mm (0.0039 in)
Clutch spring height	6.78 mm (0.27 in)
Minimum height	6.4 mm (0.25 in)
Spring quantity	1 pc
Transmission	
Transmission type	Constant mesh 5-speed
Primary reduction system	Spur gear
Primary reduction ratio	75/48 (1.563)
Secondary reduction system	Shaft drive
Secondary reduction ratio	35/37 × 21/27 × 33/9 (2.698)
Operation	Left foot operation
Gear ratio	
1st	43/17 (2.529)
2nd	39/22 (1.773)
3rd	31/23 (1.348)
4th	28/26 (1.077)

5th	26/28 (0.929)
Main axle runout limit	0.08 mm (0.0032 in)
Drive axle runout limit	0.08 mm (0.0032 in)
Shifting mechanism	
Shift mechanism type	Shift drum and guide bar
Shift fork guide bar bending limit	0.100 mm (0.0039 in)
Air filter	
Air filter element	Dry element
Fuel pump	
Pump type	Electrical
Model/manufacturer	5JW 21/DENSO
Maximum consumption amperage	6.0 A
Output pressure	324.0 kPa (47.0 psi) (3.24 kgf/cm²)
Fuel injection	
Model/quantity	INP-151/4
Manufacturer	NIPPON INJECTOR
Throttle body	
Type/quantity	42EHS/4
Manufacturer	MIKUNI
ID mark	3P61 00
Throttle position sensor	
Resistance	4.0–6.0 kΩ
Output voltage (at idle)	0.63–0.73 V
Fuel injection sensor	
Crankshaft position sensor resistance	421–569 Ω at 20 °C (68 °F)
Cylinder identification sensor output voltage (ON)	More than 4.8 V
Cylinder identification sensor output voltage (OFF)	Less than 0.6 V
Intake air pressure sensor output voltage	3.75–4.25 V
Coolant temperature sensor resistance	290–354 Ω at 80 °C (176 °F)
Idling condition	
Engine idling speed	1000–1100 r/min
Intake vacuum	33.3 kPa (9.8 inHg) (250 mmHg)
Water temperature	100.0–105.0 °C (212.00–221.00 °F)
Oil temperature	80.0–90.0 °C (176.00–194.00 °F)
Throttle cable free play	3.0–5.0 mm (0.12–0.20 in)
Air induction system	
Solenoid resistance	19–25 Ω at 20 °C (68 °F)
Shaft drive	
Middle gear backlash	0.10–0.20 mm (0.0039–0.0079 in)
Ring-gear-to-stopper-bolt clearance	0.30–0.60 mm (0.0118–0.0236 in)
Ring-gear-to-thrust-washer clearance	0.10–0.20 mm (0.0039–0.0079 in)
Final gear backlash	0.22–0.45 mm (0.0087–0.0177 in)

EAS20300

CHASSIS SPECIFICATIONS

Chassis	
Frame type	Diamond
Caster angle	26.00°
Trail	109.0 mm (4.29 in)
Front wheel	
Wheel type	Cast wheel
Rim size	17M/C × MT3.50
Rim material	Aluminum
Wheel travel	135.0 mm (5.31 in)
Radial wheel runout limit	1.0 mm (0.04 in)
Lateral wheel runout limit	0.5 mm (0.02 in)
Rear wheel	
Wheel type	Cast wheel
Rim size	17M/C × MT5.50
Rim material	Aluminum
Wheel travel	125.0 mm (4.92 in)
Radial wheel runout limit	1.0 mm (0.04 in)
Lateral wheel runout limit	0.5 mm (0.02 in)
Front tire	
Type	Tubeless
Size	120/70 ZR17M/C (58W)
Manufacturer/model	METZELER/Roadtec Z6G
Manufacturer/model	BRIDGESTONE/BT020F
Wear limit (front)	1.6 mm (0.06 in)
Rear tire	
Type	Tubeless
Size	180/55 ZR17M/C (73W)
Manufacturer/model	METZELER/Roadtec Z6C
Manufacturer/model	BRIDGESTONE/BT020R
Wear limit (rear)	1.6 mm (0.06 in)
Tire air pressure (measured on cold tires)	
Loading condition	0–90 kg (0–198 lb)
Front	270 kPa (39 psi) (2.70 kgf/cm²)
Rear	290 kPa (42 psi) (2.90 kgf/cm²)
Loading condition	90–212 kg (198–467 lb)
Front	270 kPa (39 psi) (2.70 kgf/cm²)
Rear	290 kPa (42 psi) (2.90 kgf/cm²)
High-speed riding	
Front	270 kPa (39 psi) (2.70 kgf/cm²)
Rear	290 kPa (42 psi) (2.90 kgf/cm²)
Front brake	
Type	Dual disc brake
Operation	Right hand operation

Front disc brake	
Disc outside diameter × thickness	320.0 × 4.5 mm (12.60 × 0.18 in)
Brake disc thickness limit	4.0 mm (0.16 in)
Brake disc deflection limit	0.10 mm (0.0039 in)
Brake pad lining thickness (inner)	5.5 mm (0.22 in)
Limit	0.5 mm (0.02 in)
Brake pad lining thickness (outer)	5.5 mm (0.22 in)
Limit	0.5 mm (0.02 in)
Master cylinder inside diameter	15.00 mm (0.59 in)
Caliper cylinder inside diameter	30.23 mm × 4 (1.19 in × 4)
Caliper cylinder inside diameter (for unified brake)	33.96 mm × 2, 22.65 mm × 2 (1.34 in × 2, 0.89 in × 2)
Recommended fluid	DOT 4

Rear brake	
Type	Single disc brake
Operation	Right foot operation
Brake pedal position	42.0 mm (1.65 in) (below the top of the rider footrest)
Rear disc brake	
Disc outside diameter × thickness	282.0 × 5.0 mm (11.10 × 0.20 in)
Brake disc thickness limit	4.5 mm (0.18 in)
Brake disc deflection limit	0.15 mm (0.0059 in)
Brake pad lining thickness (inner)	6.3 mm (0.25 in)
Limit	0.8 mm (0.03 in)
Brake pad lining thickness (outer)	6.3 mm (0.25 in)
Limit	0.8 mm (0.03 in)
Master cylinder inside diameter	15.0 mm (0.59 in)
Caliper cylinder inside diameter	41.30 mm (1.63 in)
Recommended fluid	DOT 4

Clutch	
Recommended fluid	DOT 4
Master cylinder inside diameter	14.0 mm (0.55 in)
Release cylinder inside diameter	29.6 mm (1.17 in)

Steering	
Steering bearing type	Angular bearing
Lock to lock angle (left)	34.0°
Lock to lock angle (right)	34.0°

Front suspension	
Type	Telescopic fork
Spring/shock absorber type	Coil spring/oil damper
Front fork travel	135.0 mm (5.31 in)
Fork spring free length	262.0 mm (10.31 in)
Limit	257.0 mm (10.12 in)
Collar length	149.5 mm (5.89 in)
Installed length	251.0 mm (9.88 in)
Spring rate K1	8.30 N/mm (47.39 lb/in) (0.85 kgf/mm)
Spring stroke K1	0.0–135.0 mm (0.00–5.31 in)
Inner tube outer diameter	48.0 mm (1.89 in)
Inner tube bending limit	0.2 mm (0.01 in)

Optional spring available	No
Recommended oil	Suspension oil M1 or ohlins R & T43
Quantity	696.0 cm^3 (23.53 US oz) (24.55 Imp.oz)
Level	92.0 mm (3.62 in)
Rear suspension	
Type	Swingarm (link suspension)
Spring/shock absorber type	Coil spring/gas-oil damper
Rear shock absorber assembly travel	60.0 mm (2.36 in)
Spring free length	154.6 mm (6.09 in)
Installed length	136.2 mm (5.36 in)
Spring free length	73.9 mm (2.91 in)
Installed length	67.3 mm (2.65 in)
Soft	
Spring rate K1	91.00 N/mm (519.60 lb/in) (9.28 kgf/mm)
Spring rate K2	124.00 N/mm (708.04 lb/in) (12.64 kgf/mm)
Spring stroke K1	0.0–42.0 mm (0.00–1.65 in)
Spring stroke K2	42.0–60.0 mm (1.65–2.36 in)
Hard	
Spring rate K1	124.00 N/mm (708.04 lb/in) (12.64 kgf/mm)
Spring stroke K1	7.0–60.0 mm (0.28–2.36 in)
Optional spring available	No
Enclosed gas/air pressure (STD)	1200 kPa (170.7 psi) (12.0 kgf/cm^2)

EAS20310

ELECTRICAL SPECIFICATIONS

Voltage	
System voltage	12 V
Ignition system	
Ignition system	Transistorized coil ignition (digital)
Ignition timing (B.T.D.C.)	5.0°/1050 r/min
Engine control unit	
Model/manufacturer	FUA0008/MITSUBISHI (Europe except (B) and (F)) (ZA) (AUS) FUA0009/MITSUBISHI (B) (F)
Ignition coil	
Model/manufacturer	JO383/DENSO
Minimum ignition spark gap	6.0 mm (0.24 in)
Primary coil resistance	1.53–2.07 Ω at 20 °C (68 °F)
Secondary coil resistance	12–18 kΩ at 20 °C (68 °F)
Spark plug cap	
Material	Resin
Resistance	10.0 kΩ
AC magneto	
Model/manufacturer	LNX07/DENSO
Standard output	14.0 V 590 W 5000 r/min
Stator coil resistance	0.13–0.19 Ω at 20 °C (68 °F)
Voltage regulator	
Rectifier/regulator	
Regulator type	Semi conductor-short circuit
Model/manufacturer	FH012AA/SHINDENGEN
Regulated voltage (DC)	14.2–14.8 V
Rectifier capacity (DC)	50.0 A
Withstand voltage	40.0 V
Battery	
Model	GT14B-4
Voltage, capacity	12 V, 12.0 Ah
Manufacturer	GS YUASA
Ten hour rate amperage	1.20 A
Headlight	
Bulb type	Halogen bulb
Bulb voltage, wattage × quantity	
Headlight	12 V, 60 W/55.0 W × 2
Auxiliary light	12 V, 5.0 W × 2
Tail/brake light	12 V, 5.0 W/21.0 W × 2
Front turn signal light	12 V, 21.0 W × 2
Rear turn signal light	12 V, 21.0 W × 2

License plate light	12 V, 5.0 W × 1
Meter lighting	LED
Indicator light	
Neutral indicator light	LED
Turn signal indicator light	LED
Oil level warning light	LED
High beam indicator light	LED
Engine trouble warning light	LED
ABS warning light	LED
Immobilizer system indicator light	LED
Electric starting system	
System type	Constant mesh
Starter motor	
Model/manufacturer	3P6/YAMAHA
Power output	0.80 kW
Armature coil resistance	0.024–0.030 Ω at 20 °C (68 °F)
Brush overall length	10.8 mm (0.43 in)
Limit	3.65 mm (0.14 in)
Brush spring force	5.28–7.92 N (19.01–28.51 oz) (538–808 gf)
Commutator diameter	24.5 mm (0.96 in)
Limit	23.5 mm (0.93 in)
Mica undercut (depth)	1.50 mm (0.06 in)
Starter relay	
Model/manufacturer	MS5F-631/JIDECO
Amperage	180.0 A
Horn	
Horn type	Plane
Quantity	2 pcs
Model/manufacturer	HF-12/NIKKO
Maximum amperage	3.0 A
Coil resistance	1.01–1.11 Ω at 20 °C (68 °F)
Performance	108–116 dB/2 m (6.6 ft)
Turn signal/hazard relay	
Relay type	Full transistor
Model/manufacturer	FE246BH/DENSO
Built-in, self-canceling device	No
Turn signal blinking frequency	75.0–95.0 cycles/min
Wattage	21 W × 2.0
Oil level switch	
Model/manufacturer	3P6/DENSO
Fuel gauge	
Model/manufacturer	5JW/DENSO
Sender unit resistance (full)	19.0–21.0 Ω
Sender unit resistance (empty)	139.0–141.0 Ω

Starting circuit cut-off relay	
Model/manufacturer	G8R-30Y-V3/OMRON
Coil resistance	180.0 Ω
Headlight relay	
Model/manufacturer	ACM33211 M05/MATSUSHITA
Coil resistance	96.0 Ω
Radiator fan	
Model/manufacturer	3P6/DENSO
Running rpm	4250 r/min
Fan motor relay	
Model/manufacturer	ACM33211 M05/MATSUSHITA
Coil resistance	96.0 Ω
Thermo unit	
Model/manufacturer	25978/MITSUBISHI
Resistance at 80°C	290.0–390.0 Ω
Fuses	
Main fuse	50.0 A
Headlight fuse	25.0 A
Signaling system fuse	15.0 A
Ignition fuse	10.0 A
Radiator fan fuse	15.0 A × 2
Auxiliary DC jack fuse	3.0 A
Hazard fuse	10.0 A
Fuel injection system fuse	15.0 A
ABS motor fuse	30.0 A
ABS control unit fuse	10.0 A
Backup fuse	10.0 A
Reserve fuse	30.0 A
Reserve fuse	25.0 A
Reserve fuse	15.0 A
Reserve fuse	10.0 A
Reserve fuse	3.0 A

EAS20320
TIGHTENING TORQUES

EAS20330
GENERAL TIGHTENING TORQUE SPECIFICATIONS

This chart specifies tightening torques for standard fasteners with a standard ISO thread pitch. Tightening torque specifications for special components or assemblies are provided for each chapter of this manual. To avoid warpage, tighten multi-fastener assemblies in a crisscross pattern and progressive stages until the specified tightening torque is reached. Unless otherwise specified, tightening torque specifications require clean, dry threads. Components should be at room temperature.

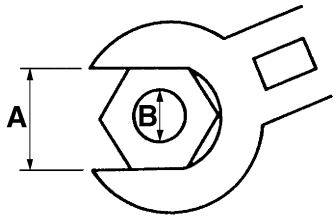

A. Distance between flats
B. Outside thread diameter

A (nut)	B (bolt)	General tightening torques		
		Nm	m·kg	ft·lb
10 mm	6 mm	6	0.6	4.3
12 mm	8 mm	15	1.5	11
14 mm	10 mm	30	3.0	22
17 mm	12 mm	55	5.5	40
19 mm	14 mm	85	8.5	61
22 mm	16 mm	130	13.0	94

EAS20340
ENGINE TIGHTENING TORQUES

Item	Thread size	Q'ty	Tightening torque	Remarks
Spark plug	M10	4	13 Nm (1.3 m·kg, 9.4 ft·lb)	
Cylinder head bolt	M10	10	See NOTE.	E
Cylinder head bolt	M6	2	12 Nm (1.2 m·kg, 8.7 ft·lb)	
Camshaft cap bolt	M6	20	10 Nm (1.0 m·kg, 7.2 ft·lb)	E
Cylinder head cover bolt	M6	8	10 Nm (1.0 m·kg, 7.2 ft·lb)	
Engine oil check bolt	M8	1	20 Nm (2.0 m·kg, 14 ft·lb)	
Cylinder head stud bolt (exhaust pipe)	M8	8	15 Nm (1.5 m·kg, 11 ft·lb)	
Reed valve cover bolt	M6	6	14 Nm (1.4 m·kg, 10 ft·lb)	LT
Connecting rod nut	M8	8	See NOTE.	M
Generator rotor bolt	M12	1	130 Nm (13.0 m·kg, 94 ft·lb)	E
Pickup rotor bolt	M10	1	45 Nm (4.5 m·kg, 32 ft·lb)	
Front balancer lever bolt	M8	1	14 Nm (1.4 m·kg, 10 ft·lb)	LT
Rear balancer lever bolt	M8	1	14 Nm (1.4 m·kg, 10 ft·lb)	LT
Front balancer shaft pinch bolt	M6	1	10 Nm (1.0 m·kg, 7.2 ft·lb)	
Rear balancer shaft pinch bolt	M6	1	10 Nm (1.0 m·kg, 7.2 ft·lb)	
Timing chain tensioner bolt	M6	2	10 Nm (1.0 m·kg, 7.2 ft·lb)	
Timing chain tensioner cap bolt	M6	1	6 Nm (0.6 m·kg, 4.3 ft·lb)	
Camshaft sprocket bolt	M7	4	24 Nm (2.4 m·kg, 17 ft·lb)	
Water pump assembly bolt	M6	3	12 Nm (1.2 m·kg, 8.7 ft·lb)	
Water pump housing cover bolt	M6	1	10 Nm (1.0 m·kg, 7.2 ft·lb)	
Coolant drain bolt	M6	1	10 Nm (1.0 m·kg, 7.2 ft·lb)	
Water jacket joint bolt	M6	2	10 Nm (1.0 m·kg, 7.2 ft·lb)	LT
Thermostat inlet pipe 1 bolt	M6	2	10 Nm (1.0 m·kg, 7.2 ft·lb)	
Thermostat housing cover/radiator filler pipe bolt	M6	3	10 Nm (1.0 m·kg, 7.2 ft·lb)	
Thermostat housing bolt	M6	1	7 Nm (0.7 m·kg, 5.1 ft·lb)	
Oil cooler bolt	M6	4	12 Nm (1.2 m·kg, 8.7 ft·lb)	LT
Engine oil drain bolt	M14	1	43 Nm (4.3 m·kg, 31 ft·lb)	
Oil strainer bolt	M6	2	10 Nm (1.0 m·kg, 7.2 ft·lb)	LT
Oil pump assembly bolt	M6	3	12 Nm (1.2 m·kg, 8.7 ft·lb)	LT
Oil delivery pipe 2 bolt	M6	1	10 Nm (1.0 m·kg, 7.2 ft·lb)	LT
Oil delivery pipe 3 bolt	M6	2	10 Nm (1.0 m·kg, 7.2 ft·lb)	LT
Oil filter cartridge bolt	M20	1	70 Nm (7.0 m·kg, 50 ft·lb)	
Oil filter cartridge	M20	1	17 Nm (1.7 m·kg, 12 ft·lb)	
Oil pan bolt	M6	20	12 Nm (1.2 m·kg, 8.7 ft·lb)	
Oil pump drive chain guide bolt	M6	2	12 Nm (1.2 m·kg, 8.7 ft·lb)	LT

Item	Thread size	Q'ty	Tightening torque	Remarks
Oil pump housing cover bolt	M6	3	12 Nm (1.2 m·kg, 8.7 ft·lb)	
Oil level switch bolt	M6	2	10 Nm (1.0 m·kg, 7.2 ft·lb)	
Throttle body joint clamp screw	M4	8	3 Nm (0.3 m·kg, 2.2 ft·lb)	
Air filter case joint clamp screw	M4	4	4 Nm (0.4 m·kg, 2.9 ft·lb)	
Air filter case and rear lower fuel tank bracket bolt	M6	2	7 Nm (0.7 m·kg, 5.1 ft·lb)	
Intake air pressure sensor bolt	M5	2	4 Nm (0.4 m·kg, 2.9 ft·lb)	
Exhaust pipe assembly nut	M8	8	20 Nm (2.0 m·kg, 14 ft·lb)	
Muffler and exhaust pipe assembly bolt	M8	2	20 Nm (2.0 m·kg, 14 ft·lb)	
Exhaust pipe assembly bolt	M8	2	17 Nm (1.7 m·kg, 12 ft·lb)	
Muffler bolt	M10	2	25 Nm (2.5 m·kg, 18 ft·lb)	
Crankcase bolt	M9	10	See NOTE.	E
Crankcase bolt	M6	2	12 Nm (1.2 m·kg, 8.7 ft·lb)	E
Crankcase bolt	M6	17	10 Nm (1.0 m·kg, 7.2 ft·lb)	E
Crankcase bolt	M8	2	24 Nm (2.4 m·kg, 17 ft·lb)	E
Crankcase blind plug	M10	1	20 Nm (2.0 m·kg, 14 ft·lb)	
Lower crankcase plug bolt	M6	1	10 Nm (1.0 m·kg, 7.2 ft·lb)	LT
Generator cover bolt	M6	11	12 Nm (1.2 m·kg, 8.7 ft·lb)	
Clutch cover bolt	M6	10	12 Nm (1.2 m·kg, 8.7 ft·lb)	
Middle gear case cover bolt	M6	9	12 Nm (1.2 m·kg, 8.7 ft·lb)	
Pickup rotor cover bolt	M6	8	12 Nm (1.2 m·kg, 8.7 ft·lb)	
Rear balancer cover bolt	M6	4	12 Nm (1.2 m·kg, 8.7 ft·lb)	
Oil baffle plate 1 bolt	M6	3	10 Nm (1.0 m·kg, 7.2 ft·lb)	LT
Oil baffle plate 2 bolt	M6	3	10 Nm (1.0 m·kg, 7.2 ft·lb)	LT
Timing mark accessing plug	M8	1	15 Nm (1.5 m·kg, 11 ft·lb)	
Oil guide plate bolt	M6	2	10 Nm (1.0 m·kg, 7.2 ft·lb)	LT
Damper cover bolt (middle gear case cover)	M6	4	10 Nm (1.0 m·kg, 7.2 ft·lb)	LT
Oil baffle plate 3 bolt	M6	2	10 Nm (1.0 m·kg, 7.2 ft·lb)	LT
Upper crankcase plug bolt	M6	1	12 Nm (1.2 m·kg, 8.7 ft·lb)	LT
Crankcase damper bolt	M6	3	12 Nm (1.2 m·kg, 8.7 ft·lb)	LT
Damper cover bolt (clutch cover)	M6	5	12 Nm (1.2 m·kg, 8.7 ft·lb)	LT
Stator assembly lead holder bolt	M6	1	7 Nm (0.7 m·kg, 5.1 ft·lb)	LT
Main gallery bolt	M20	1	12 Nm (1.2 m·kg, 8.7 ft·lb)	
Starter clutch bolt	M8	3	32 Nm (3.2 m·kg, 23 ft·lb)	LT
Clutch boss nut	M20	1	90 Nm (9.0 m·kg, 65 ft·lb)	Use a lock washer.

Item	Thread size	Q'ty	Tightening torque	Remarks
Clutch spring bolt	M6	6	8 Nm (0.8 m·kg, 5.8 ft·lb)	
Clutch release cylinder bolt	M6	3	10 Nm (1.0 m·kg, 7.2 ft·lb)	
Clutch hose union bolt	M10	1	30 Nm (3.0 m·kg, 22 ft·lb)	
Bleed screw (clutch release cylinder)	M8	1	6 Nm (0.6 m·kg, 4.3 ft·lb)	
Main axle assembly screw	M6	3	12 Nm (1.2 m·kg, 8.7 ft·lb)	Stake
Middle drive pinion gear nut	M22	1	110 Nm (11.0 m·kg, 80 ft·lb)	Use a lock washer.
Middle drive shaft bearing housing bolt	M6	3	12 Nm (1.2 m·kg, 8.7 ft·lb)	
Bearing retainer (middle drive shaft)	M88	1	110 Nm (11.0 m·kg, 80 ft·lb)	Stake
Middle driven pinion gear nut	M28	1	110 Nm (11.0 m·kg, 80 ft·lb)	Stake
Bearing retainer (middle driven shaft)	M68	1	110 Nm (11.0 m·kg, 80 ft·lb)	Stake
Middle driven shaft end cover bolt	M8	3	25 Nm (2.5 m·kg, 18 ft·lb)	
Shift drum retainer bolt	M6	2	10 Nm (1.0 m·kg, 7.2 ft·lb)	
Shift shaft spring stopper bolt	M8	1	22 Nm (2.2 m·kg, 16 ft·lb)	
Stator coil assembly bolt	M6	3	10 Nm (1.0 m·kg, 7.2 ft·lb)	
Gear position switch bolt	M5	2	4 Nm (0.4 m·kg, 2.9 ft·lb)	
Crankshaft position sensor bolt	M5	2	4 Nm (0.4 m·kg, 2.9 ft·lb)	
O_2 sensor	M18	1	45 Nm (4.5 m·kg, 32 ft·lb)	
Intake air temperature sensor	M12	1	18 Nm (1.8 m·kg, 13 ft·lb)	
Cylinder identification sensor bolt	M6	1	10 Nm (1.0 m·kg, 7.2 ft·lb)	
Coolant temperature sensor	M12	1	18 Nm (1.8 m·kg, 13 ft·lb)	
Starter motor bolt	M6	2	10 Nm (1.0 m·kg, 7.2 ft·lb)	
Throttle position sensor screw	M5	2	3.5 Nm (0.35 m·kg, 2.53 ft·lb)	
Radiator bolt	M6	3	10 Nm (1.0 m·kg, 7.2 ft·lb)	
Radiator cover bolt	M6	2	7 Nm (0.7 m·kg, 5.1 ft·lb)	
Radiator bracket bolt	M6	1	10 Nm (1.0 m·kg, 7.2 ft·lb)	
Coolant reservoir bolt	M6	2	7 Nm (0.7 m·kg, 5.1 ft·lb)	
Coolant reservoir bracket bolt	M6	2	7 Nm (0.7 m·kg, 5.1 ft·lb)	

NOTE:

Cylinder head bolt

Tighten the cylinder head bolts to 25 Nm (2.5 m·kg 18 ft·lb) in the proper tightening sequence, loosen and retighten the bolts to 25 Nm (2.5 m·kg 18 ft·lb) in the proper tightening sequence, and then tighten them further to reach the specified angle 175–185° in the proper tightening sequence.

NOTE:

Connecting rod nut

Tighten the connecting rod nuts to 20 Nm (2.0 m·kg 14 ft·lb), and then tighten them further to reach the specified angle 115–125°.

NOTE:

Crankcase bolt

Tighten the crankcase bolts to 20 Nm (2.0 m·kg 14 ft·lb) in the proper tightening sequence, loosen and retighten the bolts to 20 Nm (2.0 m·kg 14 ft·lb) in the proper tightening sequence, and then tighten them further to reach the specified angle 115–125° in the proper tightening sequence.

Cylinder head tightening sequence:

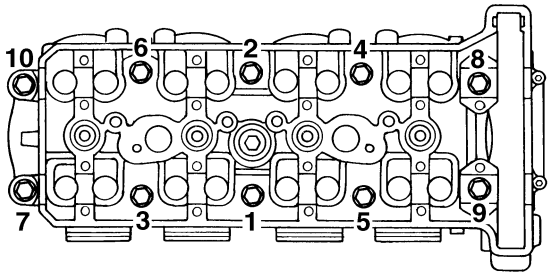

Crankcase tightening sequence:

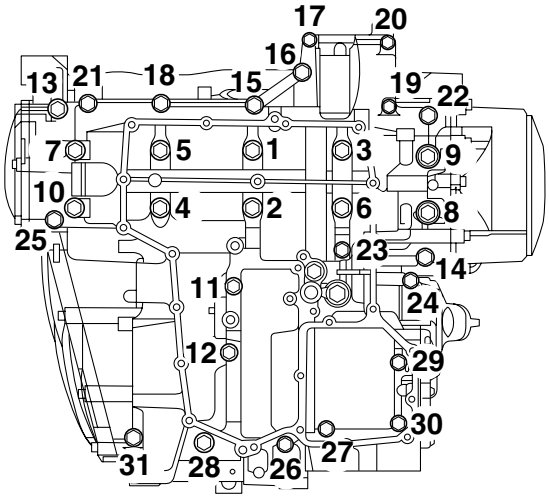

EAS20350
CHASSIS TIGHTENING TORQUES

Item	Thread size	Q'ty	Tightening torque	Remarks
Engine mounting bolts (right front lower side)	M12	1	49 Nm (4.9 m·kg, 35 ft·lb)	
Engine mounting bolts (right front upper side)	M12	1	49 Nm (4.9 m·kg, 35 ft·lb)	
Engine mounting bolts (left front lower side)	M12	1	49 Nm (4.9 m·kg, 35 ft·lb)	
Engine mounting bolts (left front upper side)	M12	1	49 Nm (4.9 m·kg, 35 ft·lb)	
Engine mounting nut (rear upper side)	M10	1	45 Nm (4.5 m·kg, 32 ft·lb)	E
Spacer bolt	M16	1	18 Nm (1.8 m·kg, 13 ft·lb)	
Engine mounting bolt (rear lower side)	M10	1	45 Nm (4.5 m·kg, 32 ft·lb)	E
Engine mounting bolt (left rear side)	M8	2	16 Nm (1.6 m·kg, 11 ft·lb)	
Engine bracket bolt (left rear side)	M10	1	32 Nm (3.2 m·kg, 23 ft·lb)	
Engine bracket bolt (top)	M8	4	16 Nm (1.6 m·kg, 11 ft·lb)	
Engine mounting bolt (top)	M10	2	37 Nm (3.7 m·kg, 27 ft·lb)	
Pinch bolt (front side)	M8	1	24 Nm (2.4 m·kg, 17 ft·lb)	
Pinch bolt (rear side)	M8	2	24 Nm (2.4 m·kg, 17 ft·lb)	
Pivot shaft	M28	1	23 Nm (2.3 m·kg, 17 ft·lb)	LS
Pivot shaft nut	M18	1	125 Nm (12.5 m·kg, 90 ft·lb)	
Pivot shaft locknut	M28	1	115 Nm (11.5 m·kg, 85 ft·lb)	
Pivot shaft locknut retainer bolt	M6	1	10 Nm (1.0 m·kg, 7.2 ft·lb)	
Relay arm and frame nut	M10	1	40 Nm (4.0 m·kg, 29 ft·lb)	
Connecting arm and relay arm nut	M10	1	48 Nm (4.8 m·kg, 35 ft·lb)	
Connecting arm and swingarm nut	M10	1	48 Nm (4.8 m·kg, 35 ft·lb)	
Rear shock absorber assembly upper nut	M12	1	64 Nm (6.4 m·kg, 46 ft·lb)	
Rear shock absorber assembly lower nut	M10	1	40 Nm (4.0 m·kg, 29 ft·lb)	
Rear shock absorber spring pre-load adjusting lever nut	M6	3	7 Nm (0.7 m·kg, 5.1 ft·lb)	
Upper bracket pinch bolt	M8	2	26 Nm (2.6 m·kg, 19 ft·lb)	
Lower bracket pinch bolt	M8	4	23 Nm (2.3 m·kg, 17 ft·lb)	
Steering stem nut	M28	1	115 Nm (11.5 m·kg, 85 ft·lb)	
Lower ring nut (initial tightening torque)	M30	1	52 Nm (5.2 m·kg, 37 ft·lb)	See NOTE.

Item	Thread size	Q'ty	Tightening torque	Remarks
Lower ring nut (final tightening torque)	M30	1	18 Nm (1.8 m·kg, 13 ft·lb)	See NOTE.
Handlebar bolt	M8	2	23 Nm (2.3 m·kg, 17 ft·lb)	
Handlebar nut	M12	2	65 Nm (6.5 m·kg, 47 ft·lb)	
Clutch master cylinder holder bolt	M6	2	10 Nm (1.0 m·kg, 7.2 ft·lb)	
Front brake master cylinder holder bolt	M6	2	10 Nm (1.0 m·kg, 7.2 ft·lb)	
Front fork cap bolt locknut	M10	1	25 Nm (2.5 m·kg, 18 ft·lb)	
Front fork damper rod assembly bolt	M10	1	35 Nm (3.5 m·kg, 25 ft·lb)	LT
Front fork cap bolt	M45	1	25 Nm (2.5 m·kg, 18 ft·lb)	LS
Front fender bolt	M6	4	6 Nm (0.6 m·kg, 4.3 ft·lb)	
Brake hose joint bracket bolt	M6	2	7 Nm (0.7 m·kg, 5.1 ft·lb)	
Lower bracket cover bolt	M6	2	7 Nm (0.7 m·kg, 5.1 ft·lb)	
Front cowling stay and frame nut	M10	2	32 Nm (3.2 m·kg, 23 ft·lb)	
Front cowling assembly bolt	M6	1	10 Nm (1.0 m·kg, 7.2 ft·lb)	
Windshield upper inner bracket and windshield lower inner bracket bolt	M6	2	10 Nm (1.0 m·kg, 7.2 ft·lb)	
Windshield upper inner bracket and windshield drive unit bolt	M6	2	7 Nm (0.7 m·kg, 5.1 ft·lb)	
Windshield lower inner bracket and windshield drive unit bolt	M6	4	7 Nm (0.7 m·kg, 5.1 ft·lb)	
Rearview mirror nut	M6	4	7 Nm (0.7 m·kg, 5.1 ft·lb)	
Windshield drive unit bolt	M6	4	10 Nm (1.0 m·kg, 7.2 ft·lb)	
Windshield drive unit side rail bolt	M6	4	10 Nm (1.0 m·kg, 7.2 ft·lb)	
Side cover bolt	M6	3	7 Nm (0.7 m·kg, 5.1 ft·lb)	
Grab bar bolt	M8	5	21 Nm (2.1 m·kg, 15 ft·lb)	
Grab bar bolt	M6	1	7 Nm (0.7 m·kg, 5.1 ft·lb)	
Fuel pump bolt	M5	6	4 Nm (0.4 m·kg, 2.9 ft·lb)	
Front fuel tank bracket and frame bolt	M6	2	10 Nm (1.0 m·kg, 7.2 ft·lb)	
Fuel tank and front fuel tank bracket bolt	M8	2	16 Nm (1.6 m·kg, 11 ft·lb)	
Fuel tank and rear upper fuel tank bracket bolt	M8	2	16 Nm (1.6 m·kg, 11 ft·lb)	
Rear upper fuel tank bracket and rear lower fuel tank bracket nut	M8	1	16 Nm (1.6 m·kg, 11 ft·lb)	
Rear lower fuel tank bracket and frame bolt	M6	4	8 Nm (0.8 m·kg, 5.8 ft·lb)	
Fuel tank cap bolt	M5	3	6 Nm (0.6 m·kg, 4.3 ft·lb)	
Storage compartment bolt	M6	2	7 Nm (0.7 m·kg, 5.1 ft·lb)	

Item	Thread size	Q'ty	Tightening torque	Remarks
T-bar bolt	M10	3	37 Nm (3.7 m·kg, 27 ft·lb)	
Rear fender bolt	M6	3	7 Nm (0.7 m·kg, 5.1 ft·lb)	
Rear fender nut	M6	2	7 Nm (0.7 m·kg, 5.1 ft·lb)	
Front wheel axle bolt	M14	1	91 Nm (9.1 m·kg, 66 ft·lb)	See NOTE.
Front wheel axle pinch bolt	M8	4	21 Nm (2.1 m·kg, 15 ft·lb)	
Front brake disc bolt	M6	12	18 Nm (1.8 m·kg, 13 ft·lb)	LT
Front wheel sensor bolt	M8	1	30 Nm (3.0 m·kg, 22 ft·lb)	
Rear wheel axle nut	M18	1	125 Nm (12.5 m·kg, 90 ft·lb)	
Rear wheel axle pinch bolt	M8	1	23 Nm (2.3 m·kg, 17 ft·lb)	
Rear brake disc bolt	M6	6	18 Nm (1.8 m·kg, 13 ft·lb)	LT
Rear wheel sensor bolt	M8	1	30 Nm (3.0 m·kg, 22 ft·lb)	
Brake torque rod nut	M8	2	30 Nm (3.0 m·kg, 22 ft·lb)	
Rear wheel dust cover screw	M5	3	5 Nm (0.5 m·kg, 3.6 ft·lb)	LT
Brake hose union bolt	M10	14	30 Nm (3.0 m·kg, 22 ft·lb)	
Brake pipe flare nut	M10	11	19 Nm (1.9 m·kg, 13 ft·lb)	
Front brake caliper bolt	M10	4	40 Nm (4.0 m·kg, 29 ft·lb)	
Front brake hose holder bolt	M6	2	7 Nm (0.7 m·kg, 5.1 ft·lb)	
Front brake caliper bleed screw	M8	3	6 Nm (0.6 m·kg, 4.3 ft·lb)	
Front brake pad bolt	M10	2	17 Nm (1.7 m·kg, 12 ft·lb)	LS
Rear brake caliper bolt	M10	2	27 Nm (2.7 m·kg, 19 ft·lb)	LS
Rear brake hose/rear wheel sensor lead holder bolt	M6	1	7 Nm (0.7 m·kg, 5.1 ft·lb)	
Rear brake caliper bleed screw	M7	1	6 Nm (0.6 m·kg, 4.3 ft·lb)	
Hydraulic unit nut	M8	3	16 Nm (1.6 m·kg, 11 ft·lb)	
Metering valve bolt	M6	2	7 Nm (0.7 m·kg, 5.1 ft·lb)	
Proportioning valve bolt	M6	2	7 Nm (0.7 m·kg, 5.1 ft·lb)	
Sidestand nut	M10	1	58 Nm (5.8 m·kg, 42 ft·lb)	
Sidestand switch screw	M5	2	4 Nm (0.4 m·kg, 2.9 ft·lb)	LT
Centerstand nut	M10	4	55 Nm (5.5 m·kg, 40 ft·lb)	
Centerstand bracket nut	M10	2	55 Nm (5.5 m·kg, 40 ft·lb)	
Brake pedal bolt	M6	1	8 Nm (0.8 m·kg, 5.8 ft·lb)	
Right footrest bracket bolt	M8	2	28 Nm (2.8 m·kg, 20 ft·lb)	
Rear brake master cylinder bolt	M8	2	18 Nm (1.8 m·kg, 13 ft·lb)	
Rear brake master cylinder locknut	M8	1	16 Nm (1.6 m·kg, 11 ft·lb)	
Left footrest assembly bolt	M8	2	28 Nm (2.8 m·kg, 20 ft·lb)	
Left footrest assembly bolt	M10	1	49 Nm (4.9 m·kg, 35 ft·lb)	
Left footrest assembly/sidestand bolt	M10	2	65 Nm (6.5 m·kg, 47 ft·lb)	LT

Item	Thread size	Q'ty	Tightening torque	Remarks
Shift arm pinch bolt	M6	1	10 Nm (1.0 m·kg, 7.2 ft·lb)	
Shift rod locknut	M6	2	7 Nm (0.7 m·kg, 5.1 ft·lb)	
Drive shaft dust cover bolt	M5	2	4 Nm (0.4 m·kg, 2.9 ft·lb)	
Final gear oil drain bolt	M14	1	23 Nm (2.3 m·kg, 17 ft·lb)	
Final gear oil filler bolt	M14	1	23 Nm (2.3 m·kg, 17 ft·lb)	
Final drive assembly nut	M10	4	42 Nm (4.0 m·kg, 29 ft·lb)	
Final drive pinion gear bearing retainer	M65	1	110 Nm (11.0 m·kg, 80 ft·lb)	Left-hand thread
Coupling gear nut	M16	1	110 Nm (11.0 m·kg, 80 ft·lb)	Stake
Ring gear bearing housing bolt	M10	2	40 Nm (4.0 m·kg, 29 ft·lb)	
Ring gear bearing housing nut	M8	6	23 Nm (2.3 m·kg, 17 ft·lb)	
Final gear case stud bolt	M8	6	9 Nm (0.9 m·kg, 6.5 ft·lb)	
Ring gear bearing housing stop-per bolt	M10	1	9 Nm (0.9 m·kg, 6.5 ft·lb)	Left-hand thread
Battery box bolt	M6	2	7 Nm (0.7 m·kg, 5.1 ft·lb)	
Battery stay bolt	M6	2	10 Nm (1.0 m·kg, 7.2 ft·lb)	
Battery holder bolt	M6	1	10 Nm (1.0 m·kg, 7.2 ft·lb)	
Horn bolt	M6	2	7 Nm (0.7 m·kg, 5.1 ft·lb)	

NOTE:

Lower ring nut

1. First, tighten the lower ring nut to approximately 52 Nm (5.2 m·kg, 37 ft·lb) with a torque wrench, then loosen the lower ring nut completely.
2. Retighten the lower ring nut to 18 Nm (1.8 m·kg, 13 ft·lb) with a torque wrench.

NOTE:

Front wheel axle pinch bolt

1. Insert the front wheel axle from the right side and tighten it with the flange bolt from the left side to 91 Nm (9.1 m·kg, 66 ft·lb).
2. In the order pinch bolt "2" → pinch bolt "1" → pinch bolt "2", tighten each bolt to 21 Nm (2.1 m·kg, 15 ft·lb) without performing temporary tightening.
3. Check that the right end of the front axle is flush with the front fork. If necessary, manually push the front axle or lightly tap it with a soft hammer until its end is flush with the front fork. However, if the surface of the front axle end is not parallel to the surface of the front fork, align a point on the outer edge of the axle with the fork, making sure that the axle does not protrude past the fork.
4. In the order pinch bolt "4" → pinch bolt "3" → pinch bolt "4", tighten each bolt to 21 Nm (2.1 m·kg, 15 ft·lb) without performing temporary tightening.

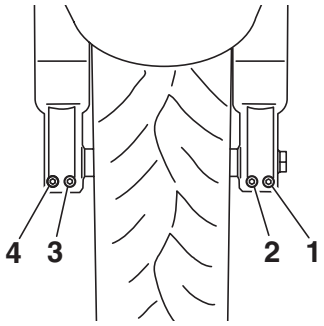
4
3
2
1

EAS20360
LUBRICATION POINTS AND LUBRICANT TYPES

EAS20370
ENGINE

Lubrication point	Lubricant
Oil seal lips	LS
O-rings	LS
Bearings	E
Crankshaft pins	E
Piston surfaces	E
Piston pins	E
Connecting rod bolts and nuts	M
Crankshaft journals	E
Camshaft lobes	M
Camshaft journals	M
Balancer absorbers, weights, gears and shafts	E
Valve stems (intake and exhaust)	M
Valve stem ends (intake and exhaust)	E
Water pump impeller shaft	E
Oil pump rotors (inner and outer) and oil pump shaft	E
Oil pump drive sprocket	E
Oil strainer	E
Oil nozzle (O-ring)	LS
Starter clutch idle gear inner surface	E
Starter clutch assembly	E
Primary driven gear	E
Push rods and ball	LS
Transmission gears (wheel and pinion)	M
Main axle and drive axle	M
Shift drum	E
Shift forks and shift fork guide bars	E
Shift shaft	E
Shift pedal bolt	LS
Damper drive cam and damper driven cam	M
Middle driven gear	M
Middle drive pinion gear	E
Middle driven pinion gear	E
Middle drive pinion gear nut	E

Lubrication point	Lubricant
Cylinder head cover mating surface	Three Bond 1541®
Cylinder head cover gasket	Yamaha bond No.1215 (Three Bond No.1215®)
Crankcase mating surface	Yamaha bond No.1215 (Three Bond No.1215®)
Crankshaft position sensor lead grommet	Yamaha bond No.1215 (Three Bond No.1215®)
Stator coil assembly lead grommet	Yamaha bond No.1215 (Three Bond No.1215®)

EAS20380
CHASSIS

Lubrication point	Lubricant
Steering bearings and upper bearing cover lip	LS
Lower bearing dust seal lip	LS
Front wheel oil seal lips (right and left)	LS
Rear wheel oil seal lips	LS
Rear wheel drive hub oil seal	LS
Rear wheel drive hub mating surface	LS
Rear brake pedal pivoting point	LS
Footrest assembly pivoting point	LS
Shift pedal pivoting point	LS
Centerstand pivoting point and metal-to-metal moving parts	LS
Sidestand pivoting point and metal-to-metal moving parts	LS
Tube guide (throttle grip) inner surface and throttle cables	LS
Brake lever pivot bolt and metal-to-metal moving parts	Silicon grease
Clutch lever pivot bolt and metal-to-metal moving parts	Silicon grease
Rear shock absorber assembly oil seal	LS
Rear shock absorber assembly bearing	LS
Rear shock absorber assembly spacer	LS
Pivot shaft and pivot shaft thread	LS
Pivot shaft bearing	LS
Pivot shaft oil seal lip	LS
Relay arm bearing	LS
Oil seals (rear shock absorber, relay arm and connecting arm)	LS
Drive shaft spline (final drive pinion gear side)	M
Drive shaft spline (universal joint side)	M
Ring gear inner surface	LS
Thrust washer (ring gear)	E
Bearing (ring gear)	LS
Bearing (final drive pinion gear)	LS

EAS20390
LUBRICATION SYSTEM CHART AND DIAGRAMS

EAS20400
ENGINE OIL LUBRICATION CHART

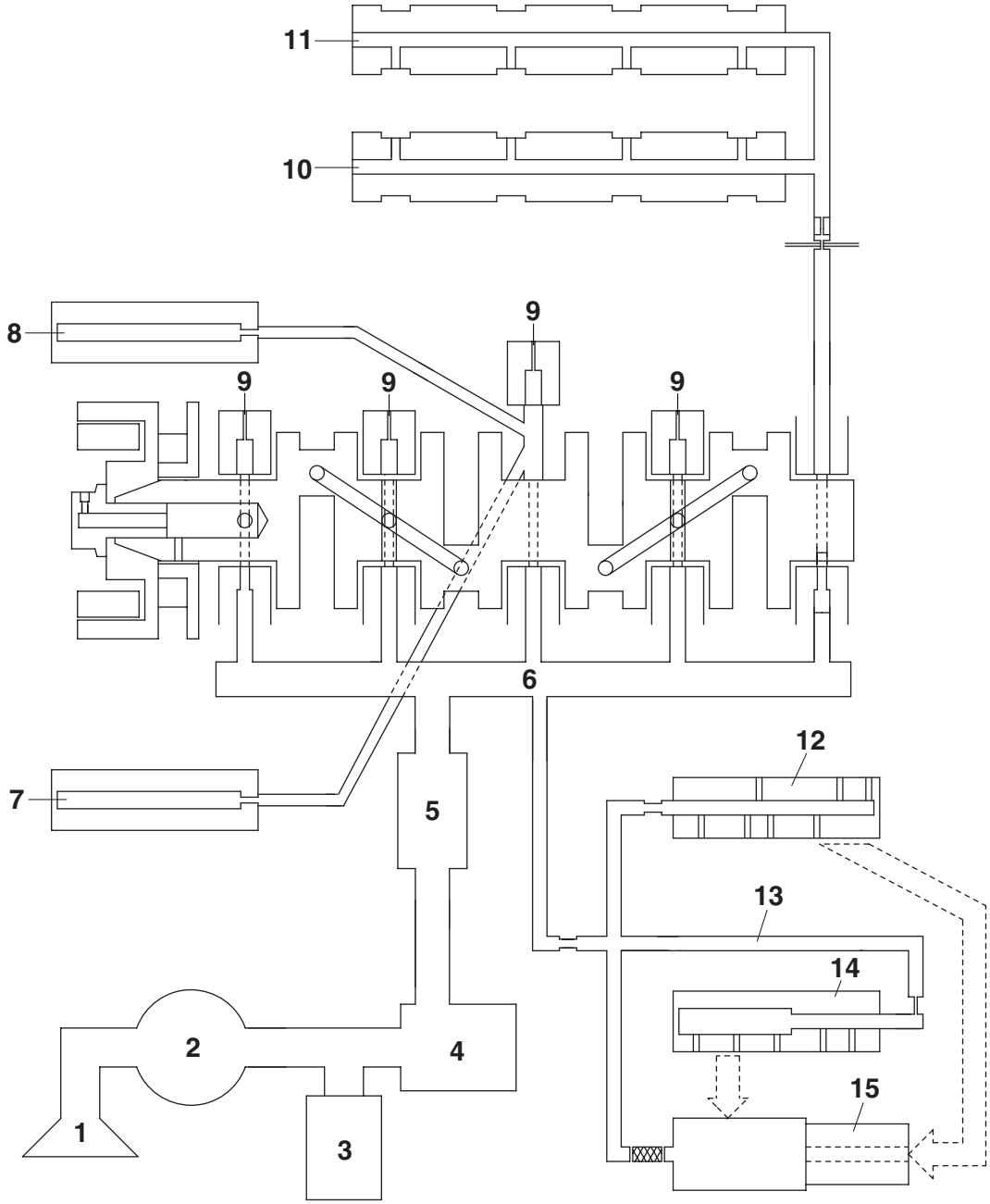

1. Oil strainer
2. Oil pump
3. Relief valve assembly
4. Oil filter
5. Oil cooler
6. Main gallery
7. Front balancer shaft
8. Rear balancer shaft
9. Oil nozzle
10. Intake camshaft
11. Exhaust camshaft
12. Main axle
13. Oil pipe
14. Drive axle
15. Middle drive shaft assembly

EAS20410
LUBRICATION DIAGRAMS

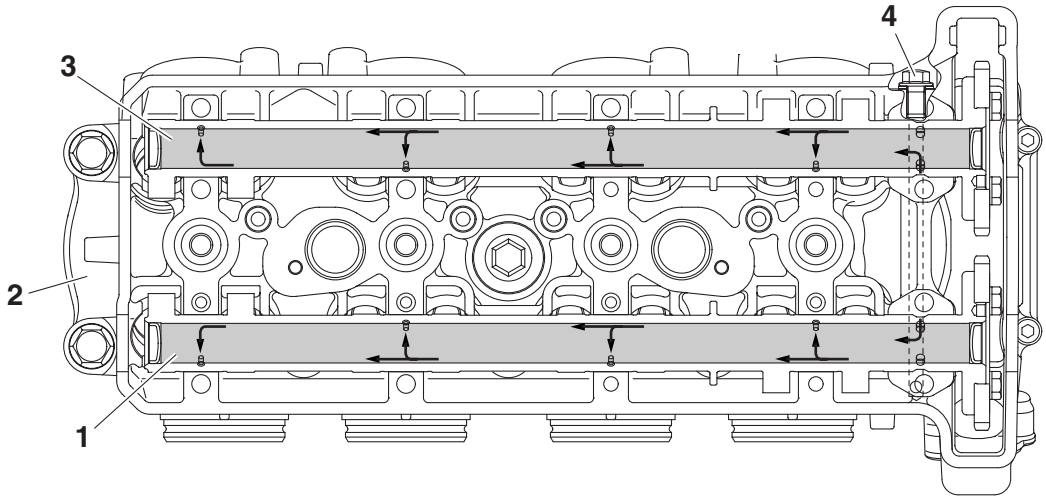

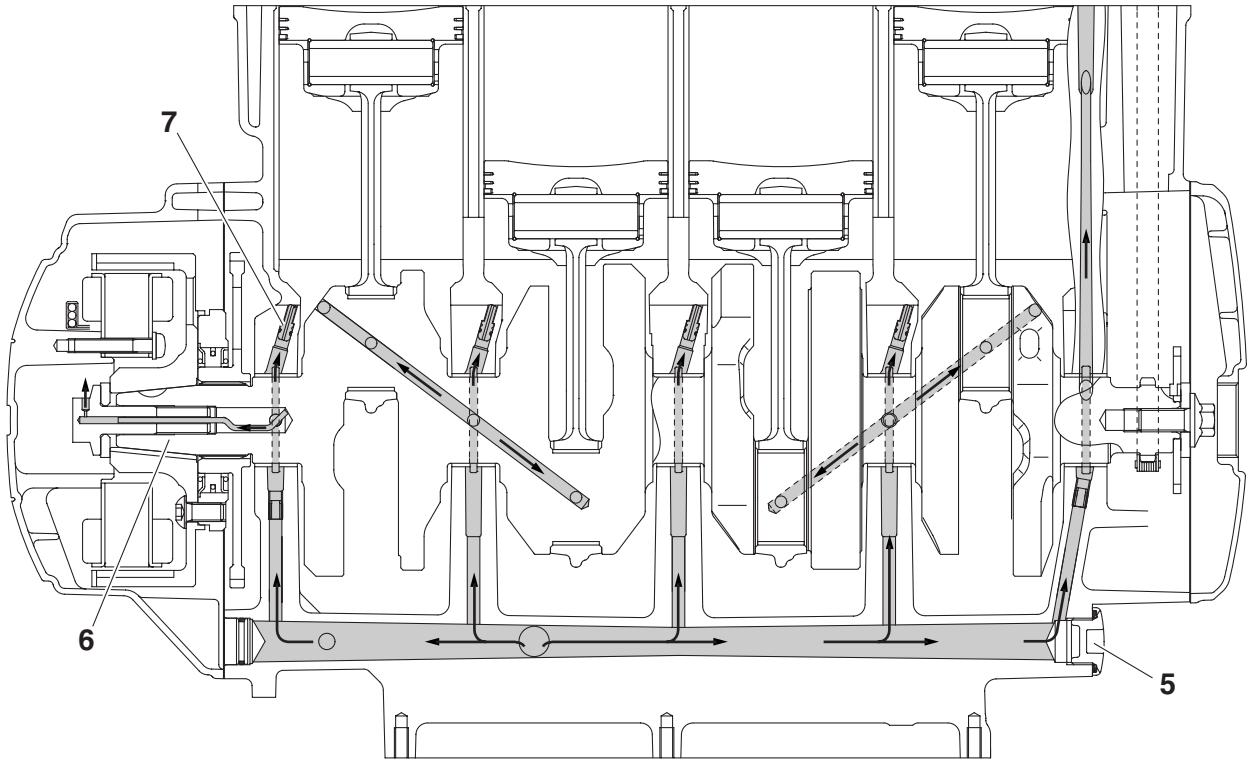

1. Intake camshaft
2. Cylinder head
3. Exhaust camshaft
4. Oil check bolt
5. Main gallery bolt
6. Crankshaft
7. Oil nozzle

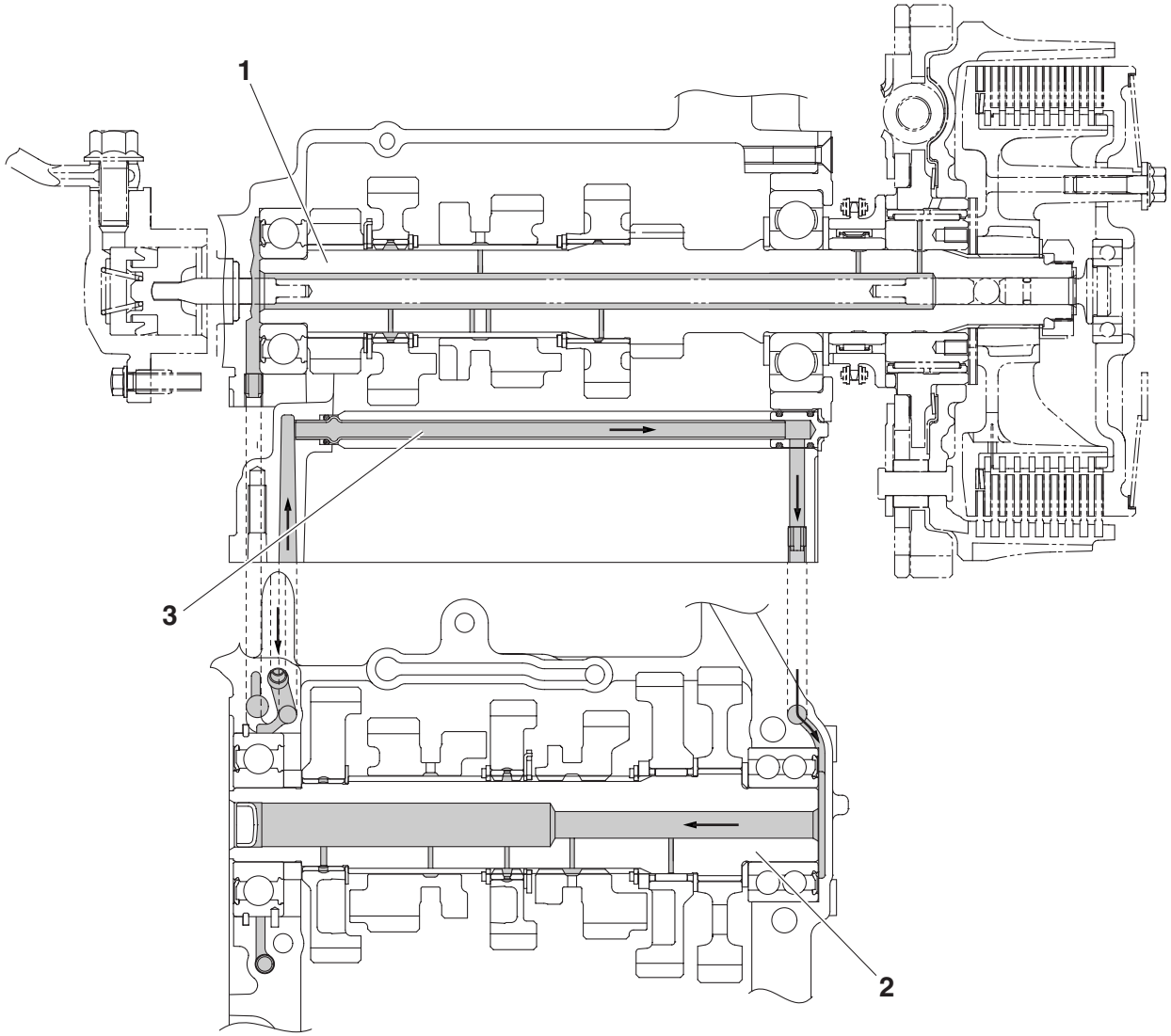
1
3
2

1. Main axle
2. Drive axle
3. Oil delivery pipe 1

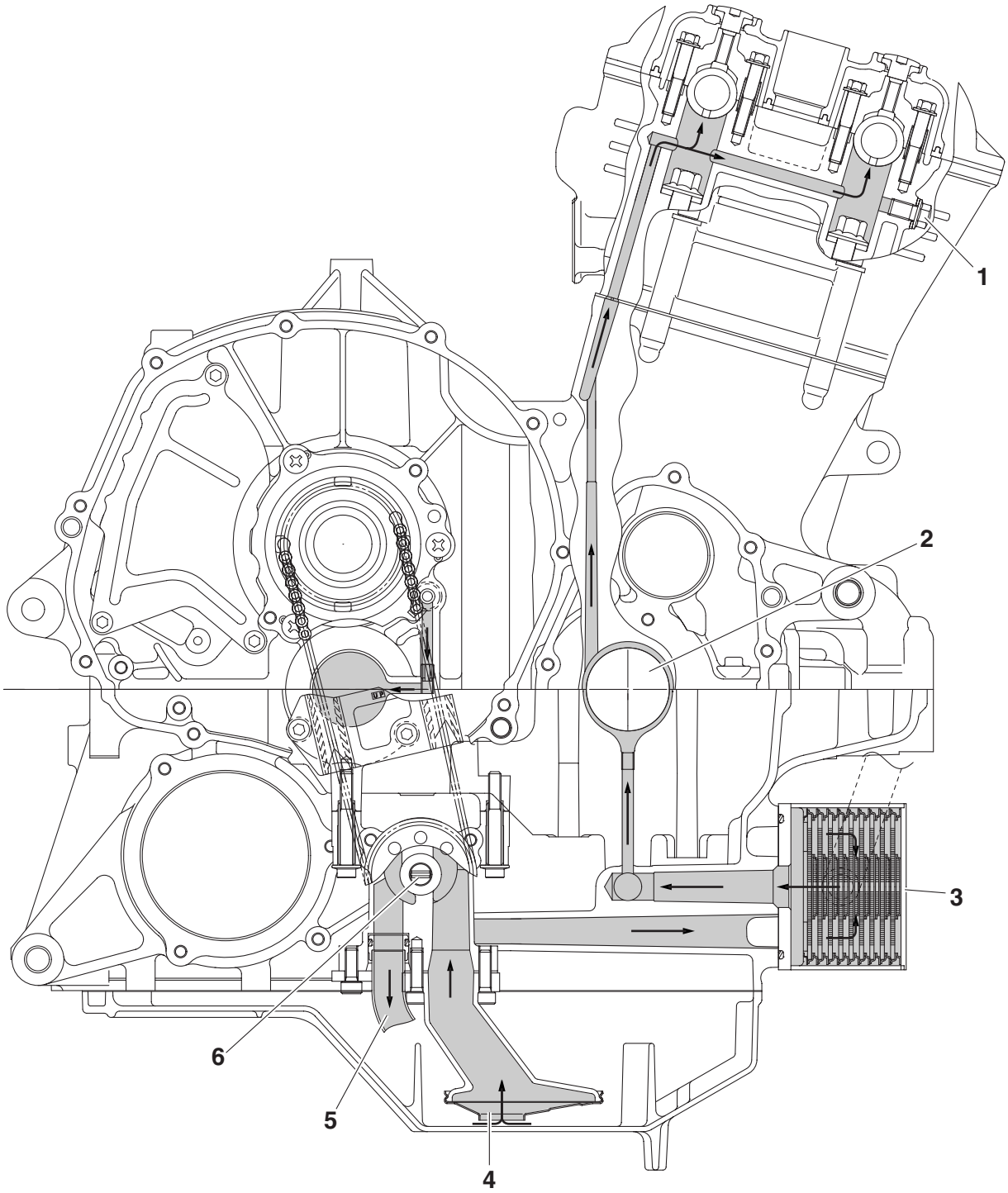
1
2
3
4
5
6

1. Oil check bolt
2. Crankshaft
3. Oil cooler
4. Oil strainer
5. Oil delivery pipe 3
6. Oil pump

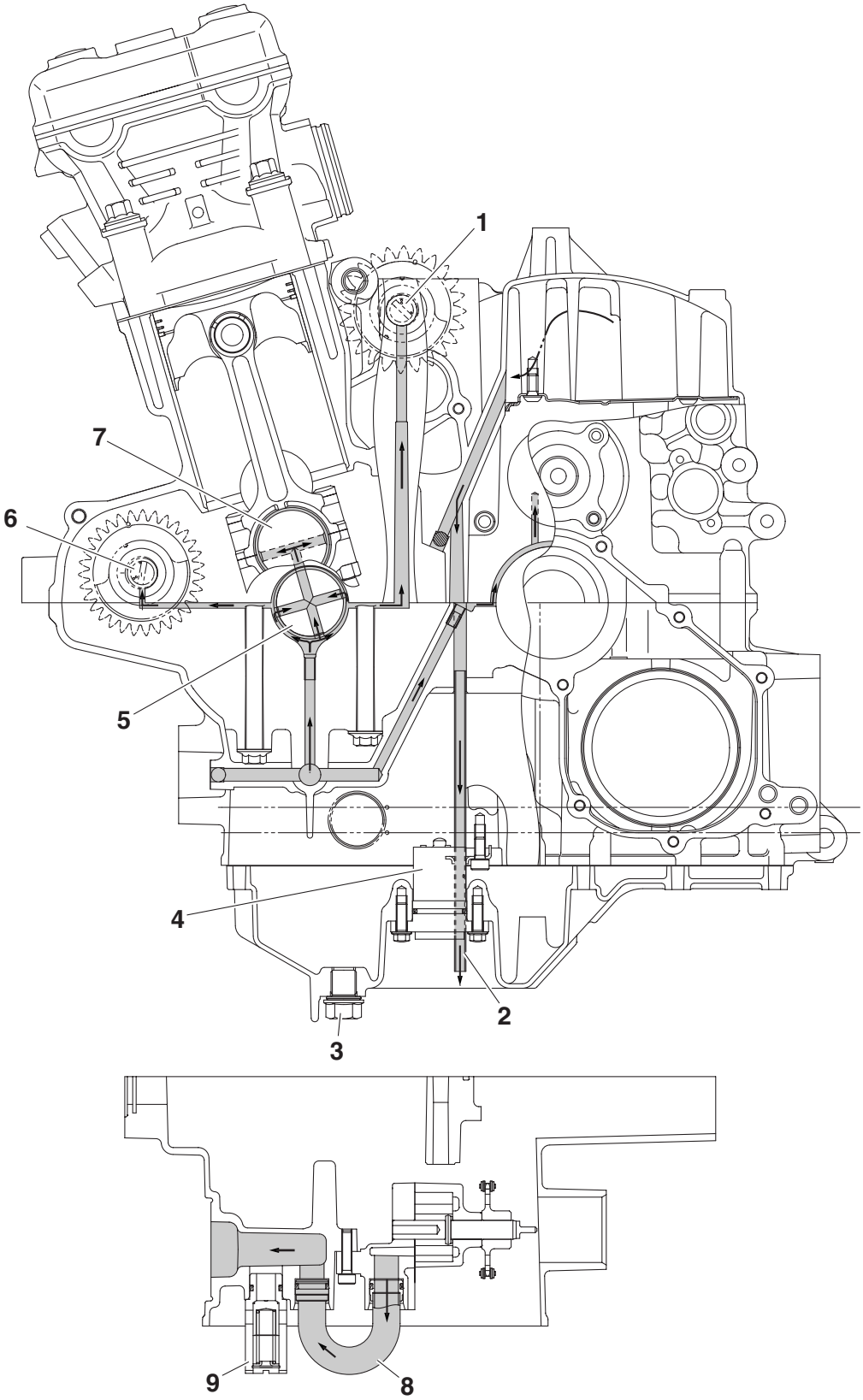
1
7
6
5
4
2
3
9
8

1. Rear balancer
2. Oil delivery pipe 2
3. Engine oil drain bolt
4. Oil level switch
5. Crankshaft
6. Front balancer
7. Crank pin
8. Oil delivery pipe 3
9. Relief valve assembly

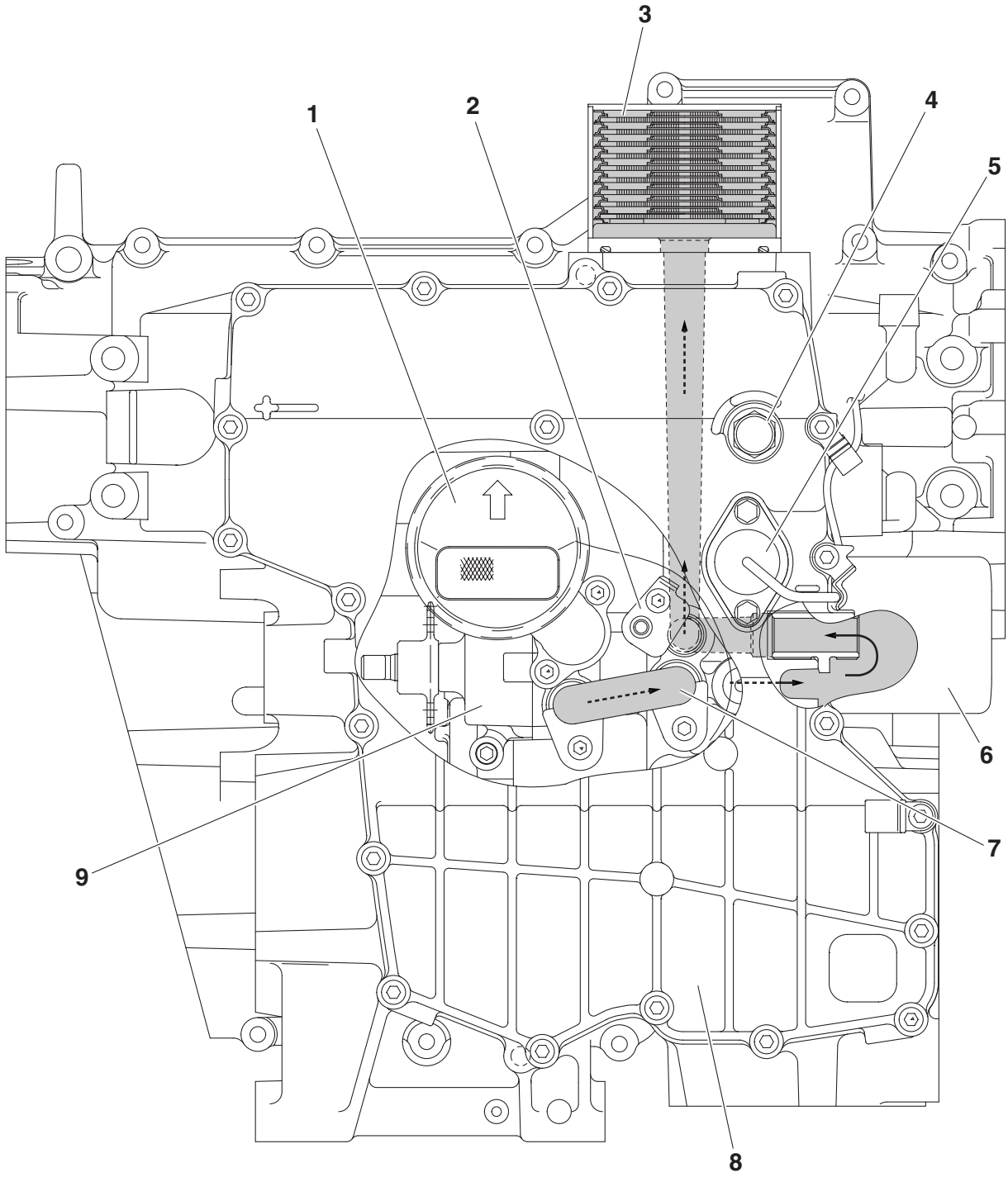
3
1
2
4
5
6
7
9
8

1. Oil strainer
2. Oil delivery pipe 2
3. Oil cooler
4. Engine oil drain bolt
5. Oil level switch
6. Oil filter cartridge
7. Oil delivery pipe 3
8. Oil pan
9. Oil pump

EAS20420

COOLING SYSTEM DIAGRAMS

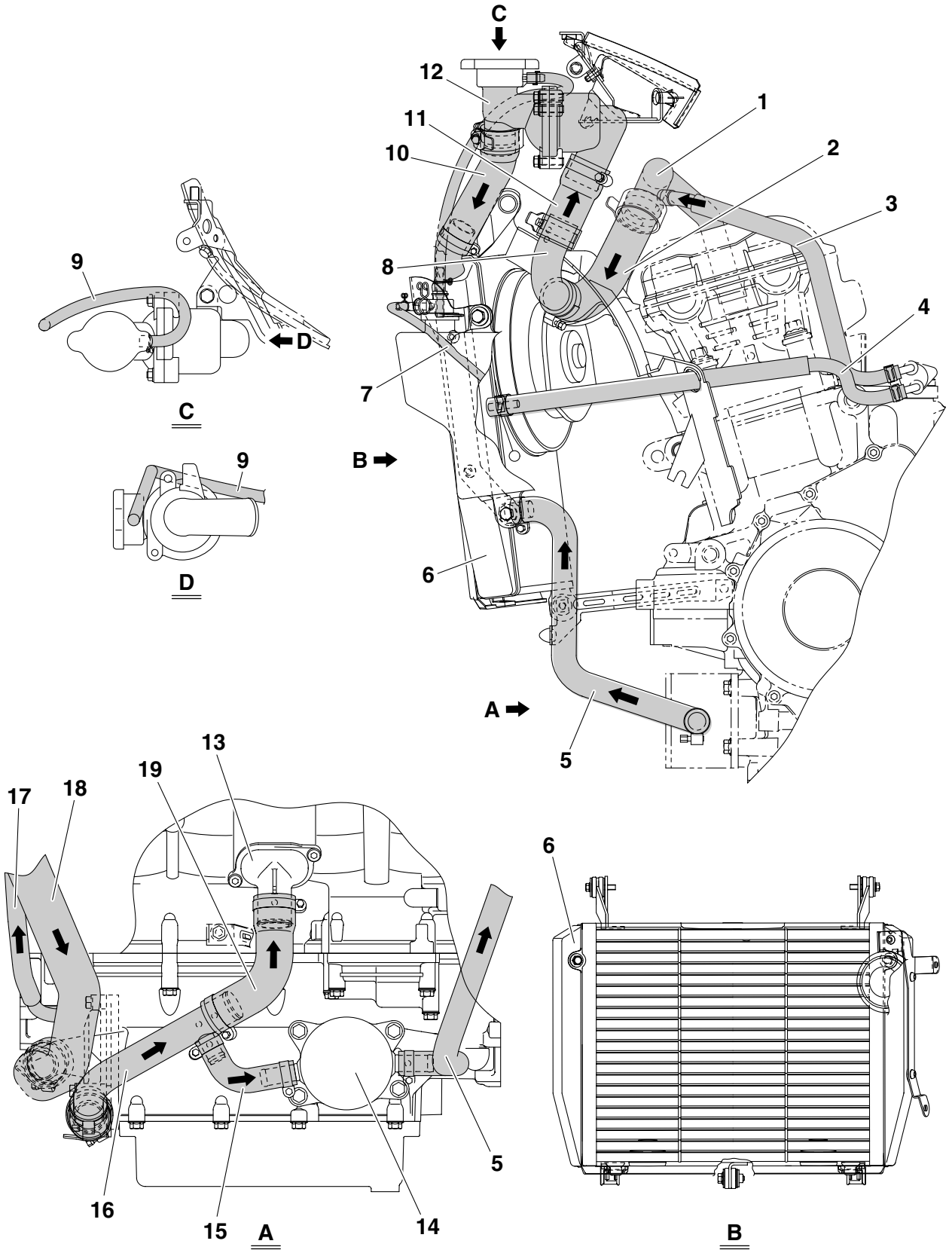

1. Thermostat inlet pipe 1
2. Thermostat inlet hose 1
3. Plunger control unit hose 1
4. Plunger control unit hose 2
5. Oil cooler outlet hose
6. Radiator
7. Coolant reservoir breather hose
8. Thermostat inlet pipe 2
9. Coolant reservoir hose
10. Radiator inlet hose
11. Thermostat inlet hose 2
12. Thermostat assembly
13. Water jacket joint
14. Oil cooler
15. Oil cooler inlet hose
16. Water pump outlet pipe
17. Water pump breather hose
18. Radiator outlet hose
19. Water jacket joint inlet hose

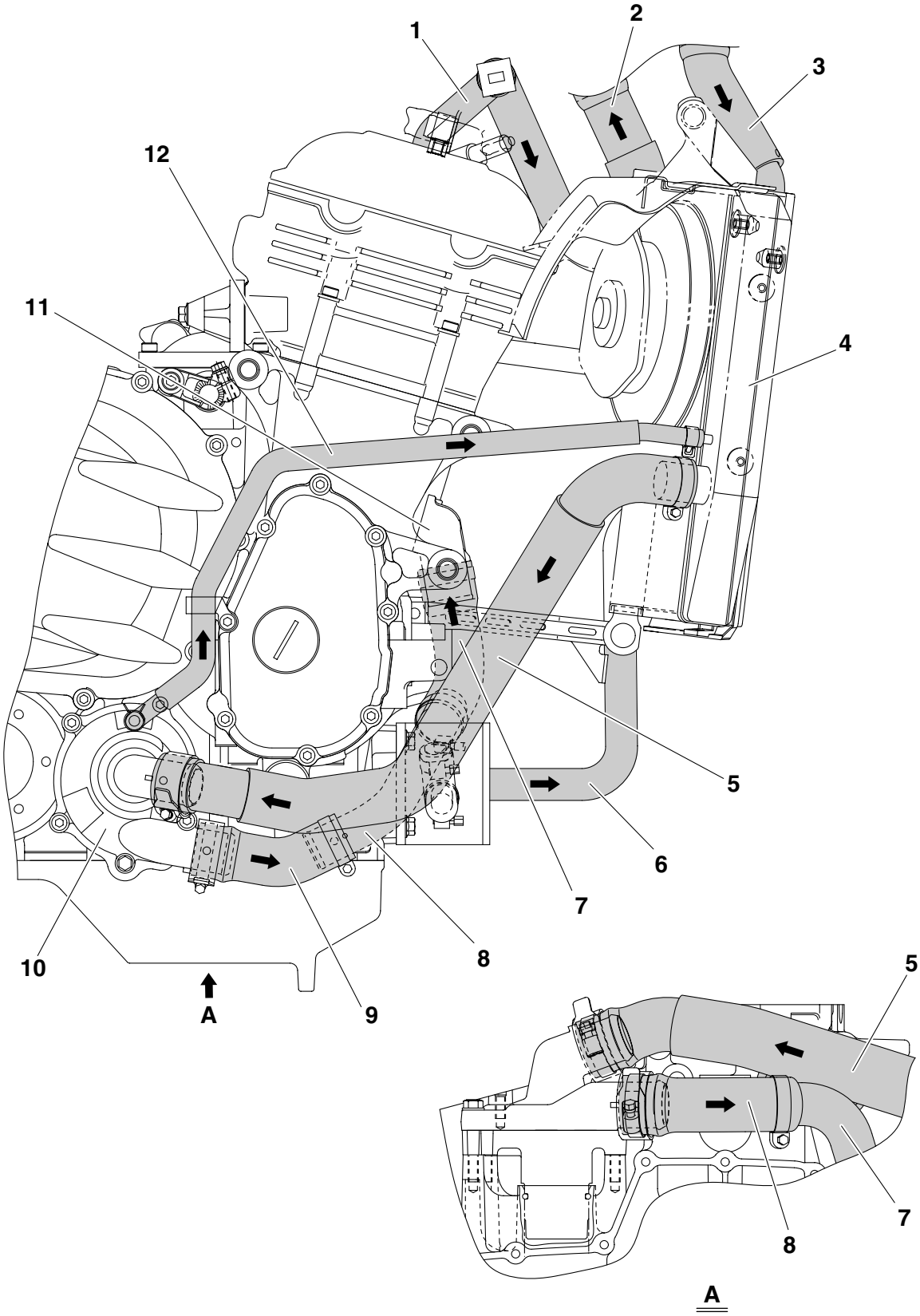
1
2
3
4
5
6
7
8
9
10
11
12
A
5
7
8
A

1. Thermostat inlet pipe 1
2. Thermostat inlet hose 2
3. Radiator inlet hose
4. Radiator
5. Radiator outlet hose
6. Oil cooler outlet hose
7. Water jacket joint inlet hose
8. Water pump outlet pipe
9. Water pump outlet hose
10. Water pump
11. Water jacket joint
12. Water pump breather hose

EAS20430

CABLE ROUTING

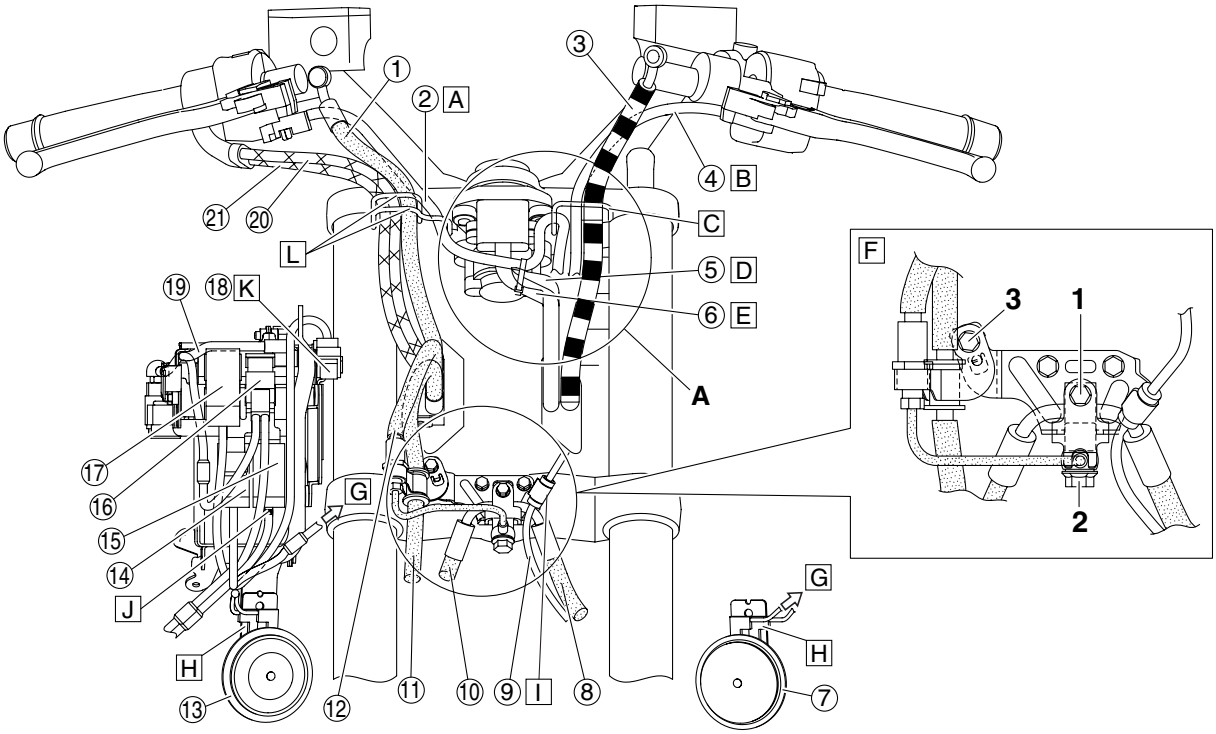

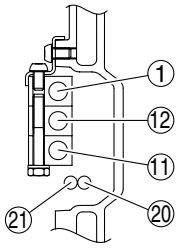

B-B

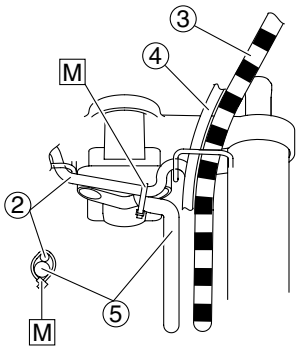

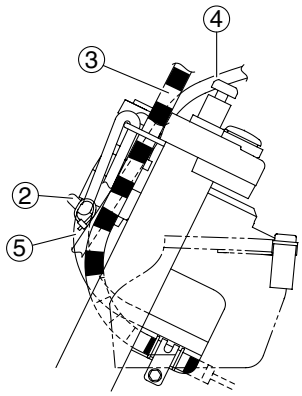

A

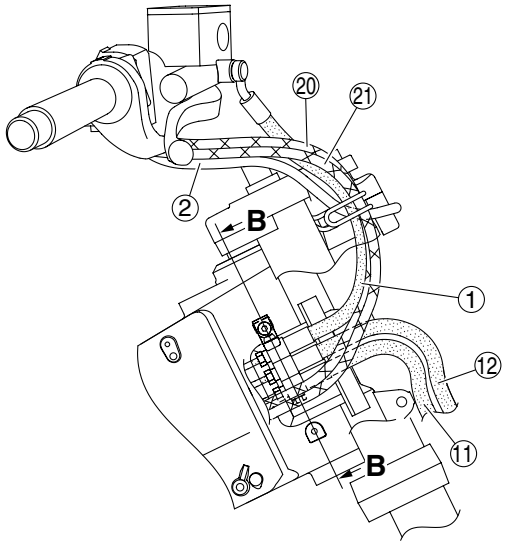

1. Brake hose (front brake master cylinder to hydraulic unit)
2. Right handlebar switch lead
3. Clutch hose
4. Left handlebar switch lead
5. Main switch lead
6. Immobilizer unit lead
7. Left horn (low)
8. Brake hose (hydraulic unit to left front brake caliper)
9. Front wheel sensor lead
10. Brake hose (hydraulic unit to right front brake caliper)
11. Brake hose (metering valve to right front brake caliper)
12. Brake hose (hydraulic unit to front brake calipers)
13. Right horn (high)
14. Headlight relay (on/off)
15. Radiator fan motor relay
16. Main fuse
17. Brake light relay
18. ABS test coupler
19. Positive battery lead
20. Throttle cable (accelerator cable)
21. Throttle cable (decelerator cable)

A. Route the right handlebar switch lead under the handlebar.
B. Route the left handlebar switch lead under the handlebar.
C. Pass the clutch hose, right handlebar switch lead, and left handlebar switch lead through the guide.
D. Route the main switch lead to the inside of the clutch hose.
E. Route the immobilizer unit lead to the inside of the clutch hose.
F. Temporarily tighten the brake hose joint bolt, union bolt, and brake hose holder bolt in the proper tightening sequence as shown. Then, tighten the bolts to the specified torques, making sure to tighten the brake hose joint bolt “1” last.
G. To front cowling wire harness
H. Install the horn L-shaped connectors so that the leads are routed outward.
I. Fasten the grommet on the front wheel sensor lead with the holder.
J. Connect the coupler that has blue tape wrapped around its leads to the radiator fan motor relay.
K. Install the ABS test coupler completely onto the tab on the battery stay.
L. Pass the brake hose (front brake master cylinder to hydraulic unit), right handlebar switch lead, and throttle cables through the guide as shown in the illustration.
M. Fasten the main switch lead and right handlebar switch lead with a plastic locking tie at the location shown in the illustration. Position the buckle of the plastic locking tie under the leads, with the end facing inward, and then cut off the excess end of the tie.

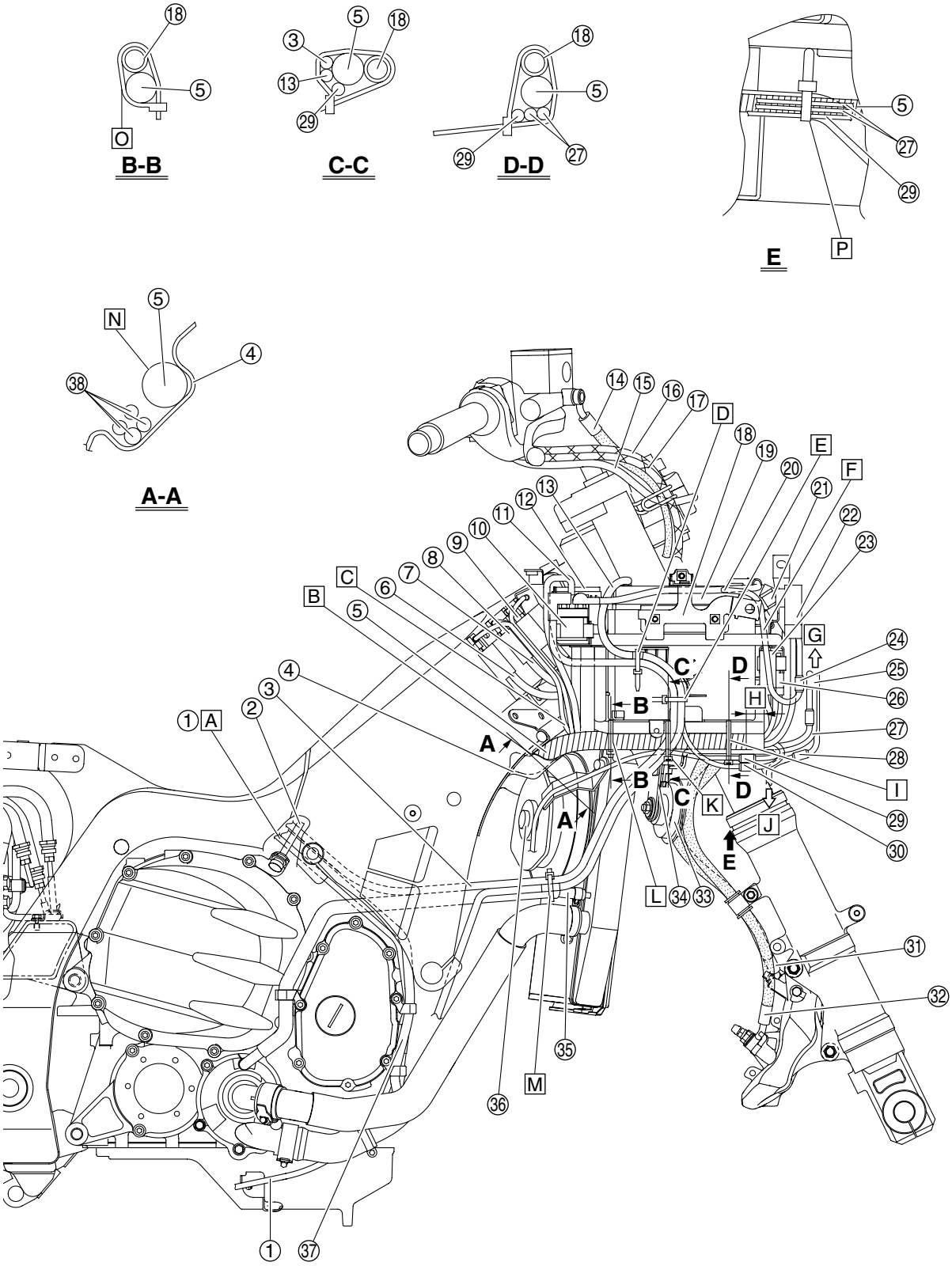
B-B
C-C
D-D
E
A-A

1. O_2 sensor lead
2. Engine idling speed adjusting cable
3. Starter motor lead
4. Air deflector
5. Wire harness
6. Spark plug lead #4
7. Spark plug lead #1
8. Cylinders-#1/#4 ignition coil
9. Cylinders-#2/#3 ignition coil
10. Starter relay
11. Starter relay lead
12. Fuse box 2
13. Negative battery lead
14. Brake hose (front brake master cylinder to hydraulic unit)
15. Right handlebar switch lead
16. Throttle cable (accelerator cable)
17. Throttle cable (decelerator cable)
18. Battery stay
19. Battery
20. Positive battery lead
21. Main fuse
22. Brake light relay
23. Headlight relay (on/off)
24. Positive battery lead coupler
25. Front cowling wire harness
26. Radiator fan motor relay
27. Right horn (high) leads
28. Front right turn signal light lead
29. Right radiator fan motor lead
30. Ground lead coupler
31. Brake hose (hydraulic unit to right front brake caliper)
32. Brake hose (metering valve to right front brake caliper)
33. Right horn (high)
34. Right horn (high) connectors
35. Water pump breather hose
36. Right radiator fan
37. Crankshaft position sensor lead
38. Spark plug leads

A. Route the O_2 sensor lead to the inside of the engine idling speed adjusting cable.
B. Make sure that the wire harness and spark plug leads are positioned in the indentation on the right side of the air deflector.
C. Route the spark plug leads to the inside of the battery stay pipe.
D. Fasten the negative battery lead at the blue tape and the starter motor lead to the battery box with a plastic locking tie. Face the end of the plastic locking tie downward. Do not cut off the excess end of the plastic locking tie.
E. Fasten the negative battery lead and starter motor lead to the battery box with a plastic locking tie. Face the end of the plastic locking tie rearward. Do not cut off the excess end of the plastic locking tie.
F. Route the positive battery lead between the battery stay and the battery box.
G. To front cowling wire harness
H. Align the rear end of the right radiator fan motor coupler with the tape on the wire harness as shown in the illustration.
I. Fasten the wire harness, right horn (high) leads, and right radiator fan motor lead with a plastic locking tie, making sure to install the tie on the fan motor lead's protective sleeve. Face the end of the plastic locking tie outward. Do not cut off the excess end of the plastic locking tie.
J. To front right turn signal light
K. Fasten the wire harness, right radiator fan motor lead, negative battery lead, and starter motor lead to the battery stay with a plastic locking tie, making sure to install the tie on the fan motor lead's protective sleeve and to position the tie in front of the air deflector. Face the end of the plastic locking tie outward, and then cut off the excess end of the tie.
L. Fasten the wire harness to the battery stay with a plastic locking tie. Face the end of the plastic locking tie downward, and then cut off the excess end of the tie.
M. Fasten the negative battery lead at the blue tape, starter motor lead, and water pump breather hose with a plastic locking tie, making sure to install the tie around the end of the hose's protective sleeve, and then cut off the excess end of the tie. Do not kink the water pump breather hose and do not face the end of the plastic locking tie downward.
N. Route the wire harness to the outside of the spark plug leads.
O. Make sure that the wire harness does not protrude to the outside of the battery stay.
P. Position the plastic locking tie to the rear of the bend in the battery stay.

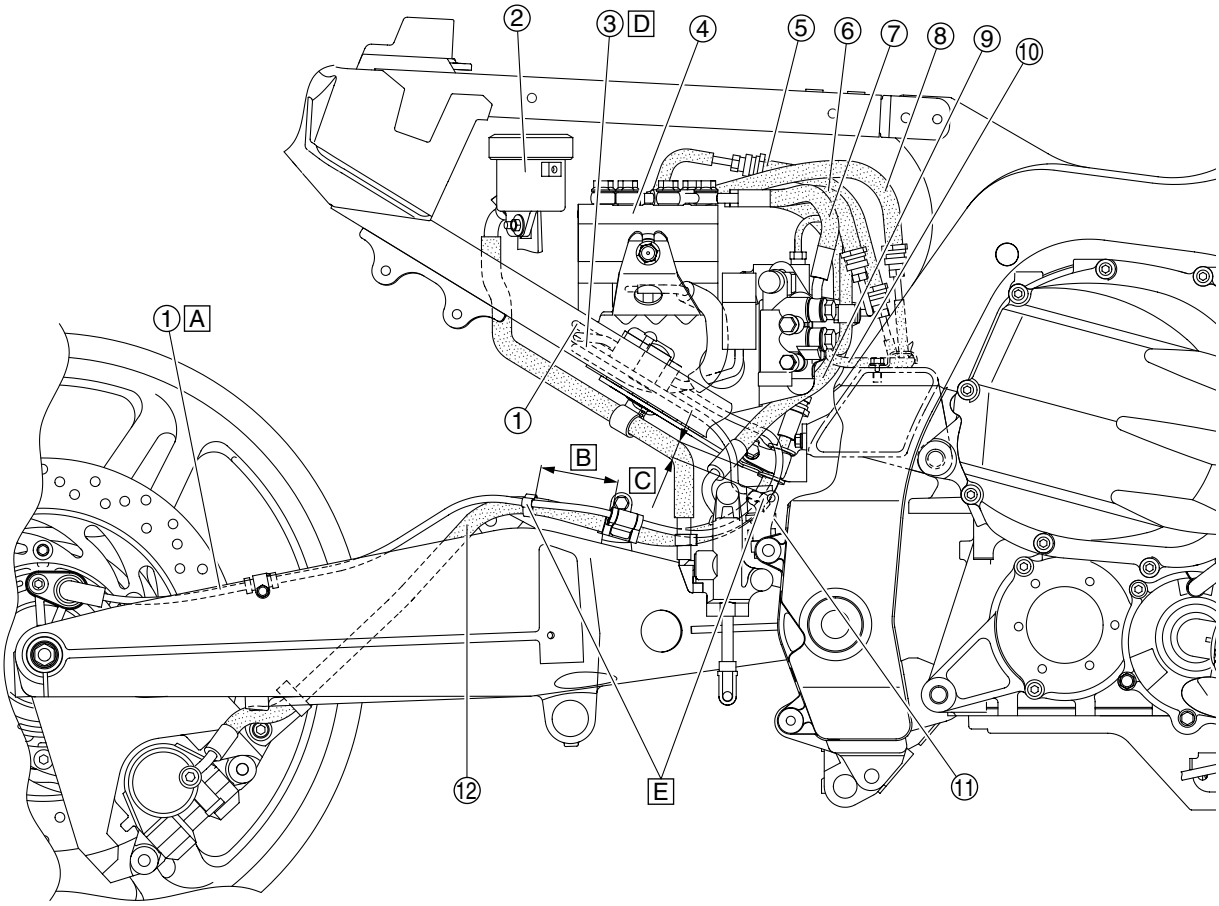
②
③ D
④
⑤
⑥
⑦
⑧
⑨
⑩
① A
①
B
C
⑫
E
⑪

1. Rear wheel sensor lead
2. Rear brake fluid reservoir
3. Rear brake light switch lead
4. Hydraulic unit
5. Brake hose (front brake master cylinder to hydraulic unit)
6. Brake hose (hydraulic unit to proportioning valve)
7. Brake hose (hydraulic unit to metering valve)
8. Brake hose (hydraulic unit to front brake calipers)
9. Brake hose (rear brake master cylinder to hydraulic unit)
10. Brake pipe (metering valve to right front brake caliper)
11. Rear brake light switch
12. Brake hose (proportioning valve to rear brake caliper)

A. Route the rear wheel sensor lead to the inside of the swingarm, making sure that the lead does not protrude above the swingarm.
B. 45–55 mm (1.77–2.17 in)
C. 10–20 mm (0.39–0.79 in)
D. Route the rear brake light switch lead under the rear wheel sensor lead.
E. Fasten the rear wheel sensor lead to the brake hose (proportioning valve to rear brake caliper) with the two holders, making sure that the fastener of each holder faces inward.

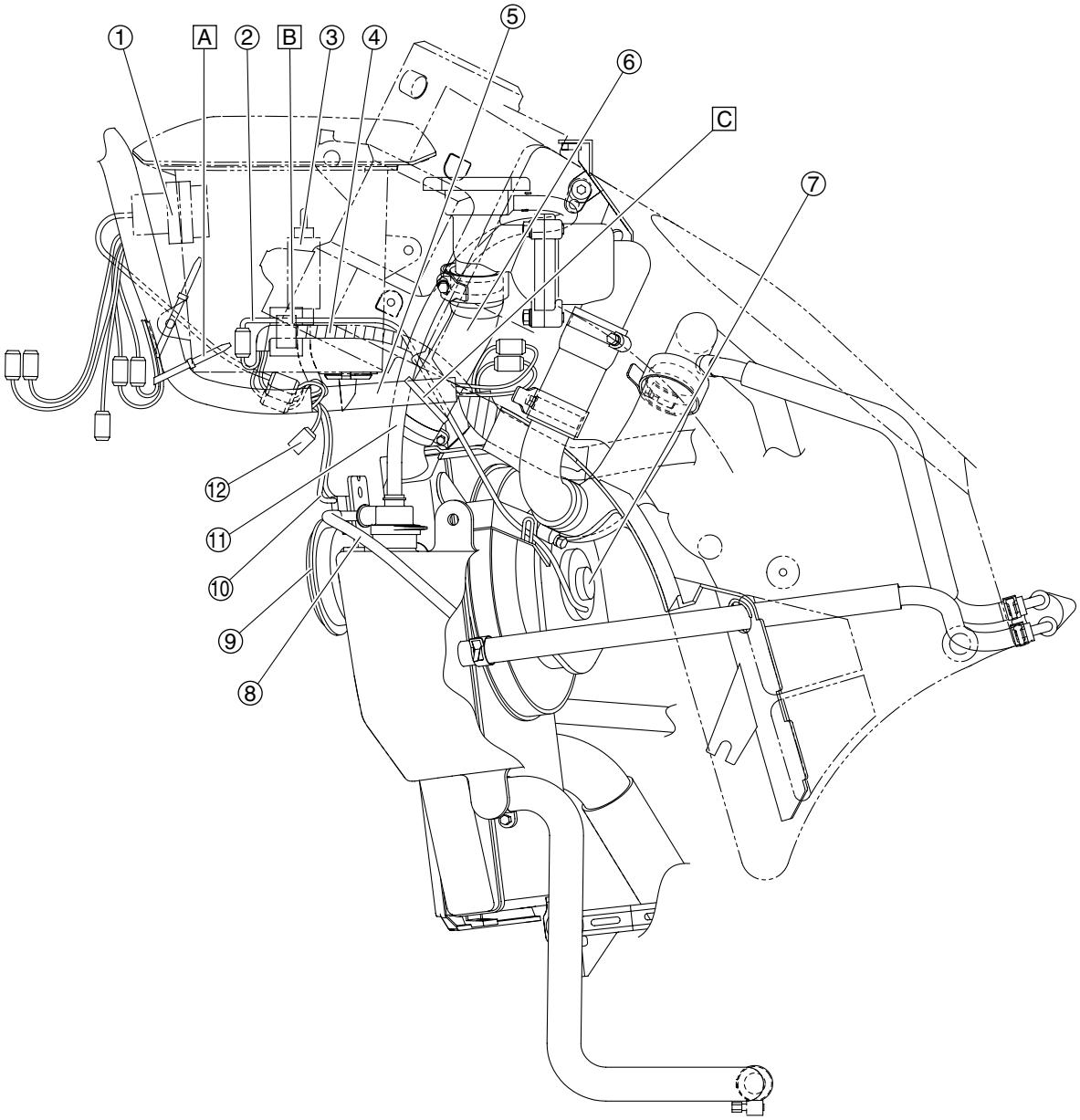
①
A
②
B
③
④
⑤
⑥
C
⑦
⑫
⑪
⑩
⑨
⑧

1. Auxiliary DC jack
2. Left radiator fan motor lead
3. Accessory box solenoid
4. Wire harness
5. Front cowling wire harness
6. Radiator inlet hose
7. Left radiator fan
8. Coolant reservoir breather hose
9. Left horn (low)
10. Left horn (low) leads
11. Thermostat assembly breather hose
12. Joint coupler

A. Fasten the handlebar switch leads to the front cowling wire harness with a plastic locking tie. Face the end of the plastic locking tie rearward, along the side of the accessory box. Do not cut off the excess end of the plastic locking tie.

B. Fasten the wire harness and left radiator fan motor lead with the holder.

C. Fasten the front cowling wire harness to the radiator inlet hose with a plastic locking tie, making sure to install the tie on the harness' protective sleeve, and then cut off the excess end of the tie.

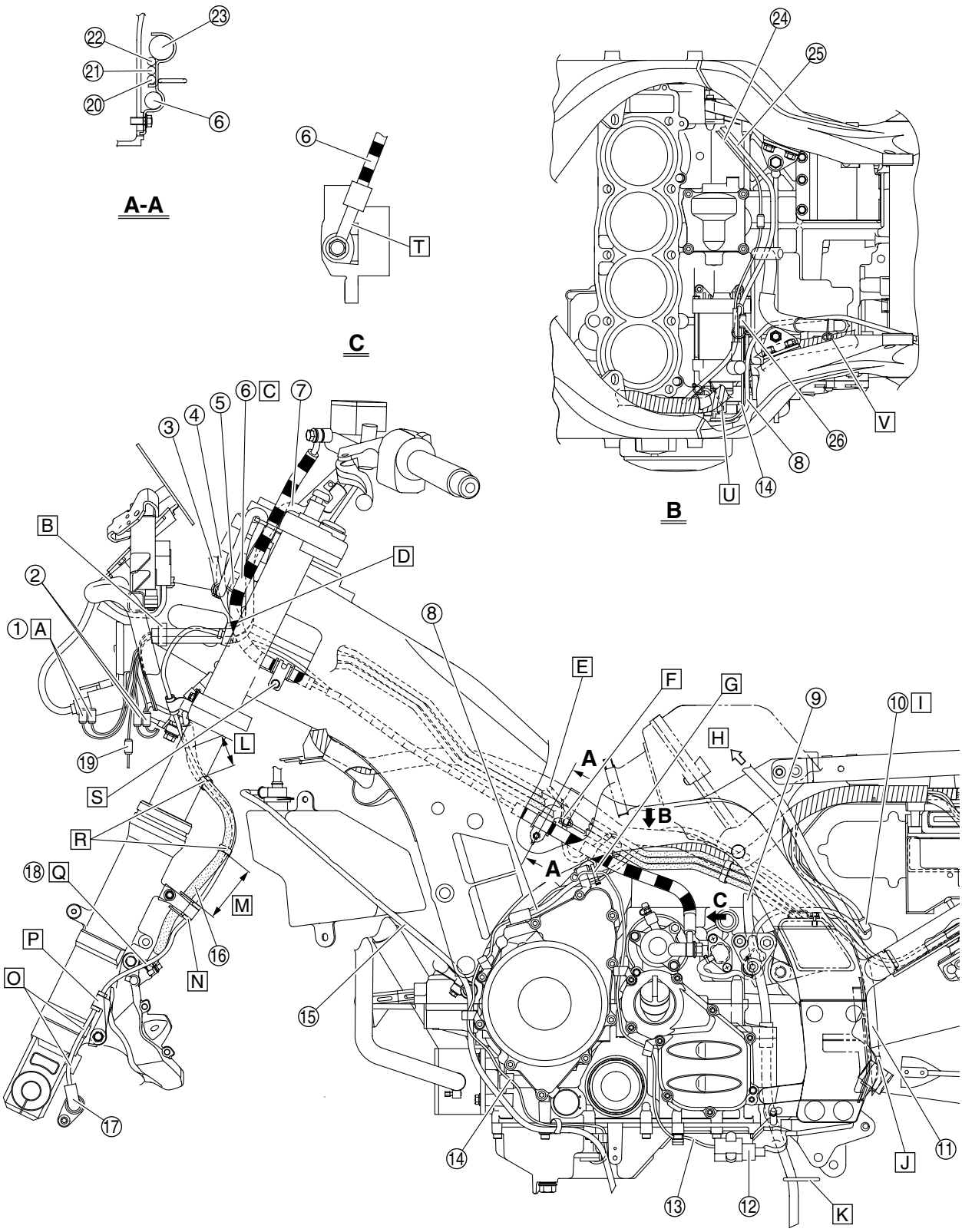
A-A
C
B
①
②
③
④
⑤
⑥
⑦
⑧
⑨
⑩
⑪
⑫
⑬
⑭
⑮
⑯
⑰
⑱
⑲
⑳
㉑
㉒
㉓
㉔
㉕
㉖
A
B
C
D
E
F
G
H
I
J
K
L
M
N
O
P
Q
R
S
T
U
V

1. Grip warmer couplers (for optional grip warmers)
2. Handlebar switch couplers
3. Right handlebar switch lead
4. Immobilizer unit lead
5. Main switch lead
6. Clutch hose
7. Left handlebar switch lead
8. Stator coil lead
9. Air filter case breather hose
10. Gear position switch lead
11. Fuel tank breather/overflow hose
12. Sidestand switch
13. Sidestand switch lead
14. Oil level switch lead
15. Coolant reservoir breather hose
16. Brake hose (hydraulic unit to left front brake caliper)
17. Front wheel sensor
18. Front wheel sensor lead
19. Front left turn signal light lead
20. Brake pipe (metering valve to right front brake caliper)
21. Brake pipe (hydraulic unit to front brake calipers)
22. Brake pipe (front brake master cylinder to hydraulic unit)
23. Wire harness
24. Crankshaft position sensor lead
25. Starter motor lead
26. Oil level switch coupler

A. Do not connect the grip warmer couplers.
B. Secure the plastic band by inserting the projection on the band into the hole in the windshield drive unit/meter assembly stay, and then fasten the handlebar switch leads with the band, making sure that the end of the band faces down. Do not cut off the excess end of the plastic band.
C. Route the clutch hose in front of the front fork as shown in the illustration.
D. Secure the plastic band by inserting the projection on the band into the hole in the windshield drive unit/meter assembly stay, and then fasten the handlebar switch leads and front wheel sensor lead with the band, making sure that the end of the band faces down. Do not cut off the excess end of the plastic band.
E. To oil level switch
F. Fasten the leads (to oil level switch and crankshaft position sensor) that branch off from the wire harness to the guide on the holder with a plastic locking tie, making sure that the end of the tie faces upward. Do not cut off the excess end of the plastic locking tie.
G. Fasten the sidestand switch lead, stator coil lead, and oil level switch lead with a plastic locking tie, making sure to bundle and fasten the sidestand switch lead so that the coupler is positioned to the front of the tie. Face the end of the plastic locking tie outward. Do not cut off the excess end of the plastic locking tie.
H. To fuel tank
I. Route the gear position switch lead so that the coupler is positioned as shown in the illustration.
J. Pass the fuel tank breather/overflow hose through the guide on the universal joint dust cover.
K. Pass the air filter case breather hose through the guide on the muffler bracket.
L. 43–53 mm (1.69–2.09 in)
M. 60–70 mm (2.36–2.76 in)
N. Fasten the grommets on the front wheel sensor lead and the brake hose (hydraulic unit to left front brake caliper) with the holder.
O. Route the front wheel sensor lead to the outside of the left front brake caliper lower mounting boss and the boss for the left front fork compression damping force adjusting screw.
P. Fasten the grommet on the front wheel sensor lead with the holder.
Q. Route the front wheel sensor lead between the left front brake caliper and the brake hose (hydraulic unit to left front brake caliper).
R. Fasten the front wheel sensor lead to the brake hose (hydraulic unit to left front brake caliper) with the two holders, making sure to position the lead to the inside of the hose.
S. Fasten the clutch hose with the holder.
T. When installing the clutch hose onto the clutch release cylinder, make sure that the pipe section on the end of the hose contacts the stopper on the cylinder body.
U. To sidestand switch
V. Face the ends of the clamp to the left, making sure that the lower end contacts the wire harness.

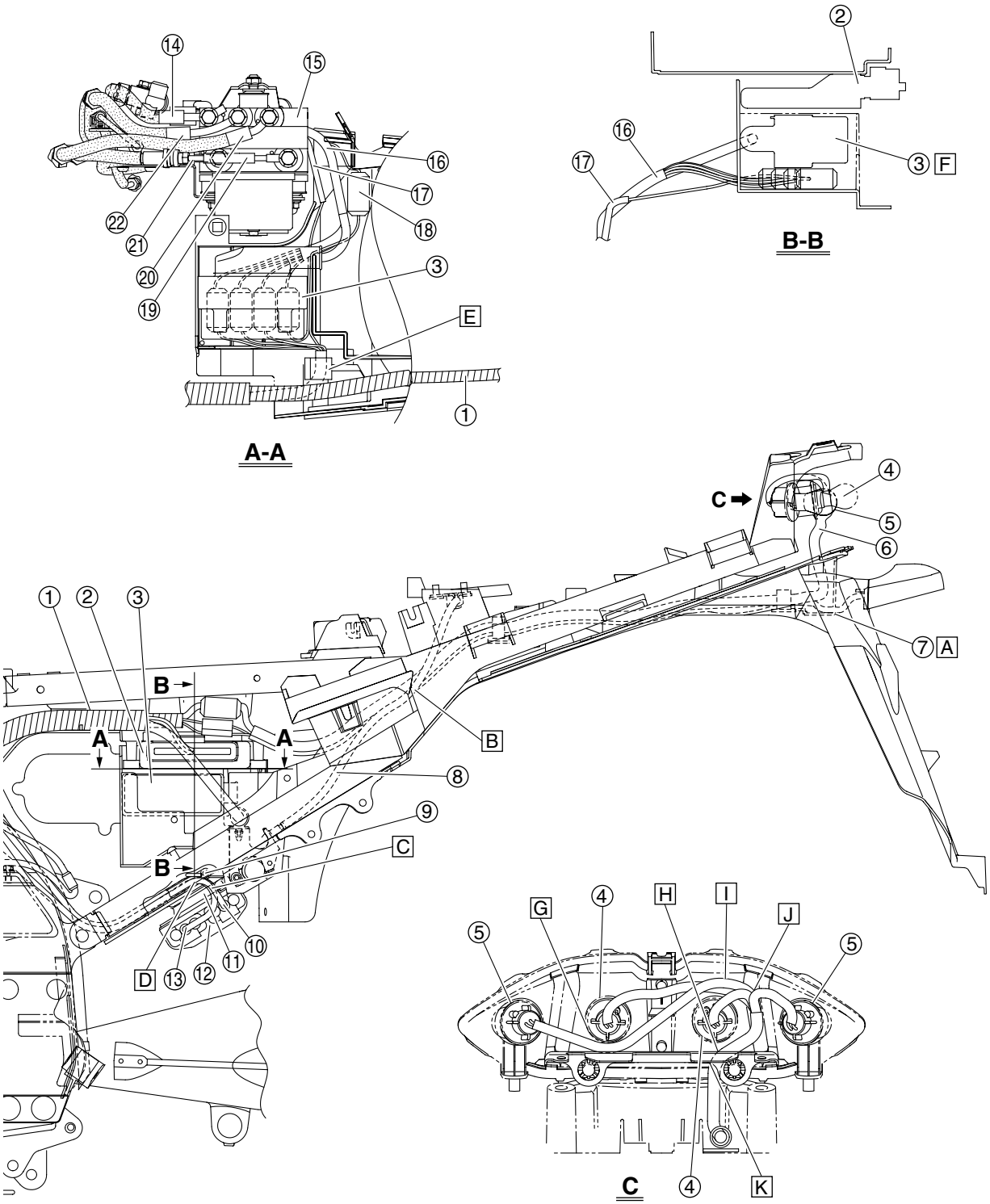
A-A
B-B
C
A
B
C
D
E
F
G
H
I
J
K

1. Wire harness
2. ECU (engine control unit)
3. ABS ECU (electronic control unit)
4. Tail/brake light
5. Rear turn signal light
6. Tail/brake light assembly lead
7. License plate light lead
8. Seat lock cable
9. Hydraulic unit breather hose
10. Stator coil lead
11. Rear shock absorber spring preload adjusting cable
12. Rectifier/regulator
13. Rectifier/regulator lead
14. Brake hose (hydraulic unit to metering valve)
15. Hydraulic unit
16. ABS wire harness
17. Rear wheel sensor lead
18. Rear brake light switch lead
19. Brake hose (front brake master cylinder to hydraulic unit)
20. Brake hose (hydraulic unit to front brake calipers)
21. Brake hose (rear brake master cylinder to hydraulic unit)
22. Brake hose (hydraulic unit to proportioning valve)

A. Pass the license plate light lead through the hole in the rear fender.
B. Route the wire harness to the inside of the seat lock cable.
C. Route the stator coil lead and rectifier/regulator lead to the outside of the rear shock absorber spring preload adjusting cable and under the hydraulic unit breather hose.
D. Pass the stator coil lead, rectifier/regulator lead, and hydraulic unit breather hose through the guide on the frame, making sure to route the hose to the outside of the leads.
E. Fasten the leads (to ABS wire harness and rear brake light switch) that branch off from the wire harness with the holder.
F. When installing the ABS ECU, be sure not to pinch the rear wheel sensor lead and ABS wire harness between the ABS ECU and the rear fender.
G. Route the rear right turn signal light lead under the right tail/brake light bulb socket.
H. Route the tail/brake light assembly lead between the left tail/brake light bulb socket and the mounting boss on the tail/brake light assembly.
I. Route the rear right turn signal light lead and right tail/brake light lead over the left tail/brake light bulb socket.
J. Route the leads between the left tail/brake light bulb socket and the rear left turn signal light bulb socket.
K. Route the tail/brake light assembly lead between the tail/brake light assembly and its bracket.

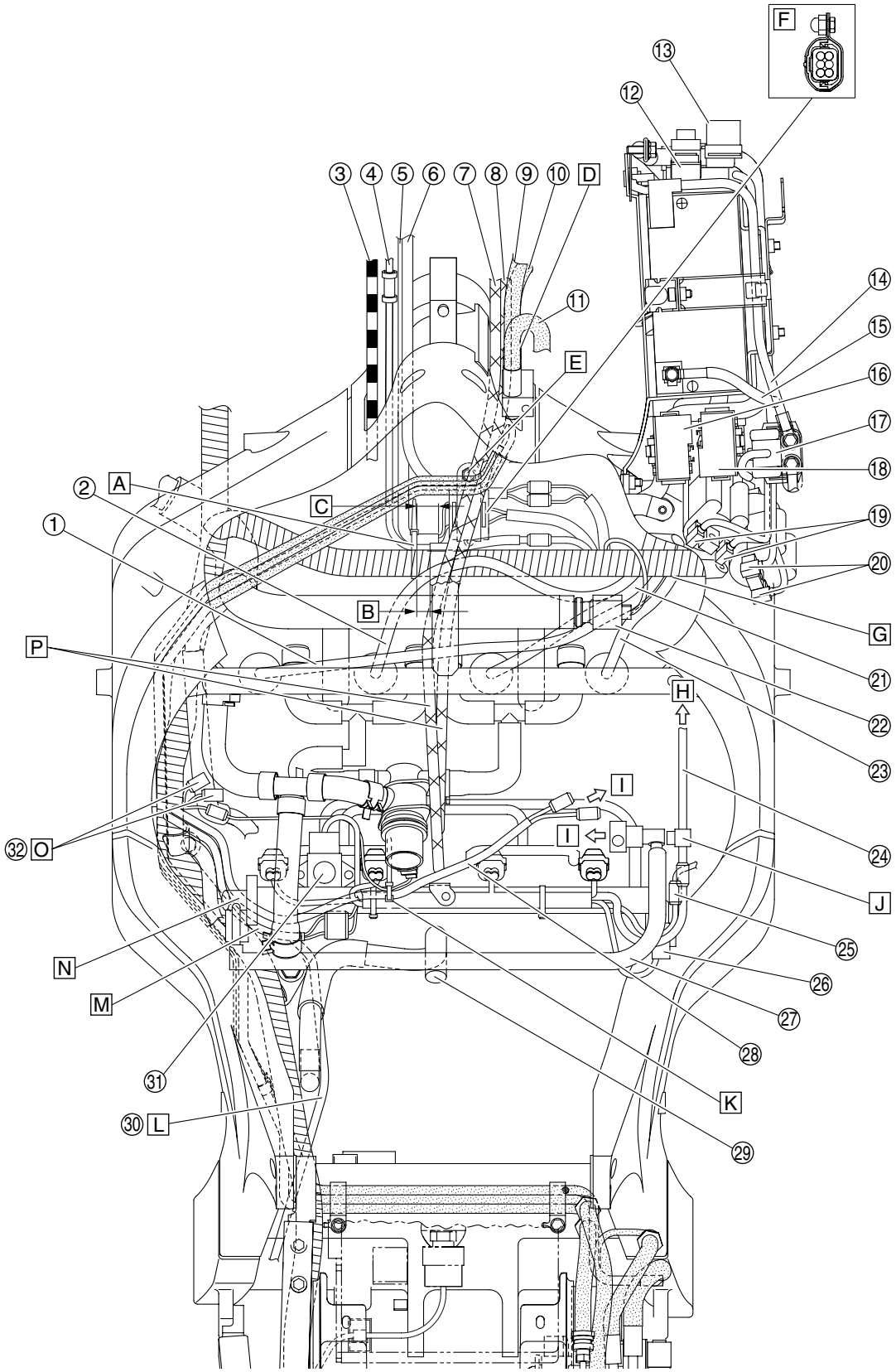
F
13
12
3
4
5
6
7
8
9
10
D
11
E
14
15
16
17
18
19
20
G
21
22
23
24
J
25
26
27
28
K
29
2
A
C
1
B
P
H
I
I
32
O
N
M
31
30
L

1. Spark plug lead #1
2. Spark plug lead #2
3. Clutch hose
4. Front wheel sensor lead
5. Immobilizer unit lead
6. Main switch lead
7. Throttle cable (accelerator cable)
8. Throttle cable (decelerator cable)
9. Brake hose (hydraulic unit to front brake calipers)
10. Brake hose (metering valve to right front brake caliper)
11. Brake hose (front brake master cylinder to hydraulic unit)
12. Main fuse
13. Brake light relay
14. Positive battery lead
15. Negative battery lead
16. Fuse box 1 (identified by blue tape on lead)
17. Starter relay
18. Fuse box 2
19. Cylinders-#2/#3 ignition coil connectors (white)
20. Cylinders-#1/#4 ignition coil connectors (black)
21. Spark plug lead #3
22. Coolant temperature sensor
23. Spark plug lead #4
24. Cylinder identification sensor lead
25. O_2 sensor coupler
26. Throttle position sensor
27. Fuel hose
28. Fuel pump/fuel sender lead
29. Crankcase breather hose
30. Stator coil lead
31. Intake air pressure sensor
32. Joint couplers

A. Fasten the immobilizer unit lead and front wheel sensor lead to the wire harness with a plastic locking tie, making sure to align the tie with the white tape on the harness. Face the end of the plastic locking tie forward. Do not cut off the excess end of the plastic locking tie.

B. Position the plastic locking tie 0–20 mm (0–0.79 in) from the end of the protective sleeve of the front wheel sensor lead.

C. Position the plastic locking tie 10–30 mm (0.39–1.18 in) from the end of the protective sleeve of the immobilizer unit lead.

D. Route the throttle cables and brake hoses through the right opening in the frame.

E. Install the immobilizer unit coupler holder so that the end with the bolt is facing forward.

F. Install the immobilizer unit coupler cover onto the coupler.

G. Route the wire harness over the spark plug leads.

H. To cylinder identification sensor

I. To fuel tank

J. Fasten the cylinder identification sensor lead with the holder on the throttle body.

K. Fasten the fuel pump/fuel sender lead and air induction system solenoid lead with a plastic locking tie, making sure that the end of the tie faces forward. Do not cut off the excess end of the plastic locking tie.

L. Route the stator coil lead to the inside of the engine bracket (top) and under the crankcase breather hose.

M. Route the wire harness (to sub-wire harness) under the fuel hose connector.

N. Route the fuel pump/fuel sender lead under the fuel hose connector.

O. Place the joint couplers in the area shown in the illustration, making sure that they do not protrude above the wire harness.

P. Route the throttle cables over the immobilizer unit lead, main switch lead, spark plug lead #2, and wire harness, and under spark plug lead #1.

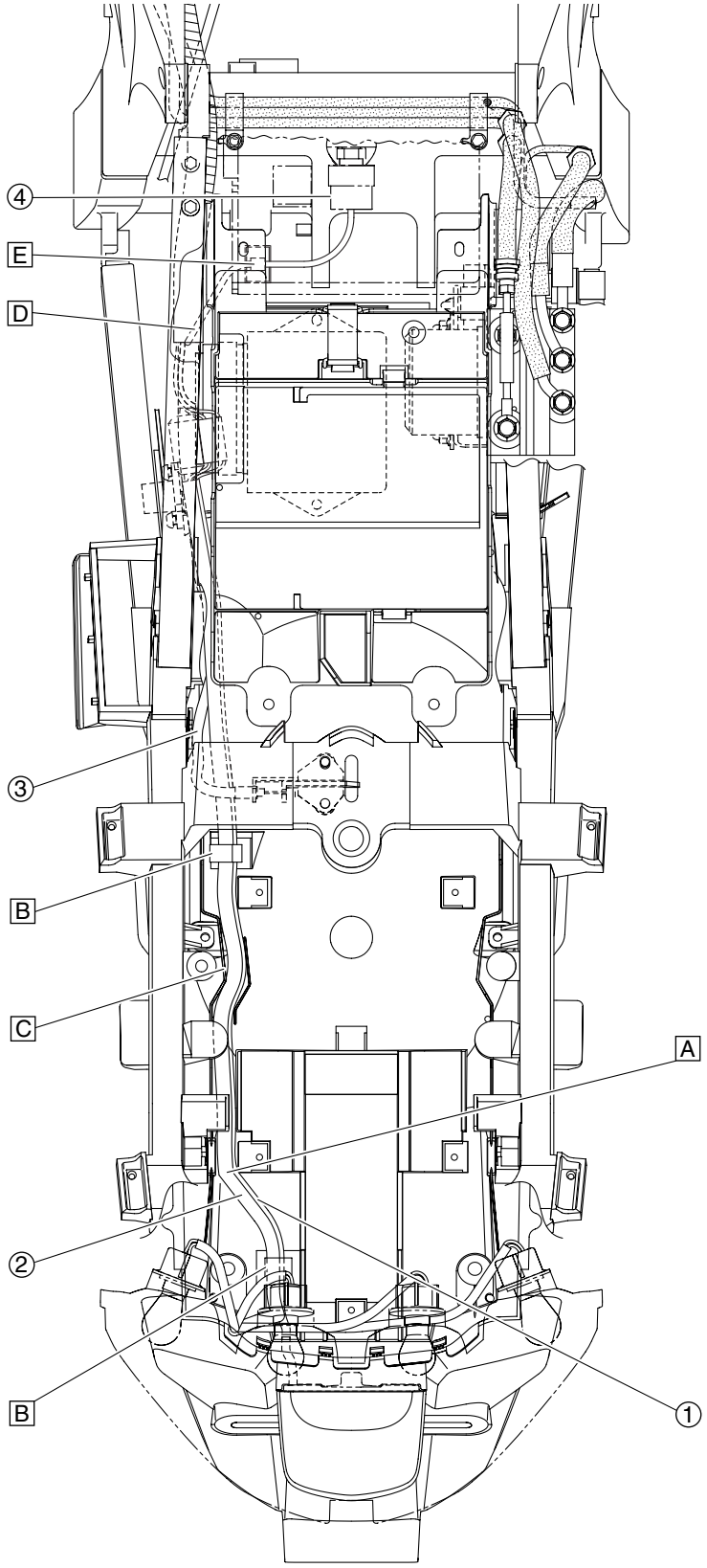
④
E
D
③
B
C
A
②
B
①

1. License plate light lead
2. Tail/brake light assembly lead
3. Seat lock cable
4. Intake air temperature sensor

A. Route the tail/brake light assembly lead and license plate light lead between the rib and the U-lock holder on the rear fender, making sure that the leads are not routed on top of the holder.
B. Fasten the tail/brake light assembly lead and license plate light lead with the holder.
C. Route the tail/brake light assembly lead and license plate light lead between the ribs on the rear fender.
D. Route the intake air temperature sensor lead under the wire harness.
E. Fasten the intake air temperature sensor lead to the air filter case with the holder.

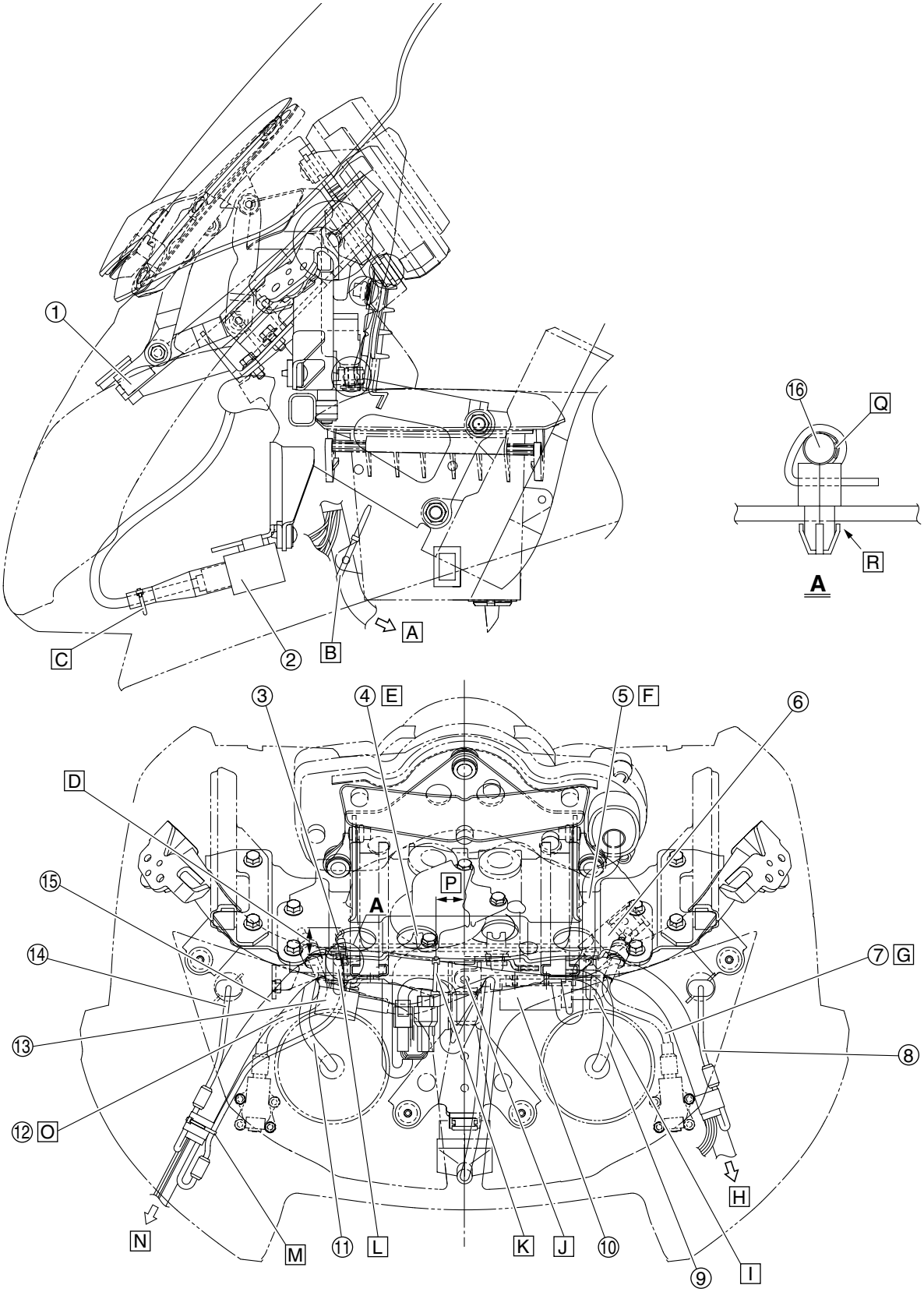
1
2
A
B
C
16
Q
R
A
3
4
E
5
F
6
D
15
P
A
14
7
G
13
8
12
O
H
N
M
11
L
K
J
10
9
I

1. Windshield drive unit
2. Relay unit
3. Thermistor
4. Windshield drive unit lead
5. Meter assembly lead
6. Headlight relay (dimmer)
7. Left headlight beam adjusting cable
8. Left auxiliary light lead
9. Left headlight lead
10. Lean angle sensor
11. Right headlight lead
12. Right headlight beam adjusting cable
13. Turn signal/hazard relay
14. Right auxiliary light lead
15. Front cowling wire harness
16. Thermistor lead

A. To wire harness

B. Fasten the front cowling wire harness to the stay on the accessory box with a plastic locking tie as shown in the illustration, making sure to position the tie below where the headlight leads branch off from the harness. Face the end of the plastic locking tie rearward, along the side of the accessory box. Do not cut off the excess end of the plastic locking tie.

C. Slide the boot over the relay unit coupler, and then fasten the boot with a plastic locking tie. Cut off the excess end of the plastic locking tie.

D. Less than 20 mm (0.79 in)

E. Pass the windshield drive unit lead through the hole in the windshield drive unit/meter assembly stay.

F. Route the meter assembly lead under the windshield drive unit.

G. Route the left headlight beam adjusting cable under the left headlight lead.

H. To wire harness

I. Secure the plastic band by inserting the projection on the band into the hole in the front of the windshield drive unit/meter assembly stay, and then fasten the front cowling wire harness with the band after the headlight lead branches off from the harness.

J. Secure the front cowling wire harness at the location shown in the illustration by inserting the projection on its holder into the hole in the windshield drive unit/meter assembly stay.

K. Fasten the leads (to windshield drive unit) that branch off from the front cowling wire harness to the harness with a plastic locking tie, making sure to position the tie 20 mm (0.79 in) from the drive unit couplers.

L. Secure the plastic band by inserting the projection on the band into the hole in the front of the windshield drive unit/meter assembly stay, and then fasten the front cowling wire harness with the band after the headlight lead branches off from the harness.

M. Fasten the thermistor lead to the front cowling wire harness with a plastic locking tie, making sure to align the tie with the tape used to fasten the front right turn signal light lead. The thermistor lead should not be taut.

N. To front right turn signal light, right horn (high), and wire harness

O. Route the right headlight beam adjusting cable between the right headlight lead and the thermistor lead.

P. Position the plastic locking tie 20–30 mm (0.79–1.18 in) to the right of the center of the front cowling as shown in the illustration.

Q. Fasten the thermistor lead with a plastic locking tie, and then cut off the excess end of the tie. Be sure to fold the protective sleeve against the lead to remove any space between the sleeve and the lead when fastening it.

R. Secure the plastic locking tie by inserting the projection on the tie into the hole in the rear of the windshield drive unit/meter assembly stay.

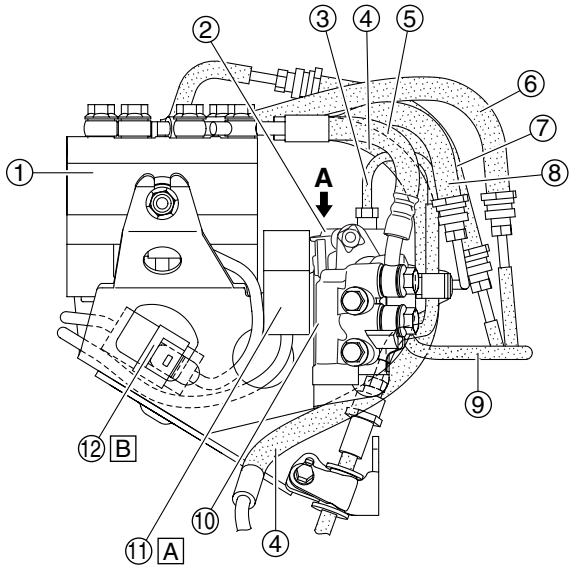

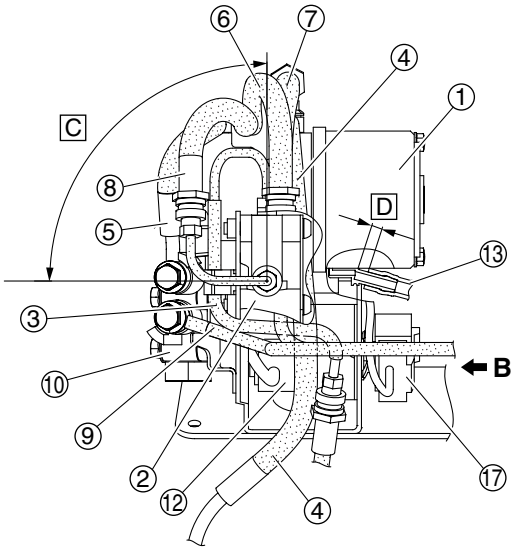

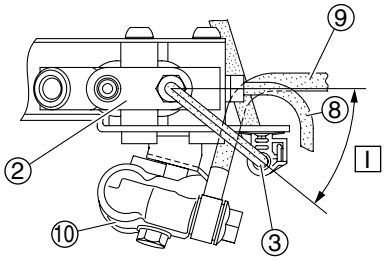

A

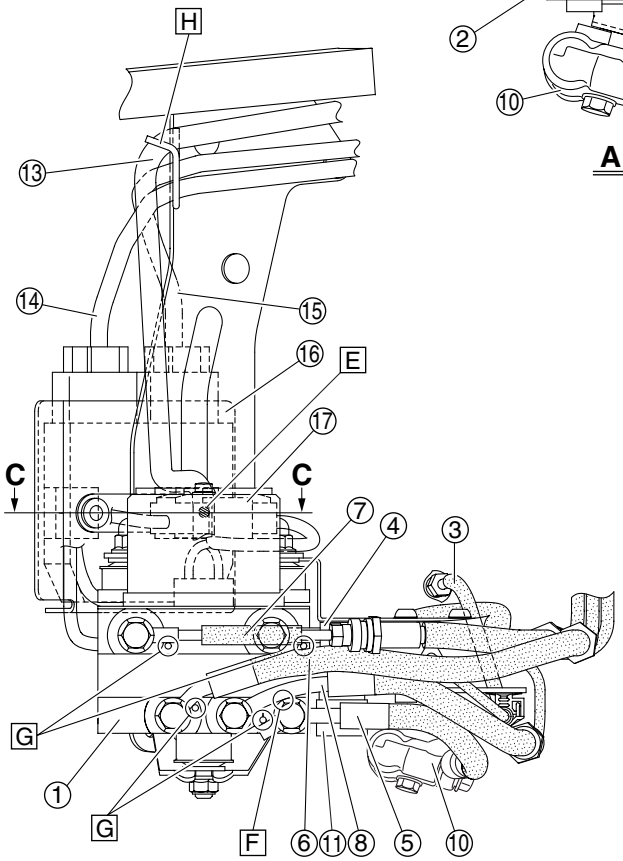

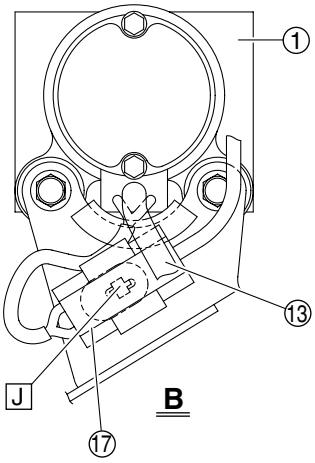

B

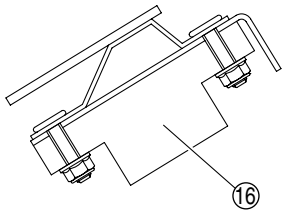

C-C

1. Hydraulic unit
2. Proportioning valve
3. Brake hose (proportioning valve to rear brake caliper)
4. Brake hose (rear brake master cylinder to hydraulic unit)
5. Brake hose (hydraulic unit to metering valve)
6. Brake hose (hydraulic unit to front brake calipers)
7. Brake hose (front brake master cylinder to hydraulic unit)
8. Brake hose (hydraulic unit to proportioning valve)
9. Brake hose (metering valve to right front brake caliper)
10. Metering valve
11. ABS motor relay
12. Hydraulic unit solenoid coupler
13. Hydraulic unit breather hose
14. Stator coil lead
15. Rectifier/regulator lead
16. Rectifier/regulator
17. ABS motor coupler

A. Install the ABS motor relay completely onto the tab on the hydraulic unit bracket.
B. Install the hydraulic unit solenoid coupler completely onto the tab on the hydraulic unit bracket.
C. 87–93°
D. 5–7 mm (0.20–0.28 in)
E. Install the hydraulic unit breather hose so that the white paint mark on the hose is facing down.
F. Make sure that the brake hose (hydraulic unit to proportioning valve) contacts the end of the brake hose (hydraulic unit to metering valve).
G. Make sure that the brake hoses contact the stoppers on the hydraulic unit.
H. Pass the hydraulic unit breather hose, stator coil lead, and rectifier/regulator lead though the guide.
I. 36–42°
J. Install the ABS motor coupler completely onto the tab on the hydraulic unit bracket.

PERIODIC CHECKS AND ADJUSTMENTS

PERIODIC MAINTENANCE 3-1
INTRODUCTION 3-1
PERIODIC MAINTENANCE AND LUBRICATION CHART 3-1

ENGINE 3-3
ADJUSTING THE VALVE CLEARANCE 3-3
SYNCHRONIZING THE THROTTLE BODIES 3-5
ADJUSTING THE EXHAUST GAS VOLUME 3-7
ADJUSTING THE ENGINE IDLING SPEED 3-8
ADJUSTING THE THROTTLE CABLE FREE PLAY 3-8
CHECKING THE SPARK PLUGS 3-9
CHECKING THE IGNITION TIMING 3-10
MEASURING THE COMPRESSION PRESSURE 3-11
CHECKING THE ENGINE OIL LEVEL 3-12
CHANGING THE ENGINE OIL 3-13
MEASURING THE ENGINE OIL PRESSURE 3-14
ADJUSTING THE CLUTCH LEVER 3-15
CHECKING THE CLUTCH FLUID LEVEL 3-15
BLEEDING THE HYDRAULIC CLUTCH SYSTEM 3-15
CLEANING THE AIR FILTER ELEMENT 3-16
CHECKING THE THROTTLE BODY JOINTS 3-16
CHECKING THE FUEL LINE 3-17
CHECKING THE CRANKCASE BREATHER HOSE 3-17
CHECKING THE EXHAUST SYSTEM 3-17
CHECKING THE COOLANT LEVEL 3-18
CHECKING THE COOLING SYSTEM 3-18
CHANGING THE COOLANT 3-19

CHASSIS 3-21
ADJUSTING THE FRONT DISC BRAKE 3-21
ADJUSTING THE REAR DISC BRAKE 3-21
CHECKING THE BRAKE FLUID LEVEL 3-22
CHECKING THE FRONT BRAKE PADS 3-22
CHECKING THE REAR BRAKE PADS 3-23
CHECKING THE BRAKE HOSES 3-23
ADJUSTING THE REAR BRAKE LIGHT SWITCH 3-23
BLEEDING THE HYDRAULIC BRAKE SYSTEM (ABS) 3-23
ADJUSTING THE SHIFT PEDAL 3-25
CHECKING THE FINAL GEAR OIL LEVEL 3-25
CHANGING THE FINAL GEAR OIL 3-26
CHECKING AND ADJUSTING THE STEERING HEAD 3-26
ADJUSTING THE HANDLEBAR POSITION 3-27
CHECKING THE FRONT FORK 3-28
ADJUSTING THE FRONT FORK LEGS 3-28
ADJUSTING THE REAR SHOCK ABSORBER ASSEMBLY 3-29
ADJUSTING THE SIDE PANELS 3-30
ADJUSTING THE RIDER SEAT HEIGHT 3-31
CHECKING THE TIRES 3-32
CHECKING THE WHEELS 3-34
CHECKING AND LUBRICATING THE CABLES 3-34
LUBRICATING THE LEVERS 3-34
LUBRICATING THE PEDALS 3-34
LUBRICATING THE SIDESTAND 3-35
LUBRICATING THE CENTERSTAND 3-35
LUBRICATING THE REAR SUSPENSION 3-35

ELECTRICAL SYSTEM 3-36
CHECKING AND CHARGING THE BATTERY 3-36
CHECKING THE FUSES 3-36
REPLACING THE HEADLIGHT BULBS 3-36
ADJUSTING THE HEADLIGHT BEAMS 3-36

EAS20450

PERIODIC MAINTENANCE

EAS20460

INTRODUCTION

This chapter includes all information necessary to perform recommended checks and adjustments. If followed, these preventive maintenance procedures will ensure more reliable vehicle operation, a longer service life and reduce the need for costly overhaul work. This information applies to vehicles already in service as well as to new vehicles that are being prepared for sale. All service technicians should be familiar with this entire chapter.

EAU17705

PERIODIC MAINTENANCE AND LUBRICATION CHART

NOTE:

- **The annual checks must be performed every year, except if a kilometer-based maintenance is performed instead.**
- From 50000 km, repeat the maintenance intervals starting from 10000 km.
- Items marked with an asterisk should be performed by a -Yamaha dealer as they require special tools, data and technical skills.

NO.		ITEM	CHECK OR MAINTENANCE JOB	ODOMETER READING (× 1000 km)					ANNUAL CHECK
				1	10	20	30	40	
1	*	**Fuel line**	• Check fuel hoses for cracks or damage.		√	√	√	√	√
2	*	**Spark plugs**	• Check condition. • Clean and regap.		√		√		
			• Replace.			√		√	
3	*	**Valves**	• Check valve clearance. • Adjust.	Every 40000 km					
4		**Air filter element**	• Clean.		√		√		
			• Replace.			√		√	
5	*	**Clutch**	• Check operation, fluid level and vehicle for fluid leakage.	√	√	√	√	√	
6	*	**Front brake**	• Check operation, fluid level and vehicle for fluid leakage.	√	√	√	√	√	√
			• Replace brake pads.	Whenever worn to the limit					
7	*	**Rear brake**	• Check operation, fluid level and vehicle for fluid leakage.	√	√	√	√	√	√
			• Replace brake pads.	Whenever worn to the limit					
8	*	**Brake hoses**	• Check for cracks or damage.		√	√	√	√	√
			• Replace.	Every 4 years					
9	*	**Wheels**	• Check runout and for damage.		√	√	√	√	
10	*	**Tires**	• Check tread depth and for damage. • Replace if necessary. • Check air pressure. • Correct if necessary.		√	√	√	√	√
11	*	**Wheel bearings**	• Check bearing for looseness or damage.		√	√	√	√	
12	*	**Swingarm**	• Check operation and for excessive play.		√	√	√	√	
			• Lubricate with lithium-soap-based grease.	Every 50000 km					
13	*	**Steering bearings**	• Check bearing play and steering for roughness.	√	√	√	√	√	
			• Lubricate with lithium-soap-based grease.	Every 20000 km					
14	*	**Chassis fasteners**	• Make sure that all nuts, bolts and screws are properly tightened.		√	√	√	√	√
15		**Sidestand, centerstand**	• Check operation. • Lubricate.		√	√	√	√	√
16	*	**Sidestand switch**	• Check operation.	√	√	√	√	√	√
17	*	**Front fork**	• Check operation and for oil leakage.		√	√	√	√	

NO.		ITEM	CHECK OR MAINTENANCE JOB	ODOMETER READING (× 1000 km)					ANNUAL CHECK
				1	10	20	30	40	
18	*	**Shock absorber assembly**	• Check operation and shock absorber for oil leakage.		√	√	√	√	
19	*	**Rear suspension relay arm and connecting arm pivoting points**	• Check operation.		√	√	√	√	
			• Lubricate with lithium-soap-based grease.			√		√	
20	*	**Fuel injection**	• Adjust engine idling speed and synchronization.	√	√	√	√	√	√
21		**Engine oil**	• Change. • Check oil level and vehicle for oil leakage.	√	√	√	√	√	√
22		**Engine oil filter cartridge**	• Replace.	√		√		√	
23	*	**Cooling system**	• Check coolant level and vehicle for coolant leakage.		√	√	√	√	√
			• Change.	Every 3 years					
24		**Final gear oil**	• Check oil level and vehicle for oil leakage. • Change.	√	√	√	√	√	
25	*	**Front and rear brake switches**	• Check operation.	√	√	√	√	√	√
26		**Moving parts and cables**	• Lubricate.		√	√	√	√	√
27	*	**Throttle grip housing and cable**	• Check operation and free play. • Adjust the throttle cable free play if necessary. • Lubricate the throttle grip housing and cable.		√	√	√	√	√
28	*	**Muffler and exhaust pipe**	• Check the screw clamp for looseness.	√	√	√	√	√	
29	*	**Lights, signals and switches**	• Check operation. • Adjust headlight beam.	√	√	√	√	√	√

EAU17670

NOTE:

- The air filter needs more frequent service if you are riding in unusually wet or dusty areas.
- Hydraulic brake and clutch service
  - Regularly check and, if necessary, correct the brake and clutch fluid levels.
  - Every two years replace the internal components of the brake master cylinders and calipers as well as clutch master and release cylinders, and change the brake and clutch fluids.
  - Replace the brake and clutch hoses every four years and if cracked or damaged.

EAS20470
ENGINE

EAS20490
ADJUSTING THE VALVE CLEARANCE

The following procedure applies to all of the valves.

NOTE:

- Valve clearance adjustment should be made on a cold engine, at room temperature.
- When the valve clearance is to be measured or adjusted, the piston must be at top dead center (TDC) on the compression stroke.

1. Remove:
   - Rider seat
   - Right side cowling
     Refer to “GENERAL CHASSIS” on page 4-1.
   - Fuel tank
     Refer to “FUEL TANK” on page 7-1.
   - T-bar
     Refer to “GENERAL CHASSIS” on page 4-1.
   - Air cut-off valve
     Refer to “AIR INDUCTION SYSTEM” on page 7-9.
   - Thermostat inlet pipe 1
     Refer to “THERMOSTAT” on page 6-6.
2. Disconnect:
   - Throttle cables
3. Remove:
   - Spark plugs
   - Cylinder head cover
   - Cylinder head cover gasket
     Refer to “CAMSHAFTS” on page 5-9.
4. Remove:
   - Hose holder “1”
   - Lead holders “2”
   - Pickup rotor cover “3”

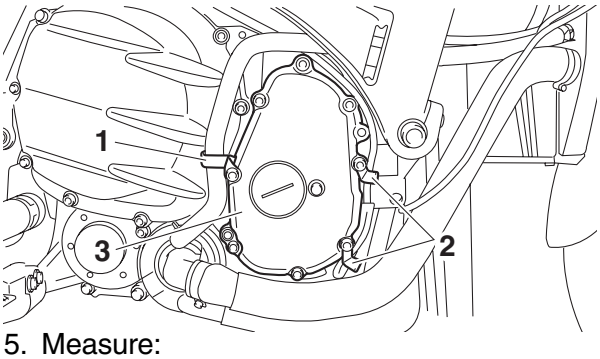

5. Measure:
   - Valve clearance
     Out of specification → Adjust.

Valve clearance (cold)
Intake
0.15–0.22 mm (0.0059–0.0087 in)
Exhaust
0.18–0.25 mm (0.0071–0.0098 in)

▼▼▼▼▼▼▼▼▼▼▼▼▼▼▼▼▼▼▼▼▼▼▼▼▼▼▼▼▼▼▼▼▼▼

a. Turn the crankshaft clockwise.
b. When piston #1 is at TDC on the compression stroke, align the TDC mark “a” on the pickup rotor with the crankcase mating surface “b”.

NOTE:

TDC on the compression stroke can be found when the camshaft lobes are turned away from each other.

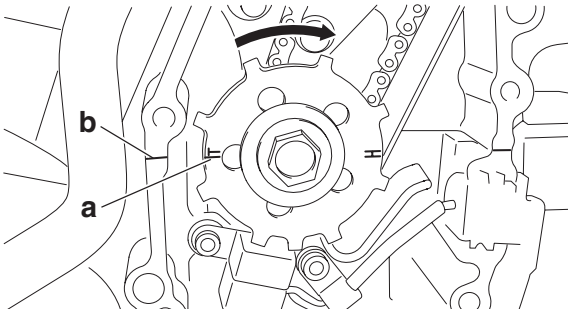

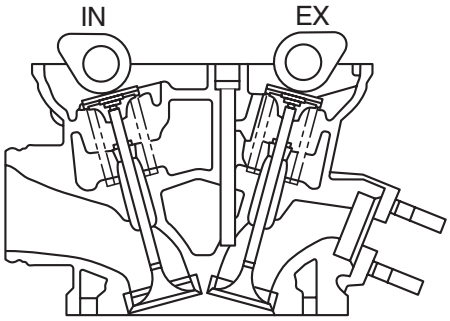

c. Measure the valve clearance with a thickness gauge “1”.

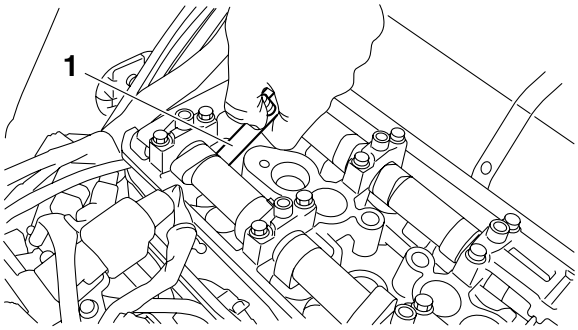

NOTE:

- If the valve clearance is incorrect, record the measured reading.

• Measure the valve clearance in the following sequence.

Valve clearance measuring sequence
Cylinder #1 → #2 → #4 → #3

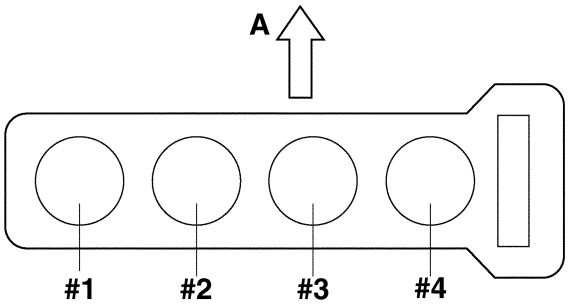

A. Front

d. To measure the valve clearances of the other cylinders, starting with cylinder #1 at TDC, turn the crankshaft clockwise as specified in the following table.

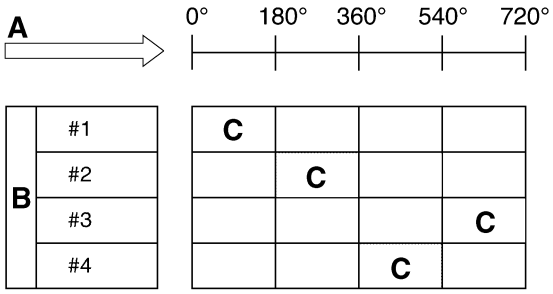

A. Degrees that the crankshaft is turned clockwise
B. Cylinder
C. Combustion cycle

Cylinder #2	180°
Cylinder #4	360°
Cylinder #3	540°

▲▲▲▲▲▲▲▲▲▲▲▲▲▲▲▲▲▲▲▲▲▲▲▲▲▲▲▲▲▲▲▲

6. Remove:
   • Camshafts

NOTE:

• Refer to "CAMSHAFTS" on page 5-9.
• When removing the timing chain and camshafts, fasten the timing chain with a wire to retrieve it if it falls into the crankcase.

7. Adjust:
   • Valve clearance

▼▼▼▼▼▼▼▼▼▼▼▼▼▼▼▼▼▼▼▼▼▼▼▼▼▼▼▼▼▼▼▼

a. Remove the valve lifter "1" and the valve pad "2" with a valve lapper "3".

Valve lapper
90890-04101
Valve lapping tool
YM-A8998

NOTE:

• Cover the timing chain opening with a rag to prevent the valve pad from falling into the crankcase.
• Make a note of the position of each valve lifter "1" and valve pad "2" so that they can be installed in the correct place.

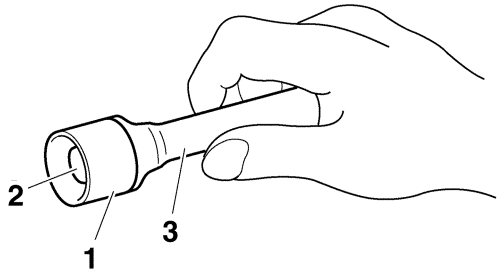

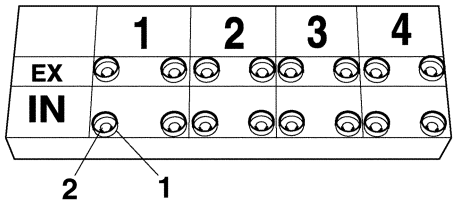

b. Calculate the difference between the specified valve clearance and the measured valve clearance.
   Example:
   Specified valve clearance = 0.15–0.22 mm (0.0059–0.0087 in)
   Measured valve clearance = 0.25 mm (0.0098 in)
   0.25 mm (0.0098 in) - 0.22 mm (0.0087 in) = 0.03 mm (0.001 in)
c. Check the thickness of the current valve pad.

NOTE:

The thickness "a" of each valve pad is marked in hundredths of millimeters on the side that touches the valve lifter.

Example:
If the valve pad is marked “155”, the pad thickness is 1.55 mm (0.061 in).

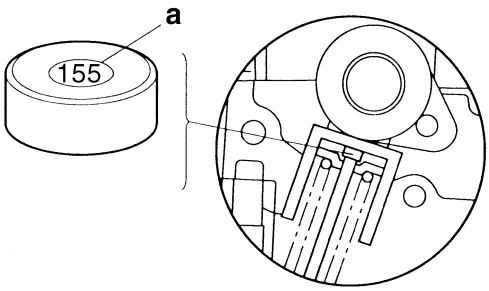

d. Calculate the sum of the values obtained in steps (b) and (c) to determine the required valve pad thickness and the valve pad number.
Example:
1.55 mm (0.061 in) + 0.03 mm (0.001 in) = 1.58 mm (0.062 in)
The valve pad number is 158.
e. Round off the valve pad number according to the following table, and then select the suitable valve pad.

Last digit	Rounded value
0, 1, 2	0
3, 4, 5, 6	5
7, 8, 9	10

NOTE:
Refer to the following table for the available valve pads.

Valve pad range	Nos. 120–240
Valve pad thickness	1.20–2.40 mm (0.0472–0.0945 in)
Available valve pads	25 thicknesses in 0.05 mm (0.002 in) increments

Example:
Valve pad number = 158
Rounded value = 160
New valve pad number = 160
f. Install the new valve pad “1” and the valve lifter “2”.

NOTE:
- Lubricate the valve lifter with engine oil.
- The valve lifter must turn smoothly when rotated by hand.
- Install the valve lifter and the valve pad in the correct place.

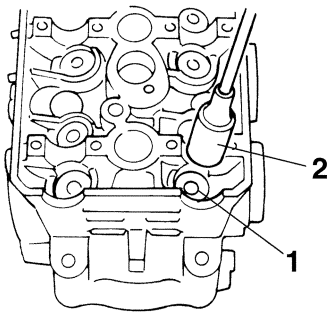

g. Install the exhaust and intake camshafts, timing chain and camshaft caps.

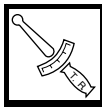	**Camshaft cap bolt** **10 Nm (1.0 m·kg, 7.2 ft·lb)**

NOTE:
- Refer to “CAMSHAFTS” on page 5-9.
- Lubricate the camshaft bearings, camshaft lobes and camshaft journals.
- First, install the exhaust camshaft.
- Turn the crankshaft clockwise several full turns to seat the parts.

h. Measure the valve clearance again.
i. If the valve clearance is still out of specification, repeat all of the valve clearance adjustment steps until the specified clearance is obtained.

▲▲▲▲▲▲▲▲▲▲▲▲▲▲▲▲▲▲▲▲▲▲▲▲▲▲▲▲▲▲▲▲▲▲

8. Install:
   - All removed parts

NOTE:
For installation, reverse the removal procedure.

9. Adjust:
   - Throttle cable free play
     Refer to “ADJUSTING THE THROTTLE CABLE FREE PLAY” on page 3-8.

EAS20570
SYNCHRONIZING THE THROTTLE BODIES

NOTE:
Prior to synchronizing the throttle bodies, the valve clearance and the engine idling speed should be properly adjusted and the ignition timing should be checked.

1. Stand the vehicle on a level surface.

NOTE:
Place the vehicle on the centerstand.

2. Remove:
   - Rider seat
     Refer to “GENERAL CHASSIS” on page 4-1.
   - Fuel tank
     Refer to “FUEL TANK” on page 7-1.
   - T-bar
     Refer to “GENERAL CHASSIS” on page 4-1.
3. Remove:
   - Caps “1”

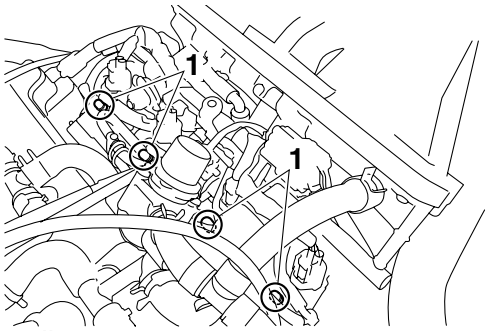

4. Install:
   - Vacuum gauge “1”
   - Digital tachometer

Vacuum gauge
90890-03094
Carburetor synchronizer
YU-44456

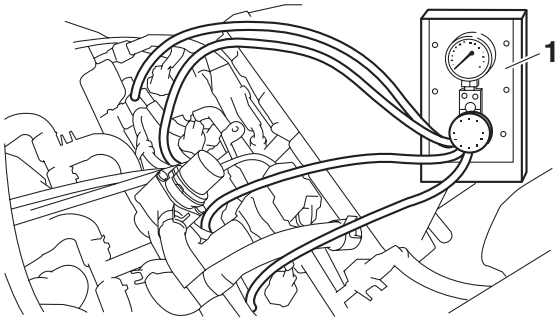

5. Install:
   - Fuel tank
6. Start the engine and let it warm up for several minutes.
7. Measure:
   - Engine idling speed
     Out of specification → Adjust.
     Refer to “ADJUSTING THE ENGINE IDLING SPEED” on page 3-8.

Engine idling speed
1000–1100 r/min

8. Adjust:
   - Throttle body synchronization

▼▼▼▼▼▼▼▼▼▼▼▼▼▼▼▼▼▼▼▼▼▼▼▼▼▼▼▼▼▼▼▼▼▼

a. With throttle body #3 as standard, adjust throttle bodies #1, #2, and #4 using the air screw “1”.

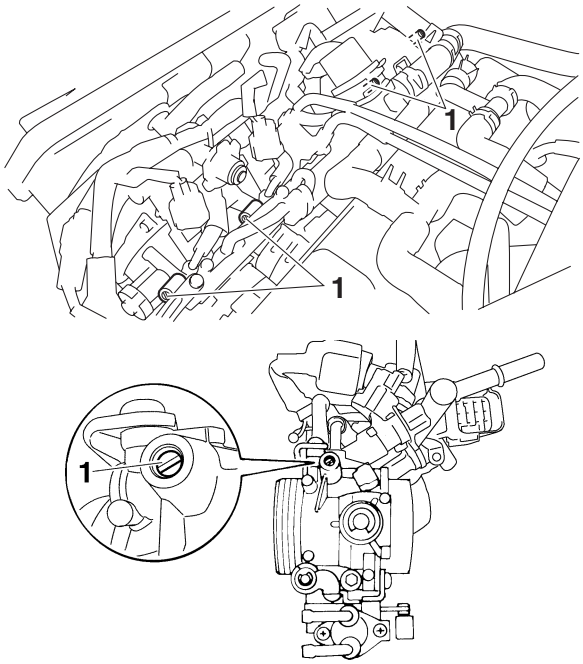

NOTE:
- After each step, rev the engine two or three times, each time for less than a second, and check the synchronization again.
- If the air screw was removed, turn the screw 3/4 turn in and be sure to synchronize the throttle body.

ECA14900
CAUTION:
Do not use the throttle valve adjusting screws to adjust the throttle body synchronization.

Vacuum gauge
90890-03094
Carburetor synchronizer
YU-44456

Intake vacuum
33.3 kPa (9.8 inHg) (250 mmHg)

NOTE:
The difference in vacuum pressure between two throttle bodies should not exceed 1.33 kPa (0.39 inHg) (10 mmHg).

▲▲▲▲▲▲▲▲▲▲▲▲▲▲▲▲▲▲▲▲▲▲▲▲▲▲▲▲▲▲▲▲▲▲

9. Measure:
   - Engine idling speed
     Out of specification → Adjust.
     Make sure that the vacuum pressure is within specification.
10. Stop the engine and remove the measuring equipment.
11. Adjust:
   - Throttle cable free play
     Refer to "ADJUSTING THE THROTTLE CABLE FREE PLAY" on page 3-8.

	Throttle cable free play **3.0–5.0 mm (0.12–0.20 in)**

12. Install:
   - Caps
13. Install:
   - T-bar
   - Rider seat
     Refer to "GENERAL CHASSIS" on page 4-1.

EAS20600

ADJUSTING THE EXHAUST GAS VOLUME

NOTE:

Be sure to set the CO density level to standard, and then adjust the exhaust gas volume.

1. Turn the main switch to "OFF".
2. Simultaneously press and hold the "SELECT" and "RESET" buttons, turn the main switch to "ON", and continue to press the buttons for 8 seconds or more.

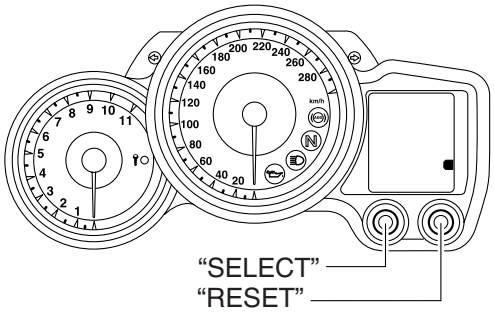

NOTE:

- All displays on the meter disappear except the odometer/tripmeter/fuel reserve tripmeter displays.
- "dIAG" appears on the odometer/tripmeter/fuel reserve tripmeter LCD.

3. Press the "SELECT" button to select the CO adjustment mode "Co" "1" or the diagnostic mode "dIAG".

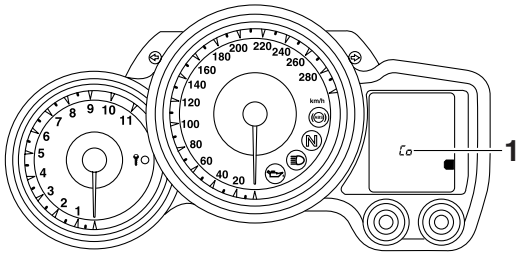

4. After selecting "CO", simultaneously press the "SELECT" and "RESET" buttons for 2 seconds or more to activate the selection.
5. Press the "SELECT" and "RESET" buttons to select a cylinder number "1".

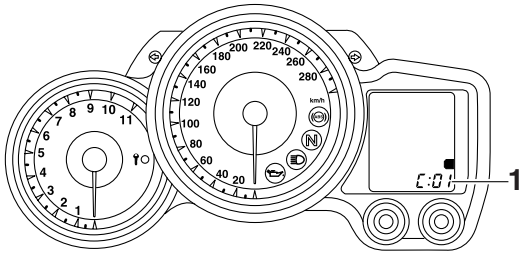

NOTE:

The selected cylinder number appears on the clock LCD.

- To decrease the selected cylinder number, press the "RESET" button.
- To increase the selected cylinder number, press the "SELECT" button.

6. After selecting the cylinder number, simultaneously press the "SELECT" and "RESET" buttons for 2 seconds or more to activate the selection.
7. Change the CO adjustment volume "2" by pressing the "SELECT" and "RESET" buttons.

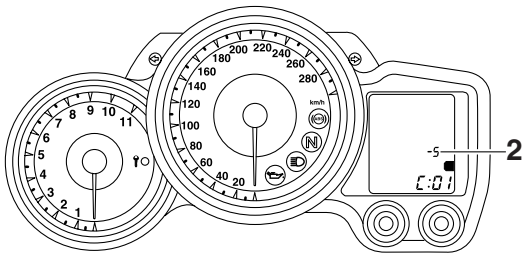

NOTE:

The CO adjustment volume appears on the odometer/tripmeter/fuel reserve tripmeter LCD.
- To decrease the CO adjustment volume, press the “RESET” button.
- To increase the CO adjustment volume, press the “SELECT” button.

8. Simultaneously press the “SELECT” and “RESET” buttons to return to the cylinder number selection (step 5).
9. Turn the main switch to “OFF” to cancel the mode.

EAS20610

ADJUSTING THE ENGINE IDLING SPEED

NOTE:

Prior to adjusting the engine idling speed, the throttle body synchronization should be adjusted properly, the air filter element should be clean, and the engine should have adequate compression.

1. Start the engine and let it warm up for several minutes.
2. Remove:
   - Right side cowling
   - Rider seat
     Refer to “GENERAL CHASSIS” on page 4-1.
   - Fuel tank
     Refer to “FUEL TANK” on page 7-1.
   - T-bar
     Refer to “GENERAL CHASSIS” on page 4-1.
3. Install:
   - Digital tachometer
     (onto the spark plug lead of cylinder #1)
4. Install:
   - Fuel tank
     Refer to “FUEL TANK” on page 7-1.
5. Check:
   - Engine idling speed
     Out of specification → Adjust.

Engine idling speed
1000–1100 r/min

6. Adjust:
   - Engine idling speed

▼▼▼▼▼▼▼▼▼▼▼▼▼▼▼▼▼▼▼▼▼▼▼▼▼▼▼▼▼▼▼▼▼▼

a. Turn the engine idle speed adjustment screw “1” in direction “a” or “b” until the specified engine idling speed is obtained.

Direction “a”
Engine idling speed is increased.
Direction “b”
Engine idling speed is decreased.

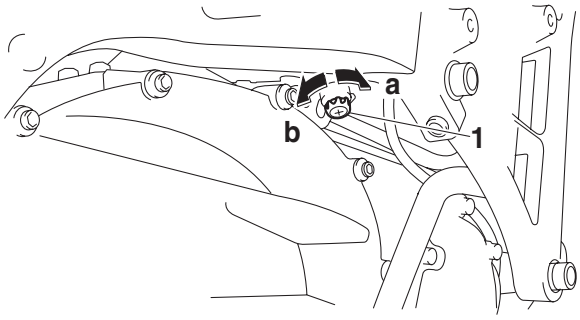

▲▲▲▲▲▲▲▲▲▲▲▲▲▲▲▲▲▲▲▲▲▲▲▲▲▲▲▲▲▲▲▲▲▲

7. Adjust:
   - Throttle cable free play
     Refer to “ADJUSTING THE THROTTLE CABLE FREE PLAY” on page 3-8.

Throttle cable free play
3.0–5.0 mm (0.12–0.20 in)

8. Install:
   - T-bar
   - Rider seat
   - Right side cowling
     Refer to “GENERAL CHASSIS” on page 4-1.

EAS20630

ADJUSTING THE THROTTLE CABLE FREE PLAY

NOTE:

Prior to adjusting the throttle cable free play, the engine idling speed and throttle body synchronization should be adjusted properly.

1. Check:
   - Throttle cable free play “a”
     Out of specification → Adjust.

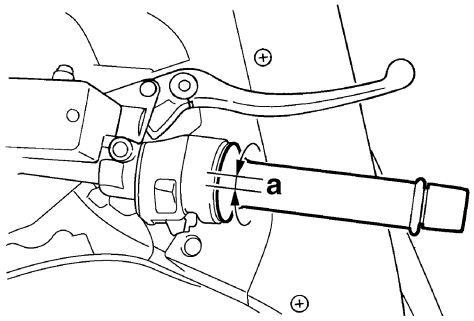

Throttle cable free play
3.0–5.0 mm (0.12–0.20 in)

2. Remove:
   - Rider seat
     Refer to “GENERAL CHASSIS” on page 4-1.
   - Fuel tank
     Refer to “FUEL TANK” on page 7-1.
   - T-bar
     Refer to “GENERAL CHASSIS” on page 4-1.
3. Adjust:
   - Throttle cable free play

▼▼▼▼▼▼▼▼▼▼▼▼▼▼▼▼▼▼▼▼▼▼▼▼▼▼▼▼▼▼▼▼▼▼

Throttle body side

a. Loosen the locknut “1” on the accelerator cable.
b. Turn the adjusting nut “2” in direction “a” or “b” until the specified throttle cable free play is obtained.

Direction “a”
Throttle cable free play is increased.
Direction “b”
Throttle cable free play is decreased.

c. Tighten the locknut.

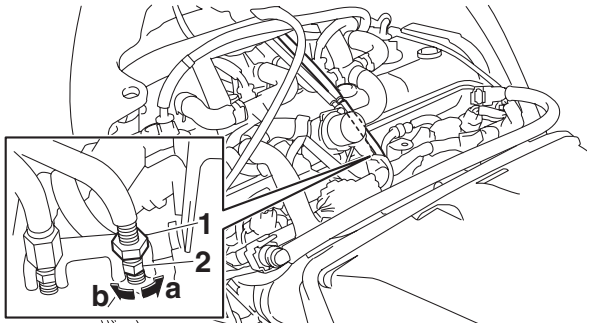

NOTE:

If the specified throttle cable free play cannot be obtained on the throttle body side of the cable, use the adjusting nut on the handlebar side.

▲▲▲▲▲▲▲▲▲▲▲▲▲▲▲▲▲▲▲▲▲▲▲▲▲▲▲▲▲▲▲▲▲▲

▼▼▼▼▼▼▼▼▼▼▼▼▼▼▼▼▼▼▼▼▼▼▼▼▼▼▼▼▼▼▼▼▼▼

Handlebar side

a. Slide back the rubber covers “1”.
b. Loosen the locknut “2”.
c. Turn the adjusting nut “3” in direction “a” or “b” until the specified throttle cable free play is obtained.

Direction “a”
Throttle cable free play is increased.
Direction “b”
Throttle cable free play is decreased.

d. Tighten the locknut.
e. Slide the rubber covers to its original position.

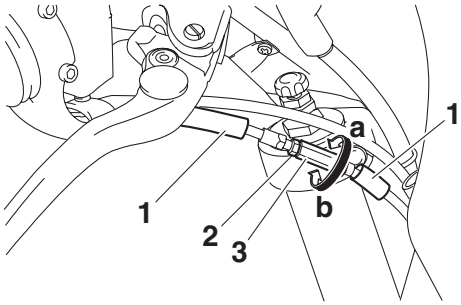

▲▲▲▲▲▲▲▲▲▲▲▲▲▲▲▲▲▲▲▲▲▲▲▲▲▲▲▲▲▲▲▲▲▲

4. Install:
   - T-bar
     Refer to “GENERAL CHASSIS” on page 4-1.
   - Fuel tank
     Refer to “FUEL TANK” on page 7-1.
   - Rider seat
     Refer to “GENERAL CHASSIS” on page 4-1.

EAS20680

CHECKING THE SPARK PLUGS

The following procedure applies to all of the spark plugs.

1. Remove:
   - Rider seat
     Refer to “GENERAL CHASSIS” on page 4-1.
   - Fuel tank
     Refer to “FUEL TANK” on page 7-1.
   - T-bar
     Refer to “GENERAL CHASSIS” on page 4-1.
2. Disconnect:
   - Spark plug cap
3. Remove:
   - Spark plug

ECA13320

CAUTION:

Before removing the spark plugs, blow away any dirt accumulated in the spark plug wells with compressed air to prevent it from falling into the cylinders.

4. Check:
   - Spark plug type
     Incorrect → Change.

Manufacturer/model
NGK/CR8E
Manufacturer/model
DENSO/U24ESR-N

5. Check:
   - Electrode “1”
     Damage/wear → Replace the spark plug.

- Insulator “2”
  Abnormal color → Replace the spark plug.
  Normal color is medium-to-light tan.

6. Clean:
   - Spark plug
     (with a spark plug cleaner or wire brush)
7. Measure:
   - Spark plug gap “a”
     (with a wire thickness gauge)
     Out of specification → Regap.

	Spark plug gap **0.7–0.8 mm (0.028–0.031 in)**

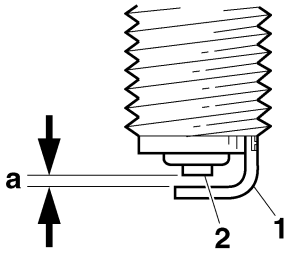

8. Install:
   - Spark plug

	Spark plug **13 Nm (1.3 m·kg, 9.4 ft·lb)**

NOTE:

Before installing the spark plug, clean the spark plug and gasket surface.

9. Connect:
   - Spark plug
10. Install:
    - T-bar
      Refer to “GENERAL CHASSIS” on page 4-1.
    - Fuel tank
      Refer to “FUEL TANK” on page 7-1.
    - Rider seat
      Refer to “GENERAL CHASSIS” on page 4-1.

EAS20700

CHECKING THE IGNITION TIMING

NOTE:

Prior to checking the ignition timing, check the wiring connections of the entire ignition system. Make sure all connections are tight and free of corrosion.

1. Stand the vehicle on a level surface.

NOTE:

Place the vehicle on the centerstand.

2. Remove:
   - Right side cowling
   - Rider seat
     Refer to “GENERAL CHASSIS” on page 4-1.
   - Fuel tank
     Refer to “FUEL TANK” on page 7-1.
   - T-bar
     Refer to “GENERAL CHASSIS” on page 4-1.
3. Remove:
   - Timing mark accessing plug “1”
     (along with the copper washer)

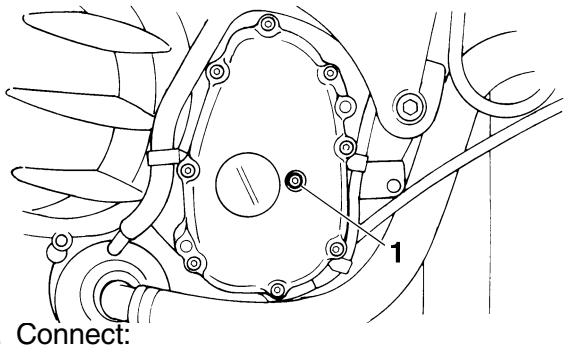

4. Connect:
   - Timing light “1”
     (onto the spark plug lead of cylinder #1)
   - Digital tachometer
     (onto the spark plug lead of cylinder #1)

	Timing light **90890-03141** **Inductive clamp timing light** **YU-03141**

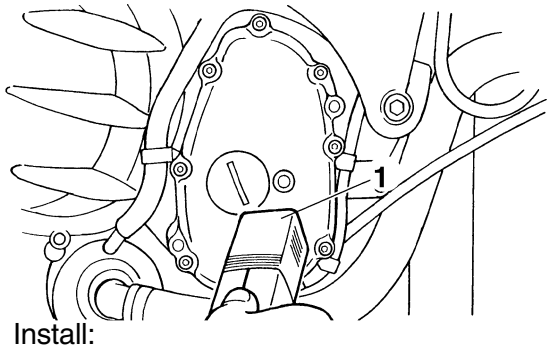

5. Install:
   - Fuel tank
     Refer to “FUEL TANK” on page 7-1.
6. Check:
   - Ignition timing

▼▼▼▼▼▼▼▼▼▼▼▼▼▼▼▼▼▼▼▼▼▼▼▼▼▼▼▼▼▼▼▼▼▼

a. Start the engine, warm it up for several minutes, and then let it run at the specified engine idling speed.

	Engine idling speed **1000–1100 r/min**

b. Check that pointer “a” on the pickup rotor cover is within the firing range “b” on the pickup rotor.
Incorrect firing range → Check the ignition system.

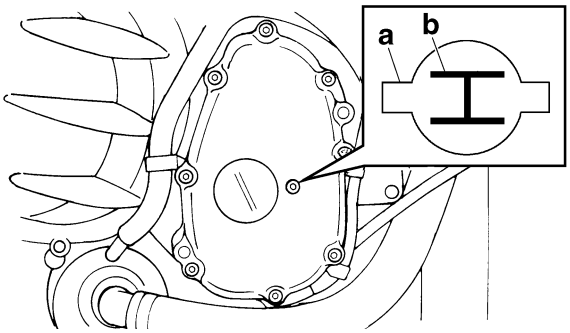

NOTE:

The ignition timing is not adjustable.

▲▲▲▲▲▲▲▲▲▲▲▲▲▲▲▲▲▲▲▲▲▲▲▲▲▲▲▲▲▲▲▲▲▲

7. Tighten:
   - Timing mark accessing plug
     (along with the copper washer New)

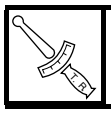	**Timing mark accessing plug** **15 Nm (1.5 m·kg, 11 ft·lb)**

8. Install:
   - T-bar
   - Rider seat
   - Right side cowling
     Refer to “GENERAL CHASSIS” on page 4-1.

EAS20710

MEASURING THE COMPRESSION PRESSURE

The following procedure applies to all of the cylinders.

NOTE:

Insufficient compression pressure will result in a loss of performance.

1. Measure:
   - Valve clearance
     Out of specification → Adjust.
     Refer to “ADJUSTING THE VALVE CLEARANCE” on page 3-3.
2. Start the engine, warm it up for several minutes, and then turn it off.
3. Remove:
   - Rider seat
     Refer to “GENERAL CHASSIS” on page 4-1.
   - Fuel tank
     Refer to “FUEL TANK” on page 7-1.
   - T-bar
     Refer to “GENERAL CHASSIS” on page 4-1.
4. Disconnect the all spark plug caps.
5. Remove:
   - Spark plug

ECA13340

CAUTION:

Before removing the spark plugs, use compressed air to blow away any dirt accumulated in the spark plug wells to prevent it from falling into the cylinders.

6. Install:
   - Compression gauge “1”

	Compression gauge **90890-03081** **Engine compression tester** **YU-33223**

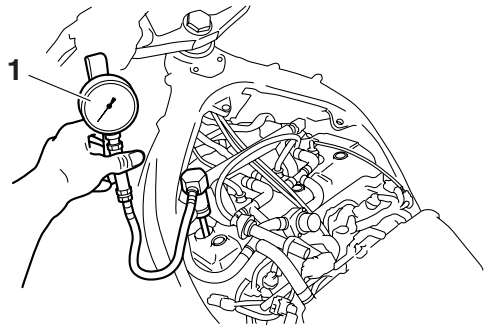

7. Measure:
   - Compression pressure
     Out of specification → Refer to steps (c) and (d).

	Standard compression pressure (at sea level) **1600 kPa/400 r/min (228 psi/400 r/min) (16.0 kgf/cm²/400 r/min)** **Minimum–maximum** **1390–1790 kPa (198–255 psi) (13.9–17.9 kgf/cm²)**

▼▼▼▼▼▼▼▼▼▼▼▼▼▼▼▼▼▼▼▼▼▼▼▼▼▼▼▼▼▼▼▼▼▼

a. Set the main switch to “ON”.
b. With the throttle wide open, crank the engine until the reading on the compression gauge stabilizes.

NOTE:

The difference in compression pressure between cylinders should not exceed 100 kPa (1 kg/cm², 14 psi).

c. If the compression pressure is above the maximum specification, check the cylinder head, valve surfaces and piston crown for carbon deposits.
   Carbon deposits → Eliminate.
d. If the compression pressure is below the minimum specification, pour a teaspoonful of engine oil into the spark plug bore and measure again.
   Refer to the following table.

Compression pressure (with oil applied into the cylinder)	
Reading	Diagnosis
Higher than without oil	Piston ring(s) wear or damage → Repair.
Same as without oil	Pistons, valves, cylinder head gasket or piston ring(s) possibly defective → Repair.

▲▲▲▲▲▲▲▲▲▲▲▲▲▲▲▲▲▲▲▲▲▲▲▲▲▲▲▲▲▲▲▲▲▲

8. Install:
   • Spark plug

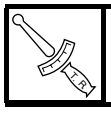

Spark plug
13 Nm (1.3 m·kg, 9.4 ft·lb)

9. Connect the all spark plug caps.
10. Install:
   • T-bar
     Refer to “GENERAL CHASSIS” on page 4-1.
   • Fuel tank
     Refer to “FUEL TANK” on page 7-1.
   • Rider seat
     Refer to “GENERAL CHASSIS” on page 4-1.

EAS20730

CHECKING THE ENGINE OIL LEVEL

1. Stand the vehicle on a level surface.

NOTE:
• Place the vehicle on the centerstand.
• Make sure the vehicle is upright.

2. Start the engine, warm it up for several minutes, and then turn it off.
3. Check:
   • Engine oil level
     The engine oil level should be between the minimum level mark “a” and maximum level mark “b”.
     Below the minimum level mark → Add the recommended engine oil to the proper level.

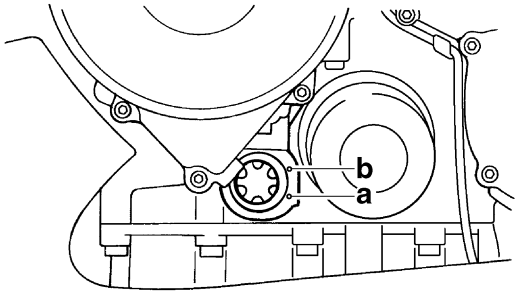

Type
SAE20W40
Recommended engine oil grade
API service SE, SF, SG type or higher
ACEA standard
G4 or G5

EC3P61036

CAUTION:
• **Engine oil also lubricates the clutch and the wrong oil types or additives could cause clutch slippage. Therefore, do not add any chemical additives or use engine oils with a grade of CD “a” or higher and do not use oils labeled “ENERGY CONSERVING II” “b”.**
• **Do not allow foreign materials to enter the crankcase.**

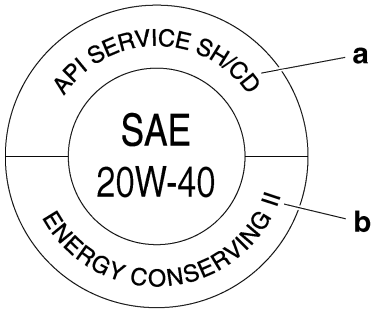

NOTE:
Before checking the engine oil level, wait a few minutes until the oil has settled.

4. Start the engine, warm it up for several minutes, and then turn it off.
5. Check the engine oil level again.

NOTE:
Before checking the engine oil level, wait a few minutes until the oil has settled.

EAS20780
CHANGING THE ENGINE OIL

1. Start the engine, warm it up for several minutes, and then turn it off.
2. Place a container under the engine oil drain bolt.
3. Remove:
   - Engine oil filler cap “1”
   - Engine oil drain bolt “2”
     (along with the gasket)

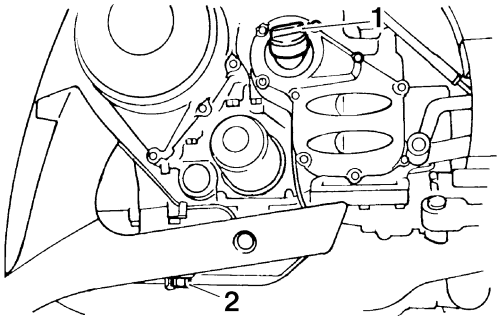

4. Drain:
   - Engine oil
     (completely from the crankcase)
5. If the oil filter cartridge is also to be replaced, perform the following procedure.

▼▼▼▼▼▼▼▼▼▼▼▼▼▼▼▼▼▼▼▼▼▼▼▼▼▼▼▼▼▼▼▼▼▼

a. Remove the oil filter cartridge “1” with an oil filter wrench “2”.

	Oil filter wrench **90890-01426** **YU-38411**

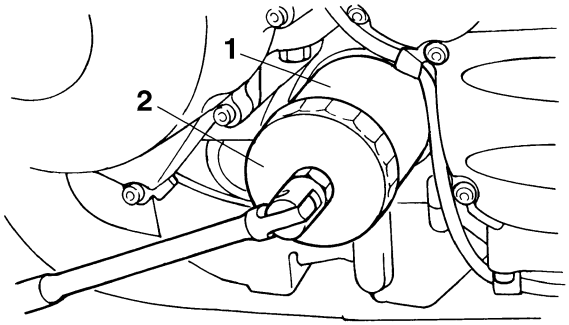

b. Lubricate the O-ring “3” of the new oil filter cartridge with a thin coat of engine oil.

ECA13390

CAUTION:

Make sure the O-ring “3” is positioned correctly in the groove of the oil filter cartridge.

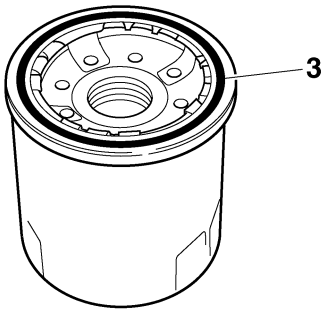

c. Tighten the new oil filter cartridge to specification with an oil filter wrench.

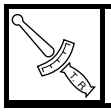	**Oil filter cartridge** **17 Nm (1.7 m·kg, 12 ft·lb)**

▲▲▲▲▲▲▲▲▲▲▲▲▲▲▲▲▲▲▲▲▲▲▲▲▲▲▲▲▲▲▲▲▲▲

6. Install:
   - Engine oil drain bolt
     (along with the gasket New)

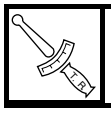	**Engine oil drain bolt** **43 Nm (4.3 m·kg, 31 ft·lb)**

7. Fill:
   - Crankcase
     (with the specified amount of the recommended engine oil)

	Engine oil quantity **Total amount** **4.90 L (5.18 US qt) (4.31 Imp.qt)** **Without oil filter cartridge replacement** **3.80 L (4.02 US qt) (3.34 Imp.qt)** **With oil filter cartridge replacement** **4.00 L (4.23 US qt) (3.52 Imp.qt)**

8. Install:
   - Engine oil filler cap
9. Start the engine, warm it up for several minutes, and then turn it off.
10. Check:
    - Engine
      (for engine oil leaks)
11. Check:
    - Engine oil level
      Refer to “CHECKING THE ENGINE OIL LEVEL” on page 3-12.
12. Check:
    - Engine oil pressure

▼▼▼▼▼▼▼▼▼▼▼▼▼▼▼▼▼▼▼▼▼▼▼▼▼▼▼▼▼▼▼▼▼▼

a. Remove the right side cowling. Refer to “GENERAL CHASSIS” on page 4-1.

b. Slightly loosen the engine oil check bolt “1”.

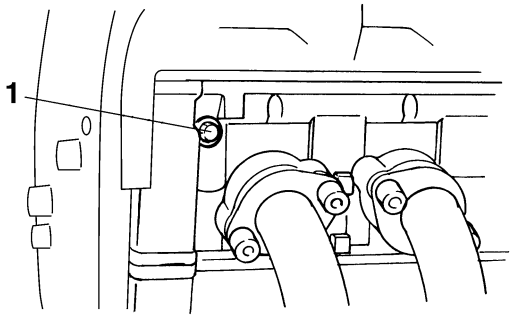

c. Start the engine and keep it idling until engine oil starts to seep from the oil gallery bolt. If no engine oil comes out after one minute, turn the engine off so that it will not seize.
d. Check the engine oil passages, the oil filter cartridge and the oil pump for damage or leakage. Refer to “OIL PUMP” on page 5-58.
e. Start the engine after solving the problem(s) and check the engine oil pressure again.
f. Tighten the oil gallery bolt to specification.

Engine oil check bolt
20 Nm (2.0 m·kg, 14 ft·lb)

g. Install the right side cowling. Refer to “GENERAL CHASSIS” on page 4-1.

▲▲▲▲▲▲▲▲▲▲▲▲▲▲▲▲▲▲▲▲▲▲▲▲▲▲▲▲▲▲▲▲▲▲

EAS20820

MEASURING THE ENGINE OIL PRESSURE

1. Check:
   - Engine oil level
     Below the minimum level mark → Add the recommended engine oil to the proper level.
2. Start the engine, warm it up for several minutes, and then turn it off.

ECA13410

CAUTION:

When the engine is cold, the engine oil will have a higher viscosity, causing the engine oil pressure to increase. Therefore, be sure to measure the engine oil pressure after warming up the engine.

3. Remove:
   - Right side cowling
     Refer to “GENERAL CHASSIS” on page 4-1.
4. Remove:
   - Main gallery bolt

EWA12980

WARNING

The engine, muffler and engine oil are extremely hot.

5. Install:
   - Oil pressure gauge set “1”
   - Oil pressure adapter B “2”

Oil pressure gauge set
90890-03120
Oil pressure adapter B
90890-03124

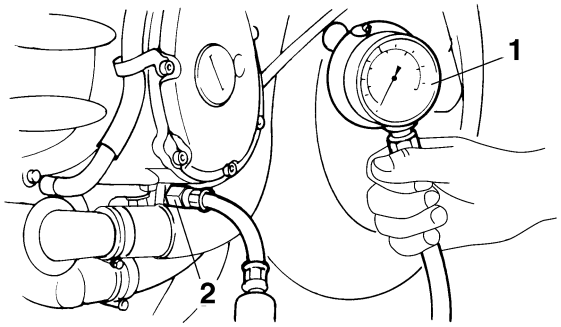

6. Measure:
   - Engine oil pressure
     (at the following conditions)
     Out of specification → Adjust.

Oil pressure (hot)
30.0 kPa/1000 r/min (4.4 psi/1000 r/min) (0.30 kgf/cm²/1000 r/min)
Oil temperature
80.0–90.0 °C (176.00–194.00 °F)

Engine oil pressure	Possible causes
Below specification	• Faulty oil pump • Clogged oil filter • Leaking oil passage • Broken or damaged oil seal
Above specification	• Leaking oil passage • Faulty oil filter • Oil viscosity too high

7. Install:
   - Main gallery bolt

Main gallery bolt
12 Nm (1.2 m·kg, 8.7 ft·lb)

8. Install:
   - Right side cowling
     Refer to “GENERAL CHASSIS” on page 4-1.

EAS20860
ADJUSTING THE CLUTCH LEVER

1. Adjust:
   - Clutch lever position
     (distance “a” from the handlebar grip to the clutch lever)

▼▼▼▼▼▼▼▼▼▼▼▼▼▼▼▼▼▼▼▼▼▼▼▼▼▼▼▼▼▼▼▼▼▼

a. While pushing the clutch lever forward, turn the adjusting dial “1” until the clutch lever is in the desired position.

NOTE:

Be sure to align the setting on the adjusting dial with the arrow mark “2” on the clutch lever holder.

Position #1
Distance “a” is the largest.
Position #5
Distance “a” is the smallest.

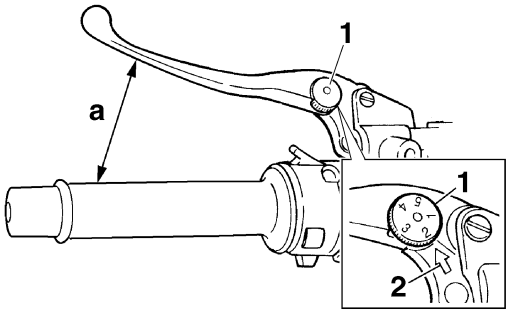

▲▲▲▲▲▲▲▲▲▲▲▲▲▲▲▲▲▲▲▲▲▲▲▲▲▲▲▲▲▲▲▲▲▲

EAS20890
CHECKING THE CLUTCH FLUID LEVEL

1. Stand the vehicle on a level surface.

NOTE:

Place the vehicle on the centerstand.

2. Check:
   - Clutch fluid level
     Below the minimum level mark “a” → Add the recommended clutch fluid to the proper level.

Recommended fluid
DOT 4

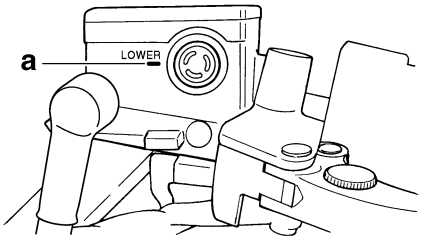

EWA13370
WARNING

- **Use only the designated clutch fluid. Other clutch fluids may cause the rubber seals to deteriorate, causing leakage and poor clutch performance.**
- **Refill with the same type of clutch fluid that is already in the system. Mixing clutch fluids may result in a harmful chemical reaction, leading to poor clutch performance.**
- **When refilling, be careful that water does not enter the clutch fluid reservoir. Water will significantly lower the boiling point of the clutch fluid and could cause vapor lock.**

ECA13420
CAUTION:

Clutch fluid may damage painted surfaces or plastic parts. Therefore, always clean up any spilt clutch fluid immediately.

NOTE:

In order to ensure a correct reading of the clutch fluid level, make sure the top of the reservoir is horizontal.

EAS20900
BLEEDING THE HYDRAULIC CLUTCH SYSTEM

EWA13000
WARNING

Bleed the hydraulic clutch system whenever:
- **the system was disassembled,**
- **a clutch hose was loosened or removed,**
- **the clutch fluid level is very low,**
- **clutch operation is faulty.**

NOTE:

- Be careful not to spill any clutch fluid or allow the clutch master cylinder reservoir to overflow.
- When bleeding the hydraulic clutch system, make sure there is always enough clutch fluid before applying the clutch lever. Ignoring this precaution could allow air to enter the hydraulic clutch system, considerably lengthening the bleeding procedure.
- If bleeding is difficult, it may be necessary to let the clutch fluid settle for a few hours. Repeat the bleeding procedure when the tiny bubbles in the hose have disappeared.

1. Bleed:
   - Hydraulic clutch system

▼▼▼▼▼▼▼▼▼▼▼▼▼▼▼▼▼▼▼▼▼▼▼▼▼▼▼▼▼▼▼▼▼▼

a. Add the recommended clutch fluid to the proper level.
b. Install the clutch master cylinder reservoir diaphragm.
c. Connect a clear plastic hose “1” tightly to the bleed screw “2”.

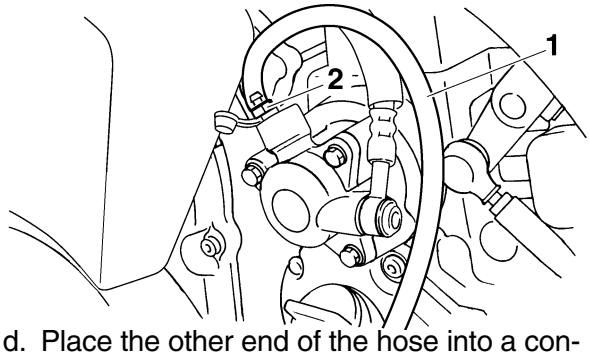

d. Place the other end of the hose into a container.
e. Slowly squeeze the clutch lever several times.
f. Fully squeeze the clutch lever without releasing it.
g. Loosen the bleed screw. This will release the tension and cause the clutch lever to contact the handlebar grip.
h. Tighten the bleed screw and then release the clutch lever.
i. Repeat steps (e) to (h) until all of the air bubbles have disappeared from the clutch fluid in the plastic hose.
j. Tighten the bleed screw to specification.

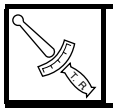	**Bleed screw** **6 Nm (0.6 m·kg, 4.3 ft·lb)**

k. Add the recommended clutch fluid to the proper level.
Refer to “CHECKING THE CLUTCH FLUID LEVEL” on page 3-15.

EWA13010

WARNING

After bleeding the hydraulic clutch system, check the clutch operation.

▲▲▲▲▲▲▲▲▲▲▲▲▲▲▲▲▲▲▲▲▲▲▲▲▲▲▲▲▲▲▲▲▲▲

EAS20920

CLEANING THE AIR FILTER ELEMENT

1. Remove:
   - Rider seat
   - Left side cover
   - Air filter case cover
   - Air filter element
   Refer to “GENERAL CHASSIS” on page 4-1.
2. Clean:
   - Air filter element
   Apply compressed air to the outer surface of the air filter element.

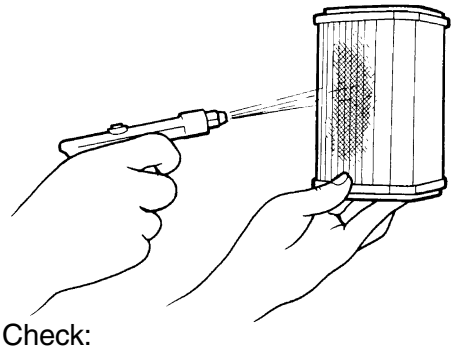

3. Check:
   - Air filter element
   Damage → Replace.

EC3P61043

CAUTION:

Never operate the engine without the air filter element installed. Unfiltered air will cause rapid wear of engine parts and may damage the engine. Operating the engine without the air filter element will also affect throttle body synchronization, leading to poor engine performance and possible overheating.

4. Install:
   - Air filter element
   - Air filter case cover
   - Left side cover
   - Rider seat
   Refer to “GENERAL CHASSIS” on page 4-1.

NOTE:

When installing the air filter element into the air filter case cover, make sure their sealing surfaces are aligned to prevent any air leaks.

EAS21010

CHECKING THE THROTTLE BODY JOINTS

The following procedure applies to all of the throttle body joints and intake manifolds.

1. Remove:
   - Rider seat
   Refer to “GENERAL CHASSIS” on page 4-1.
   - Fuel tank
   Refer to “FUEL TANK” on page 7-1.
   - Air filter case
   Refer to “GENERAL CHASSIS” on page 4-1.
   - Throttle body
   Refer to “THROTTLE BODIES” on page 7-4.
2. Check:
   - Throttle body joints “1”
   Cracks/damage → Replace.

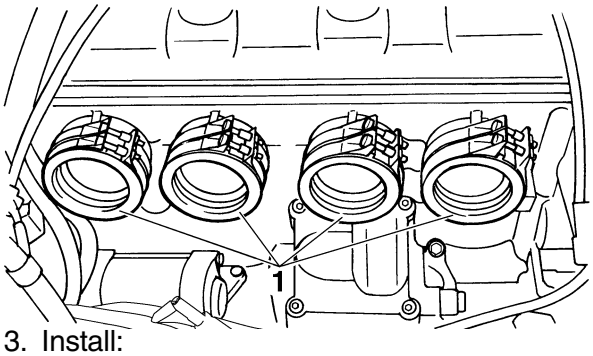

3. Install:
   - Throttle body
     Refer to “THROTTLE BODIES” on page 7-4.
   - Air filter case
     Refer to “GENERAL CHASSIS” on page 4-1.
   - Fuel tank
     Refer to “FUEL TANK” on page 7-1.
   - Rider seat
     Refer to “GENERAL CHASSIS” on page 4-1.

EAS21030

CHECKING THE FUEL LINE

1. Remove:
   - Rider seat
     Refer to “GENERAL CHASSIS” on page 4-1.
   - Fuel tank
     Refer to “FUEL TANK” on page 7-1.
   - T-bar
     Refer to “GENERAL CHASSIS” on page 4-1.
2. Check:
   - Fuel hose “1”
   - Fuel tank breather hose
   - Fuel tank overflow hose
   - Fuel tank breather/overflow hose “2”
     Cracks/damage → Replace.
     Loose connection → Connect properly.

EC3P61005

CAUTION:

Make sure the fuel tank breather/overflow hose is routed correctly.

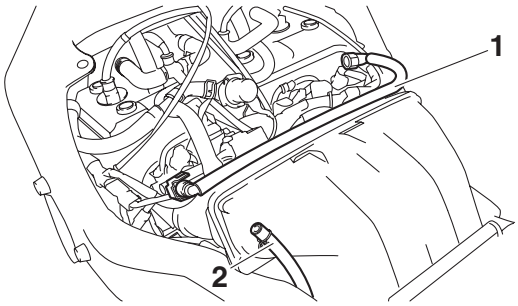

3. Install:
   - T-bar
     Refer to “GENERAL CHASSIS” on page 4-1.
   - Fuel tank
     Refer to “FUEL TANK” on page 7-1.
   - Rider seat
     Refer to “GENERAL CHASSIS” on page 4-1.

EAS21070

CHECKING THE CRANKCASE BREATHER HOSE

1. Remove:
   - Rider seat
     Refer to “GENERAL CHASSIS” on page 4-1.
   - Fuel tank
     Refer to “FUEL TANK” on page 7-1.
   - T-bar
   - Air filter case
     Refer to “GENERAL CHASSIS” on page 4-1.
2. Check:
   - Crankcase breather hose “1”
     Cracks/damage → Replace.
     Loose connection → Connect properly.

ECA13450

CAUTION:

Make sure the crankcase breather hose is routed correctly.

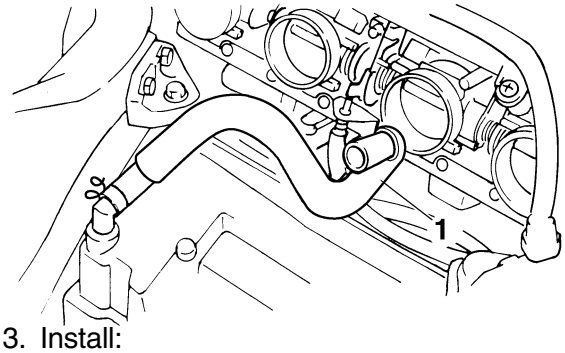

3. Install:
   - Air filter case
   - T-bar
     Refer to “GENERAL CHASSIS” on page 4-1.
   - Fuel tank
     Refer to “FUEL TANK” on page 7-1.
   - Rider seat
     Refer to “GENERAL CHASSIS” on page 4-1.

EAS21080

CHECKING THE EXHAUST SYSTEM

The following procedure applies to all of the exhaust pipes and gaskets.

1. Remove:
   - Side cowlings
     Refer to “GENERAL CHASSIS” on page 4-1.
2. Check:
   - Exhaust pipe assembly “1”
   - Mufflers “2”
     Cracks/damage → Replace.

- Gasket “3”
  Exhaust gas leaks → Replace.

3. Check:
   - Tightening torque
   - Exhaust pipe assembly nuts “4”
   - Exhaust pipe assembly bolts “5”
   - Exhaust pipe assembly and muffler bolts “6”
   - Muffler bolts “7”

Exhaust pipe assembly nut
20 Nm (2.0 m·kg, 14 ft·lb)
Exhaust pipe assembly bolt
17 Nm (1.7 m·kg, 12 ft·lb)
Exhaust pipe assembly and muffler bolt
20 Nm (2.0 m·kg, 14 ft·lb)
Muffler bolt
25 Nm (2.5 m·kg, 18 ft·lb)

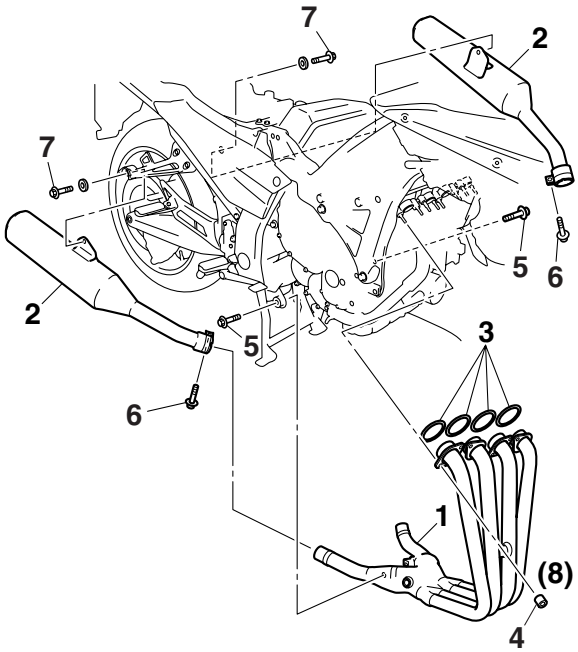

4. Install:
   - Side cowlings
     Refer to “GENERAL CHASSIS” on page 4-1.

EAS21110

CHECKING THE COOLANT LEVEL

1. Stand the vehicle on a level surface.

NOTE:

- Place the vehicle on the centerstand.
- Make sure the vehicle is upright.

2. Remove:
   - Left side panel
     Refer to “GENERAL CHASSIS” on page 4-1.

3. Check:
   - Coolant level
     The coolant level should be between the minimum level mark “a” and maximum level mark “b”.
     Below the minimum level mark → Add the recommended coolant to the proper level.

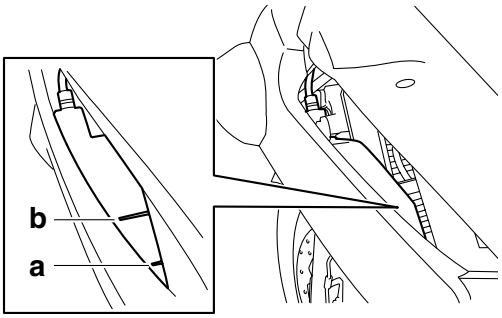

ECA13470

CAUTION:

- **Adding water instead of coolant lowers the antifreeze content of the coolant. If water is used instead of coolant check, and if necessary, correct the antifreeze concentration of the coolant.**
- **Use only distilled water. However, if distilled water is not available, soft water may be used.**

4. Start the engine, warm it up for several minutes, and then turn it off.
5. Check:
   - Coolant level

NOTE:

Before checking the coolant level, wait a few minutes until it settles.

6. Install:
   - Left side panel
     Refer to “GENERAL CHASSIS” on page 4-1.

EAS21120

CHECKING THE COOLING SYSTEM

1. Remove:
   - Exhaust pipe assembly
     Refer to “ENGINE REMOVAL” on page 5-1.
2. Check:
   - Radiator “1”
   - Oil cooler outlet hose “2”
   - Radiator inlet hose “3”
   - Radiator outlet hose “4”
   - Oil cooler inlet hose “5”
   - Oil cooler “6”
   - Water jacket joint “7”
   - Water jacket joint inlet hose “8”
   - Water pump outlet pipe “9”

- Water pump outlet hose “10”
  Cracks/damage → Replace.
  Refer to “RADIATOR” on page 6-1, “OIL COOLER” on page 6-4, “THERMOSTAT” on page 6-6 and “WATER PUMP” on page 6-10.

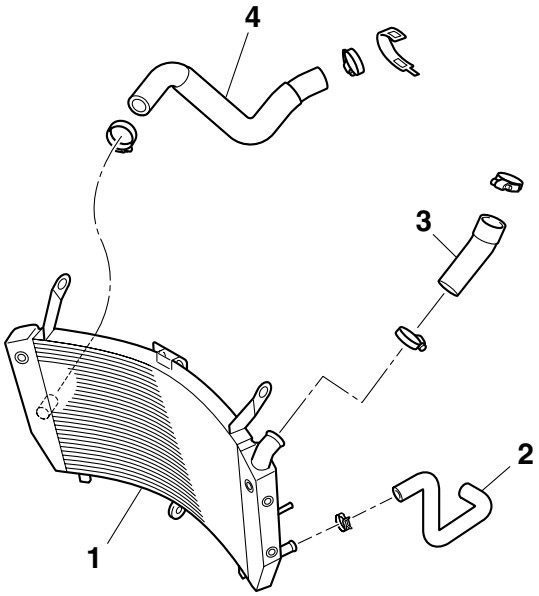

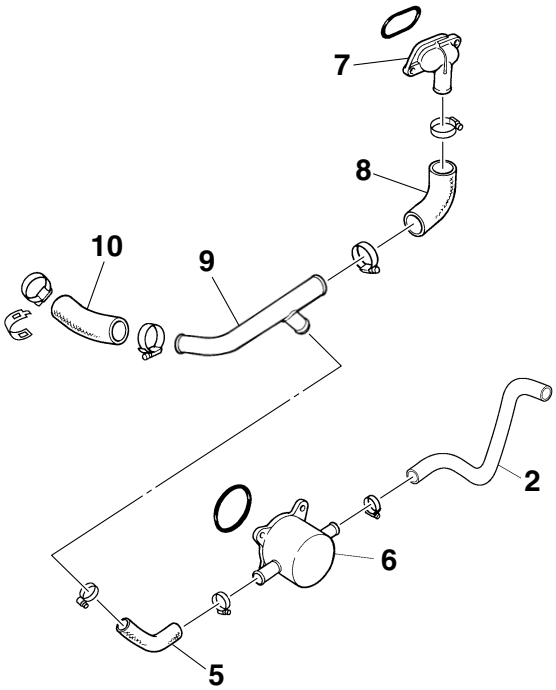

3. Install:
   - Exhaust pipe assembly
     Refer to “ENGINE REMOVAL” on page 5-1.

EAS21130

CHANGING THE COOLANT

1. Remove:
   - Front cowling
     Refer to “GENERAL CHASSIS” on page 4-1.
2. Remove:
   - Radiator cap “1”

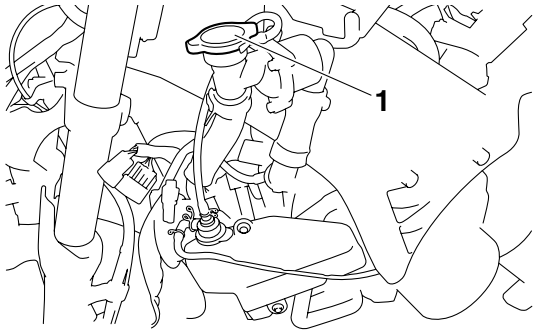

EWA13030

WARNING

A hot radiator is under pressure. Therefore, do not remove the radiator cap when the engine is hot. Scalding hot fluid and steam may be blown out, which could cause serious injury. When the engine has cooled, open the radiator cap as follows:
Place a thick rag or a towel over the radiator cap and slowly turn the radiator cap counterclockwise toward the detent to allow any residual pressure to escape. When the hissing sound has stopped, press down on the radiator cap and turn it counterclockwise to remove.

3. Remove:
   - Coolant drain bolt (water pump) “1”
     (along with the copper washer)
4. Disconnect:
   - Radiator outlet hose “2”

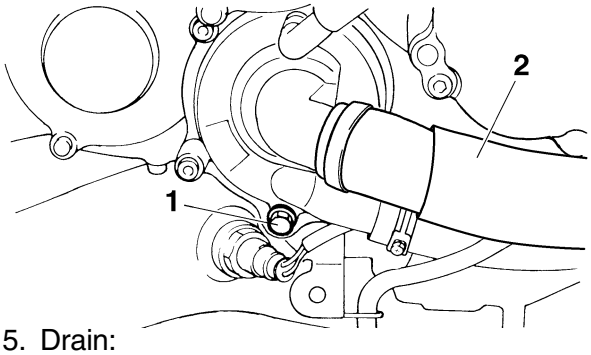

5. Drain:
   - Coolant
     (from the engine and radiator)
6. Remove:
   - Coolant reservoir “1”
   - Coolant reservoir cap “2”

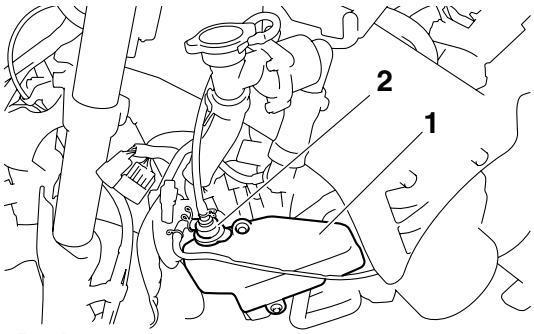

7. Drain:
   - Coolant
     (from the coolant reservoir)
8. Install:
   - Coolant reservoir
9. Connect:
   - Radiator outlet hose
10. Install:
   - Coolant drain bolt (water pump)
     (along with the copper washer New)

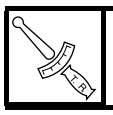	**Coolant drain bolt (water pump)** **10 Nm (1.0 m·kg, 7.2 ft·lb)**

11. Fill:
   - Cooling system
     (with the specified amount of the recommended coolant)

	Recommended antifreeze **High-quality ethylene glycol antifreeze containing corrosion inhibitors for aluminum engines** **Mixing ratio** **1:1 (antifreeze:water)** **Radiator capacity (including all routes)** **2.60 L (2.75 US qt) (2.29 Imp.qt)** **Coolant reservoir capacity (up to the maximum level mark)** **0.25 L (0.26 US qt) (0.22 Imp.qt)**

Handling notes for coolant
Coolant is potentially harmful and should be handled with special care.

EWA13040

WARNING

- **If coolant splashes in your eyes, thoroughly wash them with water and consult a doctor.**
- **If coolant splashes on your clothes, quickly wash it away with water and then with soap and water.**
- **If coolant is swallowed, induce vomiting and get immediate medical attention.**

ECA13480

CAUTION:

- **Adding water instead of coolant lowers the antifreeze content of the coolant. If water is used instead of coolant check, and if necessary, correct the antifreeze concentration of the coolant.**
- **Use only distilled water. However, if distilled water is not available, soft water may be used.**
- **If coolant comes into contact with painted surfaces, immediately wash them with water.**
- **Do not mix different types of antifreeze.**

12. Install:
   - Radiator cap
13. Fill:
   - Coolant reservoir
     (with the recommended coolant to the maximum level mark “a”)

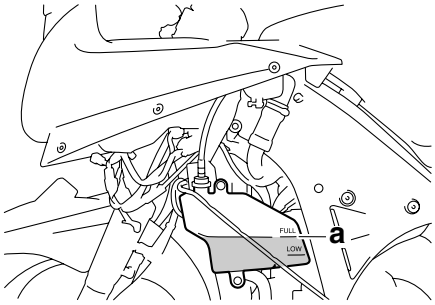

14. Install:
   - Coolant reservoir cap
15. Start the engine, warm it up for several minutes, and then stop it.
16. Check:
   - Coolant level
     Refer to “CHECKING THE COOLANT LEVEL” on page 3-18.

NOTE:

Before checking the coolant level, wait a few minutes until the coolant has settled.

17. Install:
   - Front cowling assembly
     Refer to “GENERAL CHASSIS” on page 4-1.

EAS21140
CHASSIS

EAS21160
ADJUSTING THE FRONT DISC BRAKE

1. Adjust:
   - Brake lever position
     (distance “a” from the throttle grip to the brake lever)

▼▼▼▼▼▼▼▼▼▼▼▼▼▼▼▼▼▼▼▼▼▼▼▼▼▼▼▼▼▼▼▼▼▼

a. While pushing the brake lever forward, turn the adjusting dial “1” until the brake lever is in the desired position.

NOTE:

Be sure to align the setting on the adjusting dial with the arrow mark “2” on the brake lever.

Position #1
Distance “a” is the largest.
Position #5
Distance “a” is the smallest.

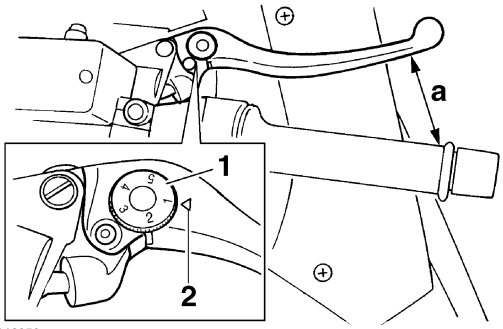

EWA13050

WARNING

A soft or spongy feeling in the brake lever can indicate the presence of air in the brake system. Before the vehicle is operated, the air must be removed by bleeding the brake system. Air in the brake system will considerably reduce braking performance.

ECA13490

CAUTION:

After adjusting the brake lever position, make sure there is no brake drag.

▲▲▲▲▲▲▲▲▲▲▲▲▲▲▲▲▲▲▲▲▲▲▲▲▲▲▲▲▲▲▲▲▲▲

EAS21190
ADJUSTING THE REAR DISC BRAKE

1. Check:
   - Brake pedal position
     (distance “a” from the top of the rider footrest to the top of the brake pedal)
     Out of specification → Adjust.

Brake pedal position
42.0 mm (1.65 in) (below the top of the rider footrest)

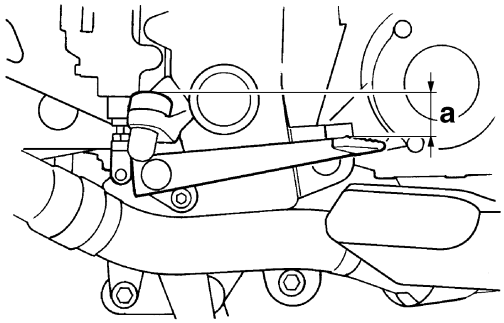

2. Adjust:
   - Brake pedal position

▼▼▼▼▼▼▼▼▼▼▼▼▼▼▼▼▼▼▼▼▼▼▼▼▼▼▼▼▼▼▼▼▼▼

a. Loosen the locknut “1”.
b. Turn the adjusting bolt “2” in direction “a” or “b” until the specified brake pedal position is obtained.

Direction “a”
Brake pedal is raised.
Direction “b”
Brake pedal is lowered.

EWA13070

WARNING

After adjusting the brake pedal position, check that the end of the adjusting bolt “c” is visible through the hole “d”.

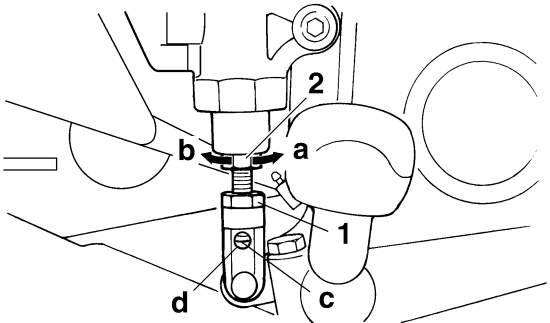

c. Tighten the locknut “1” to specification.

Locknut
16 Nm (1.6 m·kg, 11 ft·lb)

EW3P61002

WARNING

A soft or spongy feeling in the brake pedal can indicate the presence of air in the brake system. Before the vehicle is operated, the

air must be removed by bleeding the brake system. Air in the brake system will considerably reduce braking performance.

ECA13510

CAUTION:

After adjusting the brake pedal position, make sure there is no brake drag.

▲▲▲▲▲▲▲▲▲▲▲▲▲▲▲▲▲▲▲▲▲▲▲▲▲▲▲▲▲▲▲▲▲▲

3. Adjust:
   - Rear brake light switch
     Refer to “ADJUSTING THE REAR BRAKE LIGHT SWITCH” on page 3-23.

EAS21240

CHECKING THE BRAKE FLUID LEVEL

1. Stand the vehicle on a level surface.

NOTE:

- Place the vehicle on the centerstand.
- Make sure the vehicle is upright.

2. Remove:
   - Right side cover
     Refer to “GENERAL CHASSIS” on page 4-1.
3. Check:
   - Brake fluid level
     Below the minimum level mark “a” → Add the recommended brake fluid to the proper level.

Front brake
Recommended fluid
DOT 4
Rear brake
Recommended fluid
DOT 4

A

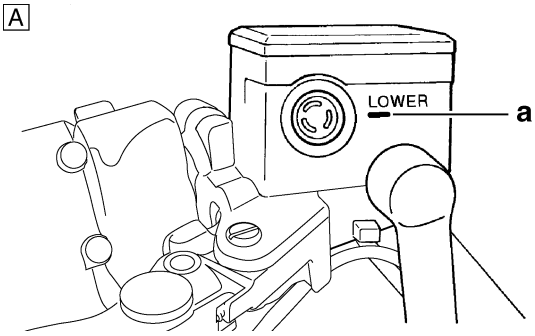

B

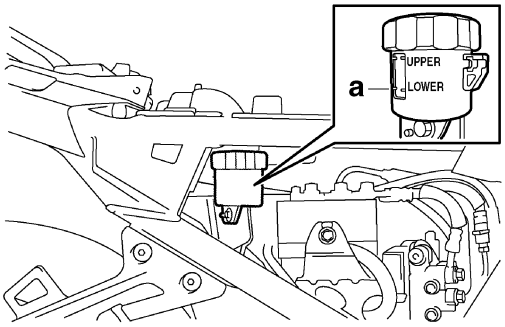

A. Front brake
B. Rear brake

EWA13090

WARNING

- **Use only the designated brake fluid. Other brake fluids may cause the rubber seals to deteriorate, causing leakage and poor brake performance.**
- **Refill with the same type of brake fluid that is already in the system. Mixing brake fluids may result in a harmful chemical reaction, leading to poor brake performance.**
- **When refilling, be careful that water does not enter the brake fluid reservoir. Water will significantly lower the boiling point of the brake fluid and could cause vapor lock.**

ECA13540

CAUTION:

Brake fluid may damage painted surfaces and plastic parts. Therefore, always clean up any spilt brake fluid immediately.

NOTE:

In order to ensure a correct reading of the brake fluid level, make sure the top of the brake fluid reservoir is horizontal.

4. Install:
   - Right side cover
     Refer to “GENERAL CHASSIS” on page 4-1.

EAS21250

CHECKING THE FRONT BRAKE PADS

The following procedure applies to all of the brake pads.

EC3P61037

CAUTION:

The amount of wear may differ for the brake pads of the right front brake caliper between the brake pads operated by the brake lever and the brake pads operated by the brake pedal. Each set of brake pads should be checked individually and replaced if necessary.

1. Operate the brake.
2. Check:
   - Front brake pad
     Wear indicator grooves “1” almost disappeared → Replace the brake pads as a set.
     Refer to “FRONT BRAKE” on page 4-25.

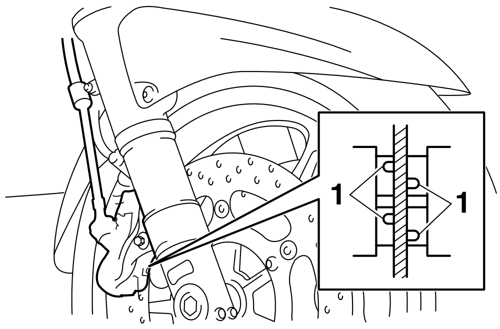

EAS21260
CHECKING THE REAR BRAKE PADS
The following procedure applies to all of the brake pads.
1. Operate the brake.
2. Check:
   - Rear brake pad
     Wear indicators “1” almost touch the brake disc → Replace the brake pads as a set.
     Refer to “REAR BRAKE” on page 4-37.

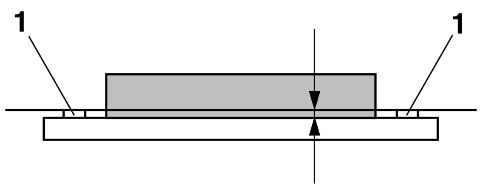

EAS21280
CHECKING THE BRAKE HOSES
The following procedure applies to all of the brake hoses and brake hose holders.
1. Check:
   - Brake hoses
     Cracks/damage/wear → Replace.
2. Check:
   - Brake hose holders
     Loose → Tighten the holder bolts.
3. Hold the vehicle upright and apply the brake several times.
4. Check:
   - Brake hoses
     Brake fluid leakage → Replace the damaged hose.
     Refer to “FRONT BRAKE” on page 4-25, “REAR BRAKE” on page 4-37 and “ABS (ANTI-LOCK BRAKE SYSTEM)” on page 4-50.

EAS21330
ADJUSTING THE REAR BRAKE LIGHT SWITCH
NOTE:
- The rear brake light switch is operated by movement of the brake pedal. The rear brake light switch is properly adjusted when the brake light comes on just before the braking effect starts.
- If the switch is not properly adjusted, ABS malfunction code No. 23 may be displayed.

1. Check:
   - Rear brake light operation timing
     Incorrect → Adjust.
2. Adjust:
   - Rear brake light operation timing

▼▼▼▼▼▼▼▼▼▼▼▼▼▼▼▼▼▼▼▼▼▼▼▼▼▼▼▼▼▼▼▼▼▼

a. Hold the main body “1” of the rear brake light switch so that it does not rotate and turn the adjusting nut “2” in direction “a” or “b” until the rear brake light comes on at the proper time.

> **Direction “a”**
> **Brake light comes on sooner.**
> **Direction “b”**
> **Brake light comes on later.**

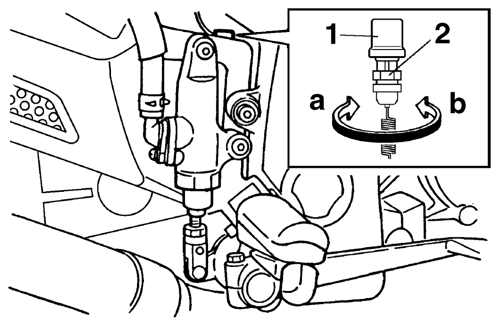

▲▲▲▲▲▲▲▲▲▲▲▲▲▲▲▲▲▲▲▲▲▲▲▲▲▲▲▲▲▲▲▲▲▲

EAS22780
BLEEDING THE HYDRAULIC BRAKE SYSTEM (ABS)
EWA14000
⚠ WARNING

Always bleed the brake system when the brake related parts are removed.

EC3P61012
CAUTION:
- **Bleed the brake system in the following order.**

- **1st step: Front brake calipers**
- **2nd step: Right front brake caliper (unified brake system)**
- **3rd step: Rear brake caliper**

EW3P61010

WARNING

Bleed the ABS whenever:
- **the system is disassembled.**
- **a brake hose is loosened, disconnected, or replaced.**
- **the brake fluid level is very low.**
- **brake operation is faulty.**

NOTE:
- Be careful not to spill any brake fluid or allow the brake master cylinder reservoir or brake fluid reservoir to overflow.
- When bleeding the ABS, make sure that there is always enough brake fluid before applying the brake. Ignoring this precaution could allow air to enter the ABS, considerably lengthening the bleeding procedure.
- If bleeding is difficult, it may be necessary to let the brake fluid settle for a few hours.
- Repeat the bleeding procedure when the tiny bubbles in the hose have disappeared.

1. Remove:
   - Right side cover
     Refer to “GENERAL CHASSIS” on page 4-1.
2. Bleed:
   - ABS

▼▼▼▼▼▼▼▼▼▼▼▼▼▼▼▼▼▼▼▼▼▼▼▼▼▼▼▼▼▼▼▼▼▼▼

a. Fill the brake master cylinder reservoir or brake fluid reservoir to the proper level with the recommended brake fluid.
b. Install the diaphragm (brake master cylinder reservoir or brake fluid reservoir).
c. Connect a clear plastic hose “1” tightly to the bleed screw “2”.

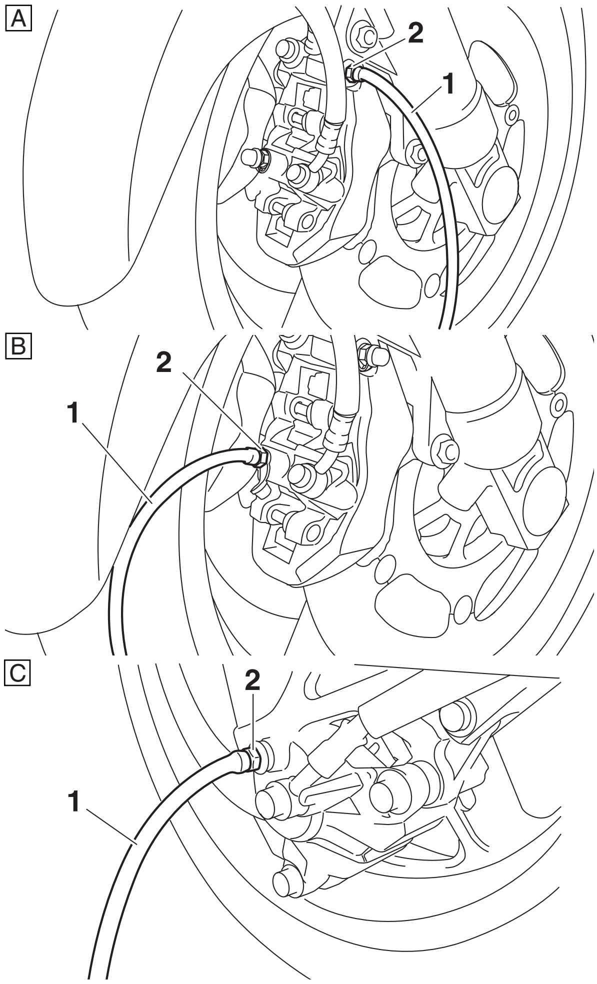

A. Front brake caliper
B. Right front brake caliper (unified brake system)
C. Rear brake caliper

d. Place the other end of the hose into a container.
e. Slowly apply the brake several times.
f. Fully squeeze the brake lever or fully depress the brake pedal and hold it in position.
g. Loosen the bleed screw.

NOTE:
Loosening the bleed screw will release the pressure and cause the brake lever to contact the throttle grip or the brake pedal to fully extend.

h. Tighten the bleed screw, and then release the brake lever or brake pedal.
i. Repeat steps (e) to (h) until all of the air bubbles have disappeared from the brake fluid in the plastic hose.
j. Check the operation of the hydraulic unit. Refer to “HYDRAULIC UNIT OPERATION TESTS” on page 4-56.

EC3P61029

CAUTION:

Make sure that the main switch is turned to "OFF" before checking the operation of the hydraulic unit.

k. After operating the ABS, repeat steps (e) to (i), and then fill the brake master cylinder reservoir or brake fluid reservoir to the proper level with the recommended brake fluid.
l. Tighten the bleed screw to the specified torque.

	Brake caliper bleed screw **6 Nm (0.6 m·kg, 4.3 ft·lb)**

m. Fill the brake master cylinder reservoir or brake fluid reservoir to the proper level with the recommended brake fluid.
Refer to "CHECKING THE BRAKE FLUID LEVEL" on page 3-22.

EWA14020

WARNING

After bleeding the ABS, check the brake operation.

▲▲▲▲▲▲▲▲▲▲▲▲▲▲▲▲▲▲▲▲▲▲▲▲▲▲▲▲▲▲▲▲

EAS21380

ADJUSTING THE SHIFT PEDAL

1. Check:
   - Shift pedal position
     Check that the center of the shift pedal end "1" is aligned with the center of the middle gear case cover bolt "2" as shown in the illustration when viewed directly from the side.
     Incorrect → Adjust.

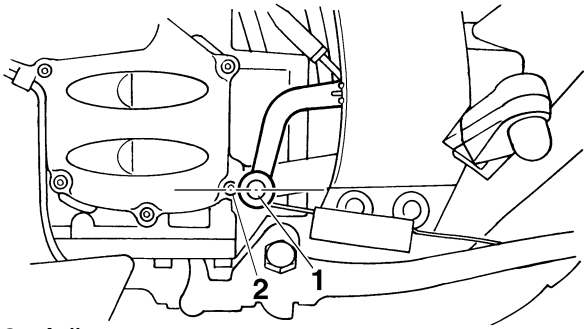

2. Adjust:
   - Shift pedal position

▼▼▼▼▼▼▼▼▼▼▼▼▼▼▼▼▼▼▼▼▼▼▼▼▼▼▼▼▼▼▼▼

a. Loosen both locknuts "1".
b. Turn the shift rod "2" in direction "a" or "b" to obtain the correct shift pedal position.

Direction "a"
Shift pedal is raised.
Direction "b"
Shift pedal is lowered.

NOTE:

Check that the groove "c" in the shift pedal is between the projections "d" on the frame.

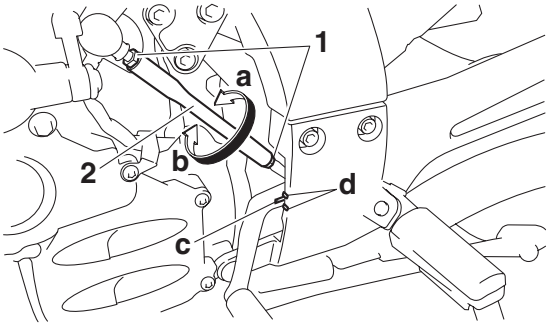

c. Tighten both locknuts to specification.

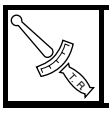	**Locknut** **7 Nm (0.7 m·kg, 5.1 ft·lb)**

▲▲▲▲▲▲▲▲▲▲▲▲▲▲▲▲▲▲▲▲▲▲▲▲▲▲▲▲▲▲▲▲

EAS21460

CHECKING THE FINAL GEAR OIL LEVEL

1. Stand the vehicle on a level surface.

NOTE:

- Place the vehicle on the centerstand.
- Make sure the vehicle is upright.

2. Remove:
   - Final gear oil filler bolt "1"
3. Check:
   - Final gear oil level
     The final gear oil level should be to the bottom brim "2" of the filler hole.
     Below the bottom brim → Add the recommended final gear oil to the proper level.

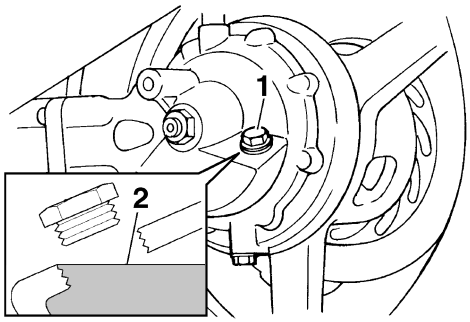

	Type **Shaft drive gear oil (Part No.: 9079E-SH001-00)**

4. Install:
   - Final gear oil filler bolt

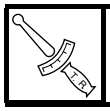	**Final gear oil filler bolt** **23 Nm (2.3 m·kg, 17 ft·lb)**

EAS21470

CHANGING THE FINAL GEAR OIL

1. Place a container under the final gear case.
2. Remove:
   - Final gear oil filler bolt "1"
   - Final gear oil drain bolt "2"
   Completely drain the final gear case of its oil.

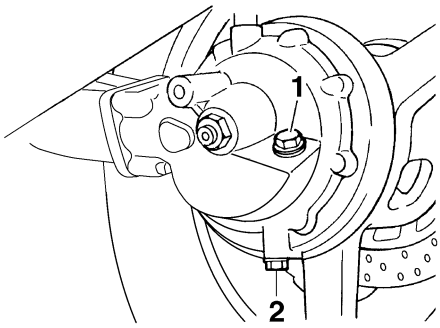

3. Check:
   - Final gear oil drain bolt gasket
   Damage → Replace.
4. Install:
   - Final gear oil drain bolt
   (along with the gasket New)

	Final gear oil drain bolt **23 Nm (2.3 m·kg, 17 ft·lb)**

5. Fill:
   - Final gear case
   (with the specified amount of the recommended final gear oil)

	Quantity **0.20 L (0.21 US qt) (0.18 Imp.qt)**

Refer to "CHECKING THE FINAL GEAR OIL LEVEL" on page 3-25.

EAS21510

CHECKING AND ADJUSTING THE STEERING HEAD

1. Stand the vehicle on a level surface.

EWA13120

WARNING

Securely support the vehicle so that there is no danger of it falling over.

NOTE:

Place the vehicle on a suitable stand so that the front wheel is elevated.

2. Check:
   - Steering head
   Grasp the bottom of the front fork legs and gently rock the front fork.
   Binding/looseness → Adjust the steering head.
3. Remove:
   - Upper bracket
   Refer to "STEERING HEAD" on page 4-75.
4. Adjust:
   - Steering head

▼▼▼▼▼▼▼▼▼▼▼▼▼▼▼▼▼▼▼▼▼▼▼▼▼▼▼▼▼▼▼▼▼▼

a. Remove the lock washer "1", the upper ring nut "2", and the rubber washer "3".

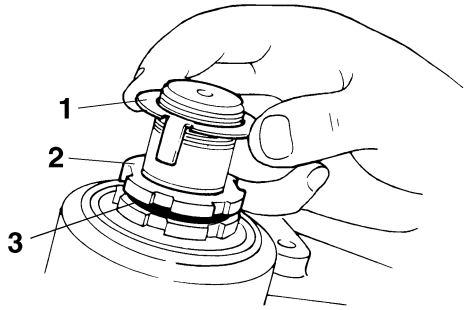

b. Tighten the lower ring nut "4" with a steering nut wrench "5".

	Steering nut wrench **90890-01403** **Spanner wrench** **YU-33975**

	Lower ring nut (initial tightening torque) **52 Nm (5.2 m·kg, 37 ft·lb)**

NOTE:

Set a torque wrench at a right angle to the steering nut wrench.

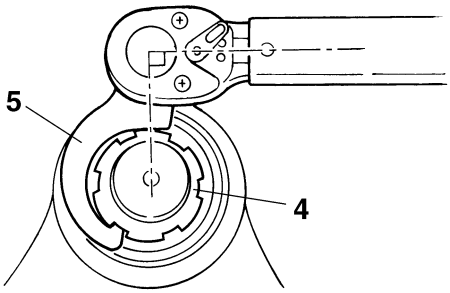

c. Loosen the lower ring nut completely and then tighten it to specification with a steering nut wrench.

EWA13140

WARNING

Do not overtighten the lower ring nut.

Lower ring nut (final tightening torque)
18 Nm (1.8 m·kg, 13 ft·lb)

d. Check the steering head for looseness or binding by turning the front fork all the way in both directions. If any binding is felt, remove the lower bracket and check the upper and lower bearings.
   Refer to “STEERING HEAD” on page 4-75.
e. Install the rubber washer “3”.
f. Install the upper ring nut “2”.
g. Finger tighten the upper ring nut, then align the slots of both ring nuts. If necessary, hold the lower ring nut and tighten the upper ring nut until their slots are aligned.
h. Install the lock washer “1”.

NOTE:

Make sure the lock washer tabs “a” sit correctly in the ring nut slots “b”.

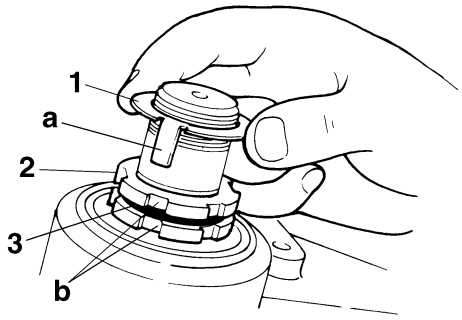

▲▲▲▲▲▲▲▲▲▲▲▲▲▲▲▲▲▲▲▲▲▲▲▲▲▲▲▲▲▲▲▲▲▲

5. Install:
   • Upper bracket
   Refer to “STEERING HEAD” on page 4-75.

ET3P61034

ADJUSTING THE HANDLEBAR POSITION

1. Check:
   • Handlebar position

NOTE:

The handlebar position can be adjusted to one of three positions to suit the rider’s preference.

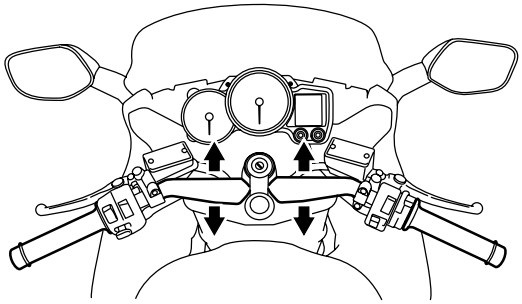

2. Adjust:
   • Handlebar position

▼▼▼▼▼▼▼▼▼▼▼▼▼▼▼▼▼▼▼▼▼▼▼▼▼▼▼▼▼▼▼▼▼▼

a. Remove the plates “1”.

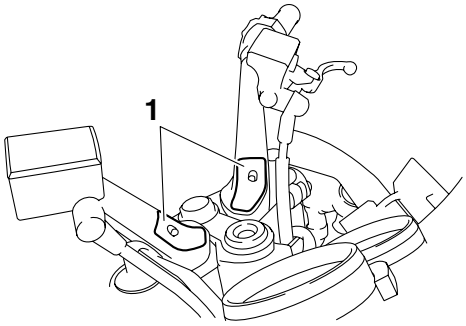

b. Remove the handlebar nuts “2” and bolts “3”.

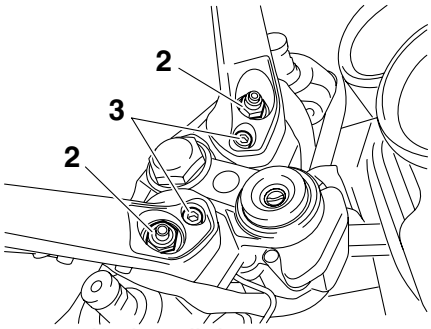

c. Remove the handlebars.
d. Install the handlebars in the desired position.

NOTE:

Fit the projections on each handlebar into the holes in the upper bracket, making sure that the handlebars are installed in the same position.

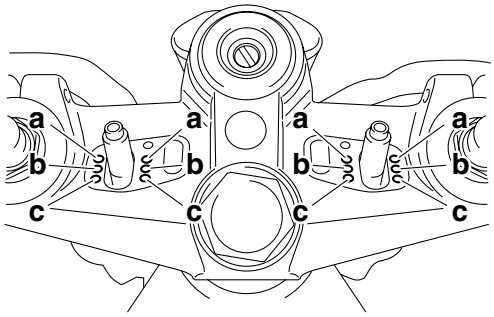

a. Front position
b. Standard position
c. Rear position

e. Install the handlebar bolts “3” and nuts “2” temporarily.

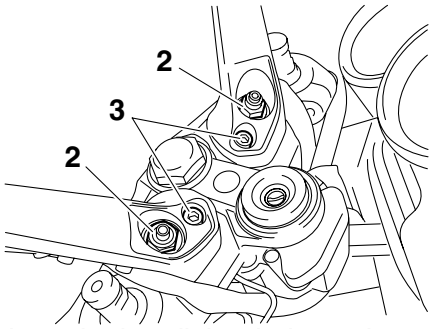

f. Tighten the handlebar bolts and nuts.

Handlebar bolt
23 Nm (2.3 m·kg, 17 ft·lb)
Handlebar nut
65 Nm (6.5 m·kg, 47 ft·lb)

NOTE:

First tighten the bolts, then tighten the nuts.

▲▲▲▲▲▲▲▲▲▲▲▲▲▲▲▲▲▲▲▲▲▲▲▲▲▲▲▲▲▲▲▲▲▲

EAS21530

CHECKING THE FRONT FORK

1. Stand the vehicle on a level surface.

EWA13120

WARNING

Securely support the vehicle so that there is no danger of it falling over.

2. Check:
   - Inner tube
     Damage/scratches → Replace.
   - Oil seal
     Oil leakage → Replace.
3. Hold the vehicle upright and apply the front brake.
4. Check:
   - Front fork operation
     Push down hard on the handlebar several times and check if the front fork rebounds smoothly.
     Rough movement → Repair.
     Refer to “FRONT FORK” on page 4-65.

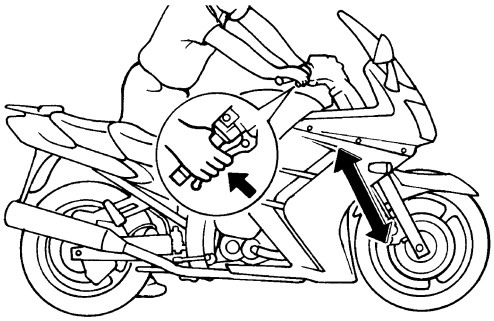

EAS21580

ADJUSTING THE FRONT FORK LEGS

The following procedure applies to both of the front fork legs.

EWA13150

WARNING

- **Always adjust both front fork legs evenly. Uneven adjustment can result in poor handling and loss of stability.**
- **Securely support the motorcycle so that there is no danger of it falling over.**

Spring preload

ECA13570

CAUTION:

- **Grooves are provided to indicate the adjustment position.**
- **Never go beyond the maximum or minimum adjustment positions.**

1. Adjust:
   - Spring preload

▼▼▼▼▼▼▼▼▼▼▼▼▼▼▼▼▼▼▼▼▼▼▼▼▼▼▼▼▼▼▼▼▼▼

a. Turn the adjusting bolt “1” in direction “a” or “b”.

Direction “a”
Spring preload is increased (suspension is harder).
Direction “b”
Spring preload is decreased (suspension is softer).

Spring preload adjusting positions
Minimum
6
Standard
4
Maximum
1

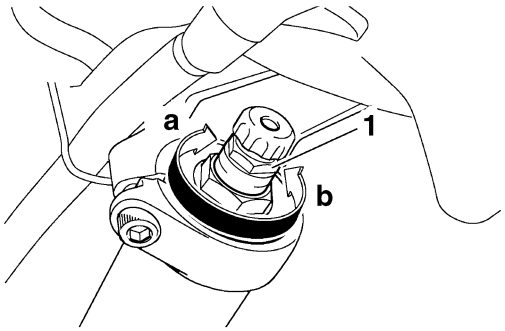

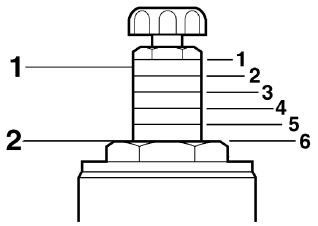

2. Current setting

▲▲▲▲▲▲▲▲▲▲▲▲▲▲▲▲▲▲▲▲▲▲▲▲▲▲▲▲▲▲▲▲

Rebound damping

ECA13590

CAUTION:

Never go beyond the maximum or minimum adjustment positions.

1. Adjust:
   - Rebound damping

▼▼▼▼▼▼▼▼▼▼▼▼▼▼▼▼▼▼▼▼▼▼▼▼▼▼▼▼▼▼▼▼

a. Turn the adjusting knob "1" in direction "a" or "b".

Direction "a"
Rebound damping is increased (suspension is harder).
Direction "b"
Rebound damping is decreased (suspension is softer).

Rebound damping adjusting positions
Minimum
17 click(s) out*
Standard
12 click(s) out*
Maximum
1 click(s) out*
*** With the adjusting knob fully turned in**

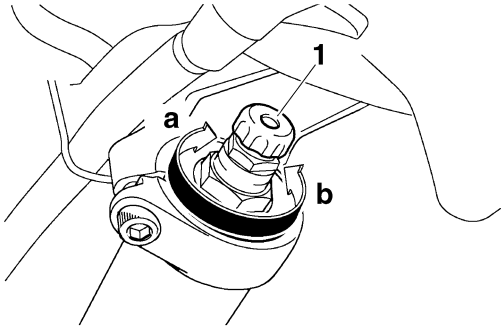

▲▲▲▲▲▲▲▲▲▲▲▲▲▲▲▲▲▲▲▲▲▲▲▲▲▲▲▲▲▲▲▲

Compression damping

ECA13590

CAUTION:

Never go beyond the maximum or minimum adjustment positions.

1. Adjust:
   - Compression damping

▼▼▼▼▼▼▼▼▼▼▼▼▼▼▼▼▼▼▼▼▼▼▼▼▼▼▼▼▼▼▼▼

a. Turn the adjusting screw "1" in direction "a" or "b".

Direction "a"
Compression damping is increased (suspension is harder).
Direction "b"
Compression damping is decreased (suspension is softer).

Compression damping adjusting positions
Minimum
21 click(s) out*
Standard
12 click(s) out*
Maximum
1 click(s) out*
*** With the adjusting screw fully turned in**

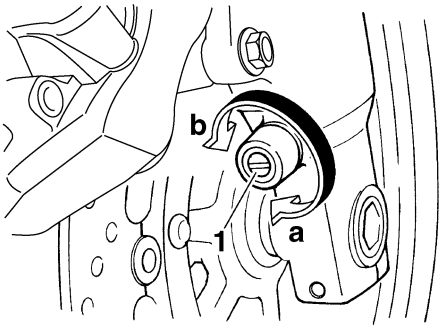

▲▲▲▲▲▲▲▲▲▲▲▲▲▲▲▲▲▲▲▲▲▲▲▲▲▲▲▲▲▲▲▲

EAS21600

ADJUSTING THE REAR SHOCK ABSORBER ASSEMBLY

EWA13120

WARNING

Securely support the vehicle so that there is no danger of it falling over.

Spring preload

ECA13590

CAUTION:

Never go beyond the maximum or minimum adjustment positions.

1. Adjust:
   • Spring preload

▼▼▼▼▼▼▼▼▼▼▼▼▼▼▼▼▼▼▼▼▼▼▼▼▼▼▼▼▼▼▼▼▼▼

a. Move the adjusting lever “1” in direction “a” or “b”.
b. Adjust the adjusting lever to “HARD” or “SOFT”.

Direction “a”
Spring preload is increased (suspension is harder).
Direction “b”
Spring preload is decreased (suspension is softer).

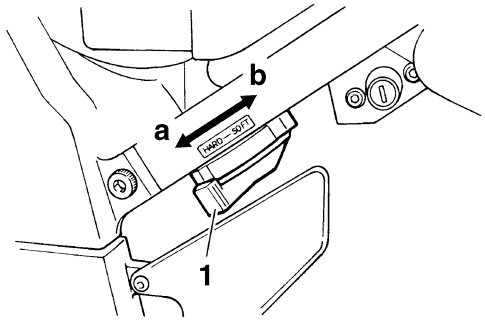

▲▲▲▲▲▲▲▲▲▲▲▲▲▲▲▲▲▲▲▲▲▲▲▲▲▲▲▲▲▲▲▲▲▲

Rebound damping

ECA13590

CAUTION:

Never go beyond the maximum or minimum adjustment positions.

1. Adjust:
   • Rebound damping

▼▼▼▼▼▼▼▼▼▼▼▼▼▼▼▼▼▼▼▼▼▼▼▼▼▼▼▼▼▼▼▼▼▼

a. Turn the adjusting knob “1” in direction “a” or “b”.

Direction “a”
Rebound damping is increased (suspension is harder).
Direction “b”
Rebound damping is decreased (suspension is softer).

Rebound damping adjusting positions
Minimum
20 click(s) out*
Standard
12 click(s) out*
Maximum
3 click(s) out*

*** With the adjusting knob fully turned in**

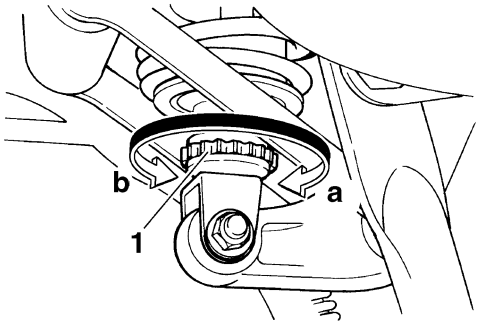

▲▲▲▲▲▲▲▲▲▲▲▲▲▲▲▲▲▲▲▲▲▲▲▲▲▲▲▲▲▲▲▲▲▲

ET3P61035

ADJUSTING THE SIDE PANELS

1. Adjust:
   • Side panel position

NOTE:

The side panels “1” can be tilted back 30 mm (1.18 in) for added ventilation to suit the riding conditions.

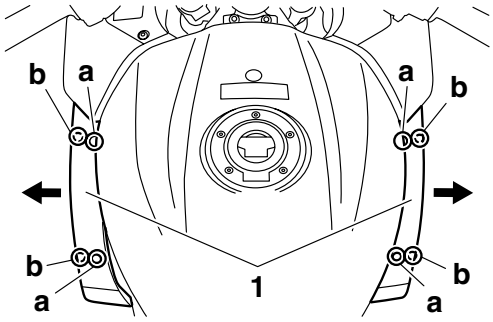

a. Closed position
b. Open position

▼▼▼▼▼▼▼▼▼▼▼▼▼▼▼▼▼▼▼▼▼▼▼▼▼▼▼▼▼▼▼▼▼▼

To open a side panel

a. Remove the quick fastener screws “1”.

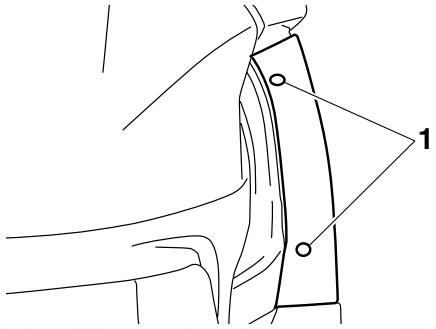

b. Pull the side panel to the open position, and then install the quick fastener screws “1”.

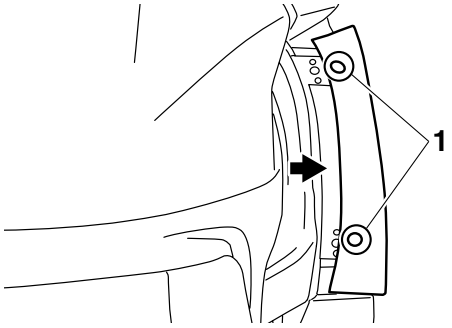

▲▲▲▲▲▲▲▲▲▲▲▲▲▲▲▲▲▲▲▲▲▲▲▲▲▲▲▲▲▲▲▲

▼▼▼▼▼▼▼▼▼▼▼▼▼▼▼▼▼▼▼▼▼▼▼▼▼▼▼▼▼▼▼▼

To close a side panel

a. Remove the quick fastener screws “1”.

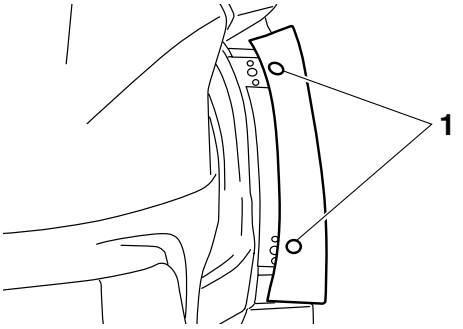

b. Push the side panel to the closed position, and then install the quick fastener screws “1”.

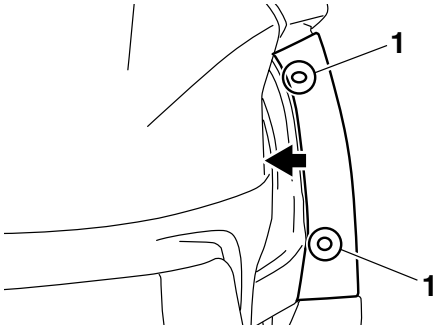

NOTE:

Make sure that the side panel is properly installed.

▲▲▲▲▲▲▲▲▲▲▲▲▲▲▲▲▲▲▲▲▲▲▲▲▲▲▲▲▲▲▲▲

ET3P61036

ADJUSTING THE RIDER SEAT HEIGHT

1. Check:
   - Rider seat height

NOTE:

- The rider seat height can be adjusted to one of two positions to suit the rider’s preference.
- The rider seat height was adjusted to the lower position at delivery.

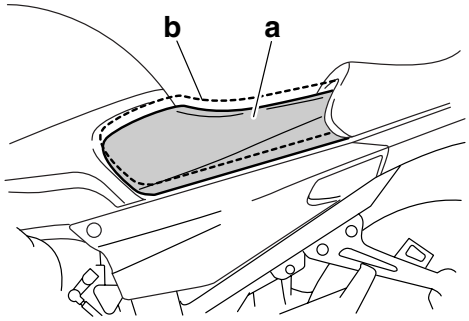

a. Low position
b. High position

2. Remove:
   - Passenger seat
   - Rider seat

   Refer to “GENERAL CHASSIS” on page 4-1.
3. Remove:
   - Rider seat height position adjuster “1”

NOTE:

Remove the rider seat height position adjuster by pulling it upward.

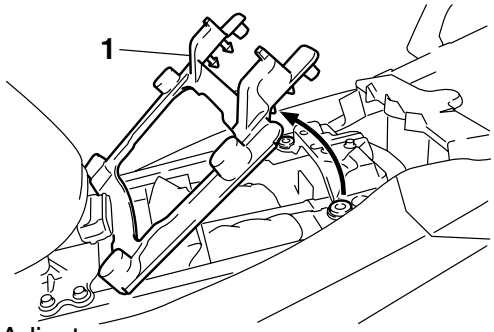

4. Adjust:
   - Rider seat height

▼▼▼▼▼▼▼▼▼▼▼▼▼▼▼▼▼▼▼▼▼▼▼▼▼▼▼▼▼▼▼▼

To change to the high position

a. Move the rider seat holder cover “1” to the lower position as shown.

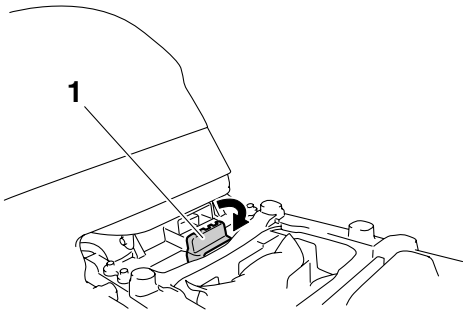

b. Install the rider seat height position adjuster “2” so that the “H” mark “a” is aligned with the match mark “b”.

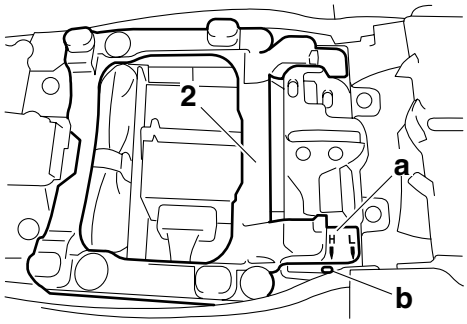

c. Insert the projection “c” on the front of the rider seat into seat holder (for high position) “3” as shown.

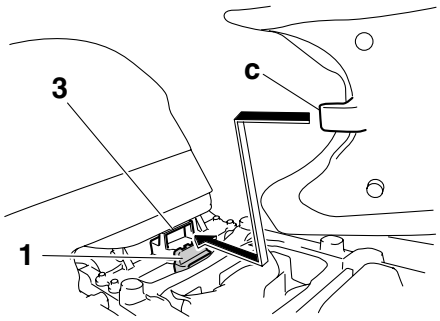

d. Align the high position projection “d” on the bottom of the rider seat with the “H” position slot “e”, and then push the rear of the seat down to lock it in place as shown.

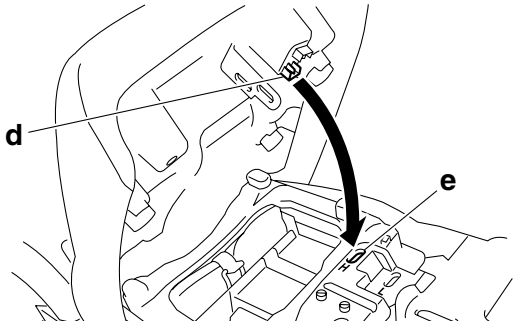

▲▲▲▲▲▲▲▲▲▲▲▲▲▲▲▲▲▲▲▲▲▲▲▲▲▲▲▲▲▲▲▲

▼▼▼▼▼▼▼▼▼▼▼▼▼▼▼▼▼▼▼▼▼▼▼▼▼▼▼▼▼▼▼▼

To change to the low position

a. Move the rider seat holder cover “1” to the upper position as shown.

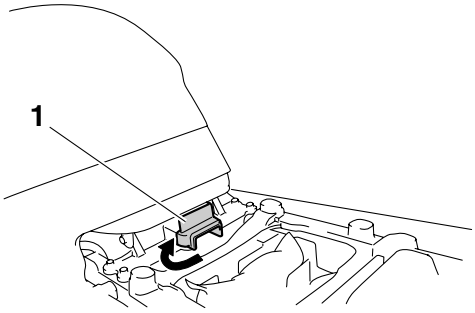

b. Install the rider seat height position adjuster “2” so that the “L” mark “a” is aligned with the match mark “b”.

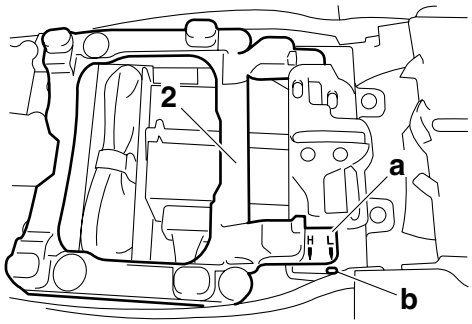

c. Insert the projection “c” on the front of the rider seat into seat holder (for low position) “3” as shown.

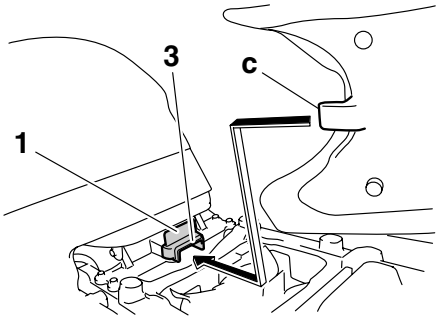

d. Align the low position projection “d” on the bottom of the rider seat with the “L” position slot “e”, and then push the rear of the seat down to lock it in place as shown.

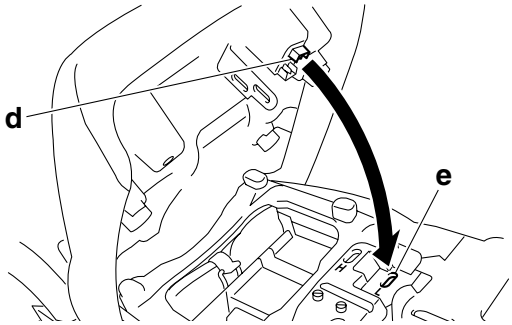

▲▲▲▲▲▲▲▲▲▲▲▲▲▲▲▲▲▲▲▲▲▲▲▲▲▲▲▲▲▲▲▲

5. Install:
   - Passenger seat
     Refer to “GENERAL CHASSIS” on page 4-1.

EAS21650

CHECKING THE TIRES

The following procedure applies to both of the tires.

1. Check:
   - Tire pressure
     Out of specification → Regulate.

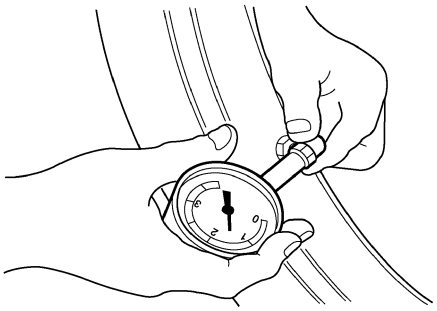

EWA13180

WARNING

- **The tire pressure should only be checked and regulated when the tire temperature equals the ambient air temperature.**
- **The tire pressure and the suspension must be adjusted according to the total weight (including cargo, rider, passenger and accessories) and the anticipated riding speed.**
- **Operation of an overloaded vehicle could cause tire damage, an accident or an injury. NEVER OVERLOAD THE VEHICLE.**

Tire air pressure (measured on cold tires)
Loading condition
0–90 kg (0–198 lb)
Front
270 kPa (39 psi) (2.70 kgf/cm²)
Rear
290 kPa (42 psi) (2.90 kgf/cm²)
Loading condition
90–212 kg (198–467 lb)
Front
270 kPa (39 psi) (2.70 kgf/cm²)
Rear
290 kPa (42 psi) (2.90 kgf/cm²)
High-speed riding
Front
270 kPa (39 psi) (2.70 kgf/cm²)
Rear
290 kPa (42 psi) (2.90 kgf/cm²)
Maximum load
212 kg (467 lb)
*** Total weight of rider, passenger, cargo and accessories**

EWA13190

WARNING

It is dangerous to ride with a worn-out tire. When the tire tread reaches the wear limit, replace the tire immediately.

2. Check:
   - Tire surfaces
     Damage/wear → Replace the tire.

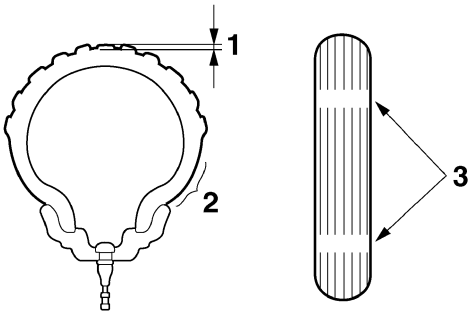

1. Tire tread depth
2. Side wall
3. Wear indicator

Wear limit (front)
1.6 mm (0.06 in)
Wear limit (rear)
1.6 mm (0.06 in)

EWA14080

WARNING

- **Do not use a tubeless tire on a wheel designed only for tube tires to avoid tire failure and personal injury from sudden deflation.**
- **When using a tube tire, be sure to install the correct tube.**
- **Always replace a new tube tire and a new tube as a set.**
- **To avoid pinching the tube, make sure the wheel rim band and tube are centered in the wheel groove.**
- **Patching a punctured tube is not recommended. If it is absolutely necessary to do so, use great care and replace the tube as soon as possible with a good quality replacement.**

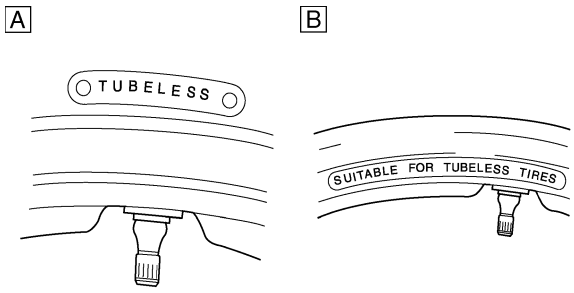

A. Tire
B. Wheel

Tube wheel	Tube tire only
Tubeless wheel	Tube or tubeless tire

EWA14090

WARNING

After extensive tests, the tires listed below have been approved by Yamaha Motor Co., Ltd. for this model. The front and rear tires should always be by the same manufacturer and of the same design. No guarantee concerning handling characteristics can be given if a tire combination other than one approved by Yamaha is used on this vehicle.

Front tire
Size
120/70 ZR17M/C (58W)
Manufacturer/model
METZELER/Roadtec Z6G
Manufacturer/model
BRIDGESTONE/BT020F

Rear tire
Size
180/55 ZR17M/C (73W)
Manufacturer/model
METZELER/Roadtec Z6C
Manufacturer/model
BRIDGESTONE/BT020R

EWA13210

WARNING

New tires have a relatively low grip on the road surface until they have been slightly worn. Therefore, approximately 100 km should be traveled at normal speed before any high-speed riding is done.

NOTE:

For tires with a direction of rotation mark “1”: Install the tire with the mark pointing in the direction of wheel rotation.

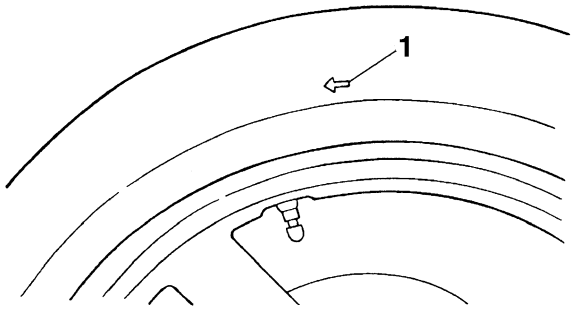

EAS21670

CHECKING THE WHEELS

The following procedure applies to both of the wheels.

1. Check:
   - Wheel
     Damage/out-of-round → Replace.

EWA13260

WARNING

Never attempt to make any repairs to the wheel.

NOTE:

After a tire or wheel has been changed or replaced, always balance the wheel.

EAS21690

CHECKING AND LUBRICATING THE CABLES

The following procedure applies to all of the inner and outer cables.

EWA13270

WARNING

Damaged outer cable may cause the cable to corrode and interfere with its movement. Replace damaged outer cable and inner cables as soon as possible.

1. Check:
   - Outer cable
     Damage → Replace.
2. Check:
   - Cable operation
     Rough movement → Lubricate.

Recommended lubricant
Engine oil or a suitable cable lubricant

NOTE:

Hold the cable end upright and pour a few drops of lubricant into the cable sheath or use a suitable lubricating device.

EAS21700

LUBRICATING THE LEVERS

Lubricate the pivoting point and metal-to-metal moving parts of the levers.

Recommended lubricant
Lithium-soap-based grease

EAS21710

LUBRICATING THE PEDALS

Lubricate the pivoting point and metal-to-metal moving parts of the pedals.

	Recommended lubricant **Lithium-soap-based grease**

EAS21720

LUBRICATING THE SIDESTAND

Lubricate the pivoting point and metal-to-metal moving parts of the sidestand.

	Recommended lubricant **Lithium-soap-based grease**

EAS21730

LUBRICATING THE CENTERSTAND

Lubricate the pivoting point and metal-to-metal moving parts of the centerstand.

	Recommended lubricant **Lithium-soap-based grease**

EAS21740

LUBRICATING THE REAR SUSPENSION

Lubricate the pivoting point and metal-to-metal moving parts of the rear suspension.

	Recommended lubricant **Lithium-soap-based grease**

EAS21750
ELECTRICAL SYSTEM

EAS21760
CHECKING AND CHARGING THE BATTERY
Refer to “ELECTRICAL COMPONENTS” on page 8-145.

EAS21770
CHECKING THE FUSES
Refer to “ELECTRICAL COMPONENTS” on page 8-145.

EAS21790
REPLACING THE HEADLIGHT BULBS
The following procedure applies to both of the headlight bulbs.

1. Remove:
   - Front cowling left inner panel 1
   - Front cowling right inner panel 1
     Refer to “GENERAL CHASSIS” on page 4-1.
2. Disconnect:
   - Headlight coupler “1”
3. Remove:
   - Headlight bulb cover “2”

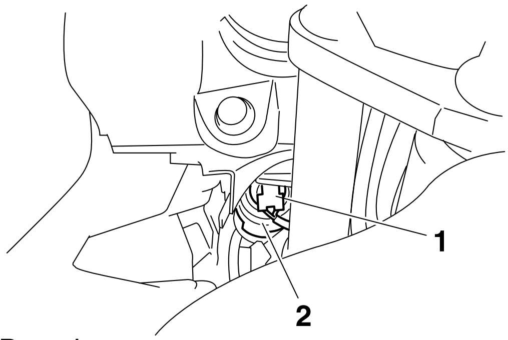

4. Detach:
   - Headlight bulb holder “1”
5. Remove:
   - Headlight bulb “2”

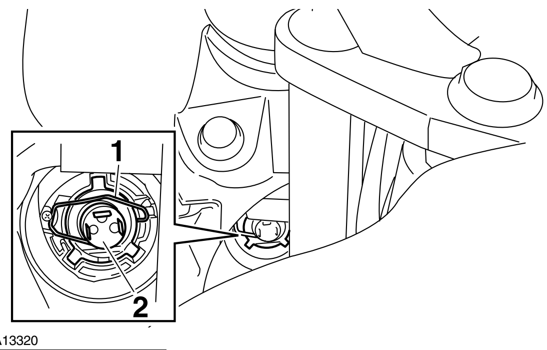

EWA13320
⚠ WARNING

Since the headlight bulb gets extremely hot, keep flammable products and your hands away from the bulb until it has cooled down.

6. Install:
   - Headlight bulb New
     Secure the new headlight bulb with the headlight bulb holder.

ECA13690
CAUTION:

Avoid touching the glass part of the headlight bulb to keep it free from oil, otherwise the transparency of the glass, the life of the bulb and the luminous flux will be adversely affected. If the headlight bulb gets soiled, thoroughly clean it with a cloth moistened with alcohol or lacquer thinner.

7. Attach:
   - Headlight bulb holder
8. Install:
   - Headlight bulb cover
9. Connect:
   - Headlight coupler
10. Install:
   - Front cowling right inner panel 1
   - Front cowling left inner panel 1
     Refer to “GENERAL CHASSIS” on page 4-1.

EAS21810
ADJUSTING THE HEADLIGHT BEAMS
1. Adjust:
   - Headlight beam (vertically)

▼▼▼▼▼▼▼▼▼▼▼▼▼▼▼▼▼▼▼▼▼▼▼▼▼▼▼▼▼▼▼▼▼▼▼

a. Turn the adjusting knobs “1” in direction “a” or “b”.

Direction “a”
Headlight beam is raised.
Direction “b”
Headlight beam is lowered.

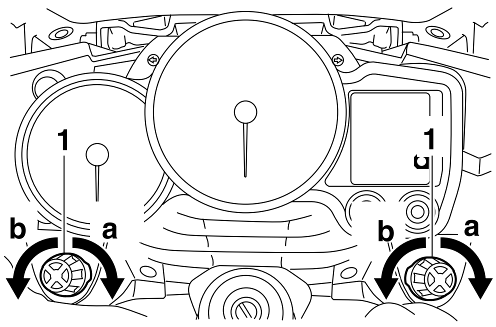

▲▲▲▲▲▲▲▲▲▲▲▲▲▲▲▲▲▲▲▲▲▲▲▲▲▲▲▲▲▲▲▲▲▲▲

2. Adjust:
   - Headlight beam (horizontally)

▼▼▼▼▼▼▼▼▼▼▼▼▼▼▼▼▼▼▼▼▼▼▼▼▼▼▼▼▼▼▼▼▼▼▼

a. Turn the adjusting screws “1” in direction “a” or “b”.
   Left headlight

Direction “a”
Headlight beam moves to the left.
Direction “b”
Headlight beam moves to the right.

Right headlight

Direction “a”
Headlight beam moves to the right.
Direction “b”
Headlight beam moves to the left.

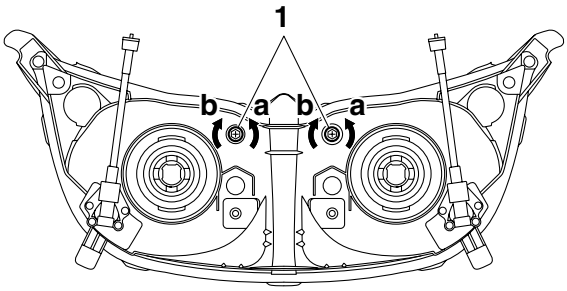

CHASSIS

GENERAL CHASSIS 4-1
REMOVING THE SIDE PANELS 4-7
INSTALLING THE FRONT COWLING LEFT INNER PANEL 2 4-7
INSTALLING THE FRONT COWLING RIGHT INNER PANEL 2 4-8
INSTALLING THE SIDE PANELS 4-8

FRONT WHEEL 4-13
REMOVING THE FRONT WHEEL 4-15
DISASSEMBLING THE FRONT WHEEL 4-15
CHECKING THE FRONT WHEEL 4-15
MAINTENANCE OF THE FRONT WHEEL SENSOR AND SENSOR ROTOR 4-16
ASSEMBLING THE FRONT WHEEL 4-17
ADJUSTING THE FRONT WHEEL STATIC BALANCE 4-17
INSTALLING THE FRONT WHEEL (FRONT BRAKE DISCS) 4-18

REAR WHEEL 4-20
REMOVING THE REAR WHEEL 4-22
DISASSEMBLING THE REAR WHEEL 4-22
CHECKING THE REAR WHEEL 4-22
MAINTENANCE OF THE REAR WHEEL SENSOR AND SENSOR ROTOR 4-22
ASSEMBLING THE REAR WHEEL 4-22
ADJUSTING THE REAR WHEEL STATIC BALANCE 4-23
INSTALLING THE REAR WHEEL (REAR BRAKE DISC) 4-23

FRONT BRAKE 4-25
INTRODUCTION 4-30
CHECKING THE FRONT BRAKE DISCS 4-30
REPLACING THE FRONT BRAKE PADS 4-31
REMOVING THE FRONT BRAKE CALIPERS 4-32
DISASSEMBLING THE FRONT BRAKE CALIPERS 4-32
CHECKING THE FRONT BRAKE CALIPERS 4-33
ASSEMBLING THE FRONT BRAKE CALIPERS 4-33
INSTALLING THE FRONT BRAKE CALIPERS 4-33
REMOVING THE FRONT BRAKE MASTER CYLINDER 4-35
CHECKING THE FRONT BRAKE MASTER CYLINDER 4-35
ASSEMBLING THE FRONT BRAKE MASTER CYLINDER 4-35
INSTALLING THE FRONT BRAKE MASTER CYLINDER 4-35

REAR BRAKE 4-37
INTRODUCTION 4-43
CHECKING THE REAR BRAKE DISC 4-43
REPLACING THE REAR BRAKE PADS 4-43
REMOVING THE REAR BRAKE CALIPER 4-44
DISASSEMBLING THE REAR BRAKE CALIPER 4-45
CHECKING THE REAR BRAKE CALIPER 4-45
ASSEMBLING THE REAR BRAKE CALIPER 4-45
INSTALLING THE REAR BRAKE CALIPER 4-45
REMOVING THE REAR BRAKE MASTER CYLINDER 4-47
CHECKING THE REAR BRAKE MASTER CYLINDER 4-47
ASSEMBLING THE REAR BRAKE MASTER CYLINDER 4-47
INSTALLING THE REAR BRAKE MASTER CYLINDER 4-48

ABS (ANTI-LOCK BRAKE SYSTEM) 4-50
ABS COMPONENTS CHART 4-50
REMOVING THE HYDRAULIC UNIT 4-54
CHECKING THE HYDRAULIC UNIT 4-54
CHECKING THE PROPORTIONING VALVE AND METERING VALVE 4-55
INSTALLING THE HYDRAULIC UNIT 4-55
HYDRAULIC UNIT OPERATION TESTS 4-56
TRIAL RUN 4-59

HANDLEBARS 4-60
REMOVING THE HANDLEBARS 4-62
CHECKING THE HANDLEBARS 4-62
INSTALLING THE HANDLEBARS 4-62

FRONT FORK 4-65
REMOVING THE FRONT FORK LEGS 4-68
DISASSEMBLING THE FRONT FORK LEGS 4-68
CHECKING THE FRONT FORK LEGS 4-69
ASSEMBLING THE FRONT FORK LEGS 4-70
INSTALLING THE FRONT FORK LEGS 4-73

STEERING HEAD 4-75
REMOVING THE LOWER BRACKET 4-77
CHECKING THE STEERING HEAD 4-77
INSTALLING THE STEERING HEAD 4-77

REAR SHOCK ABSORBER ASSEMBLY 4-79
HANDLING THE REAR SHOCK ABSORBER 4-81
DISPOSING OF A REAR SHOCK ABSORBER 4-81
REMOVING THE REAR SHOCK ABSORBER ASSEMBLY 4-81
CHECKING THE REAR SHOCK ABSORBER ASSEMBLY 4-81
CHECKING THE CONNECTING ARM AND RELAY ARM 4-82
INSTALLING THE RELAY ARM 4-82
INSTALLING THE REAR SHOCK ABSORBER ASSEMBLY 4-82

SWINGARM 4-83
REMOVING THE SWINGARM 4-85
CHECKING THE SWINGARM 4-85
INSTALLING THE SWINGARM 4-85

SHAFT DRIVE 4-87
TROUBLESHOOTING 4-91
CHECKING THE FINAL DRIVE OIL FOR CONTAMINATION AND CHECKING THE SHAFT DRIVE FOR LEAKS 4-92
MEASURING THE FINAL GEAR BACKLASH 4-92
ADJUSTING THE FINAL GEAR BACKLASH 4-93
MEASURING THE RING-GEAR-TO-STOPPER-BOLT CLEARANCE 4-94
ADJUSTING THE RING-GEAR-TO-STOPPER-BOLT CLEARANCE 4-94
DISASSEMBLING THE FINAL DRIVE ASSEMBLY 4-95
REMOVING AND INSTALLING THE BEARINGS 4-96
ALIGNING THE FINAL DRIVE PINION GEAR AND RING GEAR 4-96
CHECKING THE DRIVE SHAFT 4-99
INSTALLING THE DRIVE SHAFT AND FINAL DRIVE ASSEMBLY 4-100

EAS21830

GENERAL CHASSIS

Removing the seats and covers

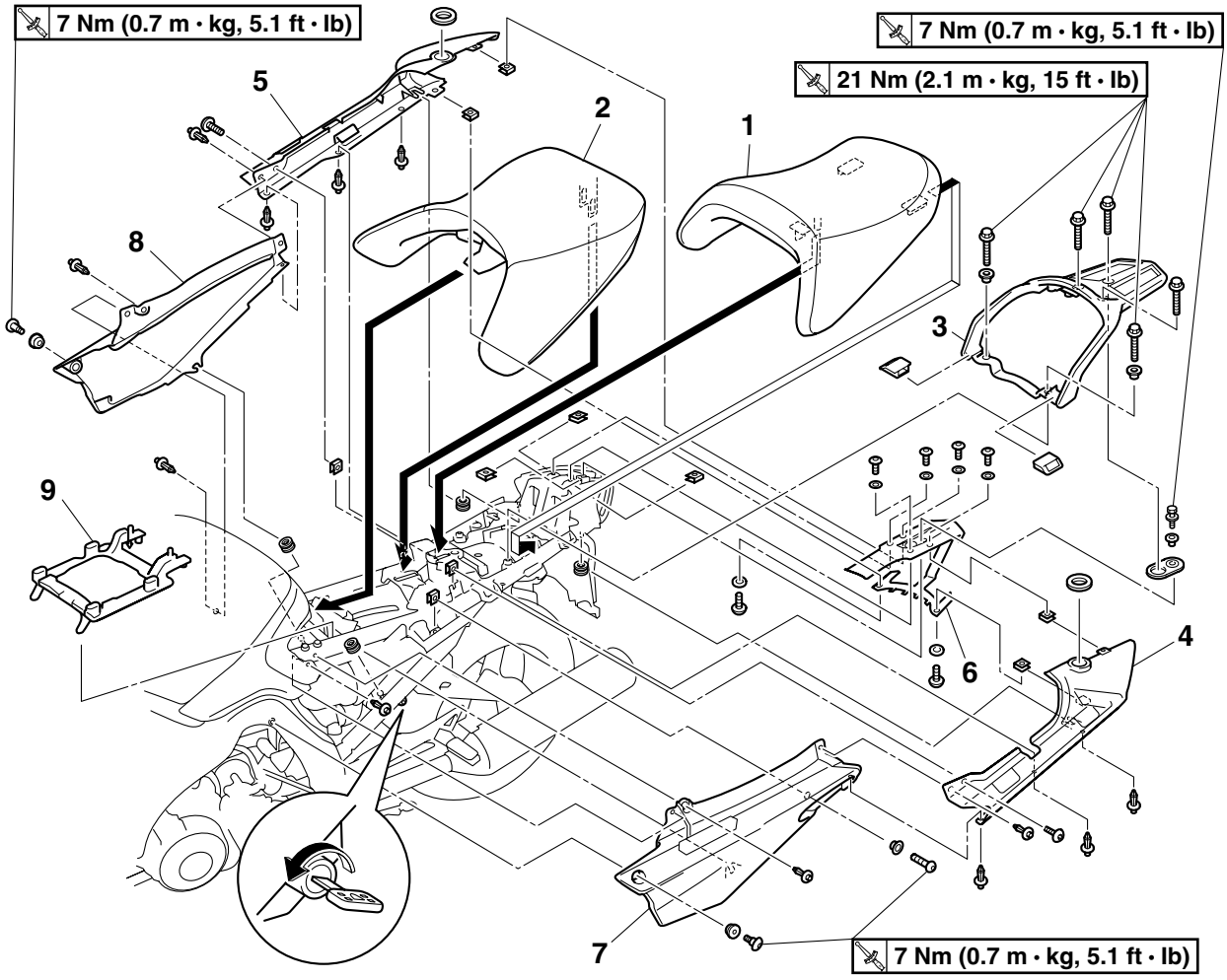

Order	Job/Parts to remove	Q'ty	Remarks
1	Passenger seat	1	
2	Rider seat	1	
3	Grab bar	1	
4	Left rear cowling	1	
5	Right rear cowling	1	
6	Center rear cowling	1	
7	Left side cover	1	
8	Right side cover	1	
9	Rider seat height position adjuster	1	
			For installation, reverse the removal procedure.

Removing the front cowling assembly

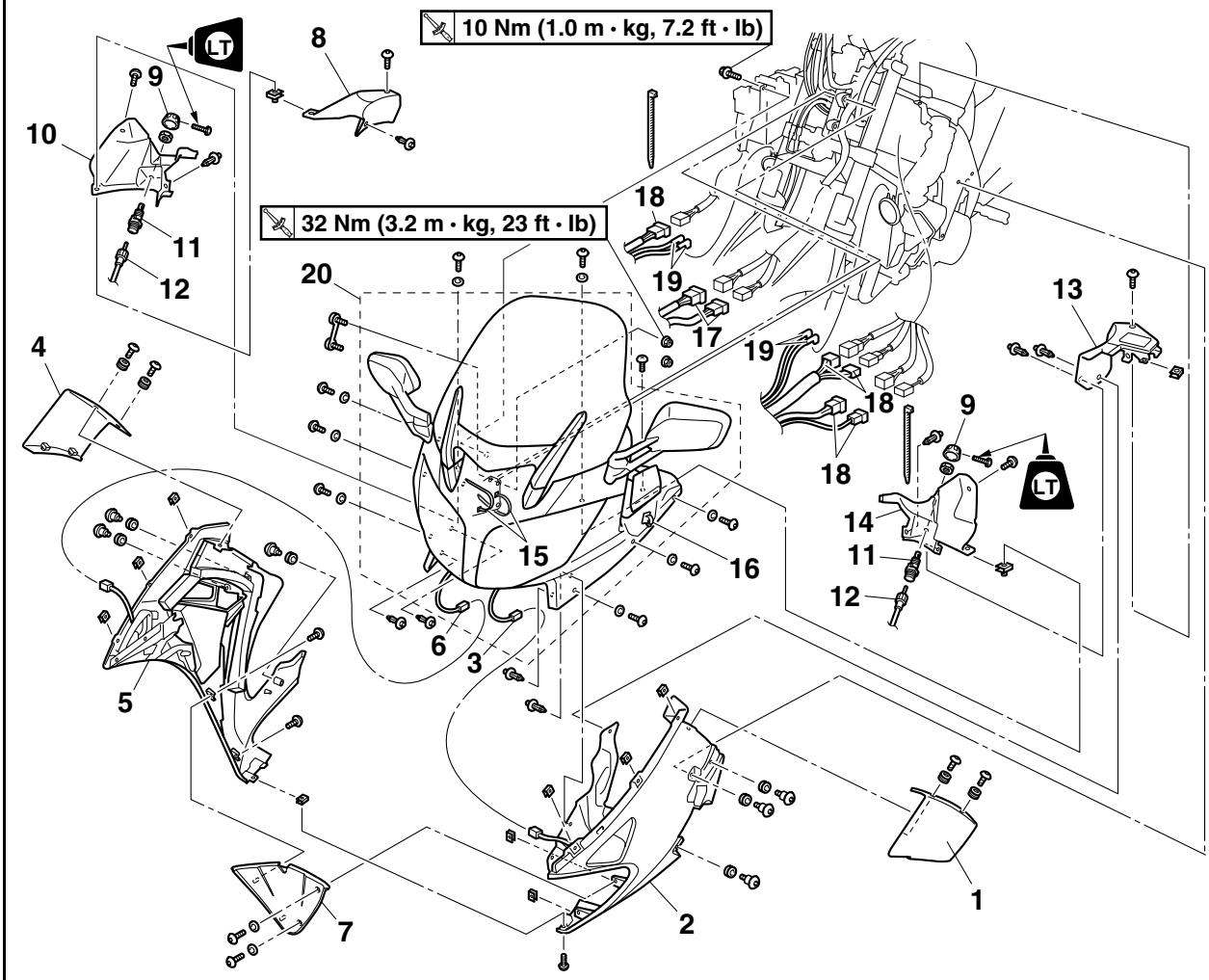

Order	Job/Parts to remove	Q'ty	Remarks
	Open the accessory box lid.		
1	Left side panel	1	
2	Left side cowling	1	
3	Front left turn signal light coupler	1	Disconnect.
4	Right side panel	1	
5	Right side cowling	1	
6	Front right turn signal light coupler	1	Disconnect.
7	Bottom cowling	1	
8	Front cowling right inner panel 1	1	
9	Headlight beam adjusting knob	2	
10	Front cowling right inner panel 2	1	
11	Adjusting knob shaft	2	
12	Headlight beam adjusting cable	2	Disconnect.
13	Front cowling left inner panel 1	1	
14	Front cowling left inner panel 2	1	
15	Plastic band	2	Disconnect.
16	Plastic holder	1	Disconnect.

Removing the front cowling assembly

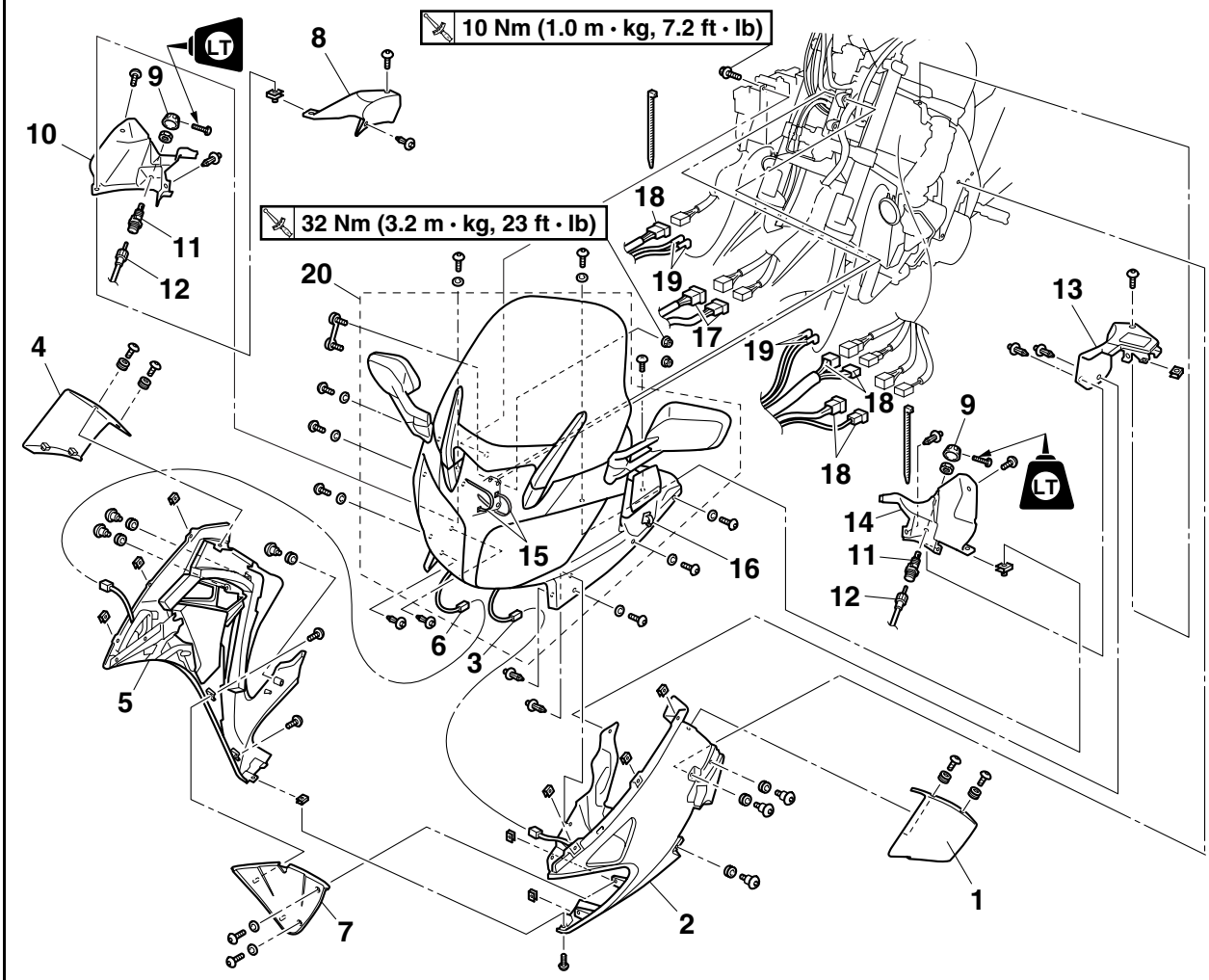

Order	Job/Parts to remove	Q'ty	Remarks
17	Handlebar switch coupler	2	Disconnect.
18	Front cowling wire harness coupler	5	Disconnect.
19	Horn connector	4	Disconnect.
20	Front cowling assembly	1	
			For installation, reverse the removal procedure.

Disassembling the front cowling assembly

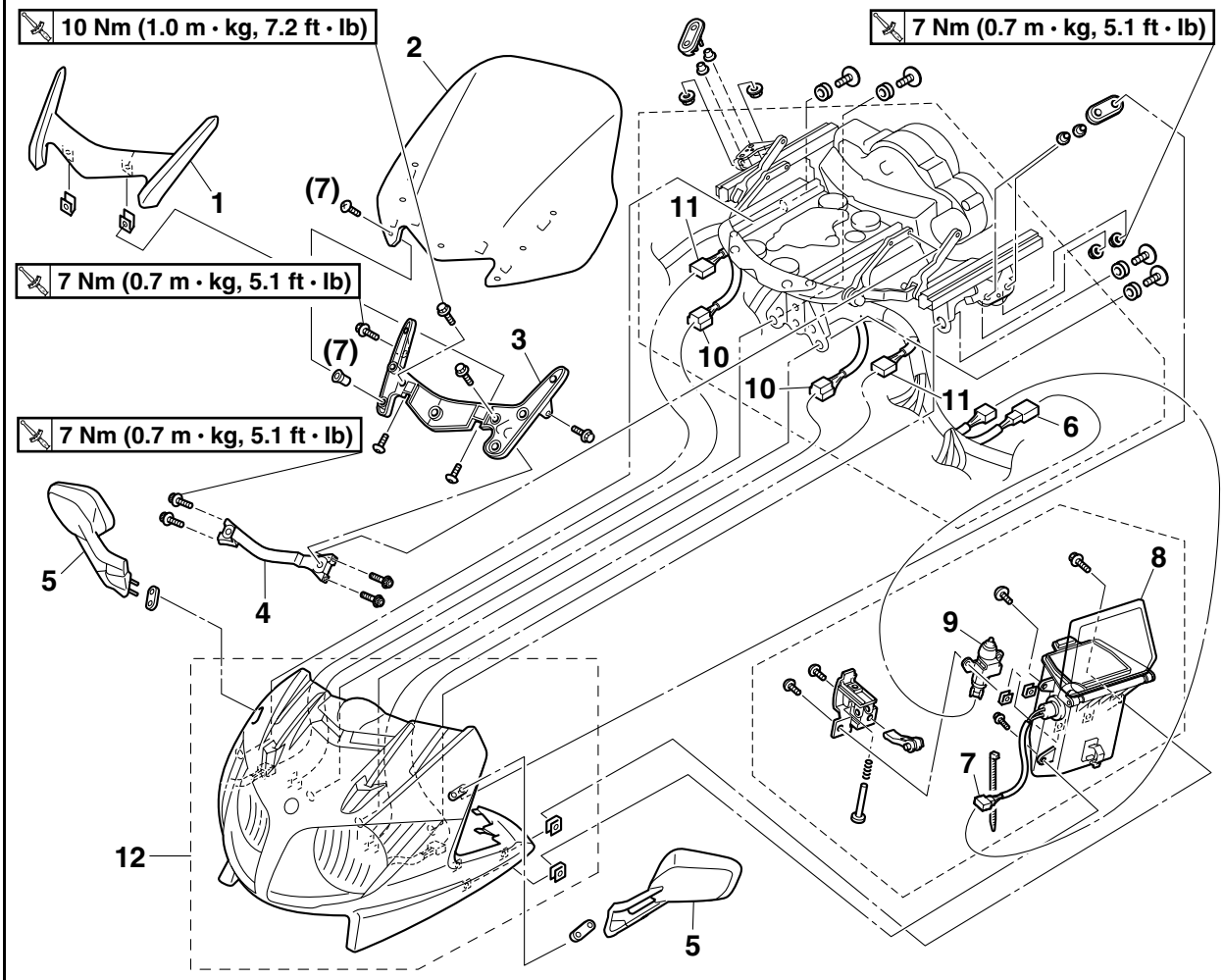

Order	Job/Parts to remove	Q'ty	Remarks
	Front cowling assembly		Refer to "Removing the front cowling assembly".
1	Windshield outer bracket	1	
2	Windshield	1	
3	Windshield upper inner bracket	1	
4	Windshield lower inner bracket	1	
5	Rearview mirror	2	
6	Accessory box solenoid coupler	1	Disconnect.
7	Auxiliary DC jack coupler	1	Disconnect.
8	Accessory box	1	
9	Accessory box solenoid	1	
10	Headlight coupler	2	Disconnect.
11	Auxiliary light coupler	2	Disconnect.
12	Front cowling	1	
			For assembly, reverse the disassembly procedure.

Removing the headlight assembly

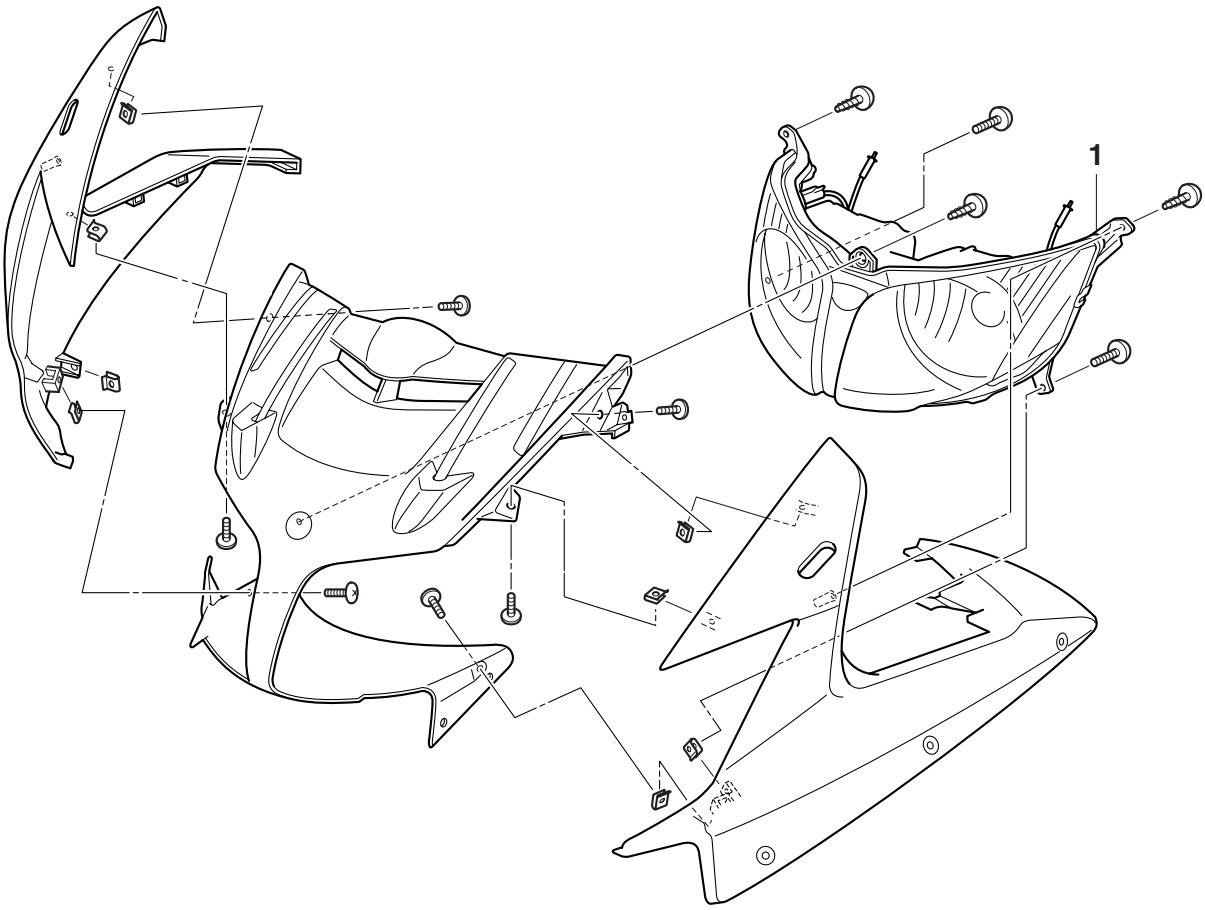

Order	Job/Parts to remove	Q'ty	Remarks
	Front cowling		Refer to "Disassembling the front cowling assembly".
1	Headlight assembly	1	
			For installation, reverse the removal procedure.

Removing the windshield drive unit, meter assembly, and relays

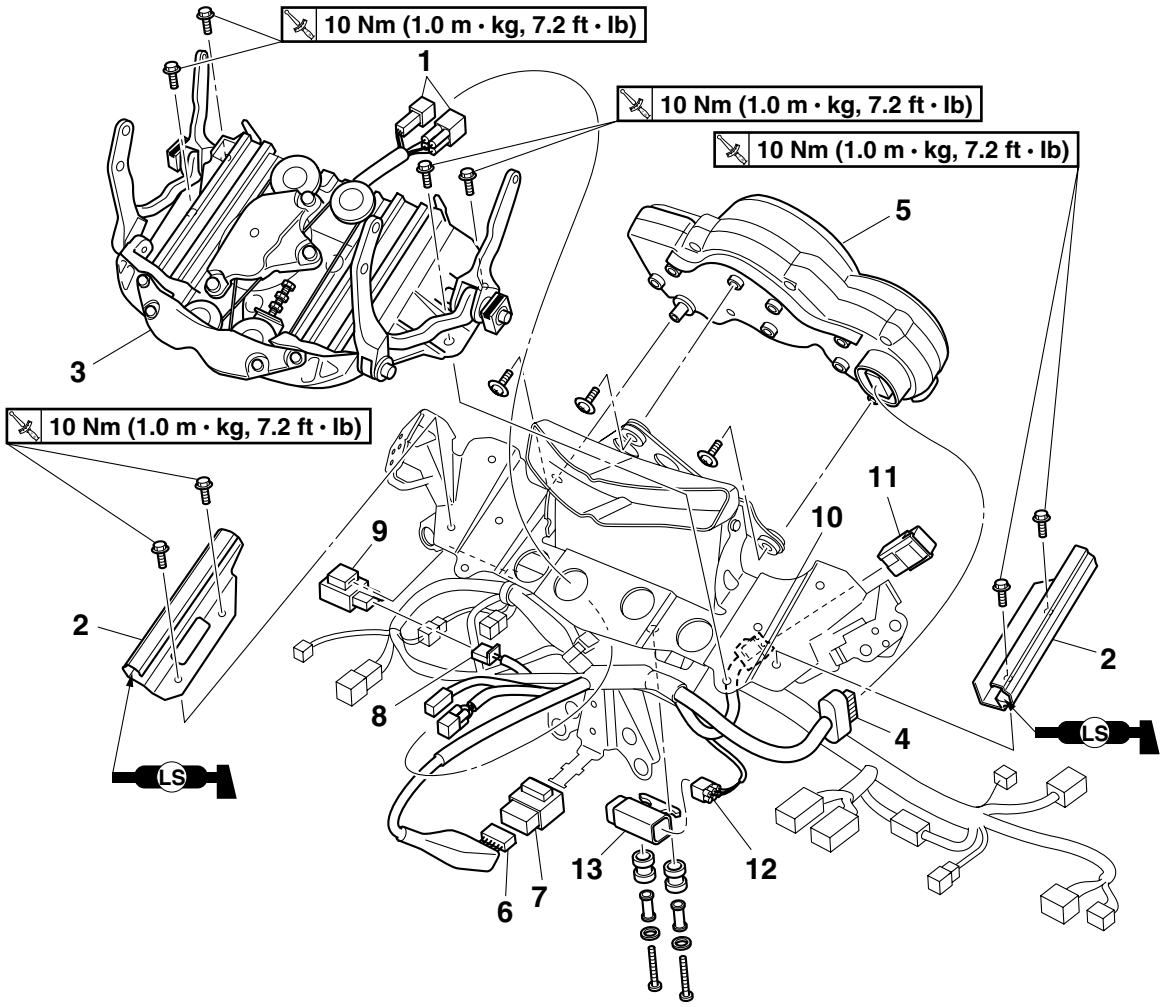

Order	Job/Parts to remove	Q'ty	Remarks
	Front cowling stay		Refer to "Disassembling the front cowling assembly".
1	Windshield drive unit coupler	2	Disconnect.
2	Windshield drive unit side rail	2	
3	Windshield drive unit	1	
4	Meter assembly coupler	1	Disconnect.
5	Meter assembly	1	
6	Relay unit coupler	1	Disconnect.
7	Relay unit	1	
8	Turn signal/hazard relay coupler	1	Disconnect.
9	Turn signal/hazard relay	1	
10	Headlight relay (dimmer) coupler	1	Disconnect.
11	Headlight relay (dimmer)	1	
12	Lean angle sensor coupler	1	Disconnect.
13	Lean angle sensor	1	
			For installation, reverse the removal procedure.

ET3P61037

REMOVING THE SIDE PANELS

1. Remove:
   - Side panel “1”

NOTE:

To release a pin on the side panel “1” from its corresponding hinge on the side cowling “2”, push the end “a” of the hinge with a flathead screwdriver.

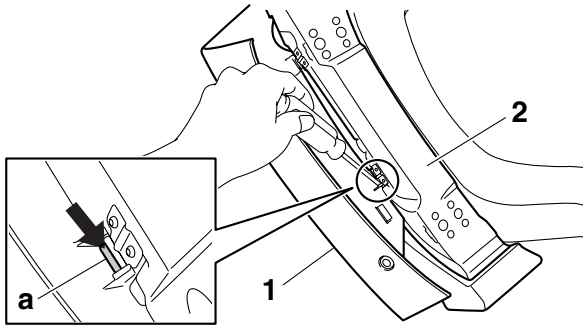

ET3P61038

INSTALLING THE FRONT COWLING LEFT INNER PANEL 2

1. Install:
   - Front cowling left inner panel 2

▼▼▼▼▼▼▼▼▼▼▼▼▼▼▼▼▼▼▼▼▼▼▼▼▼▼▼▼▼▼▼▼▼▼

EC3P61038

CAUTION:

When installing the panels onto the vehicle, be careful not to damage the panels or the vehicle itself.

a. Turn the main switch to “ON”, and then open the accessory box lid.
b. Turn the handlebar completely to the left.
c. Install the adjusting knob shaft “1” onto the left headlight beam adjusting cable “2”.

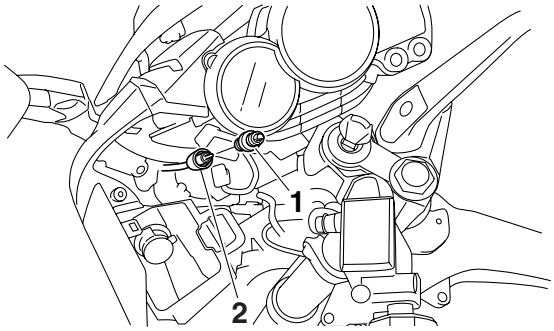

d. Place front cowling left inner panel 2 “3” between the front cowling assembly and the steering stem.

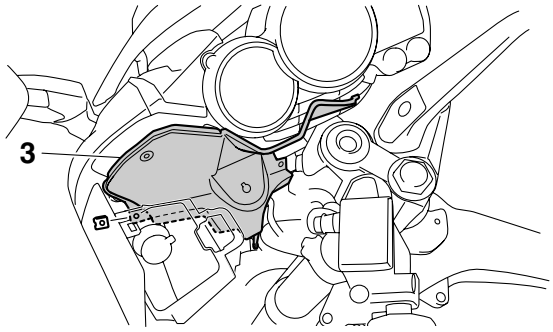

e. Fit the top and side of inner panel 2 into the front cowling assembly to the left of the meter assembly.

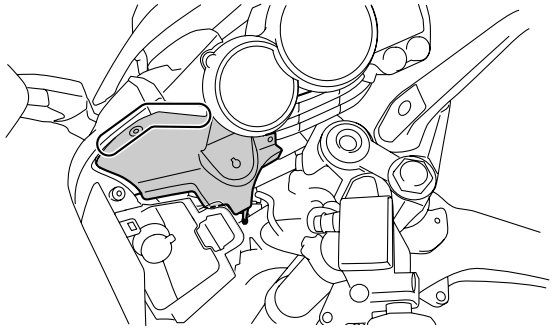

f. Fit inner panel 2 under the right side of the accessory box.

NOTE:

Pull the front cowling assembly outward when fitting the panel under the accessory box.

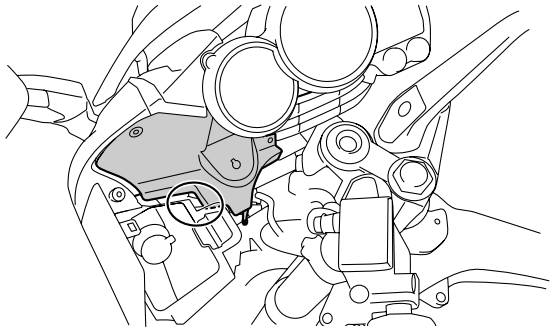

g. Fit the lower left corner of inner panel 2 into the front cowling assembly in front of the accessory box, making sure to align the bolt hole in the panel with the bolt hole in the cowling.
h. Push inner panel 2 inward, under the meter assembly.

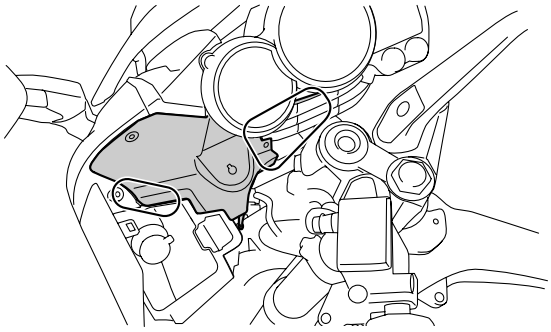

i. Insert the adjusting knob shaft into the hole in inner panel 2, making sure to align the projection “a” on the shaft's sleeve with the slot “b” in the panel, and then install the nut.
j. Install the headlight beam adjusting knob “4”.
k. Install the hexagon socket bolts and the quick fastener.

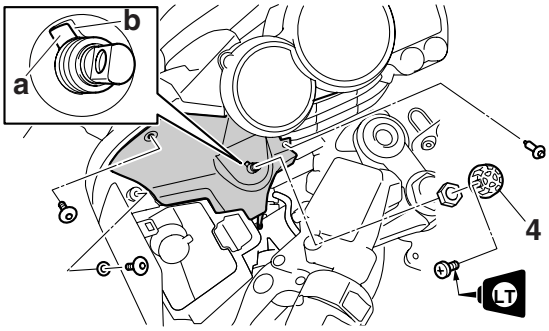

▲▲▲▲▲▲▲▲▲▲▲▲▲▲▲▲▲▲▲▲▲▲▲▲▲▲▲▲▲▲▲▲

ET3P61039

INSTALLING THE FRONT COWLING RIGHT INNER PANEL 2

1. Install:
   - Front cowling right inner panel 2

▼▼▼▼▼▼▼▼▼▼▼▼▼▼▼▼▼▼▼▼▼▼▼▼▼▼▼▼▼▼▼▼

a. Turn the handlebar completely to the right.
b. Install the adjusting knob shaft “1” onto the right headlight beam adjusting cable “2”.
c. Insert the adjusting knob shaft into the hole in front cowling right inner panel 2 “3”, making sure to align the projection “a” on the shaft’s sleeve with the slot “b” in the panel, and then install the nut.
d. Install the headlight beam adjusting knob “4”.

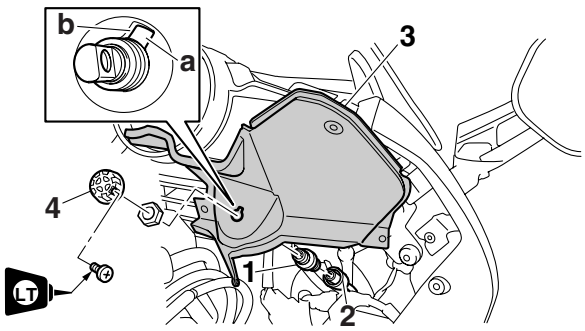

e. Fit the lower right corner of inner panel 2 into the front cowling assembly, making sure to align the bolt hole in the panel with the bolt hole in the cowling.

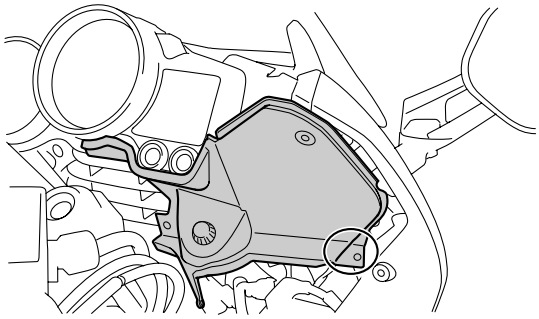

f. Fit the top and side of inner panel 2 into the front cowling assembly to the right of the meter assembly, and then push the panel inward, under the meter assembly.

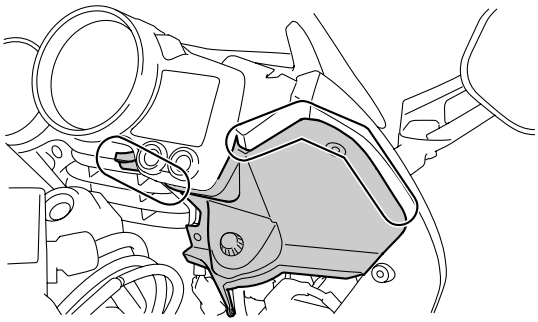

g. Install the hexagon socket bolt and the quick fastener.

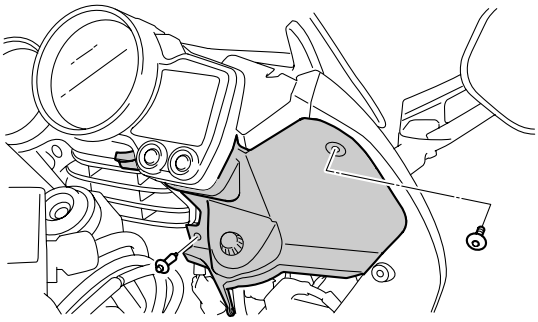

▲▲▲▲▲▲▲▲▲▲▲▲▲▲▲▲▲▲▲▲▲▲▲▲▲▲▲▲▲▲▲▲

ET3P61040

INSTALLING THE SIDE PANELS

1. Install:
   - Side panels “1”

NOTE:

Be sure to fit each pin “a” on the side panels “1” into the groove “b” in its corresponding hinge on the side cowlings “2”.

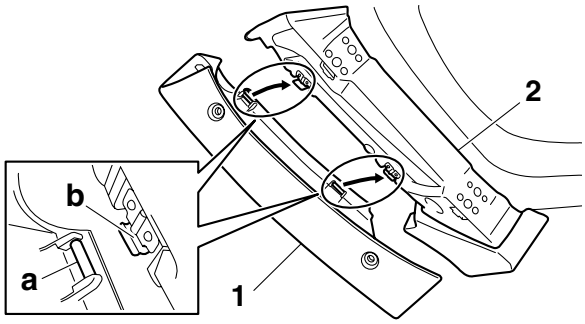
2
b
a
1

Removing the T-bar

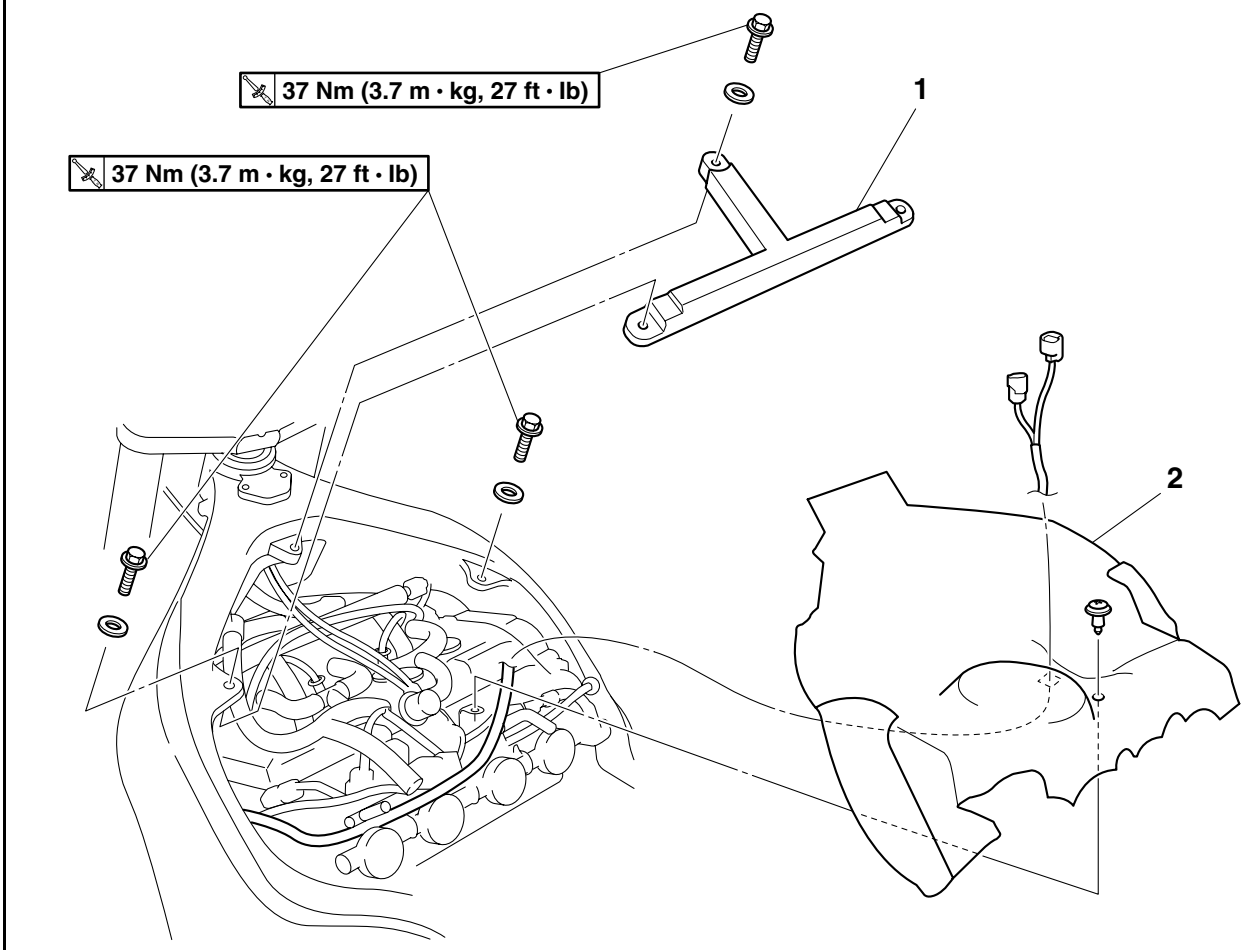

Order	Job/Parts to remove	Q'ty	Remarks
	Rider seat		Refer to "GENERAL CHASSIS" on page 4-1.
	Fuel tank		Refer to "FUEL TANK" on page 7-1.
1	T-bar	1	
2	Heat protector	1	
			For installation, reverse the removal procedure.

Removing the air filter case

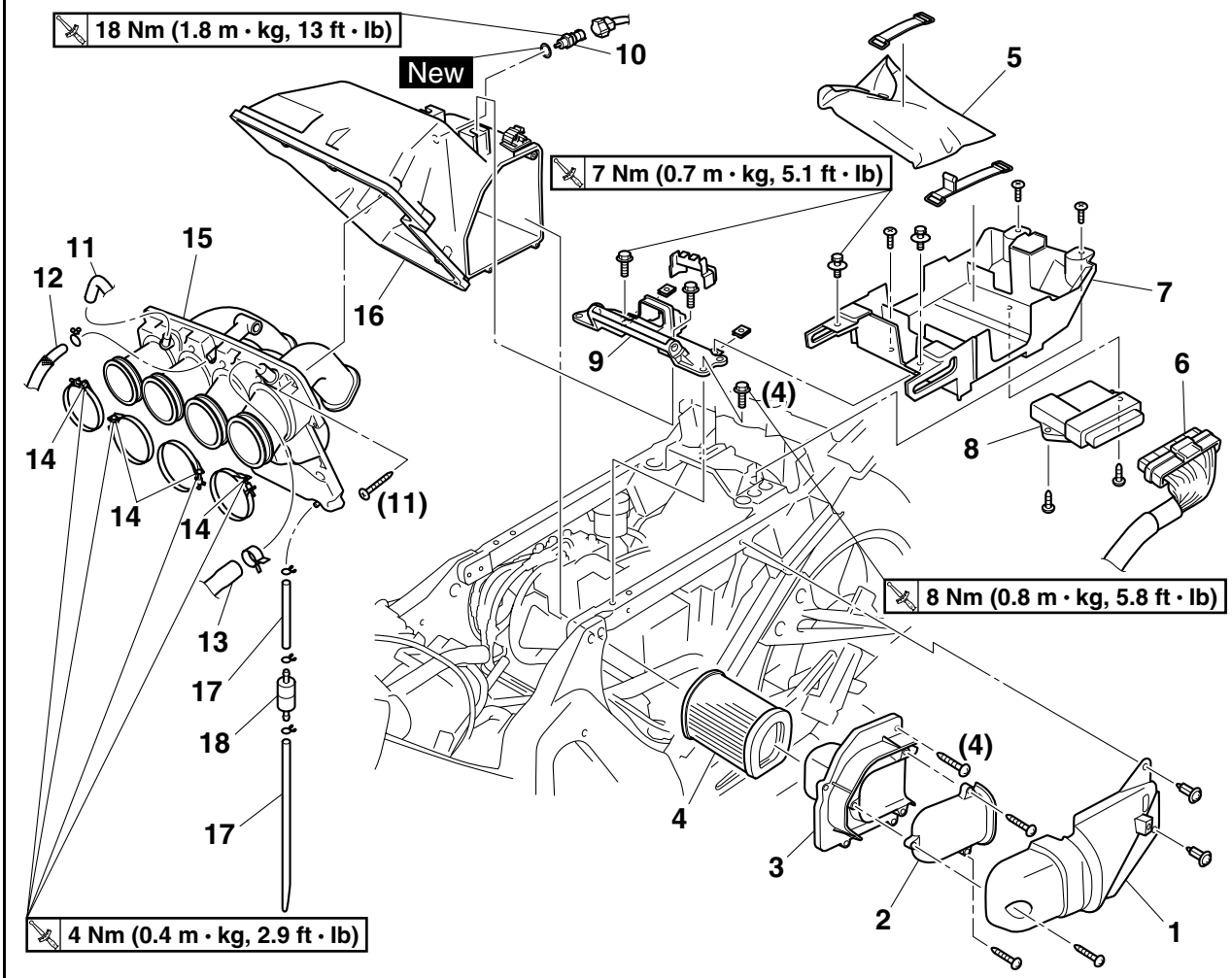

Order	Job/Parts to remove	Q'ty	Remarks
	Left side cover/T-bar		Refer to "GENERAL CHASSIS" on page 4-1.
	Fuel tank		Refer to "FUEL TANK" on page 7-1.
1	Air shroud	1	
2	Air duct	1	
3	Air filter case cover	1	
4	Air filter element	1	
5	Tool kit	1	
6	ECU coupler	1	Disconnect.
7	Storage compartment	1	
8	ECU (engine control unit)	1	
9	Rear lower fuel tank bracket	1	
10	Intake air temperature sensor	1	
11	Bypass air unit inlet hose	1	Disconnect.
12	Crankcase breather hose	1	Disconnect.
13	Air induction system hose (air filter case joint assembly to 3-way joint)	1	Disconnect.
14	Air filter case joint clamp screw	4	Loosen.

Removing the air filter case

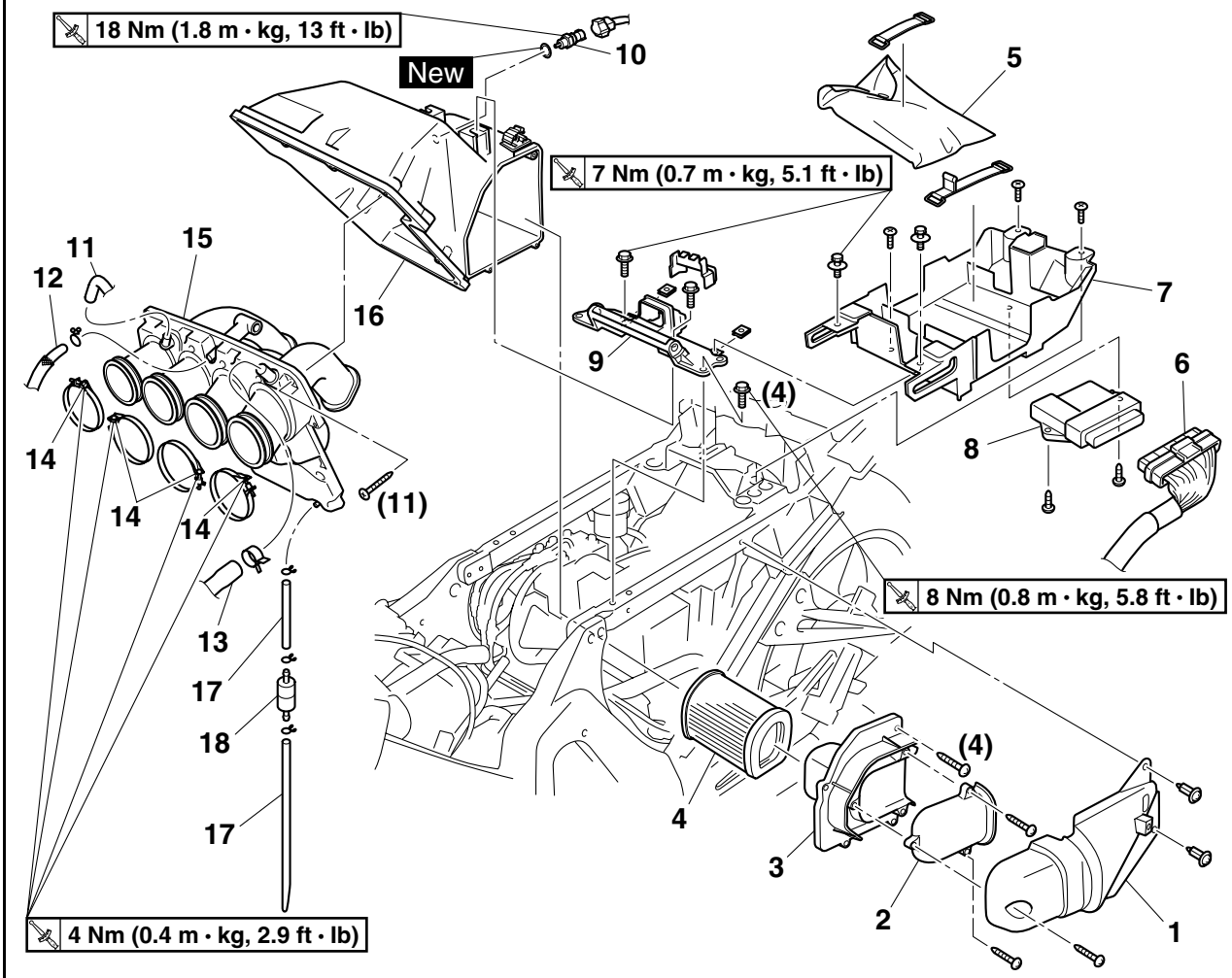

Order	Job/Parts to remove	Q'ty	Remarks
15	Air filter case joint assembly	1	
16	Air filter case	1	
17	Air filter case breather hose	2	
18	Filter assembly	1	
			For installation, reverse the removal procedure.

EAS21880

FRONT WHEEL

Removing the front wheel, brake discs, wheel sensor, and sensor housing

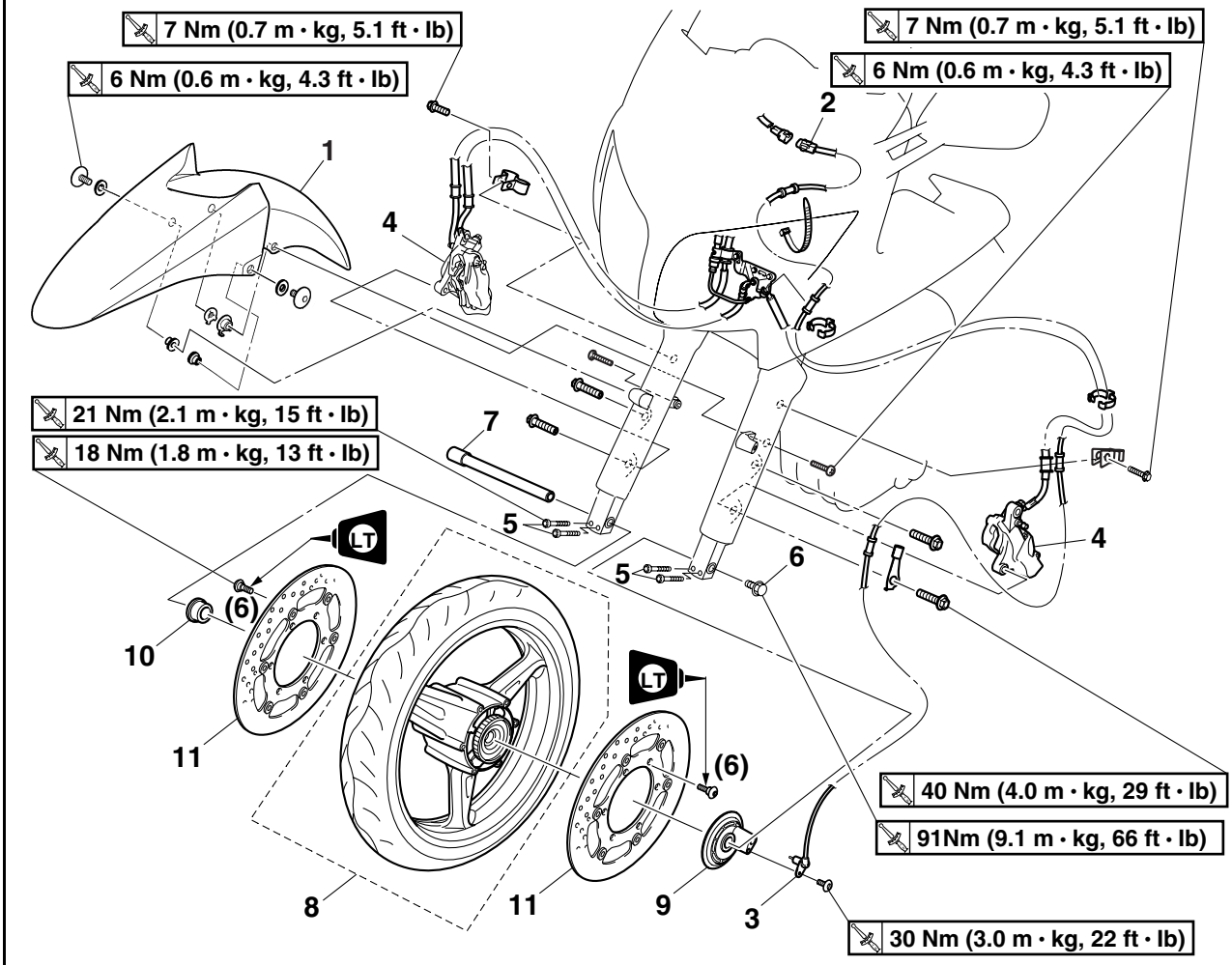

Order	Job/Parts to remove	Q'ty	Remarks
	Rider seat/T-bar		Refer to "GENERAL CHASSIS" on page 4-1.
	Fuel tank		Refer to "FUEL TANK" on page 7-1.
1	Front fender	1	
2	Front wheel sensor coupler	1	Disconnect.
3	Front wheel sensor	1	
4	Front brake caliper	2	
5	Front wheel axle pinch bolt	4	Loosen.
6	Front wheel axle bolt	1	
7	Front wheel axle	1	
8	Front wheel	1	
9	Front wheel sensor housing	1	
10	Collar	1	
11	Front brake disc	2	
			For installation, reverse the removal procedure.

Disassembling the front wheel

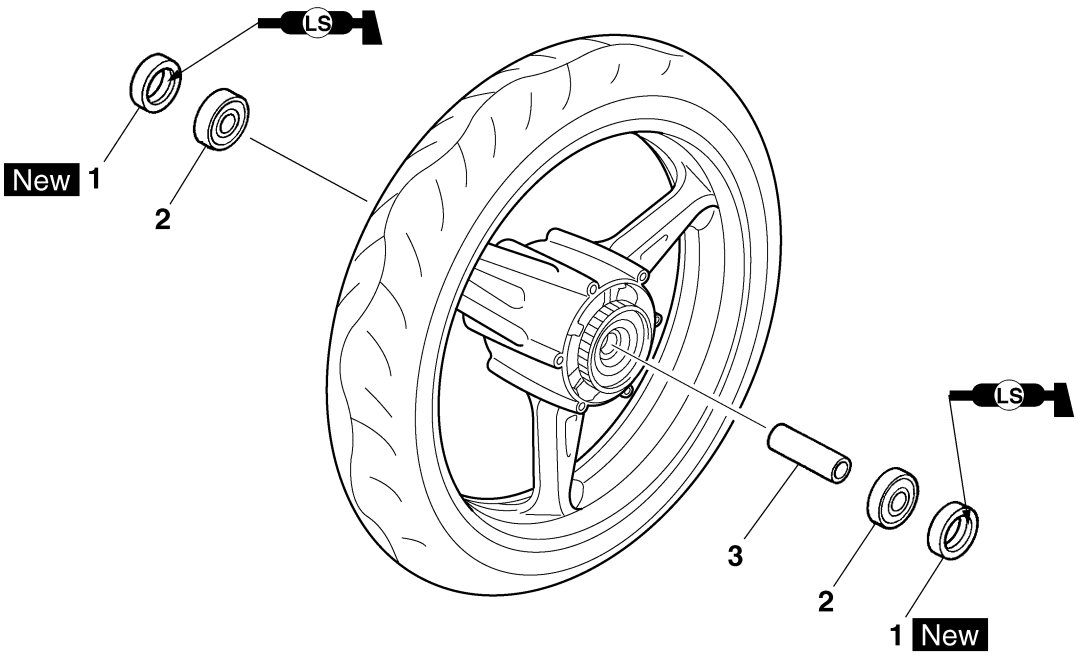

Order	Job/Parts to remove	Q'ty	Remarks
1	Oil seal	2	
2	Wheel bearing	2	
3	Spacer	1	
			For assembly, reverse the disassembly procedure.

EAS21900
REMOVING THE FRONT WHEEL
1. Stand the vehicle on a level surface.

EWA13120
WARNING

Securely support the vehicle so that there is no danger of it falling over.

2. Remove:
   - Front wheel sensor
   - Front brake calipers

EC3P61020
CAUTION:

- **Be sure not to contact the sensor electrode to any metal part when removing the front wheel sensor from the sensor housing.**
- **Do not operate the brake lever and brake pedal when removing the brake calipers.**

3. Elevate:
   - Front wheel

NOTE:

Place the vehicle on a suitable stand so that the front wheel is elevated.

EAS21910
DISASSEMBLING THE FRONT WHEEL
1. Remove:
   - Oil seals
   - Wheel bearings

▼▼▼▼▼▼▼▼▼▼▼▼▼▼▼▼▼▼▼▼▼▼▼▼▼▼▼▼▼▼▼▼▼▼

a. Clean the outside of the front wheel hub.
b. Remove the oil seals “1” with a flathead screwdriver.

NOTE:

To prevent damaging the wheel, place a rag “2” between the screwdriver and the wheel surface.

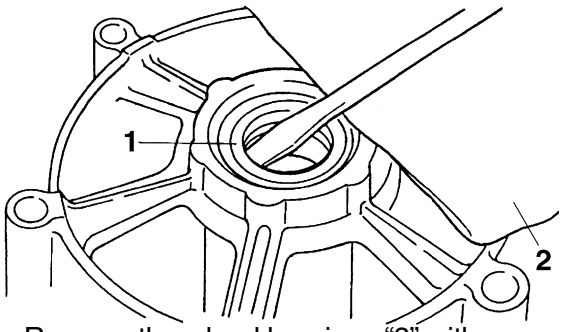

c. Remove the wheel bearings “3” with a general bearing puller.

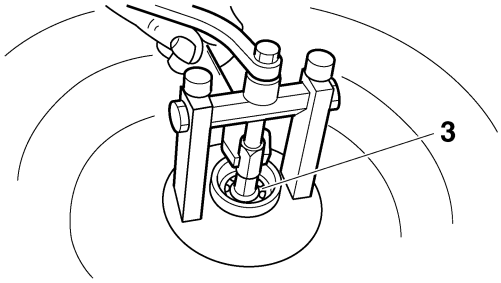

▲▲▲▲▲▲▲▲▲▲▲▲▲▲▲▲▲▲▲▲▲▲▲▲▲▲▲▲▲▲▲▲▲▲

EAS21920
CHECKING THE FRONT WHEEL
1. Check:
   - Wheel axle
     Roll the wheel axle on a flat surface.
     Bends → Replace.

EWA13460
WARNING

Do not attempt to straighten a bent wheel axle.

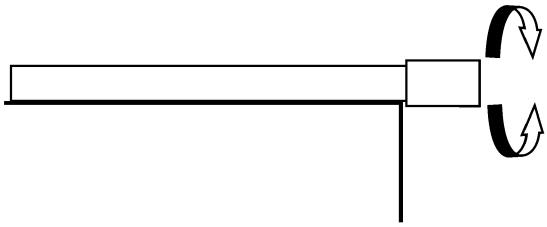

2. Check:
   - Tire
   - Front wheel
     Damage/wear → Replace.
     Refer to “CHECKING THE TIRES” on page 3-32 and “CHECKING THE WHEELS” on page 3-34.
3. Measure:
   - Radial wheel runout “1”
   - Lateral wheel runout “2”
     Over the specified limits → Replace.

Radial wheel runout limit
1.0 mm (0.04 in)
Lateral wheel runout limit
0.5 mm (0.02 in)

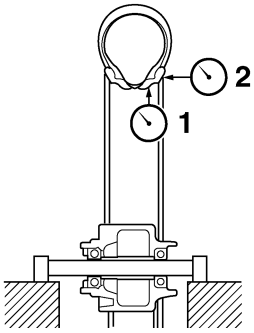

4. Check:
   - Wheel bearings
     Front wheel turns roughly or is loose → Replace the wheel bearings.
   - Oil seals
     Damage/wear → Replace.

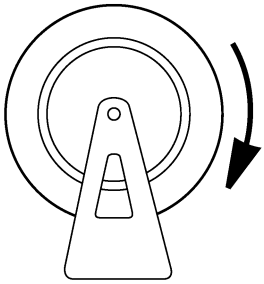

EAS22010

MAINTENANCE OF THE FRONT WHEEL SENSOR AND SENSOR ROTOR

EC3P61031

CAUTION:

- **Handle the ABS components with care since they have been accurately adjusted. Keep them away from dirt and do not subject them to shocks.**
- **The front wheel sensor cannot be disassembled. Do not attempt to disassemble it. If faulty, replace with a new one.**

1. Check:
   - Front wheel sensor "1"
     Cracks/bends/distortion → Replace.
     Iron powder/dust → Clean.

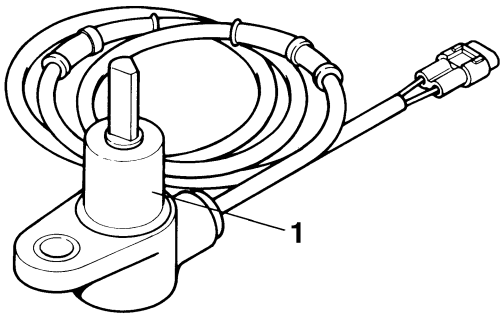

2. Measure:
   - Front wheel sensor resistance
     Out of specification → Replace.

Regulated resistance
1.2–1.6 kΩ at 20 °C (68 °F)

▼▼▼▼▼▼▼▼▼▼▼▼▼▼▼▼▼▼▼▼▼▼▼▼▼▼▼▼▼▼▼▼▼▼

a. Connect the pocket tester (Ω × 1k) to the front wheel sensor coupler terminals as shown.

Pocket tester
90890-03112
Analog pocket tester
YU-03112-C

- Positive tester probe → white "1"
- Negative tester probe → gray "2"

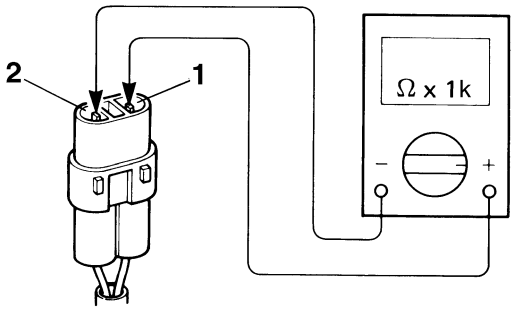

b. Measure the front wheel sensor resistance.

▲▲▲▲▲▲▲▲▲▲▲▲▲▲▲▲▲▲▲▲▲▲▲▲▲▲▲▲▲▲▲▲▲▲

3. Check:
   - Front wheel sensor rotor "1"
     Cracks/damage → Replace the front wheel assembly.

NOTE:

The wheel sensor rotor of the vehicle is inserted under pressure by a special process and cannot be replaced as a single unit. To replace the sensor rotor, replace the wheel assembly.

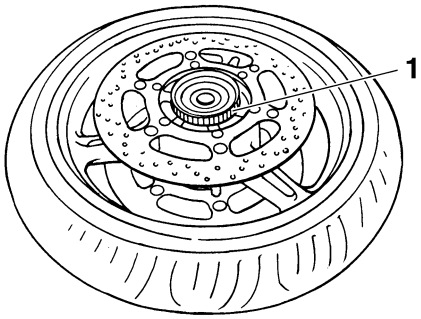

EAS21960
ASSEMBLING THE FRONT WHEEL

1. Install:
   - Wheel bearings New
   - Oil seals New

▼▼▼▼▼▼▼▼▼▼▼▼▼▼▼▼▼▼▼▼▼▼▼▼▼▼▼▼▼▼▼▼▼▼

a. Install the new wheel bearings and oil seals in the reverse order of disassembly.

EC3P61021

CAUTION:

Do not contact the wheel bearing inner race "1" or balls "2". Contact should be made only with the outer race "3".

NOTE:

Use a socket "4" that matches the diameter of the wheel bearing outer race and oil seal.

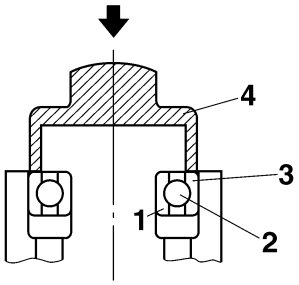

▲▲▲▲▲▲▲▲▲▲▲▲▲▲▲▲▲▲▲▲▲▲▲▲▲▲▲▲▲▲▲▲▲▲

EAS21970
ADJUSTING THE FRONT WHEEL STATIC BALANCE

NOTE:

- After replacing the tire, wheel, or both, the front wheel static balance should be adjusted.
- Adjust the front wheel static balance with the brake discs installed.

1. Remove:
   - Balancing weight(s)
2. Find:
   - Front wheel's heavy spot

NOTE:

Place the front wheel on a suitable balancing stand.

▼▼▼▼▼▼▼▼▼▼▼▼▼▼▼▼▼▼▼▼▼▼▼▼▼▼▼▼▼▼▼▼▼▼

a. Spin the front wheel.
b. When the front wheel stops, put an "X_1" mark at the bottom of the wheel.

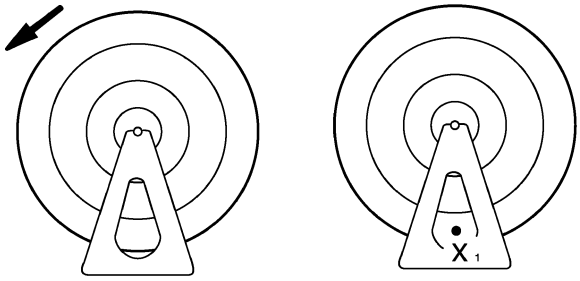

c. Turn the front wheel 90° so that the "X_1" mark is positioned as shown.
d. Release the front wheel.
e. When the wheel stops, put an "X_2" mark at the bottom of the wheel.

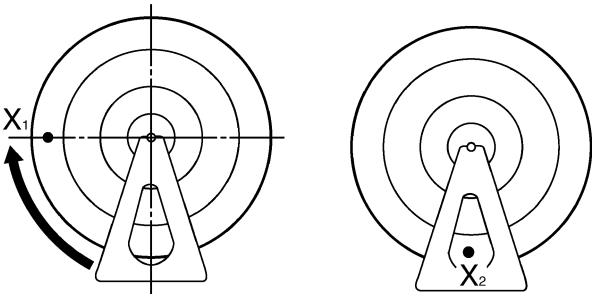

f. Repeat steps (d) through (f) several times until all the marks come to rest at the same spot.
g. The spot where all the marks come to rest is the front wheel's heavy spot "X".

▲▲▲▲▲▲▲▲▲▲▲▲▲▲▲▲▲▲▲▲▲▲▲▲▲▲▲▲▲▲▲▲▲▲

3. Adjust:
   - Front wheel static balance

▼▼▼▼▼▼▼▼▼▼▼▼▼▼▼▼▼▼▼▼▼▼▼▼▼▼▼▼▼▼▼▼▼▼

a. Install a balancing weight "1" onto the rim exactly opposite the heavy spot "X".

NOTE:

Start with the lightest weight.

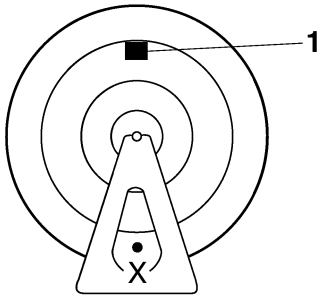

b. Turn the front wheel 90° so that the heavy spot is positioned as shown.

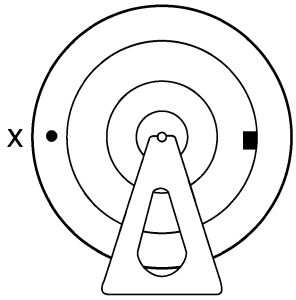

c. If the heavy spot does not stay in that position, install a heavier weight.
d. Repeat steps (b) and (c) until the front wheel is balanced.

▲▲▲▲▲▲▲▲▲▲▲▲▲▲▲▲▲▲▲▲▲▲▲▲▲▲▲▲▲▲▲▲

4. Check:
   • Front wheel static balance

▼▼▼▼▼▼▼▼▼▼▼▼▼▼▼▼▼▼▼▼▼▼▼▼▼▼▼▼▼▼▼▼

a. Turn the front wheel and make sure it stays at each position shown.

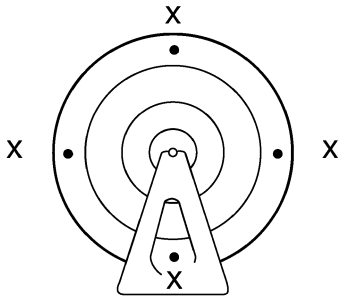

b. If the front wheel does not remain stationary at all of the positions, rebalance it.

▲▲▲▲▲▲▲▲▲▲▲▲▲▲▲▲▲▲▲▲▲▲▲▲▲▲▲▲▲▲▲▲

EAS22000

INSTALLING THE FRONT WHEEL (FRONT BRAKE DISCS)

1. Install:
   • Front brake discs

Front brake disc bolt
18 Nm (1.8 m·kg, 13 ft·lb)
LOCTITE®

NOTE:

Tighten the brake disc bolts in stages and in a crisscross pattern.

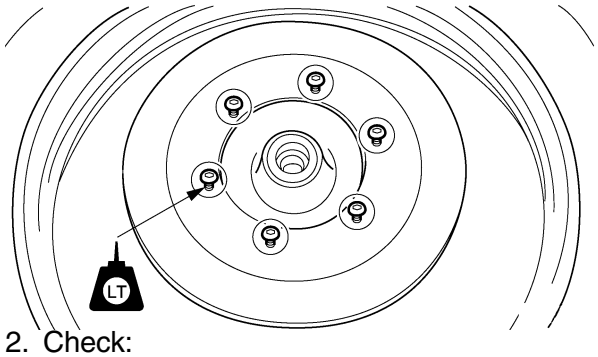

2. Check:
   • Front brake discs
   Refer to “CHECKING THE FRONT BRAKE DISCS” on page 4-30.
3. Lubricate:
   • Oil seal lips

Recommended lubricant
Lithium-soap-based grease

4. Install:
   • Collar
   • Front wheel sensor housing
   • Front wheel

NOTE:

Align the slot in the front wheel sensor housing with the projection of the front fork before assembly.

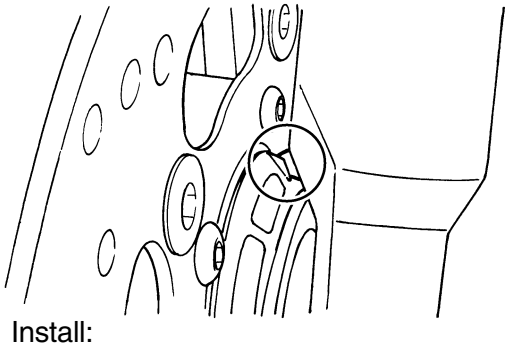

5. Install:
   • Front wheel axle
   • Front wheel axle bolt
   • Front wheel axle pinch bolts

Front wheel axle bolt
91 Nm (9.1 m·kg, 66 ft·lb)
Front wheel axle pinch bolt
21 Nm (2.1 m·kg, 15 ft·lb)

EC3P61022

CAUTION:

Before tightening the wheel axle bolt, push down hard on the handlebars several times and check if the front fork rebounds smoothly.

▼▼▼▼▼▼▼▼▼▼▼▼▼▼▼▼▼▼▼▼▼▼▼▼▼▼▼▼▼▼▼▼▼▼▼▼

a. Insert the front wheel axle from the right side and tighten it with the front wheel axle bolt from the left side to 91 Nm (9.1 m·kg, 66 ft·lb).
b. In the order pinch bolt "2" → pinch bolt "1" → pinch bolt "2", tighten each bolt to 21 Nm (2.1 m·kg, 15 ft·lb) without performing temporary tightening.
c. Check that the right end of the front wheel axle is flush with the front fork. If necessary, manually push the front wheel axle or lightly tap it with a soft hammer until its end is flush with the front fork. However, if the surface of the front wheel axle end is not parallel to the surface of the front fork, align a point on the outer edge of the axle with the fork, making sure that the axle does not protrude past the fork.
d. In the order pinch bolt "4" → pinch bolt "3" → pinch bolt "4", tighten each bolt to 21 Nm (2.1 m·kg, 15 ft·lb) without performing temporary tightening.

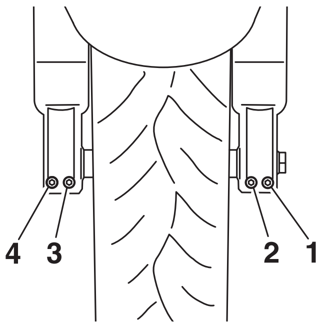

▲▲▲▲▲▲▲▲▲▲▲▲▲▲▲▲▲▲▲▲▲▲▲▲▲▲▲▲▲▲▲▲▲▲▲▲

6. Install:
   • Front brake calipers
   • Front wheel sensor

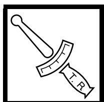

Front brake caliper bolt
40 Nm (4.0 m·kg, 29 ft·lb)
Front wheel sensor bolt
30 Nm (3.0 m·kg, 22 ft·lb)

NOTE:

When installing the front wheel sensor, check the wheel sensor lead for twists and the sensor electrode for foreign materials.

EC3P61023

CAUTION:

• **Make sure there are no foreign materials in the wheel hub. Foreign materials cause damage to the inner sensor rotor and wheel sensor.**
• **To route the front wheel sensor lead, refer to "CABLE ROUTING" on page 2-45.**

EWA13500

⚠ WARNING

Make sure the brake hose is routed properly.

7. Check:
   • Front wheel sensor installation
     Check if the wheel sensor housing is installed properly.
8. Install:
   • Front fender

NOTE:

When installing the front fender, make sure that there is no dirt between the front fender and front fork legs.

EAS22030

REAR WHEEL

Removing the rear wheel, brake disc, wheel sensor, and sensor housing

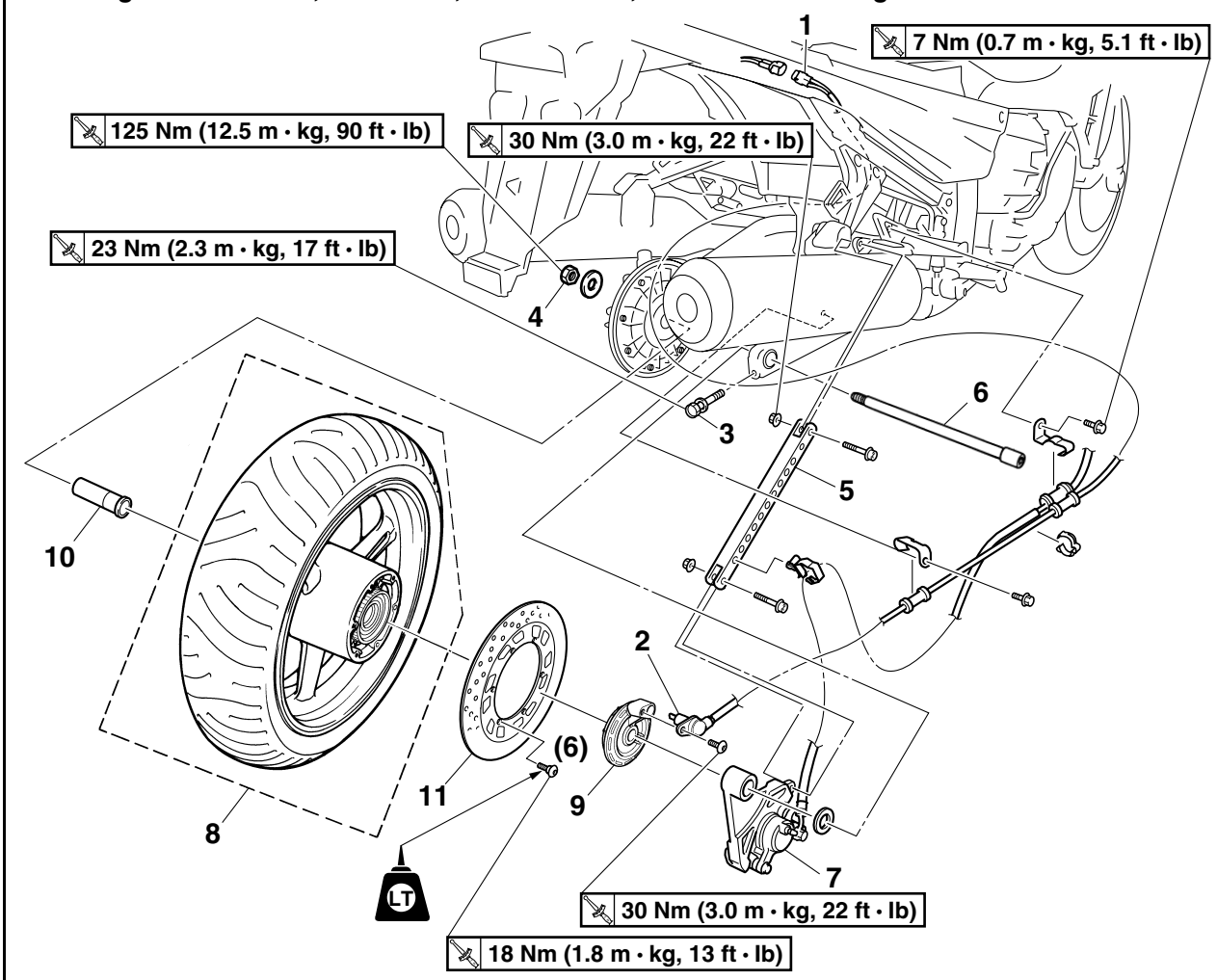

Order	Job/Parts to remove	Q'ty	Remarks
	Storage compartment		Refer to "GENERAL CHASSIS" on page 4-1.
1	Rear wheel sensor coupler	1	Disconnect.
2	Rear wheel sensor	1	
3	Rear wheel axle pinch bolt	1	Loosen.
4	Rear wheel axle nut	1	
5	Brake torque rod	1	
6	Rear wheel axle	1	
7	Rear brake caliper	1	
8	Rear wheel	1	
9	Rear wheel sensor housing	1	
10	Collar	1	
11	Rear brake disc	1	
			For installation, reverse the removal procedure.

Disassembling the rear wheel

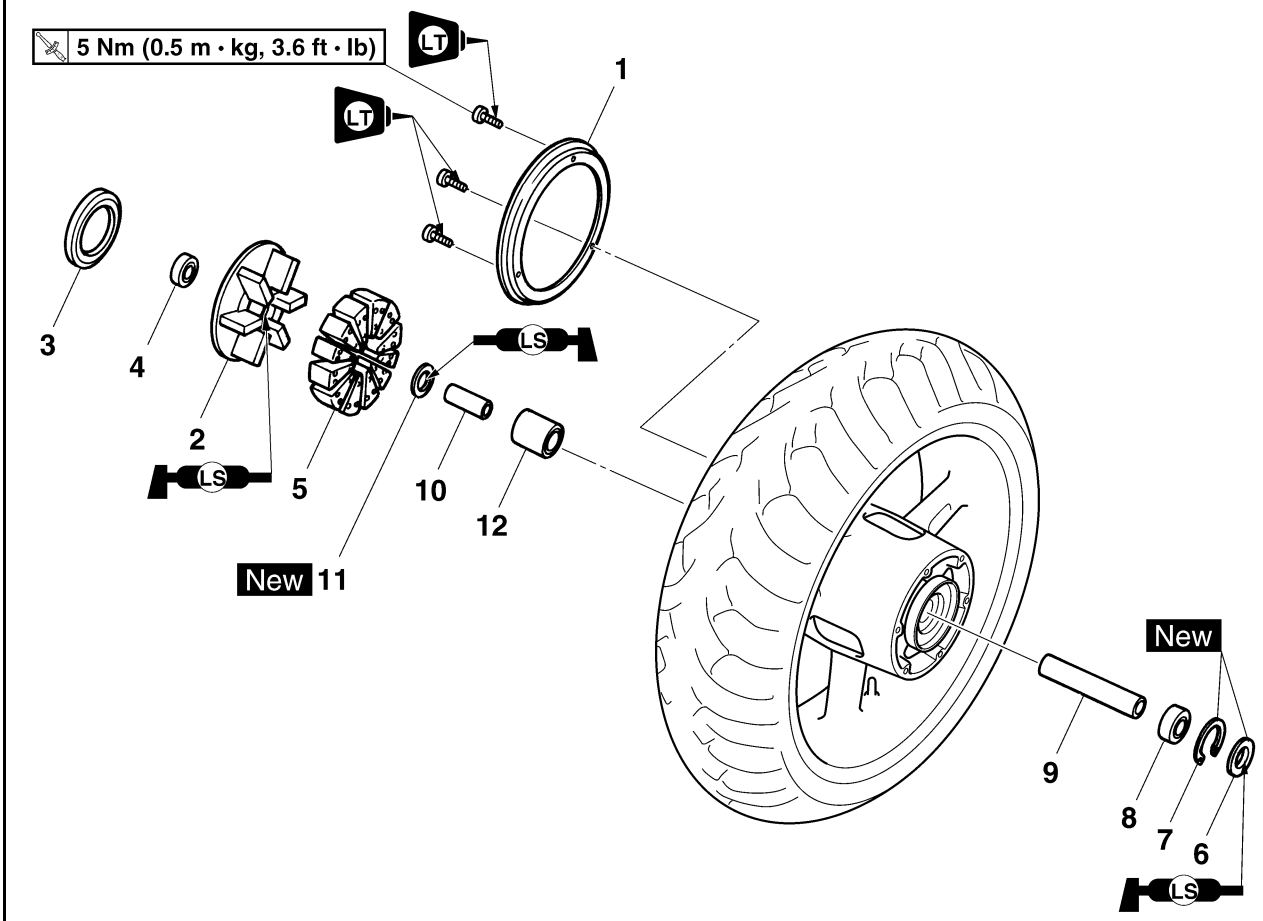

Order	Job/Parts to remove	Q'ty	Remarks
1	Dust cover	1	
2	Rear wheel drive hub	1	
3	Dust seal	1	
4	Wheel bearing	1	
5	Rear wheel drive hub damper	6	
6	Oil seal	1	
7	Circlip	1	
8	Wheel bearing	1	
9	Spacer	1	
10	Spacer	1	
11	Oil seal	1	
12	Bearing	1	
			For assembly, reverse the disassembly procedure.

EAS22050
REMOVING THE REAR WHEEL

1. Stand the vehicle on a level surface.

EWA13120
WARNING

Securely support the vehicle so that there is no danger of it falling over.

NOTE:

Place the vehicle on the centerstand so that the rear wheel is elevated.

2. Remove:
   - Rear wheel sensor
   - Rear wheel axle nut
   - Brake torque rod
   - Rear wheel axle
   - Rear brake caliper
   - Rear wheel
   - Rear wheel sensor housing

EC3P61024
CAUTION:

- **Be sure not to contact the sensor electrode to any metal part when removing the rear wheel sensor from the sensor housing.**
- **Do not operate the brake pedal when removing the brake caliper.**

NOTE:

Move the rear wheel to the right to separate it from the final drive assembly.

EAS22080
DISASSEMBLING THE REAR WHEEL

1. Remove:
   - Oil seals
   - Wheel bearings
     Refer to “DISASSEMBLING THE FRONT WHEEL” on page 4-15.

EAS22090
CHECKING THE REAR WHEEL

1. Check:
   - Rear wheel axle
   - Rear wheel
   - Wheel bearings
   - Oil seals
     Refer to “CHECKING THE FRONT WHEEL” on page 4-15.
2. Check:
   - Tire
   - Rear wheel
     Damage/wear → Replace.
     Refer to “CHECKING THE TIRES” on page 3-32 and “CHECKING THE WHEELS” on page 3-34.
3. Measure:
   - Radial wheel runout
   - Lateral wheel runout
     Refer to “CHECKING THE FRONT WHEEL” on page 4-15.

Radial wheel runout limit
1.0 mm (0.04 in)
Lateral wheel runout limit
0.5 mm (0.02 in)

EAS22200
MAINTENANCE OF THE REAR WHEEL SENSOR AND SENSOR ROTOR

EC3P61032
CAUTION:

- **Handle the ABS components with care since they have been accurately adjusted. Keep them away from dirt and do not subject them to shocks.**
- **The rear wheel sensor cannot be disassembled. Do not attempt to disassemble it. If faulty, replace with a new one.**

1. Check:
   - Rear wheel sensor
     Refer to “MAINTENANCE OF THE FRONT WHEEL SENSOR AND SENSOR ROTOR” on page 4-16.
2. Measure:
   - Rear wheel sensor resistance
     Refer to “MAINTENANCE OF THE FRONT WHEEL SENSOR AND SENSOR ROTOR” on page 4-16.
3. Check:
   - Rear wheel sensor rotor
     Refer to “MAINTENANCE OF THE FRONT WHEEL SENSOR AND SENSOR ROTOR” on page 4-16.

EAS22140
ASSEMBLING THE REAR WHEEL

1. Install:
   - Bearing “1”

Installed depth of bearing “a”
3.5–4.5 mm (0.14–0.18 in)

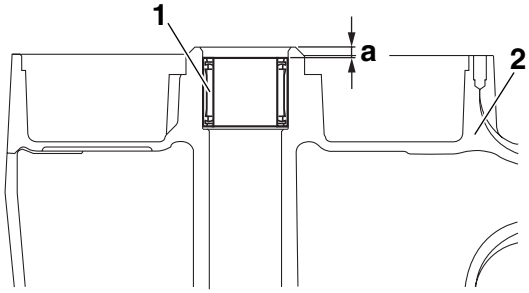

2. Rear wheel

2. Install:
   - Wheel bearings New
   - Oil seals New
     Refer to “ASSEMBLING THE FRONT WHEEL” on page 4-17.

EAS22150
ADJUSTING THE REAR WHEEL STATIC BALANCE

NOTE:
- After replacing the tire, wheel, or both, the rear wheel static balance should be adjusted.
- Adjust the rear wheel static balance with the brake disc and rear wheel drive hub installed.

1. Adjust:
   - Rear wheel static balance
     Refer to “ADJUSTING THE FRONT WHEEL STATIC BALANCE” on page 4-17.

EAS22170
INSTALLING THE REAR WHEEL (REAR BRAKE DISC)

1. Install:
   - Rear brake disc

Rear brake disc bolt
18 Nm (1.8 m·kg, 13 ft·lb)
LOCTITE®

NOTE:
Tighten the brake disc bolts in stages and in a crisscross pattern.

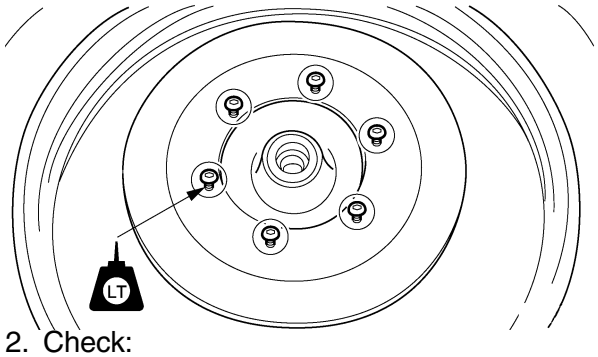

2. Check:
   - Rear brake disc
     Refer to “CHECKING THE REAR BRAKE DISC” on page 4-43.
3. Lubricate:
   - Oil seal lips

Recommended lubricant
Lithium-soap-based grease

4. Install:
   - Rear wheel sensor housing
   - Rear wheel
   - Rear brake caliper
   - Rear wheel axle
   - Brake torque rod
   - Rear wheel axle nut

NOTE:
- Align the slot “a” of the rear wheel sensor housing “1” with the projection “b” of the rear brake caliper bracket “2”, and then assemble them.
- After assembling the rear wheel sensor housing and the rear brake caliper bracket, make sure that the projection “c” on the housing is aligned with the projection “d” on the bracket.

ECA14470
CAUTION:
Make sure there are no foreign materials in the wheel hub. Foreign materials cause damage to the inner sensor rotor and wheel sensor.

EWA13500
WARNING
Make sure the brake hose is routed properly.

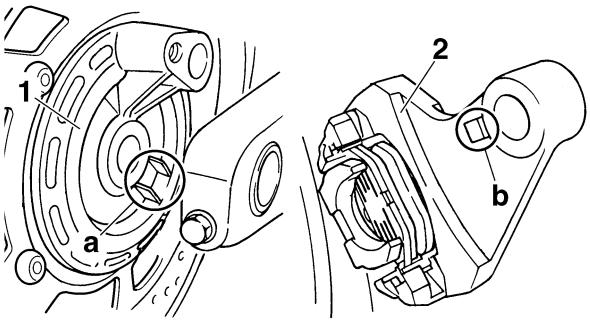

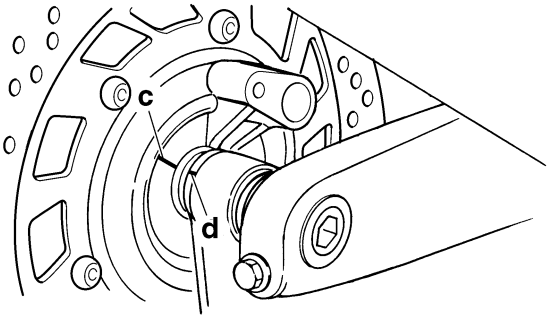

5. Tighten:
   - Brake torque rod nuts
   - Rear wheel axle nut
   - Rear wheel axle pinch bolt

	Brake torque rod nut **30 Nm (3.0 m·kg, 22 ft·lb)** **Rear wheel axle nut** **125 Nm (12.5 m·kg, 90 ft·lb)** **Rear wheel axle pinch bolt** **23 Nm (2.3 m·kg, 17 ft·lb)**

6. Install:
   - Rear wheel sensor

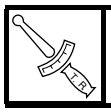	**Rear wheel sensor bolt** **30 Nm (3.0 m·kg, 22 ft·lb)**

ECA14500

CAUTION:

To route the rear wheel sensor lead, refer to "CABLE ROUTING" on page 2-45.

NOTE:

When installing the rear wheel sensor, check the rear wheel sensor lead for twists and the sensor electrode for foreign materials.

7. Check:
   - Rear wheel sensor installation
     Check if the wheel sensor housing is installed properly.

EAS22210

FRONT BRAKE

Removing the front brake pads

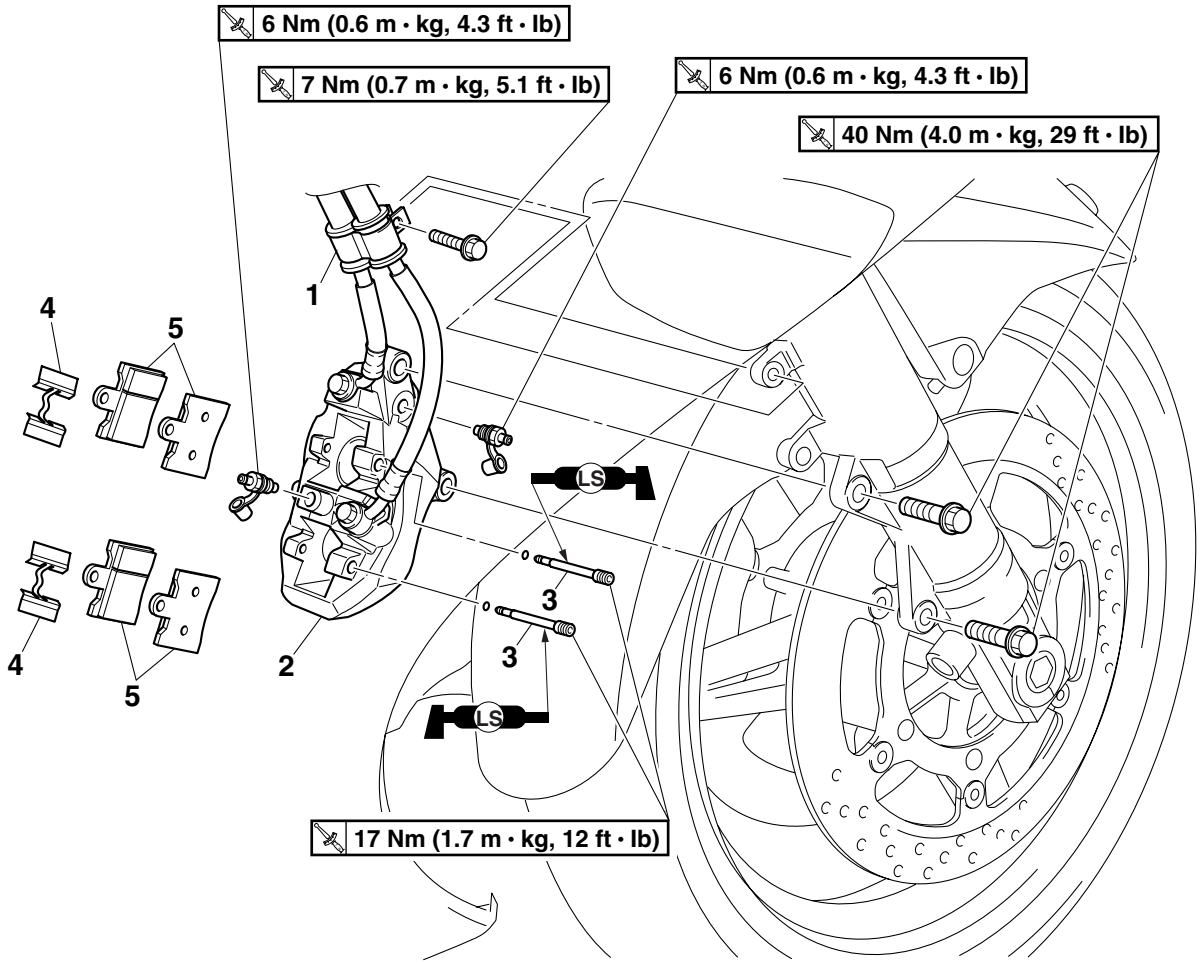

Order	Job/Parts to remove	Q'ty	Remarks
			The following procedure applies to both of the front brake calipers.
1	Brake hose holder	1	
2	Front brake caliper	1	
3	Brake pad bolt	2	
4	Brake pad spring	2	
5	Front brake pad	4	
			For installation, reverse the removal procedure.

Removing the front brake master cylinder

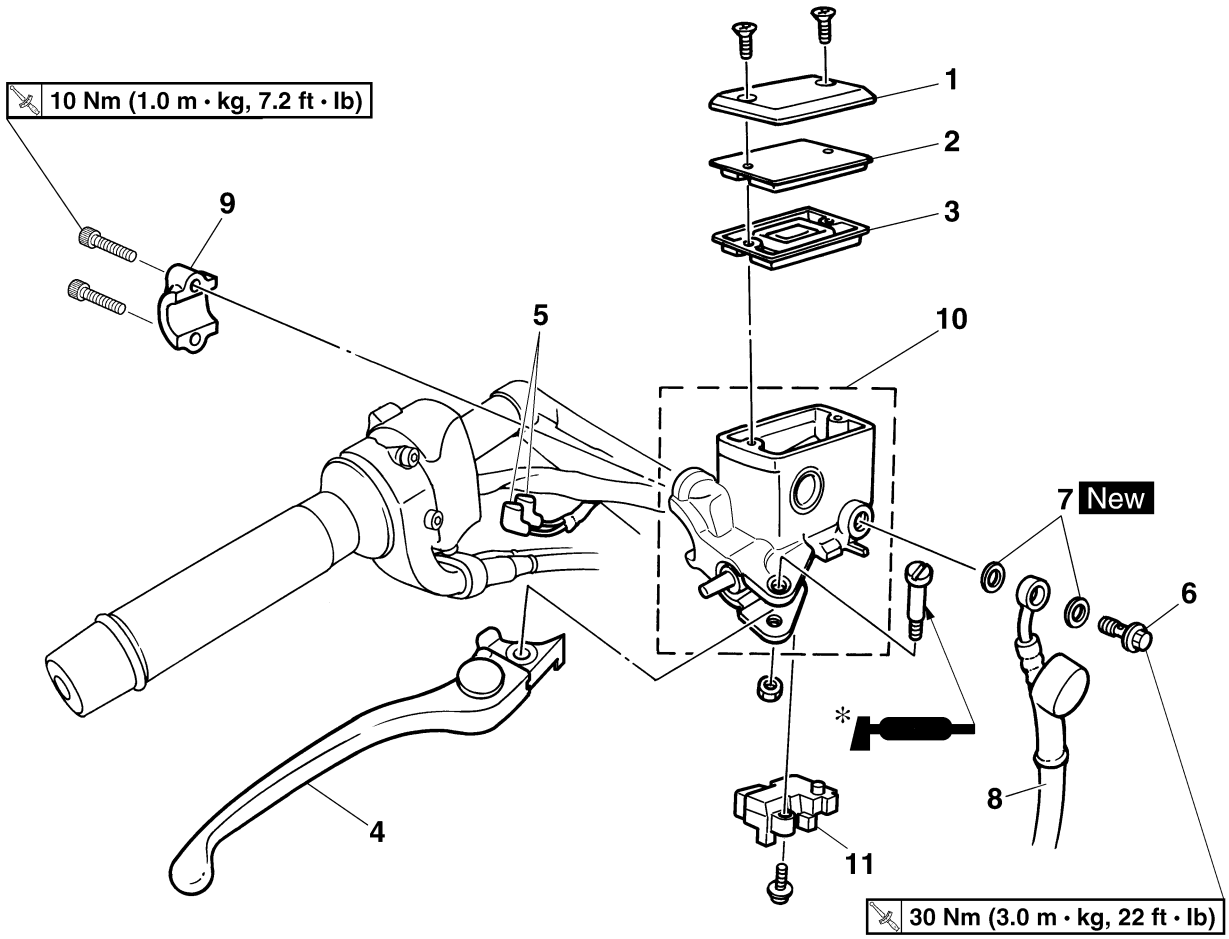

Order	Job/Parts to remove	Q'ty	Remarks
	Brake fluid		Drain. Refer to "BLEEDING THE HYDRAULIC BRAKE SYSTEM (ABS)" on page 3-23.
1	Brake master cylinder reservoir cap	1	
2	Brake master cylinder reservoir diaphragm holder	1	
3	Brake master cylinder reservoir diaphragm	1	
4	Brake lever	1	
5	Front brake light switch connector	2	Disconnect.
6	Brake hose union bolt	1	
7	Copper washer	2	
8	Brake hose (front brake master cylinder to hydraulic unit)	1	
9	Front brake master cylinder holder	1	
10	Front brake master cylinder	1	
11	Front brake light switch	1	
			For installation, reverse the removal procedure.

* Apply silicon grease

Disassembling the front brake master cylinder

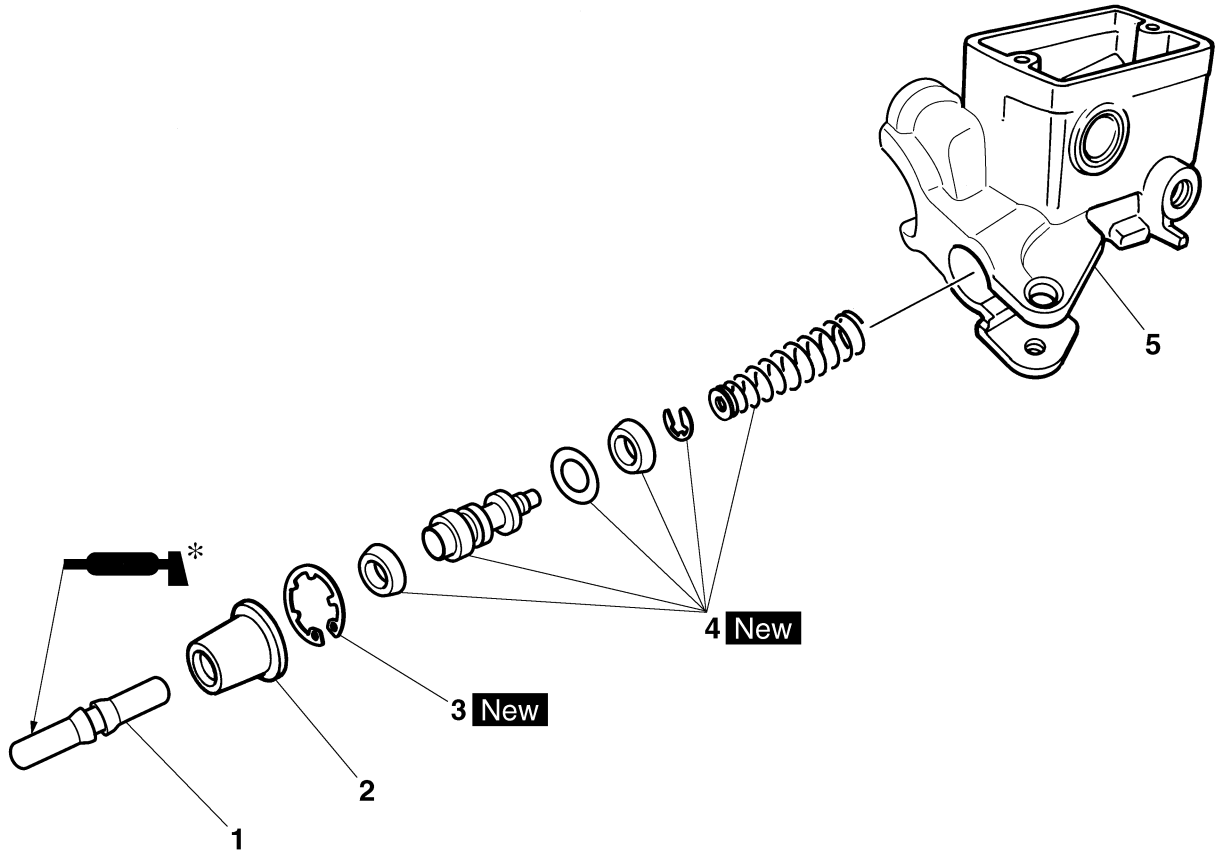

Order	Job/Parts to remove	Q'ty	Remarks
1	Brake master cylinder push rod	1	
2	Dust boot	1	
3	Circlip	1	
4	Brake master cylinder kit	1	
5	Brake master cylinder body	1	
			For assembly, reverse the disassembly procedure.

* Apply silicon grease

Removing the front brake calipers

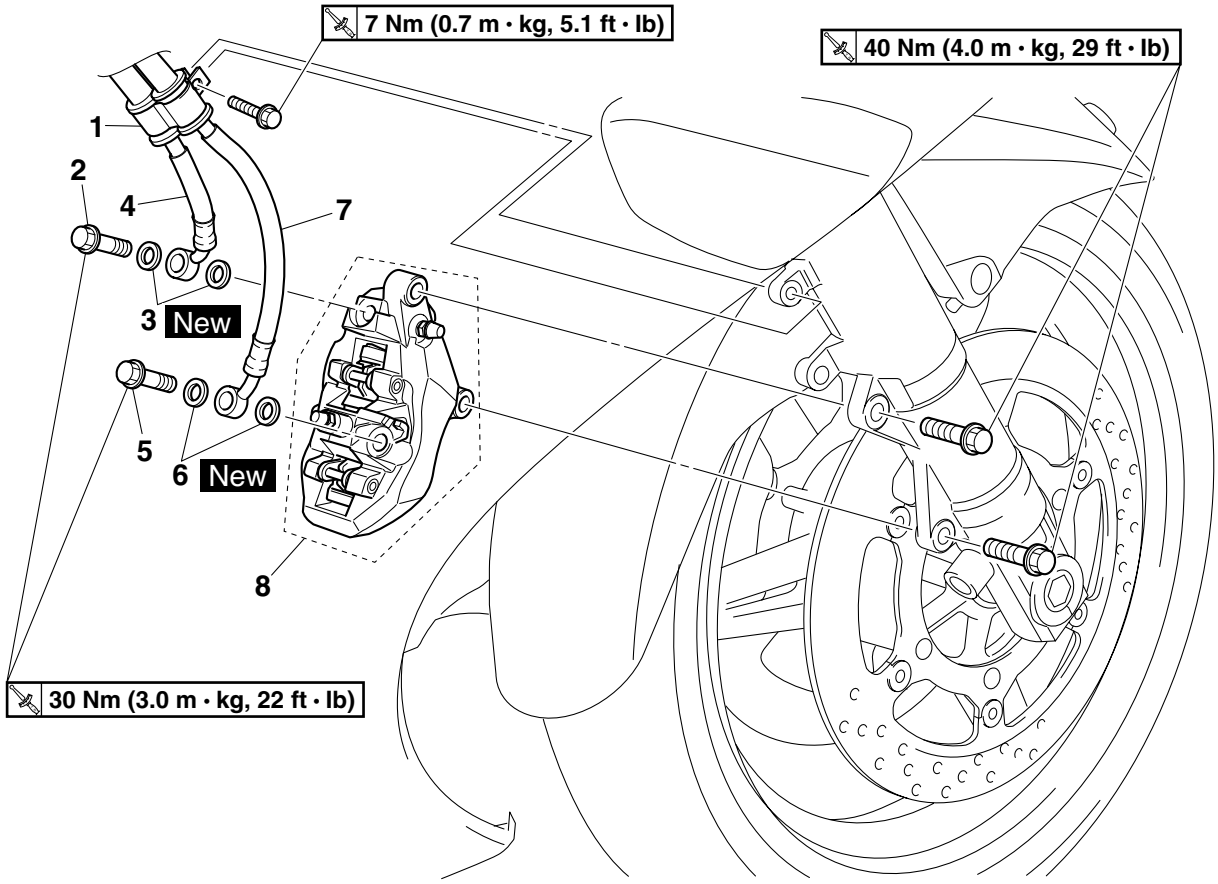

Order	Job/Parts to remove	Q'ty	Remarks
			The following procedure applies to both of the front brake calipers.
	Brake fluid		Drain. Refer to "BLEEDING THE HYDRAULIC BRAKE SYSTEM (ABS)" on page 3-23.
1	Brake hose holder	1	
2	Brake hose union bolt	1	
3	Copper washer	2	
4	Brake hose (hydraulic unit to front brake calipers)	1	
5	Brake hose union bolt (unified brake system)	1	Right side only.
6	Copper washer	2	Right side only.
7	Brake hose (metering valve to right front brake caliper)	1	Right side only.
8	Front brake caliper	1	
			For installation, reverse the removal procedure.

Disassembling the front brake calipers

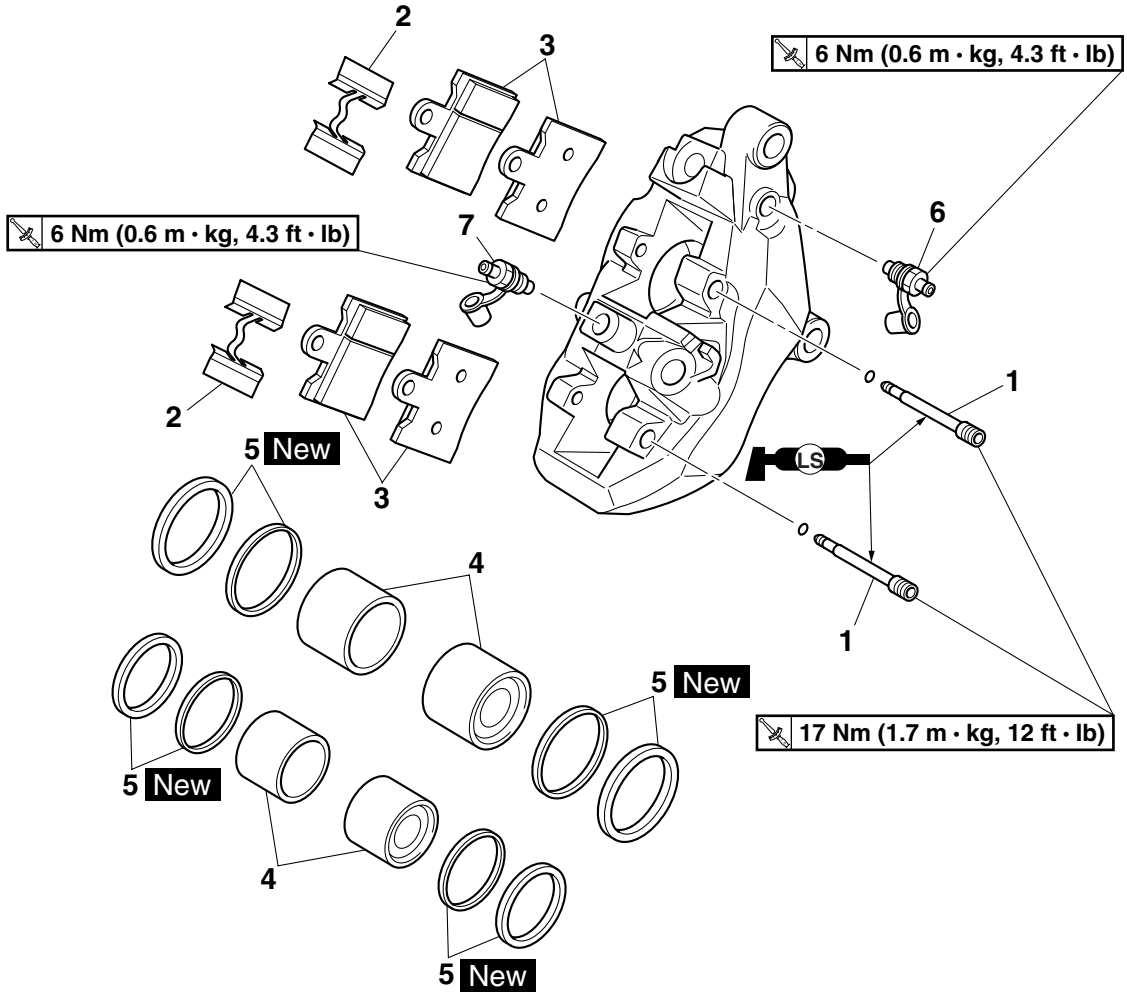

Order	Job/Parts to remove	Q'ty	Remarks
			The following procedure applies to both of the front brake calipers.
1	Brake pad bolt	2	
2	Brake pad spring	2	
3	Front brake pad	4	
4	Brake caliper piston	4	
5	Brake caliper piston seal	8	
6	Bleed screw	1	
7	Bleed screw	1	Right side only.
			For assembly, reverse the disassembly procedure.

EAS22220
INTRODUCTION
EWA14100
WARNING

Disc brake components rarely require disassembly. Therefore, always follow these preventive measures:
- **Never disassemble brake components unless absolutely necessary.**
- **If any connection on the hydraulic brake system is disconnected, the entire brake system must be disassembled, drained, cleaned, properly filled, and bled after reassembly.**
- **Never use solvents on internal brake components.**
- **Use only clean or new brake fluid for cleaning brake components.**
- **Brake fluid may damage painted surfaces and plastic parts. Therefore, always clean up any spilt brake fluid immediately.**
- **Avoid brake fluid coming into contact with the eyes as it can cause serious injury.**
- **FIRST AID FOR BRAKE FLUID ENTERING THE EYES:**
- **Flush with water for 15 minutes and get immediate medical attention.**

EAS22240
CHECKING THE FRONT BRAKE DISCS
The following procedure applies to both brake discs.
1. Remove:
   - Front wheel
     Refer to “FRONT WHEEL” on page 4-13.
2. Check:
   - Brake disc
     Damage/galling → Replace.
3. Measure:
   - Brake disc deflection
     Out of specification → Correct the brake disc deflection or replace the brake disc.

	Brake disc deflection limit **0.10 mm (0.0039 in)**

▼▼▼▼▼▼▼▼▼▼▼▼▼▼▼▼▼▼▼▼▼▼▼▼▼▼▼▼▼▼▼▼▼▼
a. Place the vehicle on a suitable stand so that the front wheel is elevated.
b. Before measuring the front brake disc deflection, turn the handlebar to the left or right to ensure that the front wheel is stationary.
c. Remove the brake caliper.
d. Hold the dial gauge at a right angle against the brake disc surface.
e. Measure the deflection 1.5 mm (0.06 in) below the edge of the brake disc.

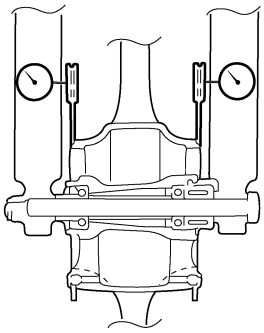

▲▲▲▲▲▲▲▲▲▲▲▲▲▲▲▲▲▲▲▲▲▲▲▲▲▲▲▲▲▲▲▲▲▲
4. Measure:
   - Brake disc thickness
     Measure the brake disc thickness at a few different locations.
     Out of specification → Replace.

	Brake disc thickness limit **4.0 mm (0.16 in)**

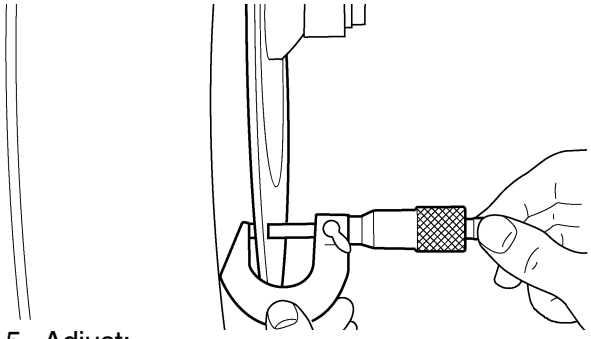

5. Adjust:
   - Brake disc deflection

▼▼▼▼▼▼▼▼▼▼▼▼▼▼▼▼▼▼▼▼▼▼▼▼▼▼▼▼▼▼▼▼▼▼
a. Remove the brake disc.
b. Rotate the brake disc by one bolt hole.
c. Install the brake disc.

	Brake disc bolt **18 Nm (1.8 m·kg, 13 ft·lb)** **LOCTITE®**

NOTE:
Tighten the brake disc bolts in stages and in a crisscross pattern.

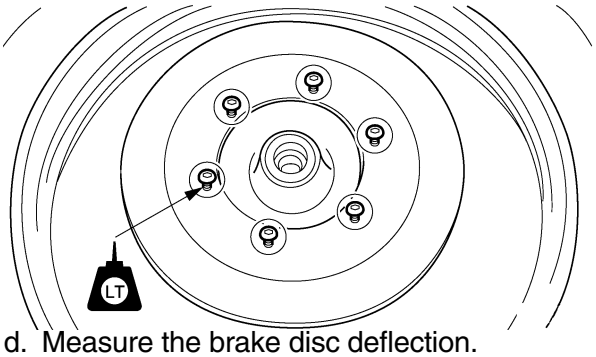

d. Measure the brake disc deflection.
e. If out of specification, repeat the adjustment steps until the brake disc deflection is within specification.
f. If the brake disc deflection cannot be brought within specification, replace the brake disc.

▲▲▲▲▲▲▲▲▲▲▲▲▲▲▲▲▲▲▲▲▲▲▲▲▲▲▲▲▲▲▲▲▲▲

6. Install:
   - Front wheel
     Refer to “FRONT WHEEL” on page 4-13.

EAS22260

REPLACING THE FRONT BRAKE PADS

The following procedure applies to both brake calipers.

NOTE:

When replacing the brake pads, it is not necessary to disconnect the brake hose or disassemble the brake caliper.

1. Measure:
   - Brake pad wear limit “a”
     Out of specification → Replace the brake pads as a set.

Brake pad lining thickness (inner)
5.5 mm (0.22 in)
Limit
0.5 mm (0.02 in)
Brake pad lining thickness (outer)
5.5 mm (0.22 in)
Limit
0.5 mm (0.02 in)

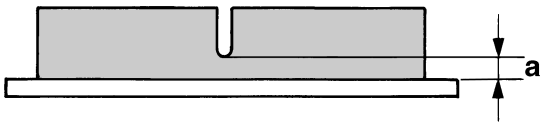

2. Install:
   - Brake pads
   - Brake pad spring

NOTE:

Always install new brake pads and a new brake pad spring as a set.

▼▼▼▼▼▼▼▼▼▼▼▼▼▼▼▼▼▼▼▼▼▼▼▼▼▼▼▼▼▼▼▼▼▼

a. Connect a clear plastic hose “1” tightly to the bleed screw “2”. Put the other end of the hose into an open container.

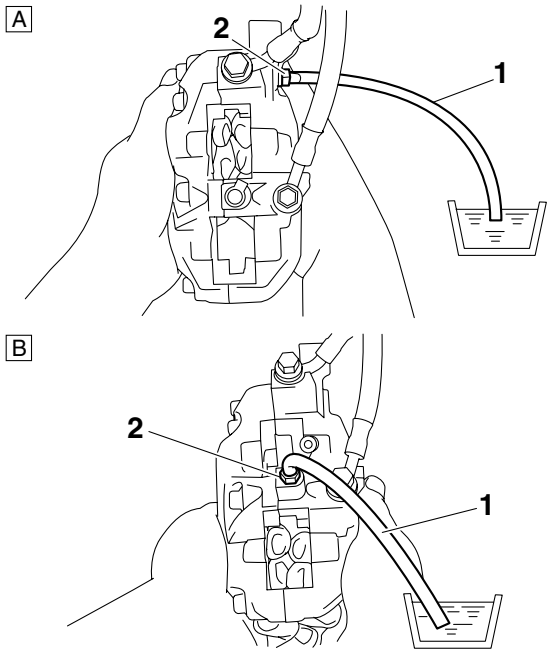

A. Front brake
B. Unified brake system

b. Loosen the bleed screw and push the brake caliper pistons into the brake caliper with your finger.
c. Tighten the bleed screw.

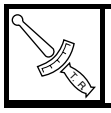

Bleed screw
6 Nm (0.6 m·kg, 4.3 ft·lb)

d. Install new brake pads and a new brake pad spring.

▲▲▲▲▲▲▲▲▲▲▲▲▲▲▲▲▲▲▲▲▲▲▲▲▲▲▲▲▲▲▲▲▲▲

3. Lubricate:
   • Brake pad bolts

	Recommended lubricant **Lithium-soap-based grease**

ECA14150

CAUTION:

• Do not allow grease to contact the brake pads.
• Remove any excess grease.

4. Install:
   • Brake pad bolts
   • Brake caliper

	Brake pad bolt **17 Nm (1.7 m·kg, 12 ft·lb)** **Brake caliper bolt** **40 Nm (4.0 m·kg, 29 ft·lb)**

5. Check:
   • Brake fluid level
   Below the minimum level mark “a” → Add the recommended brake fluid to the proper level.
   Refer to “CHECKING THE BRAKE FLUID LEVEL” on page 3-22.

A

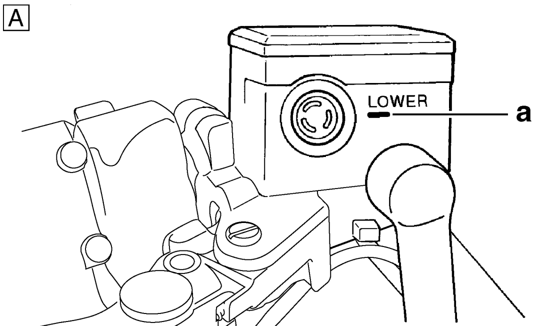

B

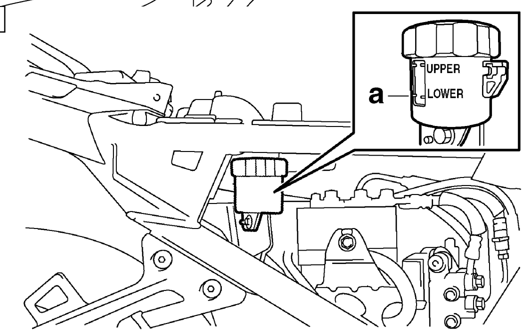

A. Front brake
B. Unified brake system

6. Check:
   • Brake lever and brake pedal operation
   Soft or spongy feeling → Bleed the brake system.
   Refer to “BLEEDING THE HYDRAULIC BRAKE SYSTEM (ABS)” on page 3-23.

EAS22300

REMOVING THE FRONT BRAKE CALIPERS

The following procedure applies to both of the brake calipers.

NOTE:

Before removing the brake caliper, drain the brake fluid from the entire brake system.

1. Remove:
   • Brake hose holder “1”
   • Brake hose union bolts “2”
   • Copper washers
   • Brake hose (hydraulic unit to front brake calipers) “3”
   • Brake hose (metering valve to right front brake caliper) “4”

NOTE:

Put the end of the brake hoses into a container and pump out the brake fluid carefully.

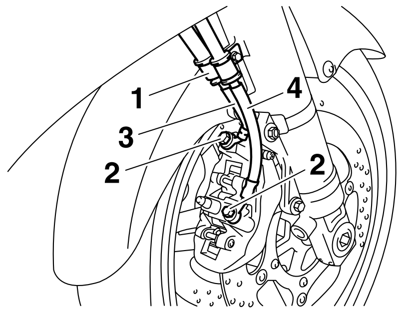

EAS22360

DISASSEMBLING THE FRONT BRAKE CALIPERS

The following procedure applies to both of the brake calipers.

1. Remove:
   • Brake caliper pistons “1”
   • Brake caliper piston seals “2”

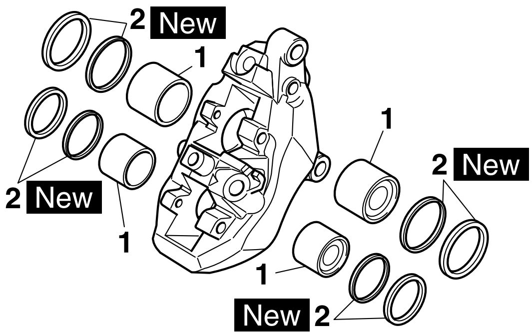

▼▼▼▼▼▼▼▼▼▼▼▼▼▼▼▼▼▼▼▼▼▼▼▼▼▼▼▼▼▼▼▼▼

a. Blow compressed air into the brake hose joint opening “a” to force out the pistons from the brake caliper.

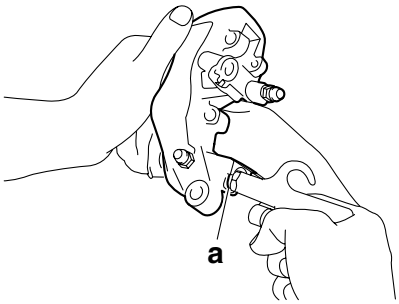

EWA13560

WARNING

- **Cover the brake caliper pistons with a rag. Be careful not to get injured when the pistons are expelled from the brake caliper.**
- **Never try to pry out the brake caliper pistons.**

b. Remove the brake caliper piston seals.

▲▲▲▲▲▲▲▲▲▲▲▲▲▲▲▲▲▲▲▲▲▲▲▲▲▲▲▲▲▲▲▲▲▲

EAS22390

CHECKING THE FRONT BRAKE CALIPERS

Recommended brake component replacement schedule	
Brake pads	If necessary
Piston seals	Every two years
Brake hoses	Every four years
Brake fluid	Every two years and whenever the brake is disassembled

1. Check:
   - Brake caliper pistons “1”
     Rust/scratches/wear → Replace the brake caliper pistons.
   - Brake caliper cylinders “2”
     Scratches/wear → Replace the brake caliper assembly.
   - Brake caliper body “3”
     Cracks/damage → Replace the brake caliper assembly.
   - Brake fluid delivery passages (brake caliper body)
     Obstruction → Blow out with compressed air.

EWA13600

WARNING

Whenever a brake caliper is disassembled, replace the piston seals.

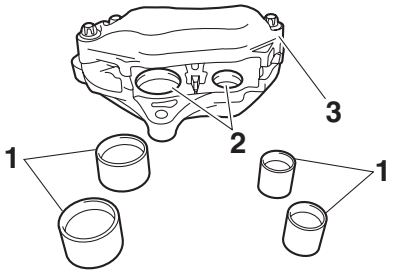

EAS22410

ASSEMBLING THE FRONT BRAKE CALIPERS

EWA13620

WARNING

- **Before installation, all internal brake components should be cleaned and lubricated with clean or new brake fluid.**
- **Never use solvents on internal brake components as they will cause the piston seals to swell and distort.**
- **Whenever a brake caliper is disassembled, replace the brake caliper piston seals.**

Recommended fluid
DOT 4

EAS22440

INSTALLING THE FRONT BRAKE CALIPERS

The following procedure applies to both of the brake calipers.

1. Install:
   - Front brake caliper “1” (temporarily)
   - Copper washers New
   - Brake hose (hydraulic unit to front brake calipers) “2”
   - Brake hose (metering valve to right front brake caliper) “3”
   - Brake hose union bolts “4”

Brake hose union bolt
30 Nm (3.0 m·kg, 22 ft·lb)

EWA13530

WARNING

Proper brake hose routing is essential to insure safe vehicle operation. Refer to “CABLE ROUTING” on page 2-45.

ECA14170

CAUTION:

When installing the brake hose onto the brake caliper "1", make sure the brake pipe "a" touches the projection "b" on the brake caliper.

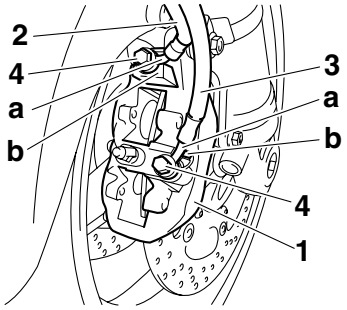

2. Remove:
   - Brake caliper
3. Install:
   - Brake pads
   - Brake pad springs
   - Brake pad bolts
   - Brake caliper
   - Brake hose holder
     Refer to "REPLACING THE FRONT BRAKE PADS" on page 4-31.

	Brake pad bolt **17 Nm (1.7 m·kg, 12 ft·lb)** **Brake caliper bolt** **40 Nm (4.0 m·kg, 29 ft·lb)** **Brake hose holder bolt** **7 Nm (0.7 m·kg, 5.1 ft·lb)**

4. Fill:
   - Brake master cylinder reservoir
   - Brake fluid reservoir
     (with the specified amount of the recommended brake fluid)

	Recommended fluid **DOT 4**

EW3P61008

WARNING

- **Use only the designated brake fluid. Other brake fluids may cause the rubber seals to deteriorate, causing leakage and poor brake performance.**
- **Refill with the same type of brake fluid that is already in the system. Mixing brake fluids may result in a harmful chemical reaction, leading to poor brake performance.**
- **When refilling, be careful that water does not enter the brake master cylinder reservoir and brake fluid reservoir. Water will significantly lower the boiling point of the brake fluid and could cause vapor lock.**

ECA13540

CAUTION:

Brake fluid may damage painted surfaces and plastic parts. Therefore, always clean up any spilt brake fluid immediately.

5. Bleed:
   - Brake system
     Refer to "BLEEDING THE HYDRAULIC BRAKE SYSTEM (ABS)" on page 3-23.
6. Check:
   - Brake fluid level
     Below the minimum level mark "a" → Add the recommended brake fluid to the proper level.
     Refer to "CHECKING THE BRAKE FLUID LEVEL" on page 3-22.

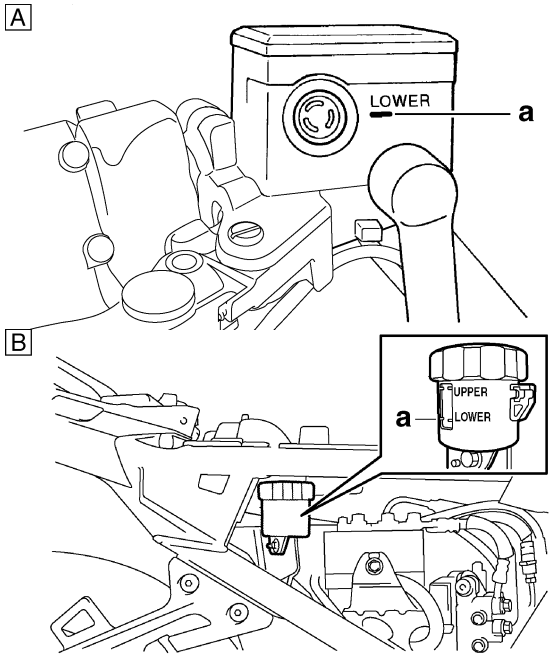

A. Front brake
B. Unified brake system

7. Check:
   - Brake lever and brake pedal operation
     Soft or spongy feeling → Bleed the brake system.
     Refer to "BLEEDING THE HYDRAULIC BRAKE SYSTEM (ABS)" on page 3-23.

EAS22490
REMOVING THE FRONT BRAKE MASTER CYLINDER

NOTE:

Before removing the front brake master cylinder, drain the brake fluid from the entire brake system.

1. Remove:
   - Brake hose union bolt “1”
   - Copper washers “2”
   - Brake hose (front brake master cylinder to hydraulic unit) “3”

NOTE:

To collect any remaining brake fluid, place a container under the master cylinder and the end of the brake hose.

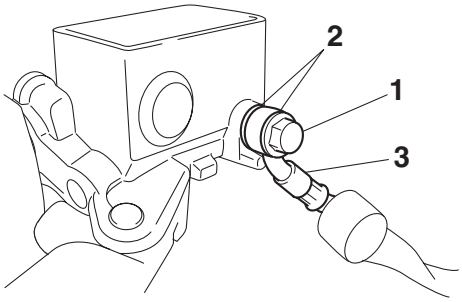

EAS22500
CHECKING THE FRONT BRAKE MASTER CYLINDER

1. Check:
   - Brake master cylinder
     Damage/scratches/wear → Replace.
   - Brake fluid delivery passages
     (brake master cylinder body)
     Obstruction → Blow out with compressed air.
2. Check:
   - Brake master cylinder kit
     Damage/scratches/wear → Replace.
3. Check:
   - Brake master cylinder reservoir
     Cracks/damage → Replace.
   - Brake master cylinder reservoir diaphragm
     Damage/wear → Replace.
4. Check:
   - Brake hose
     Cracks/damage/wear → Replace.

EAS22520
ASSEMBLING THE FRONT BRAKE MASTER CYLINDER

EWA13520

WARNING

- **Before installation, all internal brake components should be cleaned and lubricated with clean or new brake fluid.**
- **Never use solvents on internal brake components.**

Recommended fluid
DOT 4

EAS22530
INSTALLING THE FRONT BRAKE MASTER CYLINDER

1. Install:
   - Brake master cylinder “1”
   - Brake master cylinder holder “2”

Brake master cylinder holder bolt
10 Nm (1.0 m·kg, 7.2 ft·lb)

NOTE:

- Install the brake master cylinder holder with the “UP” mark facing up.
- Align the mating surfaces of the brake master cylinder holder with the punch mark “a” on the right handlebar.
- First, tighten the upper bolt, then the lower bolt.

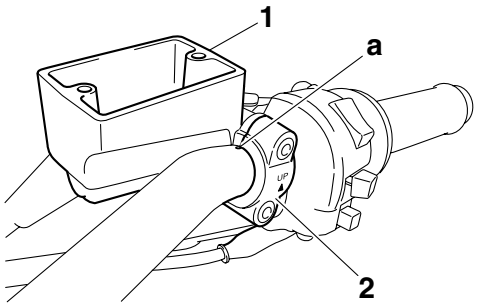

2. Install:
   - Copper washers New
   - Brake hose (front brake master cylinder to hydraulic unit)
   - Brake hose union bolt

Brake hose union bolt
30 Nm (3.0 m·kg, 22 ft·lb)

EWA13530

WARNING

Proper brake hose routing is essential to insure safe vehicle operation. Refer to "CABLE ROUTING" on page 2-45.

EC3P61025

CAUTION:

When installing the brake hose onto the brake master cylinder, make sure the brake pipe "a" touches the projection "b" on the brake master cylinder.

NOTE:

Turn the handlebar to the left and right to make sure the brake hose does not touch other parts (e.g., wire harness, cables, leads). Correct if necessary.

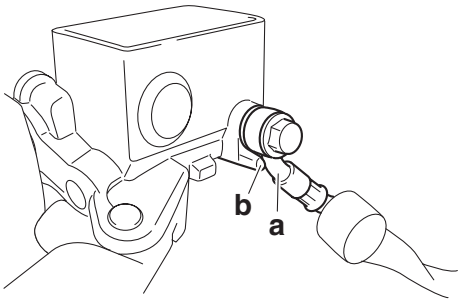

3. Fill:
   - Brake master cylinder reservoir
   - Brake fluid reservoir
     (with the specified amount of the recommended brake fluid)

	Recommended fluid **DOT 4**

EW3P61008

WARNING

- **Use only the designated brake fluid. Other brake fluids may cause the rubber seals to deteriorate, causing leakage and poor brake performance.**
- **Refill with the same type of brake fluid that is already in the system. Mixing brake fluids may result in a harmful chemical reaction, leading to poor brake performance.**
- **When refilling, be careful that water does not enter the brake master cylinder reservoir and brake fluid reservoir. Water will significantly lower the boiling point of the brake fluid and could cause vapor lock.**

ECA13540

CAUTION:

Brake fluid may damage painted surfaces and plastic parts. Therefore, always clean up any spilt brake fluid immediately.

4. Bleed:
   - Brake system
     Refer to "BLEEDING THE HYDRAULIC BRAKE SYSTEM (ABS)" on page 3-23.
5. Check:
   - Brake fluid level
     Below the minimum level mark "a" → Add the recommended brake fluid to the proper level.
     Refer to "CHECKING THE BRAKE FLUID LEVEL" on page 3-22.

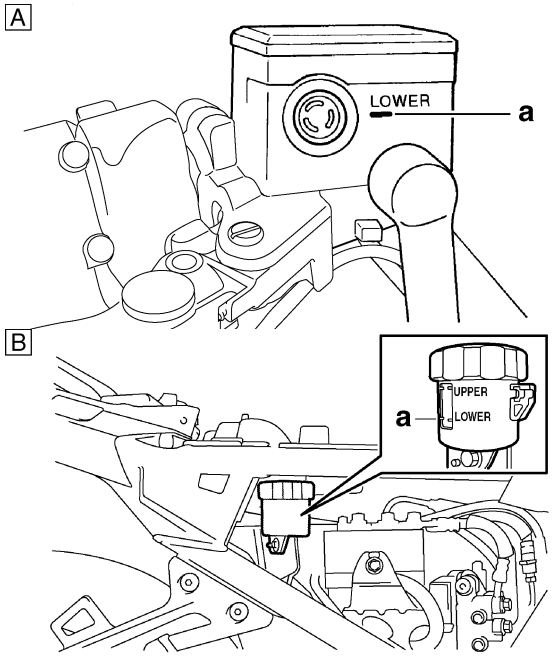

A. Front brake
B. Unified brake system

6. Check:
   - Brake lever and brake pedal operation
     Soft or spongy feeling → Bleed the brake system.
     Refer to "BLEEDING THE HYDRAULIC BRAKE SYSTEM (ABS)" on page 3-23.

EAS22550

REAR BRAKE

Removing the rear brake pads

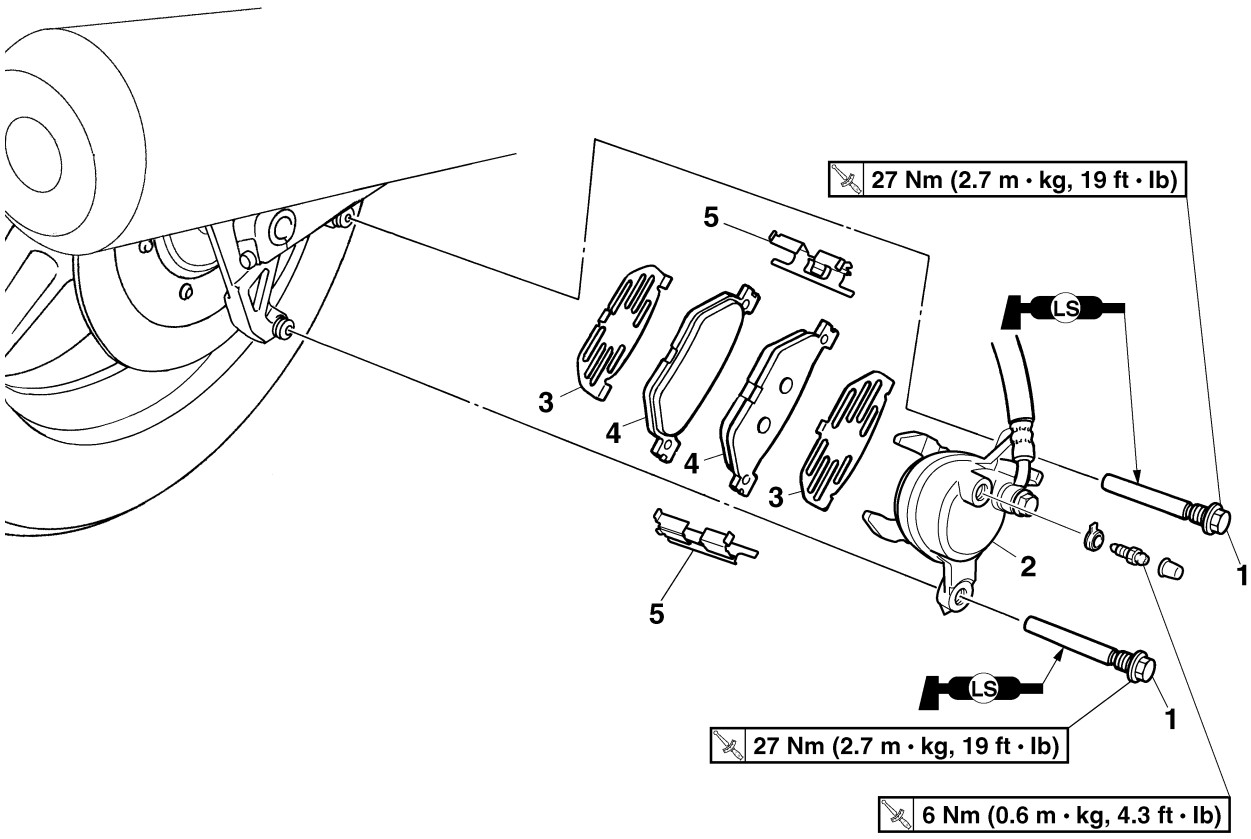

Order	Job/Parts to remove	Q'ty	Remarks
1	Rear brake caliper bolt	2	
2	Rear brake caliper	1	
3	Brake pad shim	2	
4	Rear brake pad	2	
5	Brake pad spring	2	
			For installation, reverse the removal procedure.

Removing the rear brake master cylinder

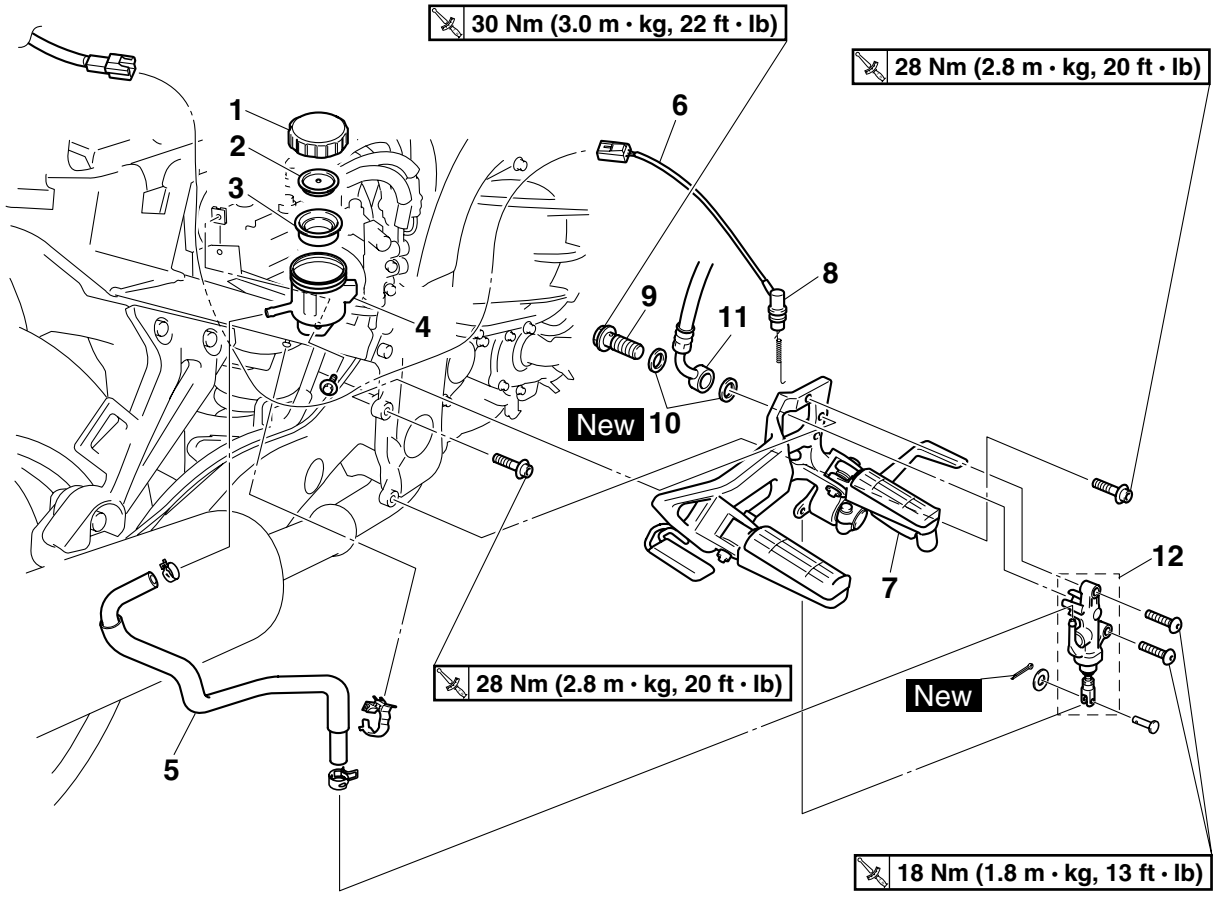

Order	Job/Parts to remove	Q'ty	Remarks
	Brake fluid		Drain. Refer to "BLEEDING THE HYDRAULIC BRAKE SYSTEM (ABS)" on page 3-23.
	Right side cover/Storage compartment		Refer to "GENERAL CHASSIS" on page 4-1.
1	Brake fluid reservoir cap	1	
2	Brake fluid reservoir diaphragm holder	1	
3	Brake fluid reservoir diaphragm	1	
4	Brake fluid reservoir	1	
5	Brake fluid reservoir hose	1	
6	Rear brake light switch coupler	1	Disconnect.
7	Right footrest assembly	1	
8	Rear brake light switch	1	
9	Brake hose union bolt	1	
10	Copper washer	2	
11	Brake hose (rear brake master cylinder to hydraulic unit)	1	Disconnect.

Removing the rear brake master cylinder

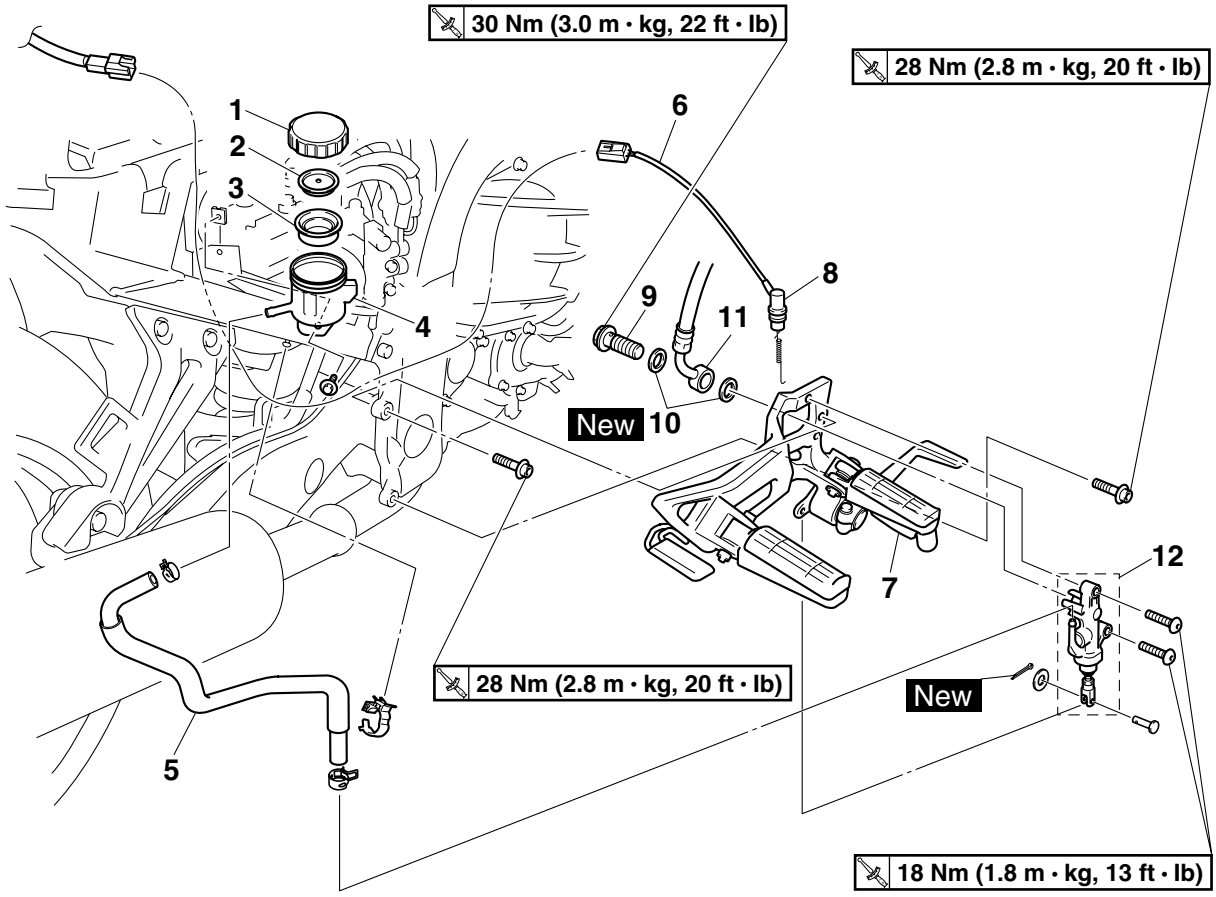

Order	Job/Parts to remove	Q'ty	Remarks
12	Rear brake master cylinder	1	
			For installation, reverse the removal procedure.

Disassembling the rear brake master cylinder

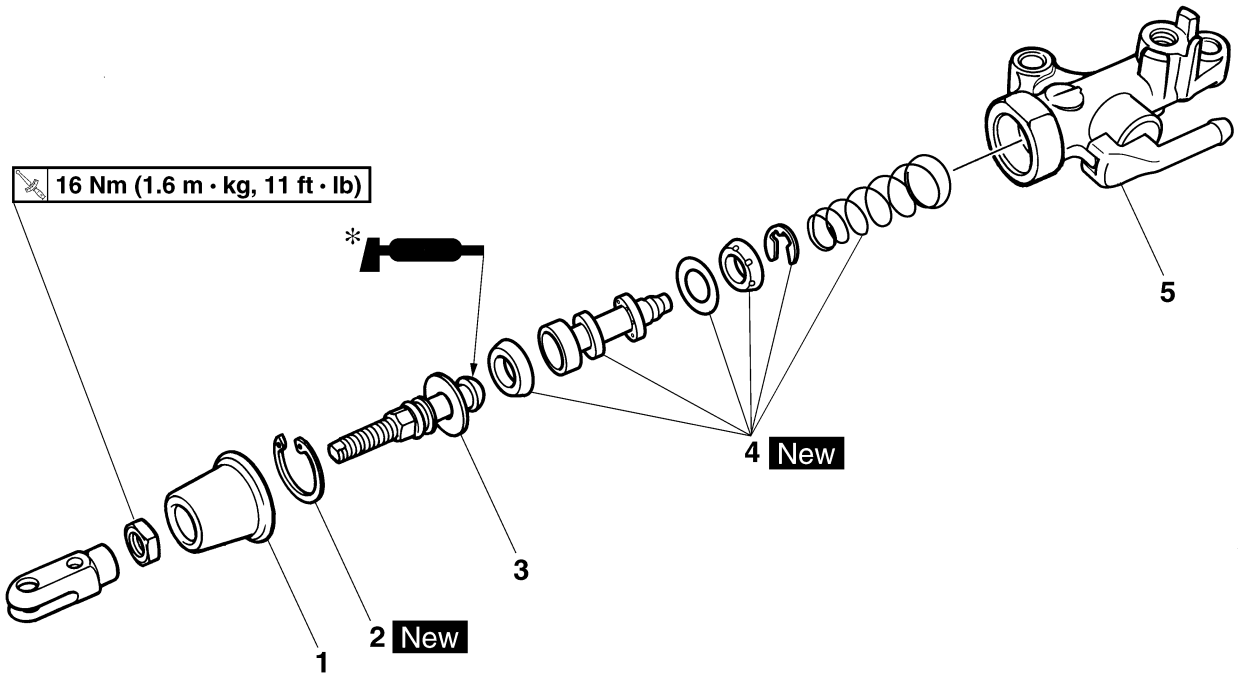

Order	Job/Parts to remove	Q'ty	Remarks
1	Dust boot	1	
2	Circlip	1	
3	Brake master cylinder push rod	1	
4	Brake master cylinder kit	1	
5	Brake master cylinder body	1	
			For assembly, reverse the disassembly procedure.

* Apply silicon grease

Removing the rear brake caliper

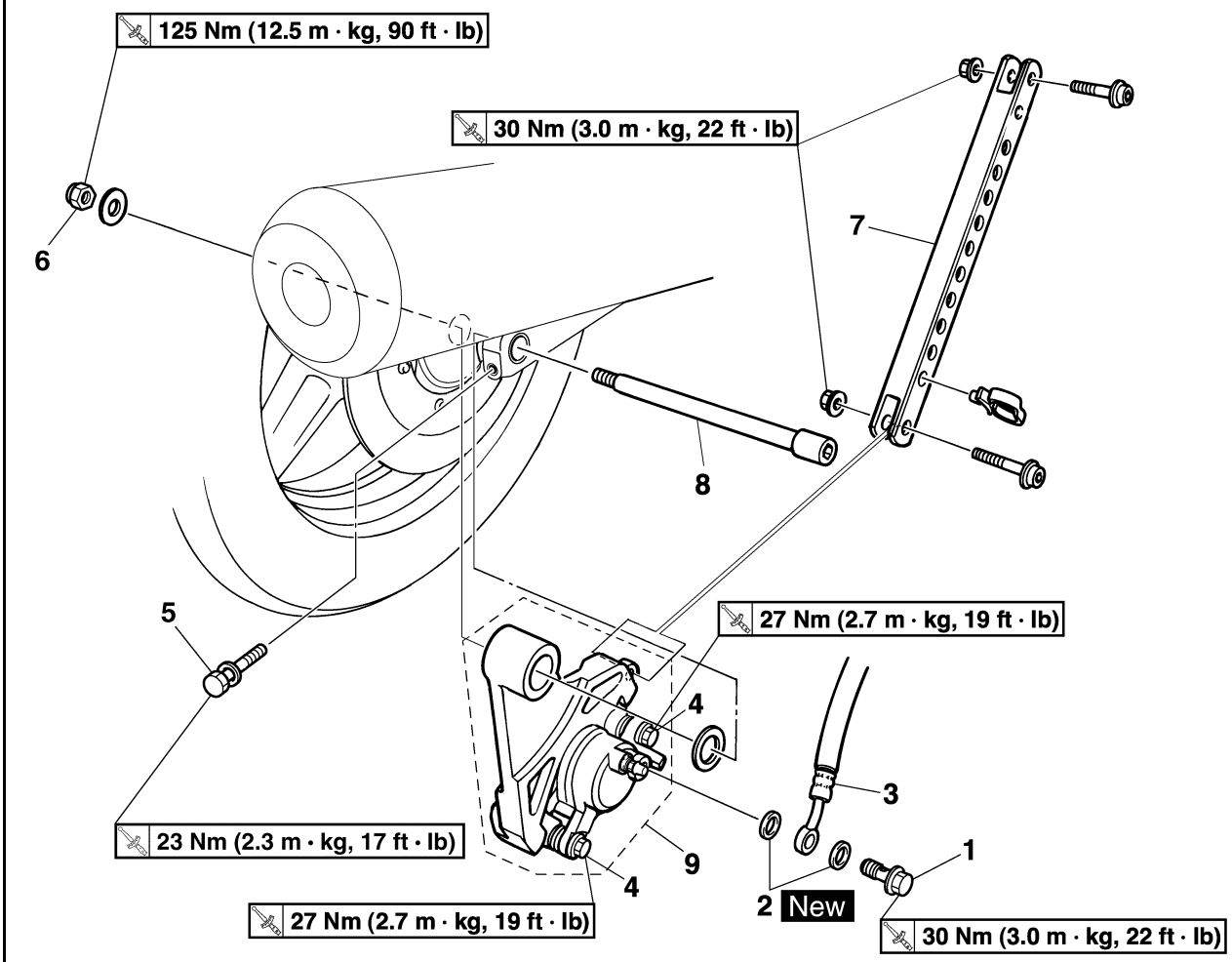

Order	Job/Parts to remove	Q'ty	Remarks
	Brake fluid		Drain. Refer to "BLEEDING THE HYDRAULIC BRAKE SYSTEM (ABS)" on page 3-23.
1	Brake hose union bolt	1	
2	Copper washer	2	
3	Brake hose (proportioning valve to rear brake caliper)	1	
4	Rear brake caliper bolt	2	Loosen.
5	Rear wheel axle pinch bolt	1	Loosen.
6	Rear wheel axle nut	1	
7	Brake torque rod	1	
8	Rear wheel axle	1	
9	Rear brake caliper assembly	1	
			For installation, reverse the removal procedure.

Disassembling the rear brake caliper

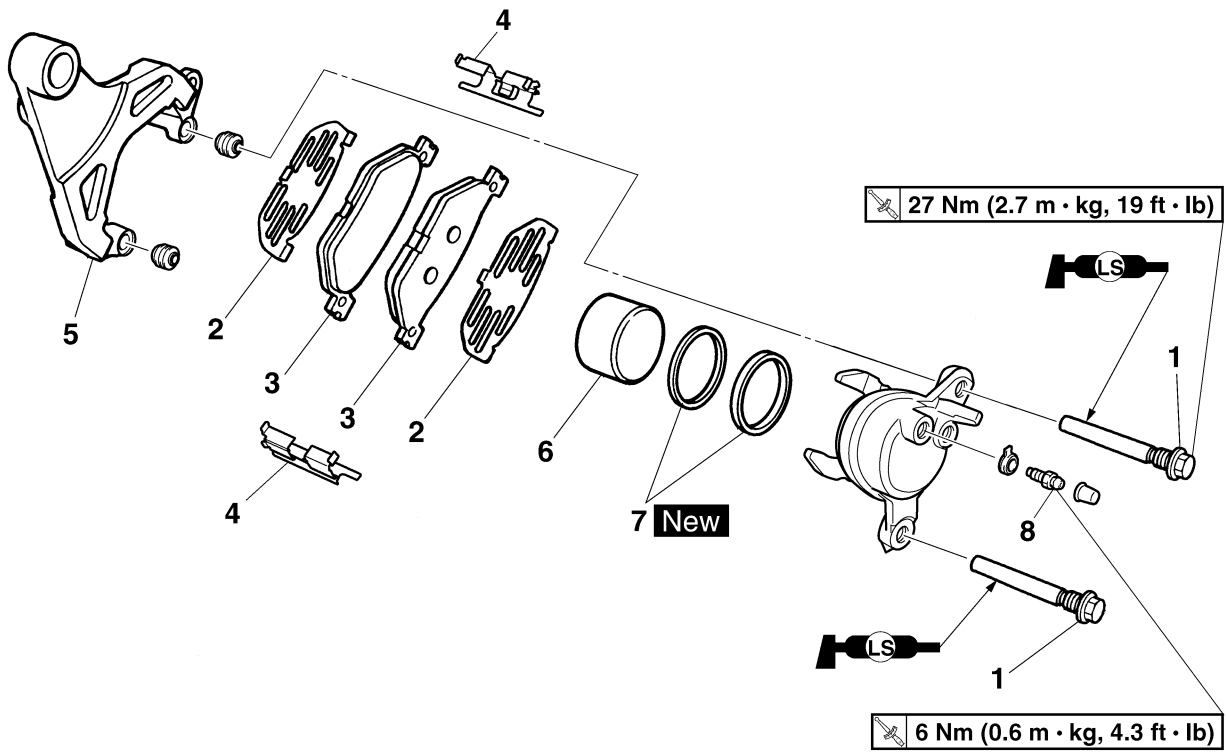

Order	Job/Parts to remove	Q'ty	Remarks
1	Rear brake caliper bolt	2	
2	Brake pad shim	2	
3	Rear brake pad	2	
4	Brake pad spring	2	
5	Rear brake caliper bracket	1	
6	Brake caliper piston	1	
7	Brake caliper piston seal	2	
8	Bleed screw	1	
			For assembly, reverse the disassembly procedure.

EAS22560
INTRODUCTION
EWA14100
WARNING

Disc brake components rarely require disassembly. Therefore, always follow these preventive measures:
- **Never disassemble brake components unless absolutely necessary.**
- **If any connection on the hydraulic brake system is disconnected, the entire brake system must be disassembled, drained, cleaned, properly filled, and bled after reassembly.**
- **Never use solvents on internal brake components.**
- **Use only clean or new brake fluid for cleaning brake components.**
- **Brake fluid may damage painted surfaces and plastic parts. Therefore, always clean up any spilt brake fluid immediately.**
- **Avoid brake fluid coming into contact with the eyes as it can cause serious injury.**
- **FIRST AID FOR BRAKE FLUID ENTERING THE EYES:**
- **Flush with water for 15 minutes and get immediate medical attention.**

EAS22570
CHECKING THE REAR BRAKE DISC
1. Remove:
   - Rear wheel
     Refer to “REAR WHEEL” on page 4-20.
2. Check:
   - Brake disc
     Damage/galling → Replace.
3. Measure:
   - Brake disc deflection
     Out of specification → Correct the brake disc deflection or replace the brake disc.
     Refer to “CHECKING THE FRONT BRAKE DISCS” on page 4-30.

Brake disc deflection limit
0.15 mm (0.0059 in)

4. Measure:
   - Brake disc thickness
     Measure the brake disc thickness at a few different locations.
     Out of specification → Replace.
     Refer to “CHECKING THE FRONT BRAKE DISCS” on page 4-30.

Brake disc thickness limit
4.5 mm (0.18 in)

5. Adjust:
   - Brake disc deflection
     Refer to “CHECKING THE FRONT BRAKE DISCS” on page 4-30.

Brake disc bolt
18 Nm (1.8 m·kg, 13 ft·lb)
LOCTITE®

6. Install:
   - Rear wheel
     Refer to “REAR WHEEL” on page 4-20.

EAS22580
REPLACING THE REAR BRAKE PADS
NOTE:
When replacing the brake pads, it is not necessary to disconnect the brake hose or disassemble the brake caliper.

1. Measure:
   - Brake pad wear limit “a”
     Out of specification → Replace the brake pads as a set.

Brake pad lining thickness (inner)
6.3 mm (0.25 in)
Limit
0.8 mm (0.03 in)
Brake pad lining thickness (outer)
6.3 mm (0.25 in)
Limit
0.8 mm (0.03 in)

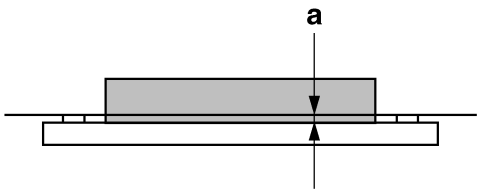

2. Install:
   - Brake pad springs
   - Brake pad shims
     (onto the brake pads)
   - Brake pads

NOTE:

Always install new brake pads, brake pad shims, and brake pad springs as a set.

▼▼▼▼▼▼▼▼▼▼▼▼▼▼▼▼▼▼▼▼▼▼▼▼▼▼▼▼▼▼▼▼▼▼

a. Connect a clear plastic hose “1” tightly to the bleed screw “2”. Put the other end of the hose into an open container.
b. Loosen the bleed screw and push the brake caliper pistons into the brake caliper with your finger.

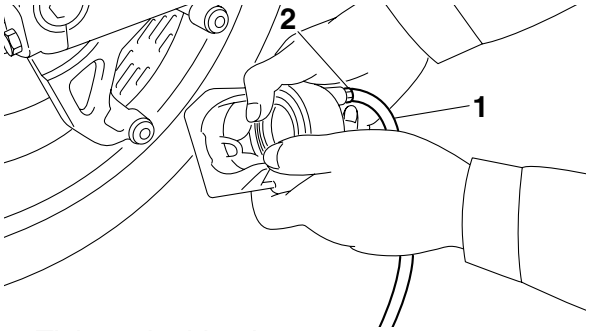

c. Tighten the bleed screw.

	Bleed screw **6 Nm (0.6 m·kg, 4.3 ft·lb)**

d. Install new brake pad springs “3”.

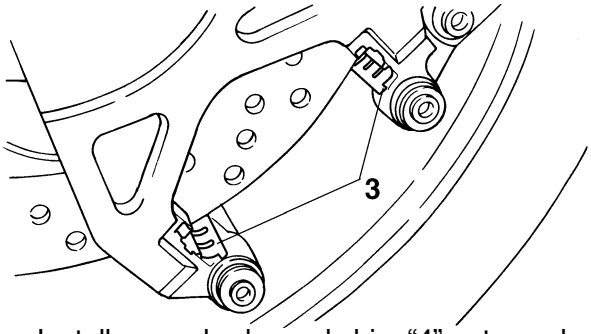

e. Install a new brake pad shim “4” onto each new brake pad “5”.

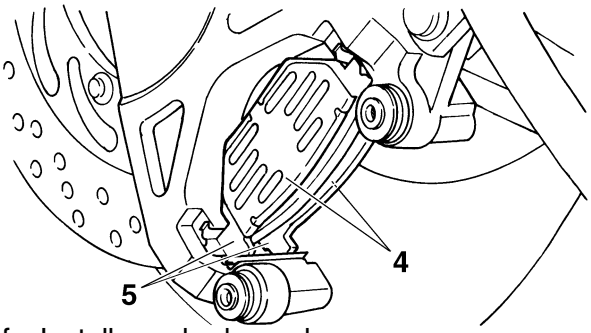

f. Install new brake pads.

▲▲▲▲▲▲▲▲▲▲▲▲▲▲▲▲▲▲▲▲▲▲▲▲▲▲▲▲▲▲▲▲▲▲

3. Install:
   - Rear brake caliper

	Rear brake caliper bolt **27 Nm (2.7 m·kg, 19 ft·lb)**

4. Check:
   - Brake fluid level
     Below the minimum level mark “a” → Add the recommended brake fluid to the proper level.
     Refer to “CHECKING THE BRAKE FLUID LEVEL” on page 3-22.

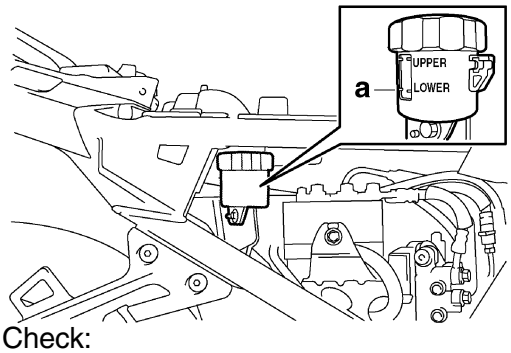

5. Check:
   - Brake pedal operation
     Soft or spongy feeling → Bleed the brake system.
     Refer to “BLEEDING THE HYDRAULIC BRAKE SYSTEM (ABS)” on page 3-23.

EAS22590

REMOVING THE REAR BRAKE CALIPER

NOTE:

Before disassembling the brake caliper, drain the brake fluid from the entire brake system.

1. Remove:
   - Brake hose union bolt “1”
   - Copper washers “2”
   - Brake hose (proportioning valve to rear brake caliper) “3”

NOTE:

Put the end of the brake hose into a container and pump out the brake fluid carefully.

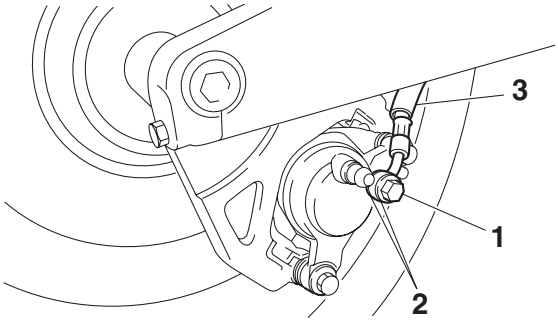

EAS22600
DISASSEMBLING THE REAR BRAKE CALIPER

1. Remove:
   - Brake caliper piston “1”
   - Brake caliper piston seals “2”

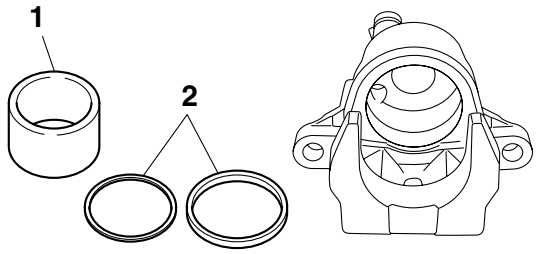

▼▼▼▼▼▼▼▼▼▼▼▼▼▼▼▼▼▼▼▼▼▼▼▼▼▼▼▼▼▼▼▼▼▼

a. Blow compressed air into the brake hose joint opening “a” to force out the piston from the brake caliper.

EWA13550
WARNING

- **Cover the brake caliper piston with a rag. Be careful not to get injured when the piston is expelled from the brake caliper.**
- **Never try to pry out the brake caliper piston.**

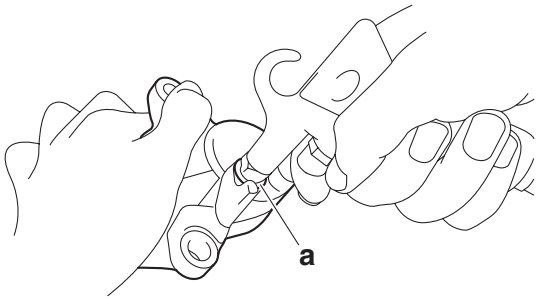

b. Remove the brake caliper piston seals.

▲▲▲▲▲▲▲▲▲▲▲▲▲▲▲▲▲▲▲▲▲▲▲▲▲▲▲▲▲▲▲▲▲▲

EAS22640
CHECKING THE REAR BRAKE CALIPER

Recommended brake component replacement schedule	
Brake pads	If necessary
Piston seals	Every two years
Brake hoses	Every four years
Brake fluid	Every two years and whenever the brake is disassembled

1. Check:
   - Brake caliper piston “1”
     Rust/scratches/wear → Replace the brake caliper pistons.
   - Brake caliper cylinder “2”
     Scratches/wear → Replace the brake caliper assembly.
   - Brake caliper body “3”
     Cracks/damage → Replace the brake caliper assembly.
   - Brake fluid delivery passage (brake caliper body)
     Obstruction → Blow out with compressed air.

EWA13610
WARNING

Whenever a brake caliper is disassembled, replace the brake caliper piston seals.

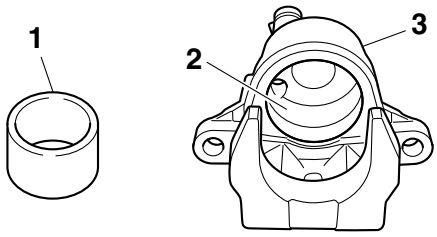

2. Check:
   - Brake caliper bracket
     Cracks/damage → Replace.

EAS22650
ASSEMBLING THE REAR BRAKE CALIPER

EWA13620
WARNING

- **Before installation, all internal brake components should be cleaned and lubricated with clean or new brake fluid.**
- **Never use solvents on internal brake components as they will cause the piston seals to swell and distort.**
- **Whenever a brake caliper is disassembled, replace the brake caliper piston seals.**

Recommended fluid
DOT 4

EAS22670
INSTALLING THE REAR BRAKE CALIPER

1. Install:
   - Rear brake caliper assembly (temporarily)
   - Rear wheel axle
   - Brake torque rod

- Rear wheel axle nut

NOTE:

- Do not install the brake pads, brake pad shims, and brake pad springs.
- Align the slot “a” of the rear wheel sensor housing “1” with the projection “b” of the rear brake caliper bracket “2”, and then assemble them.
- After assembling the rear wheel sensor housing and the rear brake caliper bracket, make sure that the projection “c” on the housing is aligned with the projection “d” on the bracket.

ECA14470

CAUTION:

Make sure there are no foreign materials in the wheel hub. Foreign materials cause damage to the inner sensor rotor and wheel sensor.

EWA13500

WARNING

Make sure the brake hose is routed properly.

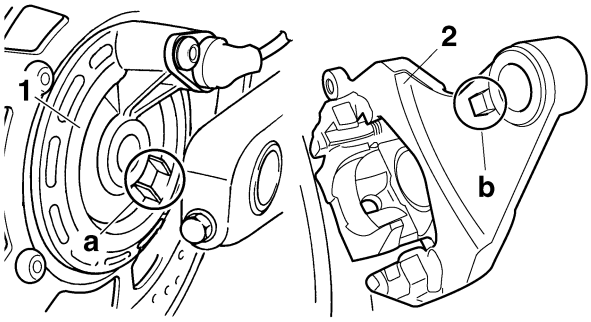

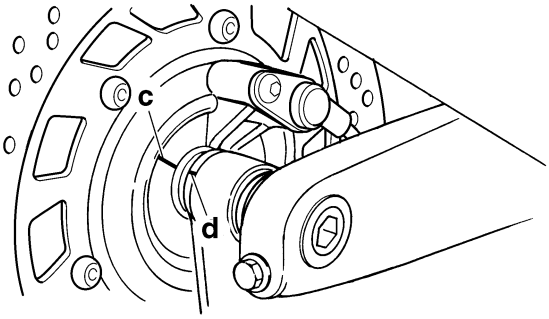

2. Tighten:
   - Brake torque rod nuts
   - Rear wheel axle nut
   - Rear wheel axle pinch bolt

Brake torque rod nut
30 Nm (3.0 m·kg, 22 ft·lb)
Rear wheel axle nut
125 Nm (12.5 m·kg, 90 ft·lb)
Rear wheel axle pinch bolt
23 Nm (2.3 m·kg, 17 ft·lb)

3. Install:
   - Copper washers New
   - Brake hose (proportioning valve to rear brake caliper) “1”
   - Brake hose union bolt “2”

Brake hose union bolt
30 Nm (3.0 m·kg, 22 ft·lb)

EWA13530

WARNING

Proper brake hose routing is essential to insure safe vehicle operation. Refer to “CABLE ROUTING” on page 2-45.

EC3P61044

CAUTION:

When installing the brake hose onto the brake caliper, make sure the brake pipe “a” touches the projection “b” on the brake caliper.

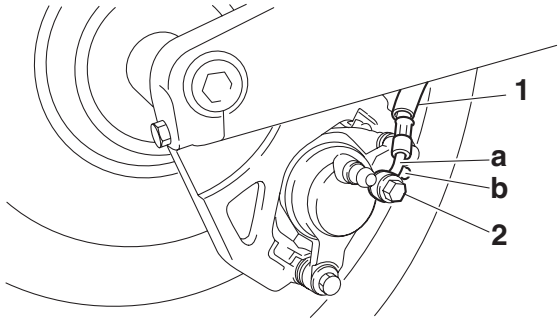

4. Remove:
   - Rear brake caliper bolts
   - Rear brake caliper
5. Install:
   - Brake pad springs
   - Rear brake pads
   - Brake pad shims
   - Rear brake caliper bolts
   - Rear brake caliper
     Refer to “REPLACING THE REAR BRAKE PADS” on page 4-43.

Rear brake caliper bolt
27 Nm (2.7 m·kg, 19 ft·lb)

6. Fill:
   - Brake fluid reservoir
     (with the specified amount of the recommended brake fluid)

Recommended fluid
DOT 4

EWA13090

WARNING

- **Use only the designated brake fluid. Other brake fluids may cause the rubber seals to deteriorate, causing leakage and poor brake performance.**
- **Refill with the same type of brake fluid that is already in the system. Mixing brake fluids may result in a harmful chemical reaction, leading to poor brake performance.**
- **When refilling, be careful that water does not enter the brake fluid reservoir. Water will significantly lower the boiling point of the brake fluid and could cause vapor lock.**

ECA13540

CAUTION:

Brake fluid may damage painted surfaces and plastic parts. Therefore, always clean up any spilt brake fluid immediately.

7. Bleed:
   - Brake system
     Refer to "BLEEDING THE HYDRAULIC BRAKE SYSTEM (ABS)" on page 3-23.
8. Check:
   - Brake fluid level
     Below the minimum level mark "a" → Add the recommended brake fluid to the proper level.
     Refer to "CHECKING THE BRAKE FLUID LEVEL" on page 3-22.

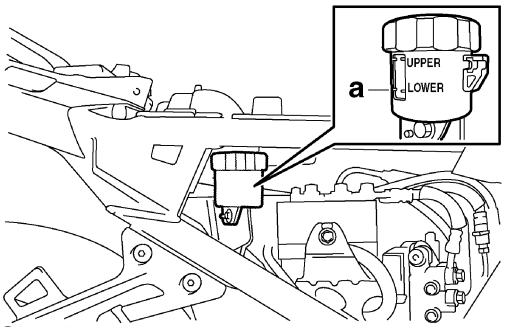

9. Check:
   - Brake pedal operation
     Soft or spongy feeling → Bleed the brake system.
     Refer to "BLEEDING THE HYDRAULIC BRAKE SYSTEM (ABS)" on page 3-23.

EAS22700

REMOVING THE REAR BRAKE MASTER CYLINDER

NOTE:

Before removing the rear brake master cylinder, drain the brake fluid from the entire brake system.

1. Remove:
   - Brake hose union bolt "1"
   - Copper washers "2"
   - Brake hose (rear brake master cylinder to hydraulic unit) "3"

NOTE:

To collect any remaining brake fluid, place a container under the master cylinder and the end of the brake hose.

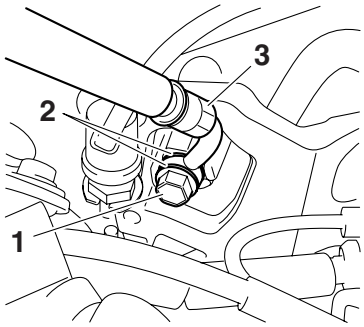

EAS22720

CHECKING THE REAR BRAKE MASTER CYLINDER

1. Check:
   - Brake master cylinder
     Damage/scratches/wear → Replace.
   - Brake fluid delivery passages (brake master cylinder body)
     Obstruction → Blow out with compressed air.
2. Check:
   - Brake master cylinder kit
     Damage/scratches/wear → Replace.
3. Check:
   - Brake fluid reservoir
     Cracks/damage → Replace.
   - Brake fluid reservoir diaphragm
     Cracks/damage → Replace.
4. Check:
   - Brake hose
     Cracks/damage/wear → Replace.

EAS22730

ASSEMBLING THE REAR BRAKE MASTER CYLINDER

EWA13520

WARNING

- **Before installation, all internal brake components should be cleaned and lubricated with clean or new brake fluid.**
- **Never use solvents on internal brake components.**

Recommended fluid
DOT 4

EAS22740
INSTALLING THE REAR BRAKE MASTER CYLINDER

1. Install:
   - Copper washers New
   - Brake hose (rear brake master cylinder to hydraulic unit) "1"
   - Rear brake hose union bolt "2"

Brake hose union bolt
30 Nm (3.0 m·kg, 22 ft·lb)

EWA13530
WARNING

Proper brake hose routing is essential to insure safe vehicle operation. Refer to "CABLE ROUTING" on page 2-45.

ECA14160
CAUTION:

When installing the brake hose onto the brake master cylinder, make sure the brake pipe touches the projection "a" as shown.

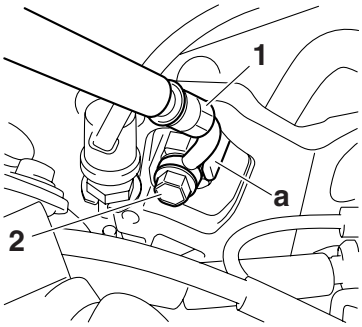

2. Install:
   - Rear brake light switch "1"

NOTE:

Install the rear brake light switch spring as shown in the illustration.

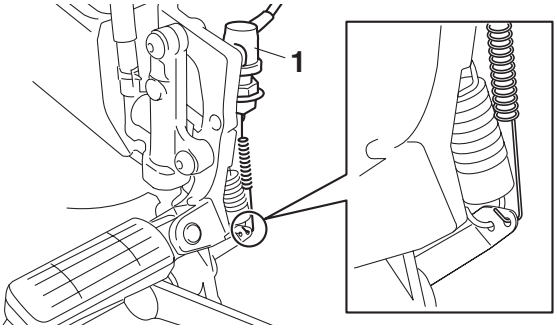

3. Fill:
   - Brake fluid reservoir
     (with the specified amount of the recommended brake fluid)

Recommended fluid
DOT 4

EWA13090
WARNING

- **Use only the designated brake fluid. Other brake fluids may cause the rubber seals to deteriorate, causing leakage and poor brake performance.**
- **Refill with the same type of brake fluid that is already in the system. Mixing brake fluids may result in a harmful chemical reaction, leading to poor brake performance.**
- **When refilling, be careful that water does not enter the brake fluid reservoir. Water will significantly lower the boiling point of the brake fluid and could cause vapor lock.**

ECA13540
CAUTION:

Brake fluid may damage painted surfaces and plastic parts. Therefore, always clean up any spilt brake fluid immediately.

4. Bleed:
   - Brake system
     Refer to "BLEEDING THE HYDRAULIC BRAKE SYSTEM (ABS)" on page 3-23.
5. Check:
   - Brake fluid level
     Below the minimum level mark "a" → Add the recommended brake fluid to the proper level.
     Refer to "CHECKING THE BRAKE FLUID LEVEL" on page 3-22.

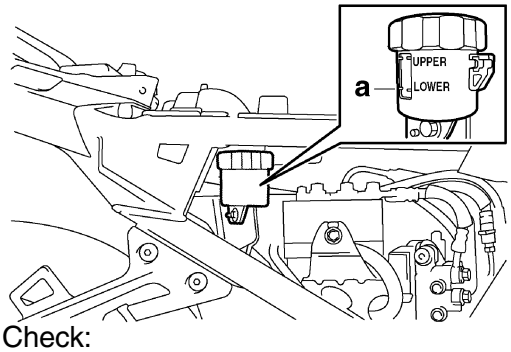

6. Check:
   - Brake pedal operation
     Soft or spongy feeling → Bleed the brake system.
     Refer to "BLEEDING THE HYDRAULIC BRAKE SYSTEM (ABS)" on page 3-23.

7. Adjust:
   - Brake pedal position
     Refer to “ADJUSTING THE REAR DISC BRAKE” on page 3-21.
8. Adjust:
   - Rear brake light operation timing
     Refer to “ADJUSTING THE REAR BRAKE LIGHT SWITCH” on page 3-23.

EAS22760

ABS (ANTI-LOCK BRAKE SYSTEM)

ET3P61060

ABS COMPONENTS CHART

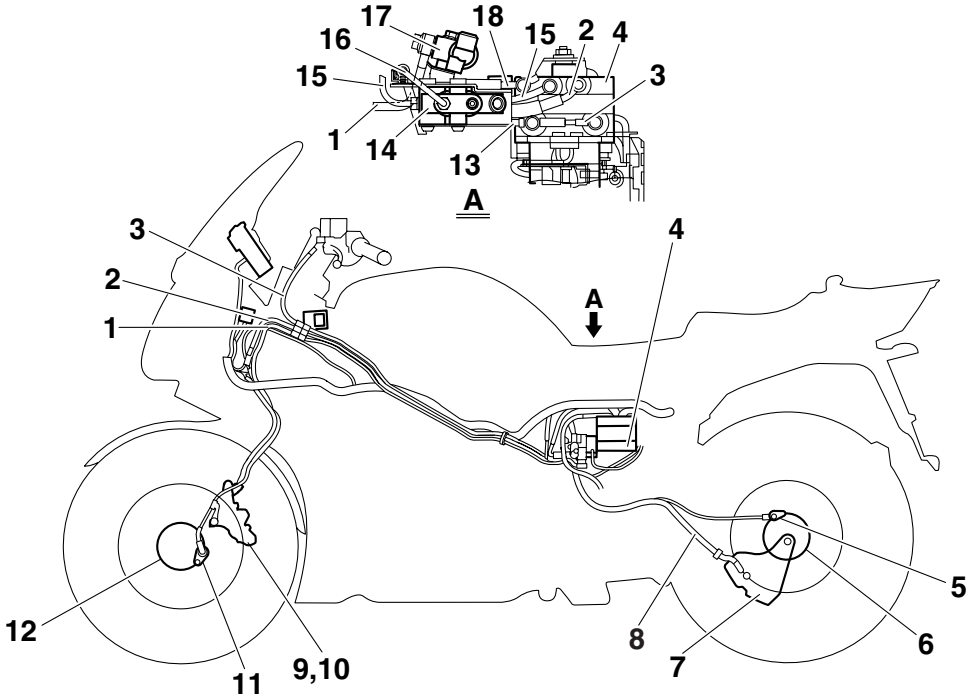

1. Brake hose (metering valve to right front brake caliper)
2. Brake hose (hydraulic unit to front brake calipers)
3. Brake hose (front brake master cylinder to hydraulic unit)
4. Hydraulic unit (HU)
5. Rear wheel sensor rotor
6. Rear wheel sensor
7. Rear brake caliper
8. Brake hose (proportioning valve to rear brake caliper)
9. Left front brake caliper
10. Right front brake caliper (partially operated together with the rear brake)
11. Front wheel sensor
12. Front wheel sensor rotor
13. Brake hose (rear brake master cylinder to hydraulic unit)
14. Proportioning valve
15. Brake hose (hydraulic unit to proportioning valve)
16. Brake hose (proportioning valve to rear brake caliper)
17. Metering valve
18. Brake hose (hydraulic unit to metering valve)

Removing the rear fender assembly

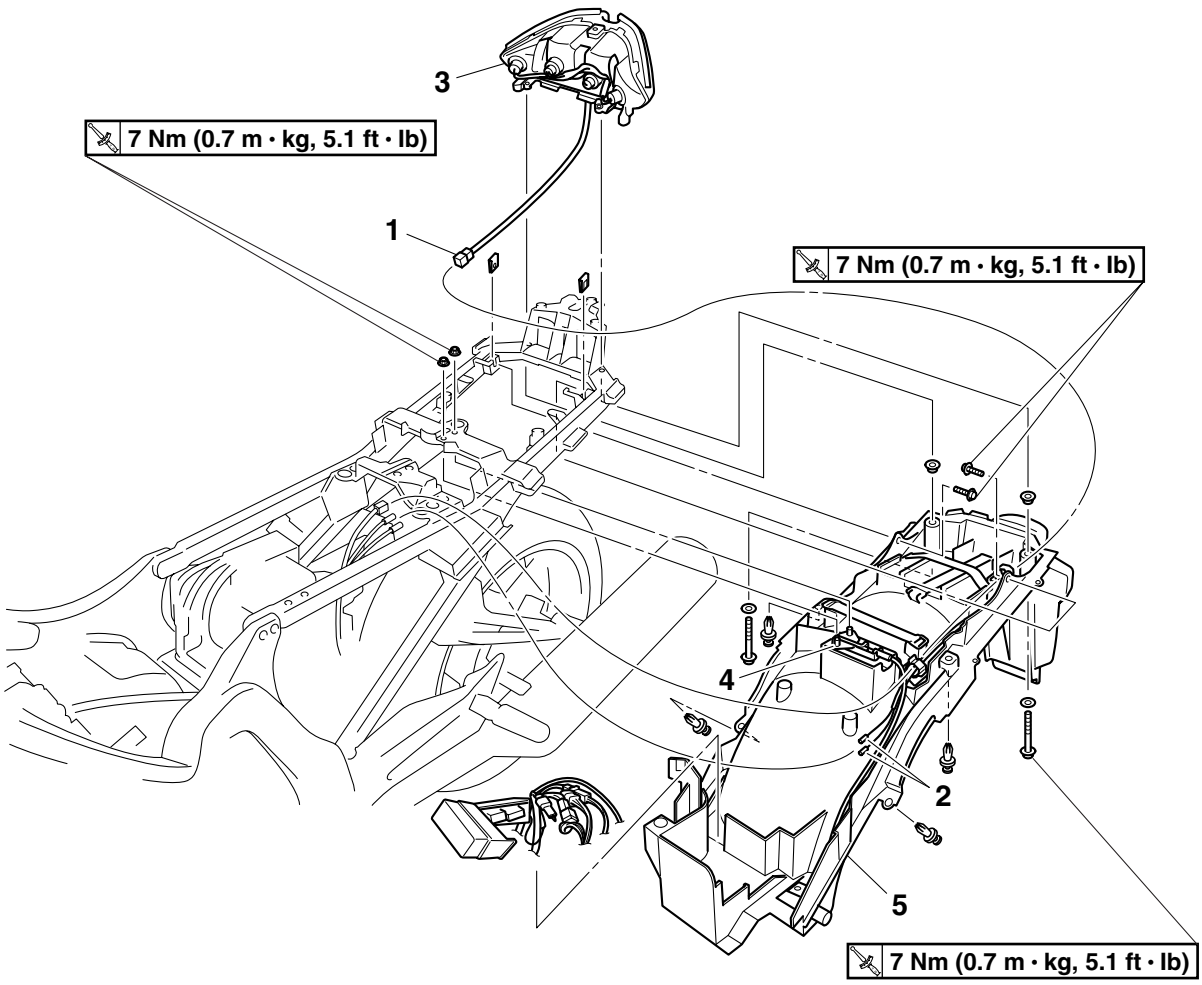

Order	Job/Parts to remove	Q'ty	Remarks
	Air filter case		Refer to "GENERAL CHASSIS" on page 4-1.
	ABS ECU/ABS motor relay		Refer to "ABS (ANTI-LOCK BRAKE SYSTEM)" on page 8-111.
	Brake fluid		Drain. Refer to "BLEEDING THE HYDRAULIC BRAKE SYSTEM (ABS)" on page 3-23.
	Brake fluid reservoir		Refer to "REAR BRAKE" on page 4-37.
1	Tail/brake light assembly coupler	1	Disconnect.
2	License plate light connector	2	Disconnect.
3	Tail/brake light assembly	1	
4	Seat lock cable assembly	1	
5	Rear fender assembly	1	
			For installation, reverse the removal procedure.

Removing the hydraulic unit

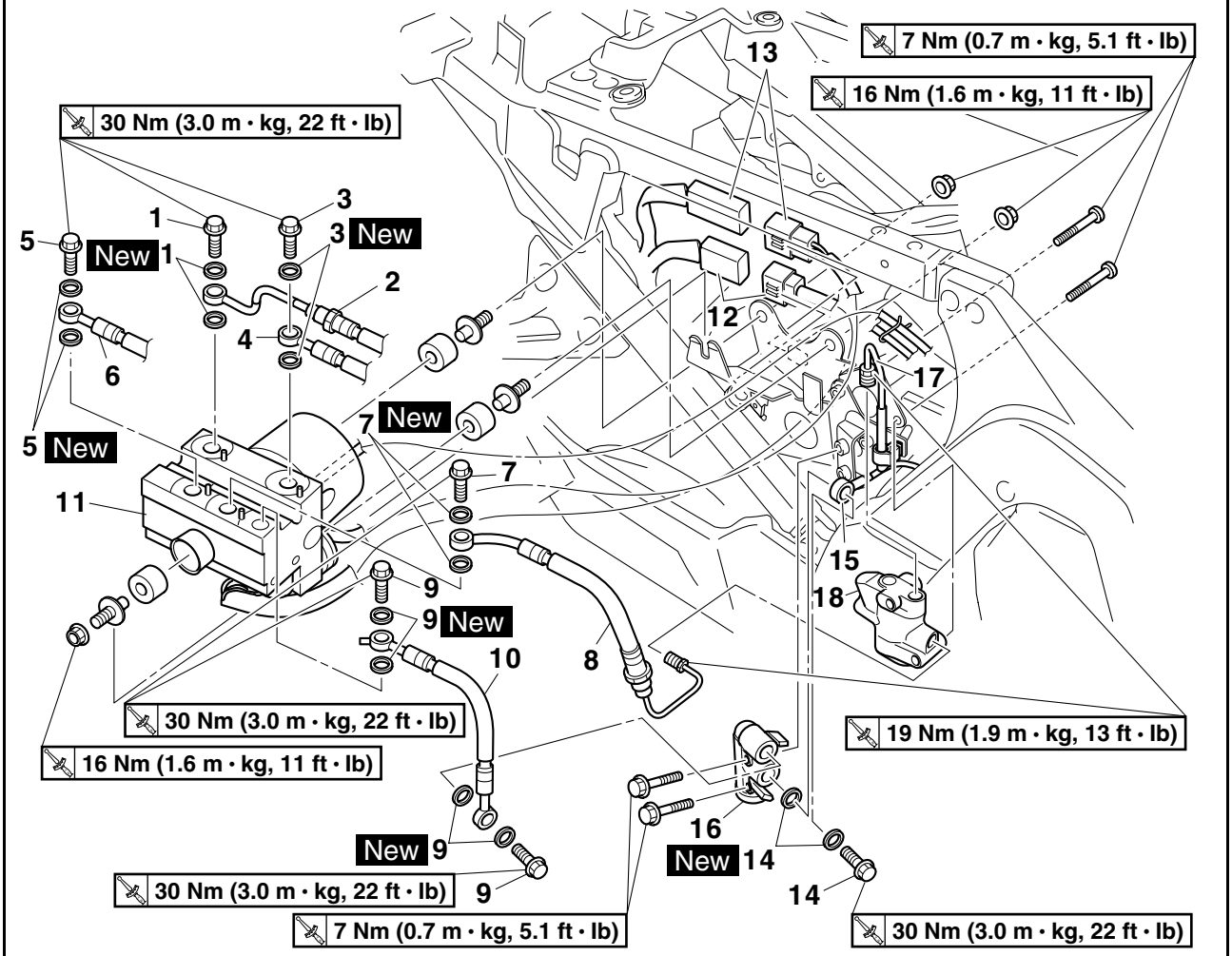

Order	Job/Parts to remove	Q'ty	Remarks
1	Brake hose union bolt/Copper washer	1/2	
2	Brake hose (front brake master cylinder to hydraulic unit)	1	Disconnect.
3	Brake hose union bolt/Copper washer	1/2	
4	Brake hose (rear brake master cylinder to hydraulic unit)	1	Disconnect.
5	Brake hose union bolt/Copper washer	1/2	
6	Brake hose (hydraulic unit to front brake calipers)	1	Disconnect.
7	Brake hose union bolt/Copper washer	1/2	
8	Brake hose (hydraulic unit to proportioning valve)	1	
9	Brake hose union bolt/Copper washer	2/4	
10	Brake hose (hydraulic unit to metering valve)	1	
11	Hydraulic unit	1	
12	Hydraulic unit solenoid coupler	1	Disconnect.
13	ABS motor coupler	1	Disconnect.
14	Brake hose union bolt/Copper washer	1/2	

Removing the hydraulic unit

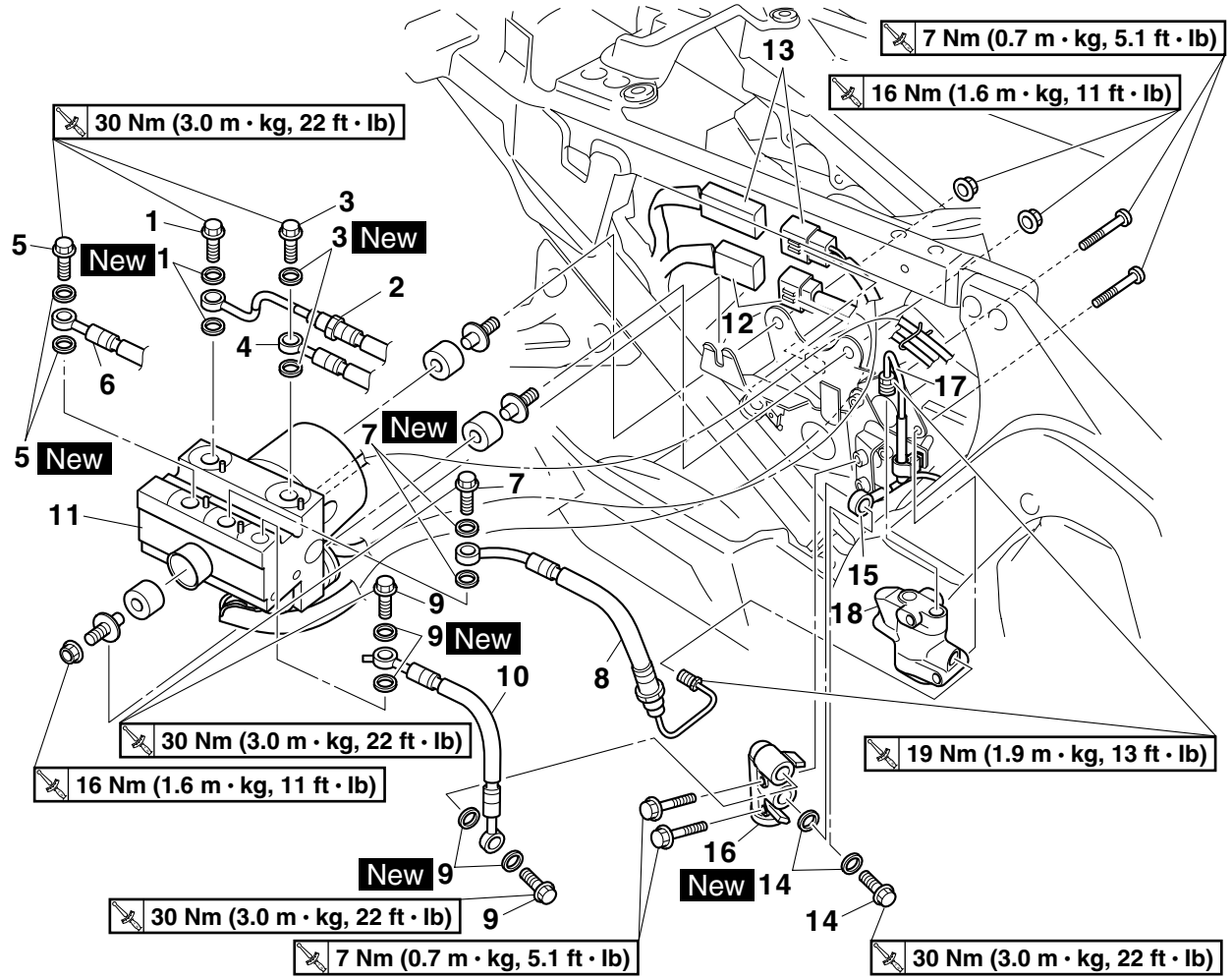

Order	Job/Parts to remove	Q'ty	Remarks
15	Brake hose (metering valve to right front brake caliper)	1	Disconnect.
16	Metering valve	1	
17	Brake hose (proportioning valve to rear brake caliper)	1	
18	Proportioning valve	1	
			For installation, reverse the removal procedure.

ET3P61055

REMOVING THE HYDRAULIC UNIT

ECA14510

CAUTION:

Do not remove the hydraulic unit to check the resistance of the solenoid valves and the ABS motor for continuity.

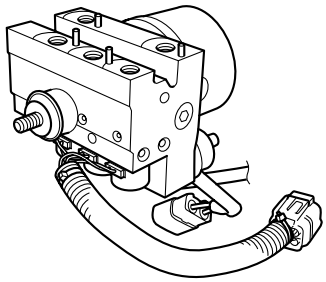

EWA13930

WARNING

Refill with the same type of brake fluid that is already in the system. Mixing fluids may result in a harmful chemical reaction, leading to poor braking performance.

EC3P61010

CAUTION:

- **Handle the ABS components with care, since they have been accurately adjusted. Keep them away from dirt and do not subject them to shocks.**
- **The wheel sensors cannot be disassembled. Do not attempt to disassemble the sensors. If faulty, replace with new sensors.**
- **Do not turn the main switch to "ON" when removing the hydraulic unit.**
- **Do not clean with compressed air.**
- **Do not reuse the brake fluid.**
- **Brake fluid may damage painted surfaces and plastic parts. Therefore, always clean up any spilt brake fluid immediately.**
- **Do not allow any brake fluid to contact the couplers. Brake fluid may damage the couplers and cause bad contacts.**
- **If the union bolts for the hydraulic unit have been removed, be sure to tighten them to the specified torque and bleed the brake system.**

1. Remove:
   - Brake hose "1" (front brake master cylinder to hydraulic unit)
   - Brake hose "2" (rear brake master cylinder to hydraulic unit)
   - Brake hose "3" (hydraulic unit to front brake calipers)
   - Brake hose "4" (hydraulic unit to proportioning valve)
   - Brake hose "5" (hydraulic unit to metering valve)

NOTE:

Do not operate the brake lever and brake pedal while removing the brake hoses.

ECA14530

CAUTION:

When removing the brake hoses, cover the area around the hydraulic unit to catch any spilt brake fluid. Do not allow the brake fluid to contact other parts.

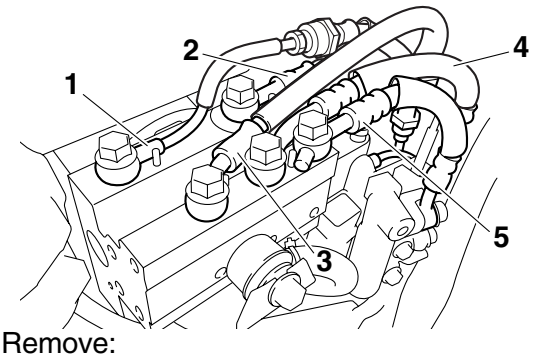

2. Remove:
   - Hydraulic unit "1"

NOTE:

To avoid brake fluid leakage and to prevent foreign materials from entering the hydraulic unit, insert a rubber plug "a" or a bolt (M10 × 1.25) into each union bolt hole.

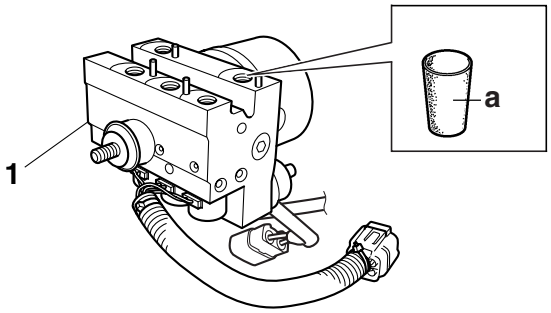

ET3P61056

CHECKING THE HYDRAULIC UNIT

1. Check:
   - Hydraulic unit "1"
     Cracks/damage → Replace the hydraulic unit.

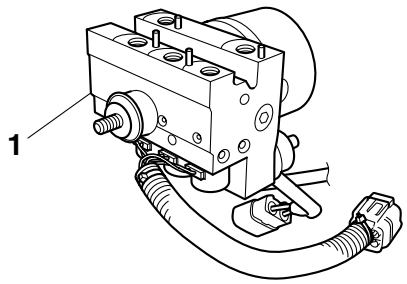

ET3P61057

CHECKING THE PROPORTIONING VALVE AND METERING VALVE

1. Check:
   - Proportioning valve
     Cracks/damage → Replace the proportioning valve.
   - Metering valve
     Cracks/damage → Replace the metering valve

ET3P61058

INSTALLING THE HYDRAULIC UNIT

Proceed in the reverse order of removal. Pay attention to the following items.

1. Install:
   - Hydraulic unit

NOTE:

Do not allow any foreign materials to enter the hydraulic unit or the brake hoses when installing the hydraulic unit.

ECA14750

CAUTION:

Do not remove the rubber plugs or bolts (M10 × 1.25) installed in the union bolt holes before installing the hydraulic unit.

2. Remove:
   - Rubber plugs or bolts (M10 × 1.25)
3. Install:
   - Copper washer New
   - Brake hose (hydraulic unit to metering valve) "1"
     (to the metering valve)
   - Brake hose union bolt

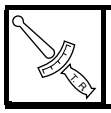	**Brake hose union bolt 30 Nm (3.0 m·kg, 22 ft·lb)**

NOTE:

The brake hose "1" contacts the stopper "a" on the metering valve.

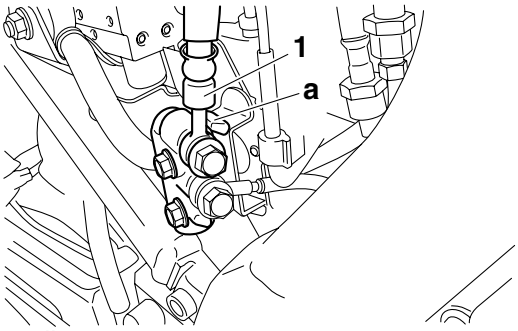

4. Install:
   - Copper washers New
   - Brake hose "1" (hydraulic unit to metering valve)
   - Brake hose "2" (hydraulic unit to proportioning valve)
   - Brake hose "3" (hydraulic unit to front brake calipers)
   - Brake hose "4" (rear brake master cylinder to hydraulic unit)
   - Brake hose "5" (front brake master cylinder to hydraulic unit)
   - Brake hose union bolts

	Brake hose union bolt 30 Nm (3.0 m·kg, 22 ft·lb)

NOTE:

- Make sure that the brake hoses "1", "3", "4", and "5" contact the stoppers "a" on the hydraulic unit.
- Make sure that the brake hose "2" contacts the end "b" of the brake hose "1".

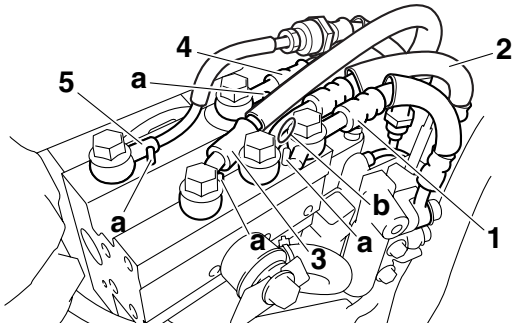

EW3P61009

WARNING

Be sure to connect each brake hose to the correct union bolt hole.

EC3P61011

CAUTION:

To route the brake hoses, refer to "CABLE ROUTING" on page 2-45.

5. Fill:
   - Brake master cylinder reservoir

- Brake fluid reservoir
  (with the specified amount of the recommended brake fluid)

	Recommended fluid **DOT 4**

EWA13090

WARNING

- **Use only the designated brake fluid. Other brake fluids may cause the rubber seals to deteriorate, causing leakage and poor brake performance.**
- **Refill with the same type of brake fluid that is already in the system. Mixing brake fluids may result in a harmful chemical reaction, leading to poor brake performance.**
- **When refilling, be careful that water does not enter the brake fluid reservoir. Water will significantly lower the boiling point of the brake fluid and could cause vapor lock.**

ECA13540

CAUTION:

Brake fluid may damage painted surfaces and plastic parts. Therefore, always clean up any spilt brake fluid immediately.

6. Bleed:
   - Brake system
     Refer to “BLEEDING THE HYDRAULIC BRAKE SYSTEM (ABS)” on page 3-23.
7. Check the operation of the hydraulic unit according to the brake lever and the brake pedal response. (Refer to “HYDRAULIC UNIT OPERATION TESTS” on page 4-56.)

ECA14770

CAUTION:

Always check the operation of the hydraulic unit according to the brake lever and the brake pedal response.

8. Delete the malfunction codes. (Refer to “[D-1] DELETING THE MALFUNCTION CODES” on page 8-142.)
9. Perform a trial run. (Refer to “TRIAL RUN” on page 4-59.)

EAS22800

HYDRAULIC UNIT OPERATION TESTS

The reaction-force pulsating action generated in the brake lever and brake pedal when the ABS is activated can be tested when the vehicle is stopped.
The hydraulic unit operation can be tested using the following two methods.

- Hydraulic unit operation test 1: this test checks the function of the ABS after the system was disassembled, adjusted, or serviced.
- Hydraulic unit operation test 2: this test generates the same reaction-force pulsating action that is generated in the brake lever and brake pedal when the ABS is activated.

Hydraulic unit operation test 1

EWA13120

WARNING

Securely support the vehicle so that there is no danger of it falling over.

NOTE:

Two people are necessary to perform hydraulic unit operation test 1.

1. Place the vehicle on the centerstand.
2. Turn the main switch to “OFF”.
3. Remove:
   - Front cowling right inner panel 1
     Refer to “GENERAL CHASSIS” on page 4-1.
4. Check:
   - Battery voltage
     Lower than 12.8 V → Charge or replace the battery.

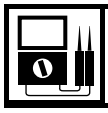	**Battery voltage** **Higher than 12.8 V**

NOTE:

- If the battery voltage is lower than 12.8 V, charge the battery, and then perform hydraulic unit operation test 1.
- If the battery voltage is lower than 10 V, the ABS warning light comes on and the ABS does not operate.

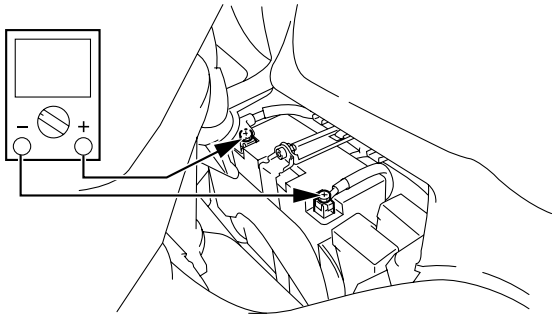

5. Connect the test coupler adapter “1” to the ABS test coupler “2”.

	Test coupler adapter **90890-03149**

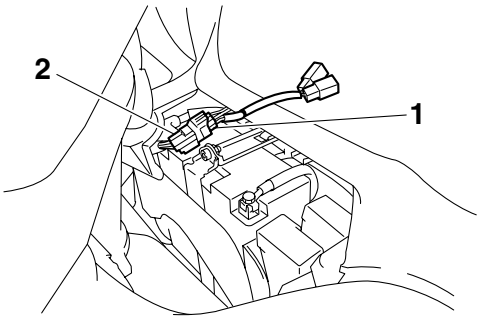

6. Turn the main switch to “ON” while operating the brake lever and the brake pedal simultaneously.

NOTE:

This check cannot be performed unless both the brake lever and the brake pedal are operated simultaneously when the main switch is turned to “ON”.

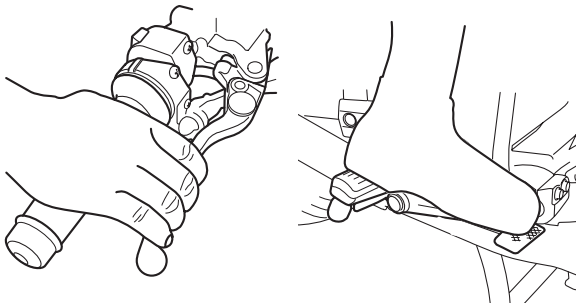

7. Check:
   - Hydraulic unit operation
     When the main switch is turned to “ON”, the ABS warning light comes on for 2 seconds, goes off for 0.5 second, and then starts flashing. When the ABS warning light starts flashing, a single pulse will be generated in the brake lever “1”. After the pulse is generated in the brake lever, it is generated in the brake pedal “2” twice.

NOTE:

A single pulse will be felt in the brake lever once, then in the brake pedal twice. The second person should confirm that the rear brake force is released during the second pulse in the brake pedal, third pulse overall, by manually applying force to rotate the rear wheel. If the rear brake force is released during the second pulse in the brake pedal, the second person will be able to rotate the rear wheel for 0.1 second.

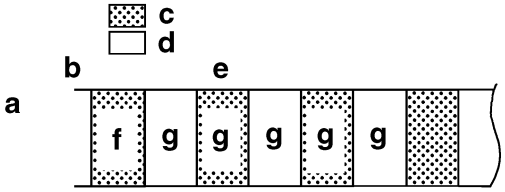

a. ABS warning light
b. Main switch “ON”
c. Comes on
d. Goes off
e. Flashes
f. 2.0 seconds
g. 0.5 second

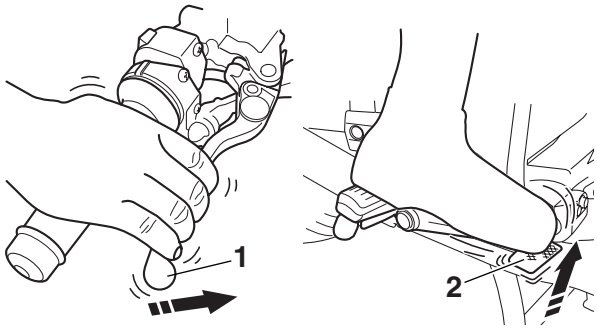

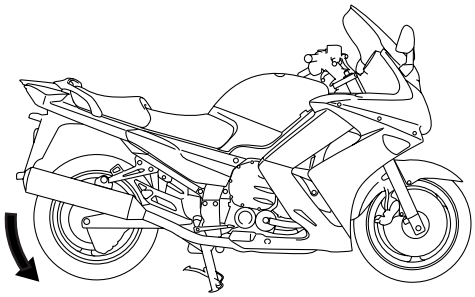

EC3P61013

CAUTION:

- **Check that the pulse is felt in the brake lever once, and then in the brake pedal twice.**
- **If the pulse is felt in the brake pedal before it is felt in the brake lever, check that the brake hoses are connected correctly to the hydraulic unit.**
- **If the rear brake force is not released during the second pulse in the brake pedal, but during the pulse in the brake lever or during the first pulse in the brake pedal, check that the brake hoses are connected correctly to the hydraulic unit.**

- **If the pulse is hardly felt in either the brake lever or brake pedal, check that the brake hoses are connected correctly to the hydraulic unit.**

- If the operation of the hydraulic unit is normal, delete all of the malfunction codes.

Hydraulic unit operation test 2

EWA13120

WARNING

Securely support the vehicle so that there is no danger of it falling over.

1. Place the vehicle on the centerstand.
2. Turn the main switch to “OFF”.
3. Remove:
   - Front cowling right inner panel 1
     Refer to “GENERAL CHASSIS” on page 4-1.
4. Check:
   - Battery voltage
     Lower than 12.8 V → Charge or replace the battery.

	Battery voltage **Higher than 12.8 V**

NOTE:

- If the battery voltage is lower than 12.8 V, charge the battery, and then perform hydraulic unit operation test 2.
- If the battery voltage is lower than 10 V, the ABS warning light comes on and the ABS does not operate.

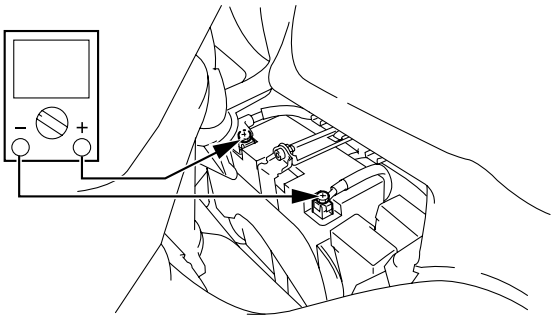

5. Connect the test coupler adapter “1” to the ABS test coupler “2”.

	Test coupler adapter **90890-03149**

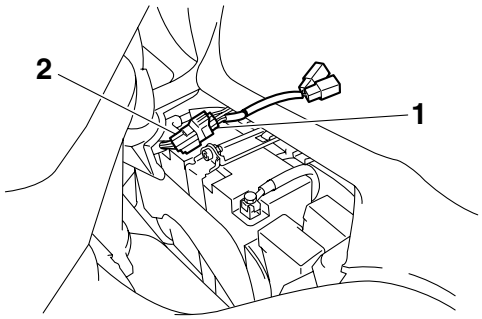

6. Set the engine stop switch “1” to “⊗”.
7. Turn the main switch to “ON”.

NOTE:

After turning the main switch to “ON”, wait approximately 2 seconds until the ABS warning light goes off.

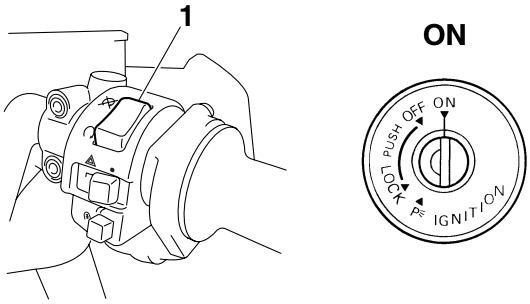

8. Push the start switch “1” for at least 4 seconds.

ECA14790

CAUTION:

Do not operate the brake lever or the brake pedal.

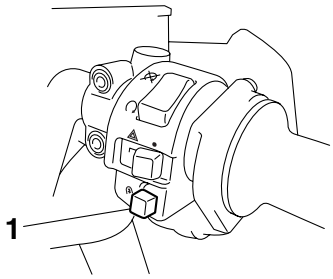

9. After releasing the start switch, operate the brake lever and the brake pedal simultaneously.

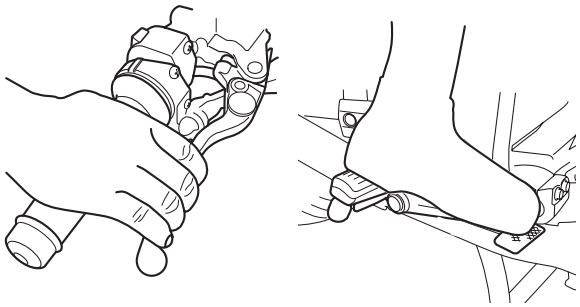

10. A reaction-force pulsating action is generated in the brake lever “1” 0.5 second after the brake lever and the brake pedal are operated simultaneously and continues for approximately 2 seconds.

NOTE:

- The reaction-force pulsating action consists of two series of quick pulses.
- Be sure to continue operating the brake lever and brake pedal even after the pulsating action has stopped.

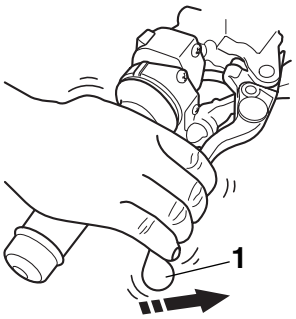

11. After the pulsating action has stopped in the brake lever, it is generated in the brake pedal “1” 0.5 second later and continues for approximately 2 seconds.

NOTE:

- The reaction-force pulsating action consists of two series of quick pulses.
- Be sure to continue operating the brake lever and brake pedal even after the pulsating action has stopped.

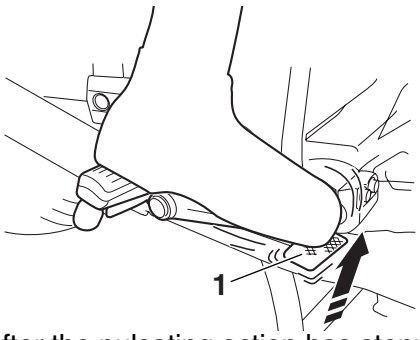

12. After the pulsating action has stopped in the brake pedal, it is generated in the brake lever 0.5 second later and continues for approximately 2 seconds.

NOTE:

The reaction-force pulsating action consists of two series of quick pulses.

EC3P61018

CAUTION:

- **Check that the pulsating action is felt in the brake lever, brake pedal, and again in the brake lever, in this order.**
- **If the pulsating action is felt in the brake pedal before it is felt in the brake lever, check that the brake hoses are connected correctly to the hydraulic unit.**
- **If the pulsating action is hardly felt in either the brake lever or brake pedal, check that the brake hoses are connected correctly to the hydraulic unit.**

13. Turn the main switch to “OFF”.
14. Remove the test coupler adapter from the ABS test coupler.
15. Turn the main switch to “ON”.
16. Set the engine stop switch to “◯”.

EAS22820

TRIAL RUN

After all checks and servicing are completed, always ensure the vehicle has no problems by performing a trial run at a speed of faster than 10 km/h.

EAS22850

HANDLEBARS

Removing the left handlebar

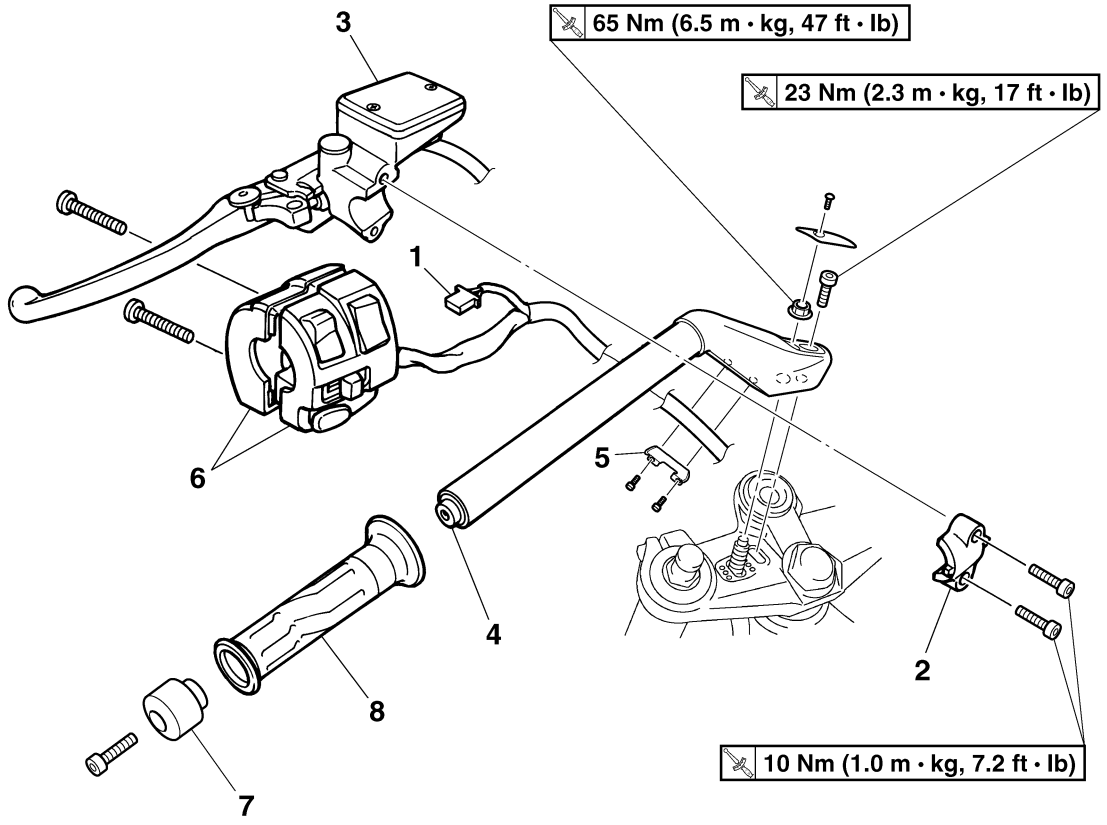

Order	Job/Parts to remove	Q'ty	Remarks
1	Clutch switch coupler	1	Disconnect.
2	Clutch master cylinder holder	1	
3	Clutch master cylinder assembly	1	
4	Left handlebar	1	
5	Lead holder	1	
6	Left handlebar switch	1	
7	Grip end	1	
8	Handlebar grip	1	
			For installation, reverse the removal procedure.

Removing the right handlebar

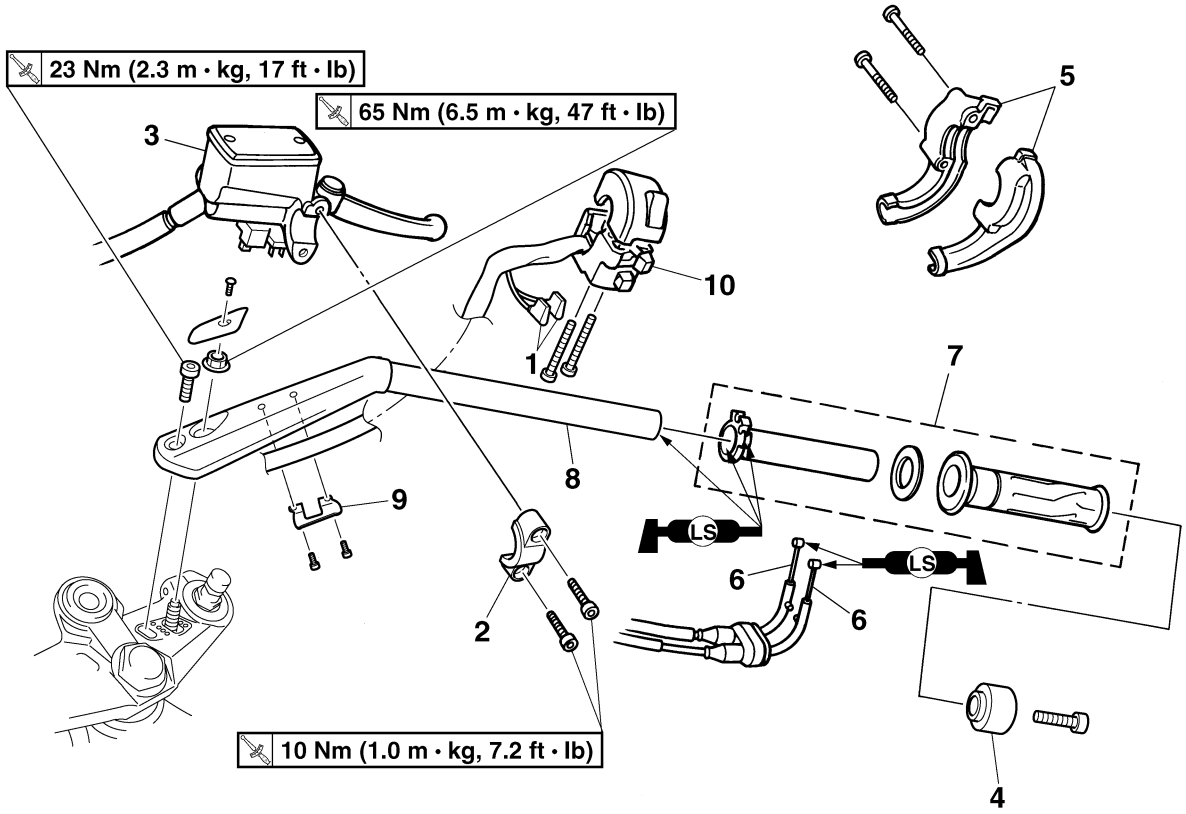

Order	Job/Parts to remove	Q'ty	Remarks
1	Front brake light switch connector	2	Disconnect.
2	Front brake master cylinder holder	1	
3	Front brake master cylinder assembly	1	
4	Grip end	1	
5	Throttle cable housing	2	
6	Throttle cable	2	Disconnect.
7	Throttle grip	1	
8	Right handlebar	1	
9	Lead holder	1	
10	Right handlebar switch	1	
			For installation, reverse the removal procedure.

EAS22870

REMOVING THE HANDLEBARS

1. Stand the vehicle on a level surface.

EWA13120

WARNING

Securely support the vehicle so that there is no danger of it falling over.

2. Remove:
   • Handlebar grip "1"

NOTE:

Blow compressed air between the handlebar and the handlebar grip, and gradually push the grip off the handlebar.

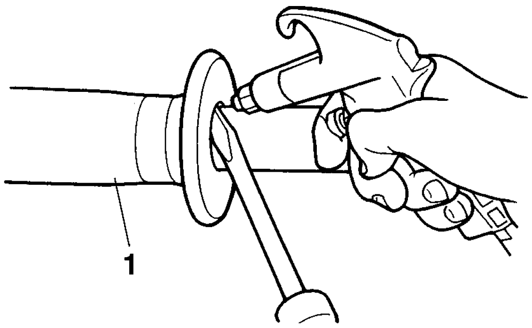

EAS22890

CHECKING THE HANDLEBARS

1. Check:
   • Left handlebar
   • Right handlebar
   Bends/cracks/damage → Replace.

EWA13690

WARNING

Do not attempt to straighten a bent handlebar as this may dangerously weaken it.

EAS22900

INSTALLING THE HANDLEBARS

1. Stand the vehicle on a level surface.

EWA13120

WARNING

Securely support the vehicle so that there is no danger of it falling over.

2. Install:
   • Handlebar grip
   • Grip end "1"

▼▼▼▼▼▼▼▼▼▼▼▼▼▼▼▼▼▼▼▼▼▼▼▼▼▼▼▼▼▼▼▼▼▼

a. Apply a thin coat of rubber adhesive onto the end of the left handlebar.
b. Slide the handlebar grip onto the left handlebar.
c. Wipe off any excess rubber adhesive with a clean rag.

EWA13700

WARNING

Do not touch the handlebar grip until the rubber adhesive has fully dried.

NOTE:

There should be 1–3 mm (0.04–0.12 in) of clearance "a" between the handlebar grip and the grip end.

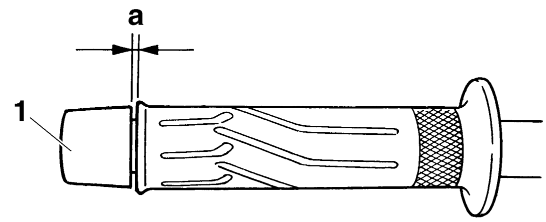

▲▲▲▲▲▲▲▲▲▲▲▲▲▲▲▲▲▲▲▲▲▲▲▲▲▲▲▲▲▲▲▲▲▲

3. Install:
   • Right handlebar switch "1"

NOTE:

Align the projection "a" on the right handlebar switch with the hole "b" on the right handlebar.

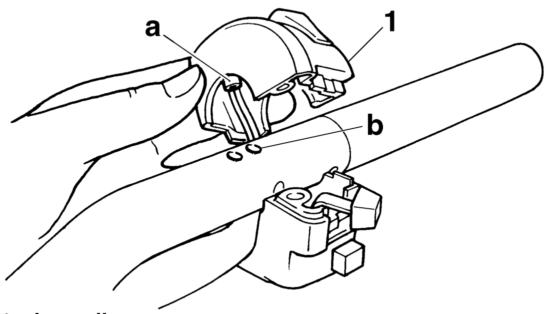

4. Install:
   • Left handlebar switch "1"

NOTE:

Align the projection "a" on the left handlebar switch with the hole "b" on the left handlebar.

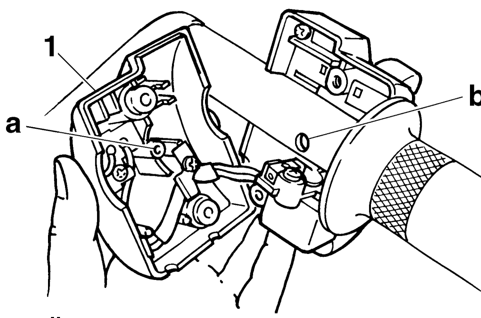

5. Install:
   • Right handlebar

- Left handlebar

NOTE:

Fit the projections on each handlebar into the holes in the upper bracket, making sure that the handlebars are installed in the same position.

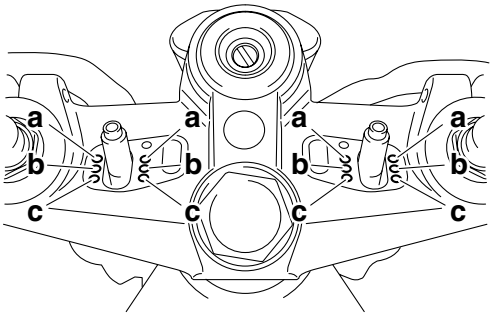

a. Front position
b. Standard position
c. Rear position

6. Install:
   - Handlebar bolts “1” (temporarily)
   - Handlebar nuts “2” (temporarily)

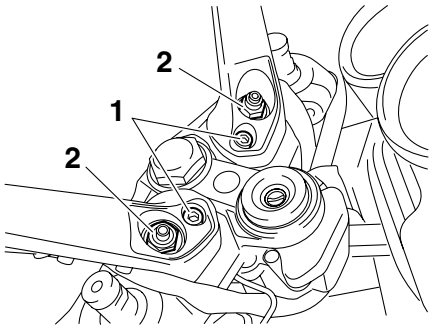

7. Tighten:
   - Handlebar bolts
   - Handlebar nuts

Handlebar bolt
23 Nm (2.3 m·kg, 17 ft·lb)
Handlebar nut
65 Nm (6.5 m·kg, 47 ft·lb)

NOTE:

First tighten the bolts, then tighten the nuts.

8. Install:
   - Throttle grip
   - Throttle cables
   - Throttle cable housing “1”
   - Grip end “2”

NOTE:

- Align the projection “a” on the throttle cable housing with the hole “b” in the right handlebar.
- There should be 1–3 mm (0.04–0.12 in) of clearance “c” between the throttle grip and the grip end.

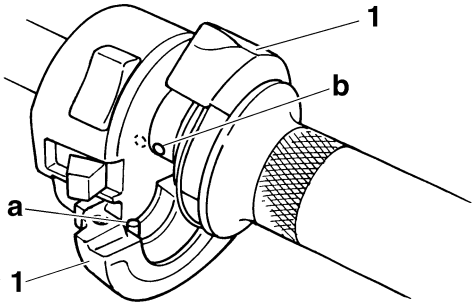

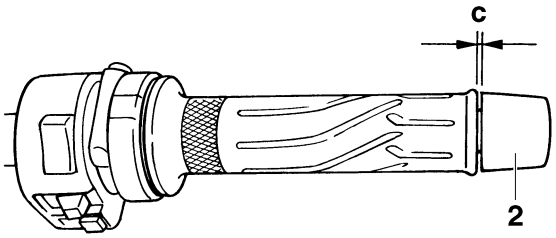

9. Install:
   - Front brake master cylinder assembly
   - Front brake master cylinder holder “1”

Front brake master cylinder holder bolt
10 Nm (1.0 m·kg, 7.2 ft·lb)

NOTE:

- Install the brake master cylinder holder with the “UP” mark facing up.
- Align the mating surfaces of the brake master cylinder holder with the punch mark “a” on the right handlebar.
- First, tighten the upper bolt, then the lower bolt.

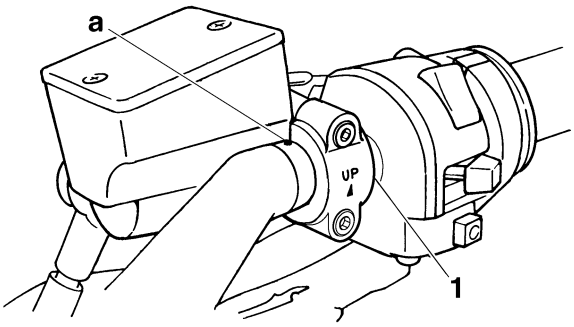

10. Install:
    - Clutch master cylinder assembly
    - Clutch master cylinder holder “1”

	Clutch master cylinder holder bolt **10 Nm (1.0 m·kg, 7.2 ft·lb)**

NOTE:

- Install the clutch master cylinder holder with the “UP” mark facing up
- Align the mating surfaces of the clutch master cylinder holder with the punch mark “a” on the left handlebar.
- First, tighten the upper bolt, then the lower bolt.

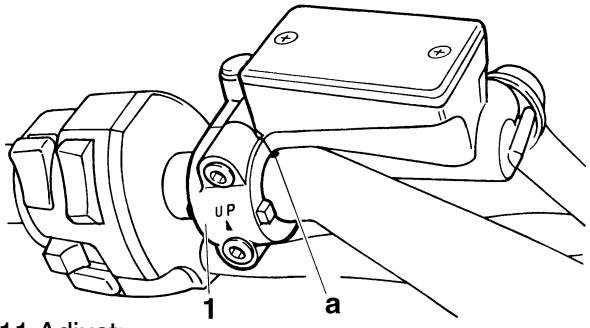

11. Adjust:
    - Throttle cable free play
      Refer to “ADJUSTING THE THROTTLE CABLE FREE PLAY” on page 3-8.

	Throttle cable free play **3.0–5.0 mm (0.12–0.20 in)**

EAS22950

FRONT FORK

Removing the front fork legs

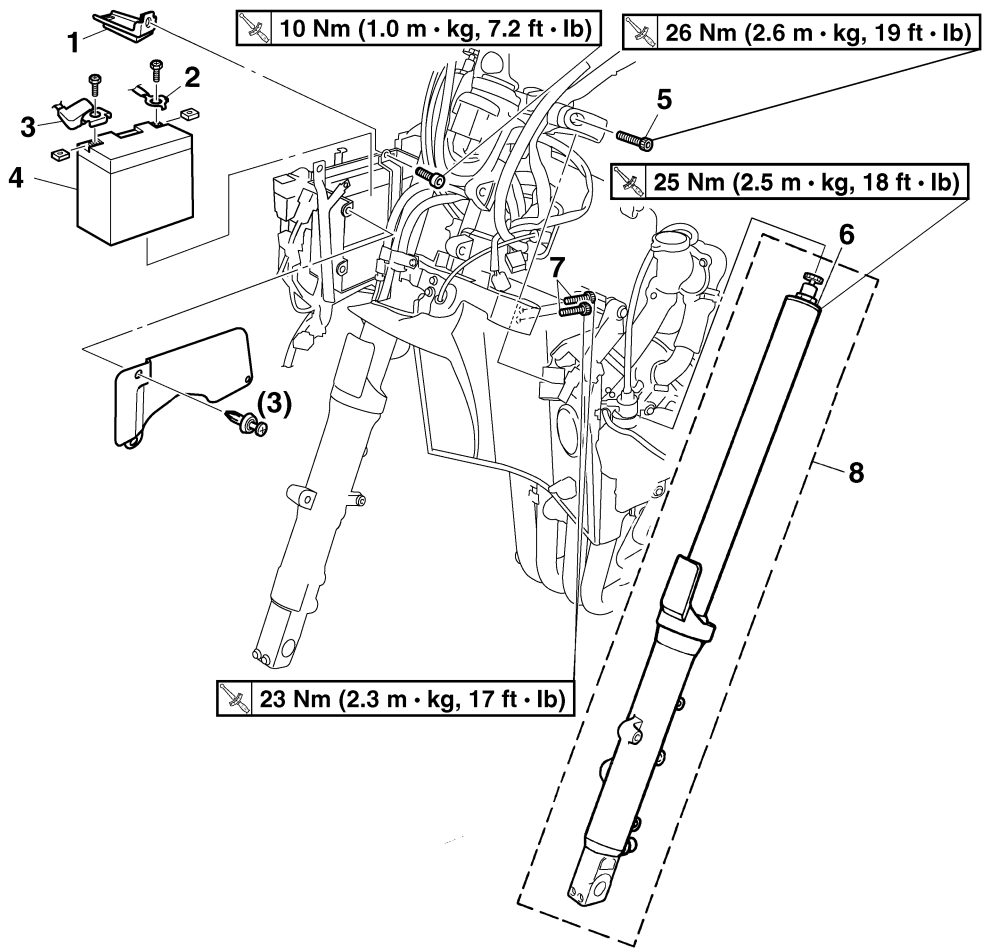

Order	Job/Parts to remove	Q'ty	Remarks
			The following procedure applies to both of the front fork legs.
	Front cowling assembly		Refer to "GENERAL CHASSIS" on page 4-1.
	Front wheel		Refer to "FRONT WHEEL" on page 4-13.
1	Battery holder	1	
2	Negative battery lead	1	Disconnect.
3	Positive battery lead	1	Disconnect.
4	Battery	1	
5	Upper bracket pinch bolt	1	Loosen.
6	Cap bolt	1	Loosen.
7	Lower bracket pinch bolt	2	Loosen.
8	Front fork leg	1	
			For installation, reverse the removal procedure.

Disassembling the front fork legs

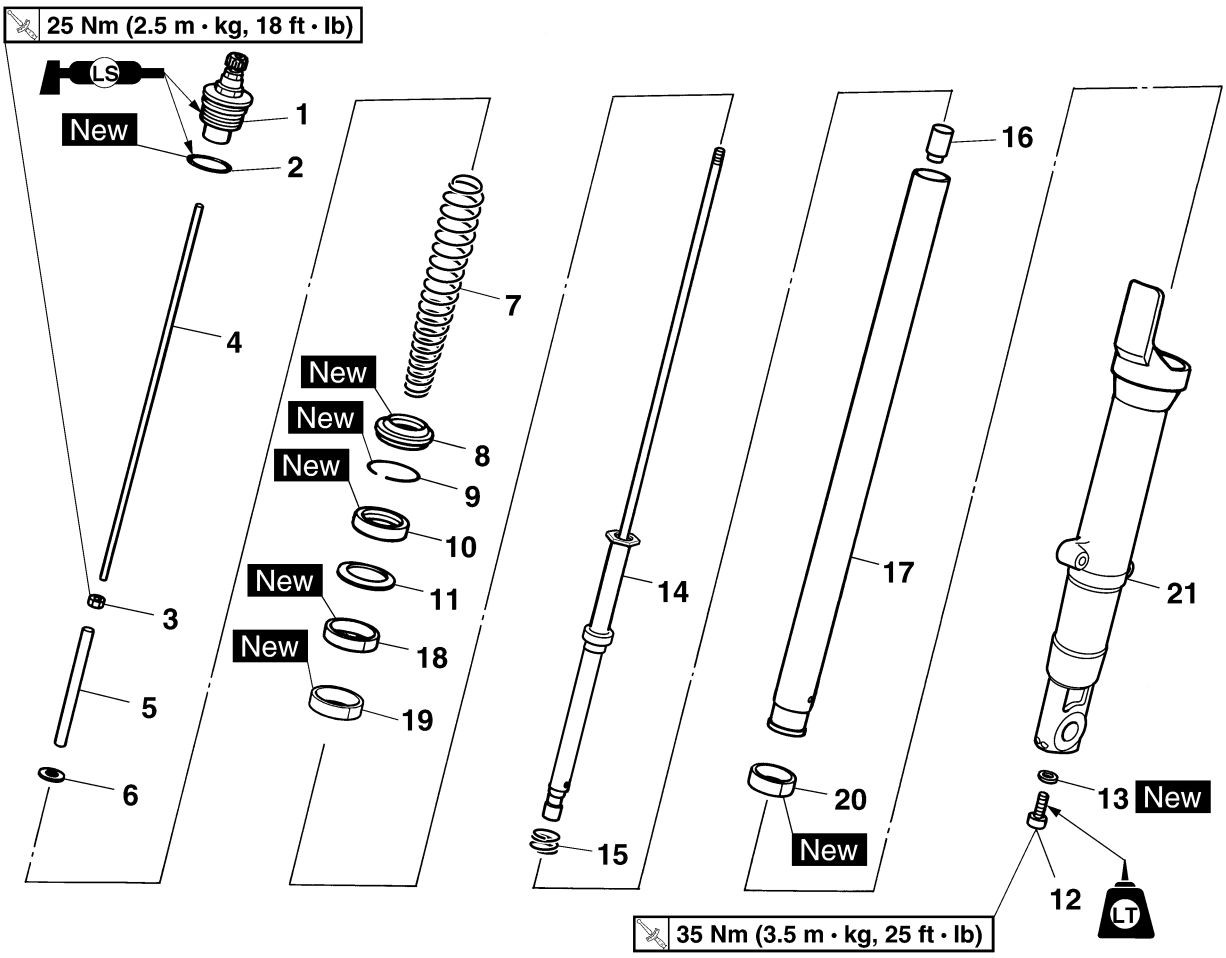

Order	Job/Parts to remove	Q'ty	Remarks
			The following procedure applies to both of the front fork legs.
1	Cap bolt	1	
2	O-ring	1	
3	Nut	1	
4	Damper adjusting rod	1	
5	Spacer	1	
6	Washer	1	
7	Fork spring	1	
8	Dust seal	1	
9	Oil seal clip	1	
10	Oil seal	1	
11	Washer	1	
12	Damper rod assembly bolt	1	
13	Copper washer	1	
14	Damper rod assembly	1	
15	Spring	1	
16	Oil flow stopper	1	

Disassembling the front fork legs

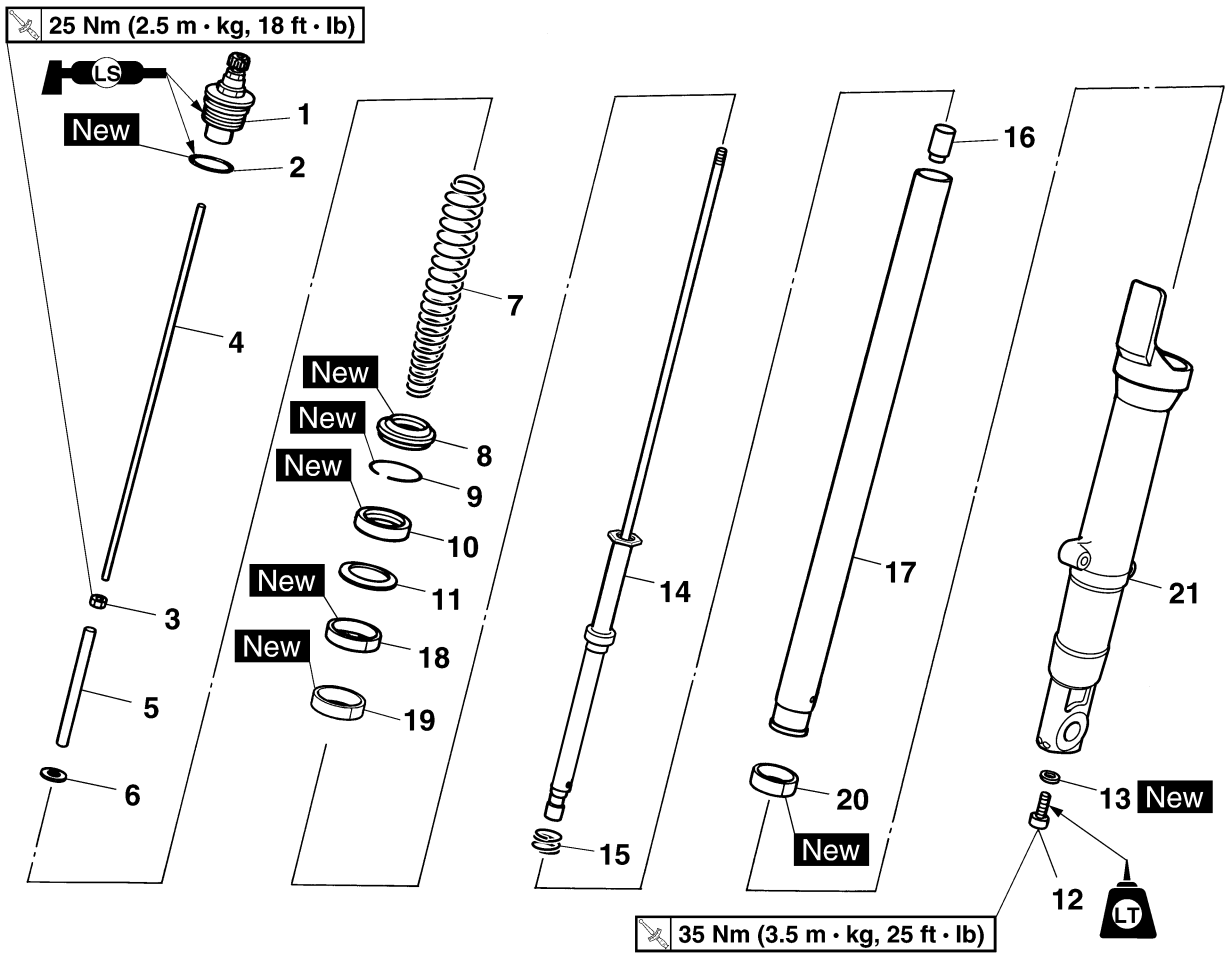

Order	Job/Parts to remove	Q'ty	Remarks
17	Inner tube	1	
18	Outer tube bushing 1	1	D = 52 mm (2.05 in), l = 12 mm (0.47 in)
19	Outer tube bushing 2	1	D = 51 mm (2.01 in), l = 15 mm (0.59 in)
20	Inner tube bushing	1	
21	Outer tube	1	
			For assembly, reverse the disassembly procedure.

EAS22960
REMOVING THE FRONT FORK LEGS
The following procedure applies to both of the front fork legs.
1. Stand the vehicle on a level surface.

EWA13120
WARNING
Securely support the vehicle so that there is no danger of it falling over.

NOTE:
Place the vehicle on a suitable stand so that the front wheel is elevated.

2. Loosen:
   - Upper bracket pinch bolt “1”
   - Cap bolt “2”
   - Lower bracket pinch bolts “3”

EWA13640
WARNING
Before loosening the upper and lower bracket pinch bolts, support the front fork leg.

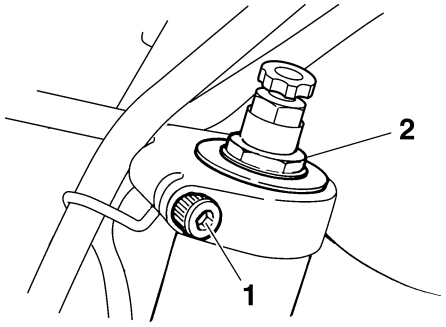

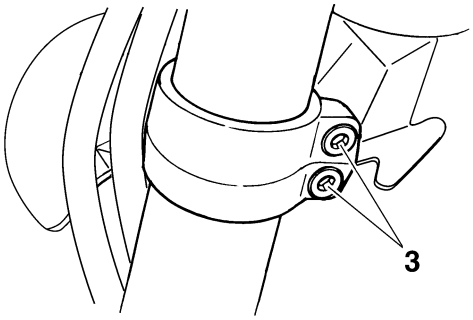

EAS22980
DISASSEMBLING THE FRONT FORK LEGS
The following procedure applies to both of the front fork legs.

1. Hold the nut “1” and loosen the cap bolt “2”.

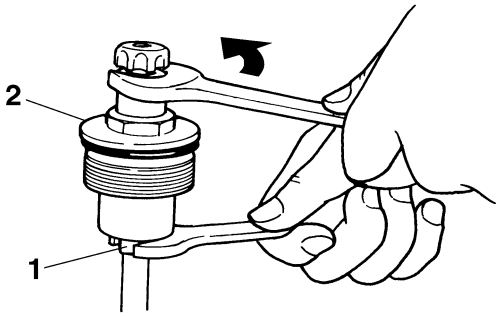

2. Drain:
   - Fork oil

NOTE:
Stroke the inner tube several times while draining the fork oil.

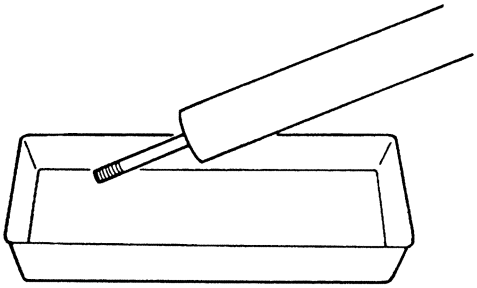

3. Remove:
   - Dust seal “1”
   - Oil seal clip “2”
     (with a flat-head screwdriver)

ECA14180
CAUTION:
Do not scratch the inner tube.

NOTE:
- Do not remove the fork leg protector from the outer tube.
- If the front fork leg protector must be removed, always install a new one.

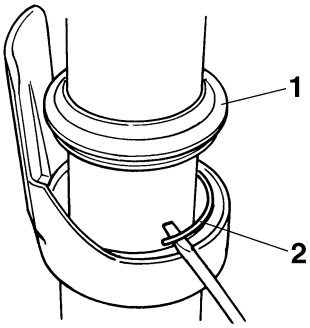

4. Remove:
   - Oil seal
   - Washer

▼▼▼▼▼▼▼▼▼▼▼▼▼▼▼▼▼▼▼▼▼▼▼▼▼▼▼▼▼▼▼▼▼▼

a. Pull up the inner tube completely, fill it with oil up to the top, and then install the cap bolt.

NOTE:

Do not install the fork spring.

b. Place the front fork leg in a press and gradually apply pressure to remove the oil seal.

EC3P61026

CAUTION:

- **Be careful not to damage the top of the cap bolt.**
- **Place an oil drain pan under the press before applying pressure to the front fork leg.**
- **Stop applying pressure when oil begins to leak from between the oil seal and the outer tube.**

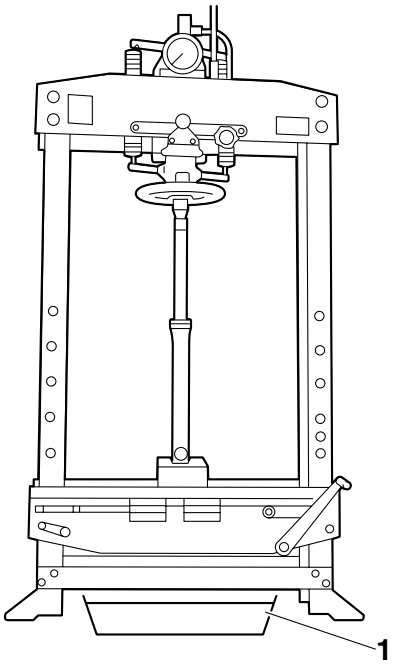

1. Oil drain pan

▲▲▲▲▲▲▲▲▲▲▲▲▲▲▲▲▲▲▲▲▲▲▲▲▲▲▲▲▲▲▲▲▲▲

5. Remove:
   - Damper rod assembly bolt
   - Copper washer

NOTE:

While holding the damper rod assembly with the damper rod holder “1”, loosen the damper rod assembly bolt.

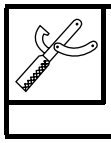

Damper rod holder
90890-01447
YM-01447

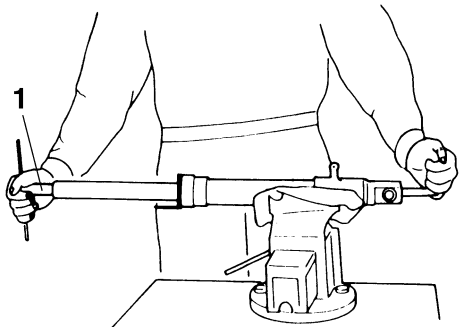

6. Remove:
   - Inner tube

▼▼▼▼▼▼▼▼▼▼▼▼▼▼▼▼▼▼▼▼▼▼▼▼▼▼▼▼▼▼▼▼▼▼

a. Hold the front fork leg horizontally.
b. Securely clamp the brake caliper bracket in a vise with soft jaws.
c. Separate the inner tube from the outer tube by pulling the inner tube forcefully but carefully.

EC3P61027

CAUTION:

- **Excessive force will damage the bushings. Damaged bushings must be replaced.**
- **Avoid bottoming the inner tube into the outer tube during the above procedure, as the oil flow stopper will be damaged.**

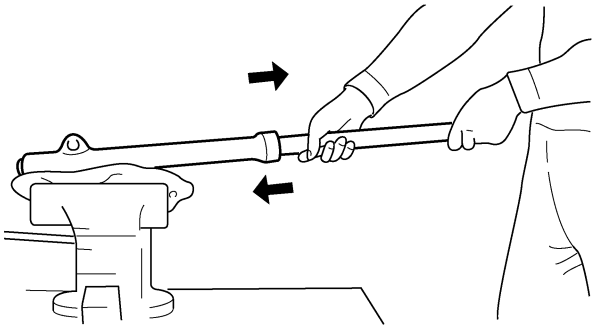

▲▲▲▲▲▲▲▲▲▲▲▲▲▲▲▲▲▲▲▲▲▲▲▲▲▲▲▲▲▲▲▲▲▲

EAS23010

CHECKING THE FRONT FORK LEGS

The following procedure applies to both of the front fork legs.

1. Check:
   - Inner tube
   - Outer tube
     Bends/damage/scratches → Replace.

EWA13650

WARNING

Do not attempt to straighten a bent inner tube as this may dangerously weaken it.

2. Measure:
   - Spring free length “a”
     Out of specification → Replace.

Fork spring free length
262.0 mm (10.31 in)
Limit
257.0 mm (10.12 in)

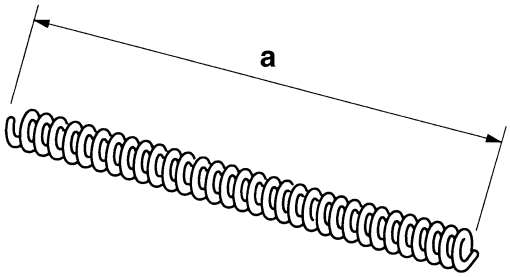

3. Check:
   - Damper rod assembly
     Damage/wear → Replace.
     Obstruction → Blow out all of the oil passages with compressed air.
   - Oil flow stopper
     Damage → Replace.

ECA14200

CAUTION:

- **The front fork leg has a built-in damper adjusting rod and a very sophisticated internal construction, which are particularly sensitive to foreign material.**
- **When disassembling and assembling the front fork leg, do not allow any foreign material to enter the front fork.**

4. Check:
   - Cap bolt O-ring
     Damage/wear → Replace.

EAS23030

ASSEMBLING THE FRONT FORK LEGS

The following procedure applies to both of the front fork legs.

EWA13660

WARNING

- **Make sure the oil levels in both front fork legs are equal.**
- **Uneven oil levels can result in poor handling and a loss of stability.**

NOTE:

- When assembling the front fork leg, be sure to replace the following parts:
  - Inner tube bushing
  - Outer tube bushing 1
  - Outer tube bushing 2
  - Oil seal
  - Dust seal
- Before assembling the front fork leg, make sure all of the components are clean.

1. Install:
   - Inner tube bushing “1” New
   - Oil flow stopper “2”
   - Spring
   - Damper rod assembly “3”

EC3P61028

CAUTION:

Allow the damper rod assembly to slide slowly down the inner tube “4” until it protrudes from the bottom of the inner tube. Be careful not to damage the inner tube.

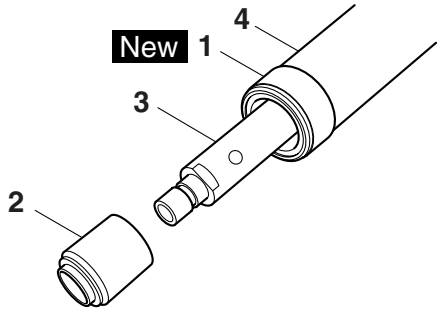

2. Lubricate:
   - Inner tube’s outer surface

Recommended oil
Suspension oil M1 or ohlins R & T43

3. Tighten:
   - Damper rod assembly bolt

Damper rod assembly bolt
35 Nm (3.5 m·kg, 25 ft·lb)
LOCTITE®

NOTE:

While holding the damper rod assembly with the damper rod holder “1”, tighten the damper rod assembly bolt.

Damper rod holder
90890-01447
YM-01447

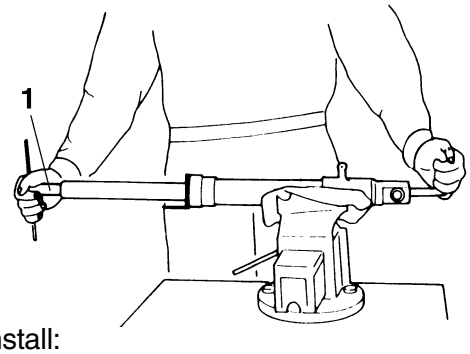

4. Install:
   - Outer tube bushing 2 (D = 51 mm (2.01 in), l = 15 mm (0.59 in)) “1” New
     (with the slide metal installer “2” and fork seal driver “3”)

	Slide metal installer **90890-01508** **Fork seal driver** **90890-01502** **YM-A0948**

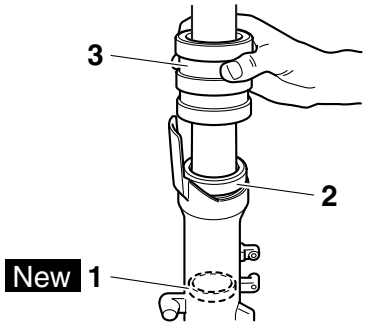

5. Install:
   - Outer tube bushing 1 (D = 52 mm (2.05 in), l = 12 mm (0.47 in)) “1” New
   - Washer “2”
     (with the fork seal driver “3”)

	Fork seal driver **90890-01502** **YM-A0948**

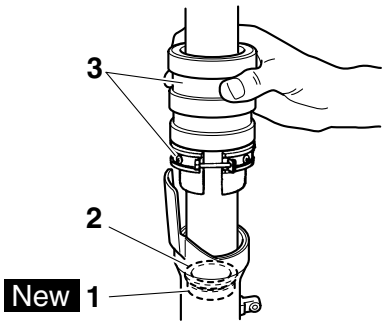

6. Install:
   - Oil seal “1” New
     (with the fork seal driver “2”)

	Fork seal driver **90890-01502** **YM-A0948**

ECA14220

CAUTION:

Make sure the numbered side of the oil seal faces up.

NOTE:

- Before installing the oil seal, lubricate its lips with lithium-soap-based grease.
- Lubricate the outer surface of the inner tube with fork oil.
- Before installing the oil seal, cover the top of the front fork leg with a plastic bag to protect the oil seal during installation.

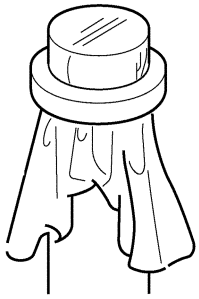

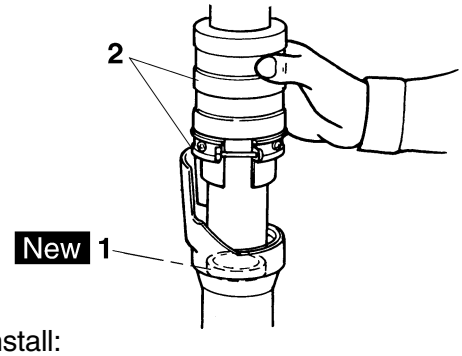

7. Install:
   - Oil seal clip “1” New

NOTE:

Adjust the oil seal clip so that it fits into the outer tube’s groove.

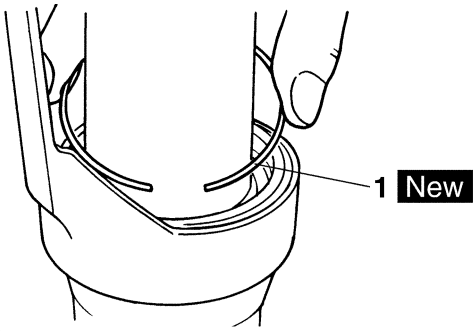

8. Install:
   - Dust seal "1" New
     (with the fork seal driver "2")

Fork seal driver
90890-01502
YM-A0948

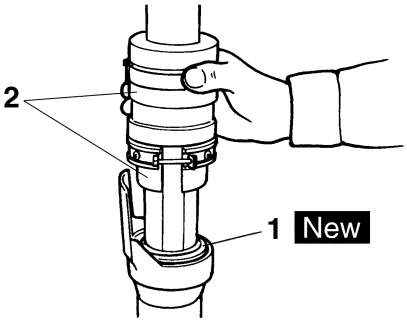

9. Fill:
   - Front fork leg
     (with the specified amount of the recommended fork oil)

Recommended oil
Suspension oil M1 or ohlins R & T43
Quantity
696.0 cm³ (23.53 US oz) (24.55 Imp.oz)

ECA14230

CAUTION:

- **Be sure to use the recommended fork oil. Other oils may have an adverse effect on front fork performance.**
- **When disassembling and assembling the front fork leg, do not allow any foreign material to enter the front fork.**

10. After filling the front fork leg, slowly stroke the damper rod assembly "1" up and down (at least ten times) to distribute the fork oil.

NOTE:

Be sure to stroke the damper rod assembly slowly because the fork oil may spurt out.

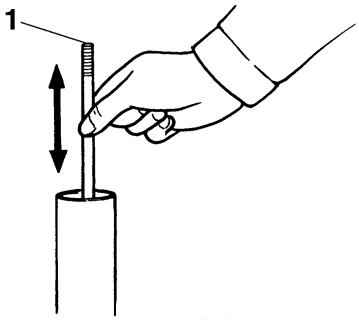

11. Slowly stroke the inner tube "1" up and down.

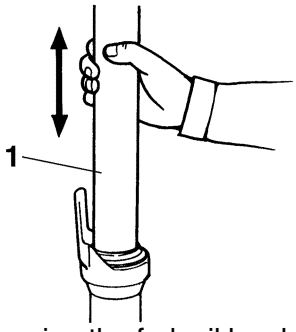

12. Before measuring the fork oil level, wait ten minutes until the oil has settled and the air bubbles have dispersed.

NOTE:

Be sure to bleed the front fork leg of any residual air.

13. Measure:
   - Front fork leg oil level "a"
     (from the top of the inner tube, with the outer tube fully compressed and without the fork spring)
     Out of specification → Correct.

Level
92.0 mm (3.62 in)

NOTE:

- While filling the front fork leg, keep it upright.
- After filling, slowly pump the front fork leg up and down to distribute the fork oil.

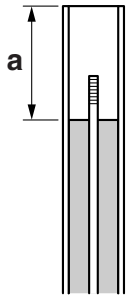

14. Install:
   - Fork spring

NOTE:

Install the fork spring so that the end “A” shown in the illustration is facing up.

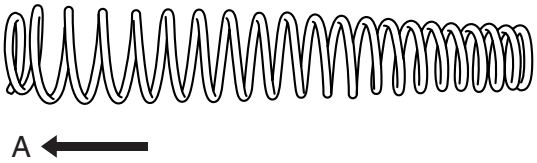

15. Install:
- Nut “1”
- Damper adjusting rod “2”
- Cap bolt “3”

▼▼▼▼▼▼▼▼▼▼▼▼▼▼▼▼▼▼▼▼▼▼▼▼▼▼▼▼▼▼▼▼▼▼

a. Install the nut “1” and finger tighten it.
b. Install the damper adjusting rod “2”.
c. Install the cap bolt “3” and finger tighten it.

EWA13670

WARNING

Always use a new cap bolt O-ring.

d. Hold the cap bolt and tighten the nut “1” to specification.

	Nut **25 Nm (2.5 m·kg, 18 ft·lb)**

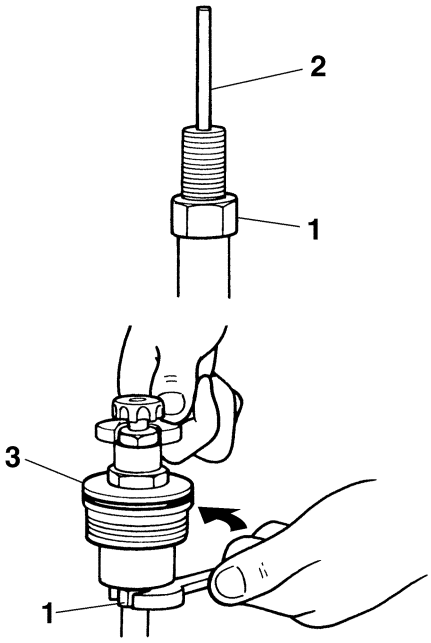

▲▲▲▲▲▲▲▲▲▲▲▲▲▲▲▲▲▲▲▲▲▲▲▲▲▲▲▲▲▲▲▲▲▲

16. Install:
- Cap bolt
  (to the outer tube)

NOTE:

Temporarily tighten the cap bolt.

EAS23050

INSTALLING THE FRONT FORK LEGS

The following procedure applies to both of the front fork legs.

1. Install:
- Front fork leg
  Temporarily tighten the upper and lower bracket pinch bolts.

NOTE:

Make sure the inner tube is flush with the top of the upper bracket.

2. Tighten:
- Lower bracket pinch bolts “1”

	Lower bracket pinch bolt **23 Nm (2.3 m·kg, 17 ft·lb)**

- Cap bolt “2”

	Cap bolt **25 Nm (2.5 m·kg, 18 ft·lb)**

- Upper bracket pinch bolt “3”

	Upper bracket pinch bolt **26 Nm (2.6 m·kg, 19 ft·lb)**

EWA13680

WARNING

Make sure the brake hoses are routed properly.

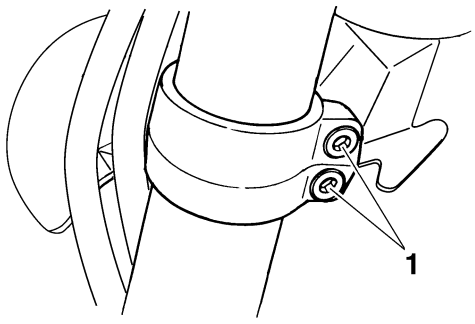

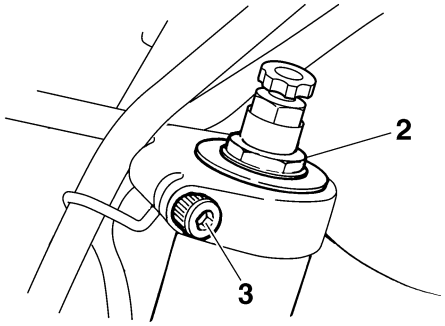

3. Adjust:
   - Spring preload
   - Rebound damping
   - Compression damping
     Refer to “ADJUSTING THE FRONT FORK LEGS” on page 3-28.

EAS23090

STEERING HEAD

Removing the lower bracket

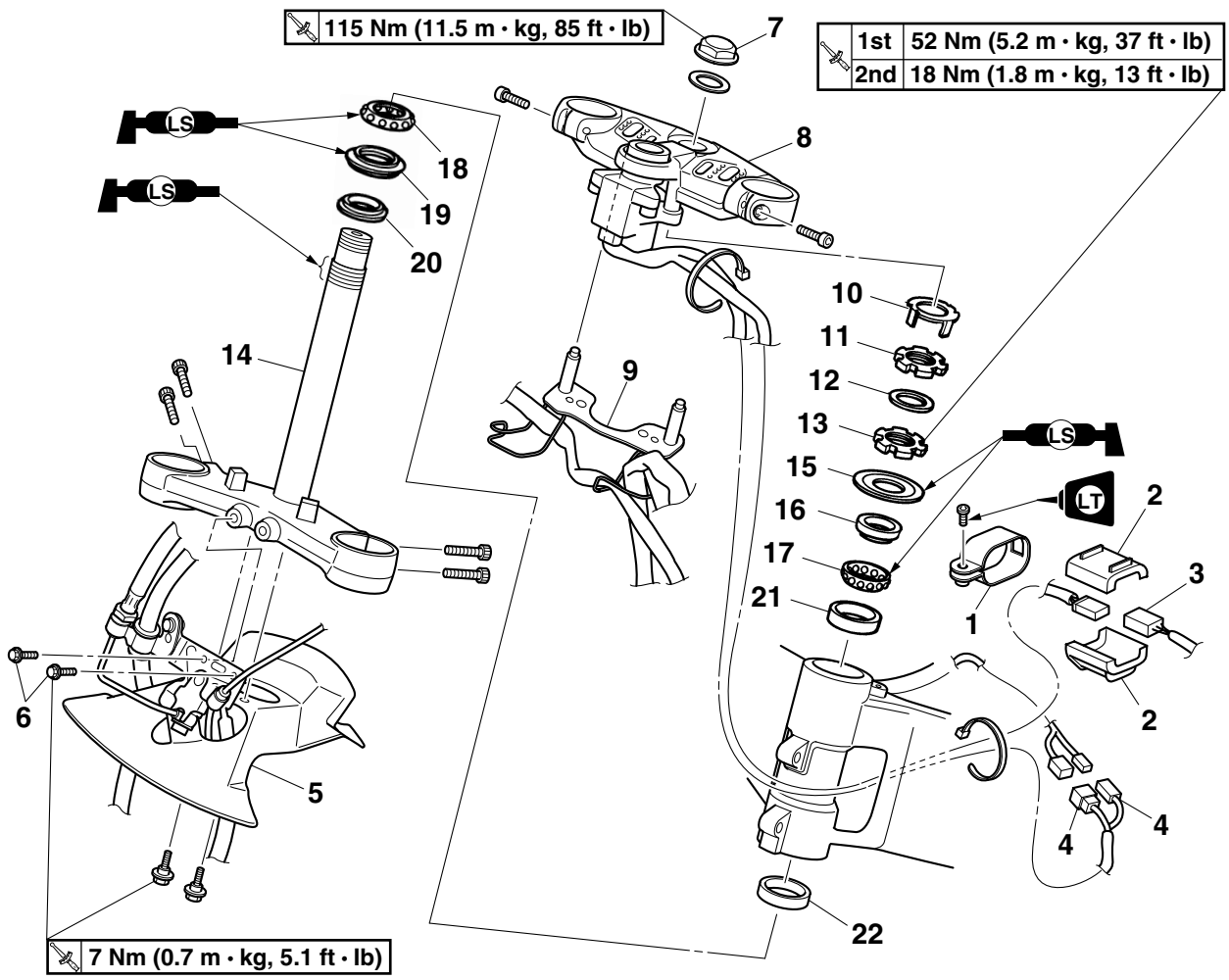

Order	Job/Parts to remove	Q'ty	Remarks
	Rider seat/T-bar		Refer to "GENERAL CHASSIS" on page 4-1.
	Fuel tank		Refer to "FUEL TANK" on page 7-1.
	Handlebars		Refer to "HANDLEBARS" on page 4-60.
	Front fork legs		Refer to "FRONT FORK" on page 4-65.
1	Immobilizer unit coupler cover holder	1	
2	Immobilizer unit coupler cover	2	
3	Immobilizer unit coupler	1	Disconnect.
4	Main switch coupler	2	Disconnect.
5	Lower bracket cover	1	
6	Brake hose joint bracket bolt	2	
7	Steering stem nut	1	
8	Upper bracket	1	
9	Handlebar bracket	1	
10	Lock washer	1	
11	Upper ring nut	1	

Removing the lower bracket

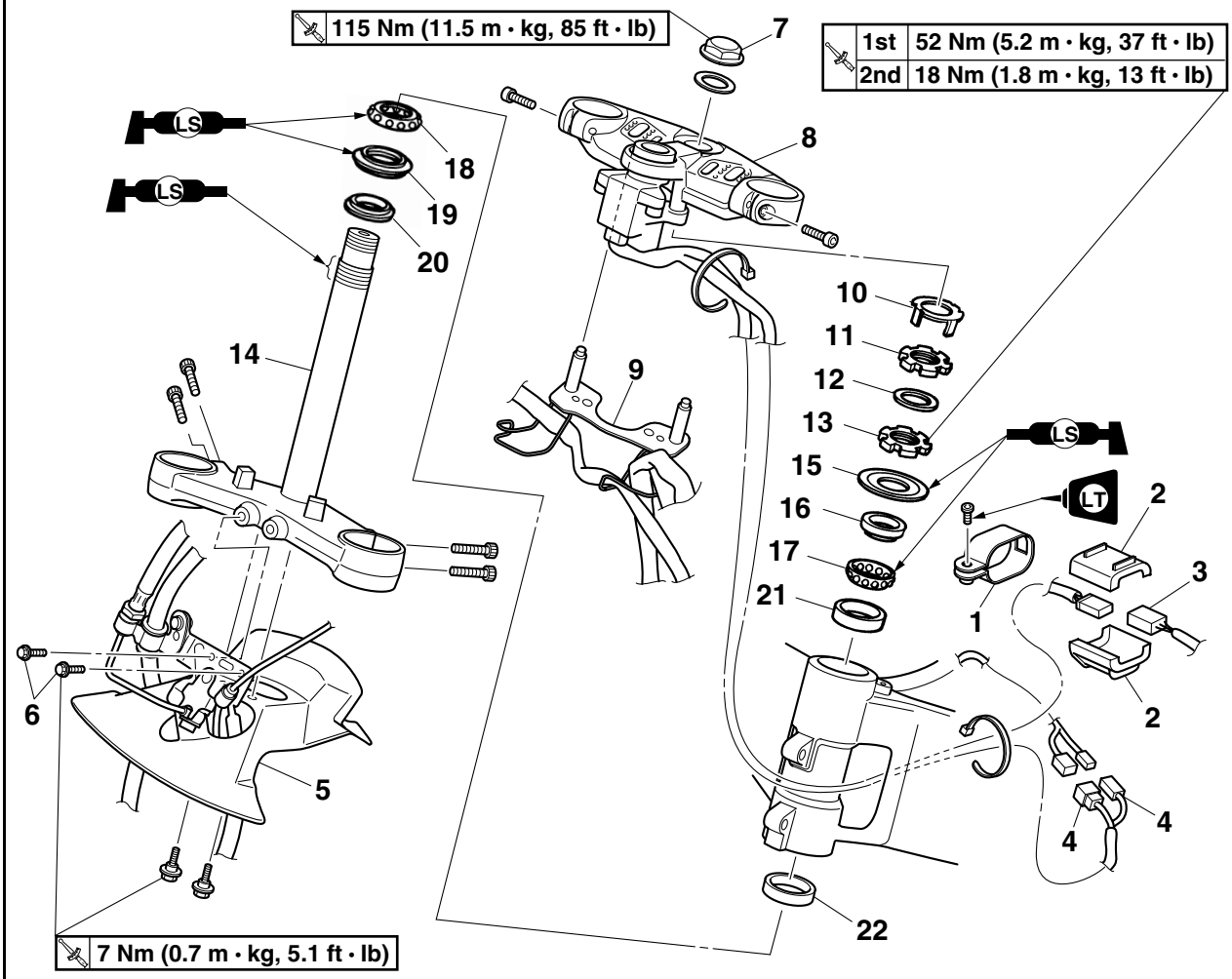

Order	Job/Parts to remove	Q'ty	Remarks
12	Rubber washer	1	
13	Lower ring nut	1	
14	Lower bracket	1	
15	Upper bearing cover	1	
16	Upper bearing inner race	1	
17	Upper bearing	1	
18	Lower bearing	1	
19	Dust seal	1	
20	Lower bearing inner race	1	
21	Upper bearing outer race	1	
22	Lower bearing outer race	1	
			For installation, reverse the removal procedure.

EAS23110
REMOVING THE LOWER BRACKET
1. Stand the vehicle on a level surface.

EWA13120
WARNING

Securely support the vehicle so that there is no danger of it falling over.

2. Remove:
   - Upper ring nut
   - Rubber washer
   - Lower ring nut “1”
   - Lower bracket

EWA13730
WARNING

Securely support the lower bracket so that there is no danger of it falling.

NOTE:

Remove the lower ring nut with the steering nut wrench “2”.

Steering nut wrench
90890-01403
Spanner wrench
YU-33975

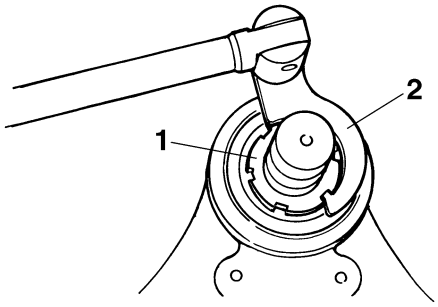

EAS23120
CHECKING THE STEERING HEAD
1. Wash:
   - Bearings
   - Bearing races

Recommended cleaning solvent
Kerosene

2. Check:
   - Bearings
   - Bearing races
     Damage/pitting → Replace.
3. Replace:
   - Bearings
   - Bearing races

▼▼▼▼▼▼▼▼▼▼▼▼▼▼▼▼▼▼▼▼▼▼▼▼▼▼▼▼▼▼▼▼▼▼

a. Remove the bearing races from the steering head pipe “1” with a long rod “2” and hammer.
b. Remove the bearing race from the lower bracket “3” with a floor chisel “4” and hammer.
c. Install new bearing races.

ECA14270
CAUTION:

If the bearing race is not installed properly, the steering head pipe could be damaged.

NOTE:

Always replace the bearings and bearing races as a set.

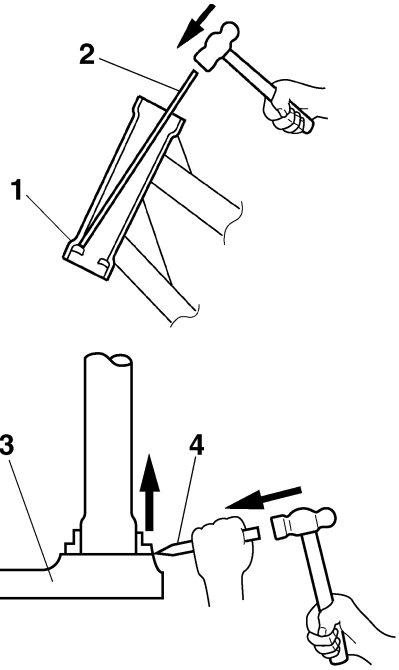

▲▲▲▲▲▲▲▲▲▲▲▲▲▲▲▲▲▲▲▲▲▲▲▲▲▲▲▲▲▲▲▲▲▲

4. Check:
   - Upper bracket
   - Lower bracket
     (along with the steering stem)
     Bends/cracks/damage → Replace.

EAS23140
INSTALLING THE STEERING HEAD
1. Lubricate:
   - Upper bearing
   - Lower bearing
   - Bearing races

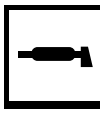

Recommended lubricant
Lithium-soap-based grease

2. Install:
   - Lower ring nut “1”
   - Rubber washer “2”
   - Upper ring nut “3”

- Lock washer “4”
  Refer to “CHECKING AND ADJUSTING THE STEERING HEAD” on page 3-26.

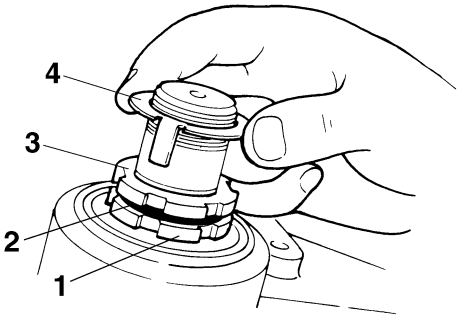

3. Install:
   - Upper bracket
   - Steering stem nut

NOTE:

Temporarily tighten the steering stem nut.

4. Install:
   - Front fork legs
     Refer to “FRONT FORK” on page 4-65.

NOTE:

Temporarily tighten the upper and lower bracket pinch bolts.

5. Tighten:
   - Steering stem nut

	Steering stem nut **115 Nm (11.5 m·kg, 85 ft·lb)**

EAS23160

REAR SHOCK ABSORBER ASSEMBLY

Removing the rear shock absorber assembly

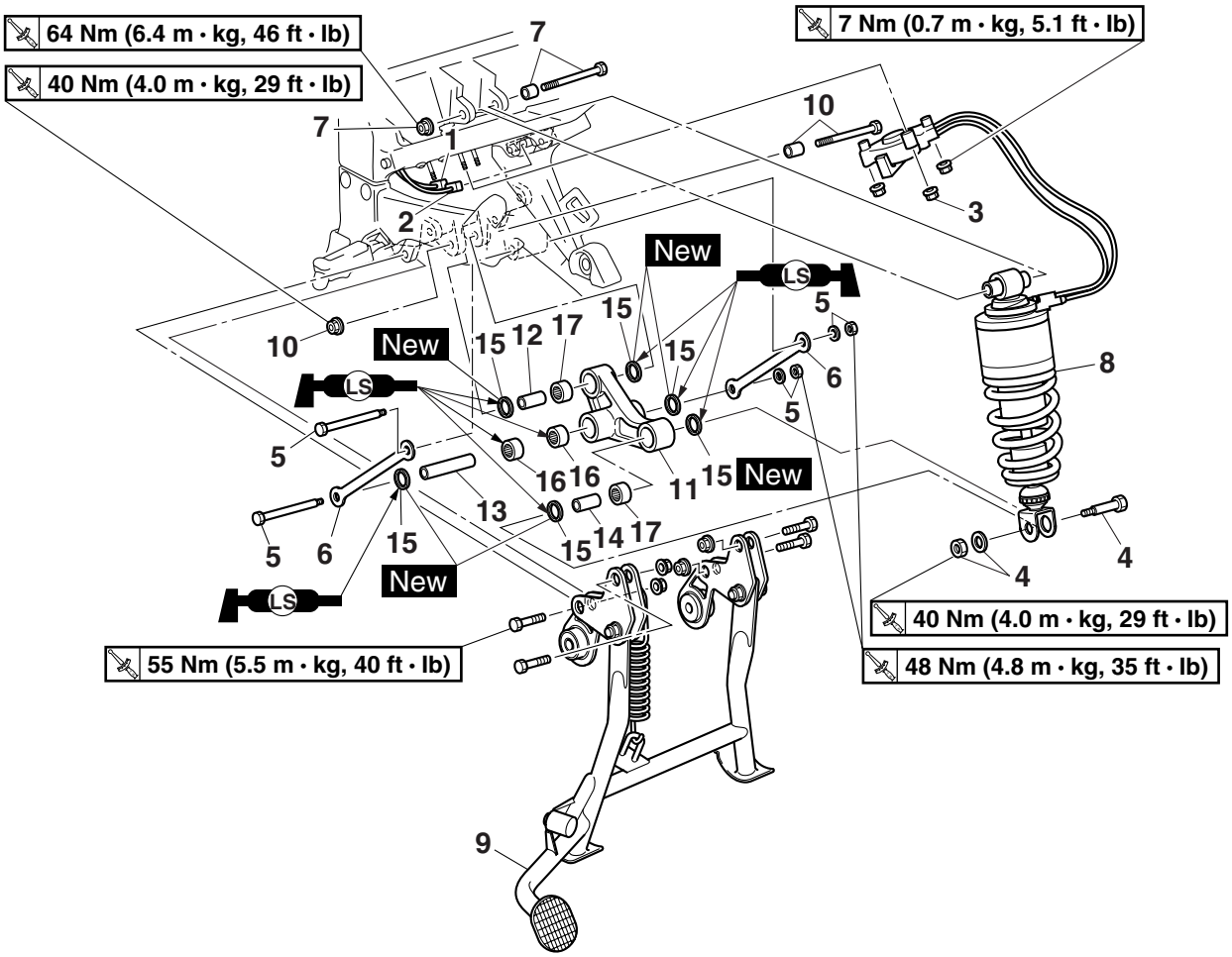

Order	Job/Parts to remove	Q'ty	Remarks
	Air filter case		Refer to "GENERAL CHASSIS" on page 4-1.
	Rear wheel		Refer to "REAR WHEEL" on page 4-20.
	Mufflers/Exhaust pipe assembly		Refer to "ENGINE REMOVAL" on page 5-1.
1	Rectifier/regulator coupler	1	Disconnect.
2	Stator coil coupler	1	Disconnect.
3	Rear shock absorber spring preload adjusting lever nut	3	
4	Rear shock absorber assembly lower nut/Washer/Bolt	1/1/1	
5	Connecting arm nut/Washer/Bolt	2/2/2	
6	Connecting arm	2	
7	Rear shock absorber assembly upper nut/Bolt/Spacer	1/1/1	
8	Rear shock absorber assembly	1	
9	Centerstand	1	
10	Relay arm nut/Bolt/Spacer	1/1/1	

Removing the rear shock absorber assembly

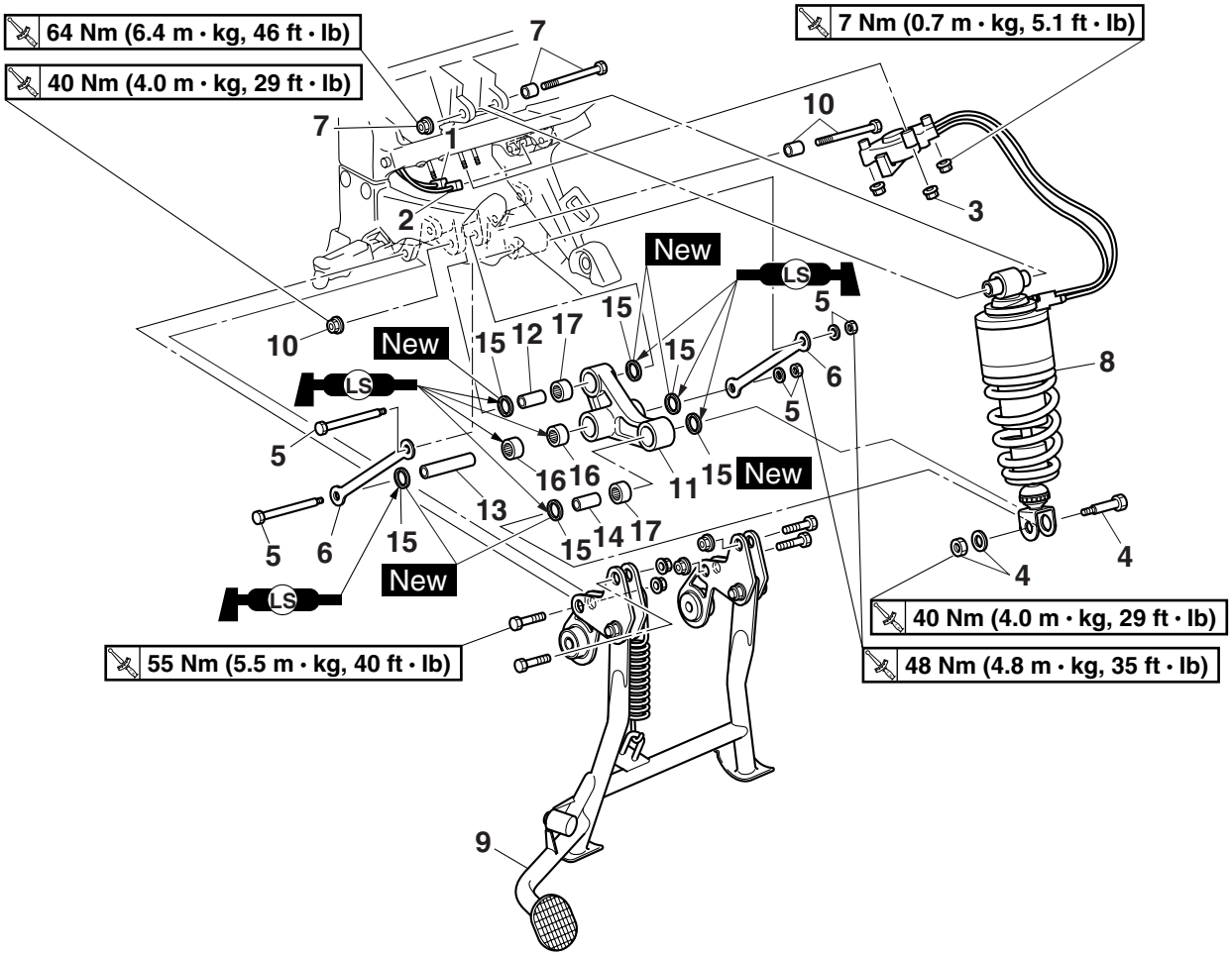

Order	Job/Parts to remove	Q'ty	Remarks
11	Relay arm	1	
12	Spacer	1	
13	Spacer	1	
14	Spacer	1	
15	Oil seal	6	
16	Bearing	2	
17	Bearing	2	
			For installation, reverse the removal procedure.

EAS23180
HANDLING THE REAR SHOCK ABSORBER

EWA13740
WARNING

This rear shock absorber contains highly compressed nitrogen gas. Before handling the rear shock absorber, read and make sure you understand the following information. The manufacturer cannot be held responsible for property damage or personal injury that may result from improper handling of the rear shock absorber.
- **Do not tamper or attempt to open the rear shock absorber.**
- **Do not subject the rear shock absorber to an open flame or any other source of high heat. High heat can cause an explosion due to excessive gas pressure.**
- **Do not deform or damage the rear shock absorber in any way. Rear shock absorber damage will result in poor damping performance.**

EAS23190
DISPOSING OF A REAR SHOCK ABSORBER

1. Gas pressure must be released before disposing of a rear shock absorber. To release the gas pressure, drill a 2–3 mm (0.08–0.12 in) hole through the rear shock absorber at a point 15–20 mm (0.59–0.79 in) from its end as shown.

EWA13760
WARNING

Wear eye protection to prevent eye damage from released gas or metal chips.

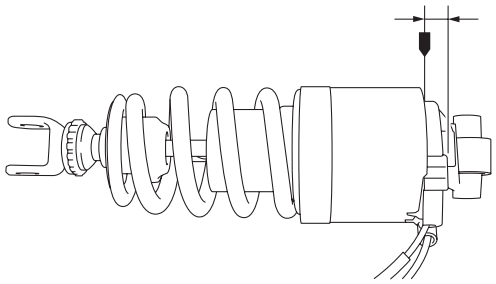

EAS23230
REMOVING THE REAR SHOCK ABSORBER ASSEMBLY

1. Stand the vehicle on a level surface.

EWA13120
WARNING

Securely support the vehicle so that there is no danger of it falling over.

NOTE:

Place the vehicle on a suitable stand so that the rear wheel is elevated.

2. Remove:
   - Rear shock absorber assembly lower bolt “1”
   - Connecting arms

NOTE:

While removing the connecting arm bolts, hold the swingarm so that it does not drop down.

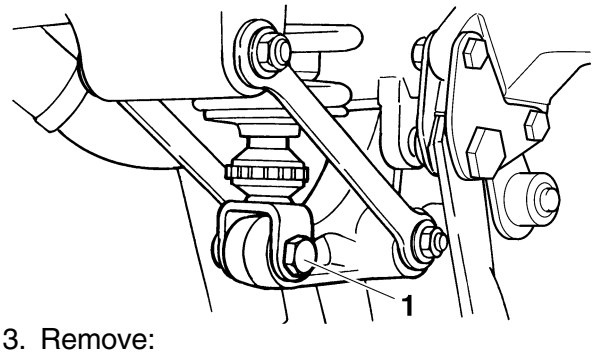

3. Remove:
   - Rear shock absorber assembly upper bolt “1”
   - Spacer “2”
   - Rear shock absorber assembly

NOTE:

- Partially pull out the rear shock absorber assembly upper bolt, slide the spacer “1” towards the bolt head to create some clearance between the bolt and the frame, and then remove the bolt completely.
- Raise the swingarm and then remove the rear shock absorber assembly from between the swingarm and relay arm.

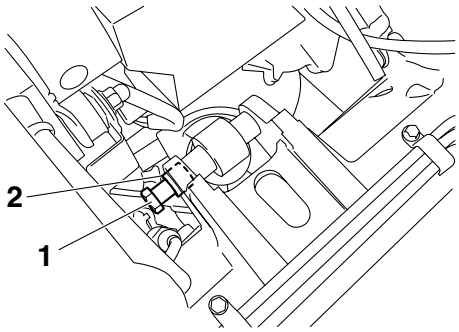

EAS23240
CHECKING THE REAR SHOCK ABSORBER ASSEMBLY

1. Check:
   - Rear shock absorber rod
     Bends/damage → Replace the rear shock absorber assembly.

- Rear shock absorber
  Gas leaks/oil leaks → Replace the rear shock absorber assembly.
- Spring
  Damage/wear → Replace the rear shock absorber assembly.
- Bushing
  Damage/wear → Replace the rear shock absorber assembly.
- Spacer
  Damage/scratches → Replace.
- Bolts
  Bends/damage/wear → Replace.

EAS23260
CHECKING THE CONNECTING ARM AND RELAY ARM

1. Check:
   - Connecting arms
   - Relay arm
     Damage/wear → Replace.
2. Check:
   - Bearings
   - Oil seals
     Damage/pitting → Replace.
3. Check:
   - Spacers
     Damage/scratches → Replace.

EAS23270
INSTALLING THE RELAY ARM

1. Lubricate:
   - Spacer
   - Bearings

	Recommended lubricant **Lithium-soap-based grease**

2. Install:
   - Bearing “1”, “2”
     (to the relay arm)

	Installed depth “a” **4.5 mm (0.18 in)** **Installed depth “b”** **3.5–4.5 mm (0.14–0.18 in)** **Installed depth “c”** **4.0 mm (0.16 in)**

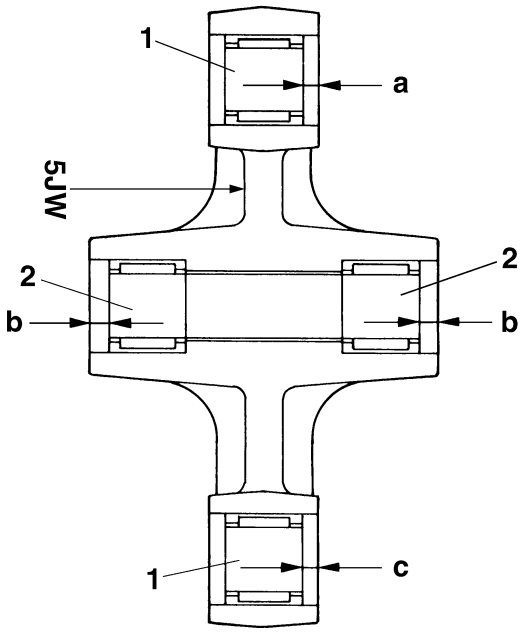

3. Install:
   - Relay arm

NOTE:

Make sure that the embossed mark “5JW” on the relay arm faces to the left.

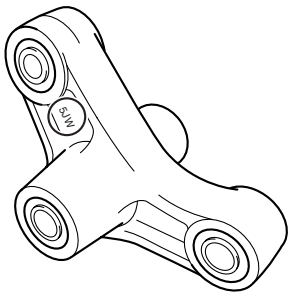

EAS23310
INSTALLING THE REAR SHOCK ABSORBER ASSEMBLY

1. Install:
   - Rear shock absorber assembly

NOTE:

- Make sure that the warning label on the rear shock absorber assembly faces to the right.
- When installing the rear shock absorber assembly, lift up the swingarm.

EAS23330

SWINGARM

Removing the swingarm

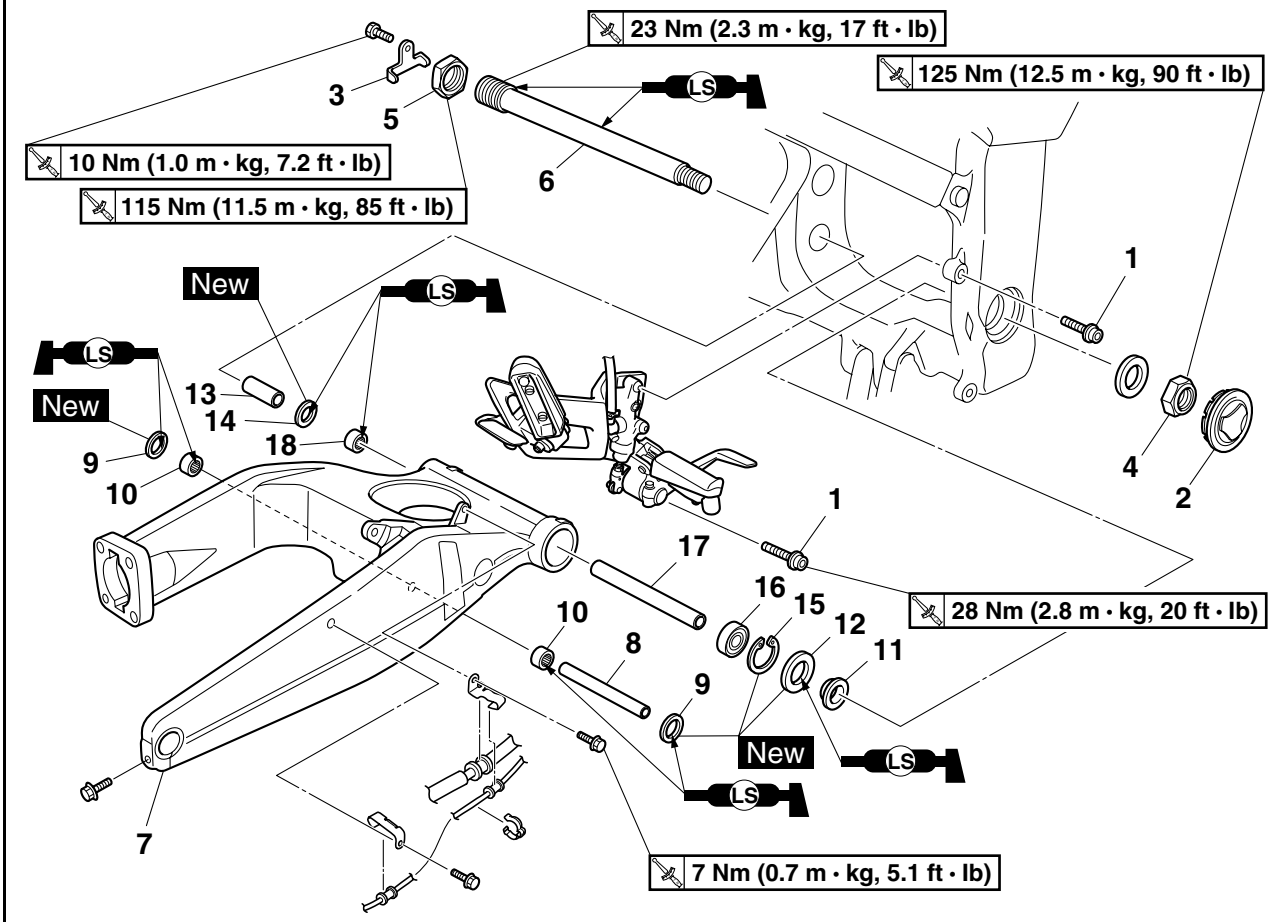

Order	Job/Parts to remove	Q'ty	Remarks
	Rear wheel		Refer to "REAR WHEEL" on page 4-20.
	Rear shock absorber assembly/Connecting arms		Refer to "REAR SHOCK ABSORBER ASSEMBLY" on page 4-79.
	Final drive assembly/Universal joint		Refer to "SHAFT DRIVE" on page 4-87.
1	Right footrest bracket bolt	2	
2	Pivot shaft end cover	1	
3	Pivot shaft locknut retainer	1	
4	Pivot shaft nut	1	
5	Pivot shaft locknut	1	
6	Pivot shaft	1	
7	Swingarm	1	
8	Spacer	1	
9	Oil seal	2	
10	Bearing	2	
11	Collar	1	
12	Oil seal	1	

Removing the swingarm

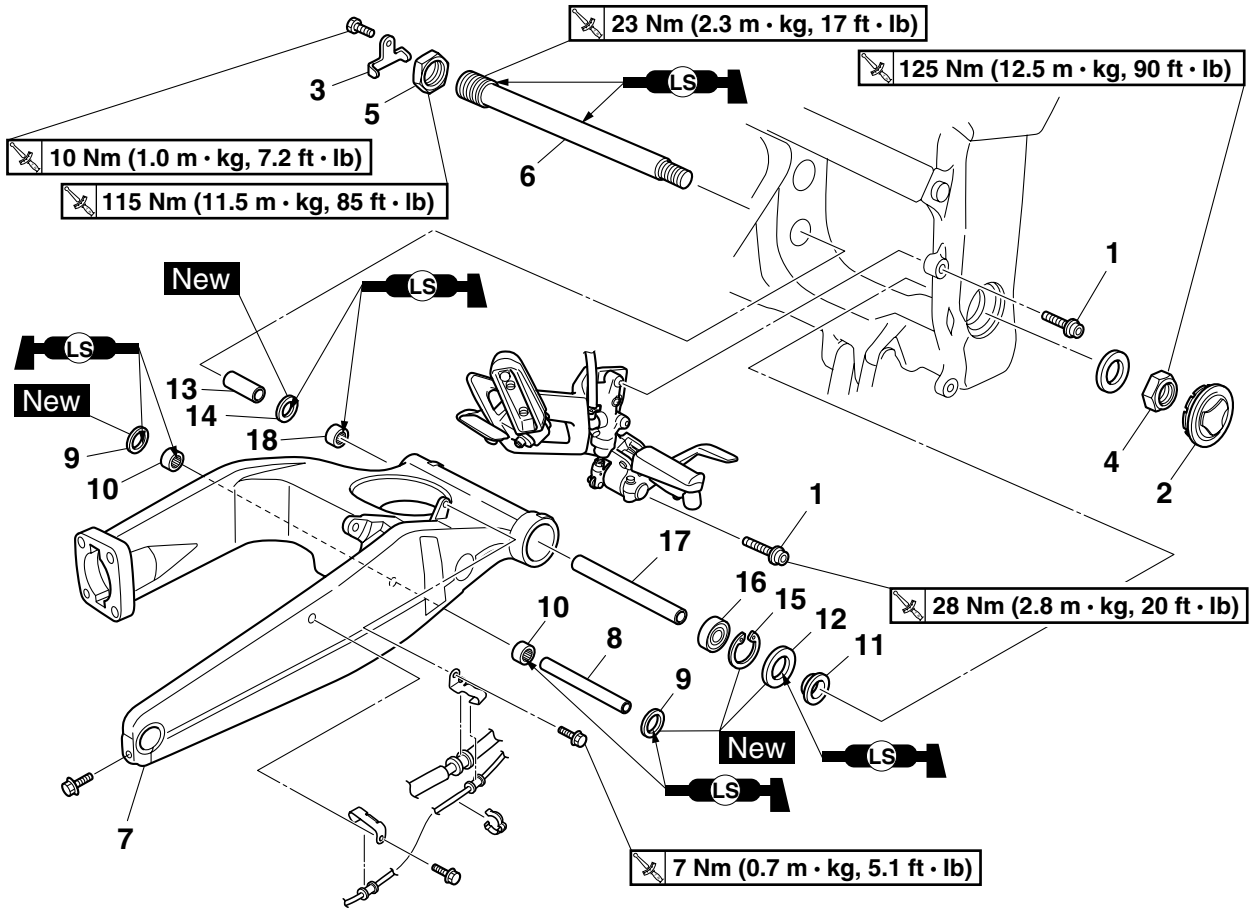

Order	Job/Parts to remove	Q'ty	Remarks
13	Spacer	1	
14	Oil seal	1	
15	Circlip	1	
16	Bearing	1	
17	Spacer	1	
18	Bearing	1	
			For installation, reverse the removal procedure.

EAS23350
REMOVING THE SWINGARM

1. Stand the vehicle on a level surface.

EWA13120
WARNING

Securely support the vehicle so that there is no danger of it falling over.

NOTE:

Place the vehicle on a suitable stand so that the rear wheel is elevated.

2. Measure:
   - Swingarm side play
   - Swingarm vertical movement

▼▼▼▼▼▼▼▼▼▼▼▼▼▼▼▼▼▼▼▼▼▼▼▼▼▼▼▼▼▼▼▼▼▼

a. Measure the tightening torque of the pivot shaft, pivot shaft nut, and pivot shaft locknut.

Pivot shaft
23 Nm (2.3 m·kg, 17 ft·lb)
Pivot shaft nut
125 Nm (12.5 m·kg, 90 ft·lb)
Pivot shaft locknut
115 Nm (11.5 m·kg, 85 ft·lb)

b. Measure the swingarm side play “A” by moving the swingarm from side to side.
c. If the swingarm side play is out of specification, check the spacers, bearings, washers, and dust covers.

Swingarm side play (at the end of the swingarm)
0 mm (0 in)

d. Check the swingarm vertical movement “B” by moving the swingarm up and down.
   If swingarm vertical movement is not smooth or if there is binding, check the spacers, bearings, washers, and dust covers.

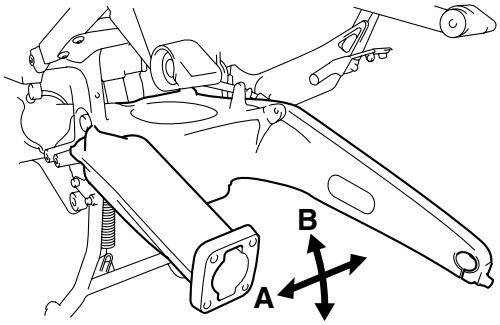

▲▲▲▲▲▲▲▲▲▲▲▲▲▲▲▲▲▲▲▲▲▲▲▲▲▲▲▲▲▲▲▲▲▲

EAS23360
CHECKING THE SWINGARM

1. Check:
   - Swingarm
     Bends/cracks/damage → Replace.
2. Check:
   - Pivot shaft
     Roll the pivot shaft on a flat surface.
     Bends → Replace.

EWA13770
WARNING

Do not attempt to straighten a bent pivot shaft.

3. Wash:
   - Pivot shaft
   - Spacers
   - Washer
   - Bearings
   - Collar

Recommended cleaning solvent
Kerosene

4. Check:
   - Spacers
   - Washer
   - Collar
   - Oil seals
     Damage/wear → Replace.
   - Bearings
     Damage/pitting → Replace.

EAS23390
INSTALLING THE SWINGARM

1. Lubricate:
   - Bearings
   - Oil seals
   - Pivot shaft

Recommended lubricant
Lithium-soap-based grease

2. Install:
   - Bearing “1”
   - Bearings “2”

Installed depth “a”
7.0 mm (0.28 in)
Installed depth “b”
4.0 mm (0.16 in)

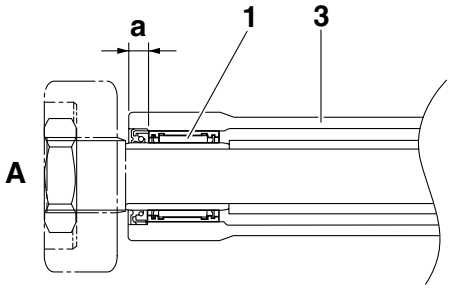

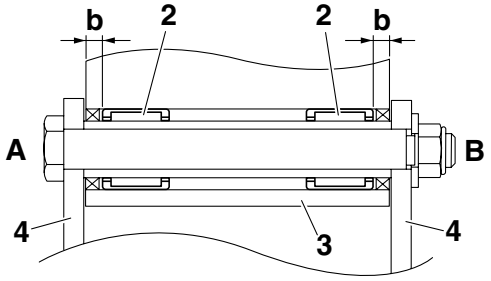

3. Swingarm
4. Connecting arm
A. Left side
B. Right side

3. Tighten:
• Pivot shaft

	Pivot shaft **23 Nm (2.3 m·kg, 17 ft·lb)**

• Pivot shaft locknut

	Pivot shaft locknut **115 Nm (11.5 m·kg, 85 ft·lb)**

• Pivot shaft nut

	Pivot shaft nut **125 Nm (12.5 m·kg, 90 ft·lb)**

EAS23550

SHAFT DRIVE

Removing the final drive assembly

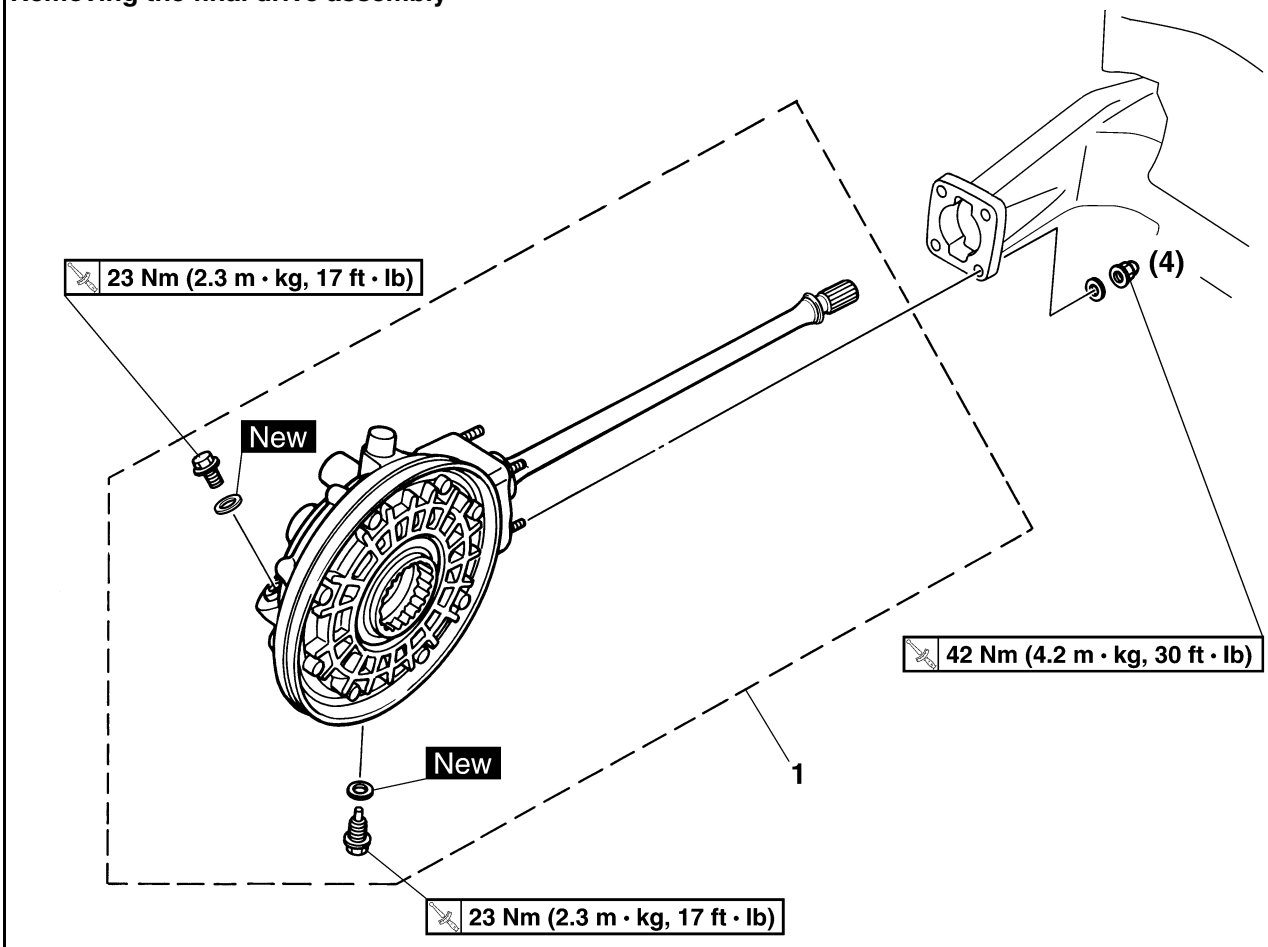

Order	Job/Parts to remove	Q'ty	Remarks
	Final gear oil		Drain. Refer to "CHANGING THE ENGINE OIL" on page 3-13.
	Rear wheel		Refer to "REAR WHEEL" on page 4-20.
1	Final drive assembly	1	
			For installation, reverse the removal procedure.

Removing the universal joint

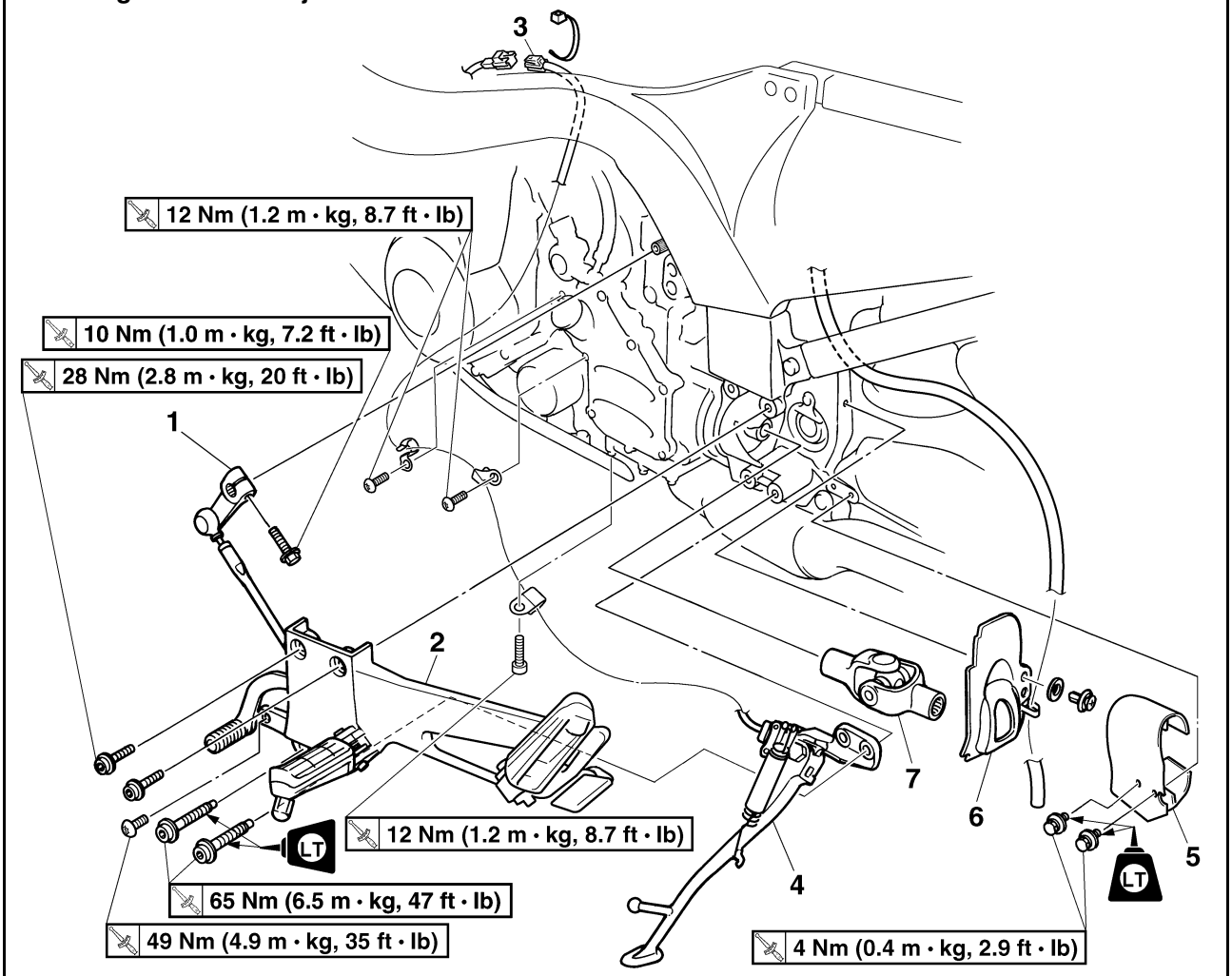

Order	Job/Parts to remove	Q'ty	Remarks
1	Shift arm	1	
2	Left footrest assembly	1	
3	Sidestand switch coupler	1	Disconnect.
4	Sidestand	1	
5	Drive shaft dust cover	1	
6	Universal joint dust cover	1	
7	Universal joint	1	
			For installation, reverse the removal procedure.

Disassembling the final drive assembly

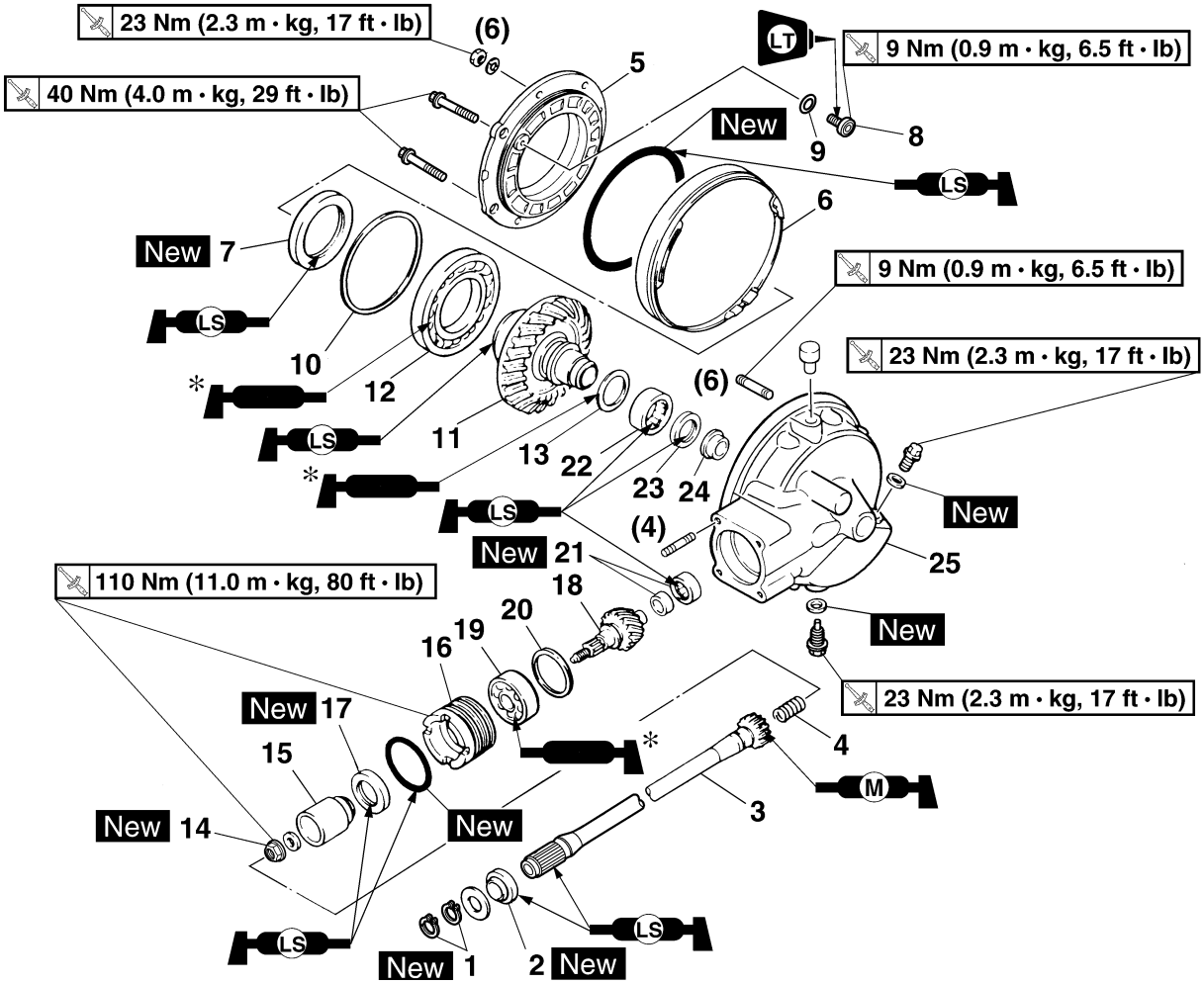

Order	Job/Parts to remove	Q'ty	Remarks
1	Circlip	2	
2	Oil seal	1	
3	Drive shaft	1	
4	Spring	1	
5	Ring gear bearing housing	1	
6	Dust cover	1	
7	Oil seal	1	
8	Stopper bolt	1	Left-hand threads
9	Stopper bolt shim(s)		
10	Ring gear shim(s)		
11	Ring gear	1	
12	Bearing	1	
13	Thrust washer	1	
14	Coupling gear nut	1	
15	Coupling gear	1	
16	Bearing retainer	1	Left-hand threads
17	Oil seal	1	

Disassembling the final drive assembly

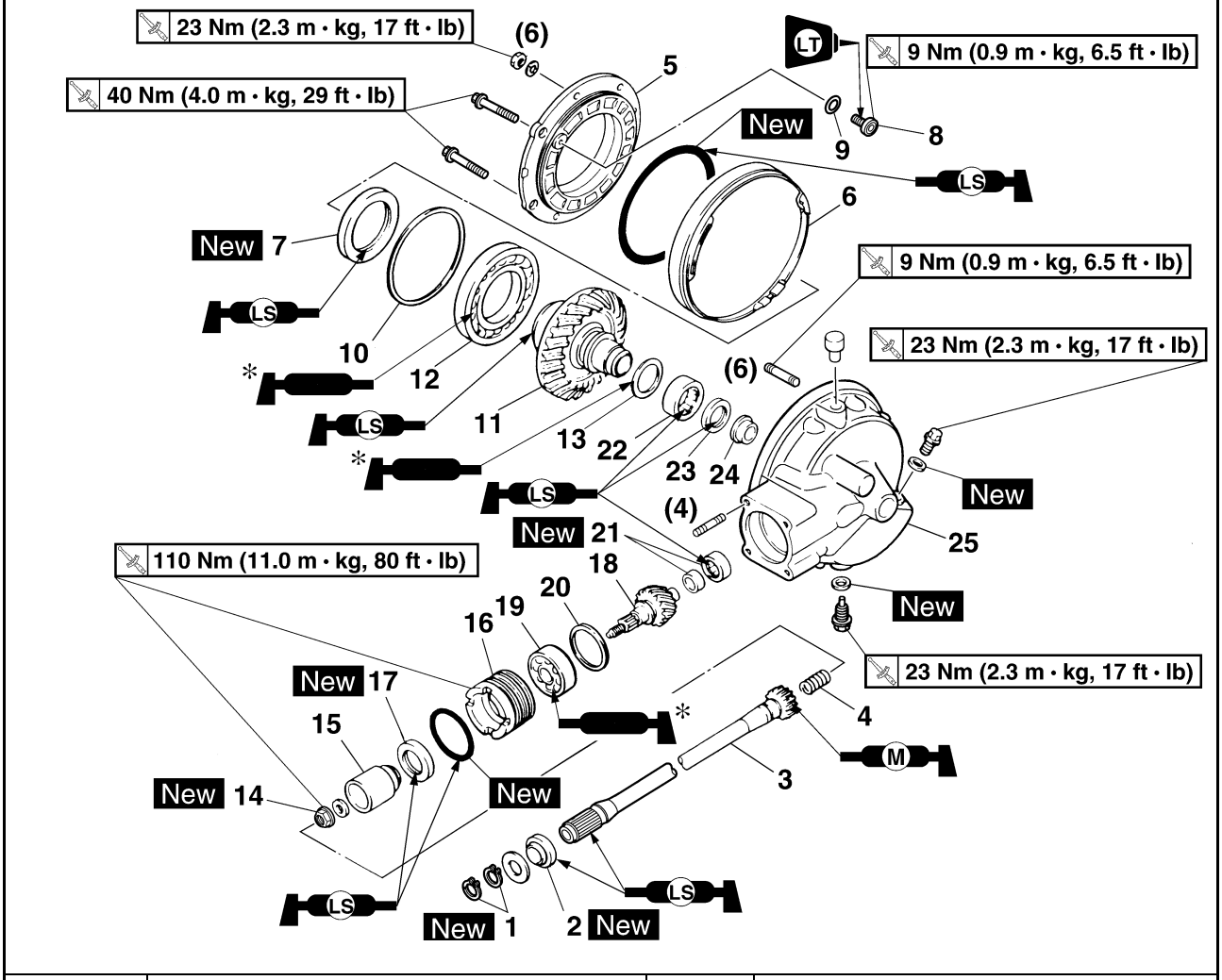

Order	Job/Parts to remove	Q'ty	Remarks
18	Final drive pinion gear	1	
19	Bearing	1	
20	Final drive pinion gear shim(s)		
21	Final drive pinion gear bearing	1	
22	Ring gear bearing	1	
23	Oil seal	1	
24	Collar	1	
25	Final gear case	1	
			For assembly, reverse the disassembly procedure.

* Apply shaft drive gear oil (Part No.: 9079E-SH001-00)

EAS23560
TROUBLESHOOTING

Symptom	Possible cause
1. A pronounced hesitation or jerky movement during acceleration, deceleration or sustained speeds (not to be confused with engine surging or transmission-related movements). 2. A rolling “rumble” noticeable at low speeds, a high-pitched whine or a “clunk” from a shaft drive component, or from the vicinity of the shaft drive. 3. The shaft drive is locked up or no power is transmitted from the engine to the rear wheel.	A. Bearing damage B. Improper gear backlash C. Damaged gear teeth D. Broken drive shaft E. Broken gear teeth F. Seizure due to lack of lubrication G. Small foreign objects lodged between moving parts

NOTE:

Causes A, B and C may be extremely difficult to diagnose. The symptoms are quite subtle and difficult to distinguish from normal operating noises. If there is reason to believe that these components are damaged, remove them and check them individual.

Inspection notes

1. Investigate any unusual noises.

▼▼

The following noises may indicate a mechanical defect:

a. A rolling “rumble” during coasting, acceleration or deceleration (increases with the rear wheel speed, but does not increase with higher engine or transmission speeds).
   Wheel bearing damage
b. A whining noise that varies with acceleration and deceleration
   Incorrect reassembly or too little gear backlash

EWA13780
⚠ WARNING

Insufficient gear backlash is extremely destructive to the gear teeth. If a test ride, following reassembly, indicates these symptoms, stop riding immediately to minimize gear damage.

c. A slight “clunk” evident at low speed operation (not to be confused with normal vehicle operation).
   Broken gear teeth

EWA13790
⚠ WARNING

Stop riding immediately if broken gear teeth are suspected. This condition could result in the shaft drive assembly locking up, causing a loss of control and possible injury to the rider.

▲▲

Troubleshooting chart

When causes (A) or (B) shown in the table at the beginning of the “TROUBLESHOOTING” section exist, check the following points.

1. Place the vehicle on a suitable stand so that the front wheel is elevated and then spin the front wheel. Are the wheel bearings damaged?	YES →	• Replace the wheel bearing(s). • Refer to “FRONT WHEEL” on page 4-13.

NO ↓

2. Place the vehicle on a suitable stand so that the rear wheel is elevated and then spin the rear wheel. Is the wheel bearing damaged?	NO →	Rear wheel bearings and shaft drive bearings are probably not damaged. Repeat the test or remove and check the components.
YES ↓		
3. Remove the rear wheel. Are the wheel bearings damaged?	YES →	• Replace the rear wheel bearing(s). • Refer to “REAR WHEEL” on page 4-20.
NO ↓		
Remove and check the drive shaft components.		

EAS23570

CHECKING THE FINAL DRIVE OIL FOR CONTAMINATION AND CHECKING THE SHAFT DRIVE FOR LEAKS

1. Drain:
   - Final gear oil
     (from the final gear case)
     Refer to “CHANGING THE FINAL GEAR OIL” on page 3-26.
2. Check:
   - Final gear oil
     Large amount of metal particles → Check for bearing seizure.

NOTE:

A small amount of metal particles in the final gear oil is normal.

3. Check:
   - Shaft drive housing
     (for oil leaks)

▼▼▼▼▼▼▼▼▼▼▼▼▼▼▼▼▼▼▼▼▼▼▼▼▼▼▼▼▼▼▼▼▼

a. Thoroughly clean the entire vehicle and then completely dry it.
b. Apply a leak-locating compound or dry powder spray to the shaft drive.
c. Test ride the vehicle long enough to locate a leak.
   Oil leak → Repair or replace the faulty part(s).

NOTE:

- What may appear to be an oil leak on a new or fairly new vehicle, may result from the application of a rust preventive coating or excessive seal lubrication.
- Always clean the vehicle and recheck the area where the leak is thought to originate from.

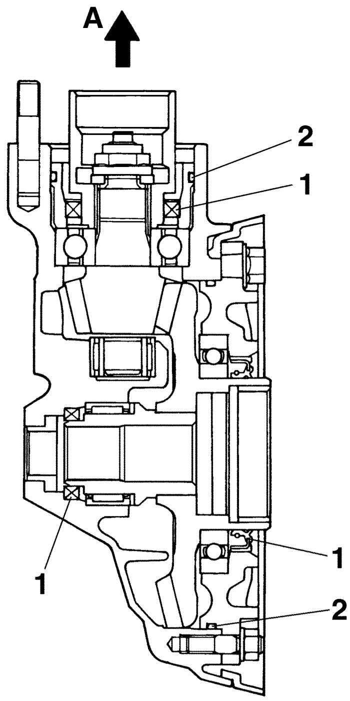

1. Oil seal
2. O-ring
A. Forward

▲▲▲▲▲▲▲▲▲▲▲▲▲▲▲▲▲▲▲▲▲▲▲▲▲▲▲▲▲▲▲▲▲

EAS23580

MEASURING THE FINAL GEAR BACKLASH

1. Secure the final drive assembly in a vise.
2. Remove:
   - Final gear oil drain bolt
3. Drain:
   - Final gear oil
     (from the final drive assembly)
4. Measure:
   - Final gear backlash
     Out of specification → Adjust.

Final gear backlash
0.22–0.45 mm (0.0087–0.0177 in)

▼▼▼▼▼▼▼▼▼▼▼▼▼▼▼▼▼▼▼▼▼▼▼▼▼▼▼▼▼▼▼▼▼▼

a. Install a bolt “1” of the specified size, into the final gear oil drain hole.

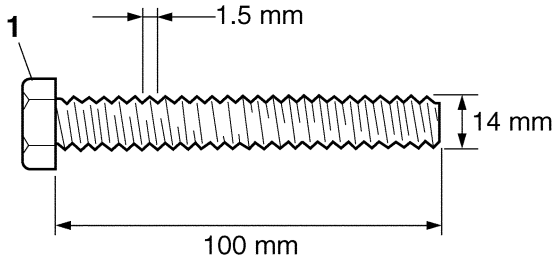

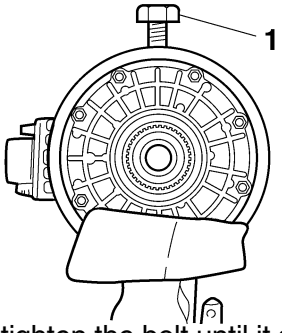

b. Finger tighten the bolt until it stops the ring gear from moving.

NOTE:

Do not overtighten the bolt.

c. Install the final gear backlash band “2” and dial gauge “3”.

NOTE:

Make sure that the dial gauge plunger contacts the groove “a” in the final gear backlash band as shown in the illustration.

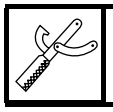

Final gear backlash band
90890-01511

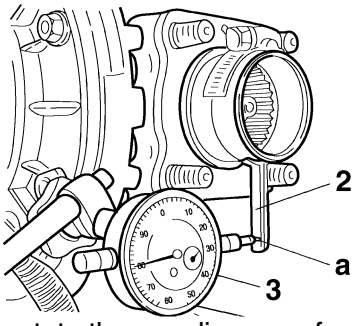

d. Gently rotate the coupling gear from engagement to engagement.
e. Record the reading on the dial gauge.
f. Remove the dial gauge, final gear backlash band, and bolt.
g. Rotate the final drive pinion gear 90°.
h. Reinstall the bolt, final gear backlash band, and dial gauge.
i. Repeat steps (d) to (h) three more times (for a total of four measurements).
j. If any of the readings are over specification, adjust the final gear backlash.

▲▲▲▲▲▲▲▲▲▲▲▲▲▲▲▲▲▲▲▲▲▲▲▲▲▲▲▲▲▲▲▲▲▲

EAS23590

ADJUSTING THE FINAL GEAR BACKLASH

1. Remove:
   - Ring gear bearing housing bolts “1”
   - Ring gear bearing housing nuts “2”

NOTE:

Working in a crisscross pattern, loosen each bolt and nut 1/4 of a turn. After all of the bolts and nuts are fully loosened, remove them.

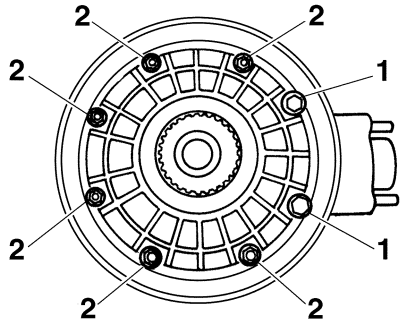

2. Remove:
   - Ring gear bearing housing “1”
   - Dust cover “2”
   - Ring gear “3”
   - Ring gear shim(s) “4”
   - Thrust washer “5”

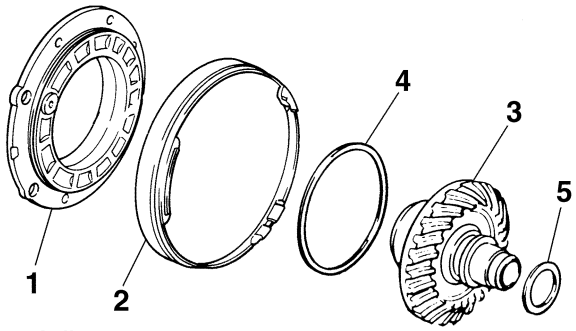

3. Adjust:
   - Final gear backlash

▼▼▼▼▼▼▼▼▼▼▼▼▼▼▼▼▼▼▼▼▼▼▼▼▼▼▼▼▼▼▼▼▼▼

a. Select the suitable shim(s) and thrust washer with the following chart.

Thinner shim	Final gear backlash is increased.
Thicker shim	Final gear backlash is decreased.

b. If it is necessary to increase the final gear backlash by more than 0.2 mm, reduce the thrust washer thickness by 0.2 mm for every 0.2 mm increase of ring gear shim thickness.
c. If it is necessary to reduce the final gear backlash by more than 0.2 mm, increase the thrust washer thickness by 0.2 mm for every 0.2 mm decrease of ring gear shim thickness.

Ring gear shims
Thickness (mm)
0.25 0.30 0.40 0.50

Thrust washers
Thickness (mm)
1.2 1.4 1.6 1.8 2.0

▲▲▲▲▲▲▲▲▲▲▲▲▲▲▲▲▲▲▲▲▲▲▲▲▲▲▲▲▲▲▲▲

EAS23600
MEASURING THE RING-GEAR-TO-STOPPER-BOLT CLEARANCE

1. Remove:
   - Ring gear bearing housing (along with the ring gear) Refer to "ADJUSTING THE FINAL GEAR BACKLASH" on page 4-93.
2. Measure:
   - Ring-gear-to-stopper-bolt clearance "a" Out of specification → Adjust.

Ring-gear-to-stopper-bolt clearance
0.30–0.60 mm (0.0118–0.0236 in)

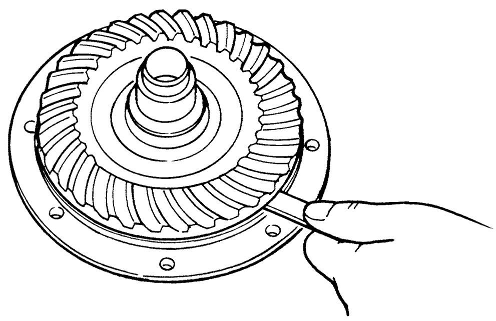

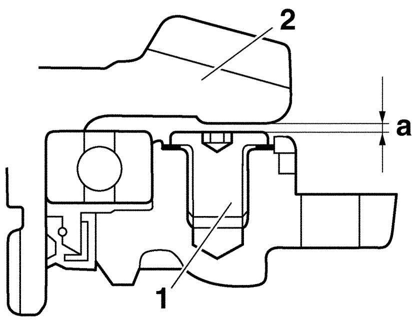

1. Stopper bolt
2. Ring gear

3. Install:
   - Ring gear bearing housing (along with the ring gear)

EAS23610
ADJUSTING THE RING-GEAR-TO-STOPPER-BOLT CLEARANCE

1. Remove:
   - Ring gear "1"
   - Stopper bolt "2"
   - Stopper bolt shim(s) "3"
   - Ring gear bearing housing "4"

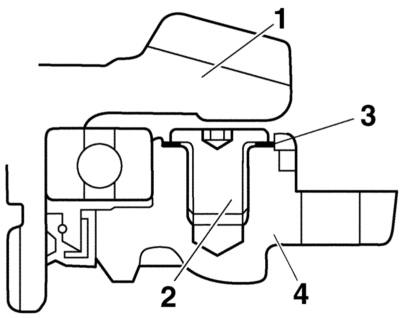

2. Select:
   - Stopper bolt shim(s)

Stopper bolt shims
Thickness (mm)
0.15 0.20

3. Install:
   - Ring gear bearing housing "1"
   - Stopper bolt shim(s) "2"
   - Stopper bolt "3"
   - Ring gear "4"

Stopper bolt
9 Nm (0.9 m·kg, 6.5 ft·lb)

ECA14320
CAUTION:

- **The stopper bolt has left-hand threads. To tighten the stopper bolt, turn it counterclockwise.**

• **Apply LOCTITE® onto the stopper bolt.**

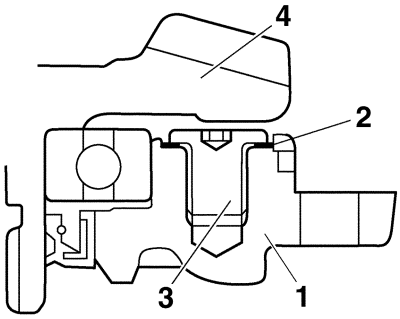

4. Measure:
   • Ring-gear-to-stopper-bolt clearance

	Ring-gear-to-stopper-bolt clearance **0.30–0.60 mm (0.0118–0.0236 in)**

NOTE:

If the ring-gear-to-stopper-bolt clearance is out of specification, repeat the above procedure.

EAS23620

DISASSEMBLING THE FINAL DRIVE ASSEMBLY

1. Remove:
   • Ring gear bearing housing bolts “1”
   • Ring gear bearing housing nuts “2”

NOTE:

Working in a crisscross pattern, loosen each bolt and nut 1/4 of a turn. After all of the bolts and nuts are fully loosened, remove them.

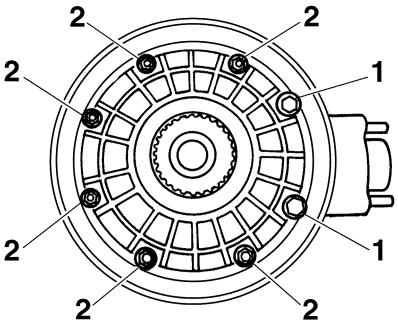

2. Remove:
   • Coupling gear nut
   • Coupling gear “1”
   (with the coupling gear/middle shaft tool “2”)

	Coupling gear/middle shaft tool **90890-01229** **Gear holder** **YM-01229**

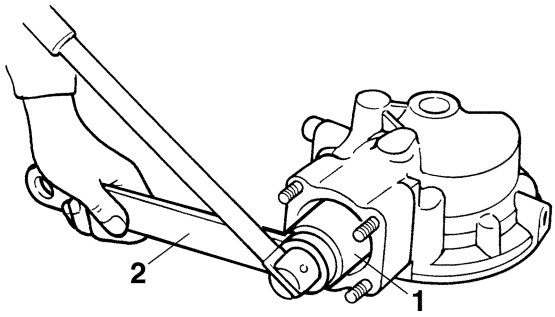

3. Remove:
   • Bearing retainer
   (with the bearing retainer wrench “1”)

	Bearing retainer wrench **90890-04050** **Pinion bearing retainer & remover** **YM-04050**

ECA14330

CAUTION:

The bearing retainer has left-hand threads. To loosen the bearing retainer, turn it clockwise.

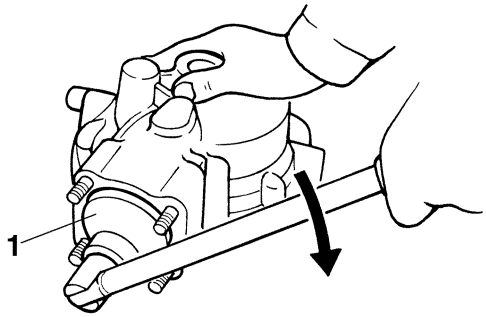

4. Remove:
   • Final drive pinion gear

EWA13800

WARNING

Always use new bearings.

ECA14340

CAUTION:

The final drive pinion gear should only be removed if ring gear replacement is necessary.

NOTE:

Lightly tap on the end of the final drive pinion gear with a soft hammer.

EAS23630
REMOVING AND INSTALLING THE BEARINGS

1. Check:
   - Bearings
     Damage → Replace.
2. Remove:
   - Collar “1”
   - Oil seal “2”
   - Bearing “3”
     (with an appropriate press tool “4” and an appropriate support for the final gear case)

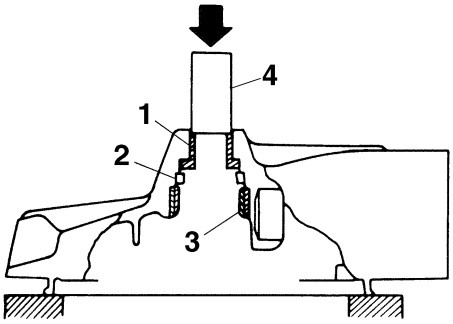

3. Remove:
   - Bearing “1”

▼▼▼▼▼▼▼▼▼▼▼▼▼▼▼▼▼▼▼▼▼▼▼▼▼▼▼▼▼▼▼▼▼▼

a. Heat the final gear case to approximately 150 °C (302 °F).
b. Remove the bearing outer races with an appropriately shaped punch “2”.

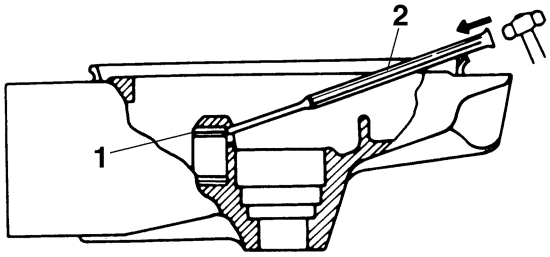

c. Remove the inner race from the final drive pinion gear.

NOTE:

The removal of the bearing is a difficult procedure and is rarely necessary.

▲▲▲▲▲▲▲▲▲▲▲▲▲▲▲▲▲▲▲▲▲▲▲▲▲▲▲▲▲▲▲▲▲▲

4. Install:
   - Bearing New

▼▼▼▼▼▼▼▼▼▼▼▼▼▼▼▼▼▼▼▼▼▼▼▼▼▼▼▼▼▼▼▼▼▼

a. Heat the final gear case to approximately 150 °C (302 °F).
b. Install the bearing outer races with a socket or appropriate tool that matches the diameter of the races.
c. Install the inner race onto the final drive pinion gear.

▲▲▲▲▲▲▲▲▲▲▲▲▲▲▲▲▲▲▲▲▲▲▲▲▲▲▲▲▲▲▲▲▲▲

5. Install:
   - Collar “1”
   - Oil seal “2” New
   - Bearing “3”
     (with an appropriate press tool “4” and press)

NOTE:

The bearing can be reused, but Yamaha recommends installing a new one.

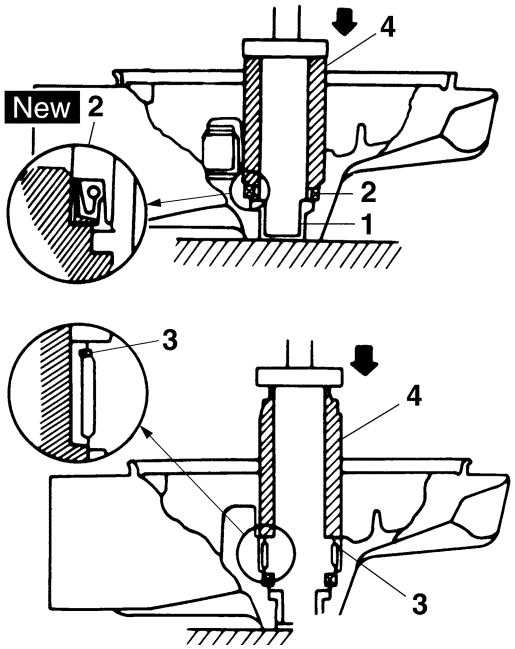

EAS23640
ALIGNING THE FINAL DRIVE PINION GEAR AND RING GEAR

NOTE:

Aligning the final drive pinion gear and ring gear is necessary when any of the following parts are replaced:
- Final gear case
- Ring gear bearing housing
- Any bearing

1. Select:
   - Final drive pinion gear shim(s)
   - Ring gear shim(s)

▼▼▼▼▼▼▼▼▼▼▼▼▼▼▼▼▼▼▼▼▼▼▼▼▼▼▼▼▼▼▼▼▼▼

a. Position the final drive pinion gear shim(s) “1” and the ring gear with shim(s) “2”. Calculate the respective thicknesses from information marked on the final gear case and the final drive pinion gear.

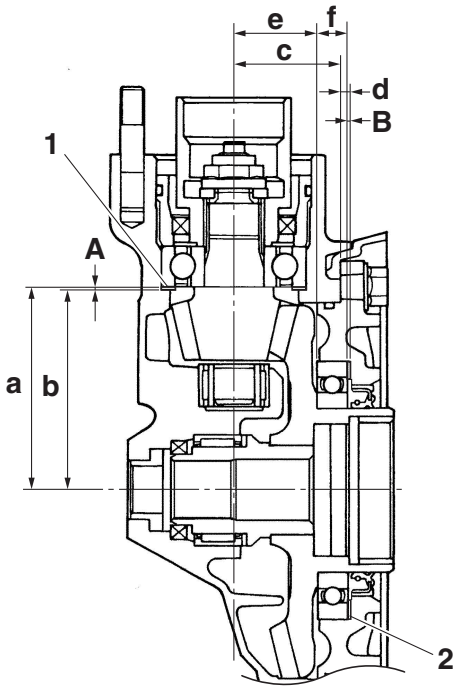

b. To find final drive pinion gear shim thickness "A", use the following formula:

Final drive pinion gear shim thickness
A = (84 + a/100) - (83 + b/100)

Where:
a = 84
b = a numeral on the final gear case, to be divided by 100 and added to "83".

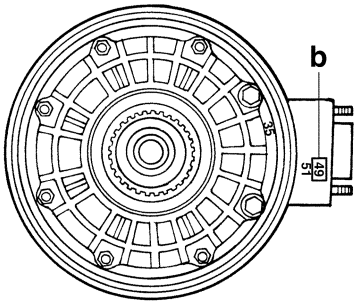

Example:
If the final drive pinion gear is marked "+01" and the final gear case is marked "50":

A = 84 - (83 + 50/100)
= 84 - (83 + 0.49)
= 84 - 83.49
= 0.51

Therefore, the calculated final drive pinion gear shim thickness is 0.51 mm. Shim sizes are supplied in the following thicknesses.

Final drive pinion gear shims Thickness (mm) 0.30 0.40 0.50

Since the final drive pinion gear shims are only available in 0.10 mm increments, round off to the hundredths digit.

Hundredth	Rounded value
0, 1, 2	0
3, 4, 5, 6, 7	5
8, 9	10

In the example above, the calculated final drive pinion gear shim thickness is 0.51 mm. The chart instructs you to round off the 1 to 0. Thus, you should use a 0.50 mm final drive pinion gear shim.

c. To find ring gear shim thickness "B", use the following formula:

Ring gear shim thickness
B = (45 + c/100) + (3 + d/100) - [(35.40 - e/100) + f]

Where:
c = a numeral on the final gear case, to be divided by 100 and added to "45".
d = a numeral usually on the outside of the ring gear bearing housing, to be divided by 100 and added to "3".

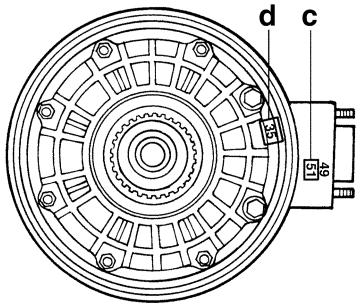

e = a numeral (positive or negative) on the inside of the ring gear, to be divided by 100 and added to "35.40".

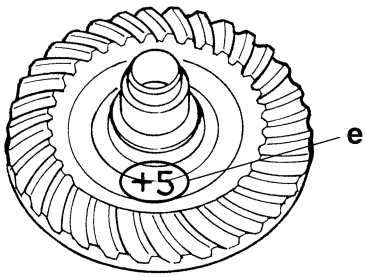

f = the ring gear bearing thickness constant.

Ring gear bearing thickness
13.00 mm (0.51 in)

Example:
If the final gear case is marked “51”, the ring gear bearing housing is marked “35”, the ring gear is marked “- 05”, and “f” is 13.00:

B = (45 + 51/100) + (3 + 35/100) - [(35.40 + 5/100) + 13]
= (45 + 0.51) + (3 + 0.35) - [(35.40 + 0.05) + 13]
= 45.51 + 3.35 - [(35.40 + 0.05) + 13]
= 48.86 - [35.45 + 13]
= 48.86 - 48.45
= 0.41

Therefore, the calculated ring gear shim thickness is 0.41 mm.
Shim sizes are supplied in the following thicknesses.

Ring gear shims
Thickness (mm)
0.25 0.30 0.40 0.50

Since the ring gear shims are only available in 0.10 mm increments, round off the hundredths digit.

Hundredth	Rounded value
0, 1, 2	0
3, 4, 5, 6, 7	5
8, 9	10

In the example above, the calculated ring gear shim thickness is 0.41 mm. The chart instructs you to round off the 1 to 0. Thus, you should use a 0.40 mm ring gear shim.

▲▲▲▲▲▲▲▲▲▲▲▲▲▲▲▲▲▲▲▲▲▲▲▲▲▲▲▲▲▲▲▲▲▲

2. Install:
- Shims (as calculated)
- Final drive pinion gear
- Bearing retainer
  (with the bearing retainer wrench “1”)

Bearing retainer
110 Nm (11.0 m·kg, 72 ft·lb)

ECA14350
CAUTION:
The bearing retainer has left-hand threads. To tighten the bearing retainer, turn it counterclockwise.

Bearing retainer wrench
90890-04050
Pinion bearing retainer & remover
YM-04050

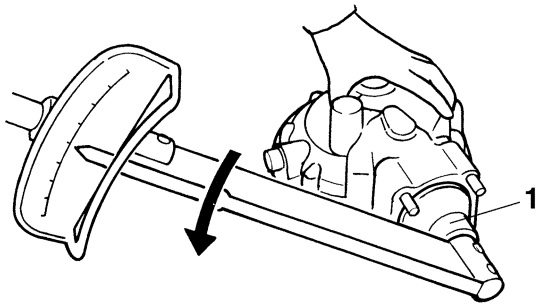

3. Install:
- Coupling gear “1”
- Coupling gear nut
  (with the coupling gear/middle shaft tool “2”)

Coupling gear nut
110 Nm (11.0 m·kg, 80 ft·lb)

Coupling gear/middle shaft tool
90890-01229
Gear holder
YM-01229

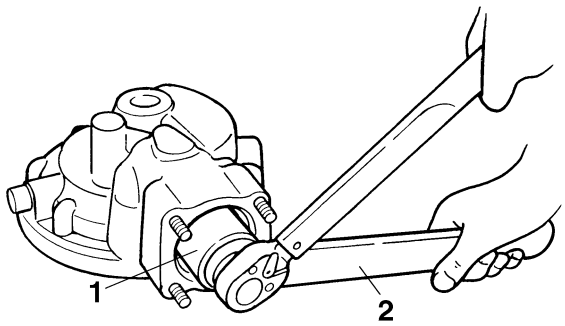

4. Stake the coupling gear nut “1” at a cutout “a” in the final drive pinion gear.

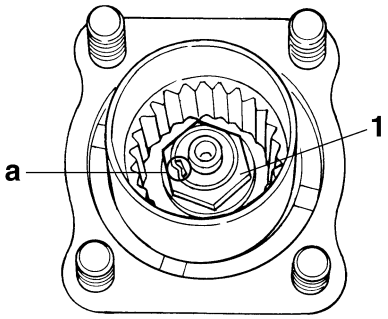

5. Install:
   - Ring gear bearing housing
     (along with the ring gear, but without the thrust washer)
6. Adjust:
   - Final gear backlash
     Refer to “MEASURING THE FINAL GEAR BACKLASH” on page 4-92 and “ADJUSTING THE FINAL GEAR BACKLASH” on page 4-93.
7. Measure:
   - Ring-gear-to-thrust-washer clearance

▼▼▼▼▼▼▼▼▼▼▼▼▼▼▼▼▼▼▼▼▼▼▼▼▼▼▼▼▼▼▼▼▼▼

a. Remove the ring gear bearing housing (along with the ring gear).
b. Place four pieces of Plastigauge® between the original thrust washer and the ring gear.
c. Install the ring gear bearing housing and tighten the bolts and nuts to specification.

Ring gear bearing housing bolt
40 Nm (4.0 m·kg, 29 ft·lb)
Ring gear bearing housing nut
23 Nm (2.3 m·kg, 17 ft·lb)

NOTE:

Do not turn the final drive pinion gear and ring gear while measuring the ring-gear-to-thrust-washer clearance with Plastigauge®.

d. Remove the ring gear bearing housing.
e. Measure the width of the flattened Plastigauge® “1”.

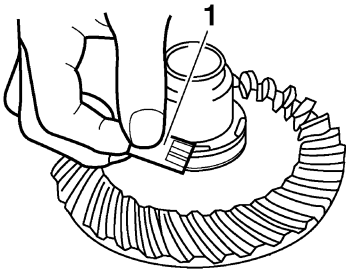

Ring-gear-to-thrust-washer clearance
0.10–0.20 mm (0.0039–0.0079 in)

f. If the ring-gear-to-thrust-washer clearance is within specification, install the ring gear bearing housing (along with the ring gear).
g. If the ring-gear-to-thrust-washer clearance is out of specification, select the correct thrust washer as follows.
h. Select the suitable thrust washer from the following chart.

Thrust washers
Thickness (mm)
1.2 1.4 1.6 1.8 2.0

i. Repeat the measurement steps until the ring-gear-to-thrust-washer clearance is within the specified limits.

Ring-gear-to-thrust-washer clearance
0.10–0.20 mm (0.0039–0.0079 in)

▲▲▲▲▲▲▲▲▲▲▲▲▲▲▲▲▲▲▲▲▲▲▲▲▲▲▲▲▲▲▲▲▲▲

EAS23650

CHECKING THE DRIVE SHAFT

1. Check:
   - Drive shaft splines
     Damage/wear → Replace the drive shaft.

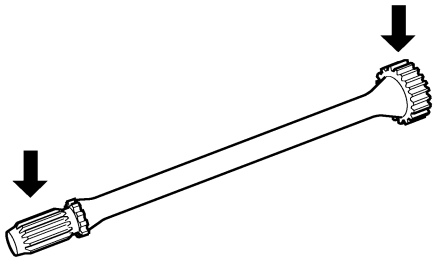

EAS23660

INSTALLING THE DRIVE SHAFT AND FINAL DRIVE ASSEMBLY

1. Lubricate:
   - Drive shaft spline (final drive pinion gear side)

	Recommended lubricant **Molybdenum disulfide grease**

2. Lubricate:
   - Drive shaft spline (universal joint side)

	Recommended lubricant **Lithium-soap-based grease**

3. Install:
   - Oil seal “1”
   - Washer “2”
     (with the fork seal driver weight “3” and fork seal driver attachment “4”)

	Fork seal driver weight **90890-01184** **Fork seal driver attachment** **90890-01186** **Replacement 27 mm** **YM-A9409-1**

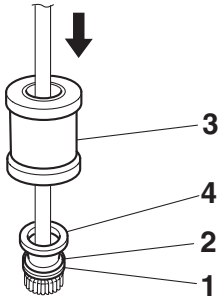

4. Install:
   - Drive shaft
     (to the final drive pinion gear)
5. Install:
   - Universal joint
   - Final drive assembly

NOTE:

Align the drive shaft splines with the driven yoke of the universal joint.

6. Tighten:
   - Final drive assembly nuts

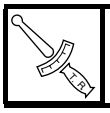	**Final gear case nut** **42 Nm (4.2 m·kg, 30 ft·lb)**

7. Install:
   - Sidestand
   - Left footrest assembly

	Left footrest assembly/sidestand bolt **65 Nm (6.5 m·kg, 47 ft·lb)** **Left footrest assembly bolt (M8)** **28 Nm (2.8 m·kg, 20 ft·lb)** **Left footrest assembly bolt (M10)** **49 Nm (4.9 m·kg, 35 ft·lb)**

NOTE:

Install the left footrest assembly/sidestand bolts “1”, left footrest assembly bolts (M8) “2” and left footrest assembly bolt (M10) “3” temporarily and then tighten them to the specified torques in the proper tightening sequence as shown.

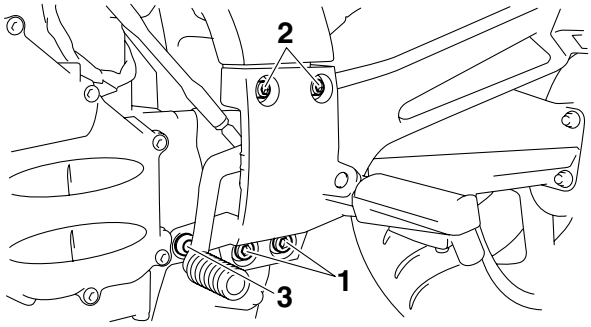

8. Install:
   - Shift arm “1”

NOTE:

Align the punch mark “a” in the shift shaft with the slot in the shift arm.

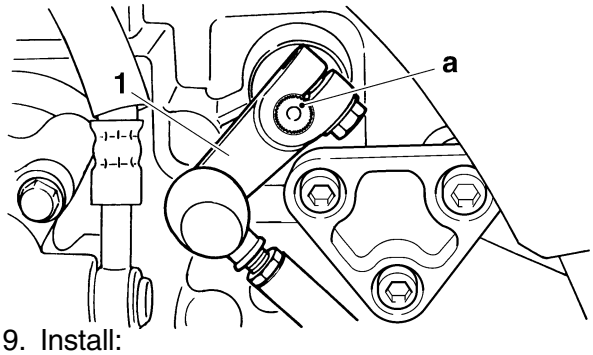

9. Install:
   - Rear wheel
     Refer to “REAR WHEEL” on page 4-20.
10. Fill:
    - Final gear case
      Refer to “CHECKING THE FINAL GEAR OIL LEVEL” on page 3-25.
11. Check:
    - Shift pedal position
      Refer to “ADJUSTING THE SHIFT PEDAL” on page 3-25.

ENGINE

ENGINE REMOVAL 5-1
REMOVING THE ENGINE 5-6
INSTALLING THE ENGINE 5-6

CAMSHAFTS 5-9
REMOVING THE CAMSHAFTS 5-11
CHECKING THE CAMSHAFTS 5-12
CHECKING THE CAMSHAFT SPROCKETS 5-13
CHECKING THE TIMING CHAIN GUIDES 5-13
CHECKING THE TIMING CHAIN TENSIONER 5-13
INSTALLING THE CAMSHAFTS 5-14

CYLINDER HEAD 5-18
REMOVING THE CYLINDER HEAD 5-19
CHECKING THE CYLINDER HEAD 5-19
INSTALLING THE CYLINDER HEAD 5-19

VALVES AND VALVE SPRINGS 5-21
REMOVING THE VALVES 5-22
CHECKING THE VALVES AND VALVE GUIDES 5-22
CHECKING THE VALVE SEATS 5-24
CHECKING THE VALVE SPRINGS 5-25
CHECKING THE VALVE LIFTERS 5-26
INSTALLING THE VALVES 5-26

GENERATOR AND STARTER CLUTCH 5-28
REMOVING THE GENERATOR 5-31
REMOVING THE STARTER CLUTCH 5-31
CHECKING THE STARTER CLUTCH 5-31
INSTALLING THE STARTER CLUTCH 5-32
INSTALLING THE GENERATOR 5-32

PICKUP ROTOR 5-34
REMOVING THE PICKUP ROTOR 5-35
INSTALLING THE PICKUP ROTOR 5-35

ELECTRIC STARTER 5-37
CHECKING THE STARTER MOTOR 5-39
ASSEMBLING THE STARTER MOTOR 5-40

CLUTCH 5-41
REMOVING THE CLUTCH 5-48
CHECKING THE FRICTION PLATES 5-48
CHECKING THE CLUTCH PLATES 5-49
CHECKING THE CLUTCH SPRING PLATE 5-49
CHECKING THE CLUTCH HOUSING 5-49
CHECKING THE CLUTCH BOSS 5-49
CHECKING THE PRESSURE PLATE 5-50
CHECKING THE CLUTCH PUSH RODS 5-50
CHECKING THE PRIMARY DRIVEN GEAR 5-50
INSTALLING THE CLUTCH 5-50
DISASSEMBLING THE CLUTCH MASTER CYLINDER 5-51
CHECKING THE CLUTCH MASTER CYLINDER 5-52
ASSEMBLING THE CLUTCH MASTER CYLINDER 5-52
INSTALLING THE CLUTCH MASTER CYLINDER 5-52
REMOVING THE CLUTCH RELEASE CYLINDER 5-54
CHECKING THE CLUTCH RELEASE CYLINDER 5-54
ASSEMBLING THE CLUTCH RELEASE CYLINDER 5-54
INSTALLING THE CLUTCH RELEASE CYLINDER 5-54

SHIFT SHAFT 5-56
CHECKING THE SHIFT SHAFT 5-57
CHECKING THE STOPPER LEVER 5-57
INSTALLING THE SHIFT SHAFT 5-57

OIL PUMP 5-58
CHECKING THE OIL PUMP 5-61
CHECKING THE RELIEF VALVE 5-61
CHECKING THE OIL DELIVERY PIPES 5-61
CHECKING THE OIL STRAINER 5-62
ASSEMBLING THE OIL PUMP 5-62
INSTALLING THE OIL PAN 5-62

MIDDLE GEAR 5-63
REMOVING THE MIDDLE DRIVE SHAFT ASSEMBLY 5-67
DISASSEMBLING THE MIDDLE DRIVE SHAFT ASSEMBLY 5-67
DISASSEMBLING THE MIDDLE DRIVEN SHAFT ASSEMBLY 5-67
CHECKING THE MIDDLE DRIVE SHAFT ASSEMBLY 5-68
CHECKING THE MIDDLE DRIVEN SHAFT ASSEMBLY 5-68
ASSEMBLING THE MIDDLE DRIVE SHAFT ASSEMBLY 5-68
ASSEMBLING THE MIDDLE DRIVEN SHAFT ASSEMBLY 5-68
INSTALLING THE MIDDLE DRIVE SHAFT ASSEMBLY 5-69
INSTALLING THE MIDDLE DRIVEN SHAFT ASSEMBLY 5-70
INSTALLING THE MIDDLE GEAR CASE COVER 5-70
MEASURING THE MIDDLE GEAR BACKLASH 5-71
ADJUSTING THE MIDDLE GEAR BACKLASH 5-71
ALIGNING THE MIDDLE GEAR 5-72

CRANKCASE 5-74
DISASSEMBLING THE CRANKCASE 5-78
CHECKING THE CRANKCASE 5-78
CHECKING THE OIL DELIVERY PIPES 5-78
CHECKING THE BEARINGS AND OIL SEAL 5-78
CHECKING THE TIMING CHAIN AND OIL PUMP DRIVE CHAIN 5-78
ASSEMBLING THE CRANKCASE 5-78

CONNECTING RODS AND PISTONS 5-82
REMOVING THE CONNECTING RODS AND PISTONS 5-83
CHECKING THE CYLINDERS AND PISTONS 5-83
CHECKING THE PISTON RINGS 5-84
CHECKING THE PISTON PIN 5-85
CHECKING THE CONNECTING RODS 5-86
INSTALLING THE CONNECTING RODS AND PISTONS 5-87

CRANKSHAFT 5-90
REMOVING THE CRANKSHAFT JOURNAL BEARINGS 5-91
CHECKING THE OIL NOZZLES 5-91
CHECKING THE CRANKSHAFT 5-91
INSTALLING THE CRANKSHAFT 5-92

TRANSMISSION 5-94
REMOVING THE TRANSMISSION 5-99
CHECKING THE SHIFT FORKS 5-99
CHECKING THE SHIFT DRUM ASSEMBLY 5-99
CHECKING THE TRANSMISSION 5-99
ASSEMBLING THE MAIN AXLE AND DRIVE AXLE 5-100
INSTALLING THE TRANSMISSION 5-101

BALANCERS 5-103
CHECKING THE BALANCERS 5-105
INSTALLING THE FRONT BALANCER 5-105
INSTALLING THE REAR BALANCER 5-106

EAS23710

ENGINE REMOVAL

Removing the exhaust pipe assembly

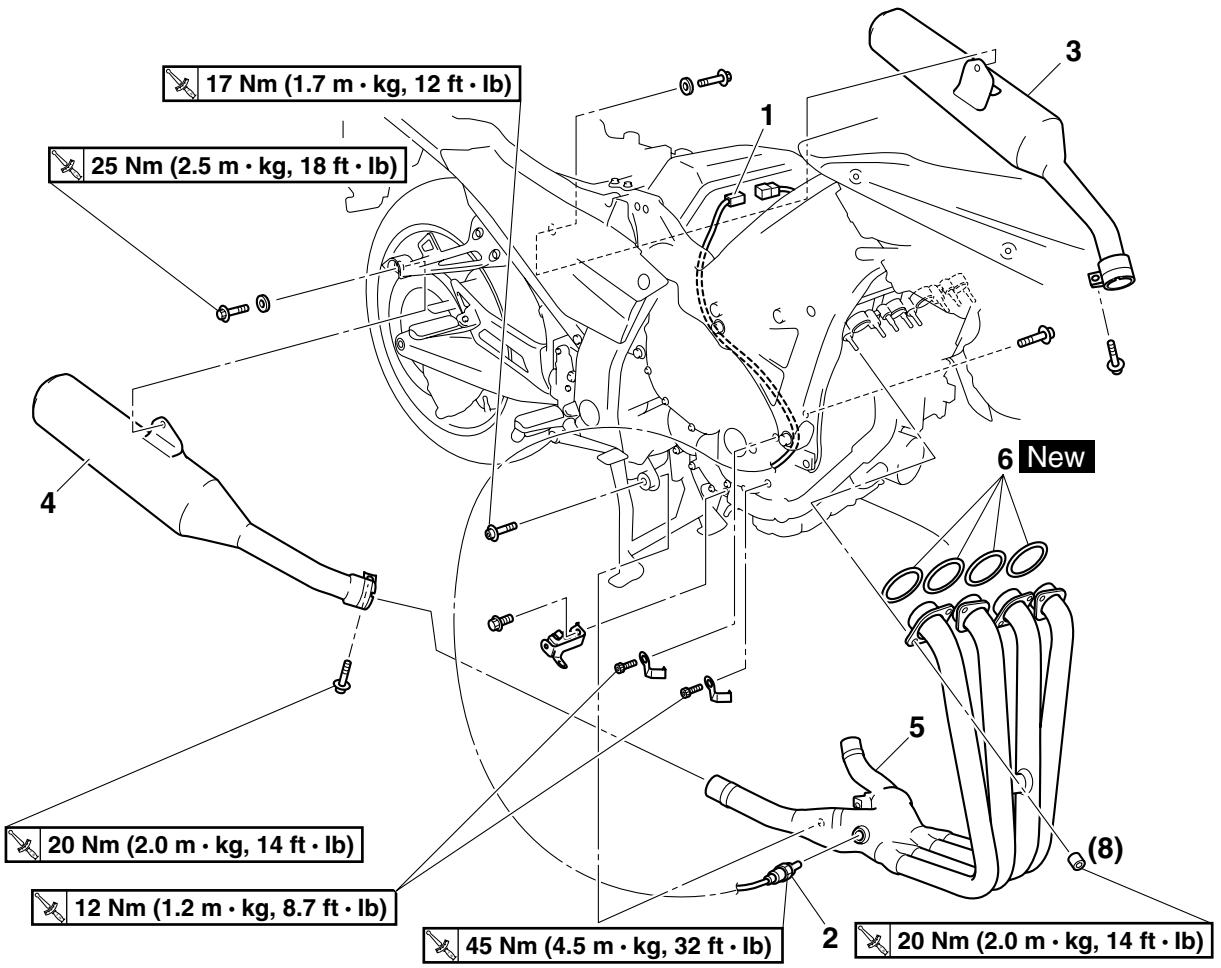

Order	Job/Parts to remove	Q'ty	Remarks
	Left side cowling/Right side cowling/T-bar		Refer to "GENERAL CHASSIS" on page 4-1.
	Fuel tank		Refer to "FUEL TANK" on page 7-1.
	Coolant		Drain. Refer to "CHANGING THE COOLANT" on page 3-19.
	Radiator		Refer to "RADIATOR" on page 6-1.
1	O_2 sensor coupler	1	Disconnect.
2	O_2 sensor	1	
3	Left muffler	1	
4	Right muffler	1	
5	Exhaust pipe assembly	1	
6	Gasket	4	
			For installation, reverse the removal procedure.

Disconnecting the leads and hoses

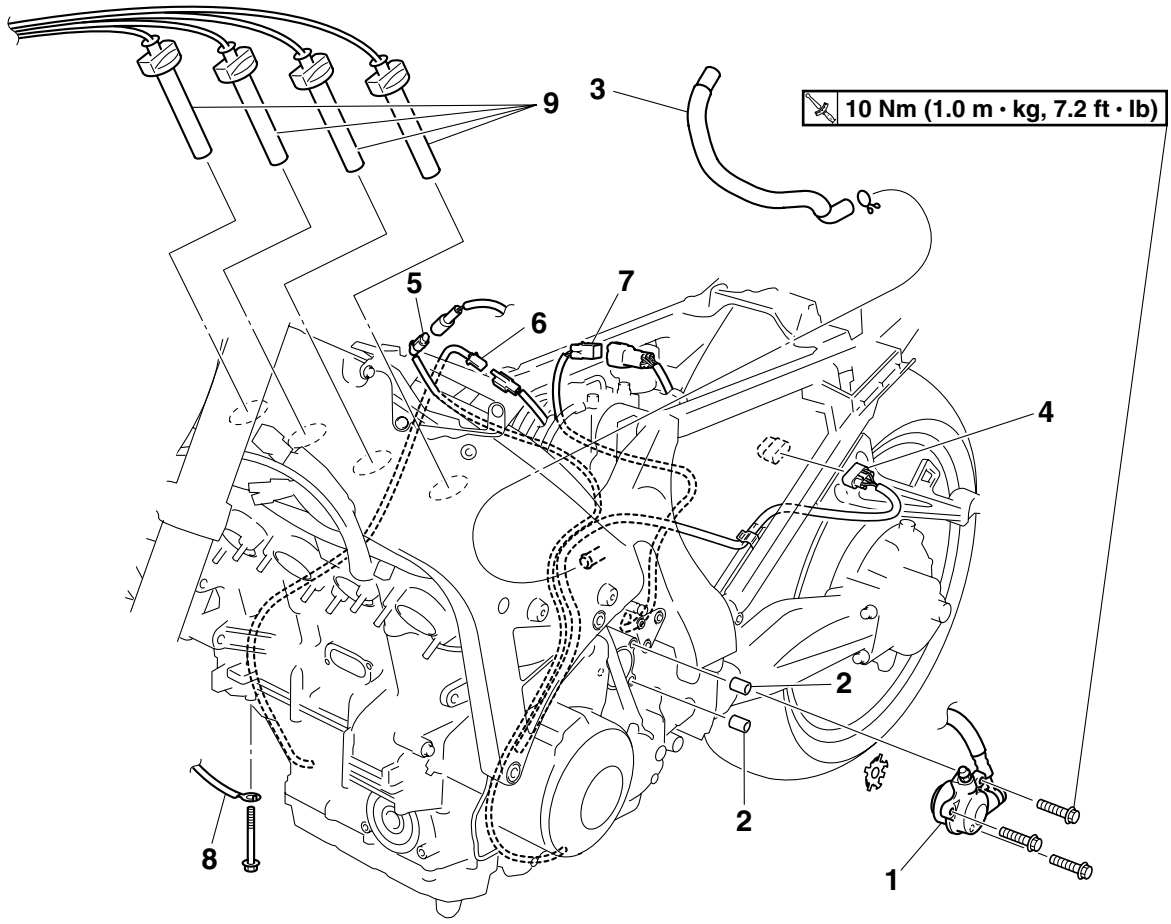

Order	Job/Parts to remove	Q'ty	Remarks
	Front fender		Refer to "FRONT WHEEL" on page 4-13.
	Air filter case		Refer to "GENERAL CHASSIS" on page 4-1.
	Throttle bodies		Refer to "THROTTLE BODIES" on page 7-4.
	Air cut-off valve/Reed valves		Refer to "AIR INDUCTION SYSTEM" on page 7-9.
	Thermostat/Thermostat inlet pipe 1		Refer to "THERMOSTAT" on page 6-6.
	Engine oil/Oil filter cartridge		Drain. Refer to "CHANGING THE ENGINE OIL" on page 3-13.
	Oil cooler		Refer to "OIL COOLER" on page 6-4.
	Water pump		Refer to "WATER PUMP" on page 6-10.
	Starter motor		Refer to "ELECTRIC STARTER" on page 5-37.
	Left footrest assembly/Sidestand		Refer to "SHAFT DRIVE" on page 4-87.
1	Clutch release cylinder	1	
2	Dowel pin	2	
3	Crankcase breather hose	1	
4	Stator coil coupler	1	Disconnect.

Disconnecting the leads and hoses

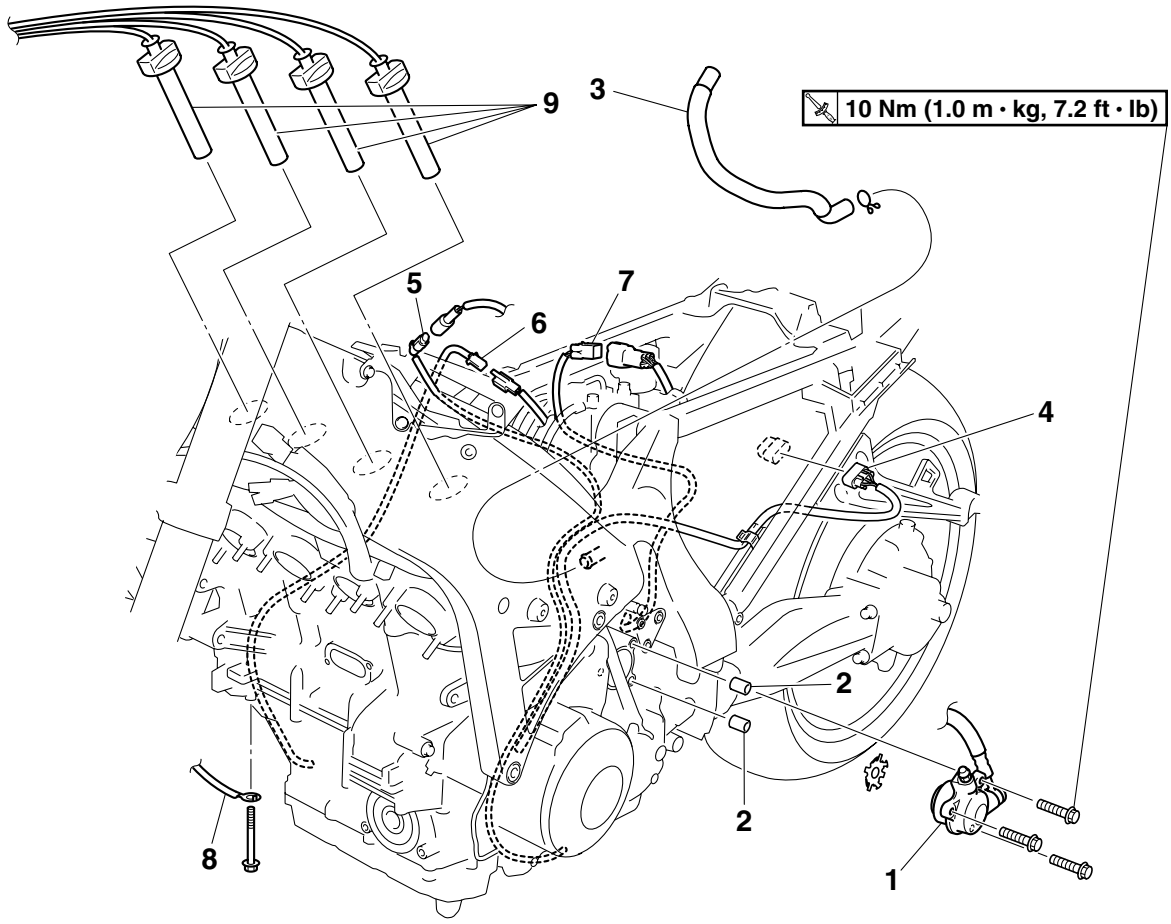

Order	Job/Parts to remove	Q'ty	Remarks
5	Oil level switch coupler	1	Disconnect.
6	Crankshaft position sensor coupler	1	Disconnect.
7	Gear position switch coupler	1	Disconnect.
8	Ground lead	1	Disconnect.
9	Spark plug cap	4	
			For installation, reverse the removal procedure.

Removing the engine

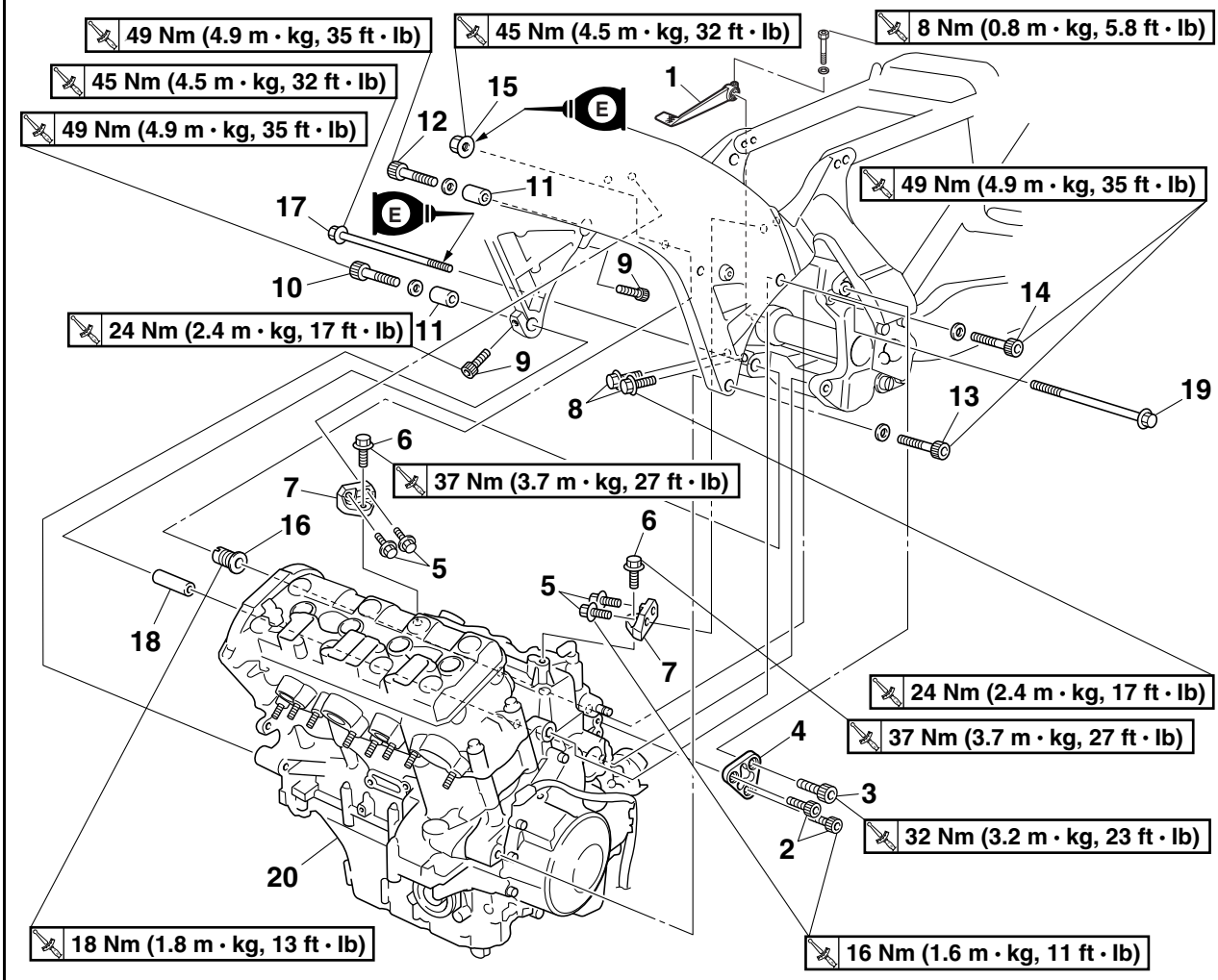

Order	Job/Parts to remove	Q'ty	Remarks
			NOTE: Place a suitable stand under the engine.
1	Brake pedal	1	
2	Engine mounting bolt (left rear side)	2	
3	Engine bracket bolt (left rear side)	1	
4	Engine bracket (left rear side)	1	
5	Engine bracket bolt (top)	4	
6	Engine mounting bolt (top)	2	
7	Engine bracket (top)	2	
8	Pinch bolt (rear side)	2	
9	Pinch bolt (front side)	2	
10	Engine mounting bolt (right front lower side)	1	
11	Spacer	2	
12	Engine mounting bolt (right front upper side)	1	
13	Engine mounting bolt (left front lower side)	1	
14	Engine mounting bolt (left front upper side)	1	
15	Engine mounting nut (rear upper side)	1	

Removing the engine

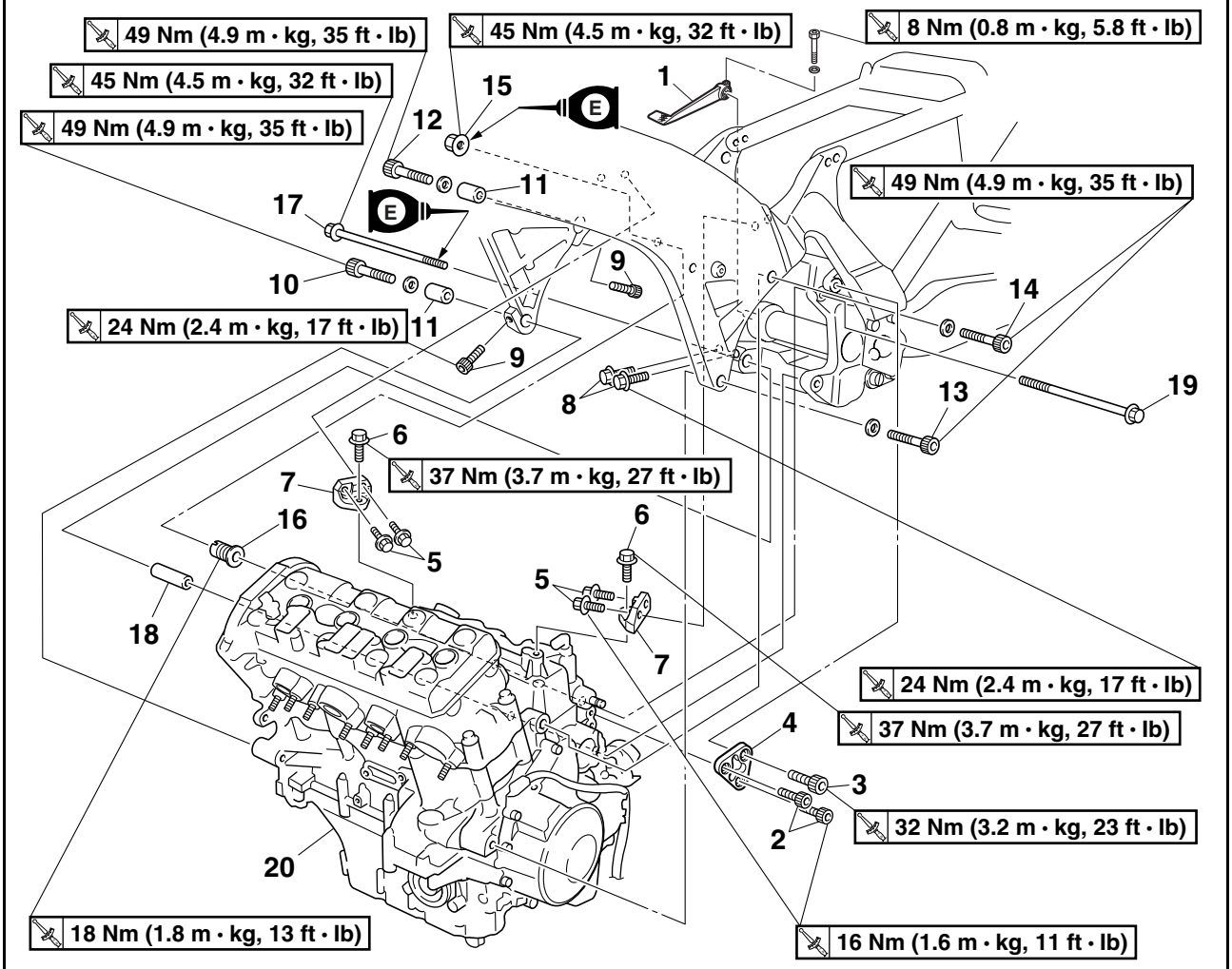

Order	Job/Parts to remove	Q'ty	Remarks
16	Spacer bolt	1	Loosen.
17	Engine mounting bolt (rear lower side)	1	
18	Spacer	1	
19	Engine mounting bolt (rear upper side)	1	
20	Engine	1	
			For installation, reverse the removal procedure.

ET3P61023
REMOVING THE ENGINE

1. Loosen:
   - Spacer bolt

NOTE:

Loosen the spacer bolt with the pivot shaft wrench “1” and pivot shaft wrench adapter “2”.

Pivot shaft wrench
90890-01471
Frame spanner socket
YM-01471
Pivot shaft wrench adapter
90890-01476

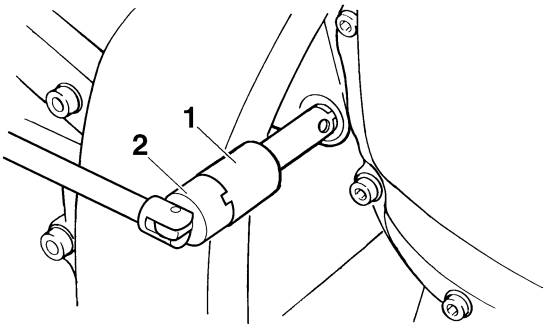

EAS23720
INSTALLING THE ENGINE

1. Install:
   - Engine

NOTE:

When mounting the engine to the frame, be sure to align the splines on the middle driven shaft with the splines on the universal joint.

2. Install:
   - Spacer bolt “1”
   - Engine mounting bolt (rear upper side) “2”
   - Spacer “3”
   - Engine mounting bolt (rear lower side) “4”
   - Engine mounting bolt (left front upper side) “5”
   - Engine mounting bolt (left front lower side) “6”
   - Spacers “7”
   - Engine mounting bolt (right front upper side) “8”
   - Engine mounting bolt (right front lower side) “9”
   - Pinch bolts (front side) “10”
   - Pinch bolts (rear side) “11”
   - Engine brackets (top) “12”
   - Engine bracket bolts (top) “13”

NOTE:

- Lubricate the engine mounting bolt (rear lower side) threads with engine oil.
- Do not fully tighten the bolts.

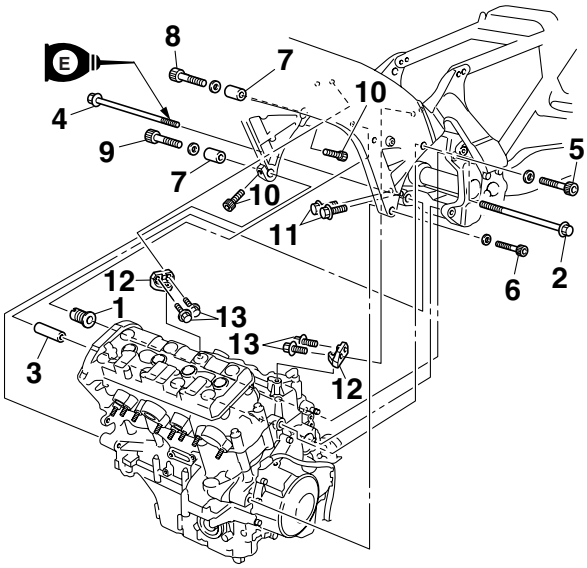

3. Tighten:
   - Engine mounting bolt (left front upper side) “5”

Engine mounting bolt (left front upper side)
49 Nm (4.9 m·kg, 35 ft·lb)

4. Tighten:
   - Engine mounting bolt (rear lower side) “4”

Engine mounting bolt (rear lower side)
45 Nm (4.5 m·kg, 32 ft·lb)

5. Tighten:
   - Spacer bolt “1”

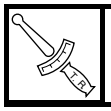

Spacer bolt
18 Nm (1.8 m·kg, 13 ft·lb)

NOTE:

- Tighten the spacer bolt “1” to specification with a pivot shaft wrench.
- When tightened, the spacer bolt should be flat against the engine surface.

Pivot shaft wrench
90890-01471
Frame spanner socket
YM-01471
Pivot shaft wrench adapter
90890-01476

6. Tighten:
   - Engine mounting nut (rear upper side) “14”

Engine mounting nut (rear upper side)
45 Nm (4.5 m·kg, 32 ft·lb)

NOTE:

Lubricate the engine mounting nut (rear upper side) threads with engine oil.

7. Tighten:
   - Engine mounting bolt (left front lower side) “6”
   - Engine mounting bolt (right front upper side) “8”
   - Engine mounting bolt (right front lower side) “9”

Engine mounting bolt (left front lower side)
49 Nm (4.9 m·kg, 35 ft·lb)
Engine mounting bolt (right front upper side)
49 Nm (4.9 m·kg, 35 ft·lb)
Engine mounting bolt (right front lower side)
49 Nm (4.9 m·kg, 35 ft·lb)

8. Install:
   - Engine mounting bolts (top) “15”
9. Tighten:
   - Pinch bolts (front side) “10”

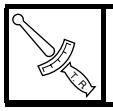

Pinch bolt (front side)
24 Nm (2.4 m·kg, 17 ft·lb)

10. Tighten:
    - Pinch bolts (rear side) “11”

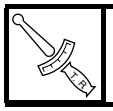

Pinch bolt (rear side)
24 Nm (2.4 m·kg, 17 ft·lb)

NOTE:

Tighten the pinch bolts (rear side) one at a time, making sure to tighten the first bolt again after tightening the second bolt.

11. Tighten:
    - Engine mounting bolts (top) “15” (temporarily tighten)
    - Engine bracket bolts (top) “13” (temporarily tighten)

NOTE:

When temporarily tightened, the bolts “15” and “13” should be flat against the engine and frame surface.

12. Tighten:
    - Engine mounting bolts (top) “15”
    - Engine bracket bolts (top) “13”

Engine mounting bolt (top)
37 Nm (3.7 m·kg, 27 ft·lb)
Engine bracket bolt (top)
16 Nm (1.6 m·kg, 11 ft·lb)

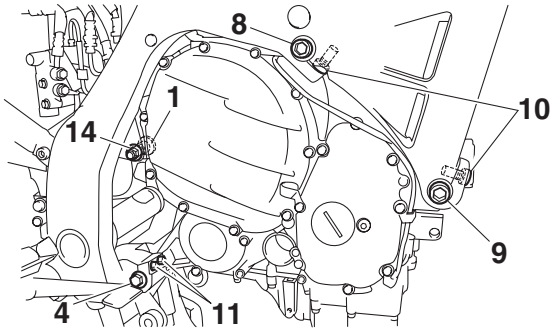

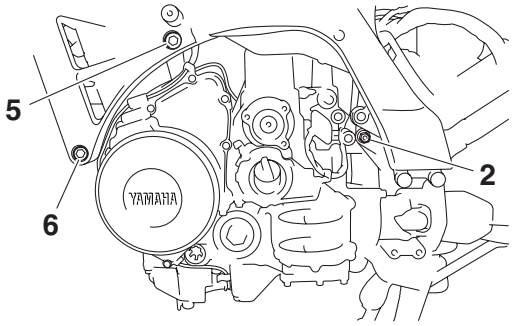

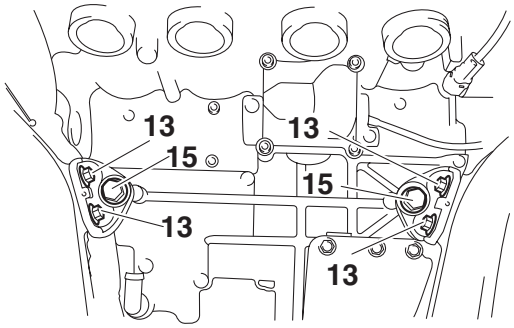

13. Install:
    - Engine bracket (left rear side) “1”
    - Engine bracket bolt (left rear side) “2”
    - Engine mounting bolts (left rear side) “3”

NOTE:

Do not fully tighten the bolts.

14. Tighten:
- Engine bracket bolt (left rear side) “2”

	Engine bracket bolt (left rear side) **32 Nm (3.2 m·kg, 23 ft·lb)**

15. Tighten:
- Engine mounting bolts (left rear side) “3”

	Engine mounting bolt (left rear side) **16 Nm (1.6 m·kg, 11 ft·lb)**

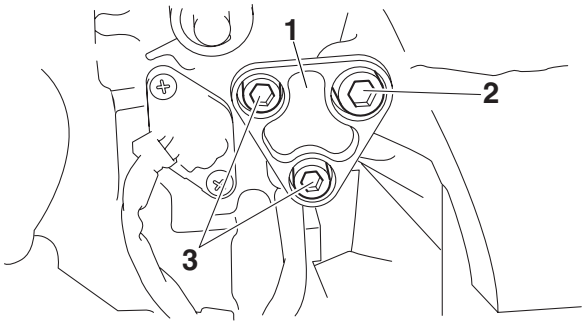

16. Install:
- Brake pedal “1”

	Brake pedal pinch bolt **8 Nm (0.8 m·kg, 5.8 ft·lb)**

NOTE:

Align the punch mark “a” on the brake pedal with the punch mark “b” on the brake pedal pivot shaft.

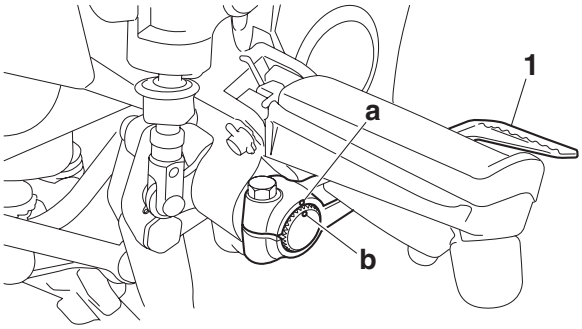

EAS23760

CAMSHAFTS

Removing the cylinder head cover

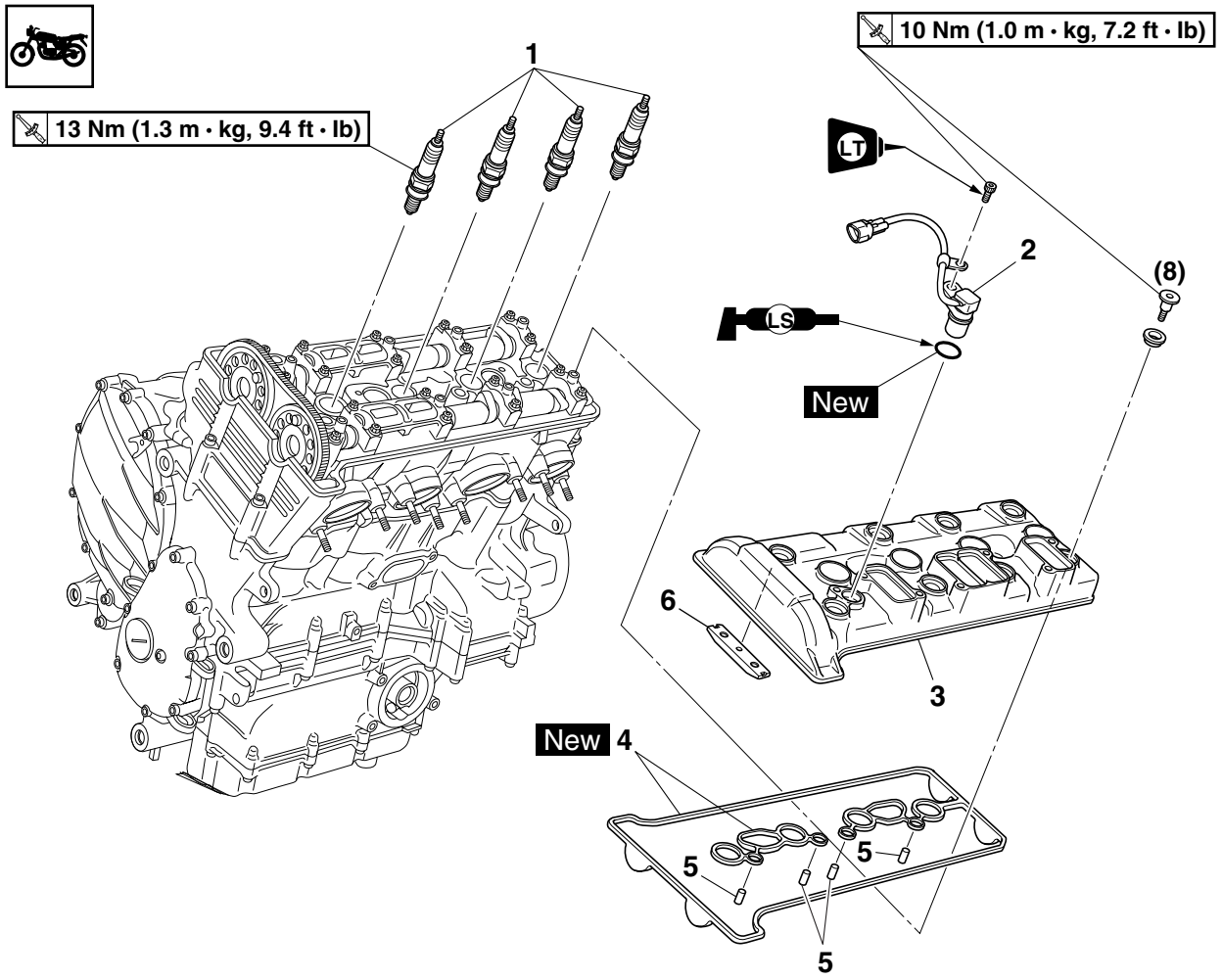

Order	Job/Parts to remove	Q'ty	Remarks
	Right side cowling		Refer to "GENERAL CHASSIS" on page 4-1.
	Air cut-off valve/Reed valves		Refer to "AIR INDUCTION SYSTEM" on page 7-9.
1	Spark plug	4	
2	Cylinder identification sensor	1	
3	Cylinder head cover	1	
4	Cylinder head cover gasket	1	
5	Dowel pin	4	
6	Timing chain guide (upper side)	1	
			For installation, reverse the removal procedure.

Removing the camshafts

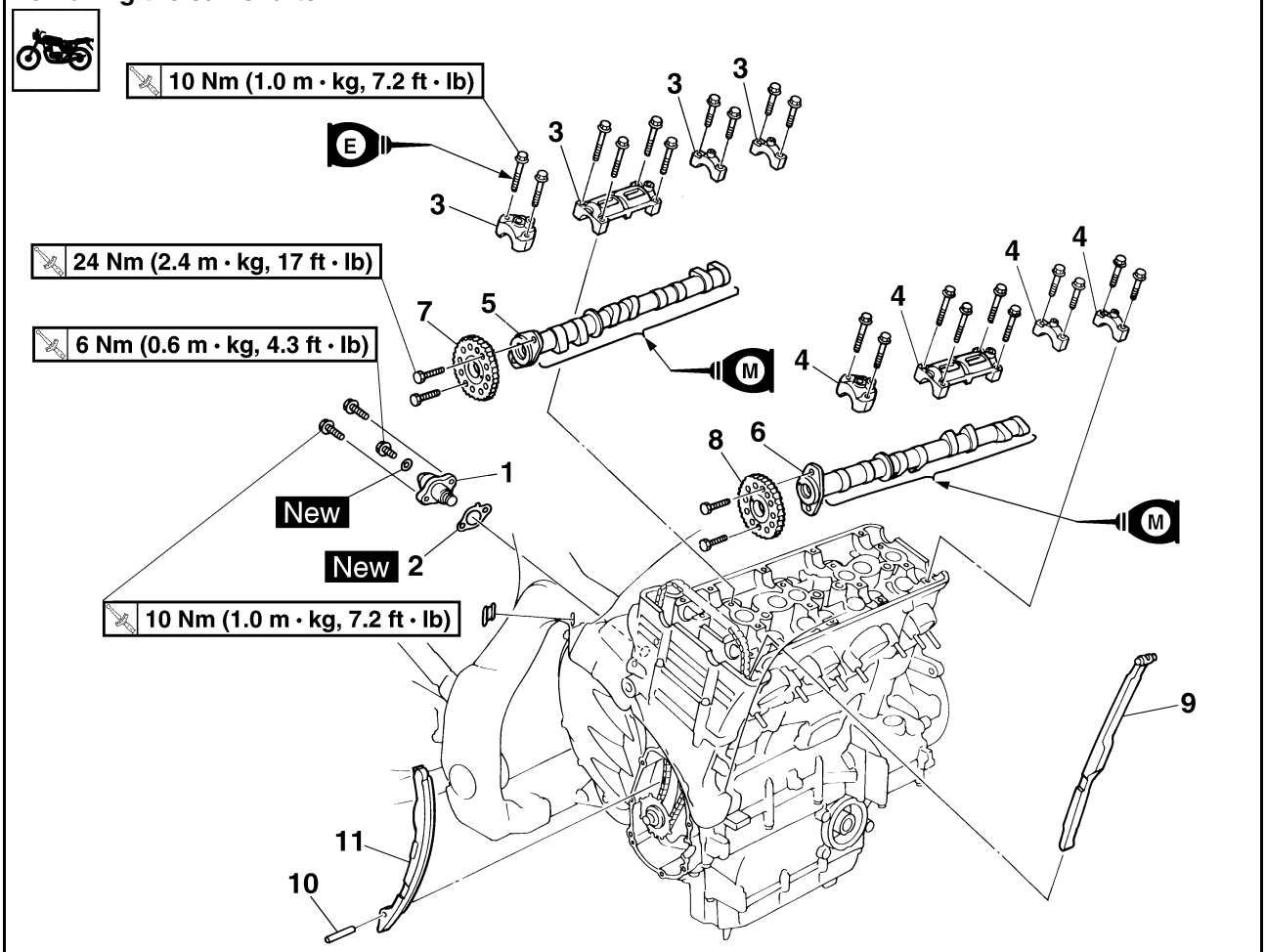

Order	Job/Parts to remove	Q'ty	Remarks
	Throttle bodies		Refer to "THROTTLE BODIES" on page 7-4.
	Pickup rotor cover		Refer to "PICKUP ROTOR" on page 5-34.
1	Timing chain tensioner	1	
2	Timing chain tensioner gasket	1	
3	Intake camshaft cap	4	
4	Exhaust camshaft cap	4	
5	Intake camshaft	1	
6	Exhaust camshaft	1	
7	Intake camshaft sprocket	1	
8	Exhaust camshaft sprocket	1	
9	Timing chain guide (exhaust side)	1	
10	Pin	1	
11	Timing chain guide (intake side)	1	
			For installation, reverse the removal procedure.

EAS23810
REMOVING THE CAMSHAFTS

1. Align:
   - "T" mark on the pickup rotor (with the crankcase mating surface)

▼▼▼▼▼▼▼▼▼▼▼▼▼▼▼▼▼▼▼▼▼▼▼▼▼▼▼▼▼▼▼▼▼▼

a. Turn the crankshaft clockwise.
b. When piston #1 is at TDC on the compression stroke, align the "T" mark "a" on the pick-up rotor with the crankcase mating surface "b".

NOTE:

TDC on the compression stroke can be found when the camshaft lobes are turned away from each other.

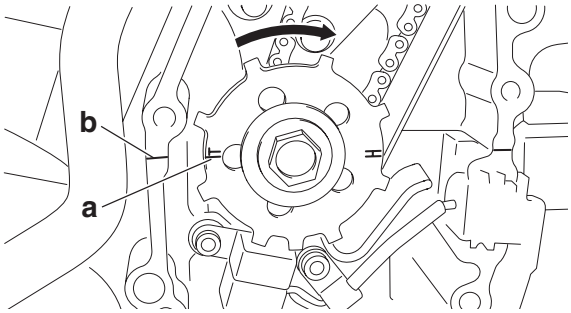

▲▲▲▲▲▲▲▲▲▲▲▲▲▲▲▲▲▲▲▲▲▲▲▲▲▲▲▲▲▲▲▲▲▲

2. Remove:
   - Rubber cap "1"
   - Timing chain tensioner cap bolt "2"
   - Washer

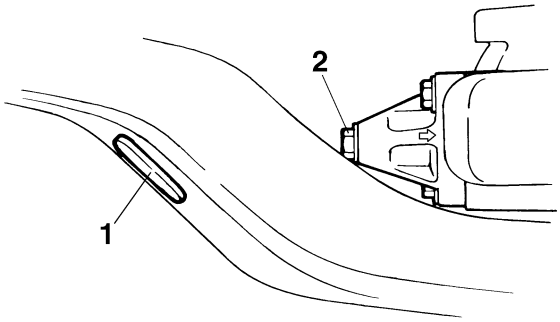

3. Turn the timing chain tensioner rod fully clockwise with a thin screwdriver "1".

NOTE:

Make sure that the tensioner rod has been fully set clockwise.

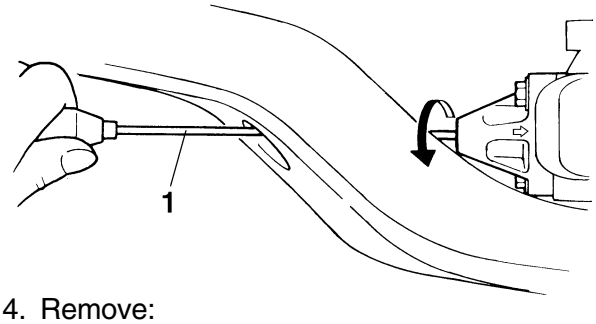

4. Remove:
   - Timing chain tensioner
   - Timing chain tensioner gasket
5. Remove:
   - Camshaft caps
   - Dowel pins

ECA13720

CAUTION:

To prevent damage to the cylinder head, camshafts or camshaft caps, loosen the camshaft cap bolts in stages and in a criss-cross pattern, working from the outside in.

6. Remove:
   - Intake camshaft "1"
   - Exhaust camshaft "2"

NOTE:

To prevent the timing chain from falling into the crankcase, fasten it with a wire "3".

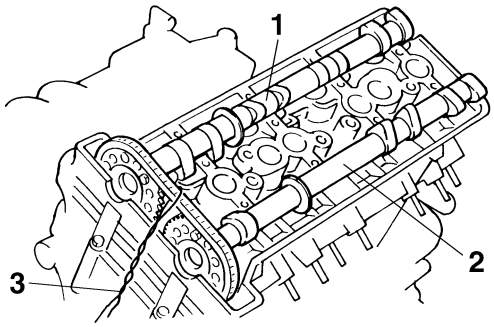

7. Remove:
   - Intake camshaft sprocket
   - Exhaust camshaft sprocket

NOTE:

While holding the camshaft sprockets with the rotor holding tool "1", loosen the camshaft sprocket bolts.

Rotor holding tool
90890-01235
Universal magneto & rotor holder
YU-01235

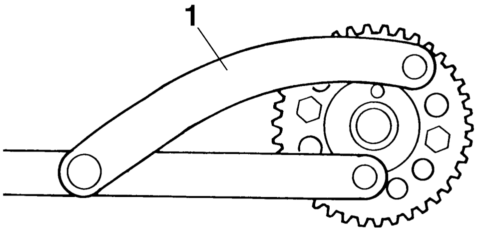

EAS23850

CHECKING THE CAMSHAFTS

1. Check:
   - Camshaft lobes
     Blue discoloration/pitting/scratches → Replace the camshaft.
2. Measure:
   - Camshaft lobe dimensions "a" and "b"
     Out of specification → Replace the camshaft.

Camshaft lobe dimensions **Intake A** **33.050–33.150 mm (1.3012–1.3051 in)** **Limit** **32.050 mm (1.2618 in)** **Intake B** **24.997–25.097 mm (0.9841–0.9881 in)** **Limit** **23.997 mm (0.9448 in)** **Exhaust A** **33.050–33.150 mm (1.3012–1.3051 in)** **Limit** **32.950 mm (1.2972 in)** **Exhaust B** **24.997–25.097 mm (0.9841–0.9881 in)** **Limit** **24.897 mm (0.9802 in)**

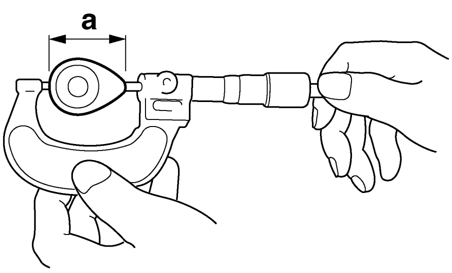

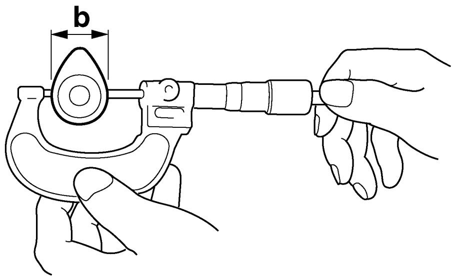

3. Measure:
   - Camshaft runout
     Out of specification → Replace.

Camshaft runout limit **0.030 mm (0.0012 in)**

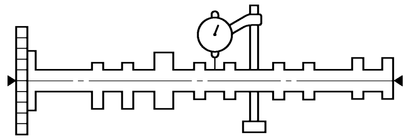

4. Measure:
   - Camshaft-journal-to-camshaft-cap clearance
     Out of specification → Measure the camshaft journal diameter.

Camshaft-journal-to-camshaft-cap clearance **0.028–0.062 mm (0.0011–0.0024 in)**

▼▼▼▼▼▼▼▼▼▼▼▼▼▼▼▼▼▼▼▼▼▼▼▼▼▼▼▼▼▼▼▼▼▼

a. Install the camshaft into the cylinder head (without the dowel pins and camshaft caps).
b. Position a strip of Plastigauge® "1" onto the camshaft journal as shown.

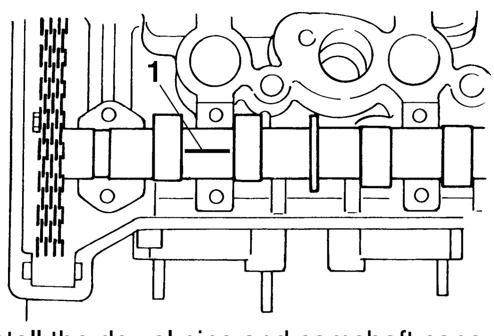

c. Install the dowel pins and camshaft caps.

NOTE:
- Tighten the camshaft cap bolts in stages and in a crisscross pattern, working from the inner caps out.
- Do not turn the camshaft when measuring the camshaft journal-to-camshaft cap clearance with the Plastigauge®.

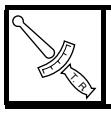	**Camshaft cap bolt** **10 Nm (1.0 m·kg, 7.2 ft·lb)**

d. Remove the camshaft caps and then measure the width of the Plastigauge® "1".

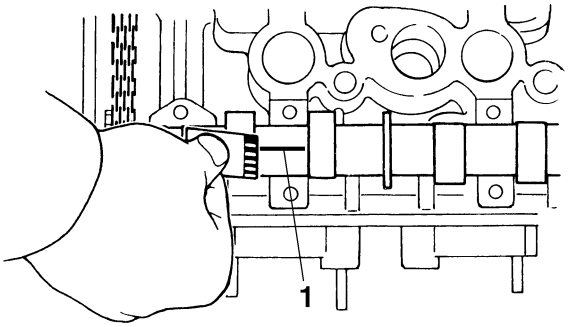

▲▲▲▲▲▲▲▲▲▲▲▲▲▲▲▲▲▲▲▲▲▲▲▲▲▲▲▲▲▲▲▲▲▲

5. Measure:
   - Camshaft journal diameter "a"
     Out of specification → Replace the camshaft.
     Within specification → Replace the cylinder head and the camshaft caps as a set.

	Camshaft journal diameter **24.459–24.472 mm (0.9630–0.9635 in)**

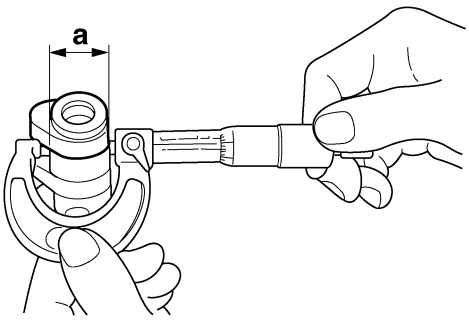

EAS23870
CHECKING THE CAMSHAFT SPROCKETS

1. Check:
   - Camshaft sprockets
     More than 1/4 tooth wear "a" → Replace the camshaft sprockets, timing chain, and crankshaft as a set.

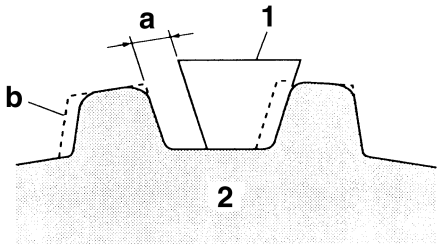

a. 1/4 tooth
b. Correct
1. Timing chain roller
2. Camshaft sprocket

EAS23950
CHECKING THE TIMING CHAIN GUIDES

1. Check:
   - Timing chain guide (exhaust side)
   - Timing chain guide (intake side)
   - Timing chain guide (upper side)
     Damage/wear → Replace the defective part(s).

EAS23970
CHECKING THE TIMING CHAIN TENSIONER

1. Check:
   - Timing chain tensioner
     Cracks/damage/rough movement → Replace.

▼▼▼▼▼▼▼▼▼▼▼▼▼▼▼▼▼▼▼▼▼▼▼▼▼▼▼▼▼▼▼▼▼▼

a. Lightly press the timing chain tensioner rod into the timing chain tensioner housing by hand.

NOTE:
While pressing the timing chain tensioner rod, wind it clockwise with a thin screwdriver "1" until it stops.

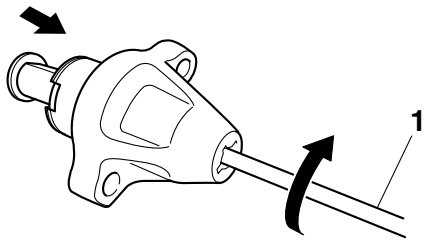

b. Remove the screwdriver and slowly release the timing chain tensioner rod.
c. Make sure that the timing chain tensioner rod comes out of the timing chain tensioner housing smoothly. If there is rough movement, replace the timing chain tensioner.

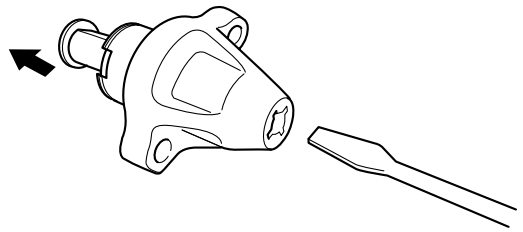

▲▲▲▲▲▲▲▲▲▲▲▲▲▲▲▲▲▲▲▲▲▲▲▲▲▲▲▲▲▲▲▲

EAS24010

INSTALLING THE CAMSHAFTS

1. Install:
   - Exhaust camshaft sprocket
   - Intake camshaft sprocket

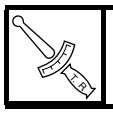	**Camshaft sprocket bolt** **24 Nm (2.4 m·kg, 17 ft·lb)**

NOTE:

- While holding the camshaft sprockets with the rotor holding tool “1”, tighten the camshaft sprocket bolts.
- Make sure that the holes “a” in the cylinder-#4 cam and match marks “b” and “c” on the camshaft sprockets are in the position shown in the illustration.
  2: Exhaust camshaft sprocket
  3: Intake camshaft sprocket
  b: Exhaust side “→”
  c: Intake side “—”
  d: Cylinder-#1 cam

	Rotor holding tool **90890-01235** **Universal magneto & rotor holder** **YU-01235**

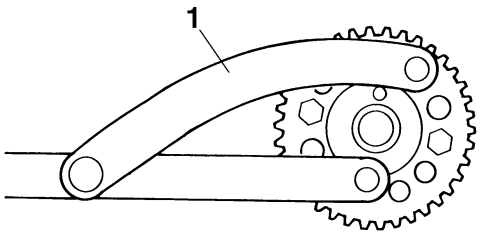

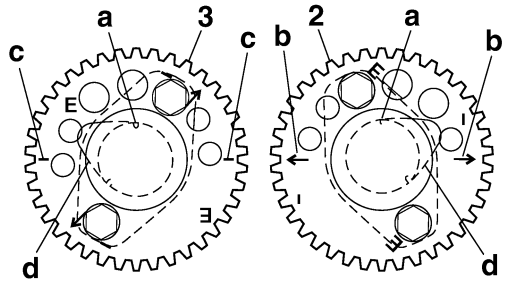

2. Install:
   - Timing chain “1”
   - Exhaust camshaft “2”
   - Intake camshaft “3”
     (with the camshaft sprockets)

ECA13740

CAUTION:

Do not turn the crankshaft when installing the camshaft(s) to avoid damage or improper valve timing.

▼▼▼▼▼▼▼▼▼▼▼▼▼▼▼▼▼▼▼▼▼▼▼▼▼▼▼▼▼▼▼▼

a. Install the timing chain onto both camshaft sprockets, and then install the camshafts.

NOTE:

- Make sure the holes “a” on each camshaft faces up.
- When installing the timing chain, start with the exhaust camshaft and be sure to keep the timing chain as tight as possible on the exhaust side.
- Make sure the match marks “b” and “c” on the camshaft sprockets are aligned with the cylinder head edge.
  b: Exhaust side “→”
  c: Intake side “—”

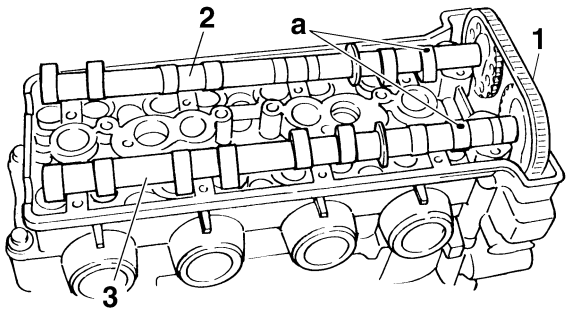

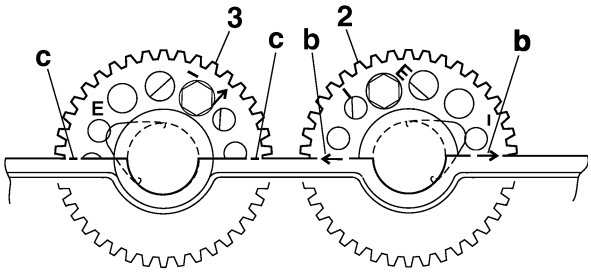

▲▲▲▲▲▲▲▲▲▲▲▲▲▲▲▲▲▲▲▲▲▲▲▲▲▲▲▲▲▲▲▲

3. Install:
   - Exhaust camshaft caps
   - Intake camshaft caps

NOTE:

- Make sure each camshaft cap is installed in its original place. Refer to the identification marks as follows:
  "E", "E1", "E2", "E3": Exhaust
  "I", "I1", "I2", "I3": Intake
- Make sure the arrow mark "a" on each camshaft points towards the right side of the engine.
- Make sure the holes "b" in the camshafts are aligned with arrow mark "a" on the camshaft caps.

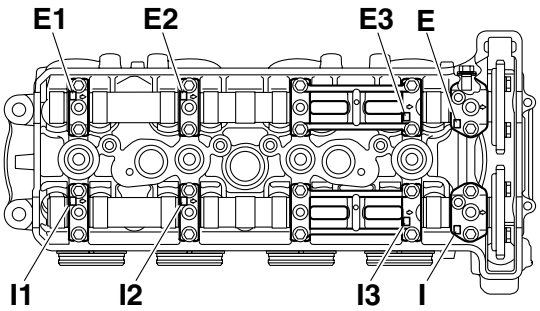

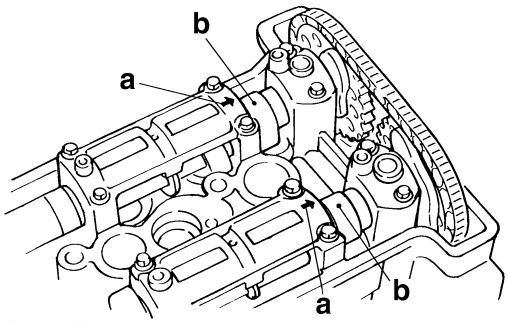

4. Install:
   - Camshaft cap bolts

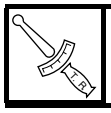	**Camshaft cap bolt** **10 Nm (1.0 m·kg, 7.2 ft·lb)**

ECA13730

CAUTION:

The camshaft cap bolts must be tightened evenly or damage to the cylinder head, camshaft caps, and camshafts will result.

NOTE:

Tighten the camshaft cap bolts in stages and in a crisscross pattern, working from the inner caps out.

5. Align:
   - "T" mark on the pickup rotor
     (with the crankcase mating surface)

▼▼▼▼▼▼▼▼▼▼▼▼▼▼▼▼▼▼▼▼▼▼▼▼▼▼▼▼▼▼▼▼

a. Turn the crankshaft clockwise.
b. When piston #1 is at TDC on the compression stroke, align the "T" mark "a" on the pickup rotor with the crankcase mating surface "b".

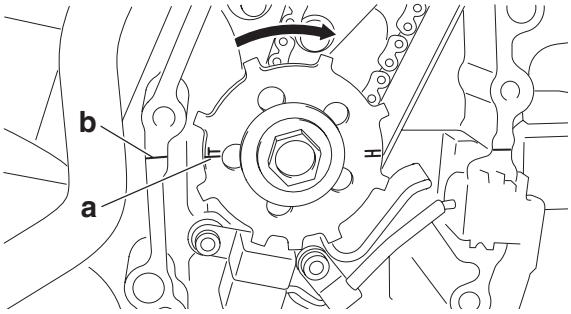

▲▲▲▲▲▲▲▲▲▲▲▲▲▲▲▲▲▲▲▲▲▲▲▲▲▲▲▲▲▲▲▲

6. Install:
   - Timing chain tensioner
   - Timing chain tensioner gasket New

▼▼▼▼▼▼▼▼▼▼▼▼▼▼▼▼▼▼▼▼▼▼▼▼▼▼▼▼▼▼▼▼

a. While lightly pressing the timing chain tensioner rod by hand, turn the tensioner rod fully clockwise with a thin screwdriver "1".
b. With the timing chain tensioner rod turned all the way into the timing chain tensioner housing (with the thin screwdriver still installed), install the gasket and the timing chain tensioner "2" onto the cylinder block.
c. Tighten the timing chain tensioner bolts "3" to the specified torque.

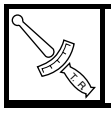	**Timing chain tensioner bolt** **10 Nm (1.0 m·kg, 7.2 ft·lb)**

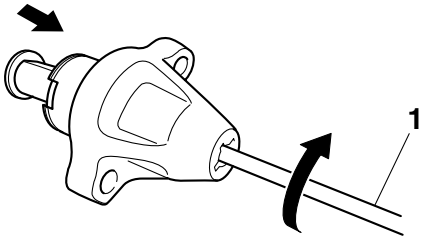

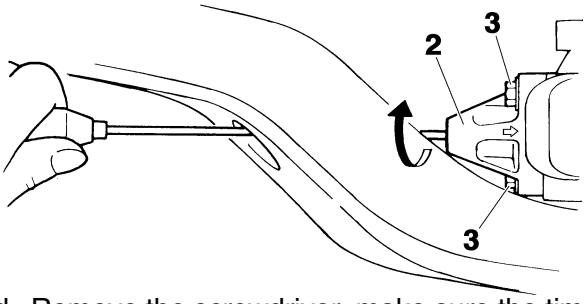

d. Remove the screwdriver, make sure the timing chain tensioner rod releases, and then tighten the cap bolt to the specified torque.

	Timing chain tensioner cap bolt 6 Nm (0.6 m·kg, 4.3 ft·lb)

▲▲▲▲▲▲▲▲▲▲▲▲▲▲▲▲▲▲▲▲▲▲▲▲▲▲▲▲▲▲▲▲▲▲

7. Turn:
   - Crankshaft
     (several turns clockwise)
8. Check:
   - "T" mark
     Make sure the "T" mark "a" on the pickup rotor is aligned with the crankcase mating surface "b".
   - Camshaft holes
     Make sure the holes "c" in the camshafts are aligned with the arrow marks "d" on the camshaft caps.
     Out of alignment → Adjust.
     Refer to the installation steps above.

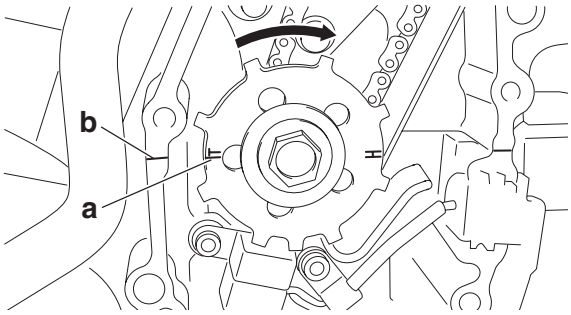

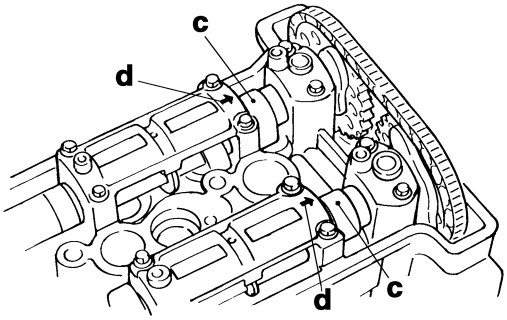

9. Measure:
   - Valve clearance
     Out of specification → Adjust.
     Refer to "ADJUSTING THE VALVE CLEARANCE" on page 3-3.
10. Install:
   - Cylinder head cover gasket New
   - Cylinder head cover

	Cylinder head cover bolt 10 Nm (1.0 m·kg, 7.2 ft·lb)

NOTE:

- Apply Three Bond 1514® "1" onto the mating surfaces of the cylinder head cover and cylinder head cover gasket.
- Apply Yamaha bond No.1215 "2" onto the mating surfaces of the cylinder head cover gasket and cylinder head.
- Tighten the cylinder head cover bolts in stages and in a crisscross pattern.

	Yamaha bond No. 1215 90890-85505 (Three Bond No.1215®)

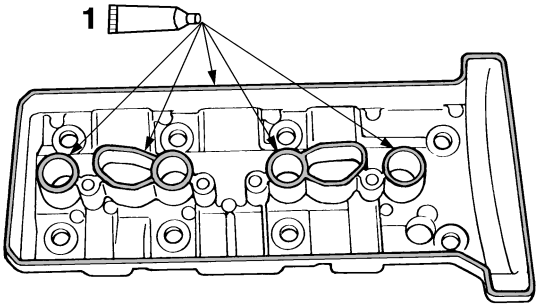

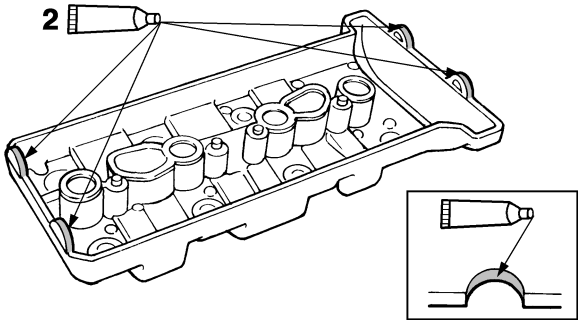
2

EAS24100

CYLINDER HEAD

Removing the cylinder head

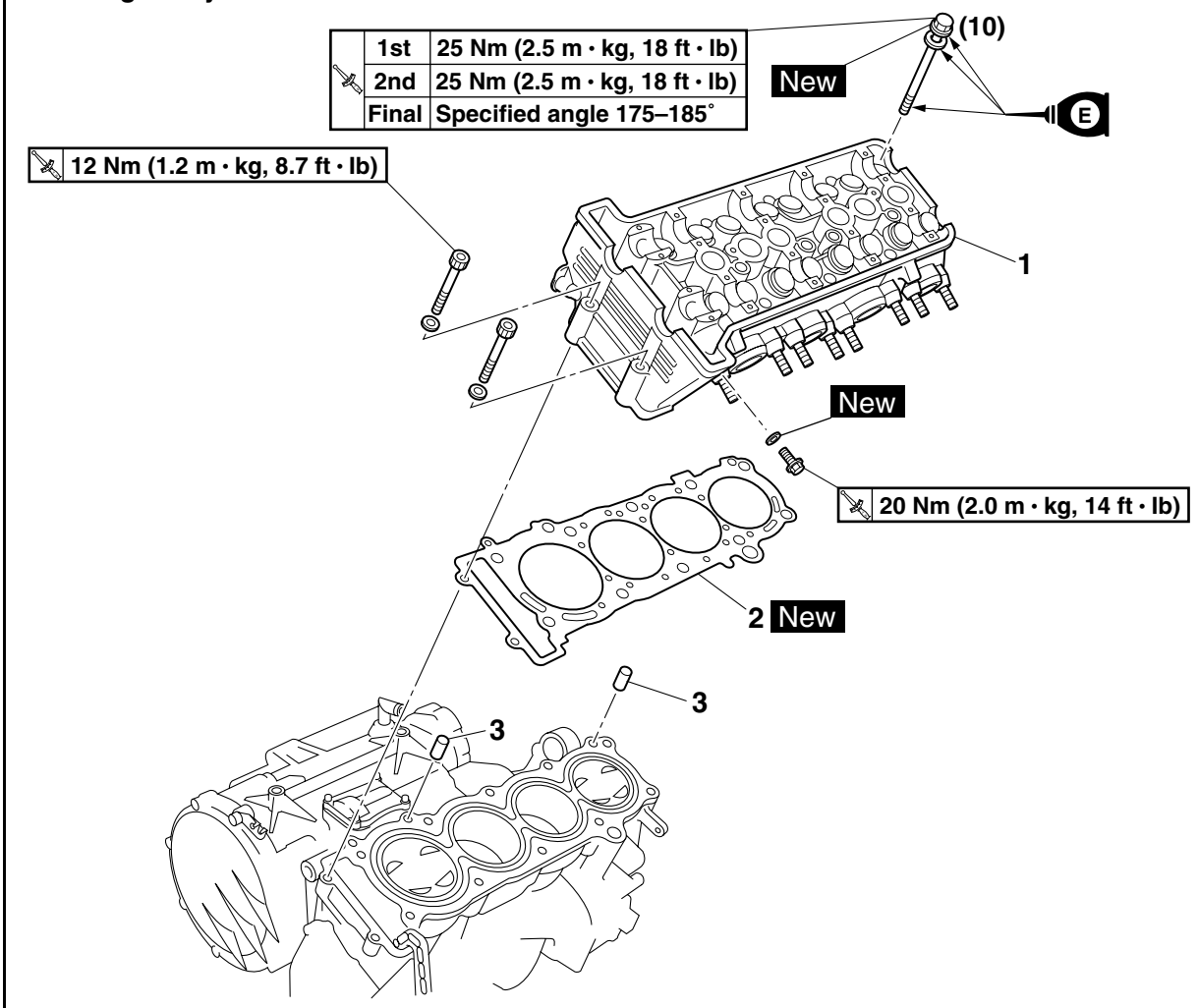

Order	Job/Parts to remove	Q'ty	Remarks
	Engine		Refer to "ENGINE REMOVAL" on page 5-1.
	Camshafts		Refer to "CAMSHAFTS" on page 5-9.
1	Cylinder head	1	
2	Cylinder head gasket	1	
3	Dowel pin	2	
			For installation, reverse the removal procedure.

EAS24120
REMOVING THE CYLINDER HEAD

1. Remove:
   - Cylinder head bolts

NOTE:

- Loosen the bolts in the proper sequence as shown.
- Loosen each bolt 1/2 of a turn at a time. After all of the bolts are fully loosened, remove them.

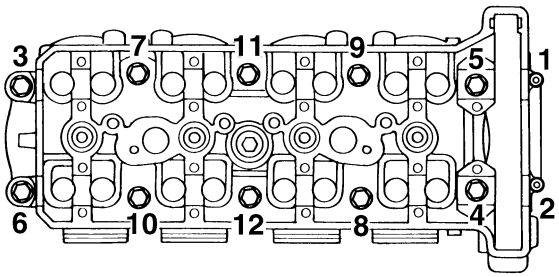

EAS24160
CHECKING THE CYLINDER HEAD

1. Eliminate:
   - Combustion chamber carbon deposits (with a rounded scraper)

NOTE:

Do not use a sharp instrument to avoid damaging or scratching:
- Spark plug bore threads
- Valve seats

2. Check:
   - Cylinder head
     Damage/scratches → Replace.
   - Cylinder head water jacket
     Mineral deposits/rust → Eliminate.
3. Measure:
   - Cylinder head warpage
     Out of specification → Resurface the cylinder head.

Warpage limit
0.10 mm (0.0039 in)

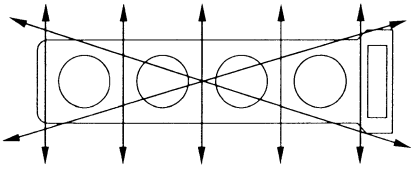

▼▼▼▼▼▼▼▼▼▼▼▼▼▼▼▼▼▼▼▼▼▼▼▼▼▼▼▼▼▼▼▼▼▼

a. Place a straightedge “1” and a thickness gauge “2” across the cylinder head.

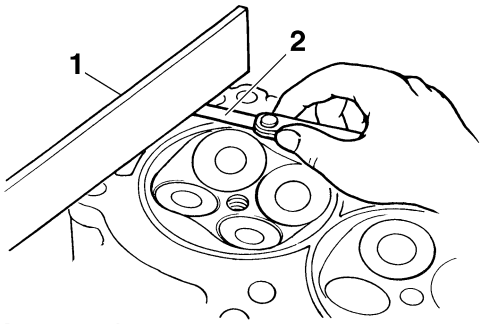

b. Measure the warpage.
c. If the limit is exceeded, resurface the cylinder head as follows.
d. Place a 400–600 grit wet sandpaper on the surface plate and resurface the cylinder head using a figure-eight sanding pattern.

NOTE:

To ensure an even surface, rotate the cylinder head several times.

▲▲▲▲▲▲▲▲▲▲▲▲▲▲▲▲▲▲▲▲▲▲▲▲▲▲▲▲▲▲▲▲▲▲

EAS24240
INSTALLING THE CYLINDER HEAD

1. Install:
   - Cylinder head

NOTE:

Pass the timing chain through the timing chain cavity.

2. Tighten:
   - Cylinder head bolts (M10) “1”–“10” New
   - Cylinder head bolts (M6) “11”, “12”

EW3P61013

⚠ WARNING

Replace the bolts with new ones.

NOTE:

Tighten the bolts using the following procedure.

▼▼▼▼▼▼▼▼▼▼▼▼▼▼▼▼▼▼▼▼▼▼▼▼▼▼▼▼▼▼▼▼▼▼

a. Lubricate the cylinder head bolts and washers with engine oil.
b. Install the washers and cylinder head bolts.
c. Tighten the cylinder head bolts (M10) in the proper tightening sequence as shown.

Cylinder head bolt (M10)
1st
25 Nm (2.5 m·kg, 18 ft·lb)

d. Loosen and retighten the cylinder head bolts in the proper tightening sequence as shown.

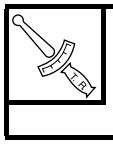

Cylinder head bolt (M10)
2nd
25 Nm (2.5 m·kg, 18 ft·lb)

e. Tighten the cylinder head bolts further to reach the specified angle 175–185° in the proper tightening sequence as shown.

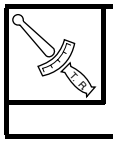

Cylinder head bolt (M10)
Final
Specified angle 175–185°

EW3P61014

WARNING

If the bolt is tightened more than the specified angle, do not loosen the bolt and then retighten it. Instead, replace the bolt with a new one and perform the procedure again.

EC3P61033

CAUTION:

- **Do not use a torque wrench to tighten the bolt to the specified angle.**
- **Tighten the bolt until it is at the specified angle.**

NOTE:

On a hexagonal bolt, note that the angle from one corner to another is 60°.

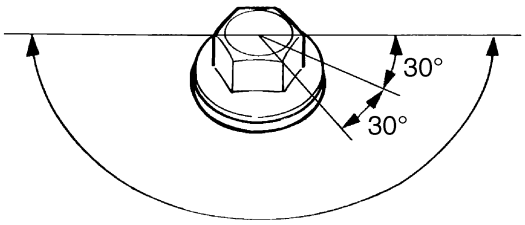

f. Tighten the cylinder head bolts (M6) in proper tightening sequence as shown.

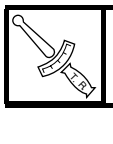

Cylinder head bolt (M6)
12 Nm (1.2 m·kg, 8.7 ft·lb)

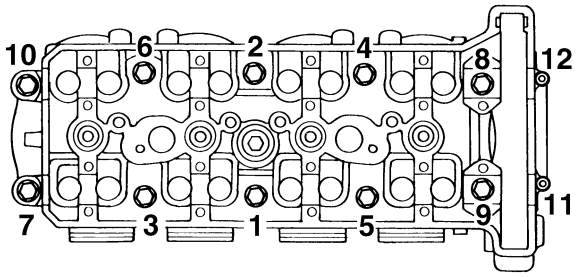

EAS24270

VALVES AND VALVE SPRINGS

Removing the valves and valve springs

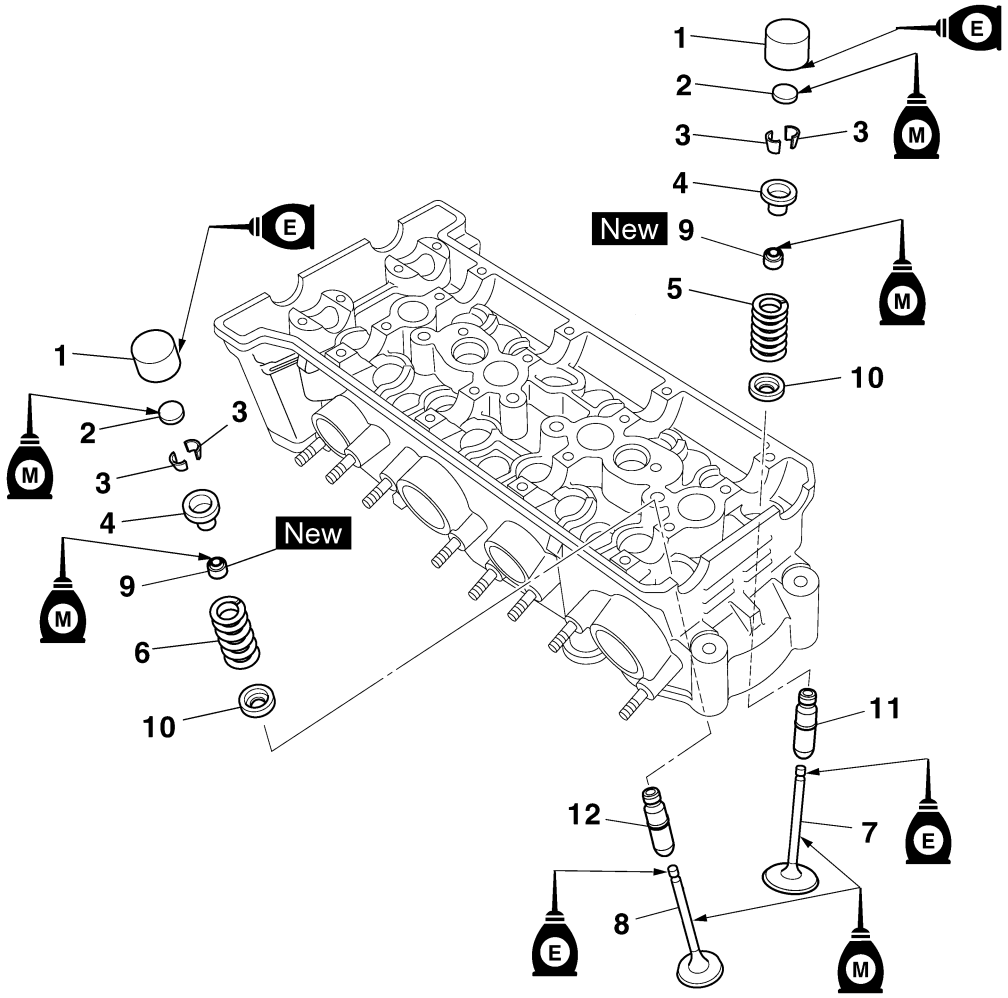

Order	Job/Parts to remove	Q'ty	Remarks
	Cylinder head		Refer to "CYLINDER HEAD" on page 5-18.
1	Valve lifter	16	
2	Valve pad	16	
3	Valve cotter	32	
4	Upper spring seat	16	
5	Intake valve spring	8	
6	Exhaust valve spring	8	
7	Intake valve	8	
8	Exhaust valve	8	
9	Valve stem seal	16	
10	Lower spring seat	16	
11	Intake valve guide	8	
12	Exhaust valve guide	8	
			For installation, reverse the removal procedure.

EAS24280
REMOVING THE VALVES
The following procedure applies to all of the valves and related components.

NOTE:

Before removing the internal parts of the cylinder head (e.g., valves, valve springs, valve seats), make sure the valves properly seal.

1. Remove:
   - Valve lifter “1”
   - Valve pad “2”

NOTE:

Make a note of the position of each valve lifter and valve pad so that they can be reinstalled in their original place.

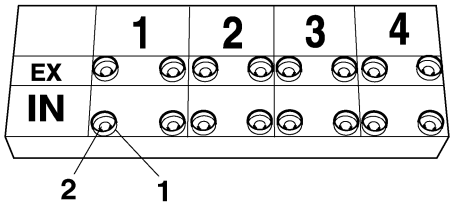

2. Check:
   - Valve sealing
     Leakage at the valve seat → Check the valve face, valve seat, and valve seat width.
     Refer to “CHECKING THE VALVE SEATS” on page 5-24.

▼▼▼▼▼▼▼▼▼▼▼▼▼▼▼▼▼▼▼▼▼▼▼▼▼▼▼▼▼▼▼▼▼▼

a. Pour a clean solvent “a” into the intake and exhaust ports.
b. Check that the valves properly seal.

NOTE:

There should be no leakage at the valve seat “1”.

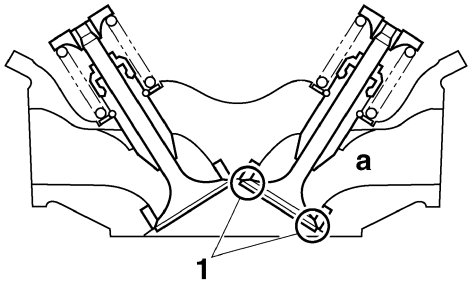

▲▲▲▲▲▲▲▲▲▲▲▲▲▲▲▲▲▲▲▲▲▲▲▲▲▲▲▲▲▲▲▲▲▲

3. Remove:
   - Valve cotters

NOTE:

Remove the valve cotters by compressing the valve spring with the valve spring compressor “1” and the valve spring compressor attachment “2”.

Valve spring compressor
90890-04019
YM-04019
Valve spring compressor attachment
90890-04114
Valve spring compressor adapter 19.5 mm
YM-04114

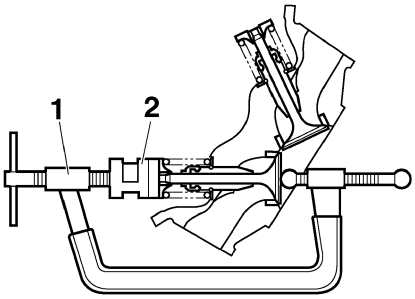

4. Remove:
   - Upper spring seat “1”
   - Valve spring “2”
   - Valve “3”
   - Valve stem seal “4”
   - Lower spring seat “5”

NOTE:

Identify the position of each part very carefully so that it can be reinstalled in its original place.

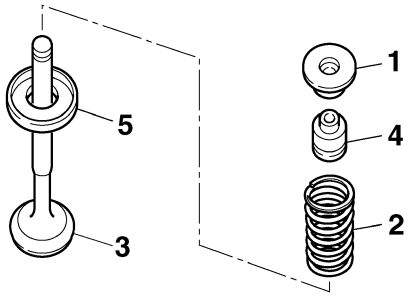

EAS24290
CHECKING THE VALVES AND VALVE GUIDES
The following procedure applies to all of the valves and valve guides.

1. Measure:
   - Valve-stem-to-valve-guide clearance
     Out of specification → Replace the valve guide.

• Valve-stem-to-valve-guide clearance = Valve guide inside diameter “a” - Valve stem diameter “b”

Valve-stem-to-valve-guide clearance (intake)
0.010–0.037 mm (0.0004–0.0015 in)
Limit
0.080 mm (0.0032 in)
Valve-stem-to-valve-guide clearance (exhaust)
0.020–0.047 mm (0.0008–0.0019 in)
Limit
0.105 mm (0.0041 in)

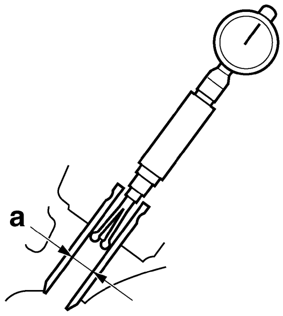

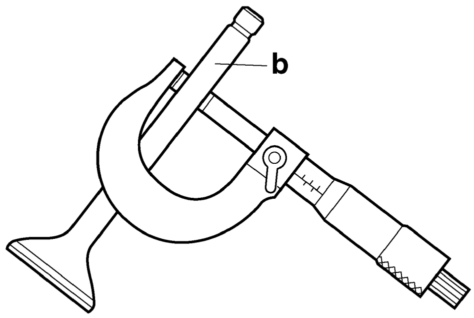

2. Replace:
   - Valve guide

NOTE:
To ease valve guide removal and installation, and to maintain the correct fit, heat the cylinder head to 100 °C (212 °F) in an oven.

▼▼▼▼▼▼▼▼▼▼▼▼▼▼▼▼▼▼▼▼▼▼▼▼▼▼▼▼▼▼▼▼▼▼

a. Remove the valve guide with the valve guide remover “1”.

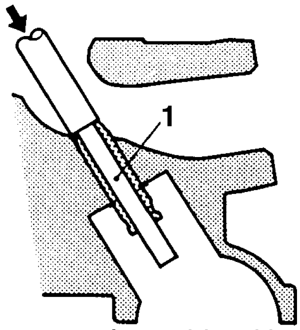

b. Install the new valve guide with the valve guide installer “2” and valve guide remover “1”.

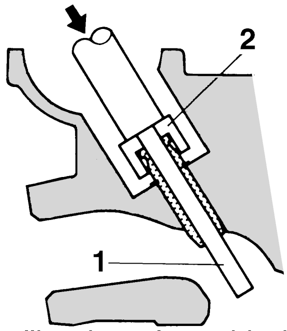

c. After installing the valve guide, bore the valve guide with the valve guide reamer “3” to obtain the proper valve-stem-to-valve-guide clearance.

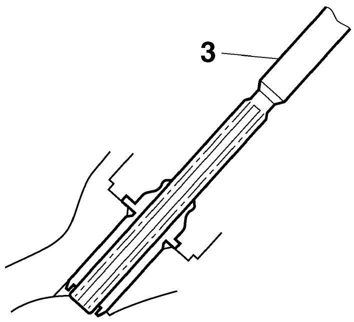

NOTE:
After replacing the valve guide, reface the valve seat.

Valve guide remover (ø5)
90890-04097
Valve guide remover (5.0 mm)
YM-04097
Valve guide installer (ø5)
90890-04098
Valve guide installer (5.0 mm)
YM-04098
Valve guide reamer (ø5)
90890-04099
Valve guide reamer (5.0 mm)
YM-04099

▲▲▲▲▲▲▲▲▲▲▲▲▲▲▲▲▲▲▲▲▲▲▲▲▲▲▲▲▲▲▲▲▲▲

3. Eliminate:
   - Carbon deposits
     (from the valve face and valve seat)
4. Check:
   - Valve face
     Pitting/wear → Grind the valve face.
   - Valve stem end
     Mushroom shape or diameter larger than the body of the valve stem → Replace the valve.
5. Measure:
   - Valve margin thickness D "a"
     Out of specification → Replace the valve.

Valve margin thickness D (intake)
0.80–1.20 mm (0.0315–0.0472 in)
Valve margin thickness D (exhaust)
0.50–0.90 mm (0.0197–0.0354 in)

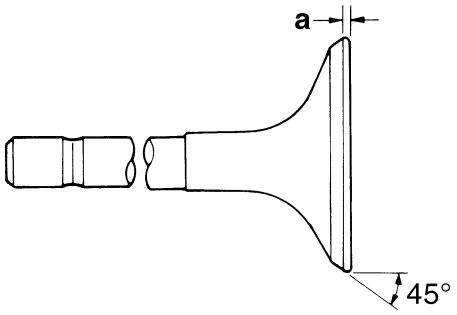

6. Measure:
   - Valve stem runout
     Out of specification → Replace the valve.

NOTE:

- When installing a new valve, always replace the valve guide.
- If the valve is removed or replaced, always replace the valve stem seal.

Valve stem runout
0.010 mm (0.0004 in)

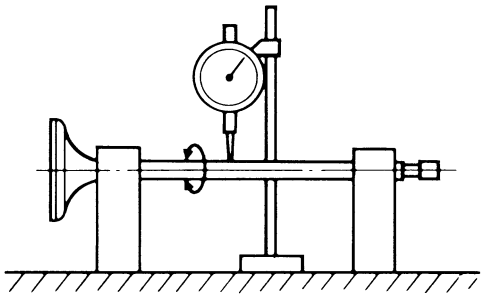

EAS24300

CHECKING THE VALVE SEATS

The following procedure applies to all of the valves and valve seats.

1. Eliminate:
   - Carbon deposits
     (from the valve face and valve seat)
2. Check:
   - Valve seat
     Pitting/wear → Replace the cylinder head.
3. Measure:
   - Valve seat width C "a"
     Out of specification → Replace the cylinder head.

Valve seat width C (intake)
0.90–1.10 mm (0.0354–0.0433 in)
Valve seat width C (exhaust)
0.90–1.10 mm (0.0354–0.0433 in)

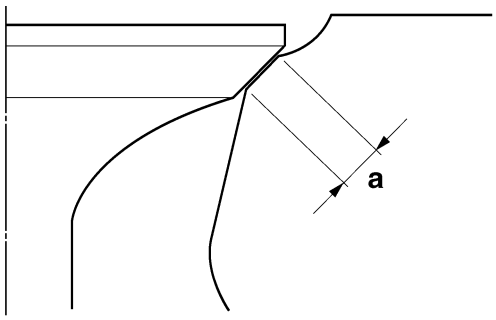

a. Apply Mechanic's blueing dye (Dykem) "b" onto the valve face.

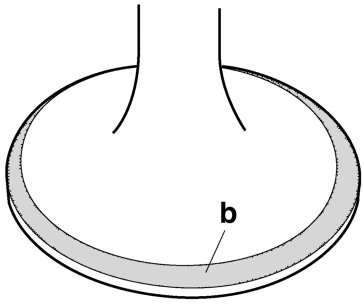

b. Install the valve into the cylinder head.
c. Press the valve through the valve guide and onto the valve seat to make a clear impression.
d. Measure the valve seat width.

NOTE:

Where the valve seat and valve face contacted one another, the blueing will have been removed.

4. Lap:
   - Valve face
   - Valve seat

NOTE:

After replacing the cylinder head or replacing the valve and valve guide, the valve seat and valve face should be lapped.

▼▼▼▼▼▼▼▼▼▼▼▼▼▼▼▼▼▼▼▼▼▼▼▼▼▼▼▼▼▼▼▼▼▼

a. Apply a coarse lapping compound "a" to the valve face.

ECA13790

CAUTION:

Do not let the lapping compound enter the gap between the valve stem and the valve guide.

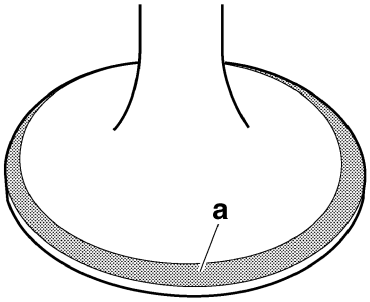

b. Apply molybdenum disulfide oil onto the valve stem.
c. Install the valve into the cylinder head.
d. Turn the valve until the valve face and valve seat are evenly polished, then clean off all of the lapping compound.

NOTE:

For the best lapping results, lightly tap the valve seat while rotating the valve back and forth between your hands.

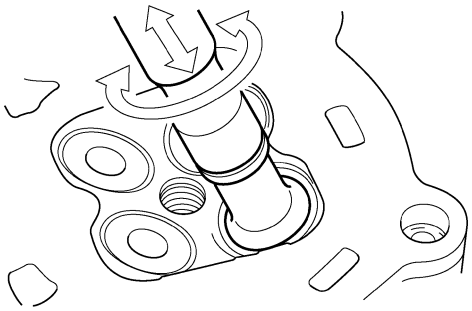

e. Apply a fine lapping compound to the valve face and repeat the above steps.
f. After every lapping procedure, be sure to clean off all of the lapping compound from the valve face and valve seat.
g. Apply Mechanic's blueing dye (Dykem) "b" onto the valve face.

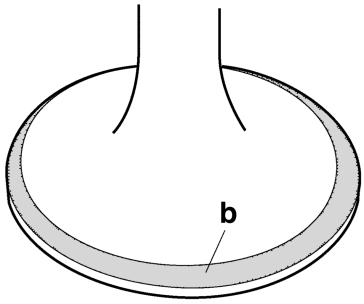

h. Install the valve into the cylinder head.
i. Press the valve through the valve guide and onto the valve seat to make a clear impression.
j. Measure the valve seat width "c" again. If the valve seat width is out of specification, reface and lap the valve seat.

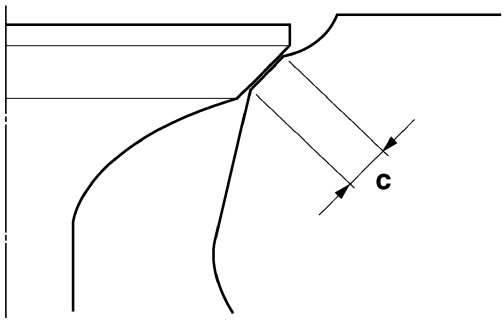

▲▲▲▲▲▲▲▲▲▲▲▲▲▲▲▲▲▲▲▲▲▲▲▲▲▲▲▲▲▲▲▲▲▲

EAS24310

CHECKING THE VALVE SPRINGS

The following procedure applies to all of the valve springs.

1. Measure:
   - Valve spring free length "a"
     Out of specification → Replace the valve spring.

Free length (intake)
39.73 mm (1.56 in)
Limit
37.74 mm (1.49 in)
Free length (exhaust)
39.73 mm (1.56 in)
Limit
37.74 mm (1.49 in)

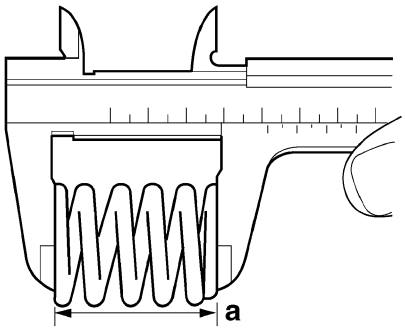

2. Measure:
   - Compressed valve spring force “a”
     Out of specification → Replace the valve spring.

	Installed compression spring force (intake) **136.00–158.00 N (30.57–35.52 lb) (13.87–16.11 kgf)** **Installed compression spring force (exhaust)** **136.00–158.00 N (30.57–35.52 lb) (13.87–16.11 kgf)** **Installed length (intake)** **33.00 mm (1.30 in)** **Installed length (exhaust)** **33.00 mm (1.30 in)**

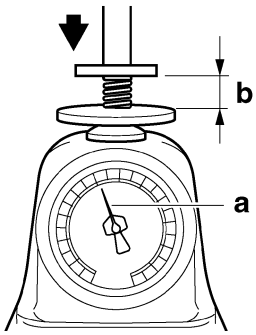

b. Installed length

3. Measure:
   - Valve spring tilt “a”
     Out of specification → Replace the valve spring.

	Spring tilt (intake) **2.5°/1.7 mm (2.5°/0.067 in)** **Spring tilt (exhaust)** **2.5°/1.7 mm (2.5°/0.067 in)**

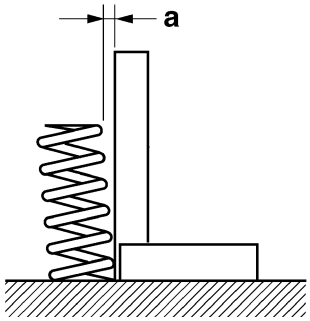

EAS24320

CHECKING THE VALVE LIFTERS

The following procedure applies to all of the valve lifters.

1. Check:
   - Valve lifter
     Damage/scratches → Replace the valve lifters and cylinder head.

EAS24340

INSTALLING THE VALVES

The following procedure applies to all of the valves and related components.

1. Deburr:
   - Valve stem end
     (with an oil stone)

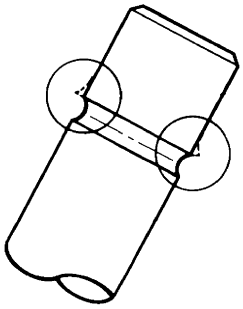

2. Lubricate:
   - Valve stem “1”
   - Valve stem seal “2”
     (with the recommended lubricant)

	Recommended lubricant **Molybdenum disulfide oil**

3. Lubricate:
   - Valve stem end
     (with the recommended lubricant)

	Recommended lubricant **Engine oil**

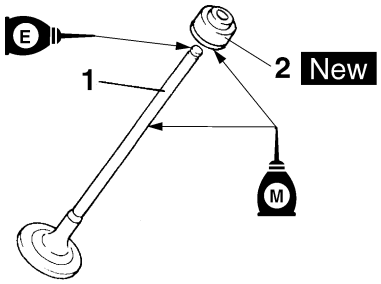

4. Install:
   - Lower spring seat “1”
   - Valve stem seal “2” New
   - Valve “3”
   - Valve spring “4”
   - Upper spring seat “5”
     (into the cylinder head)

NOTE:

- Make sure each valve is installed in its original place.
- Install the valve springs with the larger pitch “a” facing up.

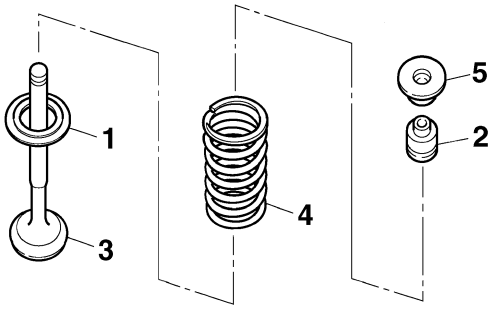

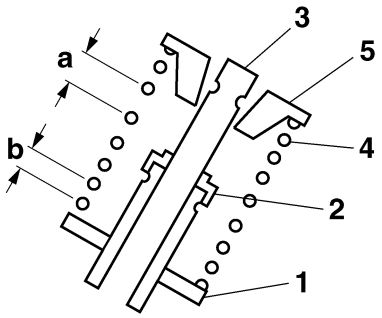

b. Smaller pitch

5. Install:
   - Valve cotters

NOTE:

Install the valve cotters by compressing the valve spring with the valve spring compressor “1” and the valve spring compressor attachment “2”.

Valve spring compressor
90890-04019
YM-04019
Valve spring compressor attachment
90890-04114
Valve spring compressor adapter 19.5 mm
YM-04114

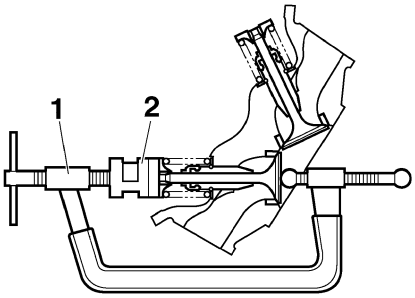

6. To secure the valve cotters onto the valve stem, lightly tap the valve tip with a soft-face hammer.

ECA13800

CAUTION:

Hitting the valve tip with excessive force could damage the valve.

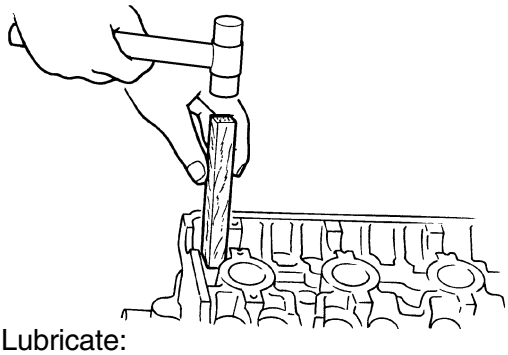

7. Lubricate:
   - Valve lifter
     (with the recommended lubricant)

Recommended lubricant
Engine oil

8. Install:
   - Valve pad
   - Valve lifter

NOTE:

- The valve lifter must move smoothly when rotated with a finger.
- Each valve lifter and valve pad must be reinstalled in its original position.

EAS24480

GENERATOR AND STARTER CLUTCH

Removing the generator rotor and starter clutch

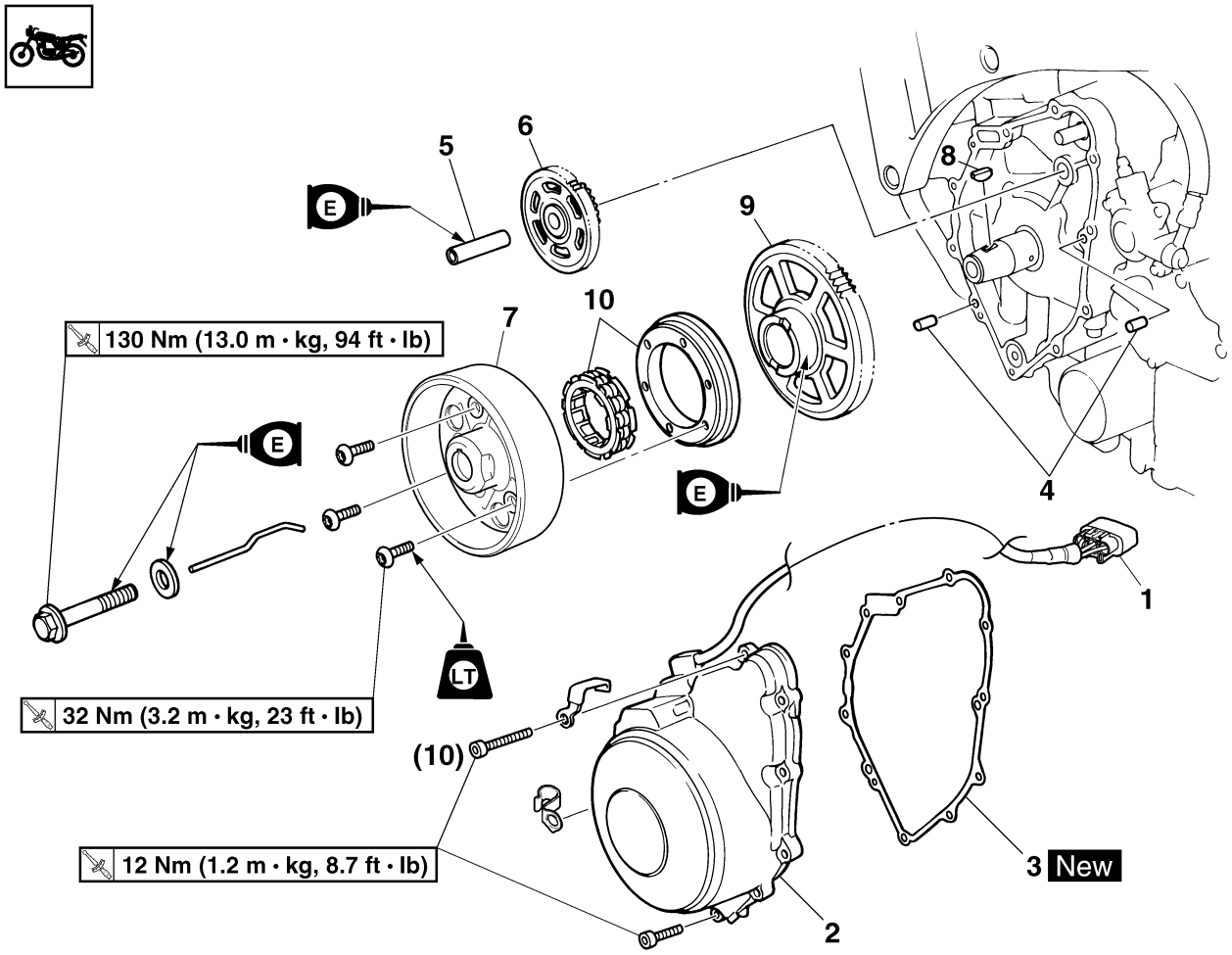

Order	Job/Parts to remove	Q'ty	Remarks
	Fuel tank		Refer to "FUEL TANK" on page 7-1.
	Air filter case		Refer to "GENERAL CHASSIS" on page 4-1.
	Engine oil		Drain. Refer to "CHANGING THE ENGINE OIL" on page 3-13.
1	Stator coil coupler	1	Disconnect.
2	Generator cover	1	
3	Generator cover gasket	1	
4	Dowel pin	2	
5	Starter clutch idle gear shaft	1	
6	Starter clutch idle gear	1	
7	Generator rotor	1	
8	Woodruff key	1	
9	Starter clutch gear	1	

Removing the generator rotor and starter clutch

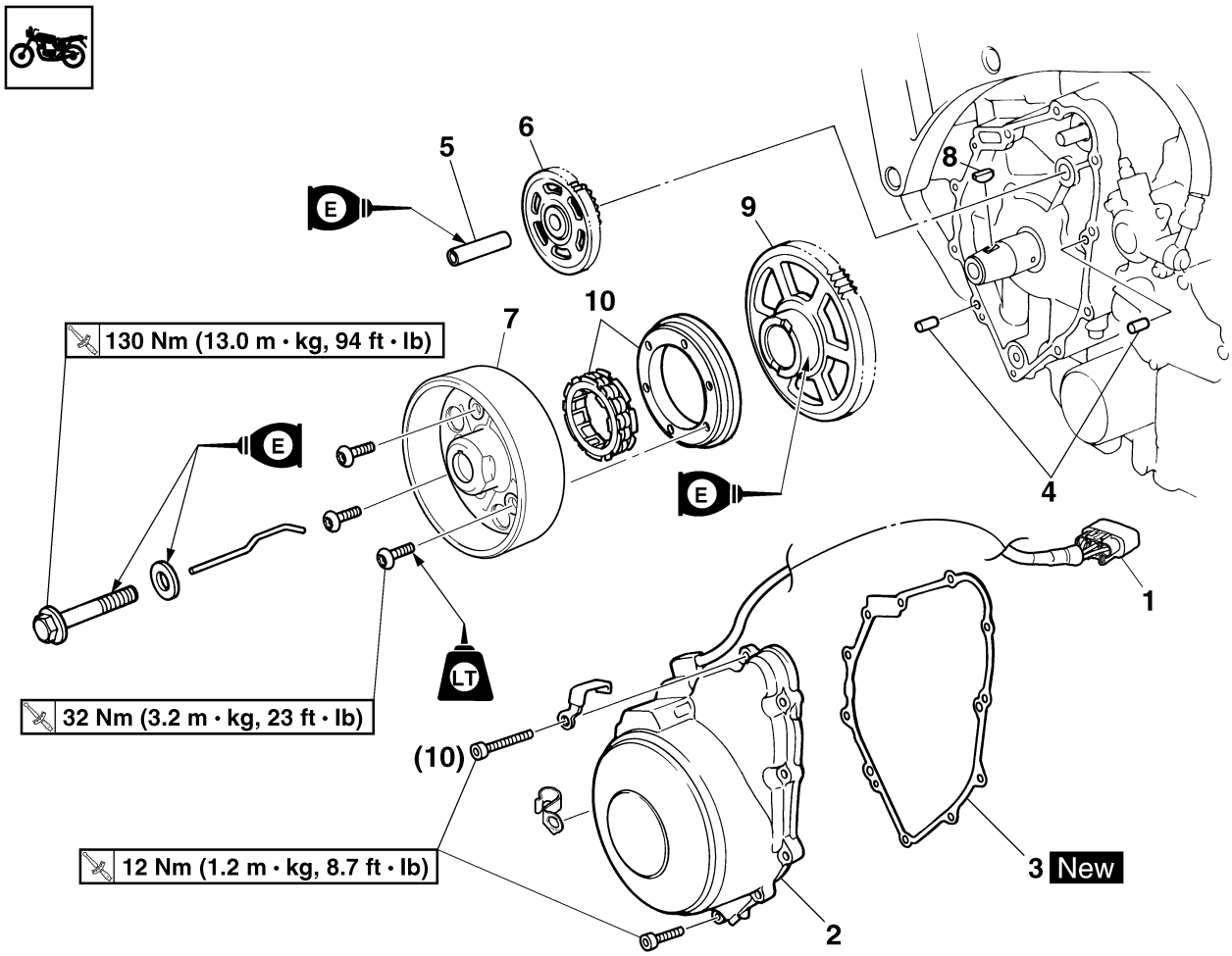

Order	Job/Parts to remove	Q'ty	Remarks
10	Starter clutch	1	
			For installation, reverse the removal procedure.

Removing the stator coil assembly

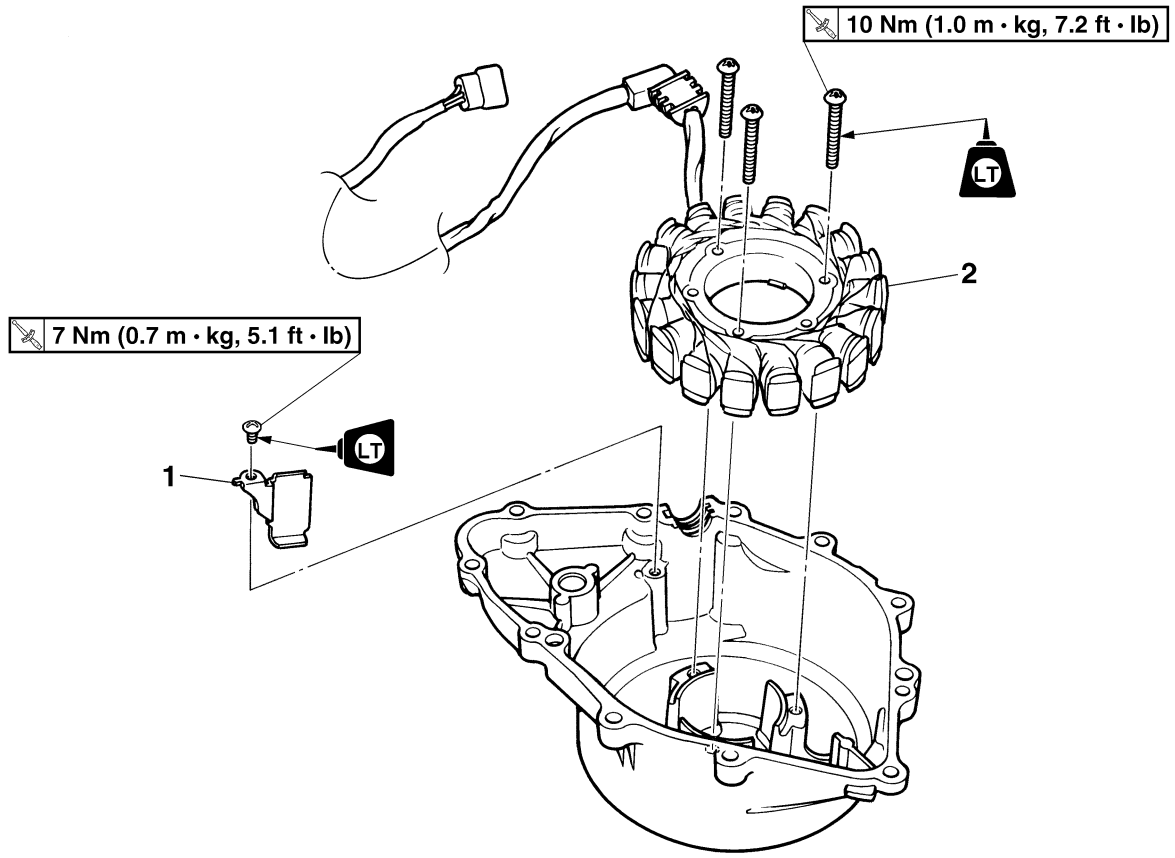

Order	Job/Parts to remove	Q'ty	Remarks
1	Stator coil assembly lead holder	1	
2	Stator coil assembly	1	
			For installation, reverse the removal procedure.

EAS24490
REMOVING THE GENERATOR

1. Remove:
   - Generator rotor bolt “1”
   - Washer

NOTE:

While holding the generator rotor “2” with the sheave holder “3”, loosen the generator rotor bolt.

Sheave holder
90890-01701
Primary clutch holder
YS-01880-A

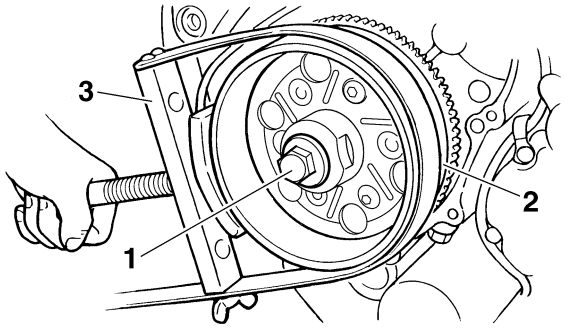

2. Remove:
   - Generator rotor “1”
     (with the flywheel puller “2”)
   - Woodruff key

ECA13880

CAUTION:

To protect the end of the crankshaft, place an appropriate sized socket between the flywheel puller set’s center bolt and the crankshaft.

NOTE:

Make sure the flywheel puller is centered over the generator rotor.

Flywheel puller
90890-01362
Heavy duty puller
YU-33270-B

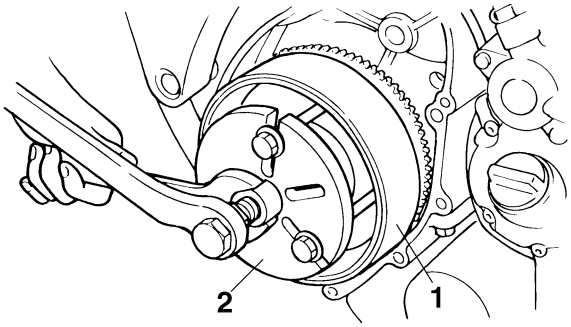

EAS24560
REMOVING THE STARTER CLUTCH

1. Remove:
   - Starter clutch bolts “1”

NOTE:

While holding the generator rotor with the sheave holder, remove the starter clutch bolts.

Sheave holder
90890-01701
Primary clutch holder
YS-01880-A

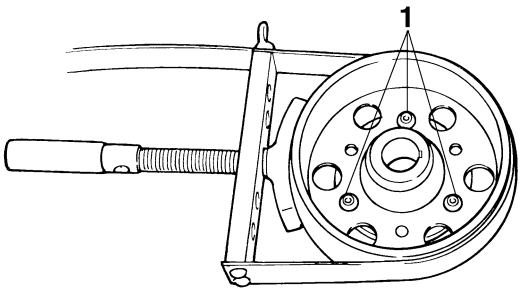

EAS24570
CHECKING THE STARTER CLUTCH

1. Check:
   - Starter clutch rollers
     Damage/wear → Replace.
2. Check:
   - Starter clutch idle gear
   - Starter clutch gear
     Burrs/chips/roughness/wear → Replace the defective part(s).
3. Check:
   - Starter clutch gear’s contacting surfaces
     Damage/pitting/wear → Replace the starter clutch gear.
4. Check:
   - Starter clutch operation

▼▼▼▼▼▼▼▼▼▼▼▼▼▼▼▼▼▼▼▼▼▼▼▼▼▼▼▼▼▼▼▼▼▼

a. Install the starter clutch gear onto the starter clutch and hold the starter clutch.
b. When turning the starter clutch gear clockwise “A”, the starter clutch and the starter clutch gear should engage, otherwise the starter clutch is faulty and must be replaced.
c. When turning the starter clutch gear counterclockwise “B”, it should turn freely, otherwise the starter clutch is faulty and must be replaced.

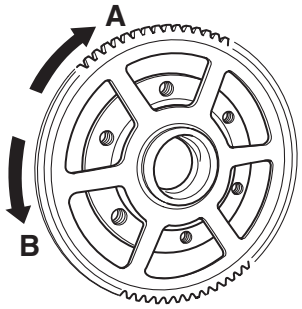

EAS24600
INSTALLING THE STARTER CLUTCH

1. Install:
   - Starter clutch
   - Starter clutch bolts “1”

Starter clutch bolt
32 Nm (3.2 m·kg, 23 ft·lb)
LOCTITE®

NOTE:

While holding the generator rotor with the sheave holder, tighten the starter clutch bolts.

Sheave holder
90890-01701
Primary clutch holder
YS-01880-A

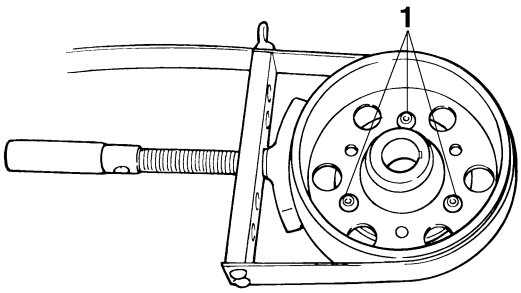

EAS24500
INSTALLING THE GENERATOR

1. Install:
   - Woodruff key
   - Generator rotor
   - Washer
   - Generator rotor bolt

NOTE:

- Clean the tapered portion of the crankshaft and the generator rotor hub.
- When installing the generator rotor, make sure the woodruff key is properly seated in the keyway of the crankshaft.
- Lubricate the generator rotor bolt threads and washer mating surfaces with engine oil.

2. Tighten:
   - Generator rotor bolt “1”

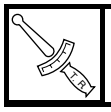

Generator rotor bolt
130 Nm (13.0 m·kg, 94 ft·lb)

NOTE:

While holding the generator rotor “2” with the sheave holder “3”, tighten the generator rotor bolt.

Sheave holder
90890-01701
Primary clutch holder
YS-01880-A

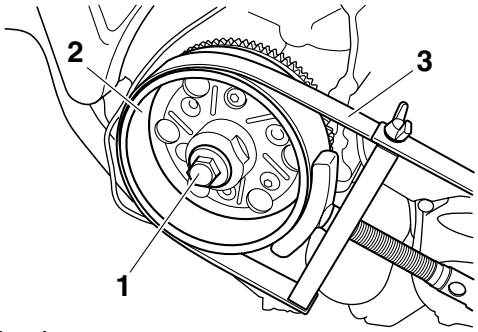

3. Apply:
   - Sealant
     (onto the stator coil assembly lead grommet)

Yamaha bond No. 1215
90890-85505
(Three Bond No.1215®)

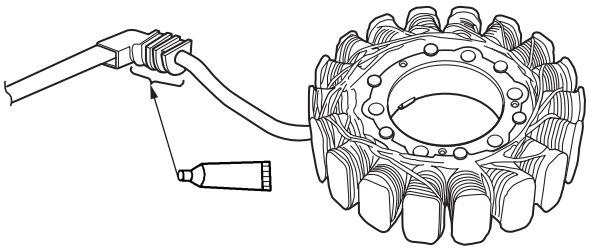

4. Install:
   - Generator cover gasket New
   - Generator cover

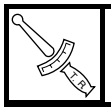

Generator cover bolt
12 Nm (1.2 m·kg, 8.7 ft·lb)

NOTE:

Tighten the generator cover bolts in stages and in a crisscross pattern.

EAS24520

PICKUP ROTOR

Removing the pickup rotor

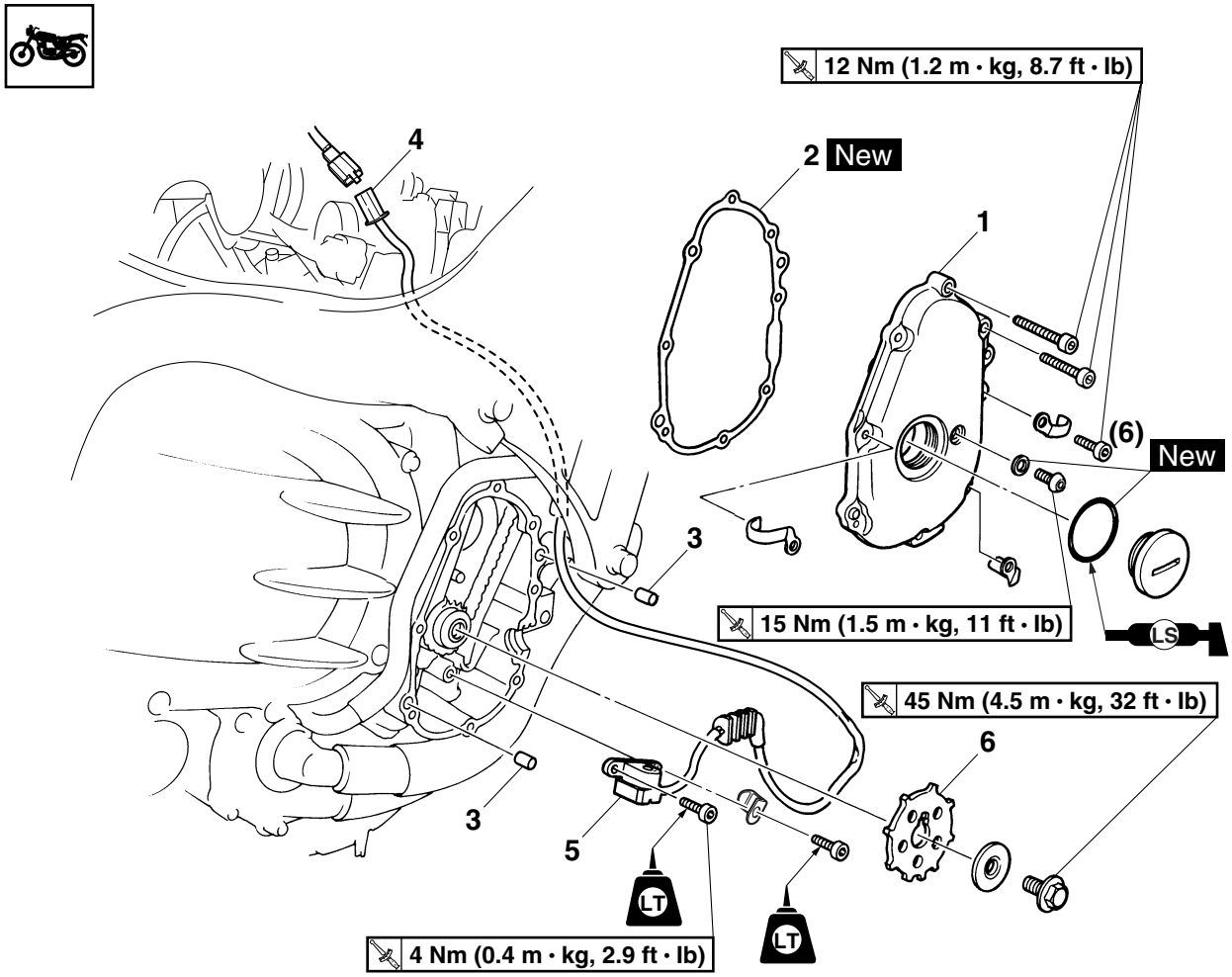

Order	Job/Parts to remove	Q'ty	Remarks
	Side cowlings/Air filter case		Refer to "GENERAL CHASSIS" on page 4-1.
	Fuel tank		Refer to "FUEL TANK" on page 7-1.
	Generator cover		Refer to "GENERATOR AND STARTER CLUTCH" on page 5-28.
1	Pickup rotor cover	1	
2	Pickup rotor cover gasket	1	
3	Dowel pin	2	
4	Crankshaft position sensor coupler	1	Disconnect.
5	Crankshaft position sensor	1	
6	Pickup rotor	1	
			For installation, reverse the removal procedure.

EAS24530
REMOVING THE PICKUP ROTOR

1. Remove:
   - Pickup rotor bolt “1”
   - Washer “2”
   - Pickup rotor “3”

NOTE:

While holding the generator rotor “4” with the sheave holder “5”, loosen the pickup rotor bolt.

Sheave holder
90890-01701
Primary clutch holder
YS-01880-A

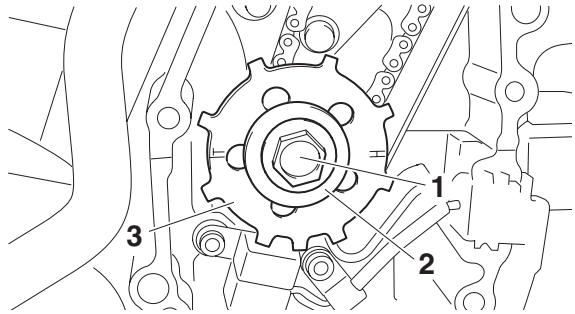

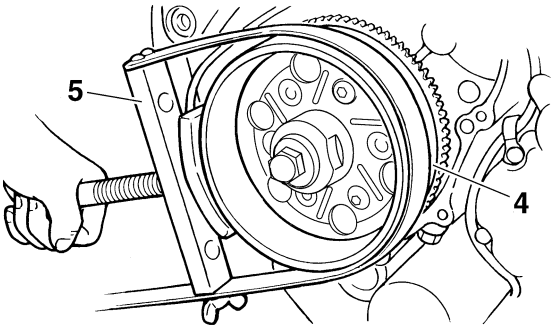

EAS24540
INSTALLING THE PICKUP ROTOR

1. Install:
   - Pickup rotor “1”
   - Washer
   - Pickup rotor bolt

NOTE:

When installing the pickup rotor, align the groove “a” in the crankshaft sprocket with the projection “b” in the pickup rotor.

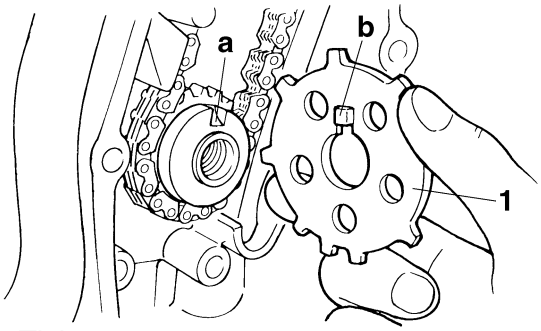

2. Tighten:
   - Pickup rotor bolt “1”

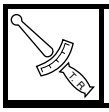

Pickup rotor bolt
45 Nm (4.5 m·kg, 32 ft·lb)

NOTE:

While holding the generator rotor “2” with the sheave holder “3”, tighten the pickup rotor bolt.

Sheave holder
90890-01701
Primary clutch holder
YS-01880-A

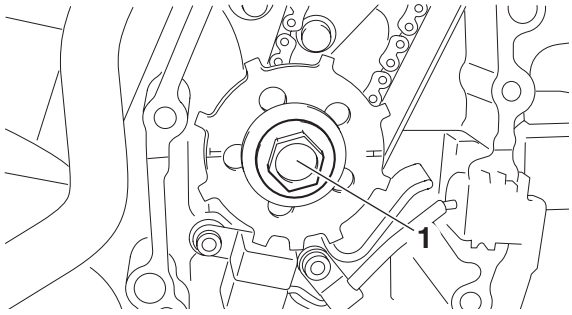

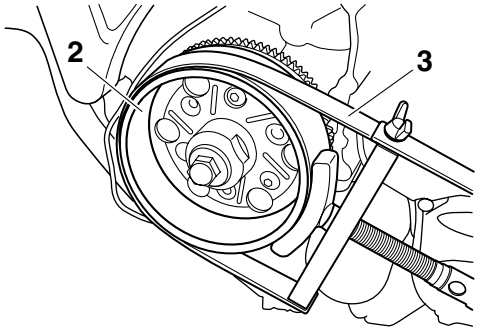

3. Apply:
   - Sealant
     (onto the crankshaft position sensor lead grommet)

Yamaha bond No. 1215
90890-85505
(Three Bond No.1215®)

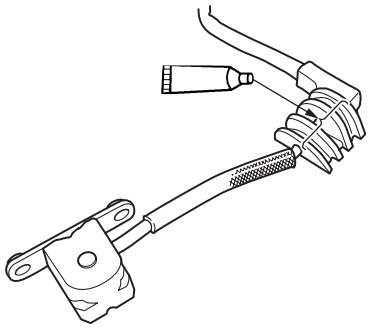

4. Install:
   - Pickup rotor cover gasket New
   - Pickup rotor cover

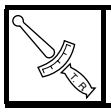	**Pickup rotor cover bolt** **12 Nm (1.2 m·kg, 8.7 ft·lb)**

NOTE:

Tighten the pickup rotor cover bolts in stages and in a crisscross pattern.

EAS24780

ELECTRIC STARTER

Removing the starter motor

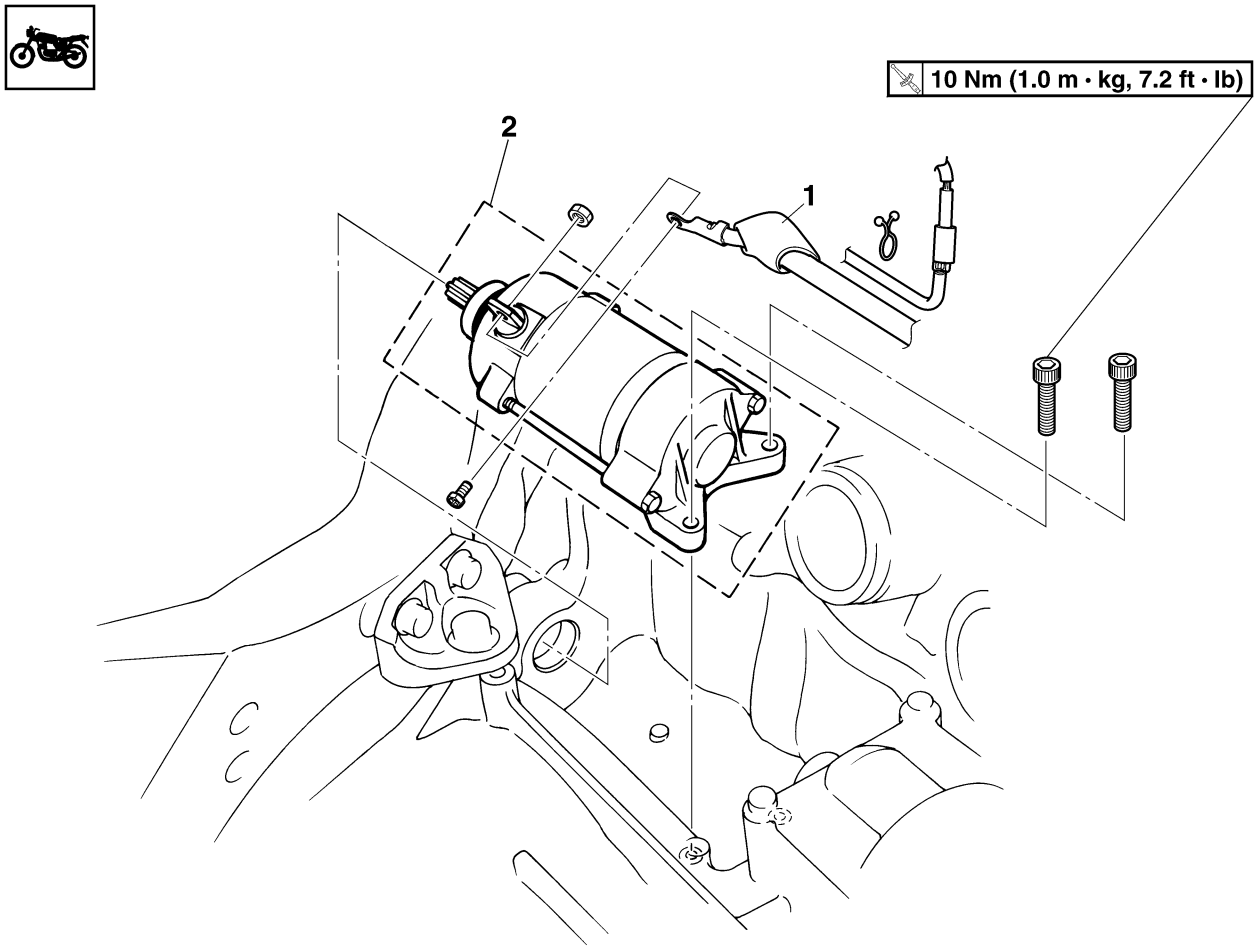

Order	Job/Parts to remove	Q'ty	Remarks
	Throttle bodies		Refer to "THROTTLE BODIES" on page 7-4.
1	Starter motor lead	1	Disconnect.
2	Starter motor assembly	1	
			For installation, reverse the removal procedure.

Disassembling the starter motor

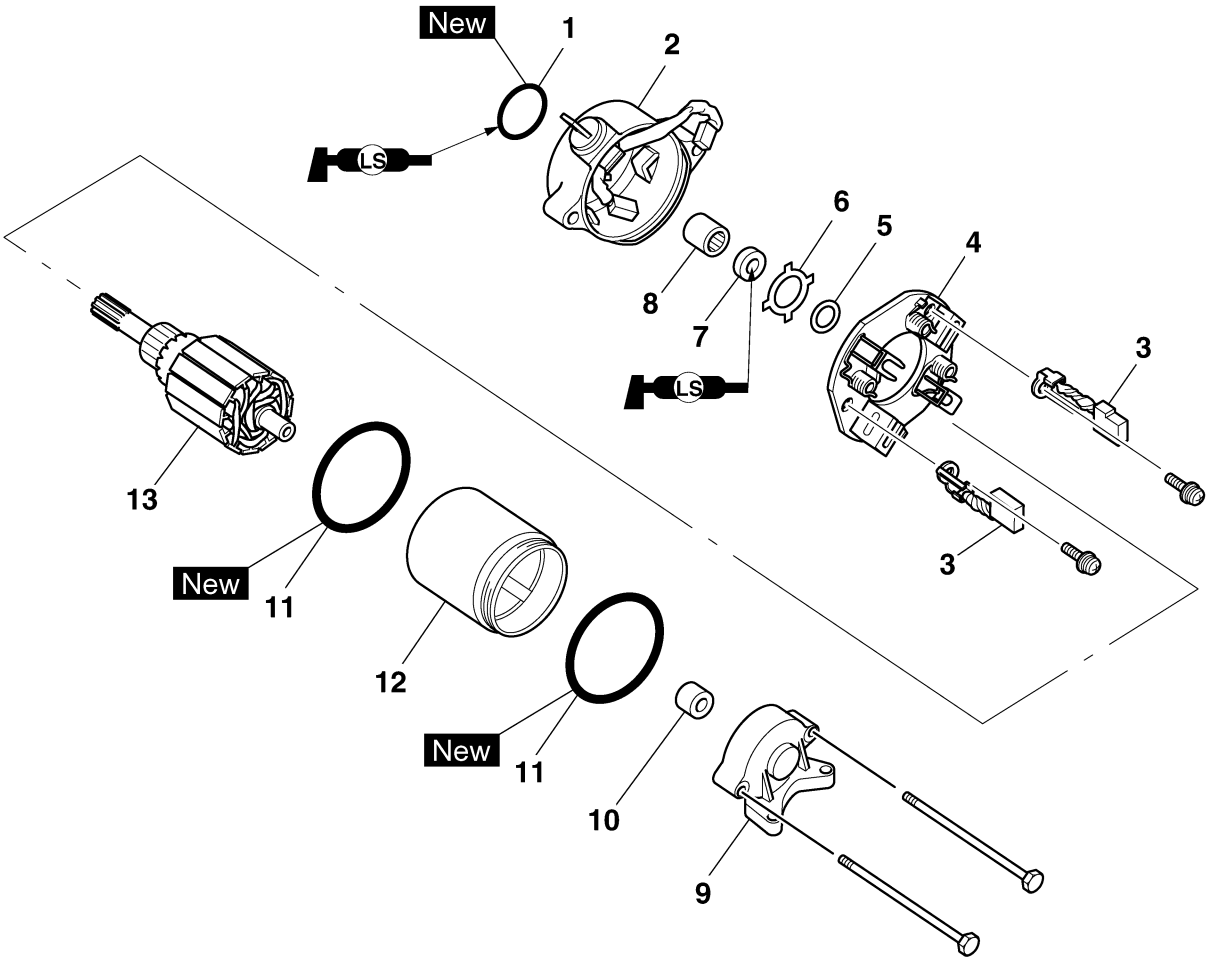

Order	Job/Parts to remove	Q'ty	Remarks
1	O-ring	1	
2	Starter motor front cover	1	
3	Brush	2	
4	Brush seat (along with brushes)	1	
5	Washer	1	
6	Lock washer	1	
7	Oil seal	1	
8	Bearing	1	
9	Starter motor rear cover	1	
10	Collar	1	
11	O-ring	2	
12	Starter motor yoke	1	
13	Armature assembly	1	
			For assembly, reverse the disassembly procedure.

EAS24790

CHECKING THE STARTER MOTOR

1. Check:
   - Commutator
     Dirt → Clean with 600 grit sandpaper.
2. Measure:
   - Commutator diameter “1”
     Out of specification → Replace the starter motor.

Limit
23.5 mm (0.93 in)

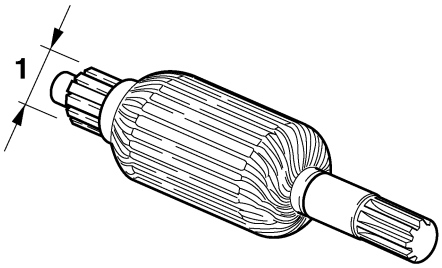

3. Measure:
   - Mica undercut “a”
     Out of specification → Scrape the mica to the proper measurement with a hacksaw blade that has been grounded to fit the commutator.

Mica undercut (depth)
1.50 mm (0.06 in)

NOTE:

The mica of the commutator must be undercut to ensure proper operation of the commutator.

4. Measure:
   - Armature assembly resistances (commutator and insulation)
     Out of specification → Replace the starter motor.

▼▼▼▼▼▼▼▼▼▼▼▼▼▼▼▼▼▼▼▼▼▼▼▼▼▼▼▼▼▼▼▼▼▼

a. Measure the armature assembly resistances with the pocket tester.

Pocket tester
90890-03112
Analog pocket tester
YU-03112-C

Armature coil
Commutator resistance “1”
0.024–0.030 Ω at 20 °C (68 °F)
Insulation resistance “2”
Above 1 MΩ at 20 °C (68 °F)

b. If any resistance is out of specification, replace the starter motor.

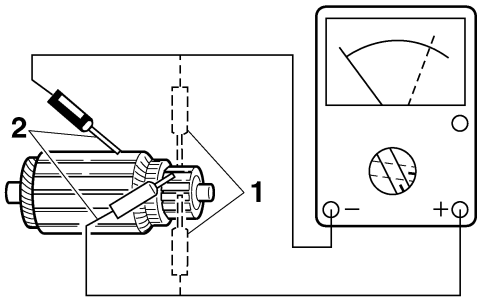

▲▲▲▲▲▲▲▲▲▲▲▲▲▲▲▲▲▲▲▲▲▲▲▲▲▲▲▲▲▲▲▲▲▲

5. Measure:
   - Brush length “a”
     Out of specification → Replace the brushes as a set.

Limit
3.65 mm (0.14 in)

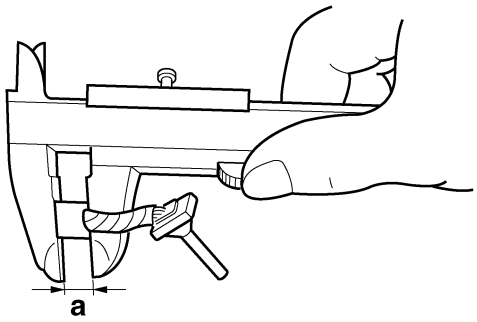

6. Measure:
   - Brush spring force
     Out of specification → Replace the brush springs as a set.

Brush spring force
5.28–7.92 N (19.01–28.51 oz)
(538–808 gf)

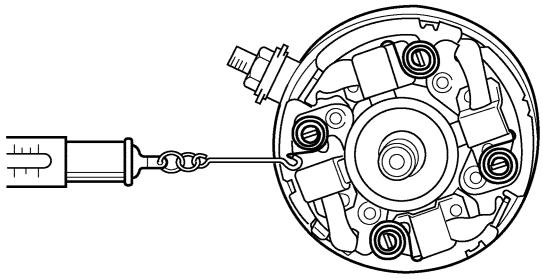

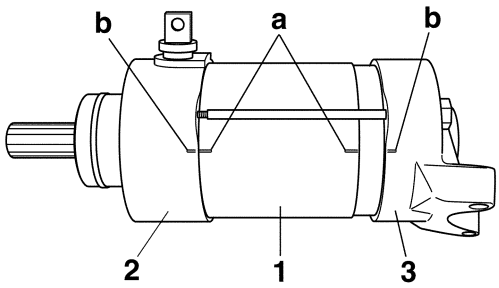

7. Check:
   - Gear teeth
     Damage/wear → Replace the gear.
8. Check:
   - Bearing
   - Oil seal
     Damage/wear → Replace the defective part(s).

EAS24800

ASSEMBLING THE STARTER MOTOR

1. Install:
   - Brush seat “1”

NOTE:

Align the slot “a” on the brush seat with the tab “b” in the starter motor front cover.

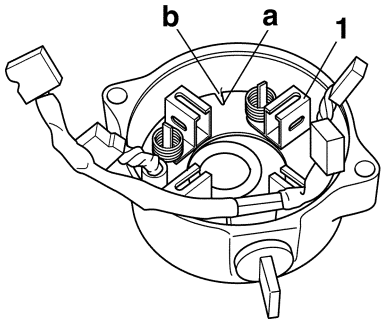

2. Install:
   - Starter motor yoke “1”
   - Starter motor front cover “2”
   - Starter motor rear cover “3”

NOTE:

Align the match marks “a” on the starter motor yoke with the match marks “b” on the starter motor front and rear covers.

EAS25060

CLUTCH

Removing the clutch cover

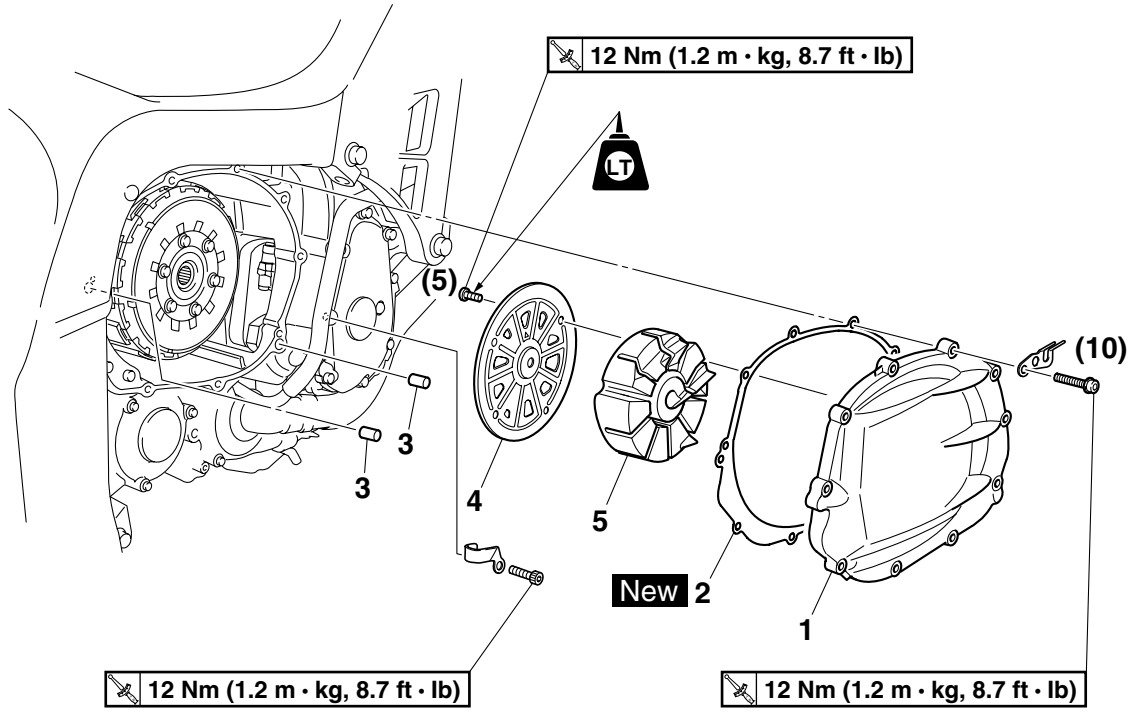

Order	Job/Parts to remove	Q'ty	Remarks
	Right side cowling		Refer to "GENERAL CHASSIS" on page 4-1.
	Engine oil		Drain. Refer to "CHANGING THE ENGINE OIL" on page 3-13.
1	Clutch cover	1	
2	Clutch cover gasket	1	
3	Dowel pin	2	
4	Damper cover	1	
5	Damper	1	
			For installation, reverse the removal procedure.

Removing the clutch

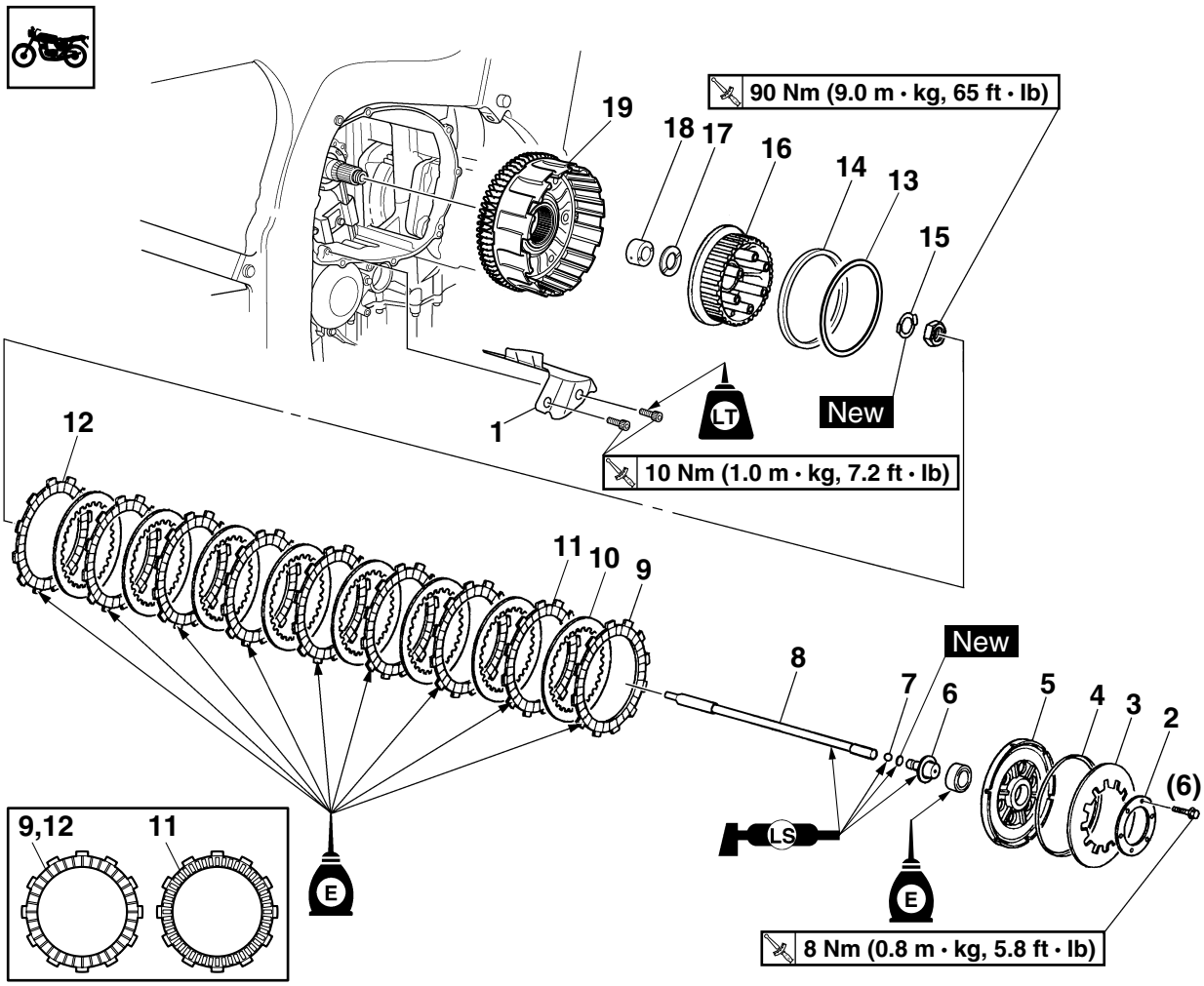

Order	Job/Parts to remove	Q'ty	Remarks
	Rear balancer		Refer to "BALANCERS" on page 5-103.
1	Oil guide plate	1	
2	Clutch spring plate retainer	1	
3	Clutch spring plate	1	
4	Clutch spring plate seat	1	
5	Pressure plate	1	
6	Short clutch push rod	1	
7	Ball	1	
8	Long clutch push rod	1	
9	Friction plate 1	1	Inside diameter: 124 mm (4.88 in)
10	Clutch plate	8	
11	Friction plate 2	7	Inside diameter: 124 mm (4.88 in)
12	Friction plate 3	1	Inside diameter: 135 mm (5.31 in)
13	Clutch damper spring	1	
14	Clutch damper spring seat	1	
15	Lock washer	1	
16	Clutch boss	1	

Removing the clutch

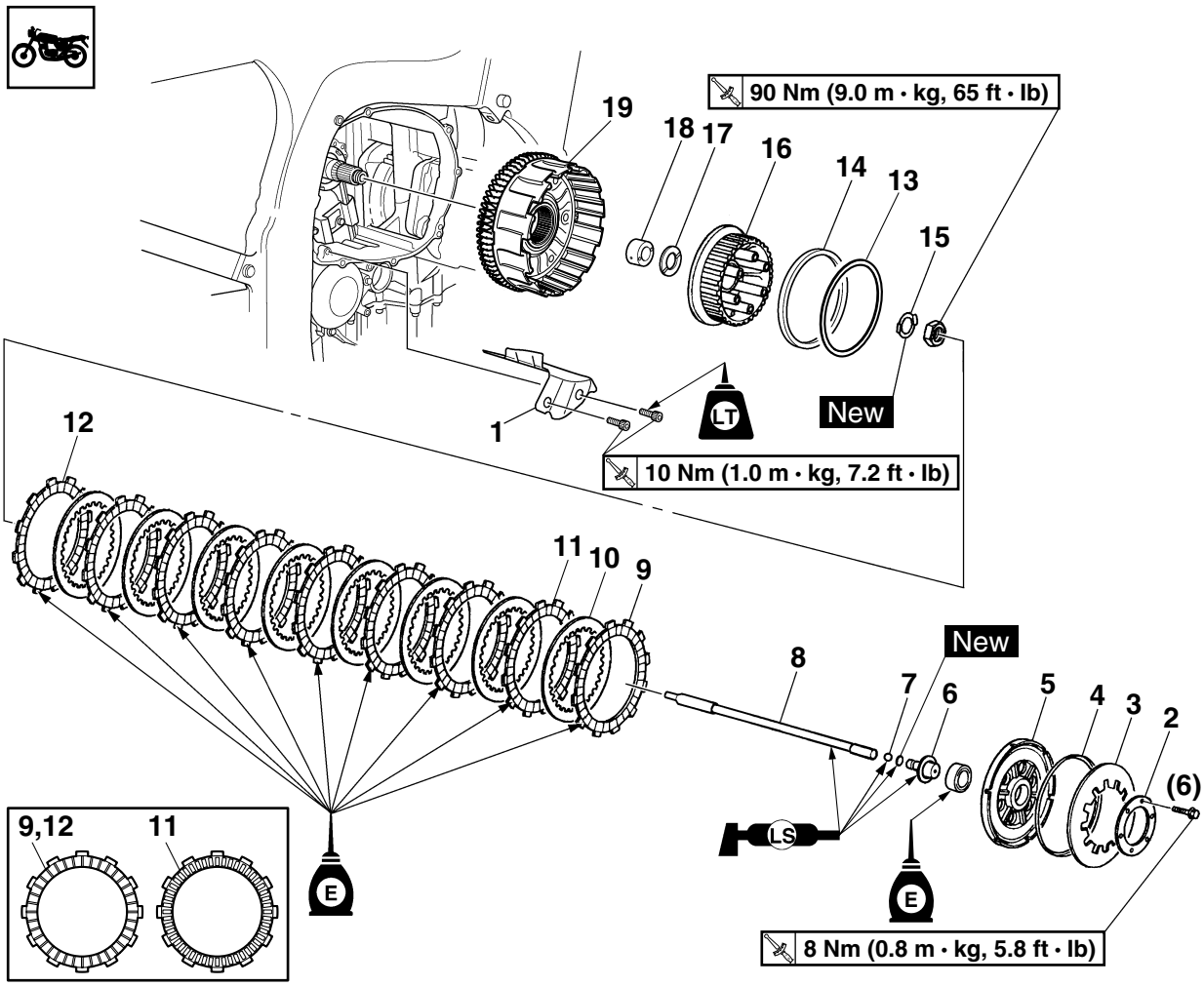

Order	Job/Parts to remove	Q'ty	Remarks
17	Thrust washer	1	
18	Spacer	1	
19	Clutch housing	1	
			For installation, reverse the removal procedure.

Removing the clutch master cylinder

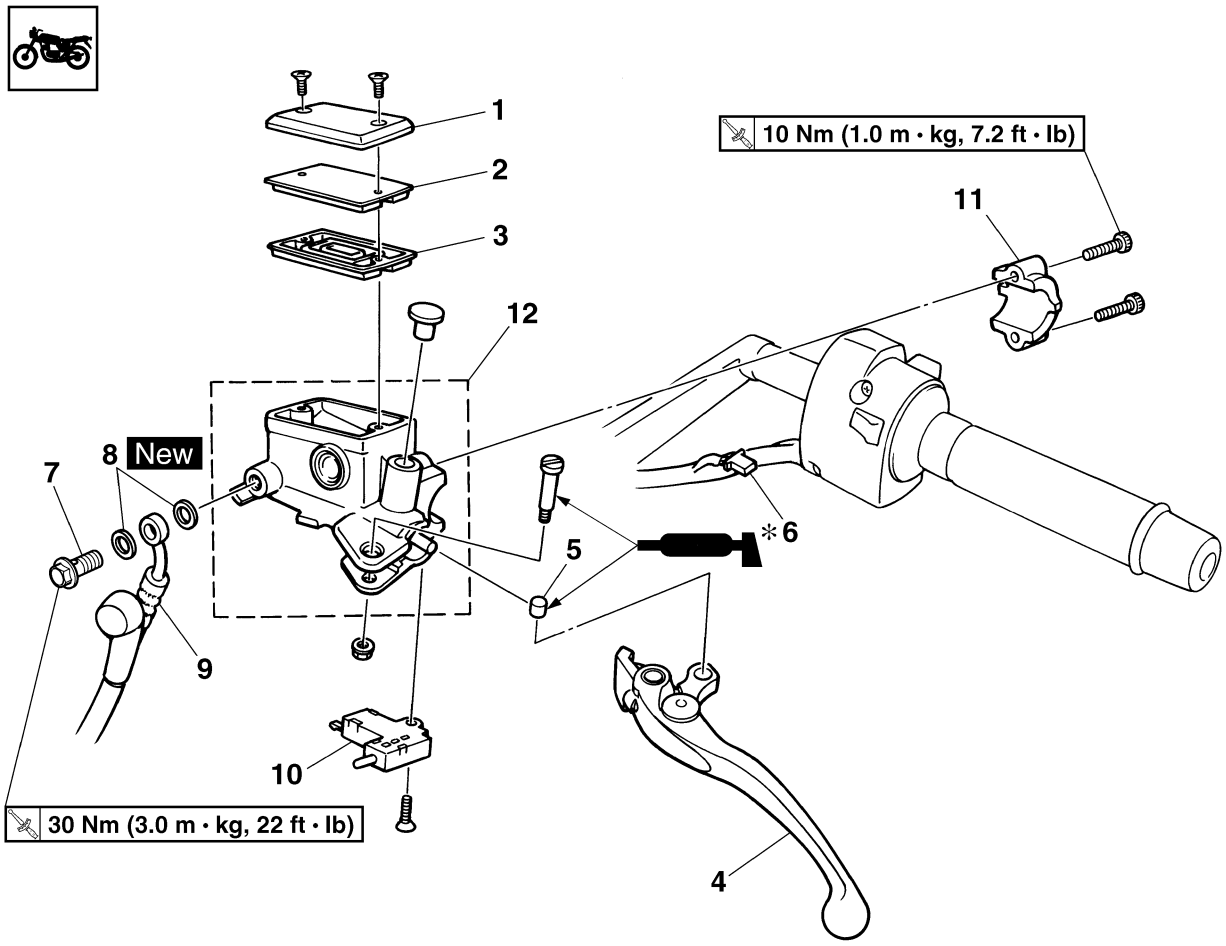

Order	Job/Parts to remove	Q'ty	Remarks
	Clutch fluid		Drain. Refer to "BLEEDING THE HYDRAULIC CLUTCH SYSTEM" on page 3-15.
1	Clutch master cylinder reservoir cap	1	
2	Clutch master cylinder reservoir diaphragm holder	1	
3	Clutch master cylinder reservoir diaphragm	1	
4	Clutch lever	1	
5	Clutch master cylinder push rod pin	1	
6	Clutch switch coupler	1	Disconnect.
7	Clutch hose union bolt	1	
8	Copper washer	2	
9	Clutch hose	1	Disconnect.
10	Clutch switch	1	
11	Clutch master cylinder holder	1	
12	Clutch master cylinder	1	
			For installation, reverse the removal procedure.

* Apply silicon grease

Disassembling the clutch master cylinder

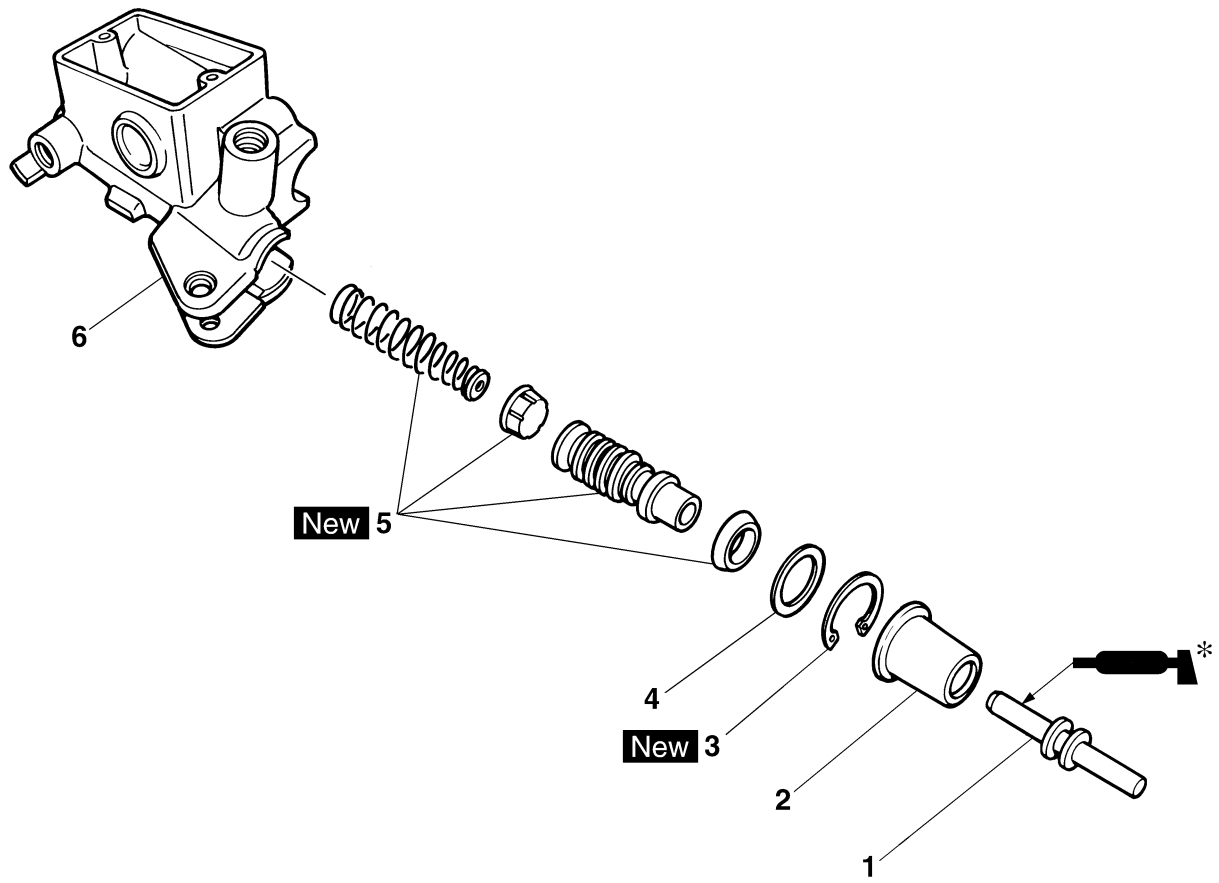

Order	Job/Parts to remove	Q'ty	Remarks
1	Clutch master cylinder push rod	1	
2	Dust boot	1	
3	Circlip	1	
4	Washer	1	
5	Clutch master cylinder kit	1	
6	Clutch master cylinder body	1	
			For assembly, reverse the disassembly procedure.

* Apply silicon grease

Removing the clutch release cylinder

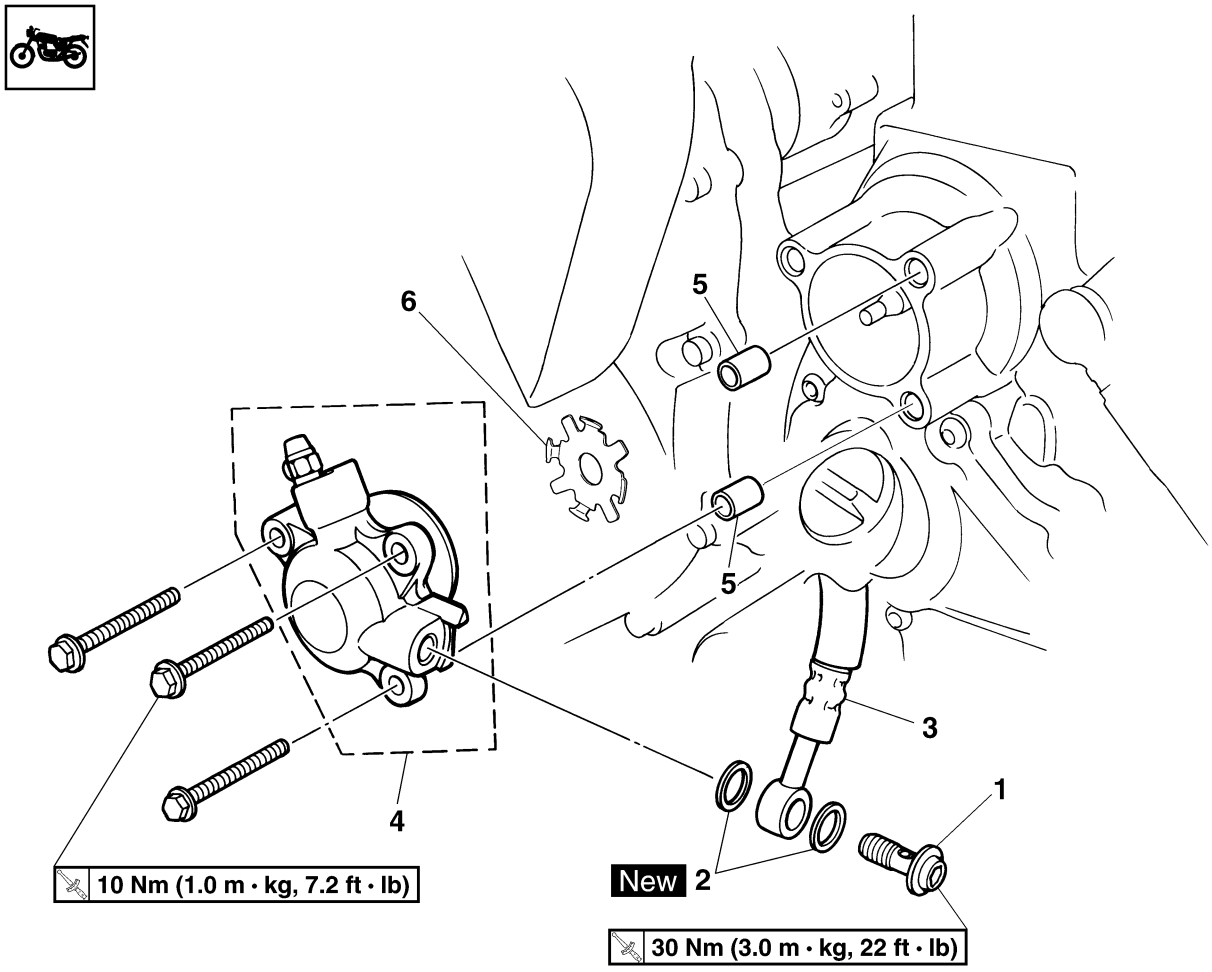

Order	Job/Parts to remove	Q'ty	Remarks
	Clutch fluid		Drain. Refer to "BLEEDING THE HYDRAULIC CLUTCH SYSTEM" on page 3-15.
1	Clutch hose union bolt	1	
2	Copper washer	2	
3	Clutch hose	1	Disconnect.
4	Clutch release cylinder	1	
5	Dowel pin	2	
6	Plate	1	
			For installation, reverse the removal procedure.

Disassembling the clutch release cylinder

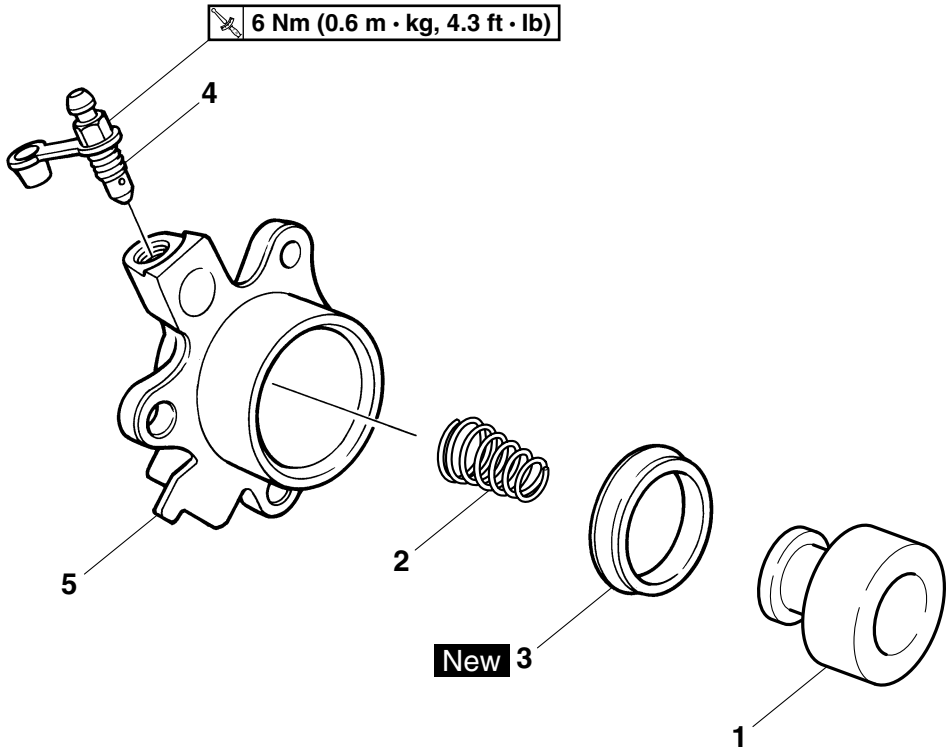

Order	Job/Parts to remove	Q'ty	Remarks
1	Clutch release cylinder piston	1	
2	Clutch release cylinder spring	1	
3	Clutch release cylinder piston seal	1	
4	Bleed screw	1	
5	Clutch release cylinder body	1	
			For assembly, reverse the disassembly procedure.

EAS25080
REMOVING THE CLUTCH

1. Remove:
   - Clutch cover “1”

NOTE:

Loosen each bolt 1/4 of a turn at a time, in stages and in a crisscross pattern. After all of the bolts are fully loosened, remove them.

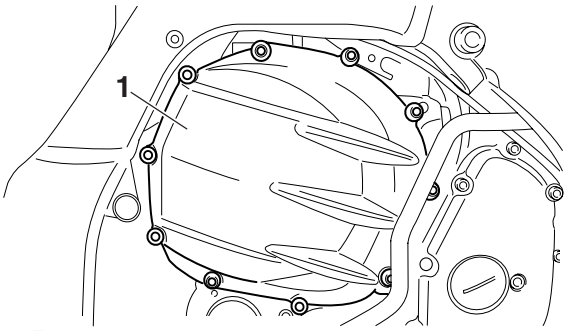

2. Remove:
   - Rear balancer weight
     Refer to “BALANCERS” on page 5-103.
3. Remove:
   - Clutch spring bolt

NOTE:

Loosen the clutch spring bolts in stages and in a crisscross pattern.

4. Straighten the lock washer tab.
5. Loosen:
   - Clutch boss nut “1”

NOTE:

While holding the clutch boss “2” with the universal clutch holder “3”, loosen the clutch boss nut.

Universal clutch holder
90890-04086
YM-91042

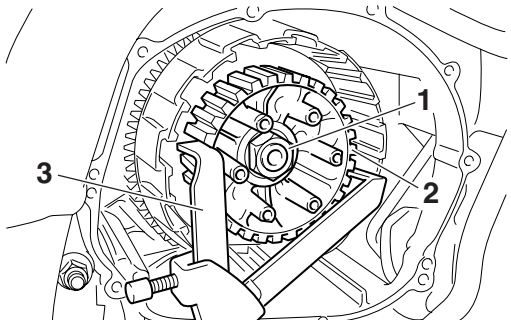

6. Remove:
   - Spacer “1”
   - Clutch housing

NOTE:

- Insert a cross-headed screwdriver into one of the holes of the clutch housing and primary driven gear, and then rotate the inner primary driven gear until both primary drive gears are aligned. The teeth of both primary driven gears must be aligned for installation.
- Insert two 5 mm bolts “2” into the spacer and then remove the spacer by pulling on the bolts.

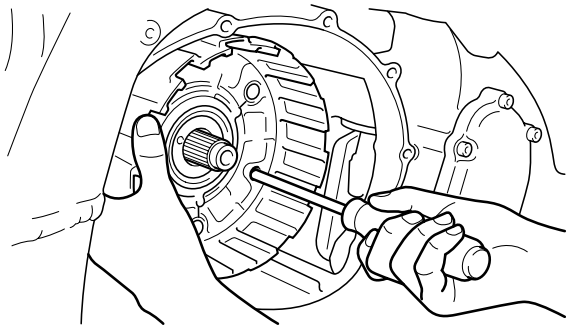

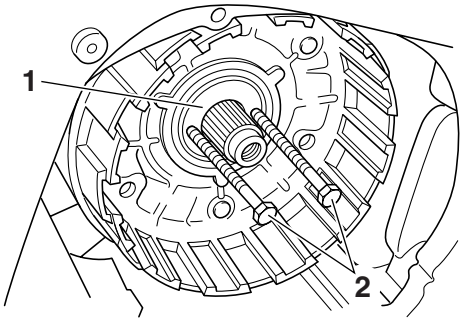

EAS25100
CHECKING THE FRICTION PLATES

The following procedure applies to all of the friction plates.

1. Check:
   - Friction plate
     Damage/wear → Replace the friction plates as a set.
2. Measure:
   - Friction plate thickness
     Out of specification → Replace the friction plates as a set.

NOTE:

Measure the friction plate at four places.

Friction plate thickness
2.90–3.10 mm (0.114–0.122 in)
Wear limit
2.80 mm (0.110 in)

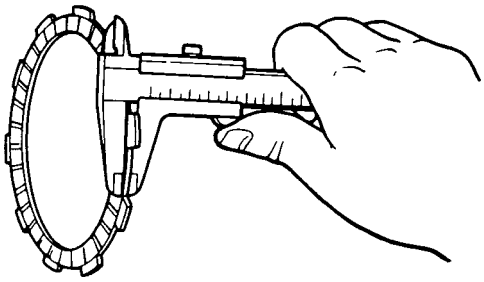

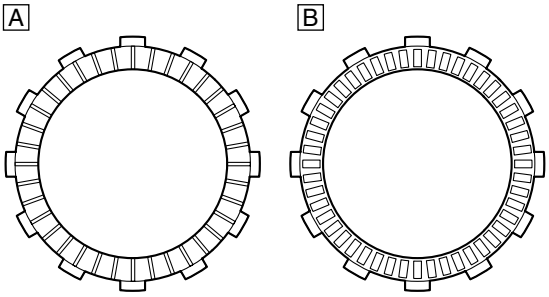

A. Friction plate 1, 3
B. Friction plate 2

EAS25110
CHECKING THE CLUTCH PLATES

The following procedure applies to all of the clutch plates.

1. Check:
   - Clutch plate
     Damage → Replace the clutch plates as a set.
2. Measure:
   - Clutch plate warpage
     (with a surface plate and thickness gauge "1")
     Out of specification → Replace the clutch plates as a set.

Thickness gauge
90890-03180
Feeler gauge set
YU-26900-9

Clutch plate thickness
1.90–2.10 mm (0.075–0.083 in)
Warpage limit
0.10 mm (0.0039 in)

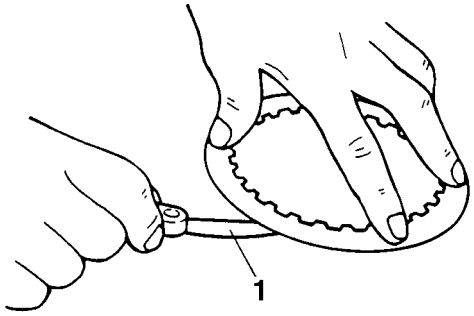

EAS25130
CHECKING THE CLUTCH SPRING PLATE

1. Check:
   - Clutch spring plate
     Damage → Replace.
2. Check:
   - Clutch spring plate seat
     Damage → Replace.

EAS25150
CHECKING THE CLUTCH HOUSING

1. Check:
   - Clutch housing dogs
     Damage/pitting/wear → Deburr the clutch housing dogs or replace the clutch housing.

NOTE:

Pitting on the clutch housing dogs will cause erratic clutch operation.

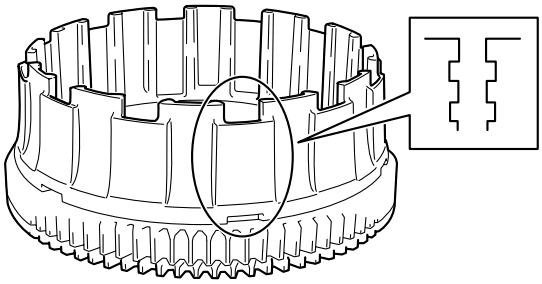

2. Check:
   - Bearing
     Damage/wear → Replace the bearing and clutch housing.

EAS25160
CHECKING THE CLUTCH BOSS

1. Check:
   - Clutch boss splines
     Damage/pitting/wear → Replace the clutch boss.

NOTE:

Pitting on the clutch boss splines will cause erratic clutch operation.

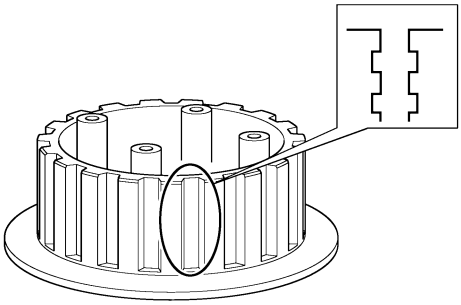

EAS25170
CHECKING THE PRESSURE PLATE
1. Check:
   - Pressure plate
     Cracks/damage → Replace.
   - Bearing
     Damage/wear → Replace.

EAS25190
CHECKING THE CLUTCH PUSH RODS
1. Check:
   - O-ring
   - Short clutch push rod
   - Long clutch push rod
   - Ball
     Cracks/damage/wear → Replace the defective part(s).
2. Measure:
   - Long clutch push rod bending limit
     Out of specification → Replace the long clutch push rod.

	Long clutch push rod bending limit **0.37 mm (0.015 in)**

EAS25210
CHECKING THE PRIMARY DRIVEN GEAR
1. Check:
   - Primary driven gear “1”
     Damage/wear → Replace the primary drive and primary driven gears as a set.
     Excessive noise during operation → Replace the clutch housing and crankshaft as a set.

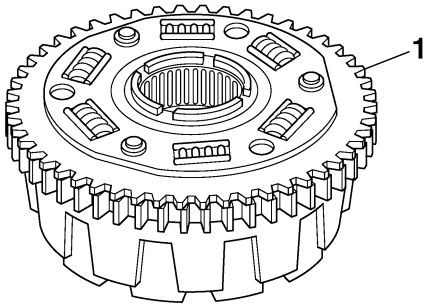

EAS25250
INSTALLING THE CLUTCH
1. Install:
   - Clutch housing “1”

NOTE:
- Make sure that the projections “a” in the clutch housing align with the slots “b” in the oil pump drive sprocket.
- Make sure that the primary driven gear teeth and primary drive gear teeth mesh correctly.
- Insert a cross-headed screwdriver into one of the holes of the clutch housing and primary driven gear, and then rotate the inner primary driven gear until both primary drive gears are aligned. The teeth of both primary driven gears must be aligned for installation.

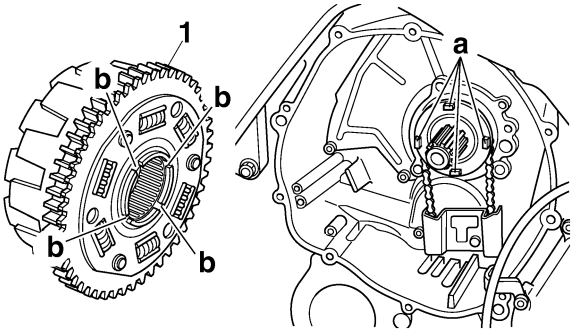

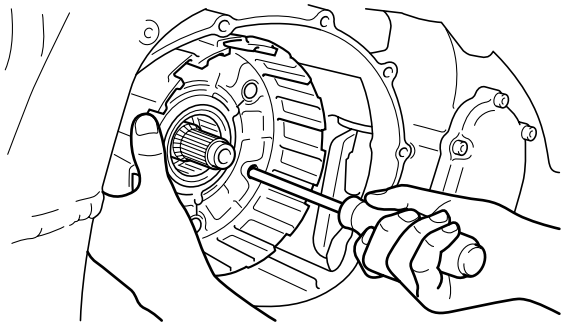

2. Install:
   - Spacer “1”

NOTE:
Install the spacer with the two screw holes facing towards the clutch boss.

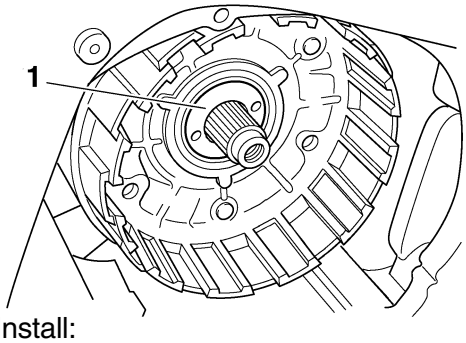

3. Install:
   - Clutch boss “1”

- Lock washer “2” New
- Clutch boss nut “3”

Clutch boss nut
90 Nm (9.0 m·kg, 65 ft·lb)

NOTE:
- Install the clutch boss nut with its large inner diameter side facing inward as shown in the illustration.
- While holding the clutch boss with the universal clutch holder “4”, tighten the clutch boss nut.

Universal clutch holder
90890-04086
YM-91042

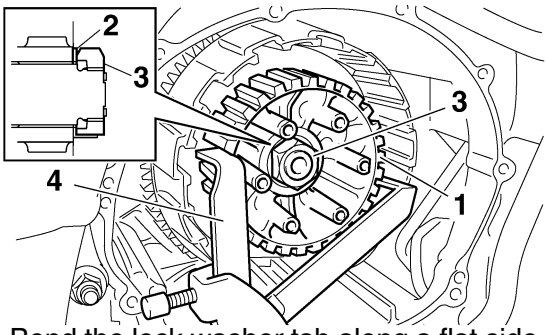

4. Bend the lock washer tab along a flat side of the nut.
5. Install:
   - Clutch damper spring seat “1”
   - Clutch damper spring “2”

NOTE:
- Install the clutch damper spring seat with the white paint mark and the sharp edge “a” facing outward.
- Install the clutch damper spring as shown in the illustration.

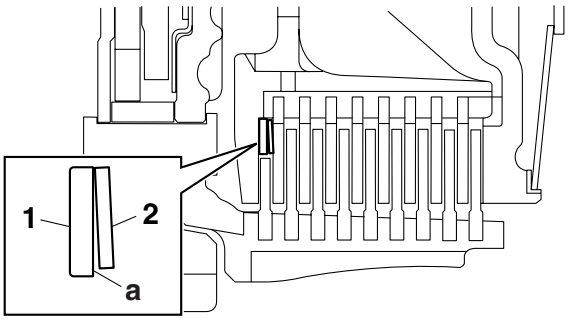

6. Lubricate:
   - Friction plates
   - Clutch plates
   (with the recommended lubricant)

Recommended lubricant
Engine oil

7. Install:
   - Friction plates
   - Clutch plates

NOTE:
First, install a friction plate and then alternate between a clutch plate and a friction plate.

8. Install:
   - Clutch spring bolts

Clutch spring bolt
8 Nm (0.8 m·kg, 5.8 ft·lb)

NOTE:
Tighten the clutch spring bolts in stages and in a crisscross pattern.

9. Install:
   - Rear balancer weight
   Refer to “BALANCERS” on page 5-103.
10. Install:
   - Clutch cover

Clutch cover bolt
12 Nm (1.2 m·kg, 8.7 ft·lb)

NOTE:
Tighten the clutch cover bolts in the proper tightening sequence as shown.

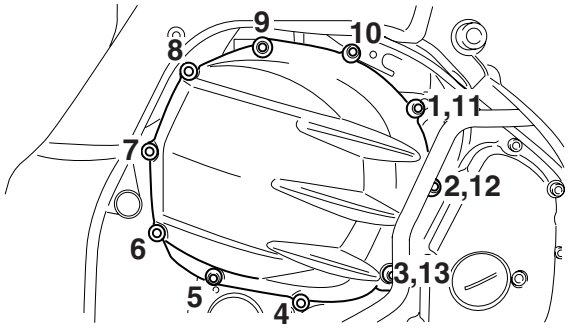

EAS25280
DISASSEMBLING THE CLUTCH MASTER CYLINDER

ECA13840
CAUTION:
- **Clutch components rarely require disassembly.**
- **Therefore, always follow these preventive measures:**
- **Never disassemble clutch components unless absolutely necessary.**

- **If any connection on the hydraulic clutch system is disconnected, the entire clutch system must be disassembled, drained, cleaned, properly filled, and bled after reassembly.**
- **Never use solvents on internal clutch components.**
- **Use only clean or new clutch fluid for cleaning clutch components.**
- **Clutch fluid may damage painted surfaces and plastic parts. Therefore, always clean up any spilt fluid immediately.**
- **Avoid clutch fluid coming into contact with the eyes as it can cause serious injury.**
- **First aid for clutch fluid entering the eyes:**
- **Flush with water for 15 minutes and get immediate medical attention.**

NOTE:

Before disassembling the clutch master cylinder, drain the clutch fluid from the entire clutch system.

1. Remove:
   - Clutch hose union bolt “1”
   - Copper washers “2”
   - Clutch hose “3”

NOTE:

To collect any remaining clutch fluid, place a container under the master cylinder and the end of the clutch hose.

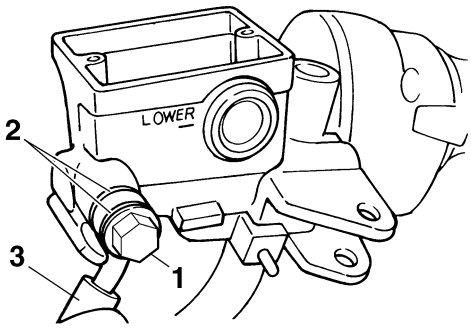

EAS25290

CHECKING THE CLUTCH MASTER CYLINDER

Recommended clutch component replacement schedule	
Piston seal	Every two years
Clutch hose	Every four years
Clutch fluid	Every two years and whenever the clutch is disassembled

1. Check:
   - Clutch master cylinder body
     Cracks/damage → Replace the clutch master cylinder.
   - Clutch fluid delivery passage (clutch master cylinder body)
     Obstruction → Blow out with compressed air.
2. Check:
   - Clutch master cylinder
   - Clutch master cylinder kit
     Rust/scratches/wear → Replace the clutch master cylinder and clutch master cylinder kit as a set.
3. Check:
   - Clutch master cylinder reservoir
     Cracks/damage → Replace.
   - Clutch master cylinder reservoir diaphragm
     Damage/wear → Replace.
4. Check:
   - Clutch hose
     Cracks/damage/wear → Replace.

EAS25300

ASSEMBLING THE CLUTCH MASTER CYLINDER

EW3P61015

WARNING

- **Before installation, all internal clutch components must be cleaned and lubricated with clean or new clutch fluid.**
- **Never use solvents on internal clutch components.**

Recommended fluid
DOT 4

EAS25310

INSTALLING THE CLUTCH MASTER CYLINDER

1. Install:
   - Clutch master cylinder “1”
   - Clutch master cylinder holder “2”

EW3P61016

WARNING

- **Install the clutch lever holder with the “UP” mark facing up.**
- **Align the end of the clutch lever holder with the punch mark “a” on the left handlebar.**
- **First, tighten the upper bolt, then the lower bolt.**

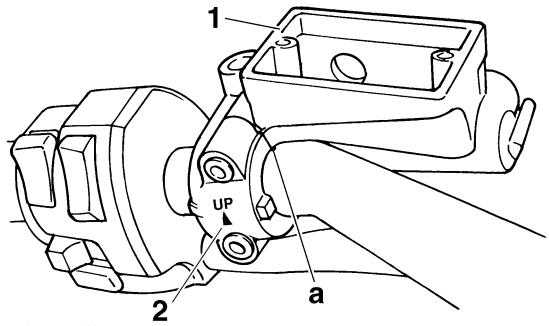

2. Install:
   - Copper washers "1" New
   - Clutch hose "2"
   - Clutch hose union bolt "3"

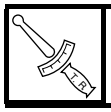	**Clutch hose union bolt** **30 Nm (3.0 m·kg, 22 ft·lb)**

EW3P61017

WARNING

Proper clutch hose routing is essential to insure safe vehicle operation. Refer to "CABLE ROUTING" on page 2-45.

EC3P61034

CAUTION:

When installing the clutch hose onto the clutch master cylinder, make sure the clutch pipe touches the projection "a" as shown.

NOTE:

Turn the handlebars to the left and to the right to make sure the clutch hose does not touch other parts (e.g., wire harness, cables, leads). Correct if necessary.

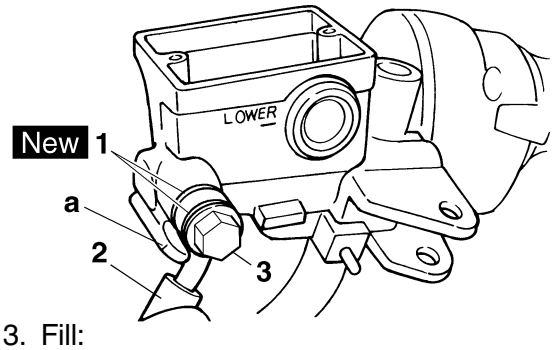

3. Fill:
   - Clutch master cylinder reservoir
     (with the specified amount of the recommended clutch fluid)

	Recommended fluid **DOT 4**

EWA13370

WARNING

- **Use only the designated clutch fluid. Other clutch fluids may cause the rubber seals to deteriorate, causing leakage and poor clutch performance.**
- **Refill with the same type of clutch fluid that is already in the system. Mixing clutch fluids may result in a harmful chemical reaction, leading to poor clutch performance.**
- **When refilling, be careful that water does not enter the clutch fluid reservoir. Water will significantly lower the boiling point of the clutch fluid and could cause vapor lock.**

ECA13420

CAUTION:

Clutch fluid may damage painted surfaces or plastic parts. Therefore, always clean up any spilt clutch fluid immediately.

NOTE:

In order to ensure a correct reading of the clutch fluid level, make sure the top of the reservoir is horizontal.

4. Bleed:
   - Clutch system
     Refer to "BLEEDING THE HYDRAULIC CLUTCH SYSTEM" on page 3-15.
5. Check:
   - Clutch fluid level
     Below the minimum level mark "a" → Add the recommended clutch fluid to the proper level.
     Refer to "CHECKING THE CLUTCH FLUID LEVEL" on page 3-15.

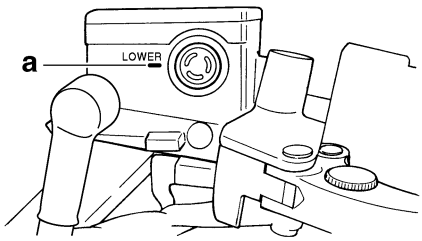

6. Check:
   - Clutch lever operation
     Soft or spongy feeling → Bleed the clutch system.
     Refer to "BLEEDING THE HYDRAULIC CLUTCH SYSTEM" on page 3-15.

ET3P61024
REMOVING THE CLUTCH RELEASE CYLINDER
1. Remove:
   - Clutch hose union bolt “1”
   - Copper washers “2”
   - Clutch hose “3”

NOTE:

Put the end of the clutch hose into a container and pump out the clutch fluid carefully.

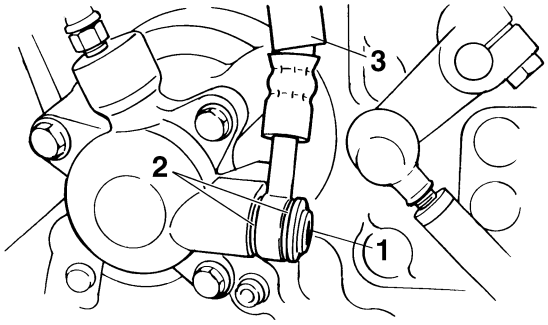

EAS25330
CHECKING THE CLUTCH RELEASE CYLINDER
1. Check:
   - Clutch release cylinder body
     Cracks/damage → Replace the clutch release cylinder.
2. Check:
   - Clutch release cylinder “1”
   - Clutch release cylinder piston “2”
     Rust/scratches/wear → Replace the clutch release cylinder and clutch release cylinder piston as a set.

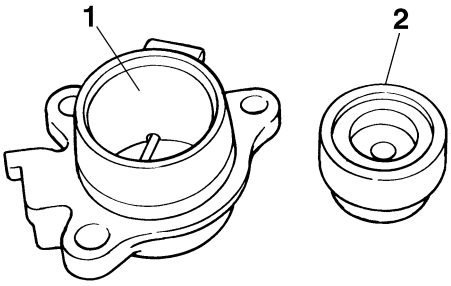

EAS25340
ASSEMBLING THE CLUTCH RELEASE CYLINDER

EW3P61018

WARNING

- **Before installation, all internal clutch components must be cleaned and lubricated with clean or new clutch fluid.**
- **Never use solvents on internal clutch components as they will cause the piston seal to swell and distort.**
- **Whenever a clutch release cylinder is disassembled, replace the piston seal.**

Recommended fluid
DOT 4

EAS25350
INSTALLING THE CLUTCH RELEASE CYLINDER
1. Check:
   - Copper washers “1” New
   - Clutch hose “2”
   - Clutch hose union bolt “3”

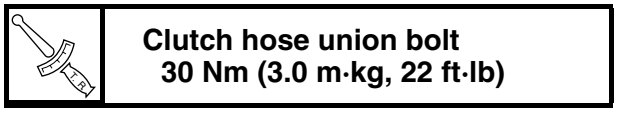

Clutch hose union bolt
30 Nm (3.0 m·kg, 22 ft·lb)

EW3P61017

WARNING

Proper clutch hose routing is essential to insure safe vehicle operation. Refer to “CABLE ROUTING” on page 2-45.

EC3P61035

CAUTION:

When installing the clutch hose onto the clutch release cylinder, make sure the pipe “a” touches the projection “b” on the clutch release cylinder body.

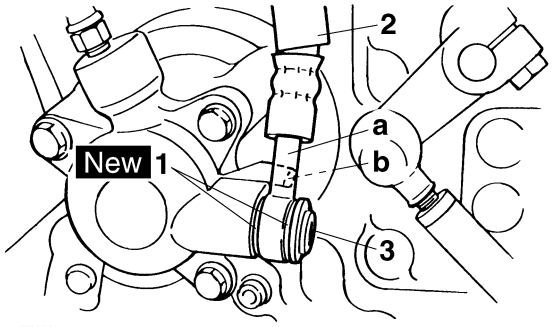

2. Fill:
   - Clutch master cylinder reservoir
     (with the specified amount of the recommended clutch fluid)

Recommended fluid
DOT 4

EWA13370

WARNING

- **Use only the designated clutch fluid. Other clutch fluids may cause the rubber seals to deteriorate, causing leakage and poor clutch performance.**
- **Refill with the same type of clutch fluid that is already in the system. Mixing clutch fluids may result in a harmful chemical reaction, leading to poor clutch performance.**
- **When refilling, be careful that water does not enter the clutch fluid reservoir. Water will significantly lower the boiling point of the clutch fluid and could cause vapor lock.**

ECA13420

CAUTION:

Clutch fluid may damage painted surfaces or plastic parts. Therefore, always clean up any spilt clutch fluid immediately.

NOTE:

In order to ensure a correct reading of the clutch fluid level, make sure that the top of the reservoir is horizontal.

3. Bleed:
   - Clutch system
     Refer to “BLEEDING THE HYDRAULIC CLUTCH SYSTEM” on page 3-15.
4. Check:
   - Clutch fluid level
     Below the minimum level mark “a” → Add the recommended clutch fluid to the proper level.
     Refer to “CHECKING THE CLUTCH FLUID LEVEL” on page 3-15.

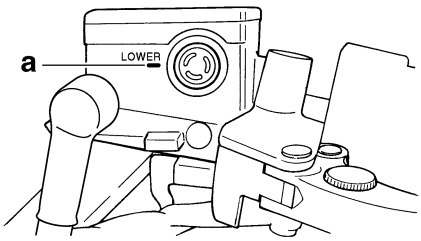

5. Check:
   - Clutch lever operation
     Soft or spongy feeling → Bleed the clutch system.
     Refer to “BLEEDING THE HYDRAULIC CLUTCH SYSTEM” on page 3-15.

EAS25410

SHIFT SHAFT

Removing the shift shaft and stopper lever

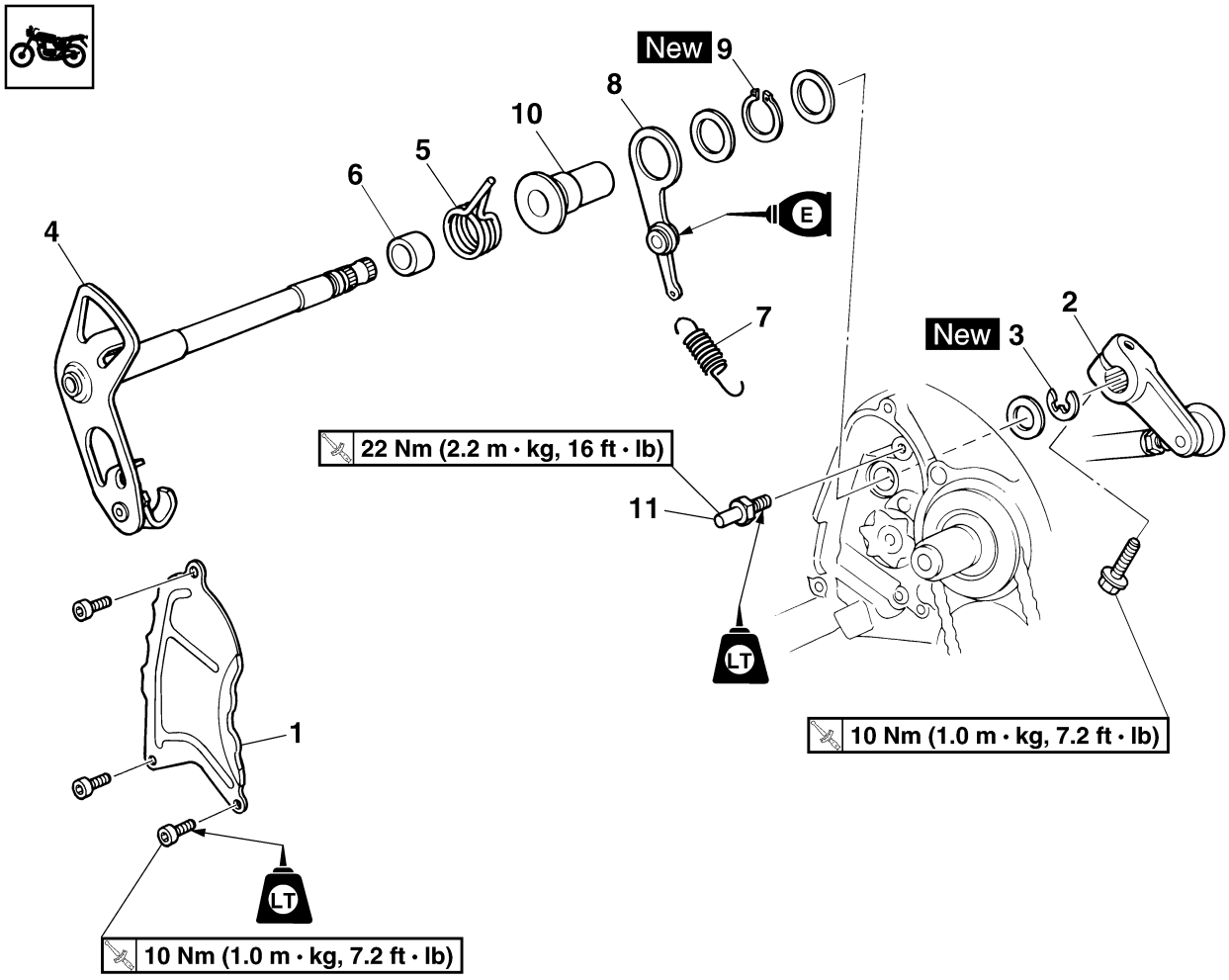

Order	Job/Parts to remove	Q'ty	Remarks
	Clutch housing		Refer to "CLUTCH" on page 5-41.
1	Oil baffle plate 1	1	
2	Shift arm	1	
3	Circlip	1	
4	Shift shaft	1	
5	Shift shaft spring	1	
6	Spacer	1	
7	Stopper lever spring	1	
8	Stopper lever	1	
9	Circlip	1	
10	Collar	1	
11	Shift shaft spring stopper	1	
			For installation, reverse the removal procedure.

EAS25420
CHECKING THE SHIFT SHAFT
1. Check:
   - Shift shaft
     Bends/damage/wear → Replace.
   - Shift shaft spring
     Damage/wear → Replace.

EAS25430
CHECKING THE STOPPER LEVER
1. Check:
   - Stopper lever
     Bends/damage → Replace.
     Roller turns roughly → Replace the stopper lever.
   - Shift lever spring
     Damage/wear → Replace.

EAS25450
INSTALLING THE SHIFT SHAFT
1. Install:
   - Stopper lever “1”
   - Stopper lever spring “2”

NOTE:
- Hook the ends of the stopper lever spring onto the stopper lever and the crankcase boss “3”.
- Mesh the stopper lever with the shift drum segment assembly.

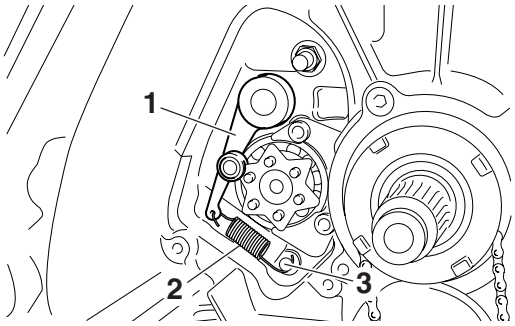

2. Install:
   - Shift shaft “1”

NOTE:
Hook the end of the shift shaft spring onto the shift shaft spring stopper “2”.

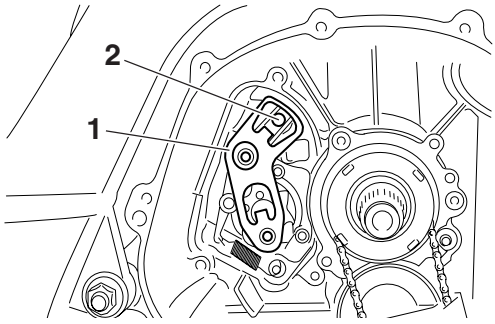

3. Install:
   - Shift arm “1”

	Shift arm bolt **10 Nm (1.0 m·kg, 7.2 ft·lb)**

NOTE:
Align the punch mark “a” in the shift shaft with the slot in the shift arm.

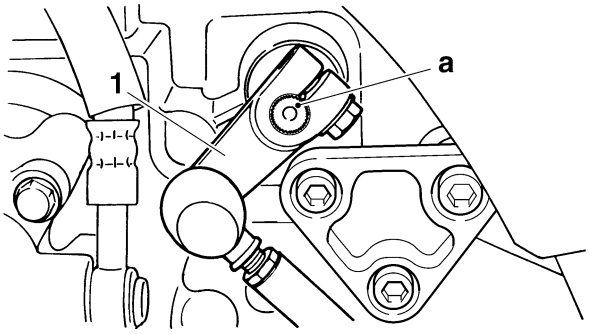

EAS24920

OIL PUMP

Removing the oil pan and oil pump

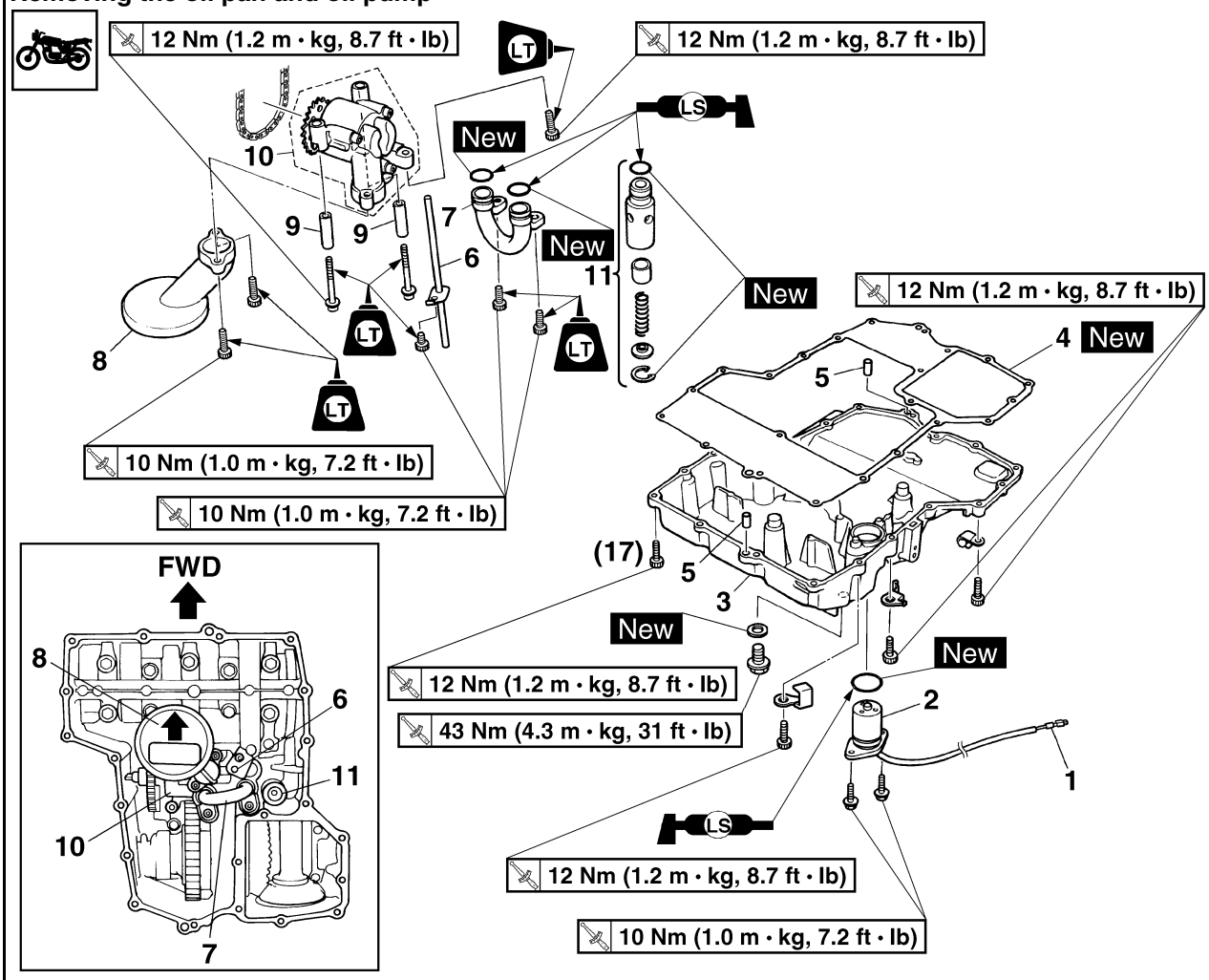

Order	Job/Parts to remove	Q'ty	Remarks
	Engine oil		Drain. Refer to "CHANGING THE ENGINE OIL" on page 3-13.
	Throttle bodies		Refer to "THROTTLE BODIES" on page 7-4.
	Exhaust pipe assembly		Refer to "ENGINE REMOVAL" on page 5-1.
	Sidestand		Refer to "SHAFT DRIVE" on page 4-87.
	Water pump		Refer to "WATER PUMP" on page 6-10.
1	Oil level switch coupler	1	Disconnect.
2	Oil level switch	1	
3	Oil pan	1	
4	Oil pan gasket	1	
5	Dowel pin	2	
6	Oil delivery pipe 2	1	
7	Oil delivery pipe 3	1	
8	Oil strainer	1	
9	Dowel pin	2	
10	Oil pump	1	

Removing the oil pan and oil pump

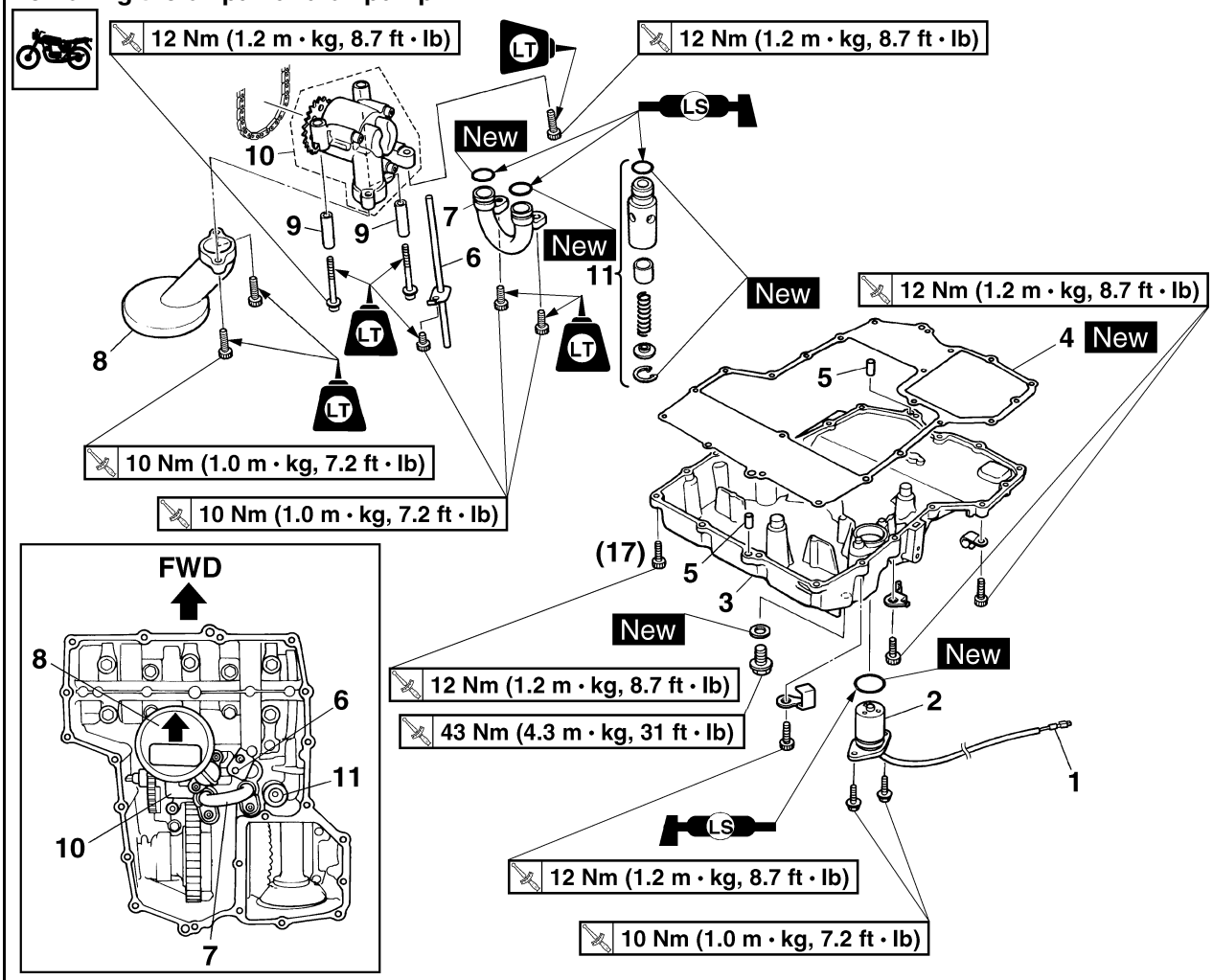

Order	Job/Parts to remove	Q'ty	Remarks
11	Relief valve assembly	1	
			For installation, reverse the removal procedure.

Disassembling the oil pump

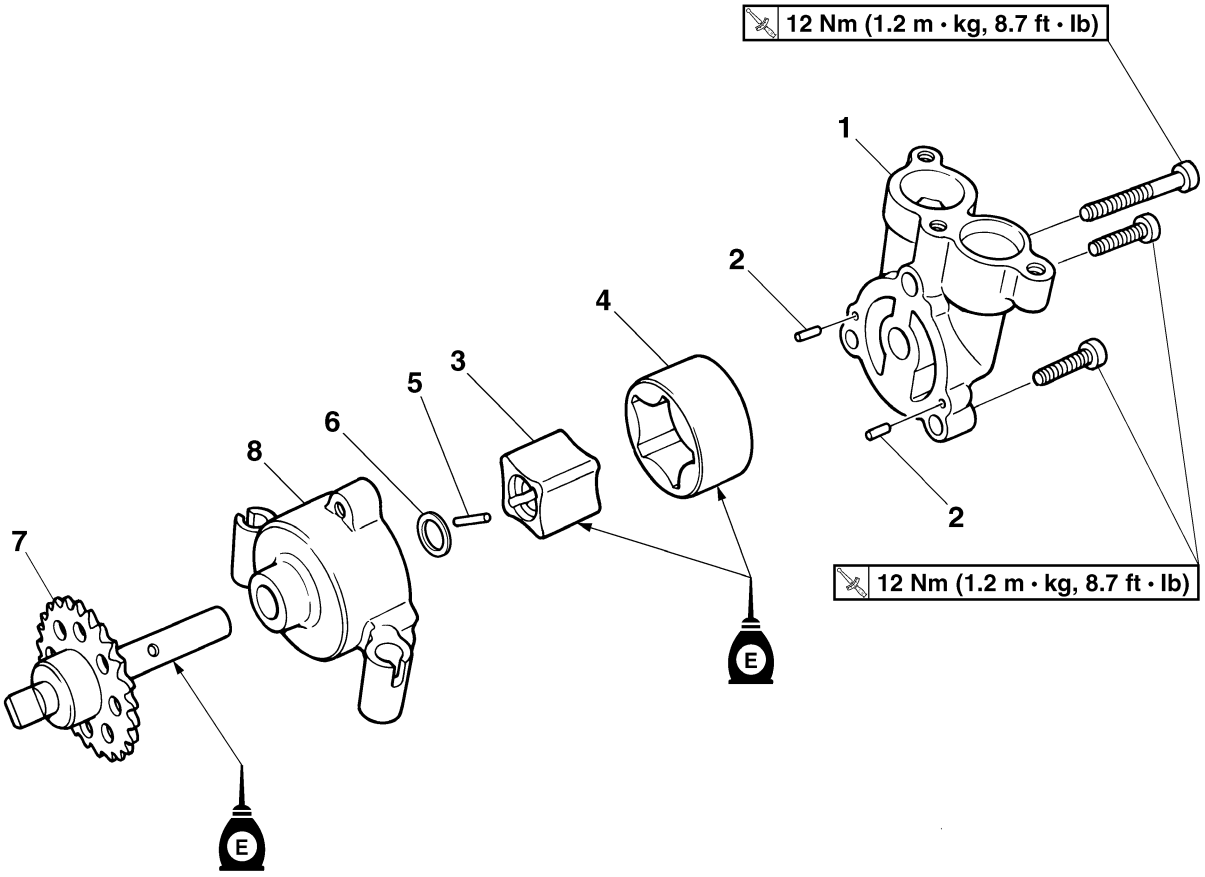

Order	Job/Parts to remove	Q'ty	Remarks
1	Oil pump housing cover	1	
2	Pin	2	
3	Oil pump inner rotor	1	
4	Oil pump outer rotor	1	
5	Pin	1	
6	Washer	1	
7	Oil pump driven sprocket	1	
8	Oil pump housing	1	
			For assembly, reverse the disassembly procedure.

EAS24960
CHECKING THE OIL PUMP

1. Check:
   - Oil pump driven sprocket
   - Oil pump housing
   - Oil pump housing cover
     Cracks/damage/wear → Replace the defective part(s).
2. Measure:
   - Inner-rotor-to-outer-rotor-tip clearance “a”
   - Outer-rotor-to-oil-pump-housing clearance “b”
   - Oil-pump-housing-to-inner-rotor-and-outer-rotor clearance “c”
     Out of specification → Replace the oil pump.

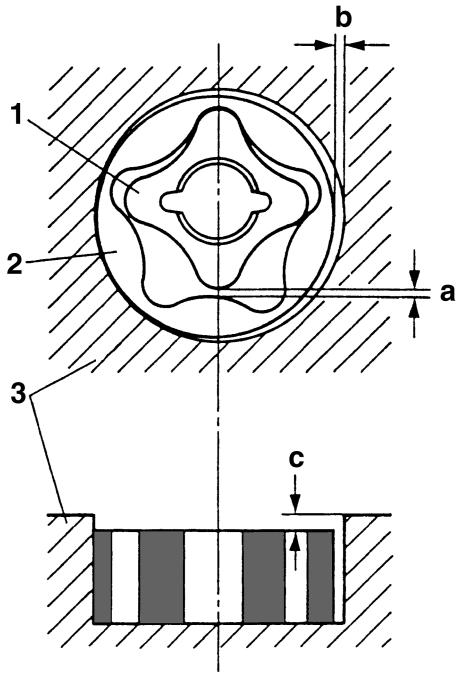

1. Inner rotor
2. Outer rotor
3. Oil pump housing

Inner-rotor-to-outer-rotor-tip clearance
Less than 0.12 mm (0.0047 in)
Limit
0.20 mm (0.0079 in)
Outer-rotor-to-oil-pump-housing clearance
0.09–0.15 mm (0.0035–0.0059 in)
Limit
0.22 mm (0.0087 in)
Oil-pump-housing-to-inner-and-outer-rotor clearance
0.03–0.08 mm (0.0012–0.0032 in)
Limit
0.15 mm (0.0059 in)

3. Check:
   - Oil pump operation
     Rough movement → Repeat steps (1) and (2) or replace the defective part(s).

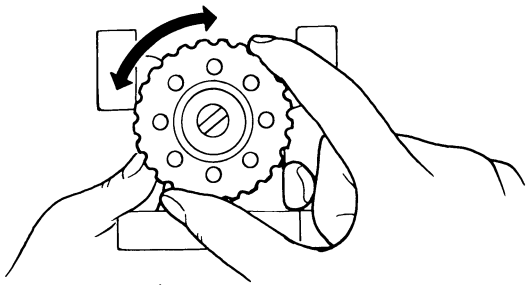

EAS24970
CHECKING THE RELIEF VALVE

1. Check:
   - Relief valve body “1”
   - Relief valve “2”
   - Spring “3”
   - O-ring “4”
     Damage/wear → Replace the defective part(s).

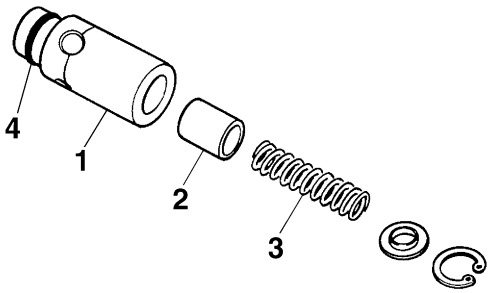

EAS24980
CHECKING THE OIL DELIVERY PIPES

The following procedure applies to all of the oil delivery pipes.

1. Check:
   - Oil delivery pipes
     Damage → Replace.
     Obstruction → Wash and blow out with compressed air.

EAS24990
CHECKING THE OIL STRAINER
1. Check:
   - Oil strainer
     Damage → Replace.
     Contaminants → Clean with solvent.

EAS25010
ASSEMBLING THE OIL PUMP
1. Lubricate:
   - Inner rotor
   - Outer rotor
   - Oil pump shaft
     (with the recommended lubricant)

	Recommended lubricant **Engine oil**

2. Install:
   - Oil pump driven sprocket
   - Oil pump housing “1”
   - Washer “2”
   - Pin “3”
   - Oil pump inner rotor “4”
   - Oil pump outer rotor

NOTE:
When installing the inner rotor, align the pin “3” in the oil pump shaft with the groove “a” in the inner rotor “4”.

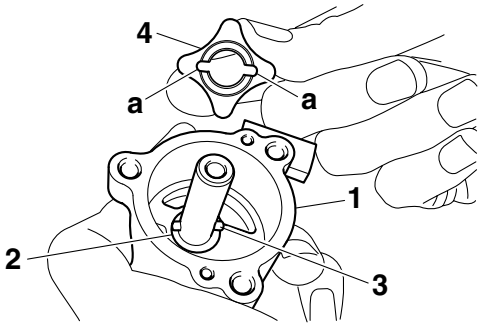

3. Check:
   - Oil pump operation
     Refer to “CHECKING THE OIL PUMP” on page 5-61.

EAS25050
INSTALLING THE OIL PAN
1. Install:
   - Oil pan gasket New
   - Oil pan

	Oil pan bolt **12 Nm (1.2 m·kg, 8.7 ft·lb)**

NOTE:
Tighten the oil pan bolts in stages and in a criss-cross pattern.

EAS25710

MIDDLE GEAR

Removing the middle gear

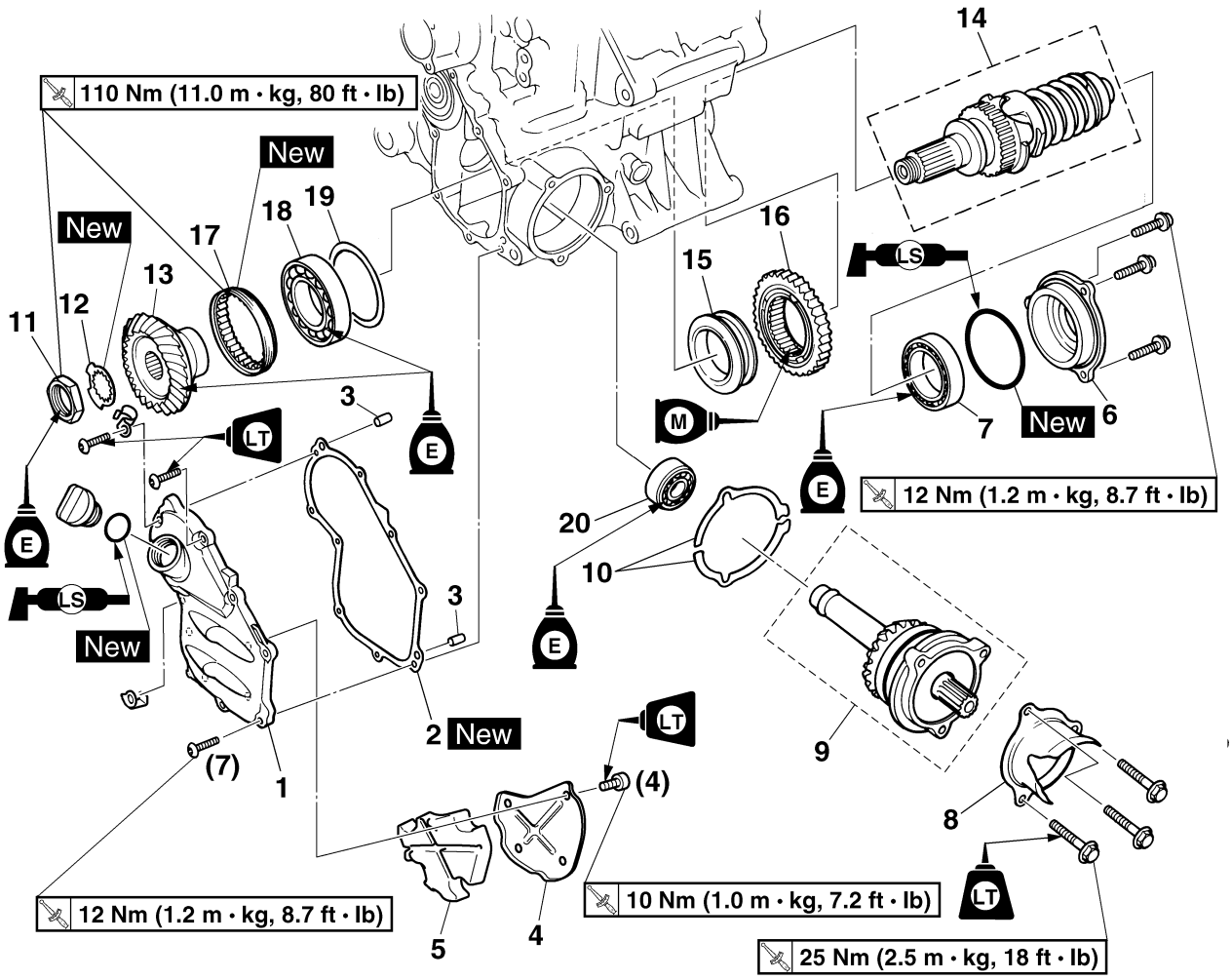

Order	Job/Parts to remove	Q'ty	Remarks
	Engine		Refer to "ENGINE REMOVAL" on page 5-1.
	Oil pan/Oil pump		Refer to "OIL PUMP" on page 5-58.
1	Middle gear case cover	1	
2	Middle gear case cover gasket	1	
3	Dowel pin	2	
4	Damper cover	1	
5	Damper	1	
6	Middle drive shaft bearing housing	1	
7	Bearing	1	
8	Middle driven shaft end cover	1	
9	Middle driven shaft assembly	1	
10	Middle driven pinion gear shim		
11	Middle drive pinion gear nut	1	
12	Lock washer	1	
13	Middle drive pinion gear	1	
14	Middle drive shaft assembly	1	

Removing the middle gear

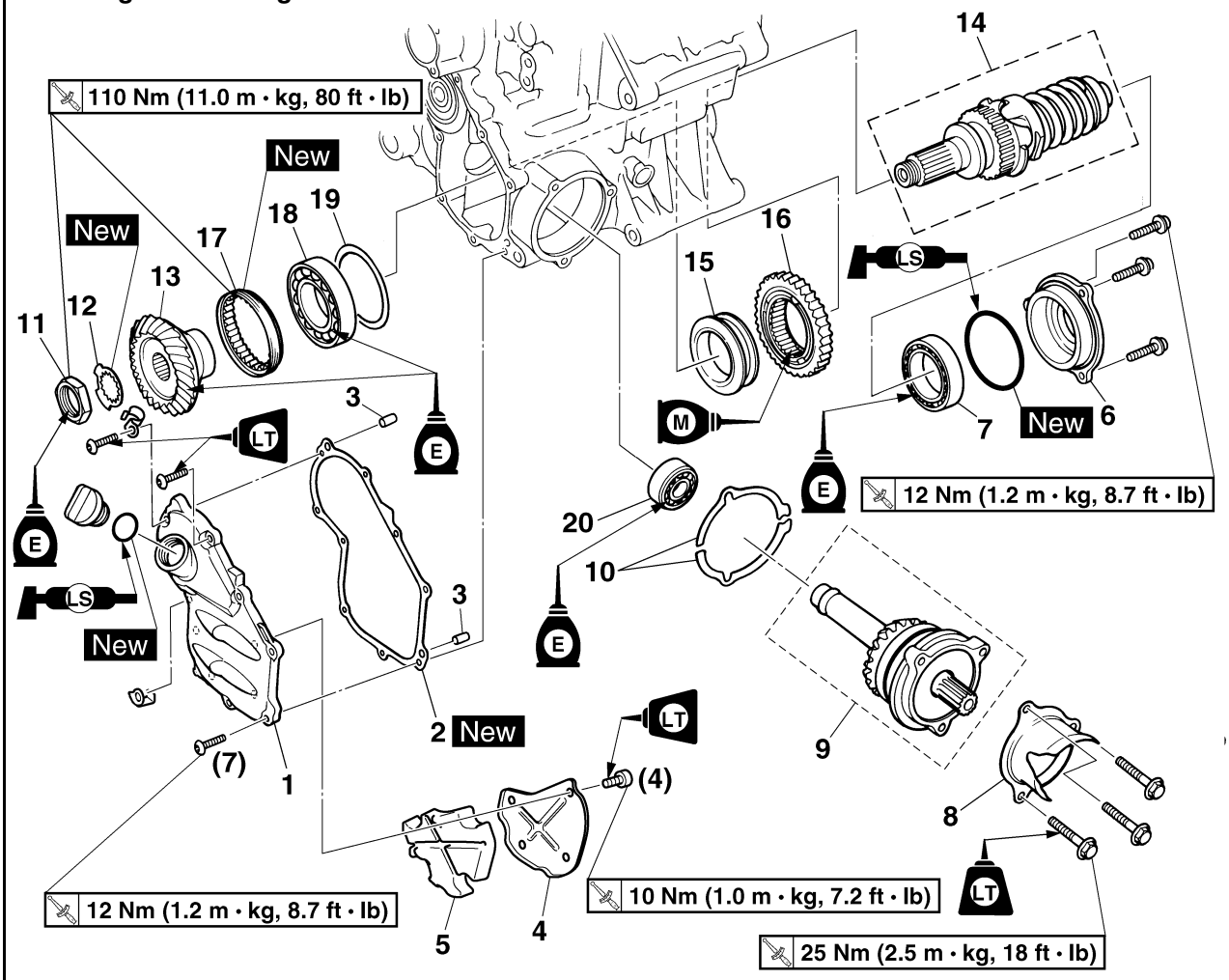

Order	Job/Parts to remove	Q'ty	Remarks
15	Spacer	1	
16	Middle driven gear	1	
17	Bearing retainer	1	
18	Bearing	1	
19	Middle drive pinion gear shim		
20	Bearing	1	
			For installation, reverse the removal procedure.

Disassembling the middle drive shaft assembly

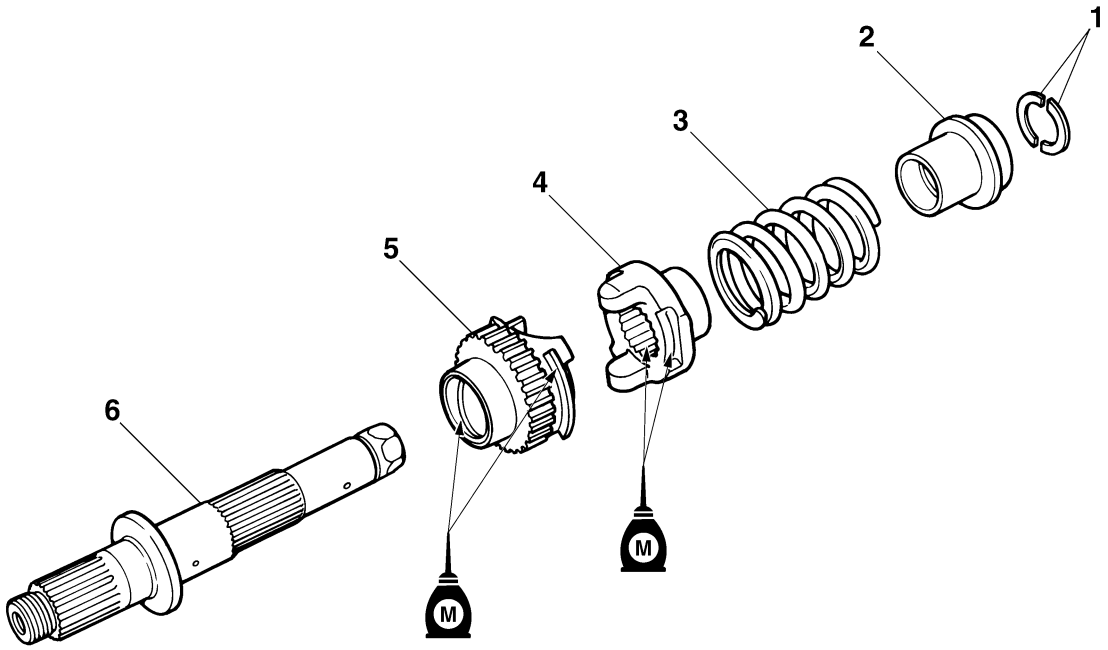

Order	Job/Parts to remove	Q'ty	Remarks
1	Spring retainer	2	
2	Spring seat	1	
3	Damper spring	1	
4	Damper driven cam	1	
5	Damper drive cam	1	
6	Middle drive shaft	1	
			For assembly, reverse the disassembly procedure.

Disassembling the middle driven shaft assembly

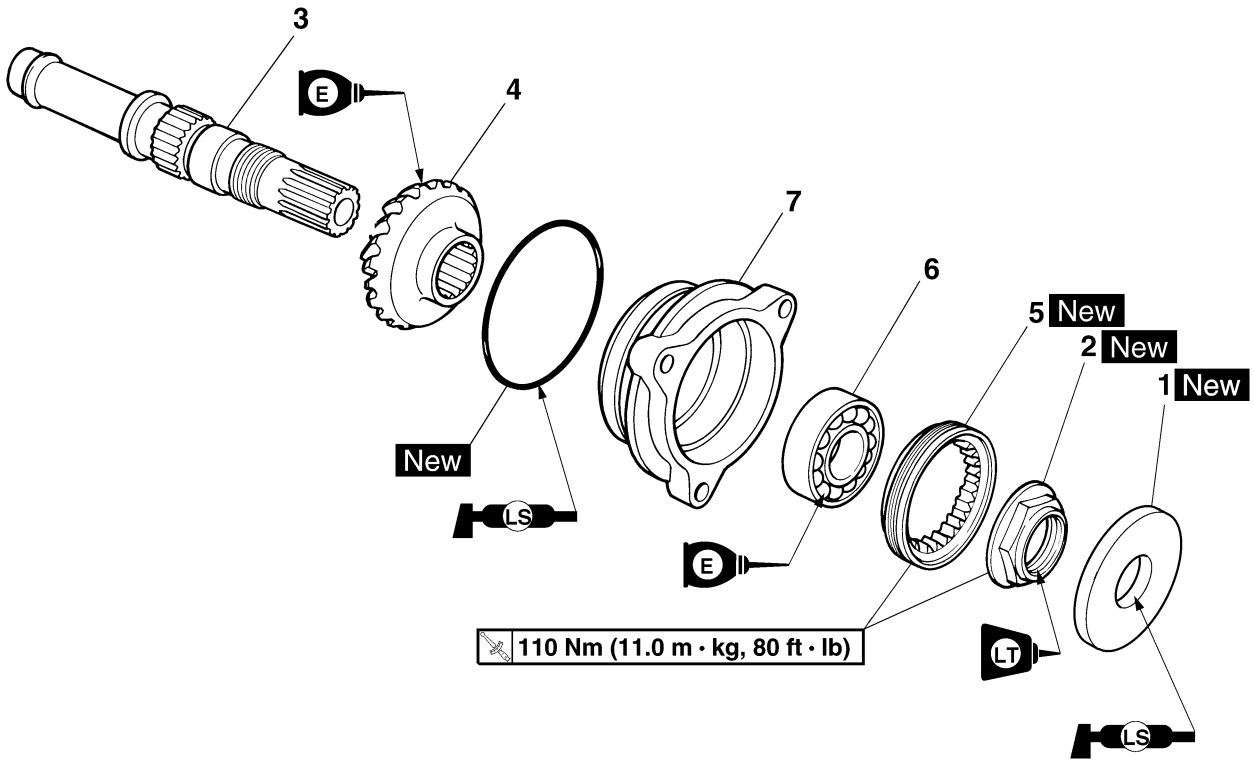

Order	Job/Parts to remove	Q'ty	Remarks
1	Oil seal	1	
2	Middle driven pinion gear nut	1	
3	Middle driven shaft	1	
4	Middle driven pinion gear	1	
5	Bearing retainer	1	
6	Bearing	1	
7	Middle driven shaft bearing housing	1	
			For assembly, reverse the disassembly procedure.

EAS25730
REMOVING THE MIDDLE DRIVE SHAFT ASSEMBLY

1. Remove:
   - Middle drive pinion gear nut “1”
   - Lock washer “2”

▼▼▼▼▼▼▼▼▼▼▼▼▼▼▼▼▼▼▼▼▼▼▼▼▼▼▼▼▼▼▼▼▼▼

a. Straighten the lock washer tab.
b. Loosen the middle drive pinion gear nut.

NOTE:

While holding the middle drive shaft.

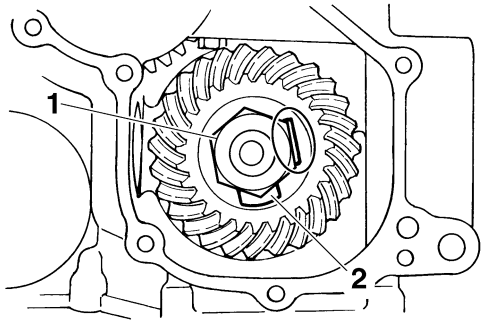

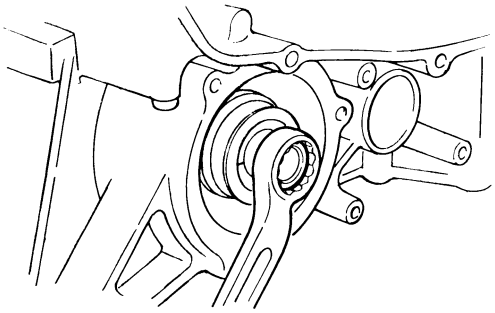

c. Remove the middle drive pinion gear nut and lock washer.

▲▲▲▲▲▲▲▲▲▲▲▲▲▲▲▲▲▲▲▲▲▲▲▲▲▲▲▲▲▲▲▲▲▲

2. Remove:
   - Bearing retainer “1”

▼▼▼▼▼▼▼▼▼▼▼▼▼▼▼▼▼▼▼▼▼▼▼▼▼▼▼▼▼▼▼▼▼▼

a. Straighten the thread on the bearing retainer.
b. Attach the bearing retainer wrench “2”.

Bearing retainer wrench
90890-04137
Middle drive shaft bearing retainer wrench
YM-04137

c. Loosen the bearing retainer.

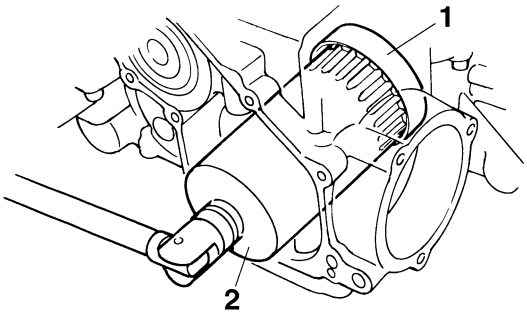

d. Remove the bearing retainer.

▲▲▲▲▲▲▲▲▲▲▲▲▲▲▲▲▲▲▲▲▲▲▲▲▲▲▲▲▲▲▲▲▲▲

EAS25750
DISASSEMBLING THE MIDDLE DRIVE SHAFT ASSEMBLY

1. Remove:
   - Spring retainers “1”

NOTE:

While compressing the spring with the damper spring compressor “2”, remove the spring retainers.

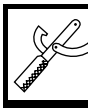

Damper spring compressor
90890-04090

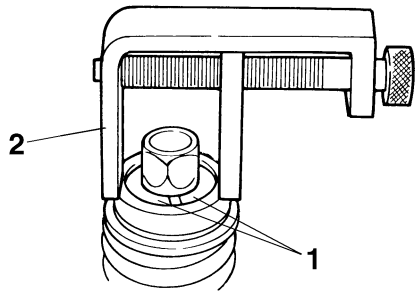

EAS25770
DISASSEMBLING THE MIDDLE DRIVEN SHAFT ASSEMBLY

1. Remove:
   - Middle driven pinion gear nut

▼▼▼▼▼▼▼▼▼▼▼▼▼▼▼▼▼▼▼▼▼▼▼▼▼▼▼▼▼▼▼▼▼▼

a. Straighten the thread on the middle driven pinion gear nut.
b. Loosen the middle driven pinion gear nut.

NOTE:

Secure the middle driven shaft in a vise, making sure to tighten the vise jaws onto the flat sections of the shaft.

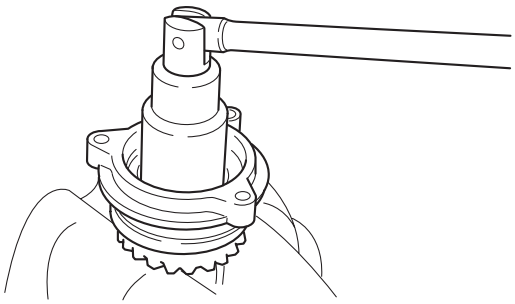

c. Remove the middle driven pinion gear nut.

▲▲▲▲▲▲▲▲▲▲▲▲▲▲▲▲▲▲▲▲▲▲▲▲▲▲▲▲▲▲▲▲▲▲

2. Remove:
   - Bearing retainer

▼▼▼▼▼▼▼▼▼▼▼▼▼▼▼▼▼▼▼▼▼▼▼▼▼▼▼▼▼▼▼▼▼▼

a. Temporarily install the middle driven shaft bearing housing onto the lower crankcase.
b. Straighten the thread on the bearing retainer.
c. Attach the bearing retainer wrench “1”.

	Bearing retainer wrench **90890-04140** **Middle drive shaft bearing retainer wrench** **YM-04140**

d. Loosen the bearing retainer.

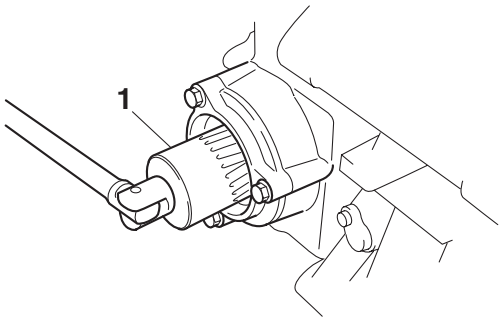

e. Remove the bearing retainer.

▲▲▲▲▲▲▲▲▲▲▲▲▲▲▲▲▲▲▲▲▲▲▲▲▲▲▲▲▲▲▲▲▲▲

EAS25780

CHECKING THE MIDDLE DRIVE SHAFT ASSEMBLY

1. Check:
   - Middle drive pinion gear
     Galling/pitting/wear → Replace.
2. Check:
   - Damper drive cam surface
   - Damper driven cam surface
     Scratches/wear → Replace.
3. Check:
   - Damper spring
     Cracks/damage → Replace.
4. Check:
   - Bearings
     Damage/pitting → Replace.

EAS25790

CHECKING THE MIDDLE DRIVEN SHAFT ASSEMBLY

1. Check:
   - Middle driven pinion gear
     Galling/pitting/wear → Replace.
2. Check:
   - Bearings
     Damage/pitting → Replace.

EAS25800

ASSEMBLING THE MIDDLE DRIVE SHAFT ASSEMBLY

1. Install:
   - Spring retainers “1”

NOTE:

While compressing the spring with the damper spring compressor “2”, install the spring retainers.

	Damper spring compressor **90890-04090**

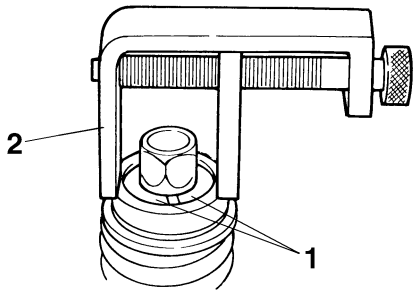

EAS25820

ASSEMBLING THE MIDDLE DRIVEN SHAFT ASSEMBLY

1. Tighten:
   - Bearing retainer New

▼▼▼▼▼▼▼▼▼▼▼▼▼▼▼▼▼▼▼▼▼▼▼▼▼▼▼▼▼▼▼▼▼▼

a. Temporarily install the middle driven shaft bearing housing onto the lower crankcase.
b. Attach the bearing retainer wrench “1”.

	Bearing retainer wrench **90890-04140** **Middle drive shaft bearing retainer wrench** **YM-04140**

c. Tighten the bearing retainer to specification.

	Bearing retainer **110 Nm (11.0 m·kg, 80 ft·lb)**

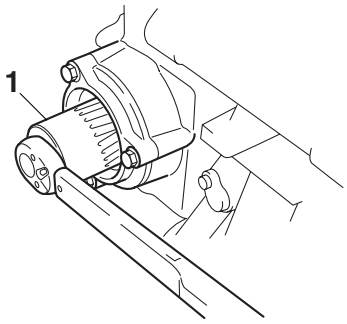

d. Lock the threads with a drift punch.

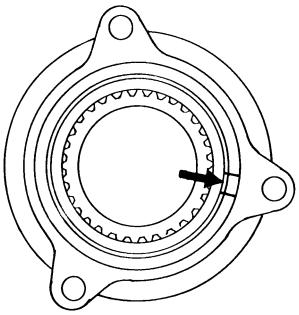

▲▲▲▲▲▲▲▲▲▲▲▲▲▲▲▲▲▲▲▲▲▲▲▲▲▲▲▲▲▲▲▲

2. Tighten:
   - Middle driven pinion gear nut New

▼▼▼▼▼▼▼▼▼▼▼▼▼▼▼▼▼▼▼▼▼▼▼▼▼▼▼▼▼▼▼▼

a. Tighten the middle driven pinion gear nut to specification.

	Middle driven pinion gear nut **110 Nm (11.0 m·kg, 80 ft·lb)** **LOCTITE®**

NOTE:

Secure the middle driven shaft in a vise, making sure to tighten the vise jaws onto the flat sections of the shaft.

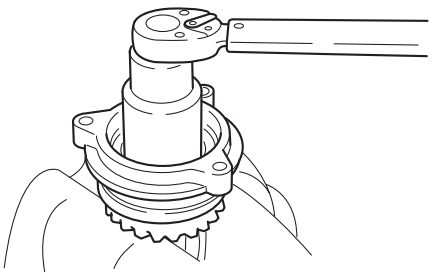

b. Lock the threads with a drift punch.

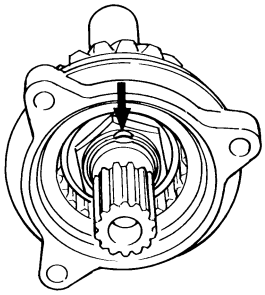

▲▲▲▲▲▲▲▲▲▲▲▲▲▲▲▲▲▲▲▲▲▲▲▲▲▲▲▲▲▲▲▲

EAS25860

INSTALLING THE MIDDLE DRIVE SHAFT ASSEMBLY

1. Tighten:
   - Bearing retainer “1” New

▼▼▼▼▼▼▼▼▼▼▼▼▼▼▼▼▼▼▼▼▼▼▼▼▼▼▼▼▼▼▼▼

a. Attach the bearing retainer wrench “2”.

	Bearing retainer wrench **90890-04137** **Middle drive shaft bearing retainer wrench** **YM-04137**

b. Tighten the bearing retainer to specification.

	Bearing retainer **110 Nm (11.0 m·kg, 80 ft·lb)**

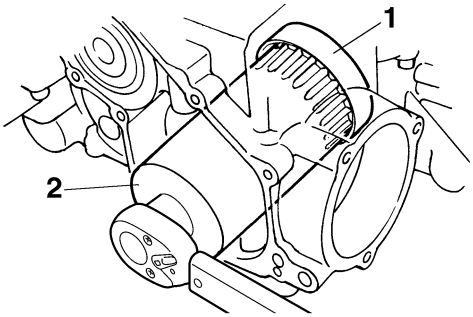

c. Lock the threads with a drift punch.

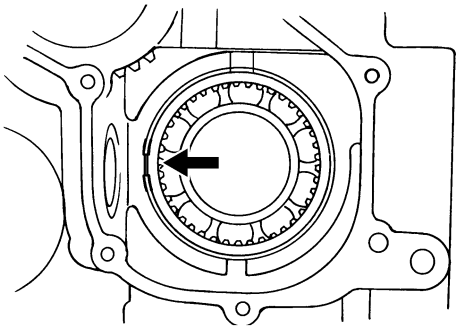

▲▲▲▲▲▲▲▲▲▲▲▲▲▲▲▲▲▲▲▲▲▲▲▲▲▲▲▲▲▲▲▲

2. Install:
   - Lock washer “1” New
   - Middle drive pinion gear nut “2”

▼▼▼▼▼▼▼▼▼▼▼▼▼▼▼▼▼▼▼▼▼▼▼▼▼▼▼▼▼▼▼▼▼▼

a. Tighten the middle drive pinion gear nut to specification.

	Middle drive pinion gear nut **110 Nm (11.0 m·kg, 80 ft·lb)**

NOTE:

- Lubricate the nut threads with engine oil.
- Install the middle drive pinion gear nut with its large inner diameter side facing inward as shown in the illustration.
- While holding the middle drive shaft.

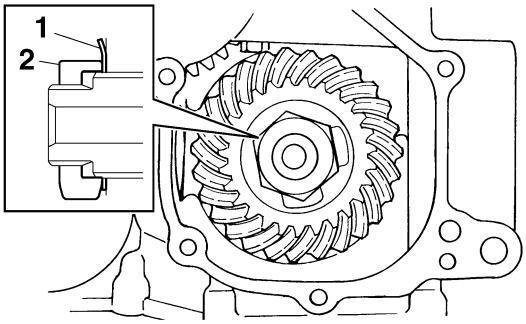

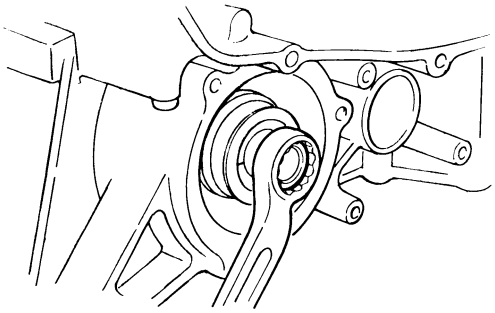

b. Bend the lock washer tab along a flat side of the nut.

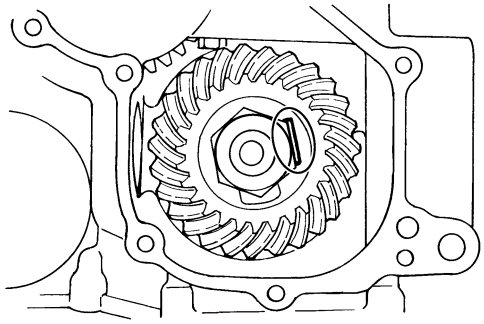

▲▲▲▲▲▲▲▲▲▲▲▲▲▲▲▲▲▲▲▲▲▲▲▲▲▲▲▲▲▲▲▲▲▲

EAS25870

INSTALLING THE MIDDLE DRIVEN SHAFT ASSEMBLY

1. Install:
   - Middle driven shaft assembly
   - Middle driven pinion gear shims “1”
   - Middle driven shaft end cover
   - Middle driven shaft bearing housing bolts

NOTE:

Finger tighten the middle driven shaft bearing housing bolts.

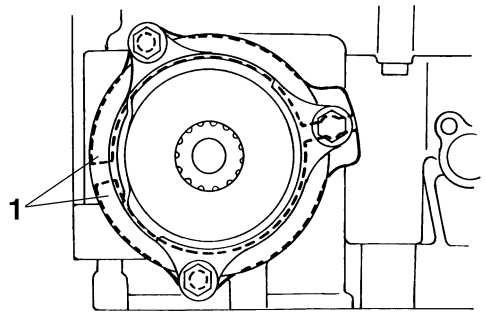

2. Tighten:
   - Middle driven shaft bearing housing bolts

	Middle driven shaft bearing housing bolt **25 Nm (2.5 m·kg, 18 ft·lb)** **LOCTITE®**

NOTE:

Before tightening the bolts:

1. Adjust the middle gear backlash.
   Refer to “ADJUSTING THE MIDDLE GEAR BACKLASH” on page 5-71.
2. Check that the middle gears turns smoothly.

ET3P61025

INSTALLING THE MIDDLE GEAR CASE COVER

1. Install:
   - Middle gear case cover
   - Middle gear case cover bolts

NOTE:

Apply locking agent (LOCTITE®) to the threads of the bolts “1”.

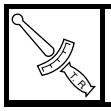	**Middle gear case cover bolt** **12 Nm (1.2 m·kg, 8.7 ft·lb)**

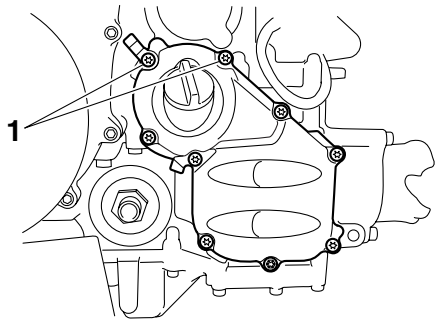

EAS25880

MEASURING THE MIDDLE GEAR BACKLASH

1. Measure:
   - Middle gear backlash
     Out of specification → Refer to "ADJUSTING THE MIDDLE GEAR BACKLASH" on page 5-71.

Middle gear backlash
0.10–0.20 mm (0.0039–0.0079 in)

▼▼▼▼▼▼▼▼▼▼▼▼▼▼▼▼▼▼▼▼▼▼▼▼▼▼▼▼▼▼▼▼▼▼

a. Hold the middle drive shaft "1".
b. Install the gear lash measurement tool "2" as shown.
c. Make sure the dial gauge plunger contacts the measuring point "a" on the gear lash measurement tool as shown.

Gear lash measurement tool
90890-01467
YM-01467

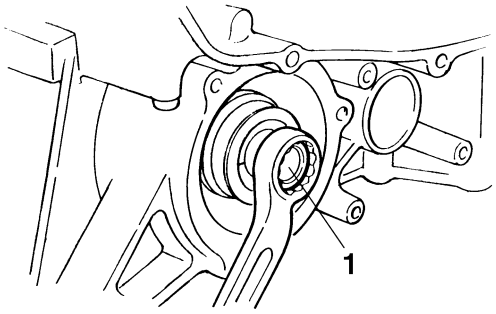

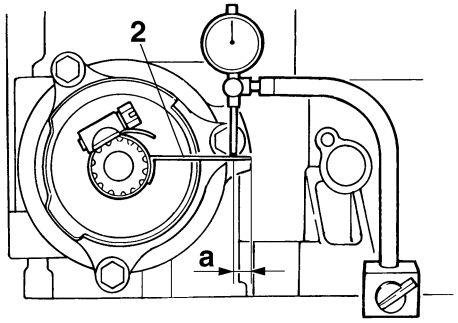

a. 14 mm (0.55 in)

d. While gently turning the middle driven shaft back and forth, measure the middle gear backlash.

NOTE:

Measure the middle gear backlash at four positions. Rotate the middle driven shaft 90° each time and observe the reading on the dial gauge.

▲▲▲▲▲▲▲▲▲▲▲▲▲▲▲▲▲▲▲▲▲▲▲▲▲▲▲▲▲▲▲▲▲▲

EAS25900

ADJUSTING THE MIDDLE GEAR BACKLASH

1. Loosen:
   - Middle driven shaft bearing housing bolts
2. Remove:
   - Middle driven pinion gear shim(s)
3. Tighten:
   - Middle driven shaft bearing housing bolts

Middle driven shaft bearing housing bolt
25 Nm (2.5 m·kg, 18 ft·lb)

ECA14050

CAUTION:

Do not overtighten the middle driven shaft bearing housing bolts or you may obtain too little middle gear backlash and damage the middle gears. If the bolts are overtightened, loosen them until the crankcase-to-middle-driven-shaft-bearing-housing clearance is within specification, as stated below. Then, repeat all of the previous steps.

NOTE:

- Tighten the middle driven shaft bearing housing bolts carefully, one thread turn at a time only. Push in the middle driven shaft bearing housing and then tighten the bolts to specification.
- After tightening the middle driven shaft bearing housing bolts, loosen them until the clearance between the crankcase and the housing is approximately 2 mm (0.08 in), when measured with a thickness gauge "1".

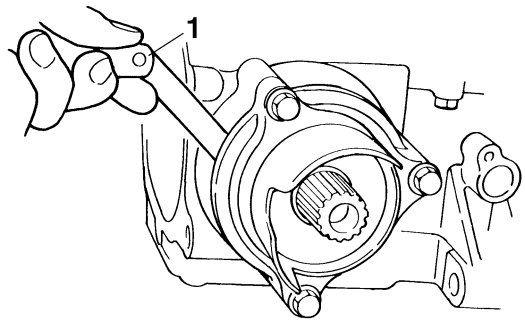

4. Hold the middle drive shaft.
5. Turn:
   - Middle driven shaft

NOTE:

While carefully tightening the middle driven shaft bearing housing bolts in stages and in a criss-cross pattern, turn the middle driven shaft back and forth until the dial gauge reads 0.10–0.20 mm (0.0039–0.0079 in).

6. Measure:
   - Crankcase-to-middle-driven-shaft-bearing-housing clearance
     (with a thickness gauge)
7. Select:
   - Middle driven pinion gear shim(s) “1”

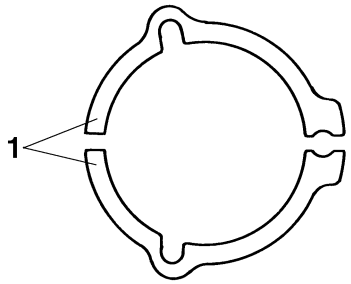

▼▼▼▼▼▼▼▼▼▼▼▼▼▼▼▼▼▼▼▼▼▼▼▼▼▼▼▼▼▼▼▼▼▼

a. Shims can only be selected in 0.05 mm increments, therefore round off to the hundredth’s digit of the calculated thickness and select the appropriate shims with the following chart.
b. For example, the clearance between the crankcase and the middle driven shaft bearing housing is 0.42 mm. Therefore, the chart instructs you to round off the 2 to 0. Thus, you should use one 0.40 mm shim.

Hundredth	Rounded value
0, 1, 2	0
3, 4, 5, 6, 7	5
8, 9	10

Shims are supplied in the following thicknesses.

Middle driven pinion gear shim Thickness (mm)
0.10 0.15 0.20 0.30 0.40 0.50

▲▲▲▲▲▲▲▲▲▲▲▲▲▲▲▲▲▲▲▲▲▲▲▲▲▲▲▲▲▲▲▲▲▲

8. Loosen:
   - Middle driven shaft bearing housing bolts
9. Install:
   - Middle driven pinion gear shim(s)
10. Tighten:
    - Middle driven shaft bearing housing bolts

Middle driven shaft bearing housing bolt
25 Nm (2.5 m·kg, 18 ft·lb)
LOCTITE®

11. Measure:
    - Middle gear backlash
      Out of specification → Refer to “MEASURING THE MIDDLE GEAR BACKLASH” on page 5-71.

EAS25930

ALIGNING THE MIDDLE GEAR

NOTE:

Aligning the middle gear is necessary when any of the following parts are replaced:
- Crankcase
- Middle drive shaft
- Middle driven shaft bearing housing

1. Select:
   - Middle drive pinion gear shim(s) “1”
   - Middle driven pinion gear shim(s) “2”

NOTE:

Select the middle driven gear shim(s) “2” by calculating the middle drive gear shim thickness and then measuring the middle gear backlash.

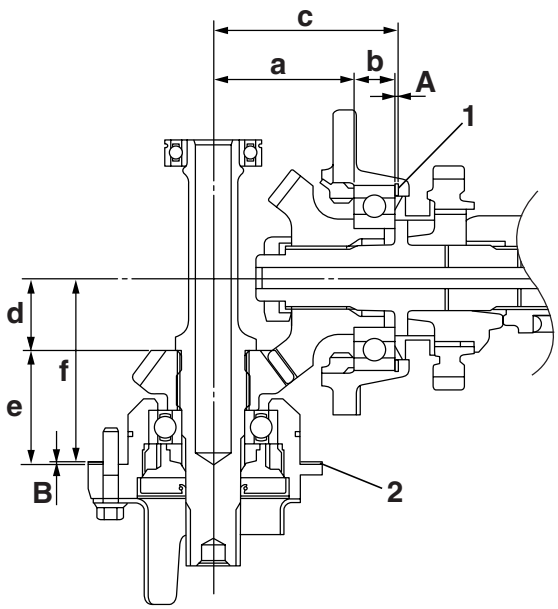

A. Middle drive pinion gear shim thickness
B. Middle driven pinion gear shim thickness

▼▼▼▼▼▼▼▼▼▼▼▼▼▼▼▼▼▼▼▼▼▼▼▼▼▼▼▼▼▼▼▼▼▼

a. Position the middle gears with the appropriate shim(s) that has had its respective thickness calculated from information marked on the crankcase and middle driven pinion gear.
b. To find middle drive pinion gear shim thickness “A”, use the following formula.

Middle drive pinion gear shim thickness
"A" = "c" - "a" - "b"

"a"= 65.00
"b"= 18.94
"c"= a numeral on the lower crankcase, to be divided by 100 and added to "84"

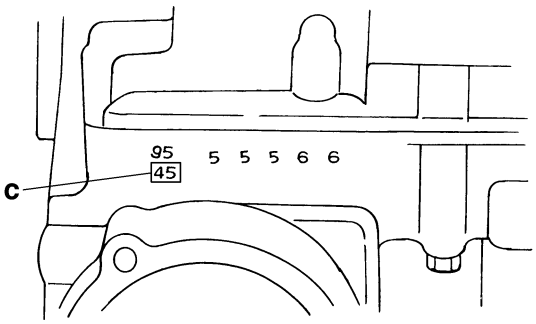

Example:
"a" is 65.00
"b" is 18.94
If the lower crankcase is marked "45"
"c" is 84.45 (i.e., 84.00 + 0.45 = 84.45)
"A" = 84.45 - 65.00 - 18.94 = 0.51
Round off to the hundredths digit and select the appropriate shim(s).

NOTE:

In the above example, the calculated number is 0.51. The chart instructs you to round off the 1 to 0. Thus, the shim thickness is 0.50 mm.

Hundredth	Rounded value
0, 1, 2	0
3, 4, 5, 6, 7	5
8, 9	10

Shims are supplied in the following thicknesses.

Middle drive pinion gear shim Thickness (mm)
0.15 0.30 0.50

c. To find middle driven pinion gear shim thickness "B", use the following formula.

Middle driven pinion gear shim thickness
"B" = "d" + "e" - "f"

"d" = a numeral on the middle driven pinion gear, to be divided by 100 and either added to or subtracted from "34"

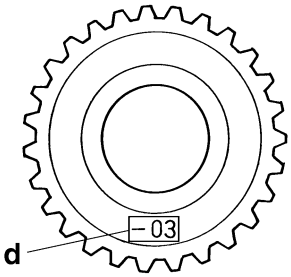

"e" = Measured value
"f" = a numeral on the lower crankcase, to be divided by 100 and added to "87".

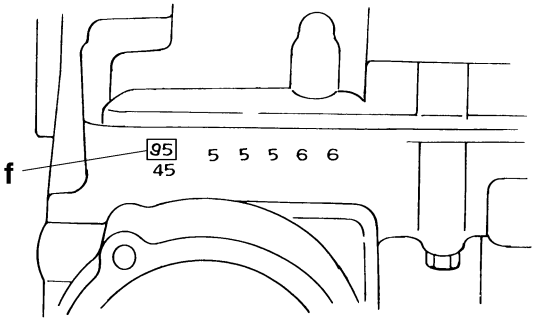

Example:
If the middle driven pinion gear is marked "- 03"
"d" is 33.97 (i.e., 34.00 + (- 0.03) = 33.97)
"e" is 54.49
If the lower crankcase is marked "95"
"f" is 87.95 (i.e., 87.00 + 0.95 = 87.95)
"B" = 33.97 + 54.49 - 87.95 = 0.51
Round off to the hundredths digit and select the appropriate shim(s).

NOTE:

In the above example, the calculated number is 0.51. The chart instructs you to round off the 1 to 0. Thus, the shim thickness is 0.50 mm.

Hundredth	Rounded value
0, 1, 2	0
3, 4, 5, 6, 7	5
8, 9	10

Shims are supplied in the following thicknesses.

Middle driven pinion gear shim Thickness (mm)
0.10 0.15 0.20 0.30 0.40 0.50

EAS25540

CRANKCASE

Separating the crankcase

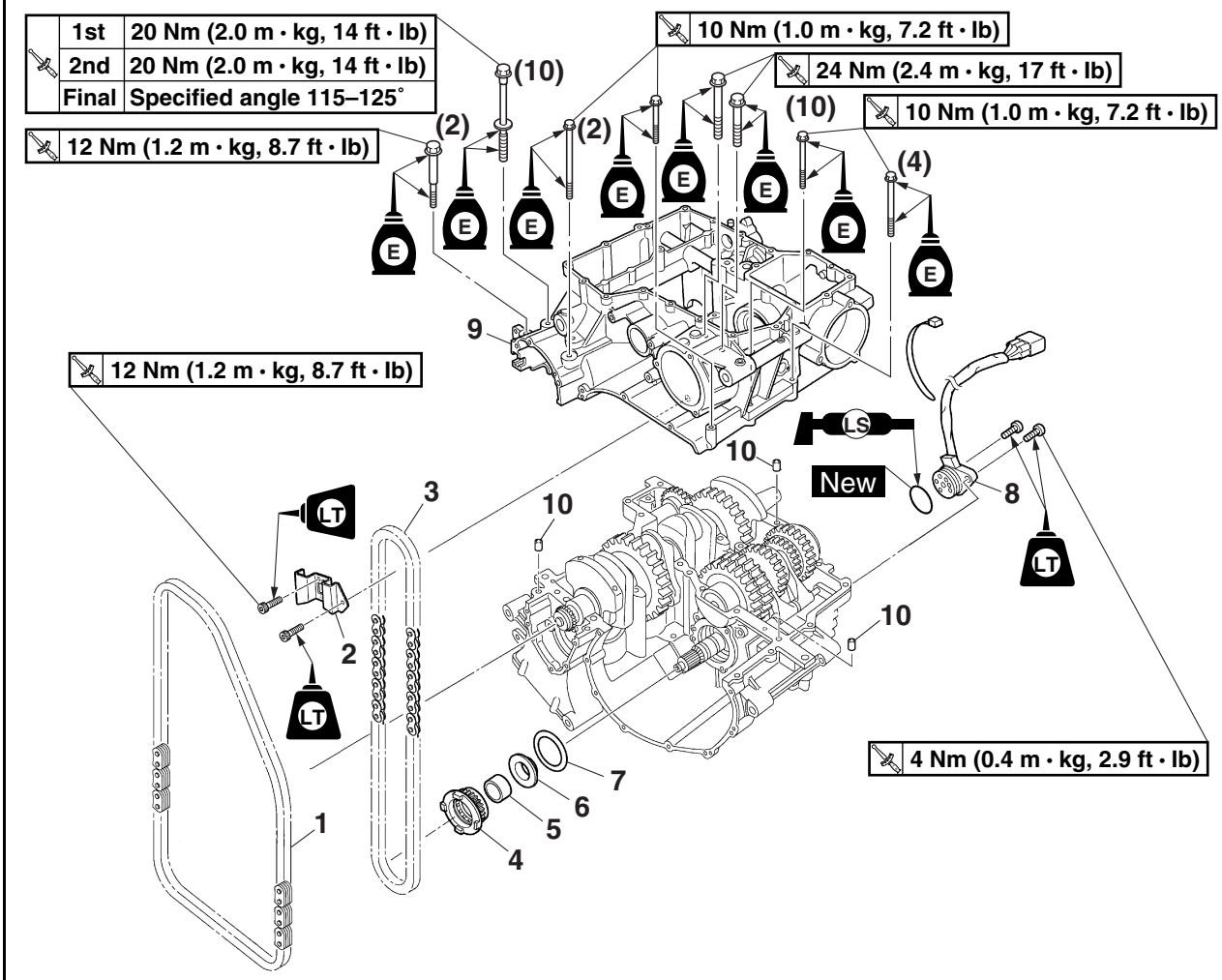

Order	Job/Parts to remove	Q'ty	Remarks
	Engine		Refer to "ENGINE REMOVAL" on page 5-1.
	Cylinder head		Refer to "CYLINDER HEAD" on page 5-18.
	Starter clutch		Refer to "GENERATOR AND STARTER CLUTCH" on page 5-28.
	Pickup rotor		Refer to "PICKUP ROTOR" on page 5-34.
	Oil pump		Refer to "OIL PUMP" on page 5-58.
	Middle drive shaft assembly		Refer to "MIDDLE GEAR" on page 5-63.
	Clutch housing		Refer to "CLUTCH" on page 5-41.
1	Timing chain	1	
2	Oil pump drive chain guide	1	
3	Oil pump drive chain	1	
4	Oil pump drive sprocket	1	
5	Spacer	1	
6	Collar	1	
7	Spring washer	1	
8	Gear position switch	1	

Separating the crankcase

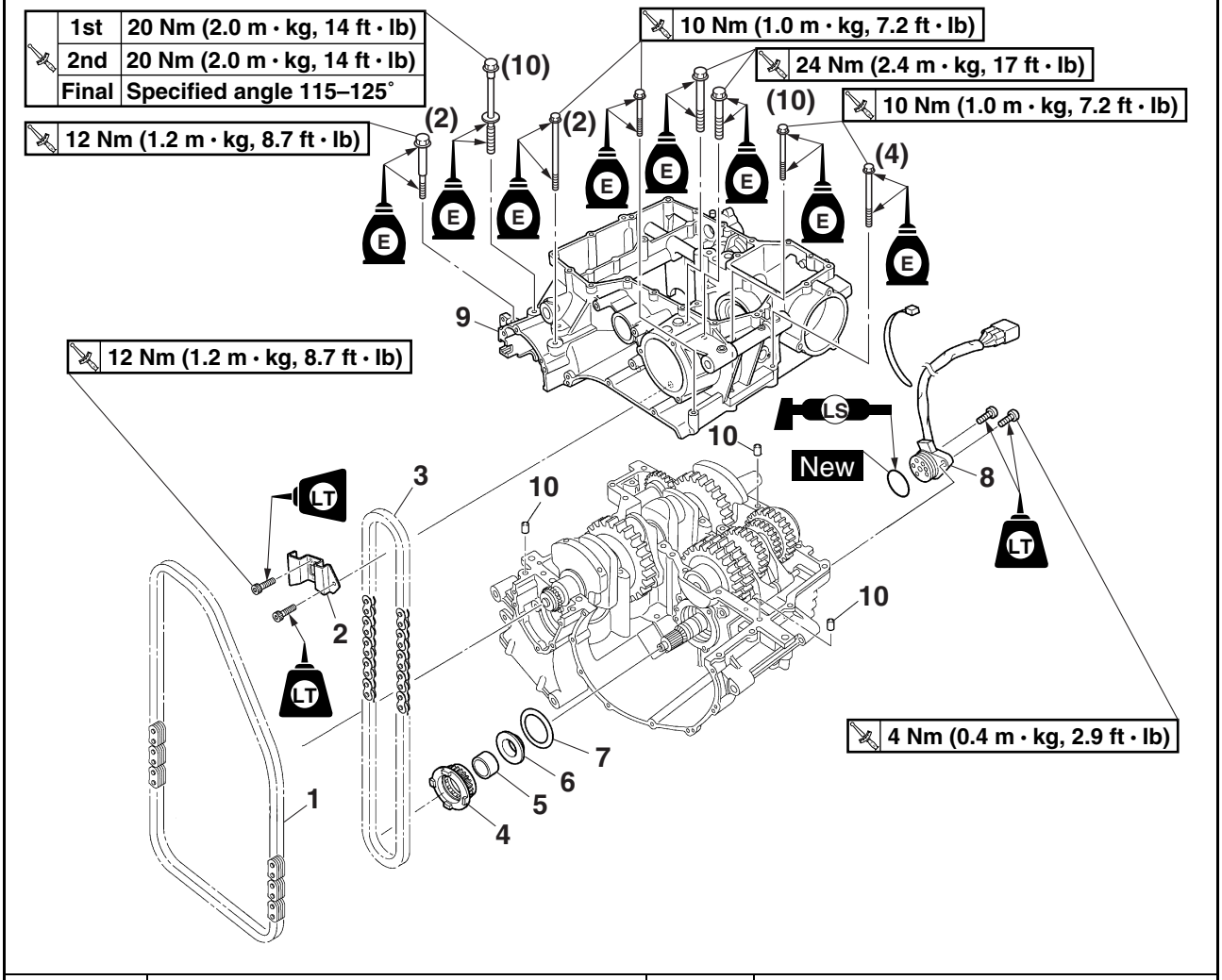

Order	Job/Parts to remove	Q'ty	Remarks
9	Lower crankcase	1	
10	Dowel pin	3	
			For installation, reverse the removal procedure.

Removing the oil baffle plate and bearings

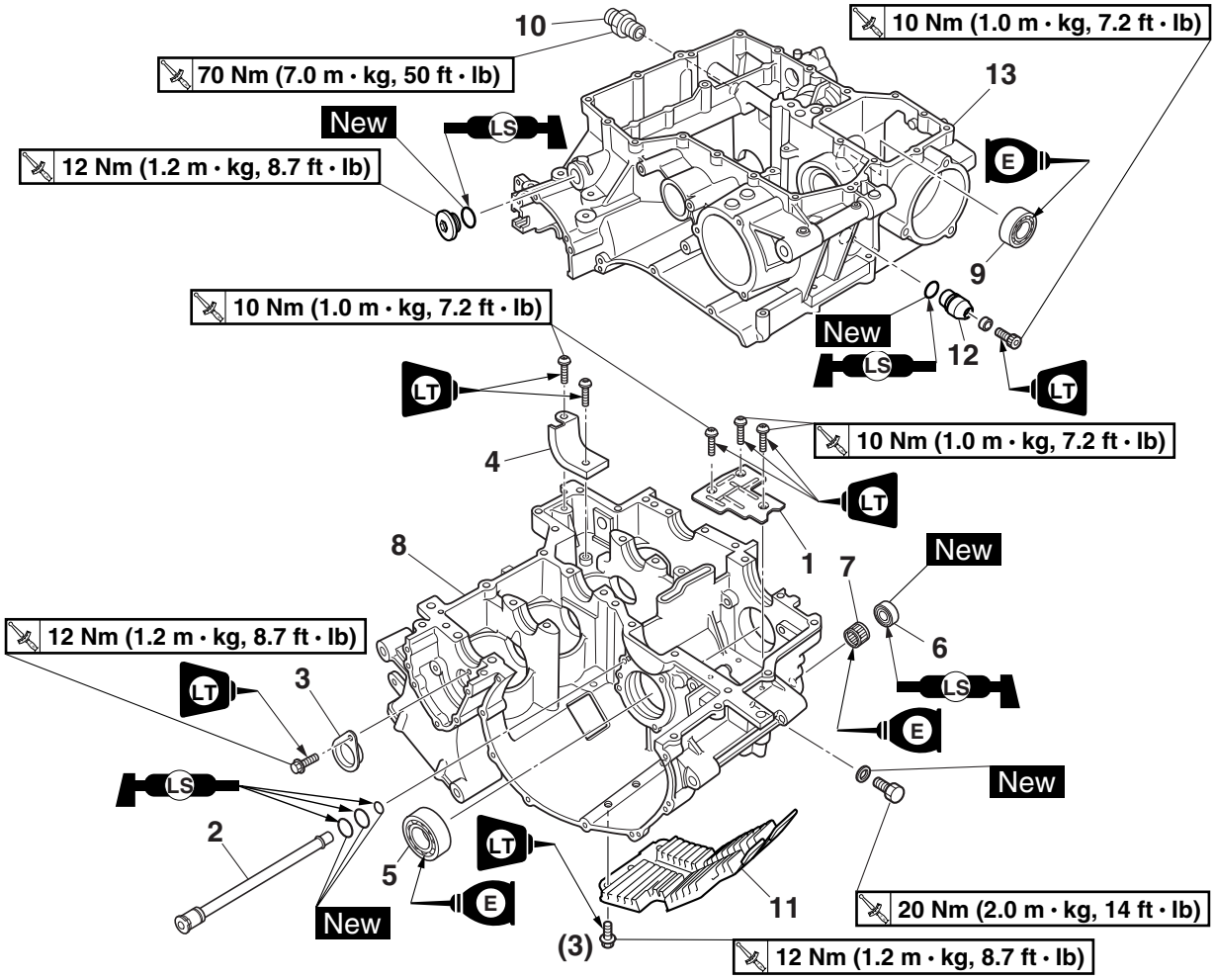

Order	Job/Parts to remove	Q'ty	Remarks
	Connecting rod		Refer to "CONNECTING RODS AND PISTONS" on page 5-82.
	Crankshaft/Crankshaft journal bearings		Refer to "CRANKSHAFT" on page 5-90.
	Transmission		Refer to "TRANSMISSION" on page 5-94.
1	Oil baffle plate 2	1	
2	Oil delivery pipe 1	1	
3	Plate	1	
4	Oil baffle plate 3	1	
5	Bearing	1	
6	Oil seal	1	
7	Bearing	1	
8	Upper crankcase	1	
9	Bearing	1	
10	Oil filter cartridge bolt	1	
11	Upper crankcase damper	1	
12	Crankcase plug	1	

Removing the oil baffle plate and bearings

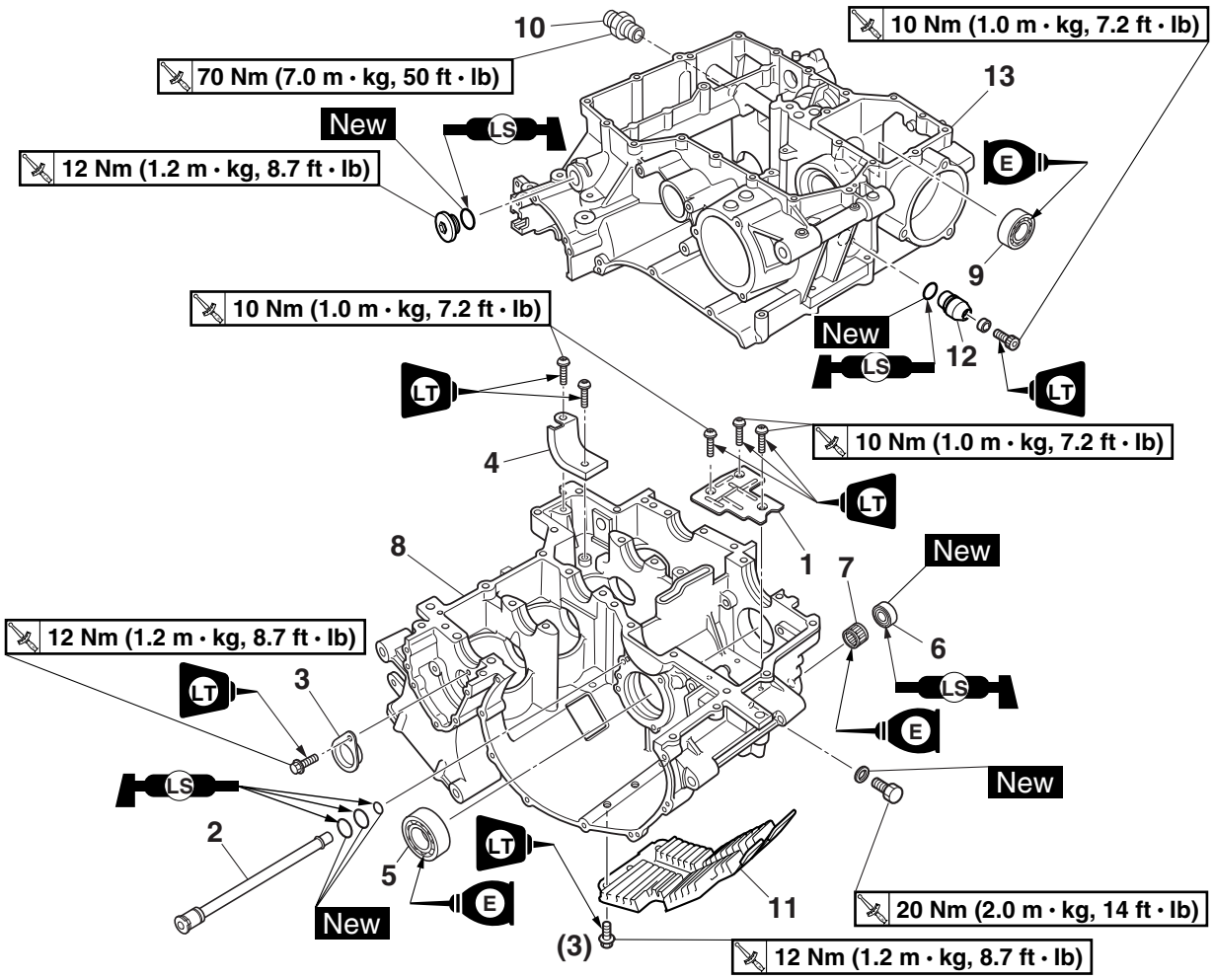

Order	Job/Parts to remove	Q'ty	Remarks
13	Lower crankcase	1	
			For installation, reverse the removal procedure.

EAS25550
DISASSEMBLING THE CRANKCASE
1. Place the engine upside down.
2. Remove:
   - Crankcase bolts

NOTE:
- Loosen each bolt 1/4 of a turn at a time, in stages and in a crisscross pattern. After all of the bolts are fully loosened, remove them.
- Loosen the bolts in decreasing numerical order (refer to the numbers in the illustration).
- The numbers embossed on the crankcase indicate the crankcase tightening sequence.

- M9 × 115 mm bolts: “1”–“10”
- M8 × 65 mm bolt: “11”
- M8 × 50 mm bolt: “12”
- M6 × 80 mm bolts: “23”, “25”
- M6 × 65 mm shoulder bolts: “13”, “14”
- M6 × 65 mm bolts: “19”, “22”, “24”, “26”
- M6 × 55 mm bolts: “15”–“18”, “20”, “21”, “27”–“30”
- M6 × 45 mm bolt: “31”

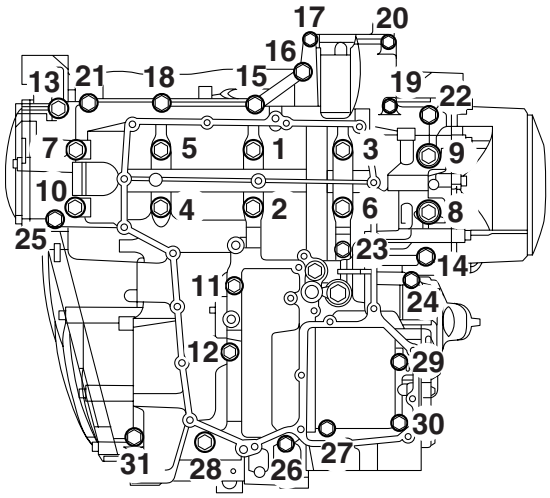

3. Remove:
   - Lower crankcase

ECA13900
CAUTION:
Tap on one side of the crankcase with a soft-face hammer. Tap only on reinforced portions of the crankcase, not on the crankcase mating surfaces. Work slowly and carefully and make sure the crankcase halves separate evenly.

EAS25580
CHECKING THE CRANKCASE
1. Thoroughly wash the crankcase halves in a mild solvent.
2. Thoroughly clean all the gasket surfaces and crankcase mating surfaces.
3. Check:
   - Crankcase
     Cracks/damage → Replace.
   - Oil delivery passages
     Obstruction → Blow out with compressed air.

EAS25600
CHECKING THE OIL DELIVERY PIPES
The following procedure applies to all of the oil delivery pipes.
1. Check:
   - Oil delivery pipe
     Damage → Replace.
     Obstruction → Wash and blow out with compressed air.

ET3P61026
CHECKING THE BEARINGS AND OIL SEAL
1. Check:
   - Bearings
     Clean and lubricate the bearings, then rotate the inner race with your finger.
     Rough movement → Replace.
   - Oil seal
     Damage/wear → Replace.

EAS25620
CHECKING THE TIMING CHAIN AND OIL PUMP DRIVE CHAIN
1. Check:
   - Timing chain
     Damage/stiffness → Replace the timing chain and camshaft sprockets as a set.
   - Oil pump drive chain
     Damage/stiffness → Replace the oil pump drive chain, oil pump drive sprocket and oil pump shaft as a set.
2. Check:
   - Oil pump drive sprocket
     Cracks/damage/wear → Replace the oil pump drive sprocket and the oil pump drive chain as a set.

EAS25680
ASSEMBLING THE CRANKCASE
1. Lubricate:
   - Crankshaft journal bearings
     (with the recommended lubricant)

Recommended lubricant
Engine oil

2. Apply:
   - Sealant
     (onto the crankcase mating surfaces and oil baffle plate 2)

Yamaha bond No. 1215
90890-85505
(Three Bond No.1215®)

NOTE:

Do not allow any sealant to come into contact with the oil gallery or crankshaft journal bearings. Do not apply sealant to within 2–3 mm (0.08–0.12 in) of the crankshaft journal bearings.

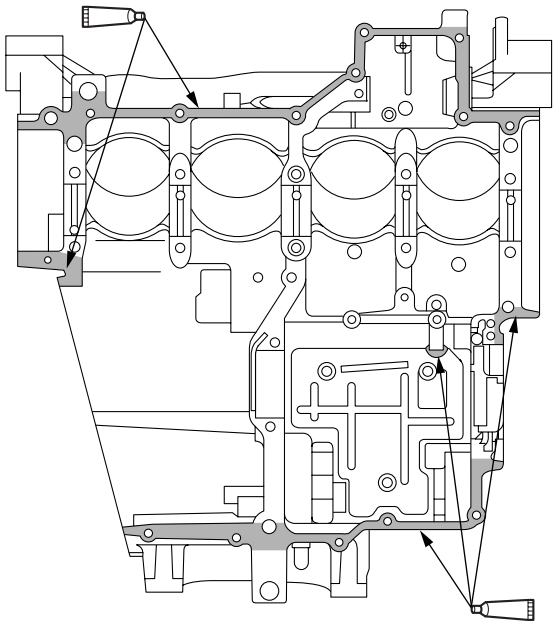

3. Install:
   - Dowel pins
4. Set the shift drum assembly and transmission gears in the neutral position.
5. Install:
   - Lower crankcase “1”
     (onto the upper crankcase “2”)

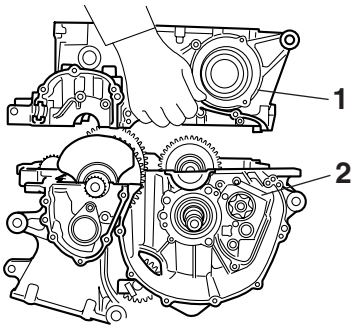

ECA13980

CAUTION:

Before tightening the crankcase bolts, make sure the transmission gears shift correctly when the shift drum assembly is turned by hand.

6. Install:
   - Crankcase bolts

NOTE:

- Lubricate the bolts “1”–“10” thread and washers with engine oil.
- Lubricate the bolts “11”–“31” thread part and mating surface with engine oil.
- Apply locking agent (LOCTITE®) to the threads of the bolt “16”.
- Finger tighten the crankcase bolts.

- M9 × 115 mm bolts: “1”–“10” New
- M8 × 65 mm bolt: “11”
- M8 × 50 mm bolt: “12”
- M6 × 80 mm bolts: “23”, “25”
- M6 × 65 mm shoulder bolts: “13”, “14”
- M6 × 65 mm bolts: “19”, “22”, “24”, “26”
- M6 × 55 mm bolts: “15”–“18”, “20”, “21”, “27”–“30”
- M6 × 45 mm bolt: “31”

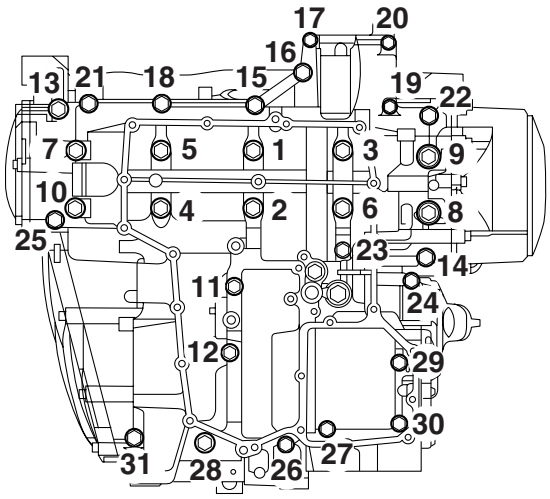

EW3P61014

WARNING

If the bolt is tightened more than the specified angle, do not loosen the bolt and then retighten it. Instead, replace the bolt with a new one and perform the procedure again.

EC3P61033

CAUTION:

- **Do not use a torque wrench to tighten the bolt to the specified angle.**
- **Tighten the bolt until it is at the specified angle.**

NOTE:

On a hexagonal bolt, note that the angle from one corner to another is 60°.

7. Tighten:
   - Crankcase bolts (M9 × 115 mm) “1”–“10”

New

EW3P61013

WARNING

Replace the bolts with new ones.

NOTE:

The tightening procedure of crankcase bolts “1”–“10” is angle controlled, therefore tighten the bolts using the following procedure.

▼▼▼▼▼▼▼▼▼▼▼▼▼▼▼▼▼▼▼▼▼▼▼▼▼▼▼▼▼▼▼▼▼▼

a. Tighten the crankcase bolts in the proper tightening sequence as shown.

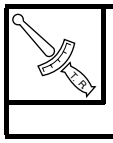

Crankcase bolt “1”–“10”
1st
20 Nm (2.0 m·kg, 14 ft·lb)

b. Loosen and retighten the crankcase bolts in the proper tightening sequence as shown.

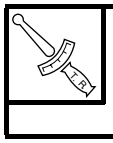

Crankcase bolt “1”–“10”
2nd
20 Nm (2.0 m·kg, 14 ft·lb)

c. Tighten the crankcase bolts further to reach the specified angle 115–125° in the proper tightening sequence as shown.

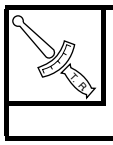

Crankcase bolt “1”–“10”
Final
Specified angle 115–125°

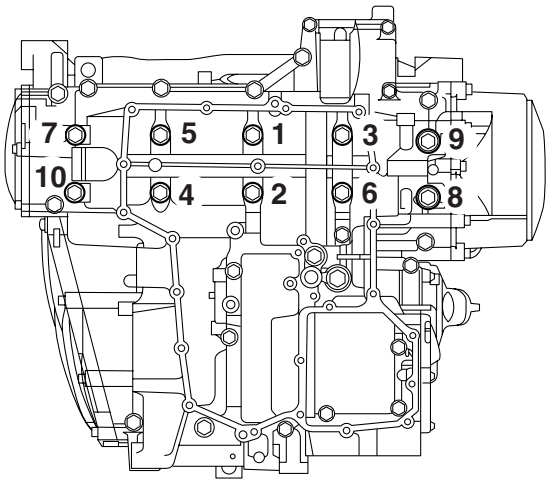

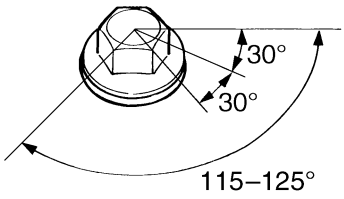

▲▲▲▲▲▲▲▲▲▲▲▲▲▲▲▲▲▲▲▲▲▲▲▲▲▲▲▲▲▲▲▲▲▲

8. Tighten:
   - Crankcase bolts “11”–“31”

Crankcase bolt “11”, “12”
24 Nm (2.4 m·kg, 17 ft·lb)
Crankcase bolt “13”, “14”
12 Nm (1.2 m·kg, 8.7 ft·lb)
Crankcase bolt “15”–“31”
10 Nm (1.0 m·kg, 7.2 ft·lb)

NOTE:

Tighten the crankcase bolts in the proper tightening sequence as shown.

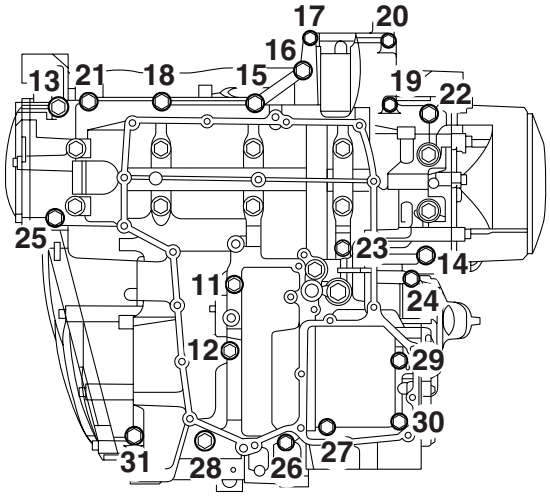

ET3P61027

CONNECTING RODS AND PISTONS

Removing the connecting rods and pistons

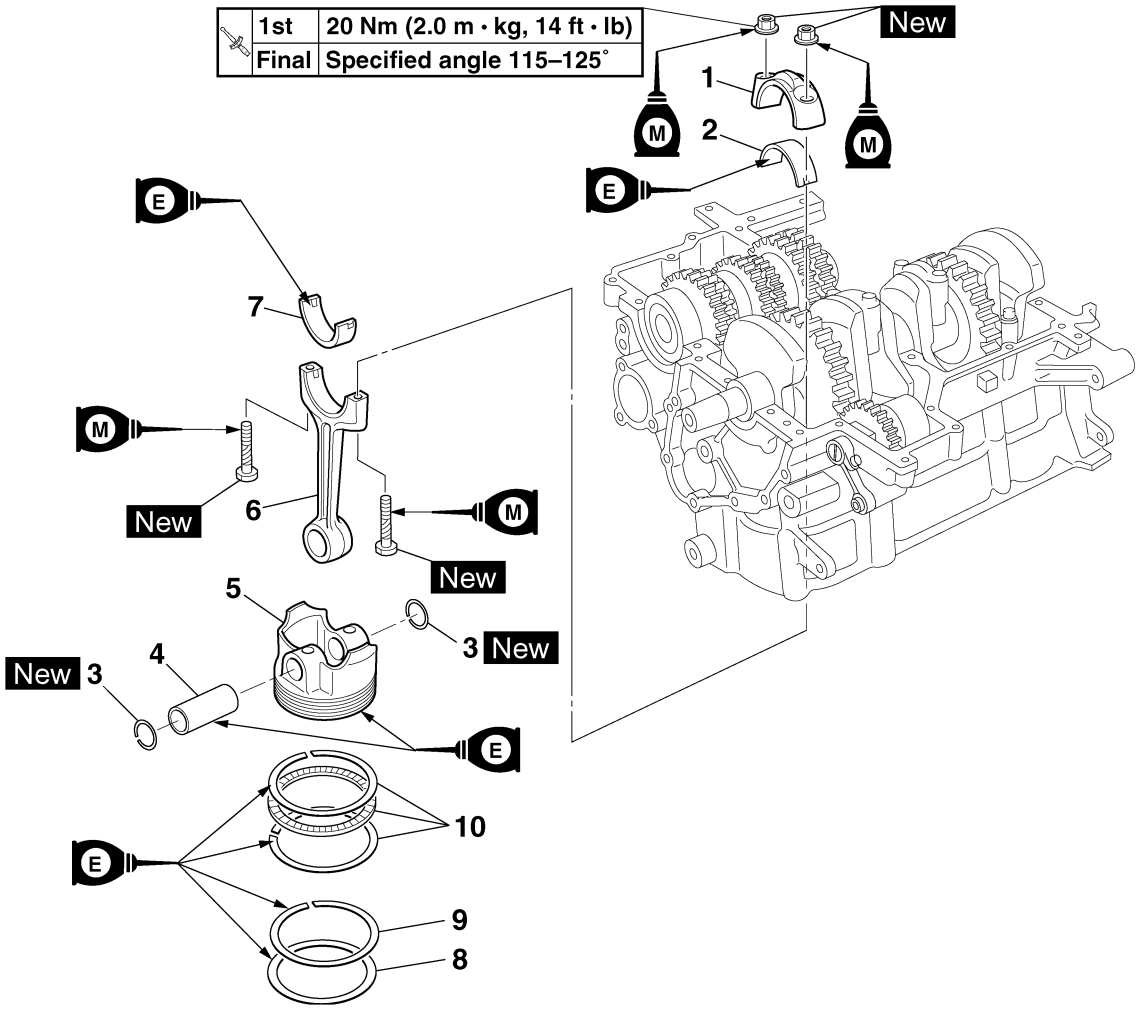

Order	Job/Parts to remove	Q'ty	Remarks
	Crankcase		Separate. Refer to "CRANKCASE" on page 5-74.
1	Connecting rod cap	4	
2	Big end lower bearing	4	
3	Piston pin clip	8	
4	Piston pin	4	
5	Piston	4	
6	Connecting rod	4	
7	Big end upper bearing	4	
8	Top ring	4	
9	2nd ring	4	
10	Oil ring	4	
			For installation, reverse the removal procedure.

EAS26030

REMOVING THE CONNECTING RODS AND PISTONS

The following procedure applies to all of the connecting rods and pistons.

1. Remove:
   - Connecting rod cap "1"

NOTE:

Identify the position of each connecting rod so that it can be reinstalled in its original place.

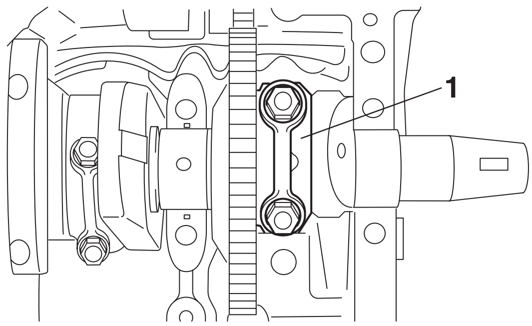

2. Remove:
   - Big end bearings (from the connecting rods and connecting rod caps)

NOTE:

Identify the position of each big end bearing so that it can be reinstalled in its original place.

3. Remove:
   - Piston pin clips "1"
   - Piston pin "2"
   - Piston "3"
   - Connecting rod "4"

ECA13810

CAUTION:

Do not use a hammer to drive the piston pin out.

NOTE:

- For reference during installation, put an identification mark on each piston crown.
- Before removing the piston pin, deburr the piston pin clip's groove and the piston's pin bore area. If both areas are deburred and the piston pin is still difficult to remove, remove it with the piston pin puller set "5".

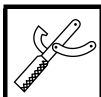

Piston pin puller set
90890-01304
Piston pin puller
YU-01304

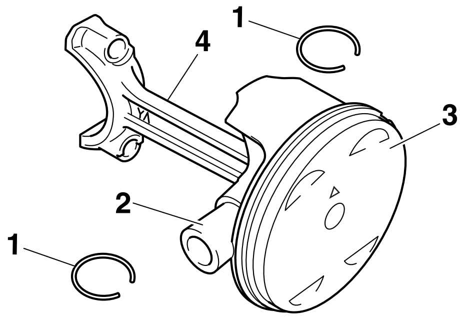

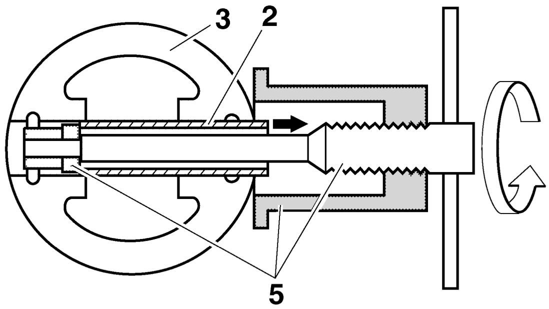

4. Remove:
   - Top ring
   - 2nd ring
   - Oil ring

NOTE:

When removing a piston ring, open the end gap with your fingers and lift the other side of the ring over the piston crown.

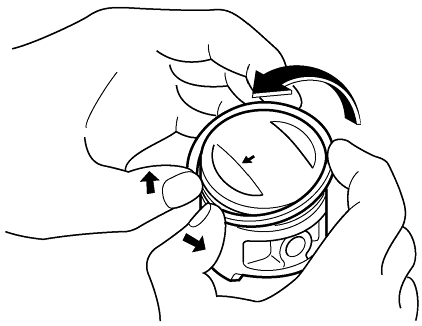

EAS24410

CHECKING THE CYLINDERS AND PISTONS

The following procedure applies to all of the cylinders and pistons.

1. Check:
   - Piston wall
   - Cylinder wall
     Vertical scratches → Rebore or replace the cylinder, and replace the piston and piston rings as a set.
2. Measure:
   - Piston-to-cylinder clearance

▼▼▼▼▼▼▼▼▼▼▼▼▼▼▼▼▼▼▼▼▼▼▼▼▼▼▼▼▼▼▼▼▼▼▼

a. Measure cylinder bore "C" with the cylinder bore gauge.

NOTE:

Measure cylinder bore “C” by taking side-to-side and front-to-back measurements of the cylinder. Then, find the average of the measurements.

Bore
79.000–79.010 mm (3.1102–3.1106 in)
Taper limit
0.050 mm (0.0020 in)
Out of round limit
0.050 mm (0.0020 in)

“C” = maximum of D_1–D_6
“T” = maximum of D_1 or D_2 - maximum of D_5 or D_6
“R” = maximum of D_1, D_3 or D_5 - minimum of D_2, D_4 or D_6

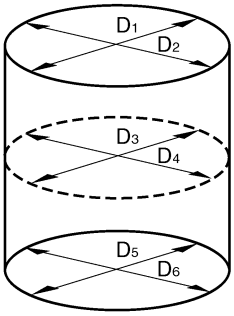

b. If out of specification, rebore or replace the cylinder, and replace the piston and piston rings as a set.
c. Measure piston skirt diameter “D” “a” with the micrometer.

Piston
Diameter D
78.965–78.980 mm (3.1089–3.1094 in)

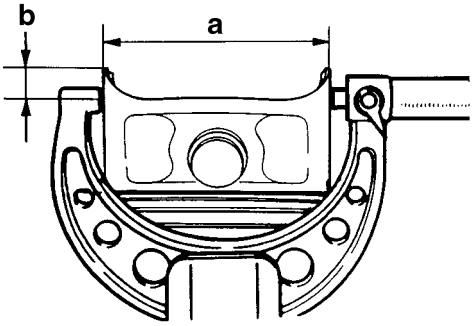

b. 5 mm (0.20 in) from the bottom edge of the piston

d. If out of specification, replace the piston and piston rings as a set.
e. Calculate the piston-to-cylinder clearance with the following formula.

• Piston-to-cylinder clearance =
Cylinder bore “C” -
Piston skirt diameter “D”

Piston-to-cylinder clearance
0.020–0.045 mm (0.0008–0.0018 in)
Limit
0.12 mm (0.0047 in)

f. If out of specification, rebore or replace the cylinder, and replace the piston and piston rings as a set.

▲▲▲▲▲▲▲▲▲▲▲▲▲▲▲▲▲▲▲▲▲▲▲▲▲▲▲▲▲▲▲▲▲▲

EAS24430

CHECKING THE PISTON RINGS

1. Measure:
   • Piston ring side clearance
   Out of specification → Replace the piston and piston rings as a set.

NOTE:

Before measuring the piston ring side clearance, eliminate any carbon deposits from the piston ring grooves and piston rings.

Piston ring
Top ring
Ring side clearance
0.030–0.070 mm (0.0012–0.0028 in)
Limit
0.120 mm (0.0047 in)
2nd ring
Ring side clearance
0.020–0.060 mm (0.0008–0.0024 in)
Limit
0.120 mm (0.0047 in)

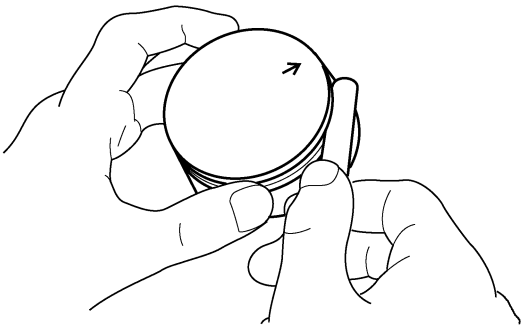

2. Install:
   - Piston ring
     (into the cylinder)

NOTE:

Level the piston ring into the cylinder with the piston crown.

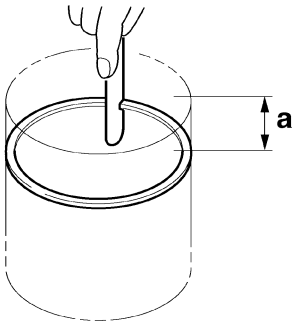

a. 5 mm (0.20 in)

3. Measure:
   - Piston ring end gap
     Out of specification → Replace the piston ring.

NOTE:

The oil ring expander spacer's end gap cannot be measured. If the oil ring rail's gap is excessive, replace all three piston rings.

Piston ring
Top ring
End gap (installed)
0.35–0.45 mm (0.0138–0.0177 in)
Limit
0.70 mm (0.0276 in)
2nd ring
End gap (installed)
0.75–0.85 mm (0.0295–0.0335 in)
Limit
1.20 mm (0.0472 in)
Oil ring
End gap (installed)
0.20–0.60 mm (0.0079–0.0236 in)

EAS24440

CHECKING THE PISTON PIN

The following procedure applies to all of the piston pins.

1. Check:
   - Piston pin
     Blue discoloration/grooves → Replace the piston pin and then check the lubrication system.
2. Measure:
   - Piston pin outside diameter "a"
     Out of specification → Replace the piston pin.

Piston pin outside diameter
18.991–19.000 mm (0.7477–0.7480 in)
Limit
18.971 mm (0.7469 in)

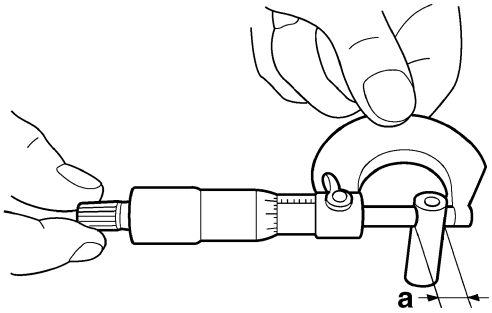

3. Measure:
   - Piston pin bore diameter "b"
     Out of specification → Replace the piston.

Piston pin bore inside diameter
19.004–19.015 mm (0.7482–0.7486 in)
Limit
19.045 mm (0.7498 in)

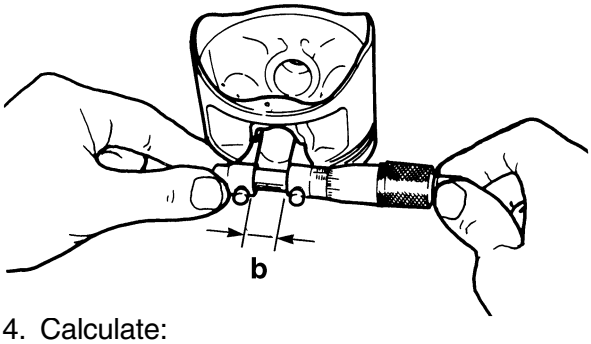

4. Calculate:
   - Piston-pin-to-piston-pin-bore clearance
     Out of specification → Replace the piston pin and piston as a set.

- Piston-pin-to-piston-pin-bore clearance = Piston pin bore diameter "b" - Piston pin outside diameter "a"

Piston-pin-to-piston-pin-bore clearance
0.004–0.024 mm (0.00016–0.00094 in)

ET3P61028

CHECKING THE CONNECTING RODS

1. Measure:
   - Crankshaft-pin-to-big-end-bearing clearance
     Out of specification → Replace the big end bearings.

Oil clearance (using plastigauge®)
0.031–0.048 mm (0.0012–0.0019 in)

▼▼▼▼▼▼▼▼▼▼▼▼▼▼▼▼▼▼▼▼▼▼▼▼▼▼▼▼▼▼▼▼▼▼

The following procedure applies to all of the connecting rods.

ECA13930

CAUTION:

Do not interchange the big end bearings and connecting rods. To obtain the correct crankshaft-pin-to-big-end-bearing clearance and prevent engine damage, the big end bearings must be installed in their original positions.

a. Clean the big end bearings, crankshaft pins, and the inside of the connecting rod halves.
b. Install the big end upper bearing into the connecting rod and the big end lower bearing into the connecting rod cap.

NOTE:

Align the projections “a” on the big end bearings with the notches “b” in the connecting rod and connecting rod cap.

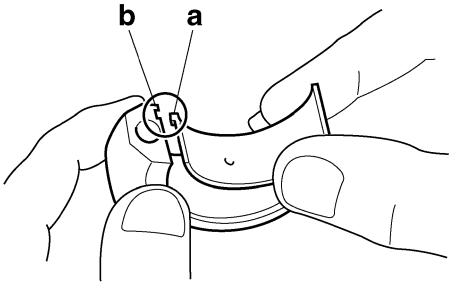

c. Put a piece of Plastigauge® “1” on the crankshaft pin.

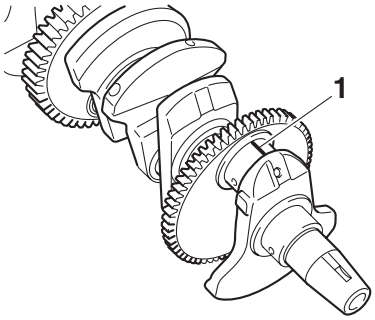

d. Assemble the connecting rod halves.

NOTE:

- Do not move the connecting rod or crankshaft until the clearance measurement has been completed.
- Lubricate the bolt threads and nut seats with molybdenum disulfide grease.
- Make sure the “Y” mark “c” on the connecting rod faces towards the left side of the crankshaft.
- Make sure the characters “d” on both the connecting rod and connecting rod cap are aligned.

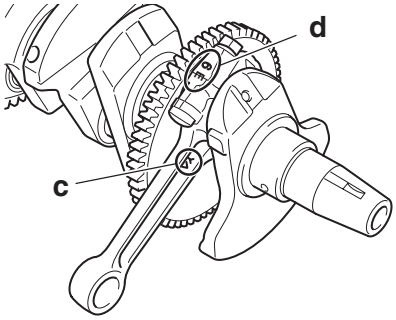

e. Tighten the connecting rod nuts.
   Refer to “INSTALLING THE CONNECTING RODS AND PISTONS” on page 5-87.
f. Remove the connecting rod and big end bearings.
   Refer to “REMOVING THE CONNECTING RODS AND PISTONS” on page 5-83.
g. Measure the compressed Plastigauge® width “e” on the crankshaft pin.
   If the crankshaft-pin-to-big-end-bearing clearance is out of specification, select replacement big end bearings.

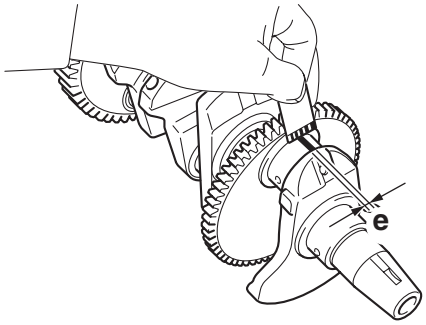

▲▲▲▲▲▲▲▲▲▲▲▲▲▲▲▲▲▲▲▲▲▲▲▲▲▲▲▲▲▲▲▲

2. Select:
   - Big end bearings (P_1–P_4)

NOTE:

- The numbers “A” stamped into the crankshaft web and the numbers “B” on the connecting rods are used to determine the replacement big end bearing sizes.
- P_1–P_4 refer to the bearings shown in the crankshaft illustration.

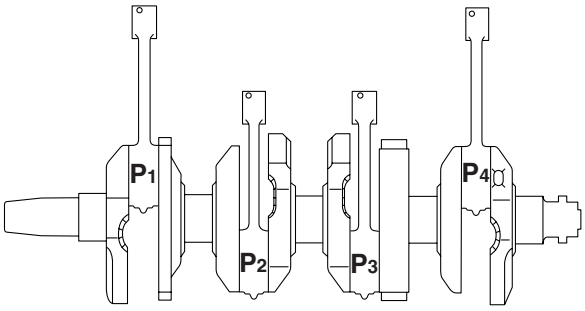

A

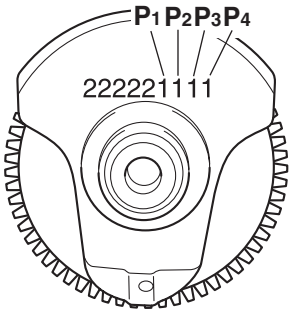

B

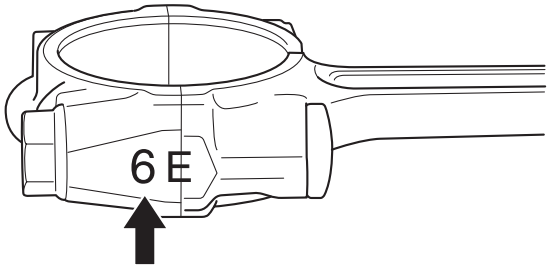

For example, if the connecting rod P_1 and the crankshaft web P_1 numbers are 6 and 1 respectively, then the bearing size for P_1 is:

P_1 (connecting rod) - P_1 (crankshaft) = 6 - 1 = 5 (yellow)

Bearing color code
1.Blue 2.Black 3.Brown 4.Green 5.Yellow 6.Pink

EAS26170

INSTALLING THE CONNECTING RODS AND PISTONS

The following procedure applies to all of the pistons and connecting rods.

1. Install:
   - Top ring “1”
   - 2nd ring “2”
   - Upper oil ring rail “3”
   - Oil ring expander “4”
   - Lower oil ring rail “5”

NOTE:

Be sure to install the piston rings so that the manufacturer’s marks face up.

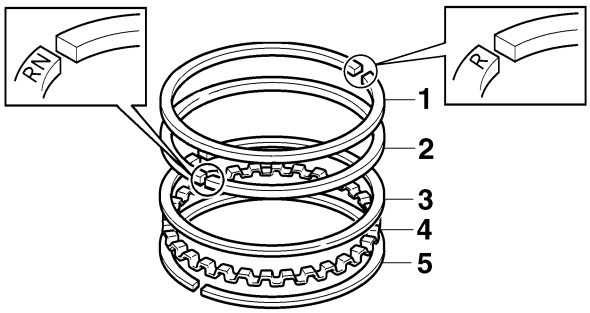

2. Install:
   - Piston “1”
     (onto the respective connecting rod “2”)
   - Piston pin “3”
   - Piston pin clips “4” New

NOTE:

- Apply engine oil onto the piston pin.
- Make sure that the “Y” mark “a” on the connecting rod is facing to the left when the punch mark “b” on the piston is pointing up. Refer to the illustration.
- When installing a piston pin clip, make sure that the clip ends are positioned away from the cutout in the piston as shown in the illustration.

- Reinstall each piston into its original cylinder (numbering order starting from the left: #1 to #4).

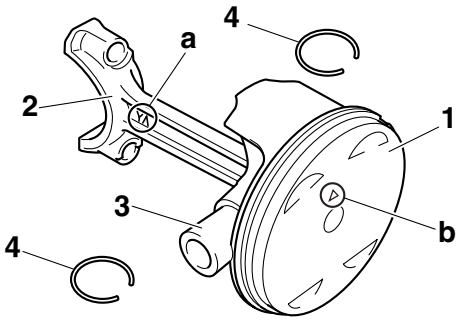

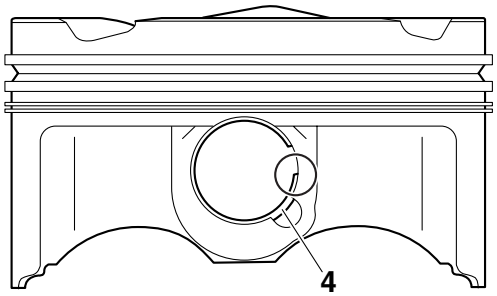

3. Offset:
   - Piston ring end gaps

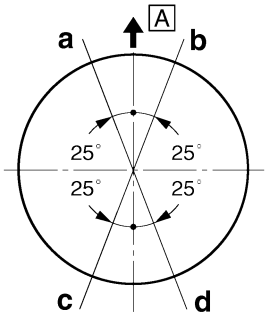

a. Top ring
b. Lower oil ring rail
c. Upper oil ring rail
d. 2nd ring
A. Intake side

4. Lubricate:
   - Piston
   - Piston rings
   - Cylinder
     (with the recommended lubricant)

	Recommended lubricant **Engine oil**

5. Lubricate:
   - Bolt threads
   - Nut seats
     (with the recommended lubricant)

	Recommended lubricant **Molybdenum disulfide oil**

6. Lubricate:
   - Crankshaft pins
   - Big end bearings
   - Connecting rod inner surface
     (with the recommended lubricant)

	Recommended lubricant **Engine oil**

7. Install:
   - Big end bearings
   - Connecting rod assembly “1”
     (into the cylinder and onto the crankshaft pin)
   - Connecting rod cap
     (onto the crankshaft pin)

NOTE:

- Align the projections on the big end bearings with the notches in the connecting rods and connecting rod caps.
- Be sure to reinstall each big end bearing in its original place.
- While compressing the piston rings with piston ring compressor “2”, install the connecting rod assembly “1” into the cylinder with the other hand.
- Make sure the “Y” marks “a” on the connecting rods face towards the left side of the crankshaft.
- Make sure the characters “b” on both the connecting rod and connecting rod cap are aligned.

	Piston ring compressor **90890-05158** **YM-08037**

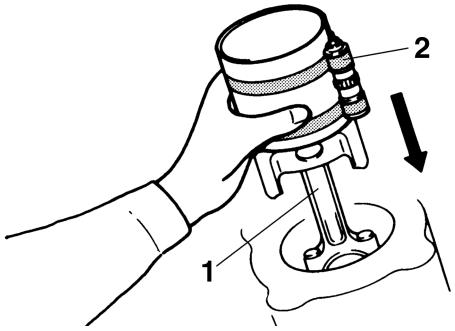

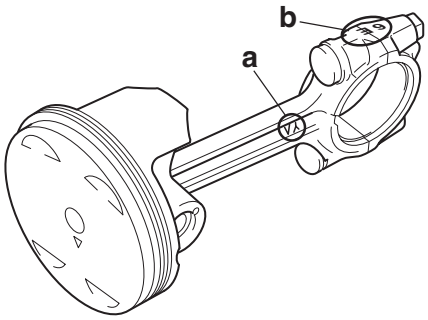

8. Tighten:
   • Connecting rod nuts “1”

EW3P61019

WARNING

Replace the connecting rod bolts and nuts with new ones.

NOTE:

Tighten the connecting rod nuts using the following procedure.

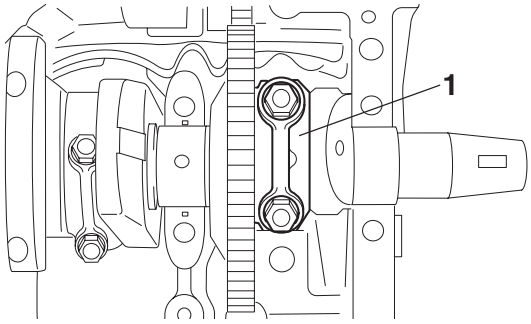

a. Tighten the connecting rod nuts with a torque wrench.

	Connecting rod nut (1st) **20 Nm (2.0 m·kg, 14 ft·lb)**

b. Put a mark “1” on the corner of the connecting rod nut “2” and the connecting rod “3”.

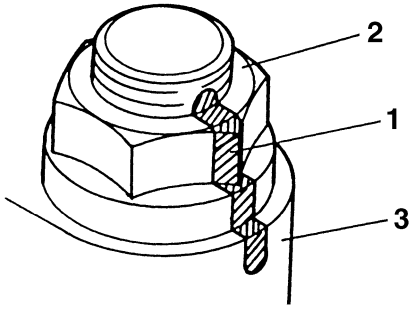

c. Tighten the connecting rod nuts further to reach the specified angle 115–125°.

	Connecting rod nut (final) **Specified angle 115–125°**

EWA13400

WARNING

If the connecting rod nut is tightened more than the specified angle, do not loosen the nut and then retighten it. Instead, replace the connecting rod bolt and nut with a new one and perform the procedure again.

ECA13950

CAUTION:

Do not use a torque wrench to tighten the connecting rod nut to the specified angle.

NOTE:

On a hexagonal nut, note that the angle from one corner to another is 60°.

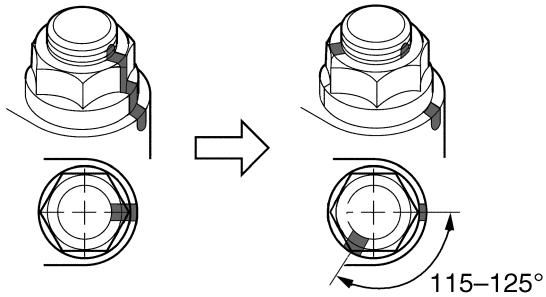

EAS25950

CRANKSHAFT

Removing the crankshaft

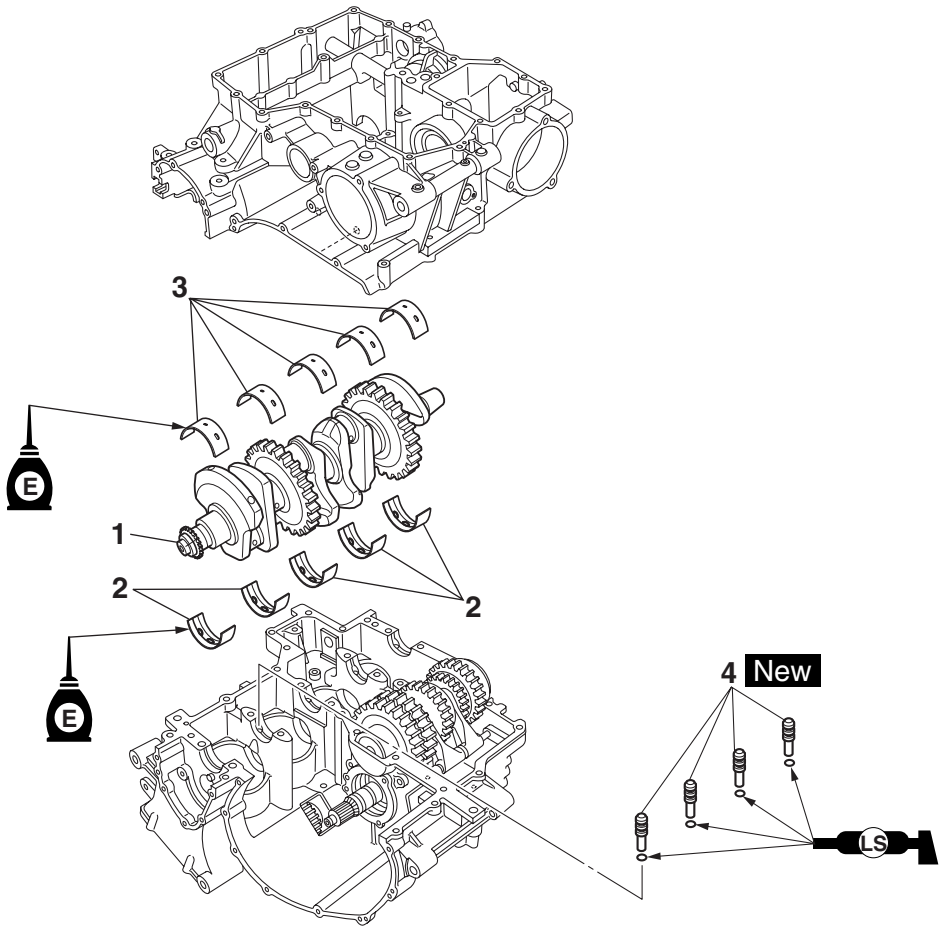

Order	Job/Parts to remove	Q'ty	Remarks
	Crankcase		Separate. Refer to "CRANKCASE" on page 5-74.
	Front balancer weight		Refer to "BALANCERS" on page 5-103.
	Connecting rod caps		Refer to "CONNECTING RODS AND PISTONS" on page 5-82.
1	Crankshaft	1	
2	Crankshaft journal upper bearing	5	
3	Crankshaft journal lower bearing	5	
4	Oil nozzle	4	
			For installation, reverse the removal procedure.

EAS26040
REMOVING THE CRANKSHAFT JOURNAL BEARINGS

1. Remove:
   - Crankshaft journal upper bearings (from the upper crankcase)
   - Crankshaft journal lower bearings (from the lower crankcase)

NOTE:

Identify the position of each crankshaft journal bearing so that it can be reinstalled in its original place.

ET3P61029
CHECKING THE OIL NOZZLES

The following procedure applies to all of the oil nozzles.

1. Check:
   - Oil nozzle
     Damage/wear → Replace the oil nozzle.
   - Oil passage
     Obstruction → Blow out with compressed air.

EAS26070
CHECKING THE CRANKSHAFT

1. Measure:
   - Crankshaft runout
     Out of specification → Replace the crankshaft.

Runout limit C
0.030 mm (0.0012 in)

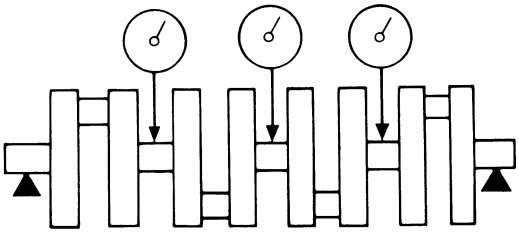

2. Check:
   - Crankshaft journal surfaces
   - Crankshaft pin surfaces
   - Bearing surfaces
     Scratches/wear → Replace the crankshaft.
3. Measure:
   - Crankshaft-journal-to-crankshaft-journal-bearing clearance
     Out of specification → Replace the crankshaft journal bearings.

Journal oil clearance (using plastigauge®)
0.027–0.045 mm (0.0011–0.0018 in)

ECA13920
CAUTION:

Do not interchange the crankshaft journal bearings. To obtain the correct crankshaft-journal-to-crankshaft-journal-bearing clearance and prevent engine damage, the crankshaft journal bearings must be installed in their original positions.

▼▼▼▼▼▼▼▼▼▼▼▼▼▼▼▼▼▼▼▼▼▼▼▼▼▼▼▼▼▼▼▼▼▼

a. Clean the crankshaft journal bearings, crankshaft journals, and bearing portions of the crankcase.
b. Place the upper crankcase upside down on a bench.
c. Install the crankshaft journal upper bearings “1” and the crankshaft into the upper crankcase.

NOTE:

Align the projections “a” on the crankshaft journal upper bearings with the notches “b” in the upper crankcase.

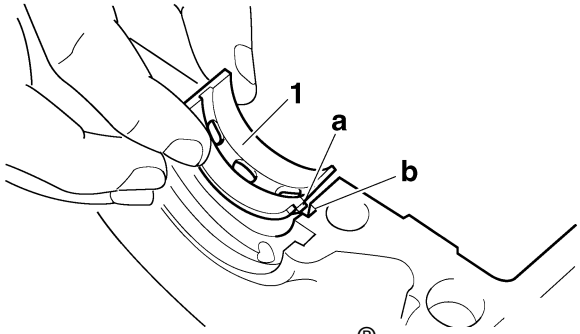

d. Put a piece of Plastigauge® “2” on each crankshaft journal.

NOTE:

Do not put the Plastigauge® over the oil hole in the crankshaft journal.

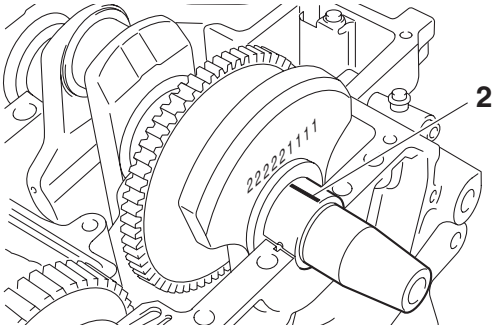

e. Install the crankshaft journal lower bearings "3" into the lower crankcase and assemble the crankcase halves.

NOTE:

- Align the projections "c" of the crankshaft journal lower bearings with the notches "d" in the lower crankcase.
- Do not move the crankshaft until the clearance measurement has been completed.

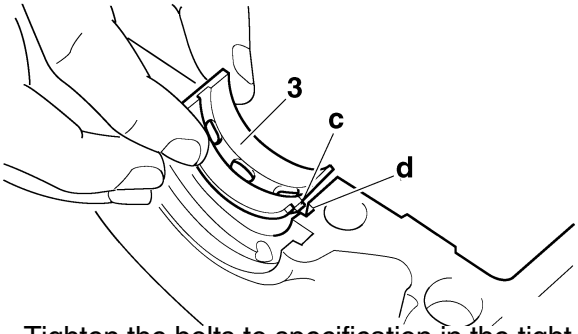

f. Tighten the bolts to specification in the tightening sequence cast on the crankcase. Refer to "CRANKCASE" on page 5-74.
g. Remove the lower crankcase and the crankshaft journal lower bearings.
h. Measure the compressed Plastigauge® width "e" on each crankshaft journal.
If the crankshaft-journal-to-crankshaft-journal-bearing clearance is out of specification, select replacement crankshaft journal bearings.

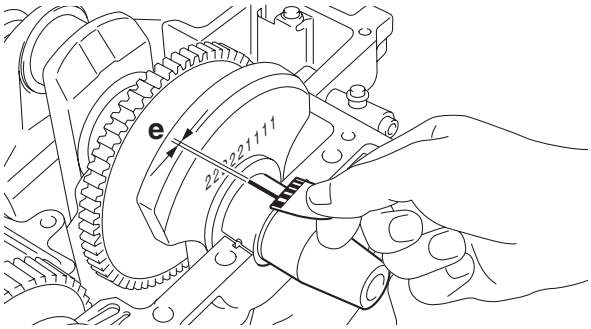

▲▲▲▲▲▲▲▲▲▲▲▲▲▲▲▲▲▲▲▲▲▲▲▲▲▲▲▲▲▲▲▲▲▲

4. Select:
   - Crankshaft journal bearings (J_1–J_5)

NOTE:

- The numbers "A" stamped into the lower crankcase and the numbers "B" stamped into the crankshaft web are used to determine the replacement crankshaft journal bearing sizes.
- J_1–J_5 refer to the bearings shown in the lower crankcase and crankshaft web illustration.
- If J_1–J_5 are the same, use the same size for all of the bearings.

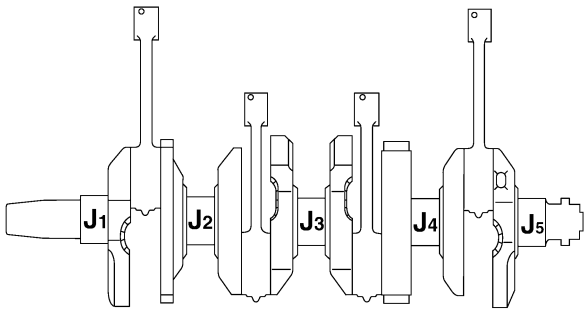

A

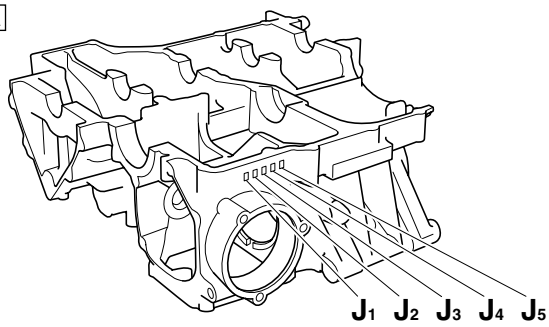

B

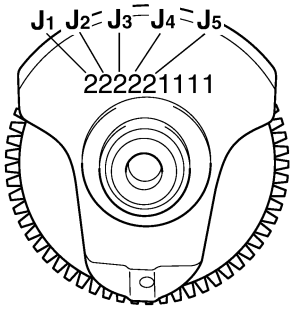

For example, if the lower crankcase J_1 and crankshaft web J_1 numbers are 6 and 2 respectively, then the bearing size for J_1 is:

J_1 (crankcase) - J_1 (crankshaft web) + 2 = 6 - 2 + 2 = 6 (pink)

Bearing color code
2.Black 3.Brown 4.Green 5.Yellow 6.Pink 7.Red 8.White

EAS26200

INSTALLING THE CRANKSHAFT

1. Install:
   - Crankshaft journal upper bearings (into the upper crankcase)
   - Crankshaft journal lower bearings (into the lower crankcase)

NOTE:

- Align the projections “a” on the crankshaft journal bearings “1” with the notches “b” in the crankcases.
- Be sure to install each crankshaft journal bearing in its original place.

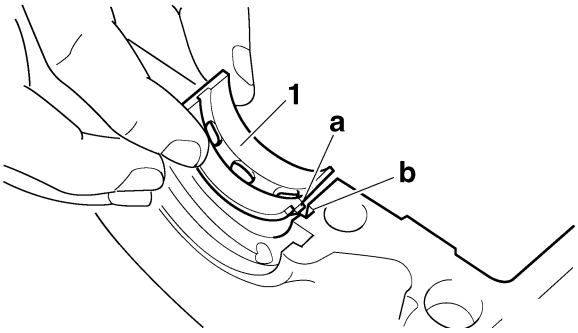

EAS26240

TRANSMISSION

Removing the transmission, shift drum assembly, and shift forks

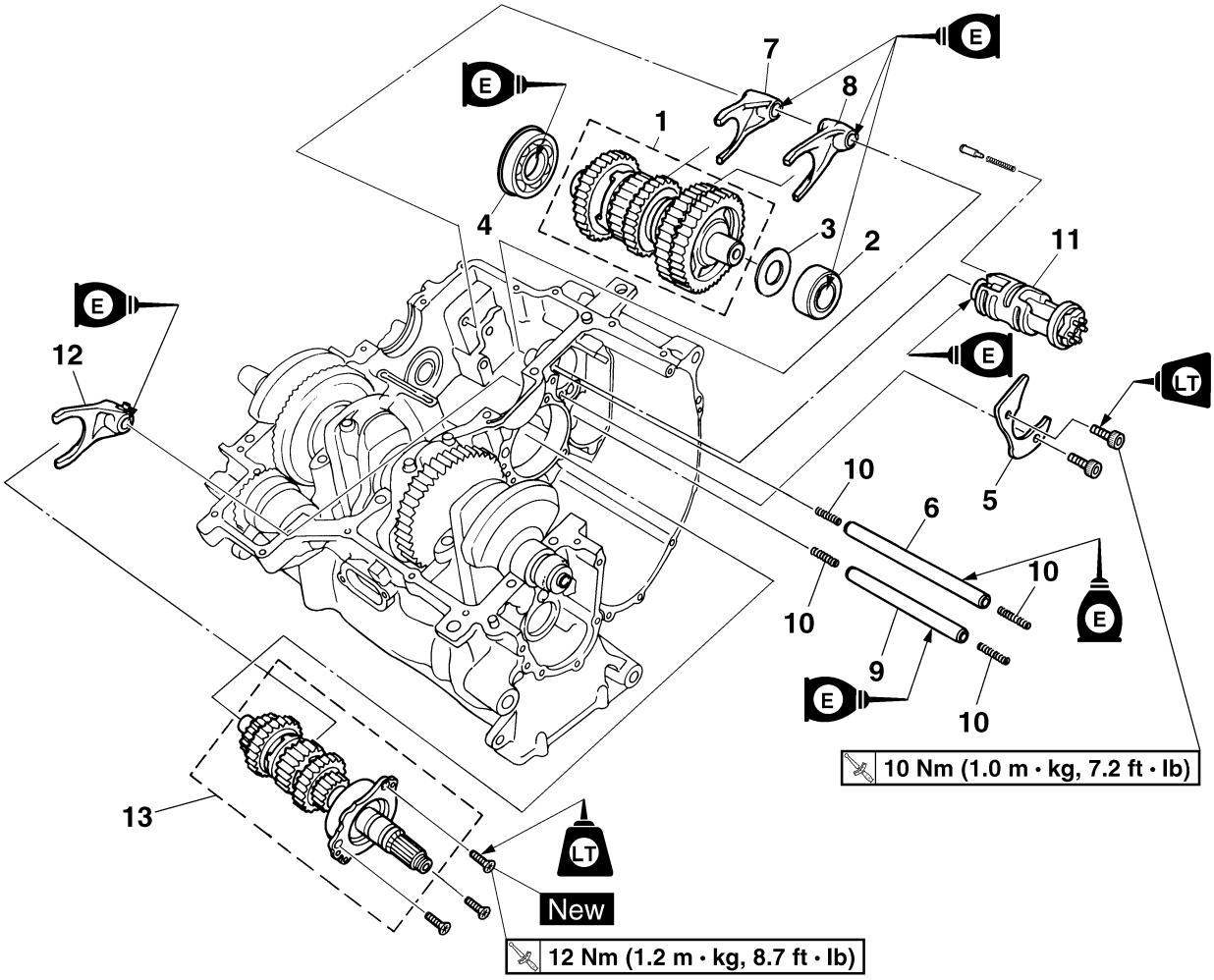

Order	Job/Parts to remove	Q'ty	Remarks
	Crankcase		Separate. Refer to "CRANKCASE" on page 5-74.
	Stopper lever		Refer to "SHIFT SHAFT" on page 5-56.
1	Drive axle assembly	1	
2	Bearing	1	
3	Washer	1	
4	Bearing	1	
5	Shift drum retainer	1	
6	Long shift fork guide bar	1	
7	Shift fork-L	1	
8	Shift fork-R	1	
9	Short shift fork guide bar	1	
10	Spring	4	
11	Shift drum assembly	1	
12	Shift fork-C	1	

Removing the transmission, shift drum assembly, and shift forks

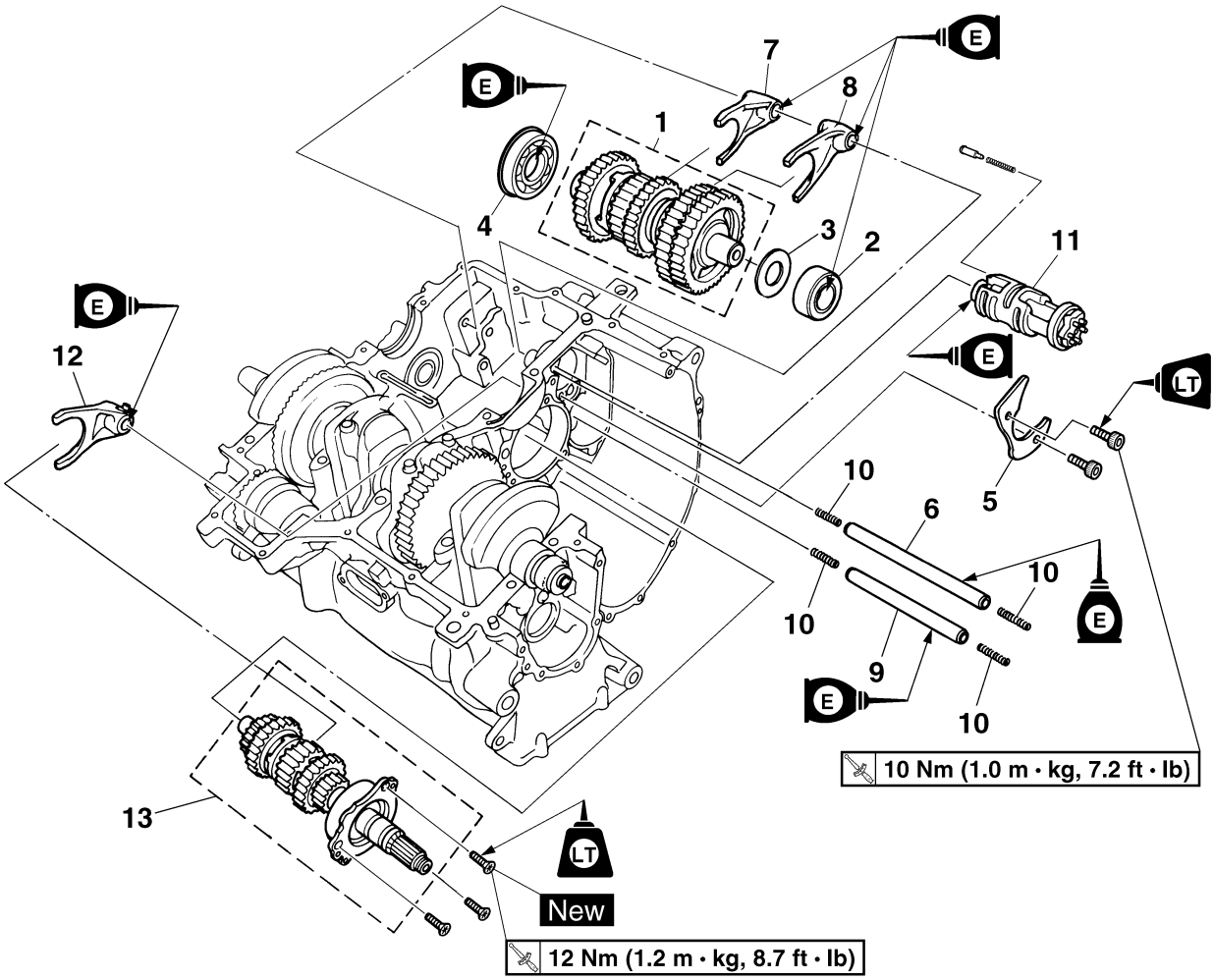

Order	Job/Parts to remove	Q'ty	Remarks
13	Main axle assembly	1	
			For installation, reverse the removal procedure.

Disassembling the main axle assembly

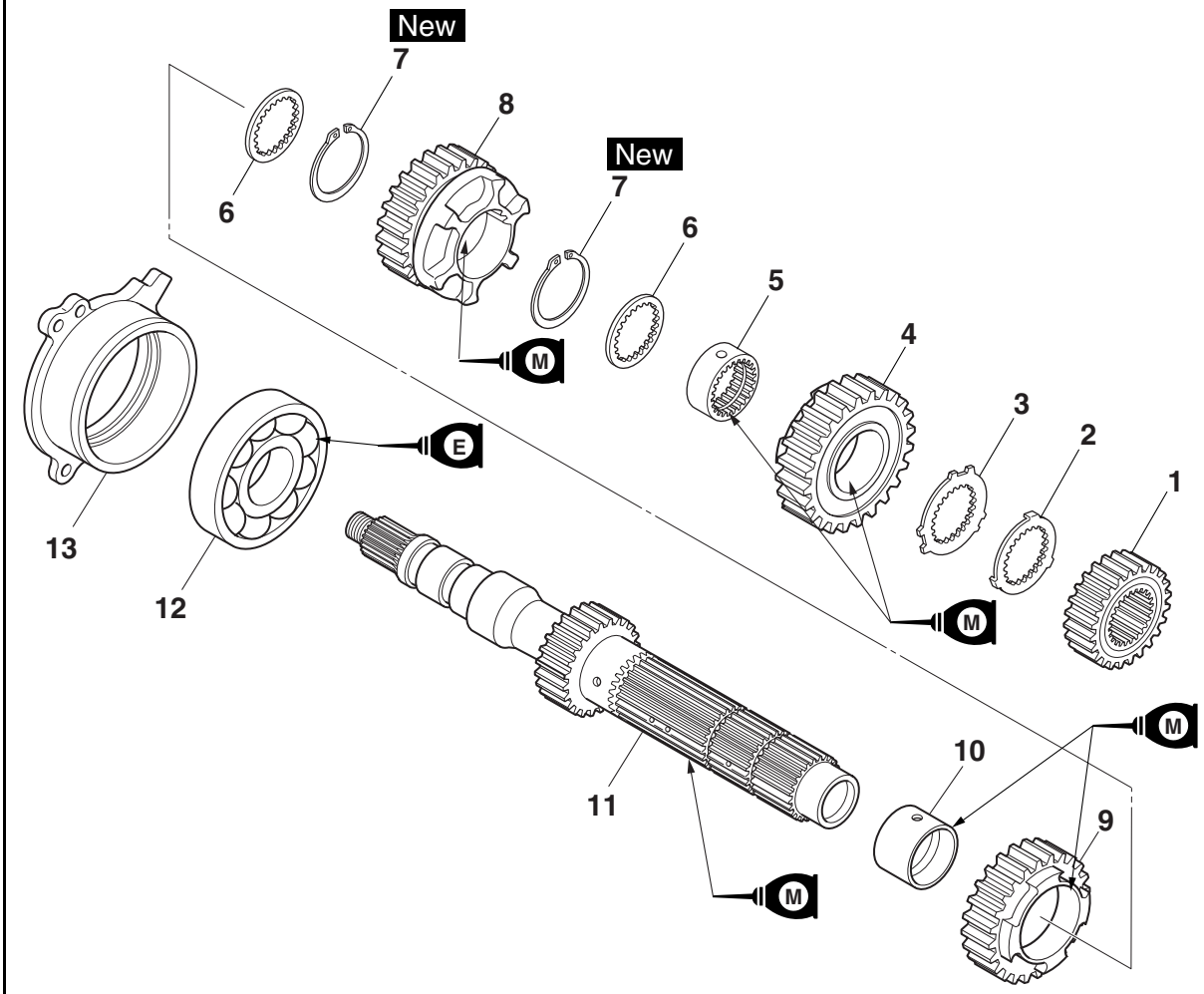

Order	Job/Parts to remove	Q'ty	Remarks
1	2nd pinion gear	1	
2	Toothed lock washer	1	
3	Toothed lock washer retainer	1	
4	5th pinion gear	1	
5	Toothed spacer	1	
6	Toothed washer	2	
7	Circlip	2	
8	3rd pinion gear	1	
9	4th pinion gear	1	
10	Collar	1	
11	Main axle/1st pinion gear	1	
12	Bearing	1	
13	Main axle bearing housing	1	
			For assembly, reverse the disassembly procedure.

Disassembling the drive axle assembly

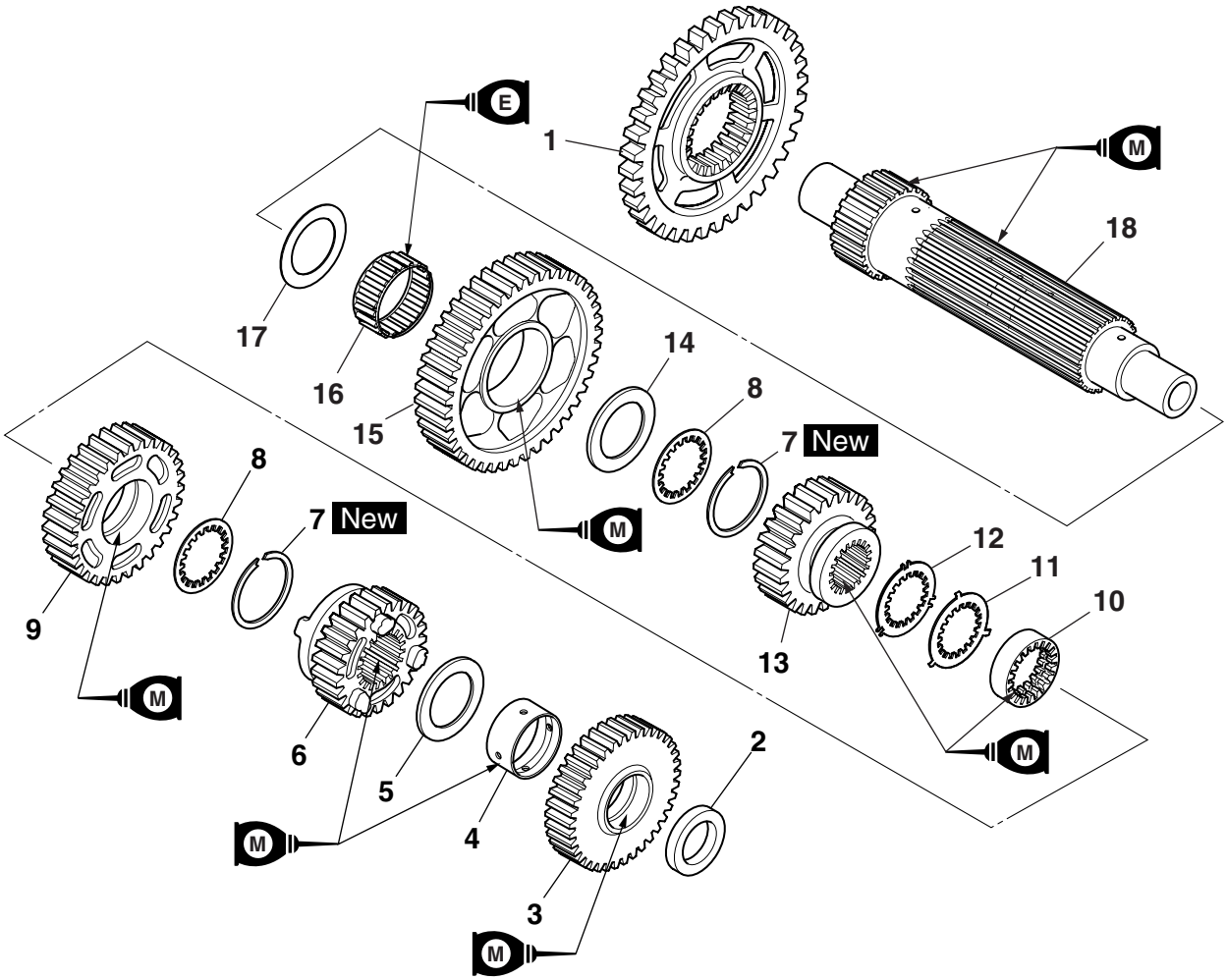

Order	Job/Parts to remove	Q'ty	Remarks
1	Middle drive gear	1	
2	Washer	1	
3	2nd wheel gear	1	
4	Collar	1	
5	Washer	1	
6	5th wheel gear	1	
7	Circlip	2	
8	Toothed washer	2	
9	3rd wheel gear	1	
10	Toothed spacer	1	
11	Toothed lock washer	1	
12	Toothed lock washer retainer	1	
13	4th wheel gear	1	
14	Washer	1	
15	1st wheel gear	1	
16	Bearing	1	
17	Washer	1	

Disassembling the drive axle assembly

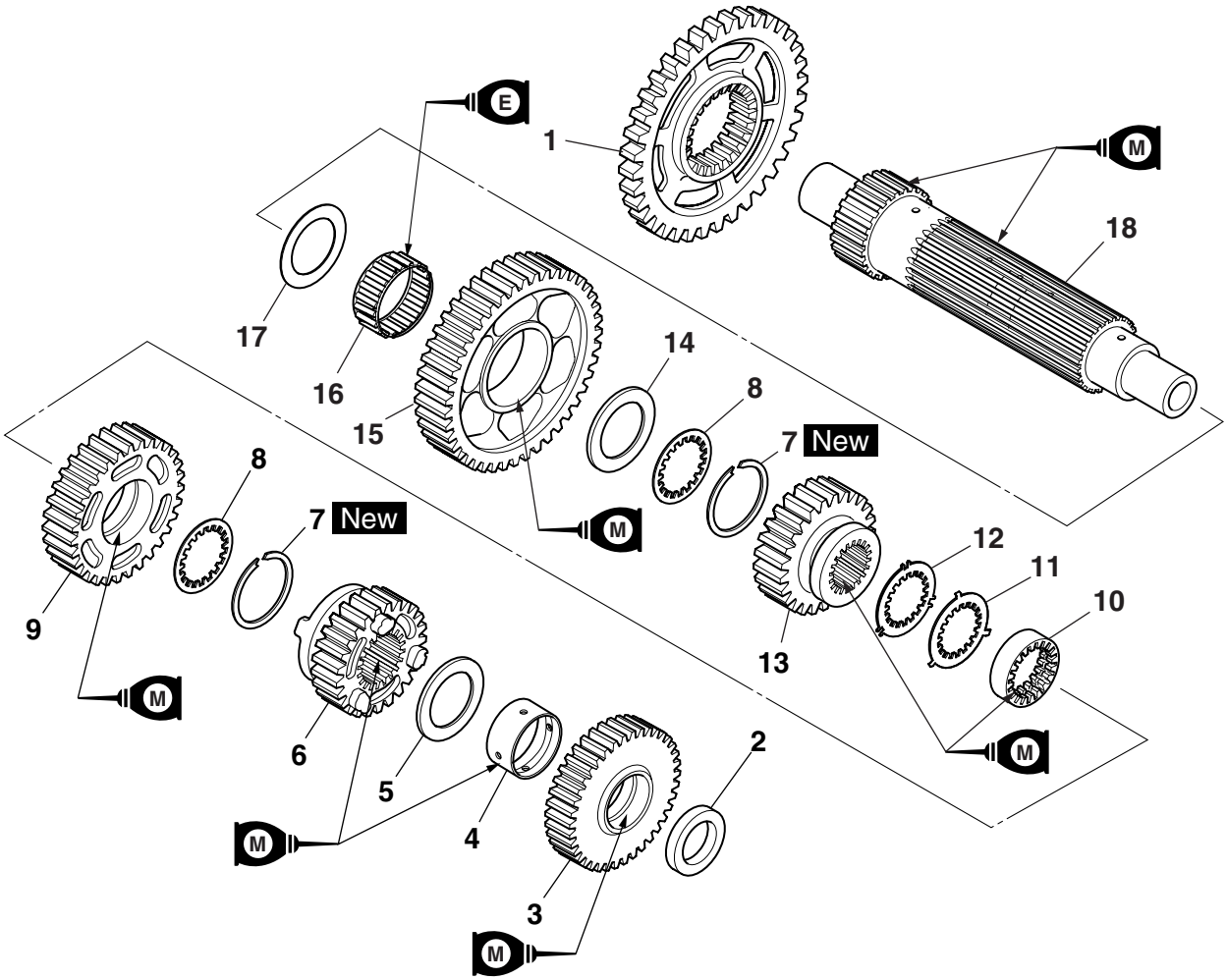

Order	Job/Parts to remove	Q'ty	Remarks
18	Drive axle	1	
			For assembly, reverse the disassembly procedure.

EAS26250
REMOVING THE TRANSMISSION
1. Remove:
   - Main axle assembly

NOTE:

Remove the main axle assembly with the slide hammer bolts “1” and weight.

Slide hammer bolt
90890-01083
Slide hammer bolt 6 mm
YU-01083-1
Weight
90890-01084
YU-01083-3

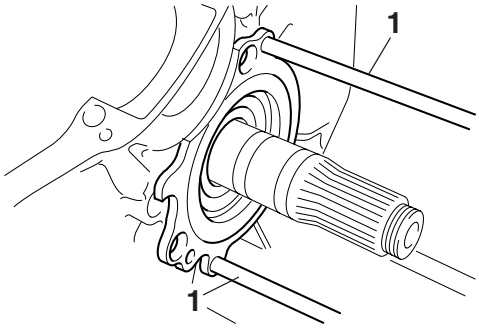

EAS26260
CHECKING THE SHIFT FORKS
The following procedure applies to all of the shift forks.
1. Check:
   - Shift fork cam follower “1”
   - Shift fork pawl “2”
     Bends/damage/scoring/wear → Replace the shift fork.

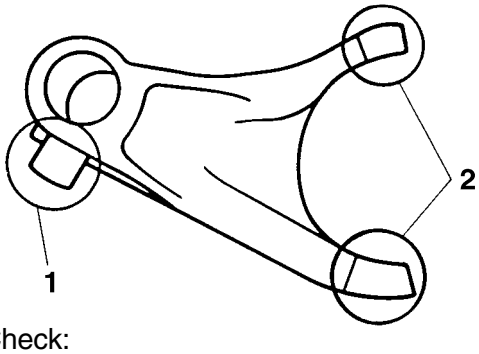

2. Check:
   - Shift fork guide bar
     Roll the shift fork guide bar on a flat surface.
     Bends → Replace.

EWA12840
WARNING

Do not attempt to straighten a bent shift fork guide bar.

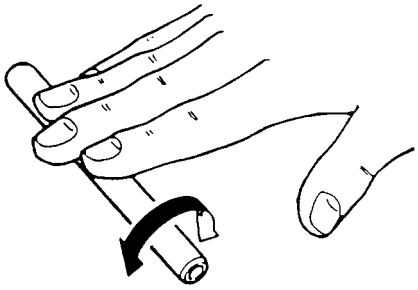

3. Check:
   - Shift fork movement
     (along the shift fork guide bar)
     Rough movement → Replace the shift forks and shift fork guide bar as a set.

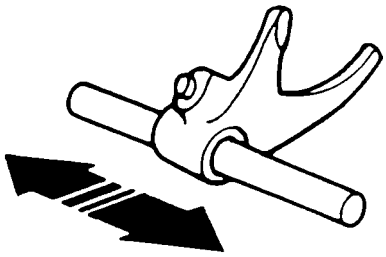

EAS26270
CHECKING THE SHIFT DRUM ASSEMBLY
1. Check:
   - Shift drum groove
     Damage/scratches/wear → Replace the shift drum assembly.
   - Shift drum segment “1”
     Damage/wear → Replace the shift drum assembly.
   - Shift drum bearing “2”
     Damage/pitting → Replace the shift drum assembly.

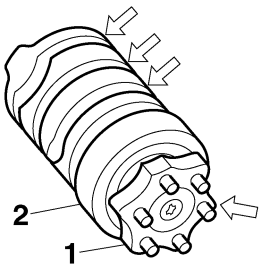

EAS26300
CHECKING THE TRANSMISSION
1. Measure:
   - Main axle runout
     (with a centering device and dial gauge “1”)
     Out of specification → Replace the main axle.

	Main axle runout limit **0.08 mm (0.0032 in)**

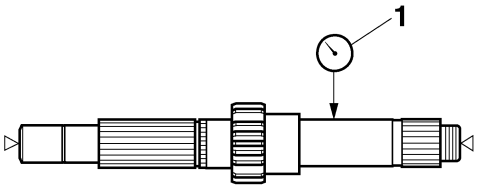

2. Measure:
   - Drive axle runout
     (with a centering device and dial gauge "1")
     Out of specification → Replace the drive axle.

	Drive axle runout limit **0.08 mm (0.0032 in)**

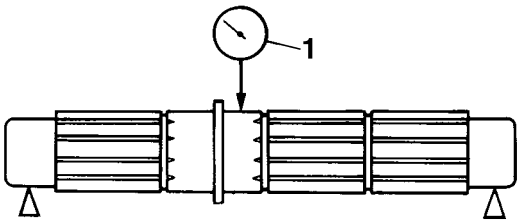

3. Check:
   - Transmission gears
     Blue discoloration/pitting/wear → Replace the defective gear(s).
   - Transmission gear dogs
     Cracks/damage/rounded edges → Replace the defective gear(s).

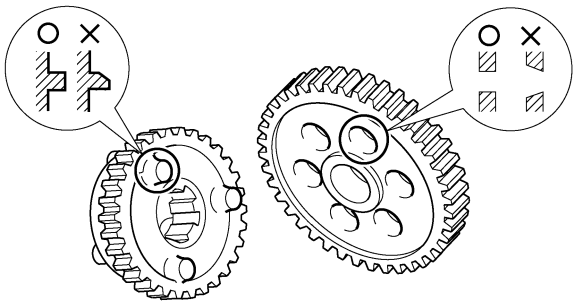

4. Check:
   - Transmission gear engagement
     (each pinion gear to its respective wheel gear)
     Incorrect → Reassemble the transmission axle assemblies.

5. Check:
   - Transmission gear movement
     Rough movement → Replace the defective part(s).
6. Check:
   - Circlips
     Bends/damage/looseness → Replace.

ET3P61030

ASSEMBLING THE MAIN AXLE AND DRIVE AXLE

1. Install:
   - Toothed washer "1"
   - Circlip "2" New

NOTE:
- Be sure the circlip sharp-edged corner "a" is positioned opposite side to the toothed washer and gear. (For main axle)
- Install the circlip so that both ends "b" rest on the sides of a spline "c" with both axles aligned.

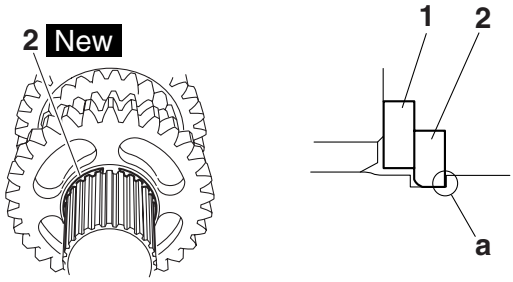

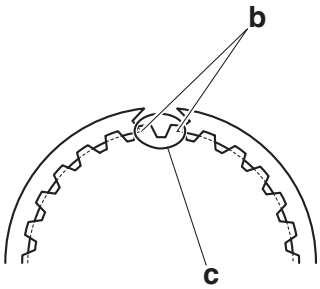

2. Install:
   - Toothed lock washer retainer "1"
   - Toothed lock washer "2"

NOTE:
- With the toothed lock washer retainer "1" in the groove "a" in the axle, align the projection on the retainer with an axle spline, and then install the toothed lock washer "2".
- Be sure to align the projection on the toothed lock washer that is between the alignment marks "b" with the alignment mark "c" on the retainer.

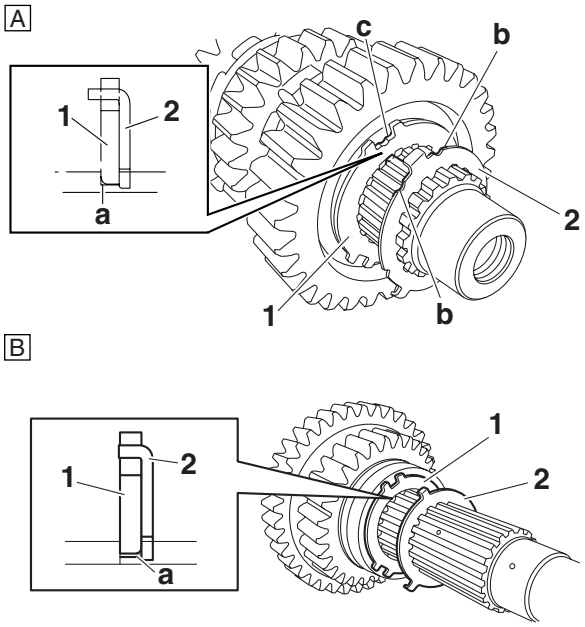

A. Main axle
B. Drive axle

3. Install:
   - 2nd pinion gear “1”

NOTE:

Install the 2nd pinion gear with its chamfered side facing inward as shown in the illustration.

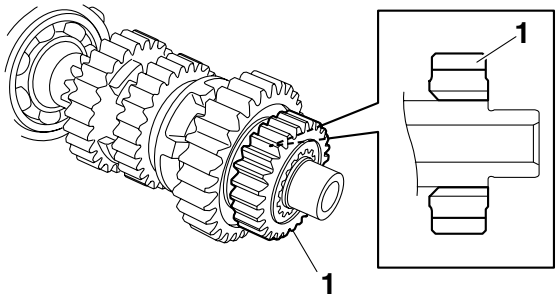

EAS26350

INSTALLING THE TRANSMISSION

1. Install:
   - Main axle assembly “1”
   - Main axle bearing housing bolts

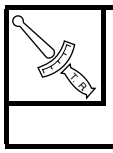

Main axle bearing housing bolt
12 Nm (1.2 m·kg, 8.7 ft·lb)
LOCTITE®

NOTE:

- When installing the main axle assembly, use a pin “2” to align the bearing housing hole with the corresponding hole in the upper crankcase.
- Stake the main axle bearing housing bolts at a cutout “a” in the main axle bearing housing.

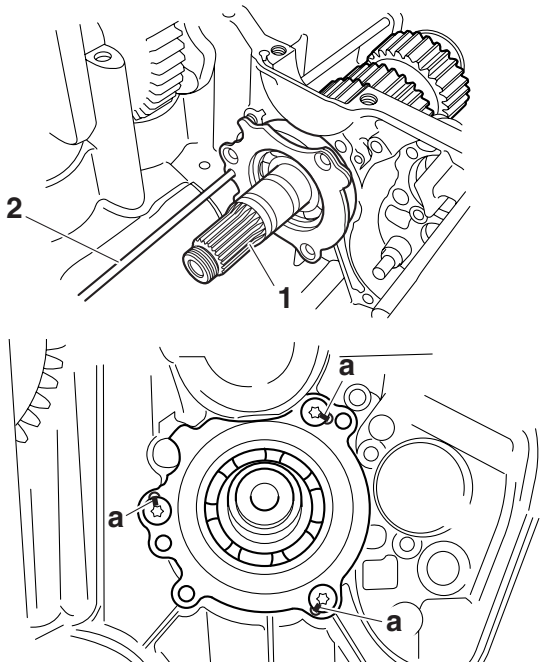

2. Install:
   - Shift fork-C
   - Shift drum assembly
   - Springs
   - Short shift fork guide bar
   - Shift fork-R
   - Shift fork-L
   - Long shift fork guide bar

NOTE:

The embossed marks on the shift forks should face towards the right side of the engine and be in the following sequence: “R”, “C”, “L”.

3. Install:
   - Washer “1”

NOTE:

Install the washer with its chamfered side facing towards the drive axle assembly as shown in the illustration.

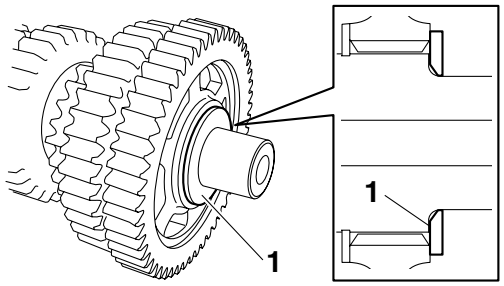

4. Install:
   - Drive axle assembly

NOTE:

- The bearing pin “1” must face towards the rear of the upper crankcase.
- Make sure the bearing circlip “2” is inserted into the groove in the upper crankcase.

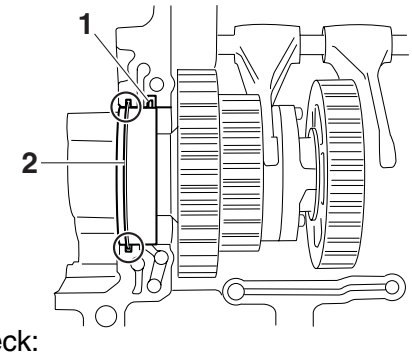

5. Check:
   - Transmission
     Rough movement → Repair.

NOTE:

Oil each gear, shaft, and bearing thoroughly.

ET3P61031

BALANCERS

Removing the front balancer

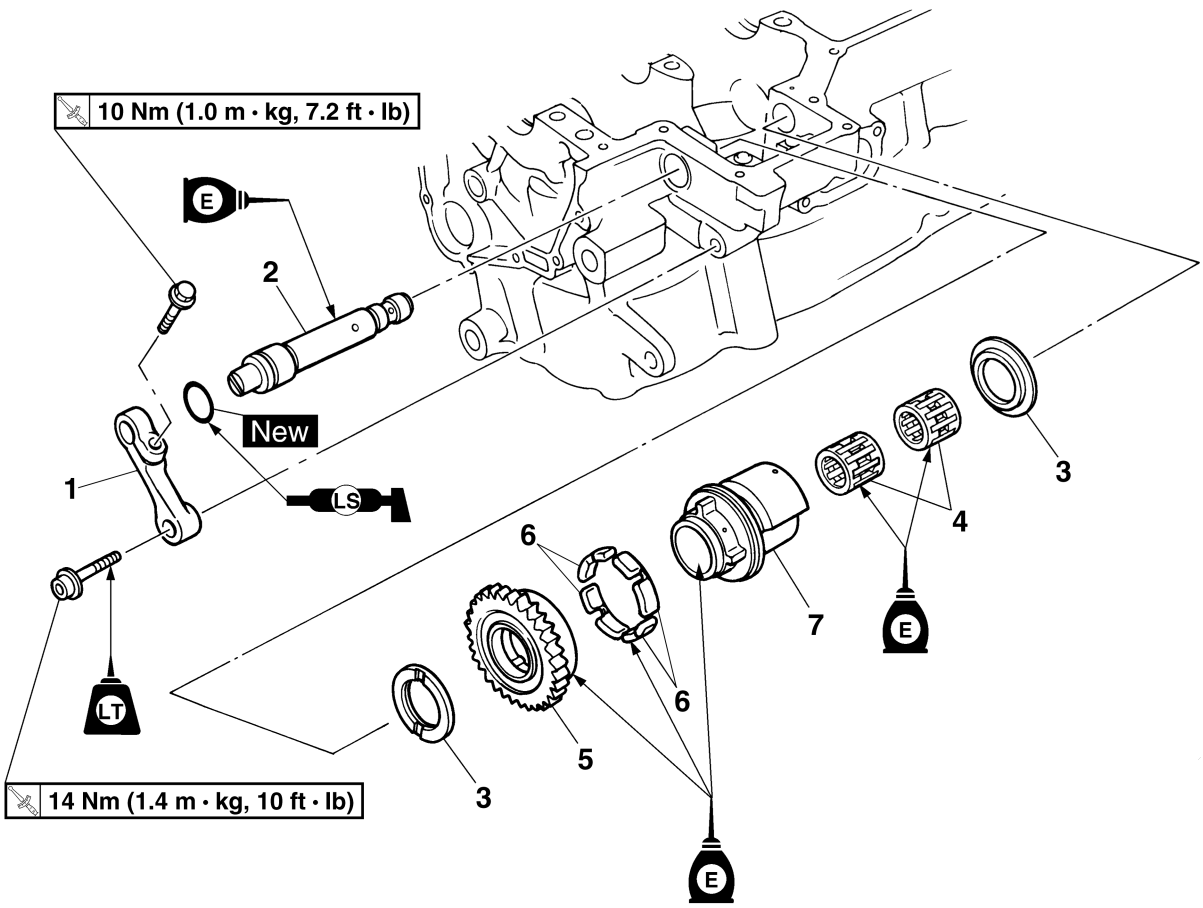

Order	Job/Parts to remove	Q'ty	Remarks
	Crankcase		Separate. Refer to "CRANKCASE" on page 5-74.
1	Front balancer lever	1	
2	Front balancer shaft	1	
3	Washer	2	
4	Bearing	2	
5	Front balancer gear	1	
6	Damper	4	
7	Front balancer weight	1	
			For installation, reverse the removal procedure.

Removing the rear balancer

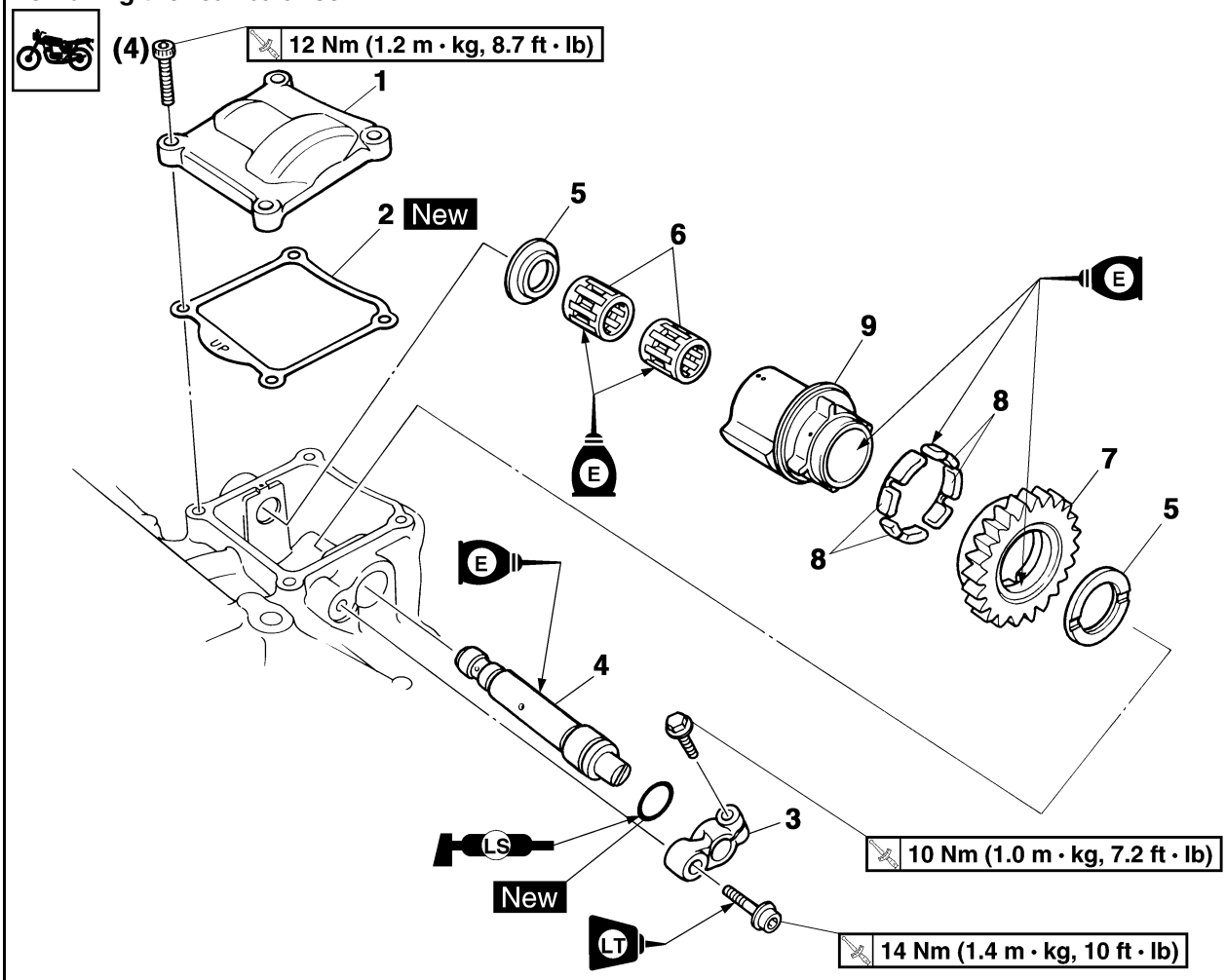

Order	Job/Parts to remove	Q'ty	Remarks
	Throttle bodies		Refer to "THROTTLE BODIES" on page 7-4.
	Pickup rotor cover		Refer to "PICKUP ROTOR" on page 5-34.
	Clutch cover		Refer to "CLUTCH" on page 5-41.
1	Rear balancer cover	1	
2	Rear balancer cover gasket	1	
3	Rear balancer lever	1	
4	Rear balancer shaft	1	
5	Washer	2	
6	Bearing	2	
7	Rear balancer gear	1	
8	Damper	4	
9	Rear balancer weight	1	
			For installation, reverse the removal procedure.

EAS26120
CHECKING THE BALANCERS

1. Check:
   - Front balancer gear
     Damage/wear → Replace the front balancer gear and crankshaft.
   - Rear balancer gear
     Damage/wear → Replace the rear balancer gear and clutch housing.
2. Check:
   - Balancer shafts
     Cracks/damage/wear → Replace the balancer shaft and bearings.
     Dirt → Clean.
   - Bearings
     Damage/wear → Replace.
   - Dampers
     Damage/wear → Replace.

ET3P61032
INSTALLING THE FRONT BALANCER

1. Install:
   - Front balancer gear "1"
   - Dampers "2"
   - Front balancer weight "3"
   - Bearings
   - Washers

NOTE:
- Install the dampers onto the balancer gear so that the middle section "a" of each damper is positioned to the outside of the gear projections as shown in the illustration.
- Align the punch mark "b" in the balancer weight with the mark "c" in the balancer gear.

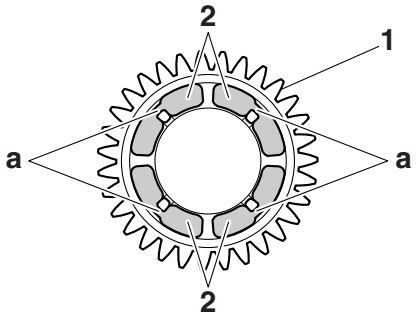

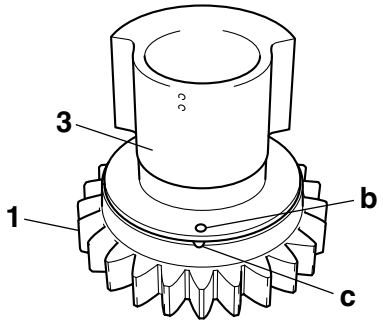

2. Align:
   - "T" mark on the pickup rotor
     (with the crankcase mating surface)

▼▼▼▼▼▼▼▼▼▼▼▼▼▼▼▼▼▼▼▼▼▼▼▼▼▼▼▼▼▼▼▼▼▼

a. Turn the crankshaft clockwise.
b. When piston #1 is at TDC on the compression stroke, align the "T" mark "a" on the pickup rotor with the crankcase mating surface "b".

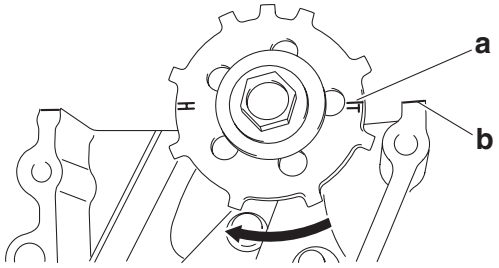

▲▲▲▲▲▲▲▲▲▲▲▲▲▲▲▲▲▲▲▲▲▲▲▲▲▲▲▲▲▲▲▲▲▲

3. Install:
   - Front balancer shaft

▼▼▼▼▼▼▼▼▼▼▼▼▼▼▼▼▼▼▼▼▼▼▼▼▼▼▼▼▼▼▼▼▼▼

a. Align the punch mark "a" in the balancer weight with the oil hole "b" in the upper crankcase.

NOTE:
- Make sure that the front balancer gear teeth and the balancer drive gear teeth mesh correctly.
- Make sure that the slot "c" is facing in the direction indicated in the illustration when installing the balancer shaft.

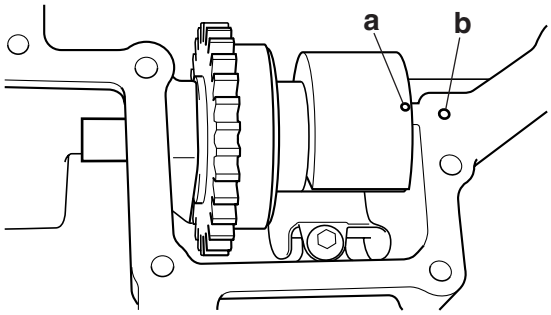

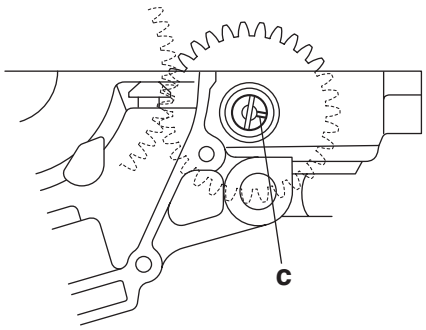

▲▲▲▲▲▲▲▲▲▲▲▲▲▲▲▲▲▲▲▲▲▲▲▲▲▲▲▲▲▲▲▲▲▲

4. Install:
   - Front balancer lever “1”
   - Front balancer lever bolt “2”

NOTE:

- Apply locking agent (LOCTITE®) to the threads of the balancer lever bolt.
- Temporarily tighten the balancer lever bolt.

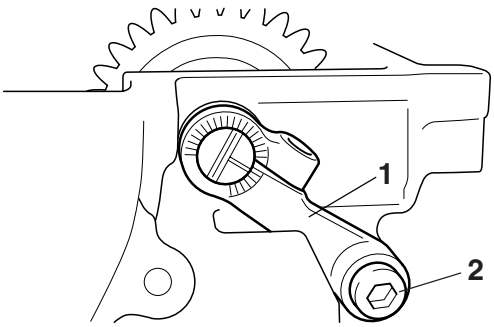

5. Tighten:
   - Front balancer shaft “1”

	Front balancer shaft 0.4 Nm (0.04 m·kg, 0.29 ft·lb)

NOTE:

Tighten the balancer shaft to the specified torque by turning it counterclockwise, and then turn it one mark back on the balancer lever scale.

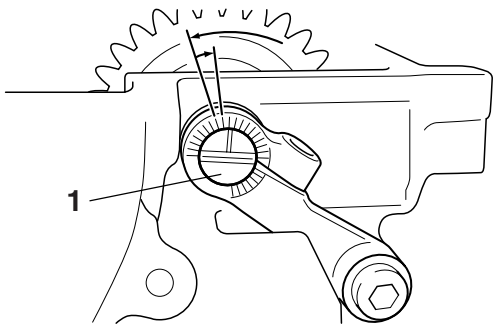

6. Tighten:
   - Front balancer lever bolt “1”
   - Front balancer shaft pinch bolt “2”

	Front balancer lever bolt 14 Nm (1.4 m·kg, 10 ft·lb) Front balancer shaft pinch bolt 10 Nm (1.0 m·kg, 7.2 ft·lb)

NOTE:

Make sure that the balancer shaft does not rotate.

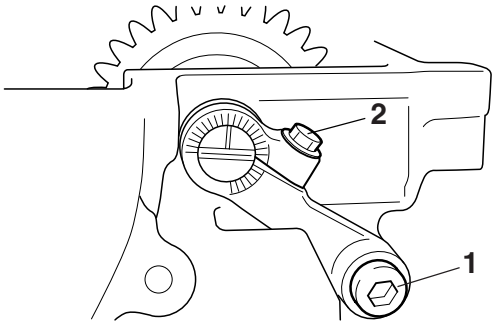

7. Start the engine and check that there is no abnormal noise coming from the balancer gear. If noise is abnormal, adjust the gear lash by turning the balancer shaft.

NOTE:

With each adjustment, turn the balancer shaft one scale.

Clockwise	Gear lash decreased
Counterclockwise	Gear lash increased

ET3P61033

INSTALLING THE REAR BALANCER

1. Install:
   - Rear balancer gear “1”
   - Dampers “2”
   - Rear balancer weight “3”
   - Bearings
   - Washers

NOTE:

- Install the dampers onto the balancer gear so that the middle section “a” of each damper is positioned to the outside of the gear projections as shown in the illustration.
- Align the punch mark “b” in the balancer weight with the mark “c” in the balancer gear.

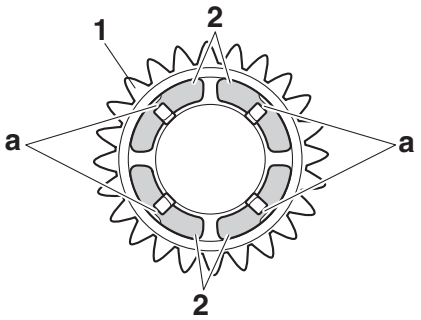

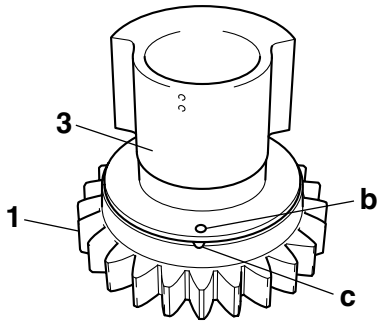

2. Align:
   - "T" mark on the pickup rotor (with the crankcase mating surface)

▼▼▼▼▼▼▼▼▼▼▼▼▼▼▼▼▼▼▼▼▼▼▼▼▼▼▼▼▼▼▼▼▼▼

a. Turn the crankshaft clockwise.
b. When piston #1 is at TDC on the compression stroke, align the "T" mark "a" on the pickup rotor with the crankcase mating surface "b".

NOTE:

TDC on the compression stroke can be found when the camshaft lobes are turned away from each other.

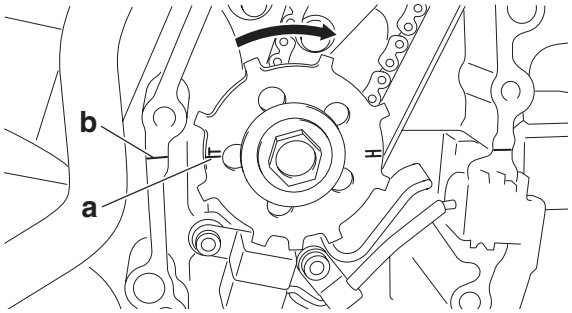

▲▲▲▲▲▲▲▲▲▲▲▲▲▲▲▲▲▲▲▲▲▲▲▲▲▲▲▲▲▲▲▲▲▲

3. Install:
   - Rear balancer shaft

▼▼▼▼▼▼▼▼▼▼▼▼▼▼▼▼▼▼▼▼▼▼▼▼▼▼▼▼▼▼▼▼▼▼

a. Align the punch marks "a" in the balancer weight with the punch mark "b" in the upper crankcase.

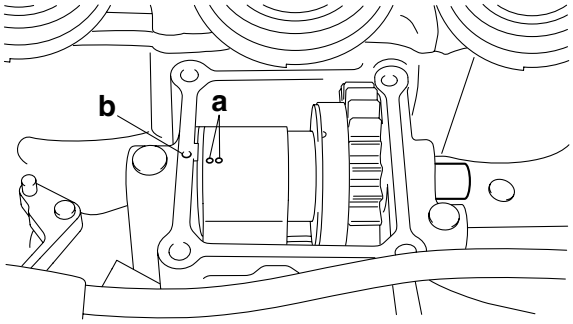

b. Align the balancer gear punch mark "c" with the primary driven gear point "d" as shown.

NOTE:

- Make sure that the rear balancer gear teeth and the primary driven gear teeth mesh correctly.
- Make sure that the balancer gear punch mark "c" is aligned with the projection "e" on the upper crankcase.
- Make sure that the slot "f" is facing in the direction indicated in the illustration when installing the balancer shaft.

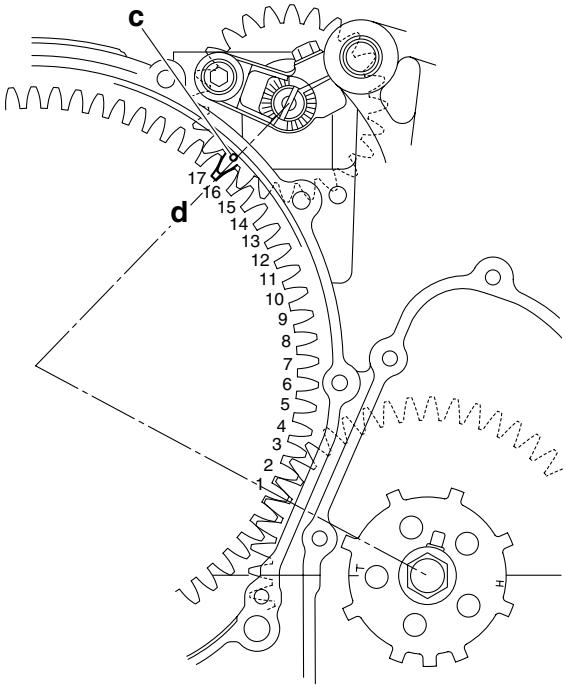

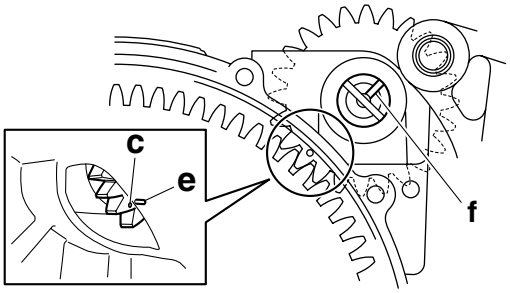

▲▲▲▲▲▲▲▲▲▲▲▲▲▲▲▲▲▲▲▲▲▲▲▲▲▲▲▲▲▲▲▲▲▲

4. Install:
   - Rear balancer lever “1”
   - Rear balancer lever bolt “2”

NOTE:

- Apply locking agent (LOCTITE®) to the threads of the balancer lever bolt.
- Temporarily tighten the balancer lever bolt.

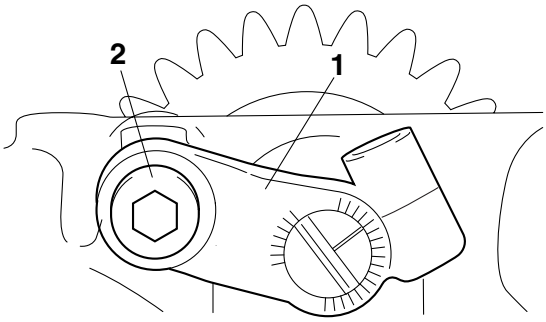

5. Tighten:
   - Rear balancer shaft “1”

	Rear balancer shaft 0.4 Nm (0.04 m·kg, 0.29 ft·lb)

NOTE:

Tighten the balancer shaft to the specified torque by turning it counterclockwise, and then turn it two marks back on the balancer lever scale.

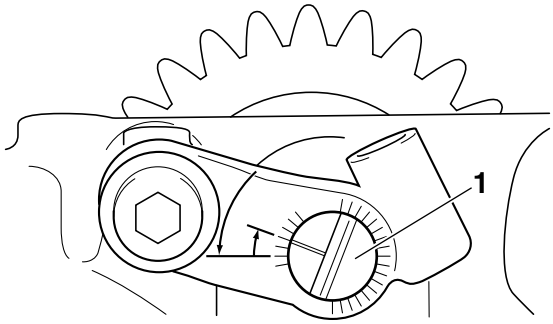

6. Tighten:
   - Rear balancer lever bolt “1”
   - Rear balancer shaft pinch bolt “2”

	Rear balancer lever bolt 14 Nm (1.4 m·kg, 10 ft·lb) Rear balancer shaft pinch bolt 10 Nm (1.0 m·kg, 7.2 ft·lb)

NOTE:

Make sure that the balancer shaft does not rotate.

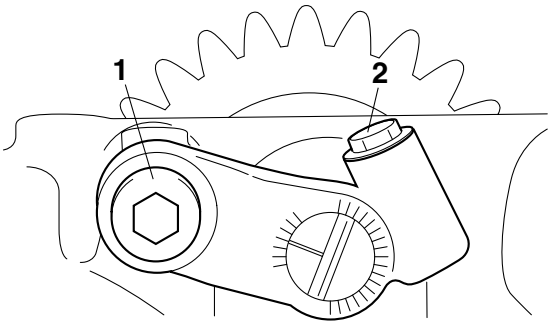

7. Start the engine and check that there is no abnormal noise coming from the balancer gear. If noise is abnormal, adjust the gear lash by turning the balancer shaft.

NOTE:

With each adjustment, turn the balancer shaft one scale.

Clockwise	Gear lash decreased
Counterclockwise	Gear lash increased

COOLING SYSTEM

RADIATOR 6-1
CHECKING THE RADIATOR 6-3
INSTALLING THE RADIATOR 6-3

OIL COOLER 6-4
CHECKING THE OIL COOLER 6-5
INSTALLING THE OIL COOLER 6-5

THERMOSTAT 6-6
CHECKING THE THERMOSTAT 6-8
INSTALLING THE THERMOSTAT ASSEMBLY 6-8

WATER PUMP 6-10
DISASSEMBLING THE WATER PUMP 6-12
CHECKING THE WATER PUMP 6-12
ASSEMBLING THE WATER PUMP 6-12
INSTALLING THE WATER PUMP 6-13

EAS26380

RADIATOR

Removing the radiator

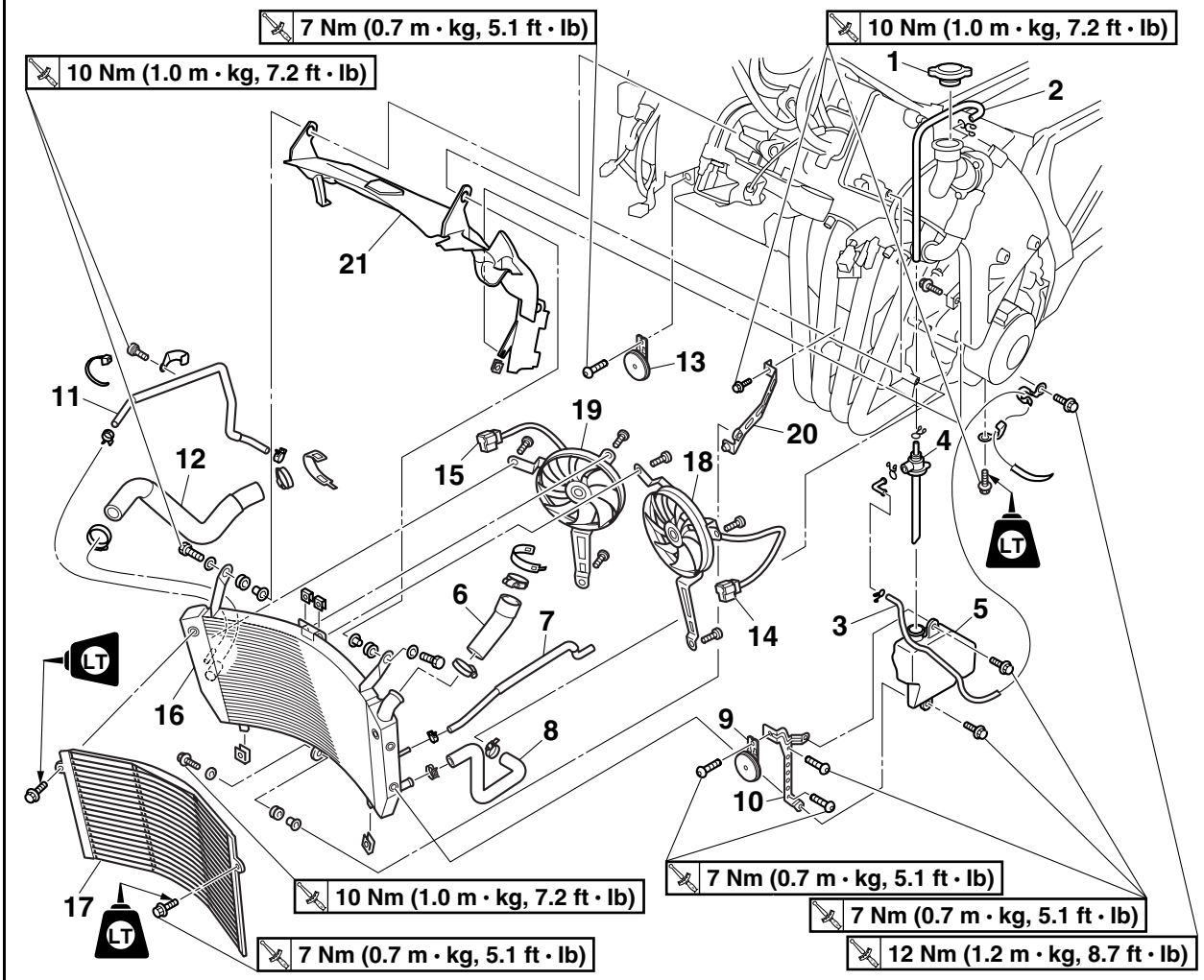

Order	Job/Parts to remove	Q'ty	Remarks
	Coolant		Drain. Refer to "CHANGING THE COOLANT" on page 3-19.
	Throttle bodies		Refer to "THROTTLE BODIES" on page 7-4.
1	Radiator cap	1	
2	Coolant reservoir hose	1	
3	Coolant reservoir breather hose	1	
4	Coolant reservoir cap	1	
5	Coolant reservoir	1	
6	Radiator inlet hose	1	
7	Plunger control unit hose 2	1	
8	Oil cooler outlet hose	1	
9	Left horn (low)	1	
10	Coolant reservoir bracket	1	
11	Water pump breather hose	1	
12	Radiator outlet hose	1	
13	Right horn (high)	1	

Removing the radiator

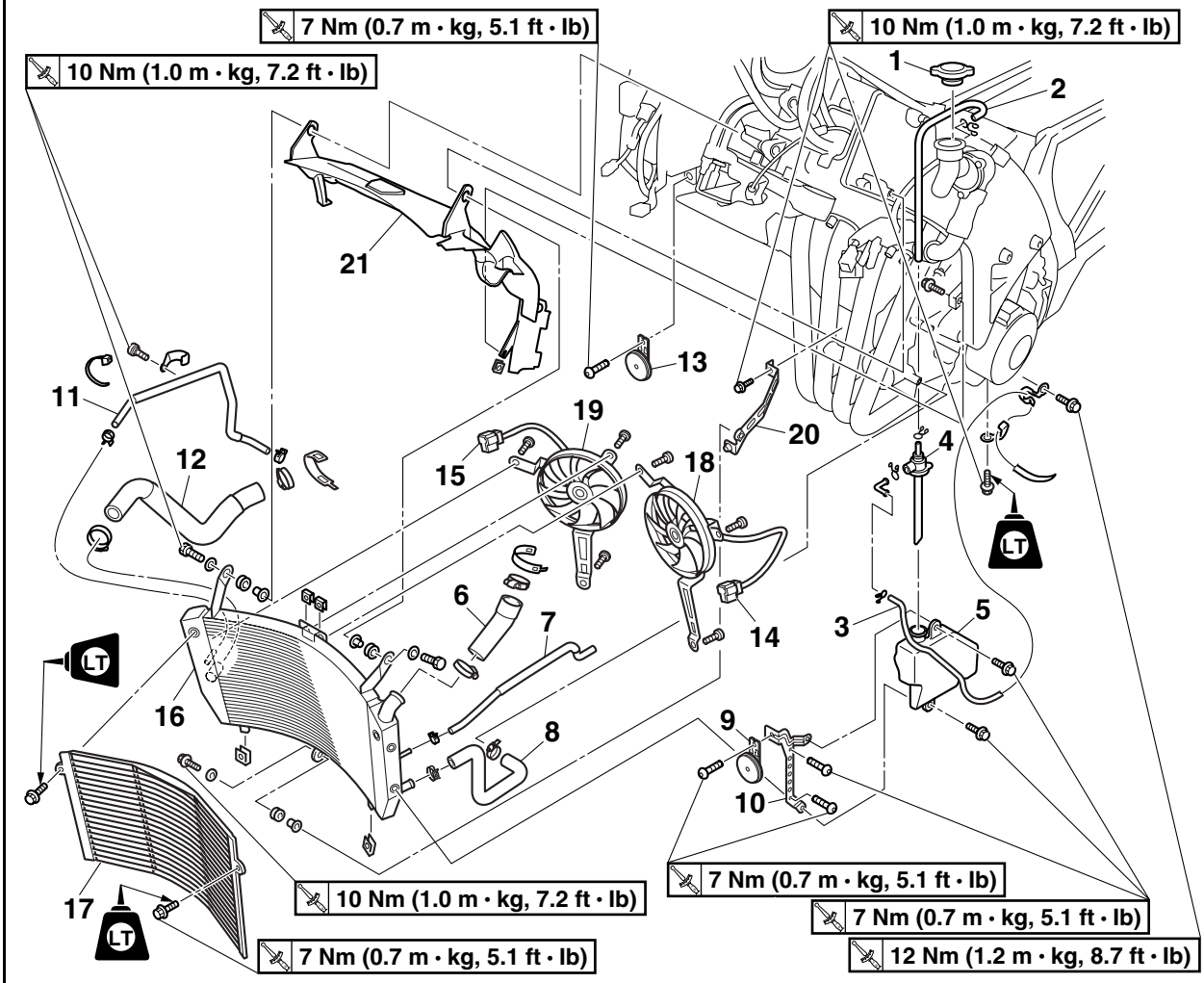

Order	Job/Parts to remove	Q'ty	Remarks
14	Left radiator fan motor coupler	1	Disconnect.
15	Right radiator fan motor coupler	1	Disconnect.
16	Radiator	1	
17	Radiator cover	1	
18	Left radiator fan motor	1	
19	Right radiator fan motor	1	
20	Radiator bracket	1	
21	Air deflector	1	
			For installation, reverse the removal procedure.

EAS26390
CHECKING THE RADIATOR

1. Check:
   - Radiator fins
     Obstruction → Clean.
     Apply compressed air to the rear of the radiator.
     Damage → Repair or replace.

NOTE:

Straighten any flattened fins with a thin, flat-head screwdriver.

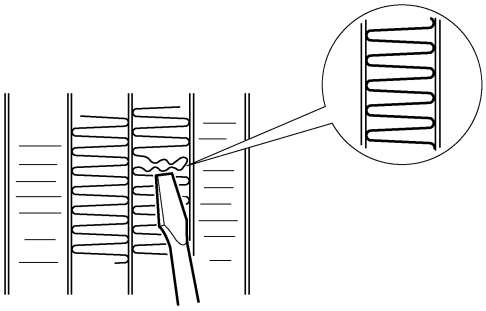

2. Check:
   - Radiator hoses
   - Radiator pipes
     Cracks/damage → Replace.
3. Measure:
   - Radiator cap opening pressure
     Below the specified pressure → Replace the radiator cap.

Radiator cap opening pressure
93.3–122.7 kPa (13.5–17.8 psi)
(0.93–1.23 kgf/cm²)

▼▼▼▼▼▼▼▼▼▼▼▼▼▼▼▼▼▼▼▼▼▼▼▼▼▼▼▼▼▼▼▼▼▼

a. Install the radiator cap tester “1” and radiator cap tester adapter “2” to the radiator cap “3”.

Radiator cap tester
90890-01325
Radiator pressure tester
YU-24460-01
Radiator cap tester adapter
90890-01352
Radiator pressure tester adapter
YU-33984

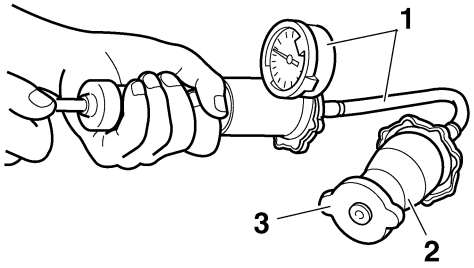

b. Apply the specified pressure for ten seconds and make sure there is no drop in pressure.

▲▲▲▲▲▲▲▲▲▲▲▲▲▲▲▲▲▲▲▲▲▲▲▲▲▲▲▲▲▲▲▲▲▲

4. Check:
   - Radiator fan
     Damage → Replace.
     Malfunction → Check and repair.
     Refer to “COOLING SYSTEM” on page 8-37.

EAS26400
INSTALLING THE RADIATOR

1. Fill:
   - Cooling system
     (with the specified amount of the recommended coolant)
     Refer to “CHANGING THE COOLANT” on page 3-19.
2. Check:
   - Cooling system
     Leaks → Repair or replace any faulty part.
3. Measure:
   - Radiator cap opening pressure
     Below the specified pressure → Replace the radiator cap.
     Refer to “CHECKING THE RADIATOR” on page 6-3.

EAS26410

OIL COOLER

Removing the oil cooler

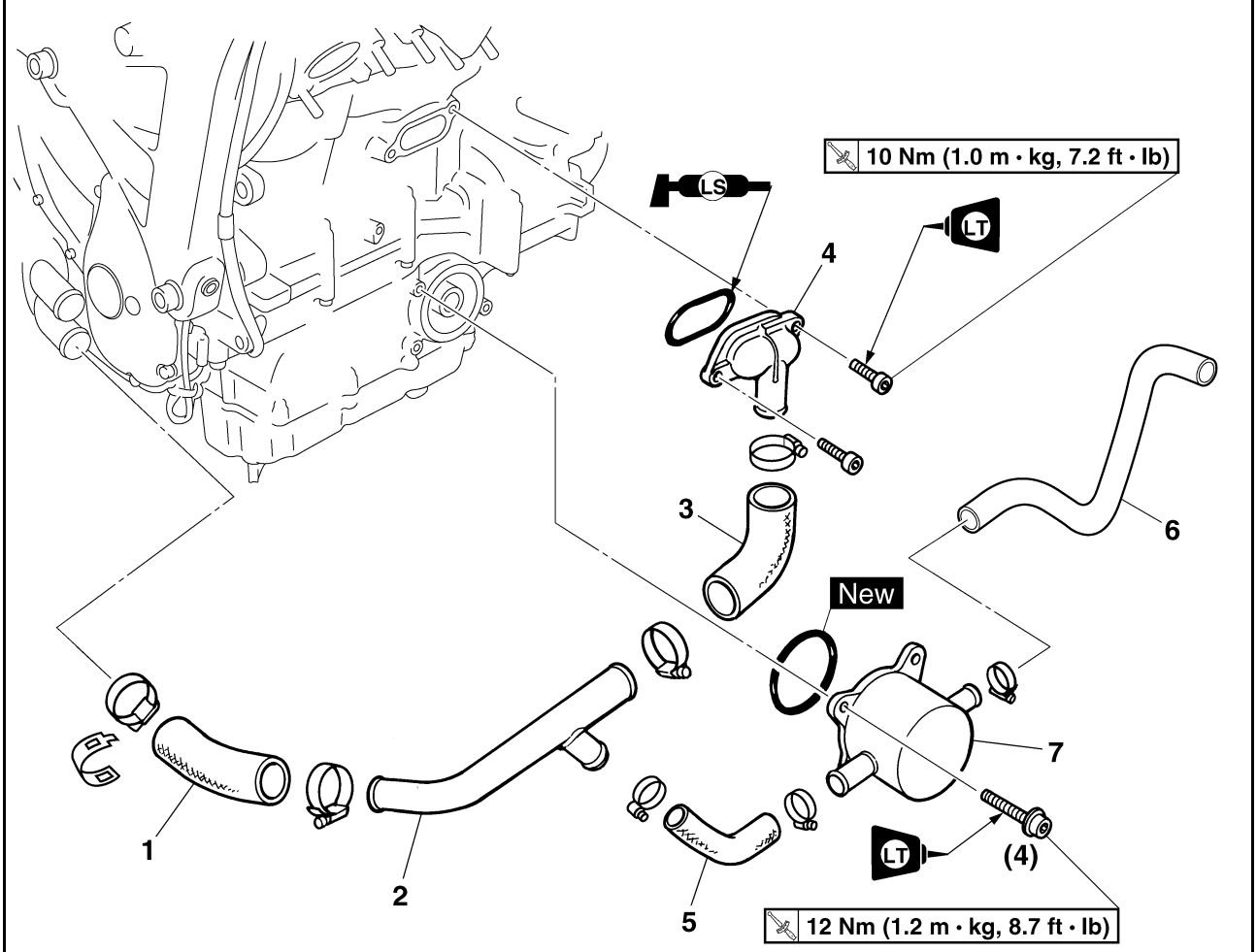

Order	Job/Parts to remove	Q'ty	Remarks
	Engine oil		Drain. Refer to "CHANGING THE ENGINE OIL" on page 3-13.
	Coolant		Drain. Refer to "CHANGING THE COOLANT" on page 3-19.
	Radiator		Refer to "RADIATOR" on page 6-1.
	Exhaust pipe assembly		Refer to "ENGINE REMOVAL" on page 5-1.
1	Water pump outlet hose	1	
2	Water pump outlet pipe	1	
3	Water jacket joint inlet hose	1	
4	Water jacket joint	1	
5	Oil cooler inlet hose	1	
6	Oil cooler outlet hose	1	
7	Oil cooler	1	
			For installation, reverse the removal procedure.

EAS26420
CHECKING THE OIL COOLER
1. Check:
   - Oil cooler
     Cracks/damage → Replace.
2. Check:
   - Oil cooler inlet hose
   - Oil cooler outlet hose
   - Water pump outlet hose
   - Water pump outlet pipe
   - Water jacket joint inlet hose
     Cracks/damage/wear → Replace.

EAS26430
INSTALLING THE OIL COOLER
1. Clean:
   - Mating surfaces of the oil cooler and the crankcase
     (with a cloth dampened with lacquer thinner)
2. Install:
   - O-ring New
   - Oil cooler

Oil cooler bolt
12 Nm (1.2 m·kg, 8.7 ft·lb)
LOCTITE®

NOTE:
Make sure the O-ring is positioned properly.

3. Fill:
   - Cooling system
     (with the specified amount of the recommended coolant)
     Refer to “CHANGING THE COOLANT” on page 3-19.
   - Crankcase
     (with the specified amount of the recommended engine oil)
     Refer to “CHANGING THE ENGINE OIL” on page 3-13.
4. Check:
   - Cooling system
     Leaks → Repair or replace any faulty part.
5. Measure:
   - Radiator cap opening pressure
     Below the specified pressure → Replace the radiator cap.
     Refer to “CHECKING THE RADIATOR” on page 6-3.

EAS26440

THERMOSTAT

Removing the thermostat assembly

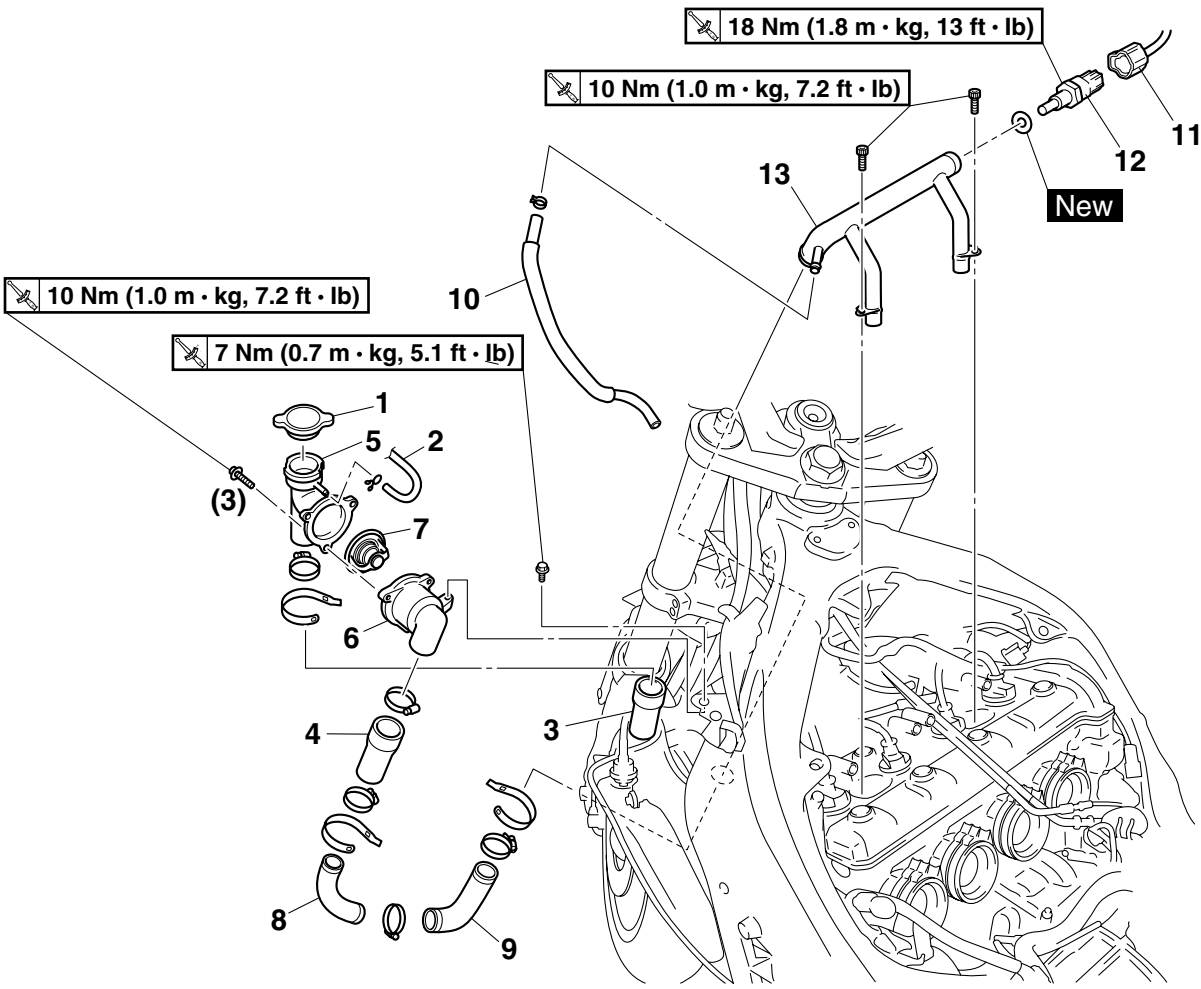

Order	Job/Parts to remove	Q'ty	Remarks
	Coolant		Drain. Refer to "CHANGING THE COOLANT" on page 3-19.
	Throttle bodies		Refer to "THROTTLE BODIES" on page 7-4.
1	Radiator cap	1	
2	Coolant reservoir hose	1	Disconnect.
3	Radiator inlet hose	1	Disconnect.
4	Thermostat inlet hose 2	1	
5	Thermostat cover/radiator filler pipe	1	
6	Thermostat housing	1	
7	Thermostat	1	
8	Thermostat inlet pipe 2	1	
9	Thermostat inlet hose 1	1	
10	Plunger control unit hose 1	1	
11	Coolant temperature sensor coupler	1	Disconnect.
12	Coolant temperature sensor	1	

Removing the thermostat assembly

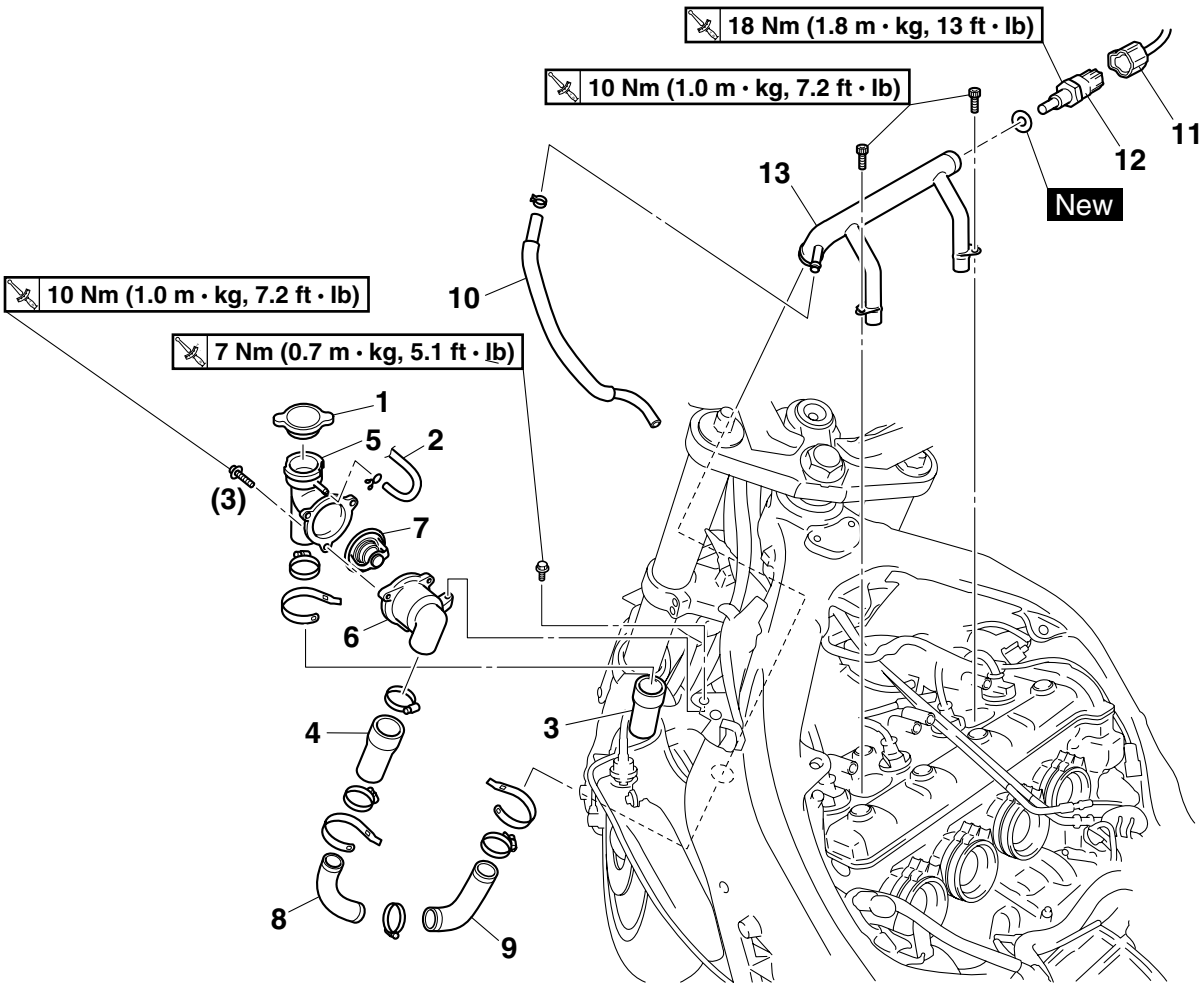

Order	Job/Parts to remove	Q'ty	Remarks
13	Thermostat inlet pipe 1	1	
			For installation, reverse the removal procedure.

EAS26450
CHECKING THE THERMOSTAT

1. Check:
   - Thermostat
     Does not open at 71–85 °C (159.8–185.0 °F) → Replace.

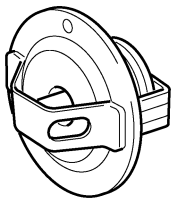

▼▼▼▼▼▼▼▼▼▼▼▼▼▼▼▼▼▼▼▼▼▼▼▼▼▼▼▼▼▼▼▼▼▼

a. Suspend the thermostat "1" in a container "2" filled with water.
b. Slowly heat the water "3".
c. Place a thermometer "4" in the water.
d. While stirring the water, observe the thermostat and thermometer's indicated temperature.

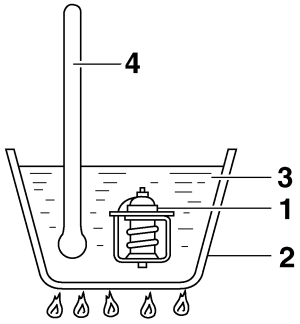

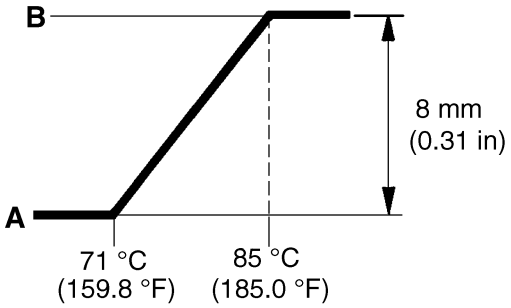

A. Fully closed
B. Fully open

NOTE:

If the accuracy of the thermostat is in doubt, replace it. A faulty thermostat could cause serious overheating or overcooling.

▲▲▲▲▲▲▲▲▲▲▲▲▲▲▲▲▲▲▲▲▲▲▲▲▲▲▲▲▲▲▲▲▲▲

2. Check:
   - Thermostat housing
     Cracks/damage → Replace.
3. Check:
   - Thermostat hoses
   - Thermostat pipes
   - Radiator inlet hose
   - Thermostat cover/radiator filler pipe
   - Plunger control unit hose 1
     Cracks/damage/wear → Replace.

EAS26490
INSTALLING THE THERMOSTAT ASSEMBLY

1. Install:
   - Copper washer New
   - Coolant temperature sensor

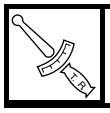	**Coolant temperature sensor 18 Nm (1.8 m·kg, 13 ft·lb)**

EC3P61019

CAUTION:

Use extreme care when handling the coolant temperature sensor. Replace any part that was dropped or subjected to a strong impact.

2. Install:
   - Thermostat "1"
   - Thermostat housing "2"

NOTE:

Install the thermostat with its breather hole "a" facing up.

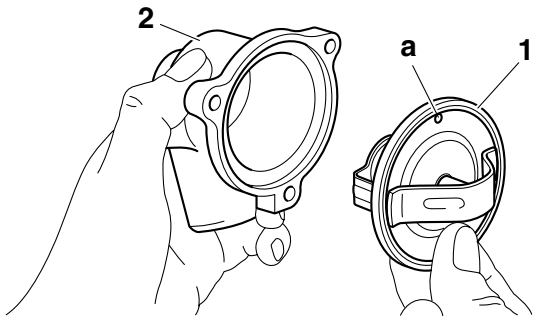

3. Fill:
   - Cooling system
     (with the specified amount of the recommended coolant)
     Refer to "CHANGING THE COOLANT" on page 3-19.
4. Check:
   - Cooling system
     Leaks → Repair or replace any faulty part.

5. Measure:
   - Radiator cap opening pressure
     Below the specified pressure → Replace the radiator cap.
     Refer to “CHECKING THE RADIATOR” on page 6-3.

EAS26500

WATER PUMP

Removing the water pump

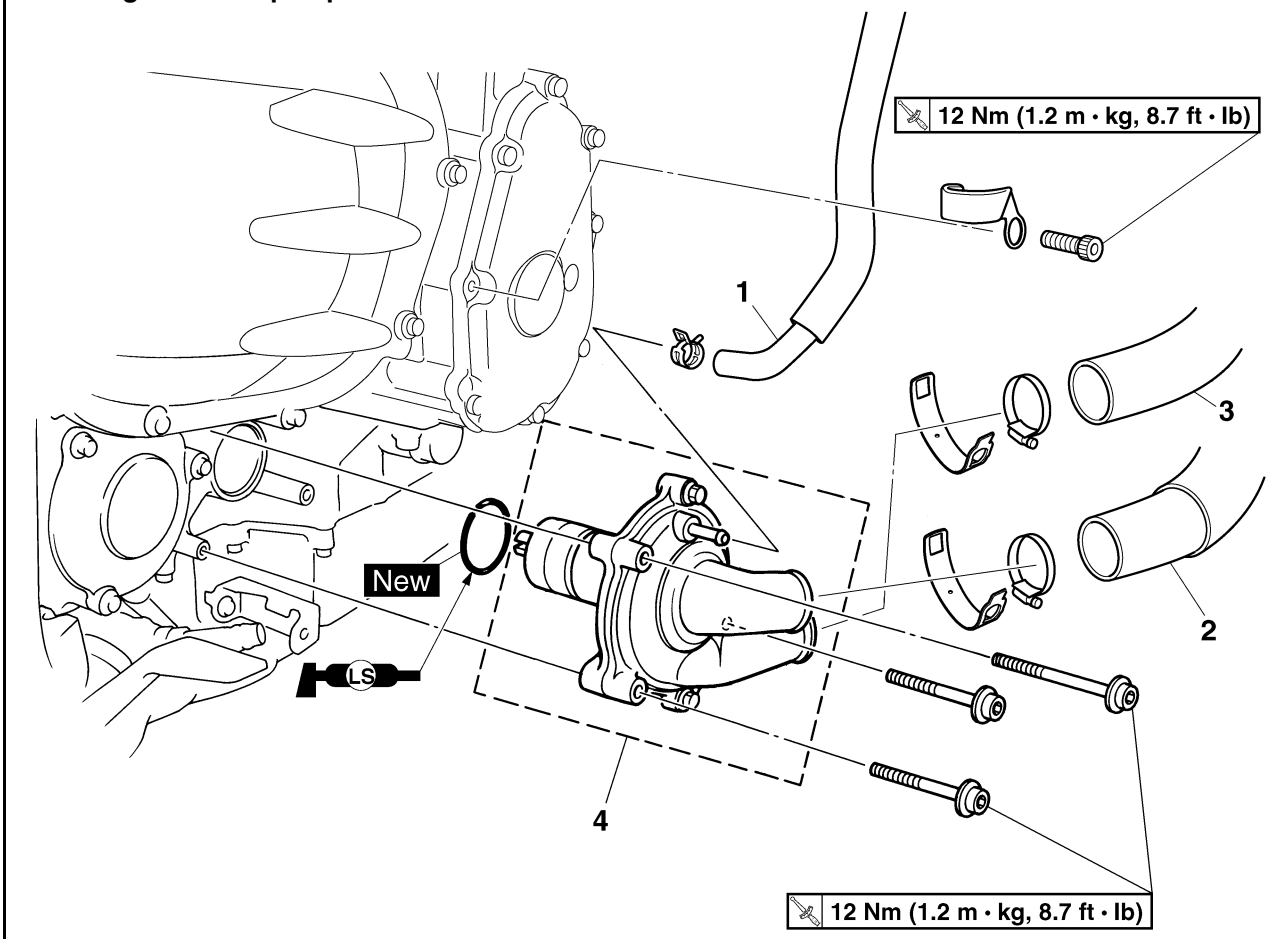

Order	Job/Parts to remove	Q'ty	Remarks
			It is not necessary to remove the water pump unless the coolant level is extremely low or the coolant contains engine oil.
	Right side cowling		Refer to "GENERAL CHASSIS" on page 4-1.
	Coolant		Drain. Refer to "CHANGING THE COOLANT" on page 3-19.
1	Water pump breather hose	1	Disconnect.
2	Radiator outlet hose	1	Disconnect.
3	Water pump outlet hose	1	Disconnect.
4	Water pump assembly	1	
			For installation, reverse the removal procedure.

Disassembling the water pump

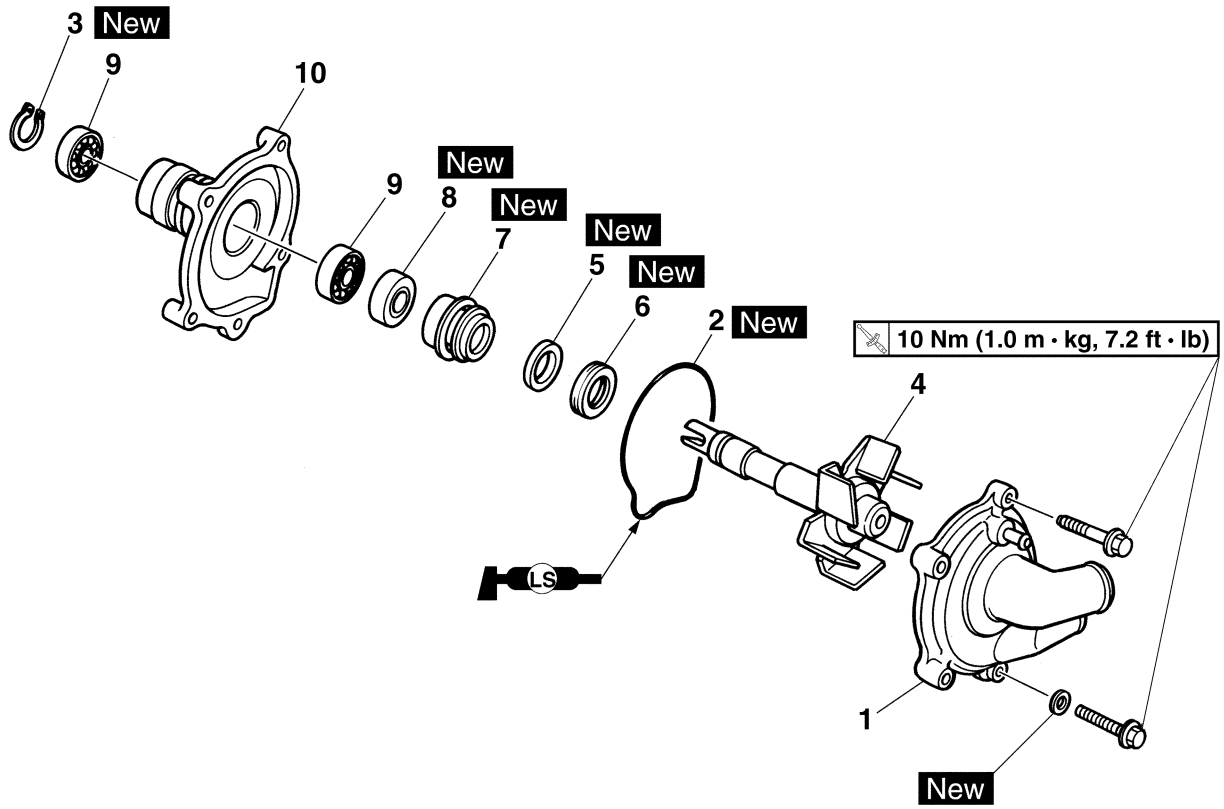

Order	Job/Parts to remove	Q'ty	Remarks
1	Water pump housing cover	1	
2	O-ring	1	
3	Circlip	1	
4	Impeller shaft	1	
5	Rubber damper holder	1	
6	Rubber damper	1	
7	Water pump seal	1	
8	Oil seal	1	
9	Bearing	2	
10	Water pump housing	1	
			For assembly, reverse the disassembly procedure.

EAS26510
DISASSEMBLING THE WATER PUMP

1. Remove:
   - Rubber damper holder “1”
   - Rubber damper “2”
     (from the impeller, with a thin, flat-head screwdriver)

NOTE:

Do not scratch the impeller shaft.

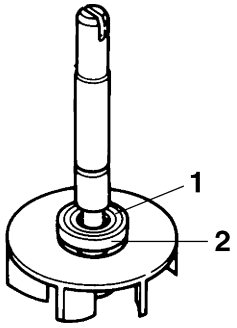

2. Remove:
   - Water pump seal “1”

NOTE:

Remove the water pump seal from the inside of the water pump housing.

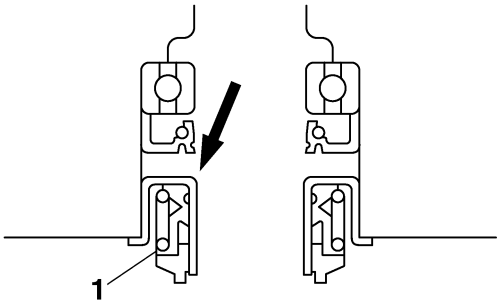

3. Remove:
   - Oil seal “1”
   - Bearing “2”

NOTE:

Remove the bearing and oil seal from the inside of the water pump housing.

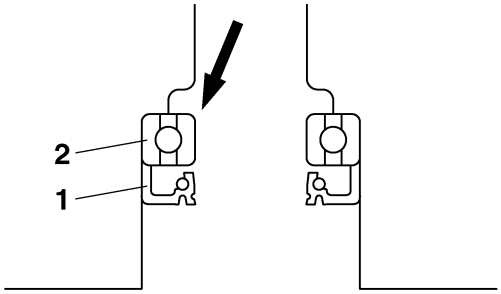

EAS26540
CHECKING THE WATER PUMP

1. Check:
   - Water pump housing cover
   - Water pump housing
   - Impeller shaft
     Cracks/damage/wear → Replace.
2. Check:
   - Bearing
     Rough movement → Replace.

EAS26560
ASSEMBLING THE WATER PUMP

1. Install:
   - Oil seal “1” New
     (into the water pump housing)

NOTE:

- Before installing the oil seal, apply tap water or coolant onto its outer surface.
- Install the oil seal with a socket that matches its outside diameter.

Installed depth of oil seal “a”
20.7–21.2 mm (0.81–0.83 in)

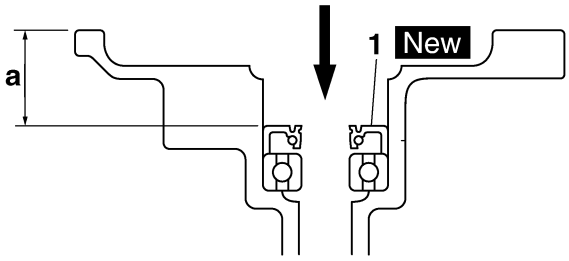

2. Install:
   - Water pump seal “1” New

ECA14080

CAUTION:

Never lubricate the water pump seal surface with oil or grease.

NOTE:

- Install the water pump seal with the special tools.
- Before installing the water pump seal, apply Yamaha bond No.1215 (Three Bond No.1215®) “2” to the water pump housing “3”.

Mechanical seal installer
90890-04078
Water pump seal installer
YM-33221-A
Middle driven shaft bearing driver
90890-04058
Bearing driver 40 mm
YM-04058
Yamaha bond No. 1215
90890-85505
(Three Bond No.1215®)

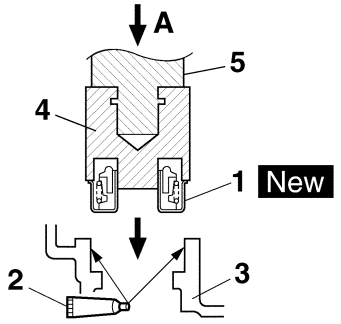

A. Push down
4. Mechanical seal installer
5. Middle driven shaft bearing driver

3. Install:
   - Rubber damper “1” New
   - Rubber damper holder “2” New

NOTE:
Before installing the rubber damper, apply tap water or coolant onto its outer surface.

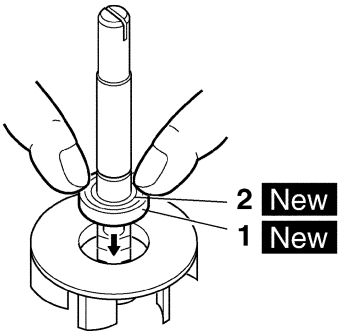

4. Measure:
   - Impeller shaft tilt
     Out of specification → Repeat steps (3) and (4).

ECA14090
CAUTION:
Make sure the rubber damper and rubber damper holder are flush with the impeller.

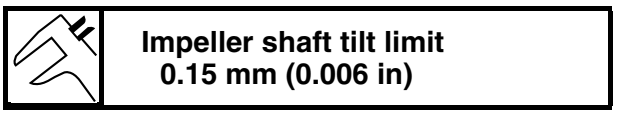

Impeller shaft tilt limit
0.15 mm (0.006 in)

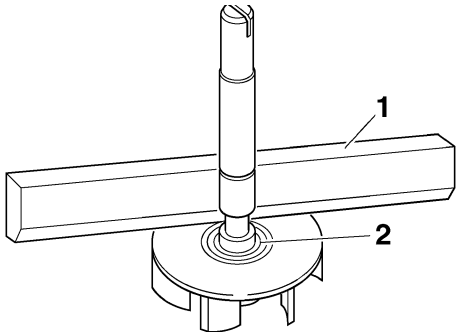

1. Straightedge
2. Impeller

5. Install:
   - Impeller “1”
   - Circlip New

NOTE:
After installation, check that the impeller shaft rotates smoothly.

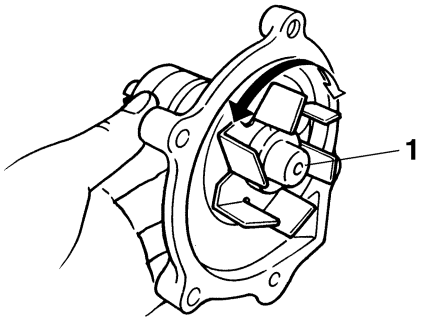

EAS26580
INSTALLING THE WATER PUMP

1. Install:
   - O-ring “1” New
   - Water pump assembly “2”

NOTE:
- Align the slit “a” on the impeller shaft with the projection “b” on the oil pump driven sprocket.
- Lubricate the O-ring with a thin coat of lithium soap base grease.

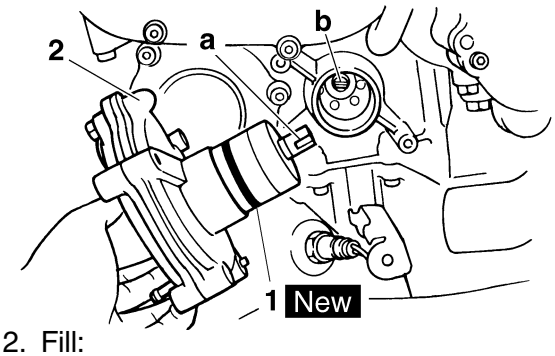

2. Fill:
   - Cooling system
     (with the specified amount of the recommended coolant)
     Refer to “CHANGING THE COOLANT” on page 3-19.
3. Check:
   - Cooling system
     Leaks → Repair or replace any faulty part.
4. Measure:
   - Radiator cap opening pressure
     Below the specified pressure → Replace the radiator cap.
     Refer to “CHECKING THE RADIATOR” on page 6-3.

FUEL SYSTEM

FUEL TANK 7-1
REMOVING THE FUEL TANK 7-2
REMOVING THE FUEL PUMP 7-2
CHECKING THE FUEL PUMP BODY 7-2
INSTALLING THE FUEL PUMP 7-2
INSTALLING THE FUEL TANK 7-2

THROTTLE BODIES 7-4
CHECKING THE INJECTORS 7-7
CHECKING THE THROTTLE BODIES 7-7
CHECKING THE FUEL PRESSURE 7-7
ADJUSTING THE THROTTLE POSITION SENSOR 7-7

AIR INDUCTION SYSTEM 7-9
CHECKING THE PRESSURE REGULATOR 7-13
CHECKING THE AIR INDUCTION SYSTEM 7-13
INSTALLING THE AIR INDUCTION SYSTEM 7-13

EAS26620

FUEL TANK

Removing the fuel tank

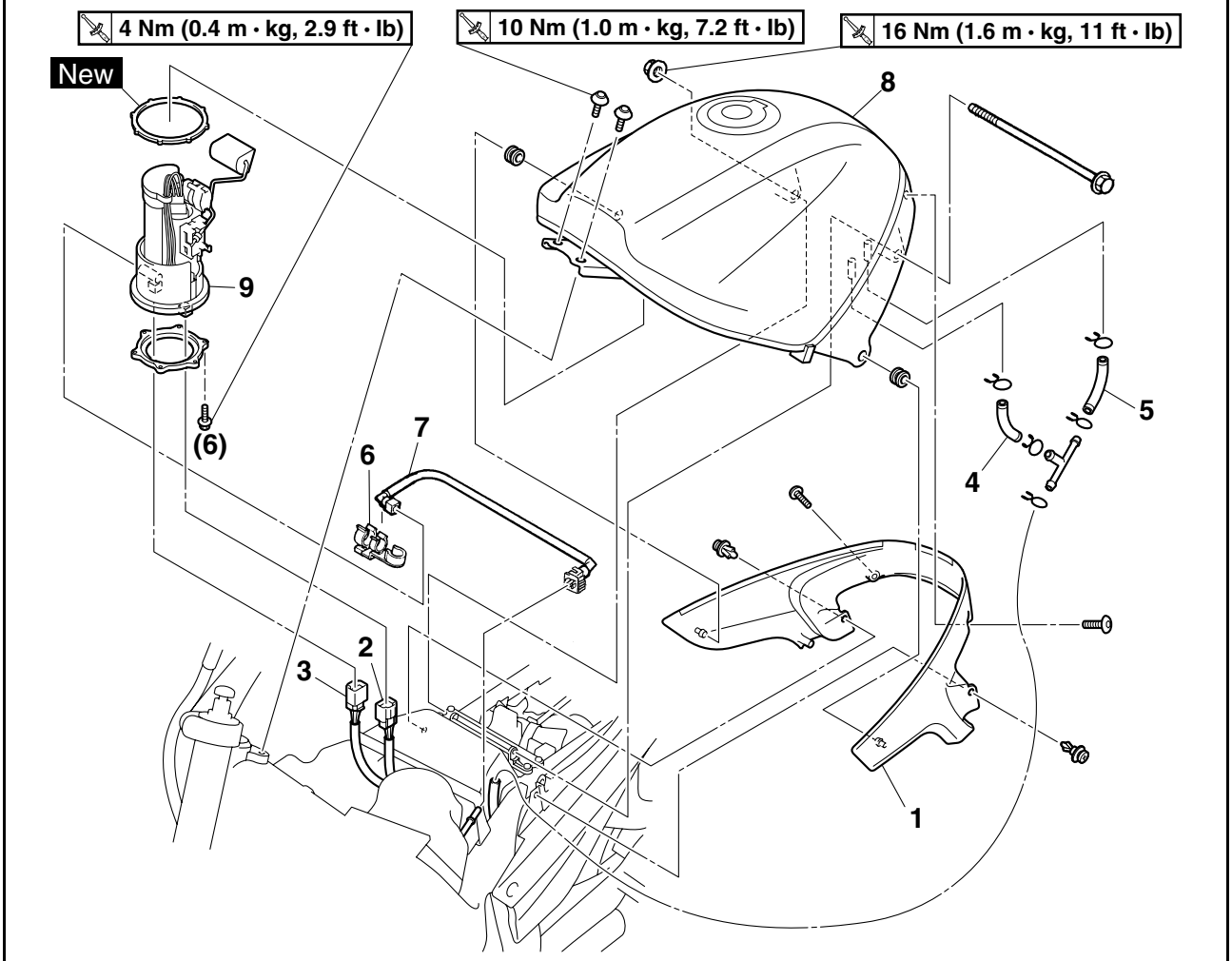

Order	Job/Parts to remove	Q'ty	Remarks
	Rider seat		Refer to "GENERAL CHASSIS" on page 4-1.
1	Fuel tank panel	1	
2	Fuel sender coupler	1	Disconnect.
3	Fuel pump coupler	1	Disconnect.
4	Fuel tank breather hose	1	
5	Fuel tank overflow hose	1	
6	Fuel hose holder	1	
7	Fuel hose	1	
8	Fuel tank	1	
9	Fuel pump	1	
			For installation, reverse the removal procedure.

EAS26630
REMOVING THE FUEL TANK
1. Extract the fuel in the fuel tank through the fuel tank cap with a pump.
2. Remove:
   - Fuel hose

EW3P61012
WARNING

Cover fuel hose connections with a cloth when disconnecting them. Residual pressure in the fuel lines could cause fuel to spurt out when removing the hoses.

NOTE:
- To remove the fuel hose from the fuel rail, slide the fuel hose connector cover “1” on the end of the hose in the direction of the arrow shown, press the two buttons “2” on the sides of the connector, and then remove the hose.
- Remove the fuel hose manually without using any tools.
- Before removing the hose, place a few rags in the area under where it will be removed.

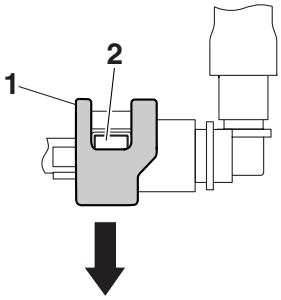

3. Remove:
   - Fuel tank

NOTE:
Do not set the fuel tank down on the installation surface of the fuel pump. Be sure to lean the fuel tank against a wall or the like.

EAS26640
REMOVING THE FUEL PUMP
1. Remove:
   - Fuel pump

ECA14720
CAUTION:
- **Do not drop the fuel pump or give it a strong shock.**
- **Do not touch the base section of the fuel sender.**

EAS26670
CHECKING THE FUEL PUMP BODY
1. Check:
   - Fuel pump body
     Obstruction → Clean.
     Cracks/damage → Replace fuel pump assembly.

EAS26700
INSTALLING THE FUEL PUMP
1. Install:
   - Fuel pump

	Fuel pump bolts **4 Nm (0.4 m·kg, 2.9 ft·lb)**

NOTE:
- Do not damage the installation surfaces of the fuel tank when installing the fuel pump.
- Always use a new fuel pump gasket.
- Install the fuel pump as shown in the illustration.
- Align the projection “a” on the fuel pump with the slot in the fuel pump bracket.
- Tighten the fuel pump bolts in the proper tightening sequence as shown.

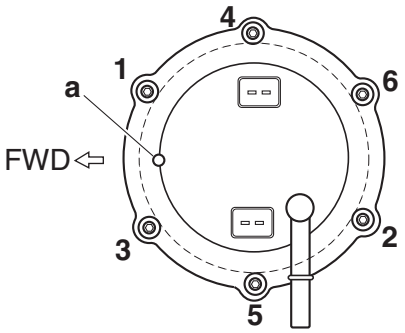

ET3P61018
INSTALLING THE FUEL TANK
1. Install:
   - Fuel hose (fuel rail side)

EC3P61007
CAUTION:

When installing the fuel hose, make sure that it is securely connected, and that the fuel hose connector cover on the fuel hose is in the correct position, otherwise the fuel hose will not be properly installed.

NOTE:
- Install the fuel hose securely onto the fuel rail until a distinct “click” is heard.

- To install the fuel hose onto the fuel rail, slide the fuel hose connector cover “1” on the end of the hose in the direction of the arrow shown.

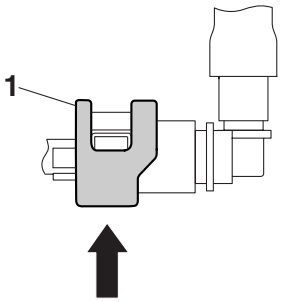

2. Install:
   - Fuel hose (fuel pump side)
   - Fuel hose holder

EC3P61008

CAUTION:

When installing the fuel hose, make sure that it is securely connected, and that the fuel hose holder is in the correct position, otherwise the fuel hose will not be properly installed.

NOTE:

- Install the fuel hose connector securely onto the fuel tank until a distinct “click” is heard, and then make sure that it does not come loose.
- After installing the fuel hose holder “1”, make sure that the sections “a”, “b”, and “c” of the holder are installed securely.

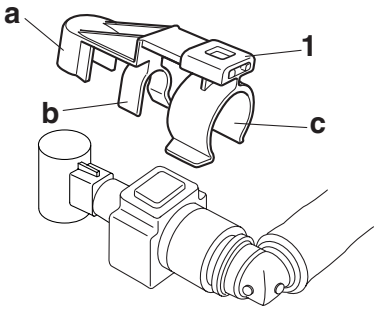

EAS26970

THROTTLE BODIES

Removing the throttle bodies

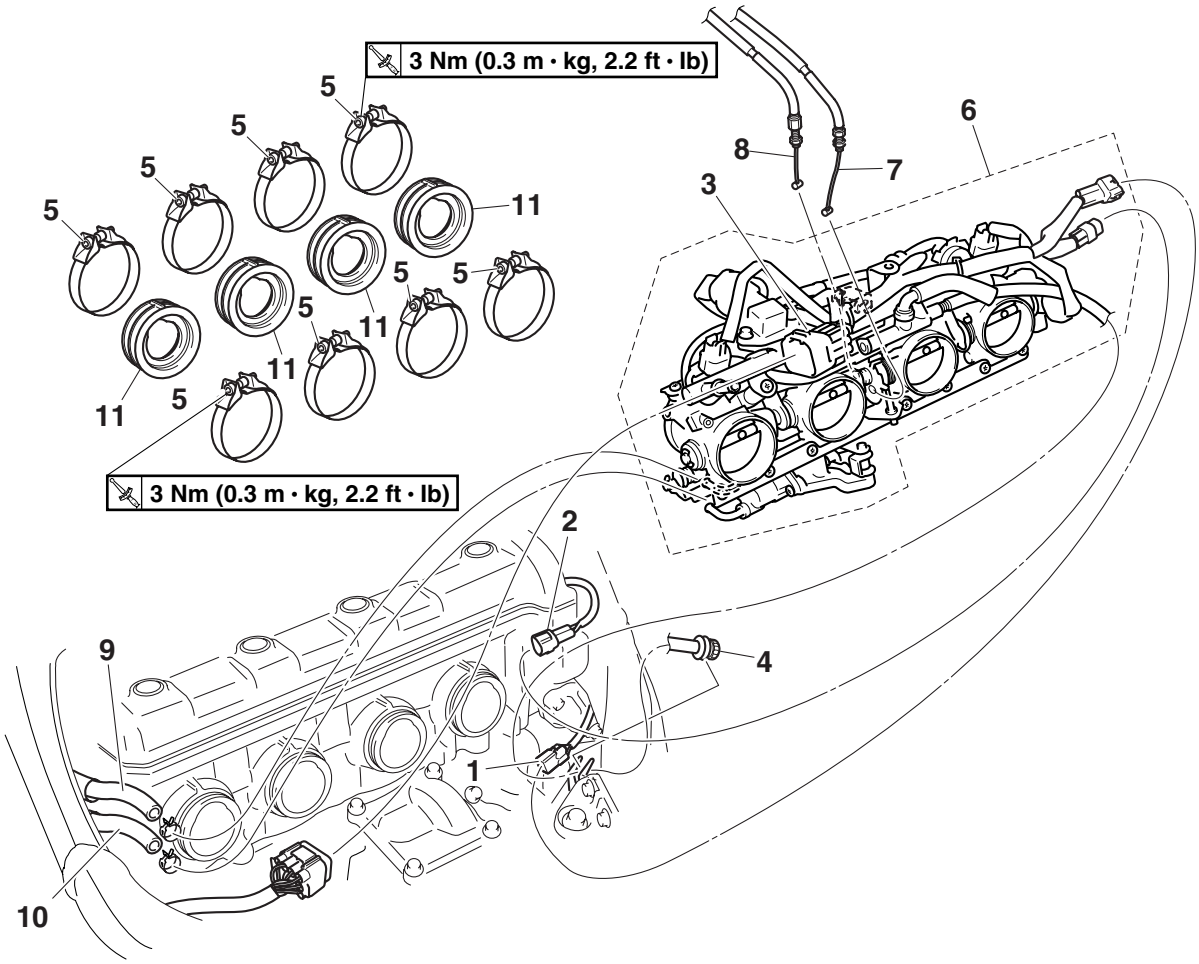

Order	Job/Parts to remove	Q'ty	Remarks
	Fuel tank		Refer to "FUEL TANK" on page 7-1.
	T-bar/Air filter case		Refer to "GENERAL CHASSIS" on page 4-1.
	Air cut-off valve		Refer to "AIR INDUCTION SYSTEM" on page 7-9.
	Coolant		Drain. Refer to "CHANGING THE COOLANT" on page 3-19.
1	O_2 sensor coupler	1	Disconnect.
2	Cylinder identification sensor coupler	1	Disconnect.
3	Sub-wire harness coupler	1	Disconnect.
4	Engine idle speed adjusting screw	1	Disconnect.
5	Throttle body joint clamp screw	8	Loosen.
6	Throttle bodies	1	
7	Throttle cable (accelerator cable)	1	Disconnect.
8	Throttle cable (decelerator cable)	1	Disconnect.
9	Plunger control unit hose 1	1	Disconnect.

Removing the throttle bodies

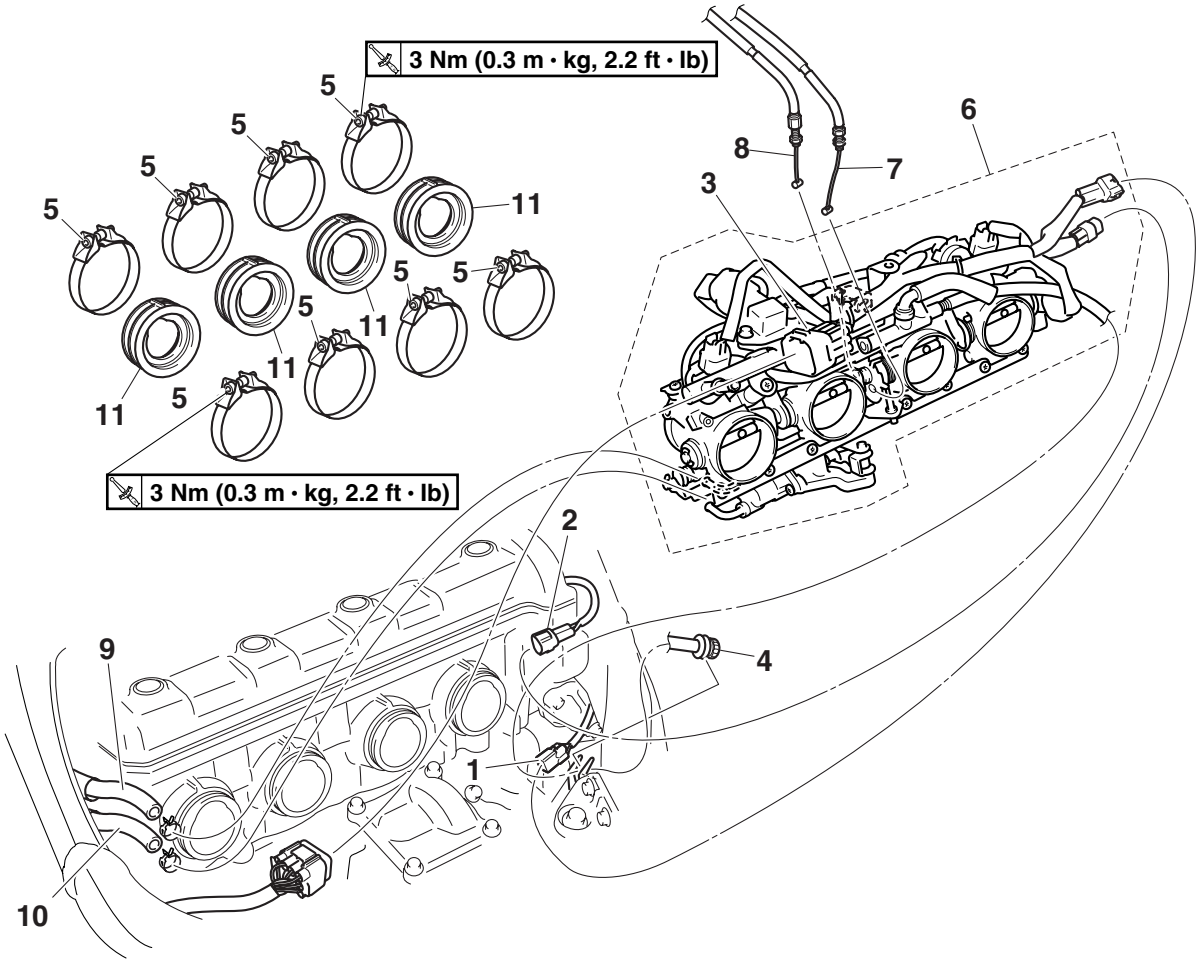

Order	Job/Parts to remove	Q'ty	Remarks
10	Plunger control unit hose 2	1	Disconnect.
11	Throttle body joint	4	
			For installation, reverse the removal procedure.

Removing the injectors

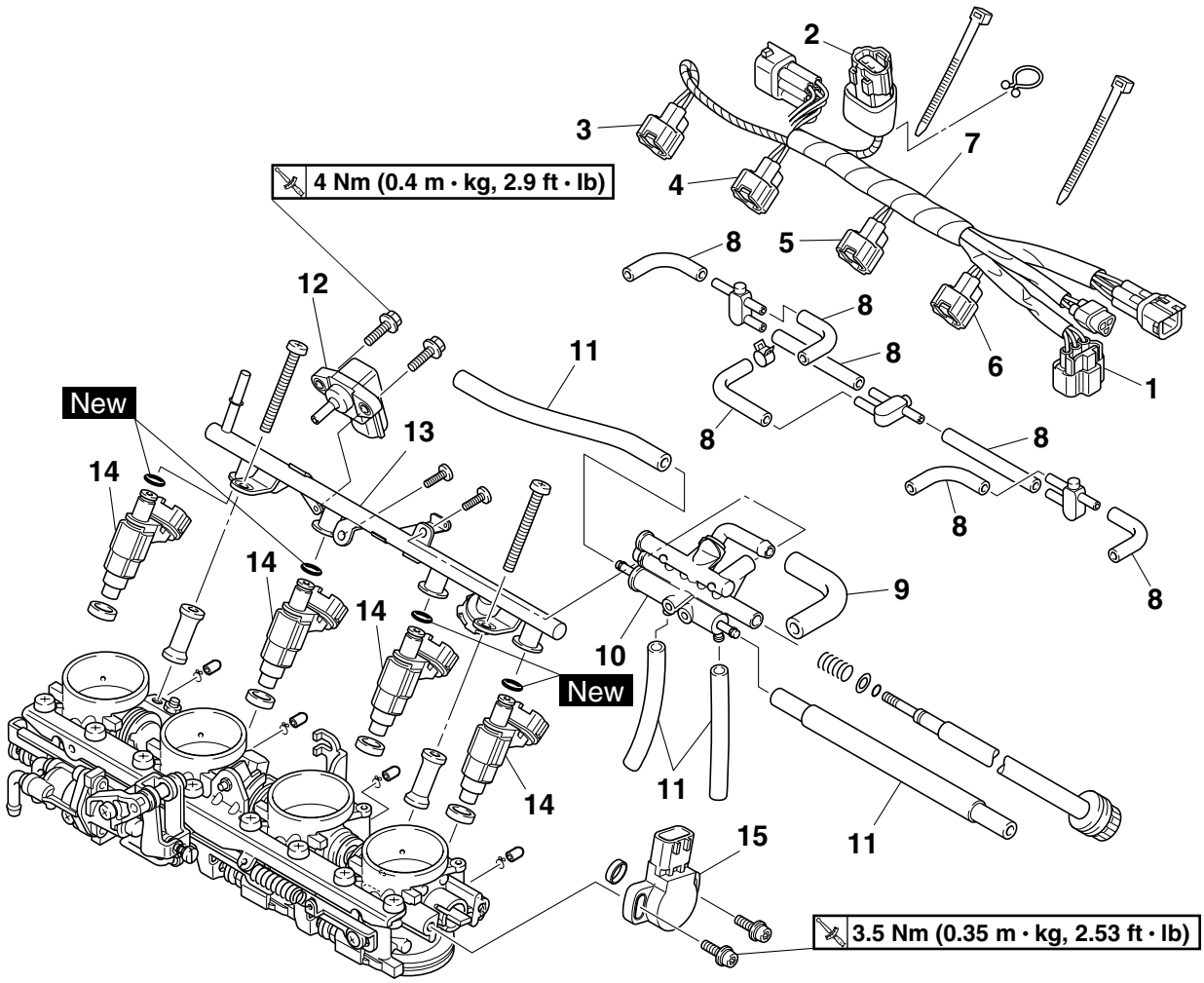

Order	Job/Parts to remove	Q'ty	Remarks
1	Throttle position sensor coupler	1	Disconnect.
2	Intake air pressure sensor coupler	1	Disconnect.
3	Cylinder-#1 injector coupler	1	Disconnect.
4	Cylinder-#2 injector coupler	1	Disconnect.
5	Cylinder-#3 injector coupler	1	Disconnect.
6	Cylinder-#4 injector coupler	1	Disconnect.
7	Sub-wire harness	1	
8	Negative pressure hose	7	
9	Bypass air unit inlet hose	1	
10	Bypass air unit	1	
11	Bypass air unit outlet hose	4	
12	Intake air pressure sensor	1	
13	Fuel rail	1	
14	Injector	4	
15	Throttle position sensor	1	
			For installation, reverse the removal procedure.

EAS26980
CHECKING THE INJECTORS
1. Check:
   - Injectors
     Damage → Replace.

EAS26990
CHECKING THE THROTTLE BODIES
1. Check:
   - Throttle bodies
     Cracks/damage → Replace the throttle bodies as a set.
2. Check:
   - Fuel passages
     Obstructions → Clean.

▼▼▼▼▼▼▼▼▼▼▼▼▼▼▼▼▼▼▼▼▼▼▼▼▼▼▼▼▼▼▼▼▼▼

a. Wash the throttle bodies in a petroleum-based solvent.
   Do not use any caustic carburetor cleaning solution.
b. Blow out all of the passages with compressed air.

▲▲▲▲▲▲▲▲▲▲▲▲▲▲▲▲▲▲▲▲▲▲▲▲▲▲▲▲▲▲▲▲▲▲

ET3P61044
CHECKING THE FUEL PRESSURE
1. Check:
   - Fuel pressure

▼▼▼▼▼▼▼▼▼▼▼▼▼▼▼▼▼▼▼▼▼▼▼▼▼▼▼▼▼▼▼▼▼▼

a. Remove the rider seat.
   Refer to “GENERAL CHASSIS” on page 4-1.
b. Disconnect the fuel hose “1” from the fuel rail “2”.

EW3P61012
WARNING

Cover fuel hose connections with a cloth when disconnecting them. Residual pressure in the fuel lines could cause fuel to spurt out when removing the hoses.

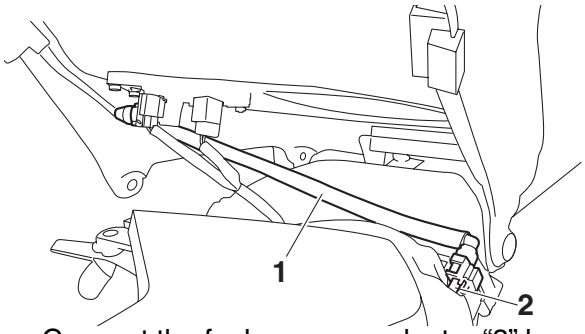

c. Connect the fuel pressure adapter “3” between the fuel hose “1” and fuel rail “2”.
d. Connect the pressure gauge “4” to fuel pressure adapter “3”.

Pressure gauge
90890-03153
YU-03153
Fuel pressure adapter
90890-03176
YM-03176

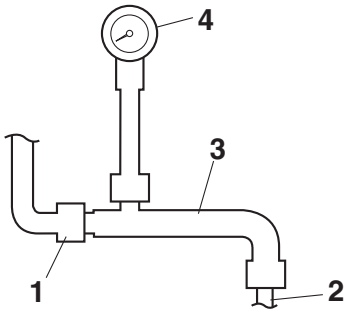

e. Start the engine.
f. Measure the fuel pressure.

Output pressure
324.0 kPa (47.0 psi) (3.24 kgf/cm²)

Faulty → Replace the fuel pump.

▲▲▲▲▲▲▲▲▲▲▲▲▲▲▲▲▲▲▲▲▲▲▲▲▲▲▲▲▲▲▲▲▲▲

EAS27030
ADJUSTING THE THROTTLE POSITION SENSOR

NOTE:

Before adjusting the throttle position sensor, the engine idling speed should be properly adjusted.

1. Check:
   - Throttle position sensor
     Refer to “CHECKING THE THROTTLE POSITION SENSOR” on page 8-167.
2. Adjust:
   - Throttle position sensor angle

▼▼▼▼▼▼▼▼▼▼▼▼▼▼▼▼▼▼▼▼▼▼▼▼▼▼▼▼▼▼▼▼▼▼

a. Connect the throttle position sensor coupler to the throttle position sensor.
b. Connect the digital circuit tester to the throttle position sensor.

- Positive tester probe → yellow “1”
- Negative tester probe → black/blue “2”

Digital circuit tester
90890-03174
Model 88 Multimeter with tachometer
YU-A1927

c. Turn the main switch to “ON”.
d. Measure the throttle position sensor voltage.
e. Adjust the throttle position sensor angle so that the voltage is within the specified range.

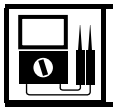

Output voltage (at idle)
0.63–0.73 V

f. After adjusting the throttle position sensor angle, tighten the throttle position sensor screws “3” to specification.

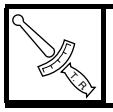

Throttle position sensor screw
3.5 Nm (0.35 m·kg, 2.53 ft·lb)

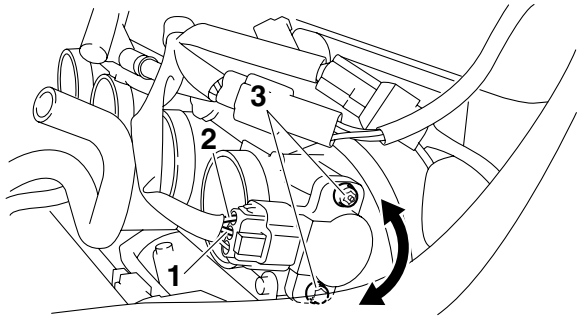

EAS27040

AIR INDUCTION SYSTEM

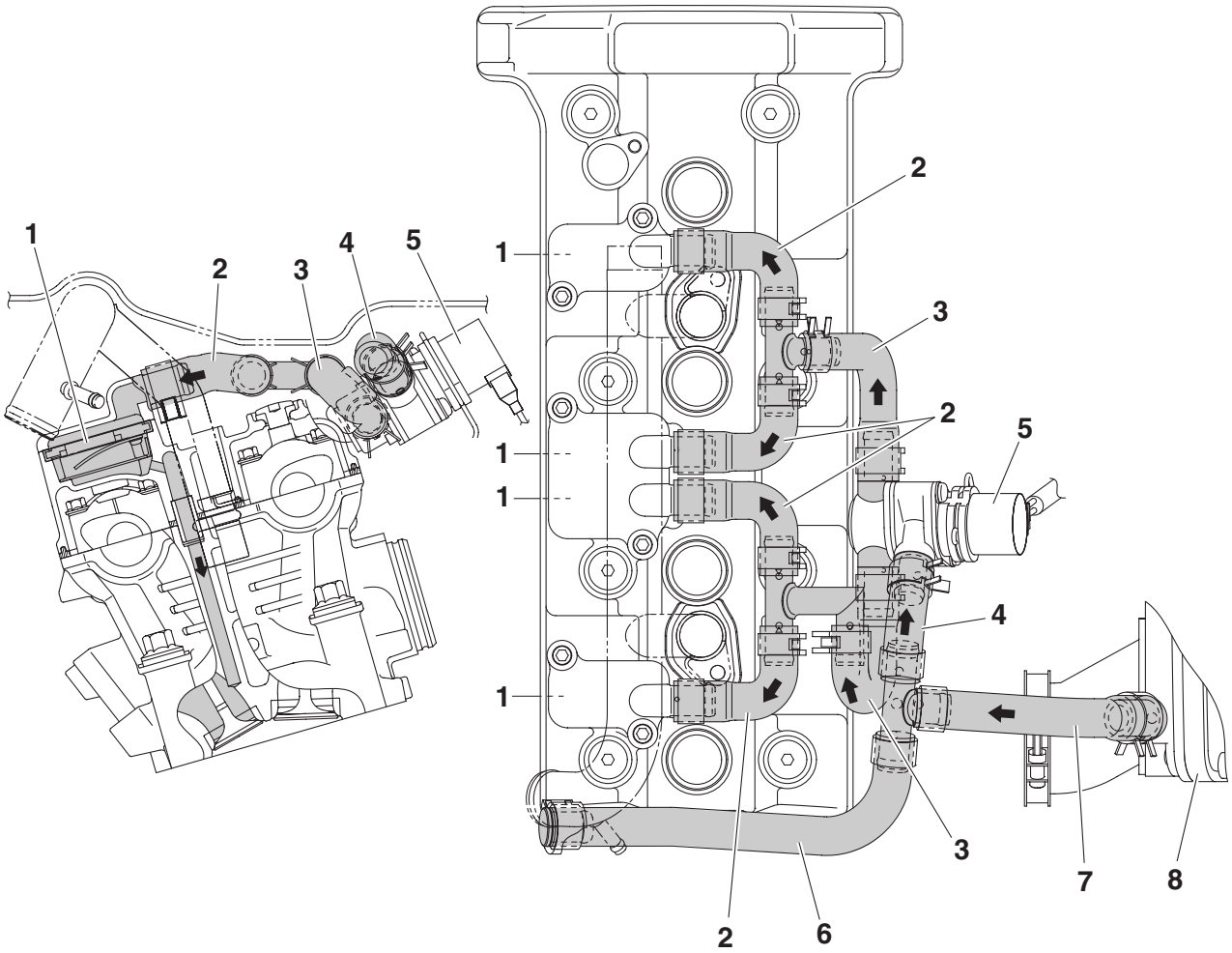

1. Reed valve assembly
2. Air induction system hose (3-way joint to reed valve cover)
3. Air induction system hose (air cut-off valve to 3-way joint)
4. Air induction system hose (3-way joint to air cut-off valve)
5. Air cut-off valve
6. Air induction system hose (3-way joint to hose plug)
7. Air induction system hose (air filter case joint assembly to 3-way joint)
8. Air filter case joint asssembly

Removing the air cut-off valve

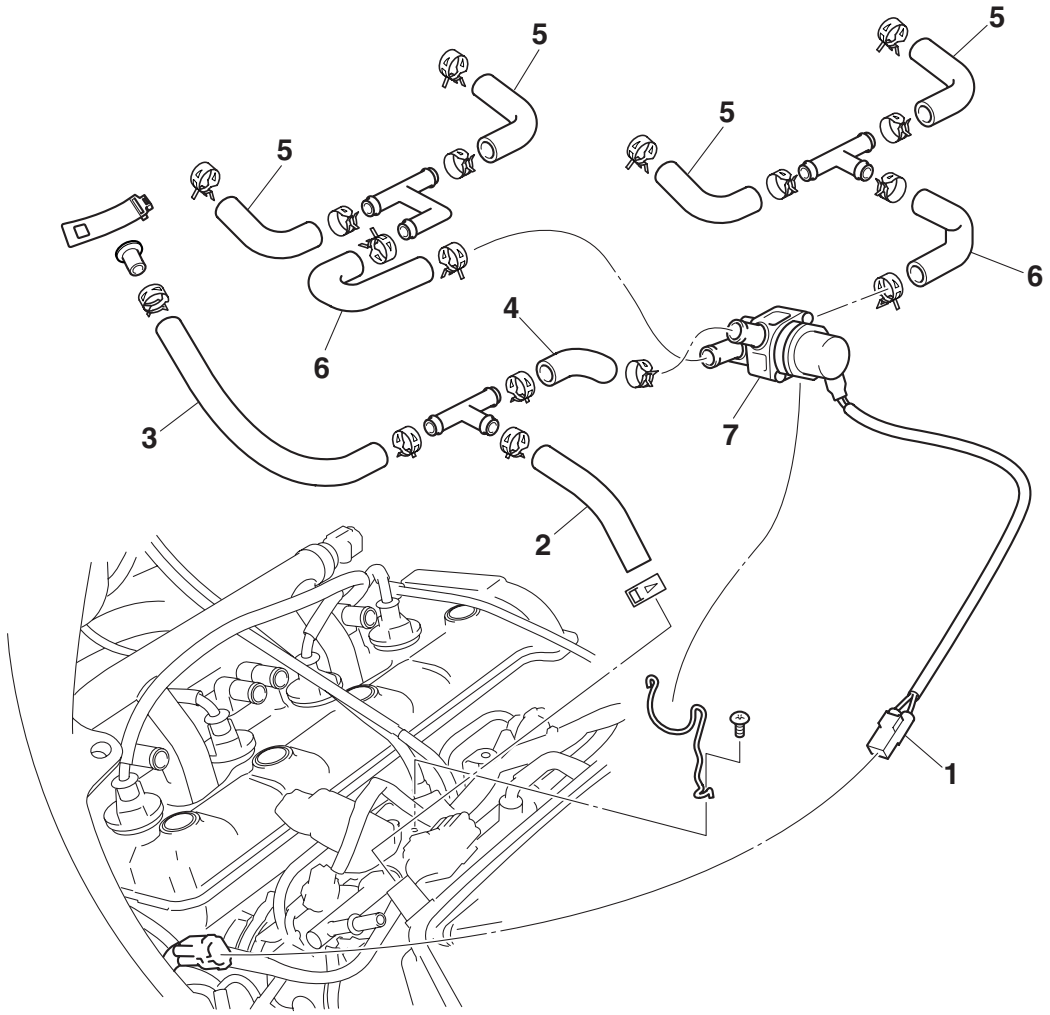

Order	Job/Parts to remove	Q'ty	Remarks
	Fuel tank		Refer to "FUEL TANK" on page 7-1.
	T-bar		Refer to "GENERAL CHASSIS" on page 4-1.
1	Air induction system solenoid coupler	1	Disconnect.
2	Air induction system hose (air filter case joint assembly to 3-way joint)	1	
3	Air induction system hose (3-way joint to hose plug)	1	
4	Air induction system hose (3-way joint to air cut-off valve)	1	
5	Air induction system hose (3-way joint to reed valve cover)	4	
6	Air induction system hose (air cut-off valve to 3-way joint)	2	
7	Air cut-off valve	1	
			For installation, reverse the removal procedure.

Removing the reed valves

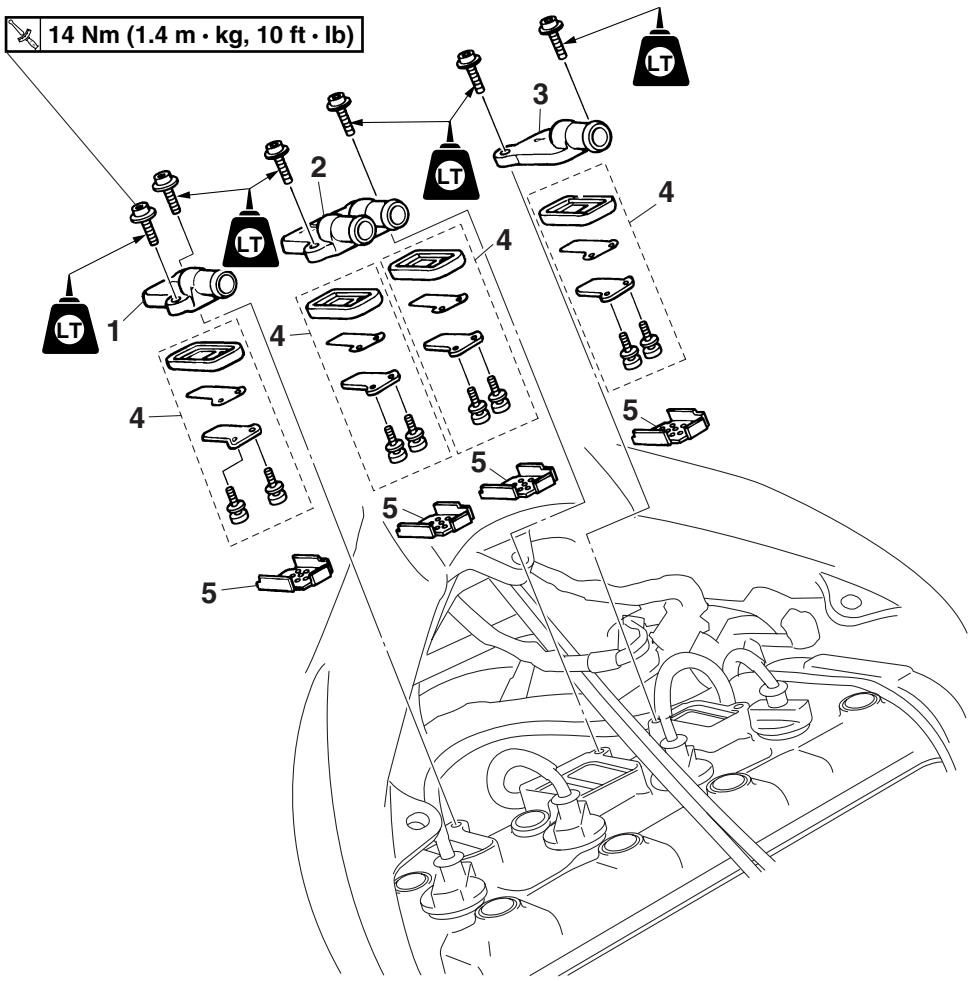

Order	Job/Parts to remove	Q'ty	Remarks
	Thermostat inlet pipe 1		Refer to "THERMOSTAT" on page 6-6.
1	Reed valve cover (cylinder-#1)	1	
2	Reed valve cover (cylinders-#2/#3)	1	
3	Reed valve cover (cylinder-#4)	1	
4	Reed valve assembly	4	
5	Reed valve plate	4	
			For installation, reverse the removal procedure.

EAS27050
CHECKING THE PRESSURE REGULATOR
1. Check:
   - Pressure regulator
     Damage → Replace.

EAS27060
CHECKING THE AIR INDUCTION SYSTEM

Air injection
The air induction system burns unburned exhaust gases by injecting fresh air (secondary air) into the exhaust port, reducing the emission of hydrocarbons. When there is negative pressure at the exhaust port, the reed valve opens, allowing secondary air to flow into the exhaust port. The required temperature for burning the unburned exhaust gases is approximately 600 to 700 °C (1112 to 1292 °F).

Air cut-off valve
The air cut-off valve is controlled by the signals from the ECU in accordance with the combustion conditions. Ordinarily, the air cut-off valve opens to allow the air to flow during idle and closes to cut-off the flow when the vehicle is being driven. However, if the coolant temperature is below the specified value, the air cut-off valve remains open and allows the air to flow into the exhaust pipe until the temperature becomes higher than the specified value.

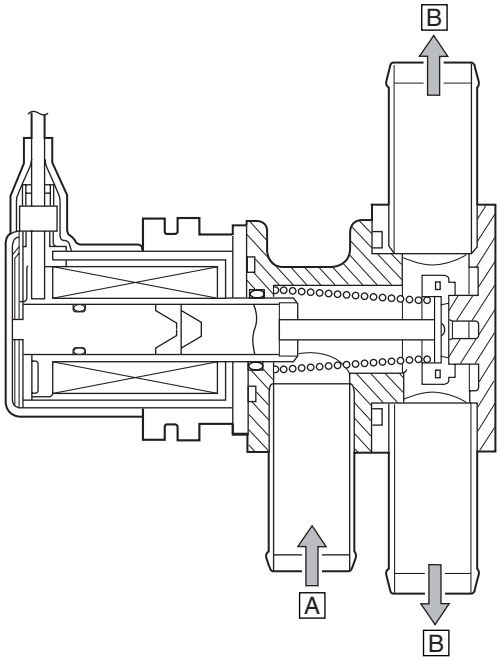

A. From the air filter case
B. To the reed valve

1. Check:
   - Hoses
     Loose connections → Connect properly.
     Cracks/damage → Replace.
   - Pipes
     Cracks/damage → Replace.
2. Check:
   - Reed valve
   - Reed valve stopper
   - Reed valve seat
     Cracks/damage → Replace the reed valve.
3. Check:
   - Air cut-off valve
     Cracks/damage → Replace.
4. Check:
   - Air induction system solenoid
     Refer to “CHECKING THE AIR INDUCTION SYSTEM SOLENOID” on page 8-168.

EAS27070
INSTALLING THE AIR INDUCTION SYSTEM
1. Install:
   - Reed valve plate “1”

NOTE:
Align the notch “a” in each plate with the projection “b” of each reed valve seat on the cylinder head cover.

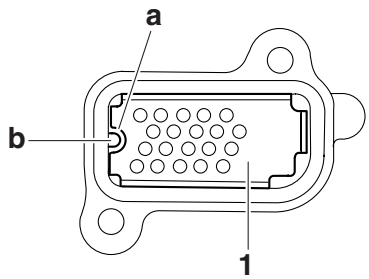

ELECTRICAL SYSTEM

IGNITION SYSTEM 8-1
CIRCUIT DIAGRAM (1/2) 8-1
CIRCUIT DIAGRAM (2/2) 8-3
ENGINE STOPPING DUE TO SIDESTAND OPERATION 8-5
TROUBLESHOOTING 8-6

ELECTRIC STARTING SYSTEM 8-9
CIRCUIT DIAGRAM (1/2) 8-9
CIRCUIT DIAGRAM (2/2) 8-11
STARTING CIRCUIT CUT-OFF SYSTEM OPERATION 8-13
TROUBLESHOOTING 8-14

CHARGING SYSTEM 8-17
CIRCUIT DIAGRAM 8-17
TROUBLESHOOTING 8-19

LIGHTING SYSTEM 8-21
CIRCUIT DIAGRAM (1/2) 8-21
CIRCUIT DIAGRAM (2/2) 8-23
TROUBLESHOOTING 8-25

SIGNALING SYSTEM 8-27
CIRCUIT DIAGRAM (1/2) 8-27
CIRCUIT DIAGRAM (2/2) 8-29
TROUBLESHOOTING 8-31

COOLING SYSTEM 8-37
CIRCUIT DIAGRAM 8-37
TROUBLESHOOTING 8-39

FUEL INJECTION SYSTEM 8-41
CIRCUIT DIAGRAM (1/2) 8-41
CIRCUIT DIAGRAM (2/2) 8-43
ECU SELF-DIAGNOSTIC FUNCTION 8-45
SELF-DIAGNOSTIC FUNCTION TABLE 8-46
TROUBLESHOOTING METHOD 8-48
DIAGNOSTIC MODE 8-49
TROUBLESHOOTING DETAILS 8-56

FUEL PUMP SYSTEM 8-81
CIRCUIT DIAGRAM (1/2) 8-81
CIRCUIT DIAGRAM (2/2) 8-83
TROUBLESHOOTING 8-85

WINDSHIELD DRIVE SYSTEM 8-87
CIRCUIT DIAGRAM (1/2) 8-87
CIRCUIT DIAGRAM (2/2) 8-89
TROUBLESHOOTING 8-91

ACCESSORY BOX SYSTEM 8-93
CIRCUIT DIAGRAM (1/2) 8-93
CIRCUIT DIAGRAM (2/2) 8-95
TROUBLESHOOTING 8-97

IMMOBILIZER SYSTEM 8-99
CIRCUIT DIAGRAM (1/2) 8-99
CIRCUIT DIAGRAM (2/2) 8-101
GENERAL INFORMATION 8-103
PART REPLACEMENT AND KEY CODE REGISTRATION REQUIREMENTS 8-103
TROUBLESHOOTING 8-106
SELF-DIAGNOSIS FAULT CODE INDICATION 8-107

ABS (ANTI-LOCK BRAKE SYSTEM) 8-111
CIRCUIT DIAGRAM (1/2) 8-111
CIRCUIT DIAGRAM (2/2) 8-113
ABS COMPONENTS CHART 8-115
ABS COUPLER LOCATION CHART 8-117
ABS ECU AND ABS MOTOR RELAY 8-119
MAINTENANCE OF THE ABS ECU 8-120
MAINTENANCE OF THE ABS MOTOR RELAY 8-120
MAINTENANCE OF THE HYDRAULIC UNIT 8-120
ABS TROUBLESHOOTING OUTLINE 8-121
BASIC INSTRUCTIONS FOR TROUBLESHOOTING 8-122
BASIC PROCESS FOR TROUBLESHOOTING 8-123
[A] CHECKING THE ABS WARNING LIGHT 8-124
[B-1] THE ABS WARNING LIGHT DOES NOT COME ON 8-124
[B-2] THE ABS WARNING LIGHT REMAINS ON 8-124
[B-3] THE ABS WARNING LIGHT FLASHES 8-124
[B-4] MALFUNCTION CHECK BY THE ABS SELF-DIAGNOSIS (PAST MALFUNCTION) 8-124
[B-5] MALFUNCTION CHECK BY THE ABS SELF-DIAGNOSIS (PRESENT MALFUNCTION) 8-125
[C-1] ONLY THE ABS WARNING LIGHT FAILS TO COME ON WHEN THE MAIN SWITCH IS TURNED TO “ON” 8-127
[C-2] THE ABS WARNING LIGHT AND ALL OTHER INDICATOR LIGHTS FAIL TO COME ON 8-127
[C-3] THE ABS WARNING LIGHT FAIL TO COME ON WHILE THE START SWITCH IS BEING PUSHED 8-127
[C-4] THE ABS WARNING LIGHT FLASHES 8-128
[C-5] THE ABS WARNING LIGHT FLASHES EVERY 0.5 SECOND 8-128
[C-6] THE ABS WARNING LIGHT REMAINS ON 8-129
[C-7] DIAGNOSIS BY THE MALFUNCTION CODE 8-129
[D-1] DELETING THE MALFUNCTION CODES 8-142
[D-2] DELETE FUNCTION TEST 8-143
[D-3] FINAL CHECK 8-144

ELECTRICAL COMPONENTS.....8-145
CHECKING THE SWITCHES 8-149
CHECKING THE BULBS AND BULB SOCKETS 8-152
CHECKING THE FUSES 8-153
CHECKING AND CHARGING THE BATTERY.....8-154
CHECKING THE RELAYS 8-157
CHECKING THE ABS MOTOR RELAY 8-159
CHECKING THE TURN SIGNAL/HAZARD RELAY.....8-160
CHECKING THE RELAY UNIT (DIODE) 8-160
CHECKING THE SPARK PLUG CAPS.....8-161
CHECKING THE IGNITION COILS.....8-161
CHECKING THE IGNITION SPARK GAP.....8-162
CHECKING THE CRANKSHAFT POSITION SENSOR.....8-162
CHECKING THE LEAN ANGLE SENSOR.....8-163
CHECKING THE STARTER MOTOR OPERATION 8-163
CHECKING THE STATOR COIL 8-164
CHECKING THE RECTIFIER/REGULATOR 8-164
CHECKING THE HORNS 8-165
CHECKING THE OIL LEVEL SWITCH 8-165
CHECKING THE FUEL SENDER 8-166
CHECKING THE RADIATOR FAN MOTORS.....8-166
CHECKING THE COOLANT TEMPERATURE SENSOR.....8-167
CHECKING THE THROTTLE POSITION SENSOR 8-167
CHECKING THE AIR INDUCTION SYSTEM SOLENOID 8-168
CHECKING THE CYLINDER IDENTIFICATION SENSOR 8-168
CHECKING THE INTAKE AIR PRESSURE SENSOR 8-168
CHECKING THE INTAKE AIR TEMPERATURE SENSOR 8-169
CHECKING THE ACCESSORY BOX SOLENOID.....8-169

EAS27090

IGNITION SYSTEM

EAS27110

CIRCUIT DIAGRAM (1/2)

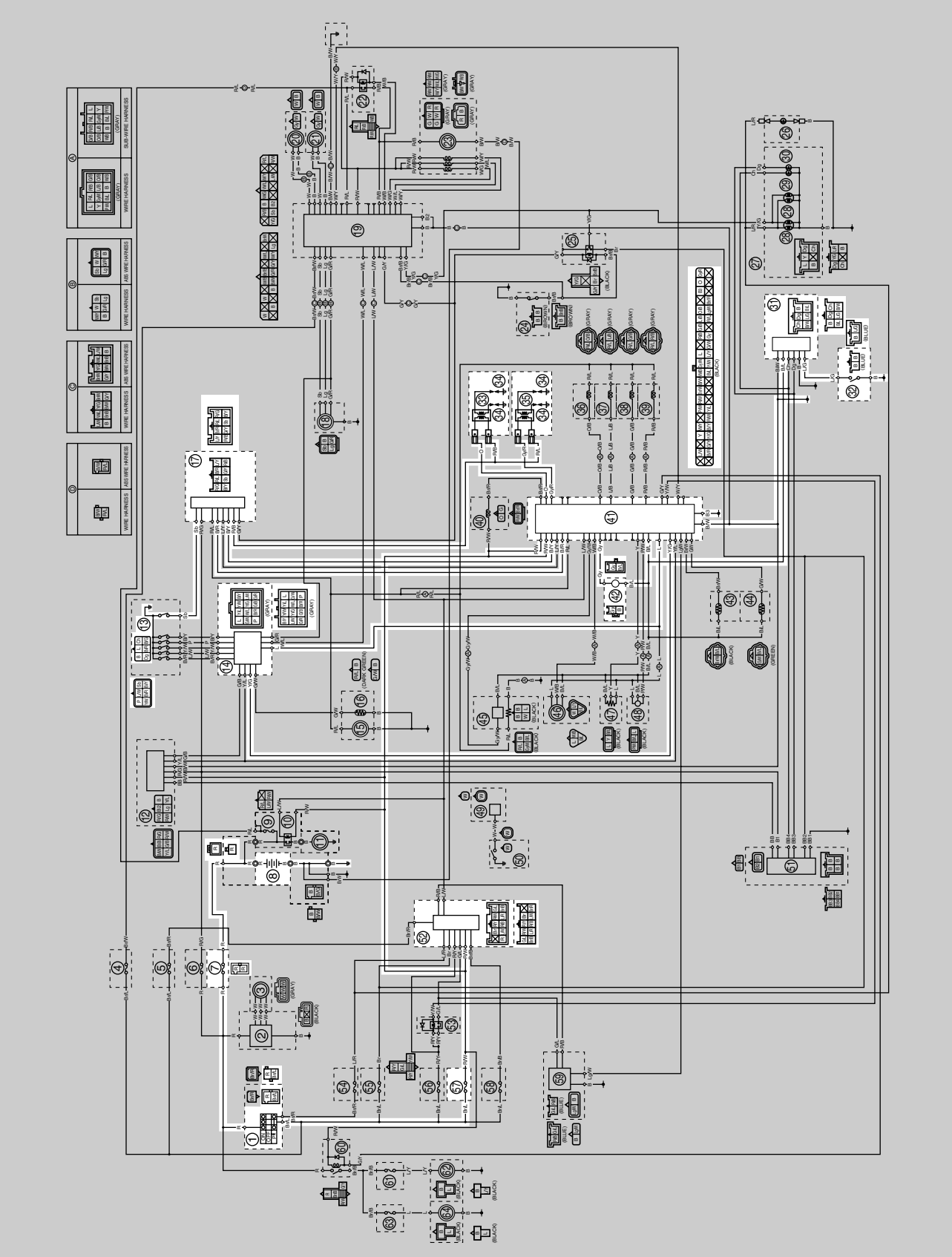

1. Main switch
7. Main fuse
8. Battery
13. Gear position switch
14. Coupler 1 (wire harness–front cowling wire harness)
17. Coupler 2 (wire harness–front cowling wire harness)
31. Coupler 3 (wire harness–front cowling wire harness)
32. Sidestand switch
33. Cylinders-#1/#4 ignition coil
34. Spark plug
35. Cylinders-#2/#3 ignition coil
41. ECU (engine control unit)
42. Crankshaft position sensor
52. Coupler 5 (wire harness–front cowling wire harness)
57. Ignition fuse

ET3P61001

CIRCUIT DIAGRAM (2/2)

Front cowling wire harness

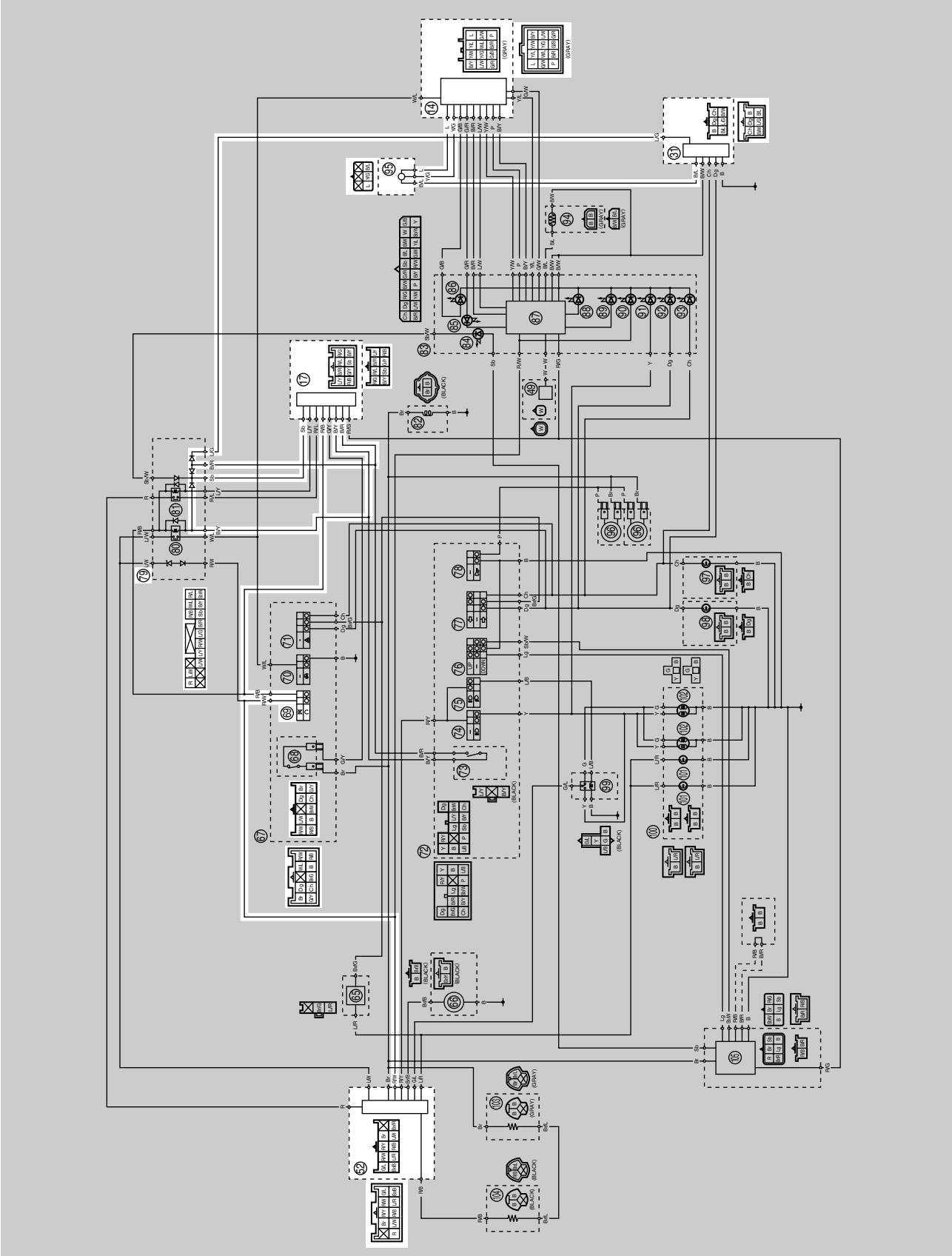

14. Coupler 1 (front cowling wire harness–wire harness)
17. Coupler 2 (front cowling wire harness–wire harness)
31. Coupler 3 (front cowling wire harness–wire harness)
52. Coupler 5 (front cowling wire harness–wire harness)
69. Engine stop switch
79. Relay unit
95. Lean angle sensor

ET3P61002

ENGINE STOPPING DUE TO SIDESTAND OPERATION

When the engine is running and the transmission is in gear, the engine will stop if the sidestand is moved down. This is because the electric current from the ignition coils does not flow to the ECU when both the gear position switch (neutral circuit) and sidestand switch are set to “OFF”, thereby preventing the spark plugs from producing a spark. However, the engine continues to run under the following conditions:

- The transmission is in gear (the neutral circuit of the gear position switch is open) and the sidestand is up (the sidestand switch circuit is closed).
- The transmission is in neutral (the neutral circuit of the gear position switch is closed) and the sidestand is down (the sidestand switch circuit is open).

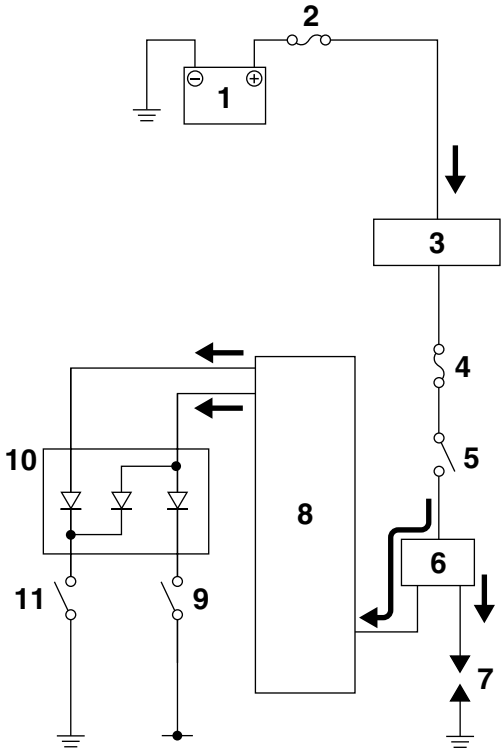

1. Battery
2. Main fuse
3. Main switch
4. Ignition fuse
5. Engine stop switch
6. Ignition coil
7. Spark plug
8. ECU (engine control unit)
9. Sidestand switch
10. Relay unit (diode)
11. Gear position switch (neutral circuit)

EAS27140

TROUBLESHOOTING

The ignition system fails to operate (no spark or intermittent spark).

NOTE:

• Before troubleshooting, remove the following part(s):
1. Front cowling assembly
2. Fuel tank
3. T-bar
4. Throttle bodies

1. Check the fuses. (Main and ignition) Refer to "CHECKING THE FUSES" on page 8-153.	NG →	Replace the fuse(s).
OK ↓		
2. Check the battery. Refer to "CHECKING AND CHARGING THE BATTERY" on page 8-154.	NG →	• Clean the battery terminals. • Recharge or replace the battery.
OK ↓		
3. Check the spark plugs. Refer to "CHECKING THE SPARK PLUGS" on page 3-9.	NG →	Re-gap or replace the spark plug(s).
OK ↓		
4. Check the ignition spark gap. Refer to "CHECKING THE IGNITION SPARK GAP" on page 8-162.	OK →	Ignition system is OK.
NG ↓		
5. Check the spark plug caps. Refer to "CHECKING THE SPARK PLUG CAPS" on page 8-161.	NG →	Replace the spark plug cap(s).
OK ↓		
6. Check the ignition coils. Refer to "CHECKING THE IGNITION COILS" on page 8-161.	NG →	Replace the ignition coil(s).
OK ↓		
7. Check the crankshaft position sensor. Refer to "CHECKING THE CRANKSHAFT POSITION SENSOR" on page 8-162.	NG →	Replace the crankshaft position sensor.
OK ↓		

8. Check the main switch. Refer to “CHECKING THE SWITCHES” on page 8-149.	NG →	Replace the main switch/immobilizer unit.
OK ↓		
9. Check the engine stop switch. Refer to “CHECKING THE SWITCHES” on page 8-149.	NG →	Replace the right handlebar switch.
OK ↓		
10. Check the gear position switch. Refer to “CHECKING THE SWITCHES” on page 8-149.	NG →	Replace the gear position switch.
OK ↓		
11. Check the sidestand switch. Refer to “CHECKING THE SWITCHES” on page 8-149.	NG →	Replace the sidestand switch.
OK ↓		
12. Check the relay unit (diode). Refer to “CHECKING THE RELAY UNIT (DIODE)” on page 8-160.	NG →	Replace the relay unit.
OK ↓		
13. Check the lean angle sensor. Refer to “CHECKING THE LEAN ANGLE SENSOR” on page 8-163.	NG →	Replace the lean angle sensor.
OK ↓		
14. Check the entire ignition system wiring. Refer to “CIRCUIT DIAGRAM (1/2)” on page 8-1 and “CIRCUIT DIAGRAM (2/2)” on page 8-3.	NG →	Properly connect or repair the ignition system wiring.
OK ↓		
Replace the ECU.		

EAS27160

ELECTRIC STARTING SYSTEM

EAS27170

CIRCUIT DIAGRAM (1/2)

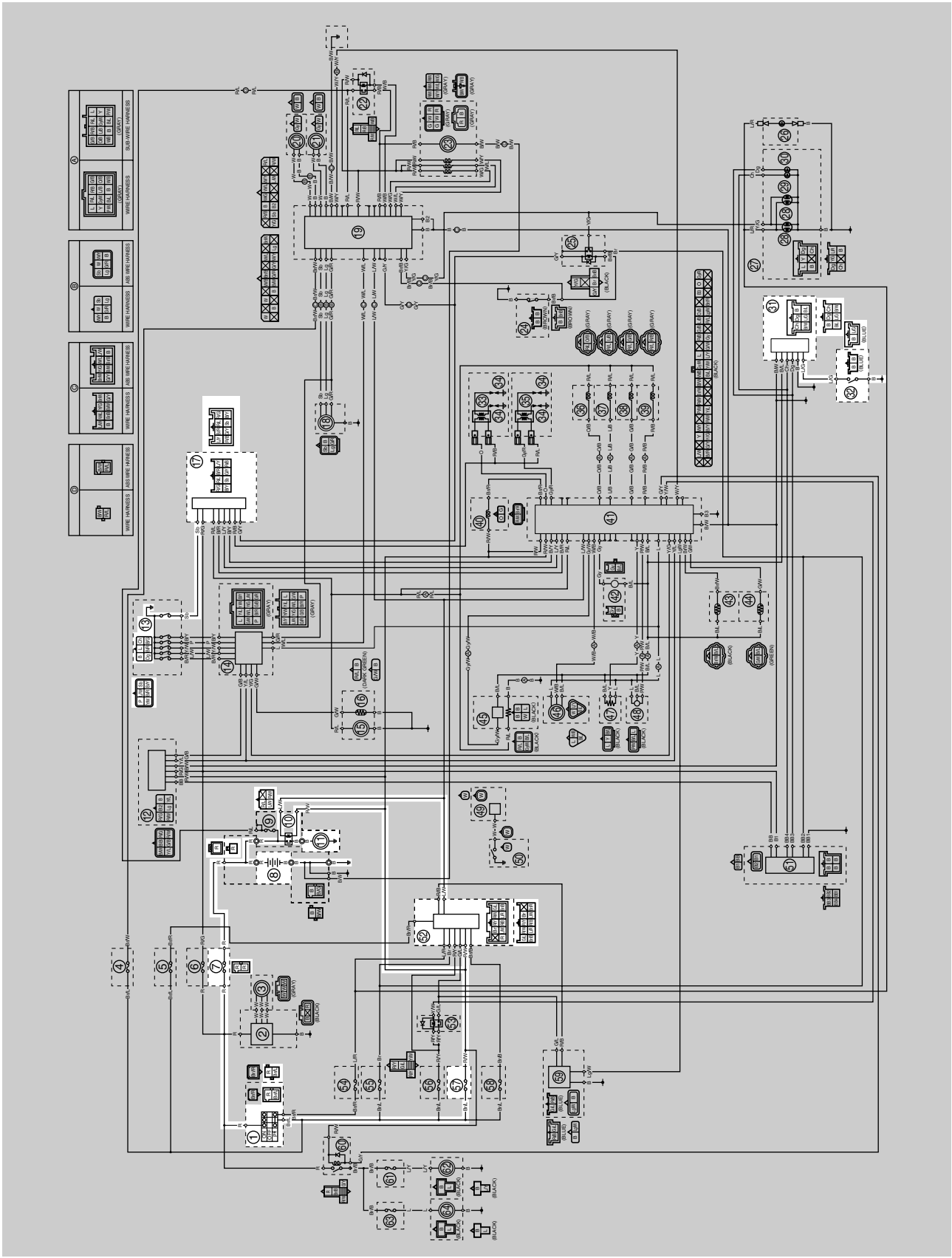

1. Main switch
7. Main fuse
8. Battery
10. Starter relay
11. Starter motor
13. Gear position switch
17. Coupler 2 (wire harness–front cowling wire harness)
31. Coupler 3 (wire harness–front cowling wire harness)
32. Sidestand switch
52. Coupler 5 (wire harness–front cowling wire harness)
57. Ignition fuse

ET3P61003

CIRCUIT DIAGRAM (2/2)

Front cowling wire harness

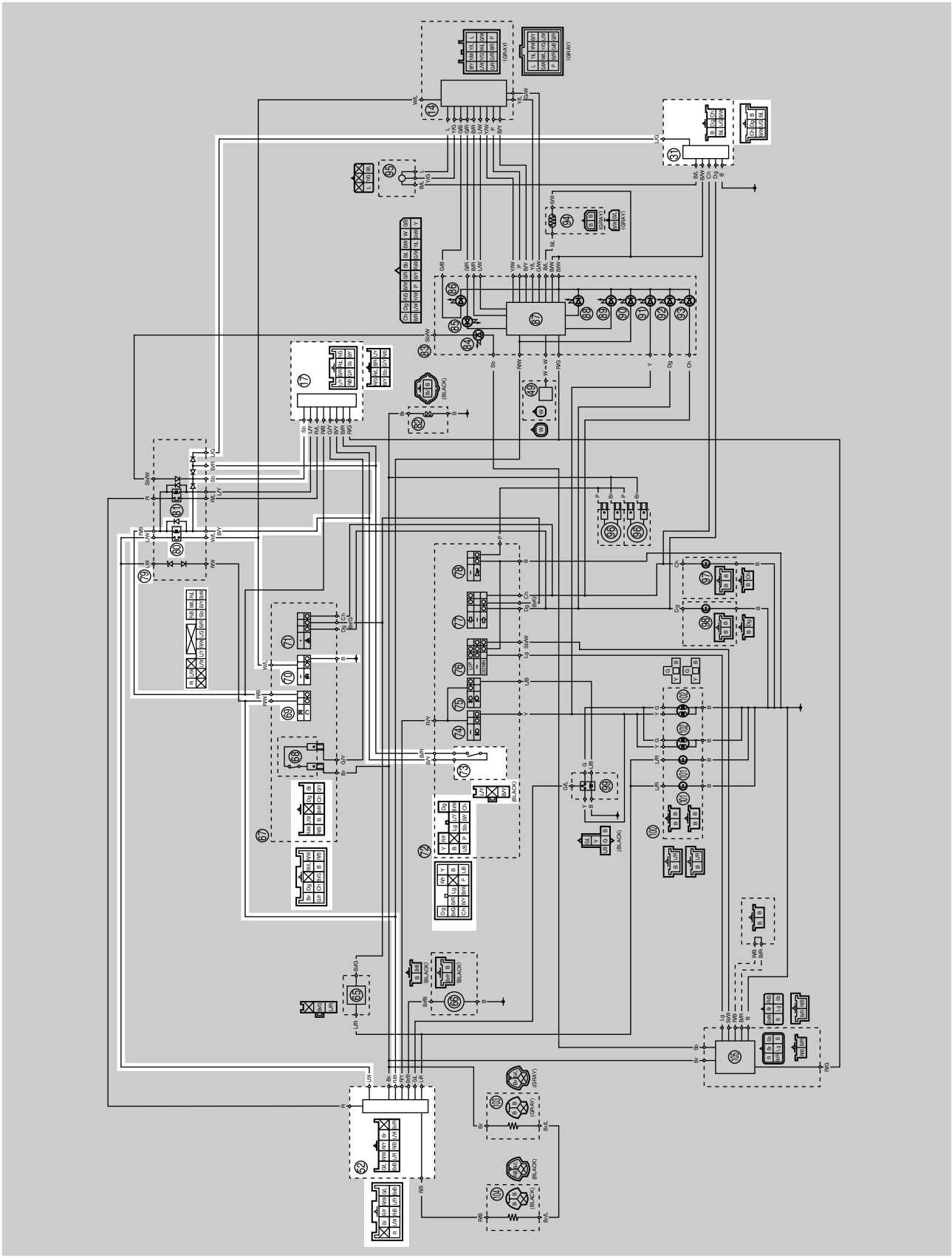

17. Coupler 2 (front cowling wire harness–wire harness)
31. Coupler 3 (front cowling wire harness–wire harness)
52. Coupler 5 (front cowling wire harness–wire harness)
69. Engine stop switch
70. Start switch
73. Clutch switch
79. Relay unit
80. Starting circuit cut-off relay

EAS27180

STARTING CIRCUIT CUT-OFF SYSTEM OPERATION

If the engine stop switch is set to "○" and the main switch is turned "ON" (both switch circuits are closed), the starter motor can only operate if at least one of the following conditions is met:

- The transmission is in neutral (the neutral circuit of the gear position switch is closed).
- The clutch lever is pulled to the handlebar (the clutch switch circuit is closed) and the sidestand is up (the sidestand switch circuit is closed).

The starting circuit cut-off relay prevents the starter motor from operating when neither of these conditions has been met. In this instance, the starting circuit cut-off relay stays open so current cannot reach the starter motor. When at least one of the above conditions has been met, the starting circuit cut-off relay is closed and the engine can be started by pushing the start switch "⊛".

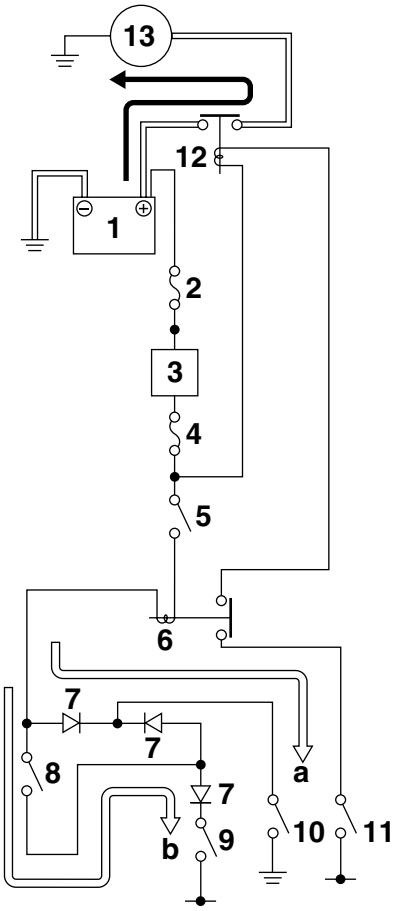

a. WHEN THE TRANSMISSION IS IN NEUTRAL
b. WHEN THE SIDESTAND IS UP AND THE CLUTCH LEVER IS PULLED TO THE HANDLEBAR
1. Battery
2. Main fuse
3. Main switch
4. Ignition fuse
5. Engine stop switch
6. Starting circuit cut-off relay
7. Relay unit (diode)
8. Clutch switch
9. Sidestand switch
10. Gear position switch
11. Start switch
12. Starter relay
13. Starter motor

EAS27190

TROUBLESHOOTING

The starter motor fails to turn.

NOTE:

• Before troubleshooting, remove the following part(s):
1. Front cowling assembly
2. Fuel tank
3. T-bar
4. Throttle bodies

1. Check the fuses. (Main and ignition) Refer to "CHECKING THE FUSES" on page 8-153.	NG →	Replace the fuse(s).
OK ↓		
2. Check the battery. Refer to "CHECKING AND CHARGING THE BATTERY" on page 8-154.	NG →	• Clean the battery terminals. • Recharge or replace the battery.
OK ↓		
3. Check the starter motor operation. Refer to "CHECKING THE STARTER MOTOR OPERATION" on page 8-163.	OK →	Starter motor is OK. Perform the electric starting system troubleshooting, starting with step 5.
NG ↓		
4. Check the starter motor. Refer to "CHECKING THE STARTER MOTOR" on page 5-39.	NG →	Repair or replace the starter motor.
OK ↓		
5. Check the relay unit (starting circuit cut-off relay). Refer to "CHECKING THE RELAYS" on page 8-157.	NG →	Replace the relay unit.
OK ↓		
6. Check the relay unit (diode). Refer to "CHECKING THE RELAY UNIT (DIODE)" on page 8-160.	NG →	Replace the relay unit.
OK ↓		
7. Check the starter relay. Refer to "CHECKING THE RELAYS" on page 8-157.	NG →	Replace the starter relay.
OK ↓		

8. Check the main switch. Refer to “CHECKING THE SWITCHES” on page 8-149.	NG →	Replace the main switch/immobilizer unit.
OK ↓		
9. Check the engine stop switch. Refer to “CHECKING THE SWITCHES” on page 8-149.	NG →	Replace the right handlebar switch.
OK ↓		
10. Check the gear position switch. Refer to “CHECKING THE SWITCHES” on page 8-149.	NG →	Replace the gear position switch.
OK ↓		
11. Check the sidestand switch. Refer to “CHECKING THE SWITCHES” on page 8-149.	NG →	Replace the sidestand switch.
OK ↓		
12. Check the clutch switch. Refer to “CHECKING THE SWITCHES” on page 8-149.	NG →	Replace the clutch switch.
OK ↓		
13. Check the start switch. Refer to “CHECKING THE SWITCHES” on page 8-149.	NG →	Replace the right handlebar switch.
OK ↓		
14. Check the entire starting system wiring. Refer to “CIRCUIT DIAGRAM (1/2)” on page 8-9 and “CIRCUIT DIAGRAM (2/2)” on page 8-11.	NG →	Properly connect or repair the starting system wiring.
OK ↓		
The starting system circuit is OK.		

EAS27200
CHARGING SYSTEM

EAS27210
CIRCUIT DIAGRAM

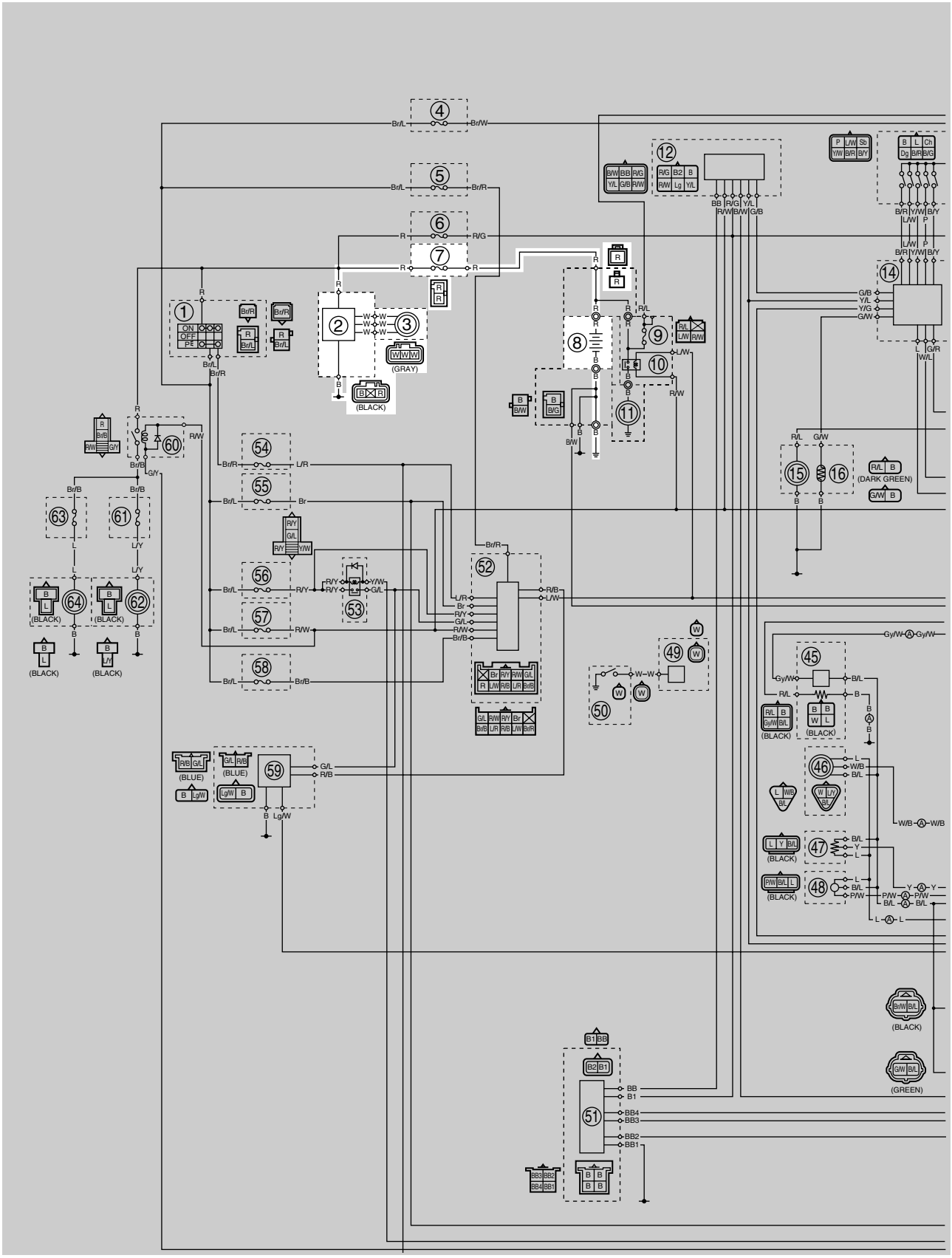

2. Rectifier/regulator
3. AC magneto
7. Main fuse
8. Battery

EAS27230

TROUBLESHOOTING

The battery is not being charged.

NOTE:

- Before troubleshooting, remove the following part(s):

1. Front cowling right inner panel 1

1. Check the fuse. (Main) Refer to "CHECKING THE FUSES" on page 8-153.	NG →	Replace the fuse.
OK ↓		
2. Check the battery. Refer to "CHECKING AND CHARGING THE BATTERY" on page 8-154.	NG →	• Clean the battery terminals. • Recharge or replace the battery.
OK ↓		
3. Check the stator coil. Refer to "CHECKING THE STATOR COIL" on page 8-164.	NG →	Replace the stator coil.
OK ↓		
4. Check the rectifier/regulator. Refer to "CHECKING THE RECTIFIER/REGULATOR" on page 8-164.	NG →	Replace the rectifier/regulator.
OK ↓		
5. Check the entire charging system wiring. Refer to "CIRCUIT DIAGRAM" on page 8-17.	NG →	Properly connect or repair the charging system wiring.
OK ↓		
The charging system circuit is OK.		

EAS27240
LIGHTING SYSTEM

EAS27250
CIRCUIT DIAGRAM (1/2)

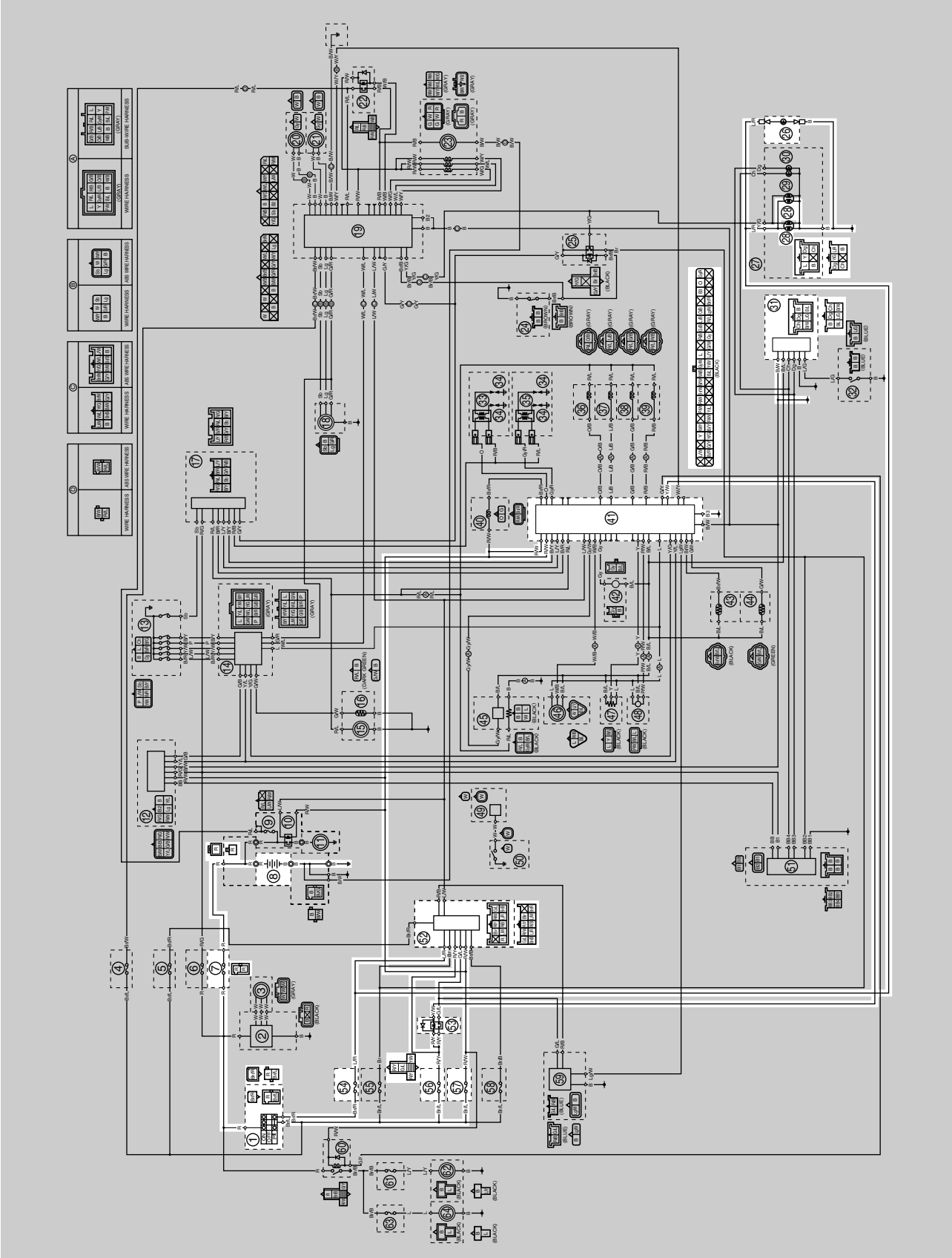

1. Main switch
7. Main fuse
8. Battery
26. License plate light
28. Tail/brake light
31. Coupler 3 (wire harness–front cowling wire harness)
41. ECU (engine control unit)
52. Coupler 5 (wire harness–front cowling wire harness)
53. Headlight relay (on/off)
54. Hazard lighting fuse
56. Headlight fuse
57. Ignition fuse

ET3P61004

CIRCUIT DIAGRAM (2/2)

Front cowling wire harness

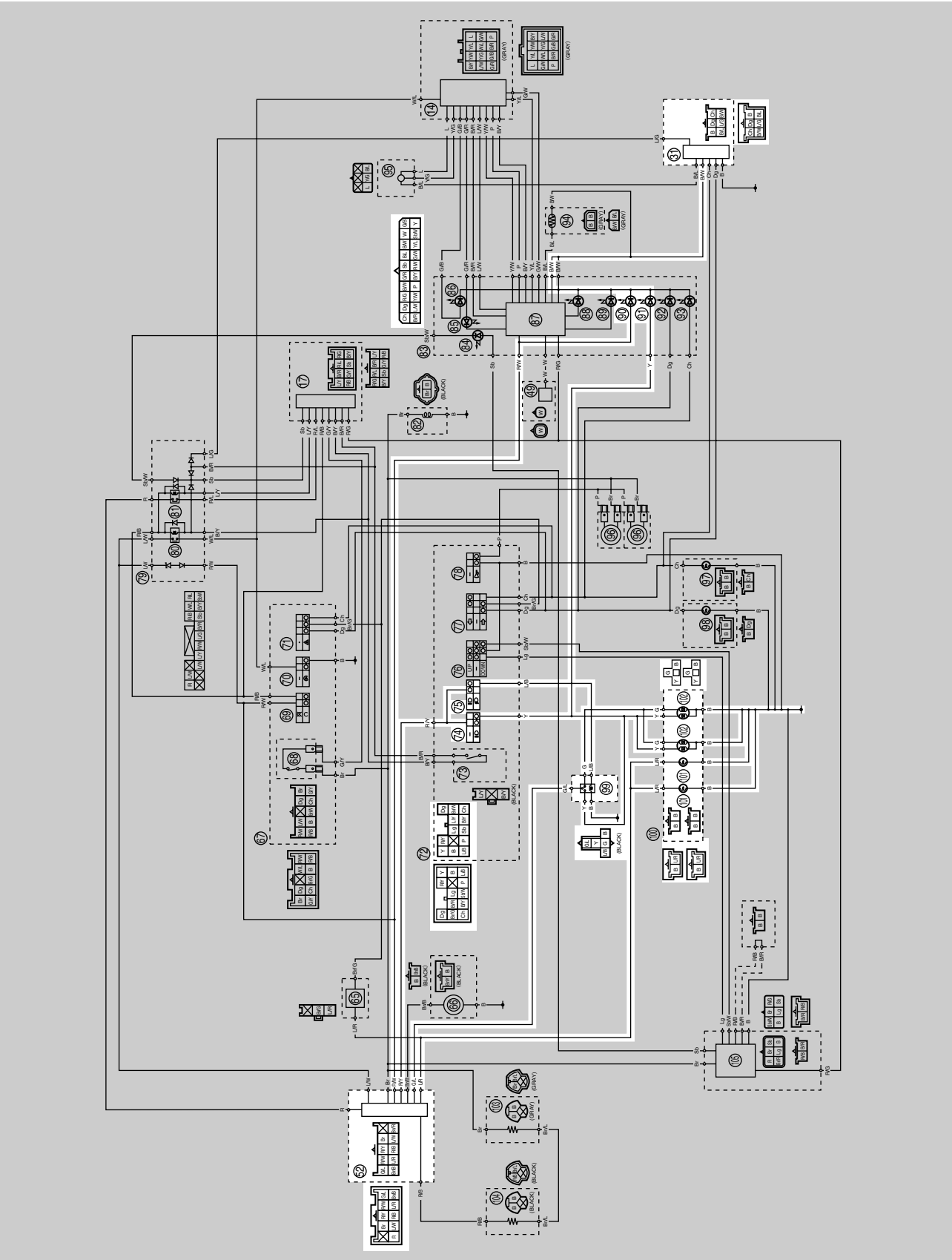

31. Coupler 3 (front cowling wire harness–wire harness)
52. Coupler 5 (front cowling wire harness–wire harness)
74. Pass switch
75. Dimmer switch
90. Meter light
91. High beam indicator light
99. Headlight relay (dimmer)
101. Auxiliary light
102. Headlight

EAS27260

TROUBLESHOOTING

Any of the following fail to light: headlights, high beam indicator light, taillight, license plate light, auxiliary lights or meter light.

NOTE:

- Before troubleshooting, remove the following part(s):

1. Front cowling assembly
2. Fuel tank
3. T-bar

1. Check the condition of each bulb and bulb socket. Refer to "CHECKING THE BULBS AND BULB SOCKETS" on page 8-152.	NG →	Replace the bulb(s) and bulb socket(s).
OK ↓		
2. Check the fuses. (Main, headlights, ignition, and hazard lighting) Refer to "CHECKING THE FUSES" on page 8-153.	NG →	Replace the fuse(s).
OK ↓		
3. Check the battery. Refer to "CHECKING AND CHARGING THE BATTERY" on page 8-154.	NG →	• Clean the battery terminals. • Recharge or replace the battery.
OK ↓		
4. Check the main switch. Refer to "CHECKING THE SWITCHES" on page 8-149.	NG →	Replace the main switch/immobilizer unit.
OK ↓		
5. Check the dimmer switch. Refer to "CHECKING THE SWITCHES" on page 8-149.	NG →	Replace the left handlebar switch.
OK ↓		
6. Check the pass switch. Refer to "CHECKING THE SWITCHES" on page 8-149.	NG →	Replace the left handlebar switch.
OK ↓		
7. Check the headlight relay (on/off). Refer to "CHECKING THE RELAYS" on page 8-157.	NG →	Replace the headlight relay (on/off).
OK ↓		

8. Check the headlight relay (dimmer). Refer to “CHECKING THE RELAYS” on page 8-157.	NG →	Replace the headlight relay (dimmer).
OK ↓		
9. Check the entire lighting system wiring. Refer to “CIRCUIT DIAGRAM (1/2)” on page 8-21 and “CIRCUIT DIAGRAM (2/2)” on page 8-23.	NG →	Properly connect or repair the lighting system wiring.
OK ↓		
Replace the ECU.		

EAS27270
SIGNALING SYSTEM

EAS27280
CIRCUIT DIAGRAM (1/2)

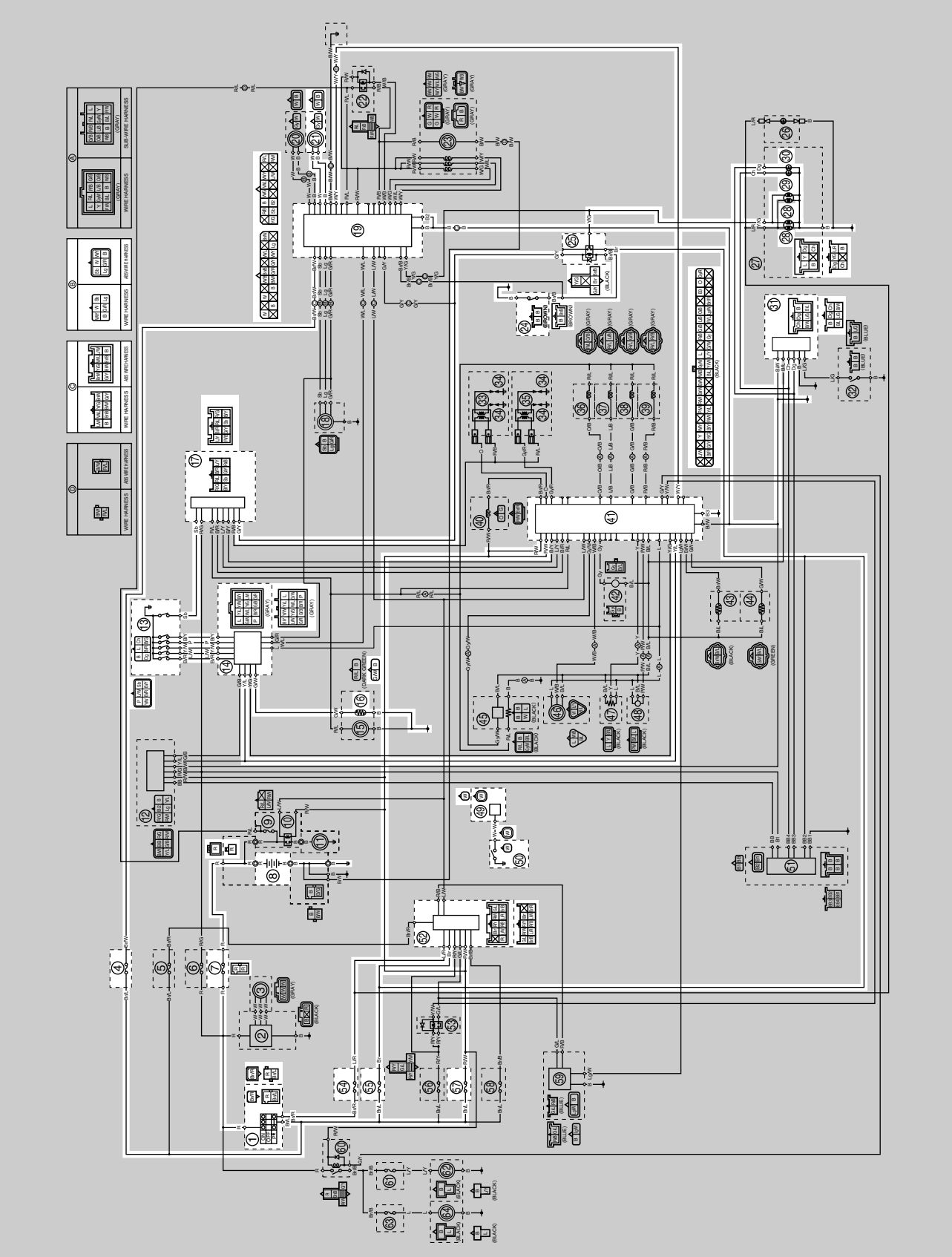

1. Main switch
4. ABS ECU fuse
7. Main fuse
8. Battery
13. Gear position switch
14. Coupler 1 (wire harness–front cowling wire harness)
16. Fuel sender
17. Coupler 2 (wire harness–front cowling wire harness)
19. ABS ECU (electronic control unit)
21. Rear wheel sensor
24. Rear brake light switch
25. Brake light relay
28. Tail/brake light
29. Rear left turn signal light
30. Rear right turn signal light
31. Coupler 3 (wire harness–front cowling wire harness)
41. ECU (engine control unit)
49. Coupler 4 (wire harness–front cowling wire harness)
50. Oil level switch
52. Coupler 5 (wire harness–front cowling wire harness)
54. Hazard lighting fuse
55. Signaling system fuse
57. Ignition fuse

ET3P61005

CIRCUIT DIAGRAM (2/2)

Front cowling wire harness

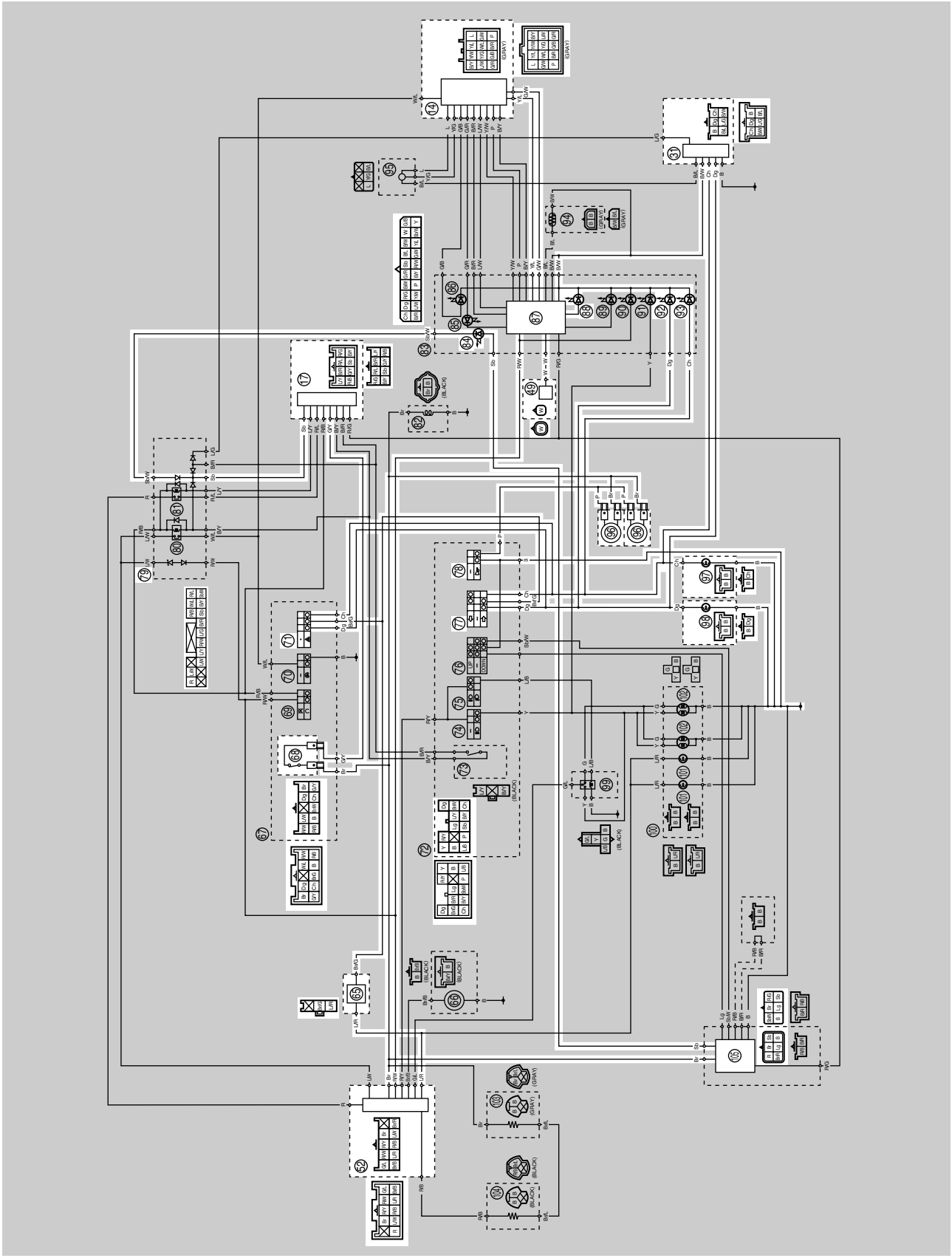

14. Coupler 1 (front cowling wire harness–wire harness)
17. Coupler 2 (front cowling wire harness–wire harness)
31. Coupler 3 (front cowling wire harness–wire harness)
49. Coupler 4 (front cowling wire harness–wire harness)
52. Coupler 5 (front cowling wire harness–wire harness)
65. Turn signal/hazard relay
68. Front brake light switch
71. Hazard switch
77. Turn signal switch
78. Horn switch
79. Relay unit
84. Neutral indicator light
87. Multi-function meter
88. Oil level warning light
92. Right turn signal indicator light
93. Left turn signal indicator light
96. Horn
97. Front left turn signal light
98. Front right turn signal light
105. Windshield drive unit

EAS27290

TROUBLESHOOTING

- Any of the following fail to light: turn signal light, brake light or indicator light.
- The horn fails to sound.
- The fuel meter fails to come on.
- The speedometer fails to operate.

NOTE:

- Before troubleshooting, remove the following part(s):

1. Front cowling assembly
2. Fuel tank
3. T-bar
4. Throttle bodies

1. Check the fuses. (Main, ignition, signaling system, hazard lighting, backup, and ABS ECU) Refer to “CHECKING THE FUSES” on page 8-153.	NG →	Replace the fuse(s).
OK ↓		
2. Check the battery. Refer to “CHECKING AND CHARGING THE BATTERY” on page 8-154.	NG →	• Clean the battery terminals. • Recharge or replace the battery.
OK ↓		
3. Check the main switch. Refer to “CHECKING THE SWITCHES” on page 8-149.	NG →	Replace the main switch/immobilizer unit.
OK ↓		
4. Check the entire signaling system wiring. Refer to “CIRCUIT DIAGRAM (1/2)” on page 8-27 and “CIRCUIT DIAGRAM (2/2)” on page 8-29.	NG →	Properly connect or repair the signaling system wiring.
OK ↓		
Check the condition of each of the signaling system circuits. Refer to “Checking the signaling system”.		

Checking the signaling system

The horn fails to sound.

1. Check the horn switch. Refer to “CHECKING THE SWITCHES” on page 8-149.	NG →	Replace the left handlebar switch.
OK ↓		

2. Check the horns. Refer to “CHECKING THE HORNS” on page 8-165.	NG →	Replace the horn(s).
OK ↓		
3. Check the entire signaling system wiring. Refer to “CIRCUIT DIAGRAM (1/2)” on page 8-27 and “CIRCUIT DIAGRAM (2/2)” on page 8-29.	NG →	Properly connect or repair the signaling system wiring.
OK ↓		
This circuit is OK.		

The tail/brake light fails to come on.

1. Check the tail/brake light bulbs and sockets. Refer to “CHECKING THE BULBS AND BULB SOCKETS” on page 8-152.	NG →	Replace the tail/brake light bulb, socket or both.
OK ↓		
2. Check the front brake light switch. Refer to “CHECKING THE SWITCHES” on page 8-149.	NG →	Replace the front brake light switch.
OK ↓		
3. Check the rear brake light switch. Refer to “CHECKING THE SWITCHES” on page 8-149.	NG →	Replace the rear brake light switch.
OK ↓		
4. Check the brake light relay. Refer to “CHECKING THE RELAYS” on page 8-157.	NG →	Replace the brake light relay.
OK ↓		
5. Check the entire signaling system wiring. Refer to “CIRCUIT DIAGRAM (1/2)” on page 8-27 and “CIRCUIT DIAGRAM (2/2)” on page 8-29.	NG →	Properly connect or repair the signaling system wiring.
OK ↓		
This circuit is OK.		

The turn signal light, turn signal indicator light or both fail to blink.

1. Check the turn signal light bulbs and sockets. Refer to “CHECKING THE BULBS AND BULB SOCKETS” on page 8-152.	NG →	Replace the turn signal light bulb, socket or both.
OK ↓		
2. Check the turn signal switch. Refer to “CHECKING THE SWITCHES” on page 8-149.	NG →	Replace the left handlebar switch.
OK ↓		
3. Check the hazard switch. Refer to “CHECKING THE SWITCHES” on page 8-149.	NG →	Replace the left handlebar switch.
OK ↓		
4. Check the turn signal/hazard relay. Refer to “CHECKING THE TURN SIGNAL/HAZARD RELAY” on page 8-160.	NG →	Replace the turn signal/hazard relay.
OK ↓		
5. Check the entire signaling system wiring. Refer to “CIRCUIT DIAGRAM (1/2)” on page 8-27 and “CIRCUIT DIAGRAM (2/2)” on page 8-29.	NG →	Properly connect or repair the signaling system wiring.
OK ↓		
This circuit is OK.		

The neutral indicator light fails to come on.

1. Check the gear position switch. Refer to “CHECKING THE SWITCHES” on page 8-149.	NG →	Replace the gear position switch.
OK ↓		
2. Check the relay unit (diode). Refer to “CHECKING THE RELAY UNIT (DIODE)” on page 8-160.	NG →	Replace the relay unit.
OK ↓		

3. Check the entire signaling system wiring. Refer to “CIRCUIT DIAGRAM (1/2)” on page 8-27 and “CIRCUIT DIAGRAM (2/2)” on page 8-29.	NG →	Properly connect or repair the signaling system wiring.
OK ↓		
Replace the windshield drive unit.		

The shift indicator fails to come on.

1. Check the gear position switch. Refer to “CHECKING THE SWITCHES” on page 8-149.	NG →	Replace the gear position switch.
OK ↓		
2. Check the entire signaling system wiring. Refer to “CIRCUIT DIAGRAM (1/2)” on page 8-27 and “CIRCUIT DIAGRAM (2/2)” on page 8-29.	NG →	Properly connect or repair the signaling system wiring.
OK ↓		
Replace the meter assembly.		

The oil level warning light fails to come on.

1. Check the oil level switch. Refer to “CHECKING THE OIL LEVEL SWITCH” on page 8-165.	NG →	Replace the oil level switch.
OK ↓		
2. Check the entire signaling system wiring. Refer to “CIRCUIT DIAGRAM (1/2)” on page 8-27 and “CIRCUIT DIAGRAM (2/2)” on page 8-29.	NG →	Properly connect or repair the signaling system wiring.
OK ↓		
Replace the meter assembly.		

The fuel meter fails to come on.

1. Check the fuel sender. Refer to “CHECKING THE FUEL SENDER” on page 8-166.	NG →	Replace the fuel pump.
OK ↓		

2. Check the entire signaling system wiring. Refer to “CIRCUIT DIAGRAM (1/2)” on page 8-27 and “CIRCUIT DIAGRAM (2/2)” on page 8-29.	NG →	Properly connect or repair the signaling system wiring.
OK ↓		
Replace the meter assembly.		

The speedometer fails to operate.

1. Check the rear wheel sensor. Refer to “MAINTENANCE OF THE REAR WHEEL SENSOR AND SENSOR ROTOR” on page 4-22.	NG →	Replace the rear wheel sensor.
OK ↓		
2. Check the entire speed sensor wiring. Refer to NOTE.	NG →	Properly connect or repair the speed sensor wiring.
OK ↓		
Replace the ABS ECU, ECU or meter assembly.		

NOTE:

Repair or replace if there is an open or short circuit.
- Between rear wheel sensor and ABS ECU coupler.
  (white–white)
  (black–black)
- Between ABS ECU coupler and ECU coupler.
  (white/yellow–white/yellow)
- Between ECU coupler and meter assembly.
  (yellow/blue–yellow/blue)

EAS27300
COOLING SYSTEM

EAS27310
CIRCUIT DIAGRAM

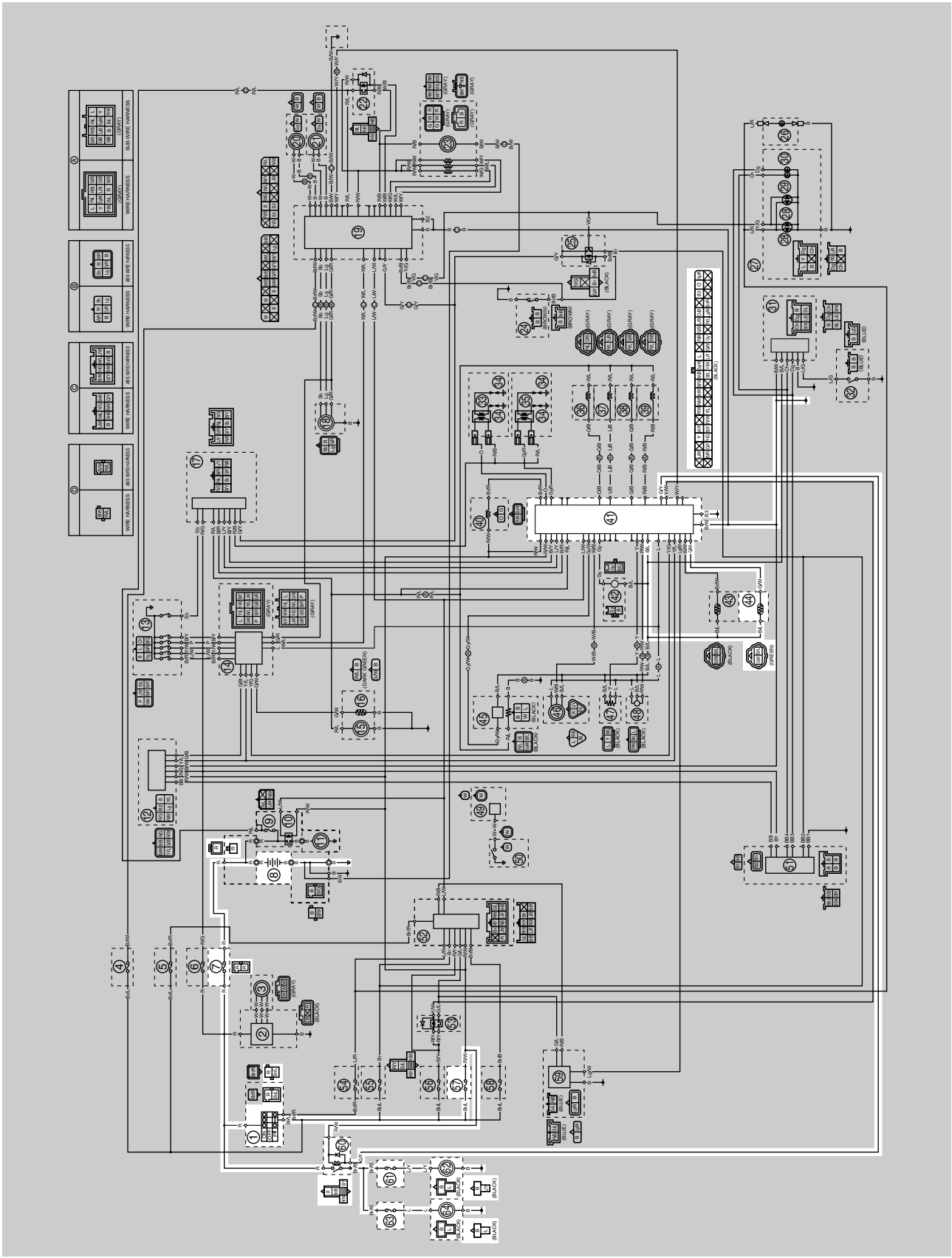

1. Main switch
7. Main fuse
8. Battery
41. ECU (engine control unit)
44. Coolant temperature sensor
57. Ignition fuse
60. Radiator fan motor relay
61. Left radiator fan motor fuse
62. Left radiator fan motor
63. Right radiator fan motor fuse
64. Right radiator fan motor

EAS27320

TROUBLESHOOTING

The radiator fan motor fails to turn.

NOTE:

• Before troubleshooting, remove the following part(s):
1. Front cowling assembly
2. Fuel tank
3. T-bar

1. Check the fuses. (Main, ignition, left radiator fan motor, and right radiator fan motor) Refer to "CHECKING THE FUSES" on page 8-153.	NG →	Replace the fuse(s).
OK ↓		
2. Check the battery. Refer to "CHECKING AND CHARGING THE BATTERY" on page 8-154.	NG →	• Clean the battery terminals. • Recharge or replace the battery.
OK ↓		
3. Check the main switch. Refer to "CHECKING THE SWITCHES" on page 8-149.	NG →	Replace the main switch/immobilizer unit.
OK ↓		
4. Check the radiator fan motors. Refer to "CHECKING THE RADIATOR FAN MOTORS" on page 8-166.	NG →	Replace the radiator fan motor(s).
OK ↓		
5. Check the radiator fan motor relay. Refer to "CHECKING THE RELAYS" on page 8-157.	NG →	Replace the radiator fan motor relay.
OK ↓		
6. Check the coolant temperature sensor. Refer to "CHECKING THE COOLANT TEMPERATURE SENSOR" on page 8-167.	NG →	Replace the coolant temperature sensor.
OK ↓		
7. Check the entire cooling system wiring. Refer to "CIRCUIT DIAGRAM" on page 8-37.	NG →	Properly connect or repair the cooling system wiring.
OK ↓		
Replace the ECU.		

EAS27330
FUEL INJECTION SYSTEM

EAS27340
CIRCUIT DIAGRAM (1/2)

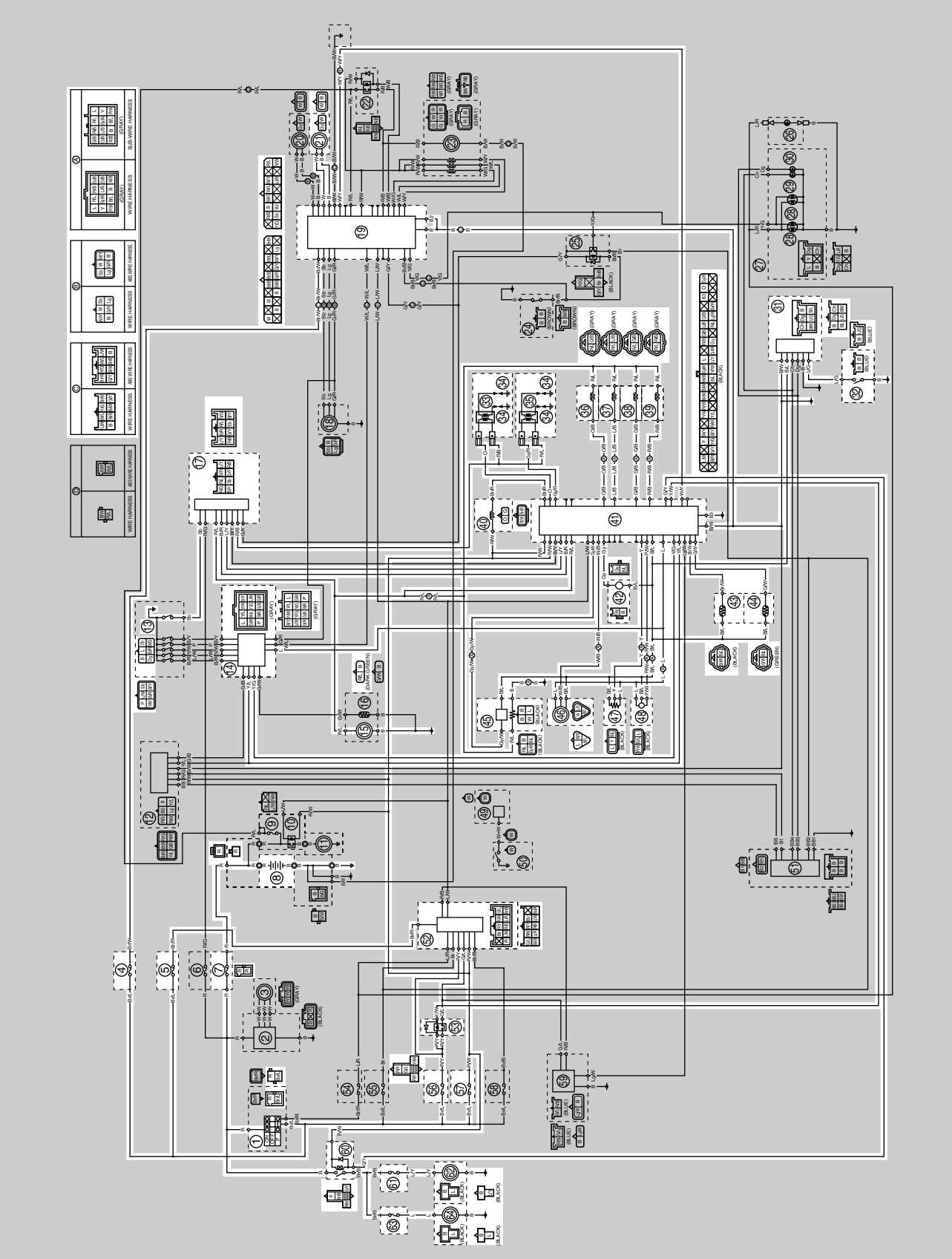

1. Main switch
4. ABS ECU fuse
5. Fuel injection system fuse
7. Main fuse
8. Battery
13. Gear position switch
14. Coupler 1 (wire harness–front cowling wire harness)
15. Fuel pump
17. Coupler 2 (wire harness–front cowling wire harness)
19. ABS ECU (electronic control unit)
21. Rear wheel sensor
31. Coupler 3 (wire harness–front cowling wire harness)
32. Sidestand switch
33. Cylinders-#1/#4 ignition coil
34. Spark plug
35. Cylinders-#2/#3 ignition coil
36. Injector #4
37. Injector #3
38. Injector #2
39. Injector #1
40. Air induction system solenoid
41. ECU (engine control unit)
42. Crankshaft position sensor
43. Intake air temperature sensor
44. Coolant temperature sensor
45. O_2 sensor
46. Cylinder identification sensor
47. Throttle position sensor
48. Intake air pressure sensor
52. Coupler 5 (wire harness–front cowling wire harness)
53. Headlight relay (on/off)
56. Headlight fuse
57. Ignition fuse
60. Radiator fan motor relay
61. Left radiator fan motor fuse
62. Left radiator fan motor
63. Right radiator fan motor fuse
64. Right radiator fan motor

ET3P61006

CIRCUIT DIAGRAM (2/2)

Front cowling wire harness

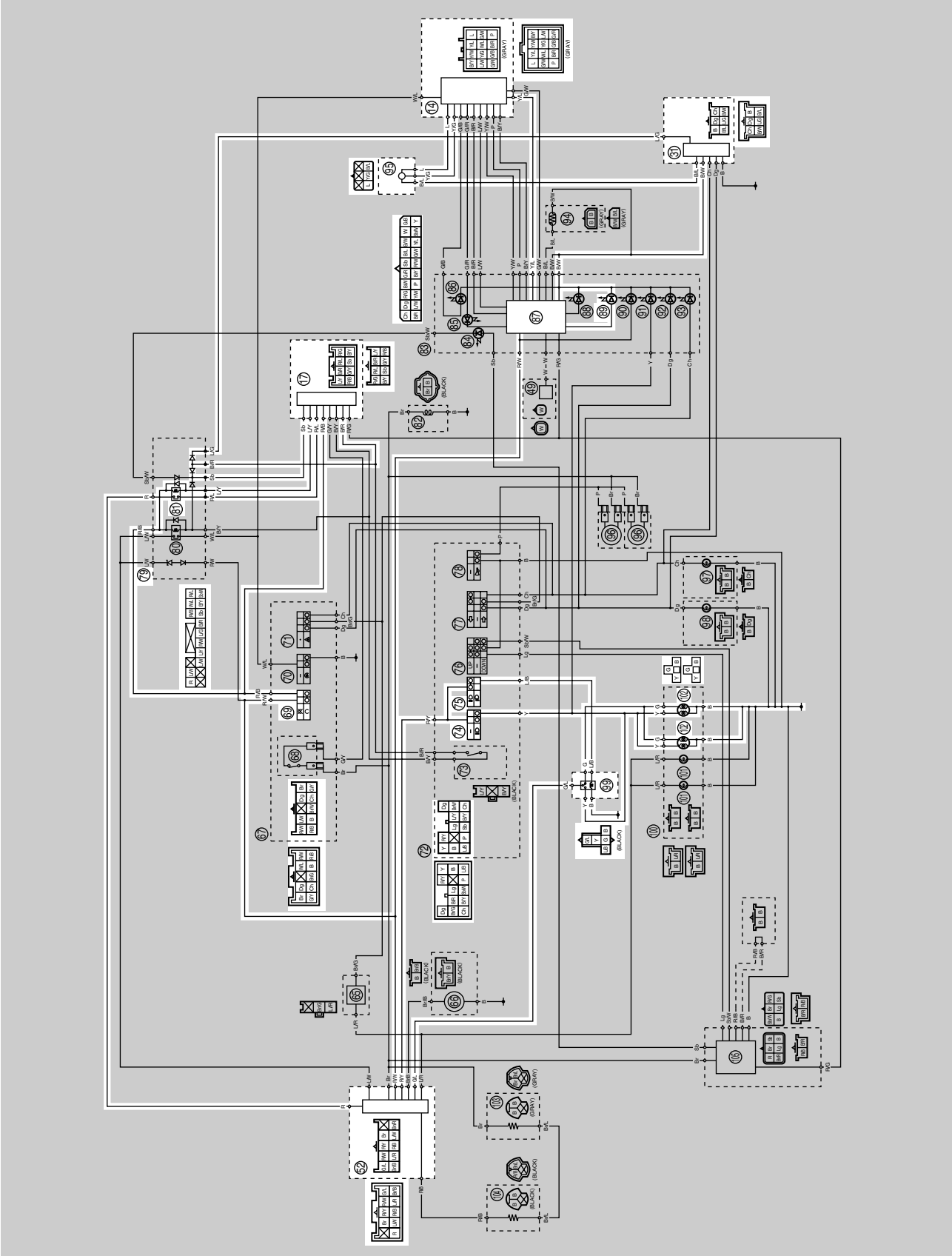

14. Coupler 1 (front cowling wire harness–wire harness)
17. Coupler 2 (front cowling wire harness–wire harness)
31. Coupler 3 (front cowling wire harness–wire harness)
52. Coupler 5 (front cowling wire harness–wire harness)
69. Engine stop switch
74. Pass switch
75. Dimmer switch
79. Relay unit
81. Fuel pump relay
87. Multi-function meter
89. Engine trouble warning light
95. Lean angle sensor
99. Headlight relay (dimmer)
102. Headlight

EAS27350

ECU SELF-DIAGNOSTIC FUNCTION

The ECU is equipped with a self-diagnostic function in order to ensure that the fuel injection system is operating normally. If this function detects a malfunction in the system, it immediately operates the engine under substitute characteristics and illuminates the engine trouble warning light to alert the rider that a malfunction has occurred in the system. Once a malfunction has been detected, a fault code is stored in the memory of the ECU.

- To inform the rider that the fuel injection system is not functioning, the engine trouble warning light flashes when the start switch is being pushed to start the engine.
- If a malfunction is detected in the system by the self-diagnostic function, the ECU provides an appropriate substitute characteristic operation, and alerts the rider of the detected malfunction by illuminating the engine trouble warning light.
- After the engine has been stopped, the lowest fault code number appears on the odometer/tripmeter/fuel reserve tripmeter LCD. Once a fault code has been displayed, it remains stored in the memory of the ECU until it is deleted.

Engine trouble warning light indication and fuel injection system operation

Warning light indication	ECU operation	Fuel injection operation	Vehicle operation
Flashing*	Warning provided when unable to start engine	Operation stopped	Cannot be operated
Remains on	Malfunction detected	Operated with substitute characteristics in accordance with the description of the malfunction	Can or cannot be operated depending on the fault code

* The warning light flashes when any one of the conditions listed below is present and the start switch is pushed:

11:	Cylinder identification sensor	33:	Cylinders-#1/#4 ignition coil (faulty ignition)
12:	Crankshaft position sensor	34:	Cylinders-#2/#3 ignition coil (faulty ignition)
19:	Black/red ECU lead (broken or disconnected)	41:	Lean angle sensor (open or short-circuit)
30:	Lean angle sensor (latch up detected)	50:	ECU internal malfunction (memory check error)

Checking the engine trouble warning light

The engine trouble warning light comes on for 1.4 seconds after the main switch has been turned to “ON” and it comes on while the start switch is being pushed. If the warning light does not come on under these conditions, the warning light (LED) may be defective.

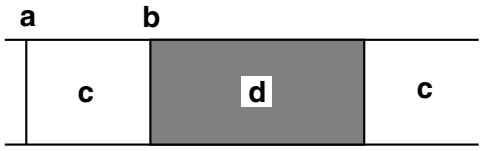

a. Main switch “OFF”
b. Main switch “ON”
c. Engine trouble warning light off
d. Engine trouble warning light on for 1.4 seconds

EAS27380
SELF-DIAGNOSTIC FUNCTION TABLE

If the ECU detects an abnormal signal from a sensor while the vehicle is being driven, the ECU illuminates the engine trouble warning light and provides the engine with alternate operating instructions that are appropriate for the type of malfunction.
When an abnormal signal is received from a sensor, the ECU processes the specified values that are programmed for each sensor in order to provide the engine with alternate operating instructions that enable the engine to continue to operate or stop operating, depending on the conditions.

Self-Diagnostic Function table

Fault code No.	Item	Symptom	Able / unable to start	Able / unable to drive
11	Cylinder identification sensor	No normal signals are received from the cylinder identification sensor.	Unable	Unable
12	Crankshaft position sensor	No normal signals are received from the crankshaft position sensor.	Unable	Unable
13	Intake air pressure sensor (open or short circuit)	Intake air pressure sensor: open or short circuit detected.	Able	Able
14	Intake air pressure sensor (hose line)	Intake air pressure sensor: hose system malfunction (clogged or detached hose).	Able	Able
15	Throttle position sensor (open or short circuit)	Throttle position sensor: open or short circuit detected.	Able	Able
16	Throttle position sensor (stuck)	Stuck throttle position sensor is detected.	Able	Able
19	Black/red ECU lead (broken or disconnected)	A break or disconnection of the black/red lead of the ECU is detected.	Unable	Unable
21	Coolant temperature sensor	Coolant temperature sensor: open or short circuit detected.	Able	Able

Fault code No.	Item	Symptom	Able / unable to start	Able / unable to drive
22	Intake air temperature sensor (open or short circuit)	Intake air temperature sensor: open or short circuit detected.	Able	Able
24	O_2 sensor (inactive)	No normal signal is received from the O_2 sensor.	Able	Able
30	Lean angle sensor	Latch up detected. No normal signal is received from the lean angle sensor.	Unable	Unable
31	O_2 sensor (compensation stuck to upper limit)	The amount of air-fuel ratio feedback compensation is maintained continuously in the vicinity of the upper limit (lean air-fuel ratio).	Able	Able
32	O_2 sensor (compensation stuck to lower limit)	The amount of air-fuel ratio feedback compensation is maintained continuously in the vicinity of the lower limit (rich air-fuel ratio).	Able	Able
33	Cylinders-#1/#4 ignition coil (faulty ignition)	Malfunction detected in the primary wire of the cylinders-#1/#4 ignition coil.	Able (depending on the number of faulty cylinders)	Able (depending on the number of faulty cylinders)
34	Cylinders-#2/#3 ignition coil (faulty ignition)	Malfunction detected in the primary wire of the cylinders-#2/#3 ignition coil.	Able (depending on the number of faulty cylinders)	Able (depending on the number of faulty cylinders)
41	Lean angle sensor (open or short circuit)	Lean angle sensor: open or short circuit detected.	Unable	Unable
42	Rear wheel sensor	No normal signals are received from the rear wheel sensor.	Able	Able
	Gear position switch (neutral circuit)	Open or short circuit is detected in the neutral circuit of the gear position switch.		
43	Fuel system voltage (monitoring voltage)	The ECU is unable to monitor the battery voltage (an open or short circuit in the line to the ECU).	Able	Able
44	Error in writing the amount of CO adjustment on EEPROM	An error is detected while reading or writing on EEPROM (CO adjustment value).	Able	Able
46	Vehicle system power supply (monitoring voltage)	Power supply to the fuel injection system is not normal.	Able	Able

Fault code No.	Item	Symptom	Able / unable to start	Able / unable to drive
50	ECU internal malfunction	Faulty ECU memory. (When this malfunction is detected in the ECU, the fault code number might not appear on the meter.)	Unable	Unable

Communication error with the meter

Fault code No.	Item	Symptom	Able / unable to start	Able / unable to drive
Er-1	ECU internal malfunction (output signal error)	No signals are received from the ECU.	Unable	Unable
Er-2	ECU internal malfunction (output signal error)	No signals are received from the ECU within the specified duration.	Unable	Unable
Er-3	ECU internal malfunction (output signal error)	Data from the ECU cannot be received correctly.	Unable	Unable
Er-4	ECU internal malfunction (input signal error)	Non-registered data has been received from the meter.	Unable	Unable

EAS27400

TROUBLESHOOTING METHOD

The engine operation is not normal and the engine trouble warning light comes on.

1. Check:
   - Fault code number

▼▼▼▼▼▼▼▼▼▼▼▼▼▼▼▼▼▼▼▼▼▼▼▼▼▼▼▼▼▼▼▼▼

a. Check the fault code number displayed on the meter.
b. Identify the faulty system with the fault code. Refer to “Self-Diagnostic Function table”.
c. Identify the probable cause of the malfunction. Refer to “Fault code table”.

▲▲▲▲▲▲▲▲▲▲▲▲▲▲▲▲▲▲▲▲▲▲▲▲▲▲▲▲▲▲▲▲▲

2. Check and repair the probable cause of malfunction.

Fault code No.	No fault code No.
Check and repair. Refer to “TROUBLESHOOTING DETAILS” on page 8-56. Monitor the operation of the sensors and actuators in the diagnostic mode. Refer to “Sensor operation table” and “Actuator operation table”.	Check and repair.

3. Perform fuel injection system reinstatement action. Refer to “Reinstatement method” of table in “TROUBLESHOOTING DETAILS”.
4. Turn the main switch to “OFF” and back to “ON”, then check that no fault code number is displayed.

NOTE:

If fault codes are displayed, repeat steps (1) to (4) until no fault code number is displayed.

5. Erase the malfunction history in the diagnostic mode. Refer to “Sensor operation table (Diagnostic code No. 62)”.

NOTE:

Turning the main switch to “OFF” will not erase the malfunction history.

The engine operation is not normal but the engine trouble warning light does not come on.

1. Check the operation of following sensors and actuators in the Diagnostic mode. Refer to “Sensor operation table” and “Actuator operation table”.

01: Throttle position sensor (throttle angle)
30: Cylinders-#1/#4 ignition coil
31: Cylinders-#2/#3 ignition coil
36: Injector #1
37: Injector #2
38: Injector #3
39: Injector #4
48: Air induction system solenoid

If a malfunction is detected in the sensors or actuators, repair or replace all faulty parts.
If no malfunction is detected in the sensors and actuators, check and repair inner parts of the engine.

EAS27410

DIAGNOSTIC MODE

Setting the diagnostic mode

1. Turn the main switch to “OFF”.
2. Disconnect the wire harness coupler from the fuel pump.
3. Simultaneously press and hold the “SELECT” and “RESET” buttons, turn the main switch to “ON”, and continue to press the buttons for 8 seconds or more.

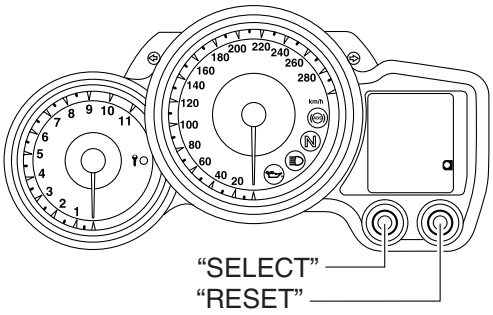

NOTE:

- All displays on the meter disappear except the odometer/tripmeter/fuel reserve tripmeter displays.
- “dIAG” appears on the odometer/tripmeter/fuel reserve tripmeter LCD.

4. Press the “SELECT” button to select the CO adjustment mode “Co” or the diagnostic mode “dIAG”.
5. After selecting “dIAG”, simultaneously press the “SELECT” and “RESET” buttons for 2 seconds or more to activate the diagnostic mode. The diagnostic code number “d:01” appears on the clock LCD.
6. Select the diagnostic code number corresponding to the fault code number by pressing the “SELECT” and “RESET” buttons.

NOTE:

- To decrease the selected diagnostic code number, press the “RESET” button. Press the “RESET” button for 1 second or longer to automatically decrease the diagnostic code numbers.
- To increase the selected diagnostic code number, press the “SELECT” button. Press the “SELECT” button for 1 second or longer to automatically increase the diagnostic code numbers.

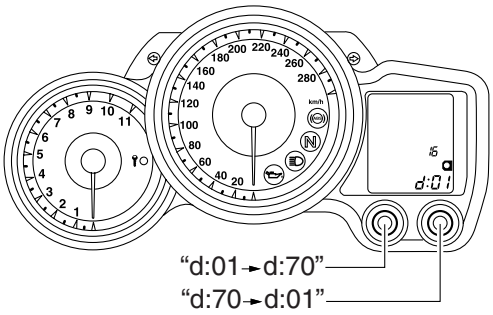

7. Verify the operation of the sensor or actuator.
   - Sensor operation
     The data representing the operating conditions of the sensor appears on the trip LCD.
   - Actuator operation
     Set the engine stop switch to "◯" to operate the actuator.

NOTE:

If the engine stop switch is set to "◯", set it to "⊗", and then set it to "◯" again.

8. Turn the main switch to "OFF" to cancel the diagnostic mode.

Fault code table

Fault code No.	Symptom	Probable cause of malfunction	Diagnostic code No.
11	No normal signals are received from the cylinder identification sensor.	• Open or short circuit in sub-wire harness. • Open or short circuit in wire harness. • Defective cylinder identification sensor. • Malfunction in ECU. • Improperly installed cylinder identification sensor.	—
12	No normal signals are received from the crankshaft position sensor.	• Open or short circuit in wire harness. • Defective crankshaft position sensor. • Malfunction in pickup rotor. • Malfunction in ECU. • Improperly installed crankshaft position sensor.	—
13	Intake air pressure sensor: open or short circuit detected.	• Open or short circuit in sub-wire harness. • Open or short circuit in wire harness. • Defective intake air pressure sensor. • Malfunction in ECU.	03
14	Intake air pressure sensor: hose system malfunction (clogged or detached hose).	• Intake air pressure sensor hose is detached, clogged, kinked, or pinched. • Malfunction in ECU.	03
15	Throttle position sensor: open or short circuit detected.	• Open or short circuit in sub-wire harness. • Open or short circuit in wire harness. • Defective throttle position sensor. • Malfunction in ECU. • Improperly installed throttle position sensor.	01
16	Stuck throttle position sensor is detected.	• Stuck throttle position sensor • Malfunction in ECU.	01

Fault code No.	Symptom	Probable cause of malfunction	Diagnostic code No.
19	A break or disconnection of the black/red lead of the ECU is detected.	• Open or short circuit in front cowling wire harness. • Open or short circuit in wire harness. • Malfunction in ECU. • Defective relay unit (diode).	20
21	Coolant temperature sensor: open or short circuit detected.	• Open or short circuit in wire harness. • Defective coolant temperature sensor. • Malfunction in ECU. • Improperly installed coolant temperature sensor.	06
22	Intake air temperature sensor: open or short circuit detected.	• Open or short circuit in wire harness. • Defective intake temperature sensor. • Malfunction in ECU. • Improperly installed intake air temperature sensor.	05
24	No normal signal is received from the O_2 sensor.	• Open or short circuit in sub-wire harness. • Open or short circuit in front cowling wire harness. • Open or short circuit in wire harness. • Defective O_2 sensor. • Malfunction in ECU. • Improperly installed O_2 sensor.	—
30	Latch up detected. No normal signal is received from the lean angle sensor.	• The vehicle has overturned. • Defective lean angle sensor. • Malfunction in ECU. • Improperly installed lean angle sensor.	08
31	The amount of air-fuel ratio feedback compensation is maintained continuously in the vicinity of the upper limit (lean air-fuel ratio).	• Open or short circuit in sub-wire harness. • Open or short circuit in front cowling wire harness. • Open or short circuit in wire harness. • Fuel pressure too low. • Clogged injectors. • Defective O_2 sensor (unable to output a rich signal). • Malfunction in ECU. • Malfunction in other areas of the fuel system.	01
32	The amount of air-fuel ratio feedback compensation is maintained continuously in the vicinity of the lower limit (rich air-fuel ratio).	• Open or short circuit in sub-wire harness. • Open or short circuit in front cowling wire harness. • Open or short circuit in wire harness. • Fuel pressure too high. • Faulty injectors (excessive injection volume). • Defective O_2 sensor (unable to output a lean signal). • Malfunction in ECU. • Malfunction in other areas of the fuel system.	01

Fault code No.	Symptom	Probable cause of malfunction	Diagnostic code No.
33	Malfunction detected in the primary wire of the cylinders-#1/#4 ignition coil.	• Open or short circuit in front cowling wire harness. • Open or short circuit in wire harness. • Malfunction in cylinders-#1/#4 ignition coil. • Malfunction in ECU.	30
34	Malfunction detected in the primary wire of the cylinders-#2/#3 ignition coil.	• Open or short circuit in front cowling wire harness. • Open or short circuit in wire harness. • Malfunction in cylinders-#2/#3 ignition coil. • Malfunction in ECU.	31
41	Lean angle sensor: open or short circuit detected.	• Open or short circuit in front cowling wire harness. • Open or short circuit in wire harness. • Defective lean angle sensor. • Malfunction in ECU.	08
42	No normal signals are received from the rear wheel sensor. Open or short circuit is detected in the neutral circuit of the gear position switch.	• Open or short circuit in ABS wire harness. • Open or short circuit in front cowling wire harness. • Open or short circuit in wire harness. • Defective rear wheel sensor. • Malfunction in rear wheel sensor detected. • Defective gear position switch. • Malfunction in the engine side of the gear position switch. • Malfunction in ECU. • Malfunction in ABS ECU.	07 21
43	The ECU is unable to monitor the battery voltage (an open or short circuit in the line to the ECU).	• Open or short circuit in front cowling wire harness. • Open or short circuit in wire harness. • Malfunction in ECU.	09
44	An error is detected while reading or writing on EEPROM (CO adjustment value).	• Malfunction in ECU. (The CO adjustment value is not properly written on or read from the internal memory).	60
46	Power supply to the fuel injection system is not normal.	Malfunction in the charging system. Refer to “CHARGING SYSTEM” on page 8-17.	—
50	Faulty ECU memory. (When this malfunction is detected in the ECU, the fault code number might not appear on the meter.)	• Malfunction in ECU. (The program and data are not properly written on or read from the internal memory.)	—
Er-1	No signals are received from the ECU.	• Open or short circuit in front cowling wire harness. • Open or short circuit in wire harness. • Malfunction in meter assembly. • Malfunction in ECU. • Defective wire connection of the ECU coupler.	—

Fault code No.	Symptom	Probable cause of malfunction	Diagnostic code No.
Er-2	No signals are received from the ECU within the specified duration.	• Open or short circuit in front cowling wire harness. • Open or short circuit in wire harness. • Malfunction in meter assembly. • Malfunction in ECU.	—
Er-3	Data from the ECU cannot be received correctly.	• Open or short circuit in front cowling wire harness. • Open or short circuit in wire harness. • Malfunction in meter assembly. • Malfunction in ECU.	—
Er-4	Non-registered data has been received from the meter.	• Open or short circuit in front cowling wire harness. • Open or short circuit in wire harness. • Malfunction in meter assembly. • Malfunction in ECU.	—

Sensor operation table

Diagnostic code No.	Item	Meter display	Checking method
01	Throttle angle		
	• Fully closed position	15–17	Check with throttle fully closed.
	• Fully opened position	97–100	Check with throttle fully open.
03	Pressure difference (atmospheric pressure and intake air pressure)	Displays the intake air pressure.	Set the engine stop switch to "◯", and then push the start switch "⊛". (If the display value changes, the performance is OK.)
05	Intake air temperature	Displays the intake air temperature.	Compare the actually measured intake air temperature with the meter display value. (*1)
06	Coolant temperature	Displays the coolant temperature.	Compare the actually measured coolant temperature with the meter display value.
07	Vehicle speed pulse	0–999	Check that the number increases when the rear wheel is rotated. The number is cumulative and does not reset each time the wheel is stopped.

Diagnostic code No.	Item	Meter display	Checking method
08	Lean angle sensor • Upright • Overturned	 0.4–1.4 3.7–4.4	Remove the lean angle sensor and incline it more than 65 degrees.
09	Fuel system voltage (battery voltage)	Approximately 12.0	Set the engine stop switch to "◯", and then compare with the actually measured battery voltage. (If the battery voltage is lower, perform recharging.)
20	Sidestand switch • Stand retracted • Stand extended	 ON OFF	Set on/off the Sidestand switch. (with the transmission in gear.)
21	Gear position switch • Neutral • In gear	 ON OFF	Shift the transmission.
60	EEPROM fault code display • No history • History exists	 00 01–04 (Cylinder fault code) • (If more than one cylinder is defective, the display alternates every two seconds to show all the detected cylinder numbers. When all cylinder numbers are shown, the display repeats the same process.)	—
61	Malfunction history code display • No history • History exists	 00 Fault codes 11-50 • (If more than one code number is detected, the display alternates every two seconds to show all the detected code numbers. When all code numbers are shown, the display repeats the same process.)	—

Diagnostic code No.	Item	Meter display	Checking method
62	Malfunction history code erasure • No history • History exists	 0 • Displays the total number of malfunctions, including the current malfunction, that have occurred since the history was last erased. (For example, if there have been three malfunctions, “03” is displayed.)	 — To erase the history, set the engine stop switch from “⊗” to “◯”.
70	Control number	0–255	—

*1 If it is not possible to check the intake temperature, use the ambient temperature as reference (use the compared values for reference).

Actuator operation table

Diagnostic code No.	Item	Actuation	Checking method
30	Cylinders-#1/#4 ignition coil	Actuates the cylinders-#1/#4 ignition coil five times at one-second intervals. Illuminates the engine trouble warning light.	Check the spark five times. • Connect an ignition checker.
31	Cylinders-#2/#3 ignition coil	Actuates the cylinders-#2/#3 ignition coil five times at one-second intervals. Illuminates the engine trouble warning light.	Check the spark five times. • Connect an ignition checker.
36	Injector #1	Actuates the injector #1 five times at one-second intervals. Illuminates the engine trouble warning light.	Check the operating sound of the injector #1 five times.
37	Injector #2	Actuates the injector #2 five times at one-second intervals. Illuminates the engine trouble warning light.	Check the operating sound of the injector #2 five times.
38	Injector #3	Actuates the injector #3 five times at one-second intervals. Illuminates the engine trouble warning light.	Check the operating sound of the injector #3 five times.

Diagnostic code No.	Item	Actuation	Checking method
39	Injector #4	Actuates the injector #4 five times at one-second intervals. Illuminates the engine trouble warning light.	Check the operating sound of the injector #4 five times.
48	Air induction system solenoid	Actuates the air induction system solenoid five times at one-second intervals. Illuminates the engine trouble warning light.	Check the operating sound of the air induction system solenoid five times.
50	Fuel pump relay	Actuates the fuel pump relay five times at one-second intervals. Illuminates the engine trouble warning light. (The engine trouble warning light is OFF when the relay is ON, and the engine trouble warning light is ON when the relay is OFF).	Check the operating sound of the fuel pump relay five times.
51	Radiator fan motor relay	Actuates the radiator fan motor relay for five cycles of five seconds. (ON 2 seconds, OFF 3 seconds) Illuminates the engine trouble warning light and rotates the radiator fan motors.	Check the operating sound of the radiator fan motor relay five times.
52	Headlight relay (on/off)	Actuates the headlight relay (on/off) for five cycles of five seconds. (ON 2 seconds, OFF 3 seconds) Illuminates the engine trouble warning light and headlight.	Check the operating sound of the headlight relay (on/off) five times.
57	Grip warmer (OPTION)	Illuminates the engine trouble warning light.	Disconnect the grip warmer control unit coupler from the control unit, if equipped, and then connect a pocket tester to the terminals (light green/white–black) of the coupler (wire harness side) and check for continuity.

EAS27450

TROUBLESHOOTING DETAILS

This section describes the measures per fault code number displayed on the meter. Check and service the items or components that are the probable cause of the malfunction following the order given. After the check and service of the malfunctioning part has been completed, reset the meter display according to the reinstatement method.

Fault code No.:
Code number displayed on the meter when the engine failed to work normally. Refer to “Self-Diagnostic Function table”.
Diagnostic code No.:
Diagnostic code number to be used when the diagnostic mode is operated. Refer to “DIAGNOSTIC MODE” on page 8-49.

Fault code No.	**11**	**Symptom**	**No normal signals are received from the cylinder identification sensor.**
Diagnostic code No.		**—**	**—**

Order	**Item/components and probable cause**	**Check or maintenance job**	**Reinstatement method**
1	Installed condition of cylinder identification sensor.	Check for looseness or pinching.	Starting the engine and operating it at idle.
2	Connections • Cylinder identification sensor coupler • Wire harness ECU coupler • Sub-wire harness coupler	• Check the coupler for any pins that may be pulled out. • Check the locking condition of the coupler. • If there is a malfunction, repair it and connect the coupler securely.	
3	Open or short circuit in wire harness and/or sub-wire harness.	• Repair or replace if there is an open or short circuit. • Between cylinder identification sensor coupler and ECU coupler. (blue–blue) (white/black–white/black) (black/blue–black/blue)	
4	Defective cylinder identification sensor.	• Replace if defective. Refer to “CHECKING THE CYLINDER IDENTIFICATION SENSOR” on page 8-168.	

Fault code No.	12	Symptom	No normal signals are received from the crankshaft position sensor.
Diagnostic code No.		—	—

Order	Item/components and probable cause	Check or maintenance job	Reinstatement method
1	Installed condition of crankshaft position sensor	Check for looseness or pinching.	Cranking the engine.
2	Connections • Crankshaft position sensor coupler • Wire harness ECU coupler	• Check the coupler for any pins that may be pulled out. • Check the locking condition of the coupler. • If there is a malfunction, repair it and connect the coupler securely.	
3	Open or short circuit in wire harness.	• Repair or replace if there is an open or short circuit. • Between the crankshaft position sensor coupler and ECU coupler. (gray–gray) (black/blue–black/blue)	
4	Defective crankshaft position sensor.	• Replace if defective. Refer to “CHECKING THE CRANKSHAFT POSITION SENSOR” on page 8-162.	

Fault code No.	13	Symptom	Intake air pressure sensor: open or short circuit detected.
Diagnostic code No.		03	Intake air pressure sensor

Order	Item/components and probable cause	Check or maintenance job	Reinstatement method
1	Connections • Intake air pressure sensor coupler • Wire harness ECU coupler • Sub-wire harness coupler	• Check the coupler for any pins that may be pulled out. • Check the locking condition of the coupler. • If there is a malfunction, repair it and connect the coupler securely.	Turning the main switch to "ON".
2	Open or short circuit in wire harness and/or sub-wire harness.	• Repair or replace if there is an open or short circuit. • Between intake air pressure sensor coupler and ECU coupler. (black/blue–black/blue) (pink/white–pink/white) (blue–blue)	
3	Defective intake air pressure sensor	• Execute the diagnostic mode. (Code No.03) • Replace if defective. Refer to "CHECKING THE INTAKE AIR PRESSURE SENSOR" on page 8-168.	

Fault code No.	14	Symptom	Intake air pressure sensor: hose system malfunction (clogged or detached hose).
Diagnostic code No.		03	Intake air pressure sensor

Order	Item/components and probable cause	Check or maintenance job	Reinstatement method
1	Intake air pressure sensor hose	• Check the intake air pressure sensor hose condition. • Repair or replace the sensor hose.	Starting the engine and operating it at idle.
2	Intake air pressure sensor malfunction at intermediate electrical potential.	• Check and repair the connection. • Replace it if there is a malfunction.	
3	Connections • Intake air pressure sensor coupler • Wire harness ECU coupler • Sub-wire harness coupler	• Check the coupler for any pins that may be pulled out. • Check the locking condition of the coupler. • If there is a malfunction, repair it and connect the coupler securely.	

Fault code No.	15	Symptom	Throttle position sensor: open or short circuit detected.
Diagnostic code No.		01	Throttle position sensor

Order	Item/components and probable cause	Check or maintenance job		Reinstatement method
1	Installed condition of throttle position sensor.	Check for looseness or pinching.		Turning the main switch to "ON".
2	Connections • Throttle position sensor coupler • Wire harness ECU coupler • Sub-wire harness coupler	• Check the coupler for any pins that may be pulled out. • Check the locking condition of the coupler. • If there is a malfunction, repair it and connect the coupler securely.		
3	Open or short circuit in wire harness and/or sub-wire harness.	• Repair or replace if there is an open or short circuit. • Between throttle position sensor coupler and ECU coupler. (black/blue–black/blue) (yellow–yellow) (blue–blue)		
4	Throttle position sensor lead wire open circuit output voltage check.	• Check for open circuit and replace the throttle position sensor. (black/blue–yellow)		
		Open circuit item	Output voltage	
		Ground wire open circuit	5 V	
		Output wire open circuit	0 V	
		Power supply wire open circuit	0 V	
5	Defective throttle position sensor.	• Execute the diagnostic mode. (Code No.01) • Replace if defective. Refer to "CHECKING THE THROTTLE POSITION SENSOR" on page 8-167.		

Fault code No.	16	Symptom	Stuck throttle position sensor is detected.
Diagnostic code No.		01	Throttle position sensor

Order	Item/components and probable cause	Check or maintenance job		Reinstatement method
1	Installed condition of throttle position sensor.	Check for looseness or pinching.		Starting the engine and operating it at idle, and then by racing it.
2	Connections • Throttle position sensor coupler • Wire harness ECU coupler • Sub-wire harness coupler	• Check the coupler for any pins that may be pulled out. • Check the locking condition of the coupler. • If there is a malfunction, repair it and connect the coupler securely.		
3	Throttle position sensor lead wire open circuit output voltage check.	• Check for open circuit and replace the throttle position sensor. (black/blue–yellow)		
		Open circuit item	Output voltage	
		Ground wire open circuit	5 V	
		Output wire open circuit	0 V	
		Power supply wire open circuit	0 V	
4	Defective throttle position sensor.	• Execute the diagnostic mode. (Code No.01) • Replace if defective. Refer to “CHECKING THE THROTTLE POSITION SENSOR” on page 8-167.		

Fault code No.	19	Symptom	A break or disconnection of the black/red lead of the ECU is detected.
Diagnostic code No.		20	Sidestand switch

Order	Item/components and probable cause	Check or maintenance job	Reinstatement method
1	Connections • Wire harness ECU coupler • Front cowling wire harness coupler	• Execute the diagnostic mode. (Code No.20) • Check the coupler for any pins that may be pulled out. • Check the locking condition of the coupler. • If there is a malfunction, repair it and connect the coupler securely.	If the transmission is in gear, retracting the sidestand. If the transmission is in neutral, reconnecting the wiring.
2	Open or short circuit in wire harness and/or front cowling wire harness.	• Repair or replace if there is an open or short circuit. • Between ECU and black/red lead.	
3	Defective sidestand switch	• Replace if defective. Refer to “CHECKING THE SWITCHES” on page 8-149.	
4	Defective relay unit (diode)	• Replace if defective. Refer to “CHECKING THE RELAYS” on page 8-157.	

Fault code No.	21	Symptom	Coolant temperature sensor: open or short circuit detected.
Diagnostic code No.		06	Coolant temperature sensor

Order	Item/components and probable cause	Check or maintenance job	Reinstatement method
1	Installed condition of coolant temperature sensor	Check for looseness or pinching.	Turning the main switch to “ON”.
2	Connections • Coolant temperature sensor coupler • Wire harness ECU coupler	• Check the coupler for any pins that may be pulled out. • Check the locking condition of the coupler. • If there is a malfunction, repair it and connect the coupler securely.	
3	Open or short circuit in wire harness.	• Repair or replace if there is an open or short circuit. • Between coolant temperature sensor coupler and ECU coupler. (black/blue–black/blue) (green/white–green/white)	
4	Defective coolant temperature sensor.	• Execute the diagnostic mode. (Code No.06) • Replace if defective. Refer to “CHECKING THE COOLANT TEMPERATURE SENSOR” on page 8-167.	

Fault code No.	22	Symptom	Intake air temperature sensor: open or short circuit detected.
Diagnostic code No.		05	Intake air temperature sensor

Order	Item/components and probable cause	Check or maintenance job	Reinstatement method
1	Installed condition of intake air temperature sensor	Check for looseness or pinching.	Turning the main switch to “ON”.
2	Connections • Intake air temperature sensor coupler • Wire harness ECU coupler	• Check the coupler for any pins that may be pulled out. • Check the locking condition of the coupler. • If there is a malfunction, repair it and connect the coupler securely.	
3	Open or short circuit in wire harness.	• Repair or replace if there is an open or short circuit. • Between intake air temperature sensor coupler and ECU coupler. (black/blue–black/blue) (brown/white–brown/white)	
4	Defective intake air temperature sensor.	• Execute the diagnostic mode. (Code No.05) • Replace if defective. Refer to “CHECKING THE INTAKE AIR TEMPERATURE SENSOR” on page 8-169.	

Fault code No.	24	Symptom	No normal signal is received from the O_2 sensor.
Diagnostic code No.		—	—

Order	Item/components and probable cause	Check or maintenance job	Reinstatement method
1	Installed condition of O_2 sensor	Check for looseness or pinching.	Starting the engine, warming it up until the coolant temperature is 60 °C or more, and then running it between 2000–3000 r/min until the engine trouble warning light turns off.
2	Connections • O_2 sensor coupler • Relay unit coupler • Wire harness ECU coupler • Sub-wire harness coupler • Front cowling wire harness coupler	• Check the coupler for any pins that may be pulled out. • Check the locking condition of the coupler. • If there is a malfunction, repair it and connect the coupler securely.	
3	Open or short circuit in wire harness, sub-wire harness, and/or front cowling wire harness.	• Repair or replace if there is an open or short circuit. • Between O_2 sensor coupler and ECU coupler. (black/blue–black/blue) (gray/white–gray/white) • Between O_2 sensor coupler and relay unit coupler. (red/blue–red/blue) • Between O_2 sensor coupler and sub-wire harness coupler. (black–black)	
4	Check fuel pressure.	Refer to “CHECKING THE FUEL PRESSURE” on page 7-7.	
5	Defective O_2 sensor	Replace if defective.	

Fault code No.	30	Symptom	Latch up detected. No normal signal is received from the lean angle sensor.
Diagnostic code No.		08	Lean angle sensor

Order	Item/components and probable cause	Check or maintenance job	Reinstatement method
1	The vehicle has overturned.	Raise the vehicle upright.	Turning the main switch to "ON" (however, the engine cannot be restarted unless the main switch is first turned "OFF").
2	Installed condition of lean angle sensor	Check the installed direction and condition of the sensor.	
3	Connections • Lean angle sensor coupler • Wire harness ECU coupler	• Check the coupler for any pins that may be pulled out. • Check the locking condition of the coupler. • If there is a malfunction, repair it and connect the coupler securely.	
4	Defective lean angle sensor	• Execute the diagnostic mode. (Code No.08) • Replace if defective. Refer to "CHECKING THE LEAN ANGLE SENSOR" on page 8-163.	

Fault code No.	31	Symptom	The amount of air-fuel ratio feedback compensation is maintained continuously in the vicinity of the upper limit (lean air-fuel ratio).
Diagnostic code No.		01	Throttle position sensor

Order	Item/components and probable cause	Check or maintenance job	Reinstatement method
1	Connections • O_2 sensor coupler • Relay unit coupler • Wire harness ECU coupler • Sub-wire harness coupler • Front cowling wire harness coupler	• Check the coupler for any pins that may be pulled out. • Check the locking condition of the coupler. • If there is a malfunction, repair it and connect the coupler securely.	Starting the engine, warming it up until the coolant temperature is 60 °C or more, and then running it between 2000–3000 r/min until the engine trouble warning light turns off.
2	Open or short circuit in wire harness, sub-wire harness, and/or front cowling wire harness.	• Repair or replace if there is an open or short circuit. • Between O_2 sensor coupler and ECU coupler. (black/blue–black/blue) (gray/white–gray/white) • Between O_2 sensor coupler and relay unit coupler. (red/blue–red/blue) • Between O_2 sensor coupler and sub-wire harness coupler. (black–black)	
3	Defective O_2 sensor	Replace if defective. (Unable to output a rich signal)	
4	Clogged injector	• Replace if defective. Refer to “CHECKING THE INJECTORS” on page 7-7.	

Fault code No.	31	Symptom	The amount of air-fuel ratio feedback compensation is maintained continuously in the vicinity of the upper limit (lean air-fuel ratio).
Diagnostic code No.		01	Throttle position sensor

Order	Item/components and probable cause	Check or maintenance job	Reinstatement method
5	The fuel pressure is too low.	• Compare the fuel pressures at idle and with throttle open. • About the same → Normal • Too low → Refer to the following table.	
		• Check the fuel pump. • Replace if defective. Refer to “CHECKING THE FUEL PUMP BODY” on page 7-2.	
		• Check the delivery hose for pinching or kinking. • Repair or replace if there is a malfunction.	
		• Check the pressure regulator. • Replace if defective. Refer to “CHECKING THE FUEL PRESSURE” on page 7-7.	
		• Check the throttle position sensor. • Execute the diagnostic mode. (Code No.01) • Replace if defective.	
		• Check the fuel system (disconnection, etc.). • Repair or replace if there is a malfunction.	
		• Check the intake system (improper sealing, etc.). • Repair or replace if there is a malfunction.	

Fault code No.	32	Symptom	The amount of air-fuel ratio feedback compensation is maintained continuously in the vicinity of the lower limit (rich air-fuel ratio).
Diagnostic code No.		01	Throttle position sensor

Order	Item/components and probable cause	Check or maintenance job	Reinstatement method
1	Connections • O_2 sensor coupler • Relay unit coupler • Wire harness ECU coupler • Sub-wire harness coupler • Front cowling wire harness coupler	• Check the coupler for any pins that may be pulled out. • Check the locking condition of the coupler. • If there is a malfunction, repair it and connect the coupler securely.	Starting the engine, warming it up until the coolant temperature is 60 °C or more, and then running it between 2000–3000 r/min until the engine trouble warning light turns off.
2	Open or short circuit in wire harness, sub-wire harness and/or front cowling wire harness.	• Repair or replace if there is an open or short circuit. • Between O_2 sensor coupler and ECU coupler. (black/blue–black/blue) (gray/white–gray/white) • Between O_2 sensor coupler and relay unit coupler. (red/blue–red/blue) • Between O_2 sensor coupler and sub-wire harness coupler. (black–black)	
3	Defective O_2 sensor	Replace if defective. (Unable to output a rich signal)	
4	Excessive volume of fuel injected by injector.	• Check the injector. • Check the fuel pressure. Refer to “CHECKING THE FUEL PRESSURE” on page 7-7.	

Fault code No.	32	Symptom	The amount of air-fuel ratio feedback compensation is maintained continuously in the vicinity of the lower limit (rich air-fuel ratio).
Diagnostic code No.		01	Throttle position sensor

Order	Item/components and probable cause	Check or maintenance job	Reinstatement method
5	The fuel pressure is too high.	• Compare the fuel pressures at idle and with throttle open. About the same → Normal Too high → Refer to the following table.	
		• Checking the pressure regulator. • Replace if defective. Refer to “CHECKING THE FUEL PRESSURE” on page 7-7.	
		• Checking the throttle position sensor. • Execute the diagnostic mode. (Code No.01) • Replace if defective.	
		• Checking the fuel system (clogging, etc.). • Repair or replace if there is a malfunction.	

Fault code No.	33	Symptom	Malfunction detected in the primary wire of the cylinders-#1/#4 ignition coil.
Diagnostic code No.		30	Cylinders-#1/#4 ignition coil

Order	Item/components and probable cause	Check or maintenance job	Reinstatement method
1	Connections • Cylinders-#1/#4 ignition coil connector (primary coil side) • Wire harness ECU coupler • Front cowling wire harness coupler	• Check the coupler for any pins that may be pulled out. • Check the locking condition of the coupler. • If there is a malfunction, repair it and connect the coupler securely.	Starting the engine and operating it at idle.
2	Open or short circuit in wire harness and/or front cowling wire harness.	• Repair or replace if there is an open or short circuit. • Between cylinders-#1/#4 ignition coil connector and ECU coupler. (orange–orange) • Between cylinders-#1/#4 ignition coil connector and right handlebar switch coupler. (red/black–red/black)	
3	Defective cylinders-#1/#4 ignition coil	• Execute the diagnostic mode. (Code No.30) • Test the primary and secondary coils for continuity. • Replace if defective. Refer to “CHECKING THE IGNITION COILS” on page 8-161.	

Fault code No.	34	Symptom	Malfunction detected in the primary wire of the cylinders-#2/#3 ignition coil.
Diagnostic code No.		31	Cylinders-#2/#3 ignition coil

Order	Item/components and probable cause	Check or maintenance job	Reinstatement method
1	Connections • Cylinders-#2/#3 ignition coil connector (primary coil side) • Wire harness ECU coupler • Front cowling wire harness coupler	• Check the coupler for any pins that may be pulled out. • Check the locking condition of the coupler. • If there is a malfunction, repair it and connect the coupler securely.	Starting the engine and operating it at idle.
2	Open or short circuit in wire harness and/or front cowling wire harness.	• Repair or replace if there is an open or short circuit. • Between cylinders-#2/#3 ignition coil connector and ECU coupler. (gray/red–gray/red) • Between cylinders-#2/#3 ignition coil connector and right handlebar switch coupler. (red/blue–red/black)	
3	Defective cylinders-#2/#3 ignition coil	• Execute the diagnostic mode. (Code No.31) • Test the primary and secondary coils for continuity. • Replace if defective. Refer to “CHECKING THE IGNITION COILS” on page 8-161.	

Fault code No.	41	Symptom	Lean angle sensor: open or short circuit detected.
Diagnostic code No.		08	Lean angle sensor

Order	Item/components and probable cause	Check or maintenance job	Reinstatement method
1	Connections • Lean angle sensor coupler • Wire harness ECU coupler • Front cowling wire harness coupler	• Check the coupler for any pins that may be pulled out. • Check the locking condition of the coupler. • If there is a malfunction, repair it and connect the coupler securely.	Turning the main switch to “ON”.
2	Open or short circuit in wire harness and/or front cowling wire harness.	• Repair or replace if there is an open or short circuit. • Between lean angle sensor coupler and ECU coupler. (black/blue–black/blue) (yellow/green–yellow/green) (blue–blue)	
3	Defective lean angle sensor	• Execute the diagnostic mode. (Code No.08) • Replace if defective. Refer to “CHECKING THE LEAN ANGLE SENSOR” on page 8-163.	

Fault code No.	42	Symptom		A. No normal signals are received from the rear wheel sensor. B. Open or short circuit is detected in the neutral circuit of the gear position switch.
Diagnostic code No.		A	07	Rear wheel sensor
		B	21	Gear position switch (neutral circuit)

Order	Item/components and probable cause	Check or maintenance job	Reinstatement method
A-1	Connections • Rear wheel sensor coupler • Wire harness ECU coupler • ABS ECU coupler • ABS wire harness coupler	• Check the coupler for any pins that may be pulled out. • Check the locking condition of the coupler. • If there is a malfunction, repair it and connect the coupler securely.	Starting the engine, and inputting the vehicle speed signals by operating the vehicle at a 20 to 30 km/h.
A-2	Open or short circuit in wire harness and/or ABS wire harness.	• Repair or replace if there is an open or short circuit. • Between rear wheel sensor coupler and ABS ECU coupler. (white–white) (black–black) • Between ABS ECU coupler and ECU coupler. (white/yellow–white/yellow)	
A-3	Sensor rotor for detecting vehicle speed has broken.	• Replace the rear wheel. Refer to “REAR WHEEL” on page 4-20.	
A-4	Defective rear wheel sensor	• Execute the diagnostic mode. (Code No.07) • Replace if defective. Refer to “MAINTENANCE OF THE REAR WHEEL SENSOR AND SENSOR ROTOR” on page 4-22.	

Fault code No.	42	Symptom		A. No normal signals are received from the rear wheel sensor. B. Open or short circuit is detected in the neutral circuit of the gear position switch.
Diagnostic code No.		A	07	Rear wheel sensor
		B	21	Gear position switch (neutral circuit)

Order	Item/components and probable cause	Check or maintenance job	Reinstatement method
B-1	Connections • Gear position switch coupler • Wire harness ECU coupler • Front cowling wire harness coupler	• Check the coupler for any pins that may be pulled out. • Check the locking condition of the coupler. • If there is a malfunction, repair it and connect the coupler securely.	Starting the engine, and inputting the vehicle speed signals by operating the vehicle at a 20 to 30 km/h.
B-2	Open or short circuit in wire harness and/or front cowling wire harness.	• Repair or replace if there is an open or short circuit. • Between gear position switch coupler and relay unit coupler. (sky blue–sky blue) • Between relay unit coupler and ECU coupler. (black/yellow–black/yellow)	
B-3	Faulty shift drum (neutral detection area)	• Replace if defective. Refer to “TRANSMISSION” on page 5-94.	
B-4	Defective gear position switch (neutral circuit)	• Execute the diagnostic mode. (Code No.21) • Replace if defective. Refer to “CHECKING THE SWITCHES” on page 8-149.	

Fault code No.	43	Symptom	The ECU is unable to monitor the battery voltage (an open or short circuit in the line to the ECU).
Diagnostic code No.		09	Fuel system voltage

Order	Item/components and probable cause	Check or maintenance job	Reinstatement method
1	Connections • Relay unit coupler • Main wire harness ECU coupler • Front cowling wire harness coupler	• Check the coupler for any pins that may be pulled out. • Check the locking condition of the coupler. • If there is a malfunction, repair it and connect the coupler securely.	Starting the engine and operating it at idle.
2	Open or short circuit in the wire harness and/or sub-wire harness.	• Repair or replace if there is an open or short circuit. • Between relay unit coupler and ECU coupler. (blue/yellow–blue/yellow) (red/blue–red/blue) • Between relay unit coupler and main switch coupler. (red–brown/blue) • Between relay unit coupler and engine stop switch coupler. (red/black–red/black)	
3	Malfunction or open circuit in fuel pump relay.	• Execute the diagnostic mode. (Code No. 09) • Replace if defective. • If there is no malfunction with the fuel pump relay, replace the ECU.	

Fault code No.	44	Symptom	An error is detected while reading or writing on EEPROM (CO adjustment value).
Diagnostic code No.		60	EEPROM fault cylinder No.

Order	Item/components and probable cause	Check or maintenance job	Reinstatement method
1	Malfunction in ECU.	• Set the faulty cylinder's exhaust gas volume. 1. Execute the diagnostic mode (Code No. 60) to check the faulty cylinder number. (If multiple cylinders are defective, the numbers of the faulty cylinders are displayed alternately at 2-second intervals.) 2. Execute the CO adjustment mode and set the exhaust gas volume of the faulty cylinder to "0". Refer to "ADJUSTING THE EXHAUST GAS VOLUME" on page 3-7. • Replace ECU if it does not recover from the malfunction.	Turning the main switch to "ON". (Readjust the exhaust gas volume after it is reinstated.)

Fault code No.	46	Symptom	Power supply to the fuel injection system is not normal.
Diagnostic code No.		—	—

Order	Item/components and probable cause	Check or maintenance job	Reinstatement method
1	Connections • Wire harness ECU coupler	• Check the coupler for any pins that may be pulled out. • Check the locking condition of the coupler. • If there is a malfunction, repair it and connect the coupler securely.	Starting the engine and operating it at idle.
2	Faulty battery.	• Replace or charge the battery. Refer to “CHECKING AND CHARGING THE BATTERY” on page 8-154.	
3	Malfunction in rectifier/regulator	• Replace if defective. Refer to “CHARGING SYSTEM” on page 8-17.	
4	Open or short circuit in wire harness.	• Repair or replace if there is an open or short circuit. • Between battery and main switch coupler. (red–red) • Between main switch coupler and ignition fuse. (brown/blue–brown/blue) • Between ignition fuse and ECU coupler. (red/white–red/white)	

Fault code No.	50	Symptom	Faulty ECU memory. (When this malfunction is detected in the ECU, the fault code number might not appear on the meter.)
Diagnostic code No.		—	—

Order	Item/components and probable cause	Check or maintenance job	Reinstatement method
1	Malfunction in ECU.	Replace the ECU. **NOTE:** Do not perform this procedure with the main switch turned to “ON”.	Turning the main switch to “ON”.

Fault code No.	Er-1	Symptom	No signals are received from the ECU.
Diagnostic code No.		—	—

Order	Item/components and probable cause	Check or maintenance job	Reinstatement method
1	Connections • Meter assembly coupler • Wire harness ECU coupler • Front cowling wire harness coupler	• Check the coupler for any pins that may be pulled out. • Check the locking condition of the coupler. • If there is a malfunction, repair it and connect the coupler securely.	Turning the main switch to “ON”.
2	Open or short circuit in wire harness and/or front cowling wire harness	• Repair or replace if there is an open or short circuit. • Between meter assembly coupler and ECU coupler. (yellow/blue–yellow/blue)	
3	Malfunction in meter assembly	Replace the meter assembly.	
4	Malfunction in ECU	Replace the ECU.	

Fault code No.	Er-2	Symptom	No signals are received from the ECU within the specified duration.
Diagnostic code No.		—	—

Order	Item/components and probable cause	Check or maintenance job	Reinstatement method
1	Connections • Meter assembly coupler • Wire harness ECU coupler • Front cowling wire harness coupler	• Check the coupler for any pins that may be pulled out. • Check the locking condition of the coupler. • If there is a malfunction, repair it and connect the coupler securely.	Turning the main switch to “ON”.
2	Open or short circuit in wire harness and/or front cowling wire harness	• Repair or replace if there is an open or short circuit. • Between meter assembly coupler and ECU coupler. (yellow/blue–yellow/blue)	
3	Malfunction in meter assembly	Replace the meter assembly.	
4	Malfunction in ECU	Replace the ECU.	

Fault code No.	Er-3	Symptom	Data from the ECU cannot be received correctly.	
Diagnostic code No.		—	—	
Order	**Item/components and probable cause**		**Check or maintenance job**	**Reinstatement method**
1	Connections • Meter assembly coupler • Wire harness ECU coupler • Front cowling wire harness coupler		• Check the coupler for any pins that may be pulled out. • Check the locking condition of the coupler. • If there is a malfunction, repair it and connect the coupler securely.	Turning the main switch to “ON”.
2	Open or short circuit in wire harness and/or front cowling wire harness		• Repair or replace if there is an open or short circuit. • Between meter assembly coupler and ECU coupler. (yellow/blue–yellow/blue)	
3	Malfunction in meter assembly		Replace the meter assembly.	
4	Malfunction in ECU		Replace the ECU.	

Fault code No.	Er-4	Symptom	Non-registered data has been received from the meter.	
Diagnostic code No.		—	—	
Order	**Item/components and probable cause**		**Check or maintenance job**	**Reinstatement method**
1	Connections • Meter assembly coupler • Wire harness ECU coupler • Front cowling wire harness coupler		• Check the coupler for any pins that may be pulled out. • Check the locking condition of the coupler. • If there is a malfunction, repair it and connect the coupler securely.	Turning the main switch to “ON”.
2	Open or short circuit in wire harness and/or front cowling wire harness		• Repair or replace if there is an open or short circuit. • Between meter assembly coupler and ECU coupler. (yellow/blue–yellow/blue)	
3	Malfunction in meter assembly		Replace the meter assembly.	
4	Malfunction in ECU		Replace the ECU.	

EAS27550
FUEL PUMP SYSTEM

EAS27560
CIRCUIT DIAGRAM (1/2)

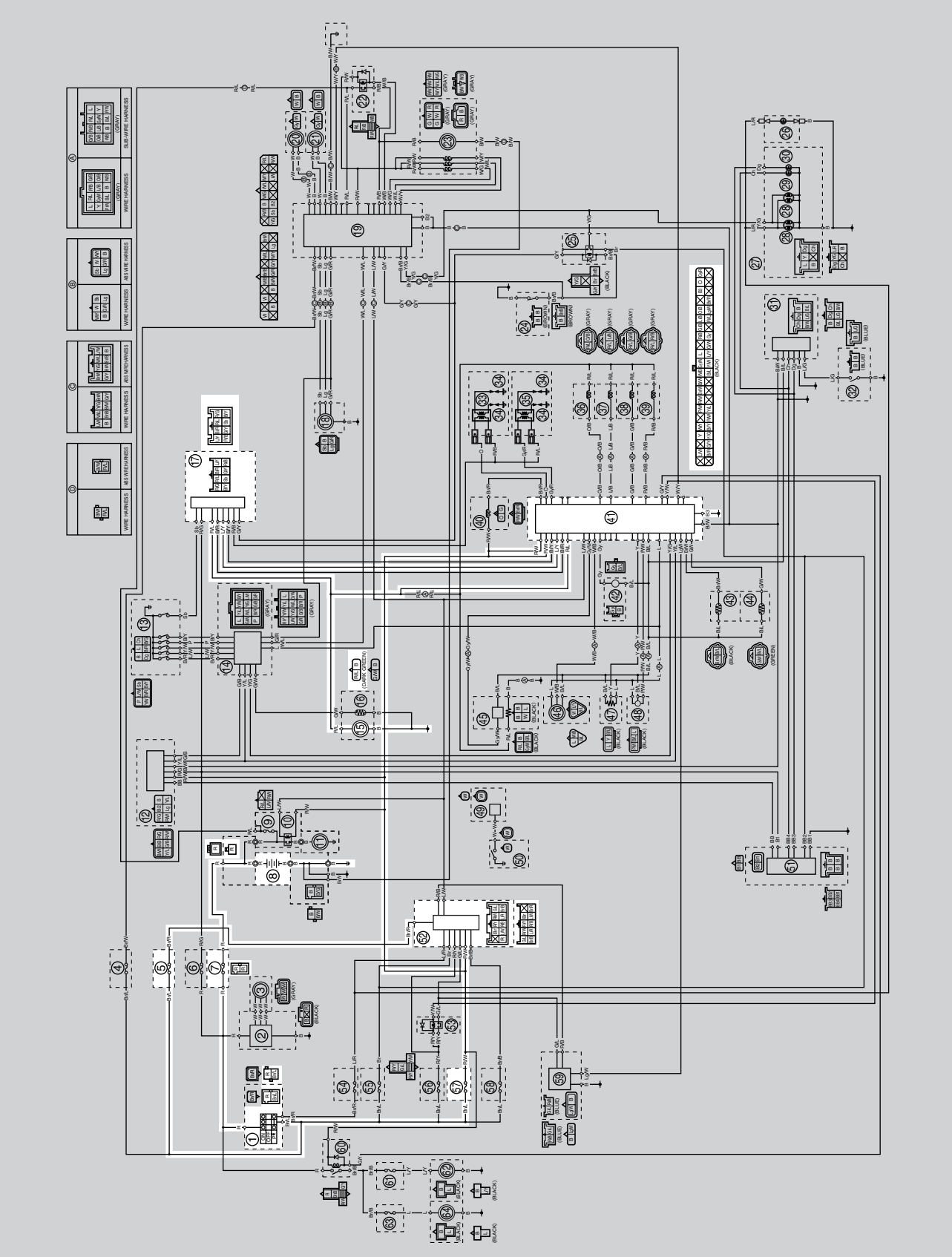

1. Main switch
5. Fuel injection system fuse
7. Main fuse
8. Battery
15. Fuel pump
17. Coupler 2 (wire harness–front cowling wire harness)
41. ECU (engine control unit)
52. Coupler 5 (wire harness–front cowling wire harness)
57. Ignition fuse

ET3P61007

CIRCUIT DIAGRAM (2/2)

Front cowling wire harness

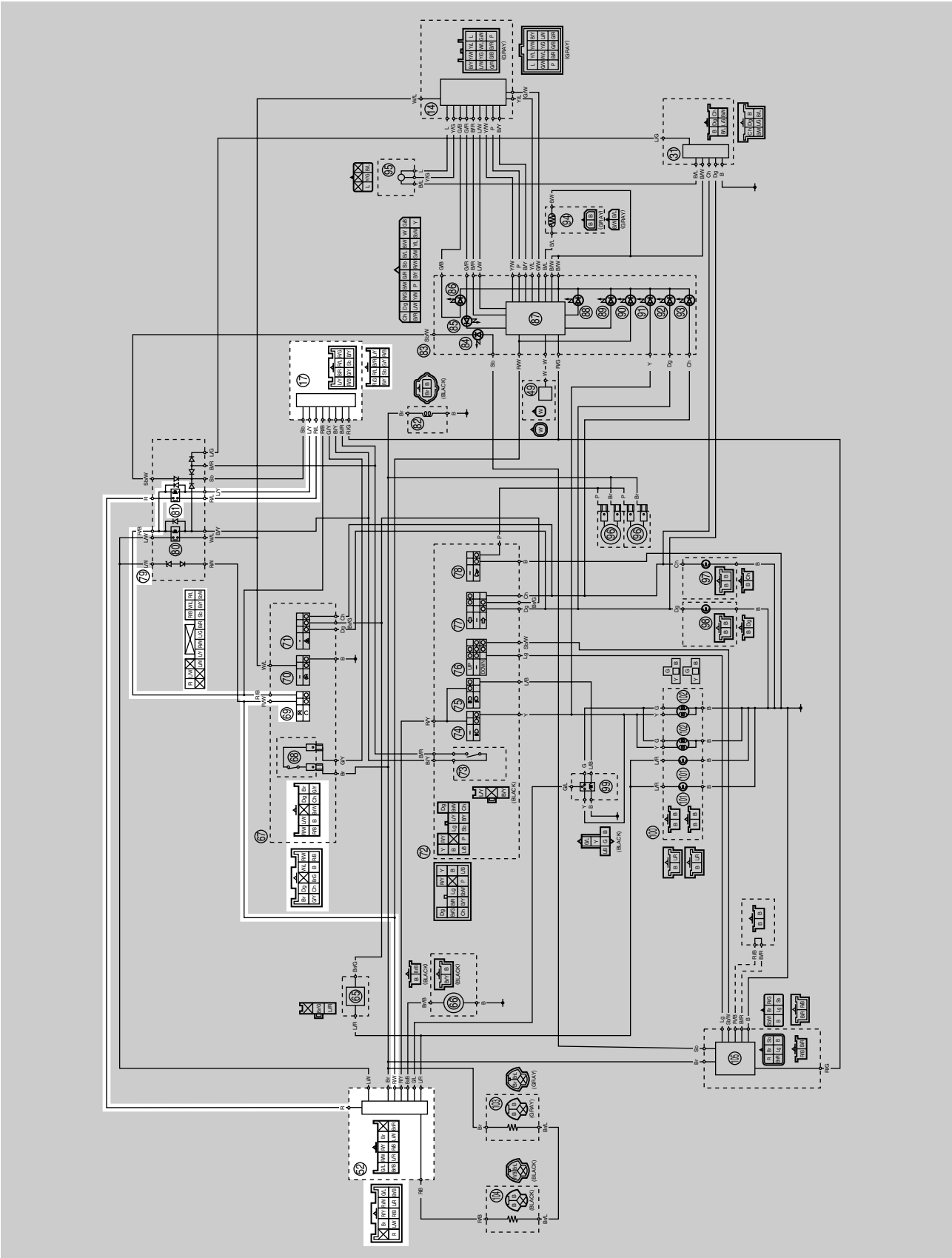

17. Coupler 2 (front cowling wire harness–wire harness)
52. Coupler 5 (front cowling wire harness–wire harness)
69. Engine stop switch
79. Relay unit
81. Fuel pump relay

EAS27570

TROUBLESHOOTING

If the fuel pump fails to operate.

NOTE:

• Before troubleshooting, remove the following part(s):
1. Front cowling assembly
2. Fuel tank
3. T-bar

1. Check the fuses. (Main, ignition, and fuel injection system) Refer to "CHECKING THE FUSES" on page 8-153.	NG →	Replace the fuse(s).
OK ↓		
2. Check the battery. Refer to "CHECKING AND CHARGING THE BATTERY" on page 8-154.	NG →	• Clean the battery terminals. • Recharge or replace the battery.
OK ↓		
3. Check the main switch. Refer to "CHECKING THE SWITCHES" on page 8-149.	NG →	Replace the main switch/immobilizer unit.
OK ↓		
4. Check the engine stop switch. Refer to "CHECKING THE SWITCHES" on page 8-149.	NG →	Replace the right handlebar switch.
OK ↓		
5. Check the relay unit (fuel pump relay). Refer to "CHECKING THE RELAYS" on page 8-157.	NG →	Replace the relay unit.
OK ↓		
6. Check the fuel pump. Refer to "CHECKING THE FUEL PUMP BODY" on page 7-2.	NG →	Replace the fuel pump assembly.
OK ↓		
7. Check the entire fuel pump system wiring. Refer to "CIRCUIT DIAGRAM (1/2)" on page 8-81 and "CIRCUIT DIAGRAM (2/2)" on page 8-83.	NG →	Properly connect or repair the fuel pump system wiring.
OK ↓		
Replace the ECU.		

EAS27610
WINDSHIELD DRIVE SYSTEM

EAS27620
CIRCUIT DIAGRAM (1/2)

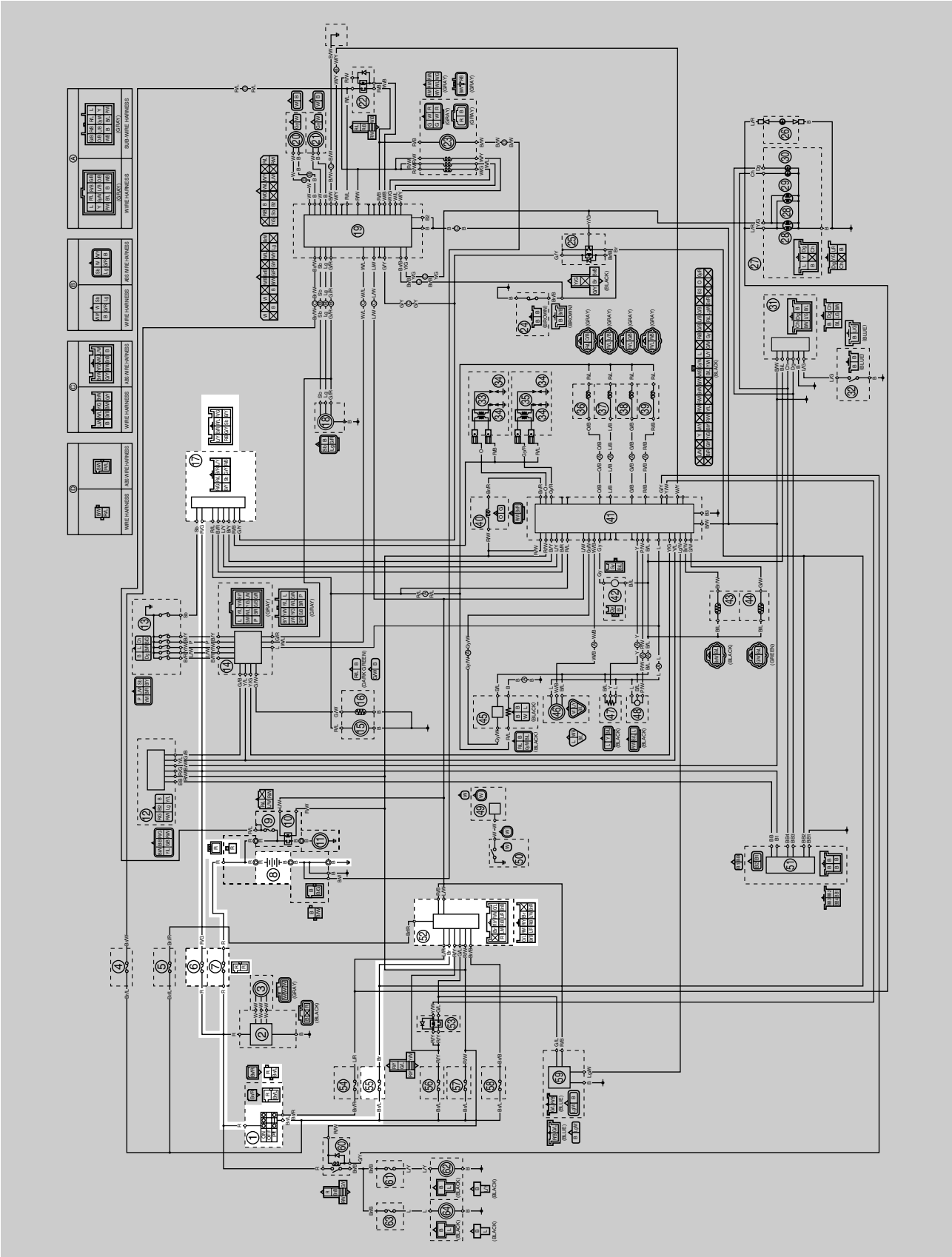

1. Main switch
6. Backup fuse (odometer, clock, immobilizer system, and windshield drive system)
7. Main fuse
8. Battery
17. Coupler 2 (wire harness–front cowling wire harness)
52. Coupler 5 (wire harness–front cowling wire harness)
55. Signaling system fuse

ET3P61008

CIRCUIT DIAGRAM (2/2)

Front cowling wire harness

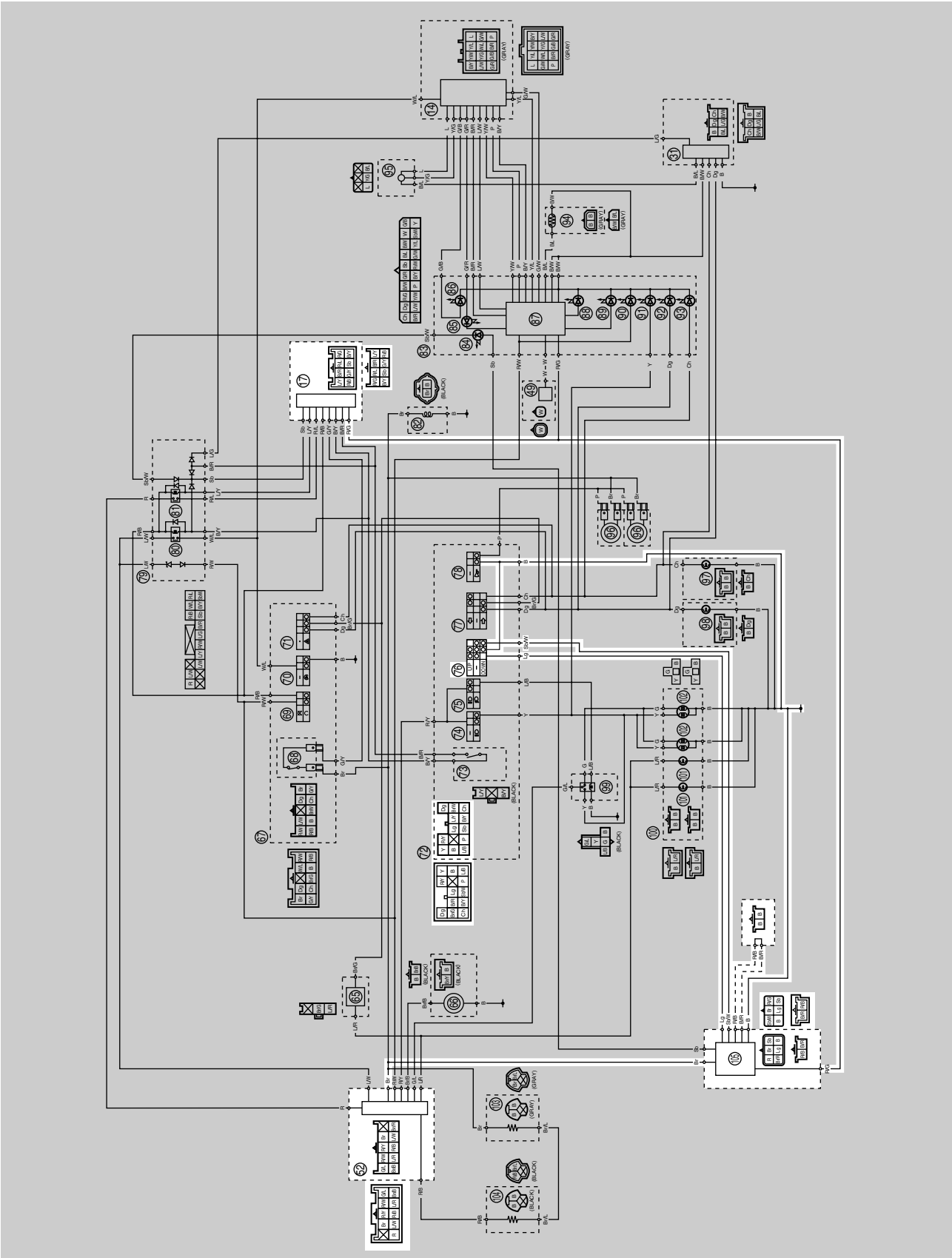

17. Coupler 2 (front cowling wire harness–wire harness)
52. Coupler 5 (front cowling wire harness–wire harness)
76. Windshield position switch
105. Windshield drive unit

EAS27630

TROUBLESHOOTING

The windshield fails to operate.

NOTE:

• Before troubleshooting, remove the following part(s):
1. Front cowling assembly
2. Fuel tank
3. T-bar

1. Check the fuses. (Main, signaling system, and back-up) Refer to "CHECKING THE FUSES" on page 8-153.	NG →	Replace the fuse(s).
OK ↓		
2. Check the battery. Refer to "CHECKING AND CHARGING THE BATTERY" on page 8-154.	NG →	• Clean the battery terminals. • Recharge or replace the battery.
OK ↓		
3. Check the main switch. Refer to "CHECKING THE SWITCHES" on page 8-149.	NG →	Replace the main switch/immobilizer unit.
OK ↓		
4. Check the windshield position switch. Refer to "CHECKING THE SWITCHES" on page 8-149.	NG →	Replace the left handlebar switch.
OK ↓		
5. Check the entire windshield drive system wiring. Refer to "CIRCUIT DIAGRAM (1/2)" on page 8-87 and "CIRCUIT DIAGRAM (2/2)" on page 8-89.	NG →	Properly connect or repair the windshield drive system wiring.
OK ↓		
Replace the windshield drive unit.		

ET3P61009

ACCESSORY BOX SYSTEM

ET3P61010

CIRCUIT DIAGRAM (1/2)

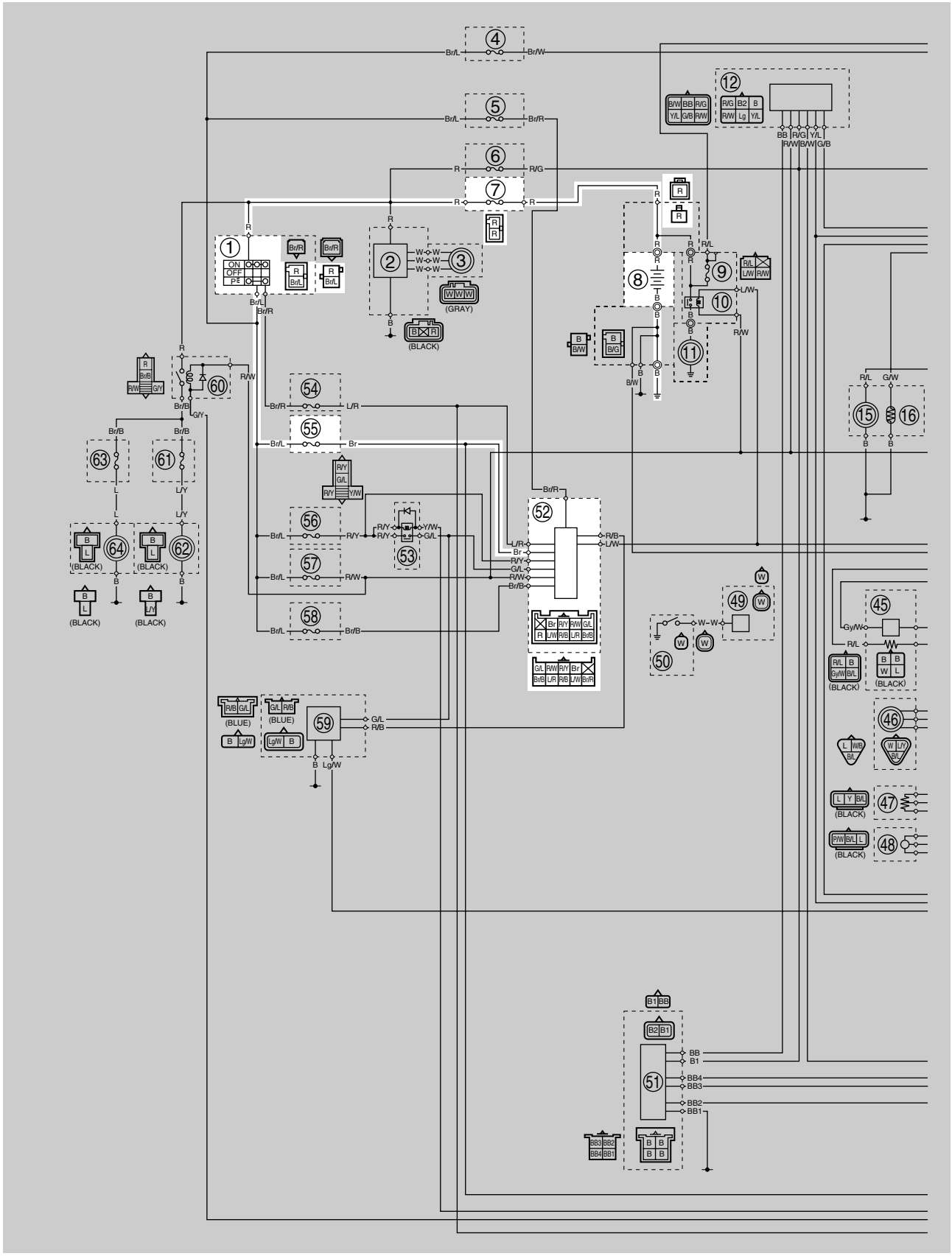

1. Main switch
7. Main fuse
8. Battery
52. Coupler 5 (wire harness–front cowling wire harness)
55. Signaling system fuse

ET3P61011

CIRCUIT DIAGRAM (2/2)

Front cowling wire harness

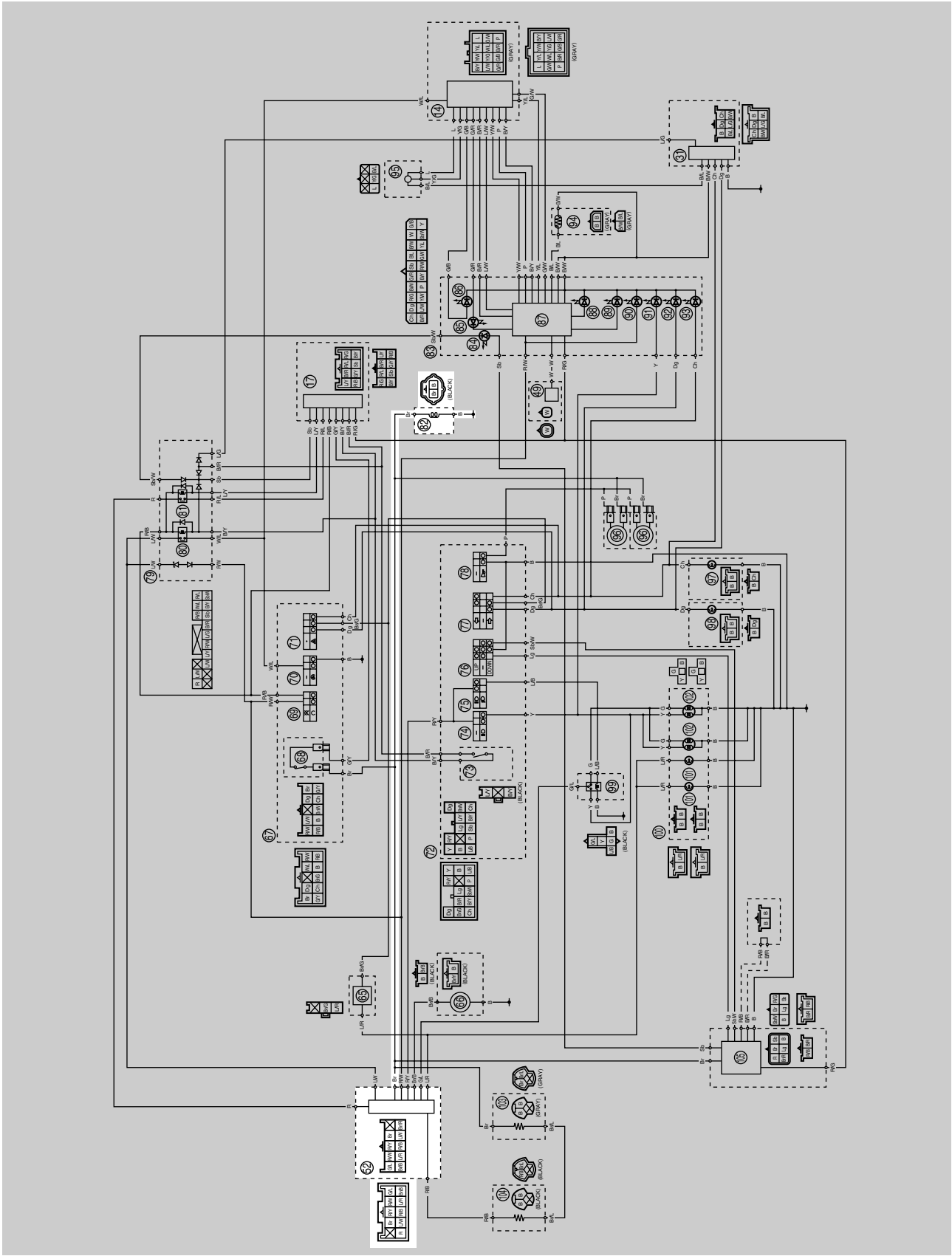

52. Coupler 5 (front cowling wire harness–wire harness)
82. Accessory box solenoid

ET3P61012

TROUBLESHOOTING

The accessory box fails to operate.

NOTE:

- Before troubleshooting, remove the following part(s):

1. Front cowling assembly

1. Check the fuses. (Main and signaling system) Refer to "CHECKING THE FUSES" on page 8-153.	NG →	Replace the fuse(s).
OK ↓		
2. Check the battery. Refer to "CHECKING AND CHARGING THE BATTERY" on page 8-154.	NG →	• Clean the battery terminals. • Recharge or replace the battery.
OK ↓		
3. Check the main switch. Refer to "CHECKING THE SWITCHES" on page 8-149.	NG →	Replace the main switch/immobilizer unit.
OK ↓		
4. Check the accessory box solenoid. Refer to "CHECKING THE ACCESSORY BOX SOLENOID" on page 8-169.	NG →	Replace the accessory box solenoid.
OK ↓		
5. Check the entire accessory box system wiring. Refer to "CIRCUIT DIAGRAM (1/2)" on page 8-87 and "CIRCUIT DIAGRAM (2/2)" on page 8-89.	NG →	Properly connect or repair the accessory box system wiring.
OK ↓		
This accessory box system circuit is OK.		

EAS27640

IMMOBILIZER SYSTEM

EAS27650

CIRCUIT DIAGRAM (1/2)

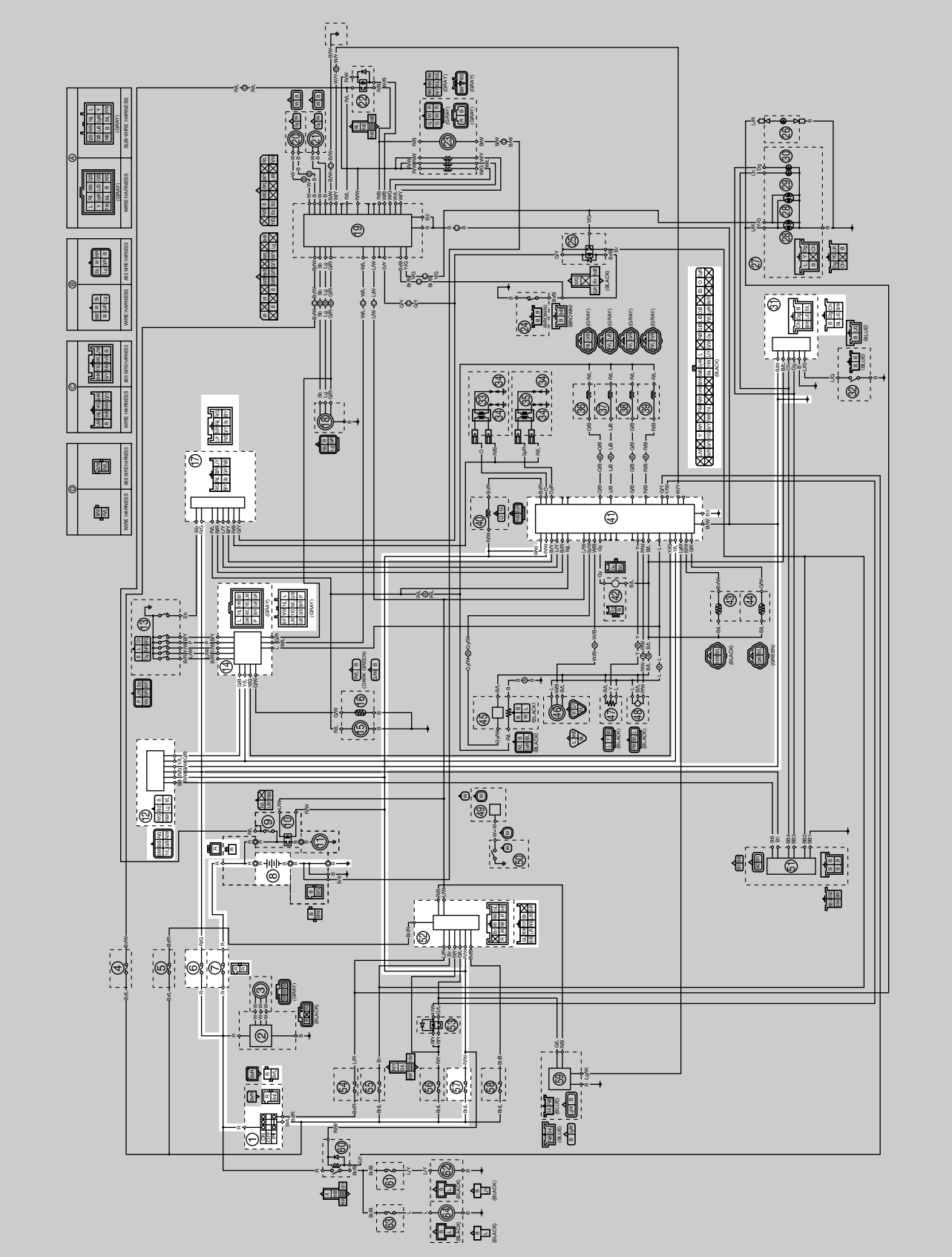

1. Main switch
6. Backup fuse (odometer, clock, immobilizer system, and windshield drive system)
7. Main fuse
8. Battery
12. Immobilizer unit
14. Coupler 1 (wire harness–front cowling wire harness)
17. Coupler 2 (wire harness–front cowling wire harness)
31. Coupler 3 (wire harness–front cowling wire harness)
41. ECU (engine control unit)
52. Coupler 5 (wire harness–front cowling wire harness)
57. Ignition fuse

ET3P61013

CIRCUIT DIAGRAM (2/2)

Front cowling wire harness

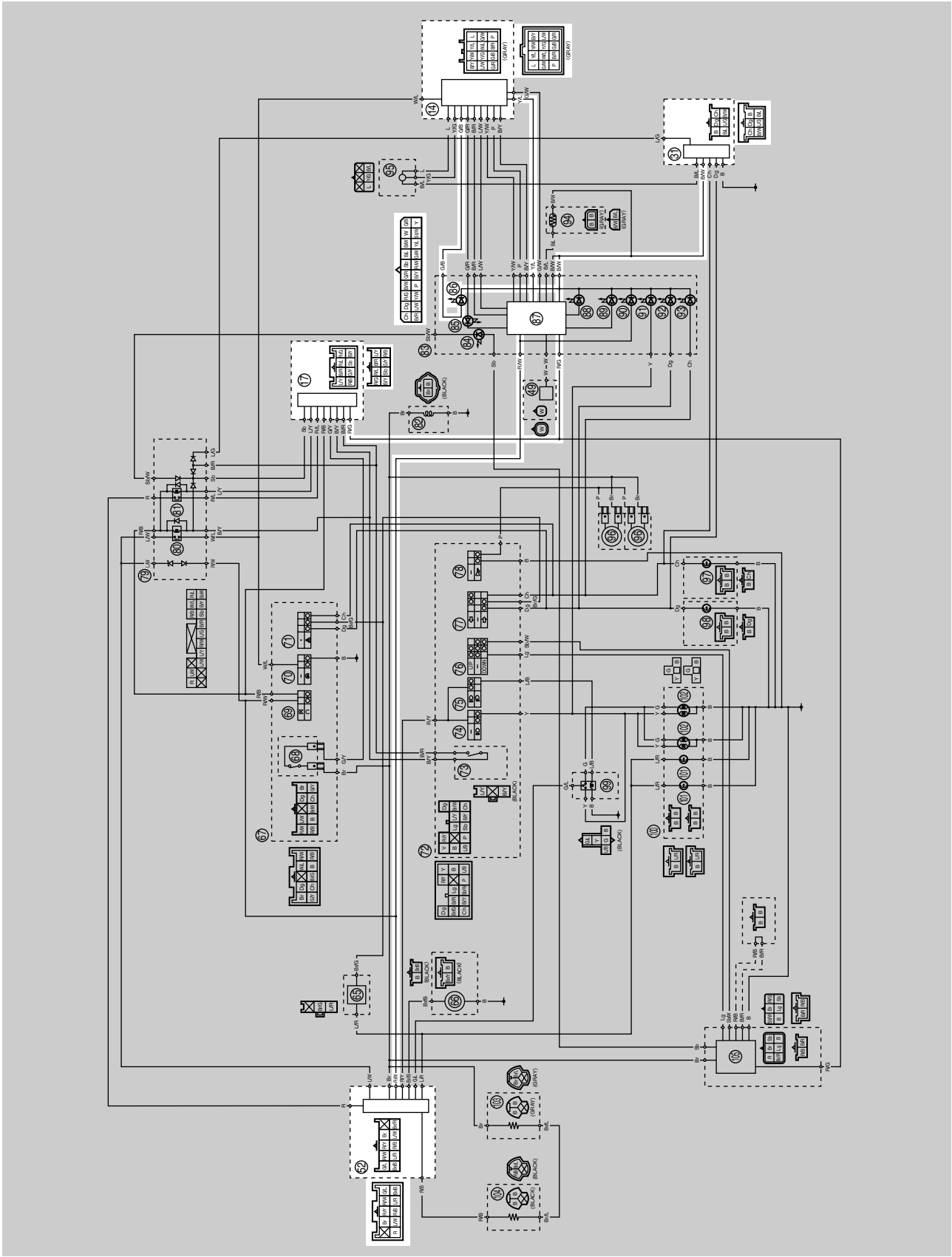

14. Coupler 1 (front cowling wire harness–wire harness)
17. Coupler 2 (front cowling wire harness–wire harness)
31. Coupler 3 (front cowling wire harness–wire harness)
52. Coupler 5 (front cowling wire harness–wire harness)
86. Immobilizer system indicator light
87. Multi-function meter

EAS27670
GENERAL INFORMATION
This vehicle is equipped with an immobilizer system to help prevent theft by re-registering codes in the standard keys. This system consists of the following:
- a code re-registering key (with a red bow)
- two standard keys (with a black bow) that can be re-registered with new codes
- a transponder (installed in the red key bow)
- an immobilizer unit
- the ECU
- an immobilizer system indicator light

The key with the red bow is used to register codes in each standard key. Do not use the key with the red bow for driving. It should only be used for re-registering new codes in the standard keys. The immobilizer system cannot be operated with a new key until the key is registered with a code. If you lose the code re-registering key, the ECU and main switch (equipped with the immobilizer unit) need to be replaced.
Therefore, always use a standard key for driving. (See caution below.)

NOTE:

Each standard key is registered during production, therefore re-registering at purchase is not necessary.

EC3P61001
CAUTION:

- **DO NOT LOSE THE CODE RE-REGISTERING KEY! If the code re-registering key is lost, registering new codes in the standard keys is impossible. The standard keys can still be used to start the vehicle. However, if code re-registering is required (e.g., if a new standard key is made or all keys are lost) the entire immobilizer system must be replaced. Therefore, it is highly recommended to use either standard key for driving, and to keep the code re-registering key in a safe place.**
- **Do not submerse the keys in water.**
- **Do not expose the keys to excessively high temperatures.**
- **Do not place the keys close to magnets (this includes, but is not limited to, products such as speakers, etc.).**
- **Do not place heavy items on the keys.**
- **Do not grind the keys or alter their shape.**
- **Do not disassemble the key bows.**
- **Do not put two keys of any immobilizer system on the same key ring.**
- **Keep the standard keys as well as other immobilizer system keys away from the code re-registering key.**
- **Keep other immobilizer system keys away from the main switch as they may cause signal interference.**

EAS27690
PART REPLACEMENT AND KEY CODE REGISTRATION REQUIREMENTS
In the course of use, you may encounter the following cases where replacement of parts and registration of code re-registering/standard keys are required.

NOTE:

Each standard key is registered during production, therefore re-registering at purchase is not necessary.

	Parts to be replaced					Key registration requirement
	Main switch/immobilizer unit		Standard key	ECU	Accessory lock* and key	
	Main switch	Immobilizer unit				
Standard key is lost			√			New standard key
All keys have been lost (including code re-registering key)	√		√	√	√	Code re-registering key and standard keys
ECU is defective				√		Code re-registering key and standard keys
Immobilizer unit is defective		√				Code re-registering key and standard keys
Main switch is defective	√		√	√	√	Code re-registering key and standard keys
Accessory lock* is defective					√	Not required

* Accessory locks mean the seat lock and fuel tank cap.

Code re-registering key registration:
When the immobilizer unit or ECU is replaced, the code re-registering key must be registered to the unit.
To register a code re-registering key:
1. Turn the main switch to “ON” with the code re-registering key.

NOTE:
Check that the immobilizer system indicator light comes on for one second, then goes off. When the immobilizer system indicator light goes off, the code re-registering key has been registered.

2. Check that the engine can be started.
3. Register the standard key, following the instructions in the section below.

Standby mode:
To enable the immobilizer system, turn the ignition key to “OFF”. 30 seconds later, the indicator light will start flashing continuously in the standby flashing mode pattern for up to 24 hours. After that time, the indicator light will stop flashing, but the immobilizer system is still enabled.

Standby mode

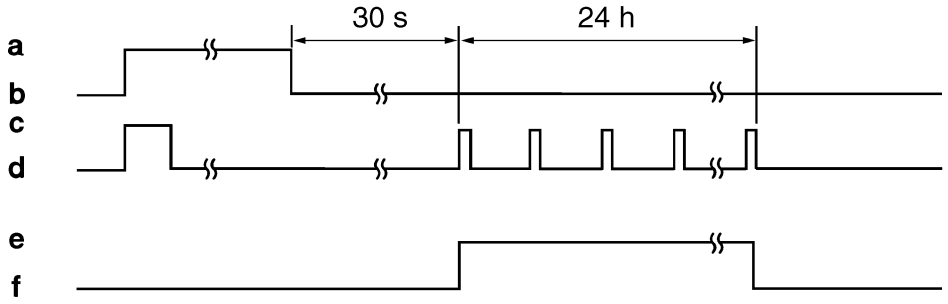

a. Main switch “ON”
b. Main switch “OFF”
c. LED on
d. LED off
e. Standby mode on
f. Standby mode off

Standard key registration:

Standard key registration is required when a standard key is lost and needs to be replaced, or when the code re-registering key is re-registered after the immobilizer unit or ECU are replaced.

NOTE:

Do not start the engine with a standard key that has not been registered. If the main switch is turned “ON” with a standard key that has not been registered, the immobilizer system indicator light flashes to indicate fault code “52”. (Refer to “SELF-DIAGNOSIS FAULT CODE INDICATION” on page 8-107.)

1. Check that the immobilizer system indicator light signals the standby mode.
2. Using the code re-registering key, turn the main switch to “ON”, then “OFF”, and then remove the key within 5 seconds.
3. Insert the first standard key to be registered into the main switch, then turn the key to “ON” within 5 seconds to activate the key registration mode.

NOTE:

The existing standard key code is erased from the memory when the key registration mode is activated. When the key registration mode is activated, the immobilizer system indicator light flashes rapidly.

4. While the indicator light is flashing, turn the main switch to “OFF”, remove the key, and within 5 seconds, insert the second standard key to be registered into the main switch.

NOTE:

If the immobilizer system indicator light stops flashing 5 seconds after the first standard key is registered, the registration mode is deactivated. If this occurs, the second standard key cannot be registered, and steps 2 to 4 need to be repeated to register both standard keys.

5. Turn the main switch to “ON”.

NOTE:

When the indicator light goes off, the registration is complete.

6. Check that the engine can be started with the two registered standard keys.

Standard key registration

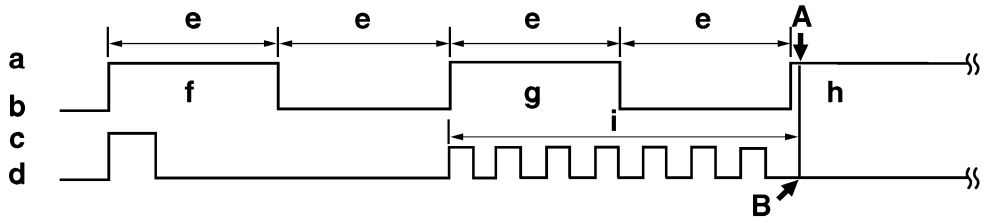

a. Main switch “ON”
b. Main switch “OFF”
c. LED on
d. LED off
e. Less than 5.0 s
f. Code re-registering key
g. First standard key
h. Second standard key
i. Registration mode
A. Registration of the second standard key is complete.
B. Immobilizer system indicator light stops flashing when the registration of the second standard key is complete.

Voiding the standard key code:

If a standard key has been lost, it is possible to disable its use by re-registering the remaining standard key. Standard key registration erases the stored standard key code from the memory, thus disabling the lost standard key. To re-register, refer to “Standard key registration”.

Standard key code voiding method

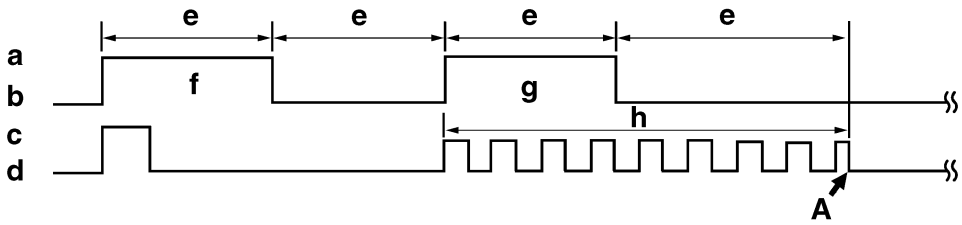

a. Main switch “ON”
b. Main switch “OFF”
c. LED on
d. LED off
e. Less than 5.0 s
f. Code re-registering key
g. Remaining standard key
h. Registration mode
A. If the immobilizer system indicator light stops flashing 5 seconds after the first standard key is registered, the second standard key cannot be registered.

EAS27700

TROUBLESHOOTING

When the main switch is turned to “ON”, the immobilizer system indicator light does not come on nor flashes.

1. Check the fuses. (Main, ignition, and backup) Refer to “CHECKING THE FUSES” on page 8-153.	NG →	Replace the fuse(s).
OK ↓		
2. Check the battery. Refer to “CHECKING AND CHARGING THE BATTERY” on page 8-154.	NG →	• Clean the battery terminals. • Recharge or replace the battery.
OK ↓		
3. Check the main switch. Refer to “CHECKING THE SWITCHES” on page 8-149.	NG →	Replace the main switch/immobilizer unit.
OK ↓		
4. Check the entire immobilizer system wiring. Refer to “CIRCUIT DIAGRAM (1/2)” on page 8-99 and “CIRCUIT DIAGRAM (2/2)” on page 8-101.	NG →	Properly connect or repair the immobilizer system wiring.
OK ↓		
• Check the condition each of the immobilizer system circuits. • Refer to “SELF-DIAGNOSIS FAULT CODE INDICATION” on page 8-107.		

EAS27720

SELF-DIAGNOSIS FAULT CODE INDICATION

When a system malfunction occurs, the fault code number is indicated in the LCD display of the meter assembly and the immobilizer system indicator light flashes at the same time. The pattern of flashing also shows the fault code.

Fault code	Part	Symptom	Cause	Action
51	IMMOBILIZER UNIT	Code cannot be transmitted between the key and the immobilizer unit.	1. Radio wave interference caused by objects around the keys and antenna. 2. Immobilizer unit malfunction. 3. Key malfunction.	1. Keep magnets, metal objects, and other immobilizer system keys away from the keys and antennas. 2. Replace the main switch/immobilizer unit. 3. Replace the key.

Fault code	Part	Symptom	Cause	Action
52	IMMOBILIZER UNIT	Codes between the key and immobilizer unit do not match.	1. Signal received from other transponder (failed to recognize code after ten consecutive attempts). 2. Signal received from unregistered standard key.	1. Place the immobilizer unit at least 50 mm away from the transponder of other vehicles. 2. Register the standard key.
53	IMMOBILIZER UNIT	Codes cannot be transmitted between the ECU and the immobilizer unit.	Noise interference or disconnected lead/cable. 1. Interference due to radio wave noise. 2. Disconnected communication harness. 3. Immobilizer unit malfunction. 4. ECU malfunction.	1. Check the wire harness and connector. 2. Replace the main switch/immobilizer unit. 3. Replace the ECU.
54	IMMOBILIZER UNIT	Codes transmitted between the ECU and the immobilizer unit do not match.	Noise interference or disconnected lead/cable. 1. Interference due to radio wave noise. 2. Disconnected communication harness. 3. Immobilizer unit malfunction. 4. ECU failure. (The ECU or immobilizer unit was replaced with a used unit from another vehicle.)	1. Register the code re-registering key. 2. Check the wire harness and connector. 3. Replace the main switch/immobilizer unit. 4. Replace the ECU.
55	IMMOBILIZER UNIT	Key code registration malfunction.	Same standard key was attempted to be registered two consecutive times.	Register another standard key.
56	ECU	Unidentified code is received.	Noise interference or disconnected lead/cable.	1. Check the wire harness and connector. 2. Replace the main switch/immobilizer unit. 3. Replace the ECU.

Immobilizer system indicator light fault code indication
Units of 10: Cycles of on for 1 second and off for 1.5 seconds.
Units of 1: Cycles of on for 0.5 second and off for 0.5 second.
Example: fault code 52

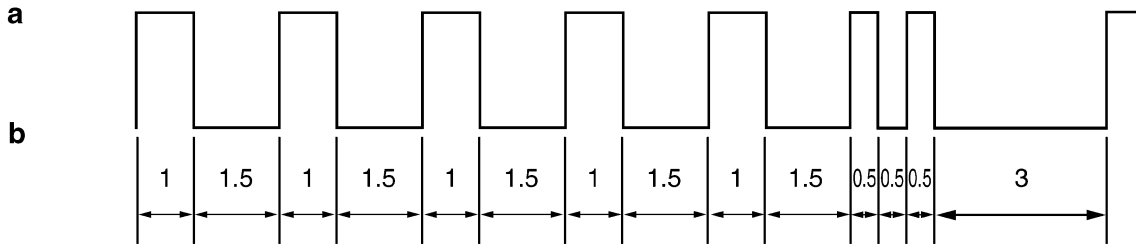

a. Light on
b. Light off

EAS28790

ABS (ANTI-LOCK BRAKE SYSTEM)

EAS27730

CIRCUIT DIAGRAM (1/2)

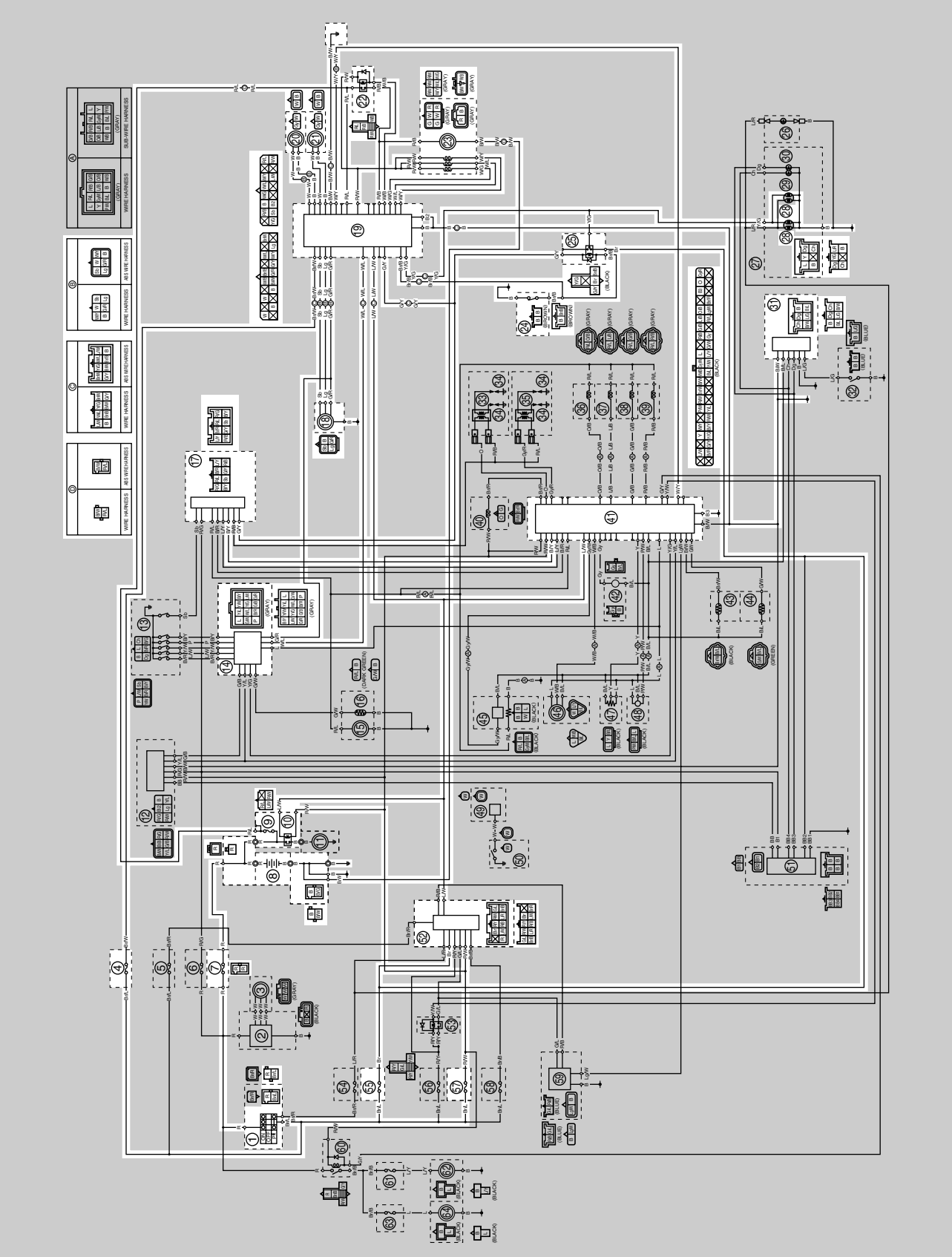

1. Main switch
4. ABS ECU fuse
7. Main fuse
8. Battery
9. ABS motor fuse
10. Starter relay
14. Coupler 1 (wire harness–front cowling wire harness)
17. Coupler 2 (wire harness–front cowling wire harness)
18. ABS test coupler
19. ABS ECU (electronic control unit)
20. Front wheel sensor
21. Rear wheel sensor
22. ABS motor relay
23. Hydraulic unit
24. Rear brake light switch
25. Brake light relay
28. Tail/brake light
31. Coupler 3 (wire harness–front cowling wire harness)
41. ECU (engine control unit)
52. Coupler 5 (wire harness–front cowling wire harness)
55. Signaling system fuse
57. Ignition fuse

ET3P61021

CIRCUIT DIAGRAM (2/2)

Front cowling wire harness

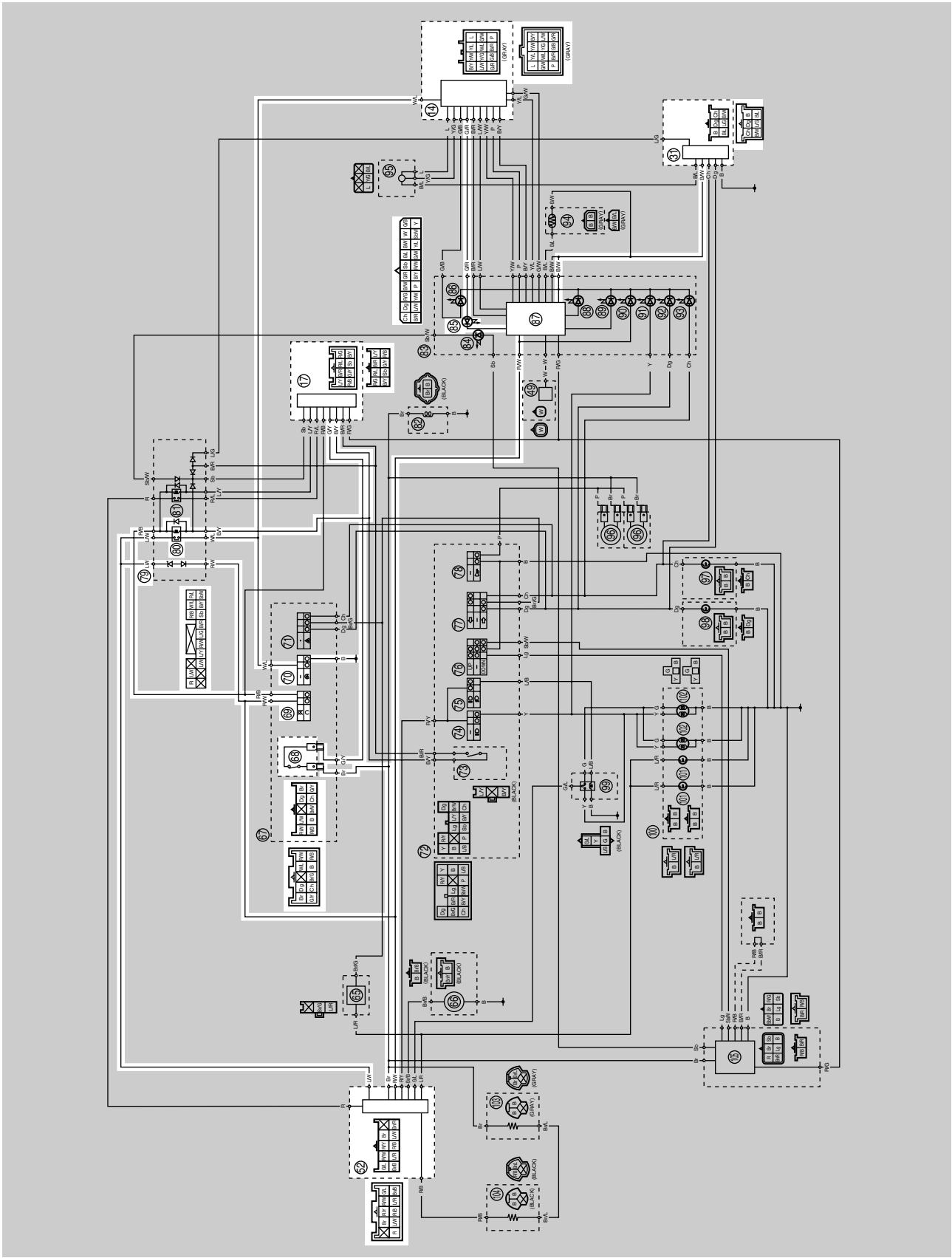

14. Coupler 1 (front cowling wire harness–wire harness)
17. Coupler 2 (front cowling wire harness–wire harness)
31. Coupler 3 (front cowling wire harness–wire harness)
52. Coupler 5 (front cowling wire harness–wire harness)
68. Front brake light switch
69. Engine stop switch
70. Start switch
79. Relay unit
80. Starting circuit cut-off relay
85. ABS warning light
87. Multi-function meter

EAS27740

ABS COMPONENTS CHART

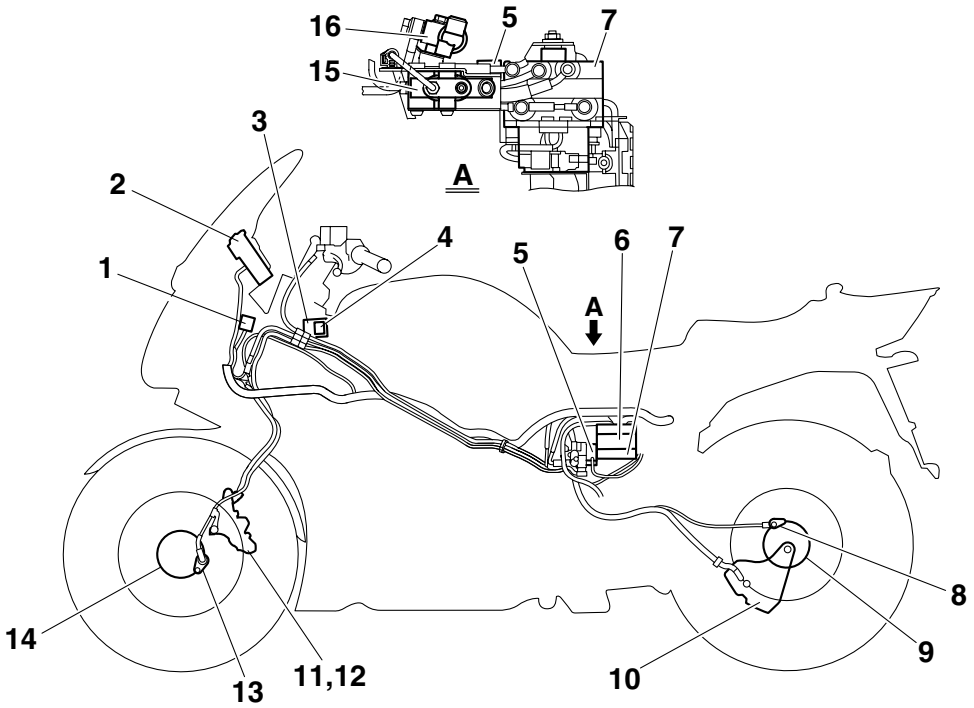

1. ABS test coupler
2. ABS warning light
3. ABS ECU fuse
4. ABS motor fuse
5. ABS motor relay
6. ABS ECU (electronic control unit)
7. Hydraulic unit (HU)
8. Rear wheel sensor
9. Rear wheel sensor rotor
10. Rear brake caliper
11. Left front brake caliper
12. Right front brake caliper (partially operated together with the rear brake)
13. Front wheel sensor
14. Front wheel sensor rotor
15. Proportioning valve
16. Metering valve

EAS27750

ABS COUPLER LOCATION CHART

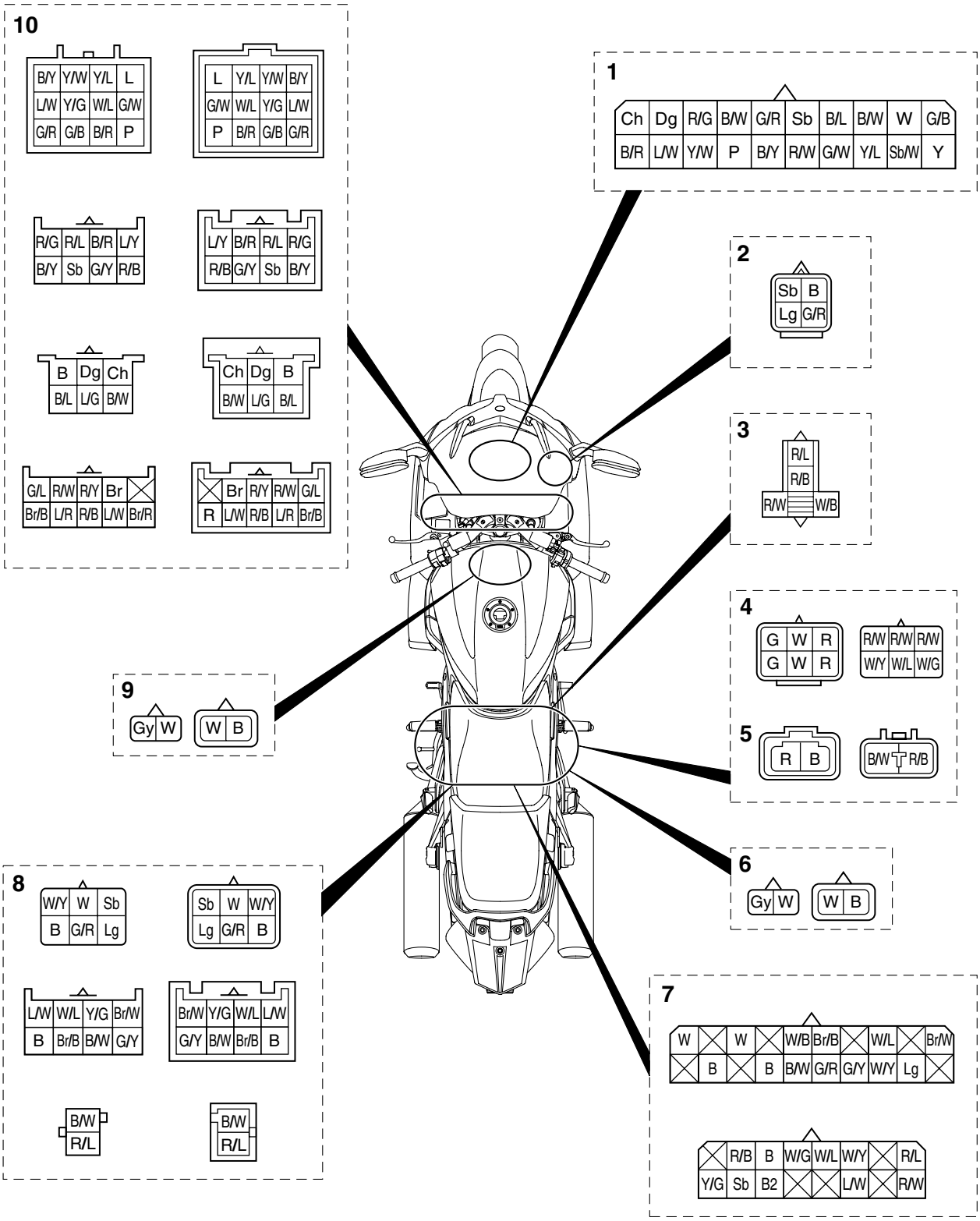

1. Meter assembly coupler
2. ABS test coupler
3. ABS motor relay coupler
4. Hydraulic unit solenoid coupler
5. ABS motor coupler
6. Rear wheel sensor coupler
7. ABS ECU coupler
8. Wire harness–ABS wire harness coupler
9. Front wheel sensor coupler
10. Wire harness–front cowling wire harness coupler

EAS27760

ABS ECU AND ABS MOTOR RELAY

Removing the ABS ECU and ABS motor relay

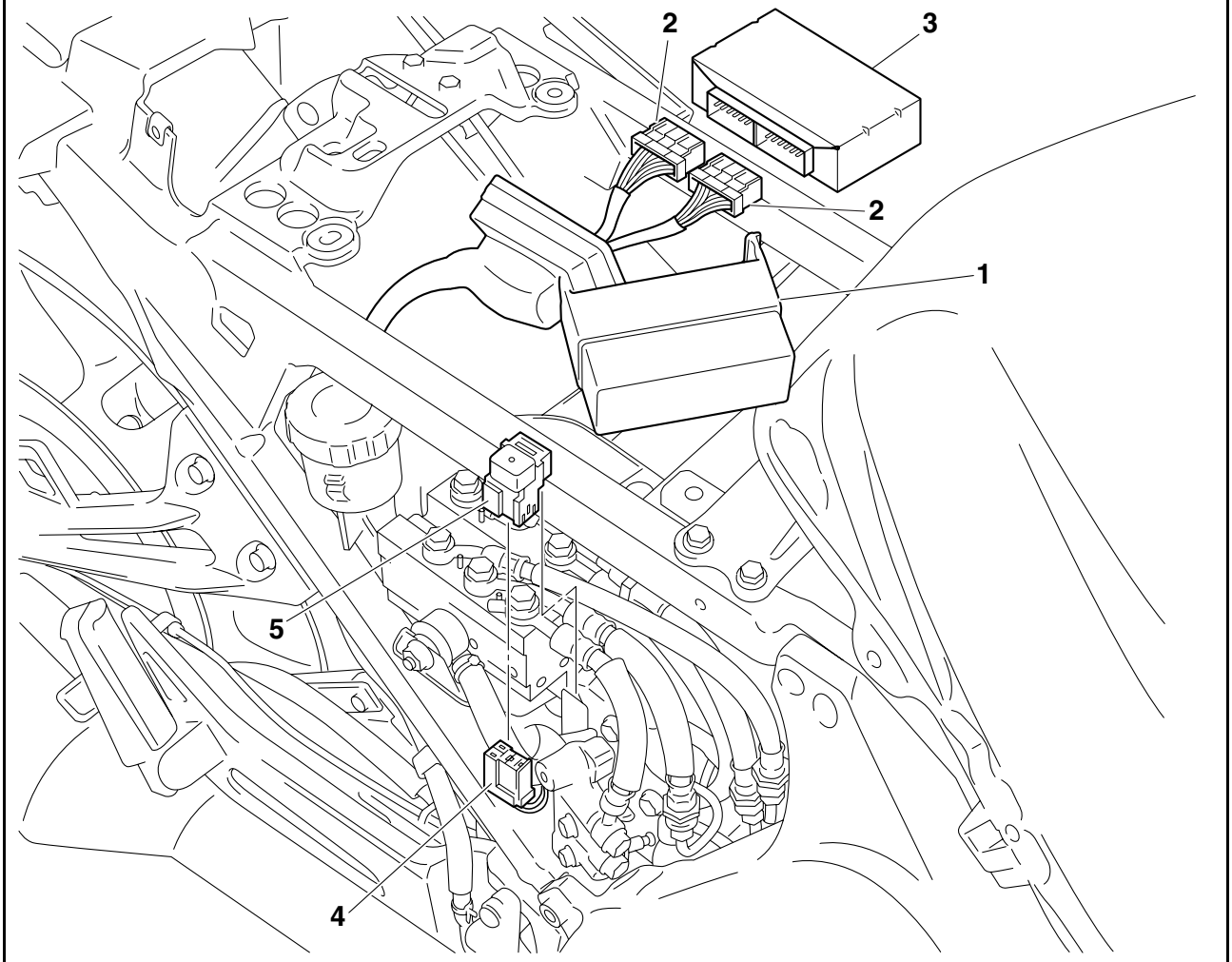

Order	Job/Parts to remove	Q'ty	Remarks
	Rear side cover		Refer to "GENERAL CHASSIS" on page 4-1.
	Storage compartment		Refer to "GENERAL CHASSIS" on page 4-1.
1	ABS ECU cover	1	
2	ABS ECU coupler	2	Disconnect.
3	ABS ECU	1	
4	ABS motor relay coupler	1	Disconnect.
5	ABS motor relay	1	
			For installation, reverse the removal procedure.

EAS27770
MAINTENANCE OF THE ABS ECU

Checking the ABS ECU
1. Check:
   - Terminals “1” of the ABS ECU
     Cracks/damages → Replace the ABS ECU.
   - Terminals “2” of the ABS ECU couplers
     Connection defective, contaminated, come-off → Correct or clean.

NOTE:

If the ABS ECU couplers are clogged with mud or dirt, clean with compressed air.

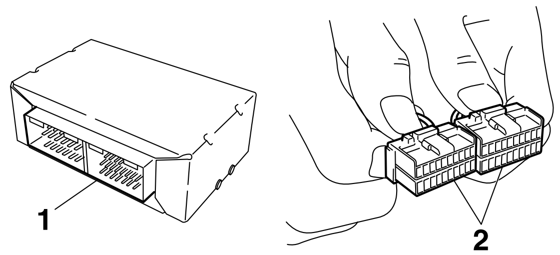

EAS27780
MAINTENANCE OF THE ABS MOTOR RELAY

Checking the ABS motor relay
1. Check:
   - ABS motor relay
     Refer to “CHECKING THE ABS MOTOR RELAY” on page 8-159.

EAS22770
MAINTENANCE OF THE HYDRAULIC UNIT

Checking the hydraulic unit (solenoid valve resistance and ABS motor continuity)
EC3P61016

CAUTION:

When checking the hydraulic unit solenoid valves and ABS motor, do not remove the brake hoses.

1. Check:
   - Solenoid valve resistance
     Out of specification → Replace the hydraulic unit.

Solenoid valve resistance
2.96–3.20 Ω at 20 °C (68 °F)

NOTE:

Measure the resistance of the front brake, rear brake, and unified brake system solenoid valves.

▼▼▼▼▼▼▼▼▼▼▼▼▼▼▼▼▼▼▼▼▼▼▼▼▼▼▼▼▼▼▼▼▼

a. Connect the pocket tester (Ω × 1) to the solenoid valve terminals as shown.

Pocket tester
90890-03112
Analog pocket tester
YU-03112-C

Rear brake solenoid valve
- Positive tester probe → terminal “1”
- Negative tester probe → terminal “2”

Front brake solenoid valve
- Positive tester probe → terminal “3”
- Negative tester probe → terminal “4”

Unified brake system solenoid valve
- Positive tester probe → terminal “5”
- Negative tester probe → terminal “6”

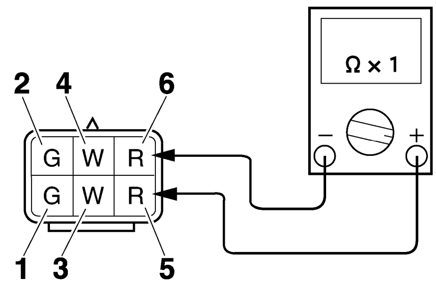

b. Measure the solenoid valve resistance.

▲▲▲▲▲▲▲▲▲▲▲▲▲▲▲▲▲▲▲▲▲▲▲▲▲▲▲▲▲▲▲▲▲

2. Check:
   - Solenoid valve insulation
     Continuity → Replace the hydraulic unit.

▼▼▼▼▼▼▼▼▼▼▼▼▼▼▼▼▼▼▼▼▼▼▼▼▼▼▼▼▼▼▼▼▼

a. Connect the pocket tester (Ω × 1k) to the solenoid terminal and negative battery terminal.

Pocket tester
90890-03112
Analog pocket tester
YU-03112-C

- Positive tester probe →
  terminals “1”, “2”, “3”, “4”, “5”, and “6”
- Negative tester probe →
  negative battery terminal

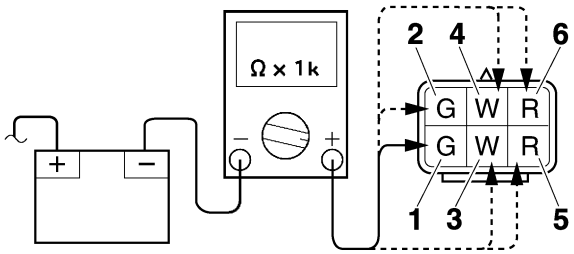

b. Check the solenoid valve insulation.

▲▲▲▲▲▲▲▲▲▲▲▲▲▲▲▲▲▲▲▲▲▲▲▲▲▲▲▲▲▲▲▲

3. Check:
   - ABS motor continuity
     No continuity → Replace the hydraulic unit.

▼▼▼▼▼▼▼▼▼▼▼▼▼▼▼▼▼▼▼▼▼▼▼▼▼▼▼▼▼▼▼▼

a. Connect the pocket tester (Ω × 1) to the ABS motor coupler as shown.

Pocket tester
90890-03112
Analog pocket tester
YU-03112-C

- Positive tester probe →
  terminal “1”
- Negative tester probe →
  terminal “2”

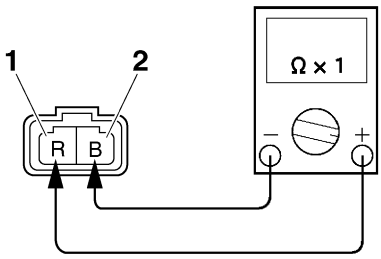

b. Check the ABS motor for continuity.

▲▲▲▲▲▲▲▲▲▲▲▲▲▲▲▲▲▲▲▲▲▲▲▲▲▲▲▲▲▲▲▲

EAS27790

ABS TROUBLESHOOTING OUTLINE

This section describes the troubleshooting for the ABS in detail. Read this service manual carefully and make sure you fully understand the information provided before repairing any malfunctions or performing service.

The ABS ECU (electronic control unit) has a self-diagnosis function. When failures occur in the system, the ABS warning light on the meter assembly indicates a malfunction.

The following troubleshooting describes the problem identification and service method according to the indications by the multi-function display. For troubleshooting items other than the following items, follow the normal service method.

EW3P61011

WARNING

When maintenance or checks have been performed on components related to the ABS, be sure to perform a final check before delivering the vehicle to the customer. (Refer to “[D-3] FINAL CHECK” on page 8-144.)

ABS operation when the ABS warning light comes on

1. The ABS warning light remains on → ABS operates as a normal brake system.
   - A malfunction was detected using the ABS self-diagnosis function.
2. The ABS warning light comes on, and then goes off when starting the engine → ABS operation is normal.
   - The ABS warning light comes on for 2 seconds, and then goes off every time the main switch is turned to “ON”.
   - The ABS warning light comes on while the start switch is being pushed.
3. The ABS warning light flashes → ABS operation is normal.
   - The front or rear brake light switch is defective or improperly adjusted.
   - The rear wheel is racing.
   - The vehicle is continuously ridden on extremely uneven roads.

Self-diagnosis and servicing

The ABS ECU has a self-diagnosis function. By utilizing this function, quick problem identification and service are possible. Previous malfunctions can be checked since the ABS ECU also stores the malfunction history.

In case malfunctions are detected:

The light cannot be used to recall the malfunction codes from the memory of the ABS ECU if the ABS warning light is already on. Connect the test coupler adapter to the ABS test coupler, and then connect a pocket tester to the light green terminal of the adapter and the positive battery terminal to determine the malfunction codes by the movement of the pocket tester needle.

In case any malfunctions are not detected:

The multi-function display indicates all the malfunction codes recorded in the ABS ECU.

You can also recall the malfunction codes by using a pocket tester. Note all of the indicated malfunction codes if more than two malfunction codes are stored in the memory.

Deleting the malfunction code(s):

When the service is finished, check the normal operation of the vehicle, and then delete the malfunction code(s). (Refer to “[D-3] FINAL CHECK” on page 8-144.) By deleting the malfunction codes stored in the ABS ECU memory, it is possible to pursue the cause correctly if another malfunction occurs.

Self-diagnosis using the ABS ECU

The ABS ECU performs a static check of the entire system when the main switch is turned to “ON”. It also checks for malfunctions while the vehicle is ridden. Since all malfunctions are recorded after they are detected, it is possible to check the recorded malfunction data by using a pocket tester or by utilizing the multi-function display when the ABS ECU has entered the self-diagnosis mode.

Special precautions for handling and servicing a vehicle equipped with ABS

EC3P61030

CAUTION:

Care should be taken not to damage components by subjecting them to shocks or pulling on them with too much force since the ABS components are precisely adjusted.

- The ABS ECU, hydraulic unit, wheel sensors, and ABS motor relay are united assemblies and cannot be disassembled.
- The malfunction history is stored in the memory of the ABS ECU. Delete the malfunction codes when the service is finished. (This is because the past malfunction codes will be displayed again if another malfunction occurs.)

EAS27800

BASIC INSTRUCTIONS FOR TROUBLESHOOTING

EW3P61004

WARNING

- **Perform the troubleshooting [A] → [B] → [C] → [D] in order. Be sure to follow the order since a wrong diagnosis could result if the steps are followed in a different order or omitted.**
- **Use sufficiently charged regular batteries only.**

[A] Malfunction check using the ABS warning light

[B] Detailed check of the malfunction

The results of the self-diagnosis by the ABS ECU can be displayed using the multi-function display or a pocket tester.

[C] Supposing the malfunction cause and position

Find the malfunction cause by reasoning the place and situation where it occurred.

[D] Servicing the ABS

Execute the final check after disassembly and assembly.

EAS27810

BASIC PROCESS FOR TROUBLESHOOTING

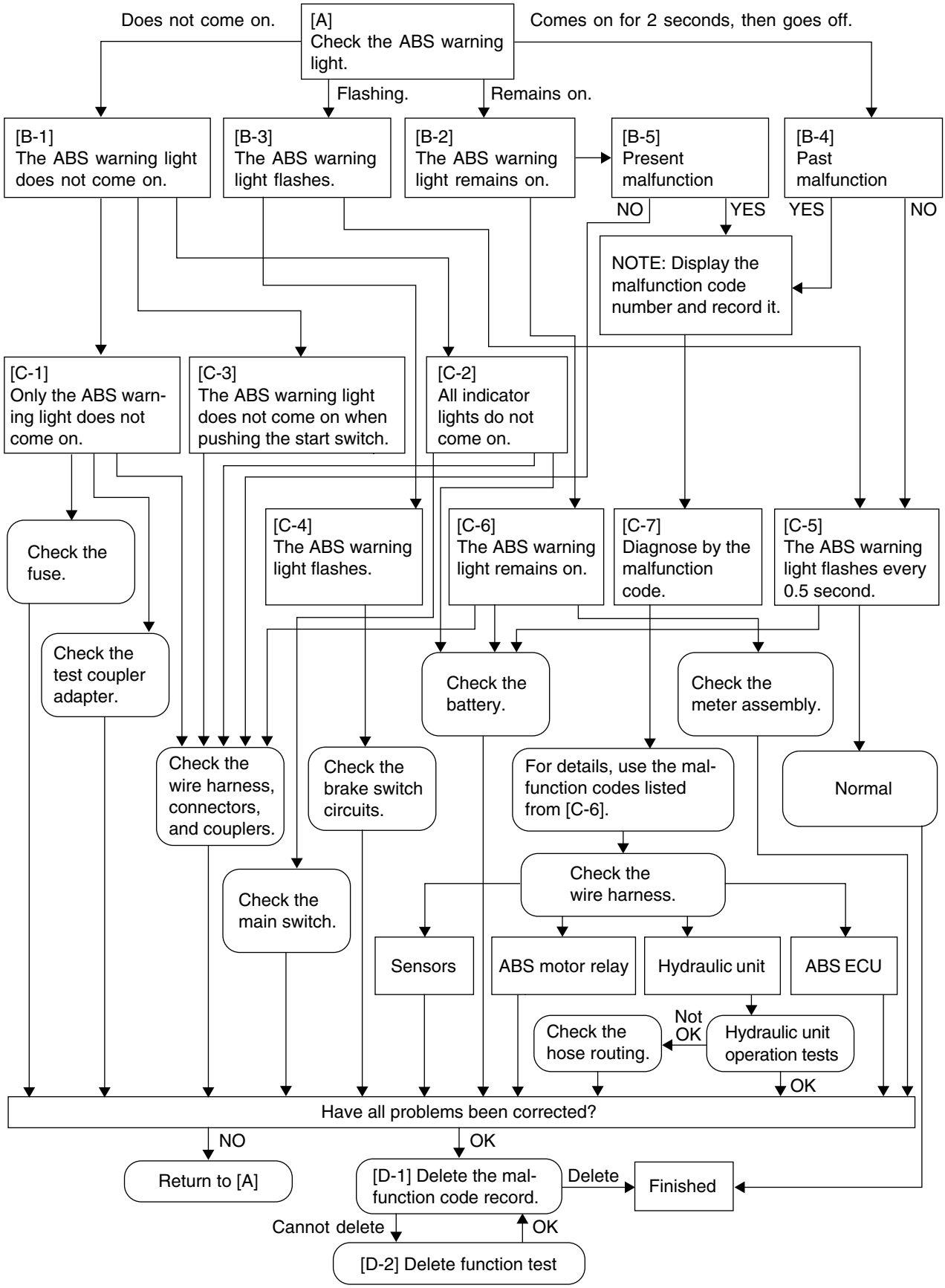

NOTE:

Do not delete the malfunction codes during the troubleshooting procedures. Be sure to delete the codes when the service is finished.

EW3P61011

WARNING

When maintenance or checks have been performed on components related to the ABS, be sure to perform a final check before delivering the vehicle to the customer. (Refer to "[D-3] FINAL CHECK" on page 8-144.)

EAS27830

[A] CHECKING THE ABS WARNING LIGHT

Turn the main switch to "ON". (Do not start the engine.)

1. The ABS warning light does not come on. [B-1]
2. The ABS warning light remains on. [B-2]
3. The ABS warning light flashes. [B-3]
4. The ABS warning light comes on for 2 seconds, then goes off. [B-4]

ET3P61061

[B-1] THE ABS WARNING LIGHT DOES NOT COME ON

1. Only the ABS warning light fails to come on when the main switch is turned to "ON". [C-1]
2. The ABS warning light and all other indicator lights fail to come on. [C-2]
3. The ABS warning light fails to come on while the start switch is being pushed. [C-3]

ET3P61062

[B-2] THE ABS WARNING LIGHT REMAINS ON

1. A present malfunction is detected. [B-5]
2. The ABS warning light remains on. [C-6]

ET3P61063

[B-3] THE ABS WARNING LIGHT FLASHES

1. The ABS warning light flashes. [C-4]
2. The ABS warning light flashes every 0.5 second. [C-5]

EAS27860

[B-4] MALFUNCTION CHECK BY THE ABS SELF-DIAGNOSIS (PAST MALFUNCTION)

Remove front cowling right inner panel 1 to access the ABS test coupler "1". Remove the protective cap from the ABS test coupler, and then connect the test coupler adapter "2" to the coupler. The T/C terminal (sky blue) is now grounded.

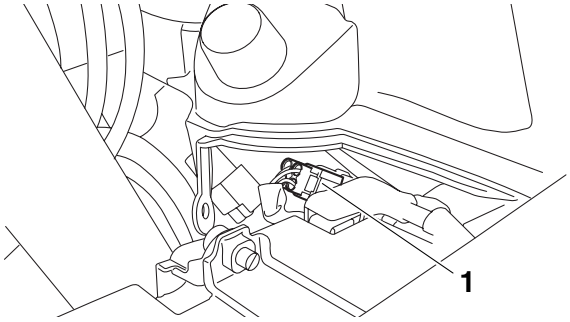

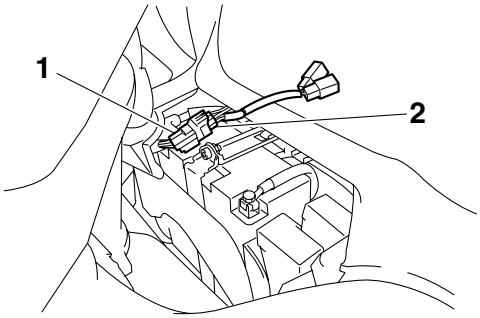

1. The malfunction code “1” is displayed on the multi-function display (example: malfunction code 11).

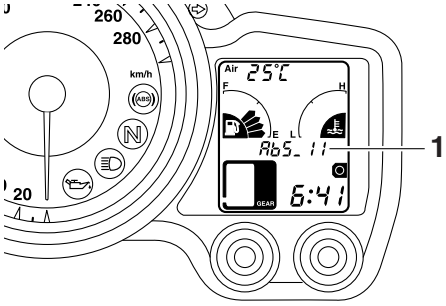

2. The ABS warning light flashes every 0.5 second for more than 6 seconds.
   The ABS warning light flashes every 0.5 second if a malfunction code for a past malfunction is not stored in the memory of the ABS ECU. The ABS warning light flashes quicker if a malfunction code is displayed on the multi-function display. If no malfunction code is displayed, make sure that the customer understands the possible conditions that may cause the ABS warning light to come on or flash even if the system is normal.

NOTE:

- The ABS malfunction codes will not be displayed if a fault code for the fuel injection system is displayed on the multi-function display. To display the ABS malfunction codes, delete the fuel injection system fault codes, and then start the check again.
- The test coupler adapter must be connected to the ABS test coupler to display the malfunction codes. If the adapter is not connected, the ABS warning light will come on or flash, but no malfunction codes will be displayed.

EAS27870

[B-5] MALFUNCTION CHECK BY THE ABS SELF-DIAGNOSIS (PRESENT MALFUNCTION)

Remove front cowling right inner panel 1 to access the ABS test coupler. Connect the test coupler adapter to the ABS test coupler in order to ground the T/C terminal (sky blue). (Figure A)
Because malfunction codes for present malfunctions are not displayed on the multi-function display, check the malfunction codes as follows.
Set the range of the pocket tester to DC 20 V. Connect the negative tester probe to the T/F terminal (light green) and the positive tester probe to the positive battery terminal. (Figure B)
Determine the malfunction code according to the movement of the pocket tester needle. (Figure C)

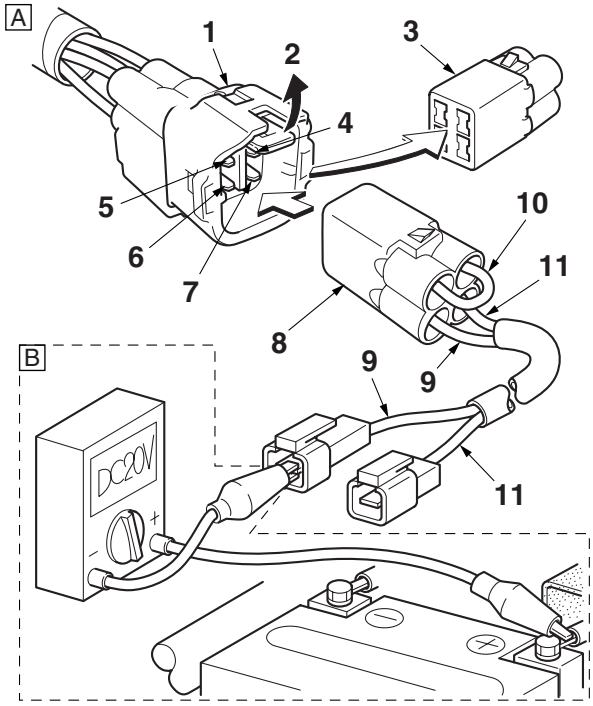

1. ABS test coupler
2. Lock plate
3. Protective cap
4. Ground terminal (black)
5. T/C terminal (sky blue)
6. T/F terminal (light green)
7. ABS warning light terminal (green/red)
8. Test coupler adapter
9. Light green lead
10. Black lead
11. White/red lead

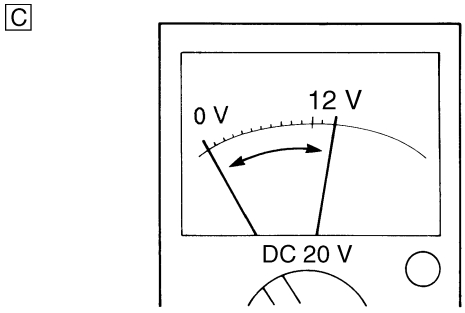

As an example, a “10 digits/1 digit pattern” of the tester reading is shown below.

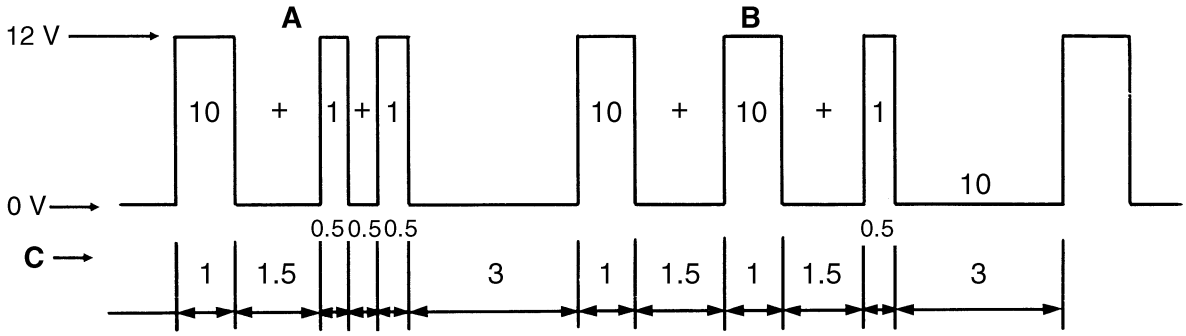

A. This example is the pattern for malfunction code 12.
B. This example is the pattern for malfunction code 21.
C. Time (seconds)

EAS27840
[C-1] ONLY THE ABS WARNING LIGHT FAILS TO COME ON WHEN THE MAIN SWITCH IS TURNED TO "ON"

Disconnect the ABS ECU couplers and meter assembly coupler, and then connect the test coupler adapter to the ABS test coupler.

1. Check for continuity between the white/red terminal of the test coupler adapter and the ground.
   - If there is continuity, ABS wire harness, front cowling wire harness or the wire harness is defective. Properly repair or replace the defective harness.
2. Disconnect the ABS ECU couplers and check that the ABS warning light comes on when the main switch is turned to "ON".
   - If the ABS warning light comes on, the ABS ECU is defective. Replace the ABS ECU.
   - If the ABS warning light does not come on, the meter assembly circuit (including the ABS warning light [LED]) is defective. Replace the meter assembly.

ET3P61064
[C-2] THE ABS WARNING LIGHT AND ALL OTHER INDICATOR LIGHTS FAIL TO COME ON

1. Main switch
   - Check the main switch for continuity.
     Refer to "CHECKING THE SWITCHES" on page 8-149.
   - If there is no continuity, replace the main switch/immobilizer unit.
2. Battery
   - Check the condition of the battery.
     Refer to "CHECKING AND CHARGING THE BATTERY" on page 8-154.
   - If the battery is defective, clean the battery terminals and recharge it, or replace the battery.
3. Main fuse
   - Check the main fuse for continuity.
     Refer to "CHECKING THE FUSES" on page 8-153.
   - If the main fuse is blown, replace the fuse.
4. Wiring
   - Check the entire multi-function meter wiring.
     Refer to "CIRCUIT DIAGRAM (1/2)" on page 8-111 and "CIRCUIT DIAGRAM (2/2)" on page 8-113.
   - If the wiring is defective, properly connect or repair the multi-function meter wiring.
   - If the wiring is good, check the condition of each multi-function meter circuit.

ET3P61065
[C-3] THE ABS WARNING LIGHT FAIL TO COME ON WHILE THE START SWITCH IS BEING PUSHED

1. Wire harness, ABS wire harness, and front cowling wire harness
   - Check the white/blue lead for continuity between "1" and "2" of the start switch monitor circuit.
   - If there is no continuity, the wire harness, ABS wire harness, or front cowling wire harness is defective. Properly repair or replace the defective harness.
2. Wire harness and ABS wire harness
   - Check the blue/white lead for continuity between "3" and "4" of the starter motor monitor circuit.
   - If there is no continuity, the wire harness or ABS wire harness is defective. Properly repair or replace the defective harness.

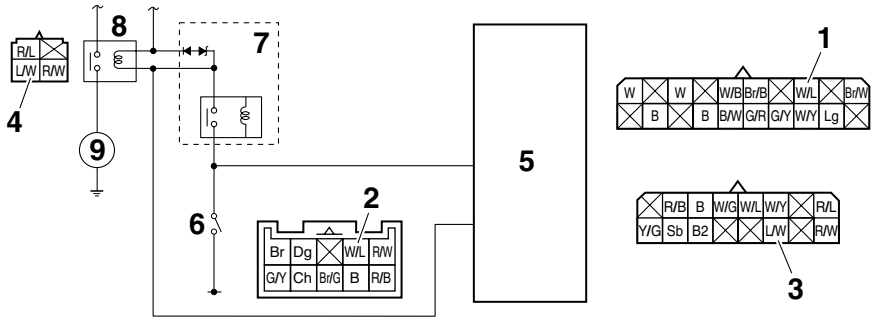

5. ABS ECU
6. Start switch
7. Relay unit (starting circuit cut-off relay)
8. Starter relay
9. Starter motor

ET3P61066

[C-4] THE ABS WARNING LIGHT FLASHES

With the engine off, check the front and rear brake light switches.
Check that the rear brake light switch is adjusted properly, and then check if the brake light comes on when the front or rear brake is applied.

1. The brake light does not come on for only one brake.
   - The corresponding brake light switch connector or coupler is disconnected. Refer to “CIRCUIT DIAGRAM (1/2)” on page 8-111 and “CIRCUIT DIAGRAM (2/2)” on page 8-113.
   - The corresponding brake light switch is defective.
2. The brake light does not come on for either brake.
   - The wire harness and front cowling wire harness may be disconnected or the fuse may be blown. Check the fuse and make sure that the wire harness (brown or brown/black lead) is connected to the power source end of the brake light switch. Refer to “CIRCUIT DIAGRAM (1/2)” on page 8-111 and “CIRCUIT DIAGRAM (2/2)” on page 8-113.
3. The brake light comes on.
   - The ABS wire harness, front cowling wire harness, and the wire harness couplers may be disconnected. Refer to “ABS COUPLER LOCATION CHART” on page 8-117.

ET3P61067

[C-5] THE ABS WARNING LIGHT FLASHES EVERY 0.5 SECOND

The ABS warning light flashes every 0.5 second if a malfunction code for a past malfunction is not stored in the memory of the ABS ECU. The ABS warning light flashes quicker if a malfunction code is displayed on the multi-function display. If no malfunction code is displayed, make sure that the customer understands the possible conditions that may cause the ABS warning light to come on or flash even if the system is normal.

1. ABS warning light flashes
   The following are probable causes to explain why the ABS warning light flashed while riding, and then stopped flashing, or stopped flashing when the main switch was turned to “OFF”, then back to “ON”.
   - The rear wheel was rotated with the vehicle on the centerstand.
     The system is normal.
   - The rear wheel raced.
     The system is normal.
   - The vehicle was ridden on the rear wheel with the front wheel elevated.
     The system is normal.
   - The vehicle was continuously ridden on extremely uneven roads.
     The system is normal.
   - The front or rear brake light switch is defective or improperly adjusted.
     Replace or adjust.

ET3P61068

[C-6] THE ABS WARNING LIGHT REMAINS ON

1. The battery voltage is low.
   - Check the condition of the battery.
     Refer to “CHECKING AND CHARGING THE BATTERY” on page 8-154.
   - If the battery voltage is low, clean the battery terminals and recharge it, or replace the battery.
2. A present malfunction is detected.
   - Connect the test coupler adapter to the ABS test coupler and utilize the ABS self-diagnosis function to check the present malfunctions.
   - Perform the troubleshooting according to the detected malfunction codes.
     Refer to “[C-7] DIAGNOSIS BY THE MALFUNCTION CODE” on page 8-129.
3. ABS is stopped by the ABS ECU
   The ABS ECU may stop the ABS operation if it is exposed to extremely strong electromagnetic waves or static electricity.
   When the ABS ECU is no longer exposed to the electromagnetic waves or static electricity, and the ABS warning light is not flashing, the ABS will operate again. Explain to the customer that the ABS will operate normally.
4. ABS ECU fuse
   - Check the ABS ECU fuse for continuity.
     Refer to “CHECKING THE FUSES” on page 8-153.
   - If the ABS ECU fuse is blown, replace the fuse.
5. ABS ECU couplers, ABS wire harness, front cowling wire harness, and wire harness
   - Check the ABS ECU couplers and wire harness couplers for continuity.
   - Check the ABS wire harness, front cowling wire harness, and wire harness for continuity.
     Refer to “CIRCUIT DIAGRAM (1/2)” on page 8-111 and “CIRCUIT DIAGRAM (2/2)” on page 8-113.
   - If the anti-lock brake system wiring is defective, properly connect or replace the ABS ECU couplers, ABS wire harness, front cowling wire harness and wire harness.
6. Check the connection of the ABS wire harness to the ABS ECU.
   - Check that the ABS wire harness is securely connected to the ABS ECU. (Refer to “ABS COUPLER LOCATION CHART” on page 8-117.)
7. The ABS ECU, ABS wire harness, front cowling wire harness or wire harness couplers are disconnected.
   - Connect the couplers if they are disconnected.
8. There is a break or disconnection in the wire harness, ABS wire harness, front cowling wire harness between the ABS ECU and the meter assembly (ABS warning light).
   - Check for continuity between the green/red terminal of the ABS ECU coupler and the green/red terminal of the meter assembly coupler.
   - If there is no continuity, ABS wire harness, front cowling wire harness or the wire harness is defective. Properly repair or replace the defective harness.
9. The meter assembly circuit is defective.
   - Disconnect the ABS ECU couplers, and then connect the test coupler adapter to the ABS test coupler.
   - Ground the white/red lead of the test coupler adapter.
   - Turn the main switch to “ON”, and then check that the ABS warning light goes off.
   - If the ABS warning light does not go off, the meter assembly is defective. Replace the meter assembly.
   - If the ABS warning light goes off, the ABS ECU is defective. Replace the ABS ECU.

EAS27880

[C-7] DIAGNOSIS BY THE MALFUNCTION CODE

Connect the test coupler adapter to the ABS test coupler, and then connect a pocket tester to the light green terminal of the adapter and the positive battery terminal to determine the malfunction code by the movement of the pocket tester needle.

Information for the malfunction codes from the ABS ECU, for both past and present malfunctions, is contained in the following table. Refer to the following table for troubleshooting.

NOTE:

Record all of the malfunction codes displayed and inspect the check points.

Malfunction code	Problem	Check point	Reference
11*	Front wheel sensor signal is not received properly. 12 V 0 V	• Installation of the front wheel sensor • Front wheel sensor lead and coupler • Wire harness and ABS wire harness (front wheel sensor circuit) • Front wheel sensor rotor	Malfunction code 11 (See page 8-133.)
12	Rear wheel sensor signal is not received properly. 12 V 0 V	• Installation of the rear wheel sensor • Rear wheel sensor lead and coupler • ABS wire harness (rear wheel sensor circuit) • Rear wheel sensor rotor	Malfunction code 12 (See page 8-133.)
13/26, 14/27	Incorrect signal from the front (13/26) or rear (14/27) wheel sensor is detected. 13 12 V 0 V 14 12 V 0 V 26 12 V 0 V 27 12 V 0 V	• Installation of the wheel sensors • Wheel sensor housings • Wheel sensor rotors	Malfunction codes 13, 14, 26 and 27 (See page 8-134.)
15/16	No continuity in the front or rear wheel sensor circuits. 15 12 V 0 V 16 12 V 0 V	• Continuity of the sensor circuits • Wire harness and ABS wire harness (ABS circuit) • Connection of the wheel sensor couplers	Malfunction codes 15 and 16 (See page 8-135.)

Malfunction code	Problem	Check point	Reference
21	Hydraulic unit solenoid circuit is broken or short-circuited. 12 V 0 V	• ABS wire harness (ABS circuit) • Hydraulic unit solenoid coupler • Hydraulic unit solenoids	Malfunction code 21 (See page 8-135.)
23	Front or rear brake light switch is defective. 12 V 0 V	• Improper adjustment of the rear brake light switch • Brake light switches • Brake light relay • Wire harness, ABS wire harness, and front cowling wire harness (ABS circuit)	Malfunction code 23 (See page 8-136.)
24	Brake light is defective. 12 V 0 V	• Brake light relay • Brake light bulbs • Wire harness and ABS wire harness (brake light circuit)	Malfunction code 24 (See page 8-137.)
25	No signal is received from the front wheel sensor when the vehicle starts moving. 12 V 0 V	• Rear wheel was rotated when the vehicle was on the centerstand • Slippage of the rear wheel • The vehicle wheelies • Installation of the front wheel sensor • Wire harness and ABS wire harness (front wheel sensor circuit)	Malfunction code 25 (See page 8-137.)
41	Front wheel will not recover from the locking tendency even though the signal is continuously transmitted from the ABS ECU to release the hydraulic pressure (when the battery voltage is normal). 41 12 V 0 V	• Brake dragging • Hydraulic unit operation tests • Front wheel brake lines	Malfunction code 41 (See page 8-137.)
42	Rear wheel will not recover from the locking tendency even though the signal is continuously transmitted from the ABS ECU to release the hydraulic pressure (when the battery voltage is normal). 42 12 V 0 V	• Brake dragging • Hydraulic unit operation tests • Rear wheel brake lines	Malfunction code 42 (See page 8-139.)
31	Disconnection is detected in the battery and ABS ECU circuit. 12 V 0 V	• ABS motor fuse • Wire harness and ABS wire harness (battery and ABS ECU circuit) • ABS ECU couplers	Malfunction code 31 (See page 8-140.)

Malfunction code	Problem	Check point	Reference
32	ABS ECU circuit is broken or short-circuited. 12 V 0 V	• Wire harness and ABS wire harness (ABS circuit) • ABS ECU	Malfunction code 32 (See page 8-140.)
33	ABS motor is defective (ABS motor stops and will not rotate). 12 V 0 V	• ABS motor fuse • Wire harness and ABS wire harness (ABS circuit) • ABS motor coupler • ABS motor relay • ABS motor circuit	Malfunction code 33 (See page 8-140.)
34	ABS motor is defective (ABS motor keeps rotating and will not stop). 12 V 0 V	• ABS motor relay • Wire harness and ABS wire harness (ABS circuit) • ABS motor circuit	Malfunction code 34 (See page 8-141.)
35	Disconnection is detected in the ABS ECU and hydraulic unit solenoid circuit. 12 V 0 V	• ABS wire harness (ABS ECU and hydraulic unit solenoid circuit) • Hydraulic unit solenoid coupler	Malfunction code 35 (See page 8-141.)
51	Front wheel will not recover from the locking tendency even though the signal is continuously transmitted from the ABS ECU to release the hydraulic pressure (when the battery voltage is low). 12 V 0 V	• Brake dragging • Hydraulic unit operation tests • Front wheel brake line • Battery voltage	Malfunction code 51 (See page 8-142.)
52	Rear wheel will not recover from the locking tendency even though the signal is continuously transmitted from the ABS ECU to release the hydraulic pressure (when the battery voltage is low). 12 V 0 V	• Brake dragging • Hydraulic unit operation tests • Rear wheel brake line • Battery voltage	Malfunction code 52 (See page 8-142.)
Present malfunction (pocket tester always indicates 12 V)	ABS ECU may be malfunctioning. 12 V 0 V	• Wire harness and ABS wire harness (ABS test coupler circuit) • Wire harness, ABS wire harness, front cowling wire harness (ABS warning light circuit) • ABS ECU (replace)	Maintenance of the ABS ECU (See page 8-120.)

* Malfunction code 11 is indicated if the rear wheel rotates for longer than about 20 seconds with the front wheel stopped (e.g., when the vehicle is on the centerstand).

NOTE:

Malfunction codes 15 (front wheel) and 16 (rear wheel) are indicated if a defective connection is detected in the front or rear wheel sensor when the vehicle is not being ridden.

Malfunction code 11 (Front wheel sensor signal is not received properly.)

Turn the main switch to "OFF", then back to "ON" after removing the test coupler adapter.

1. The ABS warning light remains on.
   → Defective connection is detected in the front wheel sensor circuit.
   - Front wheel sensor coupler is disconnected.
     Refer to "MAINTENANCE OF THE FRONT WHEEL SENSOR AND SENSOR ROTOR" on page 4-16 and "INSTALLING THE FRONT WHEEL (FRONT BRAKE DISCS)" on page 4-18.
   - Front wheel sensor or lead is broken.
     Refer to "MAINTENANCE OF THE FRONT WHEEL SENSOR AND SENSOR ROTOR" on page 4-16 and "INSTALLING THE FRONT WHEEL (FRONT BRAKE DISCS)" on page 4-18.
   - Front wheel sensor circuit is disconnected.
     Refer to "CIRCUIT DIAGRAM (1/2)" on page 8-111 and "CIRCUIT DIAGRAM (2/2)" on page 8-113.
   - ABS ECU coupler terminal is disconnected.
     Refer to "MAINTENANCE OF THE ABS ECU" on page 8-120.
2. The ABS warning light comes on for 2.0 seconds, then goes off.
   a. With the front wheel stopped, the rear wheel was rotated for longer than about 20 seconds. This is not a malfunction.
   b. No signal is generated at the front wheel sensor.
      - Front wheel sensor is not installed properly.
        Refer to "MAINTENANCE OF THE FRONT WHEEL SENSOR AND SENSOR ROTOR" on page 4-16 and "INSTALLING THE FRONT WHEEL (FRONT BRAKE DISCS)" on page 4-18.
      - Front wheel sensor rotor is defective.
        Refer to "MAINTENANCE OF THE FRONT WHEEL SENSOR AND SENSOR ROTOR" on page 4-16 and "INSTALLING THE FRONT WHEEL (FRONT BRAKE DISCS)" on page 4-18.
   c. Front wheel sensor circuit is short-circuited.
      - Front wheel sensor or lead is short-circuited.
        Refer to "MAINTENANCE OF THE FRONT WHEEL SENSOR AND SENSOR ROTOR" on page 4-16 and "INSTALLING THE FRONT WHEEL (FRONT BRAKE DISCS)" on page 4-18.
      - ABS wire harness and wire harness are short-circuited.
        Refer to "CIRCUIT DIAGRAM (1/2)" on page 8-111 and "CIRCUIT DIAGRAM (2/2)" on page 8-113.
   d. Front wheel sensor output drops.
      - Sensor signal output may drop due to failure of the bearings, wheel axle, wheel, or sensor housing of the front wheel. Check these components, without removing them, for looseness, distortion, and bends.

Malfunction code 12 (Rear wheel sensor signal is not received properly.)

Turn the main switch to "OFF", then back to "ON".

1. The ABS warning light remains on.
   → Defective connection is detected in the rear wheel sensor circuit.
   - Rear wheel sensor coupler is disconnected.
     Refer to "MAINTENANCE OF THE REAR WHEEL SENSOR AND SENSOR ROTOR" on page 4-22 and "INSTALLING THE REAR WHEEL (REAR BRAKE DISC)" on page 4-23.
   - Rear wheel sensor or lead is broken.
     Refer to "MAINTENANCE OF THE REAR WHEEL SENSOR AND SENSOR ROTOR" on page 4-22 and "INSTALLING THE REAR WHEEL (REAR BRAKE DISC)" on page 4-23.
   - Rear wheel sensor circuit is disconnected.
     Refer to "CIRCUIT DIAGRAM (1/2)" on page 8-111 and "CIRCUIT DIAGRAM (2/2)" on page 8-113.

- ABS ECU coupler terminal is disconnected.
  Refer to “MAINTENANCE OF THE ABS ECU” on page 8-120.

2. The ABS warning light comes on for 2.0 seconds, then goes off.
   a. With the rear wheel stopped, the front wheel was rotated at a speed faster than about 11 km/h. This is not a malfunction.
   b. No signal is generated at the rear wheel sensor.
      - Rear wheel sensor is not installed properly.
        Refer to “MAINTENANCE OF THE REAR WHEEL SENSOR AND SENSOR ROTOR” on page 4-22 and “INSTALLING THE REAR WHEEL (REAR BRAKE DISC)” on page 4-23.
      - Rear wheel sensor rotor is defective.
        Refer to “MAINTENANCE OF THE REAR WHEEL SENSOR AND SENSOR ROTOR” on page 4-22 and “INSTALLING THE REAR WHEEL (REAR BRAKE DISC)” on page 4-23.
   c. Rear wheel sensor circuit is short-circuited.
      - Rear wheel sensor or lead is short-circuited.
        Refer to “MAINTENANCE OF THE REAR WHEEL SENSOR AND SENSOR ROTOR” on page 4-22 and “INSTALLING THE REAR WHEEL (REAR BRAKE DISC)” on page 4-23.
      - ABS wire harness is short-circuited.
        Refer to “CIRCUIT DIAGRAM (1/2)” on page 8-111 and “CIRCUIT DIAGRAM (2/2)” on page 8-113.
   d. Rear wheel sensor output drops.
      - Sensor signal output may drop due to failure of the bearings, wheel axle, wheel, or sensor housing of the rear wheel. Check these components, without removing them, for looseness, distortion, and bends.

NOTE:

If the vehicle is continuously ridden on extremely uneven roads, the ABS warning light may flash and malfunction code 11 or 12 may be recorded depending on the condition.

Malfunction codes 13/26 (front wheel) and 14/27 (rear wheel) (Incorrect signal from the front (13/26) or rear (14/27) wheel sensor is detected.)

1. The wheel sensors or sensor rotors are not properly installed.
   a. Installation of the front or rear wheel sensor
      - Check that the wheel sensor is properly installed in the housing.
        Refer to “MAINTENANCE OF THE FRONT WHEEL SENSOR AND SENSOR ROTOR” on page 4-16, “INSTALLING THE FRONT WHEEL (FRONT BRAKE DISCS)” on page 4-18, “MAINTENANCE OF THE REAR WHEEL SENSOR AND SENSOR ROTOR” on page 4-22, and “INSTALLING THE REAR WHEEL (REAR BRAKE DISC)” on page 4-23.
      - Check if there is looseness between the housing and wheel.
        Refer to “MAINTENANCE OF THE FRONT WHEEL SENSOR AND SENSOR ROTOR” on page 4-16, “INSTALLING THE FRONT WHEEL (FRONT BRAKE DISCS)” on page 4-18, “MAINTENANCE OF THE REAR WHEEL SENSOR AND SENSOR ROTOR” on page 4-22, and “INSTALLING THE REAR WHEEL (REAR BRAKE DISC)” on page 4-23.
   b. Installation of the front or rear wheel sensor rotor
      - Check that the sensor rotor is correctly pressed in the wheel.
        Refer to “MAINTENANCE OF THE FRONT WHEEL SENSOR AND SENSOR ROTOR” on page 4-16, “INSTALLING THE FRONT WHEEL (FRONT BRAKE DISCS)” on page 4-18, “MAINTENANCE OF THE REAR WHEEL SENSOR AND SENSOR ROTOR” on page 4-22, and “INSTALLING THE REAR WHEEL (REAR BRAKE DISC)” on page 4-23.
      - Check the rotor and inside the rotor housing for foreign materials.
        Refer to “MAINTENANCE OF THE FRONT WHEEL SENSOR AND SENSOR ROTOR” on page 4-16, “INSTALLING THE FRONT WHEEL (FRONT BRAKE DISCS)” on page 4-18, “MAINTENANCE OF THE REAR WHEEL SENSOR AND SENSOR ROTOR” on page 4-22, and “INSTALLING THE REAR WHEEL (REAR BRAKE DISC)” on page 4-23.

2. Teeth surfaces of the sensor rotors are defective.
   - Check if there are flaws on the surfaces of the sensor rotor teeth. Also, check for any foreign materials.
     Refer to “MAINTENANCE OF THE FRONT WHEEL SENSOR AND SENSOR ROTOR” on page 4-16, “INSTALLING THE FRONT WHEEL (FRONT BRAKE DISCS)” on page 4-18, “MAINTENANCE OF THE REAR WHEEL SENSOR AND SENSOR ROTOR” on page 4-22, and “INSTALLING THE REAR WHEEL (REAR BRAKE DISC)” on page 4-23.
3. Sensor output has dropped.
   - Sensor signal output may drop due to failure of the bearings, wheel axle, wheel, or sensor housing of the front or rear wheel. Check these components, without removing them, for looseness, distortion, and bends.

Malfunction codes 15 (front wheel) and 16 (rear wheel) (No continuity in the front or rear wheel sensor circuit.)

Broken front or rear wheel sensor circuit is detected.

- Front or rear wheel sensor coupler is disconnected.
  Refer to “MAINTENANCE OF THE FRONT WHEEL SENSOR AND SENSOR ROTOR” on page 4-16, “INSTALLING THE FRONT WHEEL (FRONT BRAKE DISCS)” on page 4-18, “MAINTENANCE OF THE REAR WHEEL SENSOR AND SENSOR ROTOR” on page 4-22, and “INSTALLING THE REAR WHEEL (REAR BRAKE DISC)” on page 4-23.
- Front or rear wheel sensor or lead is broken.
  Refer to “MAINTENANCE OF THE FRONT WHEEL SENSOR AND SENSOR ROTOR” on page 4-16, “INSTALLING THE FRONT WHEEL (FRONT BRAKE DISCS)” on page 4-18, “MAINTENANCE OF THE REAR WHEEL SENSOR AND SENSOR ROTOR” on page 4-22, and “INSTALLING THE REAR WHEEL (REAR BRAKE DISC)” on page 4-23.
- Front or rear wheel sensor circuit is broken.
  Refer to “CIRCUIT DIAGRAM (1/2)” on page 8-111 and “CIRCUIT DIAGRAM (2/2)” on page 8-113.
- ABS wire harness is disconnected from the ABS ECU coupler terminal.
  Refer to “MAINTENANCE OF THE ABS ECU” on page 8-120.

NOTE:

- Check that both the front and rear wheel sensor couplers are connected securely.
- If the vehicle is ridden after malfunction code 15 (front wheel) or 16 (rear wheel) is displayed, the malfunction code will be overwritten from 15 to 11 (front wheel) or from 16 to 12 (rear wheel).

Malfunction code 21 (Hydraulic unit solenoid circuit is broken or short-circuited.)

1. Hydraulic unit solenoid coupler
   - Check if a hydraulic unit solenoid coupler terminal is disconnected.
     Refer to “ABS COUPLER LOCATION CHART” on page 8-117.
2. Hydraulic unit solenoids
   - Check the solenoids (front brake, rear brake, and unified brake system) for continuity.
     Refer to “MAINTENANCE OF THE HYDRAULIC UNIT” on page 8-120.
   - Check the insulation between each solenoid terminal and the negative battery terminal.
     Refer to “MAINTENANCE OF THE HYDRAULIC UNIT” on page 8-120.
3. ABS wire harness
   - Check the white/green lead for continuity between “1” and “5” of the hydraulic unit solenoid circuit.
   - Check the white/blue lead for continuity between “2” and “4” of the hydraulic unit solenoid circuit.
   - Check the white/yellow lead for continuity between “3” and “6” of the hydraulic unit solenoid circuit.
   - Check the red/white leads for continuity between “7” and “10”, between “8” and “10”, and between “9” and “10” of the hydraulic unit solenoid circuit.

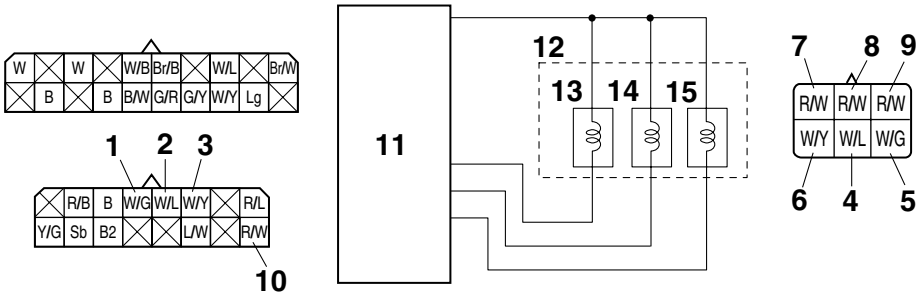

11.ABS ECU
12.Hydraulic unit
13.Front brake solenoid
14.Rear brake solenoid
15.Unified brake system solenoid

- Check the insulation of the hydraulic unit solenoid circuits and the negative battery terminal.

Malfunction code 23 (Front or rear brake light switch is defective.)

1. Wire harness, ABS wire harness, and front cowling wire harness
   - Check the entire anti-lock brake system wiring.
     Refer to “CIRCUIT DIAGRAM (1/2)” on page 8-111 and “CIRCUIT DIAGRAM (2/2)” on page 8-113.
2. Brake light relay
   - Check the brake light relay.
     Refer to “CHECKING THE RELAYS” on page 8-157.
3. Brake light switches (front and rear)
   - Check the brake light switches (front and rear).
     Refer to “CHECKING THE SWITCHES” on page 8-149.
4. Rear brake light switch
   - Check that the rear brake light switch is adjusted properly.
     Refer to “ADJUSTING THE REAR BRAKE LIGHT SWITCH” on page 3-23.
5. Wire harness, ABS wire harness, and front cowling wire harness
   - Check the front and rear brake light switch monitor circuits.
   - Check the green/yellow lead for continuity between “1” and “2” of the front brake light switch monitor circuit.
   - Check the brown/black lead for continuity between “3” and “4” of the rear brake light switch monitor circuit.

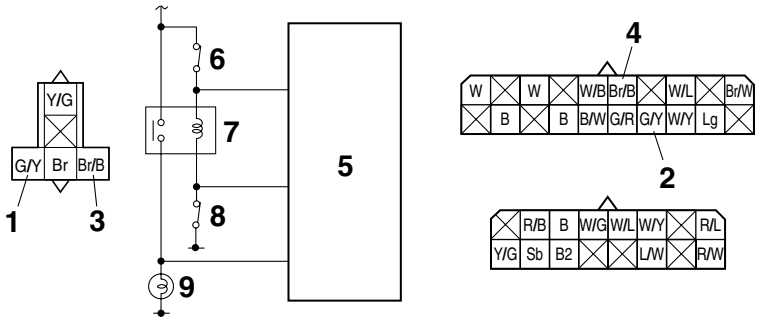

5. ABS ECU
6. Front brake light switch
7. Brake light relay
8. Rear brake light switch
9. Tail/brake light

Malfunction code 24 (Brake light is defective.)

1. Wire harness and ABS wire harness
   - Check the entire anti-lock brake system wiring.
     Refer to “CIRCUIT DIAGRAM (1/2)” on page 8-111 and “CIRCUIT DIAGRAM (2/2)” on page 8-113.
2. Brake light relay
   - Check the brake light relay.
     Refer to “CHECKING THE RELAYS” on page 8-157.
3. Wire harness and ABS wire harness
   - Check the brake light monitor circuit.
   - Check the yellow/green lead for continuity between “1” and “2” of the brake light monitor circuit.

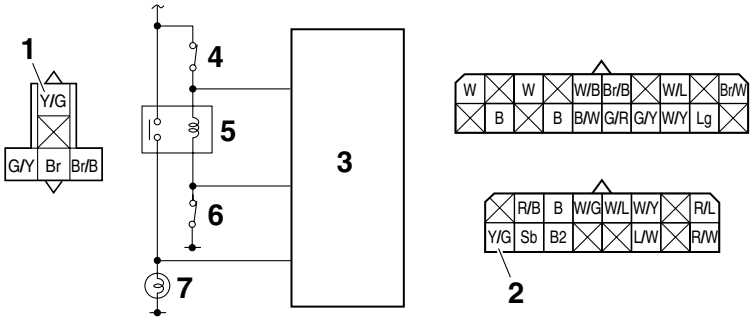

3. ABS ECU
4. Front brake light switch
5. Brake light relay
6. Rear brake light switch
7. Tail/brake light

Malfunction code 25 (No signal is received from the front wheel sensor when the vehicle starts moving.)

1. If any of the following conditions have occurred, malfunction codes (past malfunctions) will be stored in the memory of the ABS ECU, but the ABS has not malfunctioned. Delete the malfunction codes.
   - The rear wheel was rotated with the vehicle on the centerstand.
   - The rear wheel raced.
   - The vehicle was ridden on the rear wheel with the front wheel elevated.
2. The front wheel sensor is not properly installed.
   - Check that the front wheel sensor is properly installed in the housing.
     Refer to “MAINTENANCE OF THE FRONT WHEEL SENSOR AND SENSOR ROTOR” on page 4-16 and “INSTALLING THE FRONT WHEEL (FRONT BRAKE DISCS)” on page 4-18.
   - Check if there is looseness between the housing and the wheel.
     Refer to “MAINTENANCE OF THE FRONT WHEEL SENSOR AND SENSOR ROTOR” on page 4-16 and “INSTALLING THE FRONT WHEEL (FRONT BRAKE DISCS)” on page 4-18.
3. Front wheel sensor circuit is short-circuited.
   - Front wheel sensor or lead is short-circuited.
     Refer to “MAINTENANCE OF THE FRONT WHEEL SENSOR AND SENSOR ROTOR” on page 4-16 and “INSTALLING THE FRONT WHEEL (FRONT BRAKE DISCS)” on page 4-18.
   - ABS wire harness and wire harness are short-circuited.
     Refer to “CIRCUIT DIAGRAM (1/2)” on page 8-111 and “CIRCUIT DIAGRAM (2/2)” on page 8-113.

Malfunction code 41 (Front wheel will not recover from the locking tendency even though the signal is continuously transmitted from the ABS ECU to release the hydraulic pressure (when the battery voltage is normal).)

1. Rotation of wheel
   - Check that there is no brake disc drag on the front wheel and make sure that it rotates smoothly.
   - Check the front wheel axle for loose bearings and bends, and the brake discs for distortion.

2. Brake master cylinder and brake caliper
   - Check that the brake fluid pressure is correctly transmitted to the brake calipers when the brake lever is operated and that the pressure decreases when the lever is released.
3. Brake fluid
   - Visually check the brake fluid in the brake master cylinder reservoir and the brake fluid reservoir for water, foreign materials, solidification, and contamination.
   - Check for air in the brake hose lines.
4. Brake hose lines
   - Check the brake hose lines for kinks and deterioration.

EW3P61005

WARNING

Only use genuine Yamaha parts. Using other brake pipes, hoses and union bolts may close the brake hose lines.

- Check that the connections of the brake hose lines from the brake master cylinder to the hydraulic unit and from the hydraulic unit to the front brake calipers and the metering valve are correct.

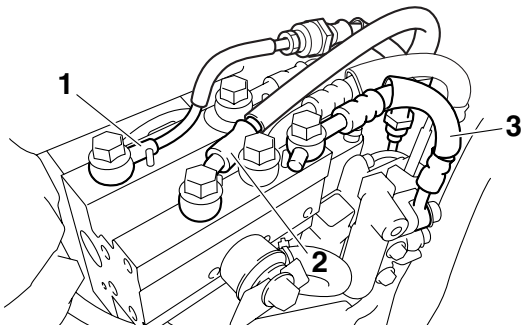

EW3P61006

WARNING

The front brakes will not function properly if the connections are incorrect.
- **Brake hose "1" inlet: from the front brake master cylinder to the hydraulic unit**
- **Brake hose "2" outlet: from the hydraulic unit to the front brake calipers**
- **Brake hose "3" outlet: from the hydraulic unit to the metering valve**

NOTE:

- If the brake hose inlet and outlet connections are incorrect on the hydraulic unit, the brake lever will be pulled to its full-stroke position without responding, and then it will be pushed back slowly without pulsating when the final check on page "[D-3] FINAL CHECK" on page 8-144 is performed.
- If the front and rear brake hose connections are reversed on the hydraulic unit, the pulsating action in the brake lever and brake pedal will be performed in the reverse order when the final check on page "[D-3] FINAL CHECK" on page 8-144 is performed.
- If the brake hoses (to the proportioning valve and the metering valve) are switched during assembly, the brakes will continue to operate as normal. However, the reduction of the hydraulic pressure for the rear brake and part of the right front brake will be reversed during the ABS operation when the final check on page "[D-3] FINAL CHECK" on page 8-144 is performed.

5. Hydraulic unit solenoid coupler terminals
   - Check if the front brake, rear brake, and unified brake system solenoid coupler terminals (hydraulic unit and ABS wire harness) are connected correctly.

	Terminal color	
	Solenoid	**ABS wire harness**
Front brake	white, white	red/white, white/blue
Rear brake	green, green	red/white, white/green
Unified brake system	red, red	red/white, white/yellow

6. Hydraulic unit
   If the malfunction is not corrected after checking items (1) to (5), replace the hydraulic unit. Be sure to connect the brake hoses and couplers correctly and securely. Check the hydraulic unit operation. Refer to “HYDRAULIC UNIT OPERATION TESTS” on page 4-56.

Malfunction code 42 (Rear wheel will not recover from the locking tendency even though the signal is continuously transmitted from the ABS ECU to release the hydraulic pressure (when the battery voltage is normal).)

1. Rotation of wheel
   - Check that there is no brake disc drag on the rear wheel and make sure that it rotates smoothly.
   - Check for brake disc distortion.
2. Brake master cylinder and brake caliper
   - Check that the brake fluid pressure is correctly transmitted to the brake caliper when the brake pedal is operated and that the pressure decreases when the pedal is released.
3. Brake fluid
   - Visually check the brake fluid in the brake fluid reservoir for water, foreign materials, solidification, and contamination.
   - Check for air in the brake hose lines.
4. Brake hose lines
   - Check the brake hose lines for kinks and deterioration (particularly between the hydraulic unit and the rear brake caliper).

EW3P61005

WARNING

Only use genuine Yamaha parts. Using other brake pipes, hoses and union bolts may close the brake hose lines.

- Check that the connections of the brake hose lines from the brake master cylinder to the hydraulic unit and from the hydraulic unit to the proportioning valve are correct.

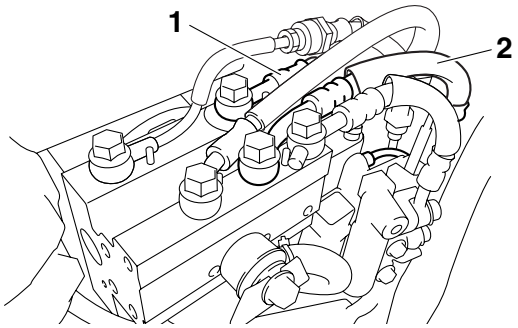

EW3P61007

WARNING

The rear brake will not function properly if the connections are reversed.
- **Brake hose “1” inlet: from the rear brake master cylinder to the hydraulic unit**
- **Brake hose “2” outlet: from the hydraulic unit to the proportioning valve**

NOTE:

- If the rear brake hose inlet and outlet connections are reversed on the hydraulic unit, the brake pedal will be pressed down to its full-stroke position without responding, and then it will be pushed back slowly without pulsating when the final check on page “[D-3] FINAL CHECK” on page 8-144 is performed.
- If the front and rear brake hose connections are reversed on the hydraulic unit, the pulsating action in the brake lever and brake pedal will be performed in the reverse order when the final check on page “[D-3] FINAL CHECK” on page 8-144 is performed.

- If the brake hoses (to the proportioning valve and the metering valve) are switched during assembly, the brakes will continue to operate as normal. However, the reduction of the hydraulic pressure for the rear brake and part of the right front brake will be reversed during the ABS operation when the final check on page "[D-3] FINAL CHECK" on page 8-144 is performed.

5. Hydraulic unit solenoid coupler terminals
   - Check if the front brake, rear brake, and unified brake system solenoid coupler terminals (hydraulic unit and ABS wire harness) are connected correctly.

	Terminal color	
	Solenoid	**ABS wire harness**
Front brake	white, white	red/white, white/blue
Rear brake	green, green	red/white, white/green
Unified brake system	red, red	red/white, white/yellow

6. Hydraulic unit
   If the malfunction is not corrected after checking items (1) to (5), replace the hydraulic unit. Be sure to connect the brake hoses and couplers correctly and securely. Check the hydraulic unit operation. Refer to "HYDRAULIC UNIT OPERATION TESTS" on page 4-56.

Malfunction code 31 (Disconnection is detected in the battery and ABS ECU circuit.)

1. ABS motor fuse
   - Check if the ABS motor fuse in the starter relay is blown.
2. Coupler between the battery and the ABS ECU
   - Check if the coupler is connected properly.
3. Wire harness and ABS wire harness
   - Turn the main switch to "OFF" and disconnect the ABS ECU coupler and battery leads.
   - Check for continuity between the positive battery terminal and the red/blue terminal of the ABS ECU coupler.
     Refer to "CIRCUIT DIAGRAM (1/2)" on page 8-111 and "CIRCUIT DIAGRAM (2/2)" on page 8-113.
4. ABS ECU
   - If the malfunction is not corrected after checking items (1) to (3), replace the ABS ECU.

Malfunction code 32 (ABS ECU circuit is broken or short-circuited.)

1. ABS ECU circuit (positive battery terminal to red/white terminal of the ABS ECU coupler)
   - Turn the main switch to "OFF" and disconnect the ABS ECU coupler and battery leads.
   - Check for continuity between the positive battery terminal and the red/white terminal of the ABS ECU coupler.
     Refer to "CIRCUIT DIAGRAM (1/2)" on page 8-111 and "CIRCUIT DIAGRAM (2/2)" on page 8-113.
     If there is continuity, repair or replace the defective harness.
2. ABS ECU circuit (brown/white terminal to red/white terminal of the ABS ECU coupler)
   - Turn the main switch to "OFF" and disconnect the ABS ECU coupler.
   - Check for continuity between the brown/white and the red/white terminals of the ABS ECU coupler.
     Refer to "CIRCUIT DIAGRAM (1/2)" on page 8-111 and "CIRCUIT DIAGRAM (2/2)" on page 8-113.
     If there is continuity, repair or replace the defective harness.
3. ABS ECU
   - If the malfunction is not corrected after checking items (1) to (2), replace the ABS ECU.

Malfunction code 33 (ABS motor is defective (ABS motor stops and will not rotate).)

1. ABS motor fuse
   - Check if the ABS motor fuse in the starter relay is blown.

2. ABS motor relay
   - Check if the ABS motor relay operates correctly.
     Refer to “MAINTENANCE OF THE ABS MOTOR RELAY” on page 8-120.
3. Wire harness and ABS wire harness
   - Remove the ABS motor relay and ABS motor fuse, and then check for continuity between the red/blue terminal of ABS wire harness and the starter relay ABS motor fuse terminal “1” (ABS wire harness side) shown in the illustration.
     Refer to “CIRCUIT DIAGRAM (1/2)” on page 8-111 and “CIRCUIT DIAGRAM (2/2)” on page 8-113.
   - Check for continuity between the positive battery terminal and the ABS motor fuse terminal “2” (battery side) shown in the illustration.
   - Disconnect the ABS ECU and ABS motor relay from ABS wire harness, and then check for continuity between the white/black terminals, between the red/white terminals, between the red/black terminals, and between the red/blue terminals.

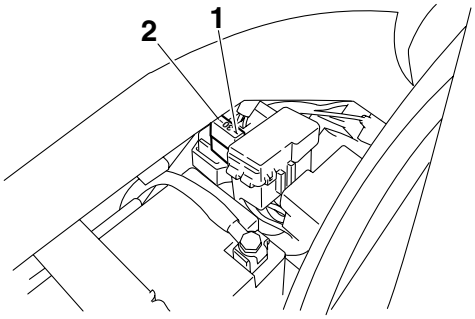

Malfunction code 34 (ABS motor is defective (ABS motor keeps rotating and will not stop).)

1. ABS motor
   - Check if the ABS motor coupler located under the hydraulic unit is connected properly.
   - Check the ABS motor for continuity.
     Refer to “MAINTENANCE OF THE HYDRAULIC UNIT” on page 8-120.
2. ABS wire harness
   - Disconnect the ABS motor coupler, and then check for continuity between the black/white terminal of the ABS motor coupler of ABS wire harness and the negative battery terminal.
   - Disconnect the ABS ECU couplers, and then check for continuity between the red/black terminal of the ABS ECU coupler and the red/black terminal of the ABS motor coupler.
     Refer to “MAINTENANCE OF THE ABS ECU” on page 8-120.
   - Remove the ABS motor relay and check for continuity between the red/white terminal of the ABS motor coupler of the ABS wire harness and positive battery terminal.
3. ABS motor relay
   - Check if the ABS motor relay operates correctly.
     Refer to “MAINTENANCE OF THE ABS MOTOR RELAY” on page 8-120.

Malfunction code 35 (Disconnection is detected in the ABS ECU and hydraulic unit solenoid circuit.)

1. Coupler between the battery and the hydraulic unit (solenoid)
   - Check if the coupler is connected properly.
2. ABS wire harness
   - Check the red/white leads for continuity between “1” and “2”, between “1” and “3”, and between “1” and “4” of the hydraulic unit solenoid circuit.

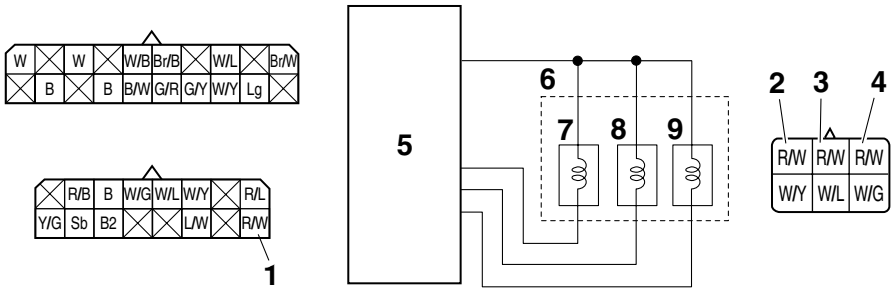

5. ABS ECU
6. Hydraulic unit
7. Front brake solenoid
8. Rear brake solenoid
9. Unified brake system solenoid

3. ABS ECU
   - If the malfunction is not corrected after checking items (1) to (2), replace the ABS ECU.

Malfunction code 51 (Front wheel will not recover from the locking tendency even though the signal is continuously transmitted from the ABS ECU to release the hydraulic pressure (when the battery voltage is low).)

1. Refer to malfunction codes 26 and 41.
2. Battery voltage
   Measure the battery output voltage.

Malfunction code 52 (Rear wheel will not recover from the locking tendency even though the signal is continuously transmitted from the ABS ECU to release the hydraulic pressure (when the battery voltage is low).)

1. Refer to malfunction codes 27 and 42.
2. Battery voltage
   Measure the battery output voltage.

EAS22830

[D-1] DELETING THE MALFUNCTION CODES

1. Connect the test coupler adapter “1” to the ABS test coupler “2”. Refer to “[B-5] MALFUNCTION CHECK BY THE ABS SELF-DIAGNOSIS (PRESENT MALFUNCTION)” on page 8-125.

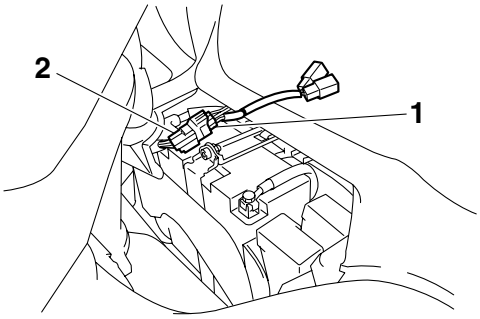

2. Turn the main switch to “ON”.
   Previously recorded malfunction codes will be displayed in the multi-function display.
3. Set the engine stop switch “1” to “⊗”.

EC3P61014

CAUTION:

If the start switch is pushed without setting the engine stop switch to “⊗”, the starter motor gears or other parts may be damaged.

4. Push the start switch “2” at least 10 times in 4 seconds to delete the malfunction codes.

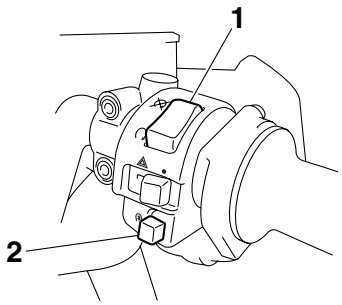

5. The multi-function display switches to the odometer/tripmeter/fuel reserve tripmeter display and the ABS warning light flashes in 0.5 second-intervals while the malfunction codes are being deleted.
6. Turn the main switch to “OFF”.
7. Turn the main switch to “ON” again.
   Check that the ABS warning light comes on for 2 seconds, goes off for 0.5 second, and then starts flashing.

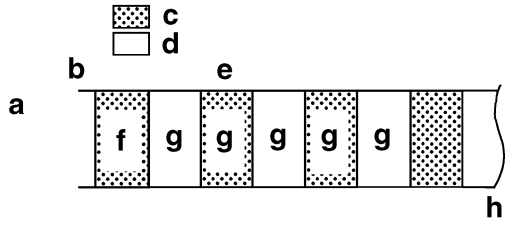

a. ABS warning light
b. Main switch “ON”
c. Comes on
d. Goes off
e. Flashes
f. 2.0 seconds
g. 0.5 second
h. Repeats

8. Turn the main switch to “OFF”.
9. Disconnect the test coupler adapter from the ABS test coupler, and then install the protective cap onto the ABS test coupler. Deleting the malfunction codes is now finished.

NOTE:

Do not forget to install the protective cap onto the ABS test coupler.

EC3P61015

CAUTION:

Since the malfunction codes remain in the memory of the ABS ECU until they are deleted, always delete the malfunction codes after the service has been completed.

ET3P61020

[D-2] DELETE FUNCTION TEST

1. Place the vehicle on the centerstand.
2. Turn the main switch to “OFF”.
3. Connect the test coupler adapter to the ABS test coupler.
4. Turn the main switch to “ON”.
5. Check:
   - ABS ECU voltage
     Lower than 12.8 V → Charge or replace the battery.

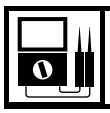

Battery voltage
Higher than 12.8 V

▼▼▼▼▼▼▼▼▼▼▼▼▼▼▼▼▼▼▼▼▼▼▼▼▼▼▼▼▼▼▼▼▼▼

a. Connect the pocket tester (DC 20 V) to the ABS ECU couplers.

Pocket tester
90890-03112
Analog pocket tester
YU-03112-C

- Positive tester probe → brown/white “1”
- Negative tester probe → black “2”

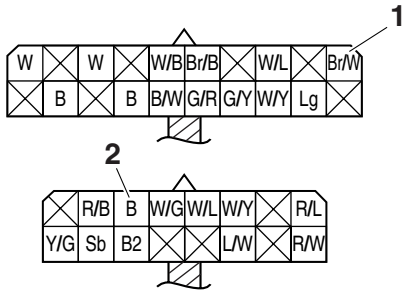

b. Measure the ABS ECU voltage.

▲▲▲▲▲▲▲▲▲▲▲▲▲▲▲▲▲▲▲▲▲▲▲▲▲▲▲▲▲▲▲▲▲▲

6. Check:
   - ABS-ECU-to-start-switch-lead continuity
     No continuity → Replace or repair the wire harness, ABS wire harness and front cowling wire harness.

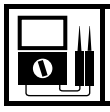

Continuity is all right.

▼▼▼▼▼▼▼▼▼▼▼▼▼▼▼▼▼▼▼▼▼▼▼▼▼▼▼▼▼▼▼▼▼▼

a. Connect the pocket tester (Ω × 1) to the ABS ECU coupler and right handlebar switch coupler.

Pocket tester
90890-03112
Analog pocket tester
YU-03112-C

- Positive tester probe → white/blue “1” (ABS ECU)
- Negative tester probe → white/blue “2” (right handlebar switch)

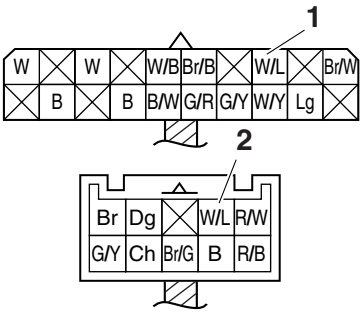

b. Check for continuity between the ABS ECU and the start switch lead.

▲▲▲▲▲▲▲▲▲▲▲▲▲▲▲▲▲▲▲▲▲▲▲▲▲▲▲▲▲▲▲▲▲▲

7. Check:
   - ABS ECU voltage
     Out of specification → Replace the right handlebar switch.

Start switch “ON”: less than 1 V
Start switch “OFF”: more than 12 V

▼▼▼▼▼▼▼▼▼▼▼▼▼▼▼▼▼▼▼▼▼▼▼▼▼▼▼▼▼▼▼▼▼▼

a. Connect the pocket tester (DC 12 V) to the ABS ECU couplers.

Pocket tester
90890-03112
Analog pocket tester
YU-03112-C

- Positive tester probe → white/blue “1”
- Negative tester probe → black “2”

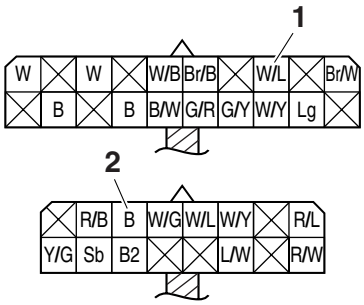

b. Push the start switch.
c. Measure the ABS ECU voltage.

▲▲▲▲▲▲▲▲▲▲▲▲▲▲▲▲▲▲▲▲▲▲▲▲▲▲▲▲▲▲▲▲▲▲

8. If the above-mentioned checks are within specification, replace the ABS ECU.

ET3P61022

[D-3] FINAL CHECK

Checking procedures

1. Check the brake fluid level in the brake master cylinder reservoir and brake fluid reservoir.
   Refer to “CHECKING THE BRAKE FLUID LEVEL” on page 3-22.
2. Check the wheel sensor housings and wheel sensors for proper installation.
   Refer to “INSTALLING THE FRONT WHEEL (FRONT BRAKE DISCS)” on page 4-18 and “INSTALLING THE REAR WHEEL (REAR BRAKE DISC)” on page 4-23.
3. Perform hydraulic unit operation test 1 or 2.
   Refer to “HYDRAULIC UNIT OPERATION TESTS” on page 4-56.
4. Delete the malfunction codes.
   Refer to “[D-1] DELETING THE MALFUNCTION CODES” on page 8-142.
5. Perform a trial run.
   Refer to “TRIAL RUN” on page 4-59.

EAS27970

ELECTRICAL COMPONENTS

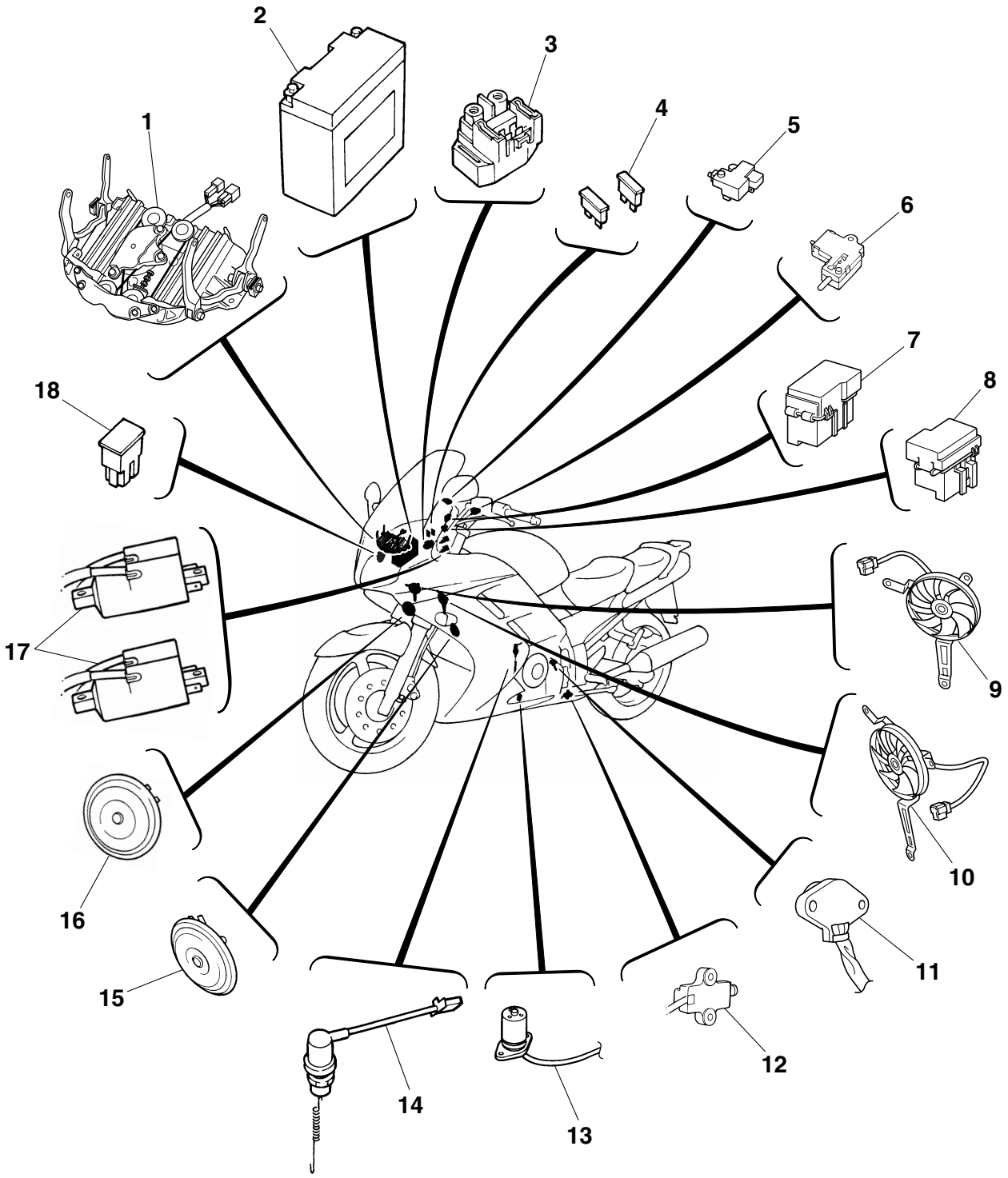

1. Windshield drive unit
2. Battery
3. Starter relay
4. ABS motor fuse
5. Front brake light switch
6. Clutch switch
7. Fuse box 2
8. Fuse box 1
9. Right radiator fan motor
10. Left radiator fan motor
11. Gear position switch
12. Sidestand switch
13. Oil level switch
14. Rear brake light switch
15. Left horn (low)
16. Right horn (high)
17. Ignition coil
18. Main fuse

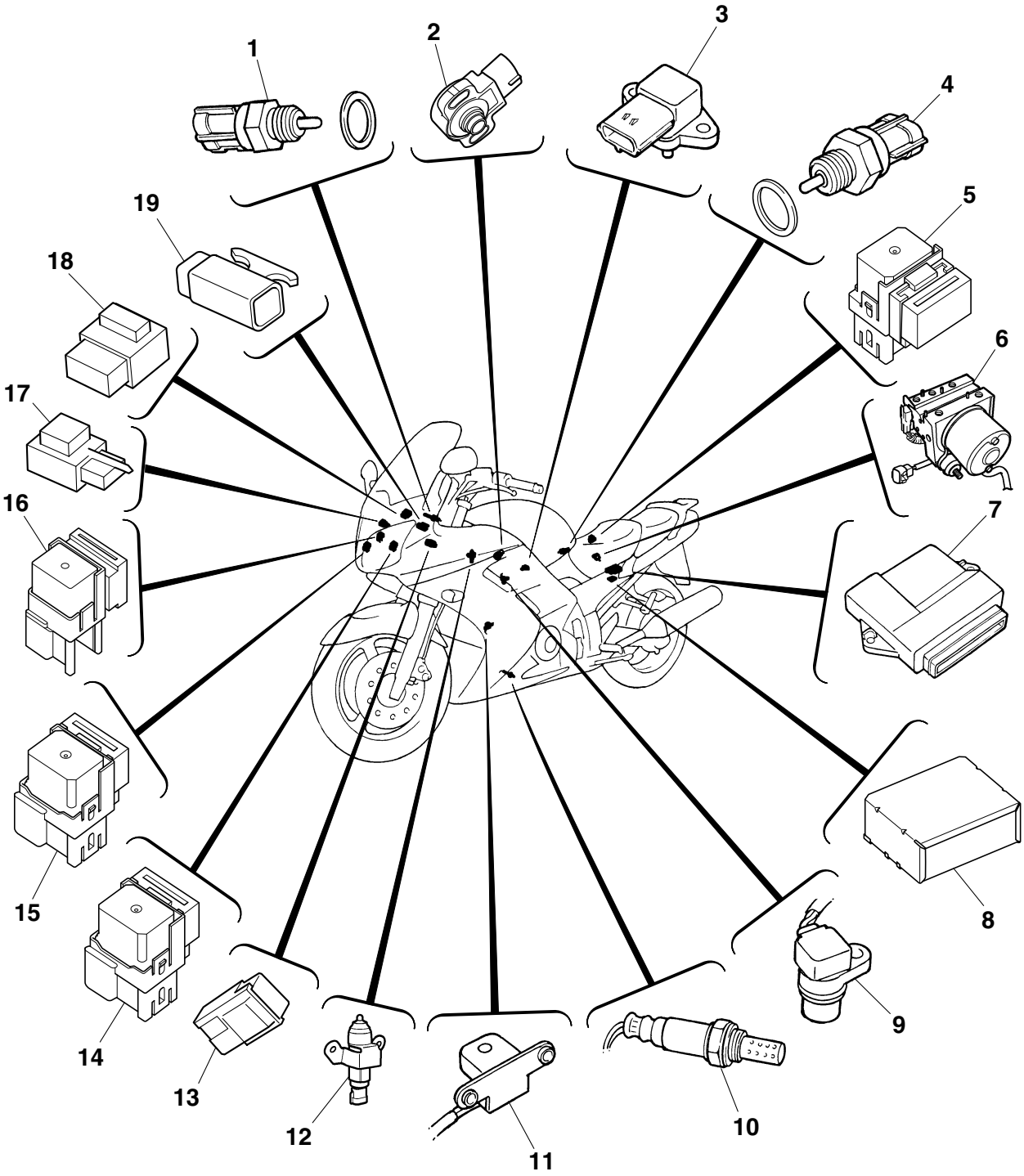
1
2
3
4
5
6
7
8
9
10
11
12
13
14
15
16
17
18
19

1. Coolant temperature sensor
2. Throttle position sensor
3. Intake air pressure sensor
4. Intake air temperature sensor
5. ABS motor relay
6. Hydraulic unit
7. ECU (engine control unit)
8. ABS (ECU)
9. Cylinder identification sensor
10. O_2 sensor
11. Crankshaft position sensor
12. Accessory box solenoid
13. Headlight relay (dimmer)
14. Radiator fan motor relay
15. Headlight relay (on/off)
16. Brake light relay
17. Turn signal/hazard relay
18. Relay unit
19. Lean angle sensor

EAS27980
CHECKING THE SWITCHES

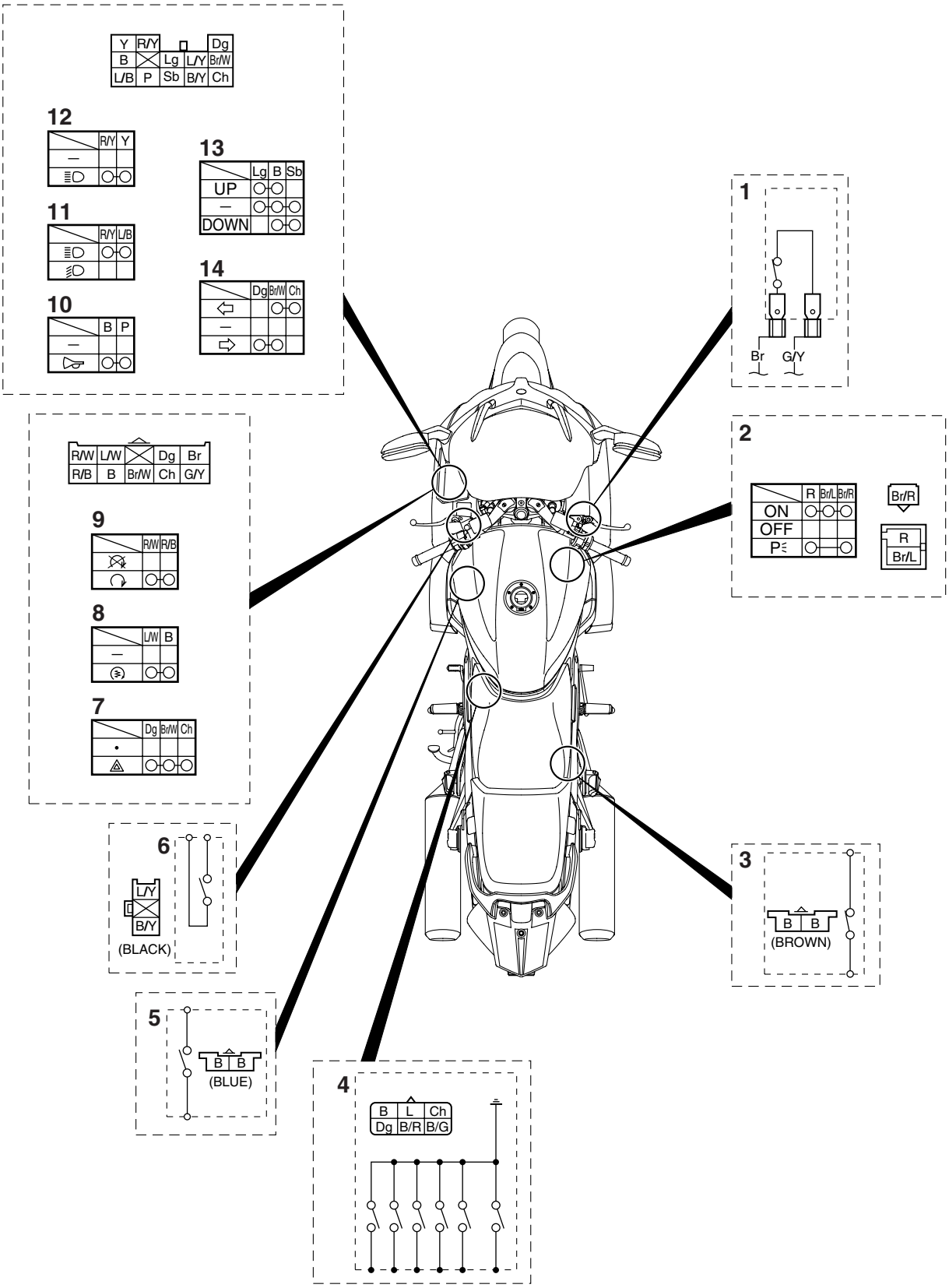

1. Front brake light switch
2. Main switch
3. Rear brake light switch
4. Gear position switch
5. Sidestand switch
6. Clutch switch
7. Hazard switch
8. Start switch
9. Engine stop switch
10. Horn switch
11. Dimmer switch
12. Pass switch
13. Windshield position switch
14. Turn signal switch

Check each switch for continuity with the pocket tester. If the continuity reading is incorrect, check the wiring connections and if necessary, replace the switch.

ECA14370

CAUTION:

Never insert the tester probes into the coupler terminal slots "a". Always insert the probes from the opposite end of the coupler, taking care not to loosen or damage the leads.

Pocket tester
90890-03112
Analog pocket tester
YU-03112-C

NOTE:

- Before checking for continuity, set the pocket tester to "0" and to the "Ω × 1" range.
- When checking for continuity, switch back and forth between the switch positions a few times.

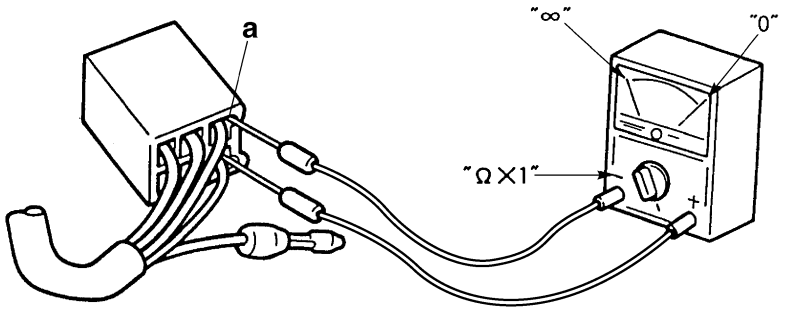

The switches and their terminal connections are illustrated as in the following example of the main switch.
The switch positions "a" are shown in the far left column and the switch lead colors "b" are shown in the top row.
The continuity (i. e., a closed circuit) between switch terminals at a given switch position is indicated by " ○——○ ". There is continuity between red, brown/blue, and brown/red when the switch is set to "ON" and between red and brown/red when the switch is set to "P≦".

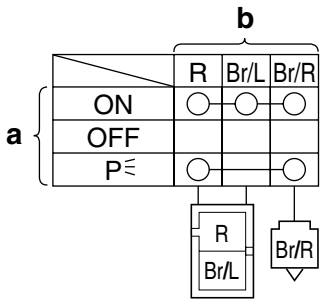

EAS27990
CHECKING THE BULBS AND BULB SOCKETS

NOTE:

Do not check any of the lights that use LEDs.

Check each bulb and bulb socket for damage or wear, proper connections, and also for continuity between the terminals.
Damage/wear → Repair or replace the bulb, bulb socket or both.
Improperly connected → Properly connect.
No continuity → Repair or replace the bulb, bulb socket or both.

Types of bulbs

The bulbs used on this vehicle are shown in the illustration.

- Bulbs “a” and “b” are used for the headlights and usually use a bulb holder that must be detached before removing the bulb. The majority of these types of bulbs can be removed from their respective socket by turning them counterclockwise.
- Bulbs “c” are used for turn signal and tail/brake lights and can be removed from the socket by pushing and turning the bulb counterclockwise.
- Bulbs “d” and “e” are used for meter and indicator lights and can be removed from their respective socket by carefully pulling them out.

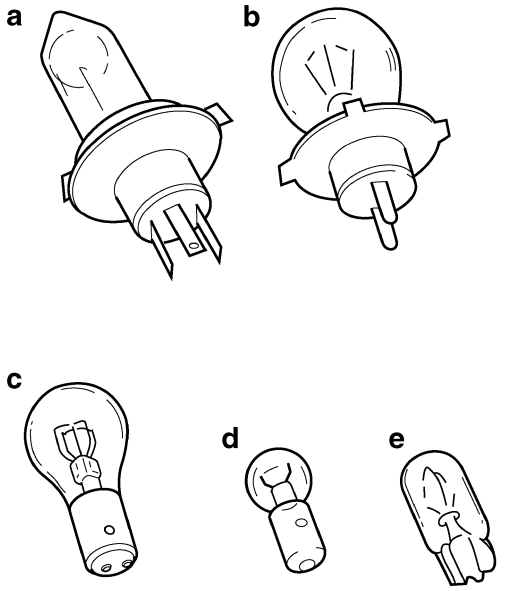

Checking the condition of the bulbs

The following procedure applies to all of the bulbs.

1. Remove:
   - Bulb

EW3P61001

WARNING

Since headlight bulbs get extremely hot, keep flammable products and your hands away from them until they have cooled down.

EC3P61002

CAUTION:

- **Be sure to hold the socket firmly when removing the bulb. Never pull the lead, otherwise it may be pulled out of the terminal in the coupler.**
- **Avoid touching the glass part of a headlight bulb to keep it free from oil, otherwise the transparency of the glass, the life of the bulb, and the luminous flux will be adversely affected. If the headlight bulb gets soiled, thoroughly clean it with a cloth moistened with alcohol or lacquer thinner.**

2. Check:
   - Bulb (for continuity)
     (with the pocket tester)
     No continuity → Replace.

Pocket tester
90890-03112
Analog pocket tester
YU-03112-C

NOTE:

Before checking for continuity, set the pocket tester to “0” and to the “Ω × 1” range.

▼▼▼▼▼▼▼▼▼▼▼▼▼▼▼▼▼▼▼▼▼▼▼▼▼▼▼▼▼▼▼▼▼▼

a. Connect the positive tester probe to terminal “1” and the negative tester probe to terminal “2”, and check the continuity.
b. Connect the positive tester probe to terminal “1” and the negative tester probe to terminal “3”, and check the continuity.
c. If either of the readings indicate no continuity, replace the bulb.

▲▲▲▲▲▲▲▲▲▲▲▲▲▲▲▲▲▲▲▲▲▲▲▲▲▲▲▲▲▲▲▲▲▲

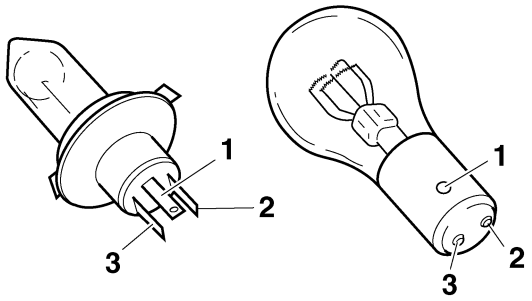

Checking the condition of the bulb sockets
The following procedure applies to all of the bulb sockets.
1. Check:
   - Bulb socket (for continuity) (with the pocket tester)
     No continuity → Replace.

Pocket tester
90890-03112
Analog pocket tester
YU-03112-C

NOTE:
Check each bulb socket for continuity in the same manner as described in the bulb section; however, note the following.

▼▼▼▼▼▼▼▼▼▼▼▼▼▼▼▼▼▼▼▼▼▼▼▼▼▼▼▼▼▼▼▼▼▼
a. Install a good bulb into the bulb socket.
b. Connect the pocket tester probes to the respective leads of the bulb socket.
c. Check the bulb socket for continuity. If any of the readings indicate no continuity, replace the bulb socket.
▲▲▲▲▲▲▲▲▲▲▲▲▲▲▲▲▲▲▲▲▲▲▲▲▲▲▲▲▲▲▲▲▲▲

EAS28000
CHECKING THE FUSES
The following procedure applies to all of the fuses.
EC3P61003
CAUTION:
To avoid a short circuit, always turn the main switch to "OFF" when checking or replacing a fuse.

1. Remove:
   - Front cowling right inner panel 1
     Refer to "GENERAL CHASSIS" on page 4-1.
2. Check:
   - Fuse

▼▼▼▼▼▼▼▼▼▼▼▼▼▼▼▼▼▼▼▼▼▼▼▼▼▼▼▼▼▼▼▼▼▼
a. Connect the pocket tester to the fuse and check the continuity.

NOTE:
Set the pocket tester selector to "Ω × 1".

Pocket tester
90890-03112
Analog pocket tester
YU-03112-C

b. If the pocket tester indicates "∞", replace the fuse.

▲▲▲▲▲▲▲▲▲▲▲▲▲▲▲▲▲▲▲▲▲▲▲▲▲▲▲▲▲▲▲▲▲▲
3. Replace:
   - Blown fuse

▼▼▼▼▼▼▼▼▼▼▼▼▼▼▼▼▼▼▼▼▼▼▼▼▼▼▼▼▼▼▼▼▼▼
a. Turn the main switch to "OFF".
b. Install a new fuse of the correct amperage rating.
c. Set on the switches to verify if the electrical circuit is operational.
d. If the fuse immediately blows again, check the electrical circuit.

Fuses	Amperage rating	Q'ty
Main	50 A	1
ABS motor	30 A	1
Headlight	25 A	1
Fuel injection system	15 A	1
Signaling system	15 A	1
Left radiator fan motor	15 A	1
Right radiator fan motor	15 A	1
Ignition	10 A	1
Hazard lighting	10 A	1
ABS ECU	10 A	1
Backup (odometer, clock, immobilizer system, and windshield drive system)	10 A	1
Auxiliary DC jack	3 A	1
Spare	30 A	1
Spare	25 A	1
Spare	15 A	1
Spare	10 A	1
Spare	3 A	1

EWA13310

WARNING

Never use a fuse with an amperage rating other than that specified. Improvising or using a fuse with the wrong amperage rating may cause extensive damage to the electrical system, cause the lighting and ignition systems to malfunction and could possibly cause a fire.

▲▲▲▲▲▲▲▲▲▲▲▲▲▲▲▲▲▲▲▲▲▲▲▲▲▲▲▲▲▲▲▲▲▲

4. Install:
   - Front cowling right inner panel 1
     Refer to “GENERAL CHASSIS” on page 4-1.

EAS28030

CHECKING AND CHARGING THE BATTERY

EWA13290

WARNING

Batteries generate explosive hydrogen gas and contain electrolyte which is made of poisonous and highly caustic sulfuric acid. Therefore, always follow these preventive measures:

- **Wear protective eye gear when handling or working near batteries.**
- **Charge batteries in a well-ventilated area.**
- **Keep batteries away from fire, sparks or open flames (e.g., welding equipment, lighted cigarettes).**
- **DO NOT SMOKE when charging or handling batteries.**
- **KEEP BATTERIES AND ELECTROLYTE OUT OF REACH OF CHILDREN.**
- **Avoid bodily contact with electrolyte as it can cause severe burns or permanent eye injury.**

FIRST AID IN CASE OF BODILY CONTACT:
EXTERNAL

- **Skin — Wash with water.**
- **Eyes — Flush with water for 15 minutes and get immediate medical attention.**

INTERNAL

- **Drink large quantities of water or milk followed with milk of magnesia, beaten egg or vegetable oil. Get immediate medical attention.**

EC3P61004

CAUTION:

- **This is a sealed battery. Never remove the sealing caps because the balance between cells will not be maintained and battery performance will deteriorate.**
- **Charging time, charging amperage and charging voltage for an MF battery are different from those of conventional batteries. The MF battery should be charged according to the appropriate charging method. If the battery is overcharged, the electrolyte level will drop considerably. Therefore, take special care when charging the battery.**

NOTE:

Since MF batteries are sealed, it is not possible to check the charge state of the battery by measuring the specific gravity of the electrolyte. Therefore, the charge of the battery has to be checked by measuring the voltage at the battery terminals.

1. Remove:
   - Front cowling right inner panel 1
     Refer to “GENERAL CHASSIS” on page 4-1.
2. Disconnect:
   - Battery leads
     (from the battery terminals)

ECA13640

CAUTION:

First, disconnect the negative battery lead “1”, and then positive battery lead “2”.

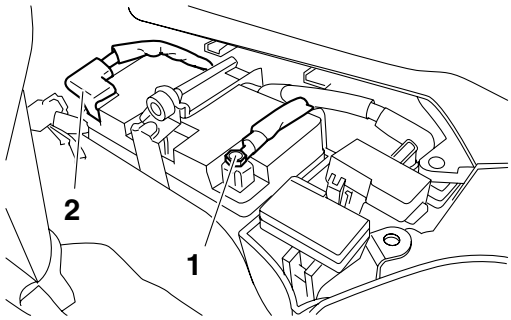

3. Remove:
   - Battery
4. Check:
   - Battery charge

▼▼▼▼▼▼▼▼▼▼▼▼▼▼▼▼▼▼▼▼▼▼▼▼▼▼▼▼▼▼▼▼▼▼

a. Connect a pocket tester to the battery terminals.

- Positive tester probe → positive battery terminal
- Negative tester probe → negative battery terminal

NOTE:

- The charge state of an MF battery can be checked by measuring its open-circuit voltage (i.e., the voltage when the positive battery terminal is disconnected).
- No charging is necessary when the open-circuit voltage equals or exceeds 12.8 V.

b. Check the charge of the battery, as shown in the charts and the following example.

Example Open-circuit voltage = 12.0 V Charging time = 6.5 hours Charge of the battery = 20–30%

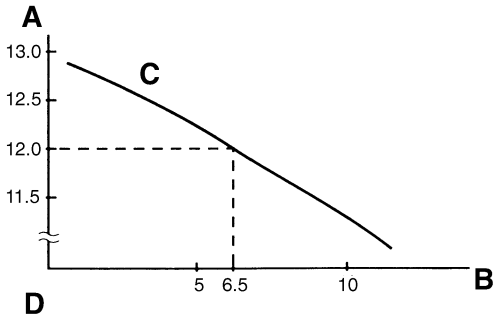

A. Open-circuit voltage (V)
B. Charging time (hours)
C. Relationship between the open-circuit voltage and the charging time at 20 °C (68 °F)
D. These values vary with the temperature, the condition of the battery plates, and the electrolyte level.

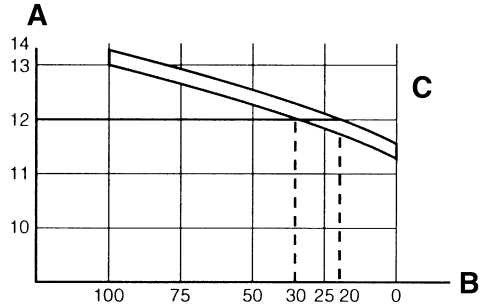

A. Open-circuit voltage (V)
B. Charging condition of the battery (%)
C. Ambient temperature 20 °C (68 °F)

▲▲▲▲▲▲▲▲▲▲▲▲▲▲▲▲▲▲▲▲▲▲▲▲▲▲▲▲▲▲▲▲

5. Charge:
   - Battery
     (refer to the appropriate charging method)

EWA13300

WARNING

Do not quick charge a battery.

ECA13670

CAUTION:

- **Never remove the MF battery sealing caps.**
- **Do not use a high-rate battery charger since it forces a high-amperage current into the battery quickly and can cause battery overheating and battery plate damage.**
- **If it is impossible to regulate the charging current on the battery charger, be careful not to overcharge the battery.**
- **When charging a battery, be sure to remove it from the vehicle. (If charging has to be done with the battery mounted on the vehicle, disconnect the negative battery lead from the battery terminal.)**
- **To reduce the chance of sparks, do not plug in the battery charger until the battery charger leads are connected to the battery.**
- **Before removing the battery charger lead clips from the battery terminals, be sure to turn off the battery charger.**
- **Make sure the battery charger lead clips are in full contact with the battery terminal and that they are not shorted. A corroded battery charger lead clip may generate heat in the contact area and a weak clip spring may cause sparks.**
- **If the battery becomes hot to the touch at any time during the charging process, disconnect the battery charger and let the battery cool before reconnecting it. Hot batteries can explode!**
- **As shown in the following illustration, the open-circuit voltage of an MF battery stabilizes about 30 minutes after charging has been completed. Therefore, wait 30 minutes after charging is completed before measuring the open-circuit voltage.**

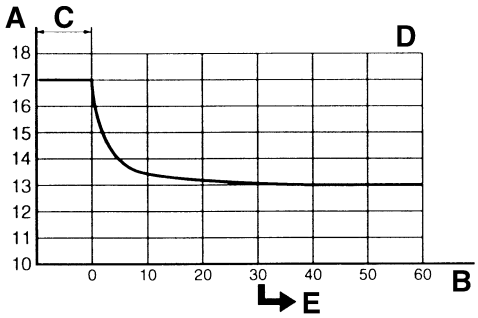

A. Open-circuit voltage (V)
B. Time (minutes)
C. Charging
D. Ambient temperature 20 °C (68 °F)
E. Check the open-circuit voltage.

▼▼▼▼▼▼▼▼▼▼▼▼▼▼▼▼▼▼▼▼▼▼▼▼▼▼▼▼▼▼▼▼▼▼

Charging method using a variable-current (voltage) charger

a. Measure the open-circuit voltage prior to charging.

NOTE:

Voltage should be measured 30 minutes after the engine is stopped.

b. Connect a charger and ammeter to the battery and start charging.

NOTE:

Set the charging voltage at 16–17 V. If the setting is lower, charging will be insufficient. If too high, the battery will be over-charged.

c. Make sure that the current is higher than the standard charging current written on the battery.

NOTE:

If the current is lower than the standard charging current written on the battery, set the charging voltage adjust dial at 20–24 V and monitor the amperage for 3–5 minutes to check the battery.

- Standard charging current is reached
  Battery is good.
- Standard charging current is not reached
  Replace the battery.

d. Adjust the voltage so that the current is at the standard charging level.
e. Set the time according to the charging time suitable for the open-circuit voltage.
f. If charging requires more than 5 hours, it is advisable to check the charging current after a lapse of 5 hours. If there is any change in the amperage, readjust the voltage to obtain the standard charging current.
g. Measure the battery open-circuit voltage after leaving the battery unused for more than 30 minutes.

12.8 V or more --- Charging is complete.
12.7 V or less --- Recharging is required.
Under 12.0 V --- Replace the battery.

▲▲▲▲▲▲▲▲▲▲▲▲▲▲▲▲▲▲▲▲▲▲▲▲▲▲▲▲▲▲▲▲▲▲

▼▼▼▼▼▼▼▼▼▼▼▼▼▼▼▼▼▼▼▼▼▼▼▼▼▼▼▼▼▼▼▼▼▼

Charging method using a constant voltage charger

a. Measure the open-circuit voltage prior to charging.

NOTE:

Voltage should be measured 30 minutes after the engine is stopped.

b. Connect a charger and ammeter to the battery and start charging.
c. Make sure that the current is higher than the standard charging current written on the battery.

NOTE:

If the current is lower than the standard charging current written on the battery, this type of battery charger cannot charge the MF battery. A variable voltage charger is recommended.

d. Charge the battery until the battery's charging voltage is 15 V.

NOTE:

Set the charging time at 20 hours (maximum).

e. Measure the battery open-circuit voltage after leaving the battery unused for more than 30 minutes.

12.8 V or more --- Charging is complete.
12.7 V or less --- Recharging is required.
Under 12.0 V --- Replace the battery.

▲▲▲▲▲▲▲▲▲▲▲▲▲▲▲▲▲▲▲▲▲▲▲▲▲▲▲▲▲▲▲▲▲▲

6. Install:
   - Battery
7. Connect:
   - Battery leads
     (to the battery terminals)

ECA13630

CAUTION:

First, connect the positive battery lead "1", and then the negative battery lead "2".

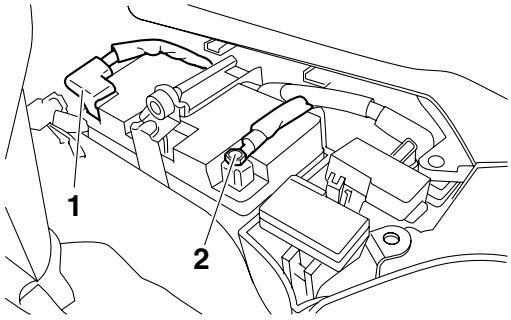

8. Check:
   - Battery terminals
     Dirt → Clean with a wire brush.
     Loose connection → Connect properly.
9. Lubricate:
   - Battery terminals

Recommended lubricant
Dielectric grease

10.Install:
- Front cowling right inner panel 1
  Refer to “GENERAL CHASSIS” on page 4-1.

EAS28040
CHECKING THE RELAYS
Check each switch for continuity with the pocket tester. If the continuity reading is incorrect, replace the relay.

Pocket tester
90890-03112
Analog pocket tester
YU-03112-C

1. Disconnect the relay from the wire harness.
2. Connect the pocket tester ($\Omega \times 1$) and battery (12 V) to the relay terminals as shown.
   Check the relay operation.
   Out of specification → Replace.

Starter relay

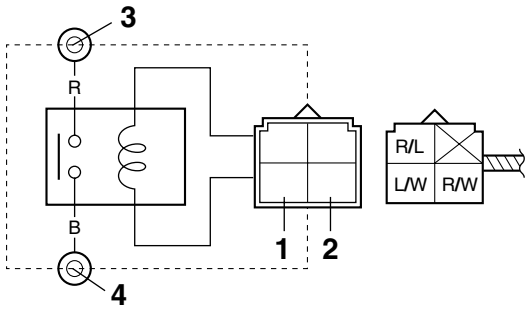

1. Positive battery terminal
2. Negative battery terminal
3. Positive tester probe
4. Negative tester probe

Result
Continuity
(between “3” and “4”)

Relay unit (starting circuit cut-off relay)

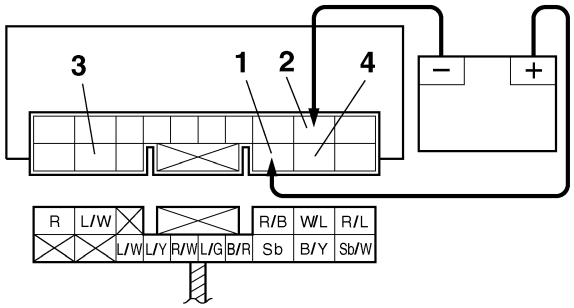

1. Positive battery terminal
2. Negative battery terminal
3. Positive tester probe
4. Negative tester probe

Result
Continuity
(between “3” and “4”)

Relay unit (fuel pump relay)

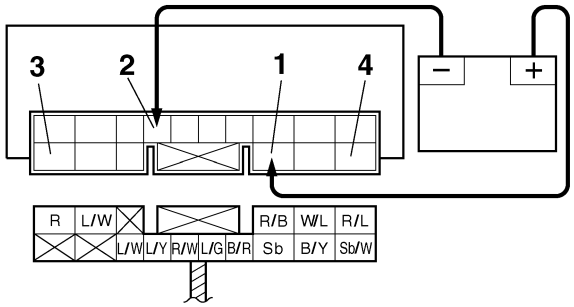

1. Positive battery terminal
2. Negative battery terminal
3. Positive tester probe
4. Negative tester probe

Result
Continuity

Headlight relay (on/off)

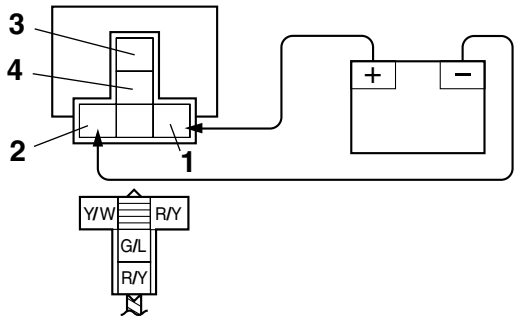

1. Positive battery terminal
2. Negative battery terminal
3. Positive tester probe
4. Negative tester probe

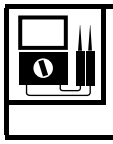

Result
Continuity
(between “3” and “4”)

Headlight relay (dimmer)

First step:

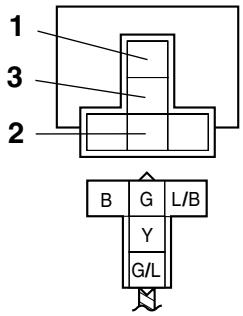

1. Positive tester probe
2. Negative tester probe
3. Negative tester probe

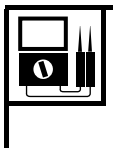

Result
Continuity
(between “1” and “2”)
No continuity
(between “1” and “3”)

Second step:

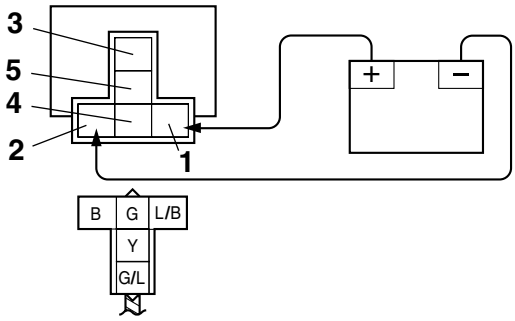

1. Positive battery terminal
2. Negative battery terminal
3. Positive tester probe
4. Negative tester probe
5. Negative tester probe

Result
No continuity
(between “3” and “4”)
Continuity
(between “3” and “5”)

Brake light relay

First step:

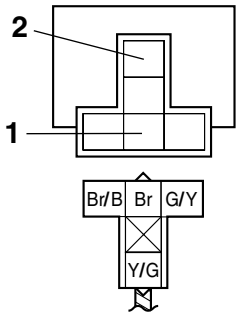

1. Positive tester probe
2. Negative tester probe

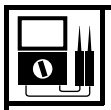

Result
Continuity
(between “1” and “2”)

Second step:

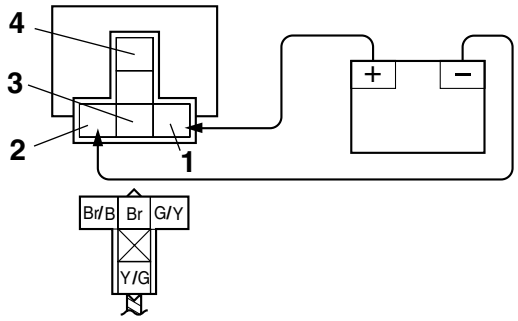

1. Positive battery terminal
2. Negative battery terminal
3. Positive tester probe
4. Negative tester probe

Result
No continuity
(between "3" and "4")

Radiator fan motor relay

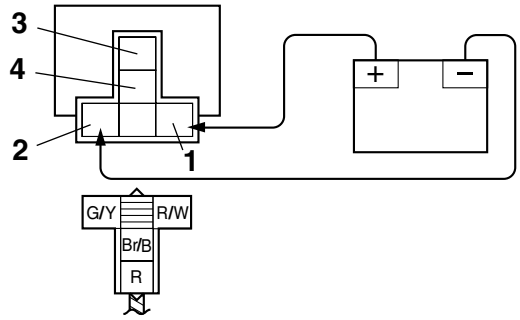

1. Positive battery terminal
2. Negative battery terminal
3. Positive tester probe
4. Negative tester probe

Result
Continuity
(between "3" and "4")

ET3P61059

CHECKING THE ABS MOTOR RELAY

1. Remove:
   - ABS motor relay
2. Check:
   - ABS motor relay resistance
     Out of specification → Replace.

ABS motor relay resistance
50–150 Ω

▼▼▼▼▼▼▼▼▼▼▼▼▼▼▼▼▼▼▼▼▼▼▼▼▼▼▼▼▼▼▼▼▼▼

a. Connect the pocket tester (Ω × 1) to the ABS motor relay terminal as shown.

Pocket tester
90890-03112
Analog pocket tester
YU-03112-C

- Positive tester probe → red/white "1"
- Negative tester probe → white/black "2"

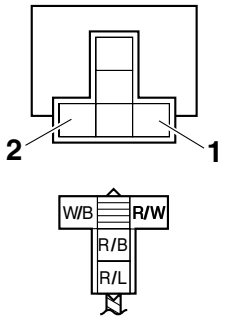

▲▲▲▲▲▲▲▲▲▲▲▲▲▲▲▲▲▲▲▲▲▲▲▲▲▲▲▲▲▲▲▲▲▲

3. Check:
   - ABS motor relay continuity
     No continuity → Replace.

▼▼▼▼▼▼▼▼▼▼▼▼▼▼▼▼▼▼▼▼▼▼▼▼▼▼▼▼▼▼▼▼▼▼

a. Connect the pocket tester (Ω × 1) to the ABS motor relay terminal as shown.

Pocket tester
90890-03112
Analog pocket tester
YU-03112-C

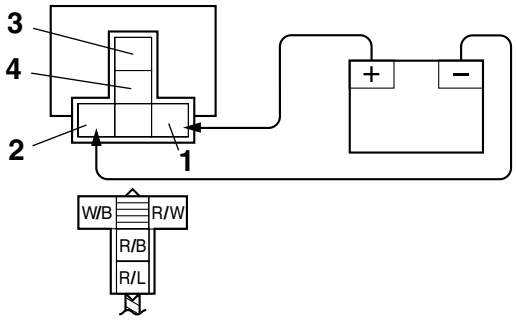

1. Positive battery terminal
2. Negative battery terminal
3. Positive tester probe
4. Negative tester probe

▲▲▲▲▲▲▲▲▲▲▲▲▲▲▲▲▲▲▲▲▲▲▲▲▲▲▲▲▲▲▲▲▲▲

ET3P61014

CHECKING THE TURN SIGNAL/HAZARD RELAY

1. Check:
   - Turn signal/hazard relay input voltage
     Out of specification → The wiring circuit from the main switch to the turn signal/hazard relay coupler is faulty and must be repaired.

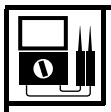

Turn signal/hazard relay input voltage
DC 12 V

▼▼▼▼▼▼▼▼▼▼▼▼▼▼▼▼▼▼▼▼▼▼▼▼▼▼▼▼▼▼▼▼▼▼

a. Connect the pocket tester (DC 20 V) to the turn signal/hazard relay terminal as shown.

Pocket tester
90890-03112
Analog pocket tester
YU-03112-C

- Positive tester probe → blue/red "1"
- Negative tester probe → ground

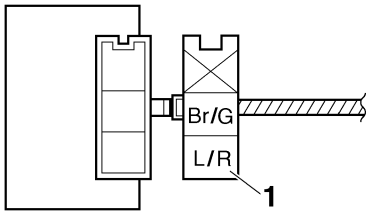

b. Turn the main switch to "ON".
c. Measure the turn signal/hazard relay input voltage.

▲▲▲▲▲▲▲▲▲▲▲▲▲▲▲▲▲▲▲▲▲▲▲▲▲▲▲▲▲▲▲▲▲▲

2. Check:
   - Turn signal/hazard relay output voltage
     Out of specification → Replace.

Turn signal/hazard relay output voltage
DC 12 V

▼▼▼▼▼▼▼▼▼▼▼▼▼▼▼▼▼▼▼▼▼▼▼▼▼▼▼▼▼▼▼▼▼▼

a. Connect the pocket tester (DC 20 V) to the turn signal/hazard relay terminal as shown.

Pocket tester
90890-03112
Analog pocket tester
YU-03112-C

- Positive tester probe → brown/green "1"
- Negative tester probe → ground

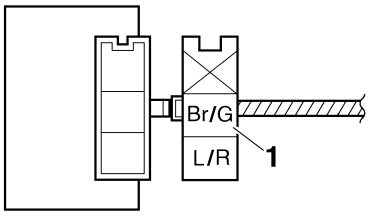

b. Turn the main switch to "ON".
c. Measure the turn signal/hazard relay output voltage.

▲▲▲▲▲▲▲▲▲▲▲▲▲▲▲▲▲▲▲▲▲▲▲▲▲▲▲▲▲▲▲▲▲▲

EAS28050

CHECKING THE RELAY UNIT (DIODE)

1. Check:
   - Relay unit (diode)
     Out of specification → Replace.

Pocket tester
90890-03112
Analog pocket tester
YU-03112-C

NOTE:

The pocket tester and the analog pocket tester readings are shown in the following table.

Continuity
Positive tester probe → sky blue "1"
Negative tester probe → black/yellow "2"
No continuity
Positive tester probe → black/yellow "2"
Negative tester probe → sky blue "1"
Continuity
Positive tester probe → sky blue "1"
Negative tester probe → black/red "3"
No continuity
Positive tester probe → black/red "3"
Negative tester probe → sky blue "1"
Continuity
Positive tester probe → sky blue "1"
Negative tester probe → sky blue/white "4"
No continuity
Positive tester probe → sky blue/white "4"
Negative tester probe → sky blue "1"
Continuity
Positive tester probe → blue/green "5"
Negative tester probe → black/red "3"
No continuity
Positive tester probe → black/red "3"
Negative tester probe → blue/green "5"

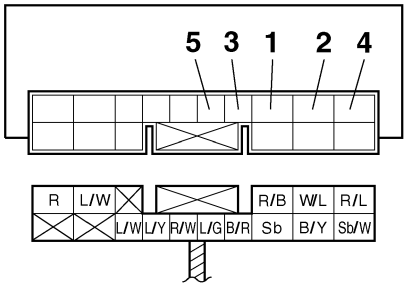

▼▼▼▼▼▼▼▼▼▼▼▼▼▼▼▼▼▼▼▼▼▼▼▼▼▼▼▼▼▼▼▼▼▼

a. Disconnect the relay unit coupler from the wire harness.
b. Connect the pocket tester (Ω × 1) to the relay unit terminal as shown.
c. Check the relay unit (diode) for continuity.
d. Check the relay unit (diode) for no continuity.

▲▲▲▲▲▲▲▲▲▲▲▲▲▲▲▲▲▲▲▲▲▲▲▲▲▲▲▲▲▲▲▲▲▲

EAS28070

CHECKING THE SPARK PLUG CAPS

The following procedure applies to all of the spark plug caps.

1. Check:
   - Spark plug cap resistance
     Out of specification → Replace.

Resistance
10.0 kΩ

▼▼▼▼▼▼▼▼▼▼▼▼▼▼▼▼▼▼▼▼▼▼▼▼▼▼▼▼▼▼▼▼▼▼

a. Remove the spark plug cap from the spark plug lead.
b. Connect the pocket tester (Ω × 1k) to the spark plug cap as shown.

Pocket tester
90890-03112
Analog pocket tester
YU-03112-C

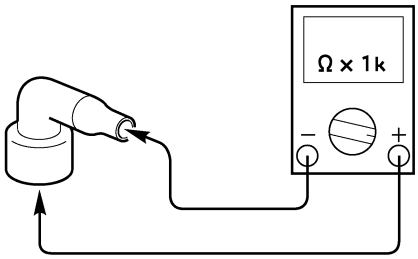

c. Measure the spark plug cap resistance.

▲▲▲▲▲▲▲▲▲▲▲▲▲▲▲▲▲▲▲▲▲▲▲▲▲▲▲▲▲▲▲▲▲▲

EAS28100

CHECKING THE IGNITION COILS

The following procedure applies to both of the ignition coils.

1. Check:
   - Primary coil resistance
     Out of specification → Replace.

Primary coil resistance
1.53–2.07 Ω at 20 °C (68 °F)

▼▼▼▼▼▼▼▼▼▼▼▼▼▼▼▼▼▼▼▼▼▼▼▼▼▼▼▼▼▼▼▼▼▼

a. Disconnect the ignition coil connectors from the ignition coil terminals.
b. Connect the pocket tester (Ω × 1) to the ignition coil as shown.

Pocket tester
90890-03112
Analog pocket tester
YU-03112-C

- Positive tester probe → red/black or red/blue “1”
- Negative tester probe → orange or gray/red “2”

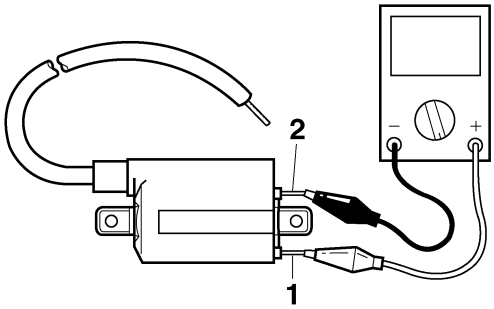

c. Measure the primary coil resistance.

▲▲▲▲▲▲▲▲▲▲▲▲▲▲▲▲▲▲▲▲▲▲▲▲▲▲▲▲▲▲▲▲

2. Check:
   - Secondary coil resistance
     Out of specification → Replace.

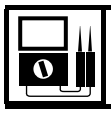

Secondary coil resistance
12–18 kΩ at 20 °C (68 °F)

▼▼▼▼▼▼▼▼▼▼▼▼▼▼▼▼▼▼▼▼▼▼▼▼▼▼▼▼▼▼▼▼

a. Disconnect the spark plug cap from the ignition coil.
b. Connect the pocket tester (Ω × 1k) to the ignition coil as shown.

Pocket tester
90890-03112
Analog pocket tester
YU-03112-C

- Positive tester probe → Spark plug lead “1”
- Negative tester probe → Spark plug lead “2”

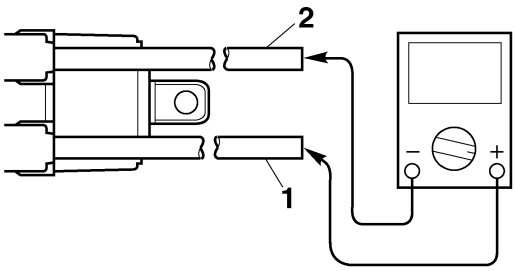

c. Measure the secondary coil resistance.

▲▲▲▲▲▲▲▲▲▲▲▲▲▲▲▲▲▲▲▲▲▲▲▲▲▲▲▲▲▲▲▲

ET3P61015

CHECKING THE IGNITION SPARK GAP

1. Check:
   - Ignition spark gap
     Out of specification → Perform the ignition system troubleshooting, starting with step 5. Refer to “TROUBLESHOOTING” on page 8-6.

Minimum ignition spark gap
6.0 mm (0.24 in)

NOTE:

If the ignition spark gap is within specification, the ignition system circuit is operating normally.

▼▼▼▼▼▼▼▼▼▼▼▼▼▼▼▼▼▼▼▼▼▼▼▼▼▼▼▼▼▼▼▼

a. Disconnect the spark plug cap from the spark plug.
b. Connect the ignition checker “1” as shown.

Ignition checker
90890-06754
Opama pet-4000 spark checker
YM-34487

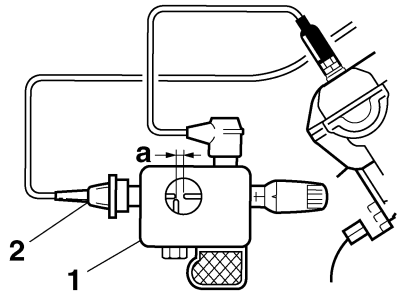

2. Spark plug cap

c. Turn the main switch to “ON” and engine stop switch to “○”.
d. Measure the ignition spark gap “a”.
e. Crank the engine by pushing the start switch “⊛” and gradually increase the spark gap until a misfire occurs.

▲▲▲▲▲▲▲▲▲▲▲▲▲▲▲▲▲▲▲▲▲▲▲▲▲▲▲▲▲▲▲▲

EAS28120

CHECKING THE CRANKSHAFT POSITION SENSOR

1. Disconnect:
   - Crankshaft position sensor coupler (from the wire harness)

2. Check:
   - Crankshaft position sensor resistance
     Out of specification → Replace the crankshaft position sensor.

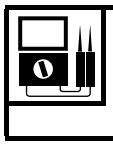

Crankshaft position sensor resistance
421–569 Ω at 20 °C (68 °F)

▼▼▼▼▼▼▼▼▼▼▼▼▼▼▼▼▼▼▼▼▼▼▼▼▼▼▼▼▼▼▼▼▼▼

a. Connect the pocket tester (Ω × 100) to the crankshaft position sensor coupler as shown.

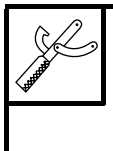

Pocket tester
90890-03112
Analog pocket tester
YU-03112-C

- Positive tester probe → gray "1"
- Negative tester probe → black "2"

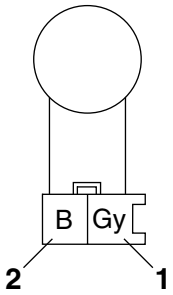

b. Measure the crankshaft position sensor resistance.

▲▲▲▲▲▲▲▲▲▲▲▲▲▲▲▲▲▲▲▲▲▲▲▲▲▲▲▲▲▲▲▲▲▲

EAS28130

CHECKING THE LEAN ANGLE SENSOR

1. Remove:
   - Lean angle sensor
2. Check:
   - Lean angle sensor output voltage
     Out of specification → Replace.

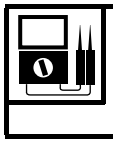

Lean angle sensor output voltage
Less than 65°: 0.4–1.4 V
More than 65°: 3.7–4.4 V

▼▼▼▼▼▼▼▼▼▼▼▼▼▼▼▼▼▼▼▼▼▼▼▼▼▼▼▼▼▼▼▼▼▼

a. Connect the lean angle sensor coupler to the wire harness.
b. Connect the pocket tester (DC 20 V) to the lean angle sensor coupler as shown.

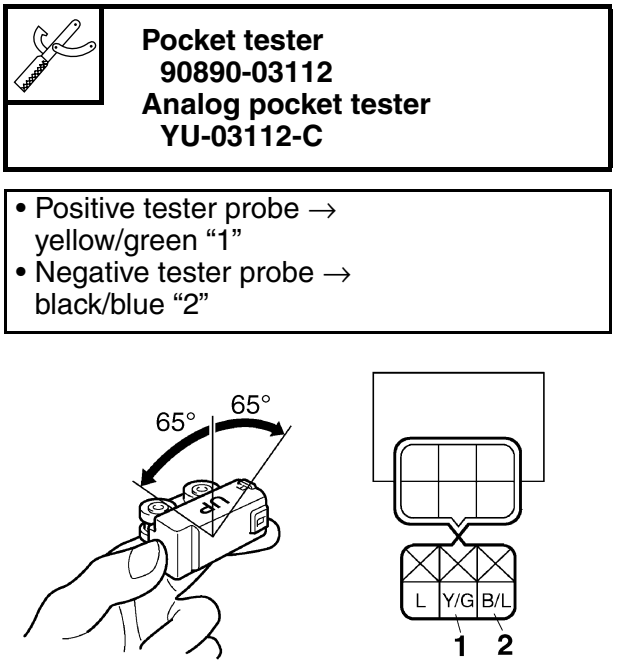

Pocket tester
90890-03112
Analog pocket tester
YU-03112-C

- Positive tester probe → yellow/green "1"
- Negative tester probe → black/blue "2"

c. Turn the main switch to "ON".
d. Turn the lean angle sensor to 65°.
e. Measure the lean angle sensor output voltage.

▲▲▲▲▲▲▲▲▲▲▲▲▲▲▲▲▲▲▲▲▲▲▲▲▲▲▲▲▲▲▲▲▲▲

ET3P61016

CHECKING THE STARTER MOTOR OPERATION

1. Check:
   - Starter motor operation
     Does not operate → Perform the electric starting system troubleshooting, starting with step 4.
     Refer to "TROUBLESHOOTING" on page 8-14.

▼▼▼▼▼▼▼▼▼▼▼▼▼▼▼▼▼▼▼▼▼▼▼▼▼▼▼▼▼▼▼▼▼▼

a. Connect the positive battery terminal "1" and starter motor lead "2" with a jumper lead "3".

EWA13810

WARNING

- **A wire that is used as a jumper lead must have at least the same capacity of the battery lead, otherwise the jumper lead may burn.**
- **This check is likely to produce sparks, therefore, make sure no flammable gas or fluid is in the vicinity.**

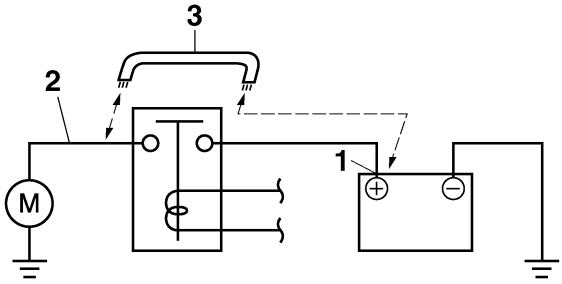

b. Check the starter motor operation.

▲▲▲▲▲▲▲▲▲▲▲▲▲▲▲▲▲▲▲▲▲▲▲▲▲▲▲▲▲▲▲▲

EAS28150

CHECKING THE STATOR COIL

1. Disconnect:
   - Stator coil coupler (from the wire harness)
2. Check:
   - Stator coil resistance
     Out of specification → Replace the stator coil.

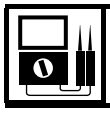

Stator coil resistance
0.13–0.19 Ω at 20 °C (68 °F)

▼▼▼▼▼▼▼▼▼▼▼▼▼▼▼▼▼▼▼▼▼▼▼▼▼▼▼▼▼▼▼▼

a. Connect the pocket tester (Ω × 1) to the stator coil coupler as shown.

Pocket tester
90890-03112
Analog pocket tester
YU-03112-C

- Positive tester probe → white “1”
- Negative tester probe → white “2”

- Positive tester probe → white “1”
- Negative tester probe → white “3”

- Positive tester probe → white “2”
- Negative tester probe → white “3”

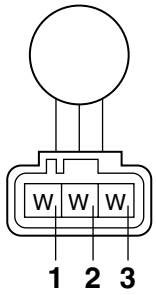

b. Measure the stator coil resistance.

▲▲▲▲▲▲▲▲▲▲▲▲▲▲▲▲▲▲▲▲▲▲▲▲▲▲▲▲▲▲▲▲

EAS28170

CHECKING THE RECTIFIER/REGULATOR

1. Check:
   - Charging voltage
     Out of specification → Replace the rectifier/regulator.

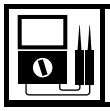

Charging voltage
14 V at 5000 r/min

▼▼▼▼▼▼▼▼▼▼▼▼▼▼▼▼▼▼▼▼▼▼▼▼▼▼▼▼▼▼▼▼

a. Set the engine tachometer to the spark plug lead of cylinder-#1.
b. Connect the pocket tester (DC 20 V) to the rectifier/regulator coupler as shown.

Pocket tester
90890-03112
Analog pocket tester
YU-03112-C

- Positive tester probe → red “1”
- Negative tester probe → black “2”

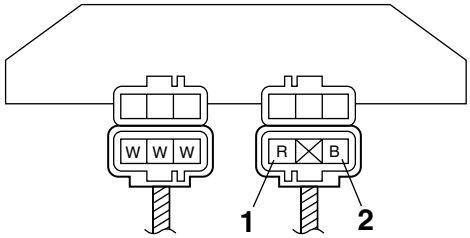

c. Start the engine and let it run at approximately 5000 r/min.
d. Measure the charging voltage.

▲▲▲▲▲▲▲▲▲▲▲▲▲▲▲▲▲▲▲▲▲▲▲▲▲▲▲▲▲▲▲▲

EAS28180
CHECKING THE HORNS

The following procedure applies to both of the horns.

1. Check:
   - Horn resistance
     Out of specification → Replace.

Coil resistance **1.01–1.11 Ω at 20 °C (68 °F)**

a. Disconnect the horn connectors from the horn terminals.
b. Connect the pocket tester (Ω × 1) to the horn terminals.

Pocket tester **90890-03112** **Analog pocket tester** **YU-03112-C**

• Positive tester probe → horn terminal “1” • Negative tester probe → horn terminal “2”

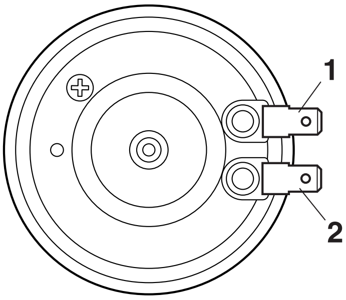

c. Measure the horn resistance.

2. Check:
   - Horn sound
     Faulty sound → Adjust or replace.

a. Connect a battery (12 V) to the horn.
b. Turn the adjusting screw in direction “a” or “b” until the horn sound is obtained.

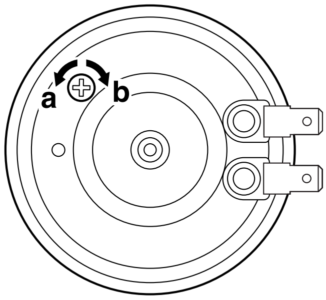

EAS28190
CHECKING THE OIL LEVEL SWITCH

1. Drain:
   - Engine oil
2. Remove:
   - Oil level switch
     (from the oil pan)
3. Check:
   - Oil level switch continuity
     Out of specification → Replace.

Oil level switch resistance **Minimum level position** **No continuity** **Maximum level position** **Continuity**

a. Connect the pocket tester (Ω × 1) to the oil level switch terminal as shown.

Pocket tester **90890-03112** **Analog pocket tester** **YU-03112-C**

Minimum level position “A” • Positive tester probe → white “1” • Negative tester probe → body ground “2”

Maximum level position “B” • Positive tester probe → white “1” • Negative tester probe → body ground “2”

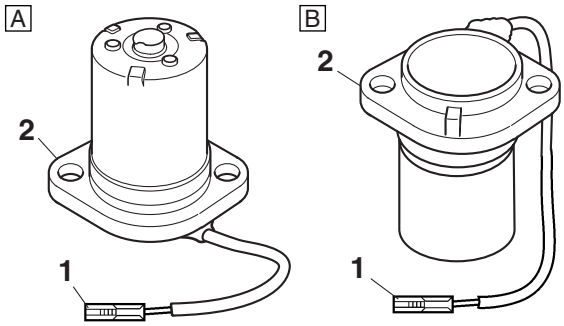

b. Measure the oil level switch resistance.

▲▲▲▲▲▲▲▲▲▲▲▲▲▲▲▲▲▲▲▲▲▲▲▲▲▲▲▲▲▲▲▲▲▲

EAS28220

CHECKING THE FUEL SENDER

1. Disconnect:
   - Fuel pump coupler
   - Fuel sender coupler (from the wire harness)
2. Remove:
   - Fuel tank
3. Remove:
   - Fuel pump (from the fuel tank)
4. Check:
   - Fuel sender resistance
     Out of specification → Replace the fuel pump assembly.

Fuel sender
Sender unit resistance (full)
19.0–21.0 Ω
Sender unit resistance (empty)
139.0–141.0 Ω

▼▼▼▼▼▼▼▼▼▼▼▼▼▼▼▼▼▼▼▼▼▼▼▼▼▼▼▼▼▼▼▼▼▼

a. Connect the pocket tester (Ω × 10) to the fuel sender terminals as shown.

Pocket tester
90890-03112
Analog pocket tester
YU-03112-C

- Positive tester probe → green/white "1"
- Negative tester probe → black "2"

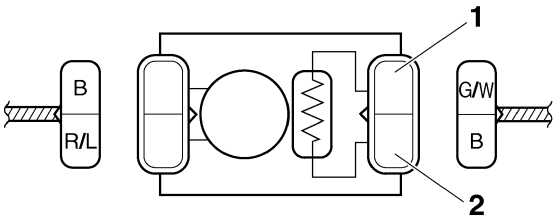

b. Move the fuel sender float to minimum "3" and maximum "4" level position.

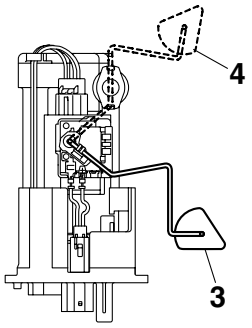

c. Measure the fuel sender resistance.

▲▲▲▲▲▲▲▲▲▲▲▲▲▲▲▲▲▲▲▲▲▲▲▲▲▲▲▲▲▲▲▲▲▲

EAS28250

CHECKING THE RADIATOR FAN MOTORS

The following procedure applies to both of the radiator fan motors.

1. Check:
   - Radiator fan motor
     Faulty/rough movement → Replace.

▼▼▼▼▼▼▼▼▼▼▼▼▼▼▼▼▼▼▼▼▼▼▼▼▼▼▼▼▼▼▼▼▼▼

a. Disconnect the radiator fan motor coupler from the wire harness.
b. Connect the battery (DC 12 V) as shown.

- Positive battery terminal → blue "1"
- Negative battery terminal → black "2"

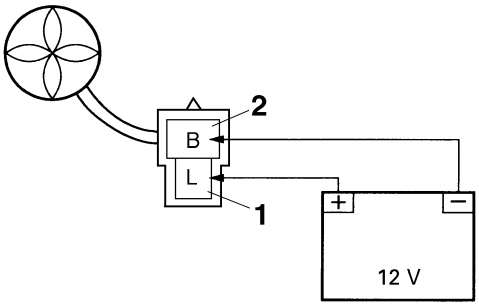

c. Measure the radiator fan motor movement.

▲▲▲▲▲▲▲▲▲▲▲▲▲▲▲▲▲▲▲▲▲▲▲▲▲▲▲▲▲▲▲▲▲▲

EAS28260
CHECKING THE COOLANT TEMPERATURE SENSOR

1. Remove:
   - Coolant temperature sensor

EWA14130
WARNING

- **Handle the coolant temperature sensor with special care.**
- **Never subject the coolant temperature sensor to strong shocks. If the coolant temperature sensor is dropped, replace it.**

2. Check:
   - Coolant temperature sensor resistance
     Out of specification → Replace.

Coolant temperature sensor resistance
290–354 Ω at 80 °C (176 °F)

▼▼▼▼▼▼▼▼▼▼▼▼▼▼▼▼▼▼▼▼▼▼▼▼▼▼▼▼▼▼▼▼▼▼

a. Connect the pocket tester (Ω × 100) to the coolant temperature sensor terminals as shown.

Pocket tester
90890-03112
Analog pocket tester
YU-03112-C

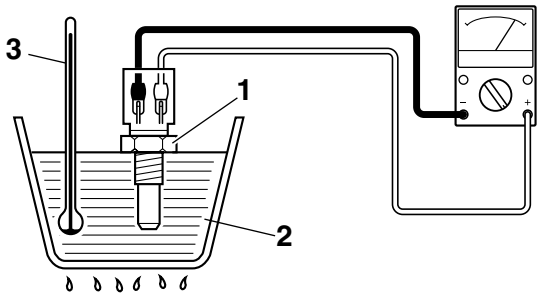

b. Immerse the coolant temperature sensor "1" in a container filled with coolant "2".

NOTE:

Make sure that the coolant temperature sensor terminals do not get wet.

c. Place a thermometer "3" in the coolant.
d. Slowly heat the coolant, and then let it cool down to the specified temperature.
e. Measure the coolant temperature sensor resistance.

▲▲▲▲▲▲▲▲▲▲▲▲▲▲▲▲▲▲▲▲▲▲▲▲▲▲▲▲▲▲▲▲▲▲

3. Install:
   - Coolant temperature sensor

Coolant temperature sensor
18 Nm (1.8 m·kg, 13 ft·lb)

EAS28300
CHECKING THE THROTTLE POSITION SENSOR

1. Remove:
   - Throttle position sensor
     (from the throttle body)
2. Check:
   - Throttle position sensor maximum resistance
     Out of specification → Replace the throttle position sensor.

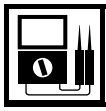

Resistance
4.0–6.0 kΩ

▼▼▼▼▼▼▼▼▼▼▼▼▼▼▼▼▼▼▼▼▼▼▼▼▼▼▼▼▼▼▼▼▼▼

a. Connect the pocket tester (Ω × 1k) to the throttle position sensor terminals as shown.

Pocket tester
90890-03112
Analog pocket tester
YU-03112-C

- Tester positive lead →
  blue "1"
- Tester negative lead →
  black/blue "2"

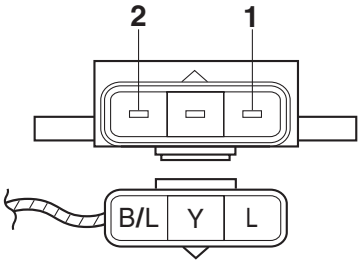

b. Measure the throttle position sensor maximum resistance.

▲▲▲▲▲▲▲▲▲▲▲▲▲▲▲▲▲▲▲▲▲▲▲▲▲▲▲▲▲▲▲▲▲▲

3. Install:
   - Throttle position sensor

NOTE:

When installing the throttle position sensor, adjust its angle properly. Refer to "ADJUSTING THE THROTTLE POSITION SENSOR" on page 7-7.

EAS28370
CHECKING THE AIR INDUCTION SYSTEM SOLENOID

1. Check:
   - Air induction system solenoid resistance
     Out of specification → Replace.

Solenoid resistance
19–25 Ω at 20 °C (68 °F)

▼▼▼▼▼▼▼▼▼▼▼▼▼▼▼▼▼▼▼▼▼▼▼▼▼▼▼▼▼▼▼▼▼▼

a. Disconnect the air induction system solenoid coupler from the wire harness.
b. Connect the pocket tester (Ω × 1) to the air induction system solenoid terminals as shown.

Pocket tester
90890-03112
Analog pocket tester
YU-03112-C

- Positive tester probe → green "1"
- Negative tester probe → orange "2"

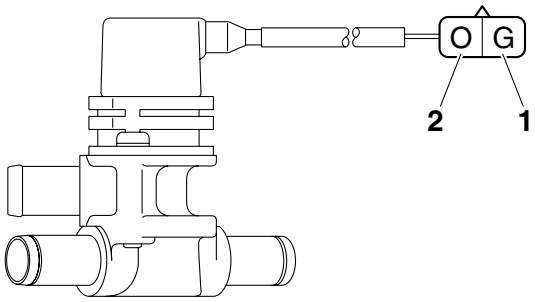

c. Measure the air induction system solenoid resistance.

▲▲▲▲▲▲▲▲▲▲▲▲▲▲▲▲▲▲▲▲▲▲▲▲▲▲▲▲▲▲▲▲▲▲

EAS28390
CHECKING THE CYLINDER IDENTIFICATION SENSOR

1. Remove:
   - Timing plate cover
2. Check:
   - Cylinder identification sensor output voltage
     Out of specification → Replace.

Cylinder identification sensor output voltage (ON)
More than 4.8 V
Cylinder identification sensor output voltage (OFF)
Less than 0.6 V

▼▼▼▼▼▼▼▼▼▼▼▼▼▼▼▼▼▼▼▼▼▼▼▼▼▼▼▼▼▼▼▼▼▼

a. Connect the pocket tester (DC 20 V) to the cylinder identification sensor coupler (wire harness side) as shown.

Pocket tester
90890-03112
Analog pocket tester
YU-03112-C

- Positive tester probe → white/black "1"
- Negative tester probe → black/blue "2"

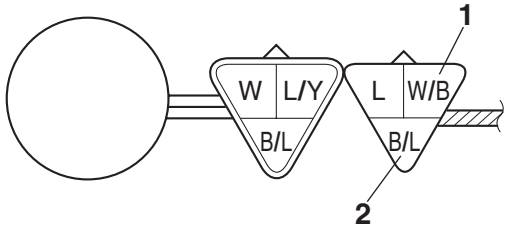

b. Turn the main switch to "ON".
c. Rotate the crankshaft.
d. Measure the voltage of white/black and black/blue. Turn the crankshaft twice and check that the output voltage rises to approximately 4.8 V once.

▲▲▲▲▲▲▲▲▲▲▲▲▲▲▲▲▲▲▲▲▲▲▲▲▲▲▲▲▲▲▲▲▲▲

EAS28410
CHECKING THE INTAKE AIR PRESSURE SENSOR

1. Check:
   - Intake air pressure sensor output voltage
     Out of specification → Replace.

Intake air pressure sensor output voltage
3.75–4.25 V

▼▼▼▼▼▼▼▼▼▼▼▼▼▼▼▼▼▼▼▼▼▼▼▼▼▼▼▼▼▼▼▼▼▼

a. Connect the pocket tester (DC 20 V) to the intake air pressure sensor coupler as shown.

Pocket tester
90890-03112
Analog pocket tester
YU-03112-C

- Positive tester probe → pink/white “1”
- Negative tester probe → black/blue “2”

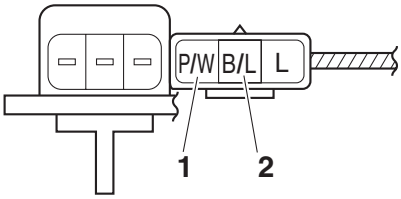

b. Turn the main switch to “ON”.
c. Measure the intake air pressure sensor output voltage.

▲▲▲▲▲▲▲▲▲▲▲▲▲▲▲▲▲▲▲▲▲▲▲▲▲▲▲▲▲▲▲▲

EAS28420

CHECKING THE INTAKE AIR TEMPERATURE SENSOR

1. Remove:
   - Intake air temperature sensor (from the air filter case)

EWA14110

WARNING

- **Handle the intake air temperature sensor with special care.**
- **Never subject the intake air temperature sensor to strong shocks. If the intake air temperature sensor is dropped, replace it.**

2. Check:
   - Intake air temperature sensor resistance
     Out of specification → Replace.

Intake air temperature sensor resistance
290–390 Ω at 80 °C (176 °F)

▼▼▼▼▼▼▼▼▼▼▼▼▼▼▼▼▼▼▼▼▼▼▼▼▼▼▼▼▼▼▼▼

a. Connect the pocket tester (Ω × 100) to the intake air temperature sensor terminals as shown.

Pocket tester
90890-03112
Analog pocket tester
YU-03112-C

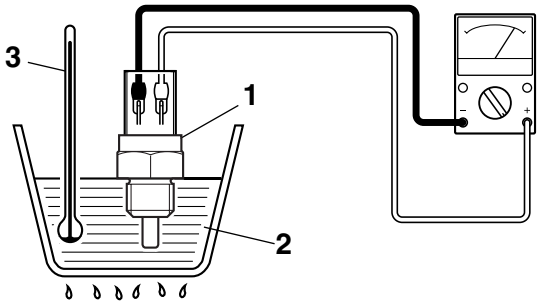

b. Immerse the intake air temperature sensor “1” in a container filled with water “2”.

NOTE:

Make sure that the intake air temperature sensor terminals do not get wet.

c. Place a thermometer “3” in the water.
d. Slowly heat the water, then let it cool down to the specified temperature.
e. Measure the intake air temperature sensor resistance.

▲▲▲▲▲▲▲▲▲▲▲▲▲▲▲▲▲▲▲▲▲▲▲▲▲▲▲▲▲▲▲▲

ET3P61017

CHECKING THE ACCESSORY BOX SOLENOID

1. Check:
   - Accessory box solenoid resistance
     Out of specification → Replace.

Accessory box solenoid resistance
19–21 Ω at 20 °C (68 °F)

▼▼▼▼▼▼▼▼▼▼▼▼▼▼▼▼▼▼▼▼▼▼▼▼▼▼▼▼▼▼▼▼

a. Disconnect the accessory box solenoid coupler from the wire harness.
b. Connect the pocket tester (Ω × 10) to the accessory box solenoid terminals as shown.

Pocket tester
90890-03112
Analog pocket tester
YU-03112-C

- Positive tester probe → brown “1”
- Negative tester probe → black “2”

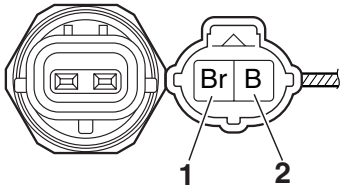

c. Measure the accessory box solenoid resistance.

▲▲▲▲▲▲▲▲▲▲▲▲▲▲▲▲▲▲▲▲▲▲▲▲▲▲▲▲▲▲▲▲▲▲

TROUBLESHOOTING

TROUBLESHOOTING 9-1
GENERAL INFORMATION 9-1
STARTING FAILURES 9-1
INCORRECT ENGINE IDLING SPEED 9-1
POOR MEDIUM-AND-HIGH-SPEED PERFORMANCE 9-2
FAULTY GEAR SHIFTING 9-2
SHIFT PEDAL DOES NOT MOVE 9-2
JUMPS OUT OF GEAR 9-2
FAULTY CLUTCH 9-2
OVERHEATING 9-3
OVERCOOLING 9-3
POOR BRAKING PERFORMANCE 9-3
FAULTY FRONT FORK LEGS 9-3
UNSTABLE HANDLING 9-3
FAULTY LIGHTING OR SIGNALING SYSTEM 9-4

EAS28450
TROUBLESHOOTING

EAS28460
GENERAL INFORMATION

NOTE:

The following guide for troubleshooting does not cover all the possible causes of trouble. It should be helpful, however, as a guide to basic troubleshooting. Refer to the relative procedure in this manual for checks, adjustments, and replacement of parts.

EAS28470
STARTING FAILURES

Engine

1. Cylinder(s) and cylinder head
   - Loose spark plug
   - Loose cylinder head
   - Damaged cylinder head gasket
   - Worn or damaged cylinder
   - Incorrect valve clearance
   - Improperly sealed valve
   - Incorrect valve-to-valve-seat contact
   - Incorrect valve timing
   - Faulty valve spring
   - Seized valve
2. Piston(s) and piston ring(s)
   - Improperly installed piston ring
   - Damaged, worn or fatigued piston ring
   - Seized piston ring
   - Seized or damaged piston
3. Air filter
   - Improperly installed air filter
   - Clogged air filter element
4. Crankcase and crankshaft
   - Improperly assembled crankcase
   - Seized crankshaft

Fuel system

1. Fuel tank
   - Empty fuel tank
   - Clogged fuel tank overflow hose
   - Deteriorated or contaminated fuel
2. Fuel pump
   - Faulty fuel pump
   - Faulty fuel pump relay
3. Throttle body(-ies)
   - Deteriorated or contaminated fuel
   - Sucked-in air

Electrical system

1. Battery
   - Discharged battery
   - Faulty battery
2. Fuse(s)
   - Blown, damaged or incorrect fuse
   - Improperly installed fuse
3. Spark plug(s)
   - Incorrect spark plug gap
   - Incorrect spark plug heat range
   - Fouled spark plug
   - Worn or damaged electrode
   - Worn or damaged insulator
   - Faulty spark plug cap
4. Ignition coil(s)
   - Cracked or broken ignition coil body
   - Broken or shorted primary or secondary coils
   - Faulty spark plug lead
5. Ignition system
   - Faulty ECU
   - Faulty crankshaft position sensor
   - Faulty cylinder identification sensor
   - Broken generator rotor woodruff key
6. Switches and wiring
   - Faulty main switch
   - Faulty engine stop switch
   - Broken or shorted wiring
   - Faulty gear position switch (neutral circuit)
   - Faulty start switch
   - Faulty sidestand switch
   - Faulty clutch switch
   - Improperly grounded circuit
   - Loose connections
7. Starting system
   - Faulty starter motor
   - Faulty starter relay
   - Faulty starting circuit cut-off relay
   - Faulty starter clutch

EAS28490
INCORRECT ENGINE IDLING SPEED

Engine

1. Cylinder(s) and cylinder head
   - Incorrect valve clearance
   - Damaged valve train components
2. Air filter
   - Clogged air filter element

Fuel system

1. Throttle body(-ies)
   - Damaged or loose throttle body joint
   - Improperly synchronized throttle bodies

- Improperly adjusted engine idling speed (throttle stop screw)
- Improper throttle cable free play
- Flooded throttle body
- Faulty air induction system

Electrical system

1. Battery
   - Discharged battery
   - Faulty battery
2. Spark plug(s)
   - Incorrect spark plug gap
   - Incorrect spark plug heat range
   - Fouled spark plug
   - Worn or damaged electrode
   - Worn or damaged insulator
   - Faulty spark plug cap
3. Ignition coil(s)
   - Broken or shorted primary or secondary coils
   - Faulty spark plug lead
   - Cracked or broken ignition coil
4. Ignition system
   - Faulty ECU
   - Faulty crankshaft position sensor
   - Faulty cylinder identification sensor
   - Broken generator rotor woodruff key

EAS28510

POOR MEDIUM-AND-HIGH-SPEED PERFORMANCE

Refer to “STARTING FAILURES” on page 9-1.

Engine

1. Air filter
   - Clogged air filter element

Fuel system

1. Fuel pump
   - Faulty fuel pump

EAS28530

FAULTY GEAR SHIFTING

Shifting is difficult

Refer to “Clutch drags”.

EAS28540

SHIFT PEDAL DOES NOT MOVE

Shift shaft

- Improperly adjusted shift rod
- Bent shift shaft

Shift drum and shift forks

- Foreign object in a shift drum groove
- Seized shift fork
- Bent shift fork guide bar

Transmission

- Seized transmission gear
- Foreign object between transmission gears
- Improperly assembled transmission

EAS28550

JUMPS OUT OF GEAR

Shift shaft

- Incorrect shift pedal position
- Improperly returned stopper lever

Shift forks

- Worn shift fork

Shift drum

- Incorrect axial play
- Worn shift drum groove

Transmission

- Worn gear dog

EAS28570

FAULTY CLUTCH

Clutch slips

1. Clutch
   - Improperly assembled clutch
   - Improperly assembled clutch master cylinder
   - Improperly assembled clutch release cylinder
   - Incorrect clutch fluid level
   - Damaged clutch hose
   - Loose or fatigued clutch spring plate
   - Loose union bolt
   - Worn friction plate
   - Worn clutch plate
   - Damaged clutch release cylinder
2. Engine oil
   - Incorrect oil level
   - Incorrect oil viscosity (low)
   - Deteriorated oil

Clutch drags

1. Clutch
   - Air in hydraulic clutch system
   - Warped pressure plate
   - Bent clutch plate
   - Swollen friction plate
   - Bent clutch push rod
   - Damaged clutch boss
   - Burnt primary driven gear bushing
   - Damaged clutch release cylinder

- Match marks not aligned
2. Engine oil
   - Incorrect oil level
   - Incorrect oil viscosity (high)
   - Deteriorated oil

EAS28600
OVERHEATING

Engine
1. Clogged coolant passages
   - Cylinder head and piston(s)
   - Heavy carbon buildup
2. Engine oil
   - Incorrect oil level
   - Incorrect oil viscosity
   - Inferior oil quality

Cooling system
1. Coolant
   - Low coolant level
2. Radiator
   - Damaged or leaking radiator
   - Faulty radiator cap
   - Bent or damaged radiator fin
3. Water pump
   - Damaged or faulty water pump
4. Thermostat
   - Thermostat stays closed
5. Oil cooler
   - Clogged or damaged oil cooler
6. Hose(s) and pipe(s)
   - Damaged hose
   - Improperly connected hose
   - Damaged pipe
   - Improperly connected pipe

Fuel system
1. Throttle body(-ies)
   - Damaged or loose throttle body joint
2. Air filter
   - Clogged air filter element

Chassis
1. Brake(s)
   - Dragging brake

Electrical system
1. Spark plug(s)
   - Incorrect spark plug gap
   - Incorrect spark plug heat range
2. Ignition system
   - Faulty ECU

EAS28610
OVERCOOLING

Cooling system
1. Thermostat
   - Thermostat stays open

EAS28620
POOR BRAKING PERFORMANCE
- Worn brake pad
- Worn brake disc
- Air in hydraulic brake system
- Leaking brake fluid
- Faulty brake caliper kit
- Faulty brake caliper seal
- Loose union bolt
- Damaged brake hose
- Oil or grease on the brake disc
- Oil or grease on the brake pad
- Incorrect brake fluid level

EAS28660
FAULTY FRONT FORK LEGS

Leaking oil
- Bent, damaged or rusty inner tube
- Cracked or damaged outer tube
- Improperly installed oil seal
- Damaged oil seal lip
- Incorrect oil level (high)
- Loose damper rod assembly bolt
- Damaged damper rod assembly bolt copper washer
- Cracked or damaged cap bolt O-ring

Malfunction
- Bent or damaged inner tube
- Bent or damaged outer tube
- Damaged fork spring
- Worn or damaged outer tube bushing
- Bent or damaged damper rod
- Incorrect oil viscosity
- Incorrect oil level

EAS28680
UNSTABLE HANDLING

Handlebars
- Bent or improperly installed right handlebar
- Bent or improperly installed left handlebar
1. Steering head components
   - Improperly installed upper bracket
   - Improperly installed lower bracket (improperly tightened ring nut)
   - Bent steering stem

- Damaged ball bearing or bearing race

2. Front fork leg(s)
   - Uneven oil levels (both front fork legs)
   - Unevenly tensioned fork spring (both front fork legs)
   - Broken fork spring
   - Bent or damaged inner tube
   - Bent or damaged outer tube
3. Swingarm
   - Worn bearing or bushing
   - Bent or damaged swingarm

Rear shock absorber assembly
- Faulty rear shock absorber spring
- Leaking oil or gas

Tire(s)
- Uneven tire pressures (front and rear)
- Incorrect tire pressure
- Uneven tire wear

Wheel(s)
- Incorrect wheel balance
- Deformed cast wheel
- Damaged wheel bearing
- Bent or loose wheel axle
- Excessive wheel runout

Frame
- Bent frame
- Damaged steering head pipe
- Improperly installed bearing race

EAS28710
FAULTY LIGHTING OR SIGNALING SYSTEM

Headlight does not come on
- Wrong headlight bulb
- Too many electrical accessories
- Hard charging
- Incorrect connection
- Improperly grounded circuit
- Poor contacts (main switch)
- Burnt-out headlight bulb

Headlight bulb burnt out
- Wrong headlight bulb
- Faulty battery
- Faulty rectifier/regulator
- Improperly grounded circuit
- Faulty main switch
- Headlight bulb life expired

Tail/brake light does not come on
- Wrong tail/brake light bulb
- Too many electrical accessories
- Incorrect connection
- Burnt-out tail/brake light bulb

Tail/brake light bulb burnt out
- Wrong tail/brake light bulb
- Faulty battery
- Incorrectly adjusted rear brake light switch
- Tail/brake light bulb life expired

Turn signal does not come on
- Faulty turn signal switch
- Faulty turn signal/hazard relay
- Burnt-out turn signal bulb
- Incorrect connection
- Damaged or faulty wire harness
- Improperly grounded circuit
- Faulty battery
- Blown, damaged or incorrect fuse

Turn signal flashes slowly
- Faulty turn signal/hazard relay
- Faulty main switch
- Faulty turn signal switch
- Incorrect turn signal bulb

Turn signal remains lit
- Faulty turn signal/hazard relay
- Burnt-out turn signal bulb

Turn signal flashes quickly
- Incorrect turn signal bulb
- Faulty turn signal/hazard relay
- Burnt-out turn signal bulb

Horn does not sound
- Improperly adjusted horn
- Damaged or faulty horn
- Faulty main switch
- Faulty horn switch
- Faulty battery
- Blown, damaged or incorrect fuse
- Faulty wire harness

EAS28740

WIRING DIAGRAM

FJR1300A(V) 2006

1. Main switch
2. Rectifier/regulator
3. AC magneto
4. ABS ECU fuse
5. Fuel injection system fuse
6. Backup fuse (odometer, clock, immobilizer system, and windshield drive system)
7. Main fuse
8. Battery
9. ABS motor fuse
10. Starter relay
11. Starter motor
12. Immobilizer unit
13. Gear position switch
14. Coupler 1 (wire harness–front cowling wire harness)
15. Fuel pump
16. Fuel sender
17. Coupler 2 (wire harness–front cowling wire harness)
18. ABS test coupler
19. ABS ECU (electronic control unit)
20. Front wheel sensor
21. Rear wheel sensor
22. ABS motor relay
23. Hydraulic unit
24. Rear brake light switch
25. Brake light relay
26. License plate light
27. Taillight assembly
28. Tail/brake light
29. Rear left turn signal light
30. Rear right turn signal light
31. Coupler 3 (wire harness–front cowling wire harness)
32. Sidestand switch
33. Cylinders-#1/#4 ignition coil
34. Spark plug
35. Cylinders-#2/#3 ignition coil
36. Injector #4
37. Injector #3
38. Injector #2
39. Injector #1
40. Air induction system solenoid
41. ECU (engine control unit)
42. Crankshaft position sensor
43. Intake air temperature sensor
44. Coolant temperature sensor
45. O_2 sensor
46. Cylinder identification sensor
47. Throttle position sensor
48. Intake air pressure sensor
49. Coupler 4 (wire harness–front cowling wire harness)
50. Oil level switch
51. Anti-theft alarm (OPTION)
52. Coupler 5 (wire harness–front cowling wire harness)
53. Headlight relay (on/off)
54. Hazard lighting fuse
55. Signaling system fuse
56. Headlight fuse
57. Ignition fuse
58. Auxiliary DC jack fuse
59. Grip warmer control unit (OPTION)
60. Radiator fan motor relay
61. Left radiator fan motor fuse
62. Left radiator fan motor
63. Right radiator fan motor fuse
64. Right radiator fan motor
65. Turn signal/hazard relay
66. Auxiliary DC jack
67. Right handlebar switch
68. Front brake light switch
69. Engine stop switch
70. Start switch
71. Hazard switch
72. Left handlebar switch
73. Clutch switch
74. Pass switch
75. Dimmer switch
76. Windshield position switch
77. Turn signal switch
78. Horn switch
79. Relay unit
80. Starting circuit cut-off relay
81. Fuel pump relay
82. Accessory box solenoid
83. Meter assembly
84. Neutral indicator light
85. ABS warning light
86. Immobilizer system indicator light
87. Multi-function meter
88. Oil level warning light
89. Engine trouble warning light
90. Meter light
91. High beam indicator light
92. Right turn signal indicator light
93. Left turn signal indicator light
94. Thermistor
95. Lean angle sensor
96. Horn
97. Front left turn signal light
98. Front right turn signal light
99. Headlight relay (dimmer)
100. Headlight assembly
101. Auxiliary light
102. Headlight
103. Right grip warmer (OPTION)
104. Left grip warmer (OPTION)
105. Windshield drive unit

EAS28750

COLOR CODE

B	Black
Br	Brown
Ch	Chocolate
Dg	Dark green
G	Green
Gy	Gray
L	Blue
Lg	Light green
O	Orange
P	Pink
R	Red
Sb	Sky blue
W	White
Y	Yellow
B/G	Black/Green
B/L	Black/Blue
B/R	Black/Red
B/W	Black/White
B/Y	Black/Yellow
Br/B	Brown/Black
Br/G	Brown/Green
Br/L	Brown/Blue
Br/R	Brown/Red
Br/W	Brown/White
Br/Y	Brown/Yellow
G/B	Green/Black
G/L	Green/Blue
G/R	Green/Red
G/W	Green/White
G/Y	Green/Yellow
Gy/R	Gray/Red
Gy/W	Gray/White
L/B	Blue/Black
L/G	Blue/Green
L/R	Blue/Red
L/W	Blue/White
L/Y	Blue/Yellow
Lg/W	Light green/white
O/B	Orange/Black
P/W	Pink/White
R/B	Red/Black
R/G	Red/Green
R/L	Red/Blue
R/W	Red/White
R/Y	Red/Yellow
Sb/W	Sky blue/White
W/B	White/Black
W/G	White/Green
W/L	White/Blue
W/Y	White/Yellow
Y/G	Yellow/Green
Y/L	Yellow/Blue
Y/W	Yellow/White

YAMAHA

YAMAHA MOTOR CO., LTD.
2500 SHINGAI IWATA SHIZUOKA JAPAN

FJR1300A(V) 2006
WIRING DIAGRAM (1/2)

FJR1300A(V) 2006
SCHÉMA DE CÂBLAGE (1/2)

FJR1300A(V) 2006
SCHALTPLAN (1/2)

FJR1300A(V) 2006
SCHEMA ELETTRICO (1/2)

FJR1300A(V) 2006
DIAGRAMA ELÉCTRICO (1/2)

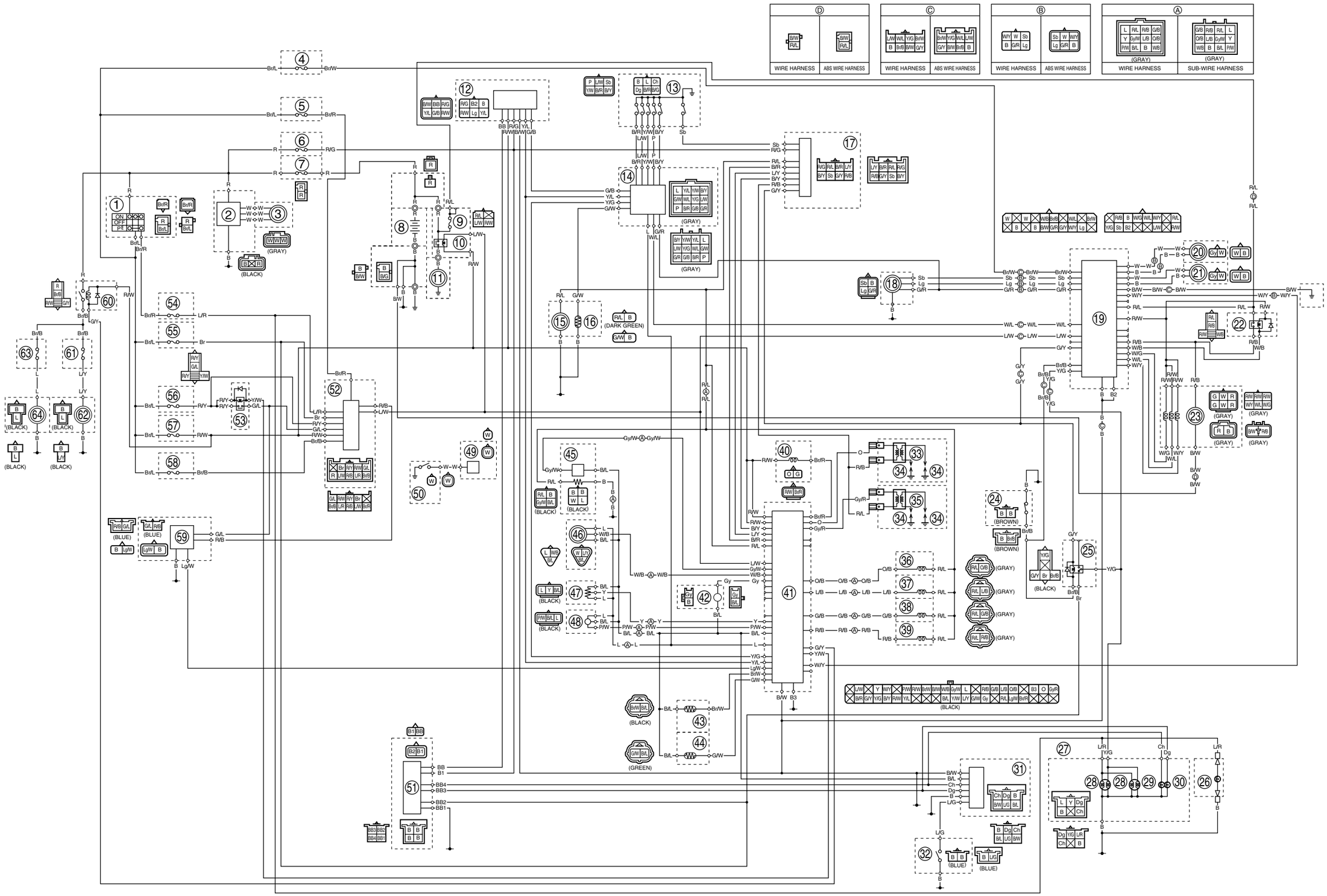

FJR1300A(V) 2006
WIRING DIAGRAM (2/2)
Front cowling wire harness

FJR1300A(V) 2006
SCHÉMA DE CÂBLAGE (2/2)
Faisceau de fils au carénage avant

FJR1300A(V) 2006
SCHALTPLAN (2/2)
Frontverkleidungs-Kabelbaum

FJR1300A(V) 2006
SCHEMA ELETTRICO (2/2)
Cablaggio elettrico del cupolino

FJR1300A(V) 2006
DIAGRAMA ELÉCTRICO (2/2)
Mazo de cables del carenado delantero

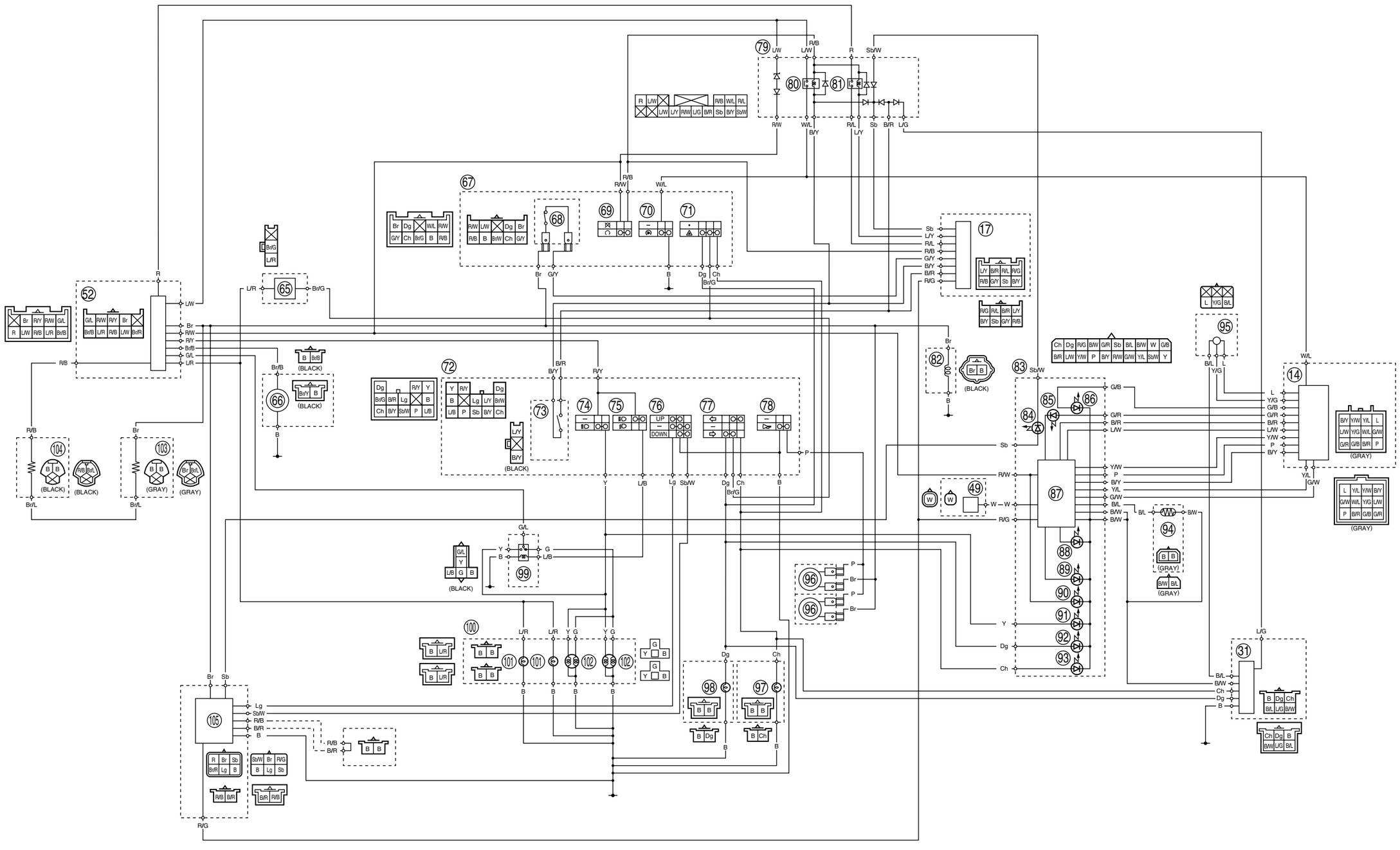

FJR1300A(V) 2006
WIRING DIAGRAM (1/2)

FJR1300A(V) 2006
SCHÉMA DE CÂBLAGE (1/2)

FJR1300A(V) 2006
SCHALTPLAN (1/2)

FJR1300A(V) 2006
SCHEMA ELETTRICO (1/2)

FJR1300A(V) 2006
DIAGRAMA ELÉCTRICO (1/2)

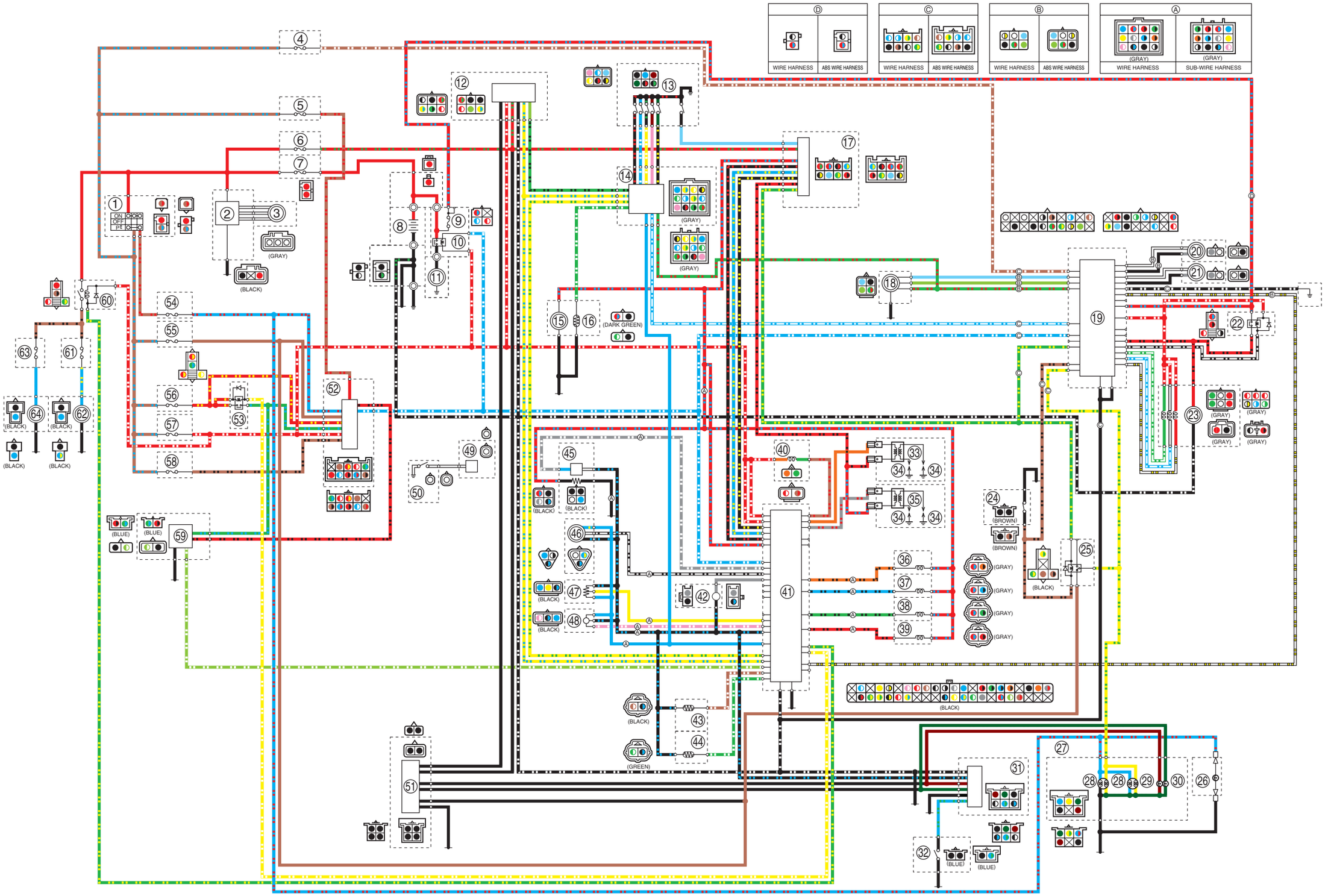

FJR1300A(V) 2006
WIRING DIAGRAM (2/2)
Front cowling wire harness

FJR1300A(V) 2006
SCHÉMA DE CÂBLAGE (2/2)
Faisceau de fils au carénage avant

FJR1300A(V) 2006
SCHALTPLAN (2/2)
Frontverkleidungs-Kabelbaum

FJR1300A(V) 2006
SCHEMA ELETTRICO (2/2)
Cablaggio elettrico del cupolino
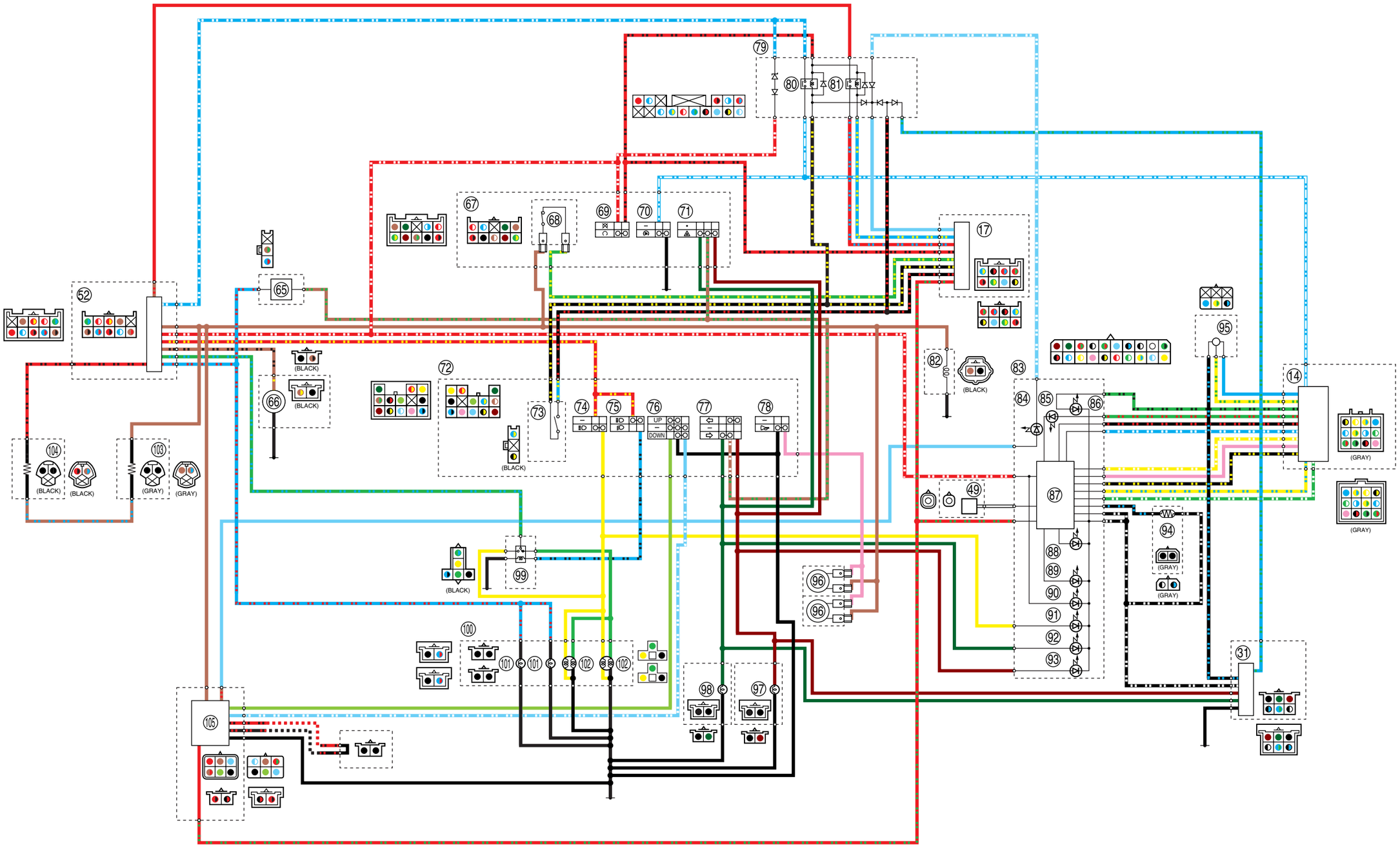
FJR1300A(V) 2006
DIAGRAMA ELÉCTRICO (2/2)
Mazo de cables del carenado delantero