# 2006

## MOTORCYCLE

## SERVICE MANUAL

## Model : YZFR6V

2C0281972006

EAS20040

YZFR6V
SERVICE MANUAL
©2005 by Yamaha Motor Co., Ltd.
Second edition, May 2007
All rights reserved.
Any reproduction or unauthorized use
without the written permission of
Yamaha Motor Co., Ltd.
is expressly prohibited.

EAS20070

# NOTICE

This manual was produced by the Yamaha Motor Company, Ltd. primarily for use by Yamaha dealers and their qualified mechanics. It is not possible to include all the knowledge of a mechanic in one manual. Therefore, anyone who uses this book to perform maintenance and repairs on Yamaha vehicles should have a basic understanding of mechanics and the techniques to repair these types of vehicles. Repair and maintenance work attempted by anyone without this knowledge is likely to render the vehicle unsafe and unfit for use.

This model has been designed and manufactured to perform within certain specifications in regard to performance and emissions. Proper service with the correct tools is necessary to ensure that the vehicle will operate as designed. If there is any question about a service procedure, it is imperative that you contact a Yamaha dealer for any service information changes that apply to this model. This policy is intended to provide the customer with the most satisfaction from his vehicle and to conform to federal environmental quality objectives.

Yamaha Motor Company, Ltd. is continually striving to improve all of its models. Modifications and significant changes in specifications or procedures will be forwarded to all authorized Yamaha dealers and will appear in future editions of this manual where applicable.

**NOTE:**

- This Service Manual contains information regarding periodic maintenance to the emission control system. Please read this material carefully.
- Designs and specifications are subject to change without notice.

EAS20080

## IMPORTANT MANUAL INFORMATION

Particularly important information is distinguished in this manual by the following.

| | |
|---|---|
| ⚠ | The Safety Alert Symbol means ATTENTION! BECOME ALERT! YOUR SAFETY IS INVOLVED! |
| **⚠ WARNING** | Failure to follow WARNING instructions could result in severe injury or death to the vehicle operator, a bystander or a person checking or repairing the vehicle. |
| **CAUTION:** | A CAUTION indicates special precautions that must be taken to avoid damage to the vehicle. |
| **NOTE:** | A NOTE provides key information to make procedures easier or clearer. |

EAS20090

# HOW TO USE THIS MANUAL

This manual is intended as a handy, easy-to-read reference book for the mechanic. Comprehensive explanations of all installation, removal, disassembly, assembly, repair and check procedures are laid out with the individual steps in sequential order.

- The manual is divided into chapters and each chapter is divided into sections. The current section title “1” is shown at the top of each page.
- Sub-section titles “2” appear in smaller print than the section title.
- To help identify parts and clarify procedure steps, there are exploded diagrams “3” at the start of each removal and disassembly section.
- Numbers “4” are given in the order of the jobs in the exploded diagram. A number indicates a disassembly step.
- Symbols “5” indicate parts to be lubricated or replaced.
  Refer to “SYMBOLS”.
- A job instruction chart “6” accompanies the exploded diagram, providing the order of jobs, names of parts, notes in jobs, etc.
- Jobs “7” requiring more information (such as special tools and technical data) are described sequentially.

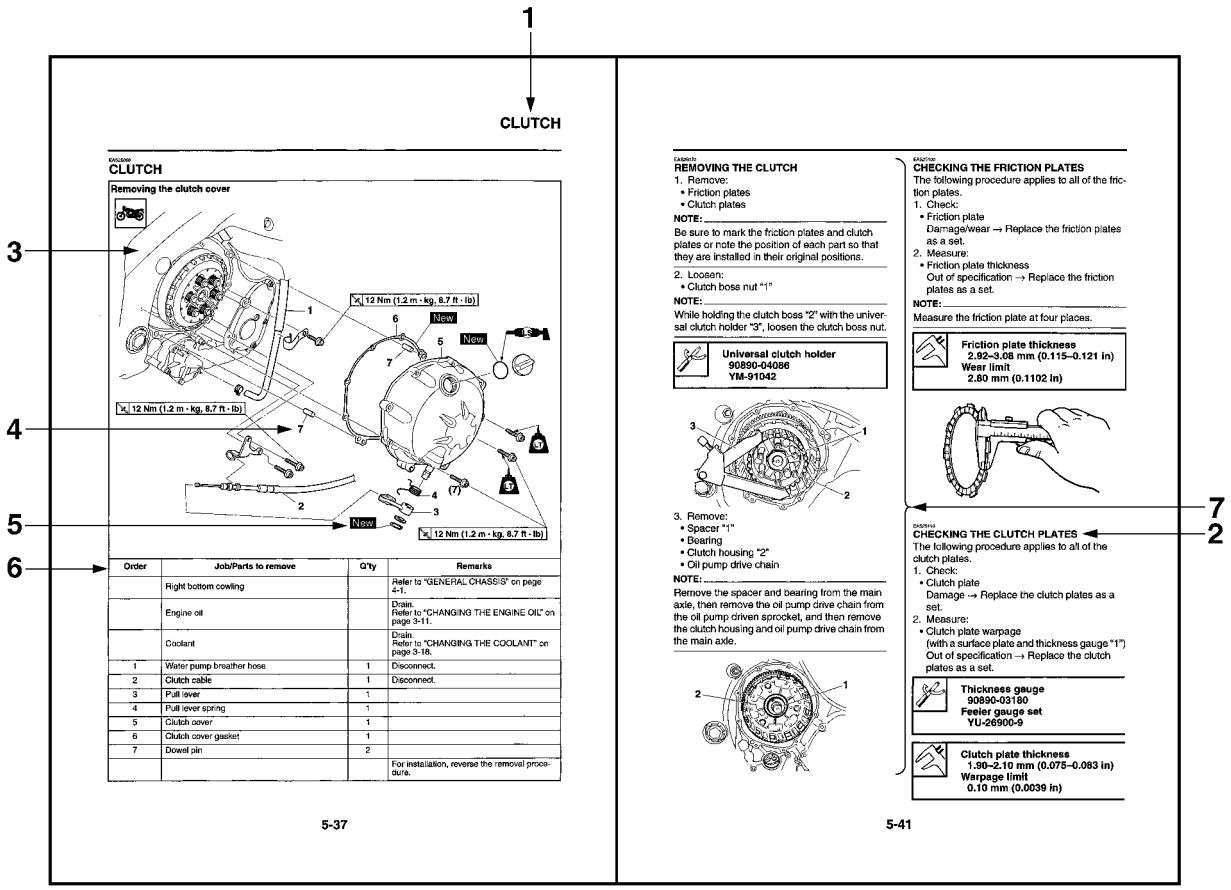

EAS20100

# SYMBOLS

The following symbols are used in this manual for easier understanding.

**NOTE:**

The following symbols are not relevant to every vehicle.

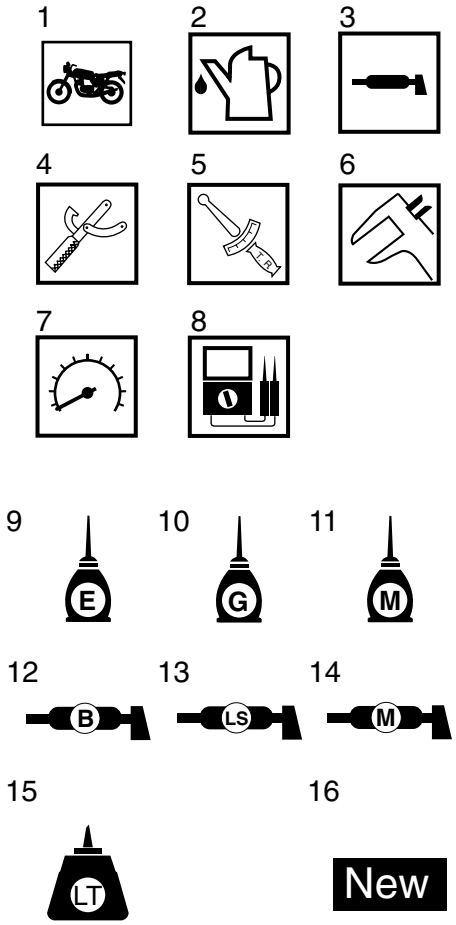


1. Serviceable with engine mounted
2. Filling fluid
3. Lubricant
4. Special tool
5. Tightening torque
6. Wear limit, clearance
7. Engine speed
8. Electrical data
9. Engine oil
10. Gear oil
11. Molybdenum disulfide oil
12. Wheel bearing grease
13. Lithium-soap-based grease
14. Molybdenum disulfide grease
15. Apply locking agent (LOCTITE®).
16. Replace the part with a new one.

# GENERAL INFORMATION

**IDENTIFICATION** ..... 1-1
VEHICLE IDENTIFICATION NUMBER ..... 1-1
MODEL LABEL ..... 1-1

**FEATURES** ..... 1-2
OUTLINE OF THE FI SYSTEM ..... 1-2
FI SYSTEM ..... 1-3
YCC-T (Yamaha Chip Controlled Throttle) ..... 1-4
INSTRUMENT FUNCTIONS ..... 1-7

**IMPORTANT INFORMATION** ..... 1-12
PREPARATION FOR REMOVAL AND DISASSEMBLY ..... 1-12
REPLACEMENT PARTS ..... 1-12
GASKETS, OIL SEALS AND O-RINGS ..... 1-12
LOCK WASHERS/PLATES AND COTTER PINS ..... 1-12
BEARINGS AND OIL SEALS ..... 1-13
CIRCLIPS ..... 1-13

**CHECKING THE CONNECTIONS** ..... 1-14

**SPECIAL TOOLS** ..... 1-15

EAS20130
# IDENTIFICATION

EAS20140
## VEHICLE IDENTIFICATION NUMBER
The vehicle identification number “1” is stamped on the right side of the steering head pipe.

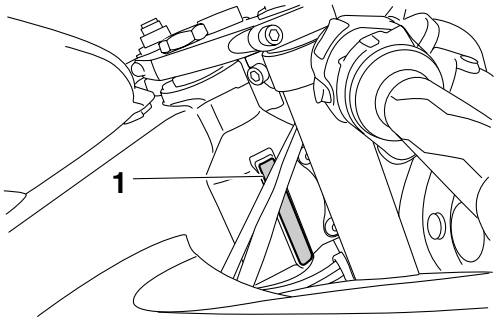


EAS20150
## MODEL LABEL
The model label “1” is affixed to the frame under the passenger seat. This information will be needed to order spare parts.

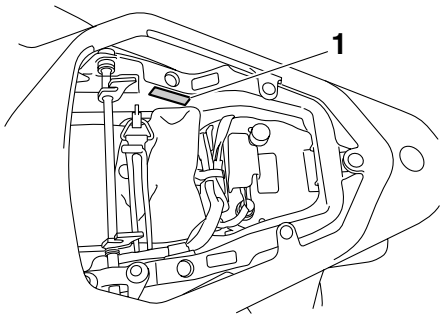

EAS20170
# FEATURES

ET2C01025
## OUTLINE OF THE FI SYSTEM

The main function of a fuel supply system is to provide fuel to the combustion chamber at the optimum air-fuel ratio in accordance with the engine operating conditions and the atmospheric temperature. In the conventional carburetor system, the air-fuel ratio of the mixture that is supplied to the combustion chamber is created by the volume of the intake air and the fuel that is metered by the jet used in the respective carburetor.

Despite the same volume of intake air, the fuel volume requirement varies by the engine operating conditions, such as acceleration, deceleration, or operating under a heavy load. Carburetors that meter the fuel through the use of jets have been provided with various auxiliary devices, so that an optimum air-fuel ratio can be achieved to accommodate the constant changes in the operating conditions of the engine.

As the requirements for the engine to deliver more performance and cleaner exhaust gases increase, it becomes necessary to control the air-fuel ratio in a more precise and finely tuned manner. To accommodate this need, this model has adopted an electronically controlled fuel injection (FI) system, in place of the conventional carburetor system. This system can achieve an optimum air-fuel ratio required by the engine at all times by using a microprocessor that regulates the fuel injection volume according to the engine operating conditions detected by various sensors.

The adoption of the FI system has resulted in a highly precise fuel supply, improved engine response, better fuel economy, and reduced exhaust emissions.

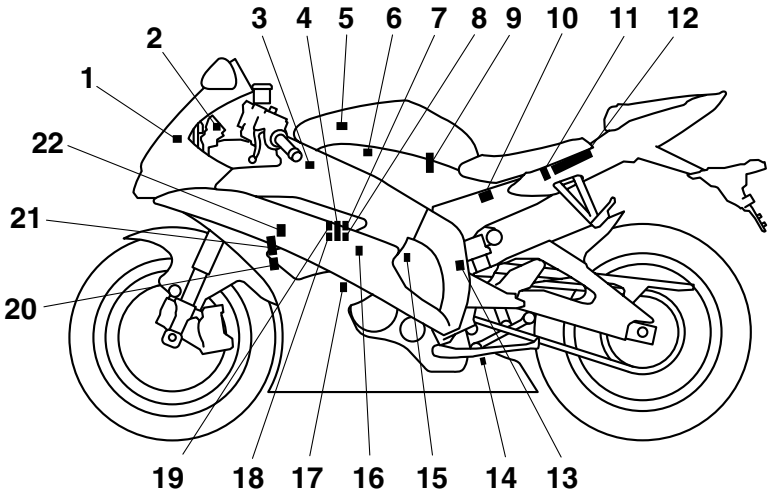


1. Air temperature sensor
2. Engine trouble warning light
3. Air induction system solenoid
4. Throttle servo motor
5. Atmospheric pressure sensor
6. Secondary injectors
7. Primary injectors
8. Intake air pressure sensor
9. Fuel pump
10. Relay unit (fuel pump relay)
11. Lean angle sensor
12. ECU (engine control unit)
13. EXUP servo motor
14. $O_2$ sensor
15. Speed sensor
16. Coolant temperature sensor
17. Crankshaft position sensor
18. Throttle position sensor (for throttle cable pulley)
19. Throttle position sensor (for throttle valves)
20. Spark plug
21. Ignition coil
22. Cylinder identification sensor

ET2C01019

## FI SYSTEM

The fuel pump delivers fuel to the fuel injector via the fuel filter. The pressure regulator maintains the fuel pressure that is applied to the fuel injector at only 324 kPa (3.24 kg/cm², 46.1 psi). Accordingly, when the energizing signal from the ECU energizes the fuel injector, the fuel passage opens, causing the fuel to be injected into the intake manifold only during the time the passage remains open. Therefore, the longer the length of time the fuel injector is energized (injection duration), the greater the volume of fuel that is supplied. Conversely, the shorter the length of time the fuel injector is energized (injection duration), the lesser the volume of fuel that is supplied.

The injection duration and the injection timing are controlled by the ECU. Signals that are input from the throttle position sensor (for throttle cable pulley), throttle position sensor (for throttle valves), coolant temperature sensor, atmospheric pressure sensor, cylinder identification sensor, lean angle sensor, crankshaft position sensor, intake air pressure sensor, air temperature sensor, speed sensor and $O_2$ sensor enable the ECU to determine the injection duration. The injection timing is determined through the signals from the crankshaft position sensor. As a result, the volume of fuel that is required by the engine can be supplied at all times in accordance with the driving conditions.

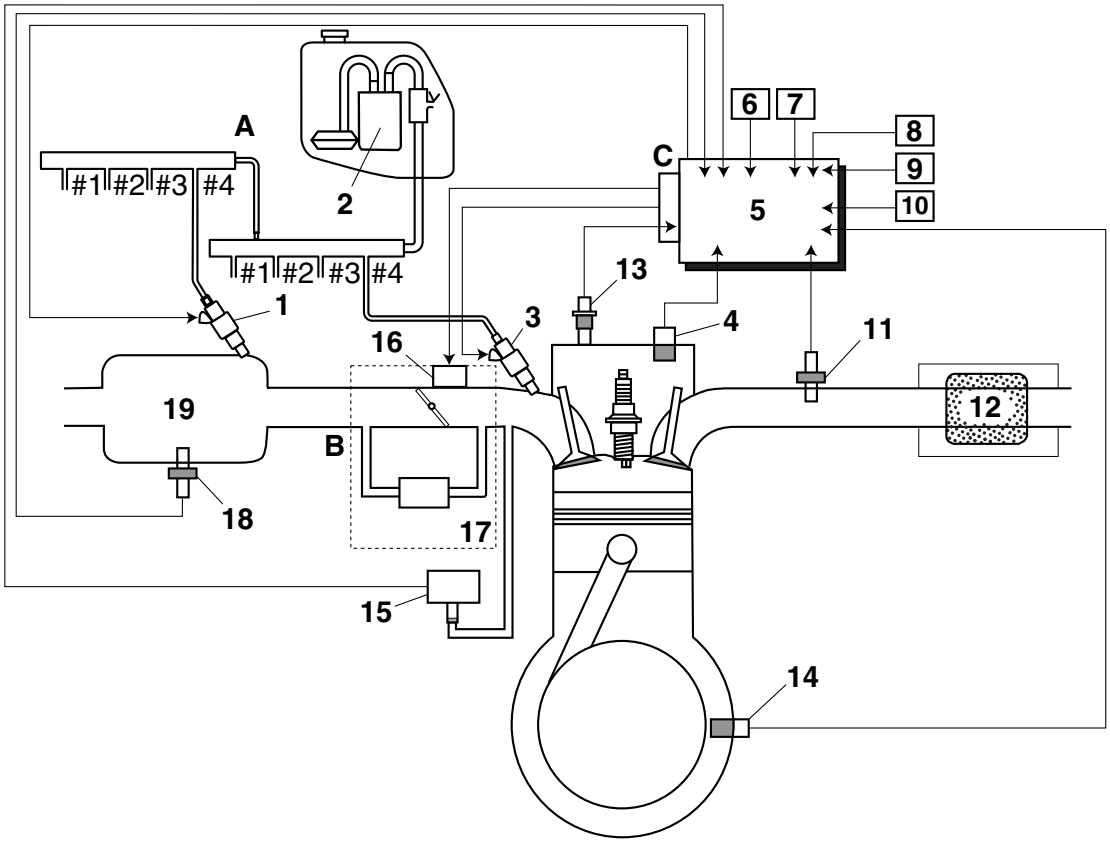


1. Secondary injector
2. Fuel pump
3. Primary injector
4. Cylinder identification sensor
5. ECU (engine control unit)
6. Throttle position sensor (for throttle cable pulley)
7. Throttle position sensor (for throttle valves)
8. Speed sensor
9. Air temperature sensor
10. Lean angle sensor
11. $O_2$ sensor
12. Catalytic converter
13. Coolant temperature sensor
14. Crankshaft position sensor
15. Intake air pressure sensor
16. Throttle servo motor
17. Throttle body
18. Atmospheric pressure sensor
19. Air filter case

A. Fuel system
B. Air system
C. Control system

ET2C01026

## YCC-T (Yamaha Chip Controlled Throttle)

### Mechanism characteristics

Yamaha developed the YCC-T system employing the most advanced electronic control technologies. Electronic control throttle systems have been used on automobiles, but Yamaha has developed a faster, more compact system specifically for the needs of a sports motorcycle. The Yamaha-developed system has a high-speed calculating capacity that produces computations of running conditions every 1/1000th of a second.

The YCC-T system is designed to respond to the throttle action of the rider by having the ECU instantaneously calculate the ideal throttle valve opening and generate signals to operate the motor-driven throttle valves and thus actively control the intake air volume.

The ECU contains three CPUs with a capacity about five times that of conventional units, making it possible for the system to respond extremely quickly to the slightest adjustments made by the rider. In particular, optimized control of the throttle valve opening provides the optimum volume of intake air for easy-to-use torque, even in a high-revving engine.

### Aims and advantages of using YCC-T

- Increased engine power
  By shortening the air intake path, higher engine speed is possible → Increased engine power.
- Improved driveability
  Air intake volume is controlled according to the operating conditions → Improved throttle response to meet engine requirement.
  Driving force is controlled at the optimal level according to the transmission gear position and engine speed → Improved throttle control.
- Engine braking control
  Due to the throttle control, optimal engine braking is made possible.
- Simplified idle speed control (ISC) mechanism
  The bypass mechanism and ISC actuator are eliminated → A simple mechanism is used to maintain a steady idle speed.
- Reduced weight
  Compared to using a sub-throttle mechanism, weight is reduced.

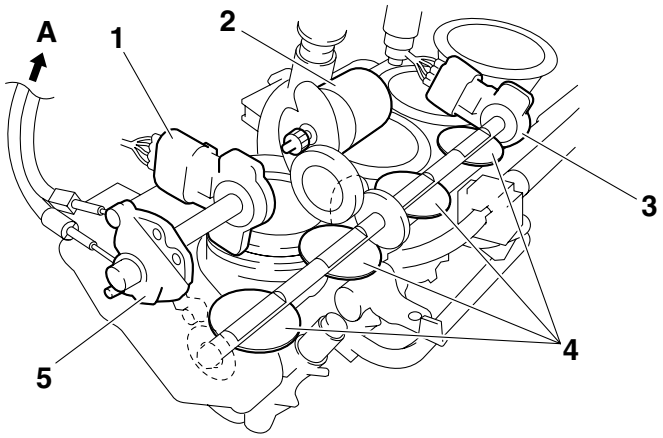


1. Throttle position sensor (for throttle cable pulley)
2. Throttle servo motor
3. Throttle position sensor (for throttle valves)
4. Throttle valves
5. Throttle cable pulley with linkage guard

A. To throttle grip

## YCC-T system outline

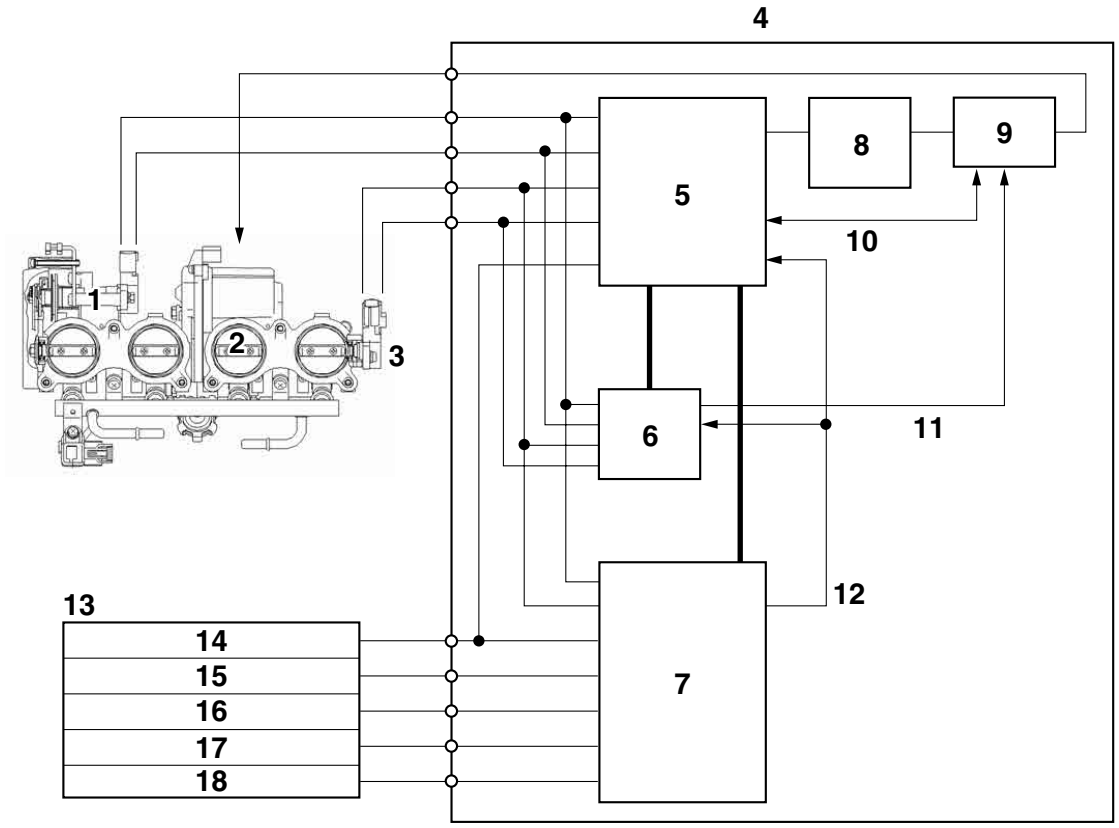


1. Throttle position sensor (for throttle cable pulley)
2. Throttle servo motor
3. Throttle position sensor (for throttle valves)
4. ECU (engine control unit)
5. ETV main CPU (32 bit)
6. ETV sub CPU (16 bit)
7. FI CPU (32 bit)
8. Throttle servo motor driver
9. Throttle servo motor driver operation sensing/shut off circuit
10. Throttle servo motor driver operation sensing feedback/emergency stop
11. Emergency stop
12. Engine revolution (pulse signal)
13. Sensor input
14. Neutral switch
15. Crankshaft position sensor
16. Speed sensor
17. Coolant temperature sensor
18. Atmospheric pressure sensor

## YCC-T control outline

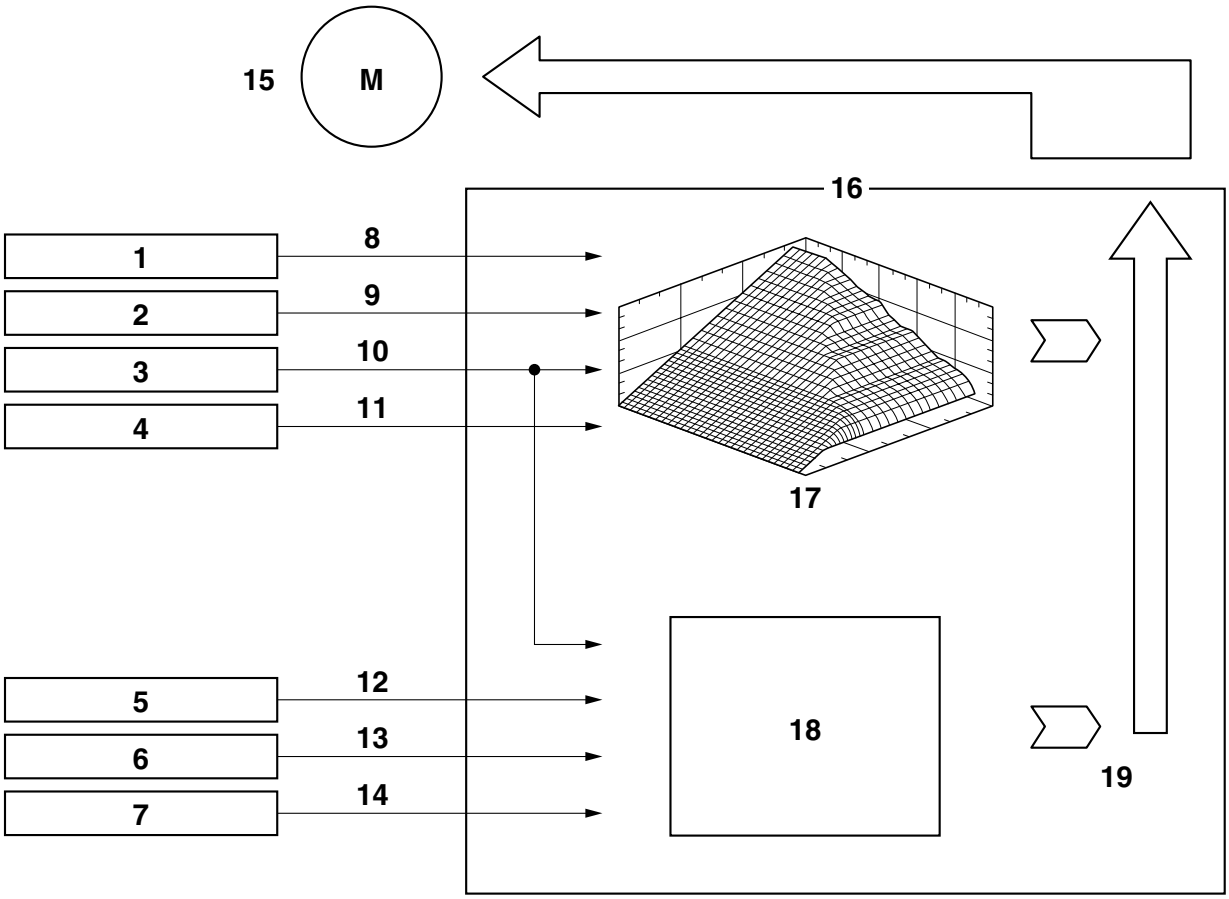


1. Throttle position sensor (for throttle cable pulley)
2. Throttle position sensor (for throttle valves)
3. Crankshaft position sensor
4. Speed sensor
5. Coolant temperature sensor
6. Neutral switch
7. Atmospheric pressure sensor
8. Throttle position (for throttle cable pulley) (two signals)
9. Throttle position (for throttle valves) (two signals)
10. Engine revolution
11. Vehicle speed
12. Coolant temperature
13. Neutral/In gear
14. Atmospheric pressure
15. Throttle servo motor
16. ECU (engine control unit)
17. Base map
18. Idle speed control
19. Calculated throttle valve opening angle

ET2C01020
## INSTRUMENT FUNCTIONS

### Multi-function meter unit

EW2C01003
**WARNING**

**Be sure to stop the vehicle before making any setting changes to the multi-function meter unit.**

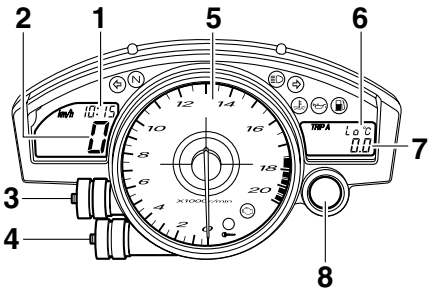


1. Clock
2. Speedometer
3. “SELECT” button
4. “RESET” button
5. Tachometer
6. Coolant temperature display/air intake temperature display
7. Odometer/tripmeters/fuel reserve tripmeter/stopwatch
8. Shift timing indicator light

The multi-function meter unit is equipped with the following:
- a speedometer (which shows the riding speed)
- a tachometer (which shows engine speed)
- an odometer (which shows the total distance traveled)
- two tripmeters (which show the distance traveled since they were last set to zero)
- a fuel reserve tripmeter (which shows the distance traveled since the fuel level warning light came on)
- a stopwatch
- a clock
- a coolant temperature display
- an air intake temperature display
- a self-diagnosis device
- a display brightness and shift timing indicator light control mode

**NOTE:**

Be sure to turn the key to “ON” before using the “SELECT” and “RESET” buttons.

### Tachometer

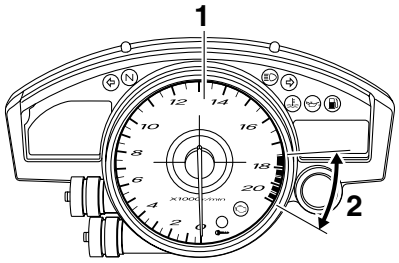


1. Tachometer
2. Tachometer red zone

The electric tachometer allows the rider to monitor the engine speed and keep it within the ideal power range.
When the key is turned to “ON”, the tachometer needle will sweep once across the r/min range and then return to zero r/min in order to test the electrical circuit.

EC2C01020
**CAUTION:**

**Do not operate the engine in the tachometer red zone.**
**Red zone: 17500 r/min and above**

### Clock mode

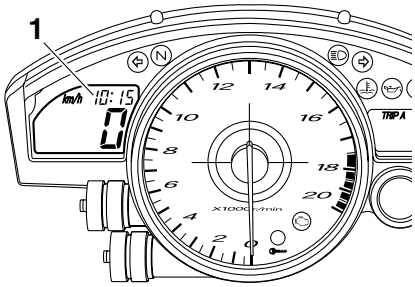


1. Clock

Turn the key to “ON”.

To set the clock:
1. Push the “SELECT” button and “RESET” button together for at least two seconds.
2. When the hour digits start flashing, push the “RESET” button to set the hours.
3. Push the “SELECT” button, and the minute digits will start flashing.
4. Push the “RESET” button to set the minutes.
5. Push the “SELECT” button and then release it to start the clock.

**Odometer, tripmeter, and stopwatch modes**

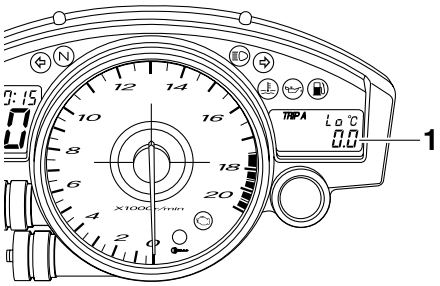


1. Odometer/tripmeters/fuel reserve tripmeter/stopwatch

Push the “SELECT” button to switch the display between the odometer mode “ODO”, the tripmeter modes “TRIP A” and “TRIP B” and the stopwatch mode in the following order:
TRIP A → TRIP B → ODO → Stopwatch → TRIP A
If the fuel level warning light comes on, the odometer display will automatically change to the fuel reserve tripmeter mode “F-TRIP” and start counting the distance traveled from that point. In that case, push the “SELECT” button to switch the display between the various tripmeter, odometer, and stopwatch modes in the following order:
F-TRIP → Stopwatch → TRIP A → TRIP B → ODO → F-TRIP
To reset a tripmeter, select it by pushing the “SELECT” button, and then push the “RESET” button for at least one second. If you do not reset the fuel reserve tripmeter manually, it will reset itself automatically and the display will return to the prior mode after refueling and traveling 5 km (3 mi).

**Stopwatch mode**
To change the display to the stopwatch mode, select it by pushing the “SELECT” button. (The stopwatch digits will start flashing.) Release the “SELECT” button, and then push it again for a few seconds until the stopwatch digits stop flashing.

Standard measurement:
1. Push the “RESET” button to start the stopwatch.
2. Push the “SELECT” button to stop the stopwatch.
3. Push the “SELECT” button again to reset the stopwatch.

Split-time measurement:
1. Push the “RESET” button to start the stopwatch.
2. Push the “RESET” button or start switch “” to measure split-times. (The colon “:” will start flashing.)
3. Push the “RESET” button or start switch “” to display the final split-time or push the “SELECT” button to stop the stopwatch and display total elapsed time.
4. Push the “SELECT” button to reset the stopwatch.

**NOTE:**
To change the display back to the prior mode, push the “SELECT” button for a few seconds.

**Coolant temperature display**

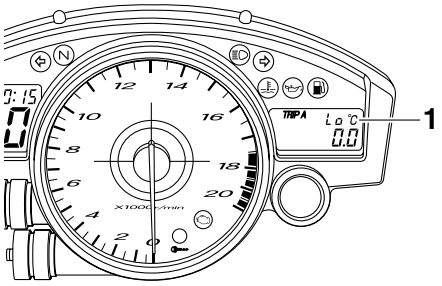


1. Coolant temperature display

The coolant temperature display indicates the temperature of the coolant. Push the “RESET” button to switch the coolant temperature display to the air intake temperature display.

**NOTE:**
When the coolant temperature display is selected, “C” is displayed for one second, and then the coolant temperature is displayed.

EC2C01021

**CAUTION:**

**Do not operate the engine if it is overheated.**

### Air intake temperature display

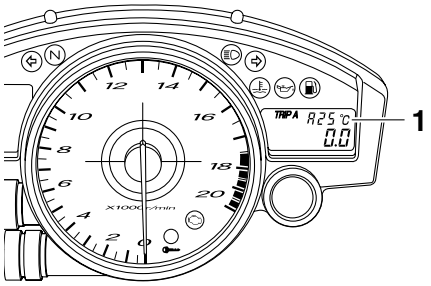


1. Air intake temperature display

The air intake temperature display indicates the temperature of the air drawn into the air filter case. Push the “RESET” button to switch the coolant temperature display to the air intake temperature display.

**NOTE:**

- Even if the air intake temperature is set to be displayed, the coolant temperature warning light comes on when the engine overheats.
- When the key is turned to “ON”, the coolant temperature is automatically displayed, even if the air intake temperature was displayed prior to turning the key to “OFF”.
- When the air intake temperature display is selected, “A” is displayed before the temperature.

### Self-diagnosis device

This model is equipped with a self-diagnosis device for various electrical circuits.
If any of those circuits are defective, the engine trouble warning light will come on, and then the odometer/trip meter/fuel reserve trip meter/stopwatch display will indicate a two-digit error code (e.g., 11, 12, 13).
If the display indicates an error code, note the code number, and then check the vehicle. Refer to “FUEL INJECTION SYSTEM” on page 8-33.

EC2C01022

**CAUTION:**

**If the display indicates an error code, the vehicle should be checked as soon as possible in order to avoid engine damage.**

This model is also equipped with a self-diagnosis device for the immobilizer system.
If any of the immobilizer system circuits are defective, the immobilizer system indicator light will flash, and then the odometer/trip meter/fuel reserve trip meter/stopwatch display will indicate a two-digit error code (e.g., 51, 52, 53).

**NOTE:**

If the display indicates error code 52, this could be caused by transponder interference. If this error code appears, try the following.

1. Use the code re-registering key to start the engine.

**NOTE:**

Make sure there are no other immobilizer keys close to the main switch, and do not keep more than one immobilizer key on the same key ring! Immobilizer system keys may cause signal interference, which may prevent the engine from starting.

2. If the engine starts, turn it off and try starting the engine with the standard keys.
3. If one or both of the standard keys do not start the engine, re-register the standard keys.

If the display indicates an error code, note the code number, and then check the vehicle. Refer to “IMMOBILIZER SYSTEM” on page 8-77.

EC2C01022

**CAUTION:**

**If the display indicates an error code, the vehicle should be checked as soon as possible in order to avoid engine damage.**

### Display brightness and shift timing indicator light control mode

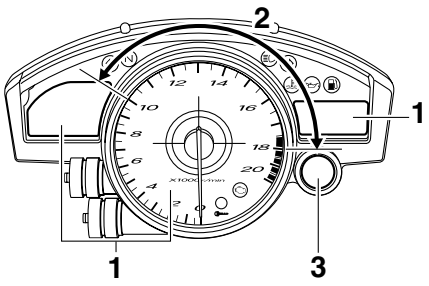


1. Display brightness
2. Shift timing indicator light activation/deactivation
3. Shift timing indicator light

This mode cycles through five control functions, allowing you to make the following settings in the order listed below.

- Display brightness:
  This function allows you to adjust the brightness of the displays and tachometer to suit the outside lighting conditions.
- Shift timing indicator light activity:
  This function allows you to choose whether or not the indicator light should be activated and whether it should flash or stay on when activated.
- Shift timing indicator light activation:
  This function allows you to select the engine speed at which the indicator light will be activated.
- Shift timing indicator light deactivation:
  This function allows you to select the engine speed at which the indicator light will be deactivated.
- Shift timing indicator light brightness:
  This function allows you to adjust the brightness of the indicator light to suit your preference.

**NOTE:**

In this mode, the odometer/trip meter/fuel reserve trip meter/stopwatch display shows the current setting for each function (except the shift timing indicator light activity function).

To adjust the brightness of the multi-function meter displays and tachometer:

1. Turn the key to “OFF”.
2. Push and hold the “SELECT” button.
3. Turn the key to “ON”, and then release the “SELECT” button after five seconds.
4. Push the “RESET” button to select the desired brightness level.
5. Push the “SELECT” button to confirm the selected brightness level. The control mode changes to the shift timing indicator light activity function.

To set the shift timing indicator light activity function:

1. Push the “RESET” button to select one of the following indicator light activity settings:
   - The indicator light will stay on when activated. (This setting is selected when the indicator light stays on.)
   - The indicator light will flash when activated. (This setting is selected when the indicator light flashes four times per second.)
   - The indicator light is deactivated; in other words, it will not come on or flash. (This setting is selected when the indicator light flashes once every two seconds.)
2. Push the “SELECT” button to confirm the selected indicator light activity. The control mode changes to the shift timing indicator light activation function.

To set the shift timing indicator light activation function:

**NOTE:**

The shift timing indicator light activation function can be set between 10000 r/min and 18000 r/min. From 10000 r/min to 13000 r/min, the indicator light can be set in increments of 500 r/min. From 13000 r/min to 18000 r/min, the indicator light can be set in increments of 200 r/min.

1. Push the “RESET” button to select the desired engine speed for activating the indicator light.
2. Push the “SELECT” button to confirm the selected engine speed. The control mode changes to the shift timing indicator light deactivation function.

To set the shift timing indicator light deactivation function:

**NOTE:**

- The shift timing indicator light deactivation function can be set between 10000 r/min and 18000 r/min. From 10000 r/min to 13000 r/min, the indicator light can be set in increments of 500 r/min. From 13000 r/min to 18000 r/min, the indicator light can be set in increments of 200 r/min.
- Be sure to set the deactivation function to a higher engine speed than for the activation function, otherwise the shift timing indicator light will remain deactivated.

1. Push the “RESET” button to select the desired engine speed for deactivating the indicator light.
2. Push the “SELECT” button to confirm the selected engine speed. The control mode changes to the shift timing indicator light brightness function.

To adjust the shift timing indicator light brightness:

1. Push the “RESET” button to select the desired indicator light brightness level.
2. Push the “SELECT” button to confirm the selected indicator light brightness level. The display will return to the odometer or tripmeter mode.

EAS20180
# IMPORTANT INFORMATION

EAS20190
## PREPARATION FOR REMOVAL AND DISASSEMBLY

1. Before removal and disassembly, remove all dirt, mud, dust and foreign material.

2. Use only the proper tools and cleaning equipment.
   Refer to “SPECIAL TOOLS” on page 1-15.
3. When disassembling, always keep mated parts together. This includes gears, cylinders, pistons and other parts that have been “mated” through normal wear. Mated parts must always be reused or replaced as an assembly.

4. During disassembly, clean all of the parts and place them in trays in the order of disassembly. This will speed up assembly and allow for the correct installation of all parts.
5. Keep all parts away from any source of fire.

EAS20200
## REPLACEMENT PARTS

Use only genuine Yamaha parts for all replacements. Use oil and grease recommended by Yamaha for all lubrication jobs. Other brands may be similar in function and appearance, but inferior in quality.

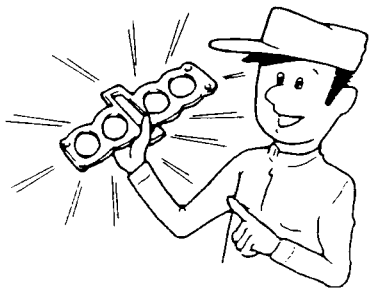

EAS20210
## GASKETS, OIL SEALS AND O-RINGS

1. When overhauling the engine, replace all gaskets, seals and O-rings. All gasket surfaces, oil seal lips and O-rings must be cleaned.
2. During reassembly, properly oil all mating parts and bearings and lubricate the oil seal lips with grease.

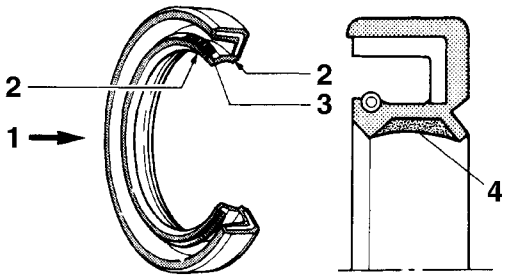


1. Oil
2. Lip
3. Spring
4. Grease

EAS20220
## LOCK WASHERS/PLATES AND COTTER PINS

After removal, replace all lock washers/plates “1” and cotter pins. After the bolt or nut has been tightened to specification, bend the lock tabs along a flat of the bolt or nut.

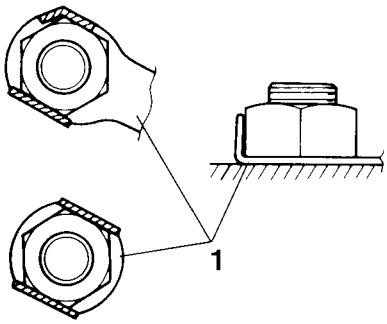

EAS20230

## BEARINGS AND OIL SEALS

Install bearings “1” and oil seals “2” so that the manufacturer’s marks or numbers are visible. When installing oil seals, lubricate the oil seal lips with a light coat of lithium-soap-based grease. Oil bearings liberally when installing, if appropriate.

ECA13300

**CAUTION:**

**Do not spin the bearing with compressed air because this will damage the bearing surfaces.**

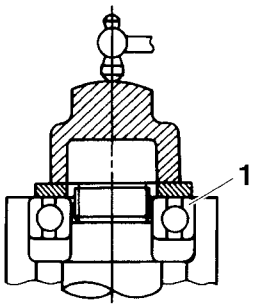


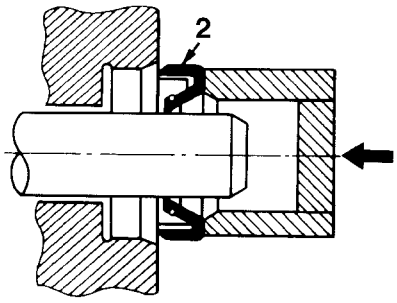


EAS20240

## CIRCLIPS

Before reassembly, check all circlips carefully and replace damaged or distorted circlips. Always replace piston pin clips after one use. When installing a circlip “1”, make sure the sharp-edged corner “2” is positioned opposite the thrust “3” that the circlip receives.

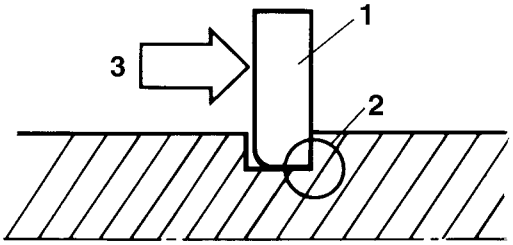

EAS20250

## CHECKING THE CONNECTIONS

Check the leads, couplers, and connectors for stains, rust, moisture, etc.

1. Disconnect:
   - Lead
   - Coupler
   - Connector
2. Check:
   - Lead
   - Coupler
   - Connector
     Moisture → Dry with an air blower.
     Rust/stains → Connect and disconnect several times.

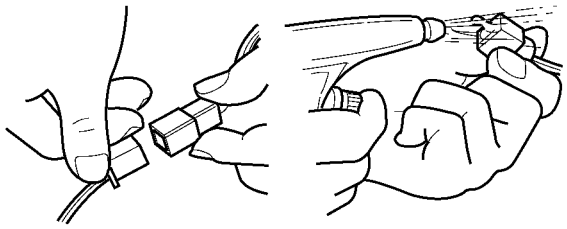

3. Check:
   - All connections
     Loose connection → Connect properly.

**NOTE:**

If the pin "1" on the terminal is flattened, bend it up.

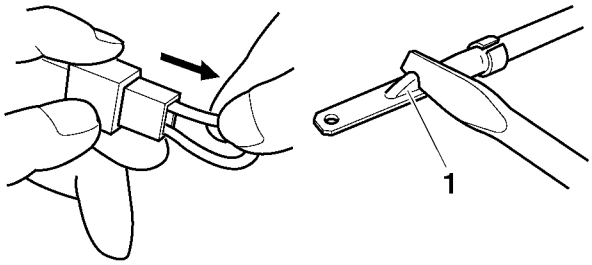


4. Connect:
   - Lead
   - Coupler
   - Connector

**NOTE:**

Make sure all connections are tight.

5. Check:
   - Continuity
     (with the pocket tester)

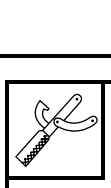

**Pocket tester**
**90890-03112**
**Analog pocket tester**
**YU-03112-C**

**NOTE:**

- If there is no continuity, clean the terminals.
- When checking the wire harness, perform steps (1) to (3).
- As a quick remedy, use a contact revitalizer available at most part stores.

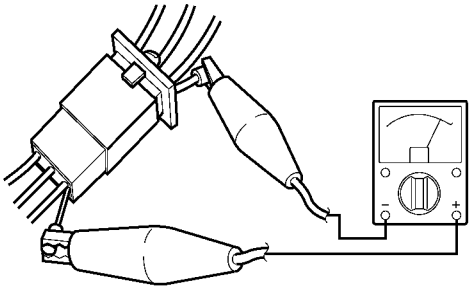

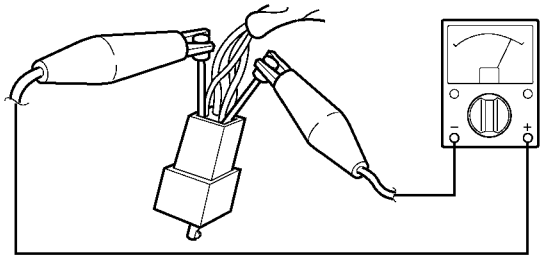

EAS20260

# SPECIAL TOOLS

The following special tools are necessary for complete and accurate tune-up and assembly. Use only the appropriate special tools as this will help prevent damage caused by the use of inappropriate tools or improvised techniques. Special tools, part numbers or both may differ depending on the country. When placing an order, refer to the list provided below to avoid any mistakes.

**NOTE:**

- For U.S.A. and Canada, use part number starting with “YM-”, “YU-”, or “ACC-”.
- For others, use part number starting with “90890-”.

| Tool name/Tool No. | Illustration | Reference pages |
|---|---|---|
| Pocket tester<br>90890-03112<br>Analog pocket tester<br>YU-03112-C | | 1-14, 5-35, 8-93, 8-94, 8-95, 8-99, 8-100, 8-101, 8-102, 8-103, 8-104, 8-105, 8-106, 8-107, 8-108, 8-109, 8-110, 8-111 |
| Valve lapper<br>90890-04101<br>Valve lapping tool<br>YM-A8998 | 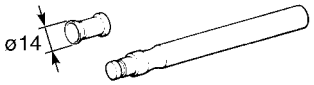 | 3-5 |
| Vacuum gauge<br>90890-03094<br>Carburetor synchronizer<br>YU-44456 | 90890-03094<br> 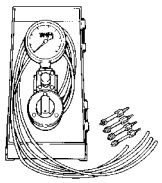 <br>YU-44456<br> | 3-7 |
| Compression gauge<br>90890-03081<br>Engine compression tester<br>YU-33223 | 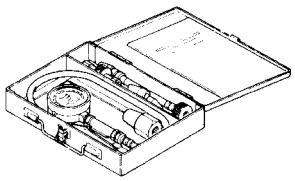 | 3-10 |
| Extension<br>90890-04136 | 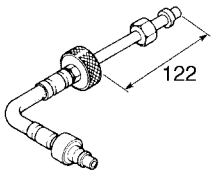 | 3-10 |

| Tool name/Tool No. | Illustration | Reference pages |
|---|---|---|
| Oil filter wrench<br>90890-01426<br>YU-38411 | 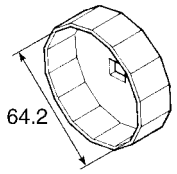 | 3-11 |
| Oil pressure gauge set<br>90890-03120 | 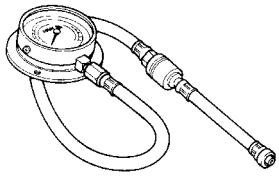 | 3-13 |
| Oil pressure adapter H<br>90890-03139 | 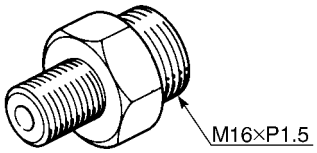 | 3-13 |
| Steering nut wrench<br>90890-01403<br>Spanner wrench<br>YU-33975 | 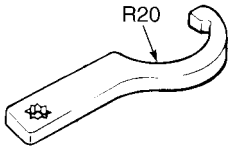 | 3-27, 4-58 |
| Fork spring compressor<br>90890-01441<br>YM-01441 | 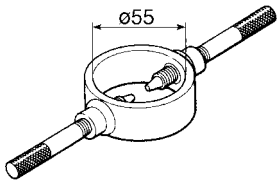 | 4-47, 4-52 |
| Rod holder<br>90890-01434<br>Damper rod holder double ended<br>YM-01434 | 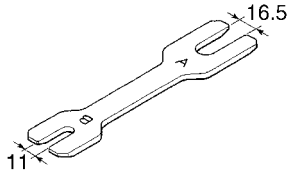 | 4-47, 4-52 |
| Damper rod holder<br>90890-01506<br>YM-01506 | 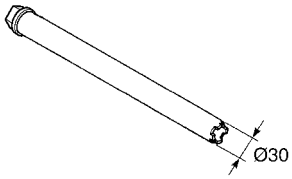 | 4-48, 4-49 |
| Fork seal driver<br>90890-01442<br>Adjustable fork seal driver (36–46 mm)<br>YM-01442 | 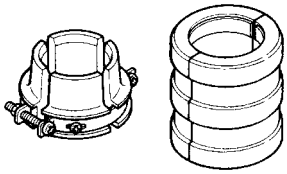 | 4-50 |

| Tool name/Tool No. | Illustration | Reference pages |
|---|---|---|
| Rod puller<br>90890-01437<br>Universal damping rod bleeding tool set<br>YM-A8703 | 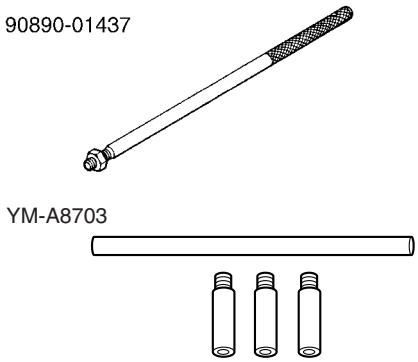 | 4-51, 4-52 |
| Rod puller attachment (M10)<br>90890-01436<br>Universal damping rod bleeding tool set<br>YM-A8703 | 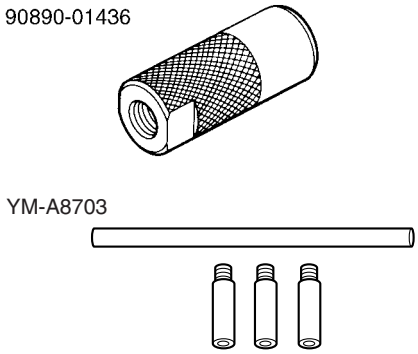 | 4-51, 4-52 |
| Ring nut wrench<br>90890-01268<br>Spanner wrench<br>YU-01268 | 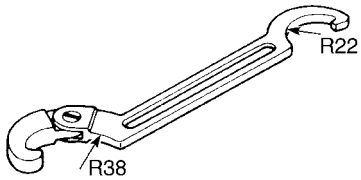 | 4-58 |
| Ring nut wrench<br>90890-01507<br>YM-01507 | 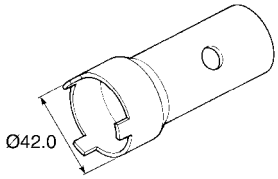 | 4-67, 4-69 |
| Damper rod holder (24 mm)<br>90890-01328<br>YM-01328 | 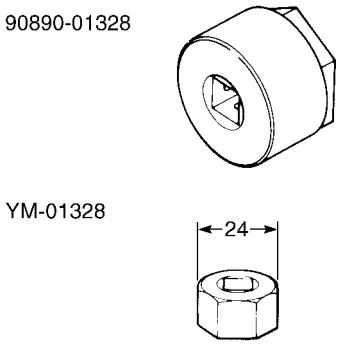 | 4-67, 4-68 |
| Valve spring compressor<br>90890-04019<br>YM-04019 | 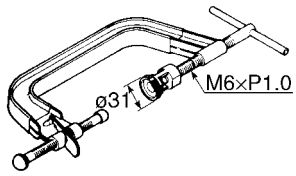 | 5-19, 5-24 |

| Tool name/Tool No. | Illustration | Reference pages |
|---|---|---|
| Valve spring compressor attachment<br>90890-04108<br>Valve spring compressor adapter 22 mm<br>YM-04108 | 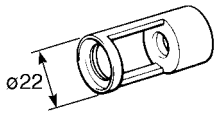 | 5-19, 5-24 |
| Valve guide remover (ø4.5)<br>90890-04116<br>Valve guide remover (4.5 mm)<br>YM-04116 | 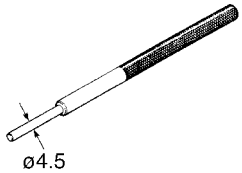 | 5-21 |
| Valve guide installer (ø4.5)<br>90890-04117<br>Valve guide installer (4.5 mm)<br>YM-04117 | 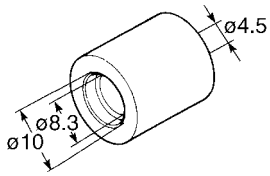 | 5-21 |
| Valve guide reamer (ø4.5)<br>90890-04118<br>Valve guide reamer (4.5 mm)<br>YM-04118 | 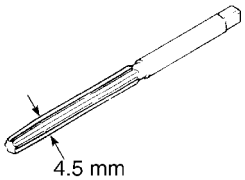 | 5-21 |
| Valve spring compressor<br>90890-04109 | 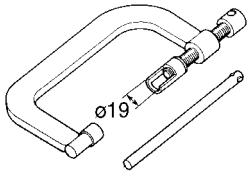 | 5-24 |
| Sheave holder<br>90890-01701<br>Primary clutch holder<br>YS-01880-A | 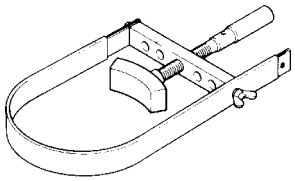 | 5-28, 5-29,<br>5-31 |
| Flywheel puller<br>90890-01404<br>Flywheel puller<br>YM-01404 | 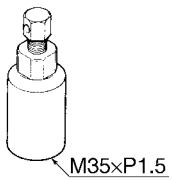 | 5-28 |
| Yamaha bond No. 1215<br>90890-85505<br>(Three Bond No.1215®) | 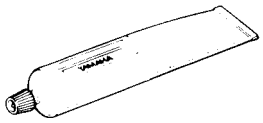 | 5-29, 5-31,<br>5-57 |

| Tool name/Tool No. | Illustration | Reference pages |
|---|---|---|
| Universal clutch holder<br>90890-04086<br>YM-91042 | 90890-04086<br> 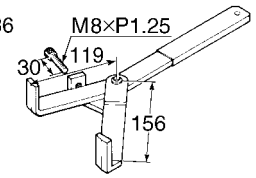 <br>YM-91042<br> 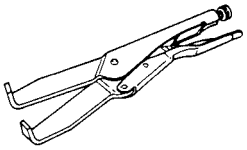 | 5-41, 5-45 |
| Thickness gauge<br>90890-03180<br>Feeler gauge set<br>YU-26900-9 | 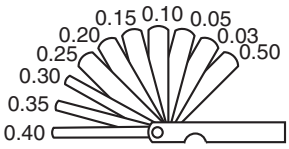 | 5-41 |
| Piston pin puller set<br>90890-01304<br>Piston pin puller<br>YU-01304 | 90890-01304<br> 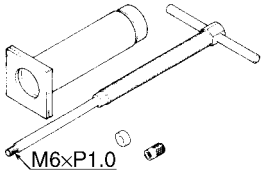 <br>YU-01304<br> 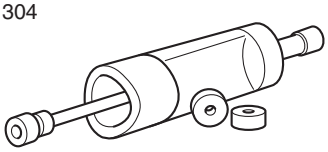 | 5-60 |
| Radiator cap tester<br>90890-01325<br>Radiator pressure tester<br>YU-24460-01 | 90890-01325<br> 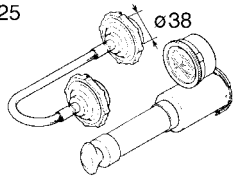 <br>YU-24460-01<br> 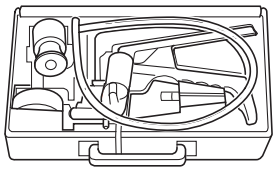 | 6-3 |
| Radiator cap tester adapter<br>90890-01352<br>Radiator pressure tester adapter<br>YU-33984 | 90890-01352<br> 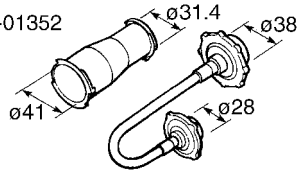 <br>YU-33984<br> 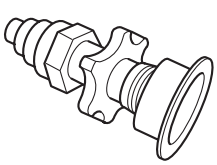 | 6-3 |

| Tool name/Tool No. | Illustration | Reference pages |
|---|---|---|
| Pressure gauge<br>90890-03153<br>Pressure gauge<br>YU-03153 | 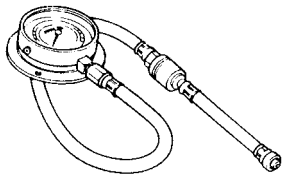 | 7-10 |
| Fuel pressure adapter<br>90890-03176<br>YM-03176 | 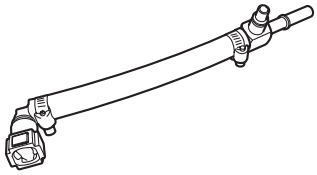 | 7-10 |
| Digital circuit tester<br>90890-03174<br>Model 88 Multimeter with tachometer<br>YU-A1927 | 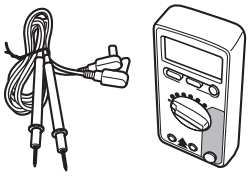 | 7-11 |
| Ignition checker<br>90890-06754<br>Opama pet-4000 spark checker<br>YM-34487 | 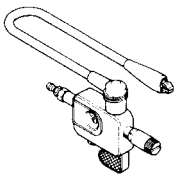 | 8-102 |

# SPECIFICATIONS

**GENERAL SPECIFICATIONS** ..... 2-1

**ENGINE SPECIFICATIONS** ..... 2-2

**CHASSIS SPECIFICATIONS** ..... 2-10

**ELECTRICAL SPECIFICATIONS** ..... 2-13

**TIGHTENING TORQUES** ..... 2-16
- GENERAL TIGHTENING TORQUE SPECIFICATIONS ..... 2-16
- ENGINE TIGHTENING TORQUES ..... 2-17
- CHASSIS TIGHTENING TORQUES ..... 2-21

**LUBRICATION POINTS AND LUBRICANT TYPES** ..... 2-25
- ENGINE ..... 2-25
- CHASSIS ..... 2-27

**LUBRICATION SYSTEM CHART AND DIAGRAMS** ..... 2-29
- ENGINE OIL LUBRICATION CHART ..... 2-29
- LUBRICATION DIAGRAMS ..... 2-31

**COOLING SYSTEM DIAGRAMS** ..... 2-43

**CABLE ROUTING** ..... 2-47

EAS20280

# GENERAL SPECIFICATIONS

| | |
|---|---|
| **Model** | |
| Model | 2C07/2C0A |
| **Dimensions** | |
| Overall length | 2040 mm (80.3 in) |
| Overall width | 700 mm (27.6 in) |
| Overall height | 1100 mm (43.3 in) |
| Seat height | 850 mm (33.5 in) |
| Wheelbase | 1380 mm (54.3 in) |
| Ground clearance | 130 mm (5.12 in) |
| Minimum turning radius | 3600 mm (141.7 in) |
| **Weight** | |
| With oil and fuel | 182.0 kg (401 lb) |
| Maximum load | 193 kg (425 lb) |

EAS20290

# ENGINE SPECIFICATIONS

| | |
|---|---|
| **Engine** | |
| Engine type | Liquid-cooled 4-stroke, DOHC |
| Displacement | 599 $cm^3$ (36.55 cu.in) |
| Cylinder arrangement | Forward-inclined parallel 4-cylinder |
| Bore × stroke | 67.0 × 42.5 mm (2.64 × 1.67 in) |
| Compression ratio | 12.8 :1 |
| Standard compression pressure (at sea level) | 1550 kPa/400 r/min (220.5 psi/400 r/min) (15.5 $kgf/cm^2$/400 r/min) |
| Minimum–maximum | 1300–1600 kPa (184.9–227.6 psi) (13.0–16.0 $kgf/cm^2$) |
| Starting system | Electric starter |
| **Fuel** | |
| Recommended fuel | Premium unleaded gasoline only |
| Fuel tank capacity | 17.5 L (4.62 US gal) (3.85 Imp.gal) |
| Fuel reserve amount | 3.5 L (0.92 US gal) (0.77 Imp.gal) |
| **Engine oil** | |
| Lubrication system | Wet sump |
| Type | YAMALUBE 4, SAE10W30 or SAE20W40 |
| Recommended engine oil grade | API service SF, SG type or higher |
| Engine oil quantity | |
| Total amount | 3.40 L (3.59 US qt) (2.99 Imp.qt) |
| Without oil filter cartridge replacement | 2.40 L (2.54 US qt) (2.11 Imp.qt) |
| With oil filter cartridge replacement | 2.60 L (2.75 US qt) (2.29 Imp.qt) |
| Oil cooler capacity (including all routes) | 0.23 L (2.43 US qt) (2.02 Imp.qt) |
| Oil pressure (hot) | 80.0 kPa/1300 r/min (11.6 psi/1300 r/min) (0.80 $kgf/cm^2$/1300 r/min) |
| **Oil filter** | |
| Oil filter type | Cartridge (paper) |
| **Oil pump** | |
| Oil pump type | Trochoid |
| Inner-rotor-to-outer-rotor-tip clearance | Less than 0.12 mm (0.0047 in) |
| Limit | 0.20 mm (0.0079 in) |
| Outer-rotor-to-oil-pump-housing clearance | 0.090–0.150 mm (0.0035–0.0059 in) |
| Limit | 0.220 mm (0.0087 in) |
| Oil-pump-housing-to-inner-and-outer-rotor clearance | 0.06–0.11 mm (0.0024–0.0043 in) |
| Limit | 0.18 mm (0.0071 in) |
| Bypass valve opening pressure | 78.4–117.6 kPa (11.4–17.1 psi) (0.78–1.18 $kgf/cm^2$) |
| Relief valve operating pressure | 660.0–740.0 kPa (95.7–107.3 psi) (6.60–7.40 $kgf/cm^2$) |
| Pressure check location | MAIN GALLERY |
| **Cooling system** | |
| Radiator capacity (including all routes) | 2.30 L (2.43 US qt) (2.02 Imp.qt) |

| | |
|---|---|
| Coolant reservoir capacity (up to the maximum level mark) | 0.25 L (0.26 US qt) (0.22 Imp.qt) |
| Radiator cap opening pressure | 107.9–137.3 kPa (15.6–19.9 psi) (1.08–1.37 kgf/cm²) |
| Thermostat | |
| Valve opening temperature | 71 °C (159.8 °F) |
| Valve full open temperature | 85 °C (185 °F) |
| Valve lift (full open) | More than 8 mm (0.31 in) |
| Thermo sensor | |
| Model/manufacturer | K003T20191/MITSUBISHI |
| Resistance at 80 °C | 290–354 Ω |
| Radiator core | |
| Width | 374.0 mm (14.72 in) |
| Height | 257.8 mm (10.15 in) |
| Depth | 24.0 mm (0.94 in) |
| Water pump | |
| Water pump type | Single-suction centrifugal pump |
| Reduction ratio | 85/41 × 29/31 (1.939) |
| Impeller shaft tilt limit | 0.15 mm (0.006 in) |

**Spark plug (s)**

| | |
|---|---|
| Manufacturer/model | NGK/CR10EK |
| Spark plug gap | 0.6–0.7 mm (0.024–0.028 in) |

**Cylinder head**

| | |
|---|---|
| Volume | 7.40–8.20 cm³ (0.45–0.50 cu.in) |
| Warpage limit | 0.05 mm (0.0020 in) |

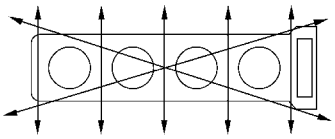

**Camshaft**

| | |
|---|---|
| Drive system | Chain drive (right) |
| Camshaft cap inside diameter | 22.500–22.521 mm (0.8858–0.8867 in) |
| Camshaft journal diameter | 22.459–22.472 mm (0.8842–0.8847 in) |
| Camshaft-journal-to-camshaft-cap clearance | 0.028–0.062 mm (0.0011–0.0024 in) |
| Limit | 0.080 mm (0.0032 in) |
| Camshaft lobe dimensions | |
| Intake A | 33.725–33.875 mm (1.3278–1.3337 in) |
| Limit | 33.675 mm (1.3258 in) |
| Intake B | 25.225–25.325 mm (0.9931–0.9970 in) |
| Limit | 25.175 mm (0.9911 in) |
| Exhaust A | 32.925–33.075 mm (1.2963–1.3022 in) |
| Limit | 32.875 mm (1.2943 in) |

| | |
|---|---|
| Exhaust B | 25.082–25.182 mm (0.9875–0.9914 in) |
| Limit | 25.032 mm (0.9855 in) |

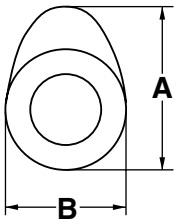


| | |
|---|---|
| Camshaft runout limit | 0.030 mm (0.0012 in) |

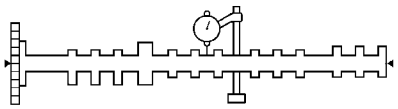

| | |
|---|---|
| **Timing chain** | |
| Model/number of links | 98XRH2015/118 |
| Tensioning system | Automatic |
| **Valve, valve seat, valve guide** | |
| Valve clearance (cold) | |
| Intake | 0.12–0.19 mm (0.0047–0.0075 in) |
| Exhaust | 0.16–0.23 mm (0.0063–0.0091 in) |
| Valve dimensions | |
| Valve head diameter A (intake) | 26.90–27.10 mm (1.0591–1.0669 in) |
| Valve head diameter A (exhaust) | 22.90–23.10 mm (0.9016–0.9094 in) |

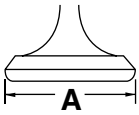


| | |
|---|---|
| Valve face width B (intake) | 1.410–2.550 mm (0.0555–0.1004 in) |
| Valve face width B (exhaust) | 1.400–2.670 mm (0.0551–0.1051 in) |

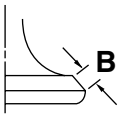


| | |
|---|---|
| Valve seat width C (intake) | 0.90–1.10 mm (0.0354–0.0433 in) |
| Limit | 1.6 mm (0.06 in) |
| Valve seat width C (exhaust) | 1.10–1.30 mm (0.0433–0.0512 in) |
| Limit | 1.8 mm (0.07 in) |

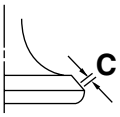

| | |
|---|---|
| Valve margin thickness D (intake) | 0.90–1.10 mm (0.0354–0.0433 in) |
| Limit | 0.8 mm (0.03 in) |
| Valve margin thickness D (exhaust) | 1.10–1.30 mm (0.0433–0.0512 in) |
| Limit | 1.0 mm (0.04 in) |

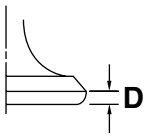


| | |
|---|---|
| Valve stem diameter (intake) | 4.475–4.490 mm (0.1762–0.1768 in) |
| Limit | 4.460 mm (0.1756 in) |
| Valve stem diameter (exhaust) | 4.460–4.475 mm (0.1756–0.1762 in) |
| Limit | 4.445 mm (0.1750 in) |
| Valve guide inside diameter (intake) | 4.500–4.512 mm (0.1772–0.1776 in) |
| Limit | 4.542 mm (0.1788 in) |
| Valve guide inside diameter (exhaust) | 4.500–4.512 mm (0.1772–0.1776 in) |
| Limit | 4.542 mm (0.1788 in) |
| Valve-stem-to-valve-guide clearance (intake) | 0.010–0.037 mm (0.0004–0.0015 in) |
| Limit | 0.080 mm (0.0032 in) |
| Valve-stem-to-valve-guide clearance (exhaust) | 0.025–0.052 mm (0.0010–0.0020 in) |
| Limit | 0.095 mm (0.0037 in) |
| Valve stem runout | 0.040 mm (0.0016 in) |

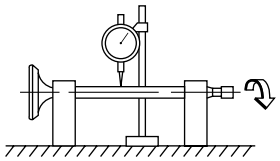

| | |
|---|---|
| Cylinder head valve seat width (intake) | 0.90–1.10 mm (0.0354–0.0433 in) |
| Limit | 1.6 mm (0.06 in) |
| Cylinder head valve seat width (exhaust) | 1.10–1.30 mm (0.0433–0.0512 in) |
| Limit | 1.8 mm (0.07 in) |

**Valve spring**

| | |
|---|---|
| Free length (intake) | 37.47 mm (1.48 in) |
| Limit | 35.60 mm (1.40 in) |
| Free length (exhaust) | 37.67 mm (1.48 in) |
| Limit | 35.79 mm (1.42 in) |
| Installed length (intake) | 32.80 mm (1.29 in) |
| Installed length (exhaust) | 32.80 mm (1.29 in) |
| Spring rate K1 (intake) | 38.11 N/mm (217.61 lb/in) (3.89 kgf/mm) |
| Spring rate K2 (intake) | 52.40 N/mm (299.20 lb/in) (5.34 kgf/mm) |
| Spring rate K1 (exhaust) | 36.36 N/mm (207.62 lb/in) (3.71 kgf/mm) |
| Spring rate K2 (exhaust) | 53.40 N/mm (304.91 lb/in) (5.45 kgf/mm) |
| Installed compression spring force (intake) | 166.00–190.00 N (37.32–42.71 lb) (16.93–19.37 kgf) |
| Installed compression spring force (exhaust) | 165.00–189.00 N (37.09–42.49 lb) (16.83–19.27 kgf) |

| | |
|---|---|
| Spring tilt (intake) | 2.5°/1.6 mm |
| Spring tilt (exhaust) | 2.5°/1.6 mm |

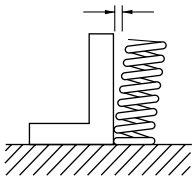

| | |
|---|---|
| Winding direction (intake) | Clockwise |
| Winding direction (exhaust) | Clockwise |

**Cylinder**

| | |
|---|---|
| Bore | 67.000–67.010 mm (2.6378–2.6382 in) |
| Taper limit | 0.050 mm (0.0020 in) |
| Out of round limit | 0.050 mm (0.0020 in) |

**Piston**

| | |
|---|---|
| Piston-to-cylinder clearance | 0.010–0.035 mm (0.0004–0.0014 in) |
| Limit | 0.05 mm (0.0022 in) |
| Diameter D | 66.975–66.990 mm (2.6368–2.6374 in) |
| Height H | 10.0 mm (0.39 in) |

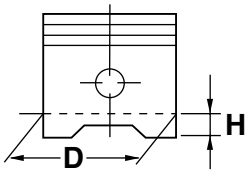


| | |
|---|---|
| Offset | 0.50 mm (0.0197 in) |
| Offset direction | Intake side |
| Piston pin bore inside diameter | 15.002–15.013 mm (0.5906–0.5911 in) |
| Limit | 15.043 mm (0.5922 in) |
| Piston pin outside diameter | 14.991–15.000 mm (0.5902–0.5906 in) |
| Limit | 14.971 mm (0.5894 in) |
| Piston-pin-to-piston-pin-bore clearance | 0.002–0.022 mm (0.00007–0.00068 in) |

**Piston ring**

| | |
|---|---|
| Top ring | |
| Ring type | Barrel |
| Dimensions (B × T) | 0.80 × 2.40 mm (0.03 × 0.09 in) |

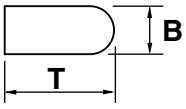


| | |
|---|---|
| End gap (installed) | 0.25–0.35 mm (0.0098–0.0138 in) |
| Limit | 0.55 mm (0.0217 in) |
| Ring side clearance | 0.030–0.065 mm (0.0012–0.0026 in) |

| | |
|---|---|
| 2nd ring | |
| Ring type | Taper |
| Dimensions (B × T) | 0.80 × 2.50 mm (0.03 × 0.10 in) |

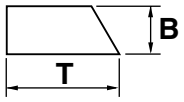


| | |
|---|---|
| End gap (installed) | 0.70–0.80 mm (0.0276–0.0315 in) |
| Limit | 1.00 mm (0.0394 in) |
| Ring side clearance | 0.020–0.055 mm (0.0008–0.0022 in) |
| Oil ring | |
| Dimensions (B × T) | 1.50 × 2.00 mm (0.06 × 0.08 in) |

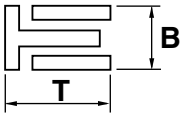


| | |
|---|---|
| End gap (installed) | 0.10–0.35 mm (0.0039–0.0138 in) |

**Connecting rod**

| | |
|---|---|
| Oil clearance (using plastigauge®) | 0.037–0.061 mm (0.0015–0.0024 in) |
| Bearing color code | 1.Blue 2.Black 3.Brown 4.Green |

**Crankshaft**

| | |
|---|---|
| Width A | Cylinders #1 and #2: 48.20–48.25 mm (1.898–1.900 in)<br>Cylinders #3 and #4: 47.90–47.95 mm (1.886–1.888 in) |
| Width B | 268.80–270.00 mm (10.58–10.63 in) |
| Runout limit C | 0.030 mm (0.0012 in) |
| Big end side clearance D | 0.160–0.262 mm (0.0063–0.0103 in) |

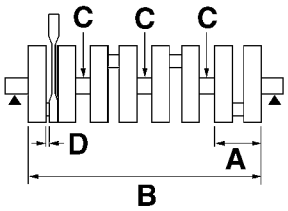


| | |
|---|---|
| Small end free play F | 0.32–0.50 mm (0.01–0.02 in) |
| Journal oil clearance (using plastigauge®) | 0.020–0.044 mm (0.0008–0.0017 in) |
| Bearing color code | 1.Blue 2.Black 3.Brown 4.Green 5.Yellow |

**Clutch**

| | |
|---|---|
| Clutch type | Wet, multiple-disc |
| Clutch release method | Outer pull, rack and pinion pull |
| Clutch lever free play | 10.0–15.0 mm (0.39–0.59 in) |
| Friction plate thickness | 2.92–3.08 mm (0.115–0.121 in) |
| Wear limit | 2.80 mm (0.1102 in) |
| Plate quantity | 9 pcs |
| Clutch plate thickness | 1.90–2.10 mm (0.075–0.083 in) |

| | |
|---|---|
| Plate quantity | 8 pcs |
| Warpage limit | 0.10 mm (0.0039 in) |
| Clutch spring free length | 55.00 mm (2.17 in) |
| Minimum length | 54.00 mm (2.13 in) |
| Spring quantity | 6 pcs |
| **Transmission** | |
| Transmission type | Constant mesh 6-speed |
| Primary reduction system | Spur gear |
| Primary reduction ratio | 85/41 (2.073) |
| Secondary reduction system | Chain drive |
| Secondary reduction ratio | 45/16 (2.813) |
| Operation | Left foot operation |
| Gear ratio | |
| 1st | 31/12 (2.583) |
| 2nd | 32/16 (2.000) |
| 3rd | 30/18 (1.667) |
| 4th | 26/18 (1.444) |
| 5th | 27/21 (1.286) |
| 6th | 23/20 (1.150) |
| Main axle runout limit | 0.02 mm (0.0008 in) |
| Drive axle runout limit | 0.02 mm (0.0008 in) |
| **Shifting mechanism** | |
| Shift mechanism type | Shift drum |
| Shift fork guide bar bending limit | 0.050 mm (0.0020 in) |
| Shift fork thickness | 5.760–5.890 mm (0.2268–0.2319 in) |
| Shift fork thickness | 5.795–5.868 mm (0.2281–0.2310 in) |
| **Air filter** | |
| Air filter element | Oil-coated paper element |
| **Fuel pump** | |
| Pump type | Electrical |
| Model/manufacturer | 2C0/DENSO |
| Maximum consumption amperage | 5.1 A |
| Output pressure | 319.0–329.0 kPa (46.3–47.7 psi) (3.19–3.29 kgf/cm²) |
| **Injector** | |
| Model/quantity | 297500–0640/4, 297500–0660/4 |
| Manufacturer | DENSO |
| **Throttle body** | |
| Type/quantity | 41EIDW/1 |
| Manufacturer | MIKUNI |
| ID mark | 2C01 00 |
| Throttle valve size | #50 |
| **Throttle position sensor** | |
| Resistance | 2.0–3.0 kΩ |

| | |
|---|---|
| **Fuel injection sensor** | |
| Crankshaft position sensor resistance | 248–372 Ω at 20 °C (68 °F) |
| Cylinder identification sensor output voltage (ON) | Less than 0.8 V |
| Cylinder identification sensor output voltage (OFF) | More than 4.8 V |
| Intake air pressure sensor output voltage | 3.15–4.15 V |
| Atmospheric pressure sensor output voltage | 3.15–4.15 V |
| **Idling condition** | |
| Engine idling speed | 1250–1350 r/min |
| Intake vacuum | 20.0 kPa (5.9 inHg) (150 mmHg) |
| Water temperature | 95.0–105.0 °C (203.00–221.00 °F) |
| Oil temperature | 82–92 °C (180–198 °F) |
| Throttle cable free play | 3.0–5.0 mm (0.12–0.20 in) |
| **Air induction system** | |
| Reed valve bending limit | 0.4 mm (0.016 in) |
| Solenoid resistance | 18–22 Ω at 20 °C (68 °F) |

EAS20300
# CHASSIS SPECIFICATIONS

| | |
|---|---|
| **Chassis** | |
| Frame type | Diamond |
| Caster angle | 24.00° |
| Trail | 97.0 mm (3.82 in) |
| **Front wheel** | |
| Wheel type | Cast wheel |
| Rim size | 17M/C × MT3.50 |
| Rim material | Aluminum |
| Wheel travel | 120.0 mm (4.72 in) |
| Radial wheel runout limit | 1.0 mm (0.04 in) |
| Lateral wheel runout limit | 0.5 mm (0.02 in) |
| **Rear wheel** | |
| Wheel type | Cast wheel |
| Rim size | 17M/C × MT5.50 |
| Rim material | Aluminum |
| Wheel travel | 120.0 mm (4.72 in) |
| Radial wheel runout limit | 1.0 mm (0.04 in) |
| Lateral wheel runout limit | 0.5 mm (0.02 in) |
| **Front tire** | |
| Type | Tubeless |
| Size | 120/70 ZR17M/C (58W) |
| Manufacturer/model | DUNLOP/D209F PT |
| Wear limit (front) | 1.0 mm (0.04 in) |
| **Rear tire** | |
| Type | Tubeless |
| Size | 180/55 ZR17M/C (73W) |
| Manufacturer/model | DUNLOP/D209PT |
| Wear limit (rear) | 1.0 mm (0.04 in) |
| **Tire air pressure (measured on cold tires)** | |
| Loading condition | 0–90 kg (0–198 lb) |
| Front | 250 kPa (36 psi) (2.50 kgf/cm²) |
| Rear | 250 kPa (36 psi) (2.50 kgf/cm²) |
| Loading condition | 90–193 kg (198–425 lb) |
| Front | 250 kPa (36 psi) (2.50 kgf/cm²) |
| Rear | 290 kPa (42 psi) (2.90 kgf/cm²) |
| High-speed riding | |
| Front | 250 kPa (36 psi) (2.50 kgf/cm²) |
| Rear | 250 kPa (36 psi) (2.50 kgf/cm²) |
| **Front brake** | |
| Type | Dual disc brake |
| Operation | Right hand operation |
| Front disc brake | |
| Disc outside diameter × thickness | 310.0 × 4.5 mm (12.20 × 0.18 in) |
| Brake disc thickness limit | 4.0 mm (0.16 in) |

| | |
|---|---|
| Brake disc deflection limit | 0.10 mm (0.0039 in) |
| Brake pad lining thickness (inner) | 4.5 mm (0.18 in) |
| Limit | 0.5 mm (0.02 in) |
| Brake pad lining thickness (outer) | 4.5 mm (0.18 in) |
| Limit | 0.5 mm (0.02 in) |
| Master cylinder inside diameter | 16.00 mm (0.63 in) |
| Caliper cylinder inside diameter | 30.23 mm × 1 (1.19 in × 1) |
| Caliper cylinder inside diameter | 27.00 mm × 1 (1.06 in × 1) |
| Recommended fluid | DOT 4 |
| **Rear brake** | |
| Type | Single disc brake |
| Operation | Right foot operation |
| Rear disc brake | |
| Disc outside diameter × thickness | 220.0 × 5.0 mm (8.66 × 0.20 in) |
| Brake disc thickness limit | 4.5 mm (0.18 in) |
| Brake disc deflection limit | 0.15 mm (0.0059 in) |
| Brake pad lining thickness (inner) | 6.0 mm (0.24 in) |
| Limit | 1.0 mm (0.04 in) |
| Brake pad lining thickness (outer) | 6.0 mm (0.24 in) |
| Limit | 1.0 mm (0.04 in) |
| Master cylinder inside diameter | 12.7 mm (0.50 in) |
| Caliper cylinder inside diameter | 38.18 mm (1.50 in) |
| Recommended fluid | DOT 4 |
| **Steering** | |
| Steering head tension | 200–500 g |
| Steering bearing type | Angular bearing |
| Lock to lock angle (left) | 25.0° |
| Lock to lock angle (right) | 25.0° |
| **Front suspension** | |
| Type | Telescopic fork |
| Spring/shock absorber type | Coil spring/oil damper |
| Front fork travel | 120.0 mm (4.72 in) |
| Fork spring free length | 247.0 mm (9.72 in) |
| Limit | 242.1 mm (9.53 in) |
| Collar length | 80.0 mm (3.15 in) |
| Installed length | 240.0 mm (9.45 in) |
| Spring rate K1 | 8.80 N/mm (50.25 lb/in) (0.90 kgf/mm) |
| Spring stroke K1 | 0.0–120.0 mm (0.00–4.72 in) |
| Inner tube outer diameter | 41.0 mm (1.61 in) |
| Inner tube bending limit | 0.2 mm (0.01 in) |
| Optional spring available | No |
| Recommended oil | Ohlins R & T43 |
| Quantity | 465.0 $cm^3$ (15.72 US oz) (16.37 Imp.oz) |
| Level | 108.0 mm (4.25 in) |
| **Rear suspension** | |
| Type | Swingarm (link suspension) |
| Spring/shock absorber type | Coil spring/gas-oil damper |
| Rear shock absorber assembly travel | 60.0 mm (2.36 in) |
| Spring free length | 163.5 mm (6.44 in) |

| | |
|---|---|
| Installed length | 152.5 mm (6.00 in) |
| Spring rate K1 | 98.00 N/mm (559.58 lb/in) (9.99 kgf/mm) |
| Spring stroke K1 | 0.0–60.0 mm (0.00–2.36 in) |
| Optional spring available | No |
| Enclosed gas/air pressure (STD) | 1200 kPa (170.7 psi) (12.0 kgf/cm$^2$) |
| **Swingarm** | |
| Swingarm end free play limit (radial) | 1.0 mm (0.04 in) |
| Swingarm end free play limit (axial) | 1.0 mm (0.04 in) |
| **Drive chain** | |
| Type/manufacturer | 525V8/DAIDO |
| Link quantity | 114 |
| Drive chain slack | 35.0–45.0 mm (1.38–1.77 in) |
| 15-link length limit | 239.3 mm (9.42 in) |

EAS20310

# ELECTRICAL SPECIFICATIONS

| | |
|---|---|
| **Voltage** | |
| System voltage | 12 V |
| **Ignition system** | |
| Ignition system | Transistorized coil ignition (digital) |
| Advancer type | Throttle position sensor and electrical |
| Ignition timing (B.T.D.C.) | 10.0°/1300 r/min |
| **Engine control unit** | |
| Model/manufacturer | TBDF30/DENSO |
| **Ignition coil** | |
| Model/manufacturer | F6T558/MITSUBISHI |
| Minimum ignition spark gap | 6.0 mm (0.24 in) |
| Primary coil resistance | 1.19–1.61 Ω |
| Secondary coil resistance | 8.5–11.5 kΩ |
| **AC magneto** | |
| Model/manufacturer | LMX62/DENSO |
| Standard output | 14.0 V 420 W 5000 r/min |
| Stator coil resistance | 0.12–0.18 Ω at 20 °C (68 °F) |
| **Rectifier/regulator** | |
| Regulator type | Semi conductor-short circuit |
| Model/manufacturer | SH678–11/SHINDENGEN |
| Regulated voltage (DC) | 14.1–14.9 V |
| Rectifier capacity | 22.0 A |
| **Battery** | |
| Model | YTZ10S |
| Voltage, capacity | 12 V, 8.6 Ah |
| Manufacturer | GS YUASA |
| Ten hour rate amperage | 0.86 A |
| **Headlight** | |
| Bulb type | Halogen bulb |
| **Bulb voltage, wattage × quantity** | |
| Headlight | 12 V, 55.0 W × 2 |
| Auxiliary light | 12 V, 5.0 W × 1 |
| Tail/brake light | LED |
| Front turn signal/position light | 12 V, 21 W/5.0 W × 2 |
| Rear turn signal light | 12 V, 21.0 W × 2 |
| License plate light | 12 V, 5.0 W × 1 |
| Meter lighting | LED |
| **Indicator light** | |
| Neutral indicator light | LED |
| Turn signal indicator light | LED |
| Oil level warning light | LED |

| | |
|---|---|
| High beam indicator light | LED |
| Fuel level warning light | LED |
| Coolant temperature warning light | LED |
| Engine trouble warning light | LED |
| Immobilizer system indicator light | LED |
| Shift timing indicator light | LED |
| **Electric starting system** | |
| System type | Constant mesh |
| **Starter motor** | |
| Model/manufacturer | SM14/MITSUBA |
| Power output | 0.60 kW |
| Armature coil resistance | 0.0012–0.0022 Ω at 20 °C (68 °F) |
| Brush overall length | 10.0 mm (0.39 in) |
| Limit | 3.50 mm (0.14 in) |
| Brush spring force | 7.16–9.52 N (25.77–34.27 oz) (730–971 gf) |
| Commutator diameter | 28.0 mm (1.10 in) |
| Limit | 27.0 mm (1.06 in) |
| Mica undercut (depth) | 0.70 mm (0.03 in) |
| **Starter relay** | |
| Model/manufacturer | 2768109-A/JIDECO |
| Amperage | 180.0 A |
| **Horn** | |
| Horn type | Plane |
| Quantity | 1 pc |
| Model/manufacturer | YF-12/NIKKO |
| Maximum amperage | 3.0 A |
| Coil resistance | 1.15–1.25 Ω at 20 °C (68 °F) |
| Performance | 105–113 dB/2m |
| **Turn signal relay** | |
| Relay type | Full transistor |
| Model/manufacturer | FE246BH/DENSO |
| Built-in, self-canceling device | No |
| Turn signal blinking frequency | 75.0–95.0 cycles/min |
| Wattage | (21, 23, 27) W × 2.0 + 3.4 W |
| **Oil level switch** | |
| Model/manufacturer | 5VX/SOMIC ISHIKAWA |
| **Fuel gauge** | |
| Model/manufacturer | 2C0/DENSO |
| Sender unit resistance (full) | 750.0–1100.0 Ω |
| **Starting circuit cut-off relay** | |
| Model/manufacturer | G8R-30Y-V4/OMRON |
| **Headlight relay** | |
| Model/manufacturer | ACM33211M04/MATSUSHITA |

| | |
|---|---|
| **Fuel pump relay** | |
| Model/manufacturer | G8R-30Y-V4/OMRON |
| **Fan motor relay** | |
| Model/manufacturer | ACM33211M05/MATSUSHITA |
| **Fuses** | |
| Main fuse | 50.0 A |
| Headlight fuse | 15.0 A |
| Signaling system fuse | 10.0 A |
| Ignition fuse | 15.0 A |
| Radiator fan fuse | 15.0 A × 2 |
| Fuel injection system fuse | 15.0 A |
| Backup fuse | 7.5 A |
| Electric throttle valve fuse | 7.5 A |
| Reserve fuse | 15.0 A |
| Reserve fuse | 10.0 A |
| Reserve fuse | 7.5 A |
| Reserve fuse | 15.0 A |

EAS20320
# TIGHTENING TORQUES

EAS20330
## GENERAL TIGHTENING TORQUE SPECIFICATIONS

This chart specifies tightening torques for standard fasteners with a standard ISO thread pitch. Tightening torque specifications for special components or assemblies are provided for each chapter of this manual. To avoid warpage, tighten multi-fastener assemblies in a crisscross pattern and progressive stages until the specified tightening torque is reached. Unless otherwise specified, tightening torque specifications require clean, dry threads. Components should be at room temperature.

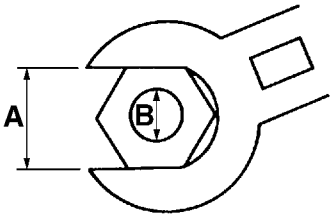


A. Distance between flats
B. Outside thread diameter

| A (nut) | B (bolt) | General tightening torques | | |
|---|---|---|---|---|
| | | Nm | m·kg | ft·lb |
| 10 mm | 6 mm | 6 | 0.6 | 4.3 |
| 12 mm | 8 mm | 15 | 1.5 | 11 |
| 14 mm | 10 mm | 30 | 3.0 | 22 |
| 17 mm | 12 mm | 55 | 5.5 | 40 |
| 19 mm | 14 mm | 85 | 8.5 | 61 |
| 22 mm | 16 mm | 130 | 13.0 | 94 |

EAS20340

## ENGINE TIGHTENING TORQUES

| Item | Thread size | Q'ty | Tightening torque | Remarks |
|---|---|---|---|---|
| Camshaft cap bolt (intake and exhaust) | M6 | 20 | 10 Nm (1.0 m·kg, 7.2 ft·lb) | |
| Cylinder head stud bolt (exhaust pipe assembly) | M8 | 8 | 15 Nm (1.5 m·kg, 11 ft·lb) | |
| Cylinder head nut (1st) | M10 | 8 | 25 Nm (2.5 m·kg, 18 ft·lb) | E |
| Cylinder head nut (final) | M10 | 8 | 42 Nm (4.2 m·kg, 30 ft·lb) | E |
| Cylinder head cap nut (1st) | M10 | 2 | 30 Nm (3.0 m·kg, 22 ft·lb) | E |
| Cylinder head cap nut (final) | M10 | 2 | 60 Nm (6.0 m·kg, 43 ft·lb) | E |
| Cylinder head bolt | M6 | 2 | 12 Nm (1.2 m·kg, 8.7 ft·lb) | |
| Spark plug | M10 | 4 | 13 Nm (1.3 m·kg, 9.4 ft·lb) | |
| Cylinder head cover bolt | M6 | 6 | 12 Nm (1.2 m·kg, 8.7 ft·lb) | |
| Oil check bolt | M8 | 1 | 20 Nm (2.0 m·kg, 14 ft·lb) | |
| Reed valve cover bolt | M6 | 4 | 10 Nm (1.0 m·kg, 7.2 ft·lb) | LT |
| Camshaft sprocket bolt | M7 | 4 | 24 Nm (2.4 m·kg, 17 ft·lb) | |
| Coolant temperature sensor | M12 | 1 | 18 Nm (1.8 m·kg, 13 ft·lb) | |
| Throttle body joint bolt | M6 | 8 | 10 Nm (1.0 m·kg, 7.2 ft·lb) | |
| Connecting rod nut (1st) | M7 | 8 | 15 Nm (1.5 m·kg, 11 ft·lb) | See NOTE M |
| Connecting rod nut (final) | M7 | 8 | Specified angle 175°–185° | See NOTE M |
| Generator rotor bolt | M12 | 1 | 70 Nm (7.0 m·kg, 50 ft·lb) | E |
| Timing chain tensioner bolt | M6 | 2 | 12 Nm (1.2 m·kg, 8.7 ft·lb) | |
| Thermostat cover bolt | M6 | 2 | 12 Nm (1.2 m·kg, 8.7 ft·lb) | |
| Water jacket joint bolt | M6 | 2 | 10 Nm (1.0 m·kg, 7.2 ft·lb) | LT |
| Water pump assembly bolt | M6 | 2 | 12 Nm (1.2 m·kg, 8.7 ft·lb) | LT |
| Water pump housing cover bolt | M6 | 2 | 10 Nm (1.0 m·kg, 7.2 ft·lb) | |
| Oil pump assembly bolt | M6 | 3 | 12 Nm (1.2 m·kg, 8.7 ft·lb) | |
| Oil pan bolt | M6 | 13 | 12 Nm (1.2 m·kg, 8.7 ft·lb) | |
| Engine oil drain bolt | M14 | 1 | 43 Nm (4.3 m·kg, 31 ft·lb) | |
| Oil filter cartridge bolt | M20 | 1 | 70 Nm (7.0 m·kg, 50 ft·lb) | |
| Oil filter cartridge | M20 | 1 | 17 Nm (1.7 m·kg, 12 ft·lb) | |
| Oil pump drive chain guide | M6 | 2 | 12 Nm (1.2 m·kg, 8.7 ft·lb) | LT |
| Oil pipe bolt | M6 | 2 | 12 Nm (1.2 m·kg, 8.7 ft·lb) | LT |
| Oil cooler union bolt | M20 | 1 | 63 Nm (6.3 m·kg, 45 ft·lb) | E |
| Upper air filter case to secondary injector holder bolt | M6 | 4 | 5 Nm (0.5 m·kg, 3.6 ft·lb) | |

| Item | Thread size | Q'ty | Tightening torque | Remarks |
|---|---|---|---|---|
| Upper air filter case to lower air filter case bolt | M5 | 9 | 2 Nm (0.2 m·kg, 1.4 ft·lb) | |
| Upper air filter case joint bolt | M5 | 6 | 4 Nm (0.4 m·kg, 2.9 ft·lb) | |
| Secondary injector fuel rail | M6 | 2 | 5 Nm (0.5 m·kg, 3.6 ft·lb) | LT |
| Locknut (throttle cable) | M6 | 2 | 5 Nm (0.5 m·kg, 3.6 ft·lb) | |
| Exhaust pipe assembly nut | M8 | 8 | 20 Nm (2.0 m·kg, 14 ft·lb) | |
| Exhaust pipe assembly bolt | M8 | 2 | 20 Nm (2.0 m·kg, 14 ft·lb) | |
| Exhaust pipe assembly bracket bolt (left lower side) | M8 | 1 | 34 Nm (3.4 m·kg, 24 ft·lb) | |
| Muffler clamp bolt | M6 | 1 | 10 Nm (1.0 m·kg, 7.2 ft·lb) | |
| Muffler bolt | M8 | 1 | 20 Nm (2.0 m·kg, 14 ft·lb) | |
| Locknut (EXUP cable adjusting bolt) | M6 | 2 | 6 Nm (0.6 m·kg, 4.3 ft·lb) | |
| EXUP servo motor drive pulley bolt | M5 | 1 | 7 Nm (0.7 m·kg, 5.1 ft·lb) | |
| EXUP servo motor bolt | M6 | 2 | 7 Nm (0.7 m·kg, 5.1 ft·lb) | |
| EXUP servo motor bracket bolt | M6 | 2 | 7 Nm (0.7 m·kg, 5.1 ft·lb) | |
| EXUP valve pulley cover bolt (front side) | M6 | 1 | 8 Nm (0.8 m·kg, 5.8 ft·lb) | LT |
| EXUP valve pulley cover bolt (rear side) | M6 | 2 | 7 Nm (0.7 m·kg, 5.1 ft·lb) | LT |
| EXUP valve nut | M6 | 1 | 7 Nm (0.7 m·kg, 5.1 ft·lb) | |
| Crankcase bolt | M8 | 2 | See NOTE | l=115 mm (4.53 in) E |
| Crankcase bolt | M8 | 8 | See NOTE | l=85 mm (3.35 in) E |
| Crankcase bolt | M8 | 2 | 24 Nm (2.4 m·kg, 17 ft·lb) | l=65 mm (2.56 in) E |
| Crankcase bolt | M6 | 15 | 10 Nm (1.0 m·kg, 7.2 ft·lb) | E |
| Generator cover bolt | M6 | 9 | 12 Nm (1.2 m·kg, 8.7 ft·lb) | |
| Clutch cover bolt | M6 | 7 | 12 Nm (1.2 m·kg, 8.7 ft·lb) | |
| Clutch cover bolt | M6 | 2 | 12 Nm (1.2 m·kg, 8.7 ft·lb) | LT |
| Pickup rotor cover bolt | M6 | 7 | 12 Nm (1.2 m·kg, 8.7 ft·lb) | |
| Timing mark accessing bolt | M8 | 1 | 15 Nm (1.5 m·kg, 11 ft·lb) | |
| Oil baffle plate 1 bolt | M6 | 1 | 12 Nm (1.2 m·kg, 8.7 ft·lb) | LT |
| Oil baffle plate 2 bolt | M6 | 3 | 12 Nm (1.2 m·kg, 8.7 ft·lb) | LT |
| Stator coil assembly bolt | M6 | 3 | 10 Nm (1.0 m·kg, 7.2 ft·lb) | LT |
| Stator coil assembly lead holder bolt | M6 | 1 | 10 Nm (1.0 m·kg, 7.2 ft·lb) | LT |

| Item | Thread size | Q'ty | Tightening torque | Remarks |
|---|---|---|---|---|
| Drive sprocket cover bolt | M6 | 3 | 10 Nm (1.0 m·kg, 7.2 ft·lb) | |
| Main gallery plug | M16 | 2 | 8 Nm (0.8 m·kg, 5.8 ft·lb) | |
| Ventilation chamber cover bolt | M6 | 5 | 12 Nm (1.2 m·kg, 8.7 ft·lb) | |
| Oil pipe | M6 | 2 | 12 Nm (1.2 m·kg, 8.7 ft·lb) | |
| Crankshaft position sensor bolt | M6 | 2 | 10 Nm (1.0 m·kg, 7.2 ft·lb) | |
| Crankcase stud bolt | M10 | 10 | See NOTE | |
| Pressure plate bolt | M6 | 6 | 8 Nm (0.8 m·kg, 5.8 ft·lb) | |
| Clutch boss nut | M20 | 1 | 115 Nm (11.5 m·kg, 85 ft·lb) | Stake |
| Clutch boss plate stud bolt | M8 | 6 | 25 Nm (2.5 m·kg, 18 ft·lb) | |
| Drive sprocket nut | M20 | 1 | 85 Nm (8.5 m·kg, 61 ft·lb) | Stake |
| Main axle screw | M6 | 3 | 12 Nm (1.2 m·kg, 8.7 ft·lb) | Stake |
| Shift drum retainer bolt | M6 | 2 | 10 Nm (1.0 m·kg, 7.2 ft·lb) | |
| Shift shaft spring stopper | M8 | 1 | 22 Nm (2.2 m·kg, 16 ft·lb) | |
| Shift arm bolt | M6 | 1 | 10 Nm (1.0 m·kg, 7.2 ft·lb) | |
| Pickup rotor bolt | M8 | 1 | 35 Nm (3.5 m·kg, 25 ft·lb) | |
| Starter motor bolt | M6 | 2 | 10 Nm (1.0 m·kg, 7.2 ft·lb) | |
| Neutral switch | M10 | 1 | 20 Nm (2.0 m·kg, 14 ft·lb) | |
| Oil level switch bolt | M6 | 2 | 10 Nm (1.0 m·kg, 7.2 ft·lb) | |
| Speed sensor bolt | M6 | 1 | 10 Nm (1.0 m·kg, 7.2 ft·lb) | |
| Cylinder identification sensor bolt | M6 | 1 | 8 Nm (0.8 m·kg, 5.8 ft·lb) | |
| Negative battery terminal/engine ground terminal bolt | M6 | 1 | 10 Nm (1.0 m·kg, 7.2 ft·lb) | |
| $O_2$ sensor | M18 | 1 | 45 Nm (4.5 m·kg, 32 ft·lb) | |

**NOTE:**

**Connecting rod nut**

Tighten the connecting rod nuts to 15 Nm (1.5 m·kg, 11 ft·lb), and then tighten them further to reach the specified angle 175°–185°.

**NOTE:**

**Crankcase bolt**

1. First, tighten the bolts to approximately 20 Nm (2.0 m·kg, 14 ft·lb) with a torque wrench.
2. Loosen all bolts one by one following the tightening order and then retighten the bolts 25 Nm (2.5 m·kg, 18 ft·lb) with a torque wrench.
3. Loosen all bolts one by one following the tightening order and then tighten them to 27 Nm (2.7 m·kg, 20 ft·lb) again.

**NOTE:**

**Crankcase stud bolt**

Install the crankcase stud bolts (M10) so that their installed length is 68.2 mm (2.69 in).

**Cylinder head tightening sequence:**

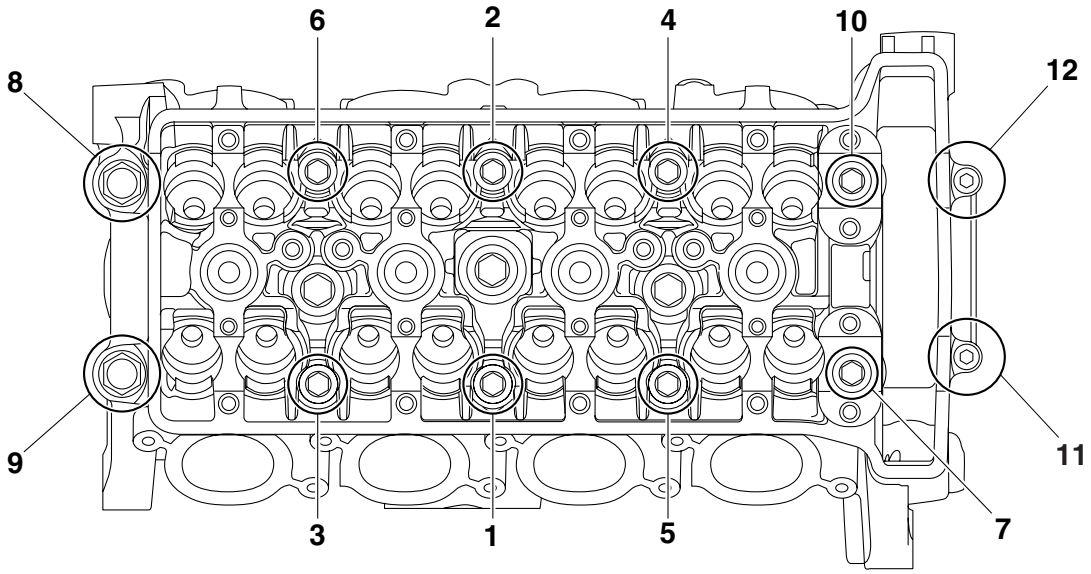


**Crankcase tightening sequence:**

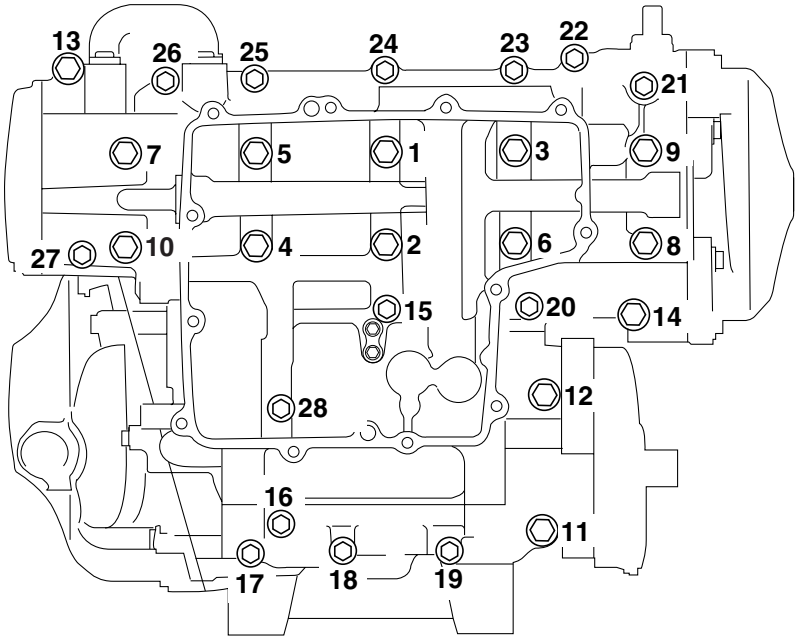

EAS20350
## CHASSIS TIGHTENING TORQUES

| Item | Thread size | Q'ty | Tightening torque | Remarks |
|---|---|---|---|---|
| Engine mounting bolt (front right side) | M10 | 2 | 45 Nm (4.5 m·kg, 32 ft·lb) | |
| Engine mounting bolt (front left side) | M10 | 2 | 45 Nm (4.5 m·kg, 32 ft·lb) | |
| Engine mounting nut (rear upper side) | M12 | 1 | 68 Nm (6.8 m·kg, 49 ft·lb) | |
| Engine mounting nut (rear lower side) | M12 | 1 | 68 Nm (6.8 m·kg, 49 ft·lb) | |
| Front wheel axle | M14 | 1 | 91 Nm (9.1 m·kg, 66 ft·lb) | |
| Front wheel axle pinch bolt | M8 | 4 | 21 Nm (2.1 m·kg, 15 ft·lb) | See NOTE |
| Front brake disc bolt | M6 | 10 | 18 Nm (1.8 m·kg, 13 ft·lb) | LT |
| Rear wheel axle nut | M24 | 1 | 110 Nm (11.0 m·kg, 80 ft·lb) | |
| Rear wheel sprocket nut | M10 | 6 | 100 Nm (10.0 m·kg, 72 ft·lb) | LT |
| Rear brake disc bolt | M8 | 5 | 30 Nm (3.0 m·kg, 22 ft·lb) | LT |
| Front brake hose union bolt | M10 | 3 | 30 Nm (3.0 m·kg, 22 ft·lb) | |
| Front brake caliper bolt | M10 | 4 | 35 Nm (3.5 m·kg, 25 ft·lb) | |
| Brake caliper bleed screw (front and rear) | M8 | 3 | 5 Nm (0.5 m·kg, 3.6 ft·lb) | |
| Front brake hose holder bolt | M6 | 2 | 7 Nm (0.7 m·kg, 5.1 ft·lb) | |
| Rear brake hose union bolt | M10 | 2 | 30 Nm (3.0 m·kg, 22 ft·lb) | |
| Rear brake caliper bolt | M8 | 1 | 22 Nm (2.2 m·kg, 16 ft·lb) | LT |
| Rear brake caliper bolt | M12 | 1 | 27 Nm (2.7 m·kg, 19 ft·lb) | LS |
| Rear brake pad pin | M10 | 1 | 17 Nm (1.7 m·kg, 12 ft·lb) | |
| Rear brake screw plug | – | 1 | 2 Nm (0.2 m·kg, 1.4 ft·lb) | |
| Handlebar pinch bolt | M8 | 2 | 32 Nm (3.2 m·kg, 23 ft·lb) | |
| Handlebar bolt | M6 | 2 | 13 Nm (1.3 m·kg, 9.4 ft·lb) | |
| Front brake master cylinder bolt | M6 | 2 | 13 Nm (1.3 m·kg, 9.4 ft·lb) | |
| Front brake master cylinder bleed screw | M8 | 1 | 6 Nm (0.6 m·kg, 4.3 ft·lb) | |
| Rearview mirror nut | M6 | 4 | 7 Nm (0.7 m·kg, 5.1 ft·lb) | |
| Clutch lever assembly bolt | M6 | 1 | 11 Nm (1.1 m·kg, 8.0 ft·lb) | |
| Clutch cable locknut (engine side) | M8 | 1 | 7 Nm (0.7 m·kg, 5.1 ft·lb) | |
| Upper bracket pinch bolt | M8 | 2 | 26 Nm (2.6 m·kg, 19 ft·lb) | |
| Steering stem nut | M28 | 1 | 115 Nm (11.5 m·kg, 85 ft·lb) | |
| Lower ring nut (initial tightening torque) | M30 | 1 | 52 Nm (5.2 m·kg, 37 ft·lb) | See NOTE |
| Lower ring nut (final tightening torque) | M30 | 1 | 14 Nm (1.4 m·kg, 10 ft·lb) | See NOTE |

| Item | Thread size | Q'ty | Tightening torque | Remarks |
|---|---|---|---|---|
| Lower bracket pinch bolt | M8 | 4 | 23 Nm (2.3 m·kg, 17 ft·lb) | See NOTE |
| Horn and front brake hose joint bolt | M6 | 1 | 10 Nm (1.0 m·kg, 7.2 ft·lb) | |
| Front brake hose guide bolt | M5 | 1 | 7 Nm (0.7 m·kg, 5.1 ft·lb) | |
| Lower bracket and front brake hose joint bracket bolt | M6 | 2 | 10 Nm (1.0 m·kg, 7.2 ft·lb) | |
| Lower bracket cover and front brake hose joint bracket bolt | M6 | 2 | 7 Nm (0.7 m·kg, 5.1 ft·lb) | |
| Front brake hose joint and front brake hose joint bracket bolt | M6 | 1 | 10 Nm (1.0 m·kg, 7.2 ft·lb) | |
| Cap bolt | M47 | 2 | 20 Nm (2.0 m·kg, 14 ft·lb) | |
| Cap bolt (damper rod assembly and nut) | M10 | 2 | 25 Nm (2.5 m·kg, 18 ft·lb) | |
| Damper rod assembly | M24 | 2 | 35 Nm (3.5 m·kg, 25 ft·lb) | |
| Front fender bolt | M6 | 2 | 7 Nm (0.7 m·kg, 5.1 ft·lb) | |
| Relay arm and frame nut | M10 | 1 | 40 Nm (4.0 m·kg, 29 ft·lb) | |
| Connecting arm and relay arm nut | M12 | 2 | 40 Nm (4.0 m·kg, 29 ft·lb) | |
| Rear shock absorber assembly upper nut | M12 | 1 | 44 Nm (4.4 m·kg, 32 ft·lb) | |
| Rear shock absorber assembly lower nut | M12 | 1 | 40 Nm (4.0 m·kg, 29 ft·lb) | |
| Rear shock absorber assembly spacer bolt | M22 | 1 | 16 Nm (1.6 m·kg, 11 ft·lb) | |
| Rear shock absorber assembly bracket nut | M14 | 1 | 52 Nm (5.2 m·kg, 37 ft·lb) | |
| Swingarm pivot shaft | M32 | 1 | 16 Nm (1.6 m·kg, 11 ft·lb) | LS |
| Swingarm pivot shaft ring nut | M32 | 1 | 95 Nm (9.5 m·kg, 68 ft·lb) | LS |
| Swingarm pivot shaft nut | M22 | 1 | 70 Nm (7.0 m·kg, 50 ft·lb) | LS |
| Drive chain guide (swingarm side) bolt | M6 | 1 | 7 Nm (0.7 m·kg, 5.1 ft·lb) | |
| Drive chain guard bolt | M6 | 1 | 7 Nm (0.7 m·kg, 5.1 ft·lb) | |
| Drive chain adjusting locknut | M8 | 2 | 16 Nm (1.6 m·kg, 11 ft·lb) | |
| Drive chain adjusting bolt | M8 | 2 | 2 Nm (0.2 m·kg,1.4 ft·lb) | |
| Rear fender bolt | M6 | 3 | 7 Nm (0.7 m·kg, 5.1 ft·lb) | |
| Fuel pump bolt | M5 | 6 | 4 Nm (0.4 m·kg, 2.9 ft·lb) | |
| Fuel tank upper cover and frame bolt | M6 | 1 | 7 Nm (0.7 m·kg, 5.1 ft·lb) | |
| Fuel tank bolt | M6 | 2 | 9 Nm (0.9 m·kg, 6.5 ft·lb) | |
| Fuel tank bracket and frame bolt | M6 | 4 | 7 Nm (0.7 m·kg, 5.1 ft·lb) | |

| Item | Thread size | Q'ty | Tightening torque | Remarks |
|---|---|---|---|---|
| Fuel tank bracket and fuel tank bolt | M6 | 1 | 7 Nm (0.7 m·kg, 5.1 ft·lb) | |
| Radiator bolt | M6 | 2 | 10 Nm (1.0 m·kg, 7.2 ft·lb) | |
| Radiator and coupler holder bolt | M6 | 2 | 5 Nm (0.5 m·kg, 3.6 ft·lb) | |
| Radiator bracket and radiator bolt | M6 | 1 | 10 Nm (1.0 m·kg, 7.2 ft·lb) | |
| Radiator bracket and frame bolt | M6 | 1 | 10 Nm (1.0 m·kg, 7.2 ft·lb) | |
| Radiator outlet hose holder bolt | M10 | 1 | 13 Nm (1.3 m·kg, 9.4 ft·lb) | |
| Coolant reservoir bolt | M6 | 2 | 5 Nm (0.5 m·kg, 3.6 ft·lb) | |
| Front cowling assembly bolt | M6 | 4 | 13 Nm (1.3 m·kg, 9.4 ft·lb) | |
| Seat lock plate bolt | M6 | 2 | 7 Nm (0.7 m·kg, 5.1 ft·lb) | |
| Rider seat and frame | M6 | 2 | 7 Nm (0.7 m·kg, 5.1 ft·lb) | |
| Battery box and frame | M6 | 2 | 7 Nm (0.7 m·kg, 5.1 ft·lb) | |
| Rear upper cowling damper plate and frame | M6 | 4 | 7 Nm (0.7 m·kg, 5.1 ft·lb) | |
| License plate light assembly bolt | M6 | 4 | 7 Nm (0.7 m·kg, 5.1 ft·lb) | |
| Rider footrest (left and right) assembly bolt | M8 | 4 | 28 Nm (2.8 m·kg, 20 ft·lb) | |
| Passenger footrest (left and right) bolt | M8 | 4 | 28 Nm (2.8 m·kg, 20 ft·lb) | |
| Rear brake fluid reservoir bracket bolt | M6 | 1 | 7 Nm (0.7 m·kg, 5.1 ft·lb) | |
| Rear brake master cylinder bolt | M6 | 2 | 13 Nm (1.3 m·kg, 9.4 ft·lb) | |
| Sidestand assembly and frame bolt | M8 | 3 | 26 Nm (2.6 m·kg, 19 ft·lb) | LS |
| Coupler holder (left and right) and frame bolt | M6 | 4 | 7 Nm (0.7 m·kg, 5.1 ft·lb) | |
| Shift arm bolt | M6 | 1 | 10 Nm (1.0 m·kg, 7.2 ft·lb) | |
| Locknut (shift rod upper side) | M6 | 1 | 7 Nm (0.7 m·kg, 5.1 ft·lb) | |
| Locknut (shift rod lower side) | M8 | 1 | 10 Nm (1.0 m·kg, 7.2 ft·lb) | |

**NOTE:**

**Front wheel axle pinch bolt**

1. Insert the front wheel axle from the right side and tighten it with the flange bolt from the left side to 91 Nm (9.1 m·kg, 66 ft·lb) without performing temporary tightening.
2. In the order pinch bolt "2" → pinch bolt "1" → pinch bolt "2", tighten each bolt to 21 Nm (2.1 m·kg, 15 ft·lb) without performing temporary tightening.
3. Check that the right end of the front axle is flush with the front fork. If necessary, manually push the front axle or lightly tap it with a soft hammer until its end is flush with the front fork. However, if the surface of the front axle end is not parallel to the surface of the front fork, align a point on the outer edge of the axle with the fork, making sure that the axle does not protrude past the fork.
4. In the order pinch bolt "4" → pinch bolt "3" → pinch bolt "4", tighten each bolt to 21 Nm (2.1 m·kg, 15 ft·lb) without performing temporary tightening.

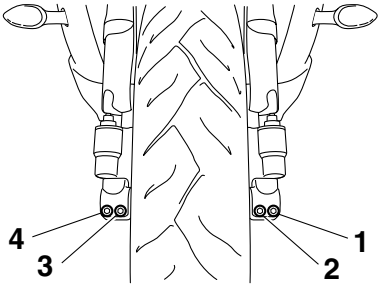


**NOTE:**

**Lower ring nut**

1. First, tighten the lower ring nut to approximately 52 Nm (5.2 m·kg, 37 ft·lb) with a torque wrench, then loosen the lower ring nut completely.
2. Retighten the lower ring nut to 14 Nm (1.4 m·kg, 10 ft·lb) with a torque wrench.

**NOTE:**

**Lower bracket pinch bolt**

Tighten each bolt to 23 Nm (2.3 m·kg, 17 ft·lb) in the order pinch bolt “1” → pinch bolt “2” → pinch bolt “1”.

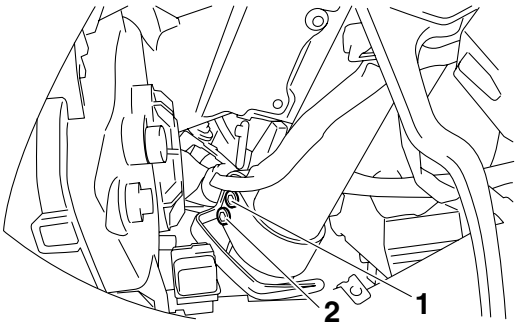

EAS20360
# LUBRICATION POINTS AND LUBRICANT TYPES

EAS20370
## ENGINE

| Lubrication point | Lubricant |
|---|---|
| Oil seal lips | LS |
| O-rings | LS |
| Bearings | E |
| Crankshaft pins | E |
| Piston surface | E |
| Piston pins | E |
| Connecting rod bolts and nuts | M |
| Crankshaft journals | E |
| Generator rotor bolt and washer | E |
| Camshaft cam lobes and camshaft journals | M |
| Valve stems (intake and exhaust) | M |
| Valve stem ends (intake and exhaust) | M |
| Valve lifter surface | E |
| Oil pump rotors (inner and outer) and oil pump housing | E |
| Oil strainer screen (inside oil strainer) | E |
| Oil strainer gasket | LS |
| Oil nozzle (O-ring) | LS |
| Starter clutch idle gear shaft | E |
| Starter clutch roller and starter clutch idle gear outer surface | E |
| Primary driven gear inner surface | E |
| Clutch pull rod | LS |
| Transmission gears (wheel and pinion) and collars | M |
| Main axle and drive axle | M |
| Shift forks and shift fork guide bars | E |
| Shift shaft | E |
| Cylinder head cover mating surface | Yamaha bond No.1215 (Three Bond No.1215®) |
| Cylinder head cover gasket | Bond TB1215B |
| Crankcase mating surface | Yamaha bond No.1215 (Three Bond No.1215®) Three Bond No.1280B |

| Lubrication point | Lubricant |
|---|---|
| Crankshaft position sensor lead grommet | Yamaha bond No.1215 (Three Bond No.1215®) |
| Stator coil lead grommet | Yamaha bond No.1215 (Three Bond No.1215®) |

EAS20380
## CHASSIS

| Lubrication point | Lubricant |
|---|---|
| Steering bearings and upper bearing cover lip | LS |
| Lower bearing dust seal lip | LS |
| Tube guide (throttle grip) inner surface and throttle cables | LS |
| Brake lever pivoting point and metal-to-metal moving parts | LS |
| Clutch cable end | LS |
| Clutch lever pivoting point and metal-to-metal moving parts | LS |
| Relay arm, connecting arm and rear shock absorber spacer | LS |
| Swingarm pivot shaft | LS |
| Swingarm pivot shaft bearings | LS |
| Swingarm dust cover lips | LS |
| Swingarm pivot shaft nut | LS |
| Oil seals (rear shock absorber, relay arm and connecting arm) | LS |
| Seat lock lever pivoting point | LS |
| Sidestand pivoting point and metal-to-metal moving parts | LS |
| Sidestand switch striker and sidestand switch contact point | LS |
| Sidestand hook and spring | LS |
| Sidestand bracket and sidestand bolt | LS |
| Shift rod pivoting point | LS |
| Shift pedal pivoting point | LS |
| Brake pedal shaft pivoting point | LS |
| Front wheel oil seal lips (left and right) | LS |
| Front wheel axle bolt | LS |
| Rear wheel oil seal lips (left and right) | LS |
| Rear wheel drive hub oil seal | LS |
| Rear wheel drive hub mating surface | LS |
| Rear wheel axle | LS |

EAS20390
# LUBRICATION SYSTEM CHART AND DIAGRAMS

EAS20400
## ENGINE OIL LUBRICATION CHART

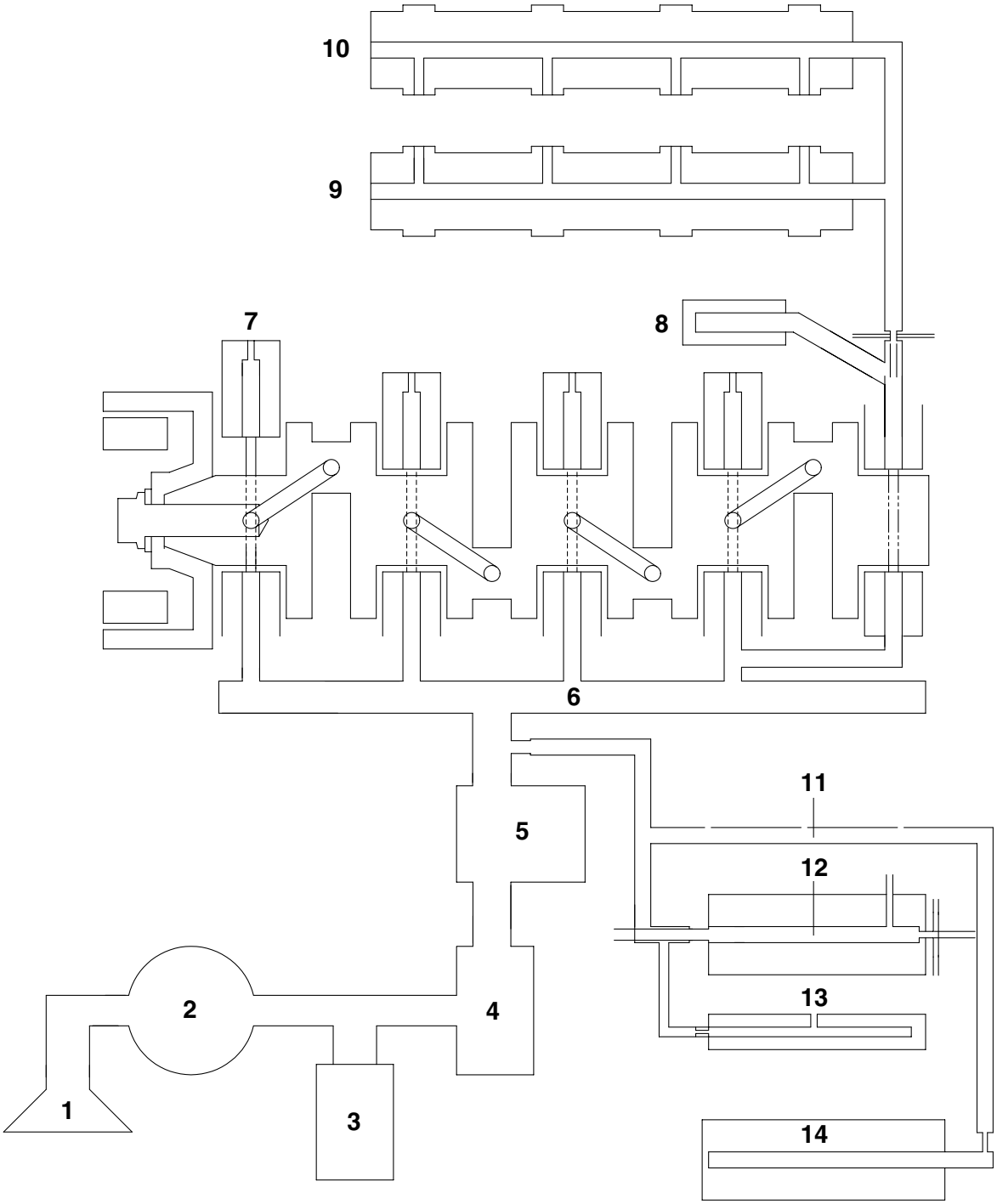

1. Oil strainer
2. Oil pump
3. Relief valve
4. Oil filter
5. Oil cooler
6. Main gallery
7. Oil nozzle
8. Timing chain tensioner
9. Intake camshaft
10. Exhaust camshaft
11. Oil pipe
12. Main axle
13. Shift fork
14. Drive axle

EAS20410

## LUBRICATION DIAGRAMS

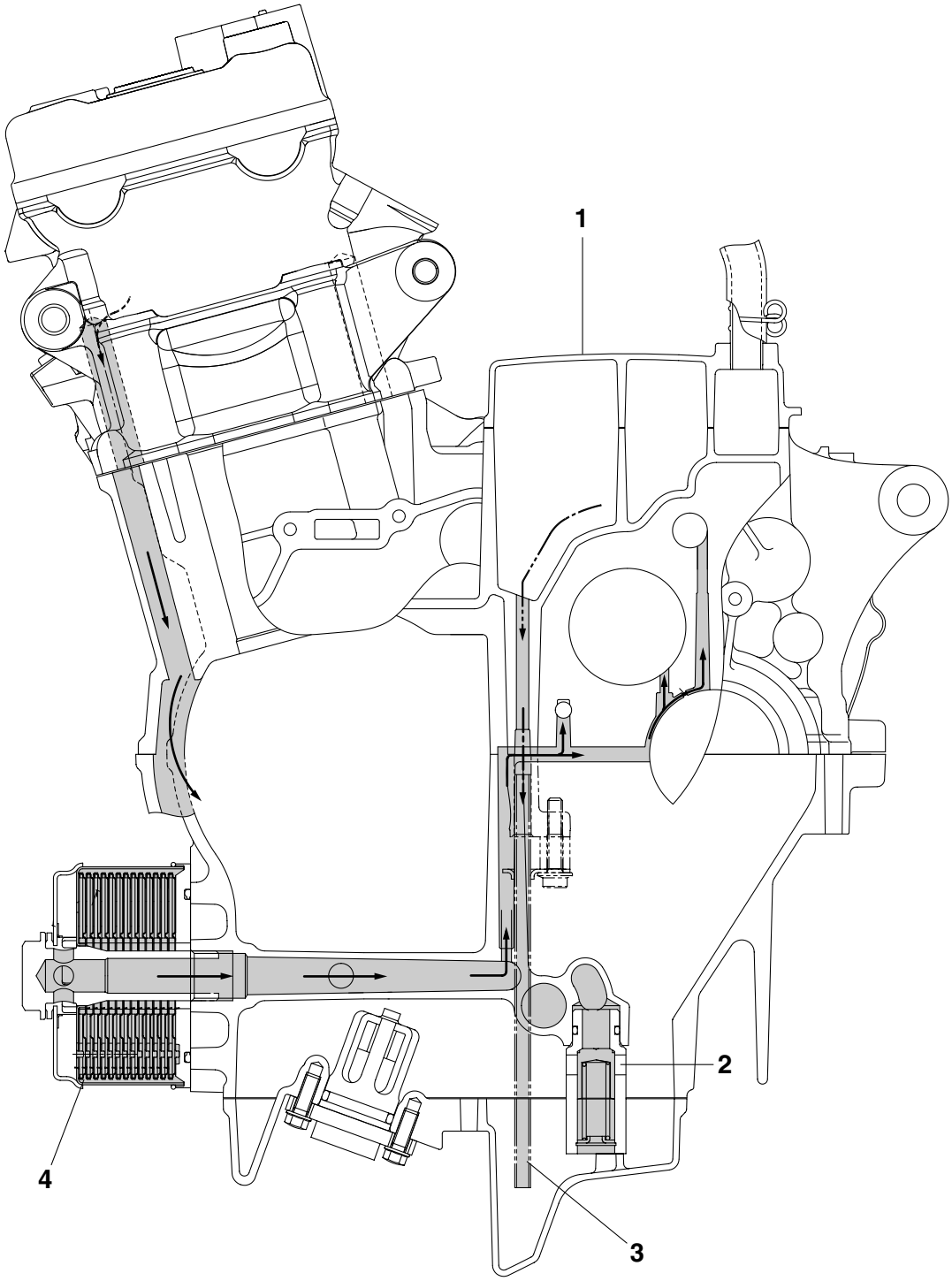

1. Ventilation chamber cover
2. Relief valve
3. Ventilation chamber oil drain pipe
4. Oil cooler

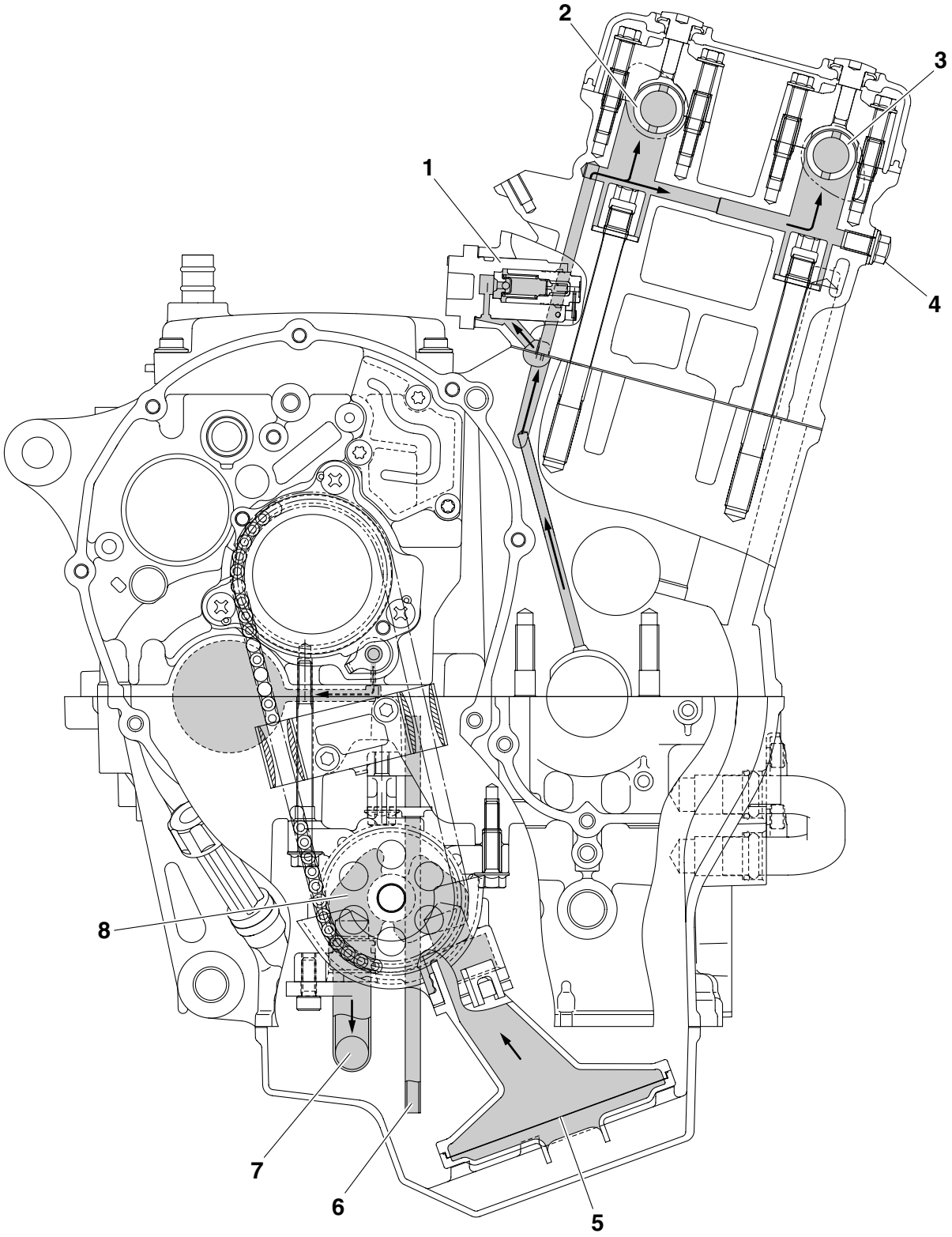
2
3
1
4
8
7
6
5

1. Timing chain tensioner
2. Intake camshaft
3. Exhaust camshaft
4. Oil check bolt
5. Oil strainer
6. Ventilation chamber oil drain pipe
7. Oil pipe
8. Oil pump

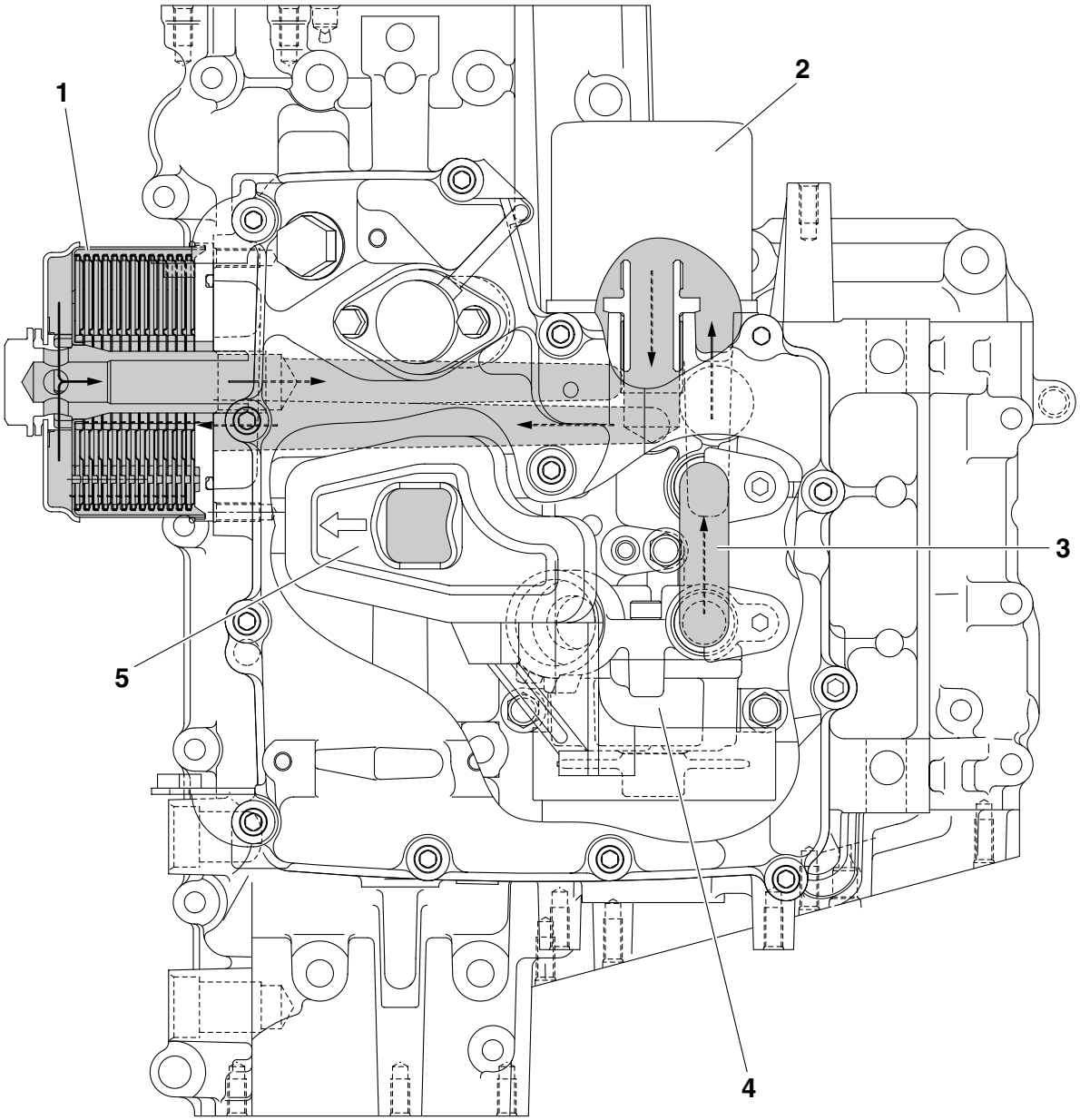
1
2
3
4
5

1. Oil cooler
2. Oil filter
3. Oil pipe
4. Oil pump
5. Oil strainer

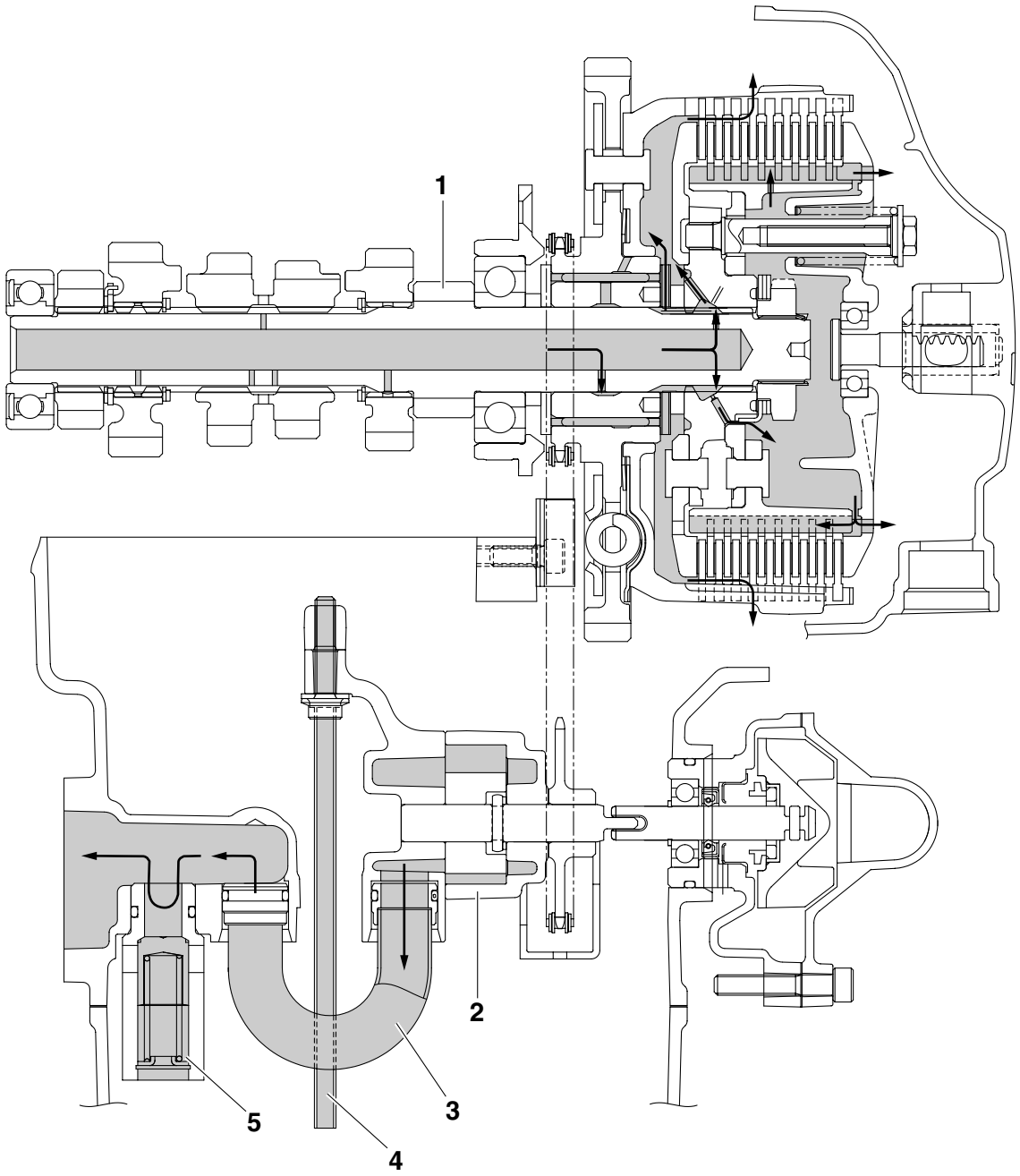
1
2
3
4
5

1. Main axle
2. Oil pump
3. Oil pipe
4. Ventilation chamber oil drain pipe
5. Relief valve

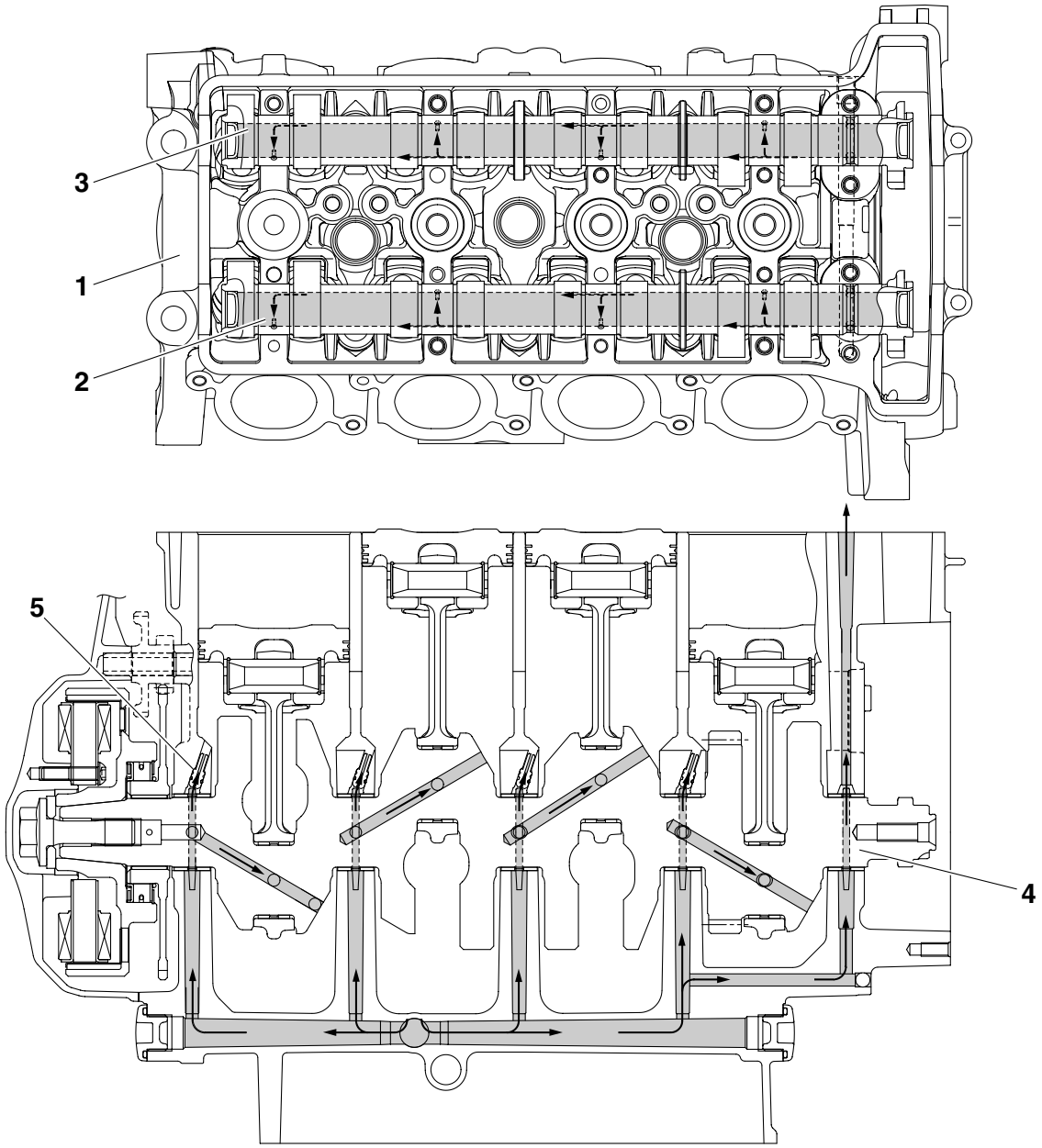
3
1
2
5
4

1. Cylinder head
2. Intake camshaft
3. Exhaust camshaft
4. Crankshaft
5. Oil nozzle

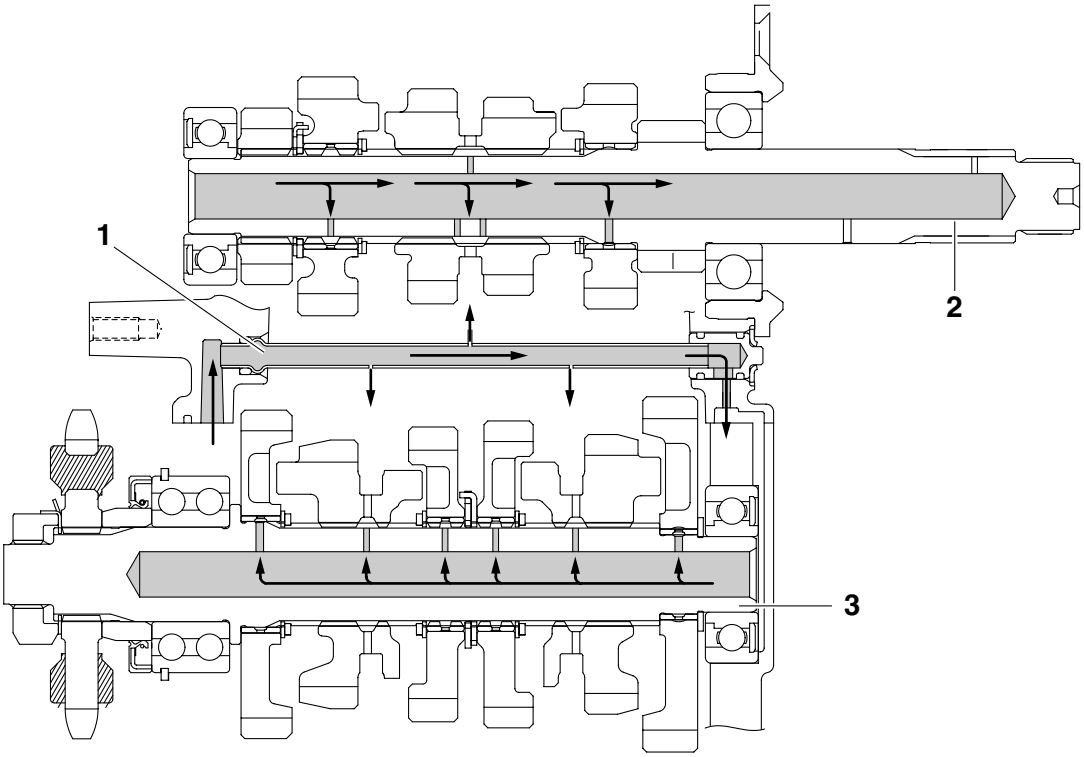
1
2
3

1. Oil pipe
2. Main axle
3. Drive axle

EAS20420

# COOLING SYSTEM DIAGRAMS

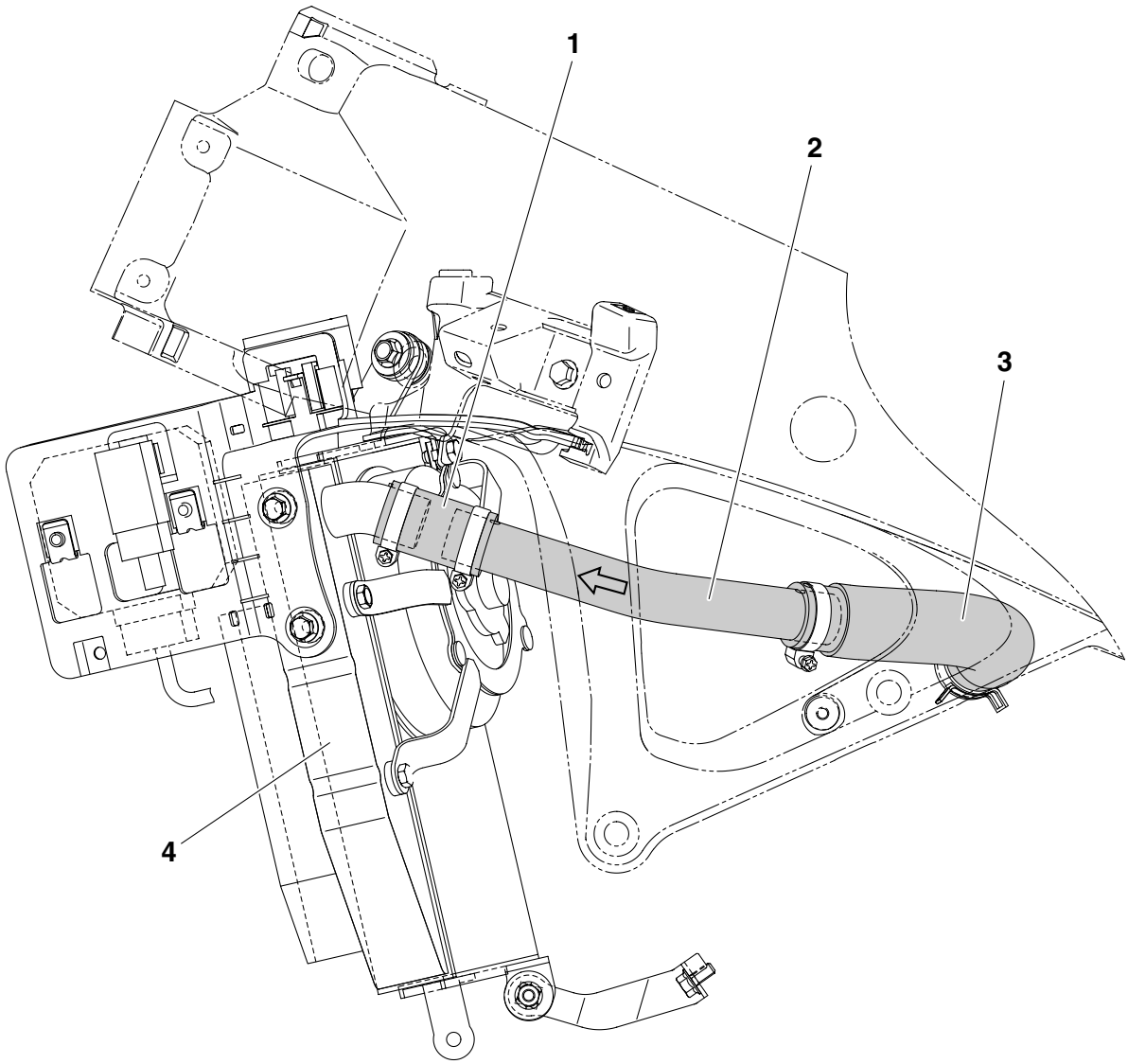

1. Radiator inlet hose
2. Radiator inlet pipe
3. Thermostat outlet hose
4. Radiator

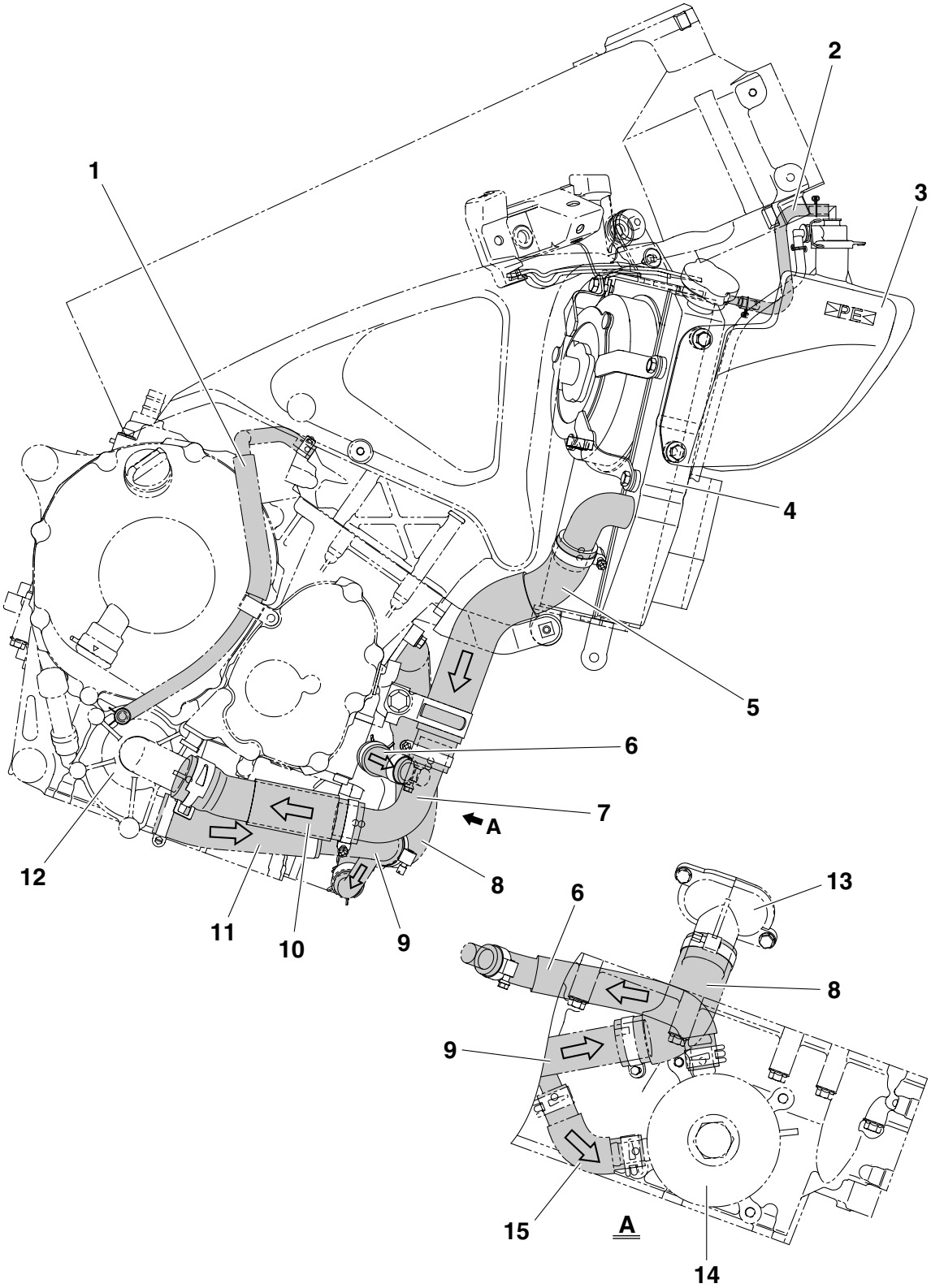
1
2
3
4
5
6
7
A
8
9
10
11
12
13
6
8
9
15
A
14

1. Water pump breather hose
2. Coolant reservoir hose
3. Coolant reservoir
4. Radiator
5. Radiator outlet hose
6. Oil cooler outlet hose
7. Radiator outlet pipe
8. Water jacket joint inlet hose
9. Water pump outlet pipe
10. Water pump inlet hose
11. Water pump outlet hose
12. Water pump
13. Water jacket joint
14. Oil cooler
15. Oil cooler inlet hose

EAS20430
# CABLE ROUTING

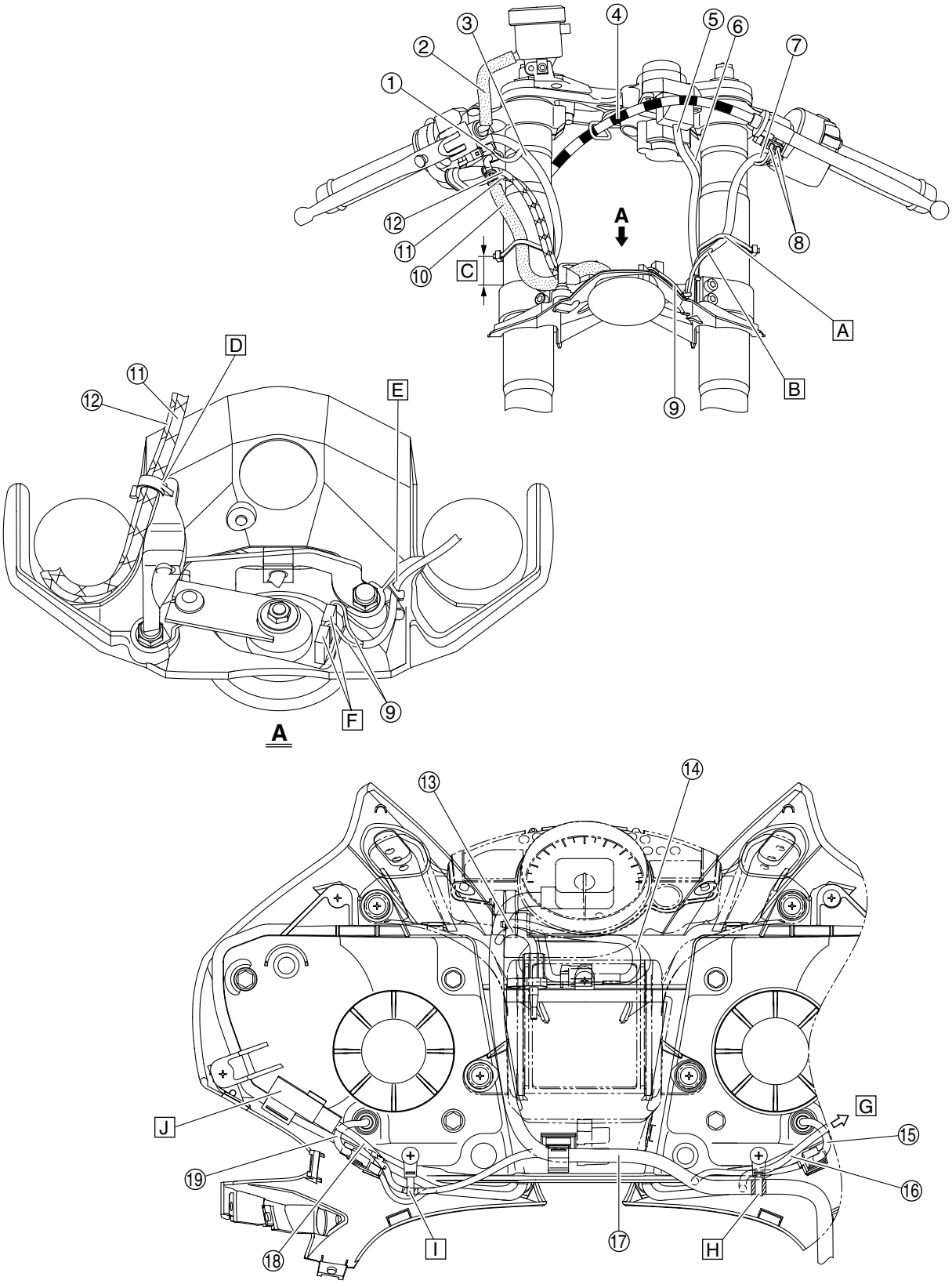

1. Front brake light switch lead
2. Front brake fluid reservoir hose
3. Right handlebar switch lead
4. Clutch cable
5. Immobilizer unit lead
6. Main switch lead
7. Left handlebar switch lead
8. Clutch switch lead
9. Horn lead
10. Front brake hose
11. Throttle cable (decelerator cable)
12. Throttle cable (accelerator cable)
13. Air temperature sensor lead
14. Auxiliary light lead
15. Headlight lead (low beam)
16. Headlight relay lead (on/off)
17. Headlight sub-wire-harness
18. Headlight relay lead (dimmer)
19. Headlight lead (high beam)

A. Fasten the left handlebar switch lead on the front side of the front fork with a plastic locking tie. Face the end of the plastic locking tie outward, and then cut off the excess end of the tie to 2–10 mm (0.08–0.39 in).
B. Be sure to position the plastic locking tie above where the horn leads branch off from the other leads.
C. 40–50 mm (1.57–1.97 in)
D. Pass the throttle cables through the guide on the lower bracket, making sure to route the decelerator cable above the accelerator cable as shown in the illustration.
E. Fasten the horn leads with the holder on the lower bracket cover.
F. Install the horn L-shaped connectors so that the leads are routed rearward.
G. To the headlight relay (on/off)
H. Fasten the wire harness at the white tape with a plastic locking tie.
I. Fasten the headlight relay lead at the white tape with a plastic locking tie.
J. Install the headlight relay (dimmer) completely onto the tab on the headlight assembly.

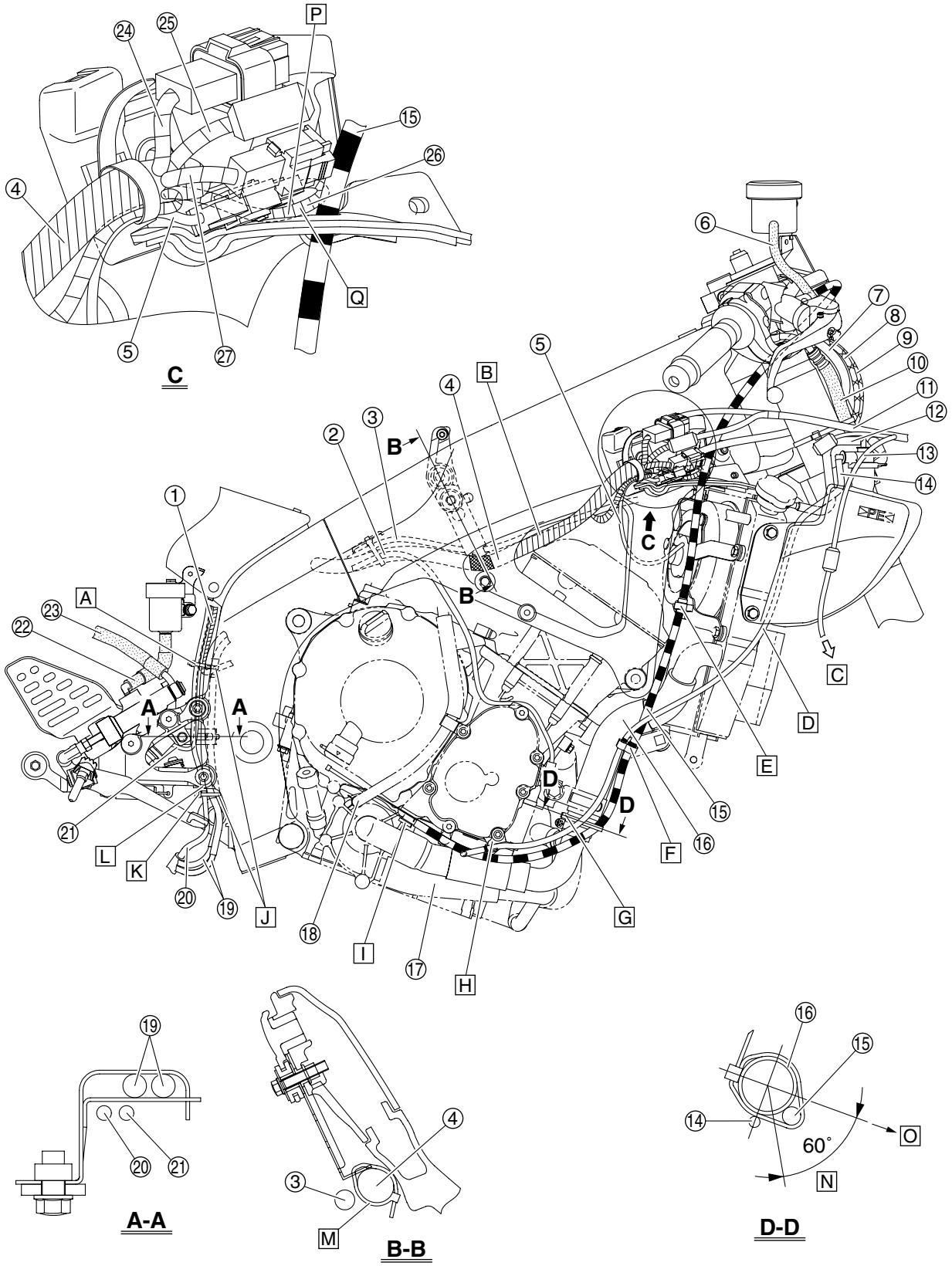
C
A-A
B-B
D-D
60˚

1. EXUP servo motor lead
2. Crankshaft position sensor lead
3. Ignition coil lead
4. Wire harness
5. Right radiator fan motor lead
6. Front brake fluid reservoir hose
7. Right handlebar switch lead
8. Throttle cable (accelerator cable)
9. Throttle cable (decelerator cable)
10. Front brake hose
11. Headlight sub-wire-harness
12. Coolant reservoir hose
13. Front right turn signal/position light lead
14. Coolant reservoir breather hose
15. Clutch cable
16. Radiator outlet hose
17. Water pump outlet hose
18. Water pump breather hose
19. EXUP cables
20. $O_2$ sensor lead
21. Rear brake light switch lead
22. Rear brake fluid reservoir hose
23. Rear brake hose
24. Headlight sub-wire-harness 2
25. Headlight sub-wire-harness 1
26. Right radiator fan motor sub-wire-harness
27. Right handlebar switch lead

A. Fasten the EXUP cables, EXUP servo motor lead, and rear brake light switch lead with a plastic locking tie, making sure to fasten the tie on the metal tubes around the cables, 0–20 mm (0–0.79 in) from the ends of the tubes. Face the end of the plastic locking tie rearward, and then cut off the excess end of the tie to 2–4 mm (0.08–0.16 in).

B. Route the wire harness on top of the heat protector, making sure to push the harness inward so that it does not protrude past the frame.

C. To the front right turn signal/position light

D. Route the coolant reservoir breather hose between the radiator and the coolant reservoir, then to the outside of the damper on the radiator.

E. Fasten the clutch cable with the holder, making sure that the metal band around the cable is above the holder.

F. Cross the coolant reservoir breather hose and clutch cable, and then fasten them with the holder, making sure to align the top of the holder with the bottom edge of the white paint mark on the cable.

G. Fasten the clutch cable to the radiator outlet hose with the plastic band, making sure to position the band between the screw clamp and the hose protector. Install the plastic band with its buckle positioned toward the rear of the vehicle and its end facing inward.

H. Fasten the coolant reservoir breather hose with the holder, making sure that the white paint mark on the hose is positioned to the rear of the holder.

I. Pass the clutch cable through the guide on the engine.

J. Make sure that the $O_2$ sensor lead and EXUP cables are not twisted or crossed between the plastic locking ties.

K. Fasten the EXUP cables and $O_2$ sensor lead with a plastic locking tie. Face the end of the plastic locking tie rearward, and then cut off the excess end of the tie to 2–4 mm (0.08–0.16 in).

L. Be sure to position the plastic locking tie 0–20 mm (0–0.78 in) below the plastic locking tie fastened around the $O_2$ sensor lead.

M. Pass a plastic locking tie through the bottom hole in the bracket, and then fasten the wire harness at the positioning tape with the tie. Face the end of the plastic locking tie downward, and then cut off the excess end of the tie to 2–10 mm (0.08–0.39 in).

N. Fasten the clutch cable with the plastic band, making sure that the cable is positioned within the 60° angle shown in the illustration.

O. Front

P. Bend back the right radiator fan motor sub-wire-harness as shown in the illustration, and then insert the projection on the coupler into the hole in the right coupler holder, making sure to route the lead to the inside of the coupler.

Q. Route the right radiator fan motor sub-wire-harness to the inside of the clutch cable.

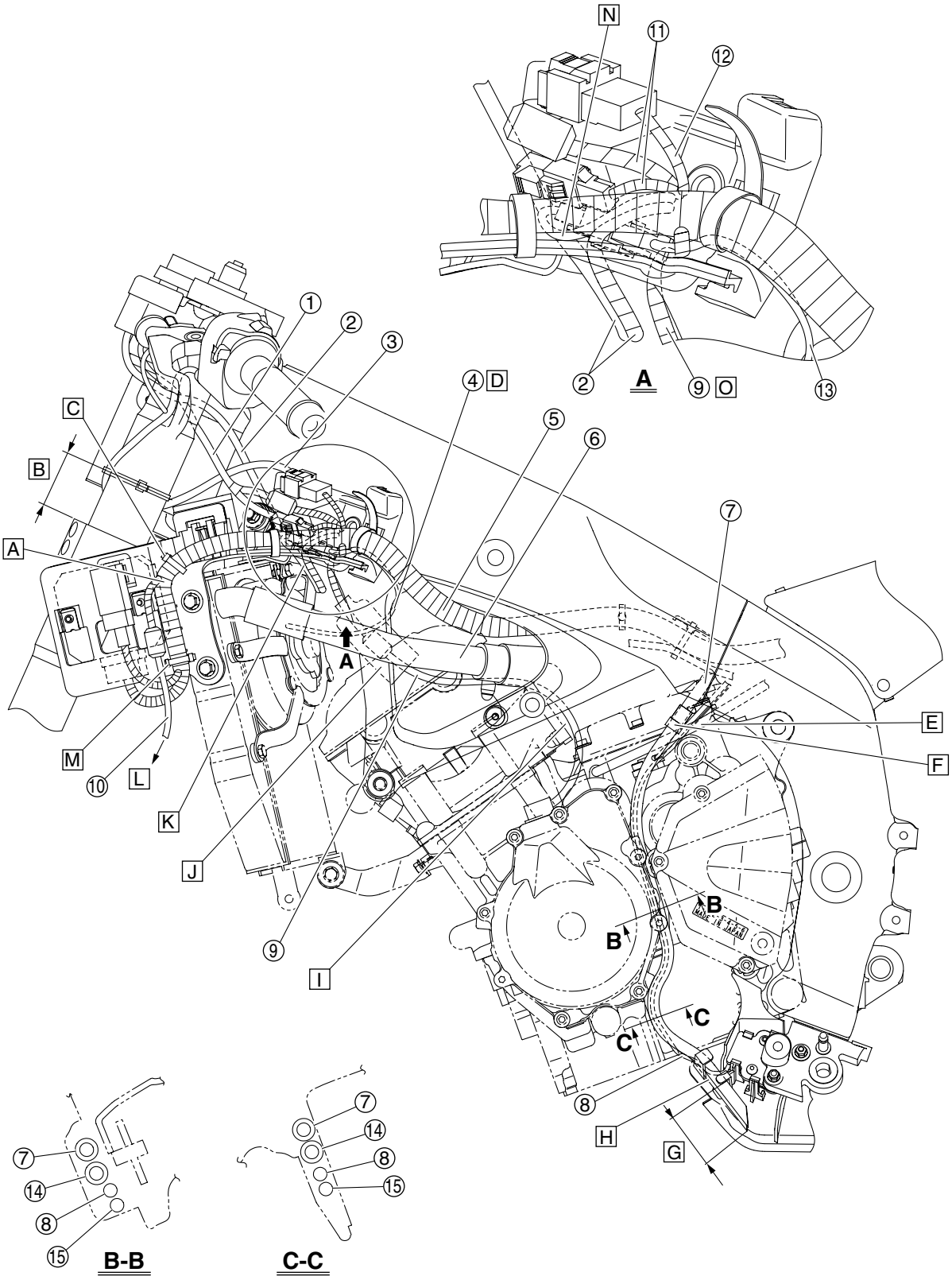
N
11
12
2
A
9
O
13
1
2
3
4
D
5
6
7
C
B
A
A
E
F
M
10
L
K
J
9
I
B
B
C
C
8
H
G
7
14
8
15
B-B
7
14
8
15
C-C

1. Main switch lead
2. Immobilizer unit lead
3. Left handlebar switch lead
4. Left radiator fan motor lead
5. Wire harness
6. Radiator inlet pipe
7. Fuel tank breather hose
8. Sidestand switch lead
9. AC magneto lead
10. Front left turn signal/position light lead
11. Main switch lead
12. Left handlebar switch lead
13. Left radiator fan motor lead
14. Fuel tank drain hose
15. Oil level switch lead

A. Bend the wire harness so that it is routed along the rectifier/regulator holder and is aligned with the plastic locking tie installation locations.

B. 45–55 mm (1.77–2.17 in)

C. Pass a plastic locking tie through the holes in the coupler holder, and then fasten the wire harness with the tie.

D. Pass the left radiator fan motor lead through the opening in the frame, and then route the lead under the wire harness.

E. Pass the starter motor lead, speed sensor lead, sidestand switch lead, and oil level switch lead between the holder on the engine and the crankcase boss, making sure to route the starter motor lead to the outside of the other leads.

F. Fasten the fuel tank drain hose and fuel tank breather hose with the holder, making sure to fasten the hoses below the holder on the engine.

G. 30–50 mm (1.18–1.97 in)

H. Pass the fuel tank drain hose, fuel tank breather hose, and sidestand switch lead through the guides on the sidestand shield, making sure to route the lead to the inside of the hoses.

I. Pass the AC magneto lead between the frame and the throttle body, and then route it under the radiator inlet pipe.

J. After connecting the AC magneto coupler, slide the cover over the coupler.

K. Route the immobilizer unit lead to the rear of the lower protruding section of the coupler holder.

L. To the front left turn signal/position light

M. Pass a plastic locking tie through the holes in the coupler holder, and then fasten the wire harness with the tie, making sure to install the tie with its buckle positioned toward the rear of the vehicle and its end facing inward. Cut off the excess end of the plastic locking tie to 2–10 mm (0.08–0.39 in).

N. Bend back the left radiator fan motor lead as shown in the illustration, and then insert the projection on the coupler into the hole in the left coupler holder. The lead may be routed to the inside or the outside of the coupler.

O. Route the AC magneto lead under the left radiator fan motor lead.

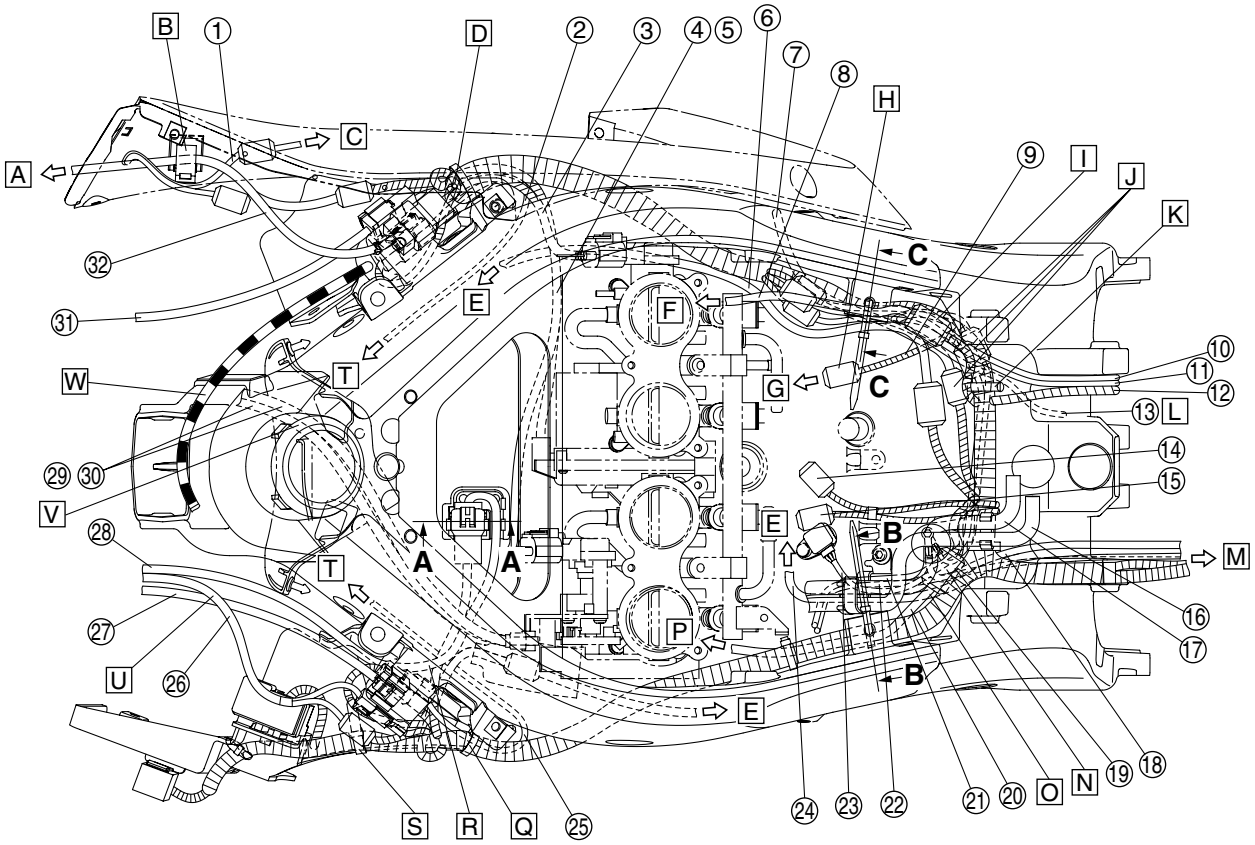
B
1
D
2
3
4
5
6
7
8
H
9
I
J
K
A
C
32
31
E
F
C
10
11
12
13
L
14
15
W
T
G
C
29
30
V
28
A
A
E
B
M
T
27
U
26
P
16
17
B
E
S
R
Q
25
24
23
22
21
20
O
N
19
18

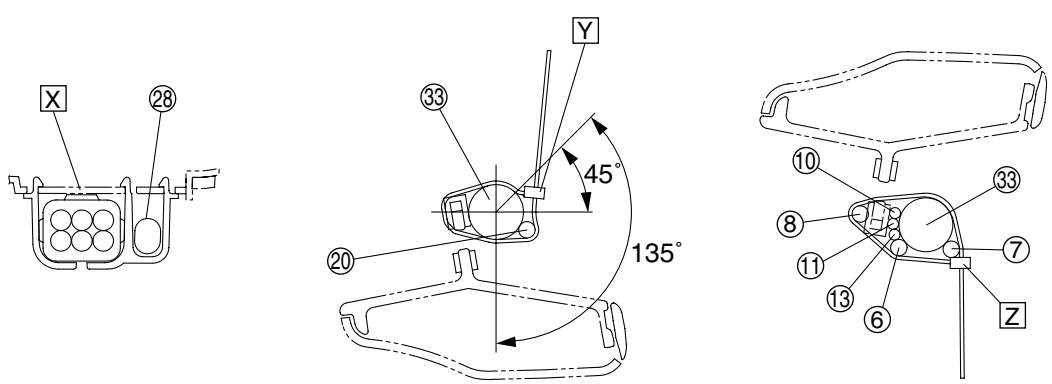
X
28
Y
33
45°
135°
20
10
33
8
11
13
6
7
Z

A-A B-B C-C

1. Front right turn signal/position light lead
2. Right radiator fan motor lead
3. Throttle position sensor (for throttle valves) lead
4. Throttle servo motor lead
5. Throttle position sensor (for throttle cable pulley) lead
6. Ignition coil lead
7. Crankshaft position sensor lead
8. Sub-wire-harness 2
9. Coolant temperature sensor lead
10. Rear brake light switch lead
11. $O_2$ sensor lead
12. EXUP servo motor lead
13. Neutral switch lead
14. Fuel pump coupler
15. Fuel sender coupler
16. Fuel tank breather hose
17. Fuel tank drain hose
18. Negative battery lead
19. Engine ground lead
20. Sub-wire-harness 3
21. Oil level switch lead
22. Sidestand switch lead
23. Speed sensor lead
24. Starter motor lead
25. Left radiator fan motor lead
26. Main switch lead
27. Left handlebar switch lead
28. Immobilizer unit lead
29. Throttle cable (accelerator cable)
30. Throttle cable (decelerator cable)
31. Right handlebar switch lead
32. Headlight sub-wire-harness 2
33. Wire harness

A. To the headlight
B. Fasten the headlight lead with the holder.
C. To the front right turn signal/position light
D. Insert the projection on the plastic band into the hole in the coupler holder, and then fasten the wire harness, right radiator fan motor lead, throttle position sensor (for throttle valves) lead, throttle servo motor lead, and throttle position sensor (for throttle cable pulley) lead with the band, making sure to route the right radiator fan motor lead to the inside of the wire harness and to face the end of the band upward.
E. To the engine
F. To the throttle bodies
G. To the coolant temperature sensor
H. Route the coolant temperature sensor lead above the crankshaft position sensor lead, neutral switch lead, oil level switch lead, and sidestand switch lead.
I. Position the sub-wire harness 2 coupler on top of the wire harness.
J. Route the oil level switch lead, speed sensor lead, and crankshaft position sensor lead under the wire harness.
K. Insert the projection on the plastic locking tie that is fastened around the wire harness into the hole in the frame.
L. Pass the neutral switch lead between the frame and the engine.
M. To the ECU
N. Install both the engine ground lead terminal and the negative battery lead terminal to the crankcase with the bolt. Make sure that the oil level switch lead and speed sensor lead are routed under the engine ground lead and negative battery lead, the leads are positioned on top of their terminals, and the terminals contact the stopper on the crankcase.
O. Position the sub-wire-harness 3 coupler under the wire harness.
P. To the secondary injectors
Q. Insert the projection on the plastic band into the hole in the coupler holder, and then fasten the wire harness and left radiator fan motor lead with the band, making sure to face the end of the band upward.
R. Route the immobilizer unit lead below the frame and throttle cables.
S. Pass a plastic locking tie through the hole in the coupler holder, and then fasten the wire harness with the tie. Face the end of the plastic locking tie inward.
T. To the radiator
U. Either lead, the left handlebar switch lead or the main switch lead, may be routed on top.
V. Route the throttle cables to the right of the projection on the center air baffle plate on top of the radiator, making sure not to twist them.
W. Route the clutch cable above the right air baffle plate on top of the radiator, and then route it downward between the plate and the coupler holder.
X. Fit the immobilizer unit coupler into the coupler holder with its projection positioned as shown in the illustration, and then install the holder onto the air induction system cover.
Y. Pass a plastic locking tie through the hole in the stay on the frame from above, and then fasten the wire harness and sub-wire-harness 3 with the tie, making sure to fasten the lead within the 135° angle shown in the illustration. Face the end of the plastic locking tie inward.
Z. Pass a plastic locking tie through the hole in the stay on the frame from above, and then fasten the leads shown in the illustration with the tie, making sure to fasten the sub-wire harness 2 above the stay and the other leads below. Face the end of the plastic locking tie inward.

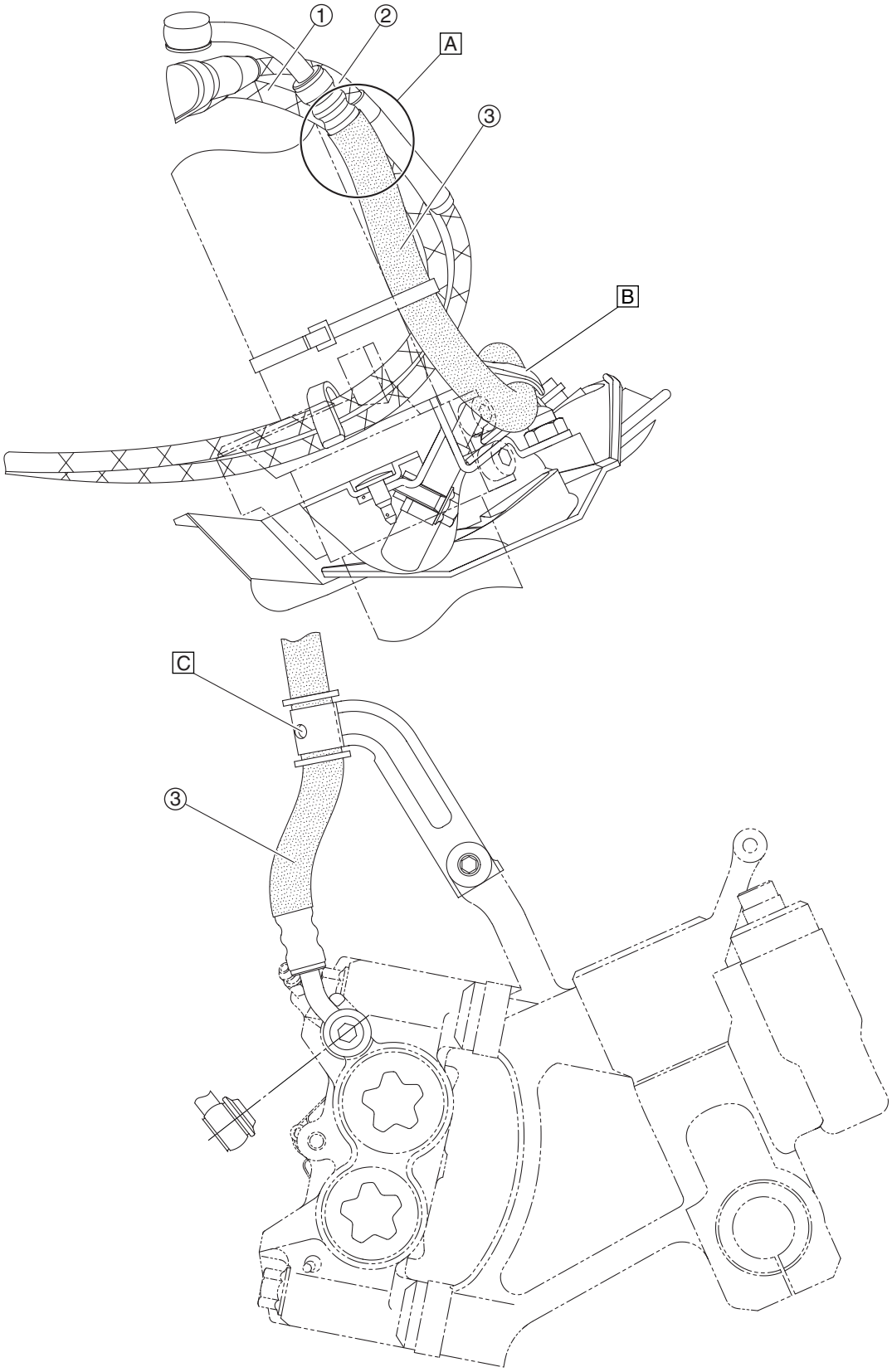
①
②
A
③
B
C
③

1. Throttle cable (decelerator cable)
2. Throttle cable (accelerator cable)
3. Front brake hose

A. Pass the throttle cables between the front fork and the front brake hose.
B. When installing the guide on the lower bracket, be sure to pass the front brake hose through it.
C. Fasten the front brake hose with the holder, making sure that the paint mark on the hose is visible through the hole in the holder.

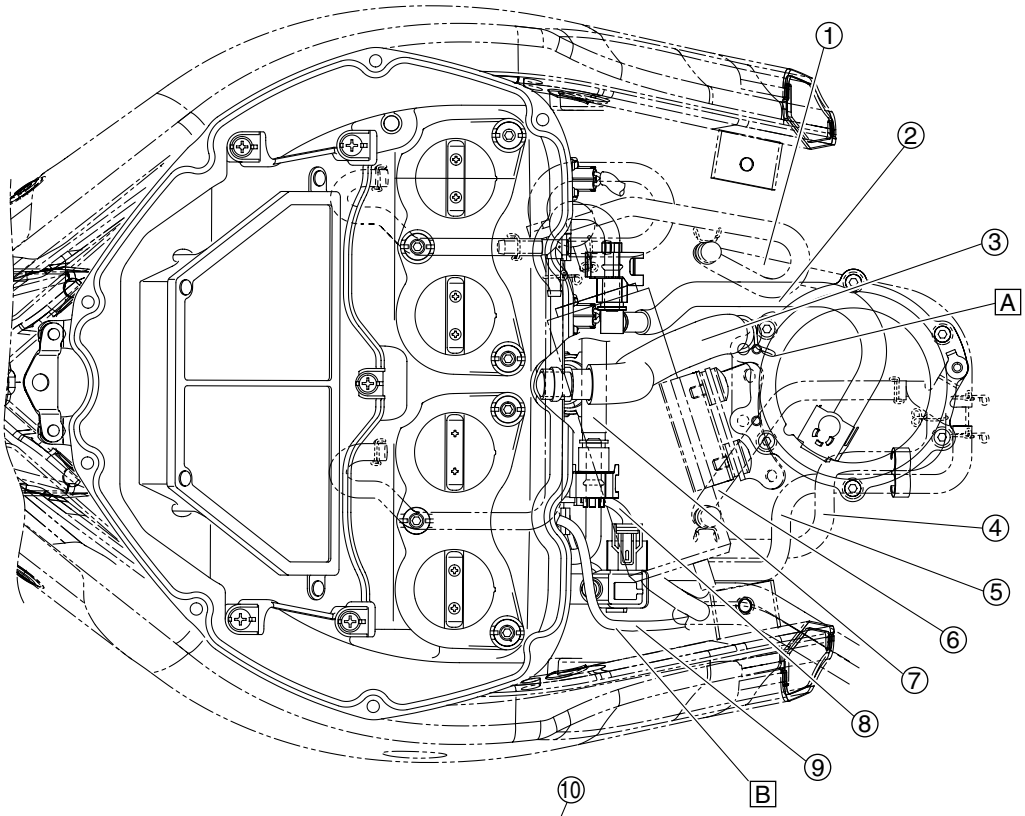
1
2
3
A
4
5
6
7
8
9
B

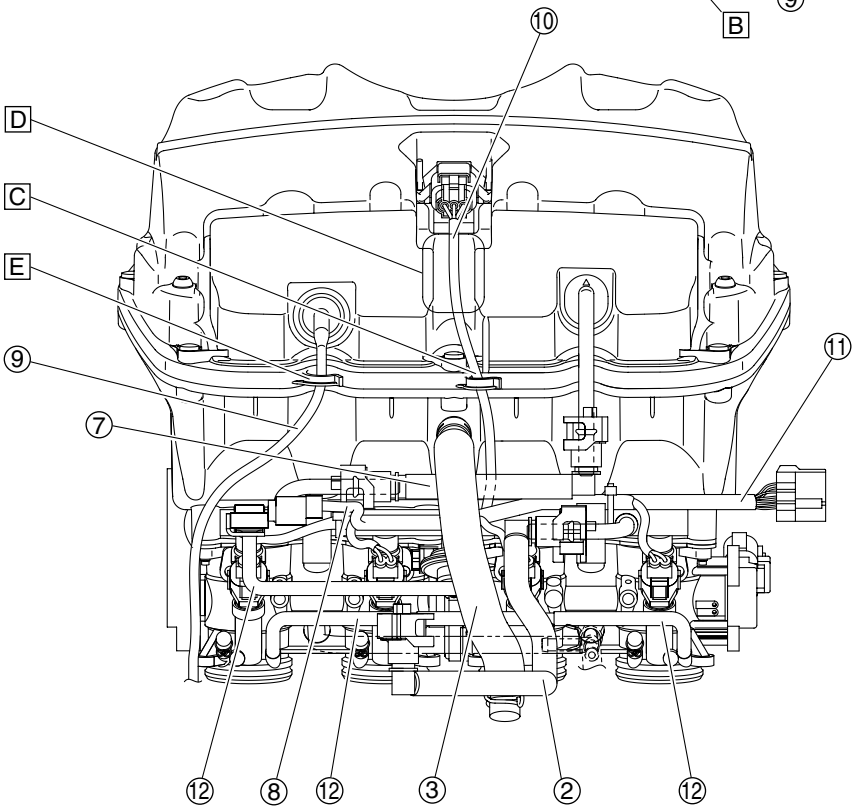
10
D
C
E
9
7
11
12
8
12
3
2
12

1. Fuel tank breather hose (fuel tank to hose joint)
2. Fuel hose (fuel tank to primary injector fuel rail)
3. Crankcase breather hose
4. Fuel tank overflow hose
5. Fuel tank breather hose
6. Fuel tank overflow hose (fuel tank to hose joint)
7. Fuel hose (primary injector fuel rail to secondary injector fuel rail)
8. Intake air pressure sensor lead
9. Sub-wire-harness 3
10. Atmospheric pressure sensor lead
11. Sub-wire-harness 2
12. Intake air pressure sensor hose

A. Face the ends of the clamp rearward.
B. Route the sub-wire-harness 3 to the left side of the intake air pressure sensor.
C. Fasten the atmospheric pressure sensor lead with the holder on the air filter case.
D. Route the atmospheric pressure sensor lead in the groove in the air filter case.
E. Fasten the sub-wire-harness 3 with the holder on the air filter case.

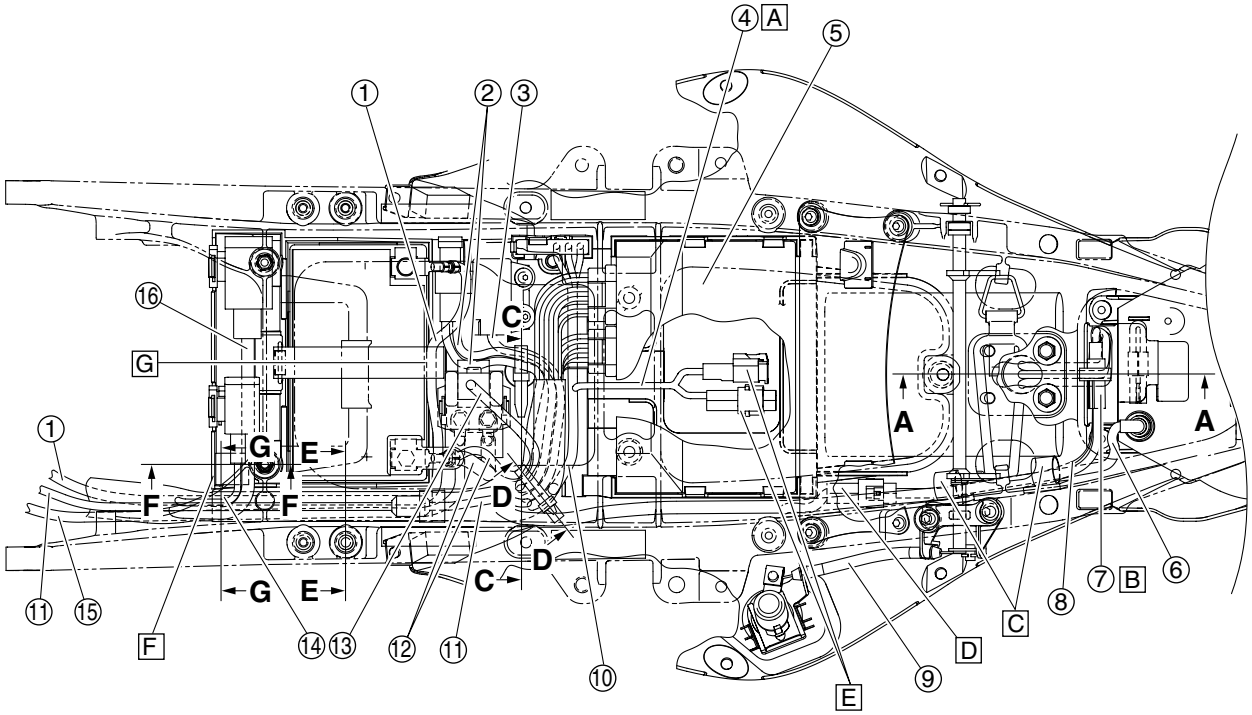


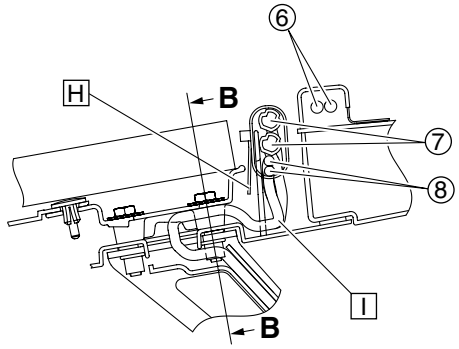


A-A

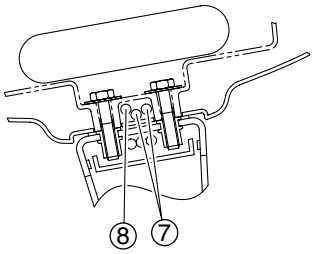

B-B

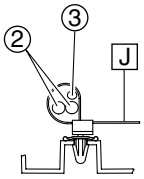


C-C

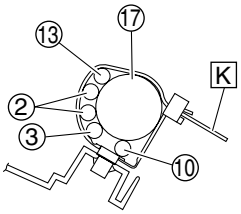


D-D

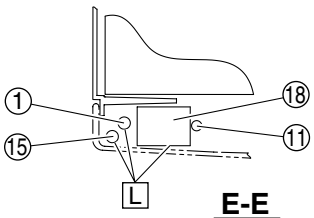


E-E

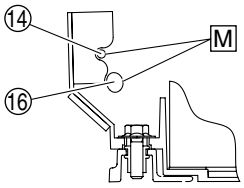


F-F

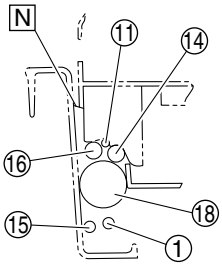


G-G

1. Negative battery lead
2. Main fuse leads
3. Lean angle sensor lead
4. Anti-theft alarm leads (OPTION)
5. ECU (engine control unit)
6. Tail/brake light lead
7. Turn signal light lead (right and left side)
8. License plate light lead
9. Seat lock cable
10. Fuse box lead
11. Sidestand switch lead
12. Positive battery lead
13. Starter relay lead
14. Turn signal relay lead
15. Starter motor lead
16. Relay unit lead
17. ECU lead
18. Wire harness

A. Be sure not to pinch the immobilizer unit lead when installing the ECU.
B. Connect the license plate light connectors and the turn signal light couplers.
C. Fasten the wire harness and the tail/brake light lead with the holders on the frame.
D. Connect the tail/brake light coupler, making sure to position it under the wire harness and between the battery box and the frame.
E. Position the anti-theft alarm couplers (OPTION) between the ECU and the rear lower cowling.
F. Do not route the turn signal/hazard relay lead or relay unit lead over the front of the battery box or the damper.
G. Pass the negative battery lead between the battery band and the battery.
H. Pass the plastic band through the hole in the rib on the rear lower cowling from the front, and then fasten the turn signal light couplers and license plate light connectors with the band. Place the end of the plastic band between the rear lower cowling and the frame.
I. Pass the turn signal light leads and license plate light leads through the hole in the rib on the rear lower cowling.
J. Face the end of the plastic band to the left.
K. Cut off the excess end of the plastic locking tie to 0–20 mm (0–0.79 in).
L. Be sure to route the wire harness above the negative battery lead and the starter motor lead.
M. Route the turn signal relay lead and relay unit lead so that they are cushioned against the damper.
N. Be sure not to pinch the leads between the battery cover and the frame.

# PERIODIC CHECKS AND ADJUSTMENTS

**PERIODIC MAINTENANCE** ..... 3-1
INTRODUCTION ..... 3-1
PERIODIC MAINTENANCE CHART FOR THE EMISSION CONTROL SYSTEM ..... 3-1
GENERAL MAINTENANCE AND LUBRICATION CHART ..... 3-1

**ENGINE** ..... 3-4
ADJUSTING THE VALVE CLEARANCE ..... 3-4
SYNCHRONIZING THE THROTTLE BODIES ..... 3-6
ADJUSTING THE THROTTLE CABLE FREE PLAY ..... 3-8
CHECKING THE SPARK PLUGS ..... 3-8
MEASURING THE COMPRESSION PRESSURE ..... 3-9
CHECKING THE ENGINE OIL LEVEL ..... 3-10
CHANGING THE ENGINE OIL ..... 3-11
MEASURING THE ENGINE OIL PRESSURE ..... 3-12
ADJUSTING THE CLUTCH LEVER FREE PLAY ..... 3-13
REPLACING THE AIR FILTER ELEMENT ..... 3-14
CHECKING THE THROTTLE BODY JOINTS ..... 3-14
CHECKING THE FUEL LINE ..... 3-15
CHECKING THE CRANKCASE BREATHER HOSE ..... 3-15
CHECKING THE EXHAUST SYSTEM ..... 3-15
ADJUSTING THE EXUP CABLES ..... 3-16
CHECKING THE COOLANT LEVEL ..... 3-17
CHECKING THE COOLING SYSTEM ..... 3-18
CHANGING THE COOLANT ..... 3-18

**CHASSIS** ..... 3-21
ADJUSTING THE FRONT DISC BRAKE ..... 3-21
ADJUSTING THE REAR DISC BRAKE ..... 3-21
CHECKING THE BRAKE FLUID LEVEL ..... 3-22
CHECKING THE FRONT BRAKE PADS ..... 3-22
CHECKING THE REAR BRAKE PADS ..... 3-22
CHECKING THE FRONT BRAKE HOSES ..... 3-23
CHECKING THE REAR BRAKE HOSES ..... 3-23
ADJUSTING THE REAR BRAKE LIGHT SWITCH ..... 3-23
BLEEDING THE HYDRAULIC BRAKE SYSTEM ..... 3-24
ADJUSTING THE SHIFT PEDAL ..... 3-25
ADJUSTING THE DRIVE CHAIN SLACK ..... 3-25
LUBRICATING THE DRIVE CHAIN ..... 3-26
CHECKING AND ADJUSTING THE STEERING HEAD ..... 3-26
CHECKING THE FRONT FORK ..... 3-28
ADJUSTING THE FRONT FORK LEGS ..... 3-28
ADJUSTING THE REAR SHOCK ABSORBER ASSEMBLY ..... 3-30
CHECKING THE TIRES ..... 3-32
CHECKING THE WHEELS ..... 3-33
CHECKING AND LUBRICATING THE CABLES ..... 3-34
LUBRICATING THE LEVERS ..... 3-34

LUBRICATING THE PEDALS ..... 3-34
LUBRICATING THE SIDESTAND ..... 3-34
LUBRICATING THE REAR SUSPENSION ..... 3-34

**ELECTRICAL SYSTEM** ..... 3-35
CHECKING AND CHARGING THE BATTERY ..... 3-35
CHECKING THE FUSES ..... 3-35
REPLACING THE HEADLIGHT BULBS ..... 3-35
ADJUSTING THE HEADLIGHT BEAMS ..... 3-35

EAS20450
# PERIODIC MAINTENANCE

EAS20460
## INTRODUCTION
This chapter includes all information necessary to perform recommended checks and adjustments. If followed, these preventive maintenance procedures will ensure more reliable vehicle operation, a longer service life and reduce the need for costly overhaul work. This information applies to vehicles already in service as well as to new vehicles that are being prepared for sale. All service technicians should be familiar with this entire chapter.

EAU17610
## PERIODIC MAINTENANCE CHART FOR THE EMISSION CONTROL SYSTEM

| No. | | ITEM | ROUTINE | INITIAL | ODOMETER READINGS | | | | |
|---|---|---|---|---|---|---|---|---|---|
| | | | | 1000 km (600 mi) or 1 month | 7000 km (4000 mi) or 6 months | 13000 km (8000 mi) or 12 months | 19000 km (12000 mi) or 18 months | 25000 km (16000 mi) or 24 months | 31000 km (20000 mi) or 30 months |
| 1 | * | **Fuel line** | • Check fuel hoses for cracks or damage.<br>• Replace if necessary. | | √ | √ | √ | √ | √ |
| 2 | * | **Spark plugs** | • Check condition.<br>• Adjust gap and clean.<br>• Replace every 13000 km (8000 mi) or 12 months. | | √ | Replace. | √ | Replace. | √ |
| 3 | * | **Valve clearance** | • Check and adjust valve clearance when engine is cold. | Every 42000 km (26600 mi) | | | | | |
| 4 | * | **Crankcase breather system** | • Check breather hose for cracks or damage.<br>• Replace if necessary. | | √ | √ | √ | √ | √ |
| 5 | * | **Fuel injection** | • Adjust synchronization. | | √ | √ | √ | √ | √ |
| 6 | * | **Exhaust system** | • Check for leakage.<br>• Tighten if necessary.<br>• Replace gasket(s) if necessary. | | √ | √ | √ | √ | √ |
| 7 | * | **Air induction system** | • Check the air cut-off valve, reed valve, and hose for damage.<br>• Replace any damaged parts. | | | √ | | √ | |

* Since these items require special tools, data and technical skills, have a Yamaha dealer perform the service.

EAU32193
## GENERAL MAINTENANCE AND LUBRICATION CHART

| No. | | ITEM | ROUTINE | INITIAL | ODOMETER READINGS | | | | |
|---|---|---|---|---|---|---|---|---|---|
| | | | | 1000 km (600 mi) or 1 month | 7000 km (4000 mi) or 6 months | 13000 km (8000 mi) or 12 months | 19000 km (12000 mi) or 18 months | 25000 km (16000 mi) or 24 months | 31000 km (20000 mi) or 30 months |
| 1 | * | **Air filter element** | • Check condition and damage.<br>• Replace if necessary. | | √ | √ | √ | √ | √ |
| 2 | * | **Clutch** | • Check operation.<br>• Adjust or replace cable. | √ | √ | √ | √ | √ | √ |
| 3 | * | **Front brake** | • Check operation, fluid level, and for fluid leakage.<br>• Replace brake pads if necessary. | √ | √ | √ | √ | √ | √ |
| 4 | * | **Rear brake** | • Check operation, fluid level, and for fluid leakage.<br>• Replace brake pads if necessary. | √ | √ | √ | √ | √ | √ |
| 5 | * | **Brake hoses** | • Check for cracks or damage. | | √ | √ | √ | √ | √ |
| | | | • Replace. | Every 4 years | | | | | |
| 6 | * | **Wheels** | • Check runout and for damage.<br>• Replace if necessary. | | √ | √ | √ | √ | √ |

| No. | | ITEM | ROUTINE | INITIAL | ODOMETER READINGS | | | | |
|---|---|---|---|---|---|---|---|---|---|
| | | | | 1000 km (600 mi) or 1 month | 7000 km (4000 mi) or 6 months | 13000 km (8000 mi) or 12 months | 19000 km (12000 mi) or 18 months | 25000 km (16000 mi) or 24 months | 31000 km (20000 mi) or 30 months |
| 7 | * | **Tires** | • Check tread depth and for damage.<br>• Replace if necessary.<br>• Check air pressure.<br>• Correct if necessary. | | √ | √ | √ | √ | √ |
| 8 | * | **Wheel bearings** | • Check bearings for smooth operation.<br>• Replace if necessary. | | √ | √ | √ | √ | √ |
| 9 | * | **Swingarm pivot bearings** | • Check bearing assemblies for looseness.<br>• Moderately repack with lithium-soap-based grease. | | | √ | | Repack. | |
| 10 | | **Drive chain** | • Check chain slack, alignment and condition.<br>• Adjust and lubricate chain with a special O-ring chain lubricant thoroughly. | Every 800 km (500 mi) and after washing the motorcycle or riding in the rain | | | | | |
| 11 | * | **Steering bearings** | • Check bearing assemblies for looseness. | √ | √ | √ | √ | √ | √ |
| | | | • Moderately repack with lithium-soap-based grease. | Every 19000 km (12000 mi) | | | | | |
| 12 | * | **Chassis fasteners** | • Check all chassis fitting and fasteners.<br>• Correct if necessary. | | √ | √ | √ | √ | √ |
| 13 | | **Brake and clutch lever pivot shafts** | • Apply lithium-soap-based grease (all-purpose grease) lightly. | | √ | √ | √ | √ | √ |
| 14 | | **Brake and shift pedal pivot shafts** | • Apply lithium-soap-based grease (all-purpose grease) lightly. | | √ | √ | √ | √ | √ |
| 15 | | **Sidestand pivot** | • Check operation.<br>• Apply lithium-soap-based grease (all-purpose grease) lightly. | | √ | √ | √ | √ | √ |
| 16 | * | **Sidestand switch** | • Check operation and replace if necessary. | √ | √ | √ | √ | √ | √ |
| 17 | * | **Front fork** | • Check operation and for oil leakage.<br>• Replace if necessary. | | √ | √ | √ | √ | √ |
| 18 | * | **Shock absorber assembly** | • Check operation and for oil leakage.<br>• Replace if necessary. | | √ | √ | √ | √ | √ |
| 19 | * | **Rear suspension link pivots** | • Check operation.<br>• Correct if necessary. | | | √ | | √ | |
| 20 | | **Engine oil** | • Change (warm engine before draining). | √ | √ | √ | √ | √ | √ |
| 21 | * | **Engine oil filter cartridge** | • Replace. | √ | | √ | | √ | |
| 22 | * | **Cooling system** | • Check hoses for cracks or damage.<br>• Replace if necessary. | | √ | √ | √ | √ | √ |
| | | | • Change with ethylene glycol anti-freeze coolant every 24 months. | | | | | Change. | |
| 23 | * | **Front and rear brake switches** | • Check operation. | √ | √ | √ | √ | √ | √ |
| 24 | * | **Control cables** | • Apply Yamaha chain and cable lube or engine oil SAE 10W-30 thoroughly. | √ | √ | √ | √ | √ | √ |
| 25 | * | **Throttle grip housing and cable** | • Check operation and free play.<br>• Adjust the throttle cable free play if necessary.<br>• Lubricate the throttle grip housing and cable. | | √ | √ | √ | √ | √ |
| 26 | * | **Lights, signals and switches** | • Check operation.<br>• Adjust headlight beam. | √ | √ | √ | √ | √ | √ |

* Since these items require special tools, data and technical skills, have a Yamaha dealer perform the service.

**NOTE:**

From 37000 km (24000 mi) or 36 months, repeat the maintenance intervals starting from 13000 km (8000 mi) or 12 months.

EAU17650

**NOTE:**

- Air filter
  - This model's air filter is equipped with a disposable oil-coated paper element, which must not be cleaned with compressed air to avoid damaging it.
  - The air filter element needs to be replaced more frequently when riding in unusually wet or dusty areas.
- Hydraulic brake service
  - After disassembling the brake master cylinders and calipers, always change the fluid. Regularly check the brake fluid levels and fill the reservoirs as required.
  - Every two years replace the internal components of the brake master cylinders and calipers, and change the brake fluid.
  - Replace the brake hoses every four years and if cracked or damaged.

EAS20470

# ENGINE

EAS20490

## ADJUSTING THE VALVE CLEARANCE

The following procedure applies to all of the valves.

**NOTE:**

- Valve clearance adjustment should be made on a cold engine, at room temperature.
- When the valve clearance is to be measured or adjusted, the piston must be at top dead center (TDC) on the compression stroke.

1. Remove:
   - Rider seat
   - Side cowlings
   - Bottom cowlings
     Refer to "GENERAL CHASSIS" on page 4-1.
   - Fuel tank
     Refer to "FUEL TANK" on page 7-1.
   - Air filter case
     Refer to "AIR FILTER CASE" on page 7-4.
   - Throttle body
     Refer to "THROTTLE BODIES" on page 7-7.
   - Air cut-off valve
     Refer to "AIR INDUCTION SYSTEM" on page 7-13.
   - Radiator
     Refer to "RADIATOR" on page 6-1.
2. Remove:
   - Ignition coils
   - Spark plugs
   - Cylinder head cover
     Refer to "CAMSHAFTS" on page 5-7.
3. Remove:
   - Pickup rotor cover "1"

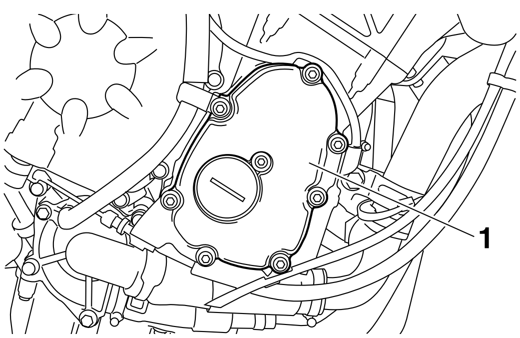


4. Measure:
   - Valve clearance
     Out of specification → Adjust.

**Valve clearance (cold)**
**Intake**
**0.12–0.19 mm (0.0047–0.0075 in)**
**Exhaust**
**0.16–0.23 mm (0.0063–0.0091 in)**

▼▼▼▼▼▼▼▼▼▼▼▼▼▼▼▼▼▼▼▼▼▼▼▼▼▼▼▼▼▼▼▼▼▼▼

a. Turn the crankshaft clockwise.

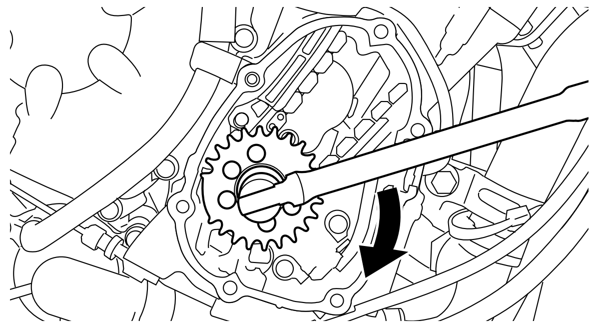

b. When piston #1 is at TDC on the compression stroke, align the TDC mark "a" on the pickup rotor with the crankcase mating surface "b".

**NOTE:**

TDC on the compression stroke can be found when the camshaft lobes are turned away from each other.

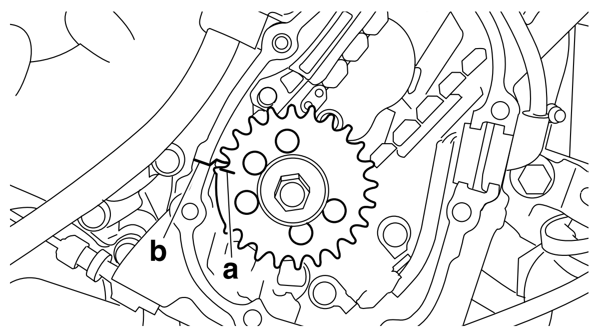


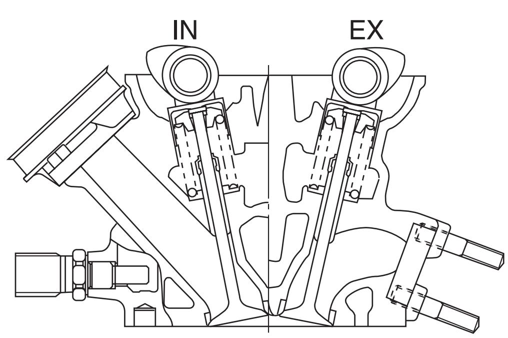


c. Measure the valve clearance with a thickness gauge "1".

**NOTE:**

- If the valve clearance is incorrect, note the measured reading.

- Measure the valve clearance in the following sequence.

**Valve clearance measuring sequence**
**Cylinder #1 → #2 → #4 → #3**

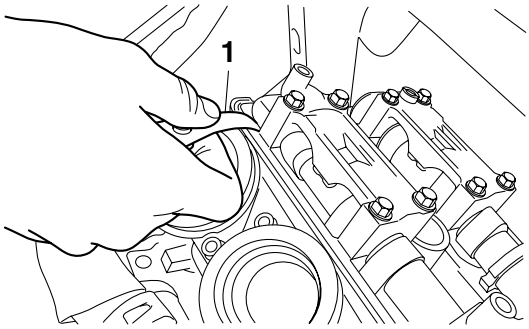


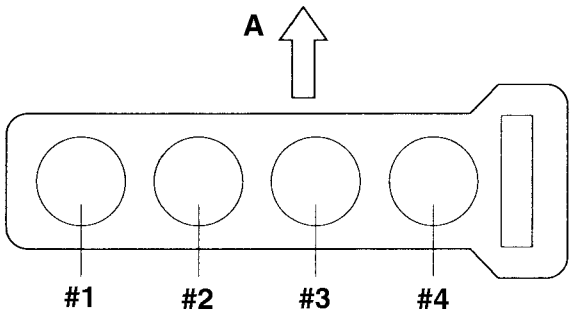


A. Front

d. To measure the valve clearances of the other cylinders, starting with cylinder #1 at TDC, turn the crankshaft clockwise as specified in the following table.

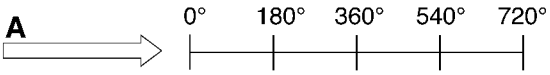


| B | | | | | |
|---|---|---|---|---|---|
| | #1 | C | | | |
| | #2 | | C | | |
| | #3 | | | | C |
| | #4 | | | C | |

A. Degrees that the crankshaft is turned clockwise
B. Cylinder
C. Combustion cycle

| | |
|---|---|
| Cylinder #2 | 180° |
| Cylinder #4 | 360° |
| Cylinder #3 | 540° |

▲▲▲▲▲▲▲▲▲▲▲▲▲▲▲▲▲▲▲▲▲▲▲▲▲▲▲▲▲▲▲▲▲▲

5. Remove:
   - Camshafts

**NOTE:**
- Refer to “CAMSHAFTS” on page 5-7.
- When removing the timing chain and camshafts, fasten the timing chain with a wire to retrieve it if it falls into the crankcase.

6. Adjust:
   - Valve clearance

▼▼▼▼▼▼▼▼▼▼▼▼▼▼▼▼▼▼▼▼▼▼▼▼▼▼▼▼▼▼▼▼▼▼

a. Remove the valve lifter “1” and the valve pad “2” with a valve lapper “3”.

**Valve lapper**
**90890-04101**
**Valve lapping tool**
**YM-A8998**

**NOTE:**
- Cover the timing chain opening with a rag to prevent the valve pad from falling into the crankcase.
- Make a note of the position of each valve lifter “1” and valve pad “2” so that they can be installed in the correct place.

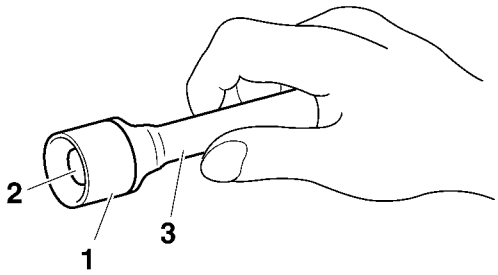


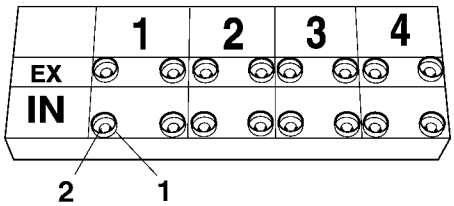


b. Calculate the difference between the specified valve clearance and the measured valve clearance.
   Example:
   Specified valve clearance = 0.11–0.20 mm (0.004–0.008 in)
   Measured valve clearance = 0.23 mm (0.009 in)
   0.23 mm (0.009 in) – 0.20 mm (0.008 in) = 0.03 mm (0.001 in)

c. Check the thickness of the current valve pad.

**NOTE:**

The thickness “a” of each valve pad is marked in hundredths of millimeters on the side that touches the valve lifter.

Example:
If the valve pad is marked “155”, the pad thickness is 1.55 mm (0.061 in).

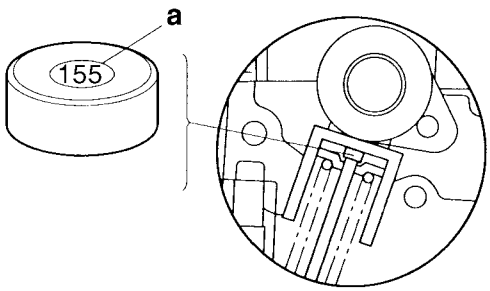


d. Calculate the sum of the values obtained in steps (b) and (c) to determine the required valve pad thickness and the valve pad number.
Example:
1.55 mm (0.061 in) + 0.03 mm (0.001 in) = 1.58 mm (0.062 in)
The valve pad number is 158.

e. Round off the valve pad number according to the following table, and then select the suitable valve pad.

| Last digit | Rounded value |
|---|---|
| 0, 1, 2 | 0 |
| 3, 4, 5, 6 | 5 |
| 7, 8, 9 | 10 |

**NOTE:**

Refer to the following table for the available valve pads.

| | |
|---|---|
| Valve pad range | Nos. 150–240 |
| Valve pad thickness | 1.50–2.40 mm (0.0591–0.0945 in) |
| Available valve pads | 25 thicknesses in 0.05 mm (0.002 in) increments |

Example:
Valve pad number = 158
Rounded value = 160
New valve pad number = 160

f. Install the new valve pad “1” and the valve lifter “2”.

**NOTE:**

- Lubricate the valve lifter with engine oil.
- The valve lifter must turn smoothly when rotated by hand.
- Install the valve lifter and the valve pad in the correct place.

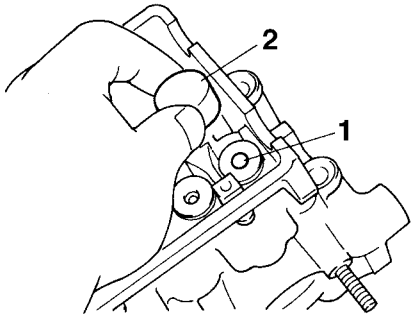


g. Install the exhaust and intake camshafts, timing chain and camshaft caps.

| | |
|---|---|
| | **Camshaft cap bolt**<br>**10 Nm (1.0 m·kg, 7.2 ft·lb)** |

**NOTE:**

- Refer to “CAMSHAFTS” on page 5-7.
- Lubricate the camshaft bearings, camshaft lobes and camshaft journals.
- First, install the exhaust camshaft.
- Align the camshaft marks with the camshaft cap marks.
- Turn the crankshaft clockwise several full turns to seat the parts.

h. Measure the valve clearance again.

i. If the valve clearance is still out of specification, repeat all of the valve clearance adjustment steps until the specified clearance is obtained.

▲▲▲▲▲▲▲▲▲▲▲▲▲▲▲▲▲▲▲▲▲▲▲▲▲▲▲▲▲▲▲▲▲▲

7. Install:
   - All removed parts

**NOTE:**

For installation, reverse the removal procedure.

EAS20570

## SYNCHRONIZING THE THROTTLE BODIES

**NOTE:**

Prior to synchronizing the throttle bodies, the valve clearance and the engine idling speed should be properly adjusted.

1. Stand the vehicle on a level surface.

**NOTE:**

Place the vehicle on a suitable stand.

2. Remove:
   - Rider seat
     Refer to “GENERAL CHASSIS” on page 4-1.
   - Fuel tank
     Refer to “FUEL TANK” on page 7-1.
3. Remove:
   - Caps “1”

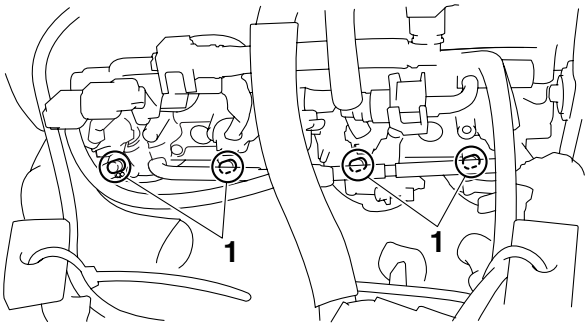


4. Install:
   - Vacuum gauge “1”
   - Digital tachometer

| | |
|---|---|
| | **Vacuum gauge**<br>**90890-03094**<br>**Carburetor synchronizer**<br>**YU-44456** |

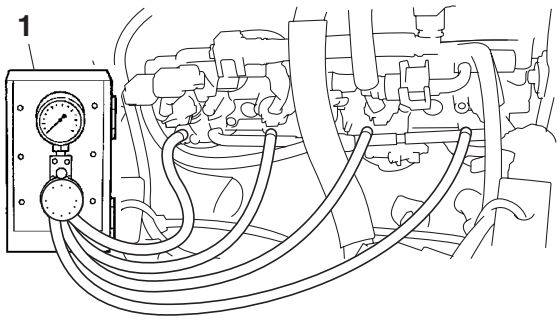


5. Install:
   - Fuel tank
     Refer to “FUEL TANK” on page 7-1.
6. Adjust:
   - Throttle body synchronization

▼▼▼▼▼▼▼▼▼▼▼▼▼▼▼▼▼▼▼▼▼▼▼▼▼▼▼▼▼▼▼▼▼▼

**Basic procedure**

a. Start the engine, warm it up for several minutes, and then let it run at the specified engine idling speed.

| | |
|---|---|
| | **Engine idling speed**<br>**1250–1350 r/min** |

b. Turn the bypass air screw “1” with a white paint mark out a little, and then turn it in fully.

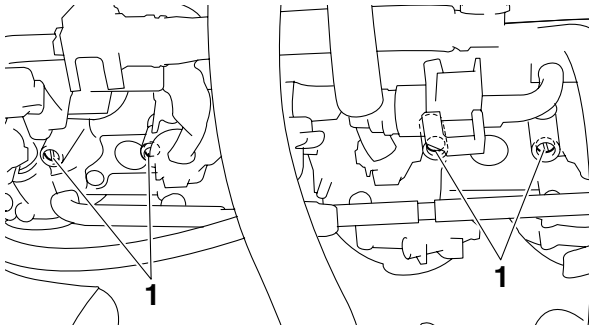


c. Using the throttle body that has the bypass air screw with a white paint mark as the standard, turn the bypass air screws without white paint marks in or out to the adjust the other throttle bodies.

**NOTE:**

- If more than one throttle body has a bypass air screw with a white paint mark, use the one with the lowest vacuum pressure as the standard.
- After each step, rev the engine two or three times, each time for less than a second, and check the synchronization again.
- If an air screw was removed, turn the screw 3/4 turn in and be sure to synchronize the throttle body.

| | |
|---|---|
| | **Intake vacuum**<br>**20.0 kPa (5.9 inHg) (150 mmHg)** |

**NOTE:**

- The difference in vacuum pressure between two throttle bodies should not exceed 1.33 kPa (10 mmHg).
- If you are unable to adjust the throttle body synchronization using this procedure, use the following procedure instead.

▲▲▲▲▲▲▲▲▲▲▲▲▲▲▲▲▲▲▲▲▲▲▲▲▲▲▲▲▲▲▲▲▲▲

▼▼▼▼▼▼▼▼▼▼▼▼▼▼▼▼▼▼▼▼▼▼▼▼▼▼▼▼▼▼▼▼▼▼

**Alternate procedure**

**NOTE:**

Use this alternate procedure if you are unable to adjust the throttle body synchronization using the basic procedure.

a. Start the engine, warm it up for several minutes, and then let it run at the specified engine idling speed.

| | |
|---|---|
| | **Engine idling speed**<br>**1250–1350 r/min** |

b. Turn all of the bypass air screws in fully.
c. Using the throttle body with the lowest vacuum pressure as the standard, turn out the bypass air screws of the other throttle bodies to adjust them.

**NOTE:**

- Do not turn out the bypass air screw of the throttle body with the lowest vacuum pressure.
- After each step, rev the engine two or three times, each time for less than a second, and check the synchronization again.
- If an air screw was removed, turn the screw 3/4 turn in and be sure to synchronize the throttle body.

**Intake vacuum**
**20.0 kPa (5.9 inHg) (150 mmHg)**

**NOTE:**

The difference in vacuum pressure between two throttle bodies should not exceed 1.33 kPa (10 mmHg).

▲▲▲▲▲▲▲▲▲▲▲▲▲▲▲▲▲▲▲▲▲▲▲▲▲▲▲▲▲▲▲▲▲▲

7. Stop the engine and remove the measuring equipment.
8. Allow the engine to cool, and then start the engine and check that the engine speed does not rise abnormally high.
9. Adjust:
   - Throttle cable free play
     Refer to “ADJUSTING THE THROTTLE CABLE FREE PLAY” on page 3-8.

**Throttle cable free play**
**3.0–5.0 mm (0.12–0.20 in)**

10. Install:
    - Caps
    - Fuel tank
      Refer to “FUEL TANK” on page 7-1.
    - Rider seat
      Refer to “GENERAL CHASSIS” on page 4-1.

EAS20630

## ADJUSTING THE THROTTLE CABLE FREE PLAY

**NOTE:**

Prior to adjusting the throttle cable free play, the engine idling speed and carburetor synchronization should be adjusted properly.

1. Check:
   - Throttle cable free play “a”
     Out of specification → Adjust.

**Throttle cable free play**
**3.0–5.0 mm (0.12–0.20 in)**

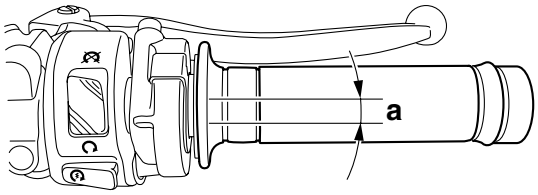


2. Adjust:
   - Throttle cable free play

▼▼▼▼▼▼▼▼▼▼▼▼▼▼▼▼▼▼▼▼▼▼▼▼▼▼▼▼▼▼▼▼▼▼

a. Loosen the locknut “1”.
b. Turn the adjusting nut “2” in direction “a” or “b” until the specified throttle cable free play is obtained.

**Direction “a”**
**Throttle cable free play is increased.**
**Direction “b”**
**Throttle cable free play is decreased.**

c. Tighten the locknut “1”.

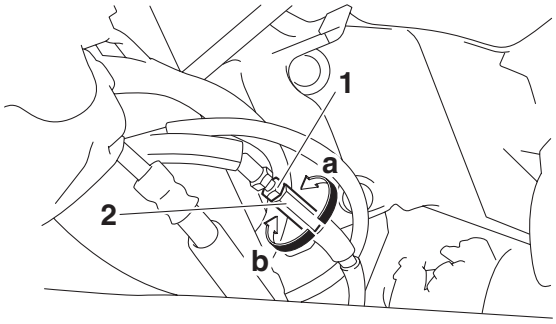


EWA12910

**WARNING**

**After adjusting the throttle cable free play, start the engine and turn the handlebar to the right and to the left to ensure that this does not cause the engine idling speed to change.**

▲▲▲▲▲▲▲▲▲▲▲▲▲▲▲▲▲▲▲▲▲▲▲▲▲▲▲▲▲▲▲▲▲▲

EAS20680

## CHECKING THE SPARK PLUGS

The following procedure applies to all of the spark plugs.

1. Remove:
   - Rider seat
     Refer to “GENERAL CHASSIS” on page 4-1.
   - Fuel tank
     Refer to “FUEL TANK” on page 7-1.
   - Air filter case
     Refer to “AIR FILTER CASE” on page 7-4.
   - Air induction system solenoid
     Refer to “AIR INDUCTION SYSTEM” on page 7-13.
2. Remove:
   - Ignition coils
   - Spark plugs

ECA13320

**CAUTION:**

**Before removing the spark plugs, blow away any dirt accumulated in the spark plug wells with compressed air to prevent it from falling into the cylinders.**

3. Check:
   - Spark plug type
     Incorrect → Change.

| | |
|---|---|
| | **Manufacturer/model**<br>**NGK/CR10EK** |

4. Check:
   - Electrode “1”
     Damage/wear → Replace the spark plug.
   - Insulator “2”
     Abnormal color → Replace the spark plug.
     Normal color is medium-to-light tan.
5. Clean:
   - Spark plug
     (with a spark plug cleaner or wire brush)
6. Measure:
   - Spark plug gap “a”
     (with a wire thickness gauge)
     Out of specification → Regap.

| | |
|---|---|
| | **Spark plug gap**<br>**0.6–0.7 mm (0.024–0.028 in)** |

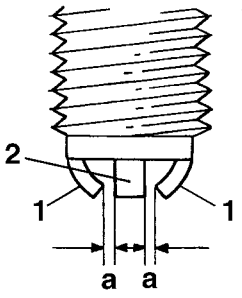


7. Install:
   - Spark plugs
   - Ignition coils

| | |
|---|---|
| | **Spark plug**<br>**13 Nm (1.3 m·kg, 9.4 ft·lb)** |

**NOTE:**

Before installing the spark plug, clean the spark plug and gasket surface.

8. Install:
   - Air induction system solenoid
     Refer to “AIR INDUCTION SYSTEM” on page 7-13.
   - Air filter case
     Refer to “AIR FILTER CASE” on page 7-4.
   - Fuel tank
     Refer to “FUEL TANK” on page 7-1.
   - Rider seat
     Refer to “GENERAL CHASSIS” on page 4-1.

EAS20710

## MEASURING THE COMPRESSION PRESSURE

The following procedure applies to all of the cylinders.

**NOTE:**

Insufficient compression pressure will result in a loss of performance.

1. Measure:
   - Valve clearance
     Out of specification → Adjust.
     Refer to “ADJUSTING THE VALVE CLEARANCE” on page 3-4.
2. Start the engine, warm it up for several minutes, and then turn it off.
3. Remove:
   - Side cowlings
   - Bottom cowlings
     Refer to “GENERAL CHASSIS” on page 4-1.
   - Radiator
     Refer to “RADIATOR” on page 6-1.
4. Remove:
   - Ignition coils
   - Spark plugs

ECA13340

**CAUTION:**

**Before removing the spark plugs, use compressed air to blow away any dirt accumulated in the spark plug wells to prevent it from falling into the cylinders.**

5. Install:
   - Compression gauge “1”
   - Extension “2”

**Compression gauge**
**90890-03081**
**Engine compression tester**
**YU-33223**
**Extension**
**90890-04136**

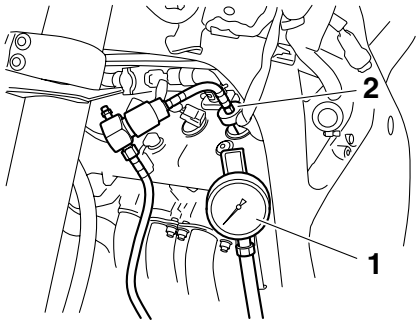


6. Measure:
   - Compression pressure
     Out of specification → Refer to steps (c) and (d).

**Standard compression pressure (at sea level)**
**1550 kPa/400 r/min (220.5 psi/400 r/min) (15.5 kgf/cm²/400 r/min)**
**Minimum–maximum**
**1300–1600 kPa (184.9–227.6 psi) (13.0–16.0 kgf/cm²)**

▼▼▼▼▼▼▼▼▼▼▼▼▼▼▼▼▼▼▼▼▼▼▼▼▼▼▼▼▼▼▼▼▼▼

a. Set the main switch to “ON”.
b. With the throttle wide open, crank the engine until the reading on the compression gauge stabilizes.

EWA12940

**WARNING**

**To prevent sparking, ground all spark plug leads before cranking the engine.**

**NOTE:**

The difference in compression pressure between cylinders should not exceed 100 kPa (1 kg/cm², 14 psi).

c. If the compression pressure is above the maximum specification, check the cylinder head, valve surfaces and piston crown for carbon deposits.
   Carbon deposits → Eliminate.
d. If the compression pressure is below the minimum specification, pour a teaspoonful of engine oil into the spark plug bore and measure again.
   Refer to the following table.

| Compression pressure (with oil applied into the cylinder) | |
|---|---|
| Reading | Diagnosis |
| Higher than without oil | Piston ring(s) wear or damage → Repair. |
| Same as without oil | Pistons, valves, cylinder head gasket or piston ring(s) possibly defective → Repair. |

▲▲▲▲▲▲▲▲▲▲▲▲▲▲▲▲▲▲▲▲▲▲▲▲▲▲▲▲▲▲▲▲▲▲

7. Install:
   - Spark plugs
   - Ignition coils

**Spark plug**
**13 Nm (1.3 m·kg, 9.4 ft·lb)**

8. Install:
   - Radiator
     Refer to “RADIATOR” on page 6-1.
   - Bottom cowlings
   - Side cowlings
     Refer to “GENERAL CHASSIS” on page 4-1.

EAS20730

## CHECKING THE ENGINE OIL LEVEL

1. Stand the vehicle on a level surface.

**NOTE:**

- Place the vehicle on a suitable stand.
- Make sure the vehicle is upright.

2. Start the engine, warm it up for several minutes, and then turn it off.
3. Remove:
   - Dipstick “1”
4. Check:
   - Engine oil level
     The engine oil level should be between the minimum level mark “a” and maximum level mark “b”.
     Below the minimum level mark → Add the recommended engine oil to the proper level.

**NOTE:**

- Before checking the engine oil level, wait a few minutes until the oil has settled.

• Do not screw the dipstick in when inspecting the oil level.

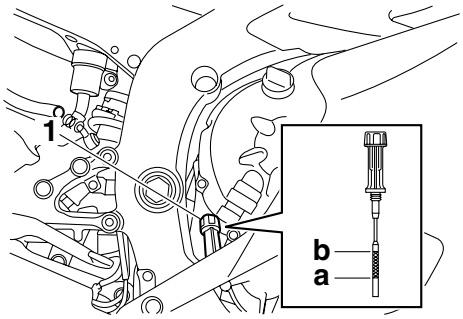


**Type**
**YAMALUBE 4, SAE10W30 or SAE20W40**
**Recommended engine oil grade**
**API service SF, SG type or higher**
**ACEA standard**
**G4 or G5**

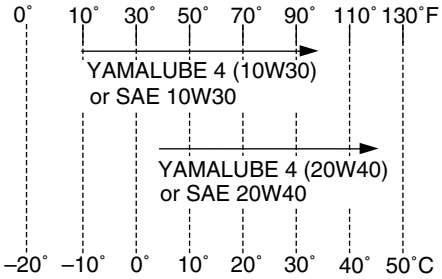


5. Start the engine, warm it up for several minutes, and then turn it off.
6. Check the engine oil level again.

**NOTE:**

Before checking the engine oil level, wait a few minutes until the oil has settled.

7. Install:
   • Dipstick

EAS20780

## CHANGING THE ENGINE OIL

1. Start the engine, warm it up for several minutes, and then turn it off.
2. Remove:
   • Left lower side cowling
   • Left bottom cowling
   Refer to “GENERAL CHASSIS” on page 4-1.
3. Place a container under the engine oil drain bolt.
4. Remove:
   • Engine oil filler cap “1”

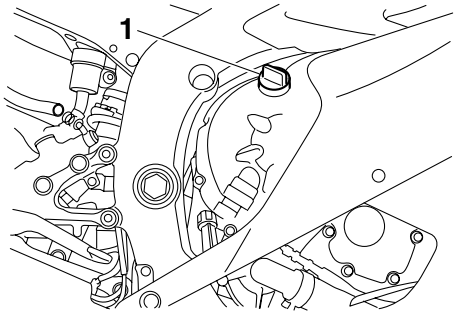


5. Remove:
   • Engine oil drain bolt “1”
   (along with the gasket)

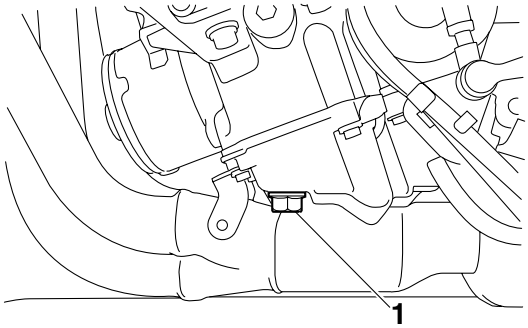


6. Drain:
   • Engine oil
   (completely from the crankcase)
7. If the oil filter cartridge is also to be replaced, perform the following procedure.

▼▼▼▼▼▼▼▼▼▼▼▼▼▼▼▼▼▼▼▼▼▼▼▼▼▼▼▼▼▼▼▼▼▼

a. Remove the shift arm “1”.
b. Pull the fuel tank breather hose “2” and fuel tank over flow hose “3” upward to remove them from the guide “4”.
c. Remove the oil filter cartridge “5” with an oil filter wrench “6”.

**Oil filter wrench**
**90890-01426**
**YU-38411**

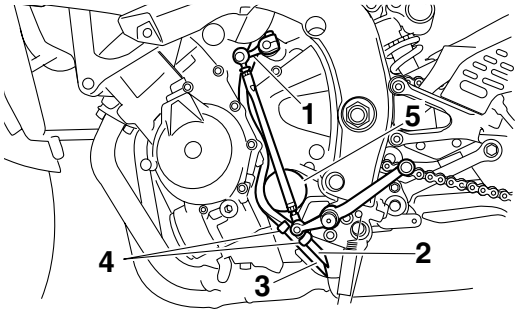

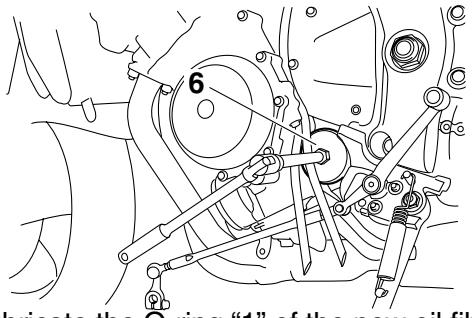


d. Lubricate the O-ring "1" of the new oil filter cartridge with a thin coat of engine oil.

EC2C01006

**CAUTION:**

**Make sure the O-ring "1" is positioned correctly in the groove of the oil filter cartridge.**

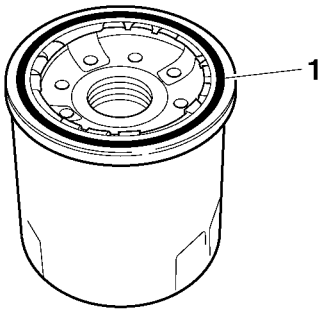


e. Tighten the new oil filter cartridge to specification with an oil filter wrench.

| | |
|---|---|
| | **Oil filter cartridge**<br>**17 Nm (1.7 m·kg, 12 ft·lb)** |

f. Insert the fuel tank breather hose and fuel tank overflow hose into the guide and place them in their original position.

g. Install the shift arm "1" by aligning the match mark "a" on the shift arm with the match mark "b" on the shift shaft "2".

| | |
|---|---|
| | **Shift arm bolt**<br>**10 Nm (1.0 m·kg, 7.2 ft·lb)** |

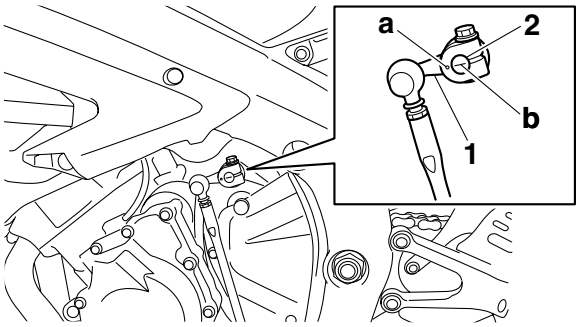


▲▲▲▲▲▲▲▲▲▲▲▲▲▲▲▲▲▲▲▲▲▲▲▲▲▲▲▲▲▲▲▲▲▲

8. Check:
   - Engine oil drain bolt gasket
     Damage → Replace.
9. Install:
   - Engine oil drain bolt
     (along with the gasket)

| | |
|---|---|
| | **Engine oil drain bolt**<br>**43 Nm (4.3 m·kg, 31 ft·lb)** |

10. Fill:
    - Crankcase
      (with the specified amount of the recommended engine oil)

| | |
|---|---|
| | **Engine oil quantity**<br>**Total amount**<br>**3.40 L (3.59 US qt) (2.99 Imp.qt)**<br>**Without oil filter cartridge replacement**<br>**2.40 L (2.54 US qt) (2.11 Imp.qt)**<br>**With oil filter cartridge replacement**<br>**2.60 L (2.75 US qt) (2.29 Imp.qt)** |

11. Install:
    - Engine oil filler cap
12. Start the engine, warm it up for several minutes, and then turn it off.
13. Check:
    - Engine
      (for engine oil leaks)
14. Check:
    - Engine oil level
      Refer to "CHECKING THE ENGINE OIL LEVEL" on page 3-10.

EAS20820

## MEASURING THE ENGINE OIL PRESSURE

1. Check:
   - Engine oil level
     Below the minimum level mark → Add the recommended engine oil to the proper level.
2. Start the engine, warm it up for several minutes, and then turn it off.

ECA13410

**CAUTION:**

**When the engine is cold, the engine oil will have a higher viscosity, causing the engine oil pressure to increase. Therefore, be sure to measure the engine oil pressure after warming up the engine.**

3. Remove:
   - Left lower side cowling

- Left bottom cowling
  Refer to “GENERAL CHASSIS” on page 4-1.

4. Remove:
   - Main gallery bolt “1”

EWA12980

**WARNING**

**The engine, muffler and engine oil are extremely hot.**

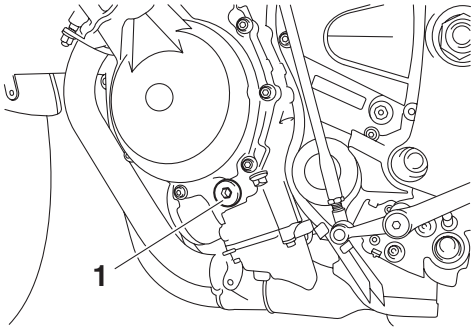


5. Install:
   - Oil pressure gauge set “1”
   - Oil pressure adapter H “2”

**Oil pressure gauge set**
**90890-03120**
**Oil pressure adapter H**
**90890-03139**

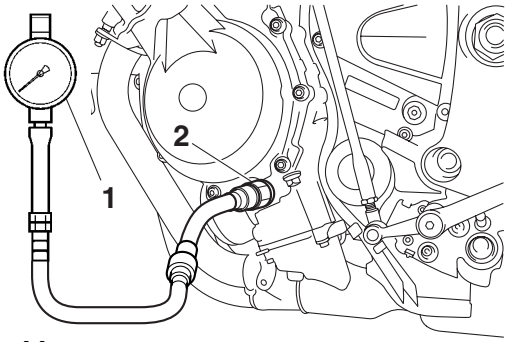


6. Measure:
   - Engine oil pressure
     (at the following conditions)

**Oil pressure (hot)**
**80.0 kPa/1300 r/min (11.6 psi/1300 r/min) (0.80 kgf/cm²/1300 r/min)**
**Oil temperature**
**82–92 °C (180–198 °F)**

Out of specification → Adjust.

| Engine oil pressure | Possible causes |
|---|---|
| Below specification | • Faulty oil pump<br>• Clogged oil filter<br>• Leaking oil passage<br>• Broken or damaged oil seal |
| Above specification | • Leaking oil passage<br>• Faulty oil filter<br>• Oil viscosity too high |

7. Install:
   - Main gallery bolt

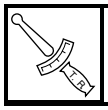

**Main gallery bolt**
**8 Nm (0.8 m·kg, 5.8 ft·lb)**

8. Install:
   - Left bottom cowling
   - Left lower side cowling
     Refer to “GENERAL CHASSIS” on page 4-1.

EAS20870

## ADJUSTING THE CLUTCH LEVER FREE PLAY

1. Check:
   - Clutch lever free play “a”
     Out of specification → Adjust.

**Clutch lever free play**
**10.0–15.0 mm (0.39–0.59 in)**

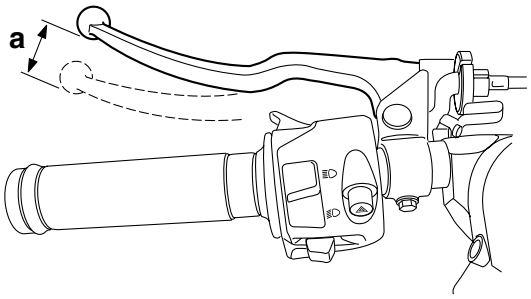


2. Adjust:
   - Clutch lever free play

▼▼▼▼▼▼▼▼▼▼▼▼▼▼▼▼▼▼▼▼▼▼▼▼▼▼▼▼▼▼▼▼▼▼

**Handlebar side**

a. Turn the adjusting bolt “1” in direction “a” or “b” until the specified clutch lever free play is obtained.

**Direction “a”**
**Clutch lever free play is increased.**
**Direction “b”**
**Clutch lever free play is decreased.**

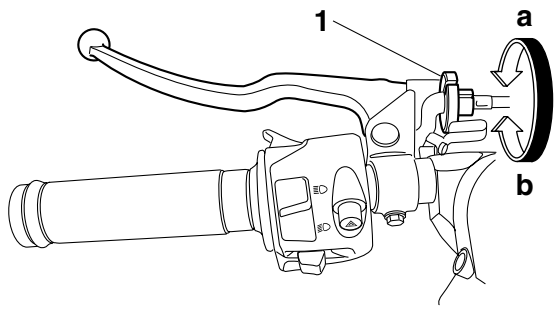


**NOTE:**

If the specified clutch lever free play cannot be obtained on the handlebar side of the cable, use the adjusting nut on the engine side.

▲▲▲▲▲▲▲▲▲▲▲▲▲▲▲▲▲▲▲▲▲▲▲▲▲▲▲▲▲▲▲▲

▼▼▼▼▼▼▼▼▼▼▼▼▼▼▼▼▼▼▼▼▼▼▼▼▼▼▼▼▼▼▼▼

**Engine side**

a. Loosen the locknut “1”.
b. Turn the adjusting nut “2” in direction “a” or “b” until the specified clutch lever free play is obtained.

| |
|---|
| **Direction “a”**<br>**Clutch lever free play is increased.**<br>**Direction “b”**<br>**Clutch lever free play is decreased.** |

c. Tighten the locknut “1”.

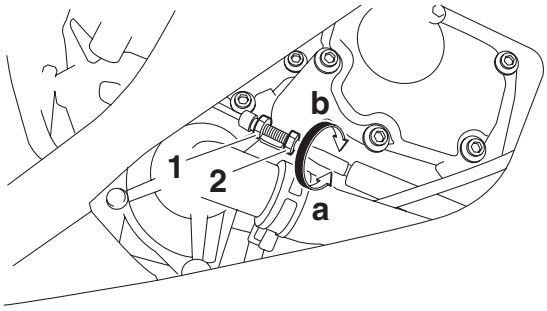


▲▲▲▲▲▲▲▲▲▲▲▲▲▲▲▲▲▲▲▲▲▲▲▲▲▲▲▲▲▲▲▲

EAS20960

## REPLACING THE AIR FILTER ELEMENT

1. Remove:
   - Rider seat
     Refer to “GENERAL CHASSIS” on page 4-1.
   - Fuel tank
     Refer to “FUEL TANK” on page 7-1.
   - Upper air filter case
     Refer to “AIR FILTER CASE” on page 7-4.
2. Remove:
   - Air filter element “1”

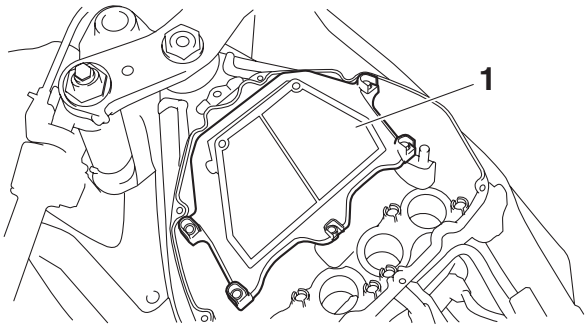


3. Check:
   - Air filter element
     Damage → Replace.

**NOTE:**

- Replace the air filter element every 40000 km (2400 mi) of operation.
- The air filter needs more frequent service if you are riding in unusually wet or dusty areas.

4. Install:
   - Air filter element

EC2C01007

**CAUTION:**

**Never operate the engine without the air filter element installed. Unfiltered air will cause rapid wear of engine parts and may damage the engine. Operating the engine without the air filter element will also affect the throttle body synchronization, leading to poor engine performance and possible overheating.**

**NOTE:**

When installing the air filter element into the lower air filter case, make sure that the sealing surfaces are aligned to prevent any air leaks.

5. Install:
   - Upper air filter case
     Refer to “AIR FILTER CASE” on page 7-4.
   - Fuel tank
     Refer to “FUEL TANK” on page 7-1.
   - Rider seat
     Refer to “GENERAL CHASSIS” on page 4-1.

EAS21010

## CHECKING THE THROTTLE BODY JOINTS

The following procedure applies to all of the throttle body joints and intake manifolds.

1. Remove:
   - Rider seat
     Refer to “GENERAL CHASSIS” on page 4-1.
   - Fuel tank
     Refer to “FUEL TANK” on page 7-1.
   - Air filter case
     Refer to “AIR FILTER CASE” on page 7-4.

- Throttle body
  Refer to “THROTTLE BODIES” on page 7-7.

2. Check:
   - Throttle body joints “1”
     Cracks/damage → Replace.

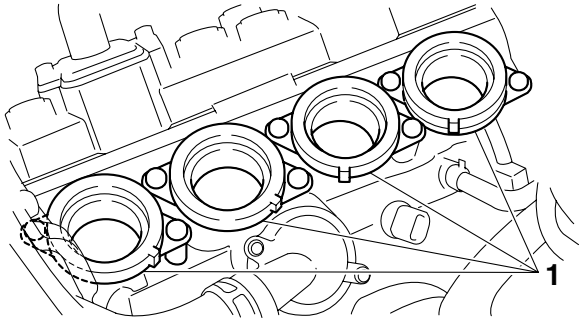


3. Install:
   - Throttle body
     Refer to “THROTTLE BODIES” on page 7-7.
   - Air filter case
     Refer to “AIR FILTER CASE” on page 7-4.
   - Fuel tank
     Refer to “FUEL TANK” on page 7-1.
   - Rider seat
     Refer to “GENERAL CHASSIS” on page 4-1.

EAS21030

## CHECKING THE FUEL LINE

The following procedure applies to all of the fuel, vacuum and breather hoses.

1. Remove:
   - Rider seat
     Refer to “GENERAL CHASSIS” on page 4-1.
   - Fuel tank
     Refer to “FUEL TANK” on page 7-1.
2. Check:
   - Fuel hoses “1”
   - Vacuum hoses
   - Overflow hose “2”
   - Breather hose “3”
     Cracks/damage → Replace.
     Loose connection → Connect properly.

ECA14940

**CAUTION:**

**Make sure the fuel tank breather hose is routed correctly.**

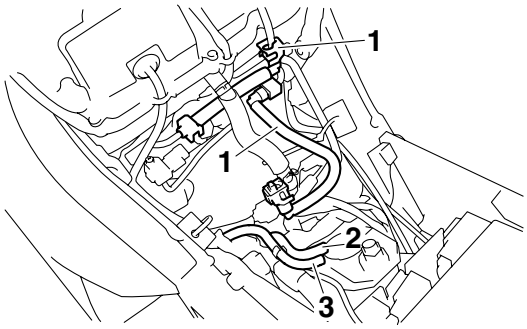


3. Install:
   - Fuel tank
     Refer to “FUEL TANK” on page 7-1.
   - Rider seat
     Refer to “GENERAL CHASSIS” on page 4-1.

EAS21070

## CHECKING THE CRANKCASE BREATHER HOSE

1. Remove:
   - Rider seat
     Refer to “GENERAL CHASSIS” on page 4-1.
   - Fuel tank
     Refer to “FUEL TANK” on page 7-1.
2. Check:
   - Crankcase breather hose “1”
     Cracks/damage → Replace.
     Loose connection → Connect properly.

ECA13450

**CAUTION:**

**Make sure the crankcase breather hose is routed correctly.**

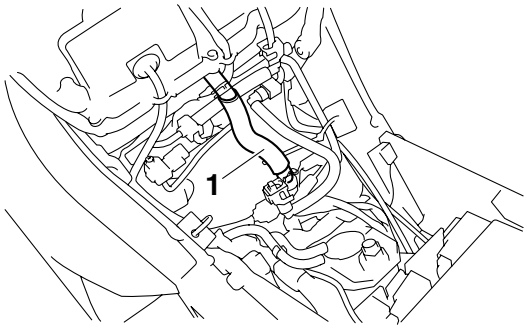


3. Install:
   - Fuel tank
     Refer to “FUEL TANK” on page 7-1.
   - Rider seat
     Refer to “GENERAL CHASSIS” on page 4-1.

EAS21080

## CHECKING THE EXHAUST SYSTEM

The following procedure applies to all of the exhaust pipe assembly and gaskets.

1. Remove:
   - Side cowlings

- Bottom cowlings
  Refer to “GENERAL CHASSIS” on page 4-1.
2. Check:
   - Exhaust pipe assembly “1”
   - Muffler “2”
     Cracks/damage → Replace.
   - Gaskets “3”
     Exhaust gas leaks → Replace.
3. Check:
   Tightening torque
   - Exhaust pipe assembly and cylinder head nuts “4”
   - Exhaust pipe assembly and exhaust pipe assembly bracket bolts “5”
   - Exhaust pipe assembly and muffler bolt “6”
   - Muffler and right rider footrest bracket bolt “7”

**Exhaust pipe assembly and cylinder head nut**
**20 Nm (2.0 m·kg, 14 ft·lb)**
**Exhaust pipe assembly and exhaust pipe assembly bracket bolt**
**20 Nm (2.0 m·kg, 14 ft·lb)**
**Exhaust pipe assembly and muffler bolt**
**10 Nm (1.0 m·kg, 7.2 ft·lb)**
**Muffler and right rider footrest bracket bolt**
**20 Nm (2.0 m·kg, 14 ft·lb)**

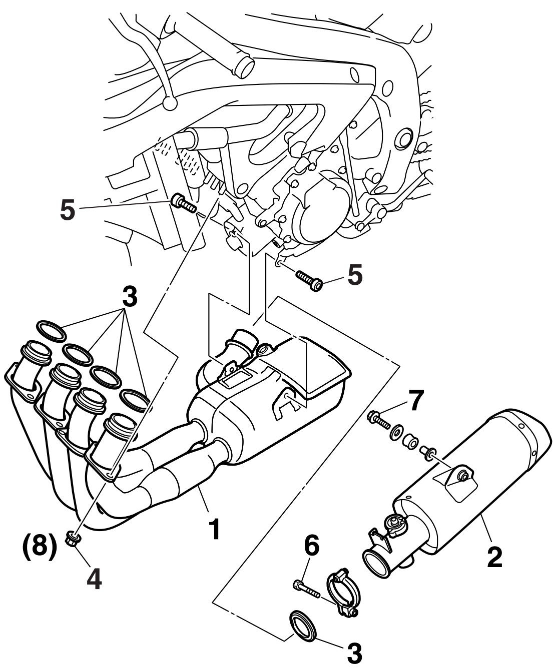


4. Install:
   - Bottom cowlings
   - Side cowlings
     Refer to “GENERAL CHASSIS” on page 4-1.

EAS21100

**ADJUSTING THE EXUP CABLES**

1. Remove:
   - EXUP valve pulley cover “1”

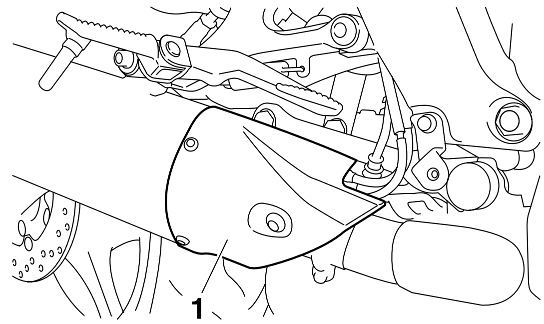


2. Check:
   - EXUP system operation

▼▼▼▼▼▼▼▼▼▼▼▼▼▼▼▼▼▼▼▼▼▼▼▼▼▼▼▼▼▼▼▼▼▼

a. Activate the diagnostic mode and select the diagnostic code number “53”.
   Refer to “FUEL INJECTION SYSTEM” on page 8-33.
b. Set the engine stop switch to “∩”.
c. Check that the EXUP valve operates properly.

**NOTE:**

Check that the projection “a” on the EXUP valve pulley contacts the stopper “b” (fully open position). If the projection does not contact the stopper, adjust the EXUP cable free play.

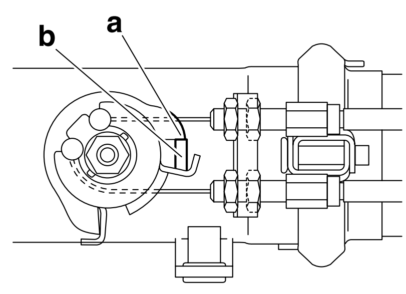


▲▲▲▲▲▲▲▲▲▲▲▲▲▲▲▲▲▲▲▲▲▲▲▲▲▲▲▲▲▲▲▲▲▲

3. Check:
   - EXUP cable free play (at the EXUP valve pulley) “a”
     Out of specification → Adjust.

**EXUP cable free play (at the EXUP valve pulley)**
**1.5 mm (0.06 in) or less**

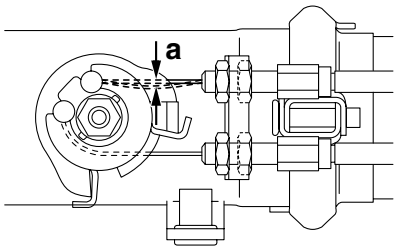


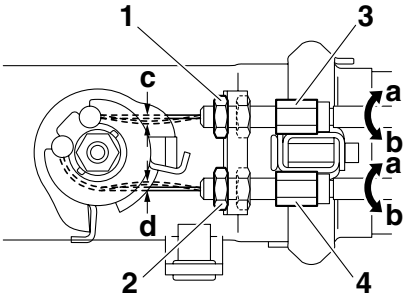


4. Adjust:
   - EXUP cable free play

▼▼▼▼▼▼▼▼▼▼▼▼▼▼▼▼▼▼▼▼▼▼▼▼▼▼▼▼▼▼▼▼▼▼▼▼

a. Loosen the locknuts “1” and “2”.
b. Turn the adjusting bolt “3” in direction “a” or “b” until the specification.

**Direction “a”**
**Free play is increased.**
**Direction “b”**
**Free play is decreased.**

**EXUP cable free play (at the EXUP valve pulley)**
**c: 1.5 mm (0.06 in) or less**

c. Tighten the locknut “1” to specification.

**Locknut (EXUP cable adjusting bolt)**
**6 Nm (0.6 m·kg, 4.3 ft·lb)**

d. Turn the adjusting bolt “4” in direction “a” or “b” until the specification.

**Direction “a”**
**Free play is increased.**
**Direction “b”**
**Free play is decreased.**

**EXUP cable free play (at the EXUP valve pulley)**
**d: 1.5 mm (0.06 in) or less**

e. Tighten the locknut “2” to specification.

**Locknut (EXUP cable adjusting bolt)**
**6 Nm (0.6 m·kg, 4.3 ft·lb)**

f. Repeat steps (2) and (3).

▲▲▲▲▲▲▲▲▲▲▲▲▲▲▲▲▲▲▲▲▲▲▲▲▲▲▲▲▲▲▲▲▲▲▲▲

5. Install:
   - EXUP valve pulley cover

**EXUP valve pulley cover bolt (front side)**
**8 Nm (0.8 m·kg, 5.8 ft·lb)**
**EXUP valve pulley cover bolt (rear side)**
**7 Nm (0.7 m·kg, 5.1 ft·lb)**

EAS21110

## CHECKING THE COOLANT LEVEL

1. Stand the vehicle on a level surface.

**NOTE:**

- Place the vehicle on a suitable stand.
- Make sure the vehicle is upright.

2. Check:
   - Coolant level
     The coolant level should be between the maximum level mark “a” and minimum level mark “b”.
     Below the minimum level mark → Remove the coolant reservoir cap, add the recommended coolant to the proper level.

**NOTE:**

To access the coolant reservoir cap, remove the right side panel. Refer to “GENERAL CHASSIS” on page 4-1.

ECA13470

**CAUTION:**

- **Adding water instead of coolant lowers the antifreeze content of the coolant. If water is used instead of coolant check, and if necessary, correct the antifreeze concentration of the coolant.**
- **Use only distilled water. However, if distilled water is not available, soft water may be used.**

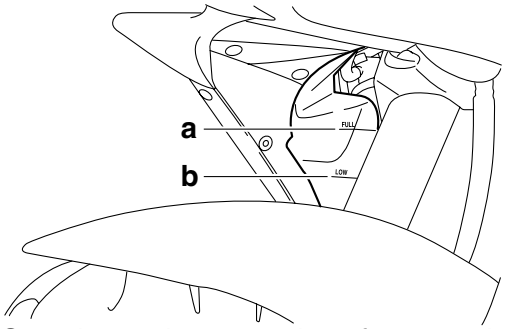


3. Start the engine, warm it up for several minutes, and then turn it off.
4. Check:
   - Coolant level

**NOTE:**

Before checking the coolant level, wait a few minutes until it settles.

EAS21120

## CHECKING THE COOLING SYSTEM

1. Remove:
   - Side cowlings
   - Bottom cowlings
     Refer to “GENERAL CHASSIS” on page 4-1.
   - Exhaust pipe assembly
     Refer to “ENGINE REMOVAL” on page 5-1.
2. Check:
   - Radiator “1”
   - Radiator inlet hose “2”
   - Radiator inlet pipe “3”
   - Thermostat outlet hose “4”
   - Radiator outlet hose “5”
   - Radiator outlet pipe “6”
   - Oil cooler “7”
   - Oil cooler outlet hose “8”
   - Oil cooler inlet hose “9”
   - Water pump outlet hose “10”
   - Water pump inlet hose
   - Water pump outlet pipe “11”
   - Water jacket joint inlet hose “12”
   - Water jacket joint “13”
     Cracks/damage → Replace.
     Refer to “RADIATOR” on page 6-1 and “OIL COOLER” on page 6-4.

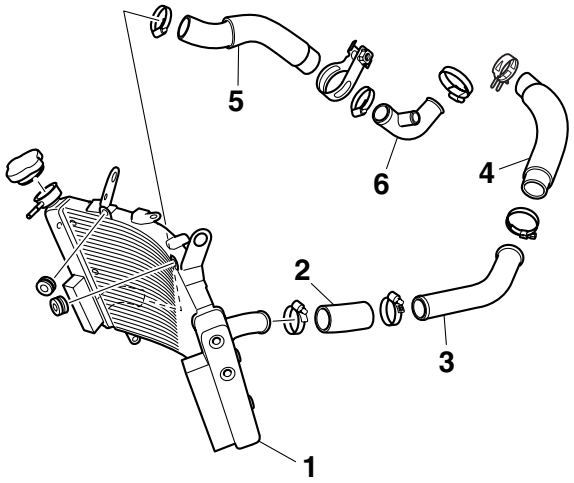


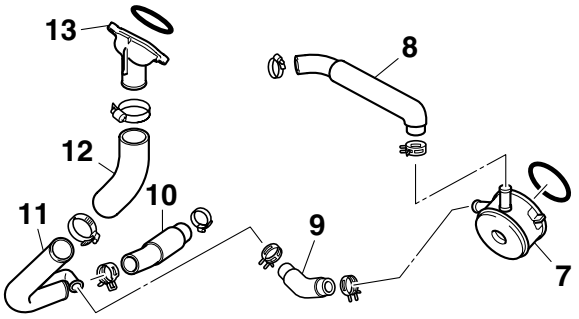


3. Install:
   - Exhaust pipe assembly
     Refer to “ENGINE REMOVAL” on page 5-1.
   - Bottom cowlings
   - Side cowlings
     Refer to “GENERAL CHASSIS” on page 4-1.

EAS21130

## CHANGING THE COOLANT

1. Remove:
   - Right side panel
   - Right upper side cowling
   - Right lower side cowling
   - Right bottom cowling
     Refer to “GENERAL CHASSIS” on page 4-1.
2. Remove:
   - Radiator cap “1”

EWA13030

**WARNING**

**A hot radiator is under pressure. Therefore, do not remove the radiator cap when the engine is hot. Scalding hot fluid and steam may**

**be blown out, which could cause serious injury. When the engine has cooled, open the radiator cap as follows:**
**Place a thick rag or a towel over the radiator cap and slowly turn the radiator cap counterclockwise toward the detent to allow any residual pressure to escape. When the hissing sound has stopped, press down on the radiator cap and turn it counterclockwise to remove.**

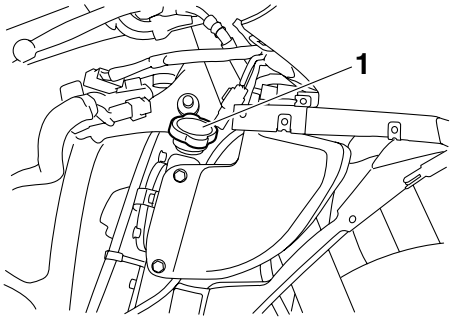


3. Remove:
   - Coolant drain bolt (water pump) “1”
     (along with the copper washer)
4. Disconnect:
   - Water pump inlet hose “2”

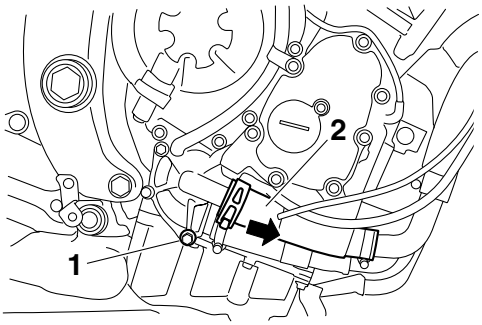


5. Drain:
   - Coolant
     (from the engine and radiator)
6. Remove:
   - Coolant reservoir “1”
   - Coolant reservoir cap “2”

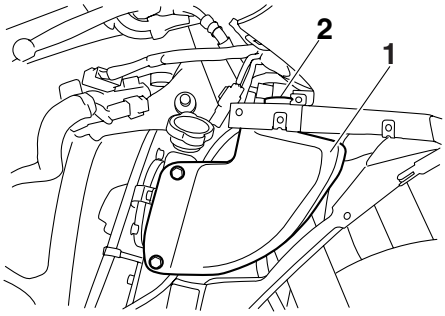


7. Drain:
   - Coolant
     (from the coolant reservoir)
8. Install:
   - Coolant reservoir
9. Connect:
   - Water pump inlet hose
10. Install:
    - Coolant drain bolt (water pump)
      (along with the copper washer New)

**Coolant drain bolt (water pump)**
**10 Nm (1.0 m·kg, 7.2 ft·lb)**

11. Fill:
    - Cooling system
      (with the specified amount of the recommended coolant)

**Recommended antifreeze**
**High-quality ethylene glycol antifreeze containing corrosion inhibitors for aluminum engines**
**Mixing ratio**
**1:1 (antifreeze:water)**
**Radiator capacity (including all routes)**
**2.30 L (2.43 US qt) (2.02 Imp.qt)**
**Coolant reservoir capacity (up to the maximum level mark)**
**0.25 L (0.26 US qt) (0.22 Imp.qt)**

Handling notes for coolant
Coolant is potentially harmful and should be handled with special care.

EWA13040
**WARNING**

- **If coolant splashes in your eyes, thoroughly wash them with water and consult a doctor.**
- **If coolant splashes on your clothes, quickly wash it away with water and then with soap and water.**
- **If coolant is swallowed, induce vomiting and get immediate medical attention.**

ECA13480
**CAUTION:**

- **Adding water instead of coolant lowers the antifreeze content of the coolant. If water is used instead of coolant check, and if necessary, correct the antifreeze concentration of the coolant.**
- **Use only distilled water. However, if distilled water is not available, soft water may be used.**

- **If coolant comes into contact with painted surfaces, immediately wash them with water.**
- **Do not mix different types of antifreeze.**

12. Install:
    - Radiator cap
13. Fill:
    - Coolant reservoir
      (with the recommended coolant to the maximum level mark “a”)

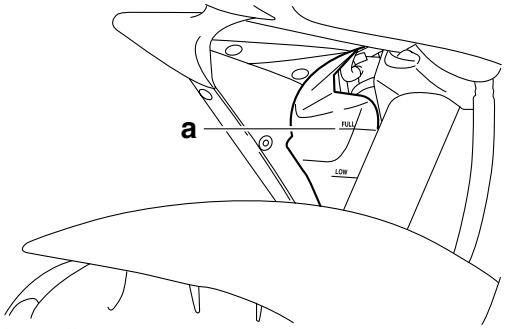


14. Install:
    - Coolant reservoir cap
15. Start the engine, warm it up for several minutes, and then stop it.
16. Check:
    - Coolant level
      Refer to “CHECKING THE COOLANT LEVEL” on page 3-17.

**NOTE:**

Before checking the coolant level, wait a few minutes until the coolant has settled.

17. Install:
    - Right bottom cowling
    - Right lower side cowling
    - Right upper side cowling
    - Right side panel
      Refer to “GENERAL CHASSIS” on page 4-1.

EAS21140

# CHASSIS

EAS21150

## ADJUSTING THE FRONT DISC BRAKE

1. Adjust:
   - Brake lever position
     (distance “a” from the throttle grip to the brake lever)

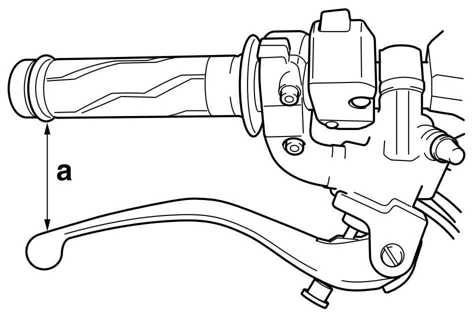


a. Push the brake lever forward.
b. Turn the adjusting knob “1” in direction “a” or “b” until the brake lever is in the desired position.

**Direction “a”**
**Brake lever distance is increased.**
**Direction “b”**
**Brake lever distance is decreased.**

c. Align the mark “c” on the adjusting knob with the mark “d” on the brake lever.

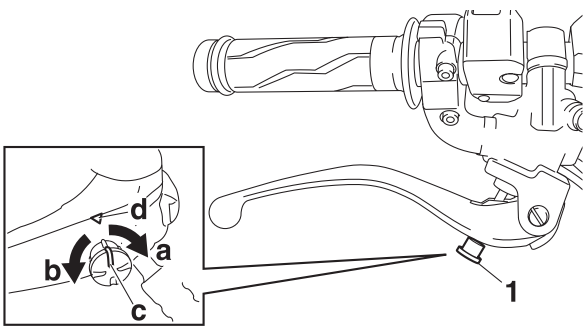


EWA13050

**WARNING**

**A soft or spongy feeling in the brake lever can indicate the presence of air in the brake system. Before the vehicle is operated, the air must be removed by bleeding the brake system. Air in the brake system will considerably reduce braking performance.**

ECA13490

**CAUTION:**

**After adjusting the brake lever position, make sure there is no brake drag.**

EAS21190

## ADJUSTING THE REAR DISC BRAKE

1. Adjust:
   - Brake pedal position

a. Loosen the locknut “1”.
b. Turn the adjusting bolt “2” in direction “a” or “b” until the specified brake pedal position is obtained.

**Direction “a”**
**Brake pedal is raised.**
**Direction “b”**
**Brake pedal is lowered.**

EWA13070

**WARNING**

**After adjusting the brake pedal position, check that the end of the adjusting bolt “c” is visible through the hole “d”.**

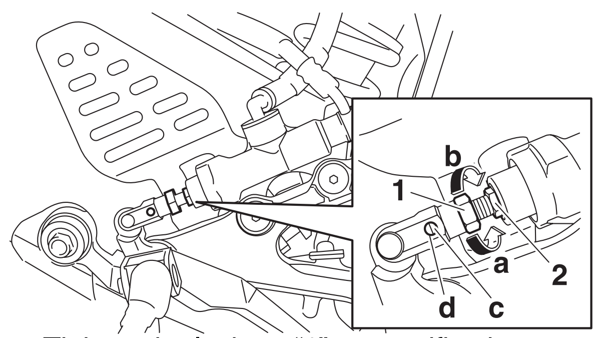


c. Tighten the locknut “1” to specification.

**Locknut**
**16 Nm (1.6 m·kg, 11 ft·lb)**

EW2C01004

**WARNING**

**A soft or spongy feeling in the brake pedal can indicate the presence of air in the brake system. Before the vehicle is operated, the air must be removed by bleeding the brake system. Air in the brake system will considerably reduce braking performance and could result in loss of control and possibly an accident. Therefore, check and, if necessary, bleed the brake system.**

EC2C01009

**CAUTION:**

**After adjusting the installed rear master cylinder length, make sure there is no brake drag.**

▲▲▲▲▲▲▲▲▲▲▲▲▲▲▲▲▲▲▲▲▲▲▲▲▲▲▲▲▲▲▲▲▲▲

2. Adjust:
   - Rear brake light switch
     Refer to “ADJUSTING THE REAR BRAKE LIGHT SWITCH” on page 3-23.

EAS21240

## CHECKING THE BRAKE FLUID LEVEL

1. Stand the vehicle on a level surface.

**NOTE:**

- Place the vehicle on a suitable stand.
- Make sure the vehicle is upright.

2. Check:
   - Brake fluid level
     Below the minimum level mark “a” → Add the recommended brake fluid to the proper level.

**Front brake**
**Recommended fluid**
**DOT 4**
**Rear brake**
**Recommended fluid**
**DOT 4**

A

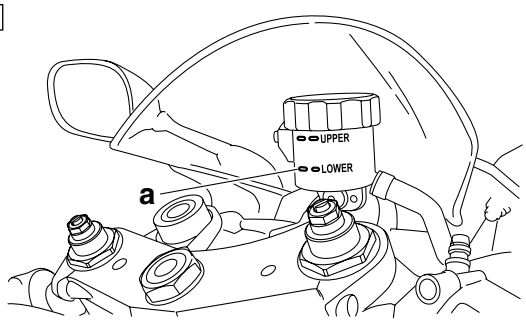


B

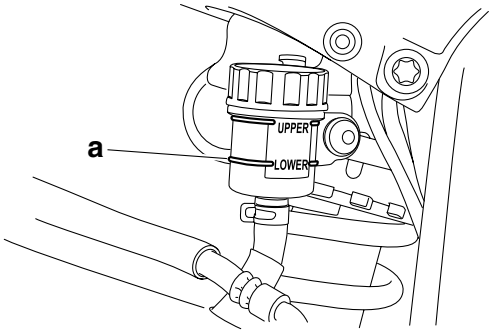


A. Front brake
B. Rear brake

EWA13090

**WARNING**

- **Use only the designated brake fluid. Other brake fluids may cause the rubber seals to deteriorate, causing leakage and poor brake performance.**
- **Refill with the same type of brake fluid that is already in the system. Mixing brake fluids may result in a harmful chemical reaction, leading to poor brake performance.**
- **When refilling, be careful that water does not enter the brake fluid reservoir. Water will significantly lower the boiling point of the brake fluid and could cause vapor lock.**

ECA13540

**CAUTION:**

**Brake fluid may damage painted surfaces and plastic parts. Therefore, always clean up any spilt brake fluid immediately.**

**NOTE:**

In order to ensure a correct reading of the brake fluid level, make sure the top of the brake fluid reservoir is horizontal.

EAS21250

## CHECKING THE FRONT BRAKE PADS

The following procedure applies to all of the brake pads.

1. Operate the brake.
2. Check:
   - Front brake pad
     Wear indicators “a” almost touch the brake disc → Replace the brake pads as a set.
     Refer to “FRONT BRAKE” on page 4-17.

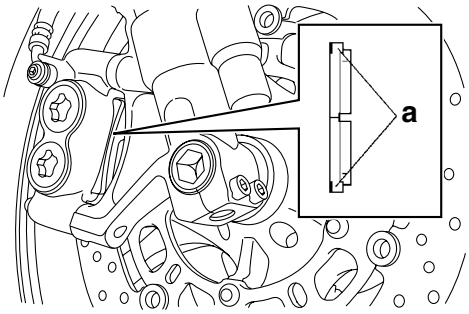


EAS21260

## CHECKING THE REAR BRAKE PADS

The following procedure applies to all of the brake pads.

1. Operate the brake.
2. Check:
   - Rear brake pad
     Wear limit “a” reached → Replace the brake pads as a set.
     Refer to “REAR BRAKE” on page 4-29.

| | |
|---|---|
| | **Limit**<br>**1.0 mm (0.04 in)** |

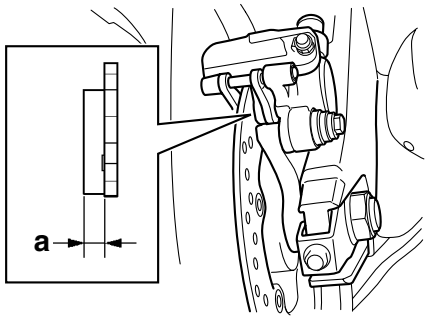


EAS21280
### CHECKING THE FRONT BRAKE HOSES

The following procedure applies to all of the brake hoses and brake hose holders.

1. Check:
   - Brake hoses “1”
     Cracks/damage/wear → Replace.
2. Check:
   - Brake hose holders “2”
     Loose → Tighten the holder bolt.

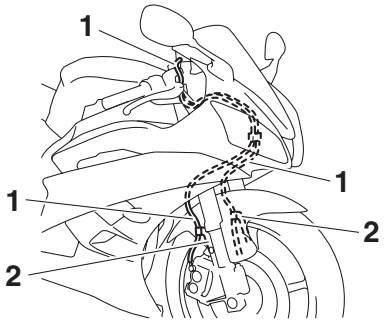


3. Hold the vehicle upright and apply the brake several times.
4. Check:
   - Brake hoses
     Brake fluid leakage → Replace the damaged hose.
     Refer to “FRONT BRAKE” on page 4-17.

EAS21290
### CHECKING THE REAR BRAKE HOSES

1. Check:
   - Brake hoses “1”
     Cracks/damage/wear → Replace.
2. Check:
   - Brake hose holders “2”
     Loose connection → Connect.

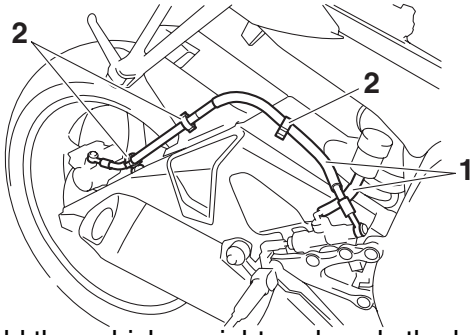


3. Hold the vehicle upright and apply the brake several times.
4. Check:
   - Brake hoses
     Brake fluid leakage → Replace the damaged hose.
     Refer to “REAR BRAKE” on page 4-29.

EAS21330
### ADJUSTING THE REAR BRAKE LIGHT SWITCH

**NOTE:**

The rear brake light switch is operated by movement of the brake pedal. The rear brake light switch is properly adjusted when the brake light comes on just before the braking effect starts.

1. Check:
   - Rear brake light operation timing
     Incorrect → Adjust.
2. Adjust:
   - Rear brake light operation timing

▼▼▼▼▼▼▼▼▼▼▼▼▼▼▼▼▼▼▼▼▼▼▼▼▼▼▼▼▼▼▼▼▼▼

a. Hold the main body “1” of the rear brake light switch so that it does not rotate and turn the adjusting nut “2” in direction “a” or “b” until the rear brake light comes on at the proper time.

| |
|---|
| **Direction “a”**<br>**Brake light comes on sooner.**<br>**Direction “b”**<br>**Brake light comes on later.** |

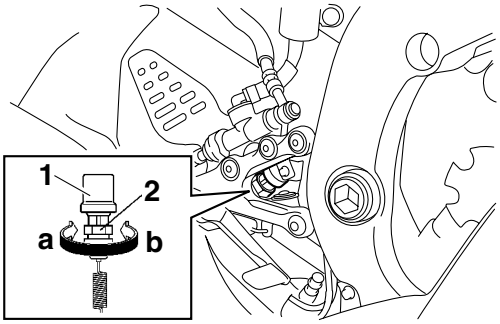


▲▲▲▲▲▲▲▲▲▲▲▲▲▲▲▲▲▲▲▲▲▲▲▲▲▲▲▲▲▲▲▲▲▲

EAS21360

## BLEEDING THE HYDRAULIC BRAKE SYSTEM

EWA13100

**WARNING**

**Bleed the hydraulic brake system whenever:**
- **the system is disassembled.**
- **a brake hose is loosened, disconnected or replaced.**
- **the brake fluid level is very low.**
- **brake operation is faulty.**

**NOTE:**

- Be careful not to spill any brake fluid or allow the brake fluid reservoir to overflow.
- When bleeding the hydraulic brake system, make sure there is always enough brake fluid before applying the brake. Ignoring this precaution could allow air to enter the hydraulic brake system, considerably lengthening the bleeding procedure.
- If bleeding is difficult, it may be necessary to let the brake fluid settle for a few hours. Repeat the bleeding procedure when the tiny bubbles in the hose have disappeared.

1. Bleed:
   - Hydraulic brake system

▼▼▼▼▼▼▼▼▼▼▼▼▼▼▼▼▼▼▼▼▼▼▼▼▼▼▼▼▼▼▼▼▼▼

a. Fill the brake fluid reservoir to the proper level with the recommended brake fluid.
b. Install the brake fluid reservoir diaphragm.
c. Connect a clear plastic hose “1” tightly to the bleed screw “2”.

A

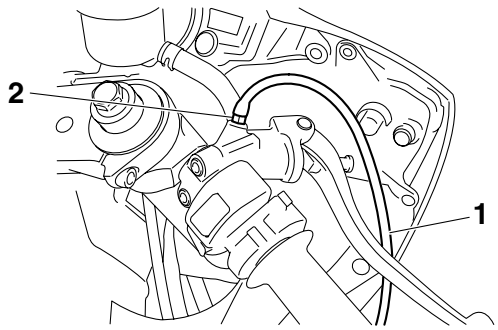


B

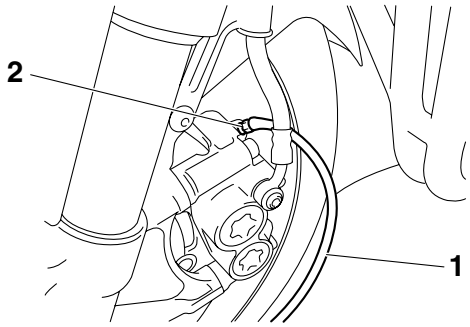


C

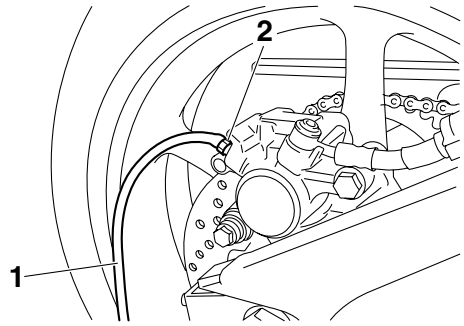


A. Front brake master cylinder
B. Front brake caliper
C. Rear brake caliper

**NOTE:**

The bleeding order of the front hydraulic brake system is the following:
1. Front brake master cylinder
2. Front brake calipers
3. Front brake master cylinder

d. Place the other end of the hose into a container.
e. Slowly apply the brake several times.
f. Fully pull the brake lever or fully press down the brake pedal and hold it in position.
g. Loosen the bleed screw.

**NOTE:**

Loosening the bleed screw will release the pressure and cause the brake lever to contact the throttle grip or the brake pedal to fully extend.

h. Tighten the bleed screw and then release the brake lever or brake pedal.
i. Repeat steps (e) to (h) until all of the air bubbles have disappeared from the brake fluid in the plastic hose.
j. Tighten the bleed screw to specification.

**Bleed screw (front brake master cylinder)**
**6 Nm (0.6 m·kg, 4.3 ft·lb)**
**Bleed screw (front brake caliper)**
**5 Nm (0.5 m·kg, 3.6 ft·lb)**
**Bleed screw (rear brake caliper)**
**5 Nm (0.5 m·kg, 3.6 ft·lb)**

k. Fill the brake fluid reservoir to the proper level with the recommended brake fluid.
Refer to "CHECKING THE BRAKE FLUID LEVEL" on page 3-22.

EWA13110

**WARNING**

**After bleeding the hydraulic brake system, check the brake operation.**

▲▲▲▲▲▲▲▲▲▲▲▲▲▲▲▲▲▲▲▲▲▲▲▲▲▲▲▲▲▲▲▲

EAS21380

## ADJUSTING THE SHIFT PEDAL

**NOTE:**

The shift pedal position is determined by the installed shift rod length "a".

1. Remove:
   - Left lower side cowling
     Refer to "GENERAL CHASSIS" on page 4-1.
2. Measure:
   - Installed shift rod length "a"
     Incorrect → Adjust.

**Installed shift rod length**
**267.2–269.2 mm (10.52–10.60 in)**

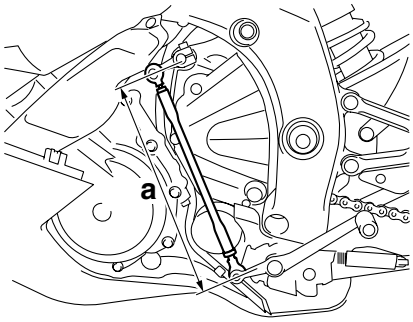


3. Adjust:
   - Installed shift rod length

▼▼▼▼▼▼▼▼▼▼▼▼▼▼▼▼▼▼▼▼▼▼▼▼▼▼▼▼▼▼▼▼

a. Loosen both locknuts "1".
b. Turn the shift rod "2" in direction "a" or "b" until the specified installed shift rod length is obtained.

**Direction "a"**
**Installed shift rod length increases.**
**Direction "b"**
**Installed shift rod length decreases.**

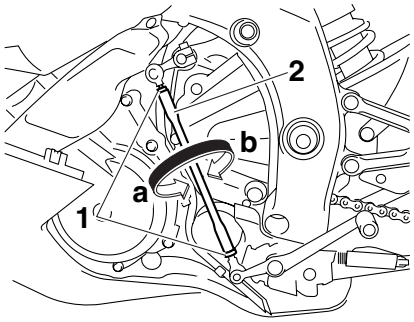


c. Tighten both locknuts to specification.

**Locknut (shift rod upper side)**
**7 Nm (0.7 m·kg, 5.1 ft·lb)**
**Locknut (shift rod lower side)**
**10 Nm (1.0 m·kg, 7.2 ft·lb)**

d. Make sure the installed shift rod length is within specification.

▲▲▲▲▲▲▲▲▲▲▲▲▲▲▲▲▲▲▲▲▲▲▲▲▲▲▲▲▲▲▲▲

4. Install:
   - Left lower side cowling
     Refer to "GENERAL CHASSIS" on page 4-1.

EAS21390

## ADJUSTING THE DRIVE CHAIN SLACK

ECA13550

**CAUTION:**

**A drive chain that is too tight will overload the engine and other vital parts, and one that is too loose can skip and damage the swingarm or cause an accident. Therefore, keep the drive chain slack within the specified limits.**

1. Stand the vehicle on a level surface.

EWA13120

**WARNING**

**Securely support the vehicle so that there is no danger of it falling over.**

**NOTE:**

Place the vehicle on a suitable stand so that the rear wheel is elevated.

2. Check:
   - Drive chain slack "a"
     Out of specification → Adjust.

| | |
|---|---|
| | **Drive chain slack**<br>**35.0–45.0 mm (1.38–1.77 in)** |

**NOTE:**

Measure the drive chain slack halfway between the drive axle and the rear wheel axle.

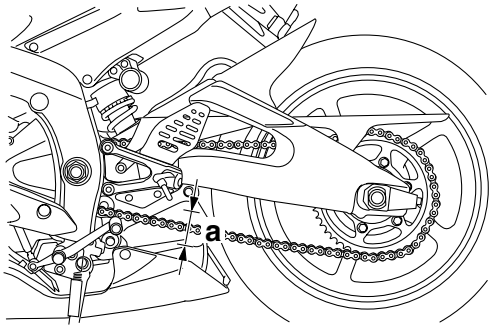


3. Adjust:
   - Drive chain slack

▼▼▼▼▼▼▼▼▼▼▼▼▼▼▼▼▼▼▼▼▼▼▼▼▼▼▼▼▼▼▼▼▼▼

a. Loosen the wheel axle nut “1”.
b. Loosen both locknuts “2”.
c. Turn both adjusting bolts “3” in direction “a” or “b” until the specified drive chain slack is obtained.

| |
|---|
| **Direction “a”**<br>**Drive chain is tightened.**<br>**Direction “b”**<br>**Drive chain is loosened.** |

**NOTE:**

Using the alignment marks “4” on each side of the swingarm, make sure that both chain pullers are in the same position for proper wheel alignment.

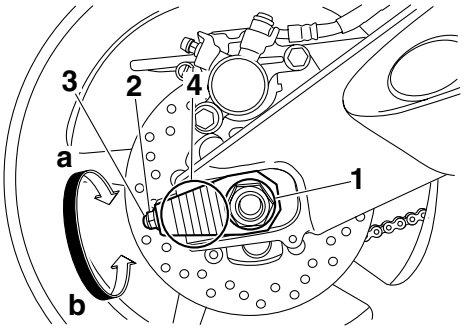


d. Tighten the wheel axle nut to specification.

| | |
|---|---|
| | **Wheel axle nut**<br>**110 Nm (11.0 m·kg, 80 ft·lb)** |

e. Tighten the drive chain adjusting bolts in direction “a” to specification.

| | |
|---|---|
| | **Drive chain adjusting bolt**<br>**2 Nm (0.2 m·kg, 1.4 ft·lb)** |

f. Tighten the locknuts to specification.

| | |
|---|---|
| | **Drive chain adjusting locknut**<br>**16 Nm (1.6 m·kg, 11 ft·lb)** |

▲▲▲▲▲▲▲▲▲▲▲▲▲▲▲▲▲▲▲▲▲▲▲▲▲▲▲▲▲▲▲▲▲▲

EAS21440

## LUBRICATING THE DRIVE CHAIN

The drive chain consists of many interacting parts. If the drive chain is not maintained properly, it will wear out quickly. Therefore, the drive chain should be serviced, especially when the vehicle is used in dusty areas.

This vehicle has a drive chain with small rubber O-rings between each side plate. Steam cleaning, high-pressure washing, certain solvents, and the use of a coarse brush can damage these O-rings. Therefore, use only kerosene to clean the drive chain. Wipe the drive chain dry and thoroughly lubricate it with engine oil or chain lubricant that is suitable for O-ring chains. Do not use any other lubricants on the drive chain since they may contain solvents that could damage the O-rings.

| | |
|---|---|
| | **Recommended lubricant**<br>**Engine oil or chain lubricant suitable for O-ring chains** |

EAS21500

## CHECKING AND ADJUSTING THE STEERING HEAD

1. Stand the vehicle on a level surface.

EWA13120

**WARNING**

**Securely support the vehicle so that there is no danger of it falling over.**

**NOTE:**

Place the vehicle on a suitable stand so that the front wheel is elevated.

2. Check:
   - Steering head
     Grasp the bottom of the front fork legs and gently rock the front fork.
     Binding/looseness → Adjust the steering head.
3. Remove:
   - Upper bracket
     Refer to “STEERING HEAD” on page 4-55.

4. Adjust:
   • Steering head

▼▼▼▼▼▼▼▼▼▼▼▼▼▼▼▼▼▼▼▼▼▼▼▼▼▼▼▼▼▼▼▼▼▼

a. Remove the lock washer “1”, upper ring nut “2”, and rubber washer “3”.

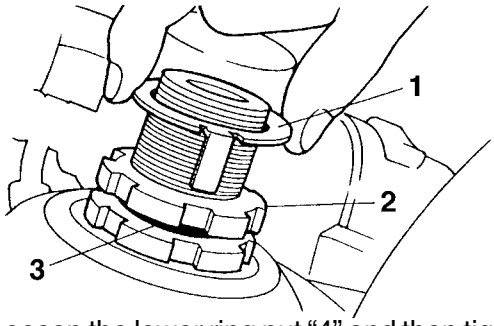


b. Loosen the lower ring nut “4” and then tighten it to specification with a steering nut wrench “5”.

| | |
|---|---|
| | **Steering nut wrench**<br>**90890-01403**<br>**Spanner wrench**<br>**YU-33975** |

| | |
|---|---|
| 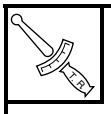 | **Lower ring nut (initial tightening torque)**<br>**52 Nm (5.2 m·kg, 37 ft·lb)** |

**NOTE:**

Set the torque wrench at a right angle to the steering nut wrench.

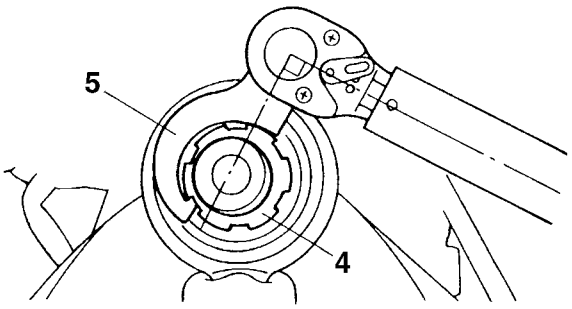


c. Loosen the lower ring nut completely, then tighten it to specification.

EWA13140

**WARNING**

**Do not overtighten the lower ring nut.**

| | |
|---|---|
| 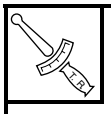 | **Lower ring nut (final tightening torque)**<br>**14 Nm (1.4 m·kg, 10 ft·lb)** |

d. Check the steering head for looseness or binding by turning the front fork all the way in both directions. If any binding is felt, remove the lower bracket and check the upper and lower bearings.
   Refer to “STEERING HEAD” on page 4-55.
e. Install the rubber washer “3”.
f. Install the upper ring nut “2”.
g. Finger tighten the upper ring nut “2”, then align the slots of both ring nuts. If necessary, hold the lower ring nut and tighten the upper ring nut until their slots are aligned.
h. Install the lock washer “1”.

**NOTE:**

Make sure the lock washer tabs “a” sit correctly in the ring nut slots “b”.

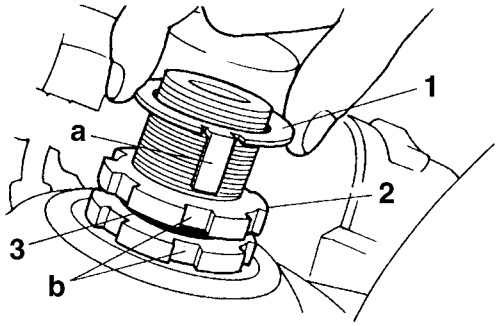


▲▲▲▲▲▲▲▲▲▲▲▲▲▲▲▲▲▲▲▲▲▲▲▲▲▲▲▲▲▲▲▲▲▲

5. Install:
   • Upper bracket
   Refer to “STEERING HEAD” on page 4-55.
6. Measure:
   • Steering head tension

▼▼▼▼▼▼▼▼▼▼▼▼▼▼▼▼▼▼▼▼▼▼▼▼▼▼▼▼▼▼▼▼▼▼

**NOTE:**

Make sure all of the cables and wires are properly routed.

a. Point the front wheel straight ahead.
b. Install a plastic locking tie “1” loosely around the end of the handlebar as shown.
c. Hook a spring gauge “2” onto the plastic locking tie.

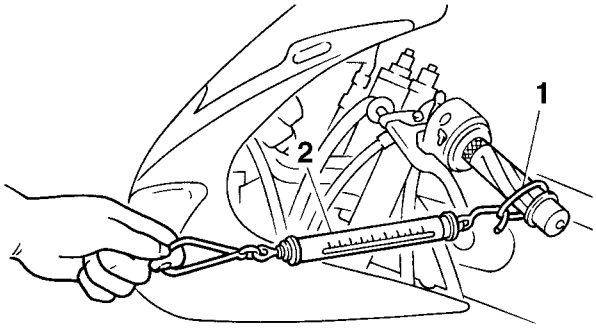

d. Hold the spring gauge at a 90° angle from the handlebar, pull the spring gauge, and then record the measurement when the handlebar starts to run.

| | |
|---|---|
| | **Steering head tension**<br>**200–500 g** |

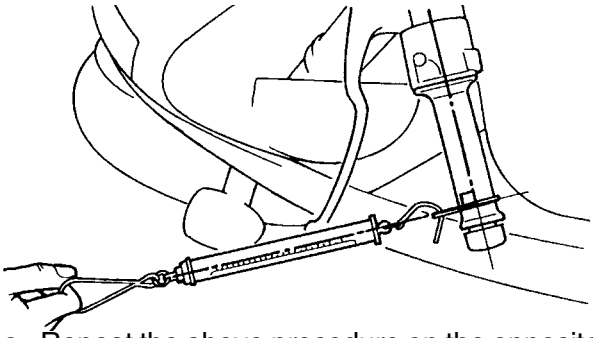

e. Repeat the above procedure on the opposite handlebar.
f. If the steering head tension is out of specification (both handlebars should be within specification), remove the upper bracket and loosen or tighten the lower ring nut.
g. Reinstall the upper bracket and measure the steering head tension again as described above.
h. Repeat the above procedure until the steering head tension is within specification.
i. Grasp the bottom of the front fork legs and gently rock the front fork.
   Binding/looseness → Adjust the steering head.

▲▲▲▲▲▲▲▲▲▲▲▲▲▲▲▲▲▲▲▲▲▲▲▲▲▲▲▲▲▲▲▲▲▲

EAS21530

## CHECKING THE FRONT FORK

1. Stand the vehicle on a level surface.

EWA13120

**WARNING**

**Securely support the vehicle so that there is no danger of it falling over.**

2. Check:
   - Inner tube “1”
     Damage/scratches → Replace.
   - Oil seal “2”
     Oil leakage → Replace.

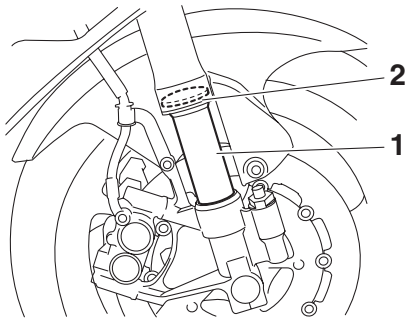


3. Hold the vehicle upright and apply the front brake.
4. Check:
   - Front fork operation
     Push down hard on the handlebar several times and check if the front fork rebounds smoothly.
     Rough movement → Repair.
     Refer to “FRONT FORK” on page 4-44.

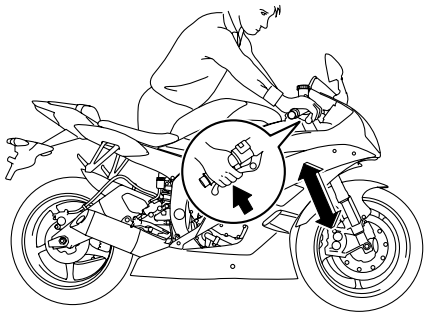

EAS21580

## ADJUSTING THE FRONT FORK LEGS

The following procedure applies to both of the front fork legs.

EW2C01006

**WARNING**

- **Always adjust both front fork legs evenly. Uneven adjustment can result in poor handling and loss of stability.**
- **Securely support the vehicle so that there is no danger of it falling over.**

### Spring preload

ECA13570

**CAUTION:**

- **Grooves are provided to indicate the adjustment position.**
- **Never go beyond the maximum or minimum adjustment positions.**

1. Adjust:
   - Spring preload

▼▼▼▼▼▼▼▼▼▼▼▼▼▼▼▼▼▼▼▼▼▼▼▼▼▼▼▼▼▼▼▼▼▼

a. Turn the adjusting bolt “1” in direction “a” or “b”.

**Direction "a"**
**Spring preload is increased (suspension is harder).**
**Direction "b"**
**Spring preload is decreased (suspension is softer).**

**Spring preload adjusting positions**
**Minimum**
**0**
**Standard**
**1**
**Maximum**
**5**

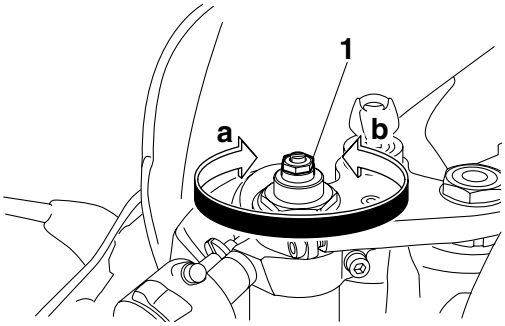


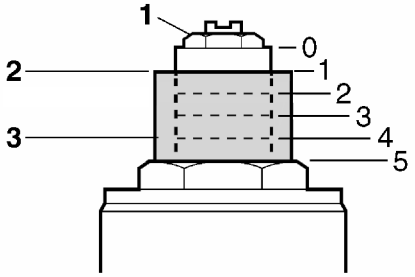


2. Current setting
3. Cap bolt collar

▲▲▲▲▲▲▲▲▲▲▲▲▲▲▲▲▲▲▲▲▲▲▲▲▲▲▲▲▲▲▲▲

### Rebound damping

ECA13590

**CAUTION:**

**Never go beyond the maximum or minimum adjustment positions.**

1. Adjust:
   - Rebound damping

▼▼▼▼▼▼▼▼▼▼▼▼▼▼▼▼▼▼▼▼▼▼▼▼▼▼▼▼▼▼▼▼

a. Turn the adjusting screw "1" in direction "a" or "b".

**Direction "a" (turn in)**
**Rebound damping is increased (suspension is harder).**
**Direction "b" (turn out)**
**Rebound damping is decreased (suspension is softer).**

**Rebound damping adjusting positions**
**Minimum**
**17 click(s) out***
**Standard**
**15 click(s) out***
**Maximum**
**1 click(s) out***

*** With the adjusting screw fully turned in**

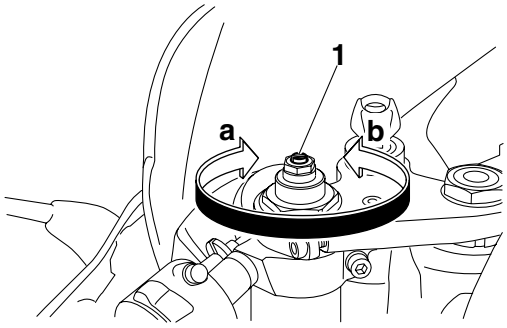


▲▲▲▲▲▲▲▲▲▲▲▲▲▲▲▲▲▲▲▲▲▲▲▲▲▲▲▲▲▲▲▲

### Compression damping

ECA13590

**CAUTION:**

**Never go beyond the maximum or minimum adjustment positions.**

1. Adjust:
   - Compression damping (fast compression damping)

▼▼▼▼▼▼▼▼▼▼▼▼▼▼▼▼▼▼▼▼▼▼▼▼▼▼▼▼▼▼▼▼

a. Turn the adjusting bolt "1" in direction "a" or "b".

**Direction "a"**
**Compression damping is increased (suspension is harder).**
**Direction "b"**
**Compression damping is decreased (suspension is softer).**

**Compression damping adjusting positions (fast compression damping)**
**Minimum**
**Distance "c" = 8 mm (0.31 in)**
**Standard**
**Distance "c" = 10 mm (0.39 in)**
**Maximum**
**Distance "c" = 12 mm (0.47 in)**

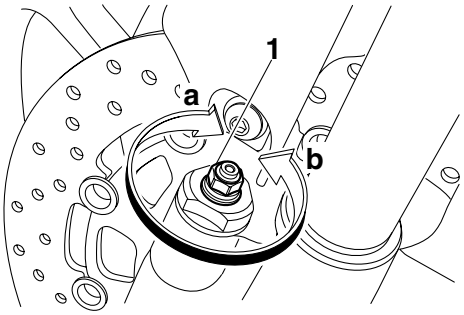


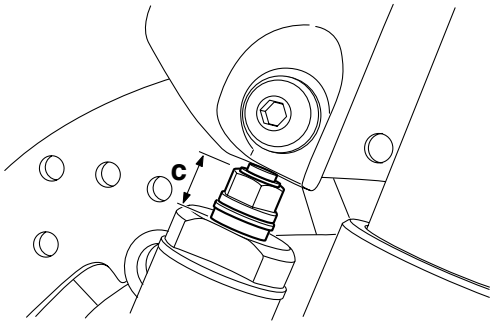


▲▲▲▲▲▲▲▲▲▲▲▲▲▲▲▲▲▲▲▲▲▲▲▲▲▲▲▲▲▲▲▲

2. Adjust:
   - Compression damping (slow compression damping)

▼▼▼▼▼▼▼▼▼▼▼▼▼▼▼▼▼▼▼▼▼▼▼▼▼▼▼▼▼▼▼▼

a. Turn the adjusting bolt "1" in direction "a" or "b".

**Direction "a" (turn in)**
**Compression damping is increased (suspension is harder).**
**Direction "b" (turn out)**
**Compression damping is decreased (suspension is softer).**

**Compression damping adjusting positions (slow compression damping)**
**Minimum**
**16 click(s) out***
**Standard**
**10 click(s) out***
**Maximum**
**1 click(s) out***
*** With the adjusting bolt fully turned in**

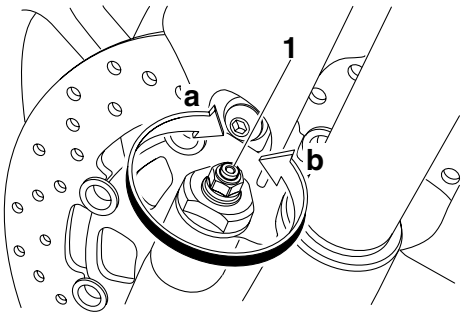


▲▲▲▲▲▲▲▲▲▲▲▲▲▲▲▲▲▲▲▲▲▲▲▲▲▲▲▲▲▲▲▲

EAS21610

## ADJUSTING THE REAR SHOCK ABSORBER ASSEMBLY

EWA13120

**WARNING**

**Securely support the vehicle so that there is no danger of it falling over.**

### Spring preload

ECA13590

**CAUTION:**

**Never go beyond the maximum or minimum adjustment positions.**

1. Adjust:
   - Spring preload

▼▼▼▼▼▼▼▼▼▼▼▼▼▼▼▼▼▼▼▼▼▼▼▼▼▼▼▼▼▼▼▼

a. Adjust the spring preload with the special wrench and wrench handle included in the owner's tool kit.
b. Turn the adjusting ring "1" in direction "a" or "b".
c. Align the desired position on the adjusting ring with the position indicator "2".

**Direction "a"**
**Spring preload is increased (suspension is harder).**
**Direction "b"**
**Spring preload is decreased (suspension is softer).**

**Spring preload adjusting positions**
**Minimum**
**1**
**Standard**
**4**
**Maximum**
**9**

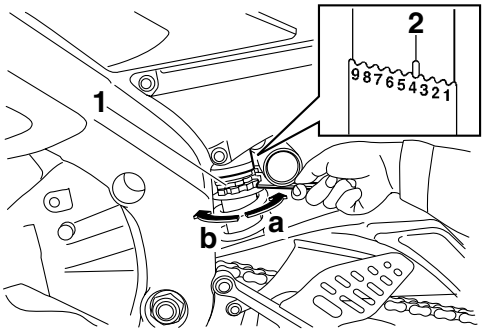


▲▲▲▲▲▲▲▲▲▲▲▲▲▲▲▲▲▲▲▲▲▲▲▲▲▲▲▲▲▲▲▲▲▲

### Rebound damping

ECA13590

**CAUTION:**

**Never go beyond the maximum or minimum adjustment positions.**

1. Adjust:
   - Rebound damping

▼▼▼▼▼▼▼▼▼▼▼▼▼▼▼▼▼▼▼▼▼▼▼▼▼▼▼▼▼▼▼▼▼▼

a. Turn the adjusting screw “1” in direction “a” or “b”.

**Direction “a” (turn in)**
**Rebound damping is increased (suspension is harder).**
**Direction “b” (turn out)**
**Rebound damping is decreased (suspension is softer).**

**Rebound damping adjusting positions**
**Minimum**
**20 click(s) out***
**Standard**
**10 click(s) out***
**Maximum**
**3 click(s) out***

*** With the adjusting screw fully turned in**

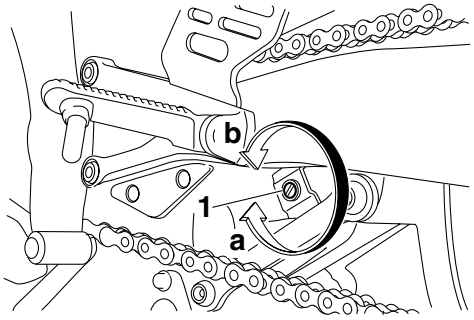


▲▲▲▲▲▲▲▲▲▲▲▲▲▲▲▲▲▲▲▲▲▲▲▲▲▲▲▲▲▲▲▲▲▲

### Compression damping

ECA13590

**CAUTION:**

**Never go beyond the maximum or minimum adjustment positions.**

1. Adjust:
   - Compression damping (fast compression damping)

▼▼▼▼▼▼▼▼▼▼▼▼▼▼▼▼▼▼▼▼▼▼▼▼▼▼▼▼▼▼▼▼▼▼

a. Turn the adjusting screw “1” in direction “a” or “b”.

**Direction “a” (turn in)**
**Compression damping is increased (suspension is harder).**
**Direction “b” (turn out)**
**Compression damping is decreased (suspension is softer).**

**Compression damping adjusting positions (fast compression damping)**
**Minimum**
**16 click(s) out***
**Standard**
**7 click(s) out***
**Maximum**
**1 click(s) out***

*** With the adjusting screw fully turned in**

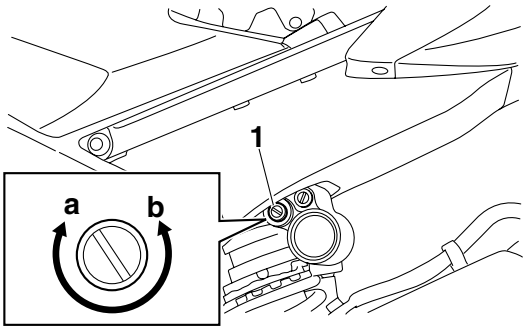


▲▲▲▲▲▲▲▲▲▲▲▲▲▲▲▲▲▲▲▲▲▲▲▲▲▲▲▲▲▲▲▲▲▲

2. Adjust:
   - Compression damping (slow compression damping)

▼▼▼▼▼▼▼▼▼▼▼▼▼▼▼▼▼▼▼▼▼▼▼▼▼▼▼▼▼▼▼▼▼▼

a. Turn the adjusting screw "1" in direction "a" or "b".

**Direction "a" (turn in)**
**Compression damping is increased (suspension is harder).**
**Direction "b" (turn out)**
**Compression damping is decreased (suspension is softer).**

**Compression damping adjusting positions (slow compression damping)**
**Minimum**
**24 click(s) out***
**Standard**
**15 click(s) out***
**Maximum**
**1 click(s) out***

*** With the adjusting screw fully turned in**

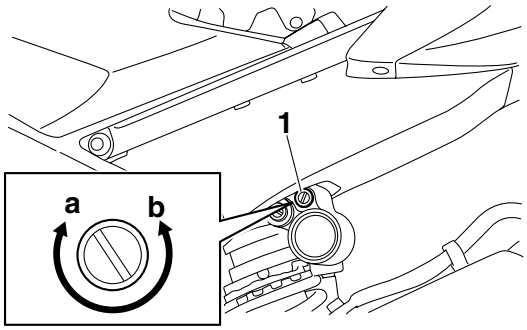


▲▲▲▲▲▲▲▲▲▲▲▲▲▲▲▲▲▲▲▲▲▲▲▲▲▲▲▲▲▲▲▲▲▲

EAS21650

## CHECKING THE TIRES

The following procedure applies to both of the tires.

1. Check:
   - Tire pressure
     Out of specification → Regulate.

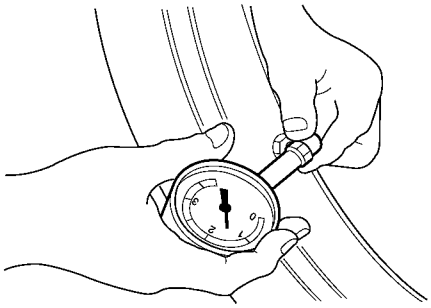

EWA13180

**WARNING**

- **The tire pressure should only be checked and regulated when the tire temperature equals the ambient air temperature.**
- **The tire pressure and the suspension must be adjusted according to the total weight (including cargo, rider, passenger and accessories) and the anticipated riding speed.**
- **Operation of an overloaded vehicle could cause tire damage, an accident or an injury.**

**NEVER OVERLOAD THE VEHICLE.**

**Tire air pressure (measured on cold tires)**
**Loading condition**
**0–90 kg (0–198 lb)**
**Front**
**250 kPa (36 psi) (2.50 kgf/cm²)**
**Rear**
**250 kPa (36 psi) (2.50 kgf/cm²)**
**Loading condition**
**90–193 kg (198–425 lb)**
**Front**
**250 kPa (36 psi) (2.50 kgf/cm²)**
**Rear**
**290 kPa (42 psi) (2.90 kgf/cm²)**
**High-speed riding**
**Front**
**250 kPa (36 psi) (2.50 kgf/cm²)**
**Rear**
**250 kPa (36 psi) (2.50 kgf/cm²)**
**Maximum load**
**193 kg (425 lb)**

*** Total weight of rider, passenger, cargo and accessories**

EWA13190

**WARNING**

**It is dangerous to ride with a worn-out tire. When the tire tread reaches the wear limit, replace the tire immediately.**

2. Check:
   - Tire surfaces
     Damage/wear → Replace the tire.

**Wear limit (front)**
**1.0 mm (0.04 in)**
**Wear limit (rear)**
**1.0 mm (0.04 in)**

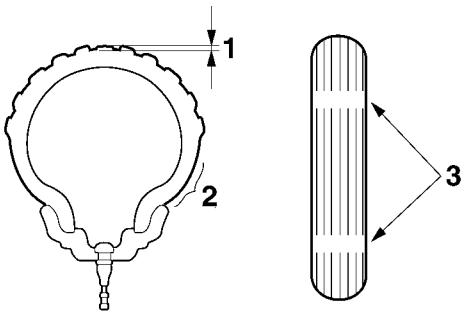


1. Tire tread depth
2. Side wall
3. Wear indicator

EWA14080

**WARNING**

- **Do not use a tubeless tire on a wheel designed only for tube tires to avoid tire failure and personal injury from sudden deflation.**
- **When using a tube tire, be sure to install the correct tube.**
- **Always replace a new tube tire and a new tube as a set.**
- **To avoid pinching the tube, make sure the wheel rim band and tube are centered in the wheel groove.**
- **Patching a punctured tube is not recommended. If it is absolutely necessary to do so, use great care and replace the tube as soon as possible with a good quality replacement.**

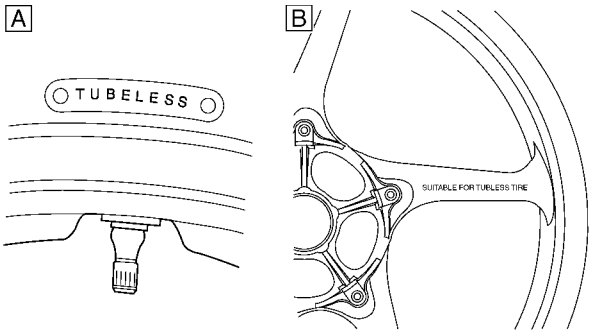


A. Tire
B. Wheel

| | |
|---|---|
| Tube wheel | Tube tire only |
| Tubeless wheel | Tube or tubeless tire |

EWA14090

**WARNING**

**After extensive tests, the tires listed below have been approved by Yamaha Motor Co., Ltd. for this model. The front and rear tires should always be by the same manufacturer and of the same design. No guarantee concerning handling characteristics can be given if a tire combination other than one approved by Yamaha is used on this vehicle.**

**Front tire**
**Size**
**120/70 ZR17M/C (58W)**
**Manufacturer/model**
**DUNLOP/D209F PT**
**Manufacturer/model**
**MICHELIN/Pilot POWER P**

**Rear tire**
**Size**
**180/55 ZR17M/C (73W)**
**Manufacturer/model**
**DUNLOP/D209PT**
**Manufacturer/model**
**MICHELIN/Pilot POWER**

EWA13210

**WARNING**

**New tires have a relatively low grip on the road surface until they have been slightly worn. Therefore, approximately 100 km should be traveled at normal speed before any high-speed riding is done.**

**NOTE:**

For tires with a direction of rotation mark “1”:
- Install the tire with the mark pointing in the direction of wheel rotation.
- Align the mark “2” with the valve installation point.

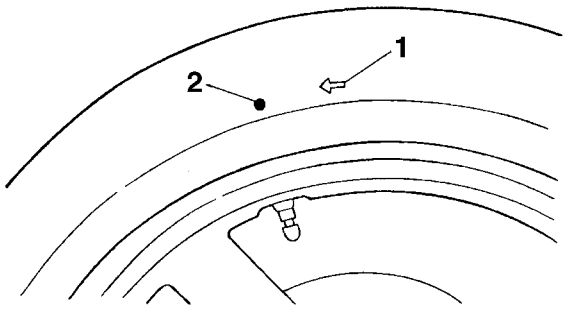


EAS21670

## CHECKING THE WHEELS

The following procedure applies to both of the wheels.

1. Check:
   - Wheel
     Damage/out-of-round → Replace.

EWA13260

**WARNING**

**Never attempt to make any repairs to the wheel.**

**NOTE:**

After a tire or wheel has been changed or replaced, always balance the wheel.

EAS21690

## CHECKING AND LUBRICATING THE CABLES

The following procedure applies to all of the inner and outer cables.

EWA13270

**WARNING**

**Damaged outer cable may cause the cable to corrode and interfere with its movement. Replace damaged outer cable and inner cables as soon as possible.**

1. Check:
   - Outer cable
     Damage → Replace.
2. Check:
   - Cable operation
     Rough movement → Lubricate.

| | |
|---|---|
| | **Recommended lubricant**<br>**Engine oil or a suitable cable lubricant** |

**NOTE:**

Hold the cable end upright and pour a few drops of lubricant into the cable sheath or use a suitable lubricating device.

EAS21700

## LUBRICATING THE LEVERS

Lubricate the pivoting point and metal-to-metal moving parts of the levers.

| | |
|---|---|
| | **Recommended lubricant**<br>**Lithium-soap-based grease** |

EAS21710

## LUBRICATING THE PEDALS

Lubricate the pivoting point and metal-to-metal moving parts of the pedals.

| | |
|---|---|
| | **Recommended lubricant**<br>**Lithium-soap-based grease** |

EAS21720

## LUBRICATING THE SIDESTAND

Lubricate the pivoting point and metal-to-metal moving parts of the sidestand.

| | |
|---|---|
| | **Recommended lubricant**<br>**Lithium-soap-based grease** |

EAS21740

## LUBRICATING THE REAR SUSPENSION

Lubricate the pivoting point and metal-to-metal moving parts of the rear suspension.

| | |
|---|---|
| | **Recommended lubricant**<br>**Lithium-soap-based grease** |

EAS21750

# ELECTRICAL SYSTEM

EAS21760

## CHECKING AND CHARGING THE BATTERY

Refer to “ELECTRICAL COMPONENTS” on page 8-87.

EAS21770

## CHECKING THE FUSES

Refer to “ELECTRICAL COMPONENTS” on page 8-87.

EAS21790

## REPLACING THE HEADLIGHT BULBS

The following procedure applies to both of the headlight bulbs.

1. Remove:
   - Headlight bulb cover “1”

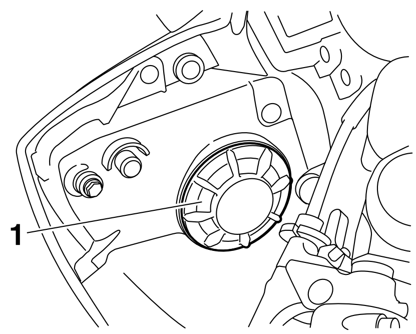


2. Disconnect:
   - Headlight coupler “1”

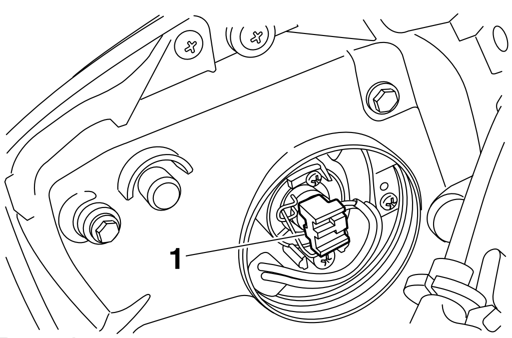


3. Detach:
   - Headlight bulb holder “1”

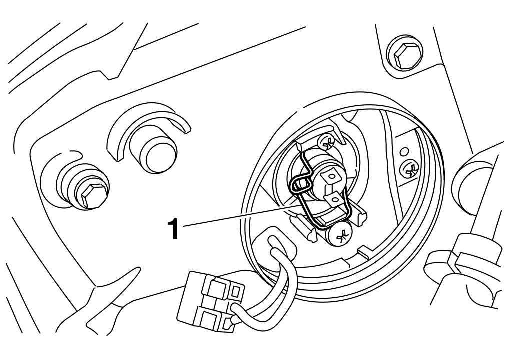


4. Remove:
   - Headlight bulb

EWA13320

**WARNING**

**Since the headlight bulb gets extremely hot, keep flammable products and your hands away from the bulb until it has cooled down.**

5. Install:
   - Headlight bulb New

     Secure the new headlight bulb with the headlight bulb holder.

ECA13690

**CAUTION:**

**Avoid touching the glass part of the headlight bulb to keep it free from oil, otherwise the transparency of the glass, the life of the bulb and the luminous flux will be adversely affected. If the headlight bulb gets soiled, thoroughly clean it with a cloth moistened with alcohol or lacquer thinner.**

6. Attach:
   - Headlight bulb holder
7. Connect:
   - Headlight coupler
8. Install:
   - Headlight bulb cover

EAS21810

## ADJUSTING THE HEADLIGHT BEAMS

The following procedure applies to both of the headlights.

1. Adjust:
   - Headlight beam (vertically)

▼▼▼▼▼▼▼▼▼▼▼▼▼▼▼▼▼▼▼▼▼▼▼▼▼▼▼▼▼▼▼▼▼▼▼

a. Turn the adjusting screw “1” in direction “a” or “b”.

**Direction “a”**
**Headlight beam is raised.**
**Direction “b”**
**Headlight beam is lowered.**

A

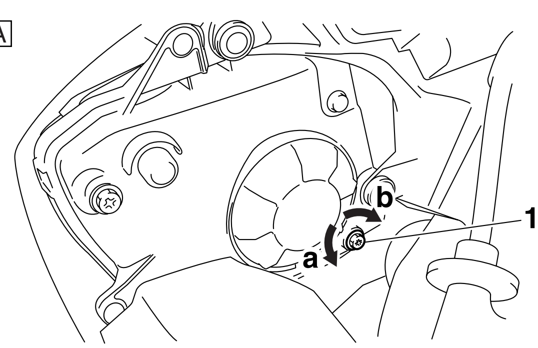

B

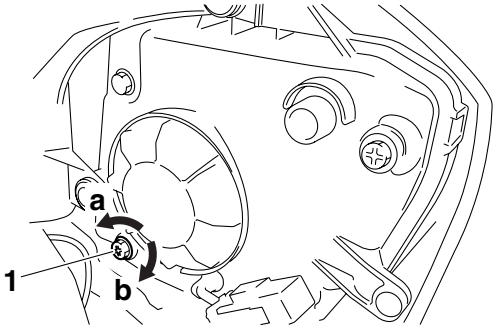


A. Left headlight
B. Right headlight

▲▲▲▲▲▲▲▲▲▲▲▲▲▲▲▲▲▲▲▲▲▲▲▲▲▲▲▲▲▲▲▲

2. Adjust:
   • Headlight beam (horizontally)

▼▼▼▼▼▼▼▼▼▼▼▼▼▼▼▼▼▼▼▼▼▼▼▼▼▼▼▼▼▼▼▼

a. Turn the adjusting screw “1” in direction “a” or “b”.

**Direction “a”**
**Headlight beam moves to the left.**
**Direction “b”**
**Headlight beam moves to the right.**

A

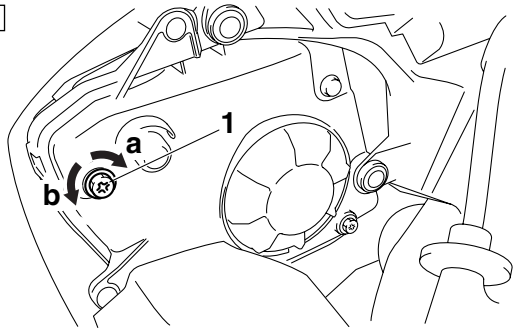


B

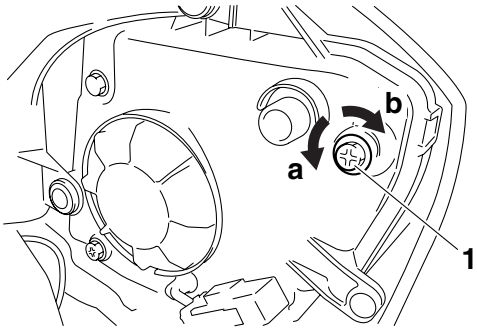


A. Left headlight
B. Right headlight

▲▲▲▲▲▲▲▲▲▲▲▲▲▲▲▲▲▲▲▲▲▲▲▲▲▲▲▲▲▲▲▲

# CHASSIS

**GENERAL CHASSIS** ..... 4-1

**FRONT WHEEL** ..... 4-4
REMOVING THE FRONT WHEEL ..... 4-7
DISASSEMBLING THE FRONT WHEEL..... 4-7
CHECKING THE FRONT WHEEL ..... 4-7
ASSEMBLING THE FRONT WHEEL..... 4-8
ADJUSTING THE FRONT WHEEL STATIC BALANCE ..... 4-8
CHECKING THE FRONT BRAKE DISCS..... 4-9
INSTALLING THE FRONT WHEEL (FRONT BRAKE DISCS) ..... 4-9

**REAR WHEEL**..... 4-11
REMOVING THE REAR WHEEL..... 4-14
DISASSEMBLING THE REAR WHEEL ..... 4-14
CHECKING THE REAR WHEEL ..... 4-14
CHECKING THE REAR BRAKE CALIPER BRACKET..... 4-14
CHECKING THE REAR WHEEL DRIVE HUB..... 4-14
CHECKING AND REPLACING THE REAR WHEEL SPROCKET ..... 4-14
ASSEMBLING THE REAR WHEEL ..... 4-15
ADJUSTING THE REAR WHEEL STATIC BALANCE ..... 4-15
CHECKING THE REAR BRAKE DISC ..... 4-15
INSTALLING THE REAR WHEEL (REAR BRAKE DISC) ..... 4-15

**FRONT BRAKE**..... 4-17
INTRODUCTION..... 4-22
CHECKING THE FRONT BRAKE DISCS..... 4-22
REPLACING THE FRONT BRAKE PADS ..... 4-23
REMOVING THE FRONT BRAKE CALIPERS ..... 4-24
DISASSEMBLING THE FRONT BRAKE CALIPERS ..... 4-24
CHECKING THE FRONT BRAKE CALIPERS..... 4-24
ASSEMBLING THE FRONT BRAKE CALIPERS ..... 4-25
INSTALLING THE FRONT BRAKE CALIPERS..... 4-25
REMOVING THE FRONT BRAKE MASTER CYLINDER..... 4-26
CHECKING THE FRONT BRAKE MASTER CYLINDER ..... 4-26
ASSEMBLING THE FRONT BRAKE MASTER CYLINDER..... 4-26
INSTALLING THE FRONT BRAKE MASTER CYLINDER ..... 4-27

**REAR BRAKE** ..... 4-29
INTRODUCTION ..... 4-34
CHECKING THE REAR BRAKE DISC ..... 4-34
REPLACING THE REAR BRAKE PADS ..... 4-34
REMOVING THE REAR BRAKE CALIPER ..... 4-35
DISASSEMBLING THE REAR BRAKE CALIPER ..... 4-35
CHECKING THE REAR BRAKE CALIPER ..... 4-36
ASSEMBLING THE REAR BRAKE CALIPER ..... 4-36
INSTALLING THE REAR BRAKE CALIPER ..... 4-37
REMOVING THE REAR BRAKE MASTER CYLINDER ..... 4-38
CHECKING THE REAR BRAKE MASTER CYLINDER ..... 4-38
ASSEMBLING THE REAR BRAKE MASTER CYLINDER ..... 4-38
INSTALLING THE REAR BRAKE MASTER CYLINDER ..... 4-38

**HANDLEBARS** ..... 4-40
REMOVING THE HANDLEBARS ..... 4-42
CHECKING THE HANDLEBARS ..... 4-42
INSTALLING THE HANDLEBARS ..... 4-42

**FRONT FORK** ..... 4-44
REMOVING THE FRONT FORK LEGS ..... 4-47
DISASSEMBLING THE FRONT FORK LEGS ..... 4-47
CHECKING THE FRONT FORK LEGS ..... 4-48
ASSEMBLING THE FRONT FORK LEGS ..... 4-49
INSTALLING THE FRONT FORK LEGS ..... 4-53

**STEERING HEAD** ..... 4-55
REMOVING THE LOWER BRACKET ..... 4-58
CHECKING THE STEERING HEAD ..... 4-58
INSTALLING THE STEERING HEAD ..... 4-58

**REAR SHOCK ABSORBER ASSEMBLY** ..... 4-60
HANDLING THE REAR SHOCK ABSORBER ..... 4-62
DISPOSING OF A REAR SHOCK ABSORBER ..... 4-62
REMOVING THE REAR SHOCK ABSORBER ASSEMBLY ..... 4-62
CHECKING THE REAR SHOCK ABSORBER ASSEMBLY ..... 4-62
CHECKING THE CONNECTING ARM AND RELAY ARM ..... 4-63
INSTALLING THE RELAY ARM ..... 4-63
INSTALLING THE REAR SHOCK ABSORBER ASSEMBLY ..... 4-63

**SWINGARM** ..... 4-65
REMOVING THE SWINGARM ..... 4-67
CHECKING THE SWINGARM ..... 4-67
INSTALLING THE SWINGARM ..... 4-68

**CHAIN DRIVE** ..... 4-70
REMOVING THE DRIVE CHAIN ..... 4-71
CHECKING THE DRIVE CHAIN ..... 4-71
CHECKING THE DRIVE SPROCKET ..... 4-72
CHECKING THE REAR WHEEL SPROCKET ..... 4-72
CHECKING THE REAR WHEEL DRIVE HUB ..... 4-72
INSTALLING THE DRIVE CHAIN ..... 4-72

EAS21830

# GENERAL CHASSIS

**Removing the seat and battery**

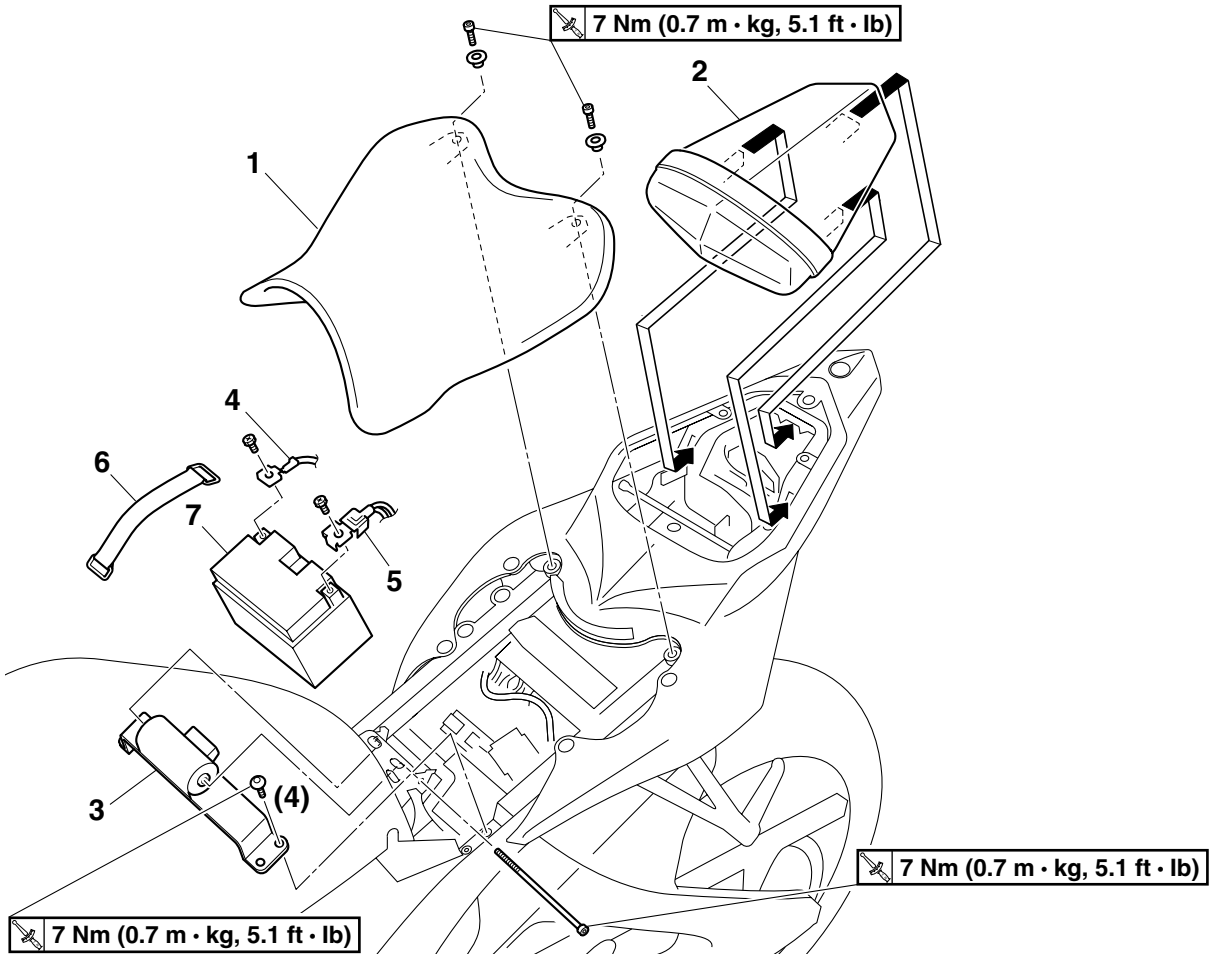


| Order | Job/Parts to remove | Q'ty | Remarks |
|---|---|---|---|
| 1 | Rider seat | 1 | |
| 2 | Passenger seat | 1 | |
| 3 | Fuel tank bracket | 1 | |
| 4 | Negative battery lead | 1 | Disconnect. |
| 5 | Positive battery lead | 1 | Disconnect. |
| 6 | Battery band | 1 | |
| 7 | Battery | 1 | |
| | | | For installation, reverse the removal procedure. |

**Removing the tail/brake light assembly**

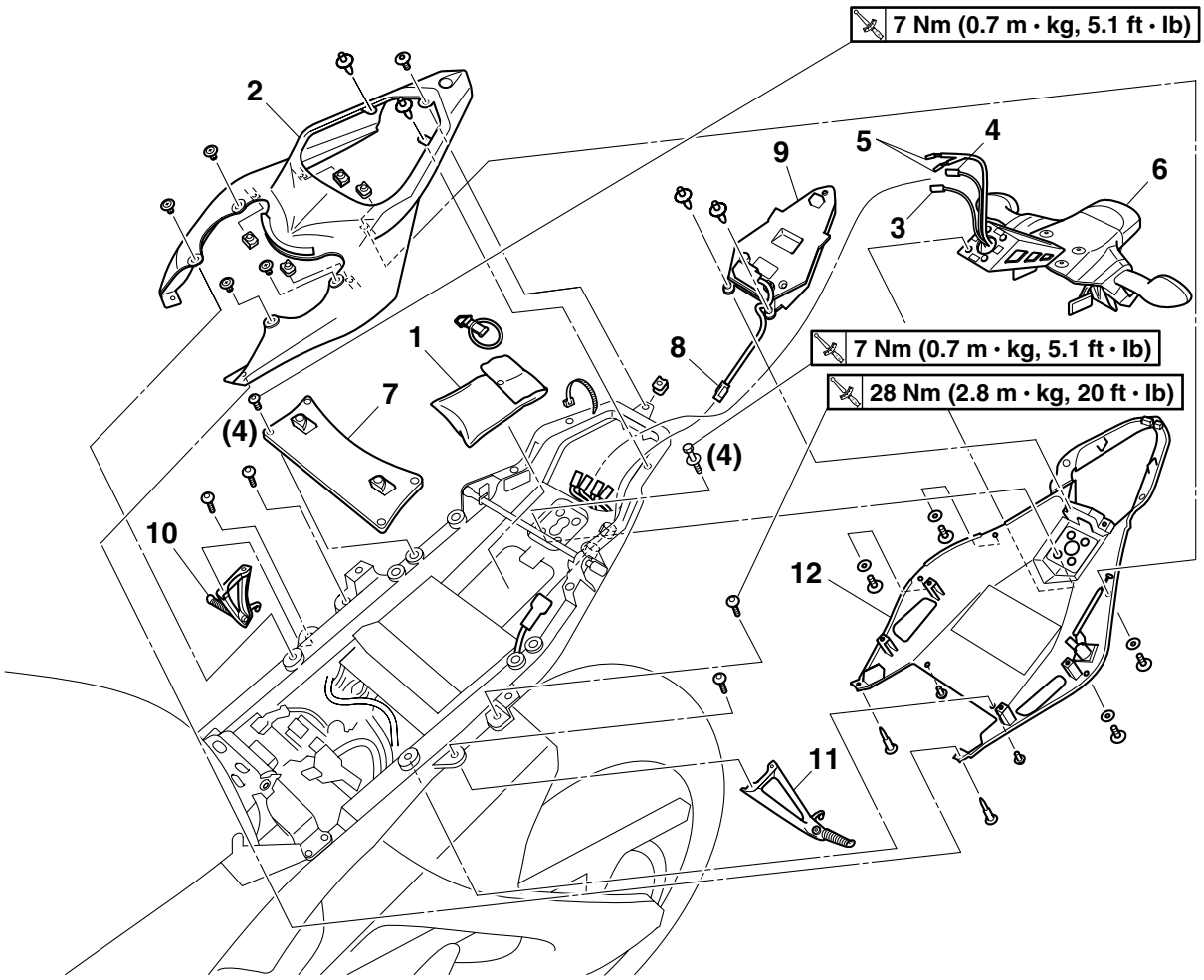


| Order | Job/Parts to remove | Q'ty | Remarks |
|---|---|---|---|
| | Rider seat/Passenger seat | | Refer to "GENERAL CHASSIS" on page 4-1. |
| 1 | Owner's tool kit | 1 | |
| 2 | Rear upper cowling | 1 | |
| 3 | Rear right turn signal light coupler | 1 | Disconnect. |
| 4 | Rear left turn signal light coupler | 1 | Disconnect. |
| 5 | License plate light connector | 2 | Disconnect. |
| 6 | License plate light assembly | 1 | |
| 7 | Rear upper cowling damper plate | 1 | |
| 8 | Tail/brake light coupler | 1 | Disconnect. |
| 9 | Tail/brake light assembly | 1 | |
| 10 | Right passenger footrest | 1 | |
| 11 | Left passenger footrest | 1 | |
| 12 | Rear lower cowling | 1 | |
| | | | For installation, reverse the removal procedure. |

**Removing the side cowlings and front cowling assembly**

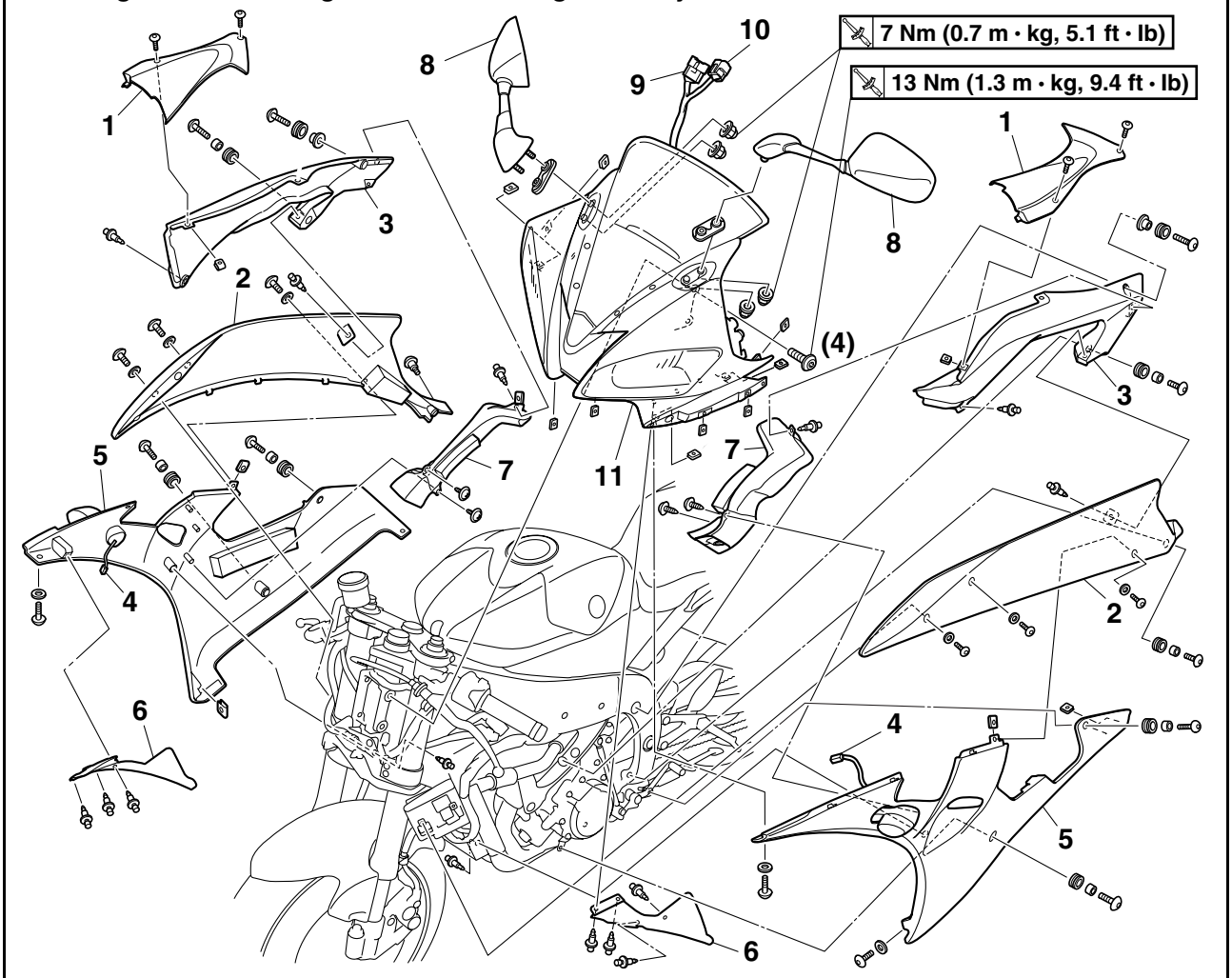


| Order | Job/Parts to remove | Q'ty | Remarks |
|---|---|---|---|
| 1 | Side panel | 2 | |
| 2 | Upper side cowling | 2 | |
| 3 | Lower side cowling | 2 | |
| 4 | Front turn signal/position light coupler | 2 | Disconnect. |
| 5 | Bottom cowling | 2 | |
| 6 | Bottom cowling inner panel | 2 | |
| 7 | Air intake duct | 2 | |
| 8 | Rearview mirror | 2 | |
| 9 | Headlight sub-wire harness 1 coupler | 1 | Disconnect. |
| 10 | Headlight sub-wire harness 2 coupler | 1 | Disconnect. |
| 11 | Front cowling assembly | 1 | |
| | | | For installation, reverse the removal procedure. |

EAS21870

# FRONT WHEEL

**Removing the front wheel and brake discs**

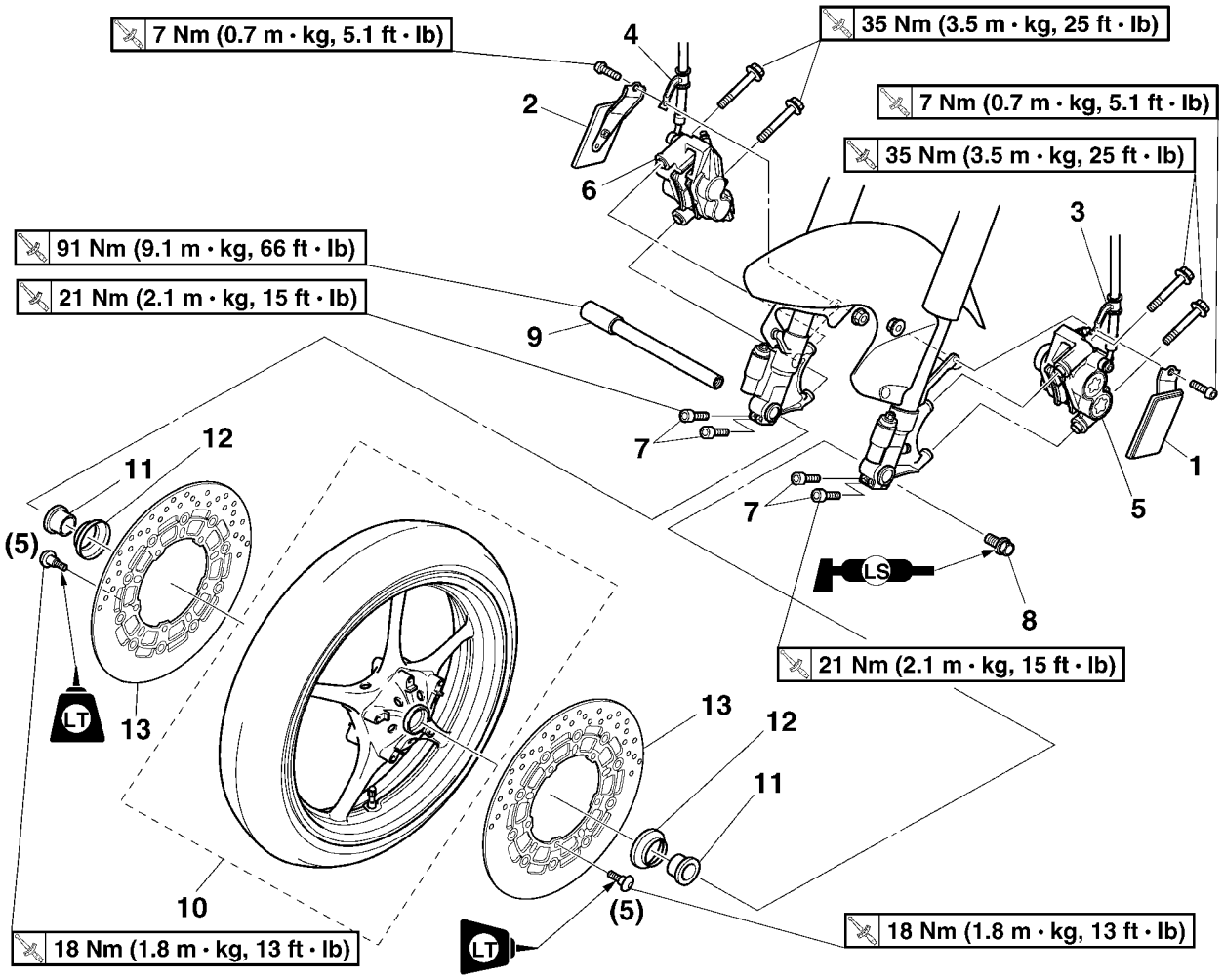


| Order | Job/Parts to remove | Q'ty | Remarks |
|---|---|---|---|
| | | | **NOTE:** Place the vehicle on a suitable stand so that the front wheel is elevated. |
| 1 | Left reflector assembly | 1 | |
| 2 | Right reflector assembly | 1 | |
| 3 | Left front brake hose holder | 1 | |
| 4 | Right front brake hose holder | 1 | |
| 5 | Left front brake caliper | 1 | |
| 6 | Right front brake caliper | 1 | |
| 7 | Front wheel axle pinch bolt | 4 | Loosen. |
| 8 | Front wheel axle bolt | 1 | |
| 9 | Front wheel axle | 1 | |
| 10 | Front wheel | 1 | |
| 11 | Collar | 2 | |
| 12 | Dust cover | 2 | |

**Removing the front wheel and brake discs**

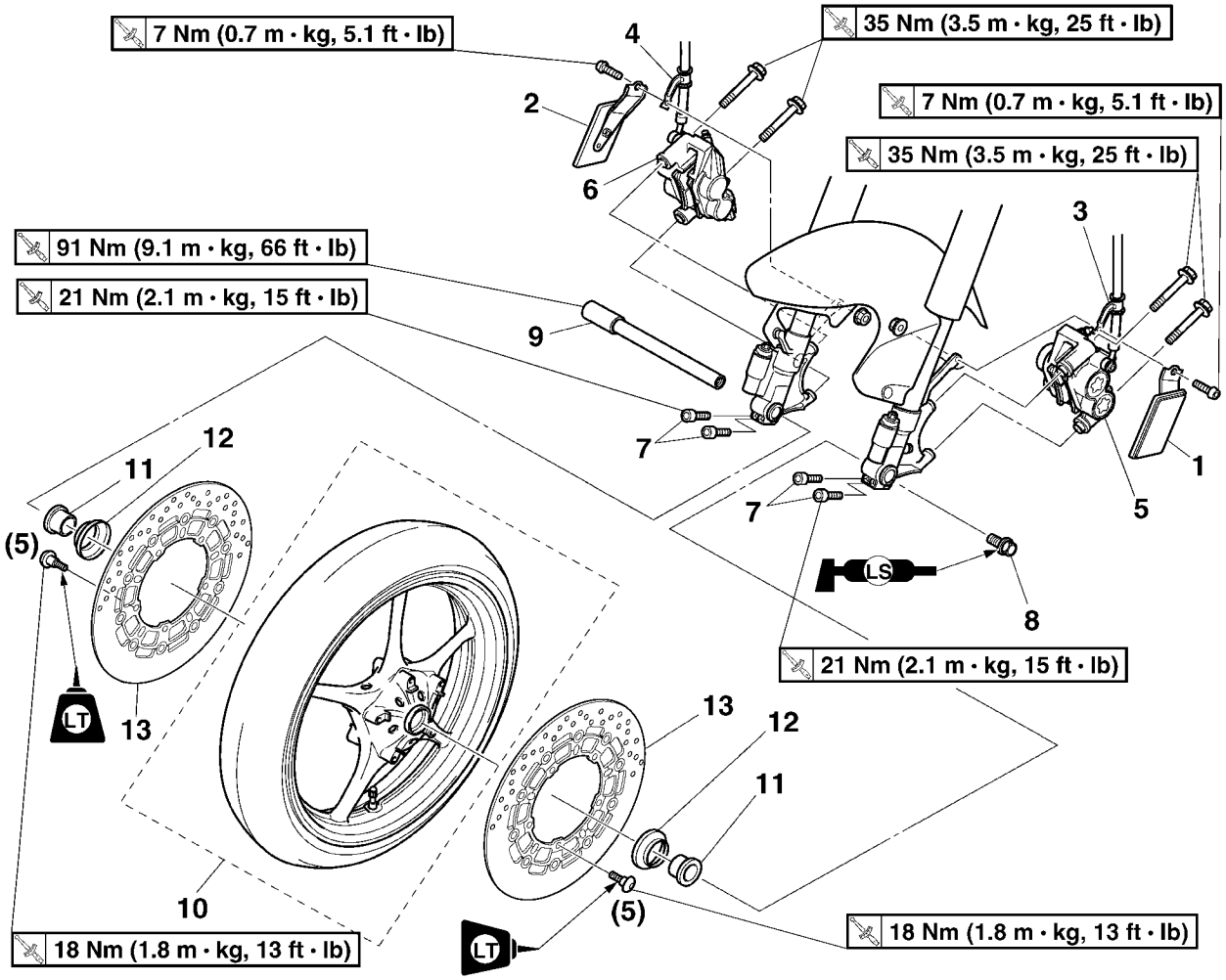


| Order | Job/Parts to remove | Q'ty | Remarks |
|---|---|---|---|
| 13 | Front brake disc | 2 | |
| | | | For installation, reverse the removal procedure. |

**Disassembling the front wheel**

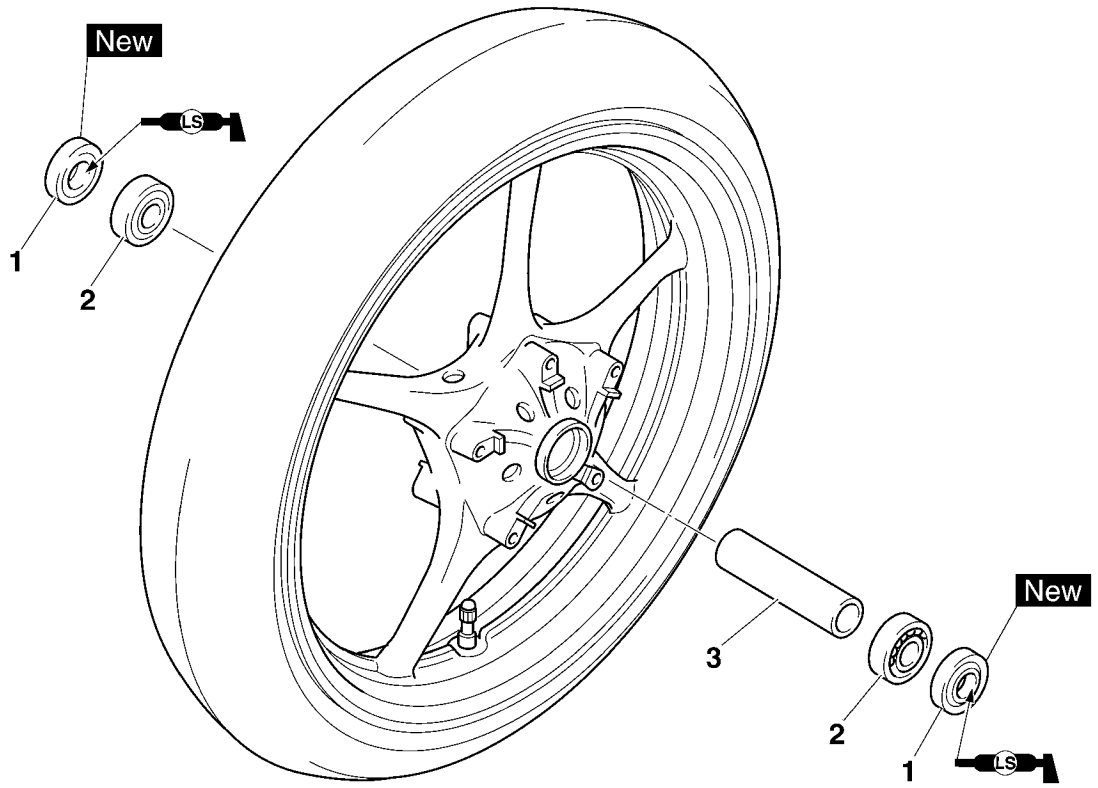


| Order | Job/Parts to remove | Q'ty | Remarks |
|---|---|---|---|
| 1 | Oil seal | 2 | |
| 2 | Wheel bearing | 2 | |
| 3 | Spacer | 1 | |
| | | | For assembly, reverse the disassembly procedure. |

EAS21900
## REMOVING THE FRONT WHEEL
1. Stand the vehicle on a level surface.

EWA13120
**WARNING**

**Securely support the vehicle so that there is no danger of it falling over.**

**NOTE:**
Place the vehicle on a suitable stand so that the front wheel is elevated.

2. Remove:
   - Left brake caliper
   - Right brake caliper

**NOTE:**
Do not apply the brake lever when removing the brake calipers.

EAS21910
## DISASSEMBLING THE FRONT WHEEL
1. Remove:
   - Oil seals
   - Wheel bearings

▼▼▼▼▼▼▼▼▼▼▼▼▼▼▼▼▼▼▼▼▼▼▼▼▼▼▼▼▼▼▼▼▼▼

a. Clean the outside of the front wheel hub.
b. Remove the oil seals "1" with a flat-head screwdriver.

**NOTE:**
To prevent damaging the wheel, place a rag "2" between the screwdriver and the wheel surface.

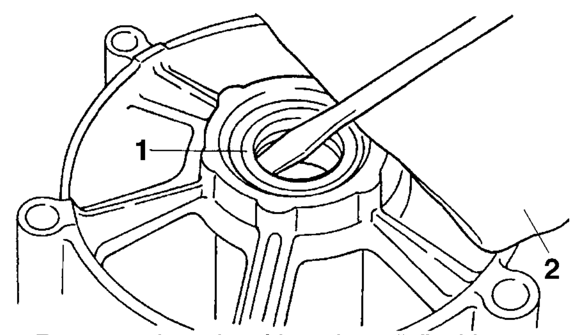


c. Remove the wheel bearings "3" with a general bearing puller.

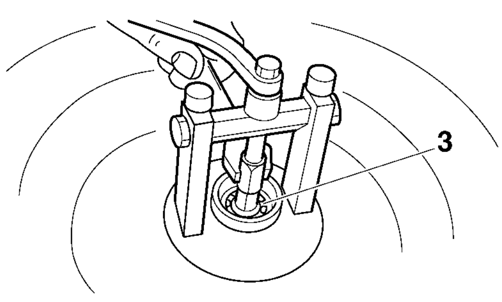


▲▲▲▲▲▲▲▲▲▲▲▲▲▲▲▲▲▲▲▲▲▲▲▲▲▲▲▲▲▲▲▲▲▲

EAS21920
## CHECKING THE FRONT WHEEL
1. Check:
   - Wheel axle
     Roll the wheel axle on a flat surface.
     Bends → Replace.

EWA13460
**WARNING**

**Do not attempt to straighten a bent wheel axle.**

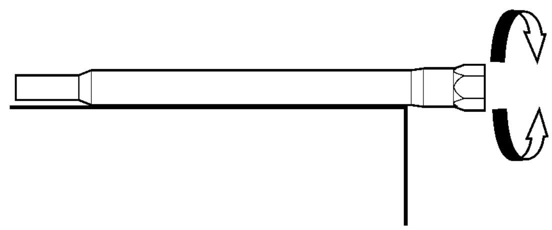

2. Check:
   - Tire
   - Front wheel
     Damage/wear → Replace.
     Refer to "CHECKING THE TIRES" on page 3-32 and "CHECKING THE WHEELS" on page 3-33.
3. Measure:
   - Radial wheel runout "1"
   - Lateral wheel runout "2"
     Over the specified limits → Replace.

**Radial wheel runout limit**
**1.0 mm (0.04 in)**
**Lateral wheel runout limit**
**0.5 mm (0.02 in)**

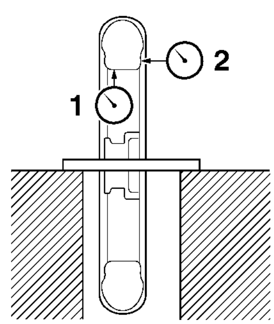


4. Check:
   - Wheel bearings
     Front wheel turns roughly or is loose → Replace the wheel bearings.
   - Oil seals
     Damage/wear → Replace.

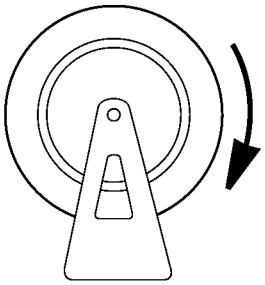

EAS21960

## ASSEMBLING THE FRONT WHEEL

1. Install:
   - Wheel bearings New
   - Oil seals New

▼▼▼▼▼▼▼▼▼▼▼▼▼▼▼▼▼▼▼▼▼▼▼▼▼▼▼▼▼▼▼▼▼▼▼▼▼▼

a. Install the new wheel bearings and oil seals in the reverse order of disassembly.

EC2C01010

**CAUTION:**

**Do not contact the wheel bearing inner race "1" or balls "2". Contact should be made only with the outer race "3".**

**NOTE:**

Use a socket "4" that matches the diameter of the wheel bearing outer race and oil seal.

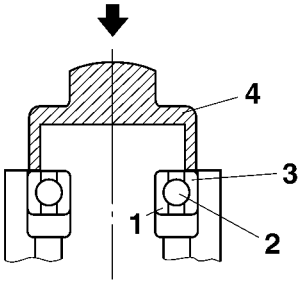


▲▲▲▲▲▲▲▲▲▲▲▲▲▲▲▲▲▲▲▲▲▲▲▲▲▲▲▲▲▲▲▲▲▲▲▲▲▲

EAS21970

## ADJUSTING THE FRONT WHEEL STATIC BALANCE

**NOTE:**

- After replacing the tire, wheel or both, the front wheel static balance should be adjusted.
- Adjust the front wheel static balance with the brake disc installed.

1. Remove:
   - Balancing weight(s)
2. Find:
   - Front wheel's heavy spot

**NOTE:**

Place the front wheel on a suitable balancing stand.

▼▼▼▼▼▼▼▼▼▼▼▼▼▼▼▼▼▼▼▼▼▼▼▼▼▼▼▼▼▼▼▼▼▼▼▼▼▼

a. Spin the front wheel.
b. When the front wheel stops, put an "$X_1$" mark at the bottom of the wheel.

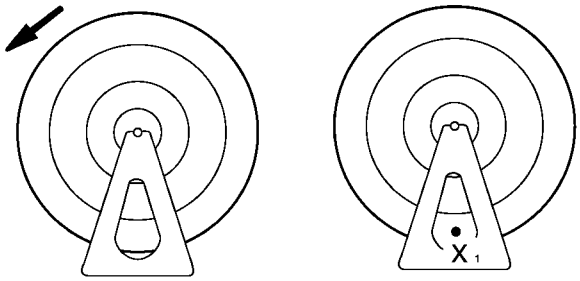


c. Turn the front wheel 90° so that the "$X_1$" mark is positioned as shown.
d. Release the front wheel.
e. When the wheel stops, put an "$X_2$" mark at the bottom of the wheel.

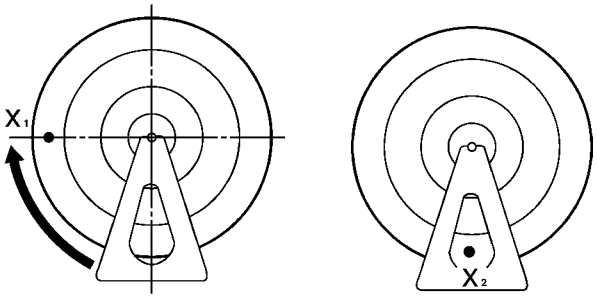


f. Repeat steps (d) through (f) several times until all the marks come to rest at the same spot.
g. The spot where all the marks come to rest is the front wheel's heavy spot "X".

▲▲▲▲▲▲▲▲▲▲▲▲▲▲▲▲▲▲▲▲▲▲▲▲▲▲▲▲▲▲▲▲▲▲▲▲▲▲

3. Adjust:
   - Front wheel static balance

▼▼▼▼▼▼▼▼▼▼▼▼▼▼▼▼▼▼▼▼▼▼▼▼▼▼▼▼▼▼▼▼▼▼▼▼▼▼

a. Install a balancing weight "1" onto the rim exactly opposite the heavy spot "X".

**NOTE:**

Start with the lightest weight.

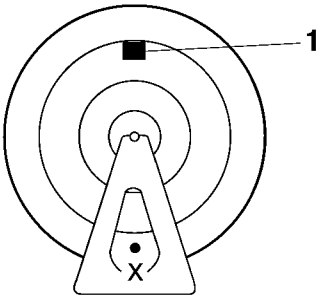


b. Turn the front wheel 90° so that the heavy spot is positioned as shown.

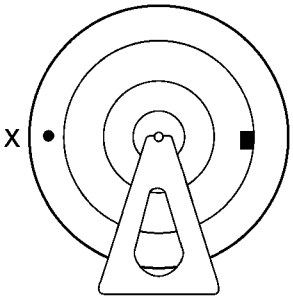


c. If the heavy spot does not stay in that position, install a heavier weight.
d. Repeat steps (b) and (c) until the front wheel is balanced.

▲▲▲▲▲▲▲▲▲▲▲▲▲▲▲▲▲▲▲▲▲▲▲▲▲▲▲▲▲▲▲▲

4. Check:
   - Front wheel static balance

▼▼▼▼▼▼▼▼▼▼▼▼▼▼▼▼▼▼▼▼▼▼▼▼▼▼▼▼▼▼▼▼

a. Turn the front wheel and make sure it stays at each position shown.

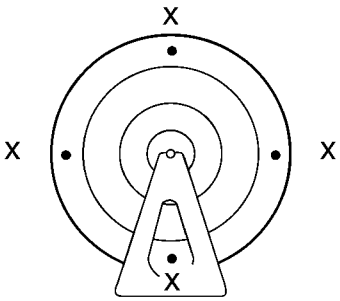


b. If the front wheel does not remain stationary at all of the positions, rebalance it.

▲▲▲▲▲▲▲▲▲▲▲▲▲▲▲▲▲▲▲▲▲▲▲▲▲▲▲▲▲▲▲▲

ET2C01002

## CHECKING THE FRONT BRAKE DISCS

Refer to “CHECKING THE FRONT BRAKE DISCS” on page 4-22.

EAS22000

## INSTALLING THE FRONT WHEEL (FRONT BRAKE DISCS)

The following procedure applies to both of the brake discs.

1. Install:
   - Front brake disc

| | |
|---|---|
| | **Front brake disc bolt**<br>**18 Nm (1.8 m·kg, 13 ft·lb)**<br>**LOCTITE®** |

**NOTE:**

Tighten the brake disc bolts in stages and in a crisscross pattern.

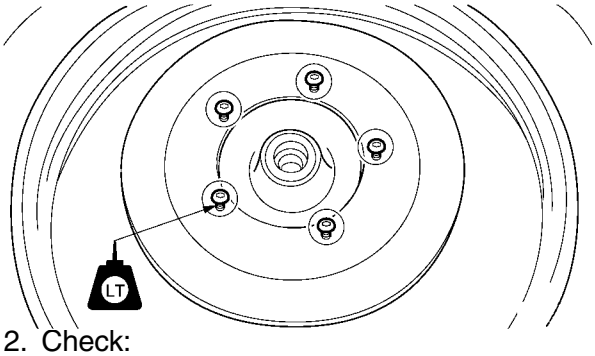


2. Check:
   - Front brake discs
     Refer to “CHECKING THE FRONT BRAKE DISCS” on page 4-22.
3. Lubricate:
   - Oil seal lips

| | |
|---|---|
| | **Recommended lubricant**<br>**Lithium-soap-based grease** |

4. Install:
   - Front wheel

**NOTE:**

Install the tire and wheel with the mark “1” pointing in the direction of wheel rotation.

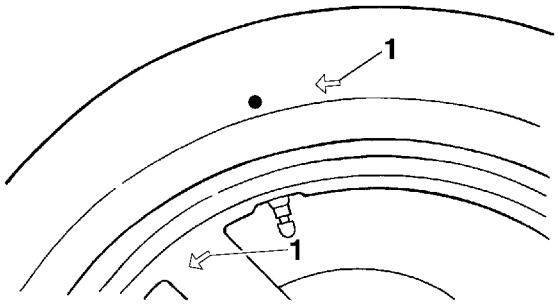


5. Install:
   - Front wheel axle
   - Front wheel axle bolt
   - Front wheel axle pinch bolts

| | |
|---|---|
| | **Front wheel axle**<br>**91 Nm (9.1 m·kg, 66 ft·lb)**<br>**Front wheel axle pinch bolt**<br>**21 Nm (2.1 m·kg, 15 ft·lb)** |

EC2C01015

**CAUTION:**

**Before tightening the wheel axle, push down hard on the handlebar several times and check if the front fork rebounds smoothly.**

**NOTE:**

Lubricate the front wheel axle bolt mating surfaces with lithium-soap-based grease.

▼▼▼▼▼▼▼▼▼▼▼▼▼▼▼▼▼▼▼▼▼▼▼▼▼▼▼▼▼▼▼▼▼▼

a. Insert the front wheel axle from the right side and tighten it with the front wheel axle bolt from the left side to 91 Nm (9.1 m·kg, 66 ft·lb) without performing temporary tightening.
b. In the order pinch bolt “2” → pinch bolt “1” → pinch bolt “2”, tighten each bolt to 21 Nm (2.1 m·kg, 15 ft·lb) without performing temporary tightening.
c. Check that the right end of the front wheel axle is flush with the front fork. If necessary, manually push the front wheel axle or lightly tap it with a soft hammer until its end is flush with the front fork. However, if the surface of the front wheel axle end is not parallel to the surface of the front fork, align a point on the outer edge of the axle with the fork, making sure that the axle does not protrude past the fork.
d. In the order pinch bolt “4” → pinch bolt “3” → pinch bolt “4”, tighten each bolt to 21 Nm (2.1 m·kg, 15 ft·lb) without performing temporary tightening.

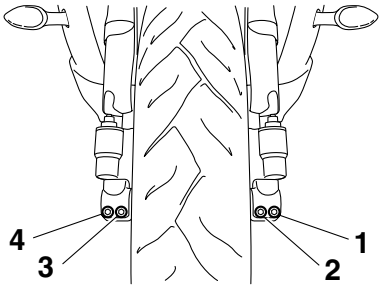


▲▲▲▲▲▲▲▲▲▲▲▲▲▲▲▲▲▲▲▲▲▲▲▲▲▲▲▲▲▲▲▲▲▲

6. Install:
   - Front brake calipers

| | |
|---|---|
| | **Front brake caliper bolt**<br>**35 Nm (3.5 m·kg, 25 ft·lb)** |

EWA13500

**WARNING**

**Make sure the brake hose is routed properly.**

EAS22020

# REAR WHEEL

**Removing the rear wheel**

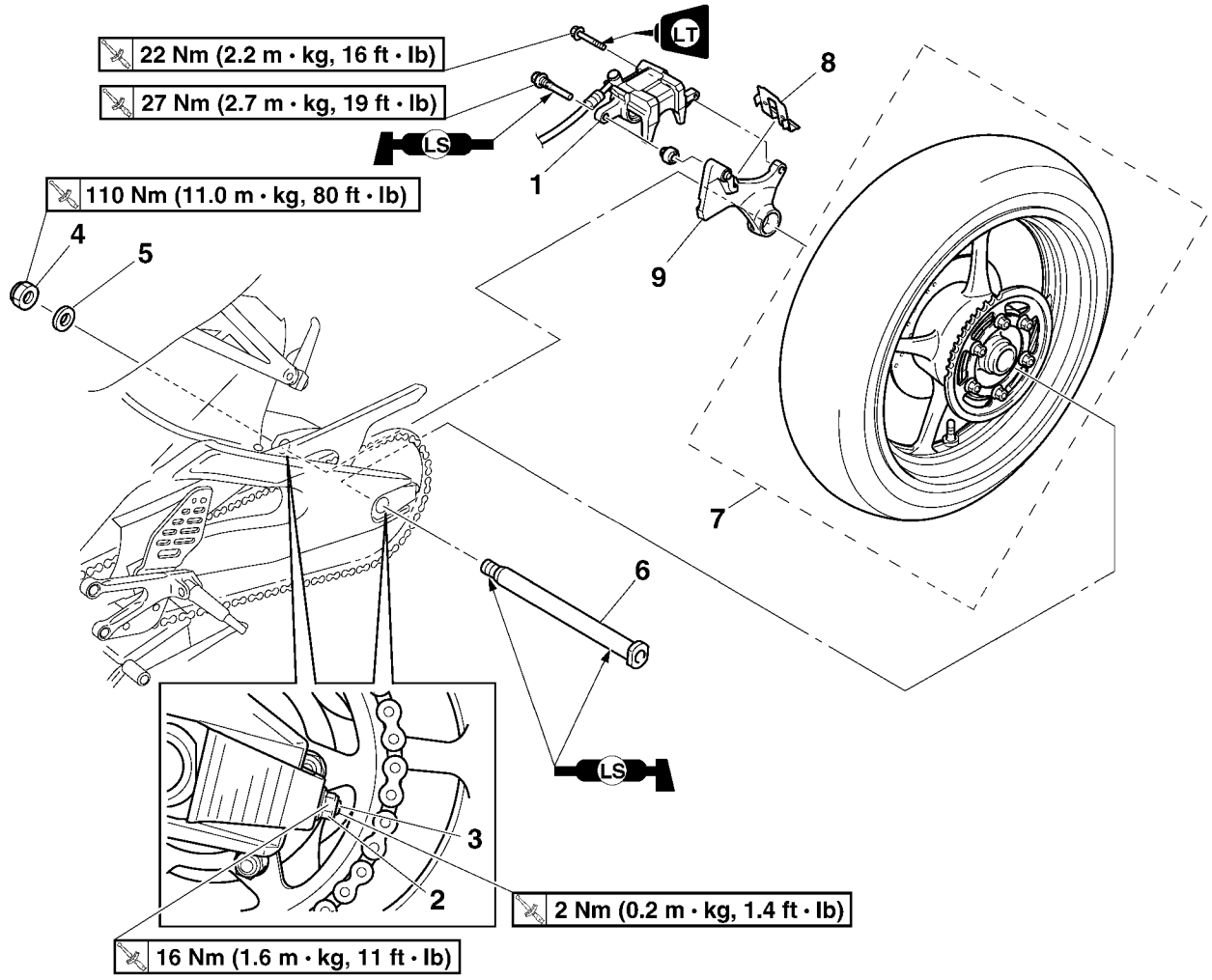


| Order | Job/Parts to remove | Q'ty | Remarks |
|---|---|---|---|
| | | | **NOTE:** Place the vehicle on a suitable stand so that the rear wheel is elevated. |
| 1 | Rear brake caliper | 1 | |
| 2 | Drive chain adjusting locknut | 2 | Loosen. |
| 3 | Drive chain adjusting bolt | 2 | Loosen. |
| 4 | Rear wheel axle nut | 1 | |
| 5 | Washer | 1 | |
| 6 | Rear wheel axle | 1 | |
| 7 | Rear wheel | 1 | |
| 8 | Brake pad spring | 1 | |
| 9 | Rear brake caliper bracket | 1 | |
| | | | For installation, reverse the removal procedure. |

**Removing the rear brake disc and rear wheel sprocket**

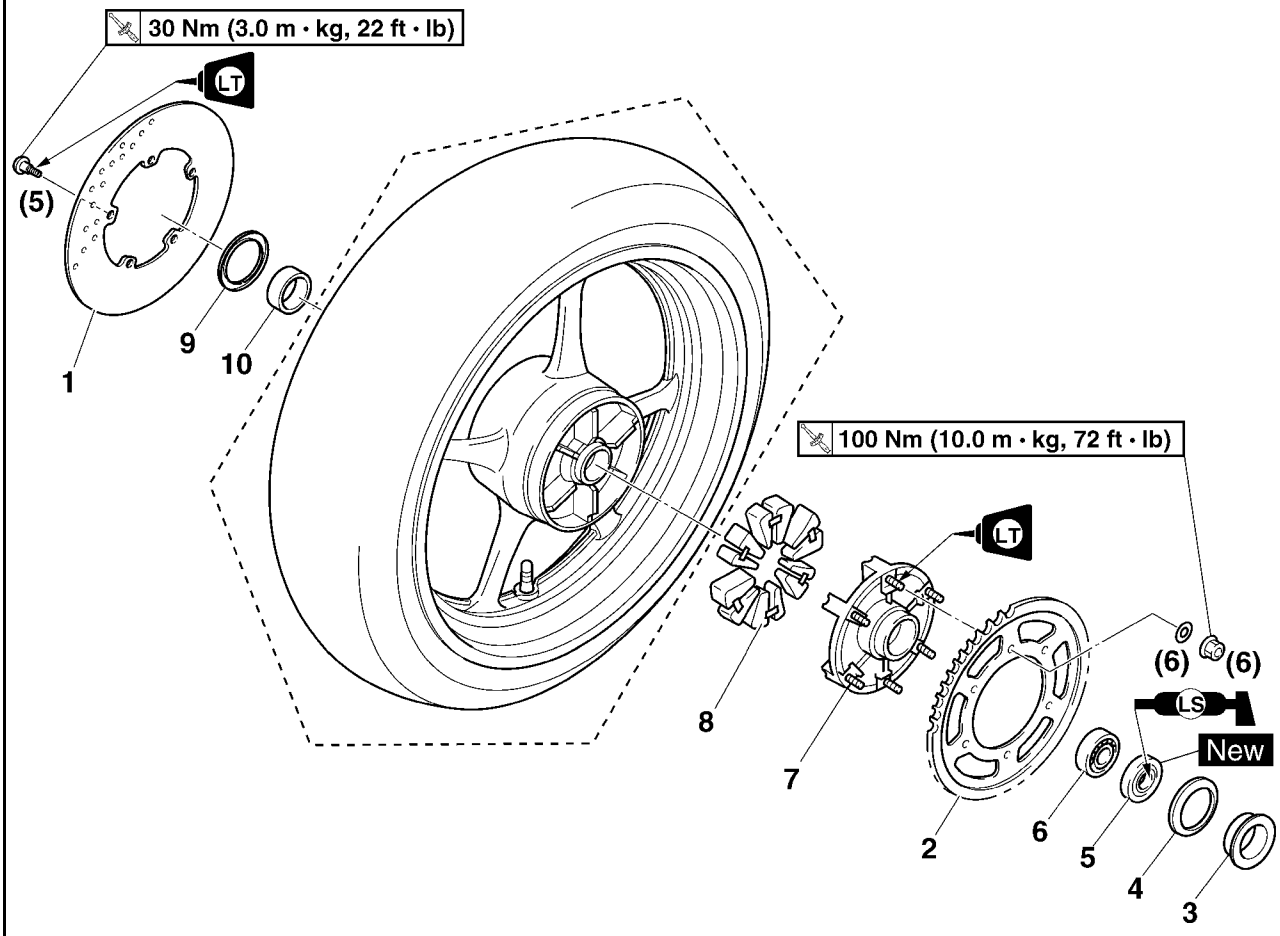


| Order | Job/Parts to remove | Q'ty | Remarks |
|---|---|---|---|
| 1 | Rear brake disc | 1 | |
| 2 | Rear wheel sprocket | 1 | |
| 3 | Collar | 1 | |
| 4 | Dust cover | 1 | |
| 5 | Oil seal | 1 | |
| 6 | Bearing | 1 | |
| 7 | Rear wheel drive hub | 1 | |
| 8 | Rear wheel drive hub damper | 6 | |
| 9 | Dust cover | 1 | |
| 10 | Collar | 1 | |
| | | | For installation, reverse the removal procedure. |

**Disassembling the rear wheel**

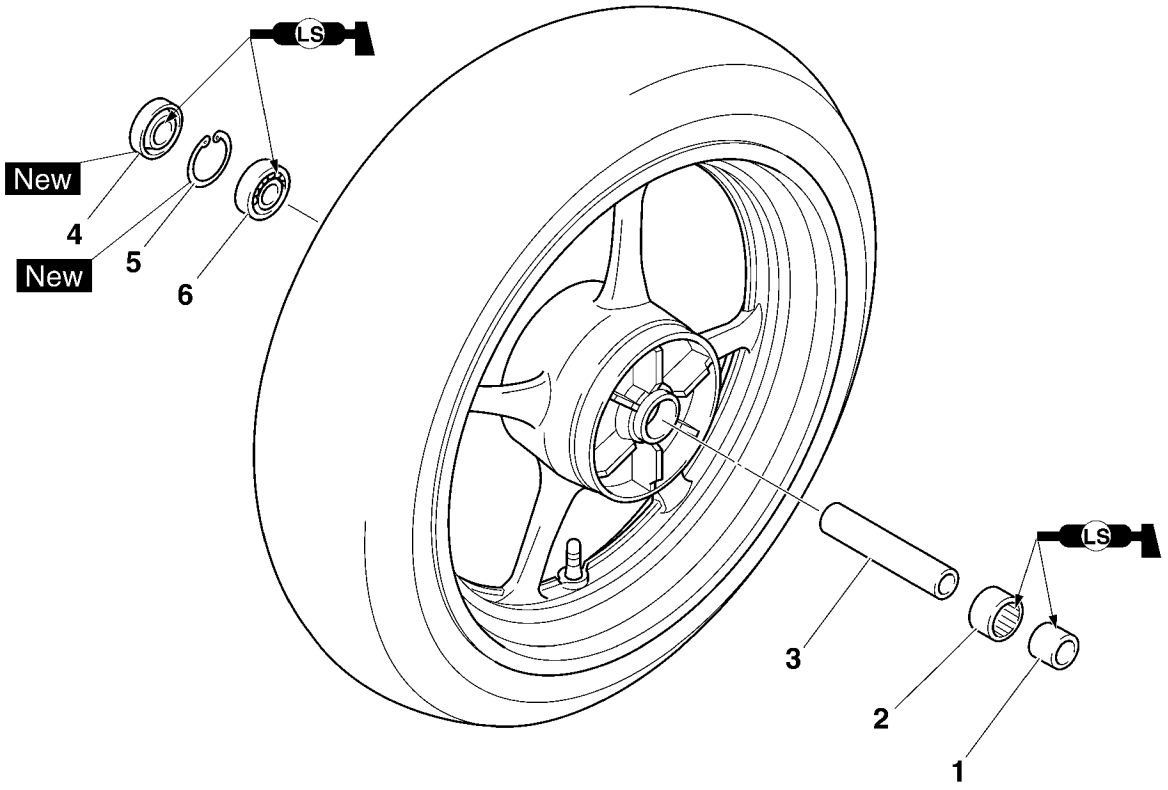


| Order | Job/Parts to remove | Q'ty | Remarks |
|---|---|---|---|
| 1 | Collar | 1 | |
| 2 | Bearing | 1 | |
| 3 | Spacer | 1 | |
| 4 | Oil seal | 1 | |
| 5 | Circlip | 1 | |
| 6 | Bearing | 1 | |
| | | | For assembly, reverse the disassembly procedure. |

EAS22040
## REMOVING THE REAR WHEEL
1. Stand the vehicle on a level surface.

EWA13120
**WARNING**

**Securely support the vehicle so that there is no danger of it falling over.**

**NOTE:**

Place the vehicle on a suitable stand so that the rear wheel is elevated.

2. Remove:
   - Rear brake caliper “1”

**NOTE:**

Do not depress the brake pedal when removing the brake caliper.

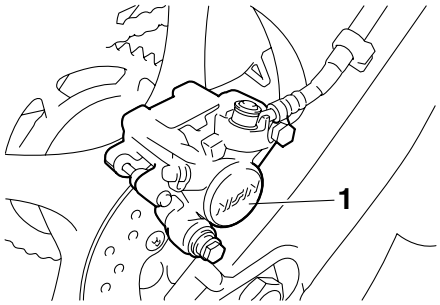


3. Remove:
   - Rear wheel axle nut “1”
   - Rear wheel axle “2”
   - Rear wheel

**NOTE:**

Push the rear wheel forward and remove the drive chain from the rear wheel sprocket.

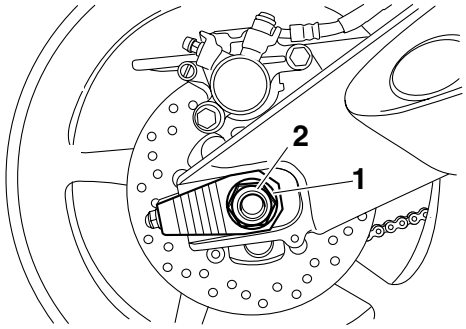


EAS22080
## DISASSEMBLING THE REAR WHEEL
1. Remove:
   - Oil seals
   - Wheel bearings
     Refer to “DISASSEMBLING THE FRONT WHEEL” on page 4-7.

EAS22090
## CHECKING THE REAR WHEEL
1. Check:
   - Rear wheel axle
   - Rear wheel
   - Wheel bearings
   - Oil seals
     Refer to “CHECKING THE FRONT WHEEL” on page 4-7.
2. Check:
   - Tire
   - Rear wheel
     Damage/wear → Replace.
     Refer to “CHECKING THE TIRES” on page 3-32 and “CHECKING THE WHEELS” on page 3-33.
3. Measure:
   - Radial wheel runout
   - Lateral wheel runout
     Refer to “CHECKING THE FRONT WHEEL” on page 4-7.

**Radial wheel runout limit**
**1.0 mm (0.04 in)**
**Lateral wheel runout limit**
**0.5 mm (0.02 in)**

ET2C01024
## CHECKING THE REAR BRAKE CALIPER BRACKET
1. Check:
   - Rear brake caliper bracket
     Cracks/damage → Replace.

EAS22110
## CHECKING THE REAR WHEEL DRIVE HUB
1. Check:
   - Rear wheel drive hub
     Cracks/damage → Replace.
   - Rear wheel drive hub dampers
     Damage/wear → Replace.

EAS22120
## CHECKING AND REPLACING THE REAR WHEEL SPROCKET
1. Check:
   - Rear wheel sprocket
     More than 1/4 tooth “a” wear → Replace the rear wheel sprocket.
     Bent teeth → Replace the rear wheel sprocket.

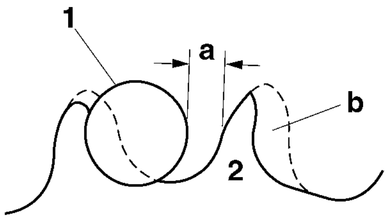


b. Correct
1. Drive chain roller
2. Rear wheel sprocket

2. Replace:
   - Rear wheel sprocket

▼▼▼▼▼▼▼▼▼▼▼▼▼▼▼▼▼▼▼▼▼▼▼▼▼▼▼▼▼▼▼▼▼▼▼

a. Remove the self-locking nuts and the rear wheel sprocket.
b. Clean the rear wheel drive hub with a clean cloth, especially the surfaces that contact the sprocket.
c. Install the new rear wheel sprocket.

**Rear wheel sprocket self-locking nut**
**100 Nm (10.0 m·kg, 72 ft·lb)**

**NOTE:**
Tighten the self-locking nuts in stages and in a crisscross pattern.

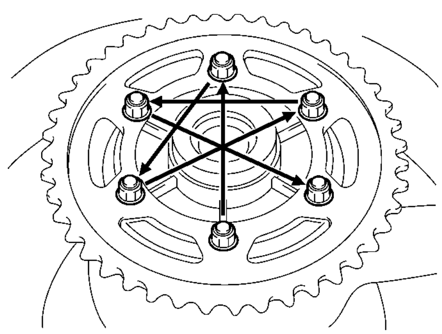

▲▲▲▲▲▲▲▲▲▲▲▲▲▲▲▲▲▲▲▲▲▲▲▲▲▲▲▲▲▲▲▲▲▲▲

EAS22140
## ASSEMBLING THE REAR WHEEL
1. Install:
   - Wheel bearings New
   - Oil seals New
     Refer to "ASSEMBLING THE FRONT WHEEL" on page 4-8.

EAS22150
## ADJUSTING THE REAR WHEEL STATIC BALANCE

**NOTE:**
- After replacing the tire, wheel or both, the rear wheel static balance should be adjusted.
- Adjust the rear wheel static balance with the brake disc and rear wheel drive hub installed.

1. Adjust:
   - Rear wheel static balance
     Refer to "ADJUSTING THE FRONT WHEEL STATIC BALANCE" on page 4-8.

ET2C01004
## CHECKING THE REAR BRAKE DISC
Refer to "CHECKING THE REAR BRAKE DISC" on page 4-34.

EAS22160
## INSTALLING THE REAR WHEEL (REAR BRAKE DISC)
1. Install:
   - Rear brake disc

**Rear brake disc bolt**
**30 Nm (3.0 m·kg, 22 ft·lb)**
**LOCTITE®**

**NOTE:**
Tighten the brake disc bolts in stages and in a crisscross pattern.

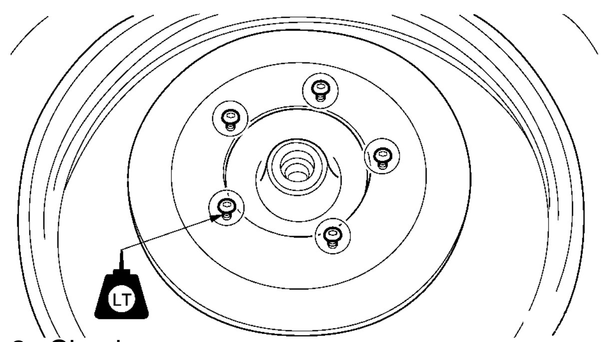


2. Check:
   - Rear brake disc
     Refer to "CHECKING THE REAR BRAKE DISC" on page 4-34.
3. Lubricate:
   - Rear wheel axle
   - Wheel bearings
   - Oil seal lips
   - Collars

**Recommended lubricant**
**Lithium-soap-based grease**

4. Adjust:
   - Drive chain slack
     Refer to “ADJUSTING THE DRIVE CHAIN SLACK” on page 3-25.

| | |
|---|---|
| | **Drive chain slack**<br>**35.0–45.0 mm (1.38–1.77 in)** |

5. Install:
   - Rear brake caliper

| | |
|---|---|
| | **Rear brake caliper bolt (M12)**<br>**27 Nm (2.7 m·kg, 19 ft·lb)**<br>**Rear brake caliper bolt (M8)**<br>**22 Nm (2.2 m·kg, 16 ft·lb)**<br>**LOCTITE®** |

EWA13500

**WARNING**

**Make sure the brake hose is routed properly.**

EAS22210

# FRONT BRAKE

**Removing the front brake pads**

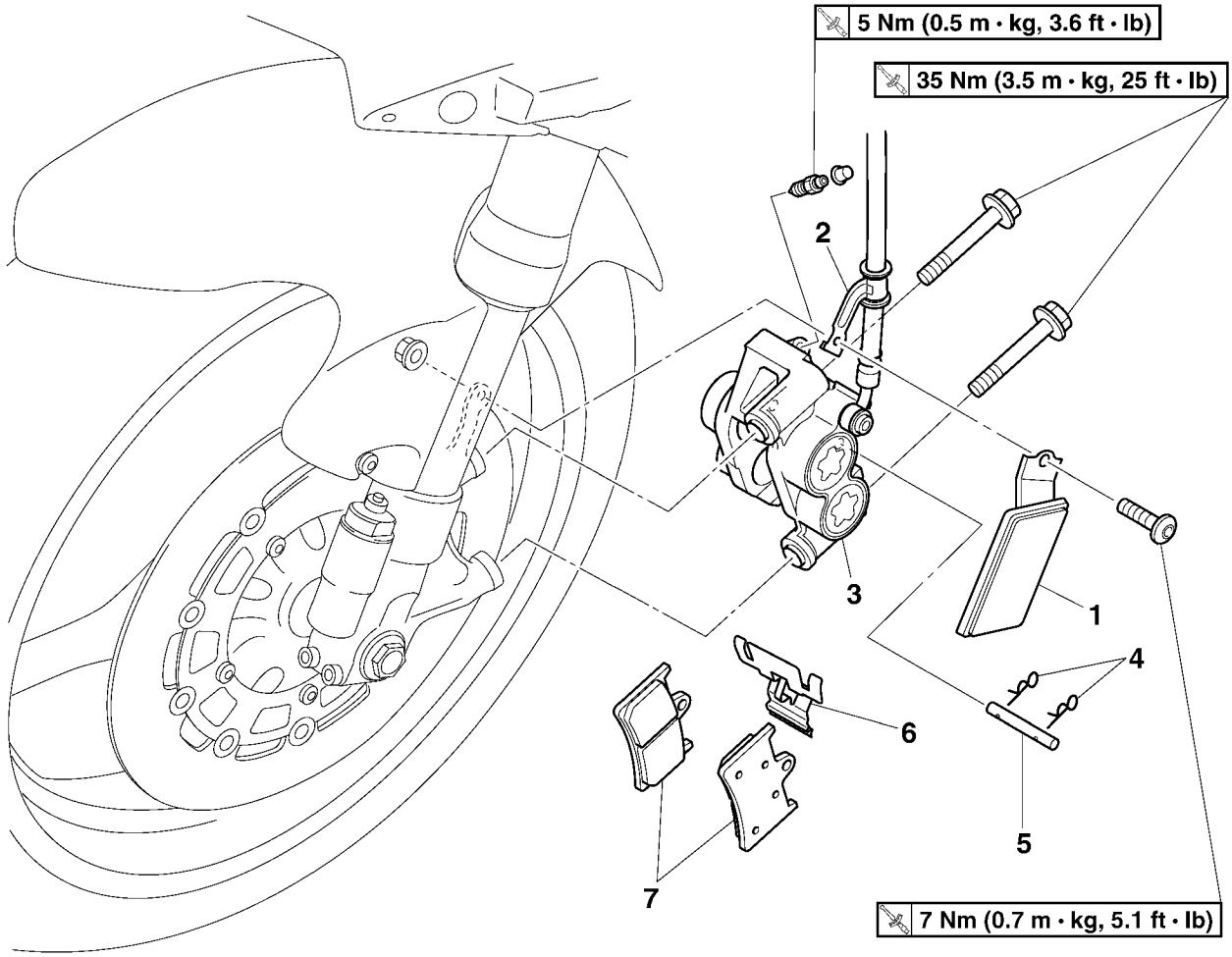


| Order | Job/Parts to remove | Q'ty | Remarks |
|---|---|---|---|
| | | | The following procedure applies to both of the front brake calipers. |
| 1 | Reflector assembly | 1 | |
| 2 | Brake hose holder | 1 | |
| 3 | Front brake caliper | 1 | |
| 4 | Brake pad clip | 2 | |
| 5 | Brake pad pin | 1 | |
| 6 | Brake pad spring | 1 | |
| 7 | Front brake pad | 2 | |
| | | | For installation, reverse the removal procedure. |

**Removing the front brake master cylinder**

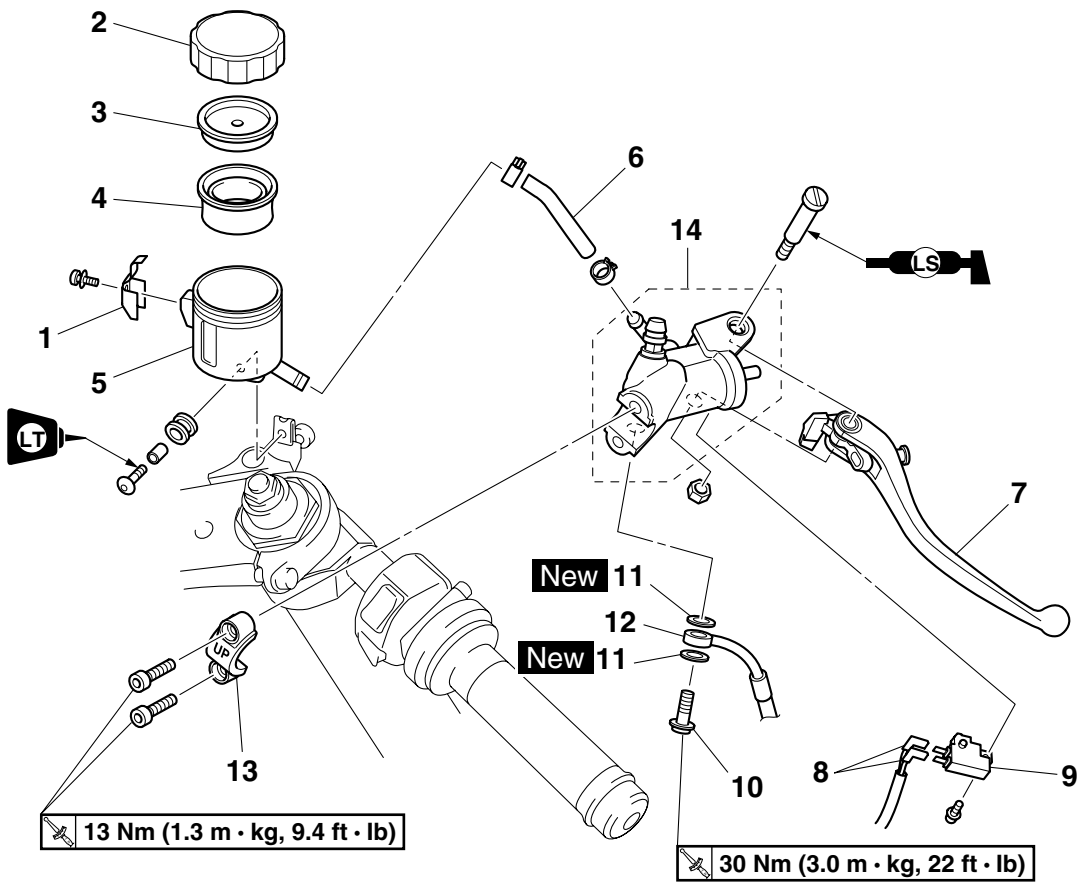


| Order | Job/Parts to remove | Q'ty | Remarks |
|---|---|---|---|
| | Brake fluid | | Drain.<br>Refer to "BLEEDING THE HYDRAULIC BRAKE SYSTEM" on page 3-24. |
| 1 | Brake fluid reservoir cap holder | 1 | |
| 2 | Brake fluid reservoir cap | 1 | |
| 3 | Brake fluid reservoir diaphragm holder | 1 | |
| 4 | Brake fluid reservoir diaphragm | 1 | |
| 5 | Brake fluid reservoir | 1 | |
| 6 | Brake fluid reservoir hose | 1 | |
| 7 | Brake lever | 1 | |
| 8 | Front brake light switch connector | 2 | Disconnect. |
| 9 | Front brake light switch | 1 | |
| 10 | Front brake hose union bolt | 1 | |
| 11 | Copper washer | 2 | |
| 12 | Front brake hose | 1 | |
| 13 | Front brake master cylinder holder | 1 | |
| 14 | Front brake master cylinder | 1 | |
| | | | For installation, reverse the removal procedure. |

**Disassembling the front brake master cylinder**

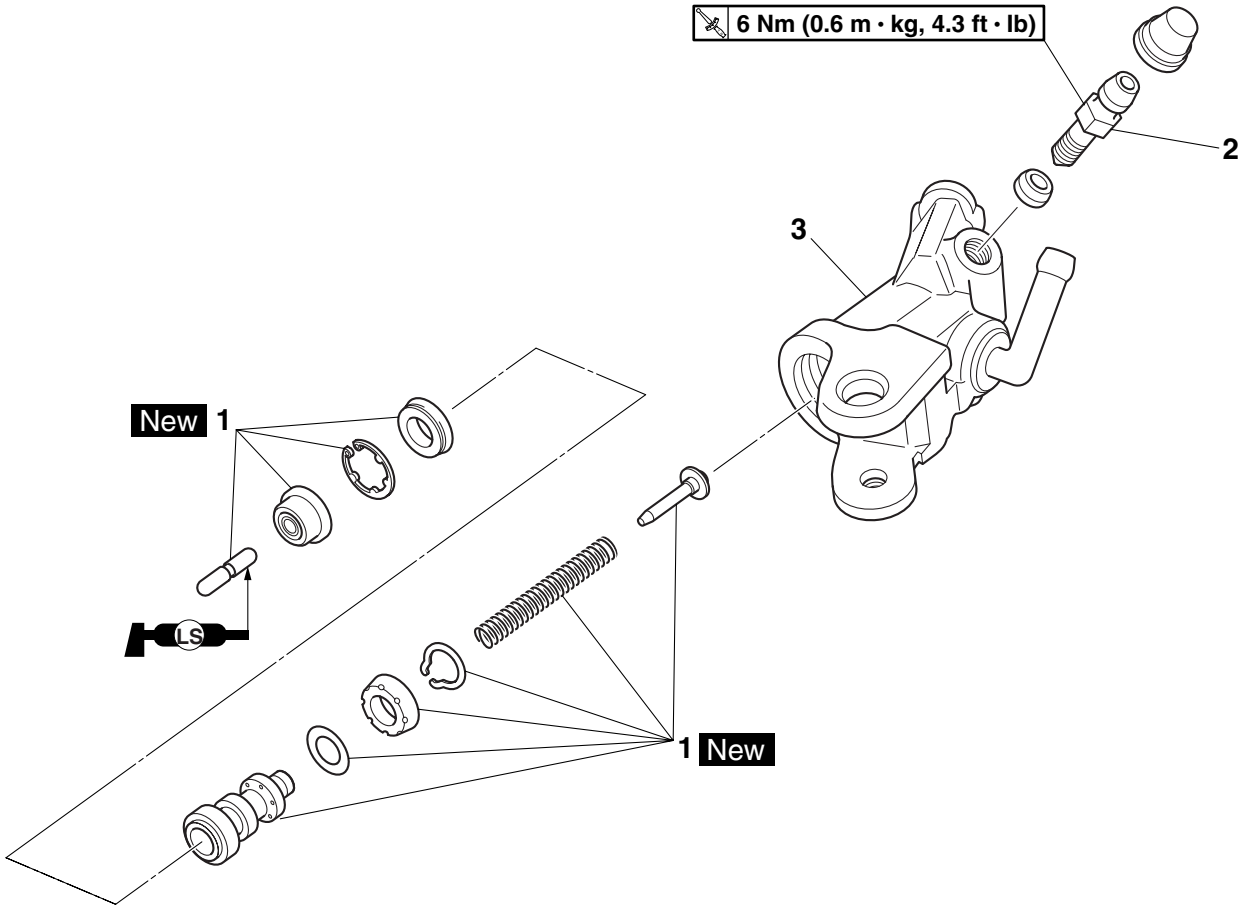


| Order | Job/Parts to remove | Q'ty | Remarks |
|---|---|---|---|
| 1 | Brake master cylinder kit | 1 | |
| 2 | Bleed screw | 1 | |
| 3 | Brake master cylinder body | 1 | |
| | | | For assembly, reverse the disassembly procedure. |

**Removing the front brake calipers**

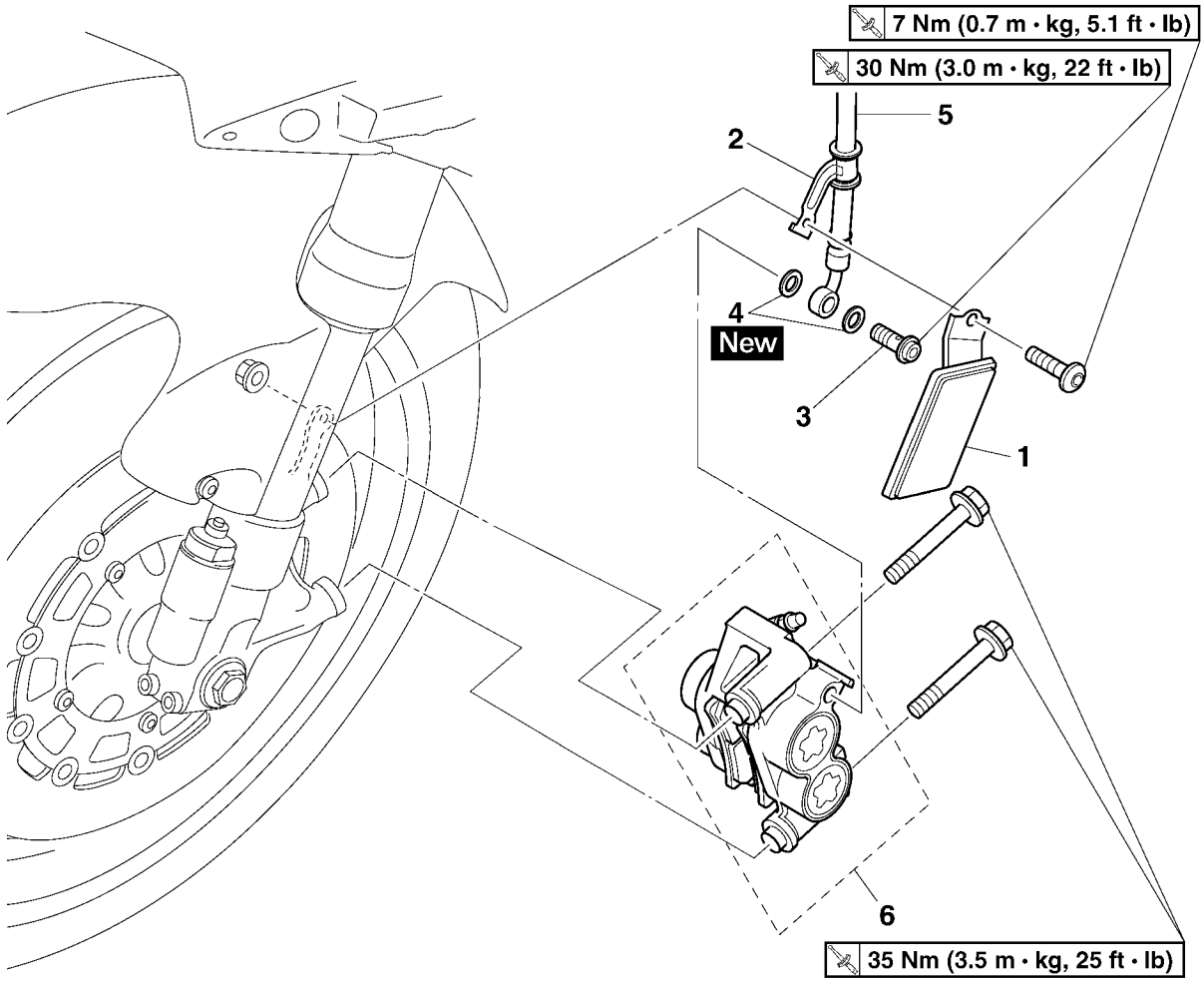


| Order | Job/Parts to remove | Q'ty | Remarks |
|---|---|---|---|
| | | | The following procedure applies to both of the front brake calipers. |
| | Brake fluid | | Drain.<br>Refer to "BLEEDING THE HYDRAULIC BRAKE SYSTEM" on page 3-24. |
| 1 | Reflector assembly | 1 | |
| 2 | Brake hose holder | 1 | |
| 3 | Front brake hose union bolt | 1 | |
| 4 | Copper washer | 2 | |
| 5 | Front brake hose | 1 | |
| 6 | Front brake caliper | 1 | |
| | | | For installation, reverse the removal procedure. |

**Disassembling the front brake calipers**

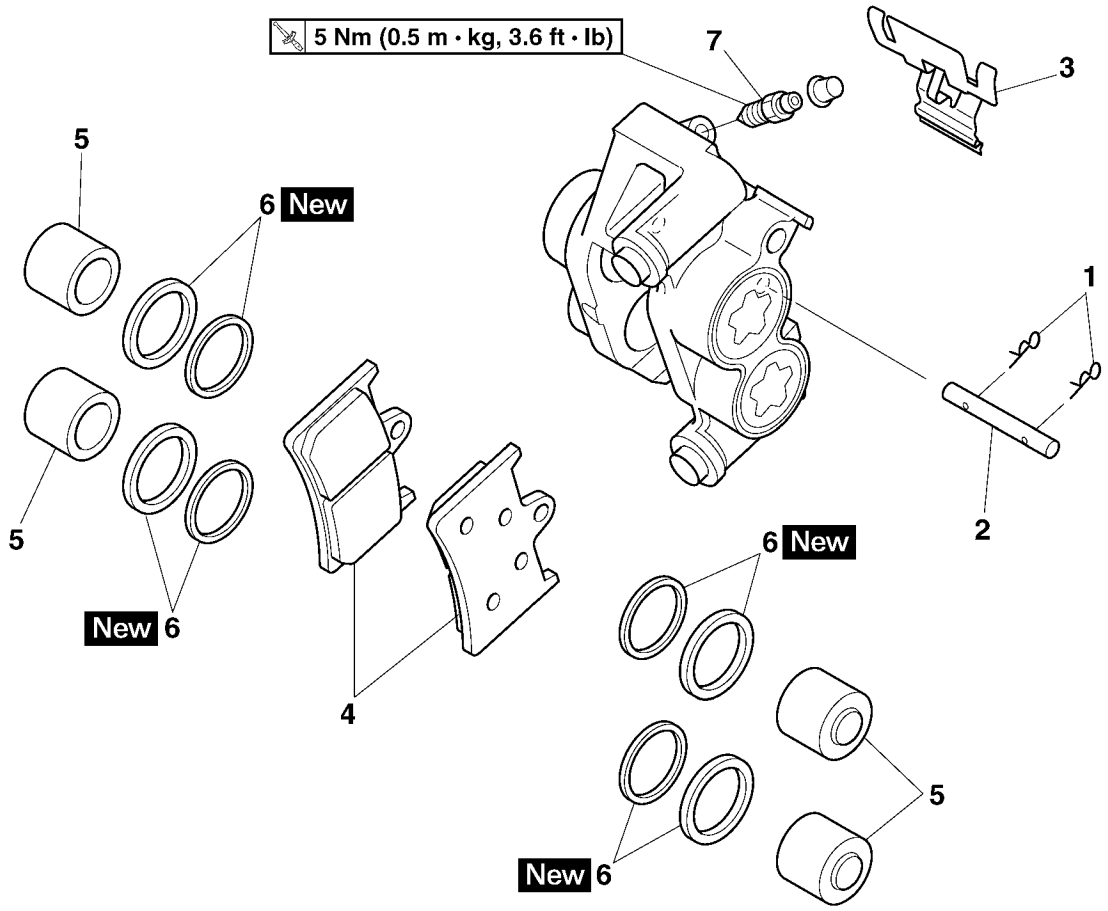


| Order | Job/Parts to remove | Q'ty | Remarks |
|---|---|---|---|
| | | | The following procedure applies to both of the front brake calipers. |
| 1 | Brake pad clip | 2 | |
| 2 | Brake pad pin | 1 | |
| 3 | Brake pad spring | 1 | |
| 4 | Front brake pad | 2 | |
| 5 | Brake caliper piston | 4 | |
| 6 | Brake caliper piston seal | 8 | |
| 7 | Bleed screw | 1 | |
| | | | For assembly, reverse the disassembly procedure. |

EAS22220
## INTRODUCTION

EWA14100
**⚠ WARNING**

**Disc brake components rarely require disassembly. Therefore, always follow these preventive measures:**
- **Never disassemble brake components unless absolutely necessary.**
- **If any connection on the hydraulic brake system is disconnected, the entire brake system must be disassembled, drained, cleaned, properly filled, and bled after reassembly.**
- **Never use solvents on internal brake components.**
- **Use only clean or new brake fluid for cleaning brake components.**
- **Brake fluid may damage painted surfaces and plastic parts. Therefore, always clean up any spilt brake fluid immediately.**
- **Avoid brake fluid coming into contact with the eyes as it can cause serious injury.**
- **FIRST AID FOR BRAKE FLUID ENTERING THE EYES:**
- **Flush with water for 15 minutes and get immediate medical attention.**

EAS22240
## CHECKING THE FRONT BRAKE DISCS

The following procedure applies to both brake discs.

1. Remove:
   - Front wheel
     Refer to “FRONT WHEEL” on page 4-4.
2. Check:
   - Brake disc
     Damage/galling → Replace.
3. Measure:
   - Brake disc deflection
     Out of specification → Correct the brake disc deflection or replace the brake disc.

**Brake disc deflection limit**
**0.10 mm (0.0039 in)**

▼▼▼▼▼▼▼▼▼▼▼▼▼▼▼▼▼▼▼▼▼▼▼▼▼▼▼▼▼▼▼▼▼

a. Place the vehicle on a suitable stand so that the front wheel is elevated.
b. Before measuring the front brake disc deflection, turn the handlebar to the left or right to ensure that the front wheel is stationary.
c. Remove the brake caliper.
d. Hold the dial gauge at a right angle against the brake disc surface.

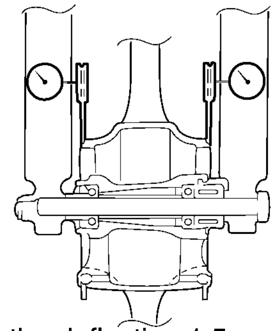

e. Measure the deflection 1.5 mm (0.06 in) below the edge of the brake disc.

▲▲▲▲▲▲▲▲▲▲▲▲▲▲▲▲▲▲▲▲▲▲▲▲▲▲▲▲▲▲▲▲▲

4. Measure:
   - Brake disc thickness
     Measure the brake disc thickness at a few different locations.
     Out of specification → Replace.

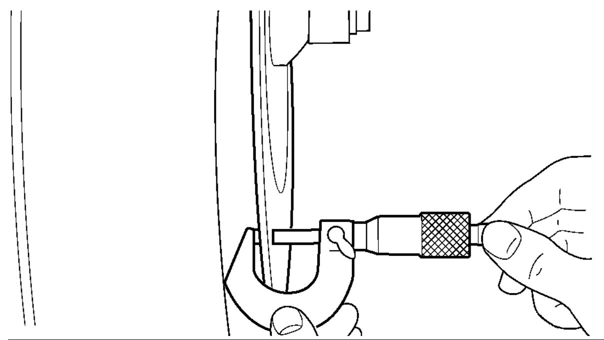

**Brake disc thickness limit**
**4.0 mm (0.16 in)**

5. Adjust:
   - Brake disc deflection

▼▼▼▼▼▼▼▼▼▼▼▼▼▼▼▼▼▼▼▼▼▼▼▼▼▼▼▼▼▼▼▼▼

a. Remove the brake disc.
b. Rotate the brake disc by one bolt hole.
c. Install the brake disc.

**NOTE:**

Tighten the brake disc bolts in stages and in a crisscross pattern.

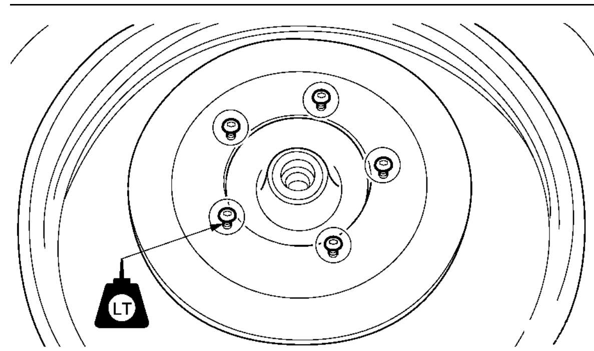

**Brake disc bolt**
**18 Nm (1.8 m·kg, 13 ft·lb)**
**LOCTITE®**

d. Measure the brake disc deflection.
e. If out of specification, repeat the adjustment steps until the brake disc deflection is within specification.
f. If the brake disc deflection cannot be brought within specification, replace the brake disc.

▲▲▲▲▲▲▲▲▲▲▲▲▲▲▲▲▲▲▲▲▲▲▲▲▲▲▲▲▲▲▲▲

6. Install:
   - Front wheel
     Refer to “FRONT WHEEL” on page 4-4.

EAS22270

## REPLACING THE FRONT BRAKE PADS

The following procedure applies to both brake calipers.

**NOTE:**

When replacing the brake pads, it is not necessary to disconnect the brake hose or disassemble the brake caliper.

1. Measure:
   - Brake pad wear limit “a”
     Out of specification → Replace the brake pads as a set.

**Brake pad lining thickness (inner)**
**4.5 mm (0.18 in)**
**Limit**
**0.5 mm (0.02 in)**
**Brake pad lining thickness (outer)**
**4.5 mm (0.18 in)**
**Limit**
**0.5 mm (0.02 in)**

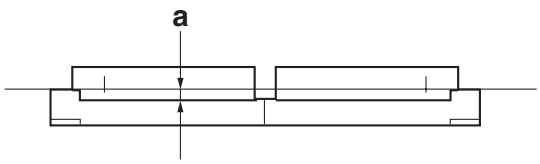


2. Install:
   - Brake pads
   - Brake pad spring

**NOTE:**

Always install new brake pads, and a brake pad spring as a set.

▼▼▼▼▼▼▼▼▼▼▼▼▼▼▼▼▼▼▼▼▼▼▼▼▼▼▼▼▼▼▼▼

a. Connect a clear plastic hose “1” tightly to the bleed screw “2”. Put the other end of the hose into an open container.
b. Loosen the bleed screw and push the brake caliper pistons into the brake caliper with your finger.

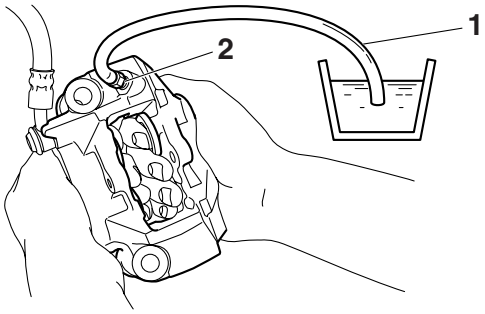


c. Tighten the bleed screw.

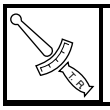

**Bleed screw**
**5 Nm (0.5 m·kg, 3.6 ft·lb)**

d. Install new brake pads and a new brake pad spring.

**NOTE:**

The arrow mark “a” on the brake pad spring must point in the direction of disc rotation.

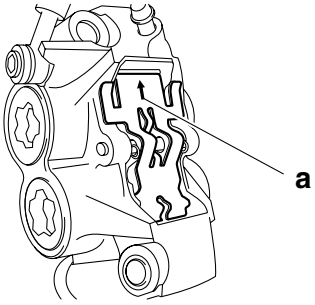


▲▲▲▲▲▲▲▲▲▲▲▲▲▲▲▲▲▲▲▲▲▲▲▲▲▲▲▲▲▲▲▲

3. Install:
   - Brake pad pin
   - Brake pad clips
   - Front brake caliper

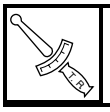

**Brake caliper bolt**
**35 Nm (3.5 m·kg, 25 ft·lb)**

4. Check:
   - Brake fluid level
     Below the minimum level mark “a” → Add the recommended brake fluid to the proper level.

Refer to “CHECKING THE BRAKE FLUID LEVEL” on page 3-22.

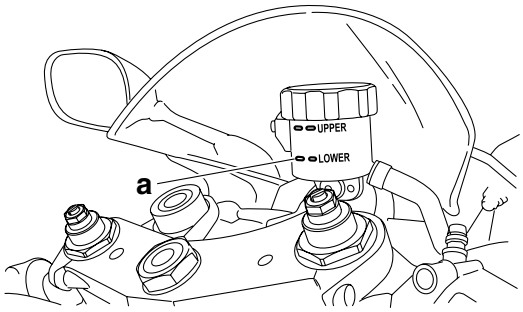


5. Check:
   - Brake lever operation
     Soft or spongy feeling → Bleed the brake system.
     Refer to “BLEEDING THE HYDRAULIC BRAKE SYSTEM” on page 3-24.

EAS22300

## REMOVING THE FRONT BRAKE CALIPERS

The following procedure applies to both of the brake calipers.

**NOTE:**

Before removing the brake caliper, drain the brake fluid from the entire brake system.

1. Remove:
   - Front brake hose union bolt “1”
   - Copper washers “2”
   - Front brake hose “3”

**NOTE:**

Put the end of the brake hose into a container and pump out the brake fluid carefully.

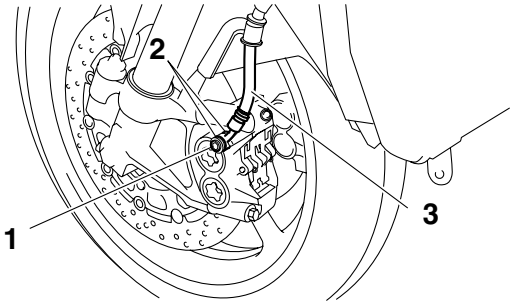


EAS22360

## DISASSEMBLING THE FRONT BRAKE CALIPERS

The following procedure applies to both of the brake calipers.

1. Remove:
   - Brake caliper pistons “1”
   - Brake caliper piston seals “2”

EW2C01005

**WARNING**

**Do not loosen the bolts “3”.**

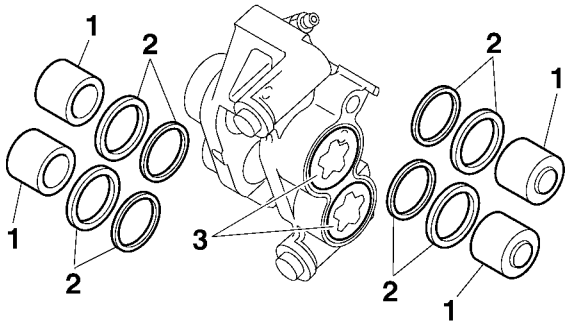


▼▼▼▼▼▼▼▼▼▼▼▼▼▼▼▼▼▼▼▼▼▼▼▼▼▼▼▼▼▼▼▼▼▼

a. Blow compressed air into the brake hose joint opening “a” to force out the left side pistons from the brake caliper.

EWA13580

**WARNING**

- **Cover the brake caliper piston with a rag. Be careful not to get injured when the piston is expelled from the brake master cylinder.**
- **Never try to pry out the brake caliper piston.**

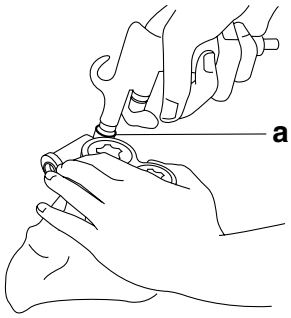


b. Remove the brake caliper piston seals.

▲▲▲▲▲▲▲▲▲▲▲▲▲▲▲▲▲▲▲▲▲▲▲▲▲▲▲▲▲▲▲▲▲▲

EAS22390

## CHECKING THE FRONT BRAKE CALIPERS

| Recommended brake component replacement schedule | |
|---|---|
| Brake pads | If necessary |
| Piston seals | Every two years |
| Brake hoses | Every four years |
| Brake fluid | Every two years and whenever the brake is disassembled |

1. Check:
   - Brake caliper pistons “1”
     Rust/scratches/wear → Replace the brake caliper pistons.

- Brake caliper cylinders “2”
  Scratches/wear → Replace the brake caliper assembly.
- Brake caliper body “3”
  Cracks/damage → Replace the brake caliper assembly.
- Brake fluid delivery passages (brake caliper body)
  Obstruction → Blow out with compressed air.

EWA13600

**WARNING**

**Whenever a brake caliper is disassembled, replace the piston seals.**

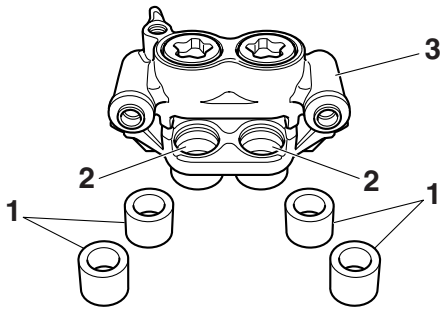


EAS22410

## ASSEMBLING THE FRONT BRAKE CALIPERS

EWA13620

**WARNING**

- **Before installation, all internal brake components should be cleaned and lubricated with clean or new brake fluid.**
- **Never use solvents on internal brake components as they will cause the piston seals to swell and distort.**
- **Whenever a brake caliper is disassembled, replace the brake caliper piston seals.**

**Recommended fluid**
**DOT 4**

EAS22450

## INSTALLING THE FRONT BRAKE CALIPERS

The following procedure applies to both of the brake calipers.

1. Install:
   - Front brake caliper “1” (temporarily)
   - Copper washers New
   - Front brake hose “2”
   - Front brake hose union bolt “3”

**Front brake hose union bolt**
**30 Nm (3.0 m·kg, 22 ft·lb)**

EWA13530

**WARNING**

**Proper brake hose routing is essential to insure safe vehicle operation. Refer to “CABLE ROUTING” on page 2-47.**

ECA14170

**CAUTION:**

**When installing the brake hose onto the brake caliper “1”, make sure the brake pipe “a” touches the projection “b” on the brake caliper.**

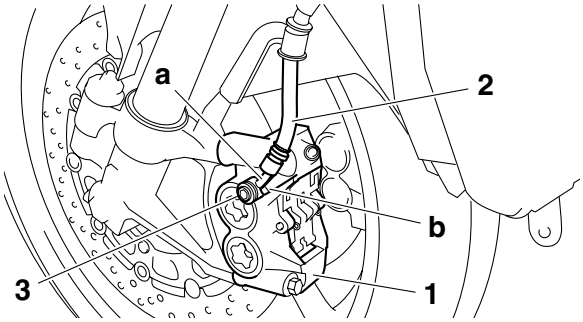


2. Remove:
   - Front brake caliper
3. Install:
   - Front brake pads
   - Brake pad spring
   - Brake pad pin
   - Brake pad clips
   - Front brake caliper

**Front brake caliper bolt**
**35 Nm (3.5 m·kg, 25 ft·lb)**

Refer to “REPLACING THE FRONT BRAKE PADS” on page 4-23.

4. Fill:
   - Brake fluid reservoir (with the specified amount of the recommended brake fluid)

**Recommended fluid**
**DOT 4**

EWA13090

**WARNING**

- **Use only the designated brake fluid. Other brake fluids may cause the rubber seals to deteriorate, causing leakage and poor brake performance.**

- **Refill with the same type of brake fluid that is already in the system. Mixing brake fluids may result in a harmful chemical reaction, leading to poor brake performance.**
- **When refilling, be careful that water does not enter the brake fluid reservoir. Water will significantly lower the boiling point of the brake fluid and could cause vapor lock.**

ECA13540

**CAUTION:**

**Brake fluid may damage painted surfaces and plastic parts. Therefore, always clean up any spilt brake fluid immediately.**

5. Bleed:
   - Brake system
     Refer to "BLEEDING THE HYDRAULIC BRAKE SYSTEM" on page 3-24.
6. Check:
   - Brake fluid level
     Below the minimum level mark "a" → Add the recommended brake fluid to the proper level.
     Refer to "CHECKING THE BRAKE FLUID LEVEL" on page 3-22.

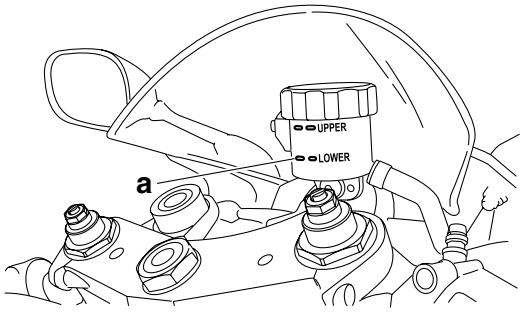


7. Check:
   - Brake lever operation
     Soft or spongy feeling → Bleed the brake system.
     Refer to "BLEEDING THE HYDRAULIC BRAKE SYSTEM" on page 3-24.

EAS22490

## REMOVING THE FRONT BRAKE MASTER CYLINDER

**NOTE:**

Before removing the front brake master cylinder, drain the brake fluid from the entire brake system.

1. Remove:
   - Front brake hose union bolt "1"
   - Copper washers "2"
   - Front brake hoses "3"

**NOTE:**

To collect any remaining brake fluid, place a container under the master cylinder and the end of the brake hose.

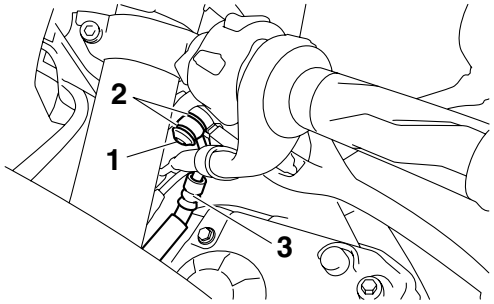


EAS22510

## CHECKING THE FRONT BRAKE MASTER CYLINDER

1. Check:
   - Front brake master cylinder
     Damage/scratches/wear → Replace.
   - Brake fluid delivery passages (brake master cylinder body)
     Obstruction → Blow out with compressed air.
2. Check:
   - Brake master cylinder kit
     Damage/scratches/wear → Replace.
3. Check:
   - Brake fluid reservoir
     Cracks/damage → Replace.
   - Brake fluid reservoir diaphragm
     Damage/wear → Replace.
4. Check:
   - Brake hose
   - Brake fluid reservoir hose
     Cracks/damage/wear → Replace.

EAS22520

## ASSEMBLING THE FRONT BRAKE MASTER CYLINDER

EWA13520

**WARNING**

- **Before installation, all internal brake components should be cleaned and lubricated with clean or new brake fluid.**
- **Never use solvents on internal brake components.**

**Recommended fluid**
**DOT 4**

EAS22540

## INSTALLING THE FRONT BRAKE MASTER CYLINDER

1. Install:
   - Front brake master cylinder “1”
   - Front brake master cylinder holder “2”

| | |
|---|---|
| 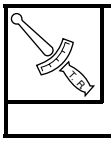 | **Front brake master cylinder holder bolt**<br>**13 Nm (1.3 m·kg, 9.4 ft·lb)** |

**NOTE:**

- Install the brake master cylinder holder with the “UP” mark “a” facing up.
- Align the mating surfaces of the brake master cylinder holder with the punch mark “b” on the handlebar.
- First, tighten the upper bolt, then the lower bolt.

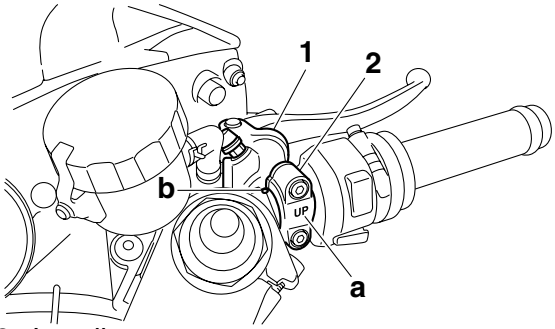


2. Install:
   - Front brake hose “1”
   - Copper washers “2” New
   - Front brake hose union bolt “3”

| | |
|---|---|
| 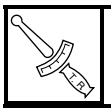 | **Front brake hose union bolt**<br>**30 Nm (3.0 m·kg, 22 ft·lb)** |

EWA13530

**WARNING**

**Proper brake hose routing is essential to insure safe vehicle operation. Refer to “CABLE ROUTING” on page 2-47.**

**NOTE:**

- Install the brake hose at a 15.8° angle to the front brake master cylinder as shown in the illustration.
- While holding the brake hose, tighten the union bolt.
- Turn the handlebar to the left and right to make sure the brake hose does not touch other parts (e.g., wire harness, cables, leads). Correct if necessary.

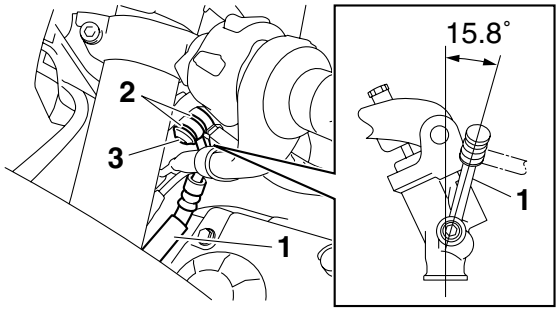


3. Fill:
   - Brake fluid reservoir
     (with the specified amount of the recommended brake fluid)

| | |
|---|---|
| | **Recommended fluid**<br>**DOT 4** |

EWA13090

**WARNING**

- **Use only the designated brake fluid. Other brake fluids may cause the rubber seals to deteriorate, causing leakage and poor brake performance.**
- **Refill with the same type of brake fluid that is already in the system. Mixing brake fluids may result in a harmful chemical reaction, leading to poor brake performance.**
- **When refilling, be careful that water does not enter the brake fluid reservoir. Water will significantly lower the boiling point of the brake fluid and could cause vapor lock.**

ECA13540

**CAUTION:**

**Brake fluid may damage painted surfaces and plastic parts. Therefore, always clean up any spilt brake fluid immediately.**

4. Bleed:
   - Brake system
     Refer to “BLEEDING THE HYDRAULIC BRAKE SYSTEM” on page 3-24.
5. Check:
   - Brake fluid level
     Below the minimum level mark “a” → Add the recommended brake fluid to the proper level.
     Refer to “CHECKING THE BRAKE FLUID LEVEL” on page 3-22.

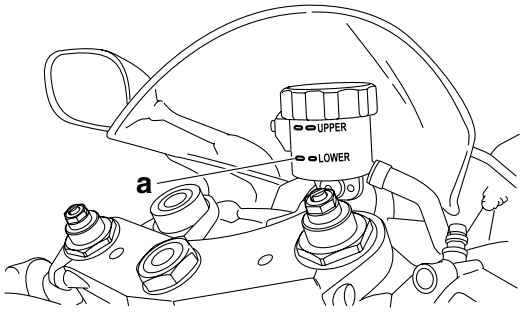


6. Check:
   - Brake lever operation
     Soft or spongy feeling → Bleed the brake system.
     Refer to “BLEEDING THE HYDRAULIC BRAKE SYSTEM” on page 3-24.

EAS22550

# REAR BRAKE

**Removing the rear brake pads**

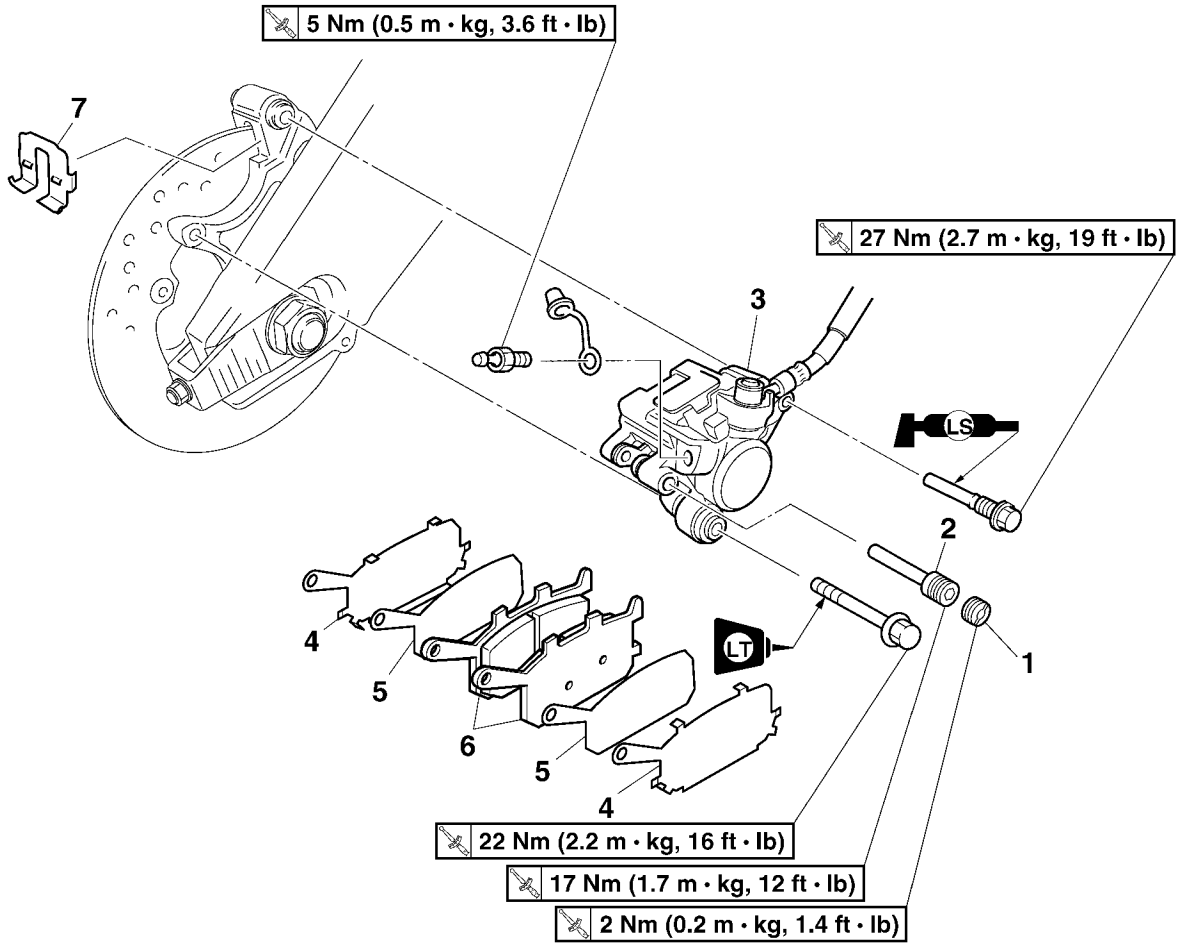


| Order | Job/Parts to remove | Q'ty | Remarks |
|---|---|---|---|
| 1 | Screw plug | 1 | |
| 2 | Brake pad pin | 1 | |
| 3 | Rear brake caliper | 1 | |
| 4 | Brake pad shim | 2 | |
| 5 | Brake pad insulator | 2 | |
| 6 | Rear brake pad | 2 | |
| 7 | Brake pad spring | 1 | |
| | | | For installation, reverse the removal procedure. |

**Removing the rear brake master cylinder**

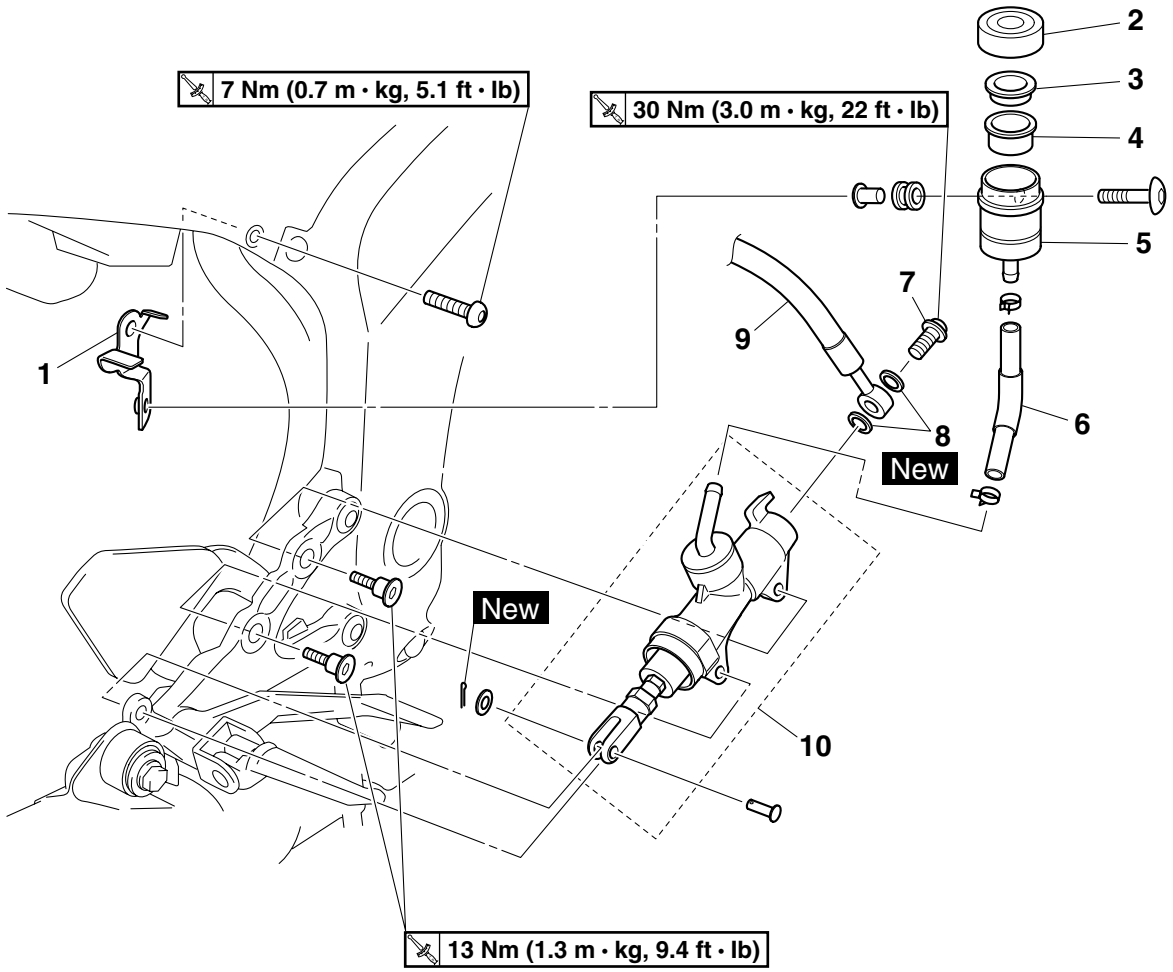


| Order | Job/Parts to remove | Q'ty | Remarks |
|---|---|---|---|
| | Brake fluid | | Drain.<br>Refer to "BLEEDING THE HYDRAULIC BRAKE SYSTEM" on page 3-24. |
| 1 | Brake fluid reservoir bracket | 1 | |
| 2 | Brake fluid reservoir cap | 1 | |
| 3 | Brake fluid reservoir diaphragm holder | 1 | |
| 4 | Brake fluid reservoir diaphragm | 1 | |
| 5 | Brake fluid reservoir | 1 | |
| 6 | Brake fluid reservoir hose | 1 | |
| 7 | Rear brake hose union bolt | 1 | |
| 8 | Copper washer | 2 | |
| 9 | Rear brake hose | 1 | |
| 10 | Rear brake master cylinder | 1 | |
| | | | For installation, reverse the removal procedure. |

**Disassembling the rear brake master cylinder**

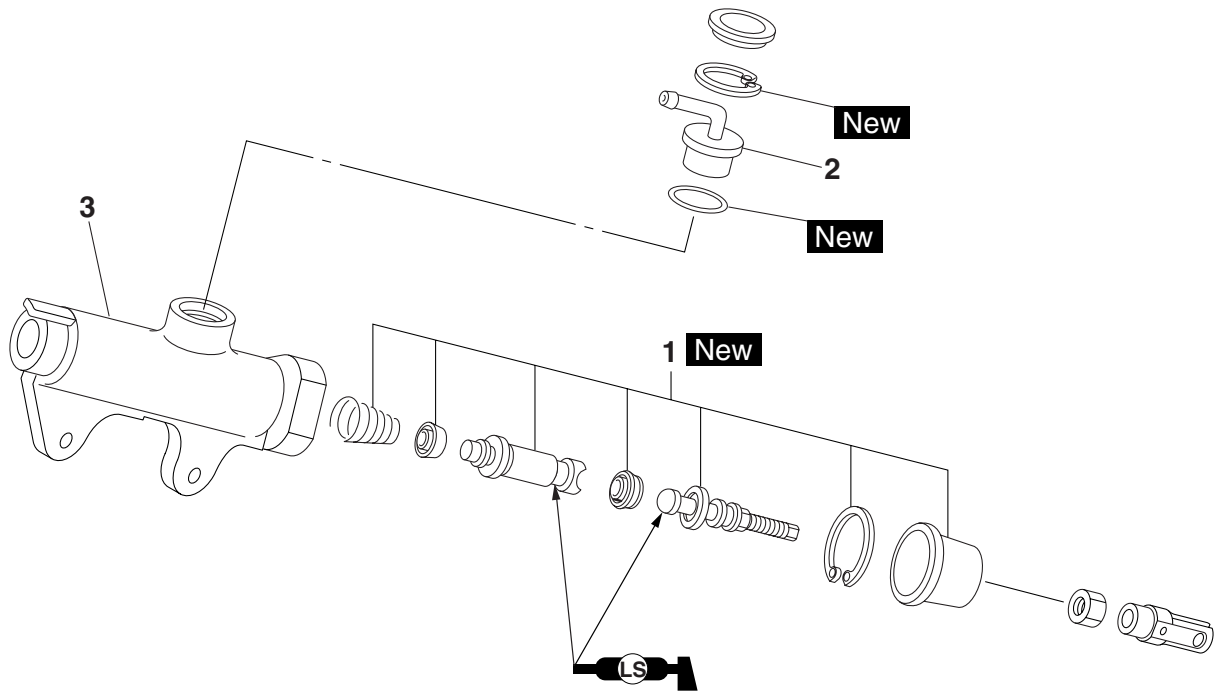


| Order | Job/Parts to remove | Q'ty | Remarks |
|---|---|---|---|
| 1 | Brake master cylinder kit | 1 | |
| 2 | Brake hose joint | 1 | |
| 3 | Brake master cylinder body | 1 | |
| | | | For assembly, reverse the disassembly procedure. |

**Removing the rear brake caliper**

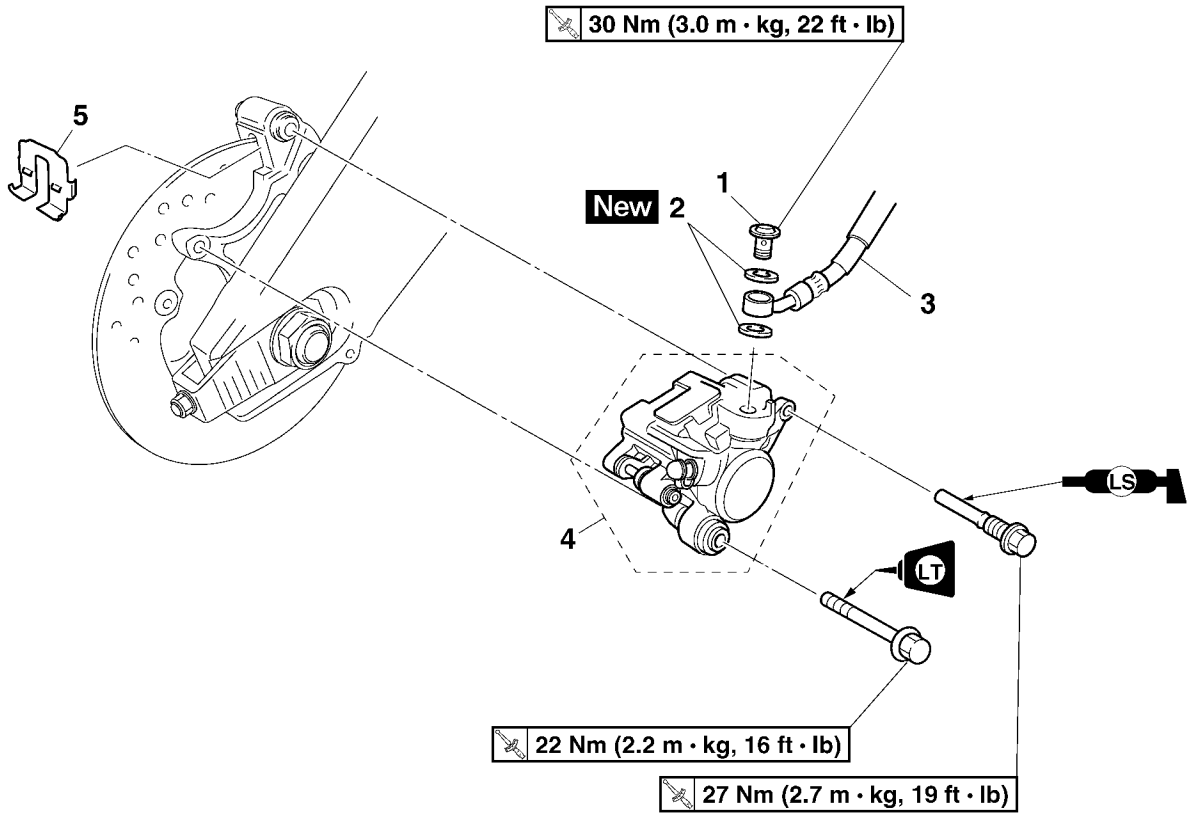


| Order | Job/Parts to remove | Q'ty | Remarks |
|---|---|---|---|
| | Brake fluid | | Drain.<br>Refer to "BLEEDING THE HYDRAULIC BRAKE SYSTEM" on page 3-24. |
| 1 | Rear brake hose union bolt | 1 | |
| 2 | Copper washer | 2 | |
| 3 | Rear brake hose | 1 | |
| 4 | Rear brake caliper | 1 | |
| 5 | Brake pad spring | 1 | |
| | | | For installation, reverse the removal procedure. |

**Disassembling the rear brake caliper**

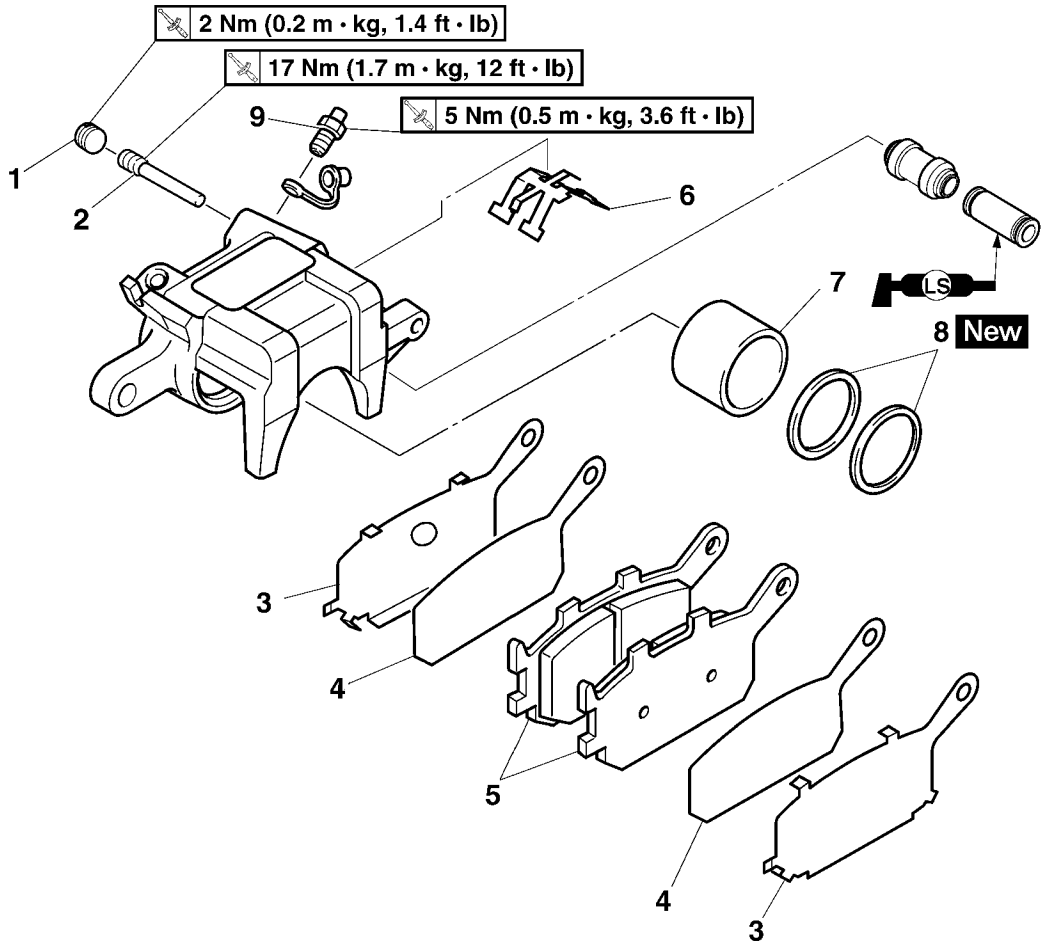


| Order | Job/Parts to remove | Q'ty | Remarks |
|---|---|---|---|
| 1 | Screw plug | 1 | |
| 2 | Brake pad pin | 1 | |
| 3 | Brake pad shim | 2 | |
| 4 | Brake pad insulator | 2 | |
| 5 | Rear brake pad | 2 | |
| 6 | Brake pad spring | 1 | |
| 7 | Brake caliper piston | 1 | |
| 8 | Brake caliper piston seal | 2 | |
| 9 | Bleed screw | 1 | |
| | | | For assembly, reverse the disassembly procedure. |

EAS22560
## INTRODUCTION

EWA14100
**WARNING**

**Disc brake components rarely require disassembly. Therefore, always follow these preventive measures:**
- **Never disassemble brake components unless absolutely necessary.**
- **If any connection on the hydraulic brake system is disconnected, the entire brake system must be disassembled, drained, cleaned, properly filled, and bled after reassembly.**
- **Never use solvents on internal brake components.**
- **Use only clean or new brake fluid for cleaning brake components.**
- **Brake fluid may damage painted surfaces and plastic parts. Therefore, always clean up any spilt brake fluid immediately.**
- **Avoid brake fluid coming into contact with the eyes as it can cause serious injury.**
- **FIRST AID FOR BRAKE FLUID ENTERING THE EYES:**
- **Flush with water for 15 minutes and get immediate medical attention.**

EAS22570
## CHECKING THE REAR BRAKE DISC

1. Remove:
   - Rear wheel
     Refer to “REAR WHEEL” on page 4-11.
2. Check:
   - Brake disc
     Damage/galling → Replace.
3. Measure:
   - Brake disc deflection
     Out of specification → Correct the brake disc deflection or replace the brake disc.
     Refer to “CHECKING THE FRONT BRAKE DISCS” on page 4-22.

**Brake disc deflection limit**
**0.15 mm (0.0059 in)**

4. Measure:
   - Brake disc thickness
     Measure the brake disc thickness at a few different locations.
     Out of specification → Replace.
     Refer to “CHECKING THE FRONT BRAKE DISCS” on page 4-22.

**Brake disc thickness limit**
**4.5 mm (0.18 in)**

5. Adjust:
   - Brake disc deflection
     Refer to “CHECKING THE FRONT BRAKE DISCS” on page 4-22.

**Rear brake disc bolt**
**30 Nm (3.0 m·kg, 22 ft·lb)**
**LOCTITE®**

6. Install:
   - Rear wheel
     Refer to “REAR WHEEL” on page 4-11.

EAS22580
## REPLACING THE REAR BRAKE PADS

**NOTE:**
When replacing the brake pads, it is not necessary to disconnect the brake hose or disassemble the brake caliper.

1. Measure:
   - Brake pad wear limit “a”
     Out of specification → Replace the brake pads as a set.

**Brake pad lining thickness (inner)**
**6.0 mm (0.24 in)**
**Limit**
**1.0 mm (0.04 in)**
**Brake pad lining thickness (outer)**
**6.0 mm (0.24 in)**
**Limit**
**1.0 mm (0.04 in)**

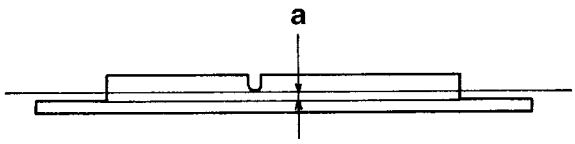


2. Install:
   - Brake pad insulators
     (onto the brake pads)
   - Brake pad shims
     (onto the brake pads)
   - Brake pads

- Brake pad spring

**NOTE:**

Always install new brake pads, brake pad insulators, brake pad shims, and a brake pad spring as a set.

▼▼▼▼▼▼▼▼▼▼▼▼▼▼▼▼▼▼▼▼▼▼▼▼▼▼▼▼▼▼▼▼▼▼

a. Connect a clear plastic hose "1" tightly to the bleed screw "2". Put the other end of the hose into an open container.
b. Loosen the bleed screw and push the brake caliper piston into the brake caliper with your finger.

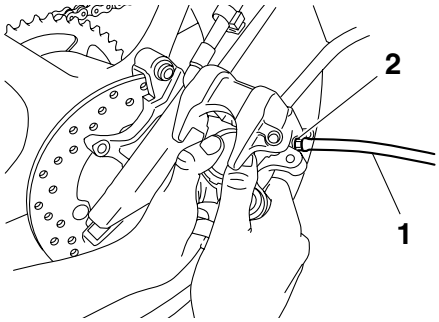


c. Tighten the bleed screw.

| | |
|---|---|
| | **Bleed screw**<br>**5 Nm (0.5 m·kg, 3.6 ft·lb)** |

d. Install a new brake pad insulator and new brake pad shim "3" onto each new brake pad "4".

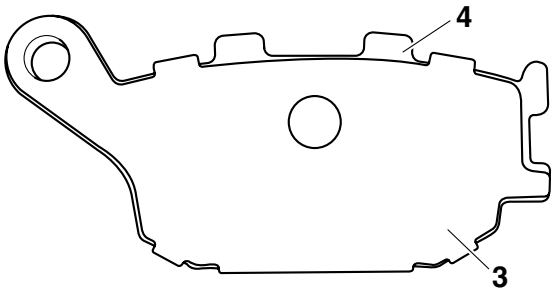


▲▲▲▲▲▲▲▲▲▲▲▲▲▲▲▲▲▲▲▲▲▲▲▲▲▲▲▲▲▲▲▲▲▲

3. Install:
   - Rear brake caliper
   - Brake pad pin
   - Screw plug

| | |
|---|---|
| | **Rear brake caliper bolt (M12)**<br>**27 Nm (2.7 m·kg, 19 ft·lb)**<br>**Rear brake caliper bolt (M8)**<br>**22 Nm (2.2 m·kg, 16 ft·lb)**<br>**LOCTITE®** |

4. Check:
   - Brake fluid level
     Below the minimum level mark "a" → Add the recommended brake fluid to the proper level.
     Refer to "CHECKING THE BRAKE FLUID LEVEL" on page 3-22.

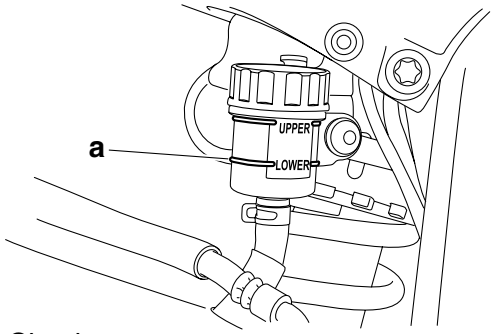


5. Check:
   - Brake pedal operation
     Soft or spongy feeling → Bleed the brake system.
     Refer to "BLEEDING THE HYDRAULIC BRAKE SYSTEM" on page 3-24.

EAS22590

## REMOVING THE REAR BRAKE CALIPER

**NOTE:**

Before disassembling the brake caliper, drain the brake fluid from the entire brake system.

1. Remove:
   - Rear brake hose union bolt "1"
   - Copper washers "2"
   - Rear brake hose "3"

**NOTE:**

Put the end of the brake hose into a container and pump out the brake fluid carefully.

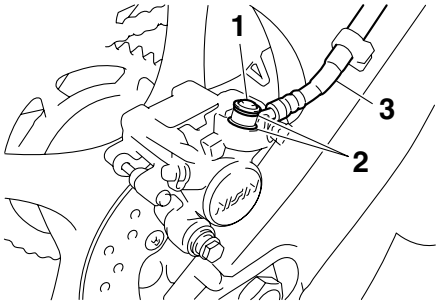


EAS22600

## DISASSEMBLING THE REAR BRAKE CALIPER

1. Remove:
   - Brake caliper piston "1"
   - Brake caliper piston seals "2"

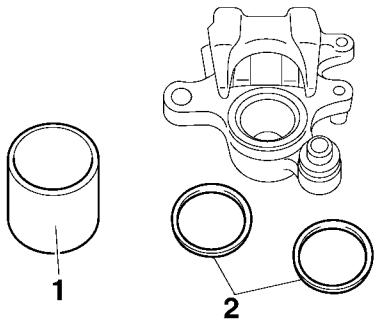


▼▼▼▼▼▼▼▼▼▼▼▼▼▼▼▼▼▼▼▼▼▼▼▼▼▼▼▼▼▼▼▼▼▼

a. Blow compressed air into the brake hose joint opening “a” to force out the piston from the brake caliper.

EWA13550

**WARNING**

- **Cover the brake caliper piston with a rag. Be careful not to get injured when the piston is expelled from the brake caliper.**
- **Never try to pry out the brake caliper piston.**

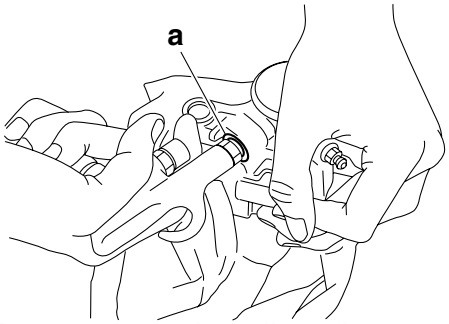


b. Remove the brake caliper piston seals.

▲▲▲▲▲▲▲▲▲▲▲▲▲▲▲▲▲▲▲▲▲▲▲▲▲▲▲▲▲▲▲▲▲▲

EAS22640

## CHECKING THE REAR BRAKE CALIPER

| Recommended brake component replacement schedule | |
|---|---|
| Brake pads | If necessary |
| Piston seals | Every two years |
| Brake hoses | Every four years |
| Brake fluid | Every two years and whenever the brake is disassembled |

1. Check:
   - Brake caliper piston “1”
     Rust/scratches/wear → Replace the brake caliper pistons.
   - Brake caliper cylinder “2”
     Scratches/wear → Replace the brake caliper assembly.
   - Brake caliper body “3”
     Cracks/damage → Replace the brake caliper assembly.
   - Brake fluid delivery passages (brake caliper body)
     Obstruction → Blow out with compressed air.

EWA13610

**WARNING**

**Whenever a brake caliper is disassembled, replace the brake caliper piston seals.**

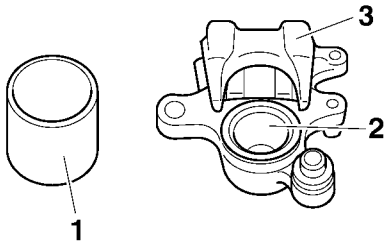


2. Check:
   - Brake caliper bracket “1”
     Cracks/damage → Replace.

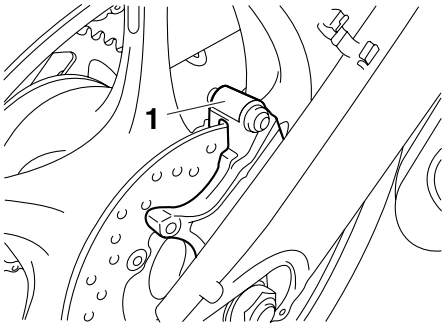


EAS22650

## ASSEMBLING THE REAR BRAKE CALIPER

EWA13620

**WARNING**

- **Before installation, all internal brake components should be cleaned and lubricated with clean or new brake fluid.**
- **Never use solvents on internal brake components as they will cause the piston seals to swell and distort.**
- **Whenever a brake caliper is disassembled, replace the brake caliper piston seals.**

| | |
|---|---|
| | **Recommended fluid**<br>**DOT 4** |

EAS22670

## INSTALLING THE REAR BRAKE CALIPER

1. Install:
   - Rear brake caliper “1” (temporarily)
   - Copper washers New
   - Rear brake hose “2”
   - Rear brake hose union bolt “3”

| | |
|---|---|
| | **Rear brake hose union bolt 30 Nm (3.0 m·kg, 22 ft·lb)** |

EWA13530

**WARNING**

**Proper brake hose routing is essential to insure safe vehicle operation. Refer to “CABLE ROUTING” on page 2-47.**

ECA14170

**CAUTION:**

**When installing the brake hose onto the brake caliper “1”, make sure the brake pipe “a” touches the projection “b” on the brake caliper.**

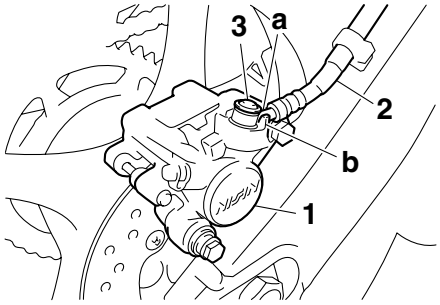


2. Remove:
   - Rear brake caliper
3. Install:
   - Rear brake pads
   - Brake pad springs
   - Brake pad pin
   - Rear brake caliper
     Refer to “REPLACING THE REAR BRAKE PADS” on page 4-34.

| | |
|---|---|
| | **Rear brake caliper bolt (M12) 27 Nm (2.7 m·kg, 19 ft·lb)**<br>**Rear brake caliper bolt (M8) 22 Nm (2.2 m·kg, 16 ft·lb)**<br>**LOCTITE®** |

4. Fill:
   - Brake fluid reservoir
     (with the specified amount of the recommended brake fluid)

| | |
|---|---|
| | **Recommended fluid DOT 4** |

EWA13090

**WARNING**

- **Use only the designated brake fluid. Other brake fluids may cause the rubber seals to deteriorate, causing leakage and poor brake performance.**
- **Refill with the same type of brake fluid that is already in the system. Mixing brake fluids may result in a harmful chemical reaction, leading to poor brake performance.**
- **When refilling, be careful that water does not enter the brake fluid reservoir. Water will significantly lower the boiling point of the brake fluid and could cause vapor lock.**

ECA13540

**CAUTION:**

**Brake fluid may damage painted surfaces and plastic parts. Therefore, always clean up any spilt brake fluid immediately.**

5. Bleed:
   - Brake system
     Refer to “BLEEDING THE HYDRAULIC BRAKE SYSTEM” on page 3-24.
6. Check:
   - Brake fluid level
     Below the minimum level mark “a” → Add the recommended brake fluid to the proper level.
     Refer to “CHECKING THE BRAKE FLUID LEVEL” on page 3-22.

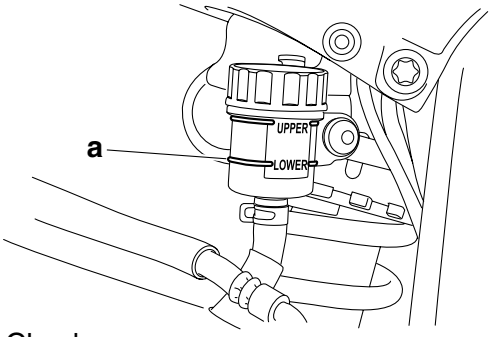


7. Check:
   - Brake pedal operation
     Soft or spongy feeling → Bleed the brake system.
     Refer to “BLEEDING THE HYDRAULIC BRAKE SYSTEM” on page 3-24.

EAS22700
## REMOVING THE REAR BRAKE MASTER CYLINDER

**NOTE:**

Before removing the rear brake master cylinder, drain the brake fluid from the entire brake system.

1. Remove:
   - Rear brake hose union bolt “1”
   - Copper washers “2”
   - Rear brake hose “3”

**NOTE:**

To collect any remaining brake fluid, place a container under the master cylinder and the end of the brake hose.

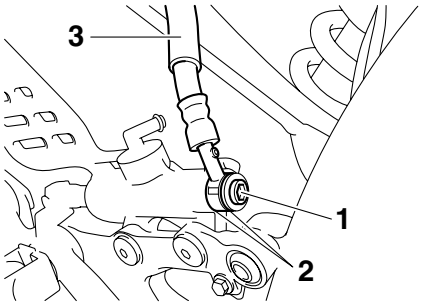


EAS22720
## CHECKING THE REAR BRAKE MASTER CYLINDER

1. Check:
   - Brake master cylinder
     Damage/scratches/wear → Replace.
   - Brake fluid delivery passages
     (brake master cylinder body)
     Obstruction → Blow out with compressed air.
2. Check:
   - Brake master cylinder kit
     Damage/scratches/wear → Replace.
3. Check:
   - Brake fluid reservoir
     Cracks/damage → Replace.
   - Brake fluid reservoir diaphragm
     Cracks/damage → Replace.
4. Check:
   - Rear brake hose
   - Brake fluid reservoir hose
     Cracks/damage/wear → Replace.

EAS22730
## ASSEMBLING THE REAR BRAKE MASTER CYLINDER

EWA13520

**WARNING**

- **Before installation, all internal brake components should be cleaned and lubricated with clean or new brake fluid.**
- **Never use solvents on internal brake components.**

**Recommended fluid**
**DOT 4**

EAS22740
## INSTALLING THE REAR BRAKE MASTER CYLINDER

1. Install:
   - Rear brake hose “1”
   - Copper washers “2” New
   - Rear brake hose union bolt “3”

**Rear brake hose union bolt**
**30 Nm (3.0 m·kg, 22 ft·lb)**

EWA13530

**WARNING**

**Proper brake hose routing is essential to insure safe vehicle operation. Refer to “CABLE ROUTING” on page 2-47.**

ECA14160

**CAUTION:**

**When installing the brake hose onto the brake master cylinder, make sure the brake pipe touches the projection “a” as shown.**

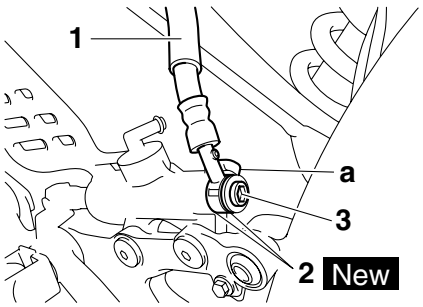


2. Fill:
   - Brake fluid reservoir
     (with the specified amount of the recommended brake fluid)

**Recommended fluid**
**DOT 4**

EWA13090

**WARNING**

- **Use only the designated brake fluid. Other brake fluids may cause the rubber seals to deteriorate, causing leakage and poor brake performance.**
- **Refill with the same type of brake fluid that is already in the system. Mixing brake fluids may result in a harmful chemical reaction, leading to poor brake performance.**
- **When refilling, be careful that water does not enter the brake fluid reservoir. Water will significantly lower the boiling point of the brake fluid and could cause vapor lock.**

ECA13540

**CAUTION:**

**Brake fluid may damage painted surfaces and plastic parts. Therefore, always clean up any spilt brake fluid immediately.**

3. Bleed:
   - Brake system
     Refer to “BLEEDING THE HYDRAULIC BRAKE SYSTEM” on page 3-24.
4. Check:
   - Brake fluid level
     Below the minimum level mark “a” → Add the recommended brake fluid to the proper level.
     Refer to “CHECKING THE BRAKE FLUID LEVEL” on page 3-22.

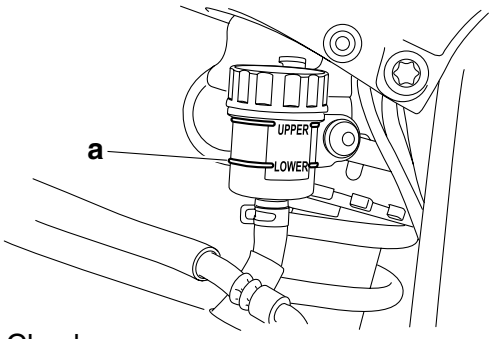


5. Check:
   - Brake pedal operation
     Soft or spongy feeling → Bleed the brake system.
     Refer to “BLEEDING THE HYDRAULIC BRAKE SYSTEM” on page 3-24.
6. Adjust:
   - Brake pedal position
     Refer to “ADJUSTING THE REAR DISC BRAKE” on page 3-21.
7. Adjust:
   - Rear brake light operation timing
     Refer to “ADJUSTING THE REAR BRAKE LIGHT SWITCH” on page 3-23.

EAS22850

# HANDLEBARS

**Removing the handlebars**

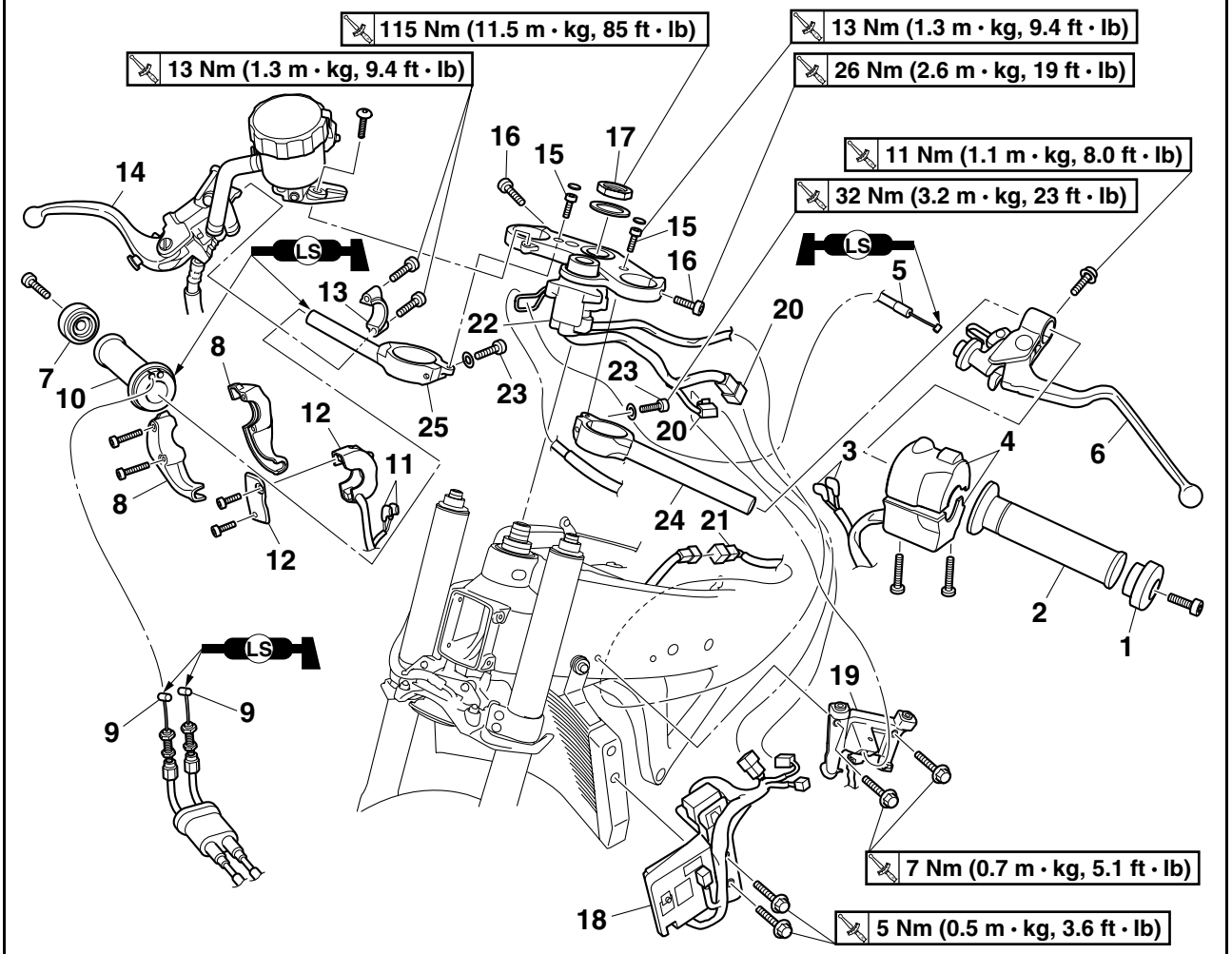


| Order | Job/Parts to remove | Q'ty | Remarks |
|---|---|---|---|
| | Left side panel/Left upper side cowling | | Refer to "GENERAL CHASSIS" on page 4-1. |
| | Fuel tank | | Refer to "FUEL TANK" on page 7-1. |
| | Air filter case | | Refer to "AIR FILTER CASE" on page 7-4. |
| | Air induction system cover | | Refer to "AIR INDUCTION SYSTEM" on page 7-13. |
| 1 | Left grip end | 1 | |
| 2 | Handlebar grip | 1 | |
| 3 | Clutch switch connector | 2 | Disconnect. |
| 4 | Left handlebar switch | 1 | |
| 5 | Clutch cable | 1 | Disconnect. |
| 6 | Clutch lever assembly | 1 | |
| 7 | Right grip end | 1 | |
| 8 | Throttle cable housing | 2 | |
| 9 | Throttle cable | 2 | Disconnect. |
| 10 | Throttle grip | 1 | |
| 11 | Front brake light switch connector | 2 | Disconnect. |

**Removing the handlebars**

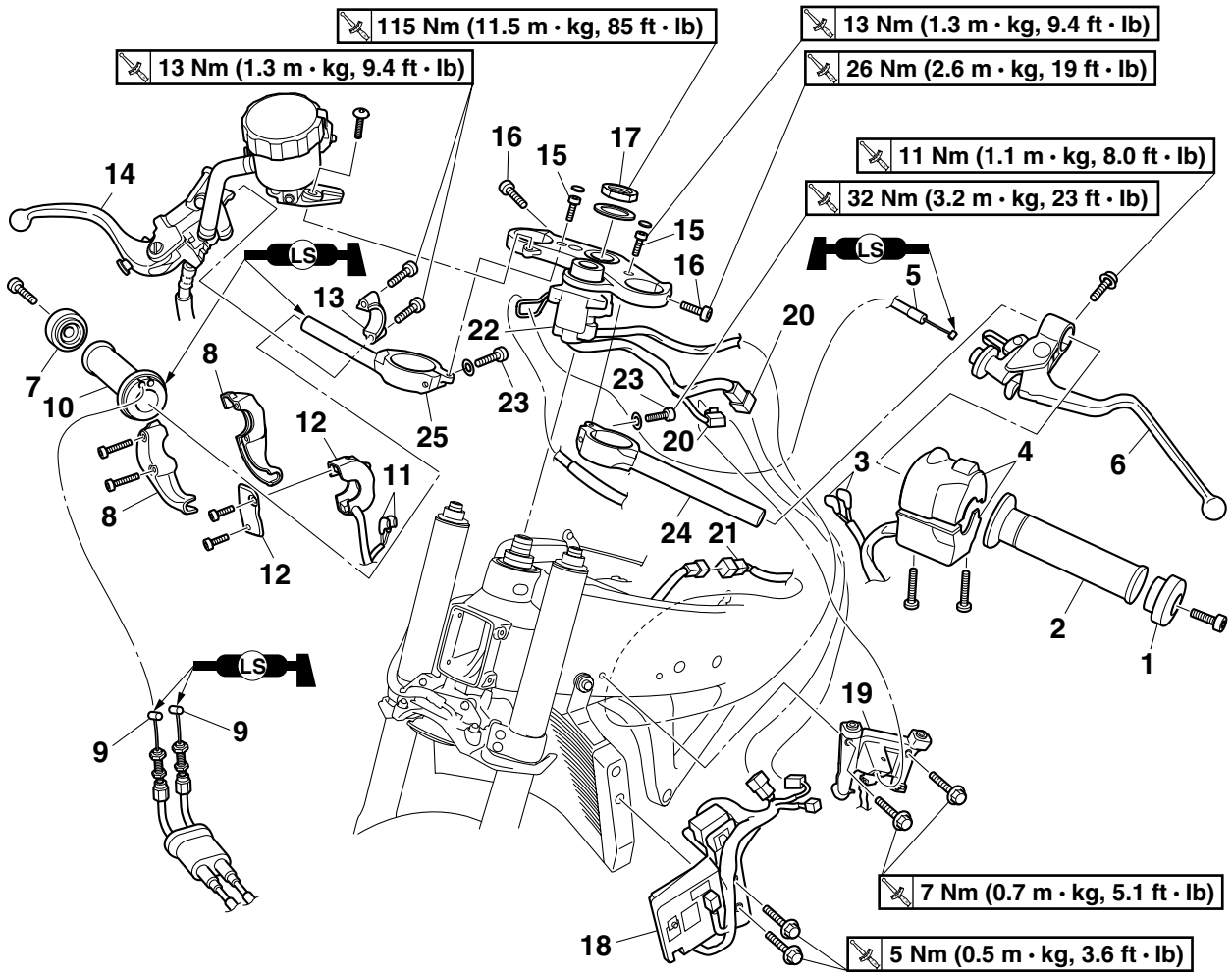


| Order | Job/Parts to remove | Q'ty | Remarks |
|---|---|---|---|
| 12 | Right handlebar switch/Bracket | 1/1 | |
| 13 | Front brake master cylinder holder | 1 | |
| 14 | Front brake master cylinder assembly | 1 | |
| 15 | Handlebar bolt | 2 | |
| 16 | Upper bracket pinch bolt | 2 | Loosen. |
| 17 | Steering stem nut | 1 | |
| 18 | Rectifier/regulator holder | 1 | |
| 19 | Left coupler holder | 1 | |
| 20 | Main switch coupler | 2 | Disconnect. |
| 21 | Immobilizer unit coupler | 1 | Disconnect. |
| 22 | Upper bracket | 1 | |
| 23 | Handlebar pinch bolt | 2 | Loosen. |
| 24 | Left handlebar | 1 | |
| 25 | Right handlebar | 1 | |
| | | | For installation, reverse the removal procedure. |

EAS22870
## REMOVING THE HANDLEBARS
1. Stand the vehicle on a level surface.

EWA13120
**WARNING**

**Securely support the vehicle so that there is no danger of it falling over.**

2. Remove:
   - Handlebar grip “1”

**NOTE:**

Blow compressed air between the handlebar and the handlebar grip, and gradually push the grip off the handlebar.

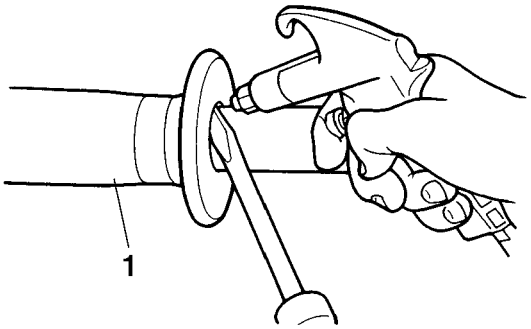


EAS22890
## CHECKING THE HANDLEBARS
1. Check:
   - Left handlebar
   - Right handlebar
     Bends/cracks/damage → Replace.

EWA13690
**WARNING**

**Do not attempt to straighten a bent handlebar as this may dangerously weaken it.**

EAS22900
## INSTALLING THE HANDLEBARS
1. Stand the vehicle on a level surface.

EWA13120
**WARNING**

**Securely support the vehicle so that there is no danger of it falling over.**

2. Install:
   - Front brake master cylinder “1”
   - Front brake master cylinder holder “2”

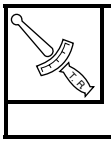

**Front brake master cylinder holder bolt**
**13 Nm (1.3 m·kg, 9.4 ft·lb)**

**NOTE:**

- Install the brake master cylinder holder with the “UP” mark “a” facing up.
- Align the mating surfaces of the brake master cylinder holder with the punch mark “b” on the handlebar.
- First, tighten the upper bolt, then the lower bolt.

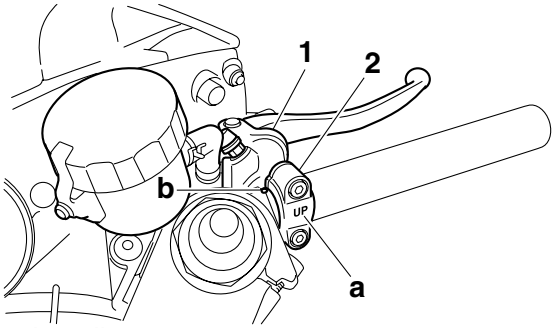


3. Install:
   - Right handlebar switch “1”
   - Right handlebar switch bracket “2”

**NOTE:**

Align the projection “a” on the right handlebar switch with the hole “b” on the right handlebar.

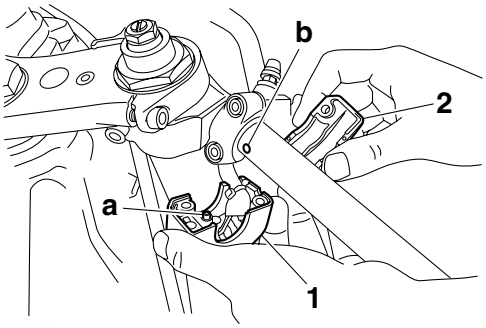


4. Install:
   - Throttle grip
   - Throttle cables
   - Throttle cable housings “1”

**NOTE:**

Align the projection “a” on the throttle cable housing with the hole “b” in the right handlebar.

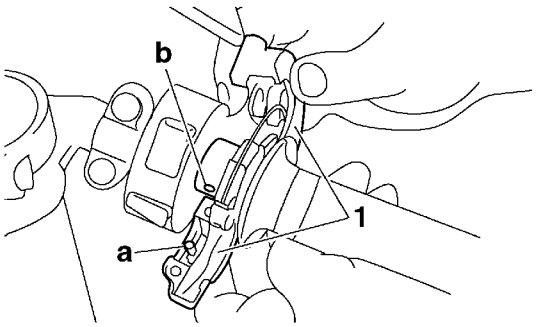


5. Install:
   - Right grip end “1”

**NOTE:**

There should be 1–3 mm (0.04–0.12 in) of clearance “a” between the throttle grip and the right grip end.

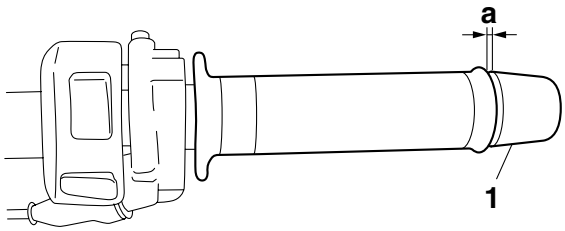


6. Install:
   - Clutch lever assembly “1”

| | |
|---|---|
| 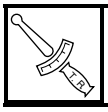 | **Clutch lever bolt**<br>**11 Nm (1.1 m·kg, 8.0 ft·lb)** |

**NOTE:**

Align the mating surfaces of the clutch lever assembly with the punch mark “a” on the left handlebar.

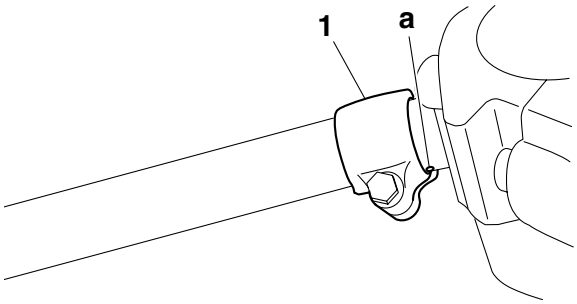


7. Install:
   - Left handlebar switch “1”

**NOTE:**

Align the projection “a” on the left handlebar switch with the hole “b” in the left handlebar.

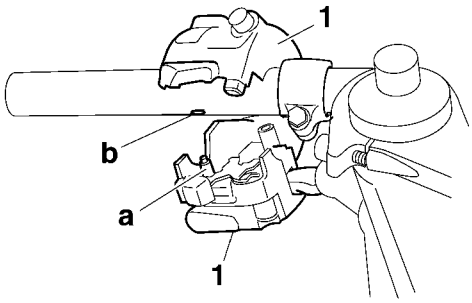


8. Install:
   - Handlebar grip “1”
   - Left grip end “2”

▼▼▼▼▼▼▼▼▼▼▼▼▼▼▼▼▼▼▼▼▼▼▼▼▼▼▼▼▼▼▼▼▼▼

a. Apply a thin coat of rubber adhesive onto the end of the left handlebar.
b. Slide the handlebar grip over the end of the left handlebar.
c. Wipe off any excess rubber adhesive with a clean rag.

EWA13700

**WARNING**

**Do not touch the handlebar grip until the rubber adhesive has fully dried.**

**NOTE:**

There should be 1–3 mm (0.04–0.12 in) of clearance “a” between the handlebar grip and the grip end.

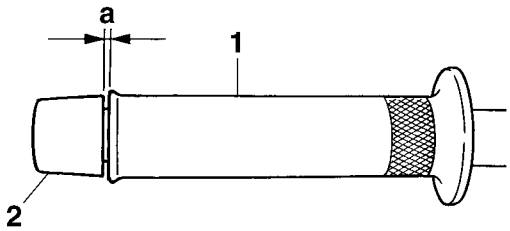


▲▲▲▲▲▲▲▲▲▲▲▲▲▲▲▲▲▲▲▲▲▲▲▲▲▲▲▲▲▲▲▲▲▲

9. Check:
   - Cable routing

**NOTE:**

Make sure the immobilizer unit lead, main switch lead, brake hoses, throttle cables, clutch cable, and handlebar switch leads are routed properly. Refer to “CABLE ROUTING” on page 2-47.

10. Adjust:
    - Clutch cable free play
      Refer to “ADJUSTING THE CLUTCH LEVER FREE PLAY” on page 3-13.

| | |
|---|---|
| | **Clutch lever free play**<br>**10.0–15.0 mm (0.39–0.59 in)** |

11. Adjust:
    - Throttle cable free play
      Refer to “ADJUSTING THE THROTTLE CABLE FREE PLAY” on page 3-8.

| | |
|---|---|
| | **Throttle cable free play**<br>**3.0–5.0 mm (0.12–0.20 in)** |

EAS22950

# FRONT FORK

**Removing the front fork legs**

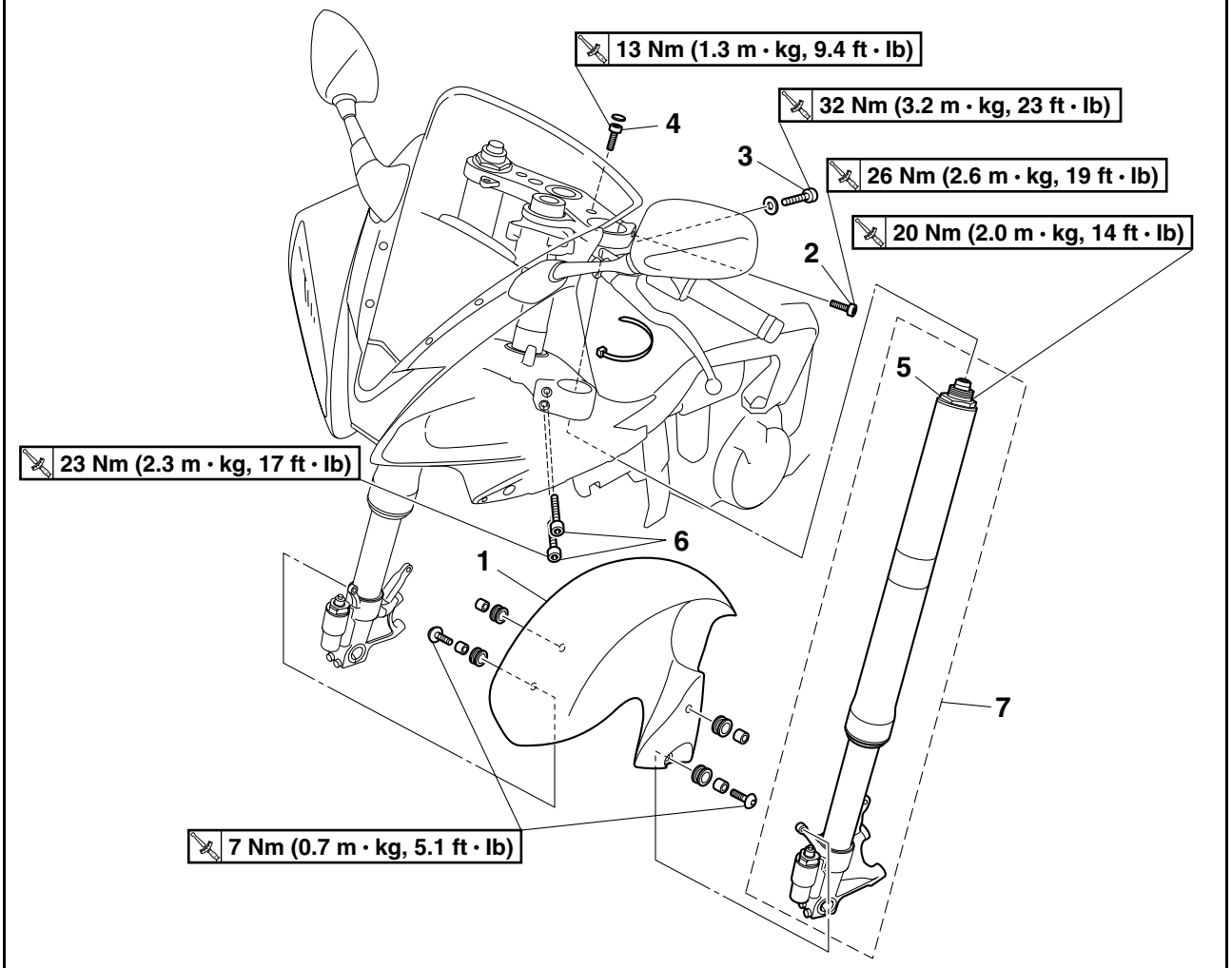


| Order | Job/Parts to remove | Q'ty | Remarks |
|---|---|---|---|
| | | | The following procedure applies to both of the front fork legs. |
| | Side panels | | Refer to "GENERAL CHASSIS" on page 4-1. |
| | Front wheel | | Refer to "FRONT WHEEL" on page 4-4. |
| 1 | Front fender | 1 | |
| 2 | Upper bracket pinch bolt | 1 | Loosen. |
| 3 | Handlebar pinch bolt | 1 | Loosen. |
| 4 | Handlebar bolt | 1 | Loosen. |
| 5 | Cap bolt | 1 | Loosen. |
| 6 | Lower bracket pinch bolt | 2 | Loosen. |
| 7 | Front fork leg | 1 | |
| | | | For installation, reverse the removal procedure. |

**Disassembling the front fork legs**

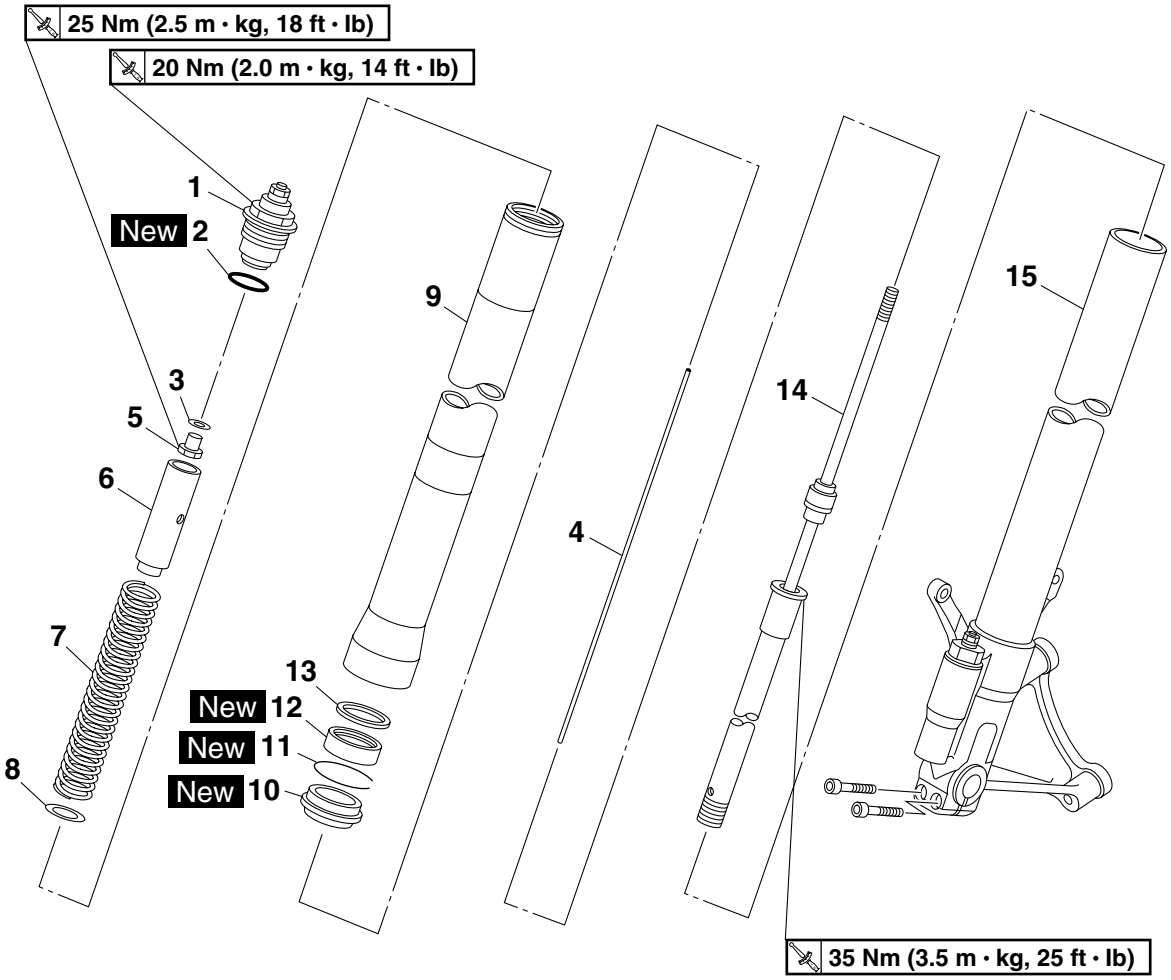


| Order | Job/Parts to remove | Q'ty | Remarks |
|---|---|---|---|
| | | | The following procedure applies to both of the front fork legs. |
| 1 | Cap bolt | 1 | |
| 2 | O-ring | 1 | |
| 3 | Washer | 1 | |
| 4 | Damper adjusting rod | 1 | |
| 5 | Nut | 1 | |
| 6 | Spacer | 1 | |
| 7 | Fork spring | 1 | |
| 8 | Spring seat | 1 | |
| 9 | Outer tube | 1 | |
| 10 | Dust seal | 1 | |
| 11 | Oil seal clip | 1 | |
| 12 | Oil seal | 1 | |
| 13 | Washer | 1 | |
| 14 | Damper rod assembly | 1 | |

**Disassembling the front fork legs**

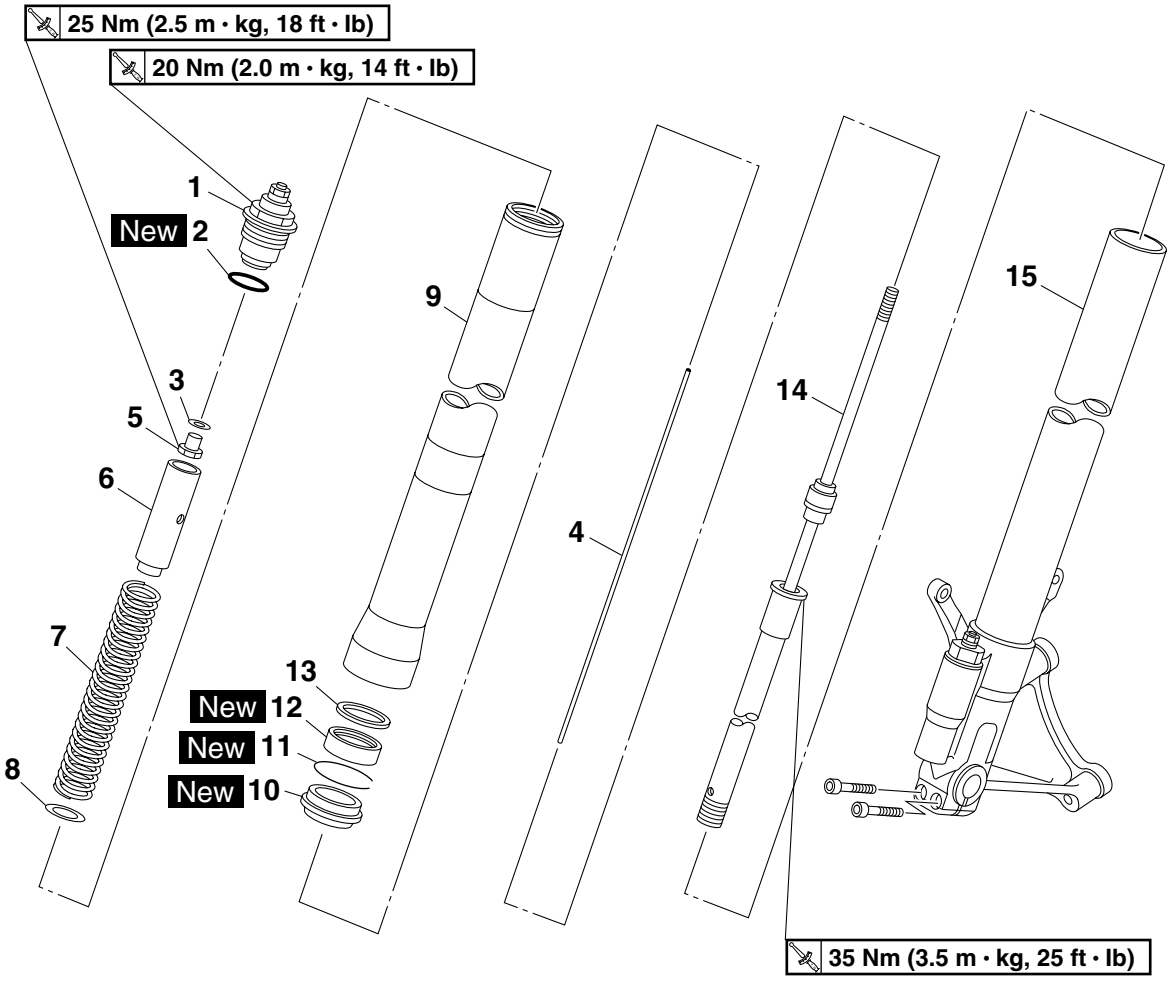


| Order | Job/Parts to remove | Q'ty | Remarks |
|---|---|---|---|
| 15 | Inner tube | 1 | |
| | | | For assembly, reverse the disassembly procedure. |

EAS22970

## REMOVING THE FRONT FORK LEGS

The following procedure applies to both of the front fork legs.

1. Stand the vehicle on a level surface.

EWA13120

**⚠ WARNING**

**Securely support the vehicle so that there is no danger of it falling over.**

**NOTE:**

Place the vehicle on a suitable stand so that the front wheel is elevated.

2. Loosen:
   - Upper bracket pinch bolt “1”
   - Handlebar pinch bolt “2”
   - Handlebar bolt “3”
   - Cap bolt “4”
   - Lower bracket pinch bolts “5”

EWA13640

**⚠ WARNING**

**Before loosening the upper and lower bracket pinch bolts, support the front fork leg.**

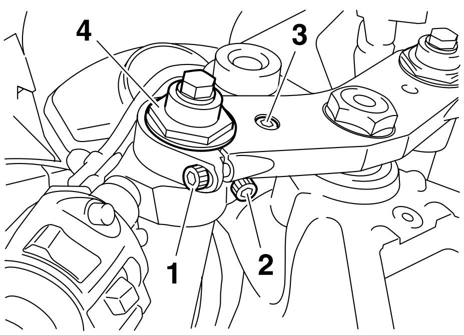


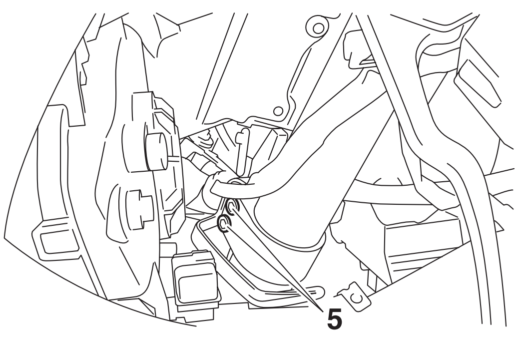


EAS22990

## DISASSEMBLING THE FRONT FORK LEGS

The following procedure applies to both of the front fork legs.

1. Position the collar “1” as shown in the illustration by turning the spring preload adjusting bolt “2” counterclockwise until it stops.

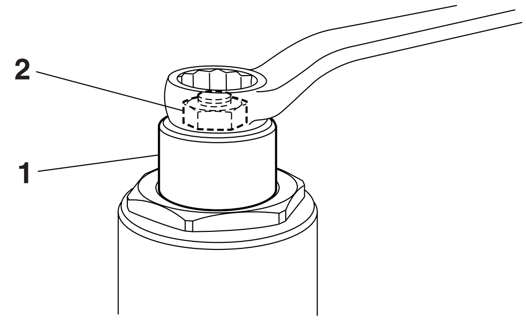


2. Remove:
   - Cap bolt “1” (from the damper adjusting rod)
   - Spacer “2”
   - Nut “3”

▼▼▼▼▼▼▼▼▼▼▼▼▼▼▼▼▼▼▼▼▼▼▼▼▼▼▼▼▼▼▼▼▼▼▼

a. Press down on the spacer with the fork spring compressor “4”.

b. Install the rod holder “5” between the nut “3” and the spacer “2”.

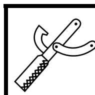

**Fork spring compressor**
**90890-01441**
**YM-01441**
**Rod holder**
**90890-01434**
**Damper rod holder double ended**
**YM-01434**

**NOTE:**

Use the side of the rod holder that is marked “B”.

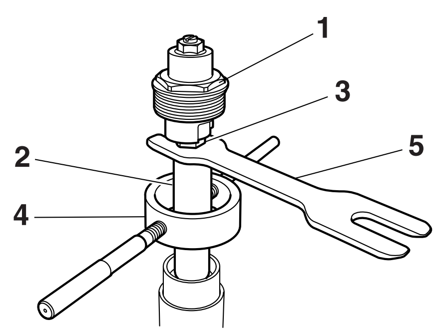


c. Hold the spring preload adjusting bolt “6” and loosen the nut “3”.

EC2C01011

**CAUTION:**

**When loosening the nut “3”, be sure not to break the projections “a” on the collar “7” of the cap bolt “1”.**

**NOTE:**

Loosen the nut using a proper tool that has a thickness of 3 mm (0.12 in) or less.

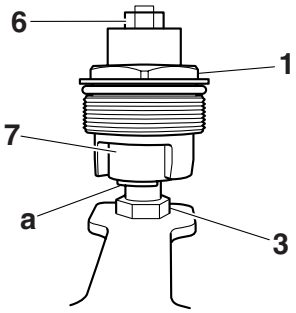


d. Remove the cap bolt.
e. Remove the rod holder and fork spring compressor.
f. Remove the nut and spacer.

▲▲▲▲▲▲▲▲▲▲▲▲▲▲▲▲▲▲▲▲▲▲▲▲▲▲▲▲▲▲▲▲▲▲

3. Drain:
   - Fork oil

**NOTE:**

Stroke the damper rod "1" several times while draining the fork oil.

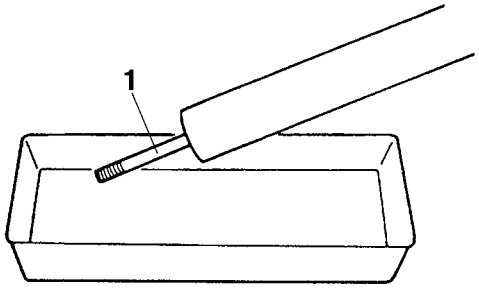


4. Remove:
   - Damper rod assembly

**NOTE:**

Remove the damper rod assembly with the damper rod holder "1".

**Damper rod holder**
**90890-01506**
**YM-01506**

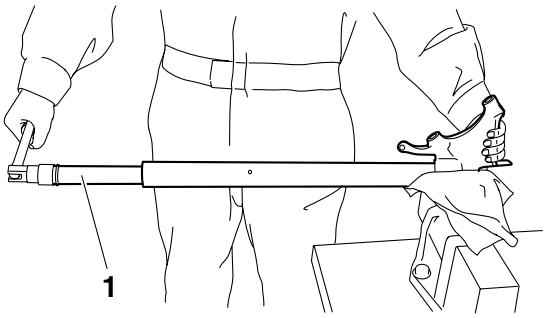


5. Remove:
   - Oil seal clip "1"
     (with a flat-head screwdriver)

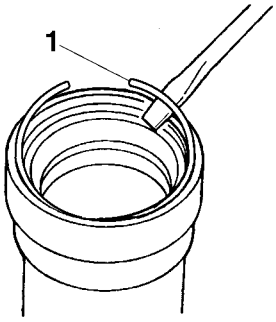


EAS23010

## CHECKING THE FRONT FORK LEGS

The following procedure applies to both of the front fork legs.

1. Check:
   - Inner tube
   - Outer tube
     Bends/damage/scratches → Replace.

EWA13650

**WARNING**

**Do not attempt to straighten a bent inner tube as this may dangerously weaken it.**

2. Measure:
   - Spring free length "a"
     Out of specification → Replace.

**Fork spring free length**
**247.0 mm (9.72 in)**
**Limit**
**242.1 mm (9.53 in)**

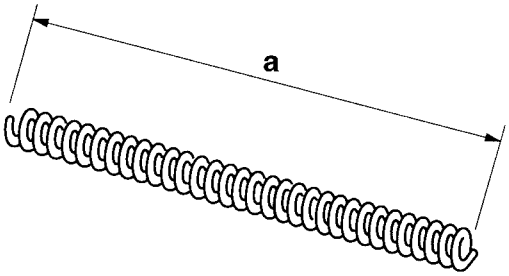

3. Check:
   - Damper rod
     Damage/wear → Replace.
     Obstruction → Blow out all of the oil passages with compressed air.
   - Damper adjusting rod
     Bends/damage → Replace.

ECA14200

**CAUTION:**

- **The front fork leg has a built-in damper adjusting rod and a very sophisticated internal construction, which are particularly sensitive to foreign material.**
- **When disassembling and assembling the front fork leg, do not allow any foreign material to enter the front fork.**

4. Check:
   - Cap bolt O-ring "1"
     Damage/wear → Replace.
   - Cap bolt collar projections "2"
     Cracks/damage → Replace.

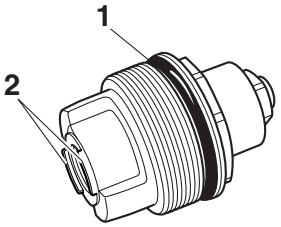


EAS23040

## ASSEMBLING THE FRONT FORK LEGS

The following procedure applies to both of the front fork legs.

EWA13660

**WARNING**

- **Make sure the oil levels in both front fork legs are equal.**
- **Uneven oil levels can result in poor handling and a loss of stability.**

**NOTE:**

- When assembling the front fork leg, be sure to replace the following parts:
  - Oil seal
  - Dust seal
  - O-ring
- Before assembling the front fork leg, make sure all of the components are clean.

1. Install:
   - Damper rod assembly "1"
   - Inner tube "2"

ECA14210

**CAUTION:**

**Allow the damper rod assembly to slide slowly down the inner tube "2" until it protrudes from the bottom of the inner tube. Be careful not to damage the inner tube.**

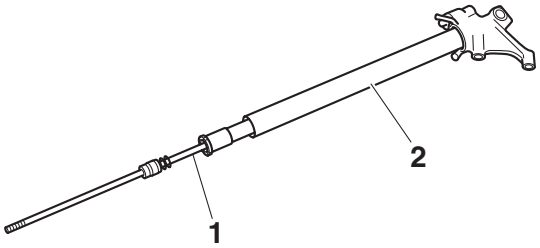


2. Lubricate:
   - Inner tube's outer surface

| | |
|---|---|
| | **Recommended oil**<br>**Ohlins R & T43** |

3. Tighten:
   - Damper rod assembly

| | |
|---|---|
| | **Damper rod assembly**<br>**35 Nm (3.5 m·kg, 25 ft·lb)** |

**NOTE:**

Tighten the damper rod assembly with the damper rod holder "1".

| | |
|---|---|
| | **Damper rod holder**<br>**90890-01506**<br>**YM-01506** |

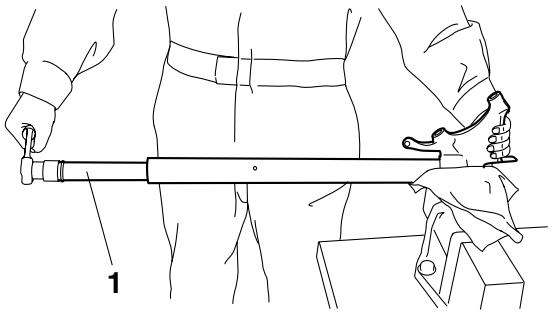


4. Install:
   - Dust seal "1" New
   - Oil seal clip "2" New
   - Oil seal "3" New
   - Washer "4"

EC2C01012

**CAUTION:**

**Make sure the numbered side of the oil seal faces bottom side.**

**NOTE:**

- Before installing the oil seal, lubricate its lips with lithium-soap-based grease.
- Lubricate the outer surface of the inner tube with fork oil.
- Before installing the oil seal, cover the top of the front fork leg with a plastic bag to protect the oil seal during installation.

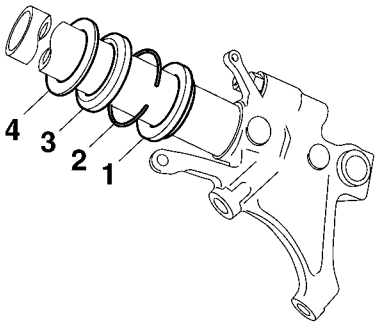


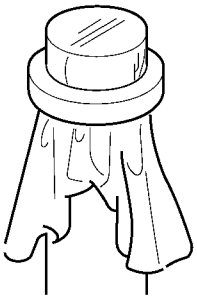

5. Install:
   - Outer tube
     (to the inner tube)
6. Install:
   - Washer
   - Oil seal “1”
     (with the fork seal driver “2”)

**Fork seal driver**
**90890-01442**
**Adjustable fork seal driver (36–46 mm)**
**YM-01442**

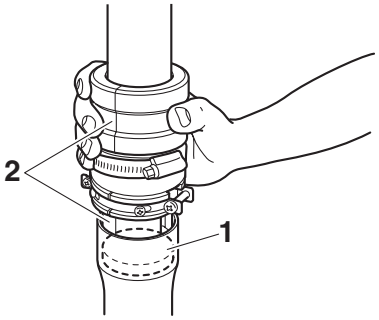


7. Install:
   - Oil seal clip “1”

**NOTE:**

Adjust the oil seal clip so that it fits into the outer tube’s groove.

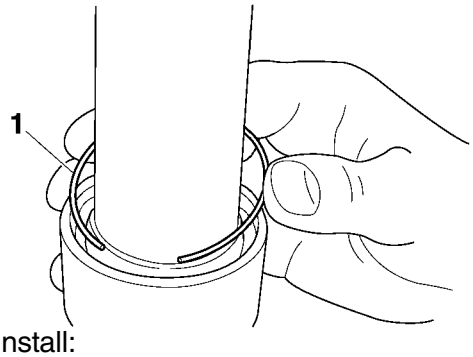


8. Install:
   - Dust seal “1”
     (with the fork seal driver weight “2”)

**Fork seal driver**
**90890-01442**
**Adjustable fork seal driver (36–46 mm)**
**YM-01442**

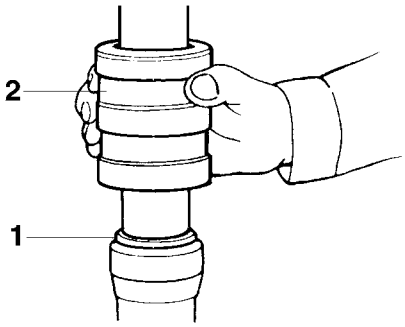


9. Install:
   - Rod puller “1”
   - Rod puller attachment “2”
     (onto the damper rod “3”)

**Rod puller**
**90890-01437**
**Universal damping rod bleeding tool set**
**YM-A8703**
**Rod puller attachment (M10)**
**90890-01436**
**Universal damping rod bleeding tool set**
**YM-A8703**

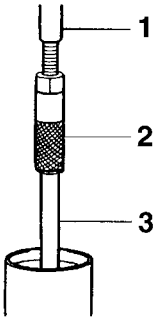


10.Fully compress the front fork leg.
11.Fill:
- Front fork leg
  (with the specified amount of the recommended fork oil)

**Quantity**
**465.0 cm³ (15.72 US oz) (16.37 Imp.oz)**
**Recommended oil**
**Ohlins R & T43**

ECA14230
**CAUTION:**

- **Be sure to use the recommended fork oil. Other oils may have an adverse effect on front fork performance.**
- **When disassembling and assembling the front fork leg, do not allow any foreign material to enter the front fork.**

12.After filling the front fork leg, slowly stroke the damper rod “1” up and down (at least ten times) to distribute the fork oil.

**NOTE:**

Be sure to stroke the damper rod slowly because the fork oil may spurt out.

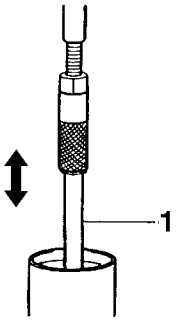


13.Before measuring the fork oil level, wait ten minutes until the oil has settled and the air bubbles have dispersed.

**NOTE:**

Be sure to bleed the front fork leg of any residual air.

14.Measure:
- Front fork leg oil level “a”
  (from the top of the outer tube, with the outer tube fully compressed and without the fork spring)
  Out of specification → Correct.

**Level**
**108.0 mm (4.25 in)**

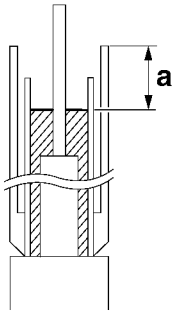


15.Install:
- Spring seat “1”
- Fork spring “2”
- Spacer “3”
- Nut “4”
- Damper adjusting rod “5”
- Washer “6”
- Cap bolt “7”
  (with O-ring)

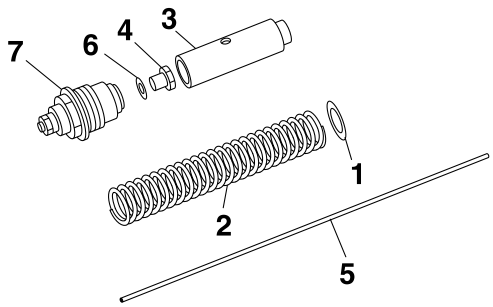


▼▼▼▼▼▼▼▼▼▼▼▼▼▼▼▼▼▼▼▼▼▼▼▼▼▼▼▼▼▼▼▼▼▼▼

a. Remove the rod puller attachment.
b. Install the spring seat.
c. Install the fork spring.

**NOTE:**

Install the spring with the smaller pitch “a” facing up “A”.

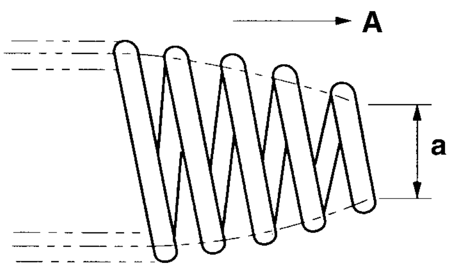


d. Install the spacer.
e. Install the nut.
f. Reinstall the rod puller attachment.
g. Press down on the spacer with the fork spring compressor “8”.
h. Pull up the rod puller and install the rod holder “9” between the nut “4” and the spacer “3”.

**Rod puller**
**90890-01437**
**Universal damping rod bleeding tool set**
**YM-A8703**
**Rod puller attachment (M10)**
**90890-01436**
**Universal damping rod bleeding tool set**
**YM-A8703**
**Fork spring compressor**
**90890-01441**
**YM-01441**
**Rod holder**
**90890-01434**
**Damper rod holder double ended**
**YM-01434**

**NOTE:**

Use the side of the rod holder that is marked “B”.

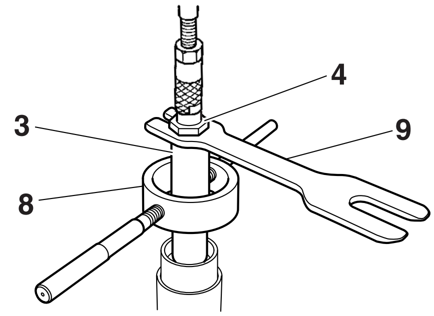


i. Remove the rod puller and rod puller attachment.
j. Install the nut “4” all the way onto the damper rod assembly.

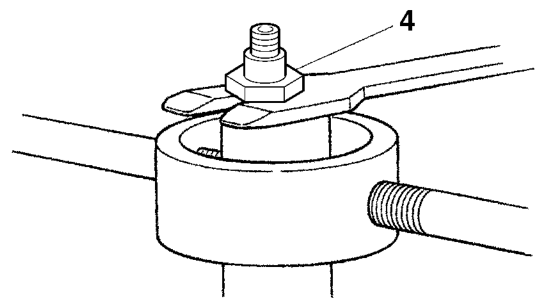


k. Install the damper adjusting rod.
l. Install the washer and cap bolt, and then finger tighten the cap bolt.
m. Hold the nut and tighten the spring preload adjusting bolt “10” into the cap bolt to specification.

EWA13670

**WARNING**

**Always use a new cap bolt O-ring.**

EC2C01013

**CAUTION:**

**When tightening the spring preload adjusting bolt “10” into the cap bolt, be sure not to break the projections “c” on the collar “11”.**

**NOTE:**

Hold the nut “4” using a proper tool that has a thickness of 3 mm (0.12 in) or less.

**Nut and cap bolt**
**25 Nm (2.5 m·kg, 18 ft·lb)**

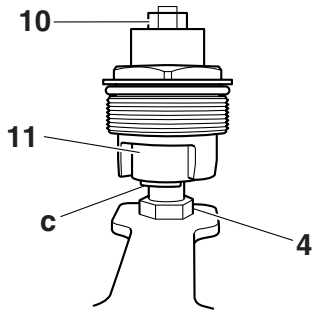


n. Remove the rod holder and fork spring compressor.

▲▲▲▲▲▲▲▲▲▲▲▲▲▲▲▲▲▲▲▲▲▲▲▲▲▲▲▲▲▲▲▲

16. Install:
- Cap bolt
  (to the outer tube)

**NOTE:**

Temporarily tighten the cap bolt.

EAS23050

## INSTALLING THE FRONT FORK LEGS

The following procedure applies to both of the front fork legs.

1. Install:
- Front fork leg
  Temporarily tighten the upper and lower bracket pinch bolts.

EWA13680

**WARNING**

**Make sure the brake hoses are routed properly.**

**NOTE:**

Make sure the outer tube is flush with the top of the upper bracket.

2. Tighten:
- Lower bracket pinch bolts “1” and “2”

| | |
|---|---|
| | **Lower bracket pinch bolt**<br>**23 Nm (2.3 m·kg, 17 ft·lb)** |

**NOTE:**

Tighten each bolt to 23 Nm (2.3 m·kg, 17 ft·lb) in the order pinch bolt “1” → pinch bolt “2” → pinch bolt “1”.

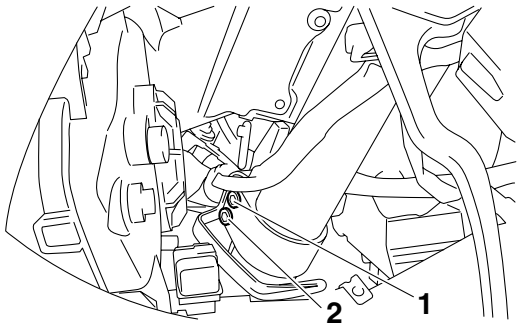


3. Tighten:
- Cap bolt “1”

| | |
|---|---|
| | **Cap bolt**<br>**20 Nm (2.0 m·kg, 14 ft·lb)** |

- Handlebar bolt “2”

| | |
|---|---|
| | **Handlebar bolt**<br>**13 Nm (1.3 m·kg, 9.4 ft·lb)** |

- Handlebar pinch bolt “3”

| | |
|---|---|
| | **Handlebar pinch bolt**<br>**32 Nm (3.2 m·kg, 23 ft·lb)** |

- Upper bracket pinch bolt “4”

| | |
|---|---|
| | **Upper bracket pinch bolt**<br>**26 Nm (2.6 m·kg, 19 ft·lb)** |

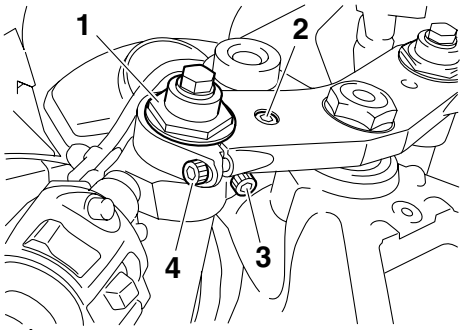


4. Check:
- Cable routing

**NOTE:**

Make sure the brake hose, throttle cables, clutch cable, and handlebar switch leads are routed properly. Refer to “CABLE ROUTING” on page 2-47.

5. Install:
- Plastic locking tie “1”
- Plastic locking tie “2”

**NOTE:**

- Fasten the left handlebar switch lead to the left front fork leg with the plastic locking tie.

- Fasten the front brake hose to the right front fork leg with the plastic locking tie.

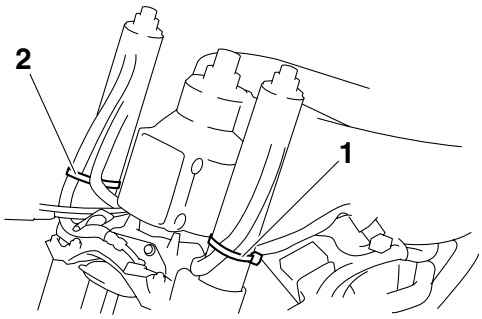


6. Adjust:
   - Spring preload
   - Rebound damping
   - Compression damping
     Refer to “ADJUSTING THE FRONT FORK LEGS” on page 3-28.

EAS23090

# STEERING HEAD

**Removing the lower bracket**

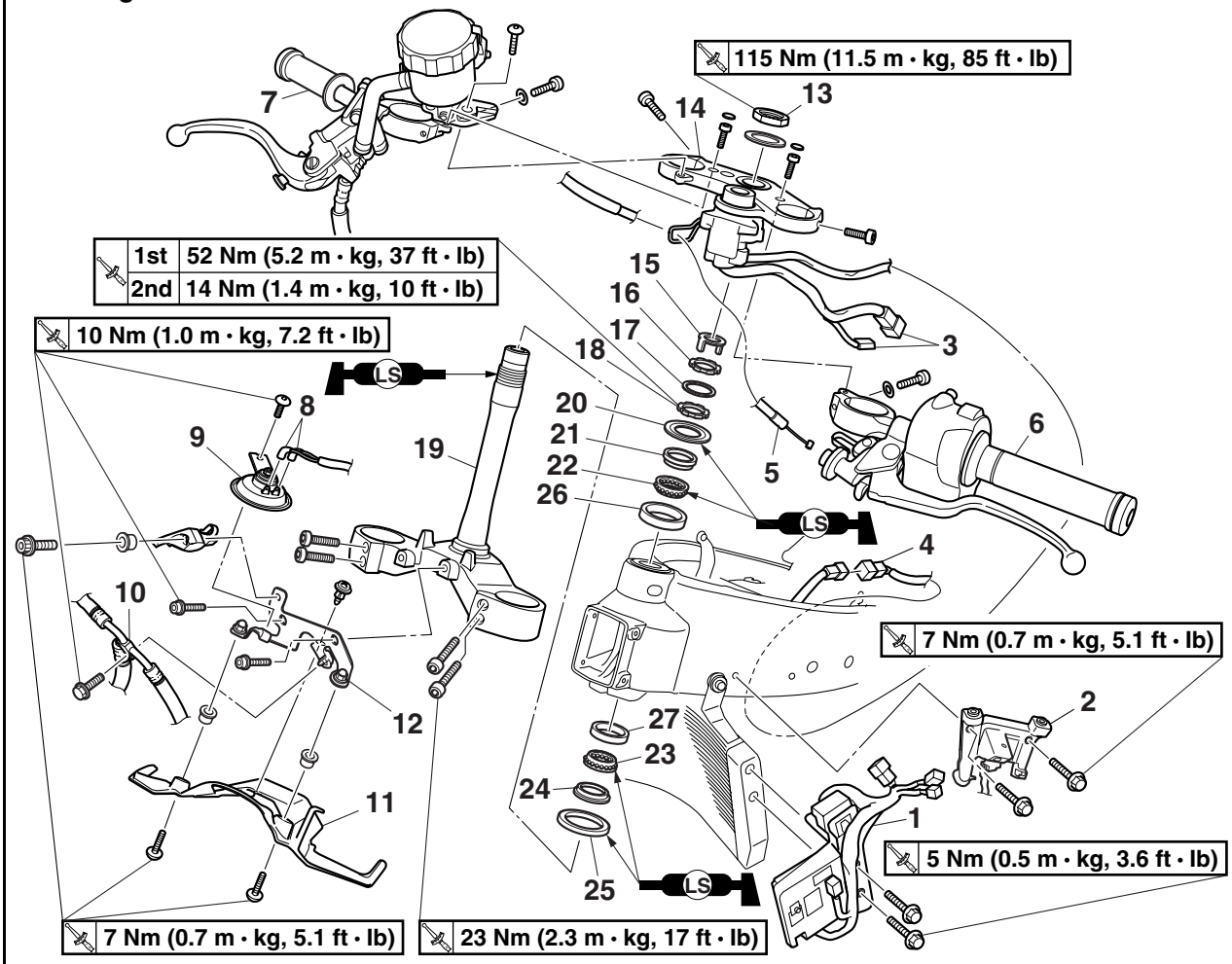


| Order | Job/Parts to remove | Q'ty | Remarks |
|---|---|---|---|
| | Front cowling assembly | | Refer to "GENERAL CHASSIS" on page 4-1. |
| | Front fork legs | | Refer to "FRONT FORK" on page 4-44. |
| | Fuel tank | | Refer to "FUEL TANK" on page 7-1. |
| | Air filter case | | Refer to "AIR FILTER CASE" on page 7-4. |
| | Air induction system cover | | Refer to "AIR INDUCTION SYSTEM" on page 7-13. |
| 1 | Rectifier/regulator holder | 1 | |
| 2 | Left coupler holder | 1 | |
| 3 | Main switch coupler | 2 | Disconnect. |
| 4 | Immobilizer unit coupler | 1 | Disconnect. |
| 5 | Clutch cable | 1 | Disconnect. |
| 6 | Left handlebar assembly | 1 | |
| 7 | Right handlebar assembly | 1 | |
| 8 | Horn connector | 2 | Disconnect. |
| 9 | Horn | 1 | |
| 10 | Front brake hose joint | 1 | |

**Removing the lower bracket**

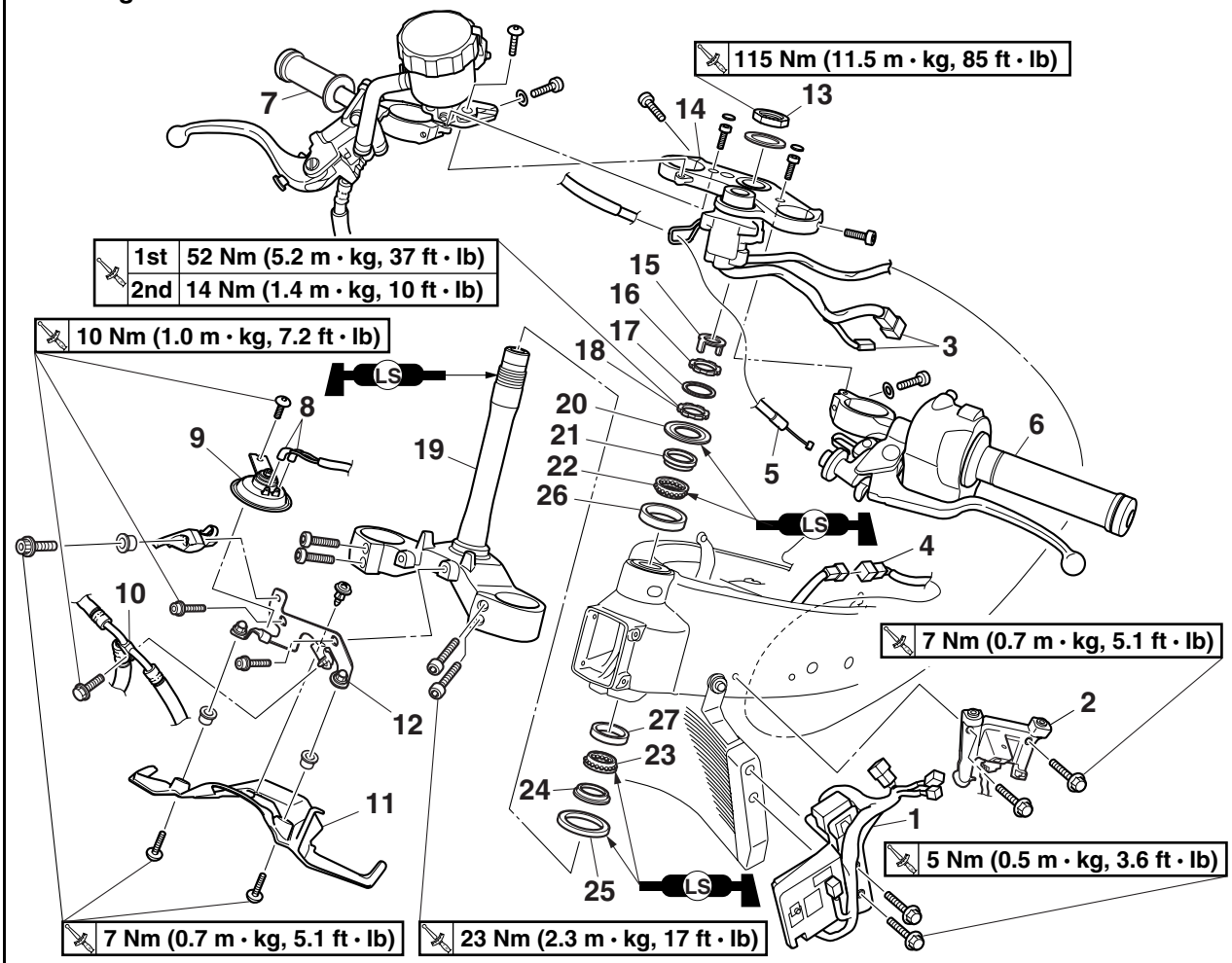


| Order | Job/Parts to remove | Q'ty | Remarks |
|---|---|---|---|
| 11 | Lower bracket cover | 1 | |
| 12 | Front brake hose joint bracket | 1 | |
| 13 | Steering stem nut | 1 | |
| 14 | Upper bracket | 1 | |
| 15 | Lock washer | 1 | |
| 16 | Upper ring nut | 1 | |
| 17 | Rubber washer | 1 | |
| 18 | Lower ring nut | 1 | |
| 19 | Lower bracket | 1 | |
| 20 | Upper bearing cover | 1 | |
| 21 | Upper bearing inner race | 1 | |
| 22 | Upper bearing | 1 | |
| 23 | Lower bearing | 1 | |
| 24 | Lower bearing inner race | 1 | |
| 25 | Lower bearing dust seal | 1 | |
| 26 | Upper bearing outer race | 1 | |

**Removing the lower bracket**

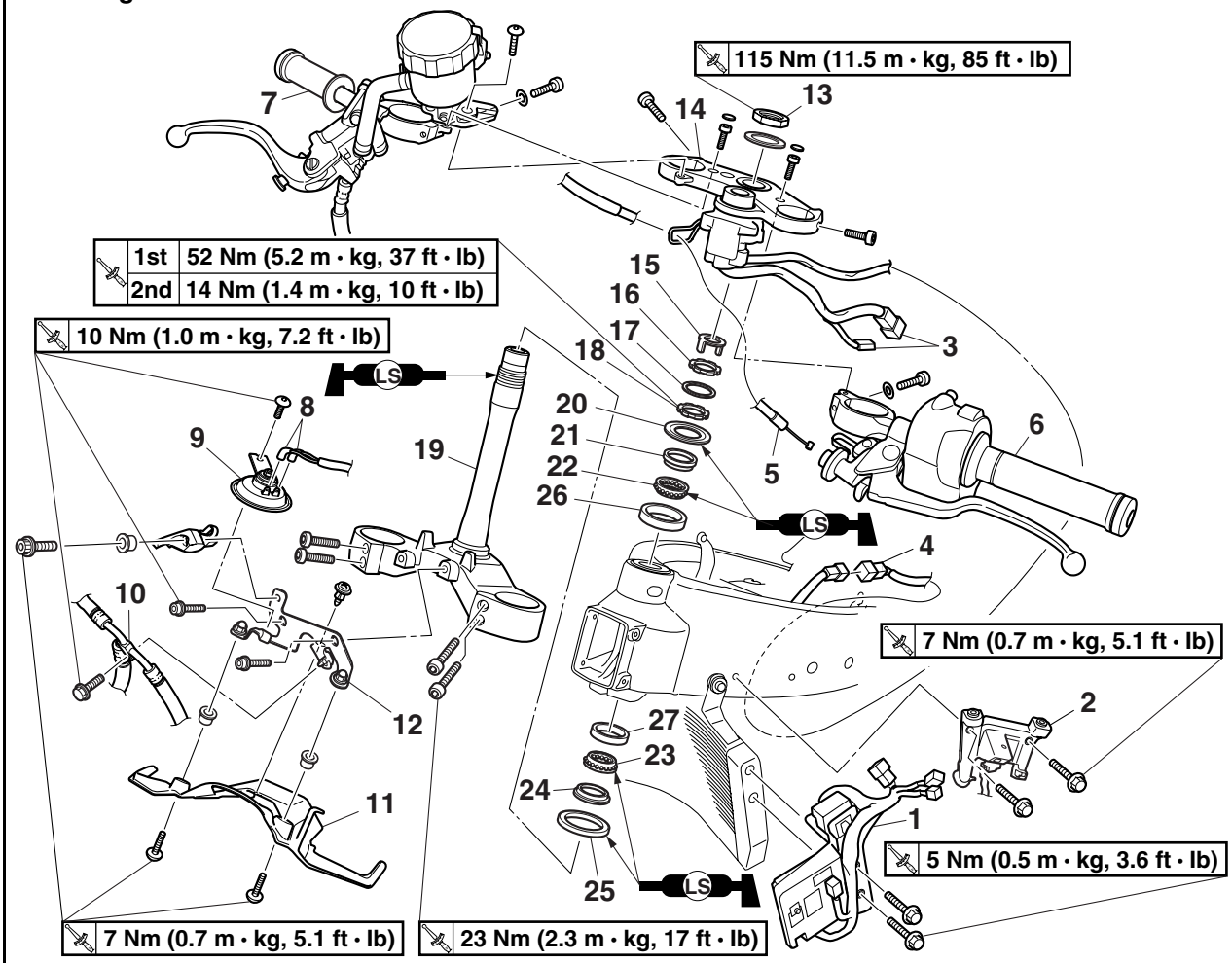


| Order | Job/Parts to remove | Q'ty | Remarks |
|---|---|---|---|
| 27 | Lower bearing outer race | 1 | |
| | | | For installation, reverse the removal procedure. |

EAS23110

## REMOVING THE LOWER BRACKET

1. Stand the vehicle on a level surface.

EWA13120

**WARNING**

**Securely support the vehicle so that there is no danger of it falling over.**

2. Remove:
   - Upper ring nut “1”
   - Rubber washer
   - Lower ring nut “2”
   - Lower bracket

EWA13730

**WARNING**

**Securely support the lower bracket so that there is no danger of it falling.**

**NOTE:**

Hold the lower ring nut with the ring nut wrench “3”, and then remove the upper ring nut with the steering nut wrench “4”.

| |
|---|
| **Ring nut wrench**<br>**90890-01268**<br>**Spanner wrench**<br>**YU-01268**<br>**Steering nut wrench**<br>**90890-01403**<br>**Spanner wrench**<br>**YU-33975** |

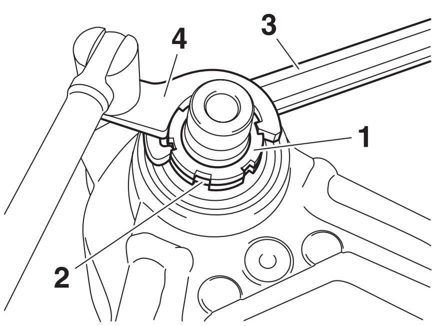


EAS23120

## CHECKING THE STEERING HEAD

1. Wash:
   - Bearings
   - Bearing races

| |
|---|
| **Recommended cleaning solvent**<br>**Kerosene** |

2. Check:
   - Bearings
   - Bearing races

   Damage/pitting → Replace.

3. Replace:
   - Bearings
   - Bearing races

▼▼▼▼▼▼▼▼▼▼▼▼▼▼▼▼▼▼▼▼▼▼▼▼▼▼▼▼▼▼▼▼▼▼▼

a. Remove the bearing race from the steering head pipe “1” with a long rod “2” and hammer.

b. Remove the bearing race from the lower bracket “3” with a floor chisel “4” and hammer.

c. Install new bearing races.

ECA14270

**CAUTION:**

**If the bearing race is not installed properly, the steering head pipe could be damaged.**

**NOTE:**

Always replace the bearings and bearing races as a set.

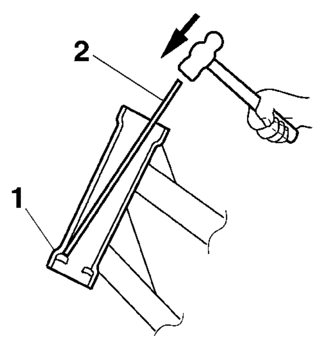


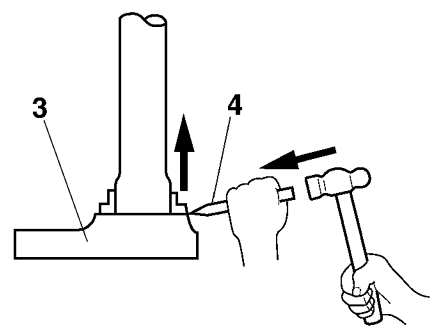


▲▲▲▲▲▲▲▲▲▲▲▲▲▲▲▲▲▲▲▲▲▲▲▲▲▲▲▲▲▲▲▲▲▲▲

4. Check:
   - Upper bracket
   - Lower bracket

   (along with the steering stem)
   Bends/cracks/damage → Replace.

EAS23140

## INSTALLING THE STEERING HEAD

1. Lubricate:
   - Upper bearing
   - Lower bearing
   - Bearing races

| |
|---|
| **Recommended lubricant**<br>**Lithium-soap-based grease** |

2. Install:
   - Lower ring nut “1”
   - Rubber washer “2”
   - Upper ring nut “3”
   - Lock washer “4”
     Refer to “CHECKING AND ADJUSTING THE STEERING HEAD” on page 3-26.

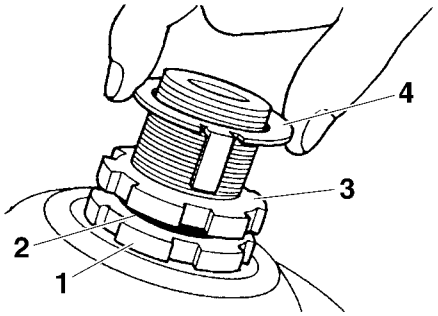


3. Install:
   - Upper bracket
   - Steering stem nut
   - Right handlebar assembly
   - Left handlebar assembly

**NOTE:**

Temporarily tighten the steering stem nut and handlebar bolts.

4. Install:
   - Front fork legs
     Refer to “FRONT FORK” on page 4-44.

**NOTE:**

Temporarily tighten the lower bracket pinch bolts.

5. Tighten:
   - Steering stem nut

| | |
|---|---|
| | **Steering stem nut**<br>**115 Nm (11.5 m·kg, 85 ft·lb)** |

6. Install:
   - Front brake hose joint bracket “1”

| | |
|---|---|
| | **Front brake hose joint bracket bolt**<br>**10 Nm (1.0 m·kg, 7.2 ft·lb)** |

   - Lower bracket cover “2”

| | |
|---|---|
| | **Lower bracket cover bolt**<br>**7 Nm (0.7 m·kg, 5.1 ft·lb)** |

   - Front brake hose joint “3”

| | |
|---|---|
| | **Front brake hose joint bolt**<br>**10 Nm (1.0 m·kg, 7.2 ft·lb)** |

**NOTE:**

Make sure that the tab “a” on the front brake hose joint bracket contacts the side “b” of the front brake hose joint.

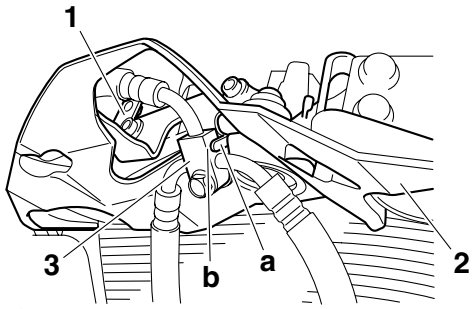


7. Check:
   - Cable routing

**NOTE:**

Make sure the immobilizer unit lead, main switch lead, brake hoses, throttle cables, clutch cable, and handlebar switch leads are routed properly. Refer to “CABLE ROUTING” on page 2-47.

EAS23160

# REAR SHOCK ABSORBER ASSEMBLY

**Removing the rear shock absorber assembly**

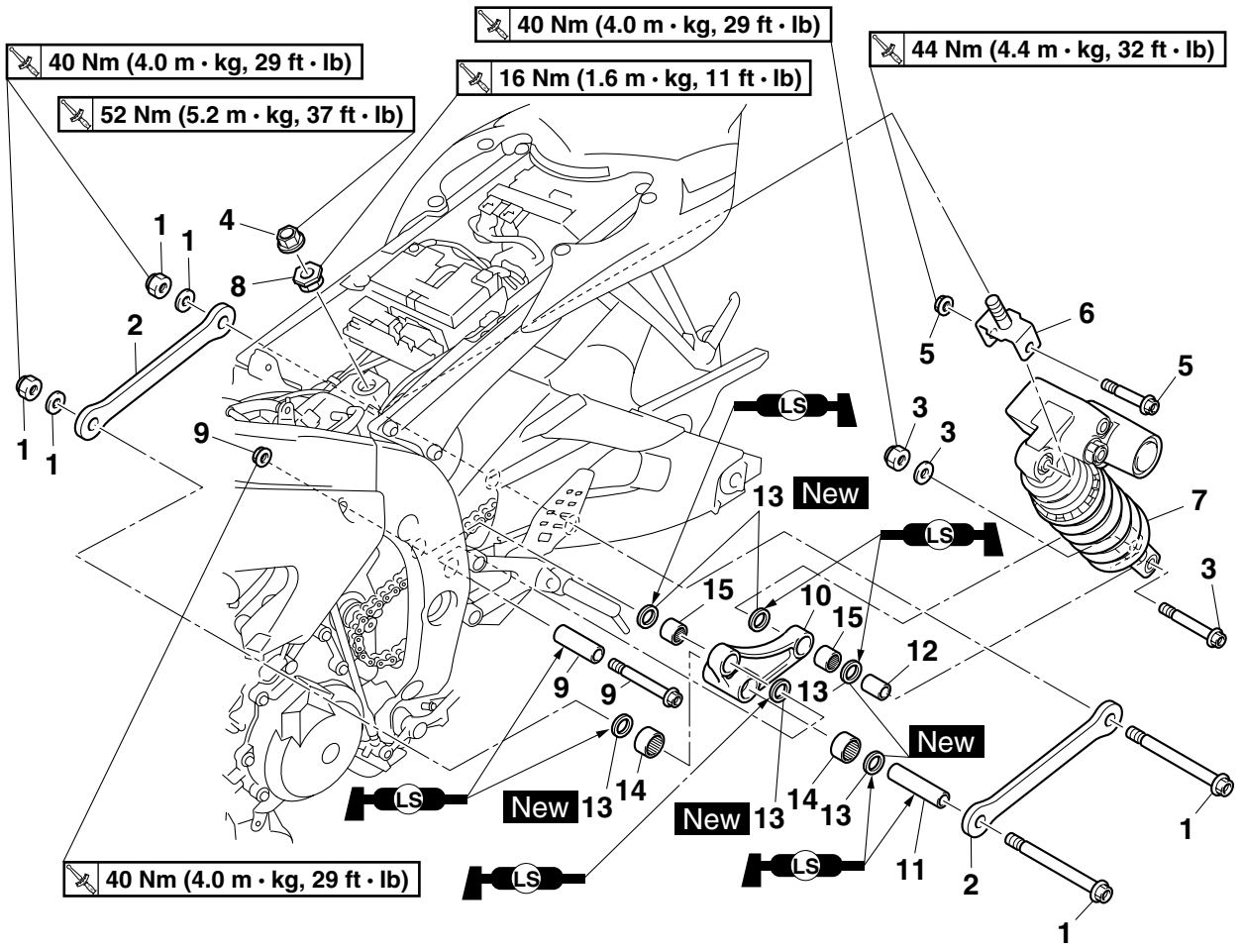


| Order | Job/Parts to remove | Q'ty | Remarks |
|---|---|---|---|
| | Exhaust pipe assembly brackets | | Refer to "ENGINE REMOVAL" on page 5-1. |
| | Rear wheel | | Refer to "REAR WHEEL" on page 4-11. |
| | Fuel tank | | Refer to "FUEL TANK" on page 7-1. |
| 1 | Connecting arm nut/Washer/Bolt | 2/2/2 | |
| 2 | Connecting arm | 2 | |
| 3 | Rear shock absorber assembly lower nut/Washer/Bolt | 1/1/1 | |
| 4 | Rear shock absorber assembly bracket nut | 1 | |
| 5 | Rear shock absorber assembly upper nut/Bolt | 1/1 | |
| 6 | Rear shock absorber assembly bracket | 1 | |
| 7 | Rear shock absorber assembly | 1 | |
| 8 | Spacer bolt | 1 | |
| 9 | Relay arm nut/Bolt/Spacer | 1/1/1 | |
| 10 | Relay arm | 1 | |
| 11 | Spacer | 1 | |
| 12 | Spacer | 1 | |

**Removing the rear shock absorber assembly**

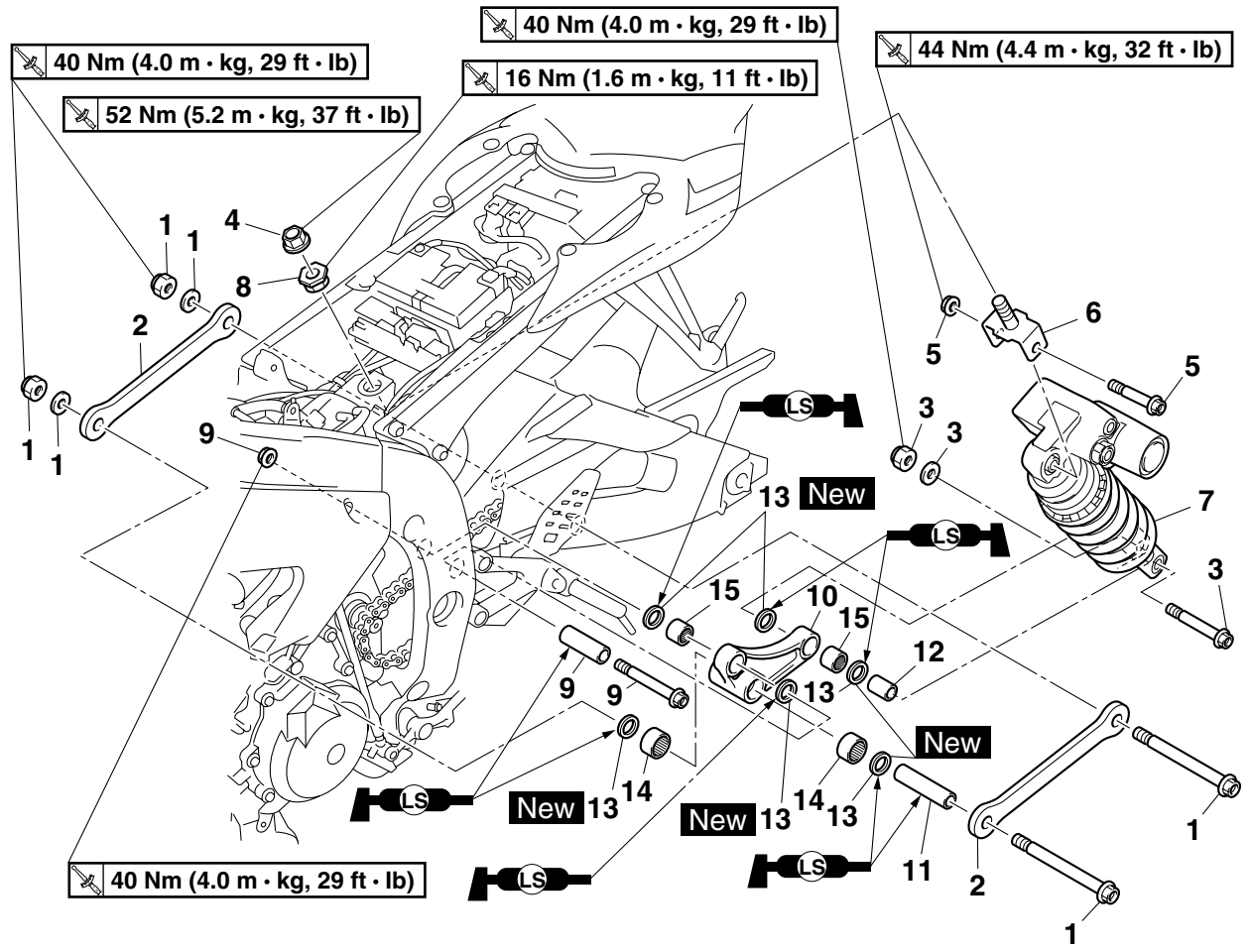


| Order | Job/Parts to remove | Q'ty | Remarks |
|---|---|---|---|
| 13 | Oil seal | 6 | |
| 14 | Bearing | 2 | |
| 15 | Bearing | 2 | |
| | | | For installation, reverse the removal procedure. |

EAS23180
## HANDLING THE REAR SHOCK ABSORBER

EWA13740
**WARNING**

**This rear shock absorber contains highly compressed nitrogen gas. Before handling the rear shock absorber, read and make sure you understand the following information. The manufacturer cannot be held responsible for property damage or personal injury that may result from improper handling of the rear shock absorber.**
- **Do not tamper or attempt to open the rear shock absorber.**
- **Do not subject the rear shock absorber to an open flame or any other source of high heat. High heat can cause an explosion due to excessive gas pressure.**
- **Do not deform or damage the rear shock absorber in any way. Rear shock absorber damage will result in poor damping performance.**

EAS23190
## DISPOSING OF A REAR SHOCK ABSORBER

1. Gas pressure must be released before disposing of a rear shock absorber. To release the gas pressure, drill a 2–3 mm (0.08–0.12 in) hole through the rear shock absorber at a point 50 mm (1.97 in) from its end as shown.

EWA13760
**WARNING**

**Wear eye protection to prevent eye damage from released gas or metal chips.**

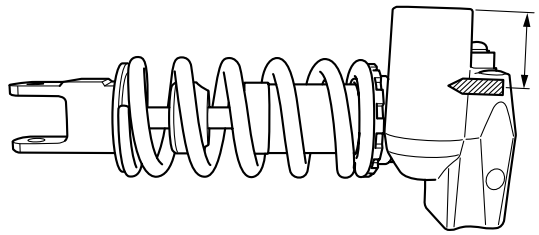

EAS23230
## REMOVING THE REAR SHOCK ABSORBER ASSEMBLY

1. Stand the vehicle on a level surface.

EWA13120
**WARNING**

**Securely support the vehicle so that there is no danger of it falling over.**

**NOTE:**

Place the vehicle on a suitable stand so that the rear wheel is elevated.

2. Remove:
   - Connecting arm bolts “1”
   - Connecting arms “2”
   - Rear shock absorber assembly lower bolt “3”

**NOTE:**

While removing the connecting arm bolts, hold the swingarm so that it does not drop down.

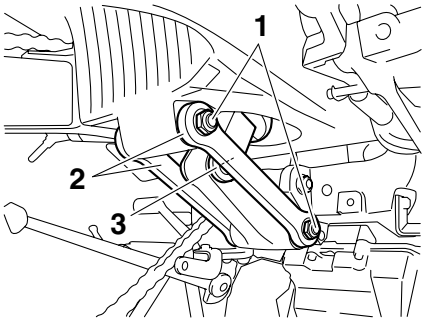


3. Remove:
   - Rear shock absorber assembly bracket nut “1”
   - Rear shock absorber assembly upper bolt “2”
   - Rear shock absorber assembly bracket “3”
   - Rear shock absorber assembly

**NOTE:**

Lower the swingarm, and then remove the rear shock absorber assembly from between the swingarm and frame.

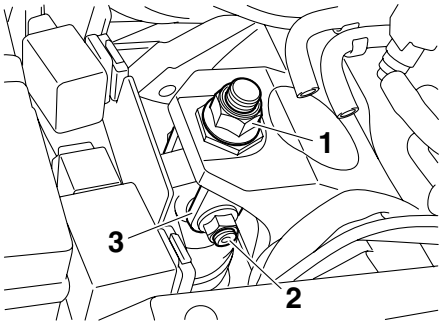


EAS23240
## CHECKING THE REAR SHOCK ABSORBER ASSEMBLY

1. Check:
   - Rear shock absorber rod
     Bends/damage → Replace the rear shock absorber assembly.
   - Rear shock absorber
     Gas leaks/oil leaks → Replace the rear shock absorber assembly.

- Spring
  Damage/wear → Replace the rear shock absorber assembly.
- Bushing
  Damage/wear → Replace.
- Spacer
  Damage/scratches → Replace.
- Bolts
  Bends/damage/wear → Replace.

EAS23260
### CHECKING THE CONNECTING ARM AND RELAY ARM

1. Check:
   - Connecting arms
   - Relay arm
     Damage/wear → Replace.
2. Check:
   - Bearings
   - Oil seals
     Damage/pitting → Replace.
3. Check:
   - Spacers
     Damage/scratches → Replace.

EAS23270
### INSTALLING THE RELAY ARM

1. Lubricate:
   - Spacers
   - Bearings

| | |
|---|---|
| 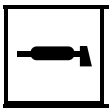 | **Recommended lubricant**<br>**Lithium-soap-based grease** |

2. Install:
   - Bearings “1”, “2”
     (to the relay arm)
   - Oil seals “3”

| | |
|---|---|
| | **Installed depth of bearing “a”**<br>**4.5 mm (0.18 in)**<br>**Installed depth of bearing “b”**<br>**3.5 mm (0.14 in)**<br>**Installed depth of oil seal “c”**<br>**1.0 mm (0.04 in)** |

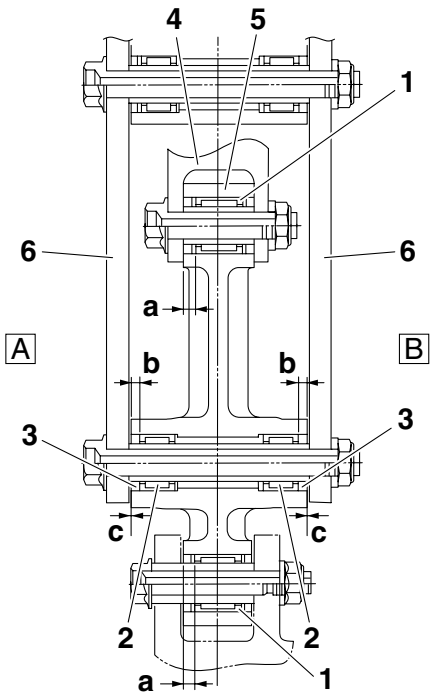


4. Rear shock absorber
5. Relay arm
6. Connecting arms

A. Left side
B. Right side

EAS23310
### INSTALLING THE REAR SHOCK ABSORBER ASSEMBLY

1. Lubricate:
   - Spacer

| | |
|---|---|
| | **Recommended lubricant**<br>**Lithium-soap-based grease** |

2. Tighten:
   - Relay arm nut

| | |
|---|---|
| | **Relay arm nut**<br>**40 Nm (4.0 m·kg, 29 ft·lb)** |

3. Install:
   - Spacer bolt
   - Rear shock absorber assembly
   - Rear shock absorber assembly bracket “1”

**NOTE:**

Be sure to fit the projection on either side of the rear shock absorber assembly bracket into the indentation in the frame.

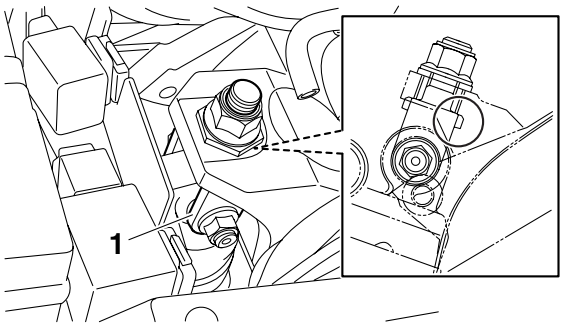


4. Tighten:
   - Spacer bolt

| | |
|---|---|
| | **Spacer bolt**<br>**16 Nm (1.6 m·kg, 11 ft·lb)** |

- Rear shock absorber assembly lower nut

| | |
|---|---|
| | **Rear shock absorber assembly lower nut**<br>**40 Nm (4.0 m·kg, 29 ft·lb)** |

- Rear shock absorber assembly upper nut

| | |
|---|---|
| | **Rear shock absorber assembly upper nut**<br>**44 Nm (4.4 m·kg, 32 ft·lb)** |

- Rear shock absorber assembly bracket nut

| | |
|---|---|
| | **Rear shock absorber assembly bracket nut**<br>**52 Nm (5.2 m·kg, 37 ft·lb)** |

5. Install:
   - Connecting arms

**NOTE:**

When installing the connecting arms, lift up the swingarm.

6. Tighten:
   - Connecting arm nuts

| | |
|---|---|
| | **Connecting arm nuts**<br>**40 Nm (4.0 m·kg, 29 ft·lb)** |

EAS23330

# SWINGARM

**Removing the swingarm**

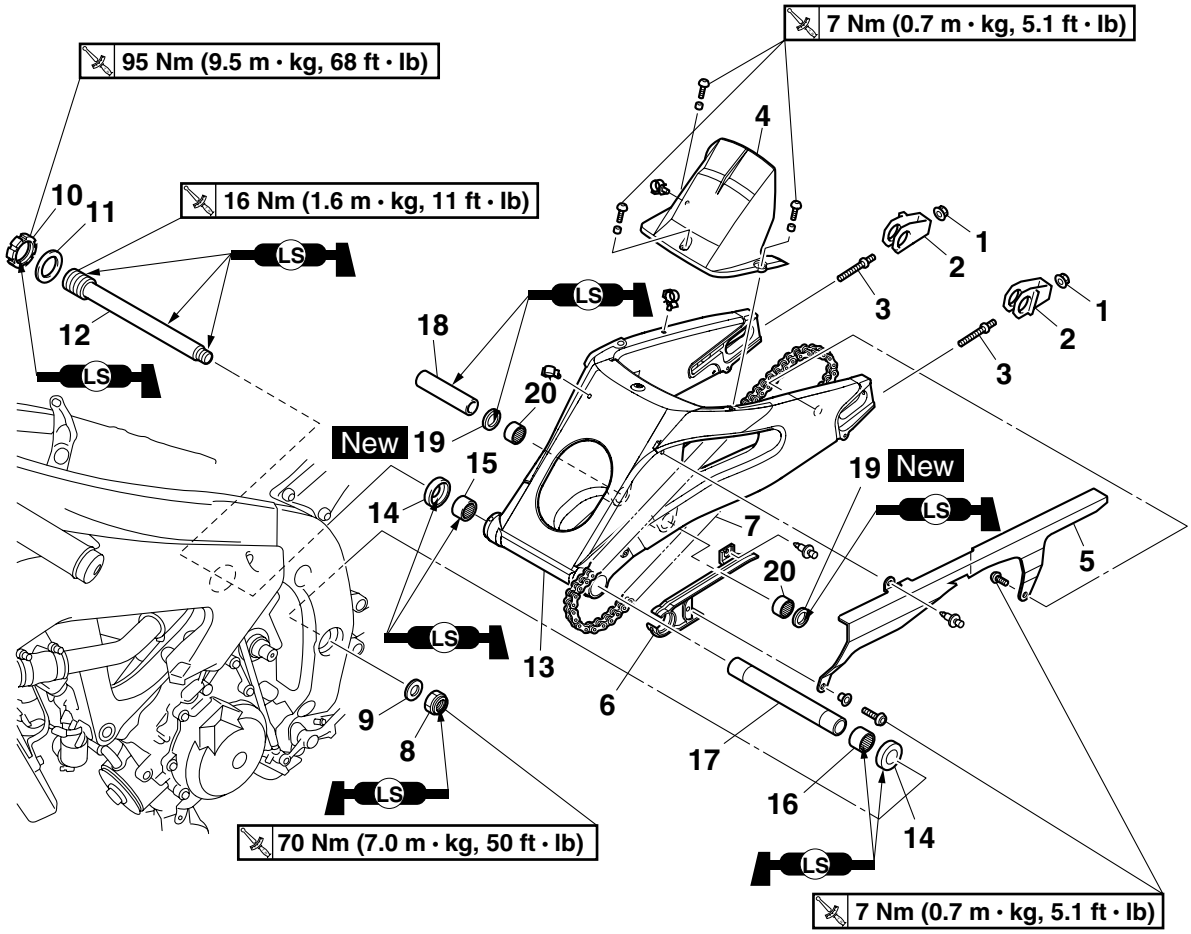


| Order | Job/Parts to remove | Q'ty | Remarks |
|---|---|---|---|
| | Rear wheel | | Refer to "REAR WHEEL" on page 4-11. |
| | Rear shock absorber | | Refer to "REAR SHOCK ABSORBER ASSEMBLY" on page 4-60. |
| | Drive chain guide (drive sprocket side) | | Refer to "CHAIN DRIVE" on page 4-70. |
| 1 | Drive chain adjusting locknut | 2 | |
| 2 | Drive chain puller | 2 | |
| 3 | Drive chain adjusting bolt | 2 | |
| 4 | Rear fender | 1 | |
| 5 | Drive chain guard | 1 | |
| 6 | Drive chain guide (swingarm side) | 1 | |
| 7 | Drive chain | 1 | |
| 8 | Swingarm pivot shaft nut | 1 | |
| 9 | Washer | 1 | |
| 10 | Swingarm pivot shaft ring nut | 1 | |
| 11 | Washer | 1 | |
| 12 | Swingarm pivot shaft | 1 | |

**Removing the swingarm**

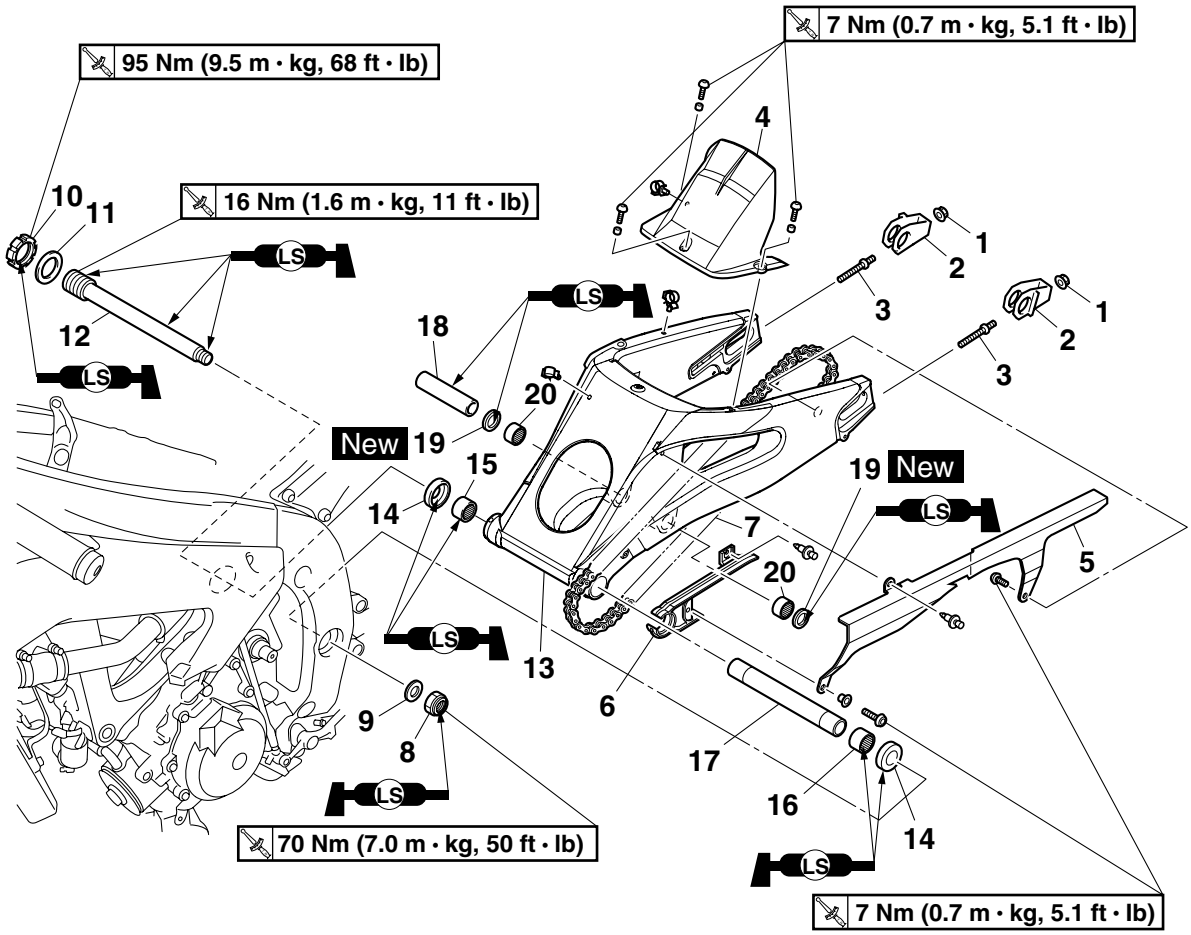


| Order | Job/Parts to remove | Q'ty | Remarks |
|---|---|---|---|
| 13 | Swingarm | 1 | |
| 14 | Dust cover | 2 | |
| 15 | Bearing | 1 | |
| 16 | Bearing | 1 | |
| 17 | Spacer | 1 | |
| 18 | Spacer | 1 | |
| 19 | Oil seal | 2 | |
| 20 | Bearing | 2 | |
| | | | For installation, reverse the removal procedure. |

EAS23350
## REMOVING THE SWINGARM

1. Stand the vehicle on a level surface.

EWA13120
**WARNING**

**Securely support the vehicle so that there is no danger of it falling over.**

**NOTE:**

Place the vehicle on a suitable stand so that the rear wheel is elevated.

2. Measure:
   - Swingarm side play
   - Swingarm vertical movement

▼▼▼▼▼▼▼▼▼▼▼▼▼▼▼▼▼▼▼▼▼▼▼▼▼▼▼▼▼▼▼▼▼▼

a. Measure the tightening torque of the pivot shaft nut, pivot shaft ring nut, and pivot shaft.

**Swingarm pivot shaft nut**
**70 Nm (7.0 m·kg, 50 ft·lb)**
**Swingarm pivot shaft ring nut**
**95 Nm (9.5 m·kg, 68 ft·lb)**
**Swingarm pivot shaft**
**16 Nm (1.6 m·kg, 11 ft·lb)**

b. Measure the swingarm side play “A” by moving the swingarm from side to side.
c. If the swingarm side play is out of specification, check the spacers, bearings, washers, and dust covers.

**Swingarm side play (at the end of the swingarm)**
**1.0 mm (0.04 in)**

d. Check the swingarm vertical movement “B” by moving the swingarm up and down.
   If swingarm vertical movement is not smooth or if there is binding, check the spacers, bearings, washers, and dust covers.

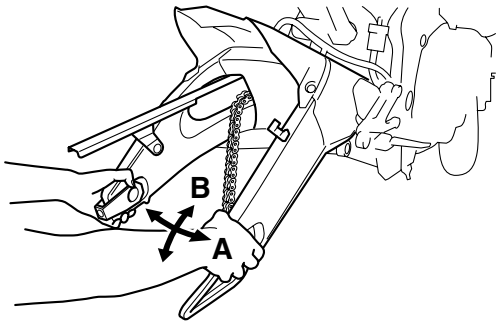


▲▲▲▲▲▲▲▲▲▲▲▲▲▲▲▲▲▲▲▲▲▲▲▲▲▲▲▲▲▲▲▲▲▲

3. Remove:
   - Drive chain
     Refer to “REMOVING THE DRIVE CHAIN” on page 4-71.
4. Remove:
   - Swingarm pivot shaft ring nut “1”

**NOTE:**

Loosen the swingarm pivot shaft ring nut with the ring nut wrench “2”.

**Ring nut wrench**
**90890-01507**
**YM-01507**

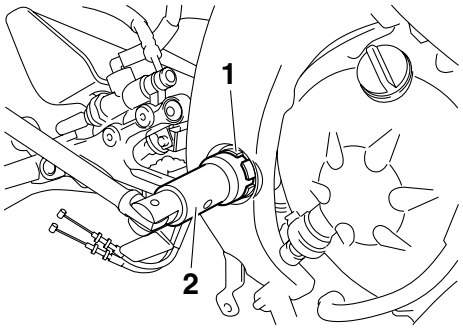


5. Remove:
   - Swingarm pivot shaft “1”

**NOTE:**

Loosen the swingarm pivot shaft with the damper rod holder (24 mm) “2”.

**Damper rod holder (24 mm)**
**90890-01328**
**YM-01328**

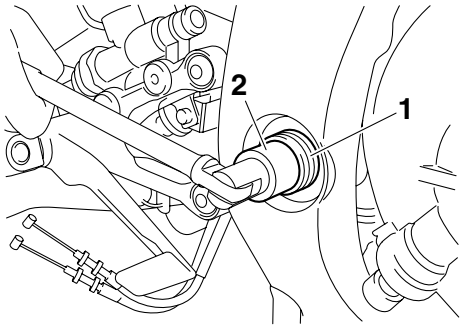


EAS23360
## CHECKING THE SWINGARM

1. Check:
   - Swingarm
     Bends/cracks/damage → Replace.
2. Check:
   - Pivot shaft
     Roll the pivot shaft on a flat surface.
     Bends → Replace.

EWA13770

**WARNING**

**Do not attempt to straighten a bent pivot shaft.**

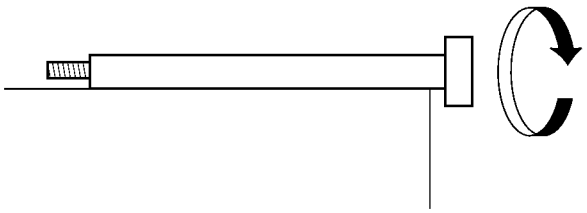

3. Wash:
   - Pivot shaft
   - Dust covers
   - Spacers
   - Washers
   - Bearings

| | |
|---|---|
| | **Recommended cleaning solvent**<br>**Kerosene** |

4. Check:
   - Dust covers
   - Spacers
   - Oil seals
     Damage/wear → Replace.
   - Bearings
     Damage/pitting → Replace.

EAS23380

## INSTALLING THE SWINGARM

1. Lubricate:
   - Bearings
   - Spacers
   - Dust covers
   - Pivot shaft

| | |
|---|---|
| | **Recommended lubricant**<br>**Lithium-soap-based grease** |

2. Install:
   - Bearing “1”
   - Bearing “2”
   - Bearings “3”
   - Oil seals “4”

| | |
|---|---|
| | **Installed depth of bearing “a”**<br>**0–1.0 mm (0–0.04 in)**<br>**Installed depth of bearing “b”**<br>**4.0 mm (0.16 in)**<br>**Installed depth of oil seal “c”**<br>**1.0 mm (0.04 in)** |

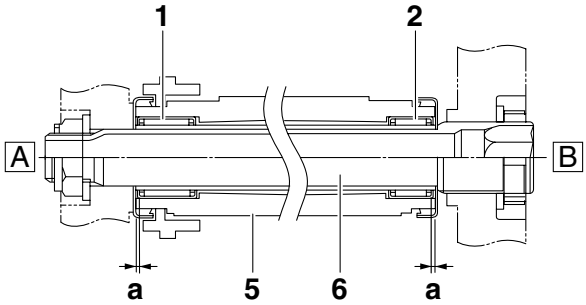


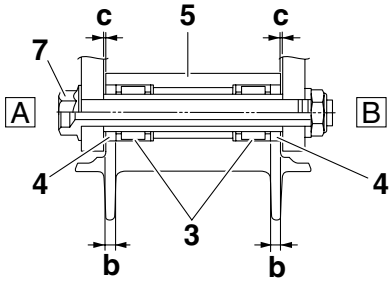


5. Swingarm
6. Swingarm pivot shaft
7. Bolt

A. Left side
B. Right side

3. Install:
   - Swingarm pivot shaft “1”

| | |
|---|---|
| | **Swingarm pivot shaft**<br>**16 Nm (1.6 m·kg, 11 ft·lb)** |

**NOTE:**

Tighten the swingarm pivot shaft with the damper rod holder (24 mm) “2”.

| | |
|---|---|
| | **Damper rod holder (24 mm)**<br>**90890-01328**<br>**YM-01328** |

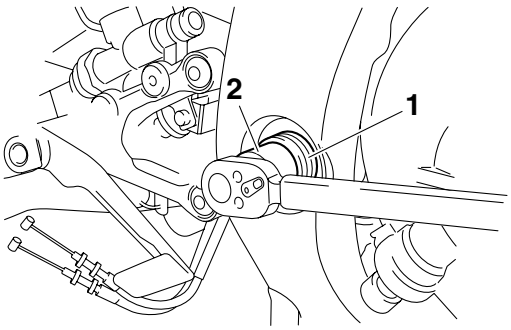


4. Install:
   - Swingarm pivot shaft ring nut “1”

| | |
|---|---|
| 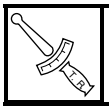 | **Swingarm pivot shaft ring nut**<br>**95 Nm (9.5 m·kg, 68 ft·lb)** |

**NOTE:**

- Lubricate the swingarm pivot ring nut threads and mating surfaces with lithium-soap-based grease.
- Tighten the swingarm pivot shaft ring nut with the ring nut wrench “2”.

| | |
|---|---|
| | **Ring nut wrench**<br>**90890-01507**<br>**YM-01507** |

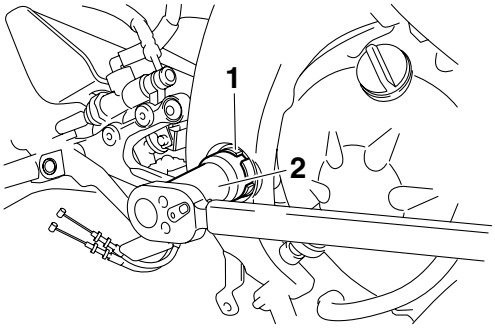


5. Install:
   - Swingarm pivot shaft nut

**NOTE:**

Lubricate the swingarm pivot shaft nut threads and mating surfaces with lithium-soap-based grease.

6. Adjust:
   - Drive chain slack
     Refer to “ADJUSTING THE DRIVE CHAIN SLACK” on page 3-25.

| | |
|---|---|
| | **Drive chain slack**<br>**35.0–45.0 mm (1.38–1.77 in)** |

EAS23400

# CHAIN DRIVE

**Removing the drive sprocket and drive chain**

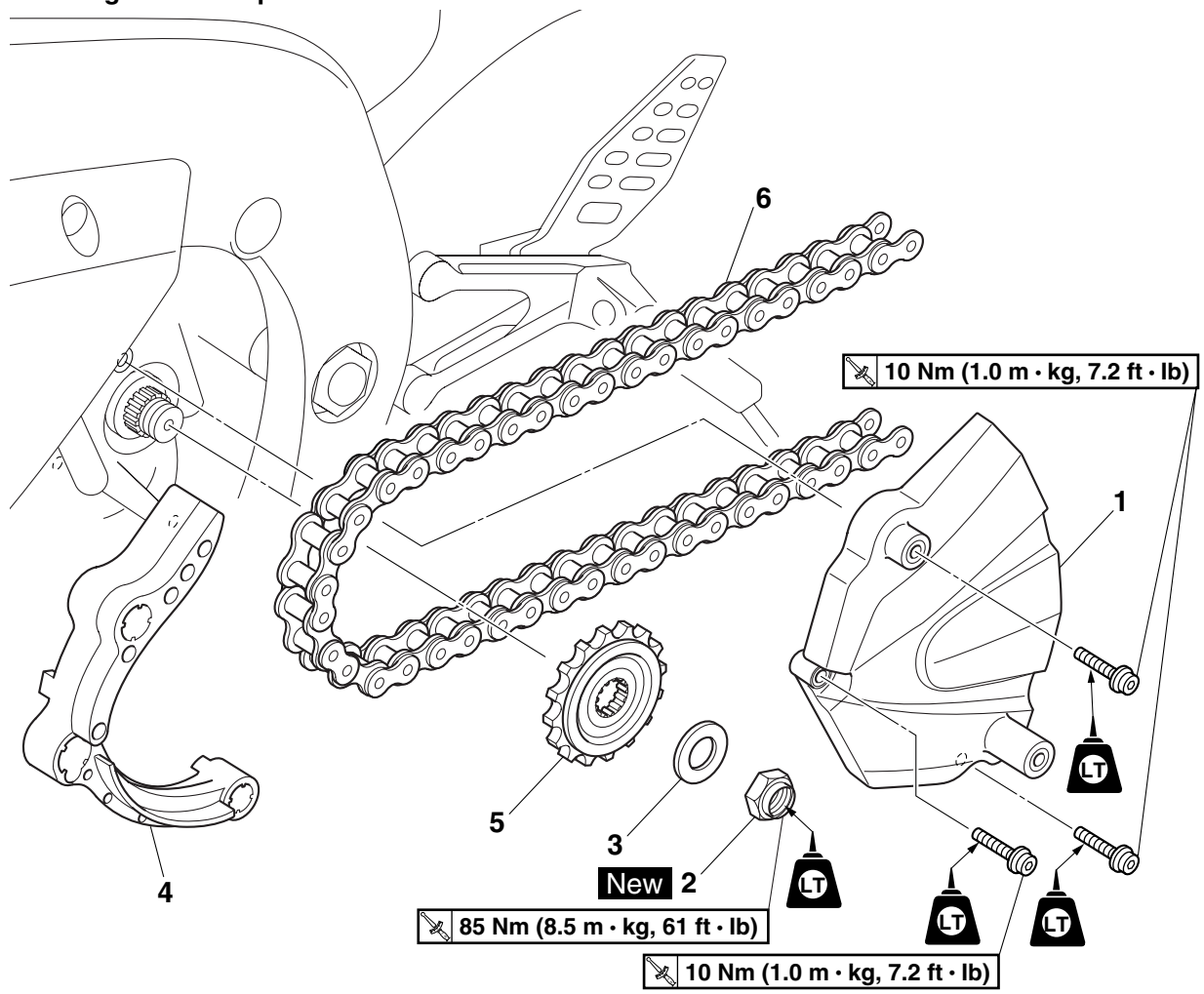


| Order | Job/Parts to remove | Q'ty | Remarks |
|---|---|---|---|
| | Left lower side cowling | | Refer to "GENERAL CHASSIS" on page 4-1. |
| | Left bottom cowling | | Refer to "GENERAL CHASSIS" on page 4-1. |
| | Shift rod | | Refer to "ENGINE REMOVAL" on page 5-1. |
| 1 | Drive sprocket cover | 1 | |
| 2 | Drive sprocket nut | 1 | |
| 3 | Washer | 1 | |
| 4 | Drive chain guide (drive sprocket side) | 1 | |
| 5 | Drive sprocket | 1 | |
| 6 | Drive chain | 1 | |
| | | | For installation, reverse the removal procedure. |

EAS23410
## REMOVING THE DRIVE CHAIN

1. Stand the vehicle on a level surface.

EWA13120
**WARNING**

**Securely support the vehicle so that there is no danger of it falling over.**

**NOTE:**

Place the vehicle on a suitable stand so that the rear wheel is elevated.

2. Remove:
   - Drive chain
     (with the drive chain cutter)

**NOTE:**

Only cut the drive chain if it or the swingarm is to be replaced.

EAS23440
## CHECKING THE DRIVE CHAIN

1. Measure:
   - 15-link section “a” of the drive chain
     Out of specification → Replace the drive chain.

| | |
|---|---|
| | **15-link length limit**<br>**239.3 mm (9.42 in)** |

▼▼▼▼▼▼▼▼▼▼▼▼▼▼▼▼▼▼▼▼▼▼▼▼▼▼▼▼▼▼▼▼▼▼

a. Measure the length “a” between the inner sides of the pins and the length “b” between the outer sides of the pins on a 15-link section of the drive chain as shown in the illustration.

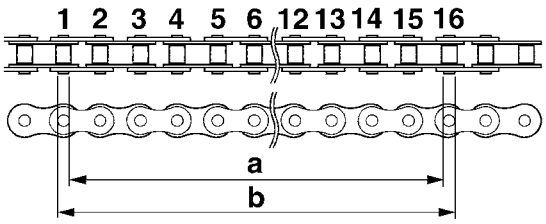


b. Calculate the length “c” of the 15-link section of the drive chain using the following formula.
   Drive chain 15-link section length “c” = (length “a” between pin inner sides + length “b” between pin outer sides)/2

**NOTE:**

- When measuring a 15-link section of the drive chain, make sure that the drive chain is taut.
- Perform this procedure 2–3 times, at a different location each time.

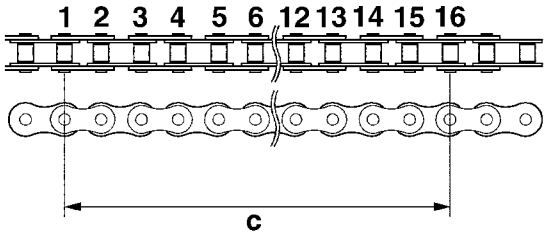


▲▲▲▲▲▲▲▲▲▲▲▲▲▲▲▲▲▲▲▲▲▲▲▲▲▲▲▲▲▲▲▲▲▲

2. Check:
   - Drive chain
     Stiffness → Clean and lubricate or replace.

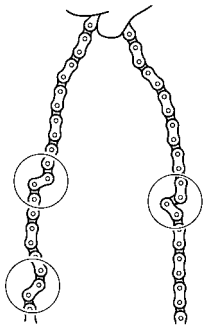

3. Clean:
   - Drive chain

▼▼▼▼▼▼▼▼▼▼▼▼▼▼▼▼▼▼▼▼▼▼▼▼▼▼▼▼▼▼▼▼▼▼

a. Wipe the drive chain with a clean cloth.
b. Put the drive chain in kerosene and remove any remaining dirt.
c. Remove the drive chain from the kerosene and completely dry it.

EC2C01014
**CAUTION:**

- **This vehicle has a drive chain with small rubber O-rings “1” between the drive chain side plates. Never use high-pressure water or air, steam, gasoline, certain solvents (e.g., benzine), or a coarse brush to clean the drive chain. High-pressure methods could force dirt or water into the drive chain’s internals, and solvents will deteriorate the O-rings. A coarse brush can also damage the O-rings. Therefore, use only kerosene to clean the drive chain.**
- **Do not soak the drive chain in kerosene for more than ten minutes, otherwise the O-rings can be damaged.**

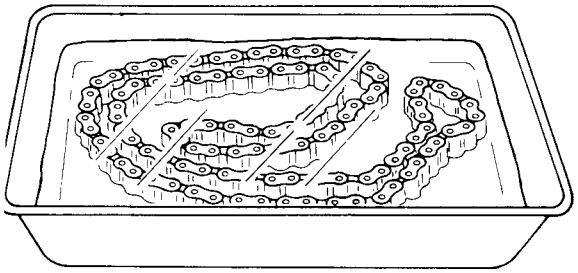

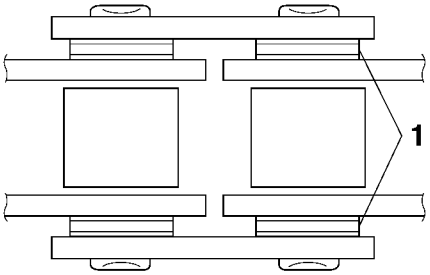


▲▲▲▲▲▲▲▲▲▲▲▲▲▲▲▲▲▲▲▲▲▲▲▲▲▲▲▲▲▲▲▲▲▲

4. Check:
   - O-rings “1”
     Damage → Replace the drive chain.
   - Drive chain rollers “2”
     Damage/wear → Replace the drive chain.
   - Drive chain side plates “3”
     Damage/wear → Replace the drive chain.
     Cracks → Replace the drive chain and make sure the battery breather hose is properly routed away from the drive chain and below the swingarm.

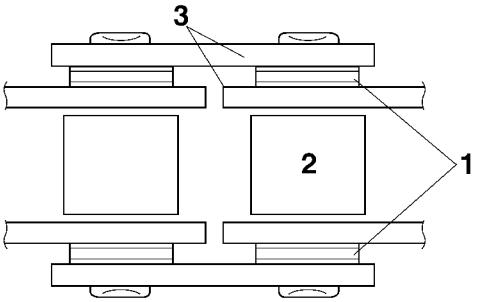


5. Lubricate:
   - Drive chain

**Recommended lubricant**
**Engine oil or chain lubricant suitable for O-ring chains**

EAS23460
## CHECKING THE DRIVE SPROCKET

1. Check:
   - Drive sprocket
     More than 1/4 tooth “a” wear → Replace the drive chain sprockets as a set.
     Bent teeth → Replace the drive chain sprockets as a set.

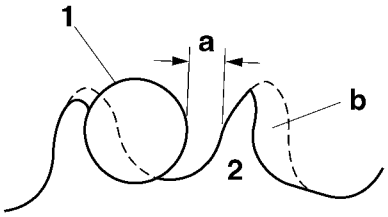


b. Correct
1. Drive chain roller
2. Drive chain sprocket

EAS23470
## CHECKING THE REAR WHEEL SPROCKET

Refer to “CHECKING AND REPLACING THE REAR WHEEL SPROCKET” on page 4-14.

EAS23480
## CHECKING THE REAR WHEEL DRIVE HUB

Refer to “CHECKING THE REAR WHEEL DRIVE HUB” on page 4-14.

EAS28800
## INSTALLING THE DRIVE CHAIN

1. Lubricate:
   - Drive chain

**Recommended lubricant**
**Engine oil or chain lubricant suitable for O-ring chains**

2. Install:
   - Drive sprocket “1”
   - Washer “2”
   - Drive sprocket nut “3” New

**NOTE:**
- While applying the rear brake, tighten the drive sprocket nut.
- Stake the drive sprocket nut “3” at a cutout “a” in the drive axle.

**Drive sprocket nut**
**85 Nm (8.5 m·kg, 61 ft·lb)**
**LOCTITE®**

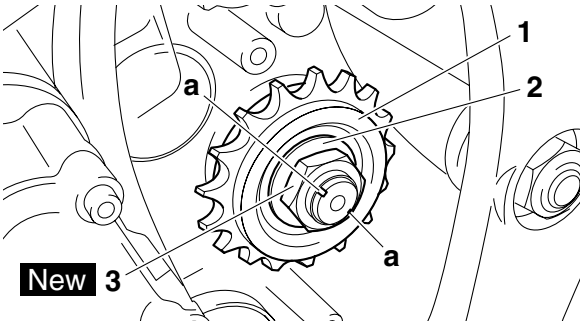
1
2
a
a
New 3

# ENGINE

**ENGINE REMOVAL** ..... 5-1
INSTALLING THE ENGINE ..... 5-6

**CAMSHAFTS** ..... 5-7
REMOVING THE CAMSHAFTS ..... 5-9
CHECKING THE CAMSHAFTS ..... 5-9
CHECKING THE TIMING CHAIN, CAMSHAFT SPROCKETS, AND TIMING CHAIN GUIDES ..... 5-11
CHECKING THE TIMING CHAIN TENSIONER ..... 5-11
INSTALLING THE CAMSHAFTS ..... 5-12

**CYLINDER HEAD** ..... 5-15
REMOVING THE CYLINDER HEAD ..... 5-16
CHECKING THE CYLINDER HEAD ..... 5-16
INSTALLING THE CYLINDER HEAD ..... 5-16

**VALVES AND VALVE SPRINGS** ..... 5-18
REMOVING THE VALVES ..... 5-19
CHECKING THE VALVES AND VALVE GUIDES ..... 5-19
CHECKING THE VALVE SEATS ..... 5-21
CHECKING THE VALVE SPRINGS ..... 5-23
CHECKING THE VALVE LIFTERS ..... 5-23
INSTALLING THE VALVES ..... 5-24

**GENERATOR AND STARTER CLUTCH** ..... 5-26
REMOVING THE GENERATOR ..... 5-28
CHECKING THE STARTER CLUTCH ..... 5-28
INSTALLING THE STARTER CLUTCH ..... 5-28
INSTALLING THE GENERATOR ..... 5-29

**PICKUP ROTOR** ..... 5-30
REMOVING THE PICKUP ROTOR ..... 5-31
INSTALLING THE PICKUP ROTOR ..... 5-31

**ELECTRIC STARTER** ..... 5-33
CHECKING THE STARTER MOTOR ..... 5-35
ASSEMBLING THE STARTER MOTOR ..... 5-36

**CLUTCH** ..... 5-37
REMOVING THE CLUTCH ..... 5-41
CHECKING THE FRICTION PLATES ..... 5-41
CHECKING THE CLUTCH PLATES ..... 5-41
CHECKING THE CLUTCH SPRINGS ..... 5-42
CHECKING THE CLUTCH HOUSING ..... 5-43
CHECKING THE CLUTCH BOSS ..... 5-43
CHECKING THE PRESSURE PLATE ..... 5-43
CHECKING THE PRIMARY DRIVE GEAR ..... 5-43
CHECKING THE PRIMARY DRIVEN GEAR ..... 5-43
CHECKING THE PULL LEVER SHAFT AND PULL ROD ..... 5-43
CHECKING THE OIL PUMP DRIVE SPROCKET AND OIL PUMP DRIVE CHAIN ..... 5-44
INSTALLING THE CLUTCH ..... 5-44

**SHIFT SHAFT** ..... 5-47
CHECKING THE SHIFT SHAFT ..... 5-49
CHECKING THE STOPPER LEVER ..... 5-49
INSTALLING THE SHIFT SHAFT ..... 5-49

**OIL PUMP** ..... 5-50
REMOVING THE OIL PAN ..... 5-53
CHECKING THE OIL PUMP ..... 5-53
CHECKING THE RELIEF VALVE ..... 5-53
CHECKING THE OIL PIPES ..... 5-54
CHECKING THE OIL STRAINER ..... 5-54
ASSEMBLING THE OIL PUMP ..... 5-54
INSTALLING THE OIL PAN ..... 5-54

**CRANKCASE** ..... 5-55
DISASSEMBLING THE CRANKCASE ..... 5-57
CHECKING THE CRANKCASE ..... 5-57
CHECKING THE OIL PIPE ..... 5-57
CHECKING THE TIMING CHAIN ..... 5-57
ASSEMBLING THE CRANKCASE ..... 5-57

**CONNECTING RODS AND PISTONS** ..... 5-59
REMOVING THE CONNECTING RODS AND PISTONS ..... 5-60
CHECKING THE CYLINDERS AND PISTONS ..... 5-60
CHECKING THE PISTON RINGS ..... 5-61
CHECKING THE PISTON PINS ..... 5-62
CHECKING THE CONNECTING RODS ..... 5-63
INSTALLING THE CONNECTING RODS AND PISTONS ..... 5-64

**CRANKSHAFT** ..... 5-67
REMOVING THE CRANKSHAFT JOURNAL BEARINGS ..... 5-68
CHECKING THE OIL NOZZLES ..... 5-68
CHECKING THE CRANKSHAFT AND CONNECTING RODS ..... 5-68
INSTALLING THE CRANKSHAFT ..... 5-70

**TRANSMISSION** ..... 5-71
REMOVING THE TRANSMISSION ..... 5-76
CHECKING THE SHIFT FORKS ..... 5-76
CHECKING THE SHIFT DRUM ASSEMBLY ..... 5-76
CHECKING THE TRANSMISSION ..... 5-77
ASSEMBLING THE MAIN AXLE AND DRIVE AXLE ..... 5-77
INSTALLING THE TRANSMISSION ..... 5-78

EAS23710

# ENGINE REMOVAL

**Removing the exhaust pipe assembly**

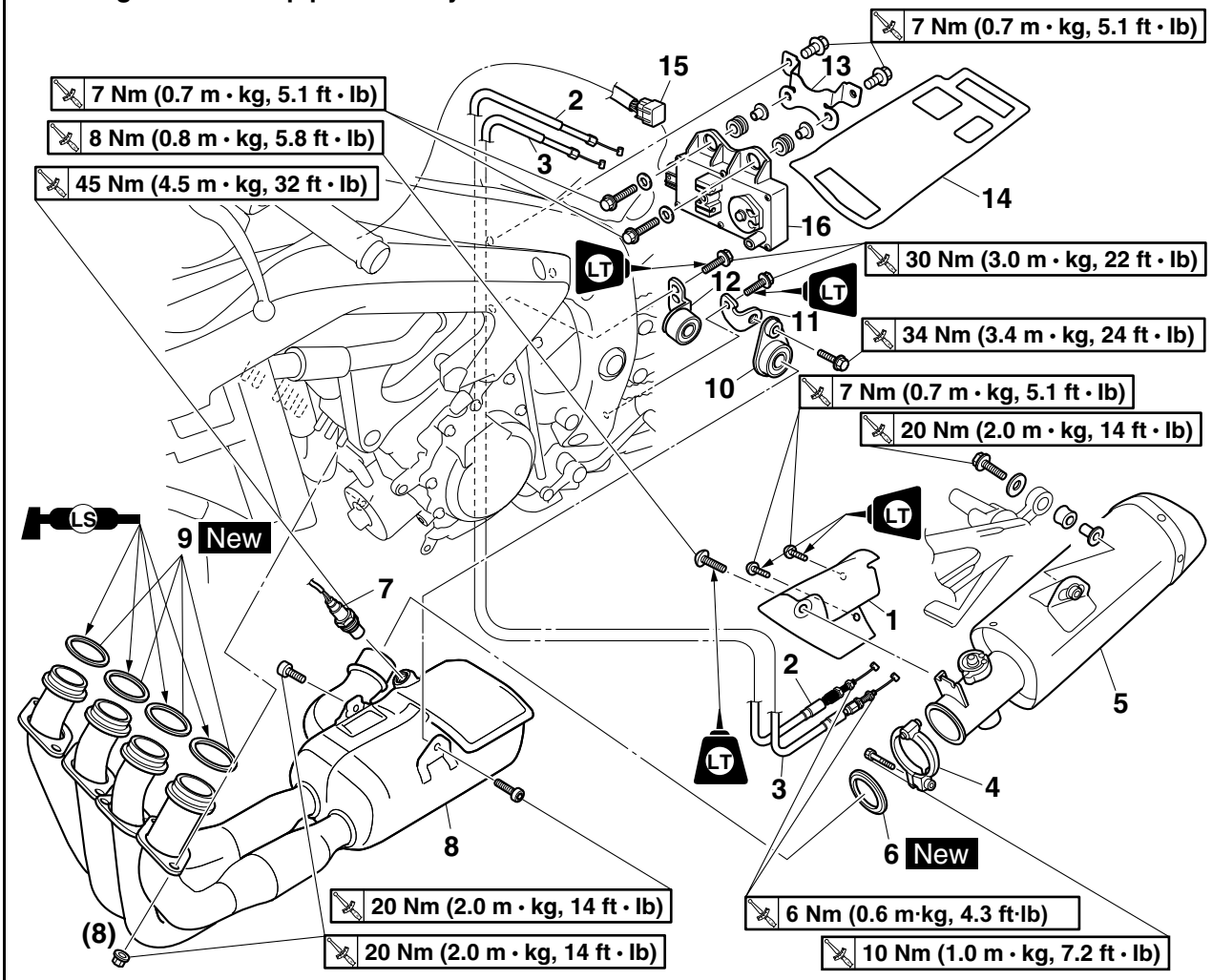


| Order | Job/Parts to remove | Q'ty | Remarks |
|---|---|---|---|
| | Lower side cowlings | | Refer to "GENERAL CHASSIS" on page 4-1. |
| | Bottom cowlings | | Refer to "GENERAL CHASSIS" on page 4-1. |
| | Radiator bracket | | Refer to "RADIATOR" on page 6-1. |
| 1 | EXUP valve pulley cover | 1 | |
| 2 | EXUP cable | 1 | Black adjusting bolt |
| 3 | EXUP cable | 1 | |
| 4 | Clamp | 1 | |
| 5 | Muffler | 1 | |
| 6 | Gasket | 1 | |
| 7 | $O_2$ sensor | 1 | |
| 8 | Exhaust pipe assembly | 1 | |
| 9 | Gasket | 4 | |
| 10 | Exhaust pipe assembly bracket (left lower side) | 1 | |
| 11 | Exhaust pipe assembly bracket (left upper side) | 1 | |

**Removing the exhaust pipe assembly**

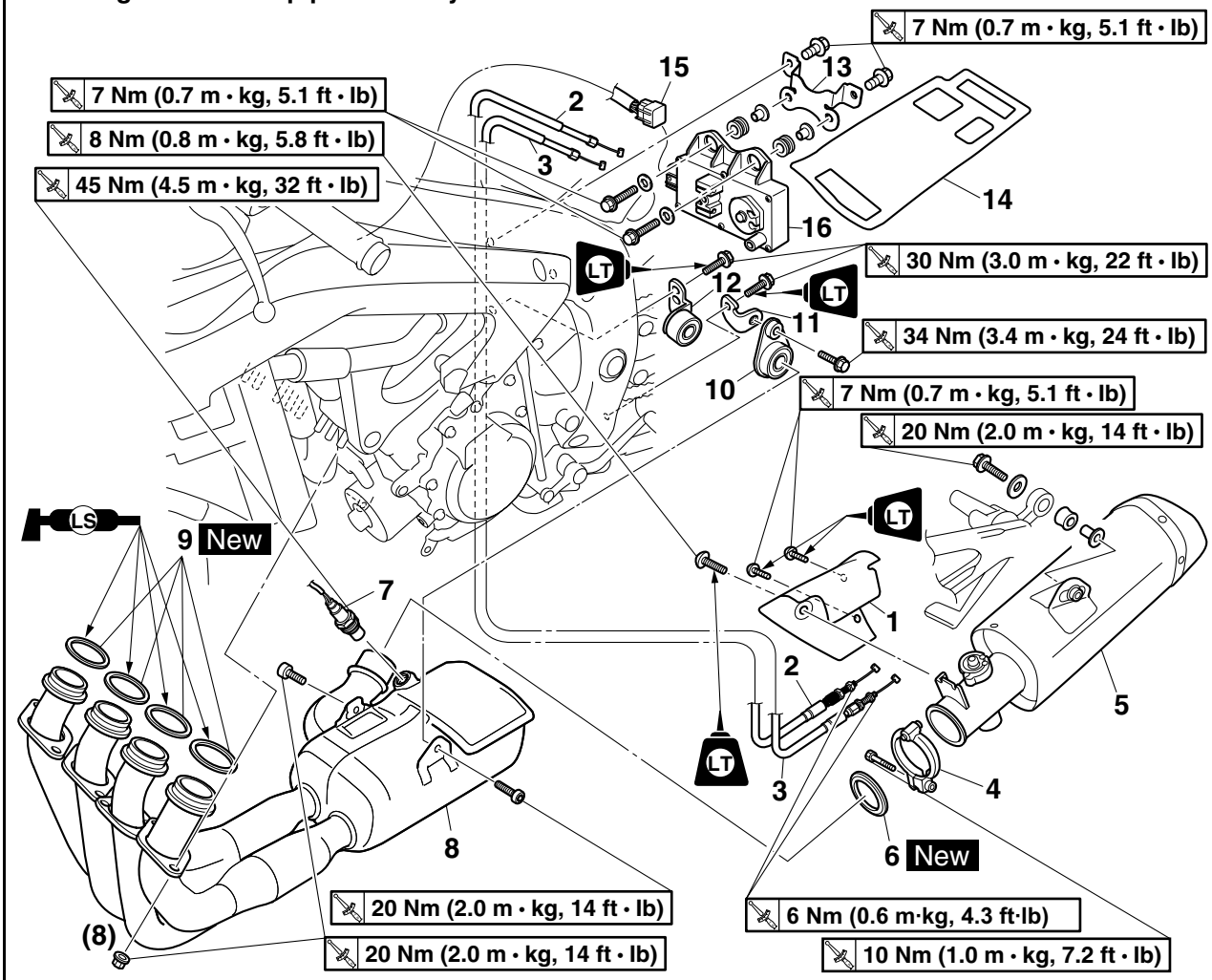


| Order | Job/Parts to remove | Q'ty | Remarks |
|---|---|---|---|
| 12 | Exhaust pipe assembly bracket (right side) | 1 | |
| 13 | EXUP servo motor bracket | 1 | |
| 14 | EXUP servo motor cover | 1 | |
| 15 | EXUP servo motor coupler | 1 | Disconnect. |
| 16 | EXUP servo motor | 1 | |
| | | | For installation, reverse the removal procedure. |

**Disconnecting the leads and hoses**

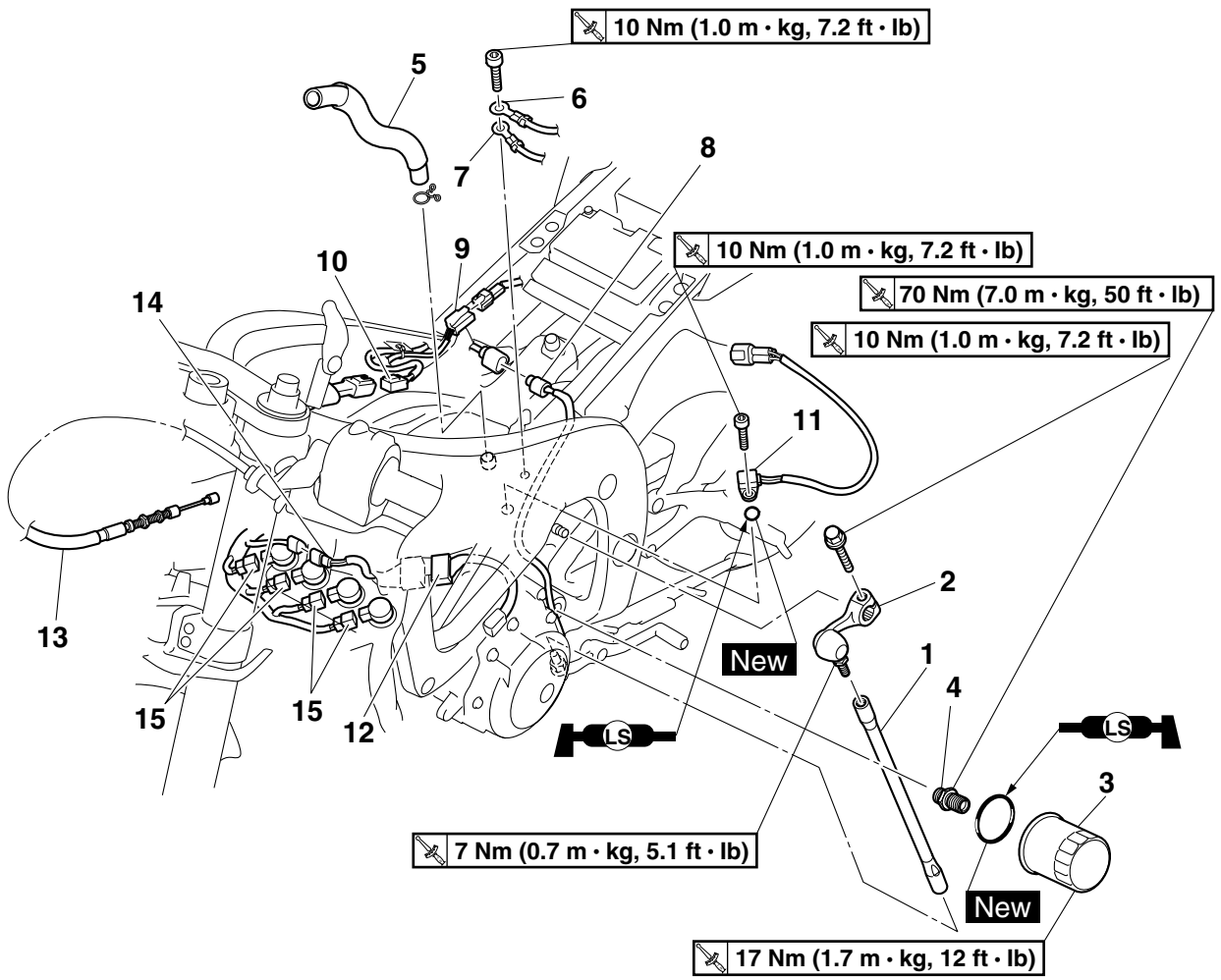


| Order | Job/Parts to remove | Q'ty | Remarks |
|---|---|---|---|
| | Fuel tank | | Refer to "FUEL TANK" on page 7-1. |
| | Air filter case | | Refer to "AIR FILTER CASE" on page 7-4. |
| | Throttle body | | Refer to "THROTTLE BODIES" on page 7-7. |
| | Air cut-off valve | | Refer to "AIR INDUCTION SYSTEM" on page 7-13. |
| | Starter motor | | Refer to "ELECTRIC STARTER" on page 5-33. |
| | Thermostat | | Refer to "THERMOSTAT" on page 6-7. |
| | Radiator | | Refer to "RADIATOR" on page 6-1. |
| | Oil cooler | | Refer to "OIL COOLER" on page 6-4. |
| | Water pump | | Refer to "WATER PUMP" on page 6-9. |
| | Drive sprocket | | Refer to "CHAIN DRIVE" on page 4-70. |
| 1 | Shift rod | 1 | |
| 2 | Shift arm | 1 | |
| 3 | Oil filter cartridge | 1 | |
| 4 | Oil filter cartridge bolt | 1 | |
| 5 | Crankcase breather hose | 1 | |
| 6 | Negative battery terminal | 1 | Disconnect. |

**Disconnecting the leads and hoses**

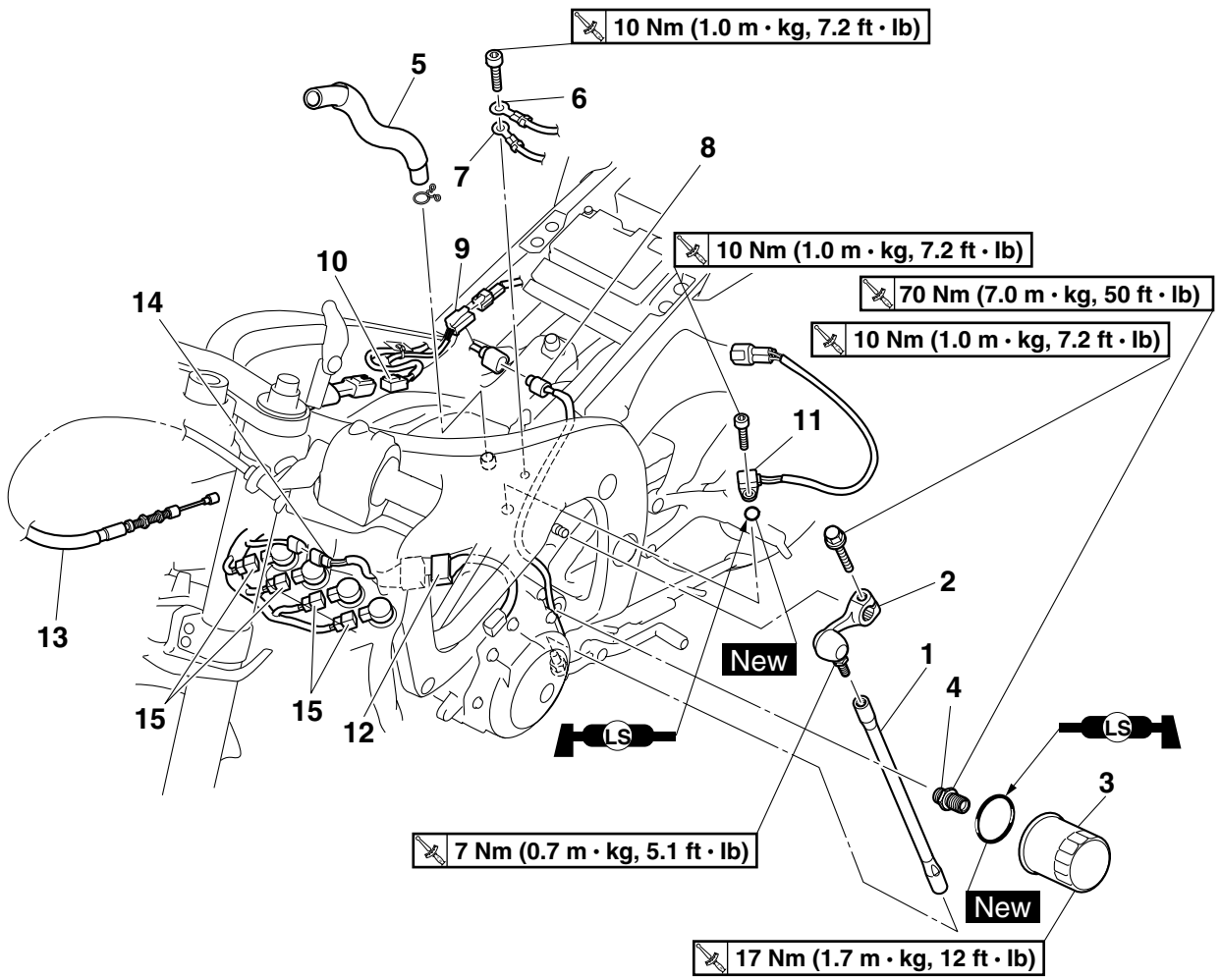


| Order | Job/Parts to remove | Q'ty | Remarks |
|---|---|---|---|
| 7 | Engine ground terminal | 1 | Disconnect. |
| 8 | Oil level switch coupler | 1 | Disconnect. |
| 9 | Crankshaft position sensor coupler | 1 | Disconnect. |
| 10 | Neutral switch coupler | 1 | Disconnect. |
| 11 | Speed sensor | 1 | |
| 12 | Stator coil assembly coupler | 1 | Disconnect. |
| 13 | Clutch cable | 1 | Disconnect. |
| 14 | Cylinder identification sensor coupler | 1 | Disconnect. |
| 15 | Ignition coil coupler | 4 | Disconnect. |
| | | | For installation, reverse the removal procedure. |

**Removing the engine**

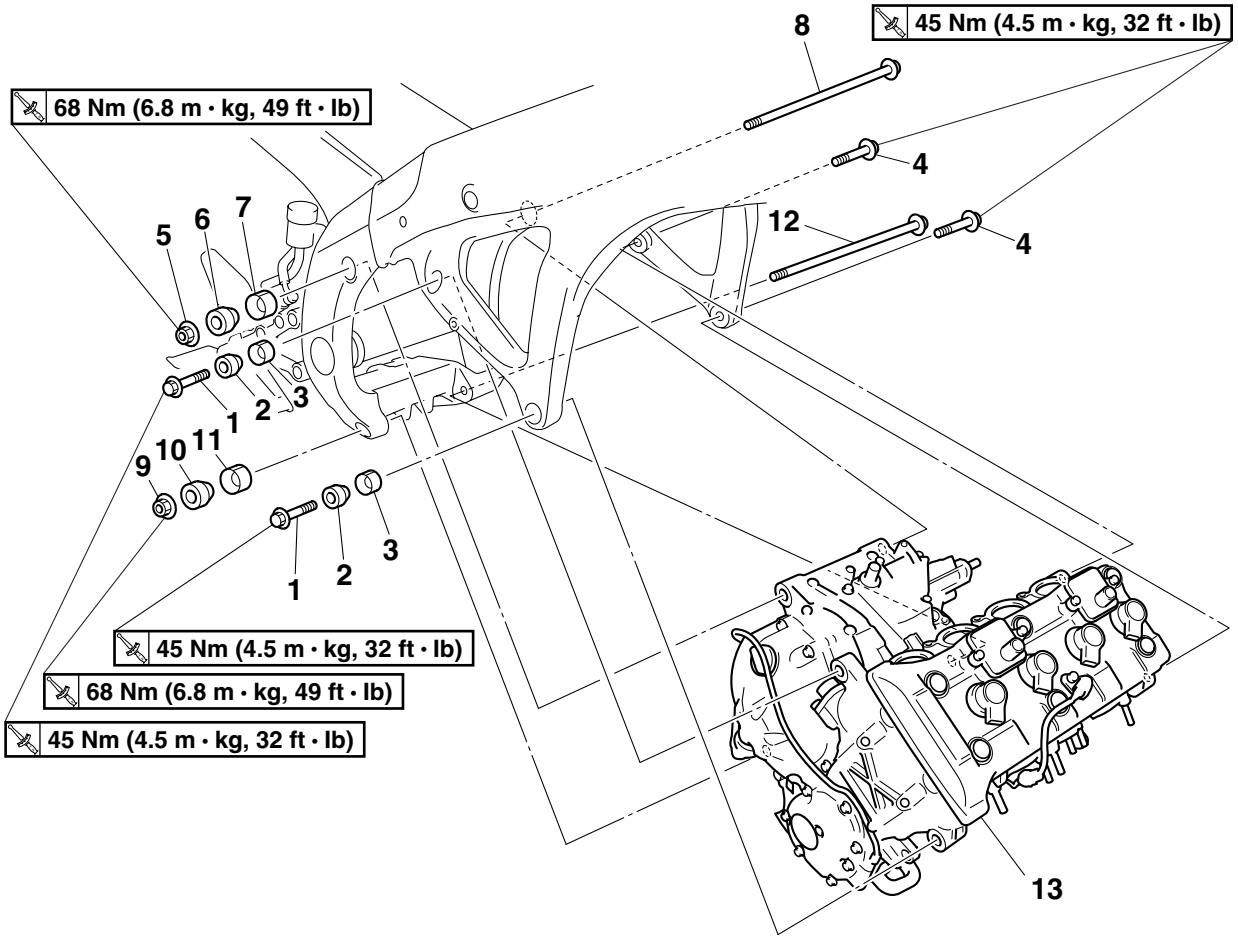


| Order | Job/Parts to remove | Q'ty | Remarks |
|---|---|---|---|
| | | | **NOTE:** Place a suitable stand under the engine. |
| 1 | Engine mounting bolt (front right side) | 2 | |
| 2 | Engine mounting collar (outside) | 2 | |
| 3 | Engine mounting collar (inside) | 2 | |
| 4 | Engine mounting bolt (front left side) | 2 | |
| 5 | Engine mounting nut (rear upper side) | 1 | |
| 6 | Engine mounting collar (outside) | 1 | |
| 7 | Engine mounting collar (inside) | 1 | |
| 8 | Engine mounting bolt (rear upper side) | 1 | |
| 9 | Engine mounting nut (rear lower side) | 1 | |
| 10 | Engine mounting collar (outside) | 1 | |
| 11 | Engine mounting collar (inside) | 1 | |
| 12 | Engine mounting bolt (rear lower side) | 1 | |
| 13 | Engine | 1 | |
| | | | For installation, reverse the removal procedure. |

EAS23720

## INSTALLING THE ENGINE

1. Install:
   - Engine “1”
   - Engine mounting bolt (rear lower side) “2”
   - Engine mounting bolt (rear upper side) “3”
   - Engine mounting collars (inside) “4”
   - Engine mounting collars (outside) “5”
   - Engine mounting nut (rear lower side) “6” (temporarily tighten)
   - Engine mounting nut (rear upper side) “7” (temporarily tighten)
   - Engine mounting bolts (front left side) “8” (temporarily tighten)
   - Engine mounting collars (inside) “9”
   - Engine mounting collars (outside) “10”
   - Engine mounting bolts (front right side) “11” (temporarily tighten)

**NOTE:**

- Be sure to pass the drive axle through the drive chain when installing the engine “1”.
- Do not fully tighten the bolts and nuts.

2. Tighten:
   - Engine mounting nut (rear lower side) “6”
   - Engine mounting nut (rear upper side) “7”
   - Engine mounting bolts (front left side) “8”
   - Engine mounting bolts (front right side) “11”

**Engine mounting nut (rear lower side)**
**68 Nm (6.8 m·kg, 49 ft·lb)**
**Engine mounting nut (rear upper side)**
**68 Nm (6.8 m·kg, 49 ft·lb)**
**Engine mounting bolt (front left side)**
**45 Nm (4.5 m·kg, 32 ft·lb)**
**Engine mounting bolt (front right side)**
**45 Nm (4.5 m·kg, 32 ft·lb)**

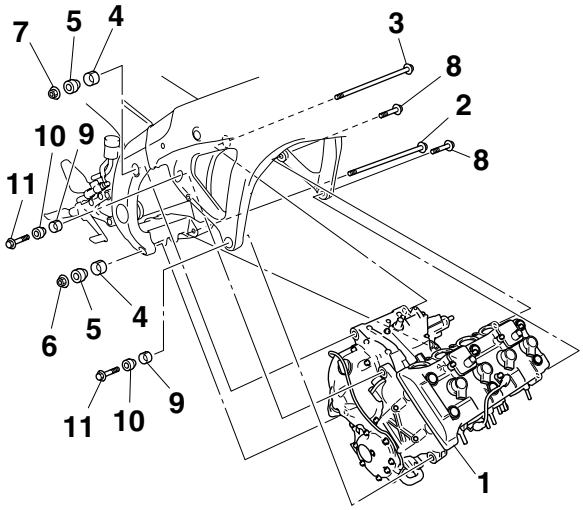


3. Install:
   - Shift arm “1”

**Shift arm bolt**
**10 Nm (1.0 m·kg, 7.2 ft·lb)**

**NOTE:**

Install the shift arm “1” with its punch mark “a” aligned with the notch “b” in end of the shift shaft.

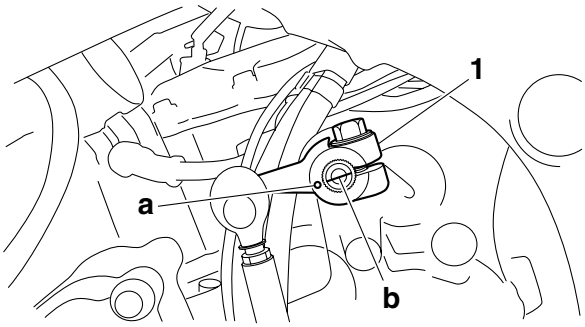

EAS23760

# CAMSHAFTS

**Removing the cylinder head cover**

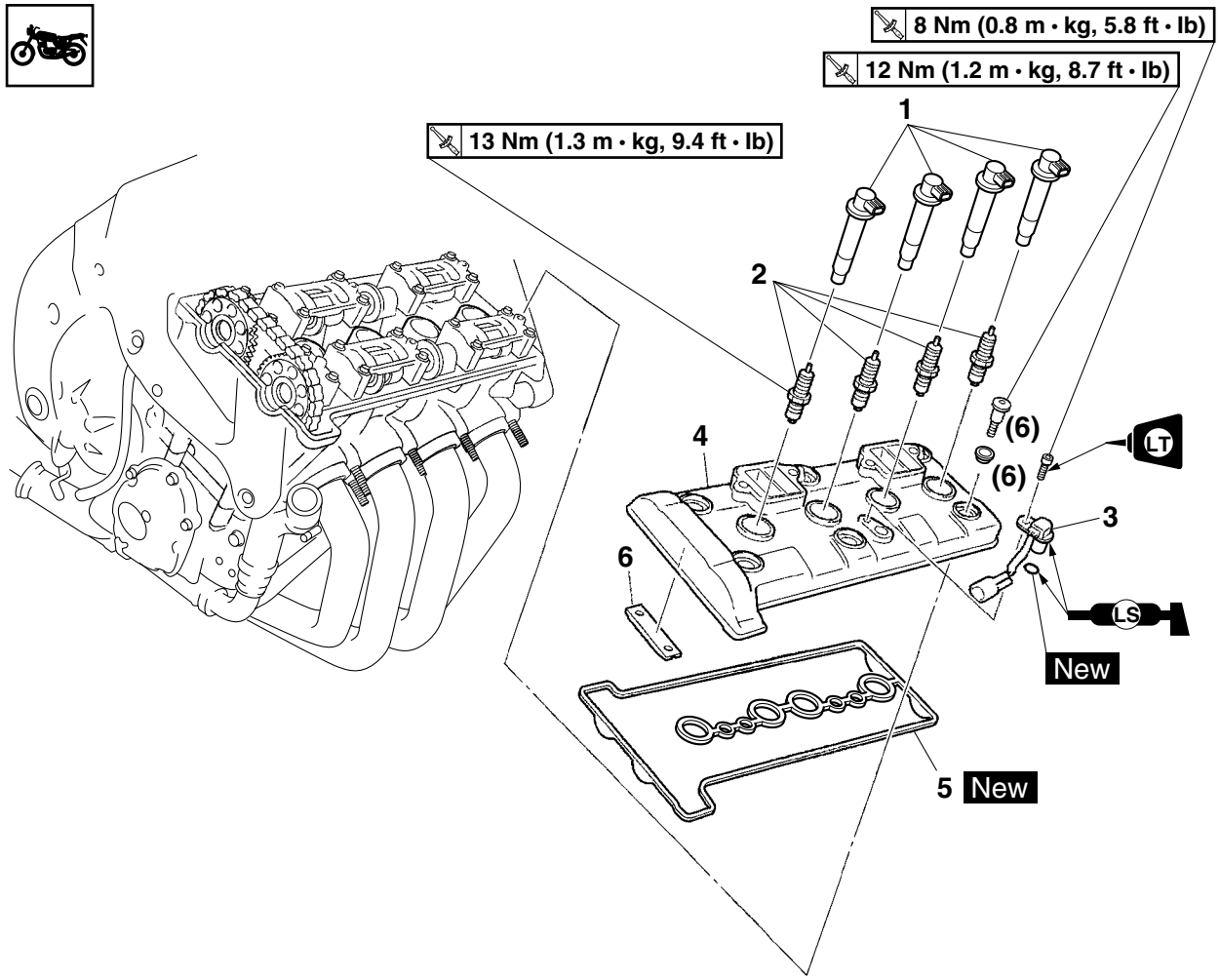


| Order | Job/Parts to remove | Q'ty | Remarks |
|---|---|---|---|
| | Radiator | | Refer to "RADIATOR" on page 6-1. |
| | Throttle body | | Refer to "THROTTLE BODIES" on page 7-7. |
| | Air cut-off valve/Reed valve assembly | | Refer to "AIR INDUCTION SYSTEM" on page 7-13. |
| 1 | Ignition coil | 4 | |
| 2 | Spark plug | 4 | |
| 3 | Cylinder identification sensor | 1 | |
| 4 | Cylinder head cover | 1 | |
| 5 | Cylinder head cover gasket | 1 | |
| 6 | Timing chain guide (upper side) | 1 | |
| | | | For installation, reverse the removal procedure. |

**Removing the camshafts**

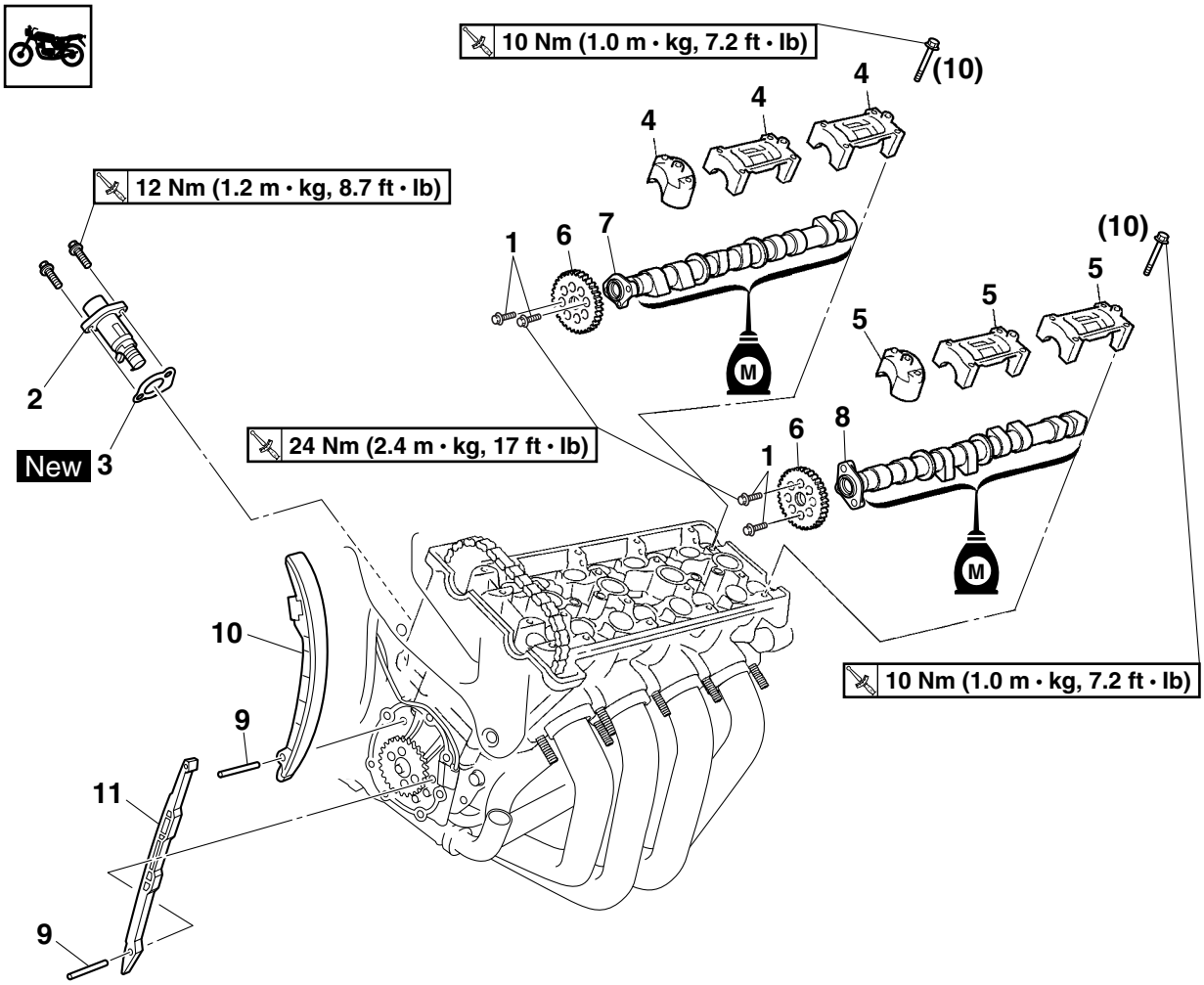


| Order | Job/Parts to remove | Q'ty | Remarks |
|---|---|---|---|
| | Pickup rotor cover | | Refer to "PICKUP ROTOR" on page 5-30. |
| 1 | Camshaft sprocket bolt | 4 | Loosen. |
| 2 | Timing chain tensioner | 1 | |
| 3 | Timing chain tensioner gasket | 1 | |
| 4 | Intake camshaft cap | 3 | |
| 5 | Exhaust camshaft cap | 3 | |
| 6 | Camshaft sprocket | 2 | |
| 7 | Intake camshaft | 1 | |
| 8 | Exhaust camshaft | 1 | |
| 9 | Pin | 2 | |
| 10 | Timing chain guide (intake side) | 1 | |
| 11 | Timing chain guide (exhaust side) | 1 | |
| | | | For installation, reverse the removal procedure. |

EAS23810

## REMOVING THE CAMSHAFTS

1. Remove:
   - Pickup rotor cover
     Refer to “PICKUP ROTOR” on page 5-30.
2. Align:
   - TDC mark on the pickup rotor
     (with the crankcase mating surface)

▼▼▼▼▼▼▼▼▼▼▼▼▼▼▼▼▼▼▼▼▼▼▼▼▼▼▼▼▼▼▼▼▼▼

a. Turn the crankshaft clockwise.

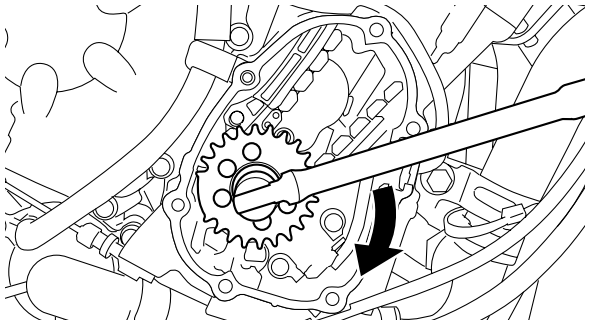

b. When piston #1 is at TDC on the compression stroke, align the TDC mark “a” on the pickup rotor with the crankcase mating surface “b”.

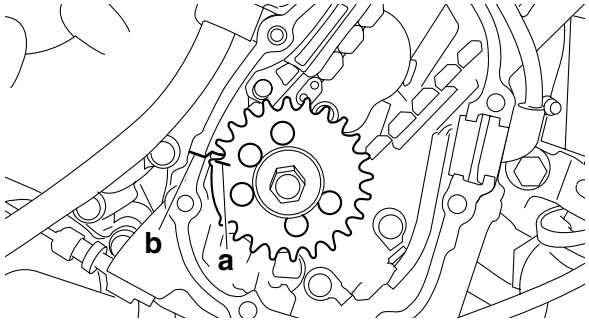


**NOTE:**

TDC on the compression stroke can be found when the camshaft lobes are turned away from each other.

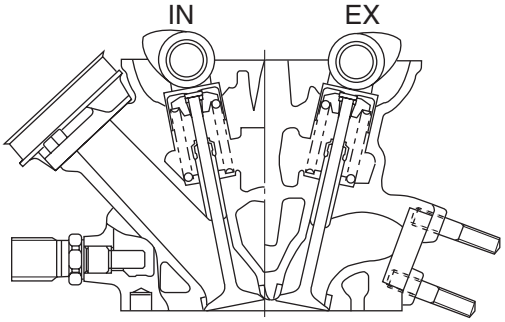


▲▲▲▲▲▲▲▲▲▲▲▲▲▲▲▲▲▲▲▲▲▲▲▲▲▲▲▲▲▲▲▲▲▲

3. Remove:
   - Camshaft caps “1”

ECA13720

**CAUTION:**

**To prevent damage to the cylinder head, camshafts or camshaft caps, loosen the camshaft cap bolts in stages and in a criss-cross pattern, working from the outside in.**

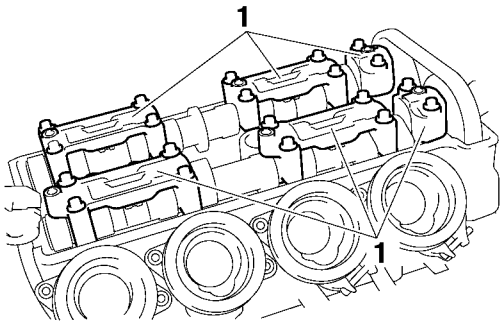


4. Remove:
   - Intake camshaft
   - Exhaust camshaft

**NOTE:**

To prevent the timing chain from falling into the crankcase, fasten it with a wire “1”.

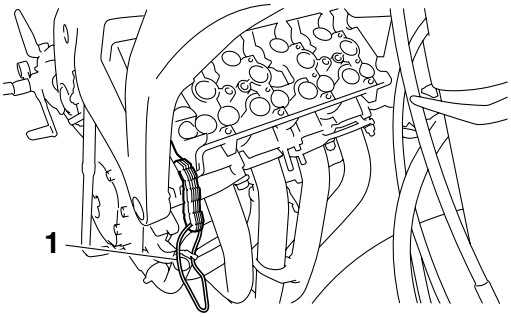


EAS23850

## CHECKING THE CAMSHAFTS

1. Check:
   - Camshaft lobes
     Blue discoloration/pitting/scratches → Replace the camshaft.
2. Measure:
   - Camshaft lobe dimensions “a” and “b”
     Out of specification → Replace the camshaft.

**Camshaft lobe dimensions**
**Intake A**
**33.725–33.875 mm (1.3278–1.3337 in)**
**Limit**
**33.675 mm (1.3258 in)**
**Intake B**
**25.225–25.325 mm (0.9931–0.9970 in)**
**Limit**
**25.175 mm (0.9911 in)**
**Exhaust A**
**32.925–33.075 mm (1.2963–1.3022 in)**
**Limit**
**32.875 mm (1.2943 in)**
**Exhaust B**
**25.082–25.182 mm (0.9875–0.9914 in)**
**Limit**
**25.032 mm (0.9855 in)**

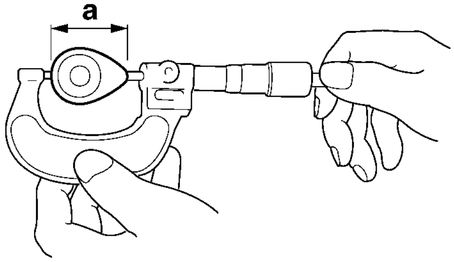


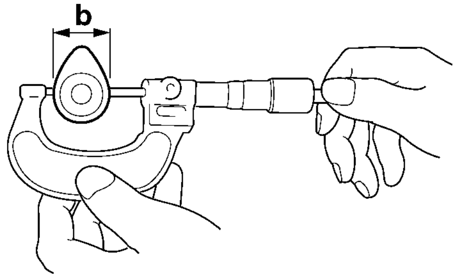


3. Measure:
   - Camshaft runout
     Out of specification → Replace.

**Camshaft runout limit**
**0.030 mm (0.0012 in)**

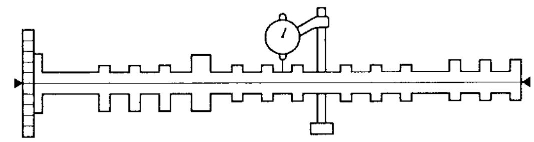

4. Measure:
   - Camshaft-journal-to-camshaft-cap clearance
     Out of specification → Measure the camshaft journal diameter.

**Camshaft-journal-to-camshaft-cap clearance**
**0.028–0.062 mm (0.0011–0.0024 in)**

▼▼▼▼▼▼▼▼▼▼▼▼▼▼▼▼▼▼▼▼▼▼▼▼▼▼▼▼▼▼▼▼▼▼▼▼▼

a. Install the camshaft into the cylinder head (without the camshaft caps).

b. Position a strip of Plastigauge® "1" onto the camshaft journal as shown.

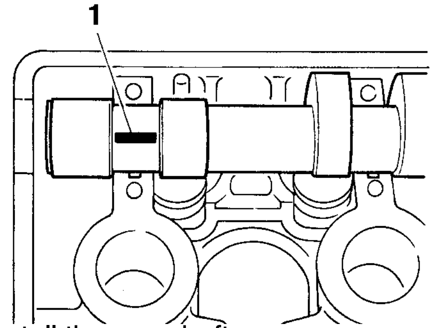


c. Install the camshaft caps.

**NOTE:**

- Tighten the camshaft cap bolts in stages and in a crisscross pattern, working from the inner caps out.
- Do not turn the camshaft when measuring the camshaft journal-to-camshaft cap clearance with the Plastigauge®.

**Camshaft cap bolt**
**10 Nm (1.0 m·kg, 7.2 ft·lb)**

d. Remove the camshaft caps and then measure the width of the Plastigauge® "1".

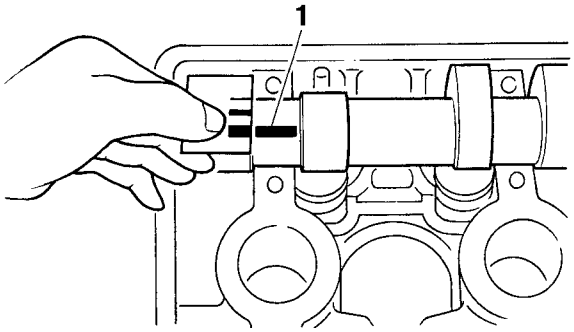


5. Measure:
   - Camshaft journal diameter “a”
     Out of specification → Replace the camshaft.
     Within specification → Replace the cylinder head and the camshaft caps as a set.

| | |
|---|---|
| | **Camshaft journal diameter 22.459–22.472 mm (0.8842–0.8847 in)** |

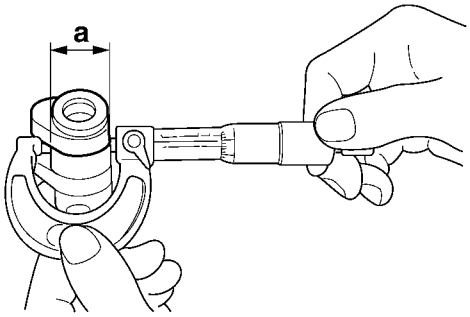


EAS23870

## CHECKING THE TIMING CHAIN, CAMSHAFT SPROCKETS, AND TIMING CHAIN GUIDES

1. Check:
   - Timing chain “1”
     Damage/stiffness → Replace the timing chain and camshaft and camshaft sprocket as a set.
2. Check:
   - Camshaft sprocket
     More than 1/4 tooth wear “a” → Replace the camshaft sprocket and the timing chain as a set.

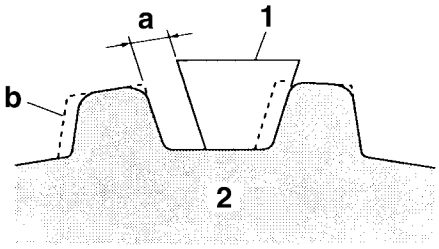


a. 1/4 tooth
b. Correct
1. Timing chain roller
2. Camshaft sprocket

3. Check:
   - Timing chain guide (exhaust side)
   - Timing chain guide (intake side)
   - Timing chain guide (upper side)
     Damage/wear → Replace the defective part(s).

EAS23970

## CHECKING THE TIMING CHAIN TENSIONER

1. Remove:
   - Timing chain tensioner rod “1”
   - Timing chain tensioner spring seat “2”
   - Timing chain tensioner inner spring “3”
   - Timing chain tensioner outer spring “5”
   - Timing chain tensioner housing “6”

**NOTE:**

Squeeze the timing chain tensioner clip “4”, and then remove the timing chain tensioner springs and timing chain tensioner rod.

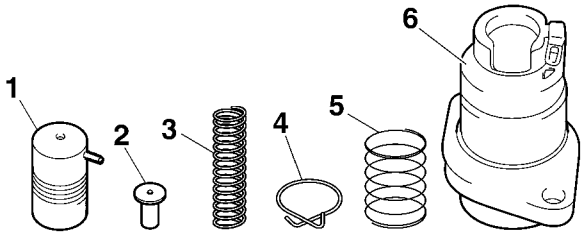


2. Check:
   - Timing chain tensioner housing
   - Timing chain tensioner rod
   - Timing chain tensioner spring seat
   - Timing chain tensioner springs
     Damage/wear → Replace the as a set.
3. Assemble:
   - Timing chain tensioner springs
   - Timing chain tensioner spring seat
   - Timing chain tensioner rod

**NOTE:**

Prior to installing the timing chain tensioner rod, drain the engine oil from the timing chain tensioner housing.

▼▼▼▼▼▼▼▼▼▼▼▼▼▼▼▼▼▼▼▼▼▼▼▼▼▼▼▼▼▼▼▼▼▼

a. Install the timing chain tensioner springs, timing chain tensioner spring seat, and timing chain tensioner rod “1”.

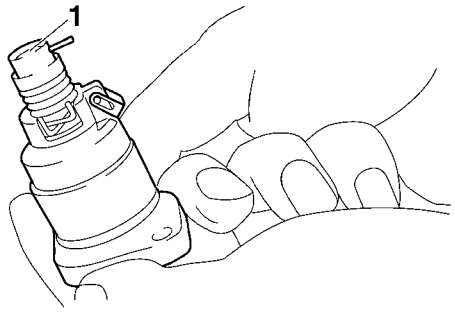


b. Squeeze the timing chain tensioner clip “2”, and then push the timing chain tensioner rod “3” into the timing chain tensioner housing.

**NOTE:**

Do not release the timing chain tensioner clip while pushing the rod into the housing, otherwise the rod may be ejected.

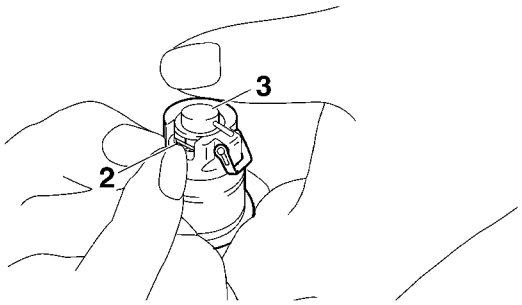


c. Hook the clip “4” to the timing chain tensioner rod “3”.

**NOTE:**

Hook the timing chain tensioner rod pin “5” to the center of the clip “4”. After the installation, check that the clip “4” can come off by its own weight by pushing the timing chain tensioner rod “3” at the position of installation.

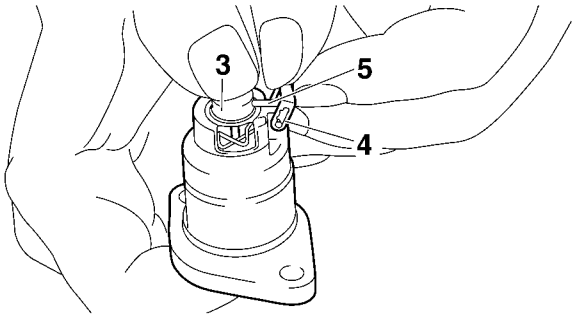


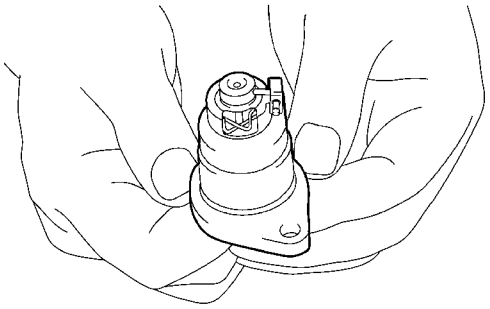

▲▲▲▲▲▲▲▲▲▲▲▲▲▲▲▲▲▲▲▲▲▲▲▲▲▲▲▲▲▲▲▲▲▲

EAS24010

## INSTALLING THE CAMSHAFTS

1. Align:
   - TDC mark on the pickup rotor (with the crankcase mating surface)

▼▼▼▼▼▼▼▼▼▼▼▼▼▼▼▼▼▼▼▼▼▼▼▼▼▼▼▼▼▼▼▼▼▼

a. Turn the crankshaft clockwise.

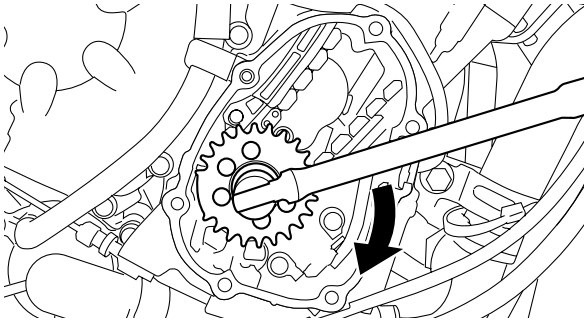

b. When piston #1 is at TDC on the compression stroke, align the TDC mark “a” on the pickup rotor with the crankcase mating surface “b”.

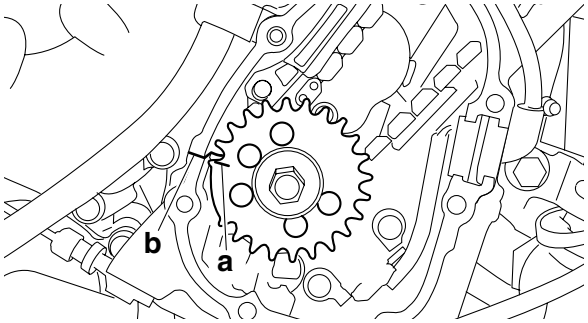


▲▲▲▲▲▲▲▲▲▲▲▲▲▲▲▲▲▲▲▲▲▲▲▲▲▲▲▲▲▲▲▲▲▲

2. Install:
   - Timing chain “1”
   - Exhaust camshaft “2”
   - Intake camshaft “3”
     (with the camshaft sprockets temporarily tightened)

**NOTE:**

- Make sure the match marks “a” on the camshaft sprockets are aligned with the cylinder head edge “b”.
- Be sure to install the timing chain so that the exhaust side of the chain is taut and the intake side is slack.

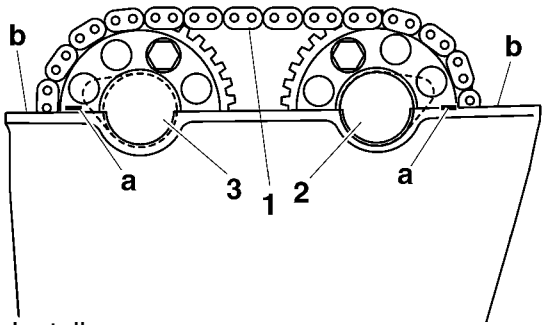


3. Install:
   - Intake camshaft caps
   - Exhaust camshaft caps

**NOTE:**

- Make sure each camshaft cap is installed in its original place. Refer to the identification marks as follows:
  “I1”, “I2”: Intake
  “E1”, “E2”: Exhaust
- Make sure the arrow mark “a” on each camshaft points towards the right side of the engine.

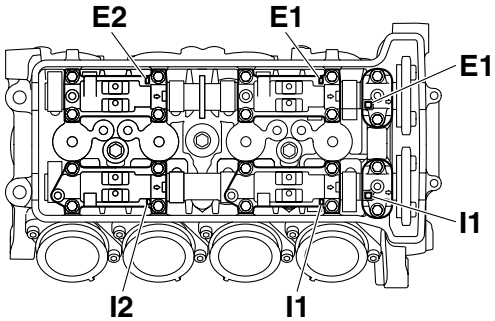


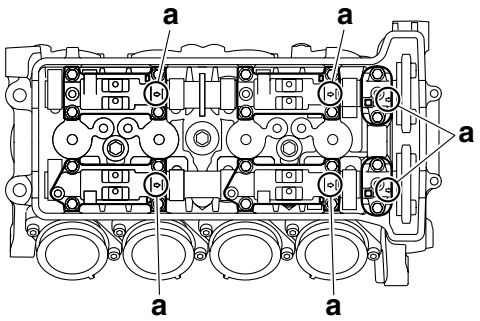


4. Install:
   - Camshaft cap bolts

| | |
|---|---|
| | **Camshaft cap bolt**<br>**10 Nm (1.0 m·kg, 7.2 ft·lb)** |

ECA13730

**CAUTION:**

**The camshaft cap bolts must be tightened evenly or damage to the cylinder head, camshaft caps, and camshafts will result.**

**NOTE:**

Tighten the camshaft cap bolts in stages and in a crisscross pattern, working from the inner caps out.

5. Install:
   - Timing chain tensioner gasket “1” New
   - Timing chain tensioner “2”

| | |
|---|---|
| | **Timing chain tensioner bolt**<br>**12 Nm (1.2 m·kg, 8.7 ft·lb)** |

**NOTE:**

- Be sure to install the timing chain tensioner gasket so that its section with the “L” mark “a” is protruding from the lower left side of the timing chain tensioner.
- The arrow mark “b” on the timing chain tensioner should face up.

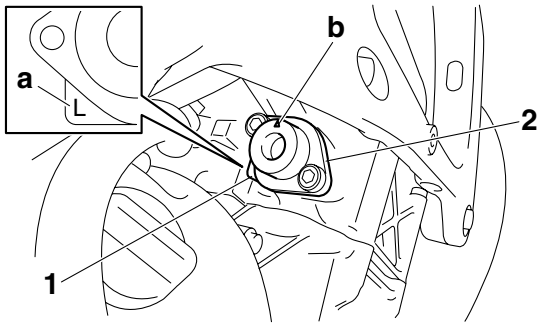

6. Rotate the crankshaft a few times to release the timing chain tensioner rod.

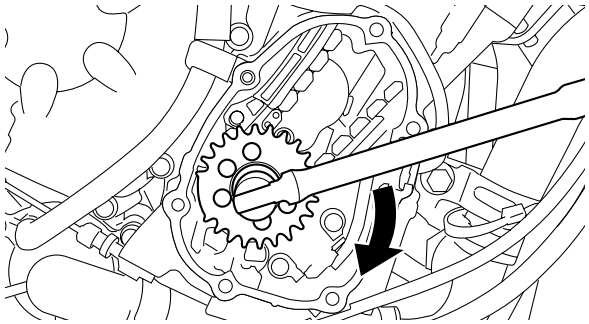

**NOTE:**

If the engine is not disassembled, set the engine stop switch to "⊗", and then crank the engine a few times by pressing the start switch for approximately 0.5–1.0 second each time.

7. Check that the timing chain is taut. If the chain is slack, reinstall the timing chain tensioner.

**NOTE:**

If the engine is not disassembled, start the engine and check for any abnormal noise. If any abnormal noise is heard, reinstall the timing chain tensioner.

8. Check:
   - TDC mark "a"
     Make sure the TDC mark on the pickup rotor is aligned with the crankcase mating surface "b".

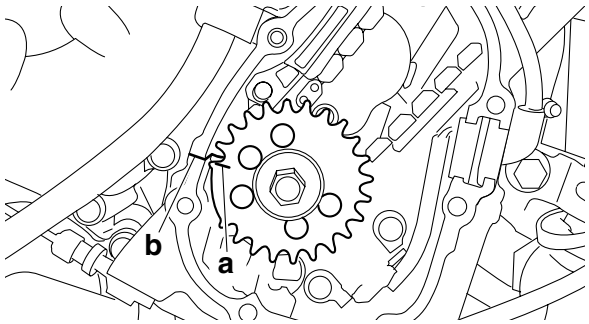


   - Camshaft sprocket match mark "c"
     Make sure the marks on the camshaft sprockets are aligned with the edge of the cylinder head "d".
     Out of alignment → Adjust.
     Refer to the installation steps above.

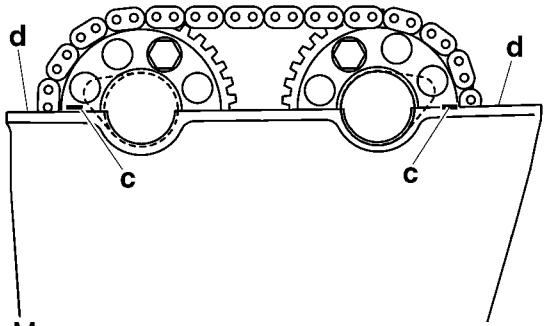


9. Measure:
   - Valve clearance
     Out of specification → Adjust.
     Refer to "ADJUSTING THE VALVE CLEARANCE" on page 3-4.
10. Install:
   - Cylinder head cover gasket New
   - Cylinder head cover

| | |
|---|---|
| 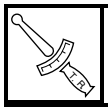 | **Cylinder head cover bolt**<br>**12 Nm (1.2 m·kg, 8.7 ft·lb)** |

**NOTE:**

- Apply bond TB1541B "1" onto the mating surfaces of the cylinder head cover and cylinder head cover gasket.
- Apply bond TB1215B "2" onto the mating surfaces of the cylinder head cover gasket and cylinder head.
- Tighten the cylinder head cover bolts stages and in a crisscross pattern.

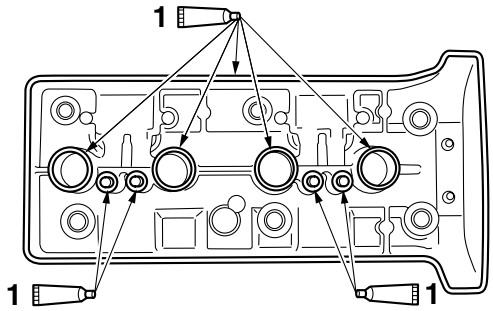


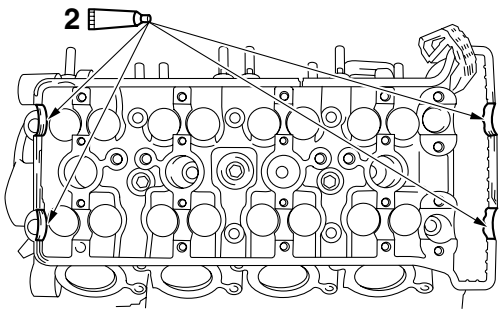

EAS24100

# CYLINDER HEAD

**Removing the cylinder head**

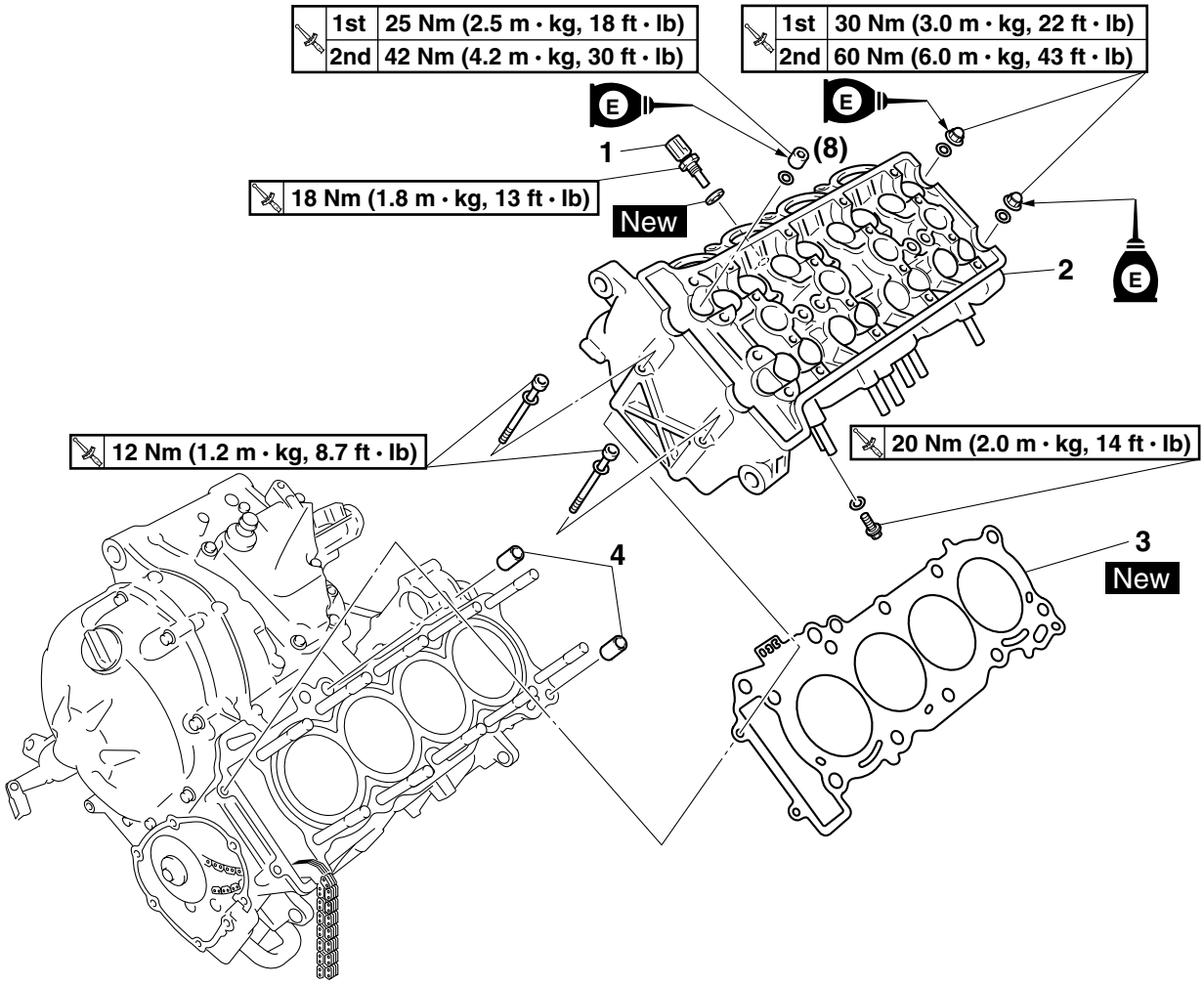


| Order | Job/Parts to remove | Q'ty | Remarks |
|---|---|---|---|
| | Engine | | Refer to "ENGINE REMOVAL" on page 5-1. |
| | Camshafts | | Refer to "CAMSHAFTS" on page 5-7. |
| 1 | Coolant temperature sensor | 1 | |
| 2 | Cylinder head | 1 | |
| 3 | Cylinder head gasket | 1 | |
| 4 | Dowel pin | 2 | |
| | | | For installation, reverse the removal procedure. |

EAS24120
## REMOVING THE CYLINDER HEAD
1. Remove:
   - Cylinder head bolts
   - Cylinder head nuts

**NOTE:**
- Loosen the nuts, cap nuts, and bolts in decreasing numerical order (refer to the numbers in the illustration).
- Loosen each nut 1/2 of a turn at a time. After all of the nuts are fully loosened, remove them.

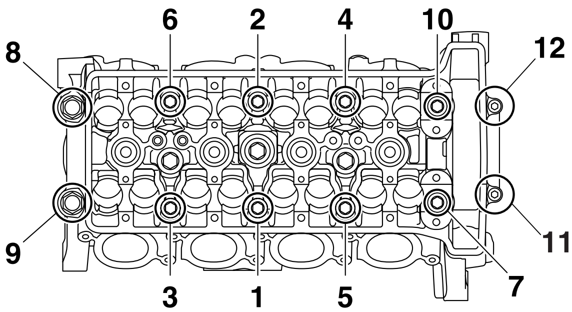


EAS24160
## CHECKING THE CYLINDER HEAD
1. Eliminate:
   - Combustion chamber carbon deposits (with a rounded scraper)

**NOTE:**
Do not use a sharp instrument to avoid damaging or scratching:
- Spark plug bore threads
- Valve seats

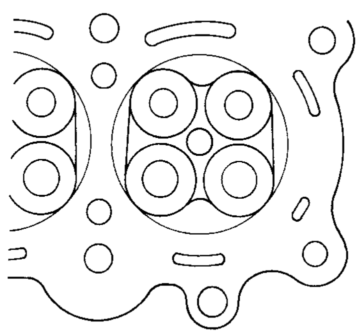

2. Check:
   - Cylinder head
     Damage/scratches → Replace.

**NOTE:**
Replace the titanium valves with the cylinder head.

Refer to “CHECKING THE VALVE SEATS” on page 5-21.
   - Cylinder head water jacket
     Mineral deposits/rust → Eliminate.
3. Measure:
   - Cylinder head warpage
     Out of specification → Resurface the cylinder head.

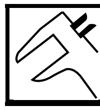

**Warpage limit**
**0.05 mm (0.0020 in)**

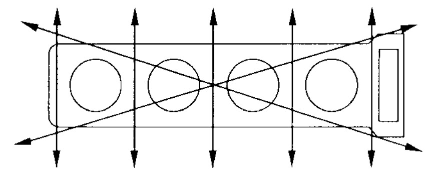

▼▼▼▼▼▼▼▼▼▼▼▼▼▼▼▼▼▼▼▼▼▼▼▼▼▼▼▼▼▼▼▼▼▼▼

a. Place a straightedge “1” and a thickness gauge “2” across the cylinder head.

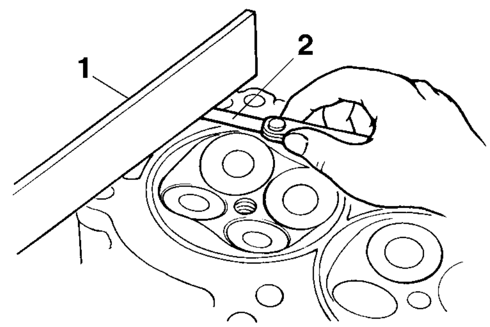


b. Measure the warpage.
c. If the limit is exceeded, resurface the cylinder head as follows.
d. Place a 400–600 grit wet sandpaper on the surface plate and resurface the cylinder head using a figure-eight sanding pattern.

**NOTE:**
To ensure an even surface, rotate the cylinder head several times.

▲▲▲▲▲▲▲▲▲▲▲▲▲▲▲▲▲▲▲▲▲▲▲▲▲▲▲▲▲▲▲▲▲▲▲

EAS24240
## INSTALLING THE CYLINDER HEAD
1. Install:
   - Cylinder head

**NOTE:**
Pass the timing chain through the timing chain cavity.

2. Tighten:
   - Cylinder head nuts “1”–“7”, “10”

| | |
|---|---|
| | **Cylinder head nut (1st)**<br>**25 Nm (2.5 m·kg, 18 ft·lb)**<br>**Cylinder head nut (final)**<br>**42 Nm (4.2 m·kg, 30 ft·lb)** |

• Cylinder head cap nuts “8”, “9”

| | |
|---|---|
| | **Cylinder head cap nut (1st)**<br>**30 Nm (3.0 m·kg, 22 ft·lb)**<br>**Cylinder head cap nut (final)**<br>**60 Nm (6.0 m·kg, 43 ft·lb)** |

• Cylinder head bolts “11”, “12”

| | |
|---|---|
| | **Cylinder head bolt**<br>**12 Nm (1.2 m·kg, 8.7 ft·lb)** |

**NOTE:**

Tighten the cylinder head nuts, cap nuts, and bolts in the proper tightening sequence as shown and torque them in two stages.

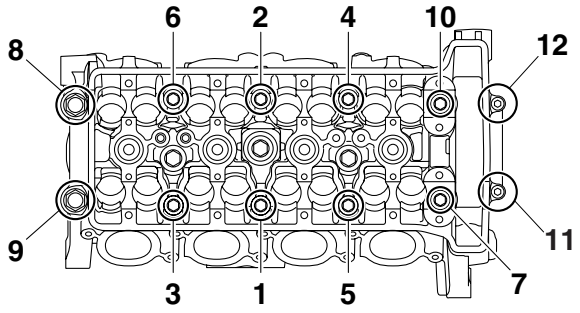

EAS24270

# VALVES AND VALVE SPRINGS

**Removing the valves and valve springs**

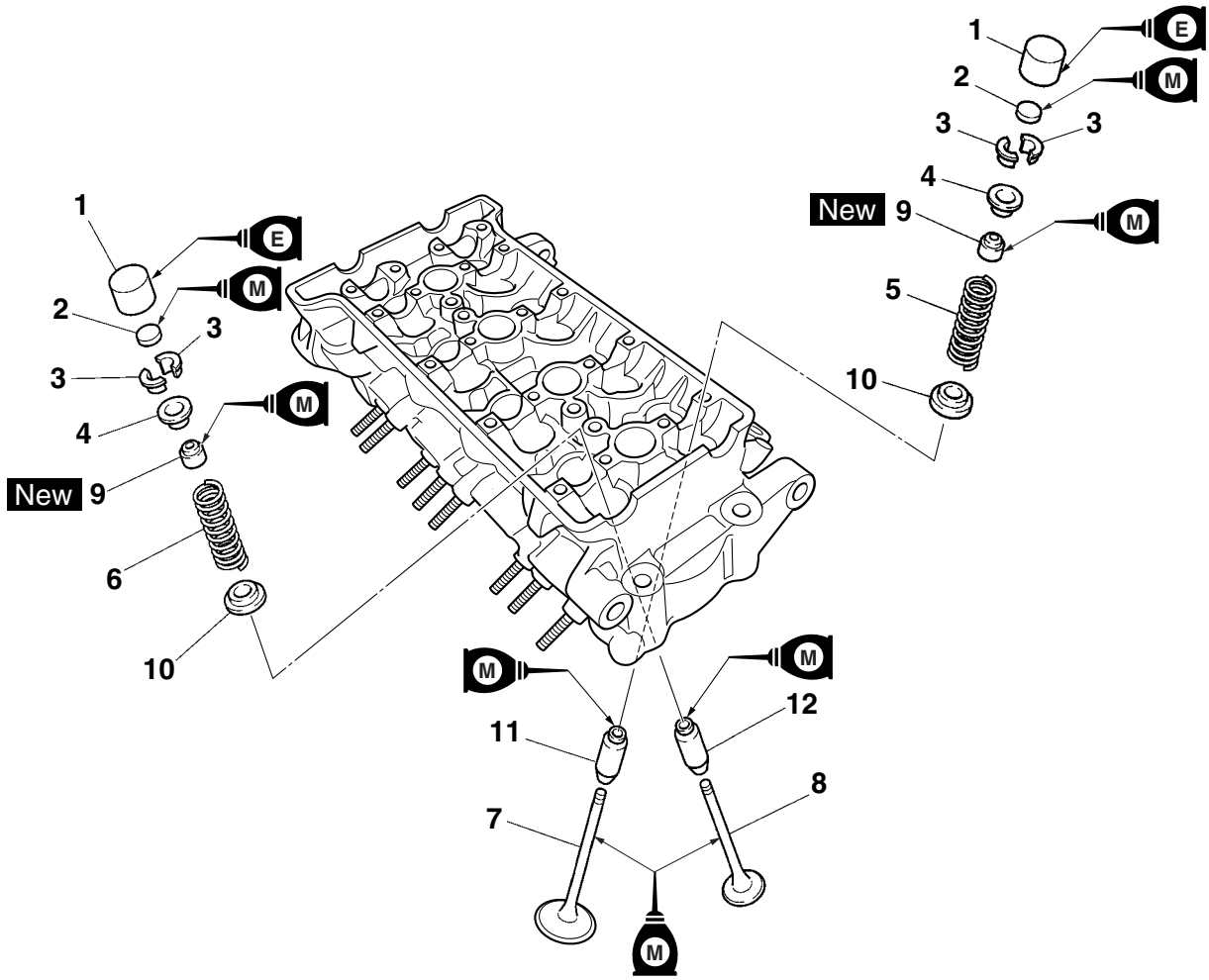


| Order | Job/Parts to remove | Q'ty | Remarks |
|---|---|---|---|
| | Cylinder head | | Refer to "CYLINDER HEAD" on page 5-15. |
| 1 | Valve lifter | 16 | |
| 2 | Valve pad | 16 | |
| 3 | Valve cotter | 32 | |
| 4 | Upper spring seat | 16 | |
| 5 | Intake valve spring | 8 | |
| 6 | Exhaust valve spring | 8 | |
| 7 | Intake valve | 8 | |
| 8 | Exhaust valve | 8 | |
| 9 | Valve stem seal | 16 | |
| 10 | Lower spring seat | 16 | |
| 11 | Intake valve guide | 8 | |
| 12 | Exhaust valve guide | 8 | |
| | | | For installation, reverse the removal procedure. |

EAS24280
## REMOVING THE VALVES

The following procedure applies to all of the valves and related components.

**NOTE:**

Before removing the internal parts of the cylinder head (e.g., valves, valve springs, valve seats), make sure the valves properly seal.

1. Remove:
   - Valve lifter “1”
   - Valve pad “2”

**NOTE:**

Make a note of the position of each valve lifter and valve pad so that they can be reinstalled in their original place.

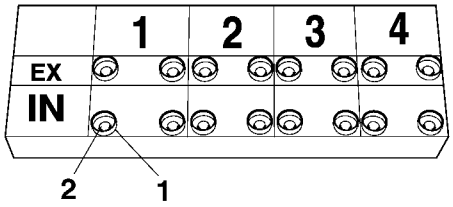


2. Check:
   - Valve sealing
     Leakage at the valve seat → Check the valve face, valve seat, and valve seat width.
     Refer to “CHECKING THE VALVE SEATS” on page 5-21.

▼▼▼▼▼▼▼▼▼▼▼▼▼▼▼▼▼▼▼▼▼▼▼▼▼▼▼▼▼▼▼▼▼▼

a. Pour a clean solvent “a” into the intake and exhaust ports.
b. Check that the valves properly seal.

**NOTE:**

There should be no leakage at the valve seat “1”.

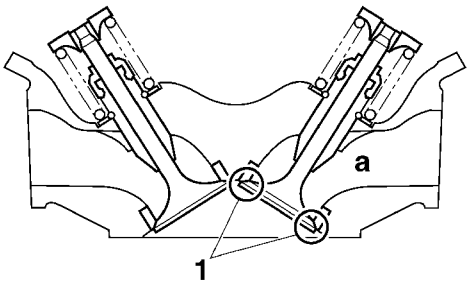


▲▲▲▲▲▲▲▲▲▲▲▲▲▲▲▲▲▲▲▲▲▲▲▲▲▲▲▲▲▲▲▲▲▲

3. Remove:
   - Valve cotters “1”

**NOTE:**

Remove the valve cotters by compressing the valve spring with the valve spring compressor “1” and the valve spring compressor attachment “2”.

**Valve spring compressor**
**90890-04019**
**YM-04019**
**Valve spring compressor attachment**
**90890-04108**
**Valve spring compressor adapter 22 mm**
**YM-04108**

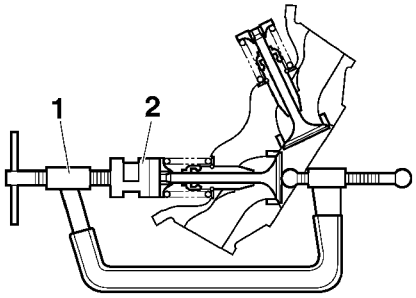


4. Remove:
   - Upper spring seat “1”
   - Valve spring “2”
   - Valve “3”
   - Valve stem seal “4”
   - Lower spring seat “5”

**NOTE:**

Identify the position of each part very carefully so that it can be reinstalled in its original place.

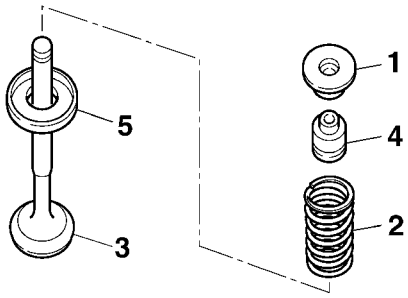


EAS24290
## CHECKING THE VALVES AND VALVE GUIDES

The following procedure applies to all of the valves and valve guides.

1. Measure:
   - Valve-stem-to-valve-guide clearance
     Out of specification → Replace the valve guide.

| |
|---|
| • Valve-stem-to-valve-guide clearance = Valve guide inside diameter “a” - Valve stem diameter “b” |

**Valve-stem-to-valve-guide clearance (intake)**
**0.010–0.037 mm (0.0004–0.0015 in)**
**Limit**
**0.080 mm (0.0032 in)**
**Valve-stem-to-valve-guide clearance (exhaust)**
**0.025–0.052 mm (0.0010–0.0020 in)**
**Limit**
**0.095 mm (0.0037 in)**

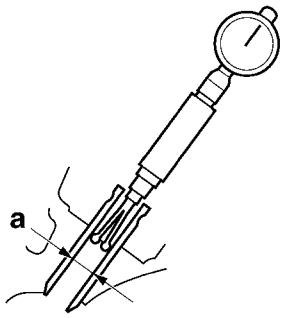


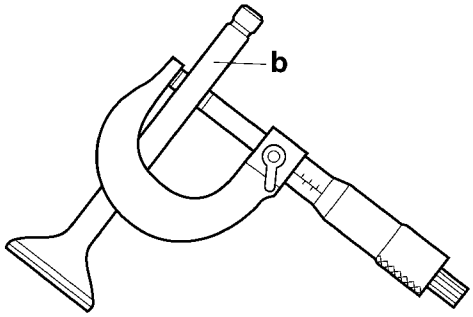


2. Replace:
   - Valve guide

**NOTE:**

To ease valve guide removal and installation, and to maintain the correct fit, heat the cylinder head to 100 °C (212 °F) in an oven.

▼▼▼▼▼▼▼▼▼▼▼▼▼▼▼▼▼▼▼▼▼▼▼▼▼▼▼▼▼▼▼▼▼▼

a. Remove the valve guide with the valve guide remover “1”.

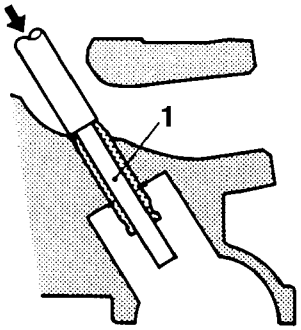


b. Install the new valve guide with the valve guide installer “2” and valve guide remover “1”.

**Valve guide position**
**15.80 mm–16.20 mm (0.622–0.638 in)**

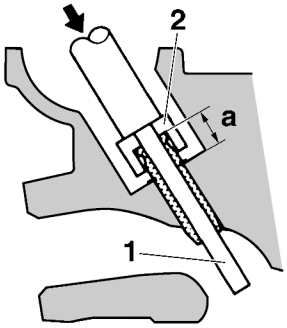


a. Valve guide position

c. After installing the valve guide, bore the valve guide with the valve guide reamer “3” to obtain the proper valve-stem-to-valve-guide clearance.

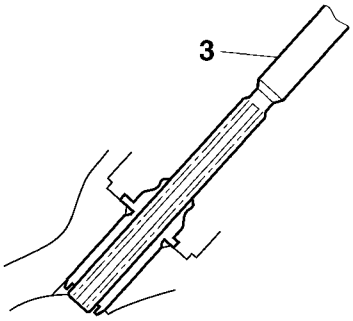


**NOTE:**

After replacing the valve guide, reface the valve seat.

**Valve guide remover (ø4.5)**
**90890-04116**
**Valve guide remover (4.5 mm)**
**YM-04116**
**Valve guide installer (ø4.5)**
**90890-04117**
**Valve guide installer (4.5 mm)**
**YM-04117**
**Valve guide reamer (ø4.5)**
**90890-04118**
**Valve guide reamer (4.5 mm)**
**YM-04118**

▲▲▲▲▲▲▲▲▲▲▲▲▲▲▲▲▲▲▲▲▲▲▲▲▲▲▲▲▲▲▲▲▲▲

3. Eliminate:
   - Carbon deposits
     (from the valve face and valve seat)
4. Check:
   - Valve face
     Pitting/wear → Grind the valve face.
   - Valve stem end
     Mushroom shape or diameter larger than the body of the valve stem → Replace the valve.
5. Measure:
   - Valve margin thickness D “a”
     Out of specification → Replace the valve.

**Valve margin thickness D (intake)**
**0.90–1.10 mm (0.0354–0.0433 in)**
**Limit**
**0.8 mm (0.03 in)**
**Valve margin thickness D (exhaust)**
**1.10–1.30 mm (0.0433–0.0512 in)**
**Limit**
**1.0 mm (0.04 in)**

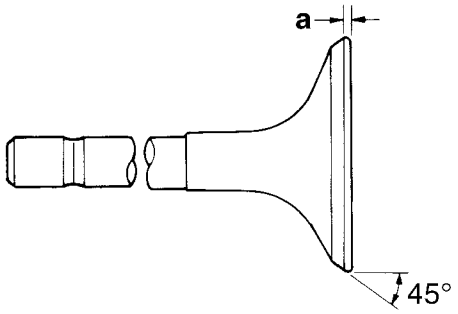


6. Measure:
   - Valve stem runout
     Out of specification → Replace the valve.

**NOTE:**

- When installing a new valve, always replace the valve guide.
- If the valve is removed or replaced, always replace the valve stem seal.

**Valve stem runout**
**0.040 mm (0.0016 in)**

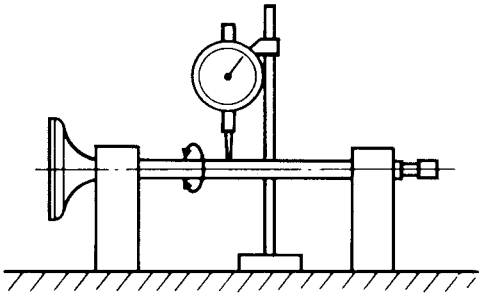

EAS24300

## CHECKING THE VALVE SEATS

The following procedure applies to all of the valves and valve seats.

1. Eliminate:
   - Carbon deposits
     (from the valve face and valve seat)
2. Check:
   - Valve seat
     Pitting/wear → Replace the cylinder head.
3. Measure:
   - Valve seat width C “a”
     Out of specification → Replace the cylinder head.

**Valve seat width C (intake)**
**0.90–1.10 mm (0.0354–0.0433 in)**
**Limit**
**1.6 mm (0.06 in)**
**Valve seat width C (exhaust)**
**1.10–1.30 mm (0.0433–0.0512 in)**
**Limit**
**1.8 mm (0.07 in)**

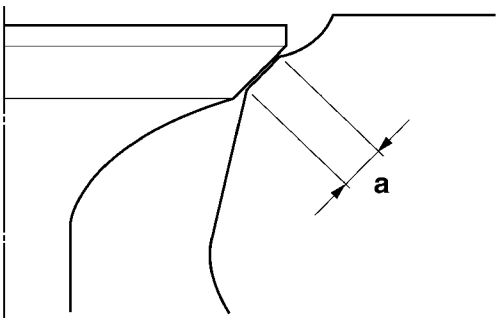


▼▼▼▼▼▼▼▼▼▼▼▼▼▼▼▼▼▼▼▼▼▼▼▼▼▼▼▼▼▼▼▼▼▼

a. Apply Mechanic’s blueing dye (Dykem) “b” onto the valve face.

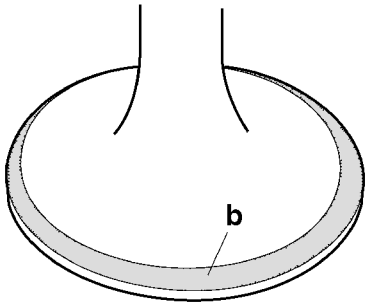


b. Install the valve into the cylinder head.
c. Press the valve through the valve guide and onto the valve seat to make a clear impression.
d. Measure the valve seat width.

**NOTE:**

Where the valve seat and valve face contacted one another, the blueing will have been removed.

▲▲▲▲▲▲▲▲▲▲▲▲▲▲▲▲▲▲▲▲▲▲▲▲▲▲▲▲▲▲▲▲▲▲

4. Lap:
   - Valve face
   - Valve seat

EC2C01028

**CAUTION:**

**This model uses titanium intake and exhaust valves. Titanium valves that have been used to lap the valve seats must not be used. Always replace lapped valves with new valves.**

**NOTE:**

- When replacing the cylinder head, replace the valves without lapping the valve seats and valve faces.
- When replacing the valves or valve guides, use new valves to lap the valve seats, and then replace them with new valves.

▼▼▼▼▼▼▼▼▼▼▼▼▼▼▼▼▼▼▼▼▼▼▼▼▼▼▼▼▼▼▼▼▼▼

a. Apply a coarse lapping compound “a” to the valve face.

ECA13790

**CAUTION:**

**Do not let the lapping compound enter the gap between the valve stem and the valve guide.**

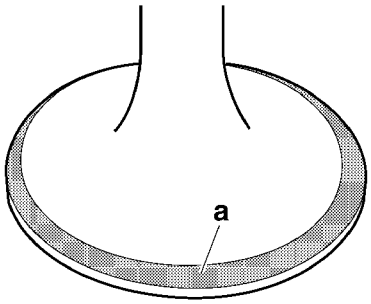


b. Apply molybdenum disulfide oil onto the valve stem.
c. Install the valve into the cylinder head.
d. Turn the valve until the valve face and valve seat are evenly polished, then clean off all of the lapping compound.

**NOTE:**

For the best lapping results, lightly tap the valve seat while rotating the valve back and forth between your hands.

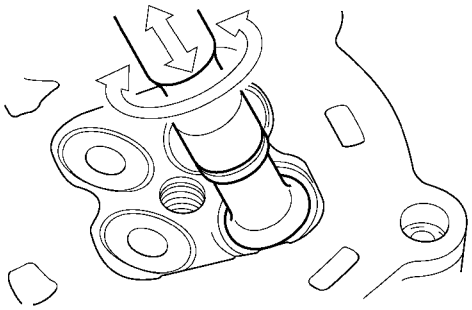

e. Apply a fine lapping compound to the valve face and repeat the above steps.
f. After every lapping procedure, be sure to clean off all of the lapping compound from the valve face and valve seat.
g. Apply Mechanic’s blueing dye (Dykem) “b” onto the valve face.

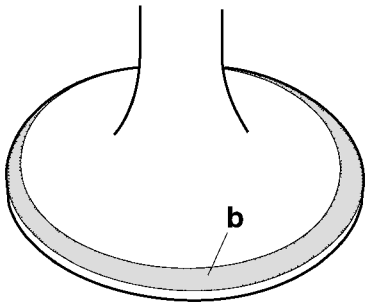


h. Install the valve into the cylinder head.
i. Press the valve through the valve guide and onto the valve seat to make a clear impression.

j. Measure the valve seat width “c” again. If the valve seat width is out of specification, reface and lap the valve seat.

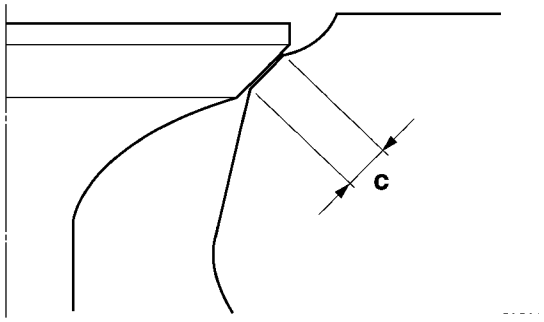


EAS24310

## CHECKING THE VALVE SPRINGS

The following procedure applies to all of the valve springs.

1. Measure:
   - Valve spring free length “a”
     Out of specification → Replace the valve spring.

**Free length (intake)**
**37.47 mm (1.48 in)**
**Limit**
**35.60 mm (1.40 in)**
**Free length (exhaust)**
**37.67 mm (1.48 in)**
**Limit**
**35.79 mm (1.42 in)**

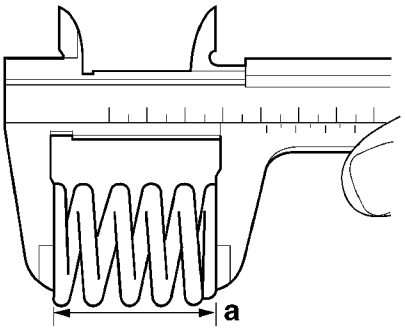


2. Measure:
   - Compressed valve spring force “a”
     Out of specification → Replace the valve spring.

**Installed compression spring force (intake)**
**166.00–190.00 N (37.32–42.71 lb) (16.93–19.37 kgf)**
**Installed compression spring force (exhaust)**
**165.00–189.00 N (37.09–42.49 lb) (16.83–19.27 kgf)**
**Installed length (intake)**
**32.80 mm (1.29 in)**
**Installed length (exhaust)**
**32.80 mm (1.29 in)**

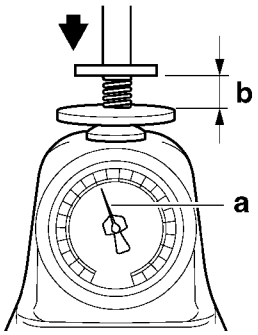


b. Installed length

3. Measure:
   - Valve spring tilt “a”
     Out of specification → Replace the valve spring.

**Spring tilt (intake)**
**2.5°/1.6 mm**
**Spring tilt (exhaust)**
**2.5°/1.6 mm**

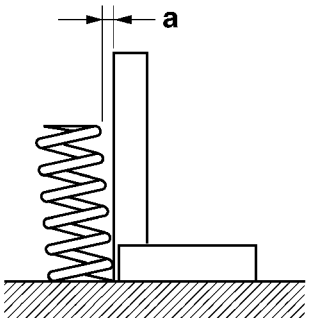


EAS24320

## CHECKING THE VALVE LIFTERS

The following procedure applies to all of the valve lifters.

1. Check:
   - Valve lifter
     Damage/scratches → Replace the valve lifters and cylinder head.

EAS24340

## INSTALLING THE VALVES

The following procedure applies to all of the valves and related components.

1. Deburr:
   - Valve stem end
     (with an oil stone)

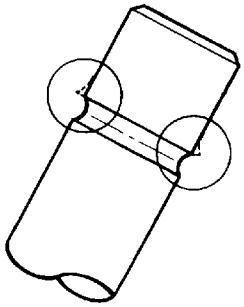

2. Lubricate:
   - Valve stem “1”
   - Valve stem seal “2”
     (with the recommended lubricant)

| | |
|---|---|
| | **Recommended lubricant**<br>**Molybdenum disulfide oil** |

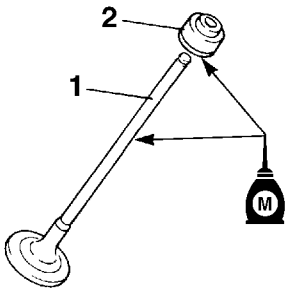


3. Install:
   - Lower spring seat “1”
   - Valve stem seal “2”
   - Valve “3”
   - Valve spring “4”
   - Upper spring seat “5”
     (into the cylinder head)

**NOTE:**

- Make sure each valve is installed in its original place.
- Install the valve springs with the larger pitch “a” facing up.

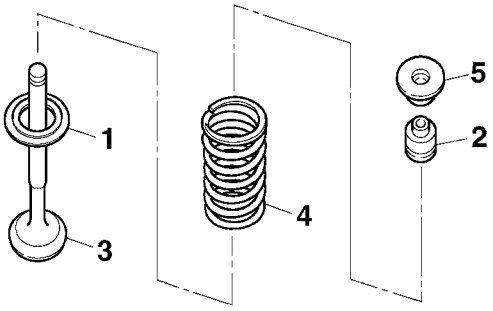


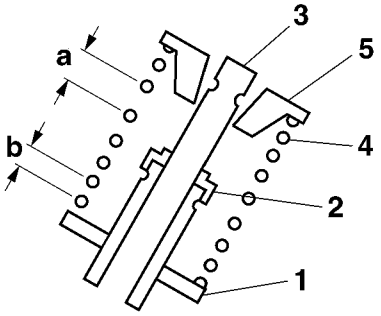


b. Smaller pitch

4. Install:
   - Valve cotters “1”

**NOTE:**

Install the valve cotters by compressing the valve spring with the valve spring compressor “1” and the valve spring compressor attachment “2”.

| | |
|---|---|
| | **Valve spring compressor**<br>**90890-04019**<br>**YM-04019**<br>**Valve spring compressor**<br>**90890-04109**<br>**Valve spring compressor attachment**<br>**90890-04108**<br>**Valve spring compressor adapter 22 mm**<br>**YM-04108** |

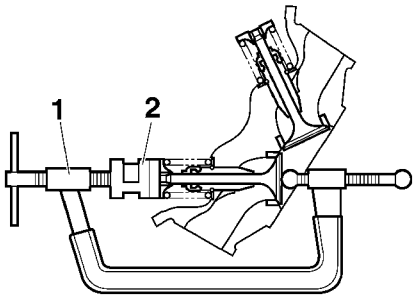

5. To secure the valve cotters onto the valve stem, lightly tap the valve tip with a soft-face hammer.

ECA13800

**CAUTION:**

**Hitting the valve tip with excessive force could damage the valve.**

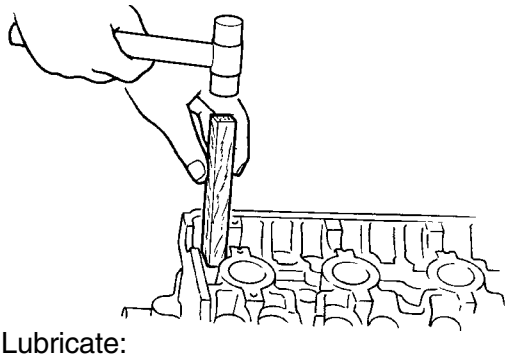

6. Lubricate:
   - Valve lifter
     (with the recommended lubricant)

| | |
|---|---|
| | **Recommended lubricant**<br>**Engine oil** |

7. Install:
   - Valve pad
   - Valve lifter

**NOTE:**

- The valve lifter must move smoothly when rotated with a finger.
- Each valve lifter and valve pad must be reinstalled in its original position.

EAS24480

# GENERATOR AND STARTER CLUTCH

**Removing the generator and starter clutch**

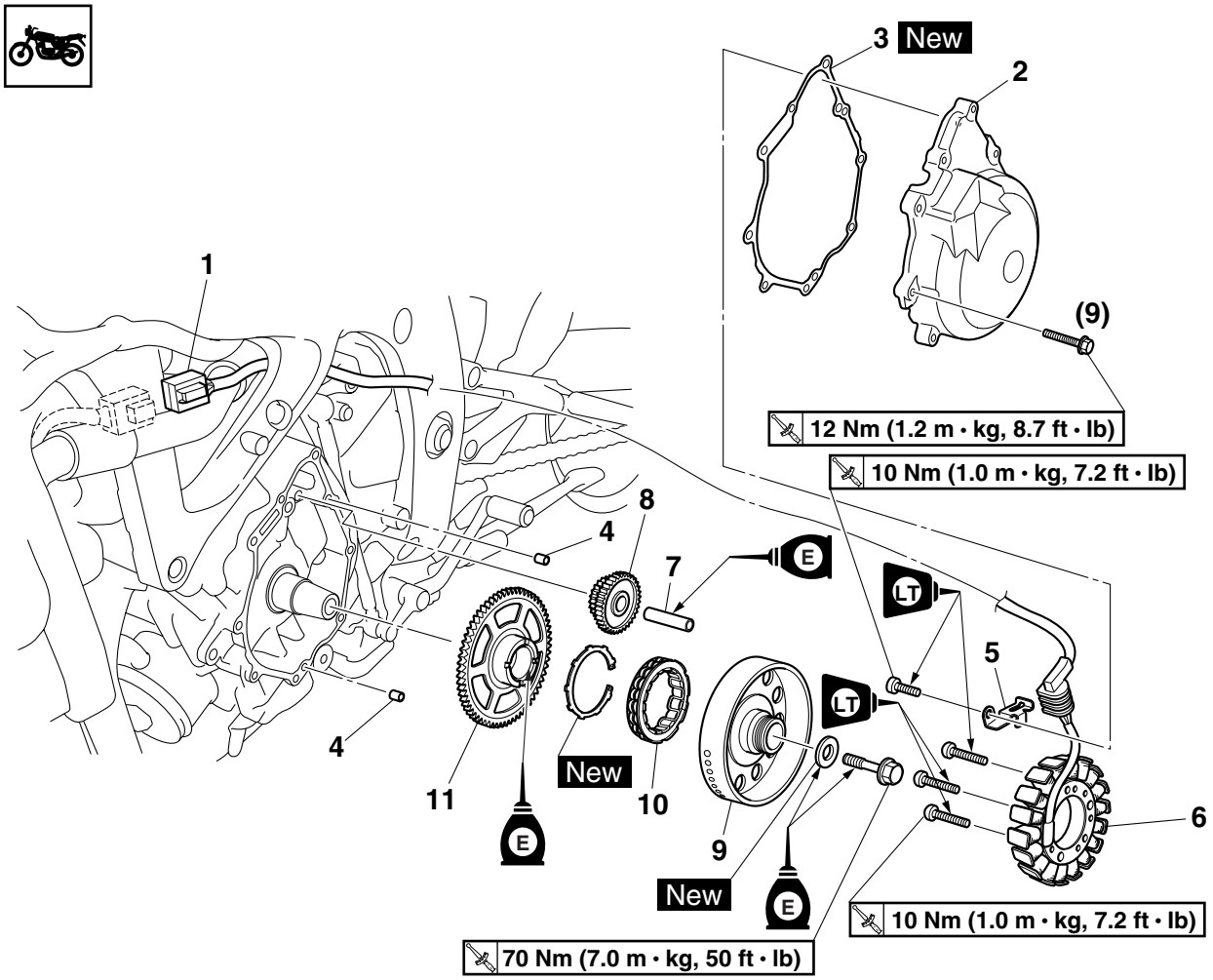


| Order | Job/Parts to remove | Q'ty | Remarks |
|---|---|---|---|
| | Left bottom cowling | | Refer to "GENERAL CHASSIS" on page 4-1. |
| | Engine oil | | Drain.<br>Refer to "CHANGING THE ENGINE OIL" on page 3-11. |
| 1 | Stator coil assembly coupler | 1 | Disconnect. |
| 2 | Generator cover | 1 | |
| 3 | Generator cover gasket | 1 | |
| 4 | Dowel pin | 2 | |
| 5 | Stator coil assembly lead holder | 1 | |
| 6 | Stator coil assembly | 1 | |
| 7 | Starter clutch idle gear shaft | 1 | |
| 8 | Starter clutch idle gear | 1 | |
| 9 | Generator rotor | 1 | |
| 10 | Starter clutch | 1 | |

**Removing the generator and starter clutch**

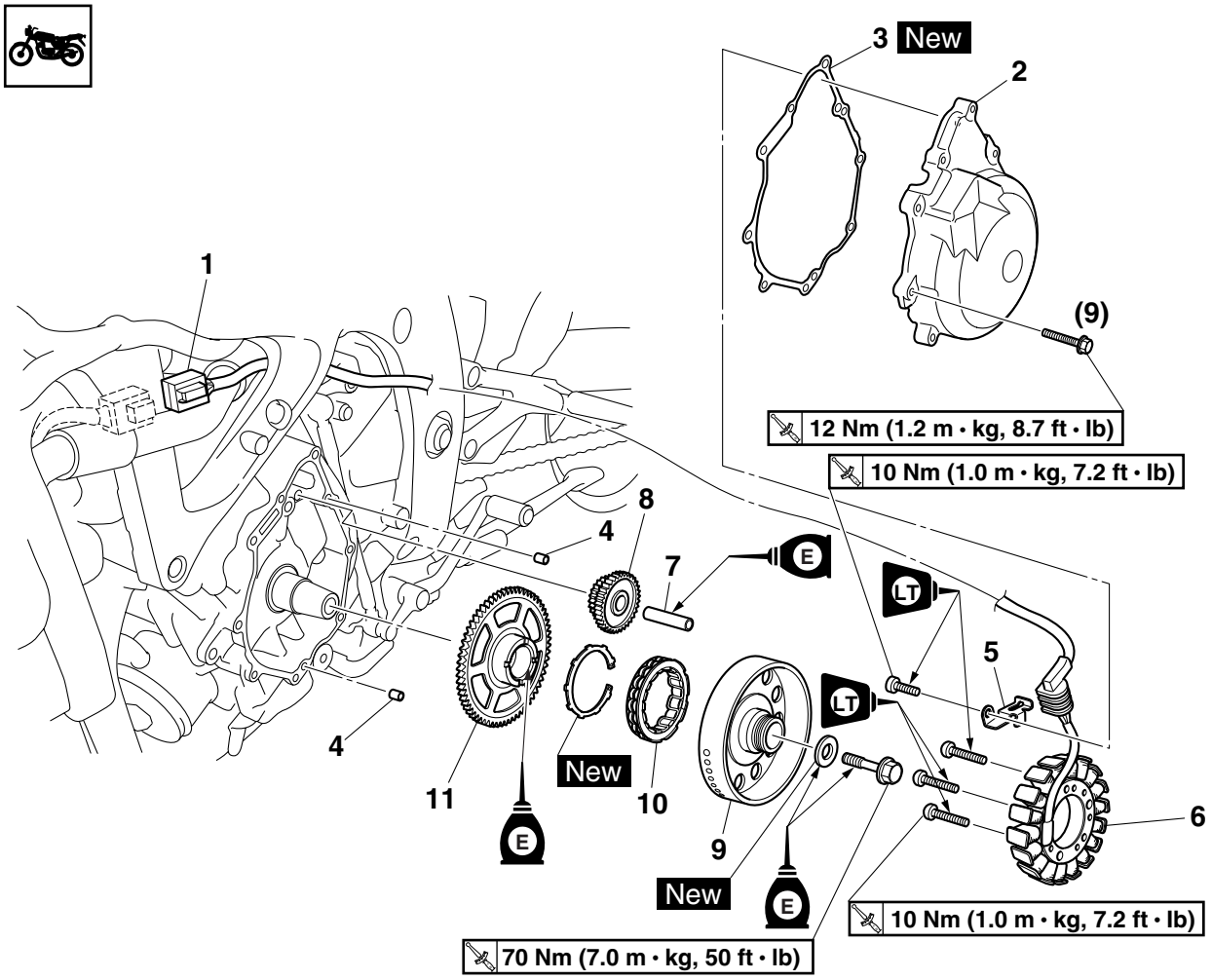


| Order | Job/Parts to remove | Q'ty | Remarks |
|---|---|---|---|
| 11 | Starter clutch gear | 1 | |
| | | | For installation, reverse the removal procedure. |

EAS24490

## REMOVING THE GENERATOR

1. Remove:
   - Generator rotor bolt "1"
   - Washer

**NOTE:**

While holding the generator rotor "2" with the sheave holder "3", loosen the generator rotor bolt.

| | |
|---|---|
| | **Sheave holder**<br>**90890-01701**<br>**Primary clutch holder**<br>**YS-01880-A** |

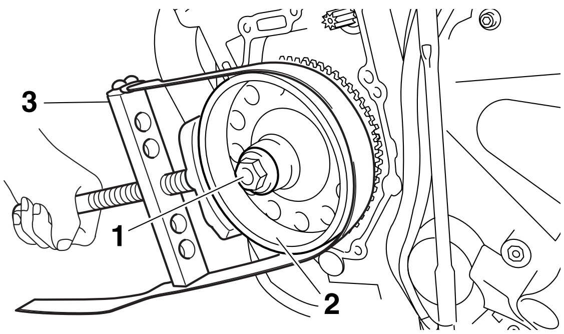


2. Remove:
   - Generator rotor "1"
     (with the flywheel puller "2")

ECA13880

**CAUTION:**

**To protect the end of the crankshaft, place an appropriate sized socket between the flywheel puller set's center bolt and the crankshaft.**

| | |
|---|---|
| | **Flywheel puller**<br>**90890-01404**<br>**Flywheel puller**<br>**YM-01404** |

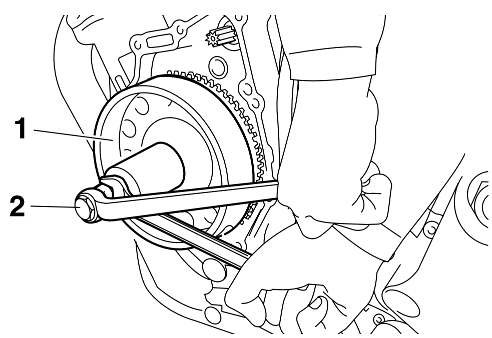


EAS24570

## CHECKING THE STARTER CLUTCH

1. Check:
   - Starter clutch rollers
     Damage/wear → Replace.
2. Check:
   - Starter clutch idle gear
   - Starter clutch gear
     Burrs/chips/roughness/wear → Replace the defective part(s).
3. Check:
   - Starter clutch gear's contacting surfaces
     Damage/pitting/wear → Replace the starter clutch gear.
4. Check:
   - Starter clutch operation

▼▼▼▼▼▼▼▼▼▼▼▼▼▼▼▼▼▼▼▼▼▼▼▼▼▼▼▼▼▼▼▼▼▼

a. Install the starter clutch gear "1" onto the generator rotor "2" and hold the generator rotor.
b. When turning the starter clutch gear clockwise "A", the starter clutch and the starter clutch gear should engage, otherwise the starter clutch is faulty and must be replaced.
c. When turning the starter clutch gear counterclockwise "B", it should turn freely, otherwise the starter clutch is faulty and must be replaced.

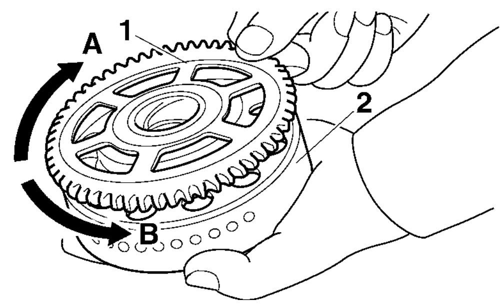


▲▲▲▲▲▲▲▲▲▲▲▲▲▲▲▲▲▲▲▲▲▲▲▲▲▲▲▲▲▲▲▲▲▲

EAS24600

## INSTALLING THE STARTER CLUTCH

1. Install:
   - Starter clutch "1"

**NOTE:**

Be sure to install the starter clutch so that its side with the arrow mark "a" is facing inward, away from the rotor.

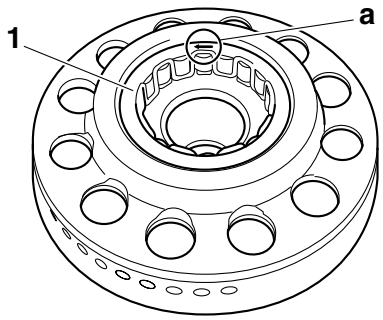


EAS24500

## INSTALLING THE GENERATOR

1. Install:
   - Generator rotor
   - Washer New
   - Generator rotor bolt

**NOTE:**

- Clean the tapered portion of the crankshaft and the generator rotor hub.
- Lubricate the generator rotor bolt threads and washer mating surfaces with engine oil.

2. Tighten:
   - Generator rotor bolt “1”

| | |
|---|---|
| | **Generator rotor bolt**<br>**70 Nm (7.0 m·kg, 50 ft·lb)** |

**NOTE:**

While holding the generator rotor “2” with the sheave holder “3”, tighten the generator rotor bolt.

| | |
|---|---|
| | **Sheave holder**<br>**90890-01701**<br>**Primary clutch holder**<br>**YS-01880-A** |

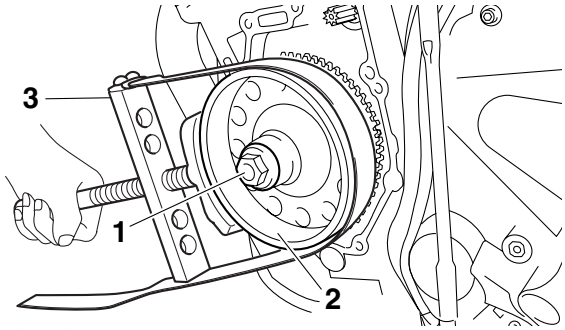


3. Apply:
   - Sealant
     (onto the stator coil assembly lead grommet)

| | |
|---|---|
| | **Yamaha bond No. 1215**<br>**90890-85505**<br>**(Three Bond No.1215®)** |

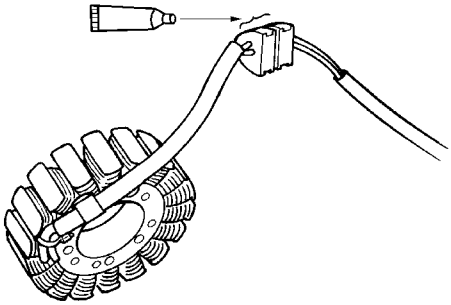

EAS24520

# PICKUP ROTOR

**Removing the pickup rotor**

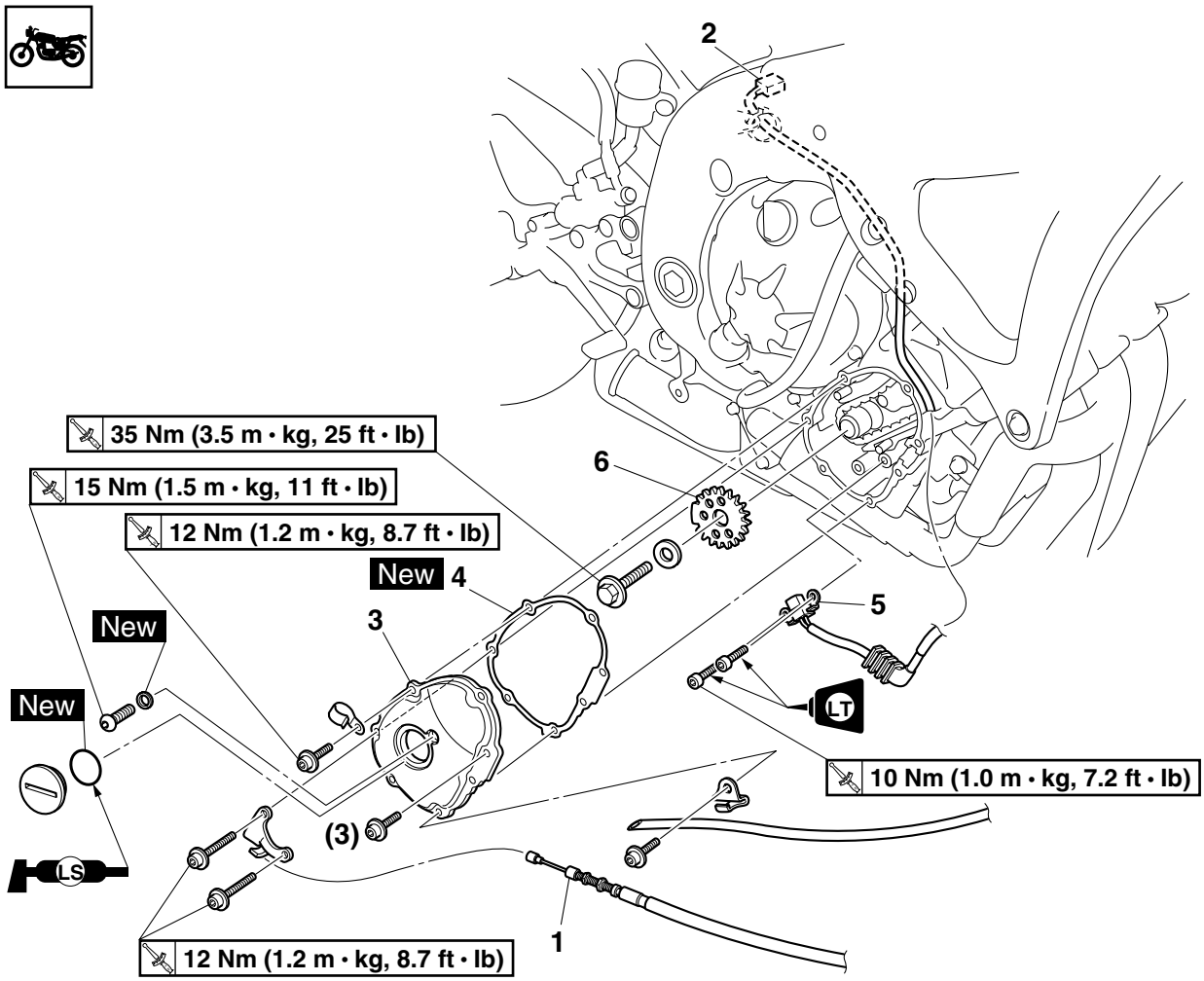


| Order | Job/Parts to remove | Q'ty | Remarks |
|---|---|---|---|
| | Right bottom cowling | | Refer to "GENERAL CHASSIS" on page 4-1. |
| | Fuel tank | | Refer to "FUEL TANK" on page 7-1. |
| | Generator cover | | Refer to "GENERATOR AND STARTER CLUTCH" on page 5-26. |
| 1 | Clutch cable | 1 | Disconnect. |
| 2 | Crankshaft position sensor coupler | 1 | Disconnect. |
| 3 | Pickup rotor cover | 1 | |
| 4 | Pickup rotor cover gasket | 1 | |
| 5 | Crankshaft position sensor | 1 | |
| 6 | Pickup rotor | 1 | |
| | | | For installation, reverse the removal procedure. |

EAS24530
## REMOVING THE PICKUP ROTOR

1. Remove:
   - Pickup rotor bolt “1”
   - Washer
   - Pickup rotor

**NOTE:**

While holding the generator rotor “2” with the rotor sheave holder “3”, loosen the pickup rotor bolt.

**Sheave holder**
**90890-01701**
**Primary clutch holder**
**YS-01880-A**

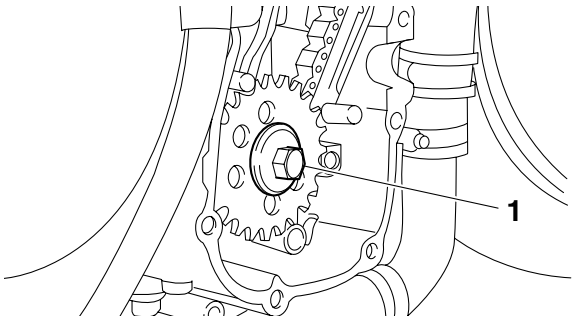


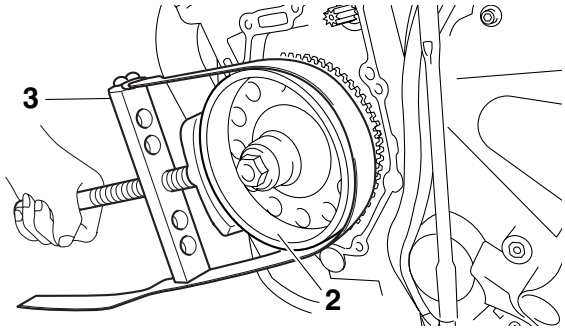


EAS24540
## INSTALLING THE PICKUP ROTOR

1. Install:
   - Pickup rotor “1”
   - Washer
   - Pickup rotor bolt

**NOTE:**

When installing the pickup rotor, align the groove “a” in the crankshaft with the projection “b” on the pickup rotor.

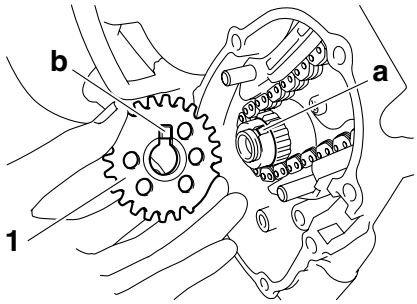


2. Tighten:
   - Pickup rotor bolt “1”

**Pickup coil rotor bolt**
**35 Nm (3.5 m·kg, 25 ft·lb)**

**NOTE:**

While holding the generator rotor “2” with the sheave holder “3”, tighten the pickup rotor bolt.

**Sheave holder**
**90890-01701**
**Primary clutch holder**
**YS-01880-A**

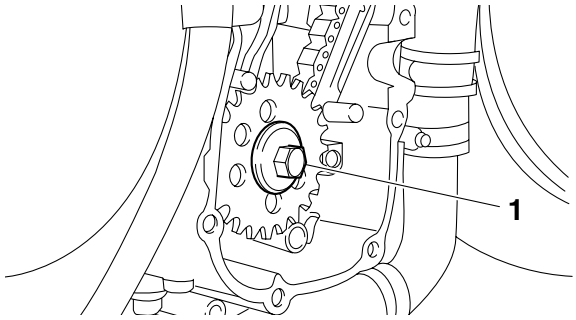


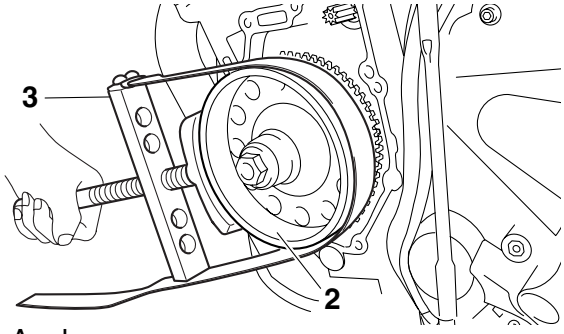


3. Apply:
   - Sealant
     (onto the crankshaft position sensor lead grommet)

**Yamaha bond No. 1215**
**90890-85505**
**(Three Bond No.1215®)**

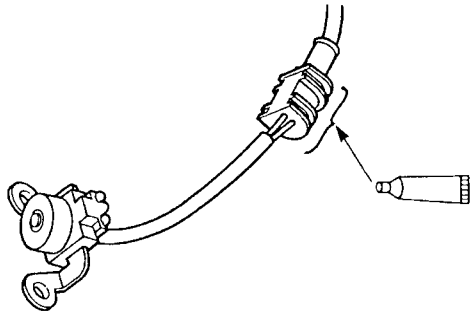

EAS24780

# ELECTRIC STARTER

**Removing the starter motor**

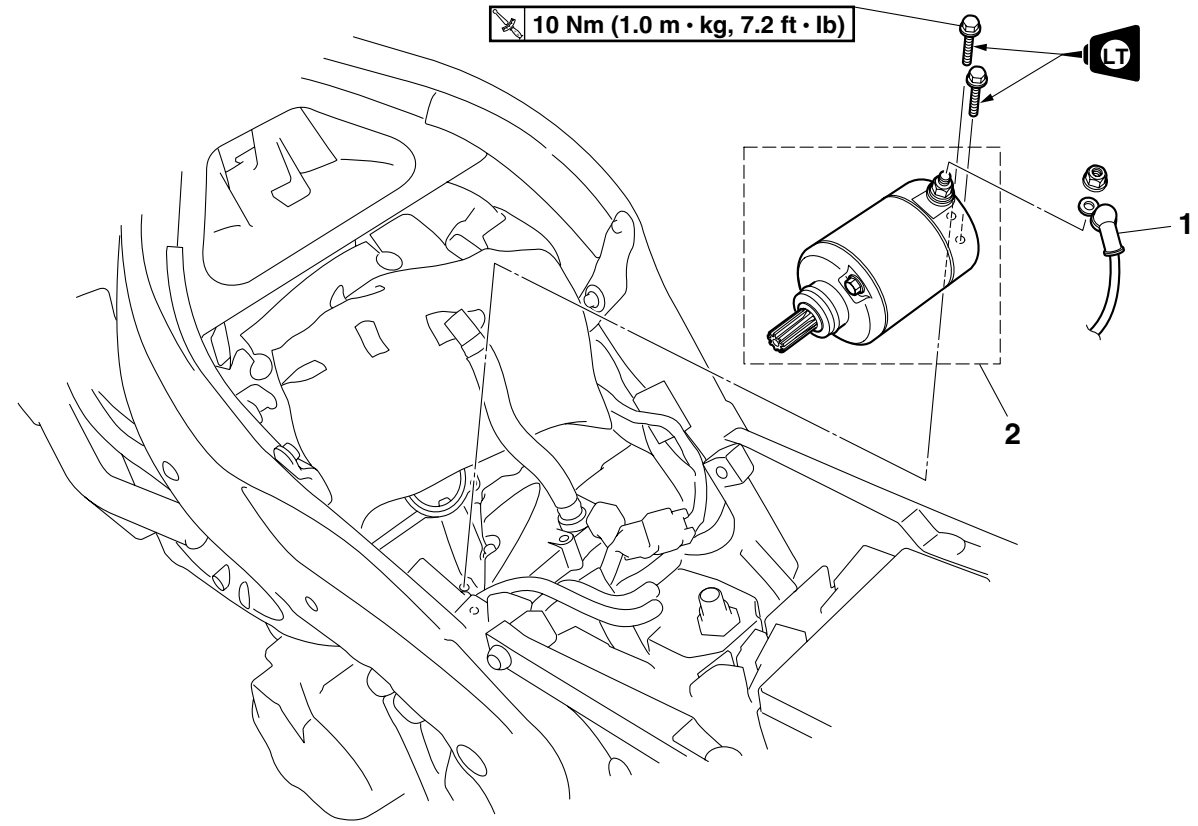


| Order | Job/Parts to remove | Q'ty | Remarks |
|---|---|---|---|
| | Rider seat | | Refer to "GENERAL CHASSIS" on page 4-1. |
| | Air filter case | | Refer to "AIR FILTER CASE" on page 7-4. |
| | Fuel tank | | Refer to "FUEL TANK" on page 7-1. |
| | Thermostat | | Refer to "THERMOSTAT" on page 6-7. |
| 1 | Starter motor lead | 1 | |
| 2 | Starter motor assembly | 1 | |
| | | | For installation, reverse the removal procedure. |

**Disassembling the starter motor**

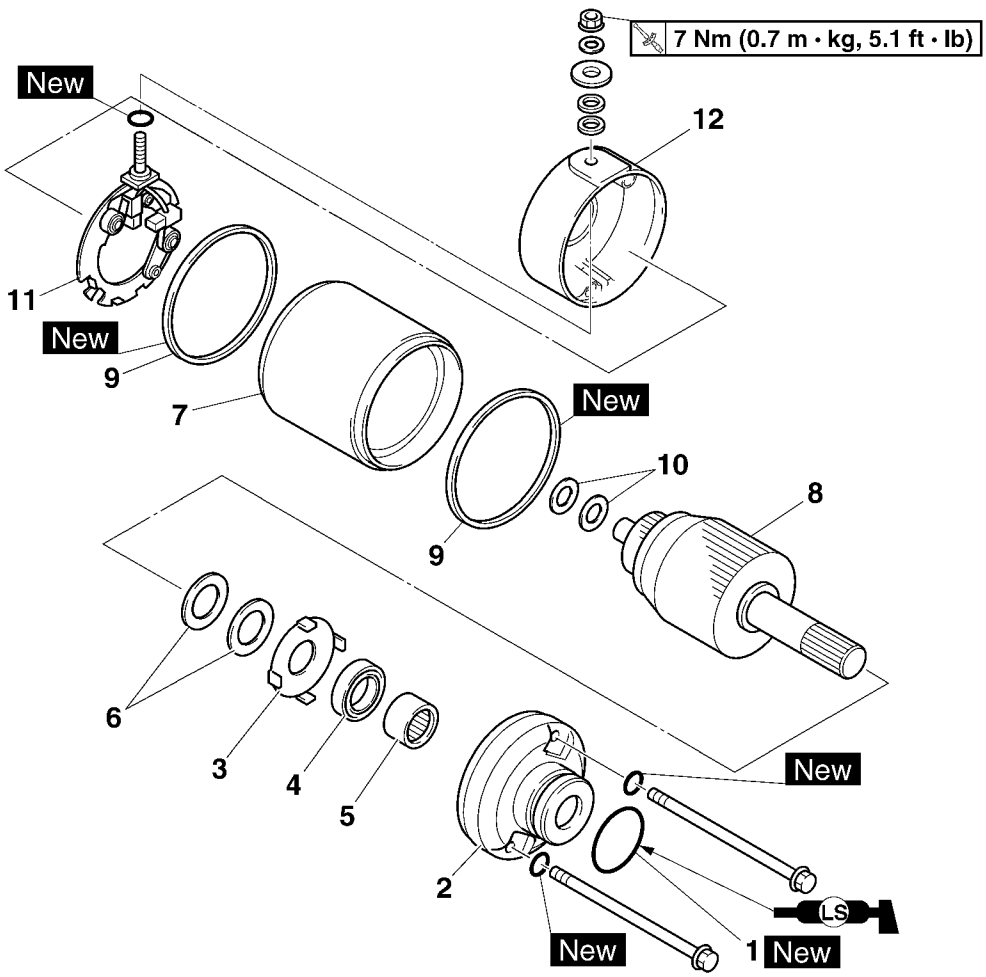


| Order | Job/Parts to remove | Q'ty | Remarks |
|---|---|---|---|
| 1 | O-ring | 1 | |
| 2 | Starter motor front cover | 1 | |
| 3 | Lock washer | 1 | |
| 4 | Oil seal | 1 | |
| 5 | Bearing | 1 | |
| 6 | Washer set | 1 | |
| 7 | Starter motor yoke | 1 | |
| 8 | Armature assembly | 1 | |
| 9 | Gasket | 2 | |
| 10 | Washer set | 2 | |
| 11 | Brush holder (along with the brushes) | 1 | |
| 12 | Starter motor rear cover | 1 | |
| | | | For assembly, reverse the disassembly procedure. |

EAS24790

## CHECKING THE STARTER MOTOR

1. Check:
   - Commutator
     Dirt → Clean with 600 grit sandpaper.
2. Measure:
   - Commutator diameter “1”
     Out of specification → Replace the starter motor.

**Limit**
**27.0 mm (1.06 in)**

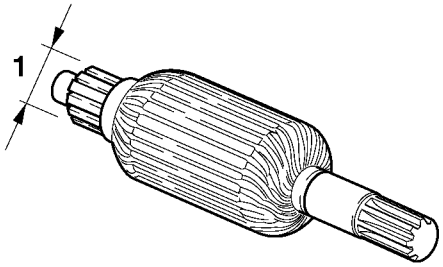


3. Measure:
   - Mica undercut “a”
     Out of specification → Scrape the mica to the proper measurement with a hacksaw blade that has been grounded to fit the commutator.

**Mica undercut (depth)**
**0.70 mm (0.03 in)**

**NOTE:**
The mica of the commutator must be undercut to ensure proper operation of the commutator.

4. Measure:
   - Armature assembly resistances (commutator and insulation)
     Out of specification → Replace the starter motor.

▼▼▼▼▼▼▼▼▼▼▼▼▼▼▼▼▼▼▼▼▼▼▼▼▼▼▼▼▼▼▼▼▼▼

a. Measure the armature assembly resistances with the pocket tester.

**Pocket tester**
**90890-03112**
**Analog pocket tester**
**YU-03112-C**

**Armature coil**
**Commutator resistance “1”**
**0.0012–0.0022 Ω at 20 °C (68 °F)**
**Insulation resistance “2”**
**Above 1 MΩ at 20 °C (68 °F)**

b. If any resistance is out of specification, replace the starter motor.

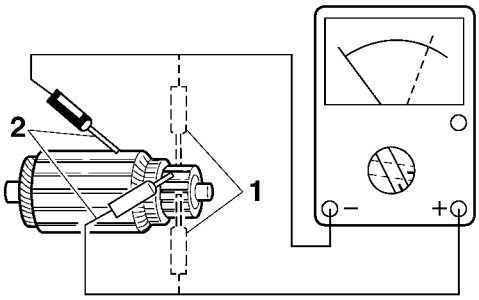


▲▲▲▲▲▲▲▲▲▲▲▲▲▲▲▲▲▲▲▲▲▲▲▲▲▲▲▲▲▲▲▲▲▲

5. Measure:
   - Brush length “a”
     Out of specification → Replace the brushes as a set.

**Limit**
**3.50 mm (0.14 in)**

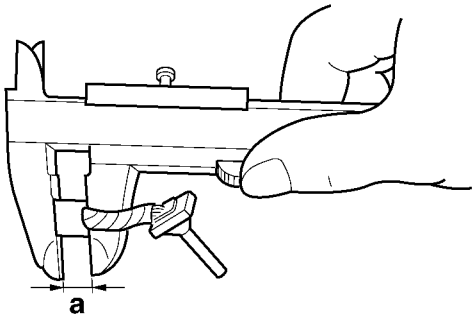


6. Measure:
   - Brush spring force
     Out of specification → Replace the brush springs as a set.

**Brush spring force**
**7.16–9.52 N (25.77–34.27 oz)**
**(730–971 gf)**

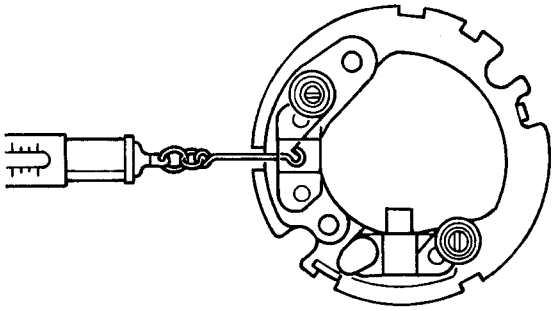

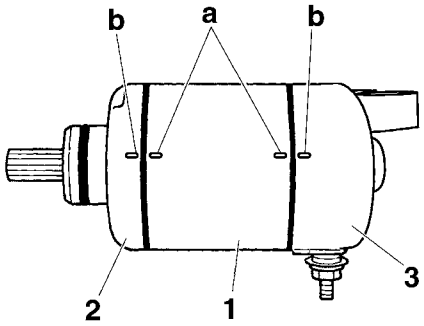


7. Check:
   - Gear teeth
     Damage/wear → Replace the gear.
8. Check:
   - Bearing
   - Oil seal
     Damage/wear → Replace the defective part(s).

EAS24800

## ASSEMBLING THE STARTER MOTOR

1. Install:
   - Starter motor yoke “1”

**NOTE:**

Align the tab “a” on the brush holder with the slot “b” in the starter motor yoke.

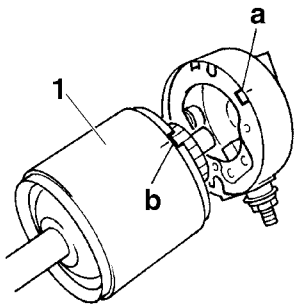


2. Install:
   - Starter motor yoke “1”
   - Starter motor front cover “2”
   - Starter motor rear cover “3”

**NOTE:**

Align the match marks “a” on the starter motor yoke with the match marks “b” on the front and starter motor rear covers.

EAS25060

# CLUTCH

**Removing the clutch cover**

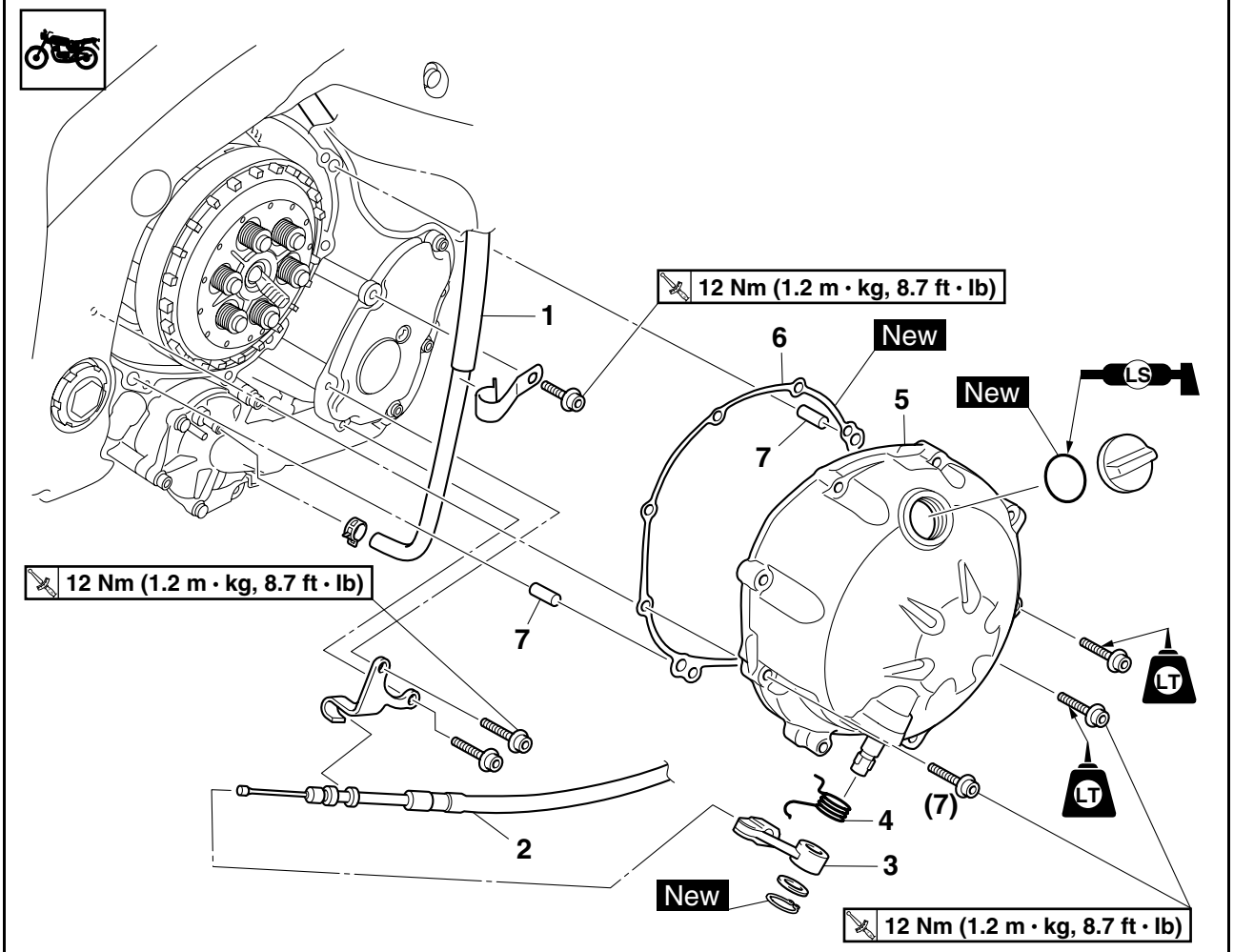


| Order | Job/Parts to remove | Q'ty | Remarks |
|---|---|---|---|
| | Right bottom cowling | | Refer to "GENERAL CHASSIS" on page 4-1. |
| | Engine oil | | Drain.<br>Refer to "CHANGING THE ENGINE OIL" on page 3-11. |
| | Coolant | | Drain.<br>Refer to "CHANGING THE COOLANT" on page 3-18. |
| 1 | Water pump breather hose | 1 | Disconnect. |
| 2 | Clutch cable | 1 | Disconnect. |
| 3 | Pull lever | 1 | |
| 4 | Pull lever spring | 1 | |
| 5 | Clutch cover | 1 | |
| 6 | Clutch cover gasket | 1 | |
| 7 | Dowel pin | 2 | |
| | | | For installation, reverse the removal procedure. |

**Removing the pull lever shaft**

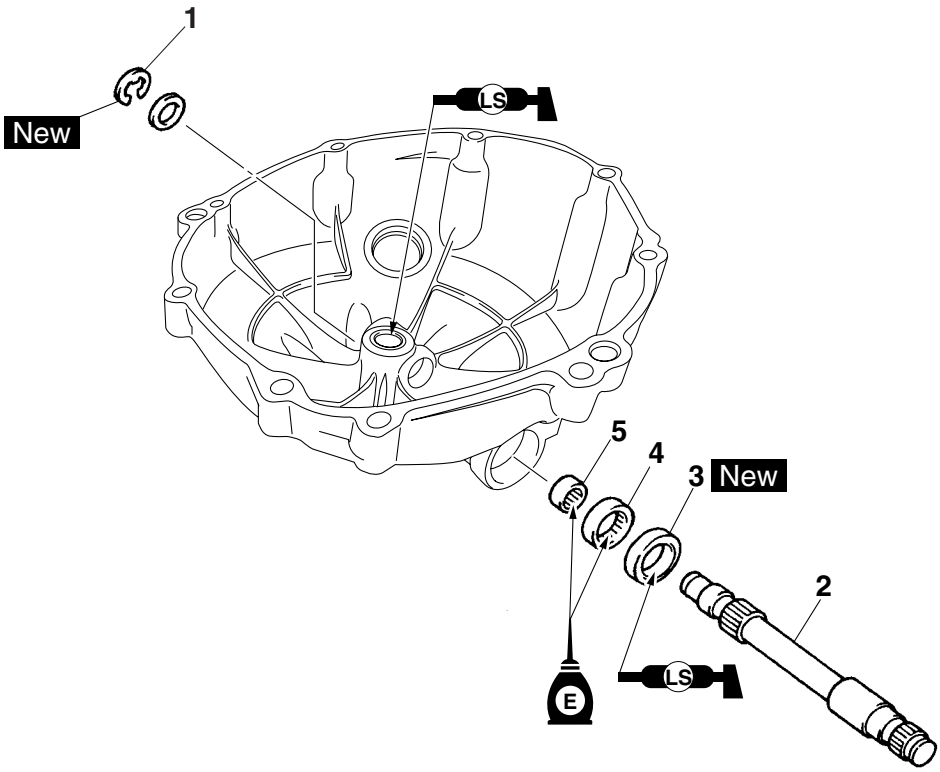


| Order | Job/Parts to remove | Q'ty | Remarks |
|---|---|---|---|
| 1 | Circlip | 1 | |
| 2 | Pull lever shaft | 1 | |
| 3 | Oil seal | 1 | |
| 4 | Bearing | 1 | |
| 5 | Bearing | 1 | |
| | | | For installation, reverse the removal procedure. |

**Removing the clutch**

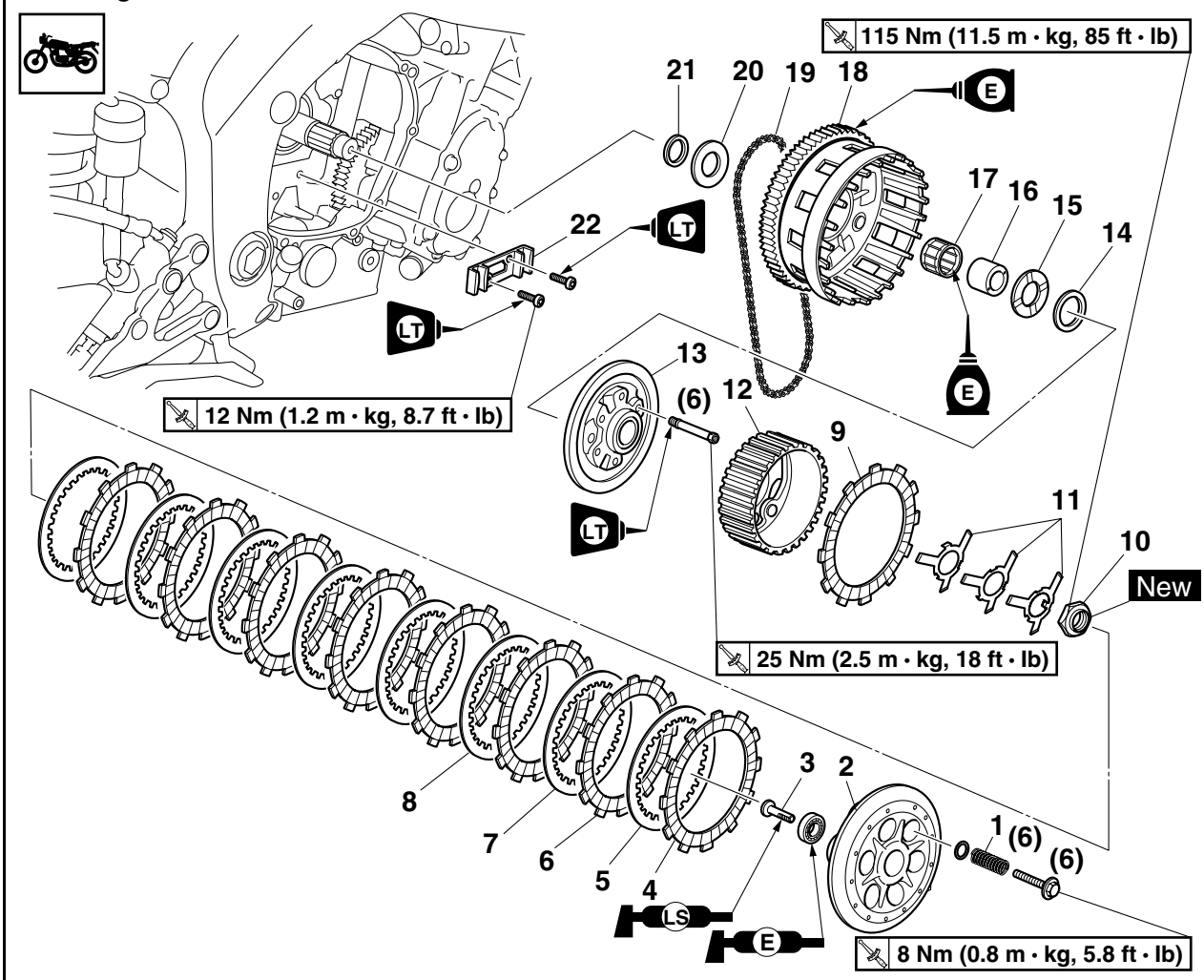


| Order | Job/Parts to remove | Q'ty | Remarks |
|---|---|---|---|
| | Ventilation chamber oil drain pipe | | Refer to "OIL PUMP" on page 5-50. |
| 1 | Clutch spring | 6 | |
| 2 | Pressure plate | 1 | |
| 3 | Pull rod | 1 | |
| 4 | Friction plate 1 | 1 | brown painting |
| 5 | Clutch plate 1 | 1 | |
| 6 | Friction plate 2 | 7 | black painting |
| 7 | Clutch plate 2 | 1 | |
| 8 | Clutch plate 3 | 6 | |
| 9 | Friction plate 3 | 1 | purple painting |
| 10 | Clutch boss nut | 1 | |
| 11 | Spring | 3 | |
| 12 | Clutch boss | 1 | |
| 13 | Clutch boss plate | 1 | |
| 14 | Washer | 1 | |
| 15 | Thrust washer 1 | 1 | |
| 16 | Spacer | 1 | |

**Removing the clutch**

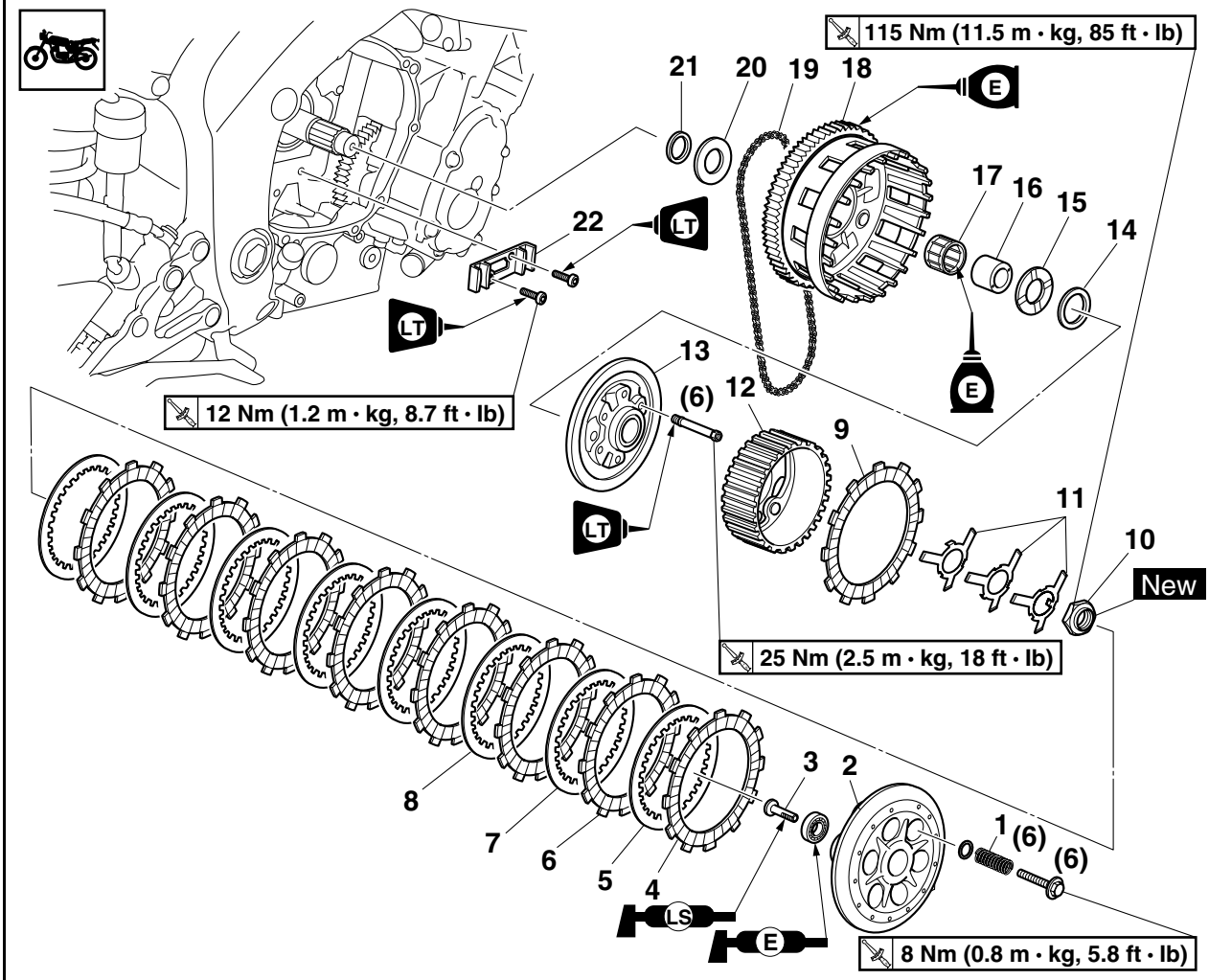


| Order | Job/Parts to remove | Q'ty | Remarks |
|---|---|---|---|
| 17 | Bearing | 1 | |
| 18 | Clutch housing | 1 | |
| 19 | Oil pump drive chain | 1 | |
| 20 | Thrust washer 2 | 1 | |
| 21 | Thrust washer 3 | 1 | |
| 22 | Oil pump drive chain guide | 1 | |
| | | | For installation, reverse the removal procedure. |

EAS25070
## REMOVING THE CLUTCH

1. Remove:
   - Friction plates
   - Clutch plates

**NOTE:**

Be sure to mark the friction plates and clutch plates or note the position of each part so that they are installed in their original positions.

2. Loosen:
   - Clutch boss nut “1”

**NOTE:**

While holding the clutch boss “2” with the universal clutch holder “3”, loosen the clutch boss nut.

**Universal clutch holder**
**90890-04086**
**YM-91042**

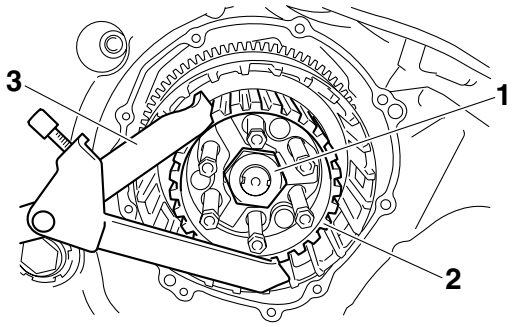


3. Remove:
   - Spacer “1”
   - Bearing
   - Clutch housing “2”
   - Oil pump drive chain

**NOTE:**

Remove the spacer and bearing from the main axle, then remove the oil pump drive chain from the oil pump driven sprocket, and then remove the clutch housing and oil pump drive chain from the main axle.

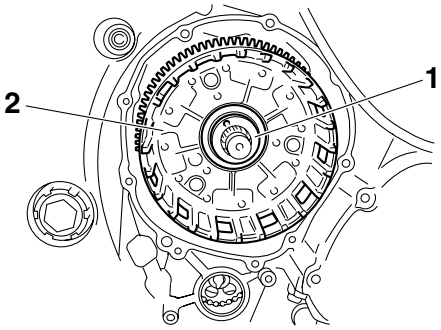


EAS25100
## CHECKING THE FRICTION PLATES

The following procedure applies to all of the friction plates.

1. Check:
   - Friction plate
     Damage/wear → Replace the friction plates as a set.
2. Measure:
   - Friction plate thickness
     Out of specification → Replace the friction plates as a set.

**NOTE:**

Measure the friction plate at four places.

**Friction plate thickness**
**2.92–3.08 mm (0.115–0.121 in)**
**Wear limit**
**2.80 mm (0.1102 in)**

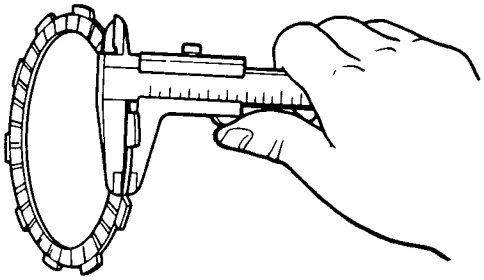

EAS25110
## CHECKING THE CLUTCH PLATES

The following procedure applies to all of the clutch plates.

1. Check:
   - Clutch plate
     Damage → Replace the clutch plates as a set.
2. Measure:
   - Clutch plate warpage
     (with a surface plate and thickness gauge “1”)
     Out of specification → Replace the clutch plates as a set.

**Thickness gauge**
**90890-03180**
**Feeler gauge set**
**YU-26900-9**

**Clutch plate thickness**
**1.90–2.10 mm (0.075–0.083 in)**
**Warpage limit**
**0.10 mm (0.0039 in)**

**NOTE:**

The clutch plate thickness specification listed above is for the plates with the standard thickness only. If a clutch plate with one of the other two plate thicknesses is installed, use 1.50–1.70 mm (0.059–0.067 in) or 2.20–2.40 mm (0.086–0.094 in) for the specification according to the plate.

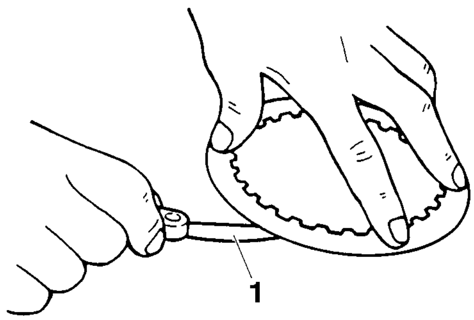


3. Measure:
   - Total width "a" of the friction plates and clutch plates
     Out of specification → Adjust.

**Total width of the friction plates and clutch plates**
**42.4–43.0 mm (1.67–1.69 in)**

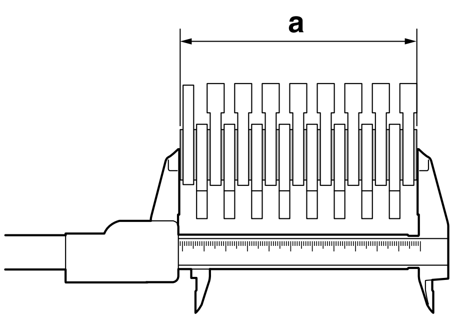


▼▼▼▼▼▼▼▼▼▼▼▼▼▼▼▼▼▼▼▼▼▼▼▼▼▼▼▼▼▼▼▼▼▼▼▼

a. Adjust the total width by replacing the clutch plate "1" and, if necessary, clutch plate "2".
b. Select the clutch plate from the following table.

| Clutch plate "1" | | |
|---|---|---|
| **Part No.** | **Thickness** | |
| 168-16325-00 | 1.6 mm (0.063 in) | |
| 3J2-16324-00 | 2.0 mm (0.079 in) | STD |
| 168-16324-00 | 2.3 mm (0.091 in) | |

| Clutch plate "2" | | |
|---|---|---|
| **Part No.** | **Thickness** | |
| 3J2-16324-00 | 2.0 mm (0.079 in) | STD |
| 168-16324-00 | 2.3 mm (0.091 in) | |

**NOTE:**

When adjusting the clutch assembly width (by replacing the clutch plate(s)), be sure to replace the clutch plate "1" first. After replacing the clutch plate "1", if specifications cannot be met, replace the clutch plate "2".

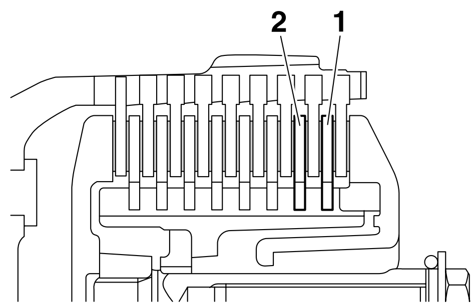


▲▲▲▲▲▲▲▲▲▲▲▲▲▲▲▲▲▲▲▲▲▲▲▲▲▲▲▲▲▲▲▲▲▲▲▲

EAS25140

## CHECKING THE CLUTCH SPRINGS

The following procedure applies to all of the clutch springs.

1. Check:
   - Clutch spring
     Damage → Replace the clutch springs as a set.
2. Measure:
   - Clutch spring free length "a"
     Out of specification → Replace the clutch springs as a set.

**Clutch spring free length**
**55.00 mm (2.17 in)**
**Minimum length**
**54.00 mm (2.13 in)**

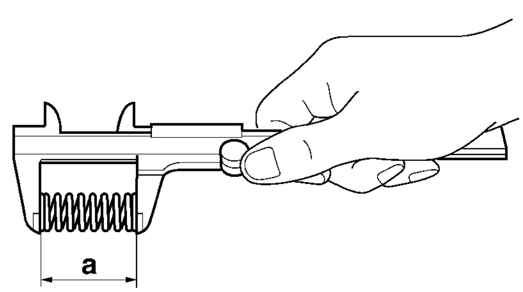

EAS25150
### CHECKING THE CLUTCH HOUSING
1. Check:
   - Clutch housing dogs
     Damage/pitting/wear → Deburr the clutch housing dogs or replace the clutch housing.

**NOTE:**

Pitting on the clutch housing dogs will cause erratic clutch operation.

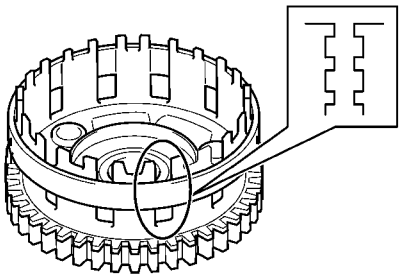

2. Check:
   - Bearing
     Damage/wear → Replace the bearing and clutch housing.

EAS25160
### CHECKING THE CLUTCH BOSS
1. Check:
   - Clutch boss splines
     Damage/pitting/wear → Replace the clutch boss.

**NOTE:**

Pitting on the clutch boss splines will cause erratic clutch operation.

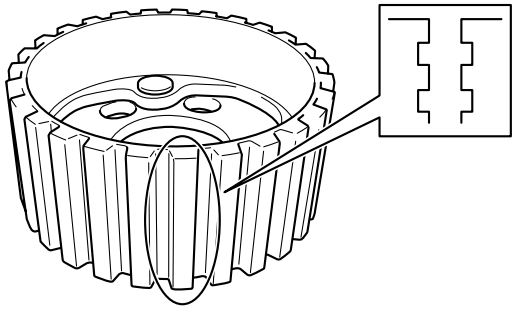

EAS25170
### CHECKING THE PRESSURE PLATE
1. Check:
   - Pressure plate “1”
     Cracks/damage → Replace.
   - Bearing “2”
     Damage/wear → Replace.

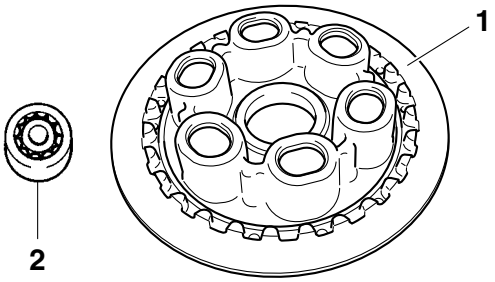


EAS25200
### CHECKING THE PRIMARY DRIVE GEAR
1. Check:
   - Primary drive gear
     Damage/wear → Replace the clutch housing and crankshaft as a set.
     Excessive noise during operation → Replace the clutch housing and crankshaft as a set.

EAS25210
### CHECKING THE PRIMARY DRIVEN GEAR
1. Check:
   - Primary driven gear “1”
     Damage/wear → Replace the clutch housing and crankshaft as a set.
     Excessive noise during operation → Replace the clutch housing and crankshaft as a set.

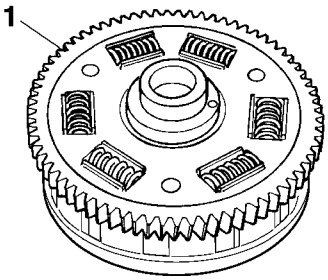


EAS25220
### CHECKING THE PULL LEVER SHAFT AND PULL ROD
1. Check:
   - Pull lever shaft pinion gear teeth “1”
   - Pull rod teeth “2”
     Damage/wear → Replace the pull rod and pull lever shaft pinion gear as a set.

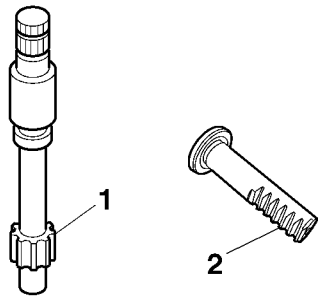


2. Check:
   - Bearing
     Damage/wear → Replace.

ET2C01011

### CHECKING THE OIL PUMP DRIVE SPROCKET AND OIL PUMP DRIVE CHAIN

1. Check:
   - Oil pump drive sprocket
     Cracks/damage/wear → Replace the clutch housing, oil pump drive chain, and oil pump driven sprocket as a set.
2. Check:
   - Oil pump drive chain
     Damage/stiffness → Replace the clutch housing, oil pump drive chain, and oil pump driven sprocket as a set.

EAS25270

### INSTALLING THE CLUTCH

1. Install:
   - Oil pump drive chain “1”
   - Clutch housing “2”

**NOTE:**

- Install the oil pump drive chain onto the clutch housing, and then install the chain onto the oil pump driven sprocket while installing the clutch housing onto the main axle.
- Make sure that the oil pump drive chain passes through the oil pump drive chain guide.

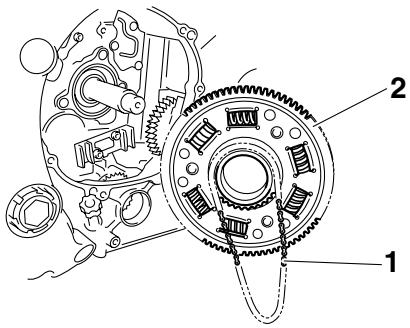


2. Install:
   - Clutch boss plate “1”
   - Clutch boss “2”

**NOTE:**

Fit the projections “a” on the clutch boss into the grooves “b” in the clutch boss plate.

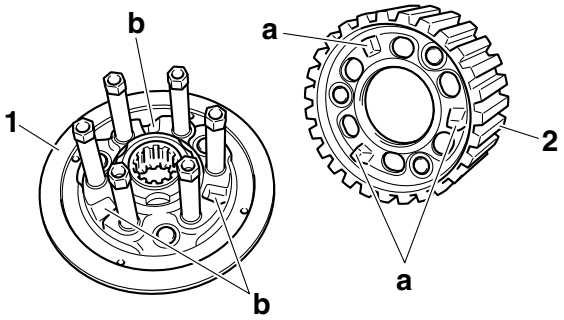


3. Install:
   - Springs “1”

**NOTE:**

- Stack the springs on top of each other, making sure that the tab “a” on each spring is in a different position.
- Fit the tabs “a” on the springs into the grooves “b” in the clutch boss plate.

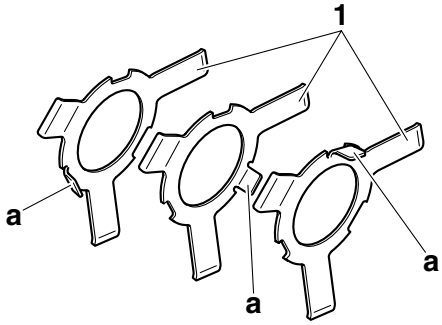


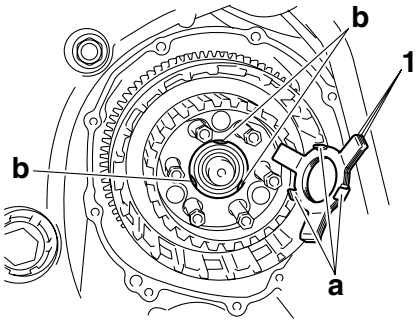


4. Tighten:
   - Clutch boss nut “1” New

| | |
|---|---|
| | **Clutch boss nut**<br>**115 Nm (11.5 m·kg, 85 ft·lb)** |

**NOTE:**

- While holding the clutch boss “2” with the universal clutch holder “3”, tighten the clutch boss nut.

- Stake the clutch boss nut at a cutout “a” in the main axle.

| | |
|---|---|
| | **Universal clutch holder**<br>**90890-04086**<br>**YM-91042** |

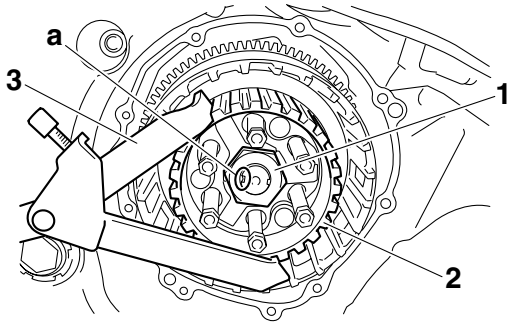


5. Lubricate:
   - Friction plates
   - Clutch plates
   (with the recommended lubricant)

| | |
|---|---|
| | **Recommended lubricant**<br>**Engine oil** |

6. Install:
   - Friction plates
   - Clutch plates

**NOTE:**

- First, install a friction plate and then alternate between a clutch plate and a friction plate.
- Install the last friction plate “1” offset from the other friction plates “2”, making sure to align a projection on the friction plate with the punch mark “a” on the clutch housing.

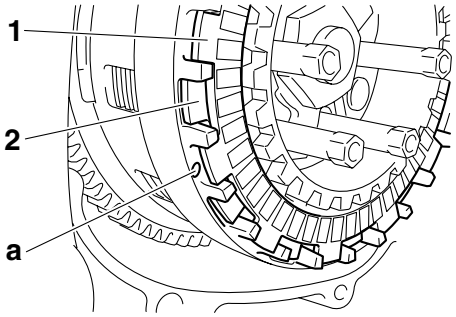


7. Install:
   - Pressure plate “1”

**NOTE:**

Align the punch marks “a” in the pressure plate with one of the three punch marks “b” in the clutch boss.

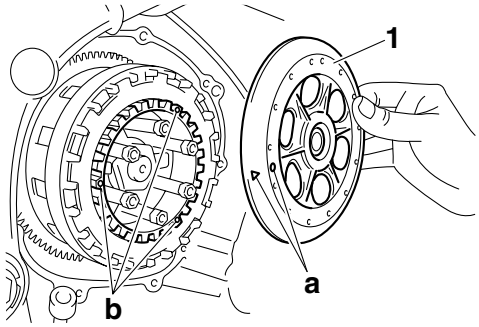


8. Install:
   - Seat plate
   - Clutch springs
   - Clutch spring bolts

| | |
|---|---|
| 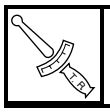 | **Clutch spring bolt**<br>**8 Nm (0.8 m·kg, 5.8 ft·lb)** |

**NOTE:**

Tighten the clutch spring bolts in stages and in a crisscross pattern.

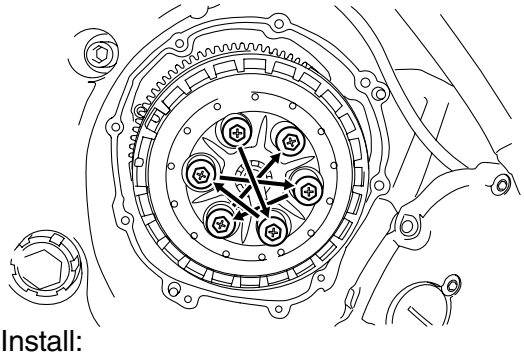

9. Install:
   - Dowel pins
   - Clutch cover gasket New
   - Clutch cover “1”

| | |
|---|---|
| 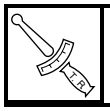 | **Clutch cover bolt**<br>**12 Nm (1.2 m·kg, 8.7 ft·lb)** |

**NOTE:**

- Position the pull rod so that the teeth “a” face towards the rear of the vehicle. Then, install the clutch cover.
- Apply locking agent (LOCTITE®) to the threads of only the clutch cover bolts “a” shown in the illustration.
- Tighten the clutch cover bolts in stages and in a crisscross pattern.

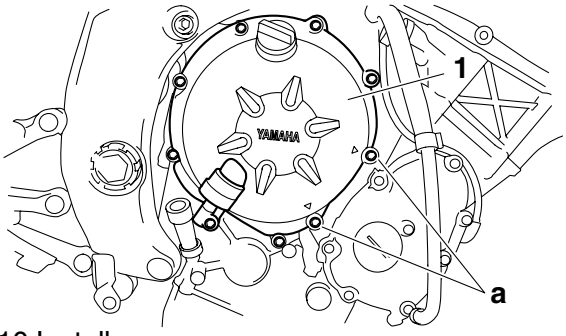


10.Install:
- Pull lever spring “1”
- Pull lever “2”
- Washer
- Circlip New

**NOTE:**
- Make sure that the mark “a” on the pull lever is facing up.
- When installing the pull lever, push it and check that its punch mark “b” aligns with the mark “c” on the clutch cover. Make sure that the pull rod teeth and pull lever shaft pinion gear are engaged.

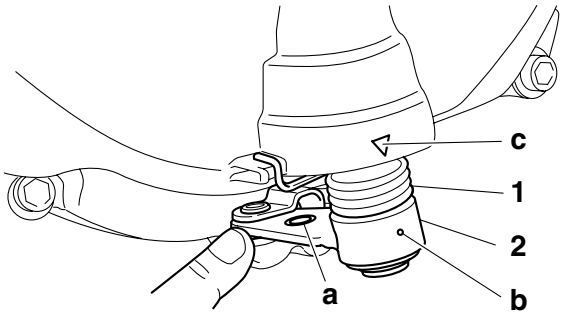


11.Adjust:
- Clutch cable free play
  Refer to “ADJUSTING THE CLUTCH LEVER FREE PLAY” on page 3-13.

EAS25410

# SHIFT SHAFT

**Removing the shift shaft and stopper lever**

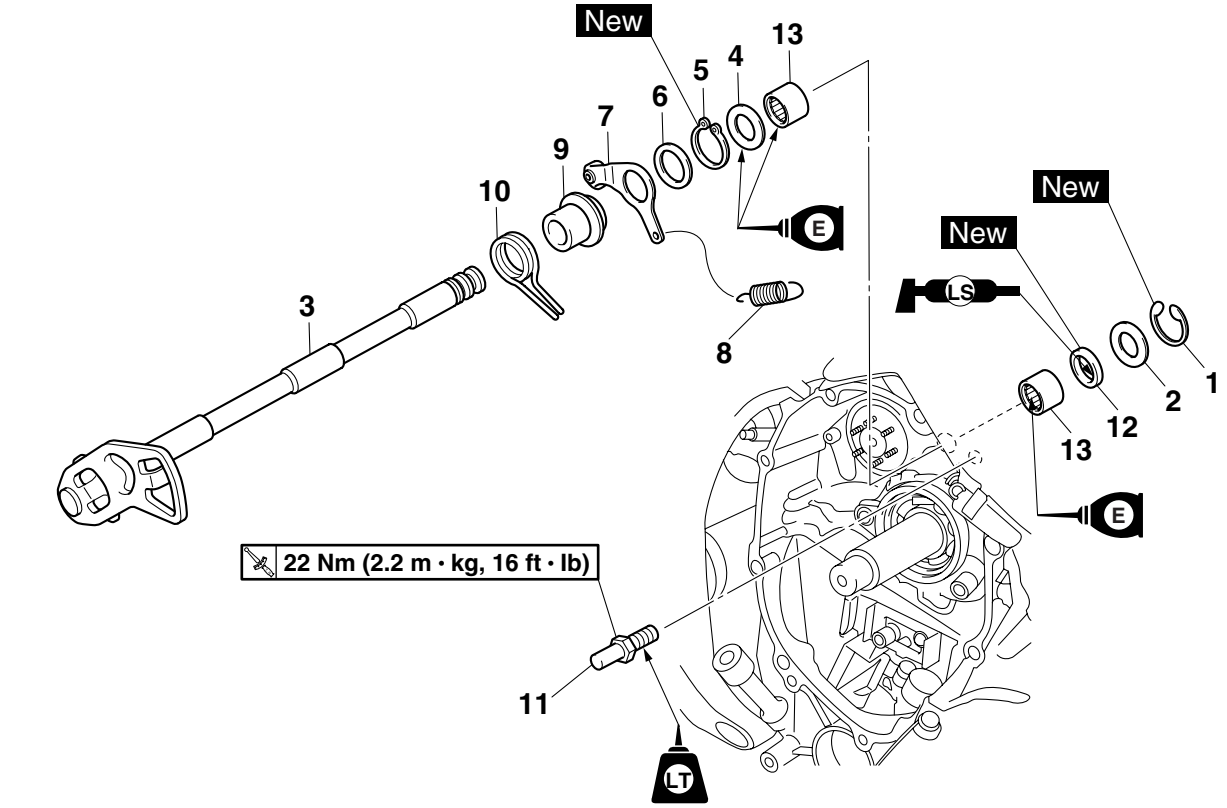


| Order | Job/Parts to remove | Q'ty | Remarks |
|---|---|---|---|
| | Shift arm | | Refer to "ENGINE REMOVAL" on page 5-1. |
| | Clutch housing | | Refer to "CLUTCH" on page 5-37. |
| 1 | Circlip | 1 | |
| 2 | Washer | 1 | |
| 3 | Shift shaft | 1 | |
| 4 | Washer | 1 | |
| 5 | Circlip | 1 | |
| 6 | Washer | 1 | |
| 7 | Stopper lever | 1 | |
| 8 | Stopper lever spring | 1 | |
| 9 | Spacer | 1 | |
| 10 | Shift shaft spring | 1 | |
| 11 | Shift shaft spring stopper | 1 | |
| 12 | Oil seal | 1 | |

**Removing the shift shaft and stopper lever**

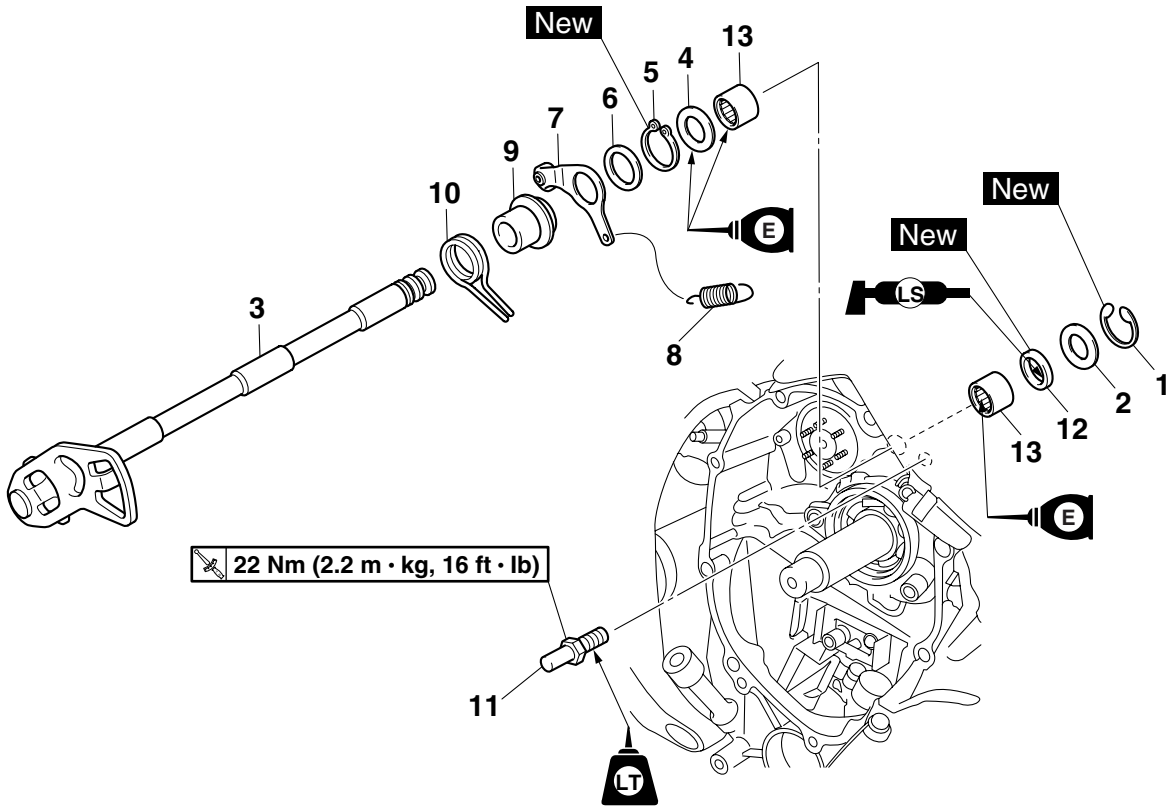


| Order | Job/Parts to remove | Q'ty | Remarks |
|---|---|---|---|
| 13 | Bearing | 2 | |
| | | | For installation, reverse the removal procedure. |

EAS25420
## CHECKING THE SHIFT SHAFT
1. Check:
   - Shift shaft
     Bends/damage/wear → Replace.
   - Shift shaft spring
     Damage/wear → Replace.

EAS25430
## CHECKING THE STOPPER LEVER
1. Check:
   - Stopper lever
     Bends/damage → Replace.
     Roller turns roughly → Replace the stopper lever.
   - Stopper lever spring
     Damage/wear → Replace.

EAS25450
## INSTALLING THE SHIFT SHAFT
1. Install:
   - Shift shaft spring stopper “1”
   - Shift shaft assembly
   - Shift shaft spring “2”

| | |
|---|---|
| | **Shift shaft spring stopper**<br>**22 Nm (2.2 m·kg, 16 ft·lb)**<br>**LOCTITE®** |

**NOTE:**
- Lubricate the oil seal lips with lithium-soap-based grease.
- Hook the end of the shift shaft spring onto the shift shaft spring stopper.
- Hook the ends of the stopper lever spring “3” onto the stopper lever “4” and the crankcase boss “5”.
- Mesh the stopper lever with the shift drum segment assembly.

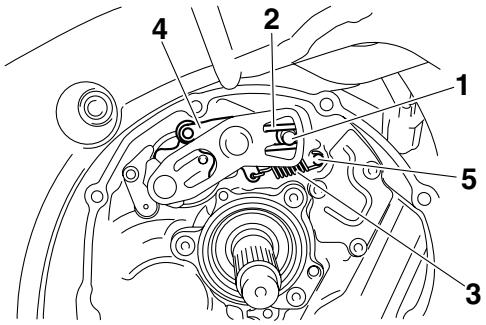

EAS24920

# OIL PUMP

**Removing the oil pan and oil pump**

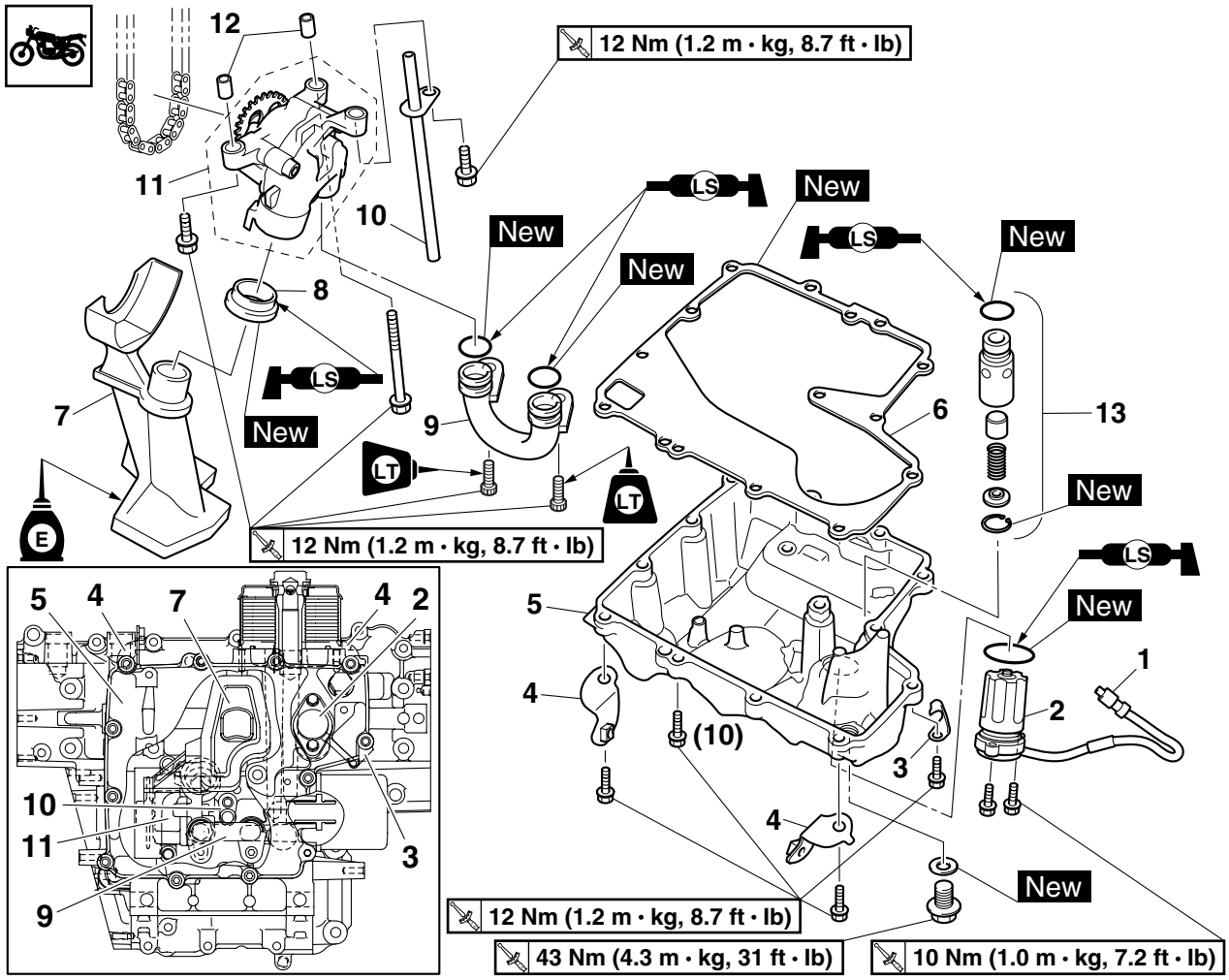


| Order | Job/Parts to remove | Q'ty | Remarks |
|---|---|---|---|
| | Engine oil | | Drain.<br>Refer to "CHANGING THE ENGINE OIL" on page 3-11. |
| | Coolant | | Drain.<br>Refer to "CHANGING THE COOLANT" on page 3-18. |
| | Exhaust pipe assembly | | Refer to "ENGINE REMOVAL" on page 5-1. |
| | Water pump | | Refer to "WATER PUMP" on page 6-9. |
| | Clutch housing | | Refer to "CLUTCH" on page 5-37. |
| 1 | Oil level switch coupler | 1 | Disconnect. |
| 2 | Oil level switch | 1 | |
| 3 | Oil level switch lead holder | 1 | |
| 4 | Bottom cowling bracket | 2 | |
| 5 | Oil pan | 1 | |
| 6 | Oil pan gasket | 1 | |
| 7 | Oil strainer | 1 | |
| 8 | Oil strainer gasket | 1 | |

**Removing the oil pan and oil pump**

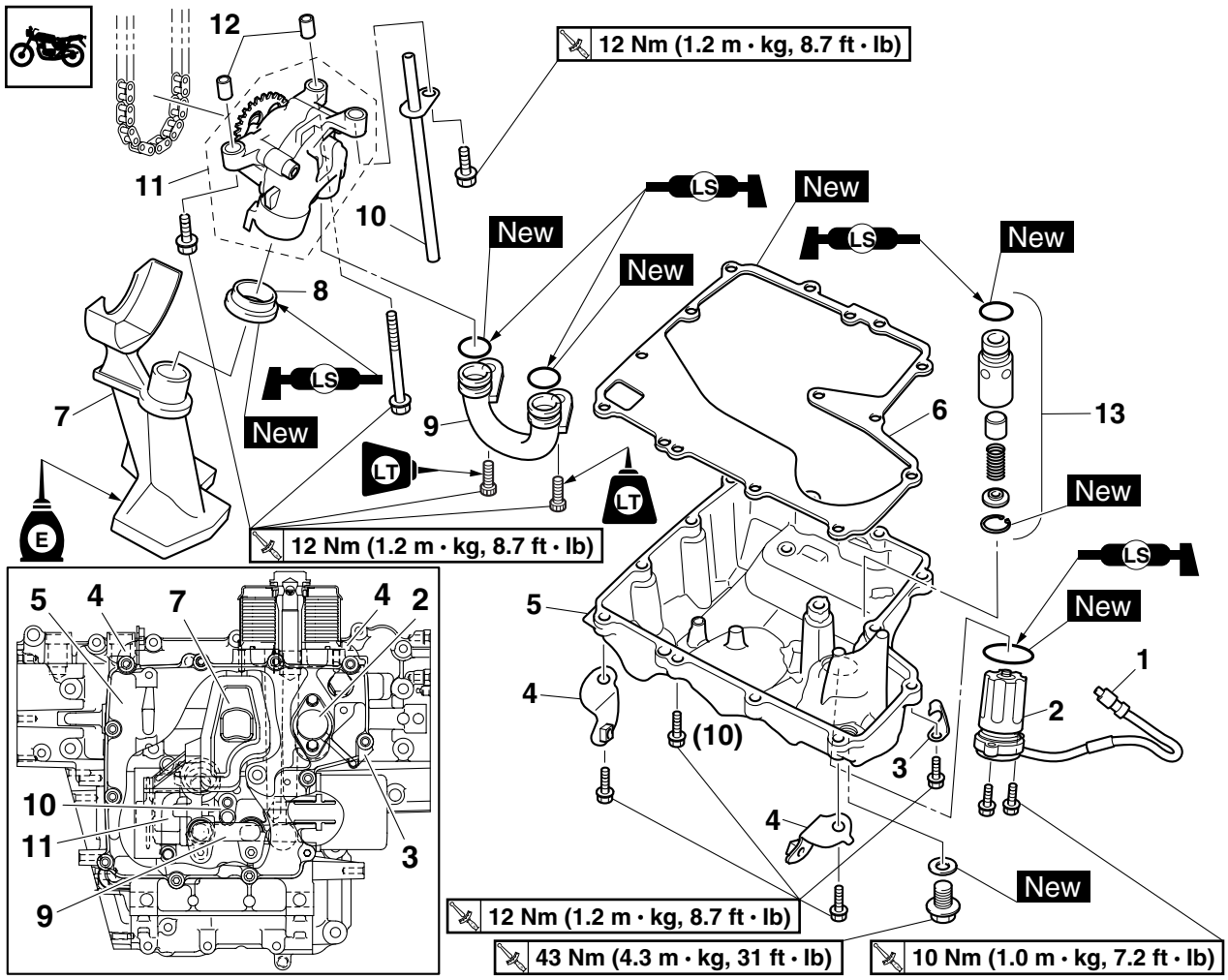


| Order | Job/Parts to remove | Q'ty | Remarks |
|---|---|---|---|
| 9 | Oil pipe | 1 | |
| 10 | Ventilation chamber oil drain pipe | 1 | |
| 11 | Oil pump assembly | 1 | |
| 12 | Dowel pin | 2 | |
| 13 | Relief valve assembly | 1 | |
| | | | For installation, reverse the removal procedure. |

**Disassembling the oil pump**

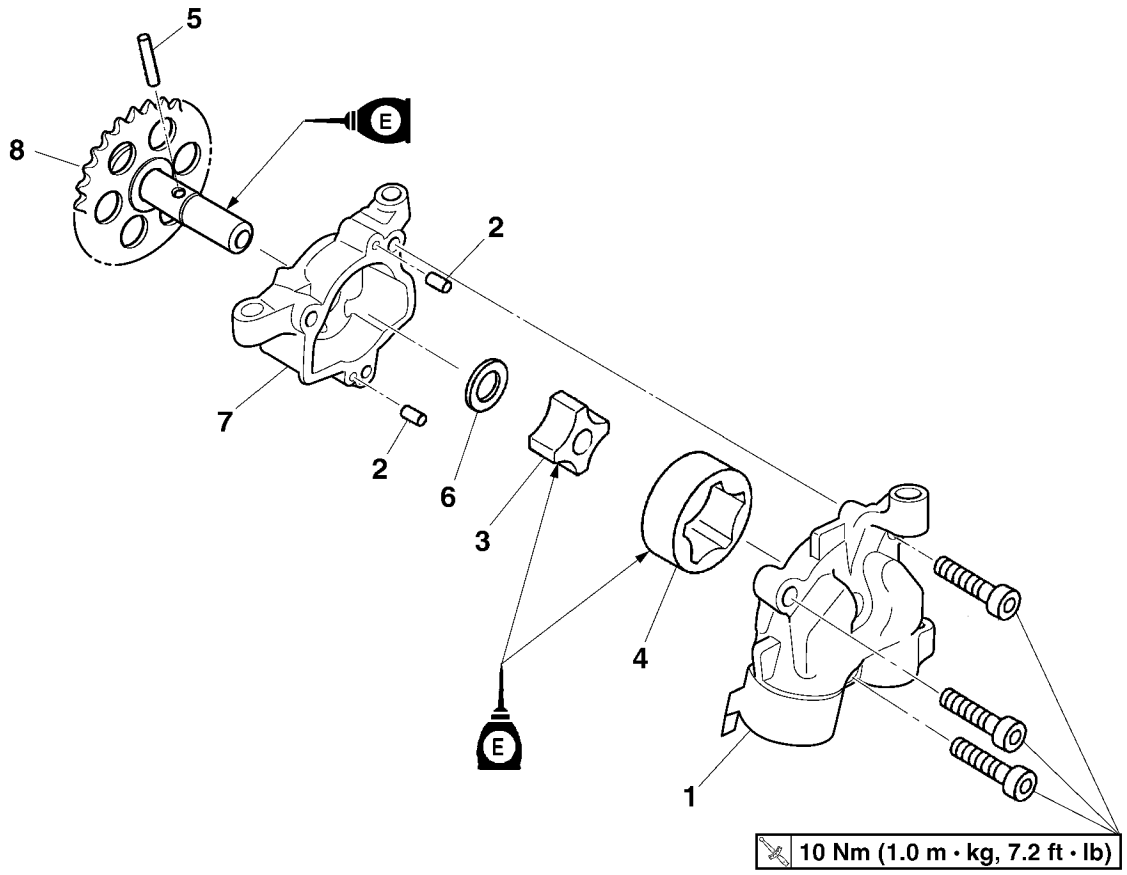


| Order | Job/Parts to remove | Q'ty | Remarks |
|---|---|---|---|
| 1 | Oil pump housing cover | 1 | |
| 2 | Pin | 2 | |
| 3 | Oil pump inner rotor | 1 | |
| 4 | Oil pump outer rotor | 1 | |
| 5 | Pin | 1 | |
| 6 | Washer | 1 | |
| 7 | Oil pump housing | 1 | |
| 8 | Oil pump driven sprocket | 1 | |
| | | | For assembly, reverse the disassembly procedure. |

EAS24930
## REMOVING THE OIL PAN
1. Remove:
   - Oil level switch lead holder
   - Bottom cowling brackets
   - Oil pan
   - Oil pan gasket

**NOTE:**

Loosen each bolt 1/4 of a turn at a time, in stages and in a crisscross pattern. After all of the bolts are fully loosened, remove them.

EAS24960
## CHECKING THE OIL PUMP
1. Check:
   - Oil pump driven sprocket
   - Oil pump housing
   - Oil pump housing cover
     Cracks/damage/wear → Replace the defective part(s).
2. Measure:
   - Inner-rotor-to-outer-rotor-tip clearance “a”
   - Outer-rotor-to-oil-pump-housing clearance “b”
   - Oil-pump-housing-to-inner-rotor-and-outer-rotor clearance “c”
     Out of specification → Replace the oil pump.

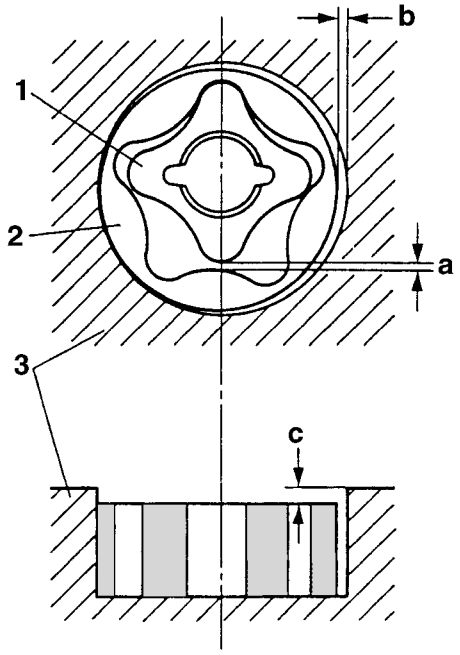


1. Inner rotor
2. Outer rotor
3. Oil pump housing

**Inner-rotor-to-outer-rotor-tip clearance**
**Less than 0.12 mm (0.0047 in)**
**Limit**
**0.20 mm (0.0079 in)**
**Outer-rotor-to-oil-pump-housing clearance**
**0.090–0.150 mm (0.0035–0.0059 in)**
**Limit**
**0.220 mm (0.0087 in)**
**Oil-pump-housing-to-inner-and-outer-rotor clearance**
**0.06–0.11 mm (0.0024–0.0043 in)**
**Limit**
**0.18 mm (0.0071 in)**

3. Check:
   - Oil pump operation
     Rough movement → Repeat steps (1) and (2) or replace the defective part(s).

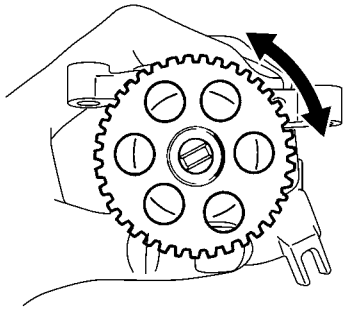

EAS24970
## CHECKING THE RELIEF VALVE
1. Check:
   - Relief valve body “1”
   - Relief valve “2”
   - Spring “3”
   - O-ring “4”
     Damage/wear → Replace the defective part(s).

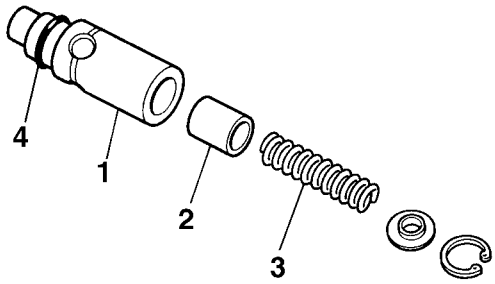

EAS24980
### CHECKING THE OIL PIPES
The following procedure applies to all of the oil delivery pipes.
1. Check:
   - Ventilation chamber oil drain pipe
   - Oil pipe
     Damage → Replace.
     Obstruction → Wash and blow out with compressed air.

EAS24990
### CHECKING THE OIL STRAINER
1. Check:
   - Oil strainer
     Damage → Replace.
     Contaminants → Clean with solvent.

EAS25010
### ASSEMBLING THE OIL PUMP
1. Lubricate:
   - Inner rotor
   - Outer rotor
   - Oil pump shaft
     (with the recommended lubricant)

| | |
|---|---|
| | **Recommended lubricant**<br>**Engine oil** |

2. Install:
   - Oil pump driven sprocket
   - Oil pump housing “1”
   - Washer “2”
   - Pin “3”
   - Oil pump inner rotor “4”
   - Oil pump outer rotor

**NOTE:**
When installing the inner rotor, align the pin “3” in the oil pump shaft with the groove “a” in the inner rotor “4”.

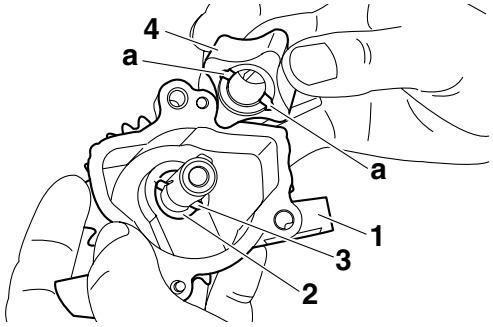


3. Check:
   - Oil pump operation
     Refer to “CHECKING THE OIL PUMP” on page 5-53.

EAS25050
### INSTALLING THE OIL PAN
1. Install:
   - Oil pan gasket New
   - Oil pan
   - Bottom cowling brackets
   - Oil level switch lead holder

| | |
|---|---|
| | **Oil pan bolt**<br>**12 Nm (1.2 m·kg, 8.7 ft·lb)** |

**NOTE:**
Tighten the oil pan bolts in stages and in a criss-cross pattern.

EAS25540

# CRANKCASE

**Separating the crankcase**

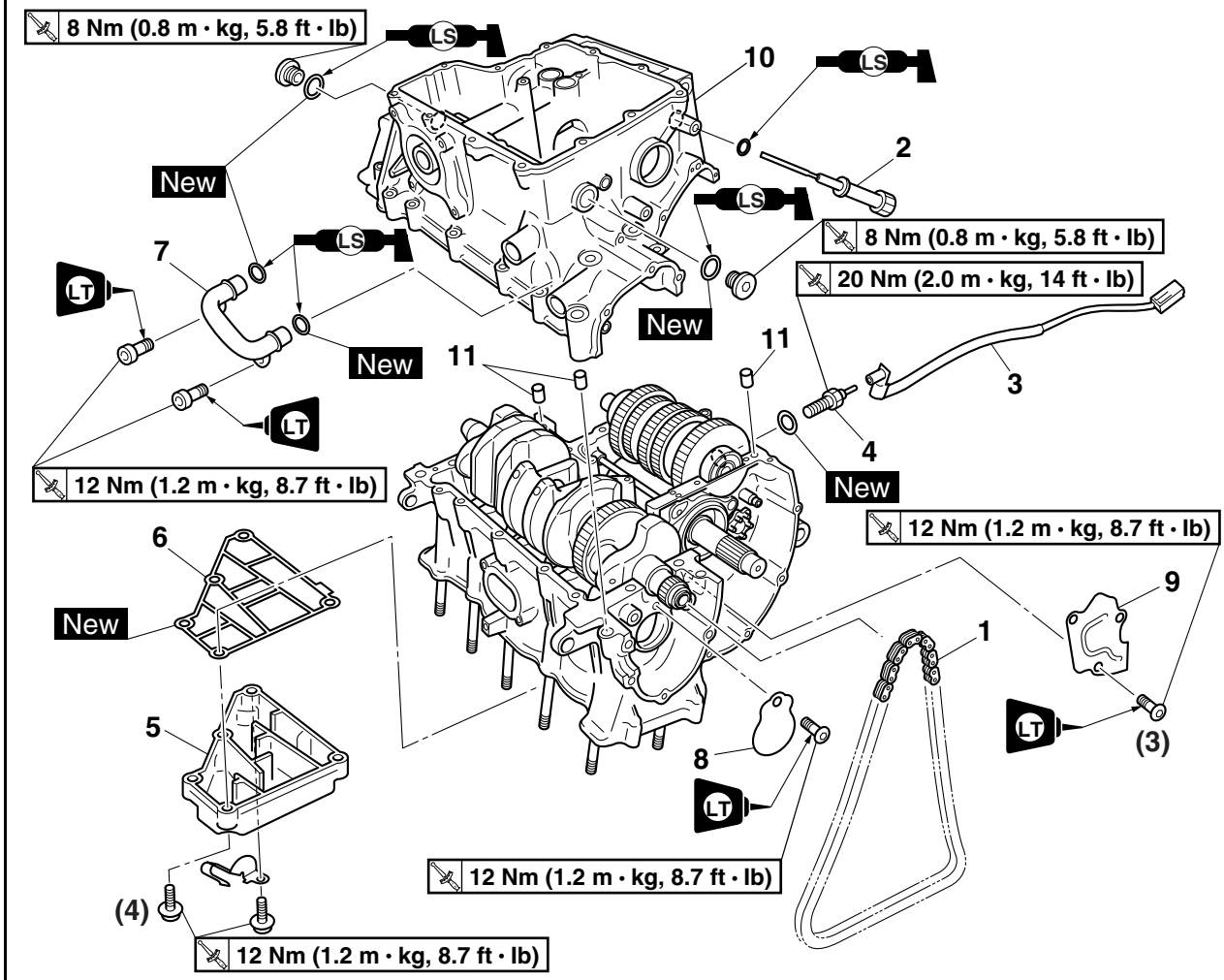


| Order | Job/Parts to remove | Q'ty | Remarks |
|---|---|---|---|
| | Engine | | Refer to "ENGINE REMOVAL" on page 5-1. |
| | Cylinder head | | Refer to "CYLINDER HEAD" on page 5-15. |
| | Starter clutch | | Refer to "GENERATOR AND STARTER CLUTCH" on page 5-26. |
| | Shift shaft | | Refer to "SHIFT SHAFT" on page 5-47. |
| | Pickup rotor | | Refer to "PICKUP ROTOR" on page 5-30. |
| | Oil pump drive chain guide | | Refer to "CLUTCH" on page 5-37. |
| | Oil pump assembly | | Refer to "OIL PUMP" on page 5-50. |
| 1 | Timing chain | 1 | |
| 2 | Dipstick | 1 | |
| 3 | Neutral switch lead | 1 | |
| 4 | Neutral switch | 1 | |
| 5 | Ventilation chamber cover | 1 | |
| 6 | Ventilation chamber cover gasket | 1 | |
| 7 | Oil pipe | 1 | |
| 8 | Oil baffle plate 1 | 1 | |

**Separating the crankcase**

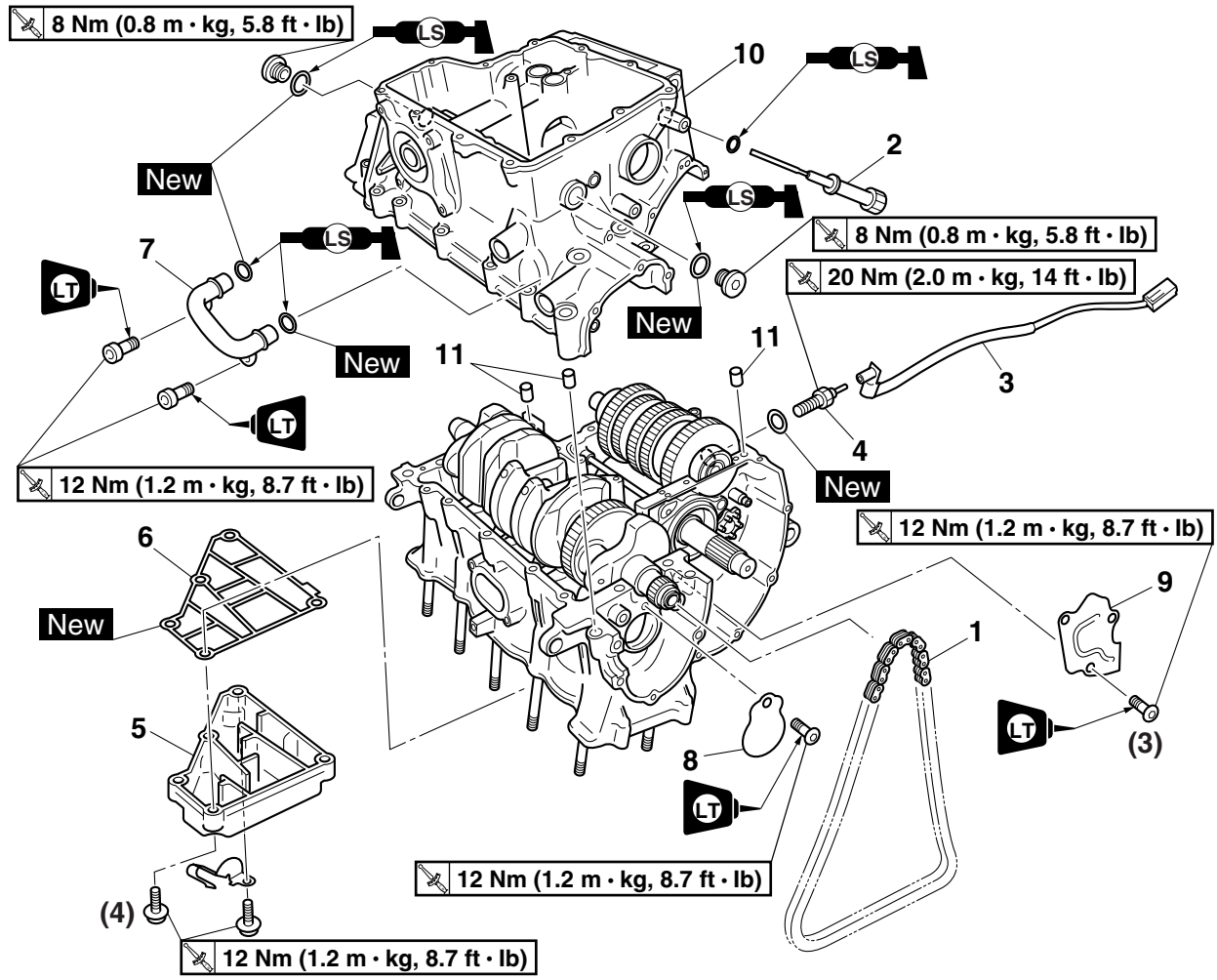


| Order | Job/Parts to remove | Q'ty | Remarks |
|---|---|---|---|
| 9 | Oil baffle plate 2 | 1 | |
| 10 | Lower crankcase | 1 | |
| 11 | Dowel pin | 3 | |
| | | | For installation, reverse the removal procedure. |

EAS25550
## DISASSEMBLING THE CRANKCASE
1. Place the engine upside down.
2. Remove:
   - Crankcase bolts

**NOTE:**
- Loosen each bolt 1/4 of a turn at a time. After all of the bolts are fully loosened, remove them.
- Loosen the bolts in decreasing numerical order (refer to the numbers in the illustration).
- The numbers embossed on the crankcase indicate the crankcase tightening sequence.

- M8 × 115 mm bolts: “8”, “9”
- M8 × 85 mm bolts: “1”–“7”, “10”
- M8 × 65 mm bolts: “11”, “12”
- M6 × 80 mm bolt: “28”
- M6 × 65 mm shoulder bolts: “13”, “14”
- M6 × 65 mm bolts: “16”, “20”, “21”
- M6 × 55 mm bolts: “15”, “22”–“27”
- M6 × 45 mm bolts: “17”–“19”

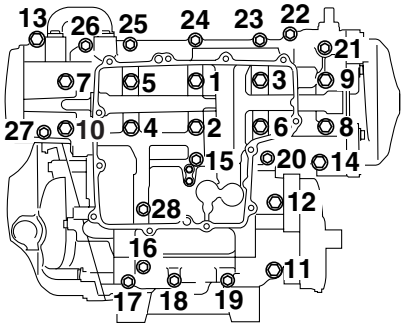


3. Remove:
   - Lower crankcase

ECA13900
**CAUTION:**
**Tap on one side of the crankcase with a soft-face hammer. Tap only on reinforced portions of the crankcase, not on the crankcase mating surfaces. Work slowly and carefully and make sure the crankcase halves separate evenly.**

EAS25580
## CHECKING THE CRANKCASE
1. Thoroughly wash the crankcase halves in a mild solvent.
2. Thoroughly clean all the gasket surfaces and crankcase mating surfaces.
3. Check:
   - Crankcase
     Cracks/damage → Replace.
   - Oil delivery passages
     Obstruction → Blow out with compressed air.

EAS25600
## CHECKING THE OIL PIPE
1. Check:
   - Oil pipe
     Damage → Replace.
     Obstruction → Wash and blow out with compressed air.

EAS25620
## CHECKING THE TIMING CHAIN
Refer to “CAMSHAFTS” on page 5-7.

EAS25640
## ASSEMBLING THE CRANKCASE
1. Lubricate:
   - Crankshaft journal bearings
     (with the recommended lubricant)

| | |
|---|---|
| | **Recommended lubricant**<br>**Engine oil** |

2. Apply:
   - Sealant
     (onto the crankcase mating surfaces)

| | |
|---|---|
| | **Yamaha bond No. 1215**<br>**90890-85505**<br>**(Three Bond No.1215®)** |

**NOTE:**
Do not allow any sealant to come into contact with the oil gallery or crankshaft journal bearings. Do not apply sealant to within 2–3 mm (0.08–0.12 in) of the crankshaft journal bearings.

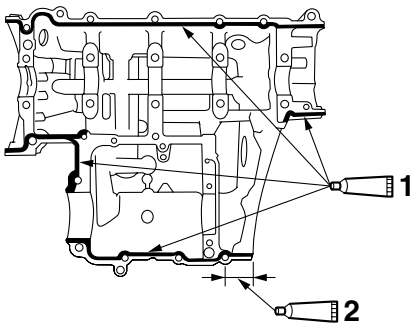


1. Three Bond No.1215®
2. Three Bond No.1280B

3. Install:
   - Dowel pins
4. Set the shift drum assembly and transmission gears in the neutral position.
5. Install:
   - Lower crankcase “1”
     (onto the upper crankcase “2”)

ECA13980

**CAUTION:**

**Before tightening the crankcase bolts, make sure the transmission gears shift correctly when the shift drum assembly is turned by hand.**

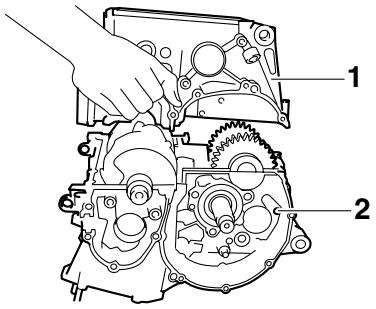


6. Install:
   - Crankcase bolts

**NOTE:**

- Lubricate the bolts “1”–“10” thread part and washers with engine oil.
- Lubricate the bolts “11”–“28” thread part and mating surfaces with engine oil.
- Finger tighten the crankcase bolts.

- M8 × 115 mm bolts: “8”, “9”
- M8 × 85 mm bolts: “1”–“7”, “10”
- M8 × 65 mm bolts: “11”, “12”
- M6 × 80 mm bolt: “28”
- M6 × 65 mm shoulder bolts: “13”, “14”
- M6 × 65 mm bolts: “16”, “20”, “21”
- M6 × 55 mm bolts: “15”, “22”–“27”
- M6 × 45 mm bolts: “17”–“19”

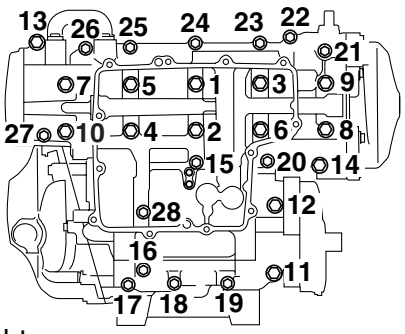


7. Tighten:
   - Crankcase bolts “1”–“10”

**Crankcase bolt (M8 × 115 mm, M8 × 85 mm)**
**1st: 20 Nm (2.0 m·kg, 14 ft·lb)**
***2nd: 25 Nm (2.5 m·kg, 18 ft·lb)**
***3rd: 27 Nm (2.7 m·kg, 20 ft·lb)**

*Loosen all bolts following the tightening order and then tighten to specification torque.

**NOTE:**

Tighten the bolts in the tightening sequence cast on the crankcase.

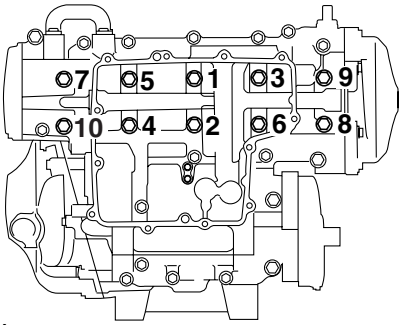


8. Tighten:
   - Crankcase bolts “11”–“28”

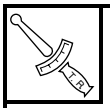

**Crankcase bolt (M8 × 65 mm)**
**24 Nm (2.4 m·kg, 17 ft·lb)**
**Crankcase bolt (M6)**
**10 Nm (1.0 m·kg, 7.2 ft·lb)**

**NOTE:**

Tighten the bolts in the tightening sequence cast on the crankcase.

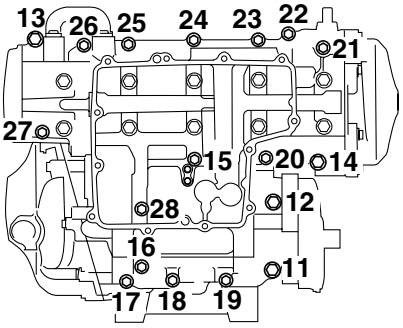

EAS24370

# CONNECTING RODS AND PISTONS

**Removing the connecting rods and pistons**

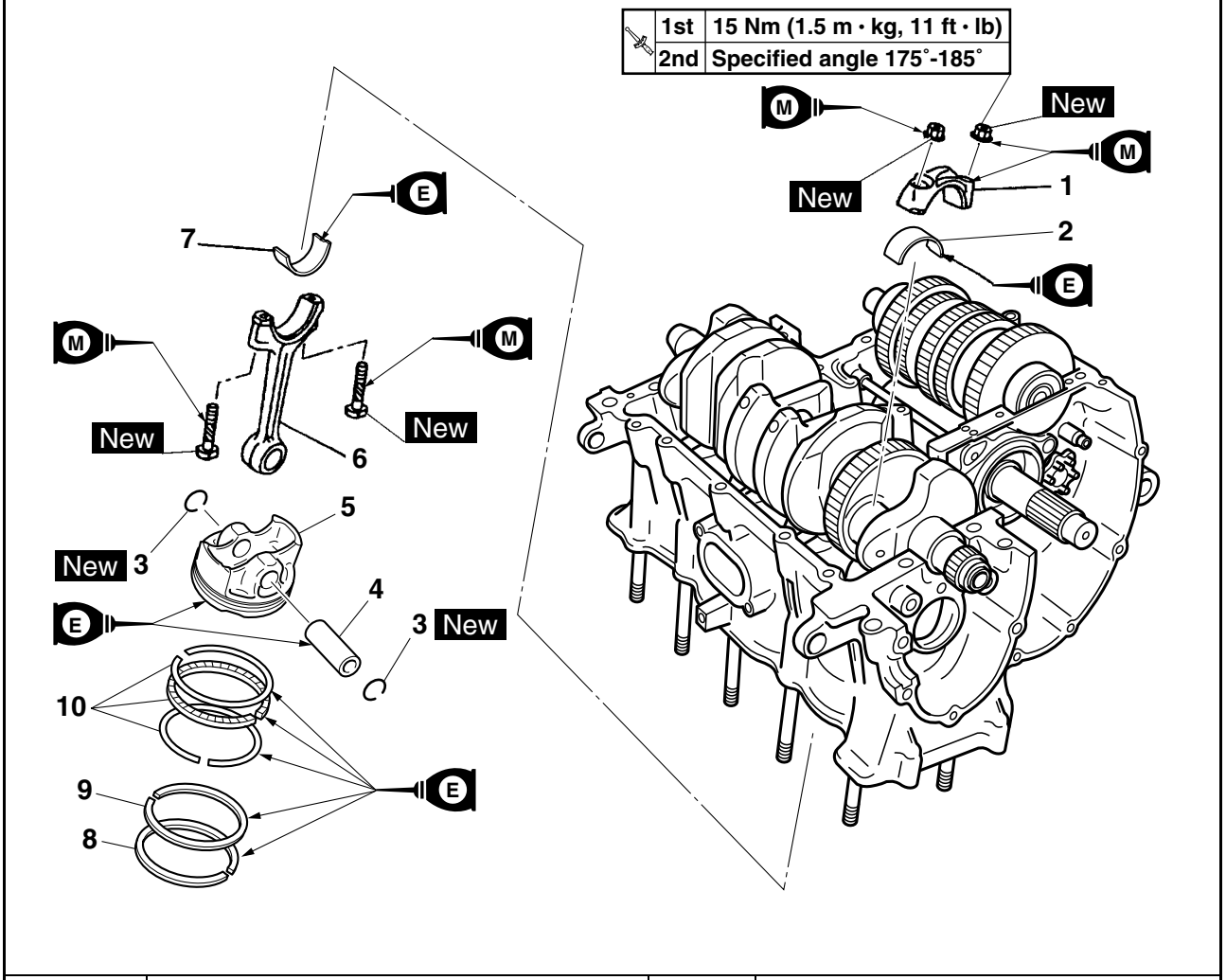


| Order | Job/Parts to remove | Q'ty | Remarks |
|---|---|---|---|
| | Crankcase | | Separate.<br>Refer to "CRANKCASE" on page 5-55. |
| 1 | Connecting rod cap | 4 | |
| 2 | Big end lower bearing | 4 | |
| 3 | Piston pin clip | 8 | |
| 4 | Piston pin | 4 | |
| 5 | Piston | 4 | |
| 6 | Connecting rod | 4 | |
| 7 | Big end upper bearing | 4 | |
| 8 | Top ring | 4 | |
| 9 | 2nd ring | 4 | |
| 10 | Oil ring | 4 | |
| | | | For installation, reverse the removal procedure. |

EAS26030

### REMOVING THE CONNECTING RODS AND PISTONS

The following procedure applies to all of the connecting rods and pistons.

1. Remove:
   - Connecting rod cap “1”

**NOTE:**

Identify the position of each connecting rod so that it can be reinstalled in its original place.

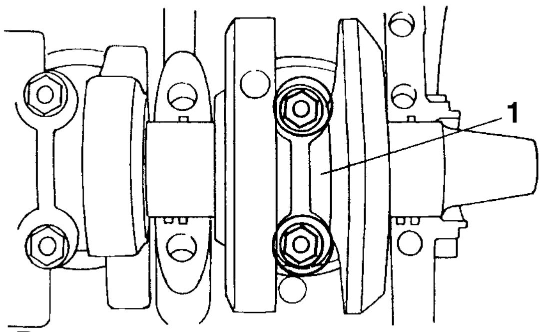


2. Remove:
   - Big end bearings
     (from the connecting rods and connecting rod caps)

**NOTE:**

Identify the position of each big end bearing so that it can be reinstalled in its original place.

3. Remove:
   - Piston pin clips “1”
   - Piston pin “2”
   - Piston “3”
   - Connecting rod “4”

ECA13810

**CAUTION:**

**Do not use a hammer to drive the piston pin out.**

**NOTE:**

- For reference during installation, put an identification mark on each piston crown.
- Before removing the piston pin, deburr the piston pin clip’s groove and the piston’s pin bore area. If both areas are deburred and the piston pin is still difficult to remove, remove it with the piston pin puller set “5”.

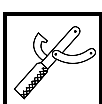

**Piston pin puller set**
**90890-01304**
**Piston pin puller**
**YU-01304**

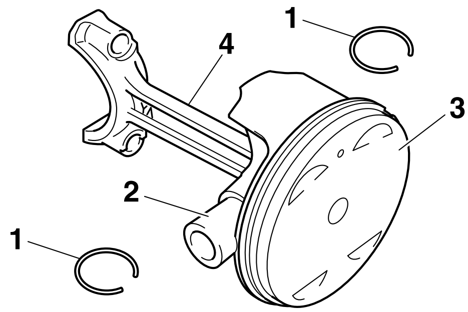


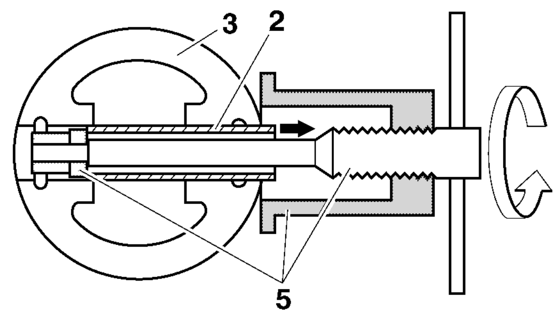


4. Remove:
   - Top ring
   - 2nd ring
   - Oil ring

**NOTE:**

When removing a piston ring, open the end gap with your fingers and lift the other side of the ring over the piston crown.

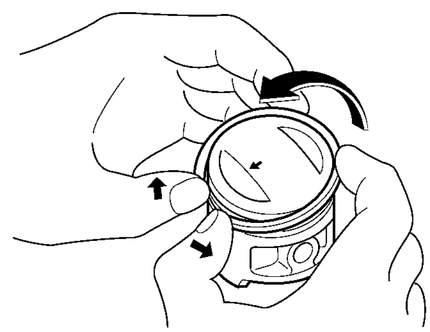

EAS24410

### CHECKING THE CYLINDERS AND PISTONS

The following procedure applies to all of the cylinders and pistons.

1. Check:
   - Piston wall
   - Cylinder wall
     Vertical scratches → Rebore or replace the cylinder, and replace the piston and piston rings as a set.
2. Measure:
   - Piston-to-cylinder clearance

▼▼▼▼▼▼▼▼▼▼▼▼▼▼▼▼▼▼▼▼▼▼▼▼▼▼▼▼▼▼▼▼▼▼▼

a. Measure cylinder bore “C” with the cylinder bore gauge.

**NOTE:**

Measure cylinder bore “C” by taking side-to-side and front-to-back measurements of the cylinder. Then, find the average of the measurements.

**Bore**
**67.000–67.010 mm (2.6378–2.6382 in)**
**Taper limit**
**0.050 mm (0.0020 in)**
**Out of round limit**
**0.050 mm (0.0020 in)**

| |
|---|
| “C” = maximum of $D_1$–$D_6$ |
| “T” = maximum of $D_1$ or $D_2$ - maximum of $D_5$ or $D_6$ |
| “R” = maximum of $D_1$, $D_3$ or $D_5$ - minimum of $D_2$, $D_4$ or $D_6$ |

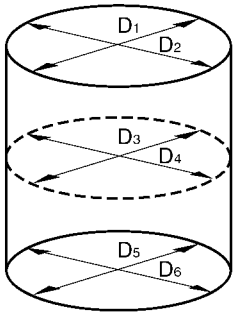


b. If out of specification, rebore or replace the cylinder, and replace the piston and piston rings as a set.
c. Measure piston skirt diameter D “a” with the micrometer.

**Piston**
**Diameter D**
**66.975–66.990 mm (2.6368–2.6374 in)**

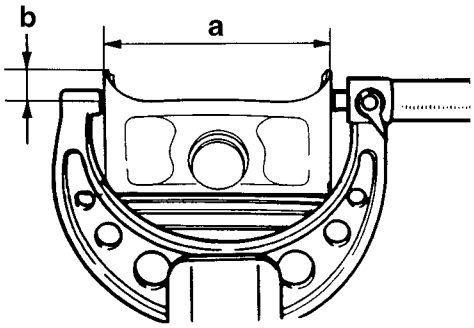


b. 10 mm (0.39 in) from the bottom edge of the piston

d. If out of specification, replace the piston and piston rings as a set.
e. Calculate the piston-to-cylinder clearance with the following formula.

- Piston-to-cylinder clearance = Cylinder bore “C” - Piston skirt diameter “D”

**Piston-to-cylinder clearance**
**0.010–0.035 mm (0.0004–0.0014 in)**
**Limit**
**0.05 mm (0.0022 in)**

f. If out of specification, rebore or replace the cylinder, and replace the piston and piston rings as a set.

▲▲▲▲▲▲▲▲▲▲▲▲▲▲▲▲▲▲▲▲▲▲▲▲▲▲▲▲▲▲▲▲▲▲

EAS24430

## CHECKING THE PISTON RINGS

1. Measure:
   - Piston ring side clearance
     Out of specification → Replace the piston and piston rings as a set.

**NOTE:**

Before measuring the piston ring side clearance, eliminate any carbon deposits from the piston ring grooves and piston rings.

**Piston ring**
**Top ring**
**Ring side clearance**
**0.030–0.065 mm (0.0012–0.0026 in)**
**2nd ring**
**Ring side clearance**
**0.020–0.055 mm (0.0008–0.0022 in)**

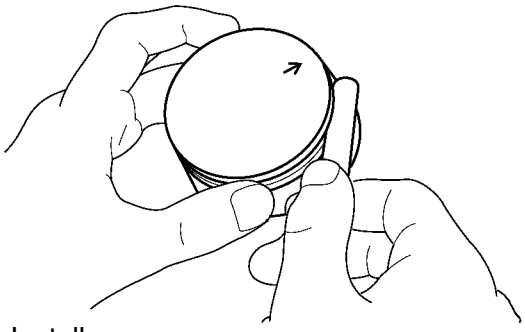

2. Install:
   - Piston ring
     (into the cylinder)

**NOTE:**

Level the piston ring into the cylinder with the piston crown.

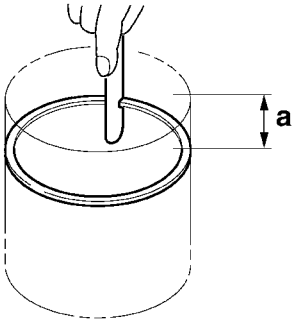


a. 5 mm (0.20 in)

3. Measure:
   - Piston ring end gap
     Out of specification → Replace the piston ring.

**NOTE:**

The oil ring expander spacer's end gap cannot be measured. If the oil ring rail's gap is excessive, replace all three piston rings.

**Piston ring**
**Top ring**
**End gap (installed)**
**0.25–0.35 mm (0.0098–0.0138 in)**
**Limit**
**0.55 mm (0.0217 in)**
**2nd ring**
**End gap (installed)**
**0.70–0.80 mm (0.0276–0.0315 in)**
**Limit**
**1.00 mm (0.0394 in)**
**Oil ring**
**End gap (installed)**
**0.10–0.35 mm (0.0039–0.0138 in)**

EAS24440

## CHECKING THE PISTON PINS

The following procedure applies to all of the piston pins.

1. Check:
   - Piston pin
     Blue discoloration/grooves → Replace the piston pin and then check the lubrication system.
2. Measure:
   - Piston pin outside diameter "a"
     Out of specification → Replace the piston pin.

**Piston pin outside diameter**
**14.991–15.000 mm (0.5902–0.5906 in)**
**Limit**
**14.971 mm (0.5894 in)**

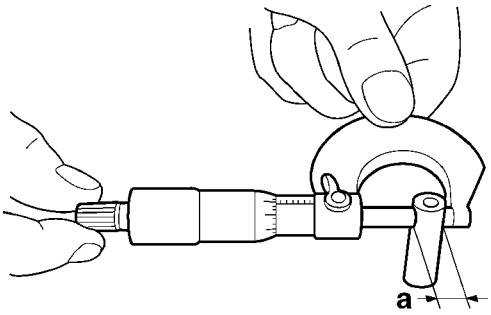


3. Measure:
   - Piston pin bore diameter "b"
     Out of specification → Replace the piston.

**Piston pin bore inside diameter**
**15.002–15.013 mm (0.5906–0.5911 in)**
**Limit**
**15.043 mm (0.5922 in)**

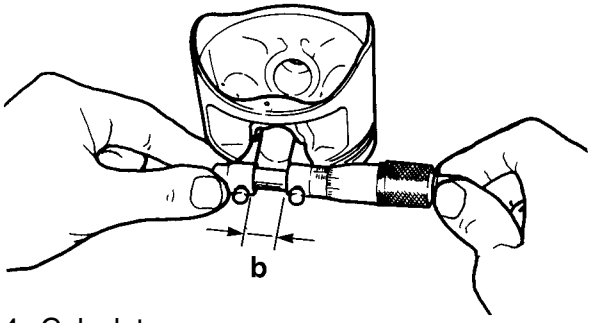


4. Calculate:
   - Piston-pin-to-piston-pin-bore clearance
     Out of specification → Replace the piston pin and piston as a set.

- Piston-pin-to-piston-pin-bore clearance = Piston pin bore diameter "b" - Piston pin outside diameter "a"

**Piston-pin-to-piston-pin-bore clearance**
**0.002–0.022 mm (0.00007–0.00068 in)**

ET2C01013

## CHECKING THE CONNECTING RODS

1. Measure:
   - Crankshaft-pin-to-big-end-bearing clearance
     Out of specification → Replace the big end bearings.

| |
|---|
| **Oil clearance (using plasti-gauge®)**<br>**0.037–0.061 mm (0.0015–0.0024 in)** |

▼▼▼▼▼▼▼▼▼▼▼▼▼▼▼▼▼▼▼▼▼▼▼▼▼▼▼▼▼▼▼▼▼▼▼▼

The following procedure applies to all of the connecting rods.

ECA13930

**CAUTION:**

**Do not interchange the big end bearings and connecting rods. To obtain the correct crankshaft-pin-to-big-end-bearing clearance and prevent engine damage, the big end bearings must be installed in their original positions.**

a. Clean the big end bearings, crankshaft pins, and the inside of the connecting rods halves.
b. Install the big end upper bearing into the connecting rod and the big end lower bearing into the connecting rod cap.

**NOTE:**

Align the projections “a” on the big end bearings with the notches “b” in the connecting rod and connecting rod cap.

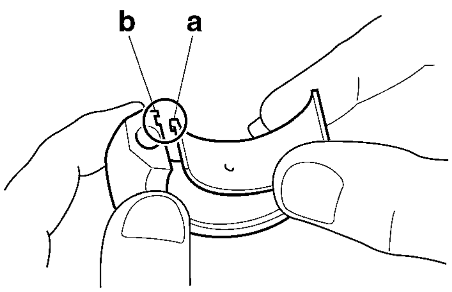


c. Put a piece of Plastigauge® “1” on the crankshaft pin.

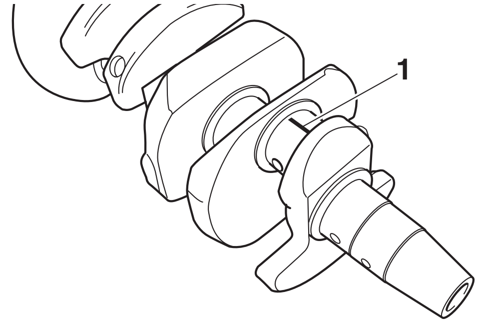


d. Assemble the connecting rod halves.

**NOTE:**

- Do not move the connecting rod or crankshaft until the clearance measurement has been completed.
- Lubricate the bolt threads and nut seats with molybdenum disulfide grease.
- Make sure the “Y” mark “c” on the connecting rod faces towards the left side of the crankshaft.
- Make sure the characters “d” on both the connecting rod and connecting rod cap are aligned.

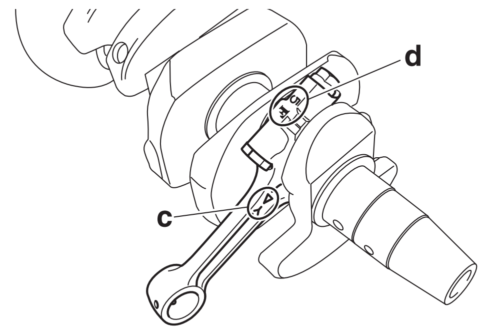


e. Tighten the connecting rod nuts.
   Refer to “INSTALLING THE CONNECTING RODS AND PISTONS” on page 5-64.
f. Remove the connecting rod and big end bearings.
   Refer to “REMOVING THE CONNECTING RODS AND PISTONS” on page 5-60.
g. Measure the compressed Plastigauge® width “e” on the crankshaft pin.
   If the crankshaft-pin-to-big-end-bearing clearance is out of specification, select replacement big end bearings.

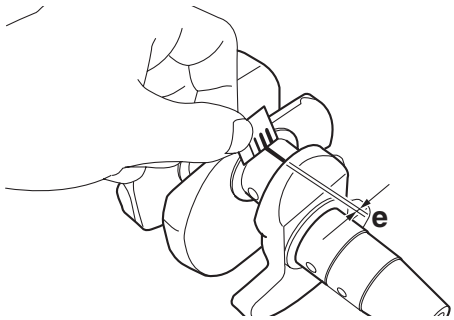


2. Select:
   - Big end bearings ($P_1$–$P_4$)

**NOTE:**

- The numbers stamped into the crankshaft web and the numbers on the connecting rods are used to determine the replacement big end bearing sizes.
- $P_1$–$P_4$ refer to the bearings shown in the crankshaft illustration.

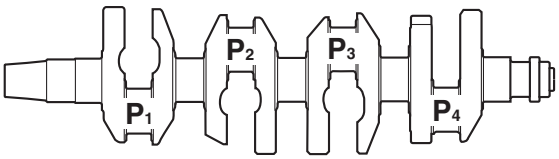


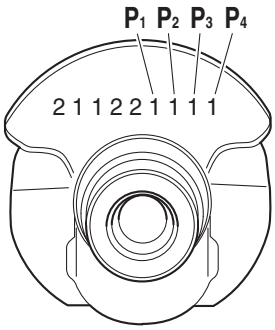


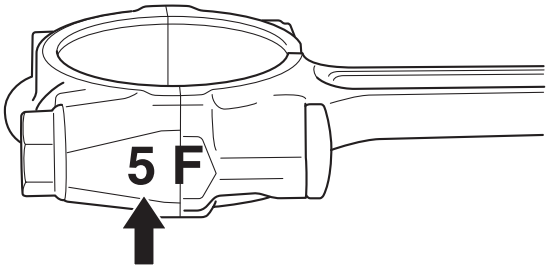


For example, if the connecting rod $P_1$ and the crankshaft web $P_1$ numbers are 5 and 1 respectively, then the bearing size for $P_1$ is:

| |
|---|
| $P_1$ (connecting rod) - $P_1$ (crankshaft)<br>=<br>5 - 1 = 4 (green) |

| | |
|---|---|
| | **Bearing color code**<br>**1.Blue 2.Black 3.Brown 4.Green** |

EAS26170

## INSTALLING THE CONNECTING RODS AND PISTONS

The following procedure applies to all of the pistons and connecting rods.

1. Install:
   - Top ring “1”
   - 2nd ring “2”
   - Upper oil ring rail “3”
   - Oil ring expander “4”
   - Lower oil ring rail “5”

**NOTE:**

Be sure to install the piston rings so that the manufacturer’s marks or numbers “a” face up.

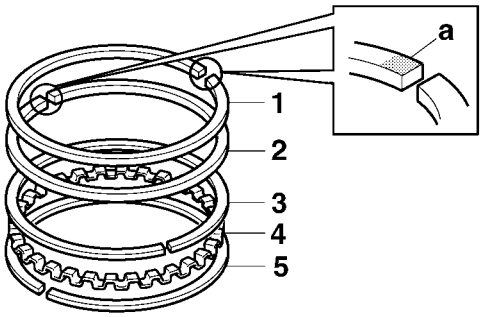


2. Install:
   - Piston “1”
     (onto the respective connecting rod “2”)
   - Piston pin “3”
   - Piston pin clips “4” New

**NOTE:**

- Apply engine oil onto the piston pin.
- Make sure that the “Y” mark “a” on the connecting rod left when the punch mark “b” on the piston is pointing up. Refer to the illustration.
- Install the piston pin clips, so that the clip ends are 3 mm (0.12 in) “c” or more from the cutout in the piston.
- Reinstall each piston into its original cylinder (numbering order starting from the left: #1 to #4).

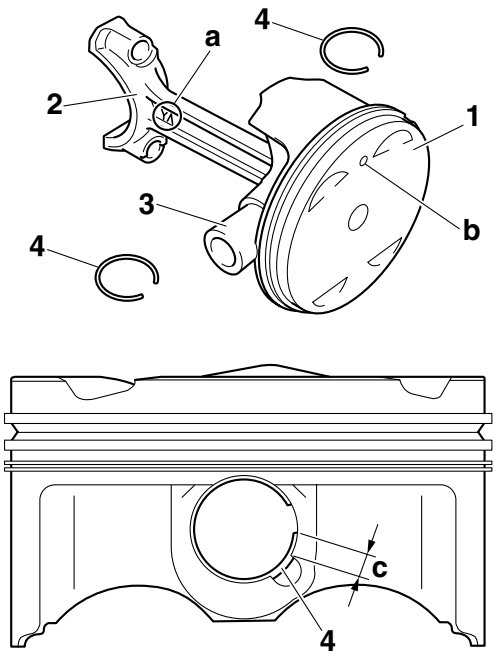


3. Offset:
   - Piston ring end gaps

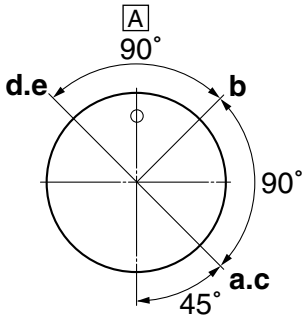


a. Top ring
b. Upper oil ring rail
c. Oil ring expander
d. 2nd ring
e. Lower oil ring rail
A. Exhaust side

4. Lubricate:
   - Piston
   - Piston rings
   - Cylinder
     (with the recommended lubricant)

| | |
|---|---|
| | **Recommended lubricant**<br>**Engine oil** |

5. Lubricate:
   - Bolt threads
   - Nut seats
     (with the recommended lubricant)

| | |
|---|---|
| | **Recommended lubricant**<br>**Molybdenum disulfide oil** |

6. Lubricate:
   - Crankshaft pins
   - Big end bearings
   - Connecting rod inner surface
     (with the recommended lubricant)

| | |
|---|---|
| | **Recommended lubricant**<br>**Engine oil** |

7. Install:
   - Big end bearings
   - Connecting rod and piston assembly
   - Connecting rod cap

**NOTE:**

- Align the projections on the big end bearings with the notches in the connecting rods and connecting rod caps.
- Be sure to reinstall each big end bearing in its original place.
- While compressing the piston rings one hand, install the connecting rod assembly into the cylinder with the other hand.
- Make sure the “Y” marks “a” on the connecting rods face towards the left side of the crankshaft.
- Make sure the characters “b” on both the connecting rod and connecting rod cap are aligned.

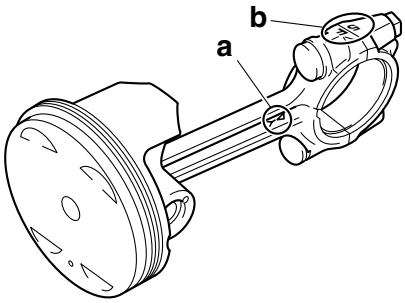


8. Tighten:
   - Connecting rod nuts “1”

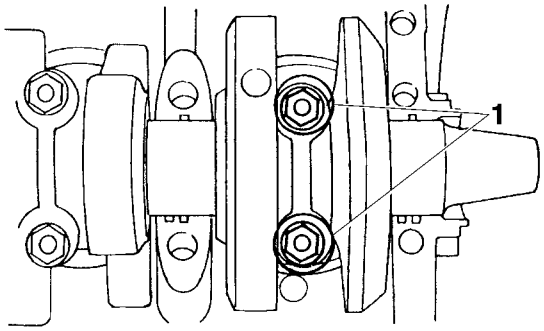

EW2C01007

**WARNING**

**Replace the connecting rod bolts and nuts with new ones.**

**NOTE:**

Tighten the connecting rod nuts using the following procedure.

a. Tighten the connecting rod nuts with a torque wrench.

| | |
|---|---|
| | **Connecting rod nut (1st)**<br>**15 Nm (1.5 m·kg, 11 ft·lb)** |

b. Put a mark “1” on the corner of the connecting rod nut “2” and the connecting rod “3”.

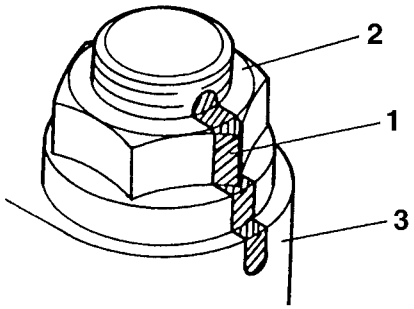


c. Tighten the connecting rod nuts further to reach the specified angle 175°–185°.

| | |
|---|---|
| | **Connecting rod nut (final)**<br>**Specified angle 175°–185°** |

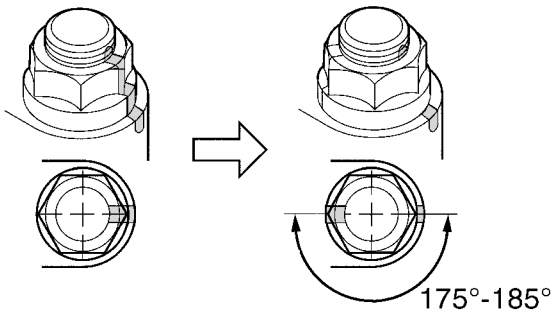


EWA13400

**WARNING**

**If the connecting rod nut is tightened more than the specified angle, do not loosen the nut and then retighten it. Instead, replace the connecting rod bolt and nut with a new one and perform the procedure again.**

ECA13950

**CAUTION:**

**Do not use a torque wrench to tighten the connecting rod nut to the specified angle.**

**NOTE:**

On a hexagonal nut, note that the angle from one corner to another is 60°.

EAS25960

# CRANKSHAFT

**Removing the crankshaft**

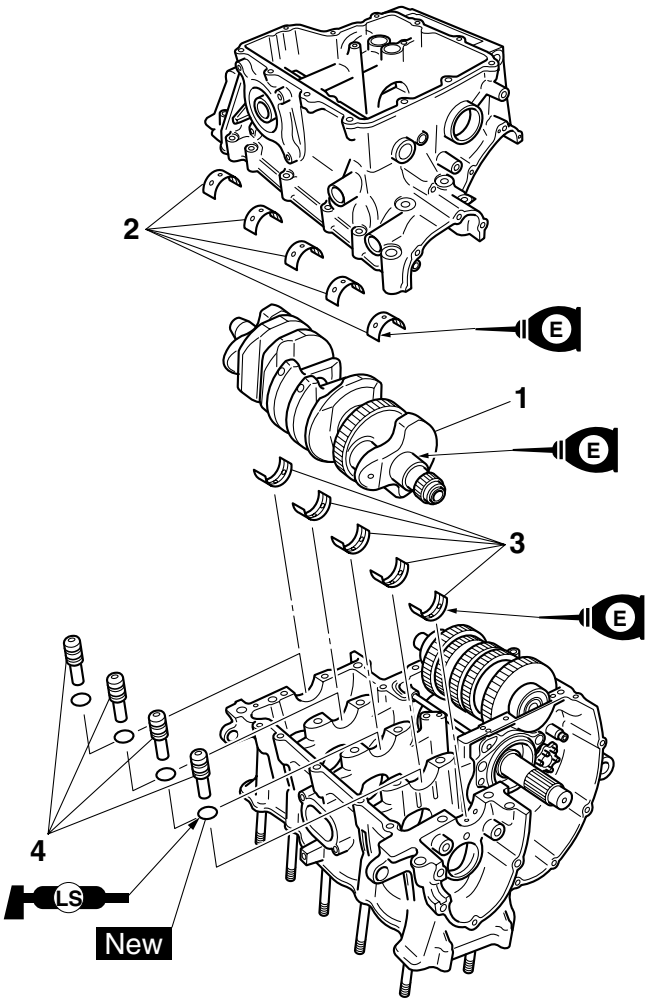


| Order | Job/Parts to remove | Q'ty | Remarks |
|---|---|---|---|
| | Crankcase | | Separate.<br>Refer to "CRANKCASE" on page 5-55. |
| | Connecting rod caps | | Refer to "CONNECTING RODS AND PISTONS" on page 5-59. |
| 1 | Crankshaft | 1 | |
| 2 | Crankshaft journal lower bearing | 5 | |
| 3 | Crankshaft journal upper bearing | 5 | |
| 4 | Oil nozzle | 4 | |
| | | | For installation, reverse the removal procedure. |

EAS26040
### REMOVING THE CRANKSHAFT JOURNAL BEARINGS

1. Remove:
   - Crankshaft journal lower bearings (from the lower crankcase)
   - Crankshaft journal upper bearings (from the upper crankcase)

**NOTE:**

Identify the position of each crankshaft journal bearing so that it can be reinstalled in its original place.

ET2C01018
### CHECKING THE OIL NOZZLES

The following procedure applies to all of the oil nozzles.

1. Check:
   - Oil nozzle
     Damage/wear → Replace the oil nozzle.
   - O-ring
     Damage/wear → Replace.
   - Oil passage
     Obstruction → Blow out with compressed air.

EAS26070
### CHECKING THE CRANKSHAFT AND CONNECTING RODS

1. Measure:
   - Crankshaft runout
     Out of specification → Replace the crankshaft.

**Runout limit C**
**0.030 mm (0.0012 in)**

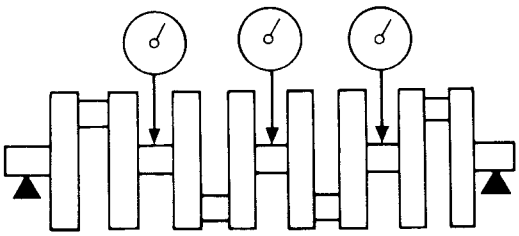

2. Check:
   - Crankshaft journal surfaces
   - Crankshaft pin surfaces
   - Bearing surfaces
     Scratches/wear → Replace the crankshaft.
3. Measure:
   - Crankshaft-journal-to-crankshaft-journal-bearing clearance
     Out of specification → Replace the crankshaft journal bearings.

**Journal oil clearance (using plastigauge®)**
**0.020–0.044 mm (0.0008–0.0017 in)**

ECA13920
**CAUTION:**

**Do not interchange the crankshaft journal bearings. To obtain the correct crankshaft-journal-to-crankshaft-journal-bearing clearance and prevent engine damage, the crankshaft journal bearings must be installed in their original positions.**

▼▼▼▼▼▼▼▼▼▼▼▼▼▼▼▼▼▼▼▼▼▼▼▼▼▼▼▼▼▼▼▼▼▼▼▼▼▼

a. Clean the crankshaft journal bearings, crankshaft journals, and bearing portions of the crankcase.
b. Place the upper crankcase upside down on a bench.
c. Install the crankshaft journal upper bearings “1” and the crankshaft into the upper crankcase.

**NOTE:**

Align the projections “a” on the crankshaft journal upper bearings with the notches “b” in the upper crankcase.

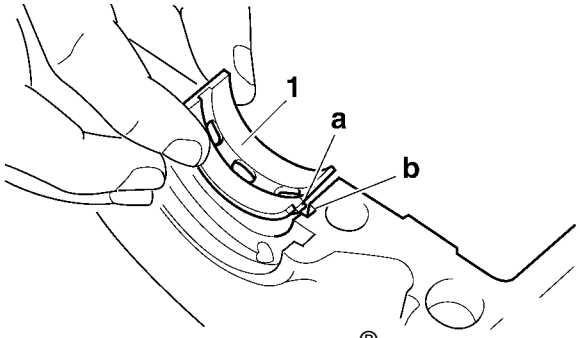


d. Put a piece of Plastigauge® “1” on each crankshaft journal.

**NOTE:**

Do not put the Plastigauge® over the oil hole in the crankshaft journal.

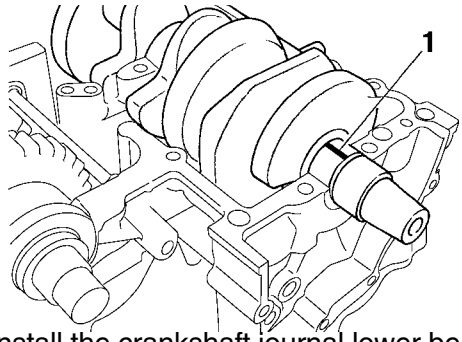


e. Install the crankshaft journal lower bearings "1" into the lower crankcase and assemble the crankcase halves.

**NOTE:**

- Align the projections "a" of the crankshaft journal lower bearings with the notches "b" in the lower crankcase.
- Do not move the crankshaft until the clearance measurement has been completed.

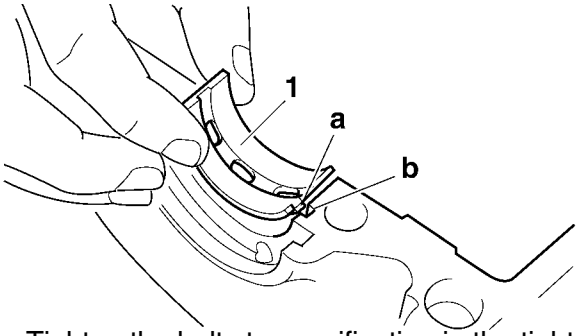


f. Tighten the bolts to specification in the tightening sequence cast on the crankcase. Refer to "CRANKCASE" on page 5-55.
g. Remove the lower crankcase and the crankshaft journal lower bearings.
h. Measure the compressed Plastigauge® width "a" on each crankshaft journal.
If the crankshaft-journal-to-crankshaft-journal-bearing clearance is out of specification, select replacement crankshaft journal bearings.

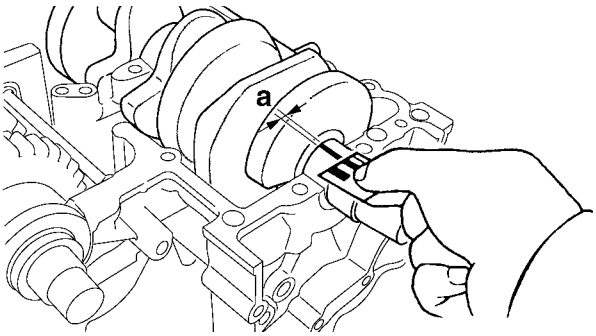


▲▲▲▲▲▲▲▲▲▲▲▲▲▲▲▲▲▲▲▲▲▲▲▲▲▲▲▲▲▲▲▲▲▲

4. Select:
   - Crankshaft journal bearings ($J_1$–$J_5$)

**NOTE:**

- The numbers "A" stamped into the crankshaft web and the numbers "B" stamped into the lower crankcase are used to determine the replacement crankshaft journal bearing sizes.
- $J_1$–$J_5$ refer to the bearings shown in the crankshaft illustration.
- If $J_1$–$J_5$ are the same, use the same size for all of the bearings.

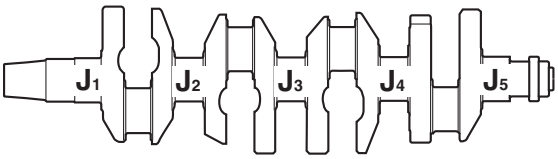


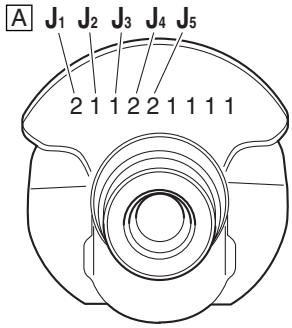


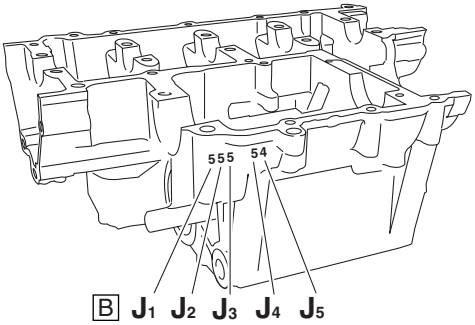


For example, if the crankcase $J_1$ and crankshaft web $J_1$ numbers are 6 and 2 respectively, then the bearing size for $J_1$ is:

| |
|---|
| $J_1$ (crankcase) - $J_1$ (crankshaft web) - 1 = 6 - 2 - 1 = 3 (brown) |

**Bearing color code**
**1.Blue 2.Black 3.Brown 4.Green 5.Yellow**

EAS26200

## INSTALLING THE CRANKSHAFT

1. Install:
   - Crankshaft journal upper bearings (into the upper crankcase)
   - Crankshaft journal lower bearings (into the lower crankcase)

**NOTE:**

- Align the projections “a” on the crankshaft journal bearings “1” with the notches “b” in the crankcases.
- Be sure to install each crankshaft journal bearing in its original place.

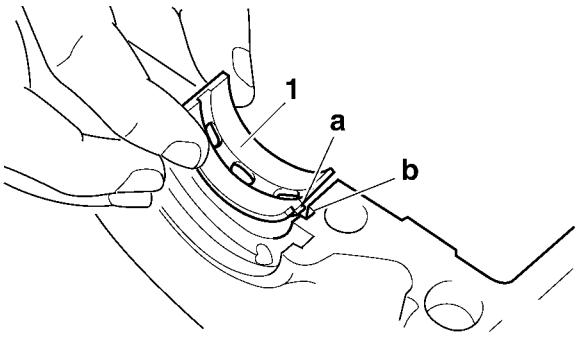

EAS26240

# TRANSMISSION

**Removing the transmission, shift drum assembly, and shift forks**

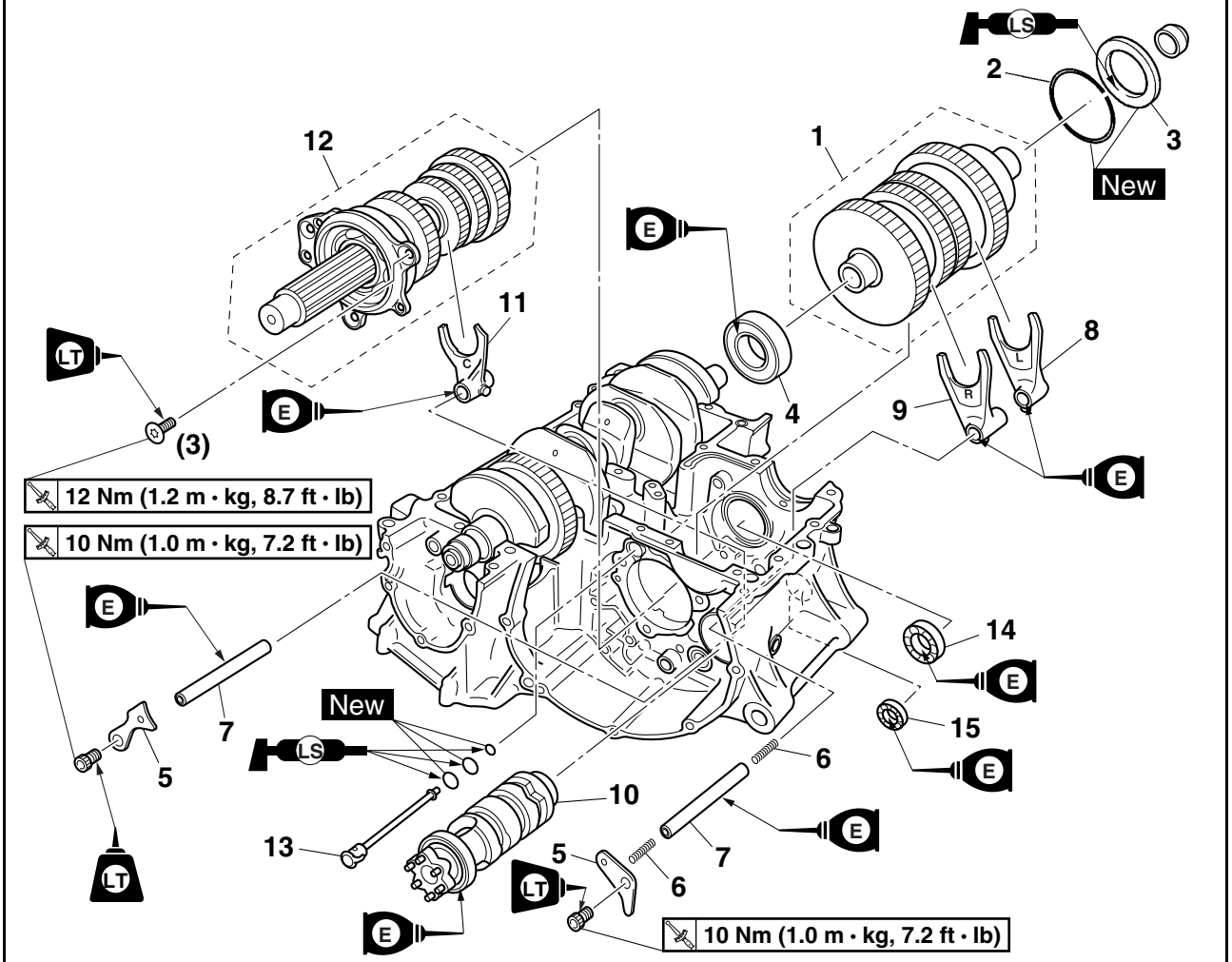


| Order | Job/Parts to remove | Q'ty | Remarks |
|---|---|---|---|
| | Crankcase | | Separate.<br>Refer to "CRANKCASE" on page 5-55. |
| 1 | Drive axle assembly | 1 | |
| 2 | Circlip | 1 | |
| 3 | Oil seal | 1 | |
| 4 | Bearing | 1 | |
| 5 | Shift drum retainer | 2 | |
| 6 | Spring | 2 | |
| 7 | Shift fork guide bar | 2 | |
| 8 | Shift fork-L | 1 | |
| 9 | Shift fork-R | 1 | |
| 10 | Shift drum assembly | 1 | |
| 11 | Shift fork-C | 1 | |
| 12 | Main axle assembly | 1 | |
| 13 | Oil pipe | 1 | |
| 14 | Bearing | 1 | |

**Removing the transmission, shift drum assembly, and shift forks**

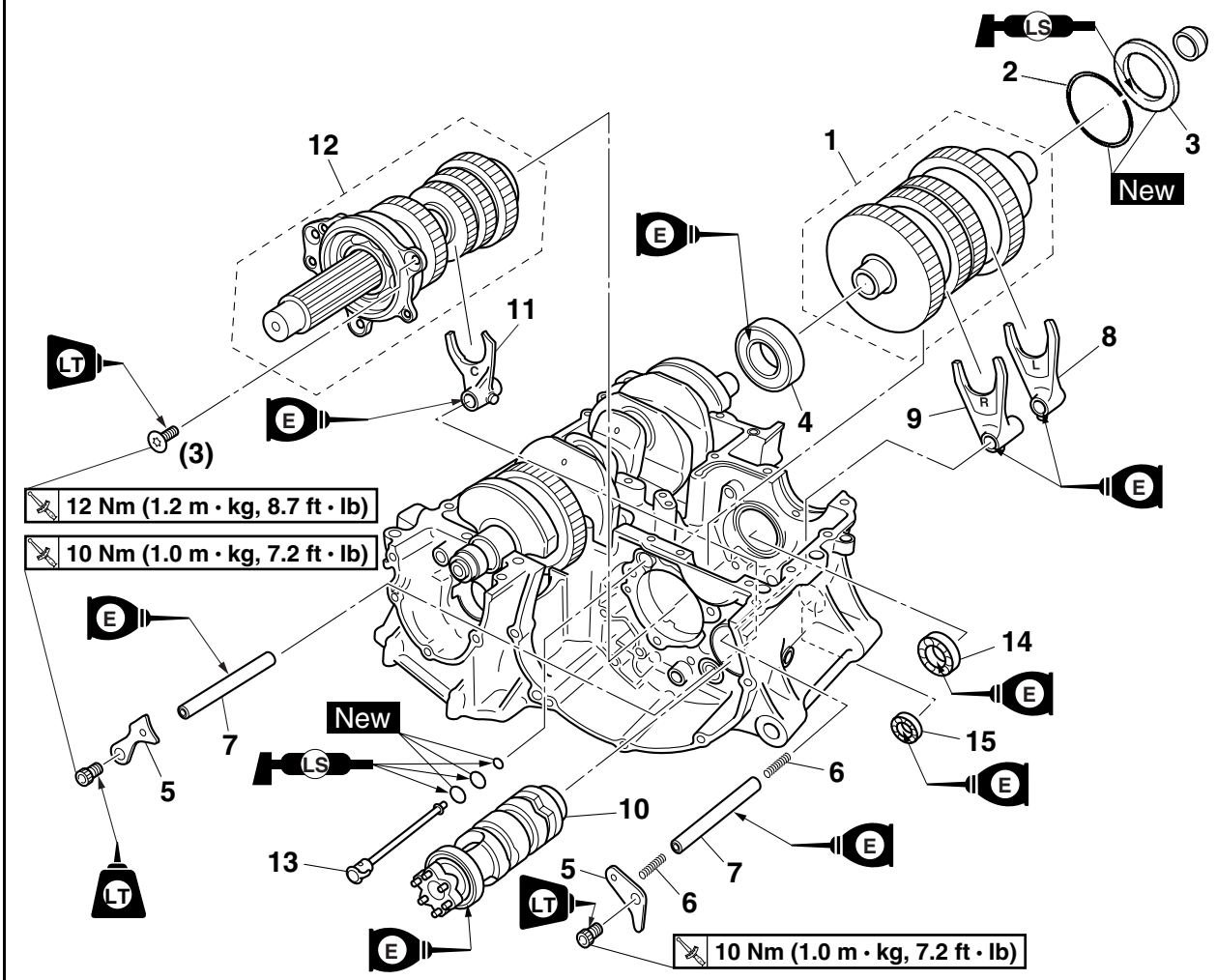


| Order | Job/Parts to remove | Q'ty | Remarks |
|---|---|---|---|
| 15 | Bearing | 1 | |
| | | | For installation, reverse the removal procedure. |

**Disassembling the main axle assembly**

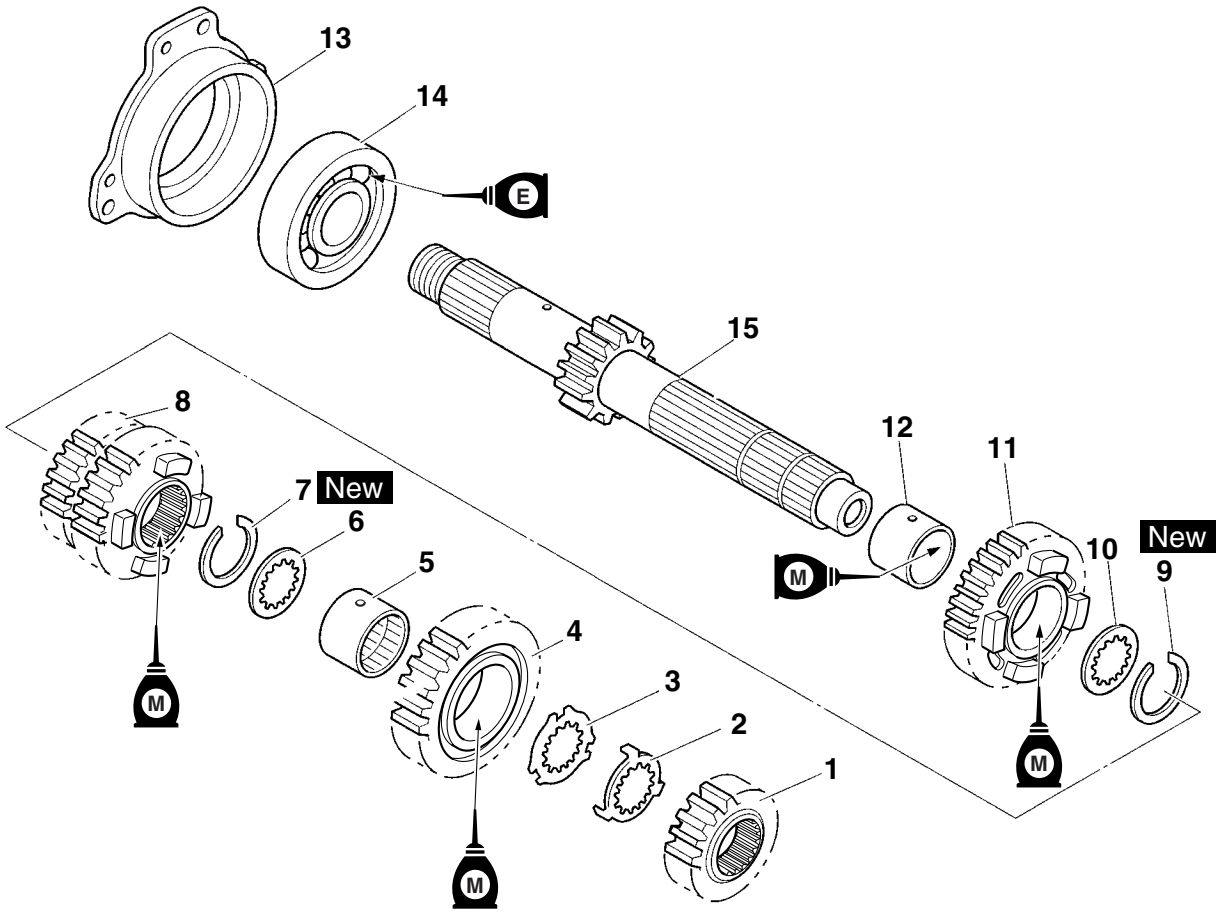


| Order | Job/Parts to remove | Q'ty | Remarks |
|---|---|---|---|
| 1 | 2nd pinion gear | 1 | |
| 2 | Toothed lock washer | 1 | |
| 3 | Toothed lock washer retainer | 1 | |
| 4 | 6th pinion gear | 1 | |
| 5 | Collar | 1 | |
| 6 | Washer | 1 | |
| 7 | Circlip | 1 | |
| 8 | 3rd/4th pinion gear | 1 | |
| 9 | Circlip | 1 | |
| 10 | Washer | 1 | |
| 11 | 5th pinion gear | 1 | |
| 12 | Collar | 1 | |
| 13 | Bearing housing | 1 | |
| 14 | Bearing | 1 | |
| 15 | Main axle/1st pinion gear | 1 | |
| | | | For assembly, reverse the disassembly procedure. |

**Disassembling the drive axle assembly**

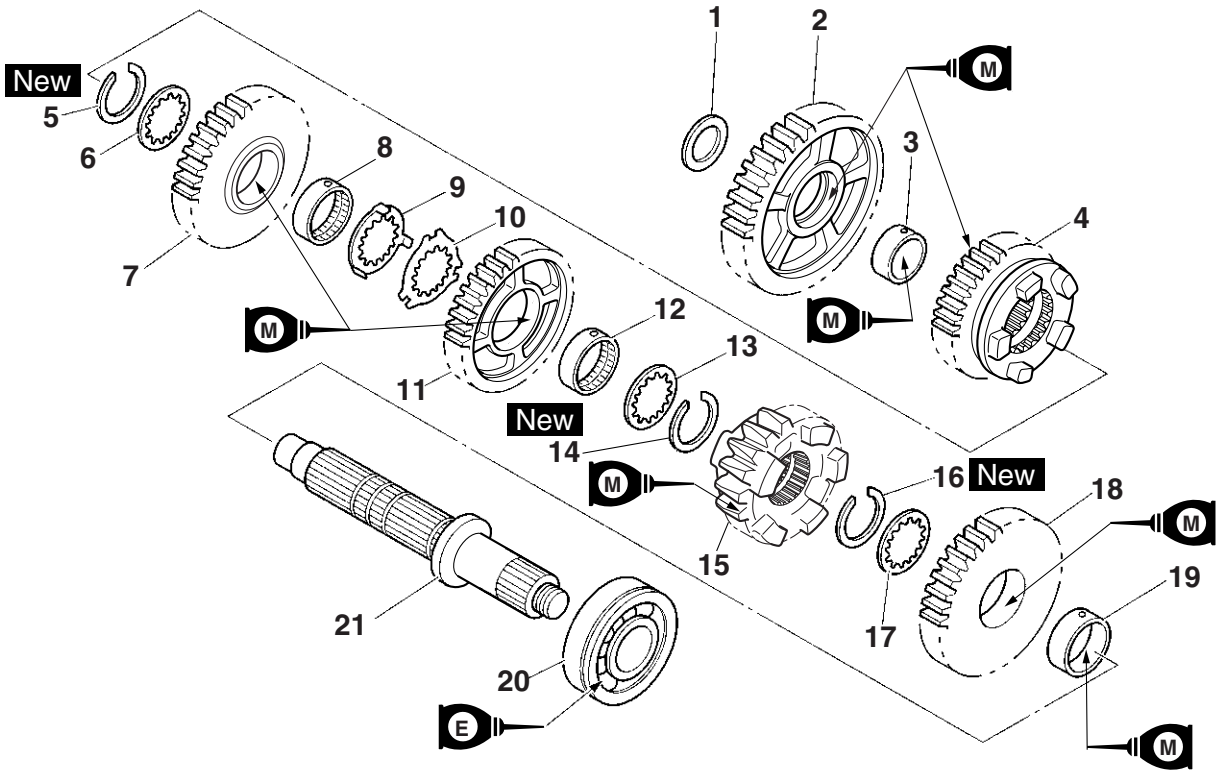


| Order | Job/Parts to remove | Q'ty | Remarks |
|---|---|---|---|
| 1 | Washer | 1 | |
| 2 | 1st wheel gear | 1 | |
| 3 | Collar | 1 | |
| 4 | 5th wheel gear | 1 | |
| 5 | Circlip | 1 | |
| 6 | Washer | 1 | |
| 7 | 3rd wheel gear | 1 | |
| 8 | Collar | 1 | |
| 9 | Toothed lock washer | 1 | |
| 10 | Toothed lock washer retainer | 1 | |
| 11 | 4th wheel gear | 1 | |
| 12 | Collar | 1 | |
| 13 | Washer | 1 | |
| 14 | Circlip | 1 | |
| 15 | 6th wheel gear | 1 | |
| 16 | Circlip | 1 | |
| 17 | Washer | 1 | |

**Disassembling the drive axle assembly**

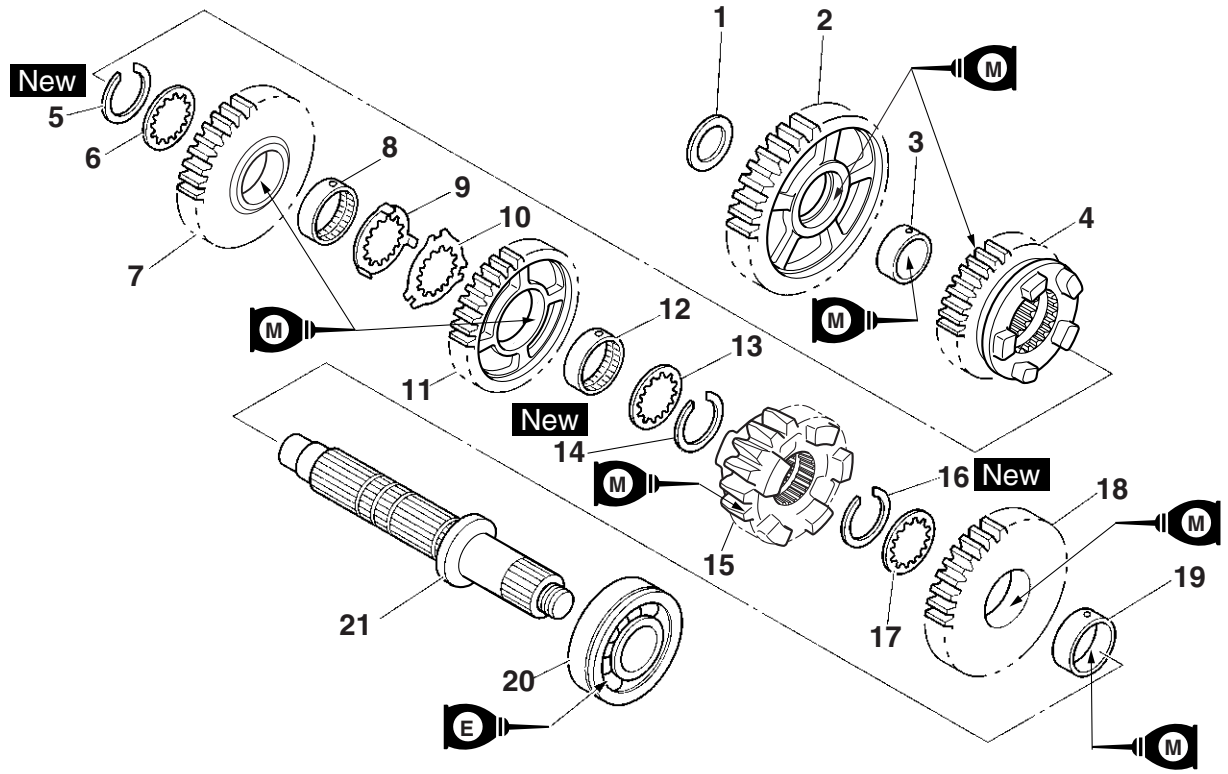


| Order | Job/Parts to remove | Q'ty | Remarks |
|---|---|---|---|
| 18 | 2nd wheel gear | 1 | |
| 19 | Collar | 1 | |
| 20 | Bearing | 1 | |
| 21 | Drive axle | 1 | |
| | | | For assembly, reverse the disassembly procedure. |

ET2C01014
## REMOVING THE TRANSMISSION

1. Remove:
   - Main axle assembly “1”

▼▼▼▼▼▼▼▼▼▼▼▼▼▼▼▼▼▼▼▼▼▼▼▼▼▼▼▼▼▼▼▼▼▼▼▼▼▼

a. Remove the main axle assembly bearing housing bolts “2”

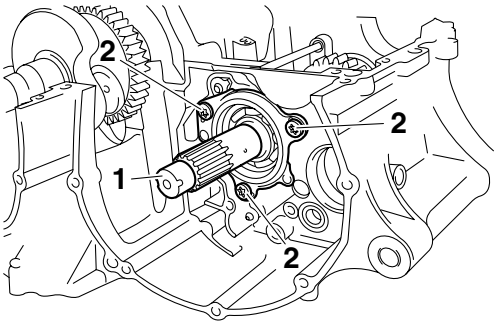


b. Insert two bolts “3” of the proper size, as shown in the illustration, into the main axle assembly bearing housing.

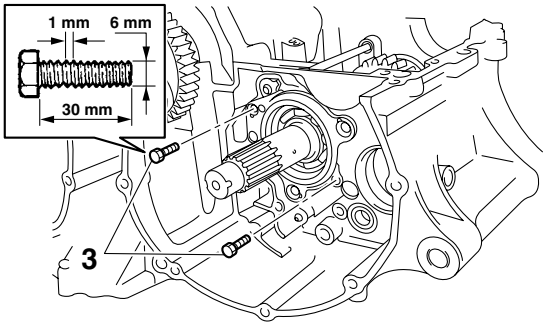


c. Tighten the bolts until they contact the crankcase surface.
d. Continue tightening the bolts until the main axle assembly comes free from the upper crankcase.

▲▲▲▲▲▲▲▲▲▲▲▲▲▲▲▲▲▲▲▲▲▲▲▲▲▲▲▲▲▲▲▲▲▲▲▲▲▲

EAS26260
## CHECKING THE SHIFT FORKS

The following procedure applies to all of the shift forks.

1. Check:
   - Shift fork cam follower “1”
   - Shift fork pawl “2”
     Bends/damage/scoring/wear → Replace the shift fork.

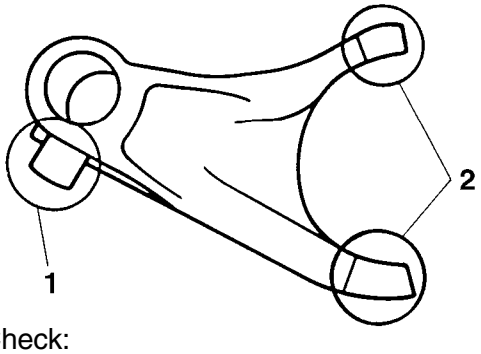


2. Check:
   - Shift fork guide bar
     Roll the shift fork guide bar on a flat surface.
     Bends → Replace.

EWA12840

**⚠ WARNING**

**Do not attempt to straighten a bent shift fork guide bar.**

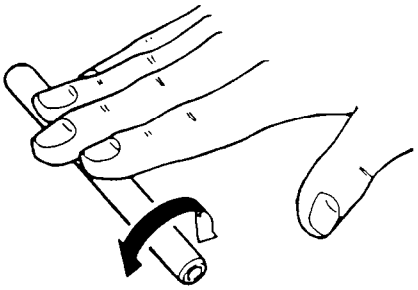

3. Check:
   - Shift fork movement
     (along the shift fork guide bar)
     Rough movement → Replace the shift forks and shift fork guide bar as a set.

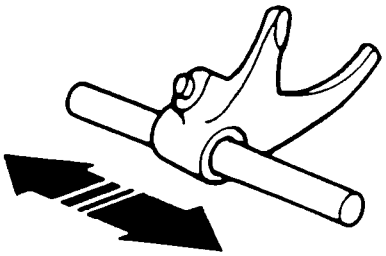

EAS26270
## CHECKING THE SHIFT DRUM ASSEMBLY

1. Check:
   - Shift drum groove
     Damage/scratches/wear → Replace the shift drum assembly.
   - Shift drum segment “1”
     Damage/wear → Replace the shift drum assembly.

- Shift drum bearing “2”
  Damage/pitting → Replace the shift drum assembly.

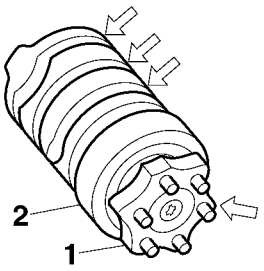


EAS26300
## CHECKING THE TRANSMISSION

1. Measure:
   - Main axle runout
     (with a centering device and dial gauge “1”)
     Out of specification → Replace the main axle.

| | |
|---|---|
| | **Main axle runout limit**<br>**0.02 mm (0.0008 in)** |

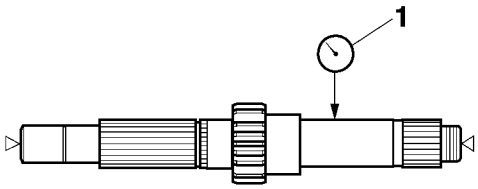


2. Measure:
   - Drive axle runout
     (with a centering device and dial gauge “1”)
     Out of specification → Replace the drive axle.

| | |
|---|---|
| | **Drive axle runout limit**<br>**0.02 mm (0.0008 in)** |

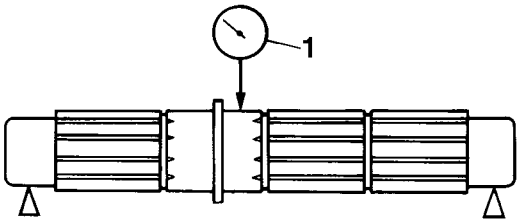


3. Check:
   - Transmission gears
     Blue discoloration/pitting/wear → Replace the defective gear(s).
   - Transmission gear dogs
     Cracks/damage/rounded edges → Replace the defective gear(s).

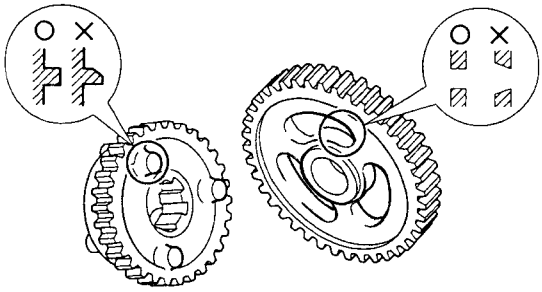


4. Check:
   - Transmission gear engagement
     (each pinion gear to its respective wheel gear)
     Incorrect → Reassemble the transmission axle assemblies.
5. Check:
   - Transmission gear movement
     Rough movement → Replace the defective part(s).
6. Check:
   - Circlips
     Bends/damage/looseness → Replace.

ET2C01015
## ASSEMBLING THE MAIN AXLE AND DRIVE AXLE

1. Install:
   - Toothed washer “1”
   - Circlip “2” New

**NOTE:**
- Be sure the circlip sharp-edged corner “a” is positioned opposite side to the toothed washer and gear.
- Install the circlip so that both ends “b” rest on the sides of a spline “c” with both axles aligned.

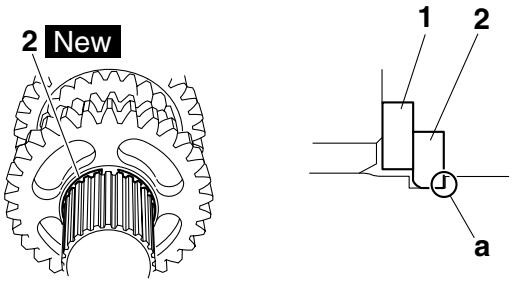


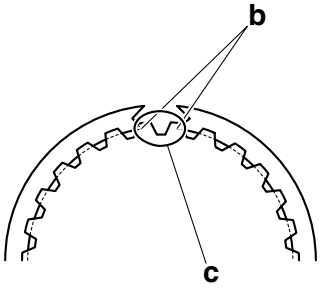


2. Install:
   - Toothed lock washer retainer “1”
   - Toothed lock washer “2”

**NOTE:**

- With the toothed lock washer retainer “1” in the groove “a” in the axle, align the projection “c” on the retainer with an axle spline “b”, and then install the toothed lock washer “2”.
- Be sure to align the projection on the toothed lock washer that is between the alignment marks “e” with the alignment mark “d” on the retainer.

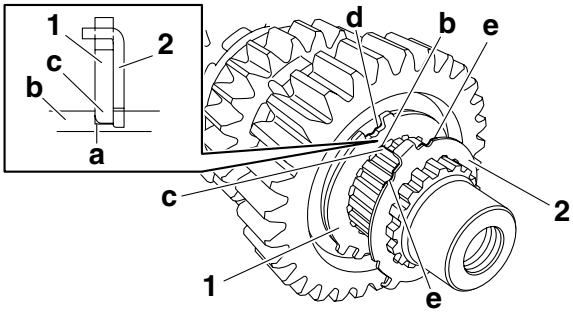


ET2C01016

## INSTALLING THE TRANSMISSION

1. Install:
   - Bearing “1”

**NOTE:**

Face the seal side of the bearing to the outside and install it close to the right side end of the crankcase.

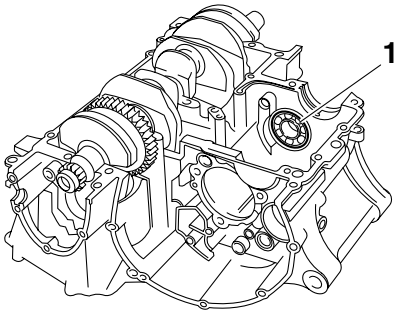


2. Install:
   - Main axle assembly “1”

**NOTE:**

Stake the main axle assembly bearing housing bolts “2” at a cutout “a” in the main axle assembly bearing housing “3”.

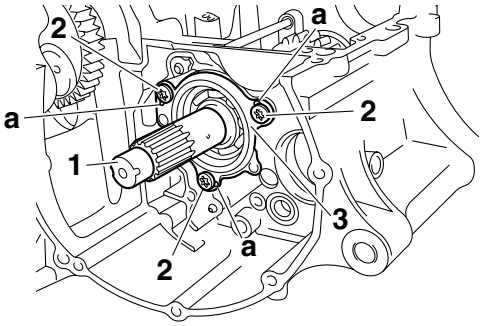


3. Install:
   - Shift fork-C “1”
   - Shift drum assembly “2”
   - Shift fork guide bar “3”

**NOTE:**

- The embossed marks on the shift forks should face towards the right side of the engine and be in the following sequence: “R”, “C”, “L”.
- Carefully position the shift forks so that they are installed correctly into the transmission gears.
- Install shift fork-C into the groove “a” in the 3rd and 4th pinion gear on the main axle.

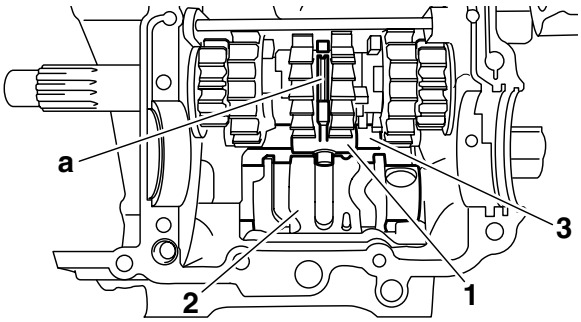


4. Install:
   - Shift fork-R “1”
   - Shift fork-L “2”

- Shift fork guide bar
- Springs
- Shift drum retainers “3”
- Bearing
- Oil seal
- Circlip “4”
- Drive axle assembly “5”

| | |
|---|---|
| | **Shift drum retainer bolt**<br>**10 Nm (1.0 m·kg, 7.2 ft·lb)**<br>**LOCTITE®** |

**NOTE:**

- Install shift fork-R into the groove “a” in the 5th wheel gear and shift fork-L into the groove “b” in the 6th wheel gear on the drive axle.
- Install the shift drum retainer with its “OUT” mark “c” facing outward.
- Make sure that the drive axle bearing circlip “4” is inserted into the grooves “d” in the upper crankcase.

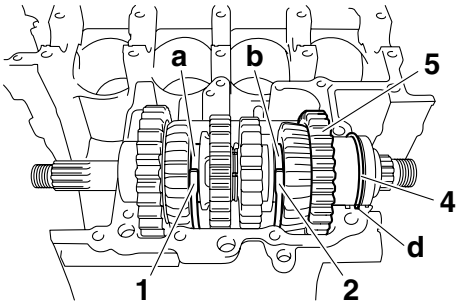


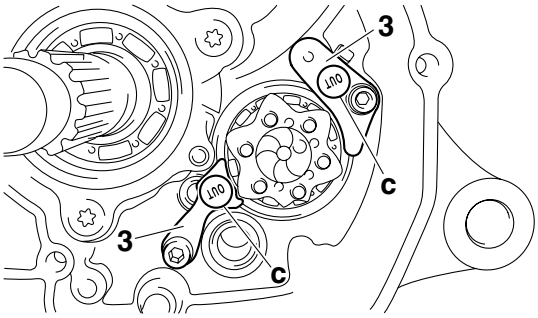

# COOLING SYSTEM

**RADIATOR** ..... 6-1
CHECKING THE RADIATOR ..... 6-3
INSTALLING THE RADIATOR ..... 6-3

**OIL COOLER** ..... 6-4
CHECKING THE OIL COOLER ..... 6-6
INSTALLING THE OIL COOLER ..... 6-6

**THERMOSTAT** ..... 6-7
CHECKING THE THERMOSTAT ..... 6-8
INSTALLING THE THERMOSTAT ..... 6-8

**WATER PUMP** ..... 6-9
CHECKING THE WATER PUMP ..... 6-10
INSTALLING THE WATER PUMP ..... 6-10

EAS26380

# RADIATOR

**Removing the radiator**

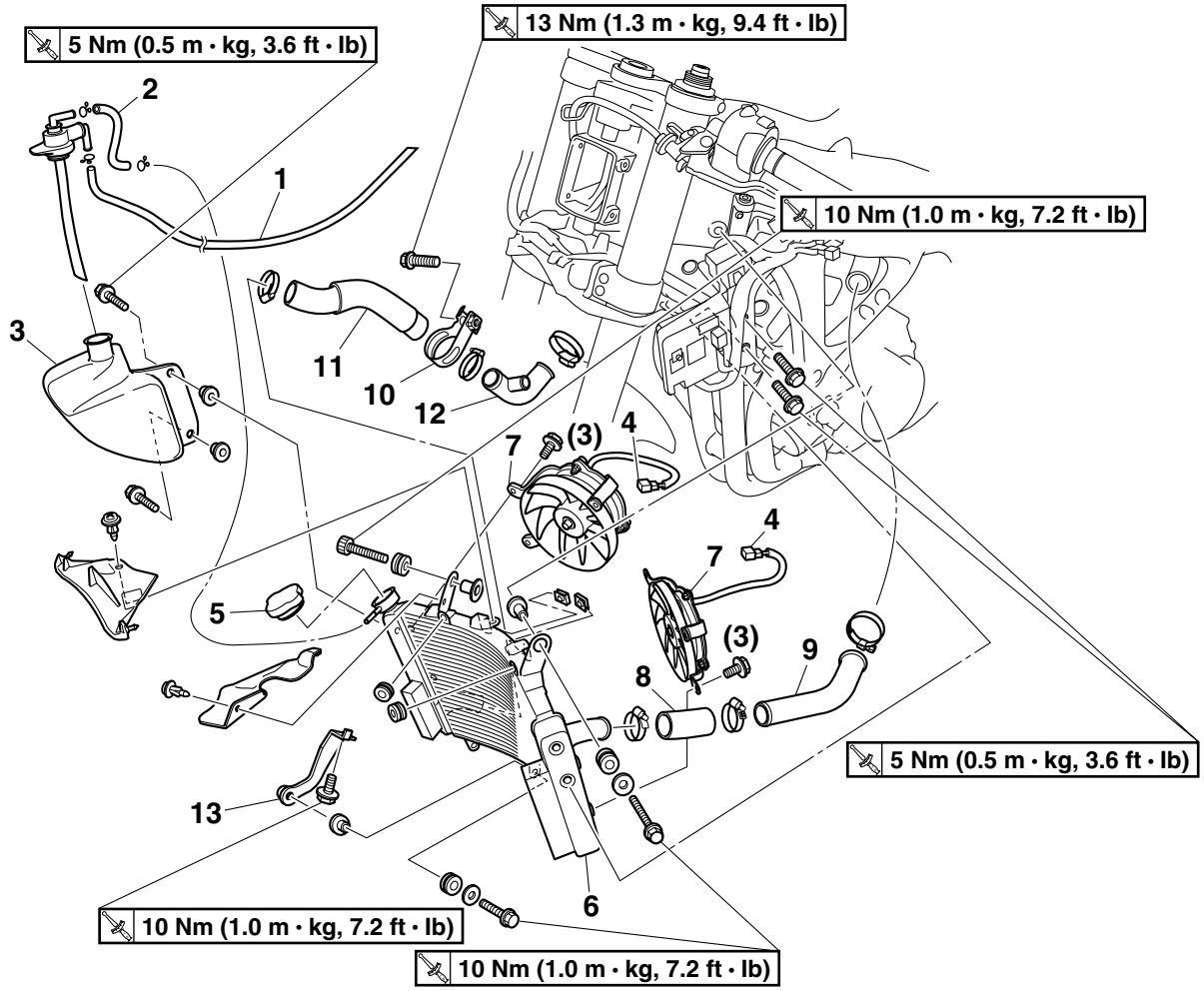


| Order | Job/Parts to remove | Q'ty | Remarks |
|---|---|---|---|
| | Lower side cowlings/Bottom cowlings | | Refer to "GENERAL CHASSIS" on page 4-1. |
| | Coolant | | Drain.<br>Refer to "CHANGING THE COOLANT" on page 3-18. |
| 1 | Coolant reservoir breather hose | 1 | |
| 2 | Coolant reservoir hose | 1 | |
| 3 | Coolant reservoir | 1 | |
| 4 | Radiator fan motor coupler | 2 | Disconnect. |
| 5 | Radiator cap | 1 | |
| 6 | Radiator | 1 | |
| 7 | Radiator fan | 2 | |
| 8 | Radiator inlet hose | 1 | |
| 9 | Radiator inlet pipe | 1 | |
| 10 | Radiator outlet hose holder | 1 | |
| 11 | Radiator outlet hose | 1 | |
| 12 | Radiator outlet pipe | 1 | |

**Removing the radiator**

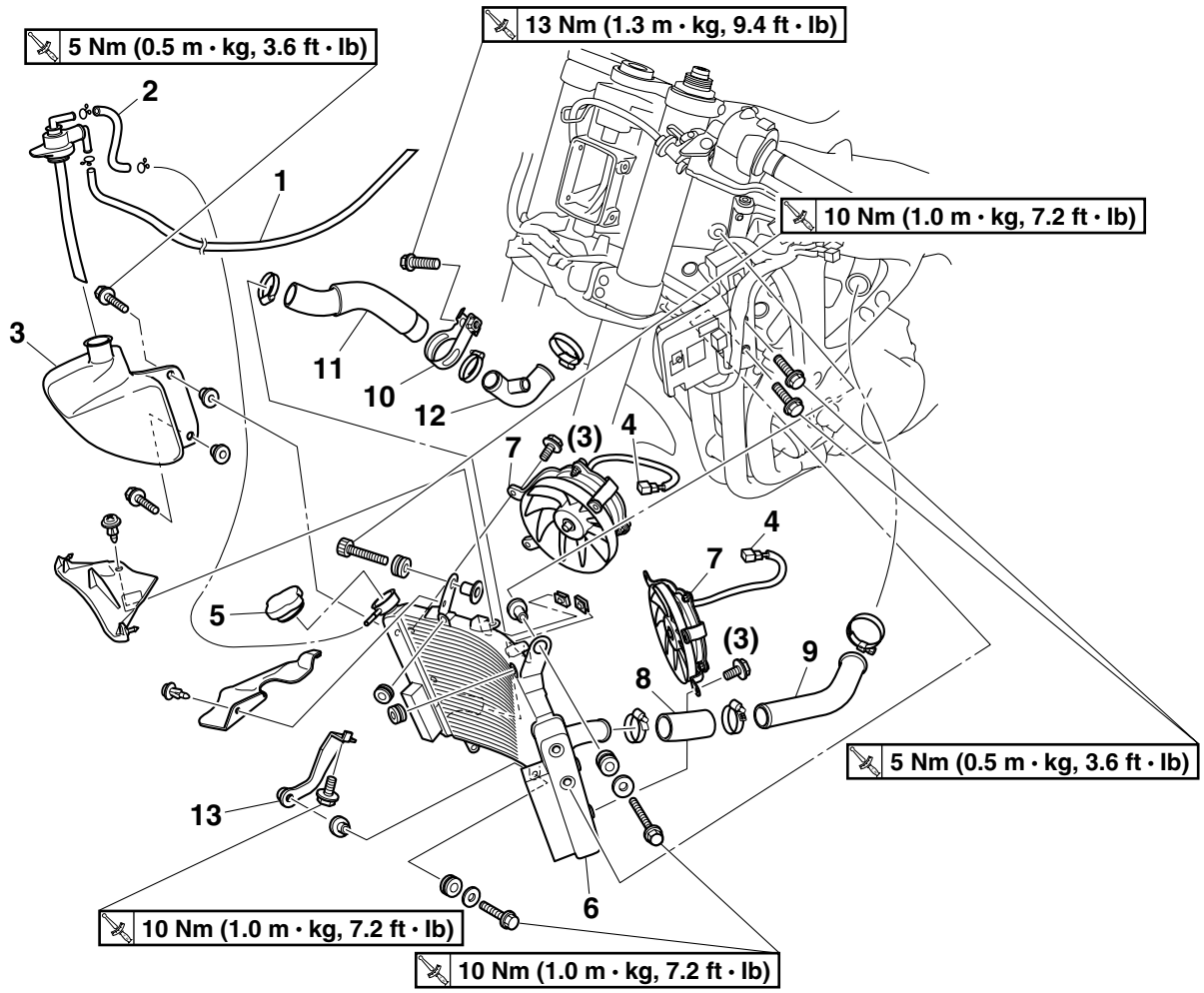


| Order | Job/Parts to remove | Q'ty | Remarks |
|---|---|---|---|
| 13 | Radiator bracket | 1 | |
| | | | For installation, reverse the removal procedure. |

EAS26390
## CHECKING THE RADIATOR

1. Check:
   - Radiator fins
     Obstruction → Clean.
     Apply compressed air to the rear of the radiator.
     Damage → Repair or replace.

**NOTE:**

Straighten any flattened fins with a thin, flat-head screwdriver.

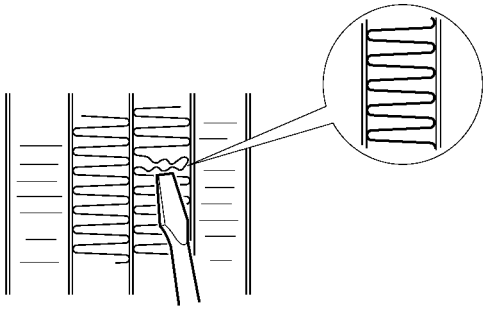

2. Check:
   - Radiator hoses
   - Radiator pipes
     Cracks/damage → Replace.
3. Measure:
   - Radiator cap opening pressure
     Below the specified pressure → Replace the radiator cap.

**Radiator cap opening pressure**
**107.9–137.3 kPa (15.6–19.9 psi)**
**(1.08–1.37 kgf/cm²)**

▼▼▼▼▼▼▼▼▼▼▼▼▼▼▼▼▼▼▼▼▼▼▼▼▼▼▼▼▼▼▼▼▼▼

a. Install the radiator cap tester “1” and radiator cap tester adapter “2” to the radiator cap “3”.

**Radiator cap tester**
**90890-01325**
**Radiator pressure tester**
**YU-24460-01**
**Radiator cap tester adapter**
**90890-01352**
**Radiator pressure tester adapter**
**YU-33984**

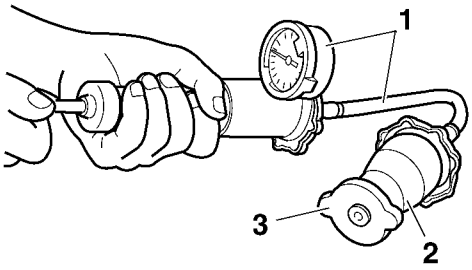


b. Apply the specified pressure for ten seconds and make sure there is no drop in pressure.

▲▲▲▲▲▲▲▲▲▲▲▲▲▲▲▲▲▲▲▲▲▲▲▲▲▲▲▲▲▲▲▲▲▲

4. Check:
   - Radiator fan
     Damage → Replace.
     Malfunction → Check and repair.
     Refer to “COOLING SYSTEM” on page 8-29.

EAS26400
## INSTALLING THE RADIATOR

1. Fill:
   - Cooling system
     (with the specified amount of the recommended coolant)
     Refer to “CHANGING THE COOLANT” on page 3-18.
2. Check:
   - Cooling system
     Leaks → Repair or replace any faulty part.
3. Measure:
   - Radiator cap opening pressure
     Below the specified pressure → Replace the radiator cap.
     Refer to “CHECKING THE RADIATOR” on page 6-3.

EAS26410

# OIL COOLER

**Removing the oil cooler**

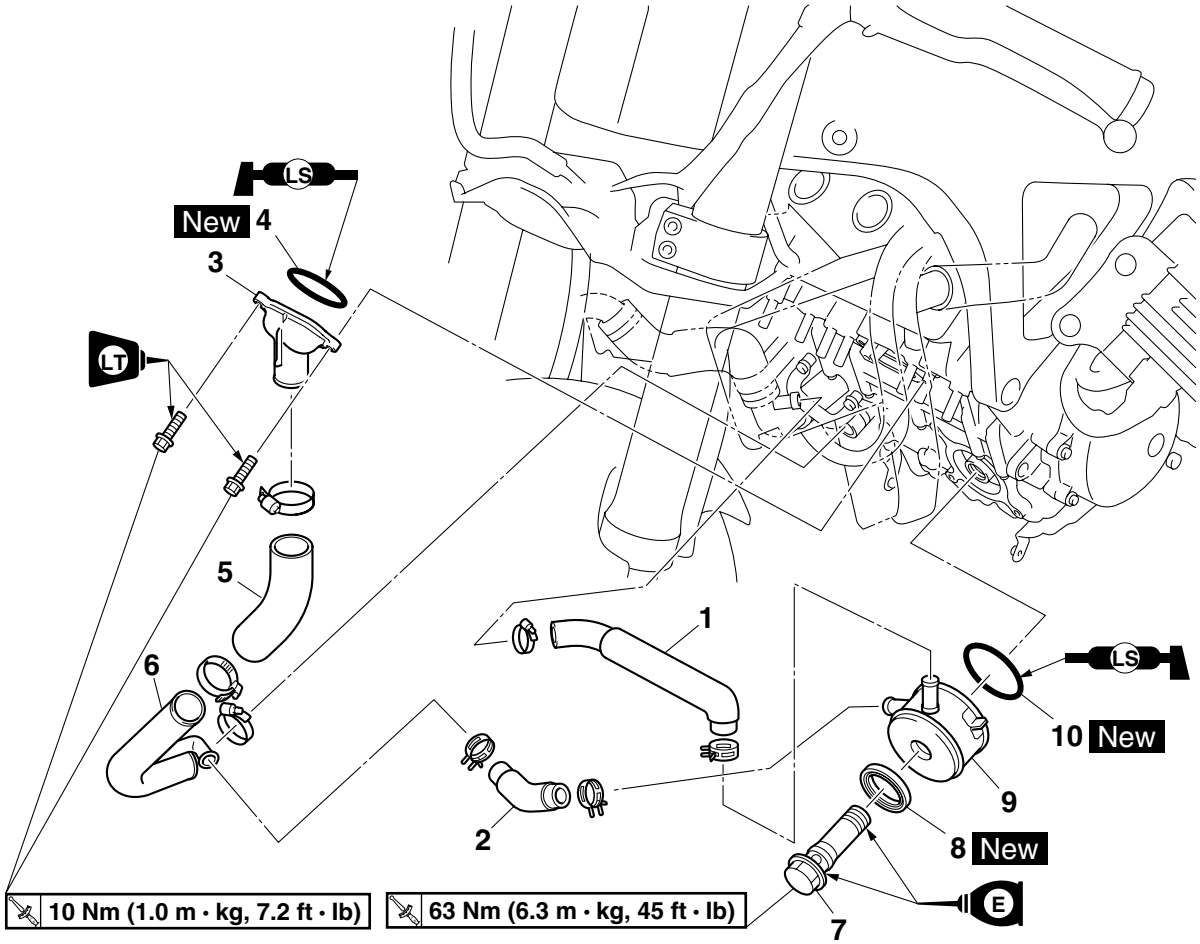


| Order | Job/Parts to remove | Q'ty | Remarks |
|---|---|---|---|
| | Engine oil | | Drain.<br>Refer to "CHANGING THE ENGINE OIL" on page 3-11. |
| | Coolant | | Drain.<br>Refer to "CHANGING THE COOLANT" on page 3-18. |
| | Exhaust pipe assembly | | Refer to "ENGINE REMOVAL" on page 5-1. |
| 1 | Oil cooler outlet hose | 1 | |
| 2 | Oil cooler inlet hose | 1 | |
| 3 | Water jacket joint | 1 | |
| 4 | O-ring | 1 | |
| 5 | Water jacket joint inlet hose | 1 | |
| 6 | Water pump outlet pipe | 1 | |
| 7 | Oil cooler union bolt | 1 | |
| 8 | Gasket | 1 | |
| 9 | Oil cooler | 1 | |

**Removing the oil cooler**

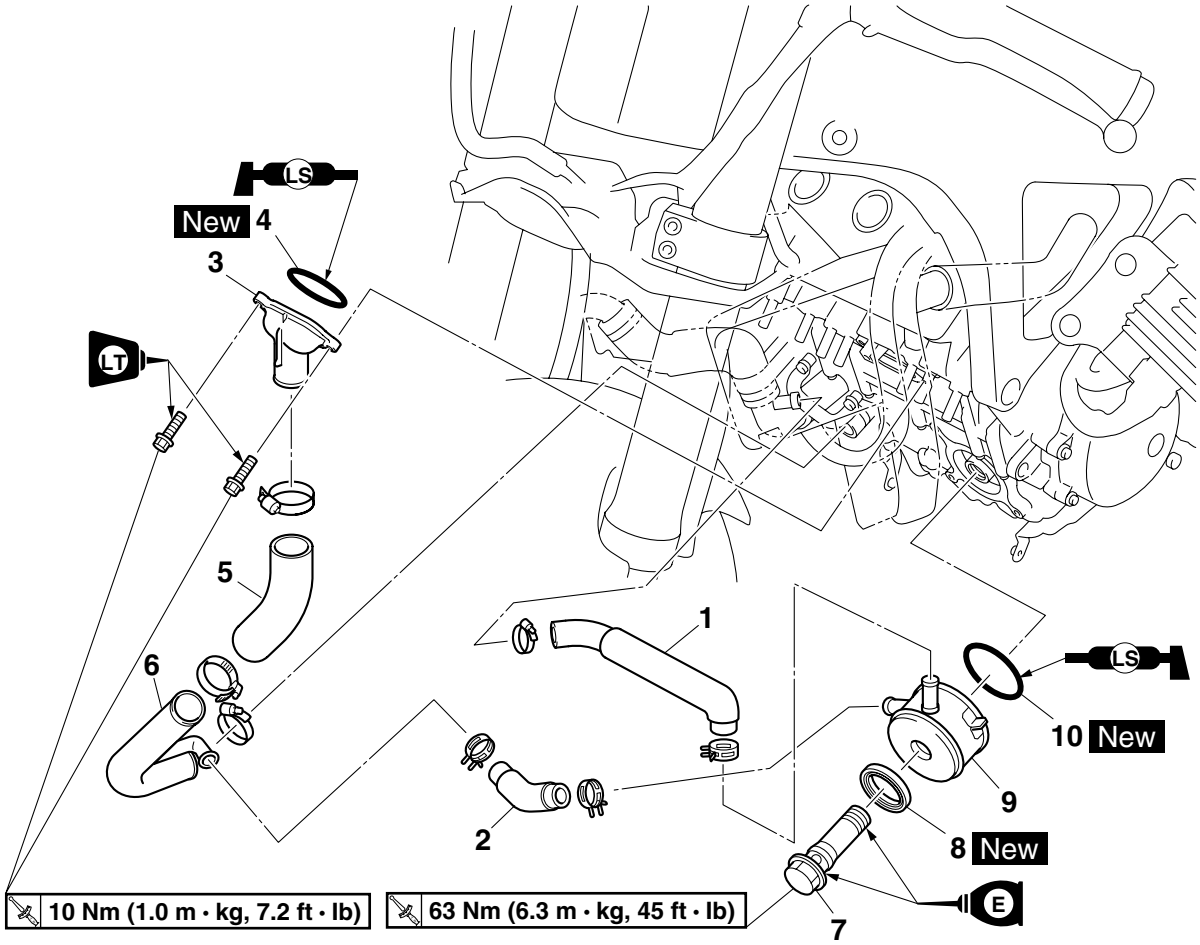


| Order | Job/Parts to remove | Q'ty | Remarks |
|---|---|---|---|
| 10 | O-ring | 1 | |
| | | | For installation, reverse the removal procedure. |

EAS26420
## CHECKING THE OIL COOLER

1. Check:
   - Oil cooler
     Cracks/damage → Replace.
2. Check:
   - Oil cooler inlet hose
   - Oil cooler outlet hose
   - Water jacket joint hose
     Cracks/damage/wear → Replace.
3. Check:
   - Water jacket joint pipe
     Damage → Replace.
     Obstruction → Wash and blow out with compressed air.

EAS26430
## INSTALLING THE OIL COOLER

1. Clean:
   - Mating surfaces of the oil cooler and the crankcase
     (with a cloth dampened with lacquer thinner)
2. Install:
   - O-ring New
   - Oil cooler "1"
   - Gasket "2" New
   - Oil cooler union bolt "3"

| | |
|---|---|
| 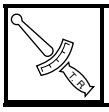 | **Oil cooler union bolt**<br>**63 Nm (6.3 m·kg, 43 ft·lb)** |

**NOTE:**
- Before installing the oil cooler, lubricate the its union bolt with a thin coat of engine oil.
- Make sure the O-ring is positioned properly.
- Make sure the projection "a" on the oil cooler touches the projection "b" on the crankcase.

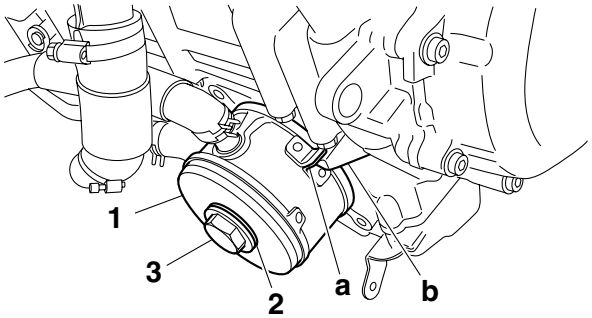


3. Fill:
   - Cooling system
     (with the specified amount of the recommended coolant)
     Refer to "CHANGING THE COOLANT" on page 3-18.
   - Crankcase
     (with the specified amount of the recommended engine oil)
     Refer to "CHANGING THE ENGINE OIL" on page 3-11.
4. Check:
   - Cooling system
     Leaks → Repair or replace any faulty part.
5. Measure:
   - Radiator cap opening pressure
     Below the specified pressure → Replace the radiator cap.
     Refer to "CHECKING THE RADIATOR" on page 6-3.

EAS26440

# THERMOSTAT

**Removing the thermostat**

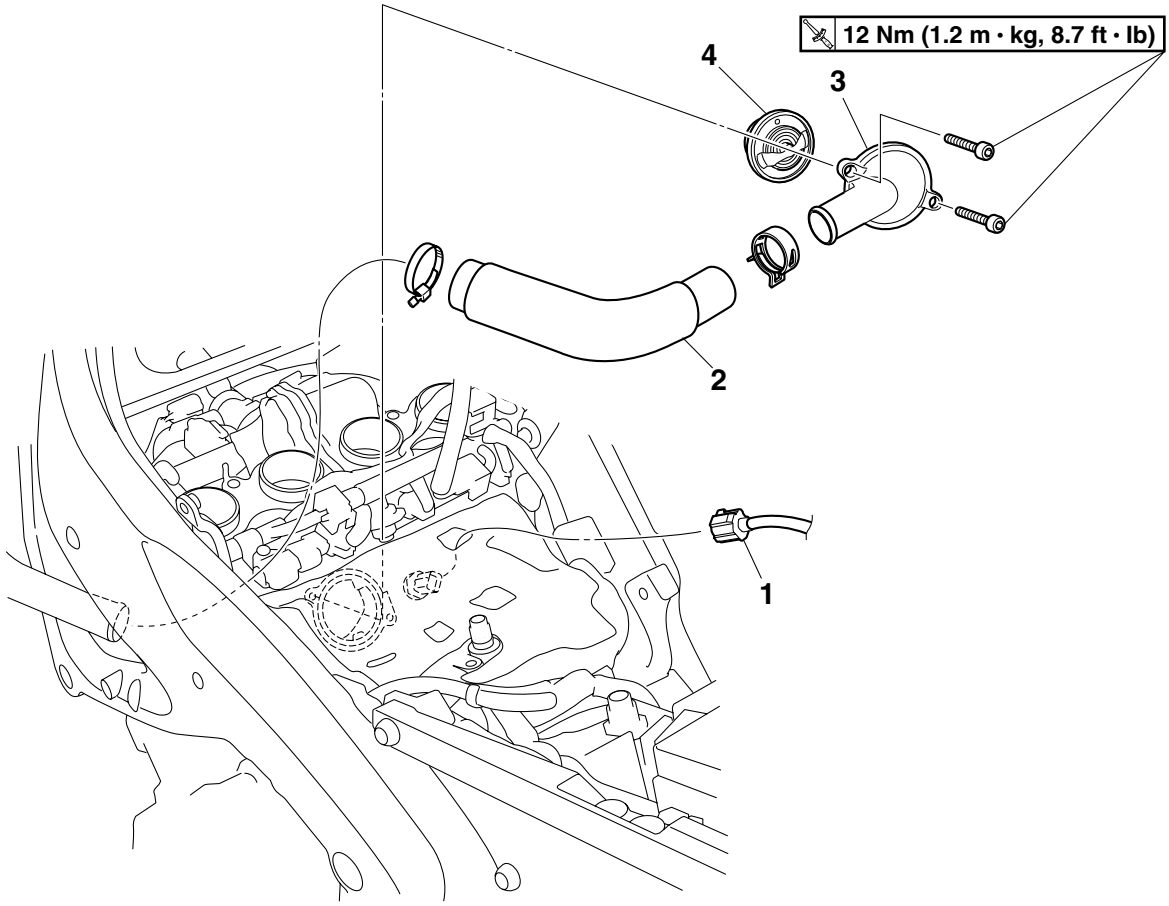


| Order | Job/Parts to remove | Q'ty | Remarks |
|---|---|---|---|
| | Air filter case | | Refer to "AIR FILTER CASE" on page 7-4. |
| | Coolant | | Drain.<br>Refer to "CHANGING THE COOLANT" on page 3-18. |
| 1 | Coolant temperature sensor coupler | 1 | Disconnect. |
| 2 | Thermostat outlet hose | 1 | |
| 3 | Thermostat cover | 1 | |
| 4 | Thermostat | 1 | |
| | | | For installation, reverse the removal procedure. |

EAS26450
## CHECKING THE THERMOSTAT

1. Check:
   - Thermostat
     Does not open at 71–85 °C (159.8–185.0 °F) → Replace.

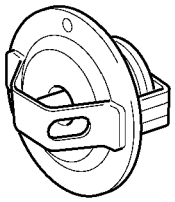

▼▼▼▼▼▼▼▼▼▼▼▼▼▼▼▼▼▼▼▼▼▼▼▼▼▼▼▼▼▼▼▼▼▼▼▼▼▼

a. Suspend the thermostat “1” in a container “2” filled with water.
b. Slowly heat the water “3”.
c. Place a thermometer “4” in the water.
d. While stirring the water, observe the thermostat and thermometer’s indicated temperature.

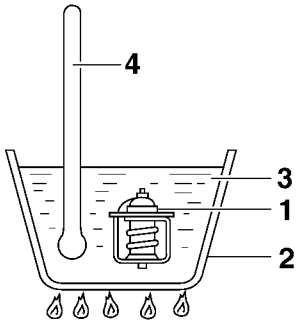


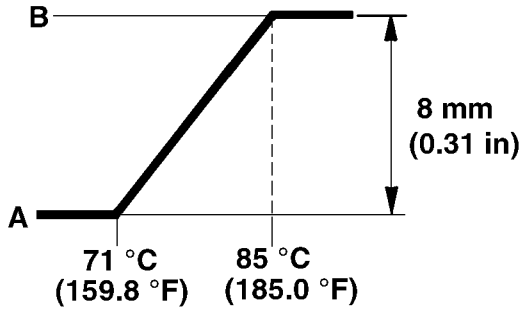


A. Fully closed
B. Fully open

**NOTE:**

If the accuracy of the thermostat is in doubt, replace it. A faulty thermostat could cause serious overheating or overcooling.

▲▲▲▲▲▲▲▲▲▲▲▲▲▲▲▲▲▲▲▲▲▲▲▲▲▲▲▲▲▲▲▲▲▲▲▲▲▲

2. Check:
   - Thermostat cover
     Cracks/damage → Replace.

EAS26480
## INSTALLING THE THERMOSTAT

1. Install:
   - Thermostat

**NOTE:**

Install the thermostat with its breather hole “a” facing up.

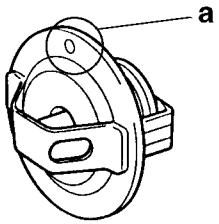


2. Fill:
   - Cooling system
     (with the specified amount of the recommended coolant)
     Refer to “CHANGING THE COOLANT” on page 3-18.
3. Check:
   - Cooling system
     Leaks → Repair or replace any faulty part.
4. Measure:
   - Radiator cap opening pressure
     Below the specified pressure → Replace the radiator cap.
     Refer to “CHECKING THE RADIATOR” on page 6-3.

EAS26500

# WATER PUMP

**Removing the water pump**

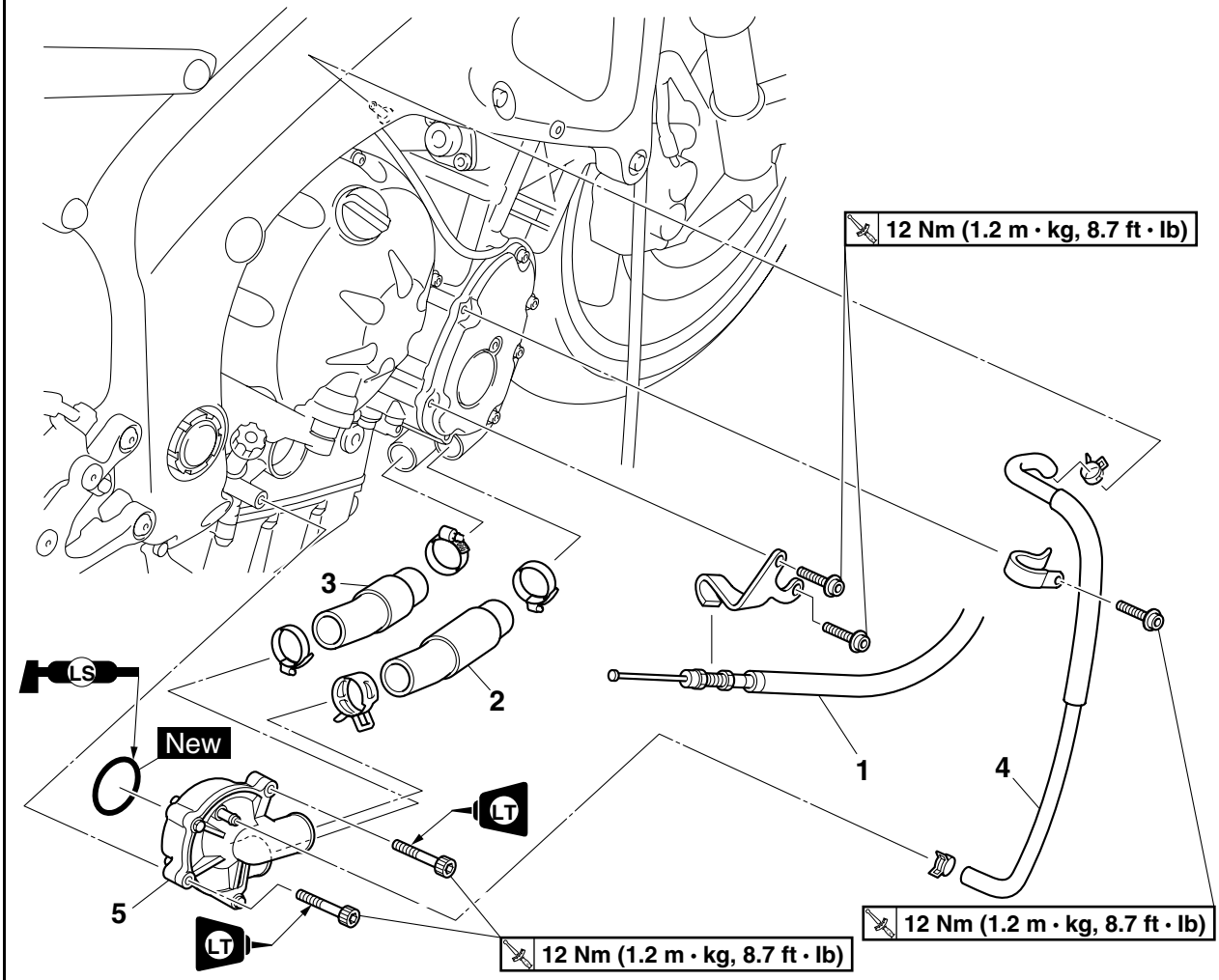


| Order | Job/Parts to remove | Q'ty | Remarks |
|---|---|---|---|
| | | | It is not necessary to remove the water pump unless the coolant level is extremely low or the coolant contains engine oil. |
| | Right bottom cowling | | Refer to "GENERAL CHASSIS" on page 4-1. |
| | Air filter case | | Refer to "AIR FILTER CASE" on page 7-4. |
| | Coolant | | Drain.<br>Refer to "CHANGING THE COOLANT" on page 3-18. |
| 1 | Clutch cable | 1 | Disconnect. |
| 2 | Water pump inlet hose | 1 | |
| 3 | Water pump outlet hose | 1 | |
| 4 | Water pump breather hose | 1 | |
| 5 | Water pump assembly | 1 | |
| | | | For installation, reverse the removal procedure. |

EAS26540
## CHECKING THE WATER PUMP
1. Check:
   - Water pump assembly
     Cracks/damage → Replace.
2. Check:
   - Water pump inlet hose
   - Water pump outlet hose
   - Water pump breather hose
     Cracks/damage/wear → Replace.

EAS26590
## INSTALLING THE WATER PUMP
1. Install:
   - Water pump assembly “1”
   - O-ring “2” New

**NOTE:**
- Align the slit “a” on the impeller shaft with the projection “b” on the oil pump shaft.
- Lubricate the O-ring with a thin coat of lithium-soap-based grease.

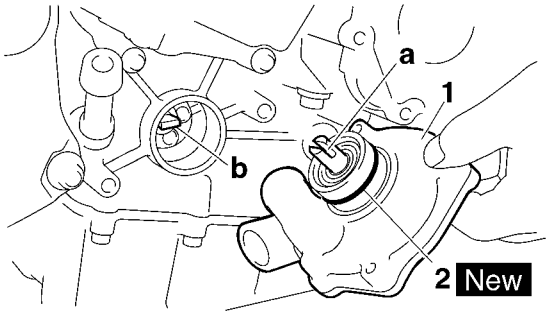


2. Fill:
   - Cooling system
     (with the specified amount of the recommended coolant)
     Refer to “CHANGING THE COOLANT” on page 3-18.
3. Check:
   - Cooling system
     Leaks → Repair or replace the faulty part.
4. Measure:
   - Radiator cap opening pressure
     Below the specified pressure → Replace the radiator cap.
     Refer to “CHECKING THE RADIATOR” on page 6-3.

# FUEL SYSTEM

**FUEL TANK** ..... 7-1
REMOVING THE FUEL TANK ..... 7-2
REMOVING THE FUEL PUMP ..... 7-2
CHECKING THE FUEL PUMP BODY ..... 7-2
CHECKING THE FUEL PUMP OPERATION ..... 7-2
INSTALLING THE FUEL PUMP ..... 7-2
INSTALLING THE FUEL TANK ..... 7-3

**AIR FILTER CASE** ..... 7-4
REMOVING THE FUEL HOSE (PRIMARY INJECTOR FUEL RAIL TO SECONDARY INJECTOR FUEL RAIL) ..... 7-6
CHECKING THE SECONDARY INJECTORS ..... 7-6
INSTALLING THE FUEL HOSE (PRIMARY INJECTOR FUEL RAIL TO SECONDARY INJECTOR FUEL RAIL) ..... 7-6

**THROTTLE BODIES** ..... 7-7
CHECKING THE PRIMARY INJECTORS ..... 7-10
CHECKING THE THROTTLE BODIES ..... 7-10
CHECKING THE FUEL PRESSURE ..... 7-10
ADJUSTING THE THROTTLE POSITION SENSOR (FOR THROTTLE VALVES) ..... 7-10
ADJUSTING THE THROTTLE POSITION SENSOR (FOR THROTTLE CABLE PULLEY) ..... 7-11
INSTALLING THE THROTTLE BODY JOINTS ..... 7-11

**AIR INDUCTION SYSTEM** ..... 7-13
CHECKING THE AIR INDUCTION SYSTEM ..... 7-17

EAS26620

# FUEL TANK

**Removing the fuel tank and fuel pump**

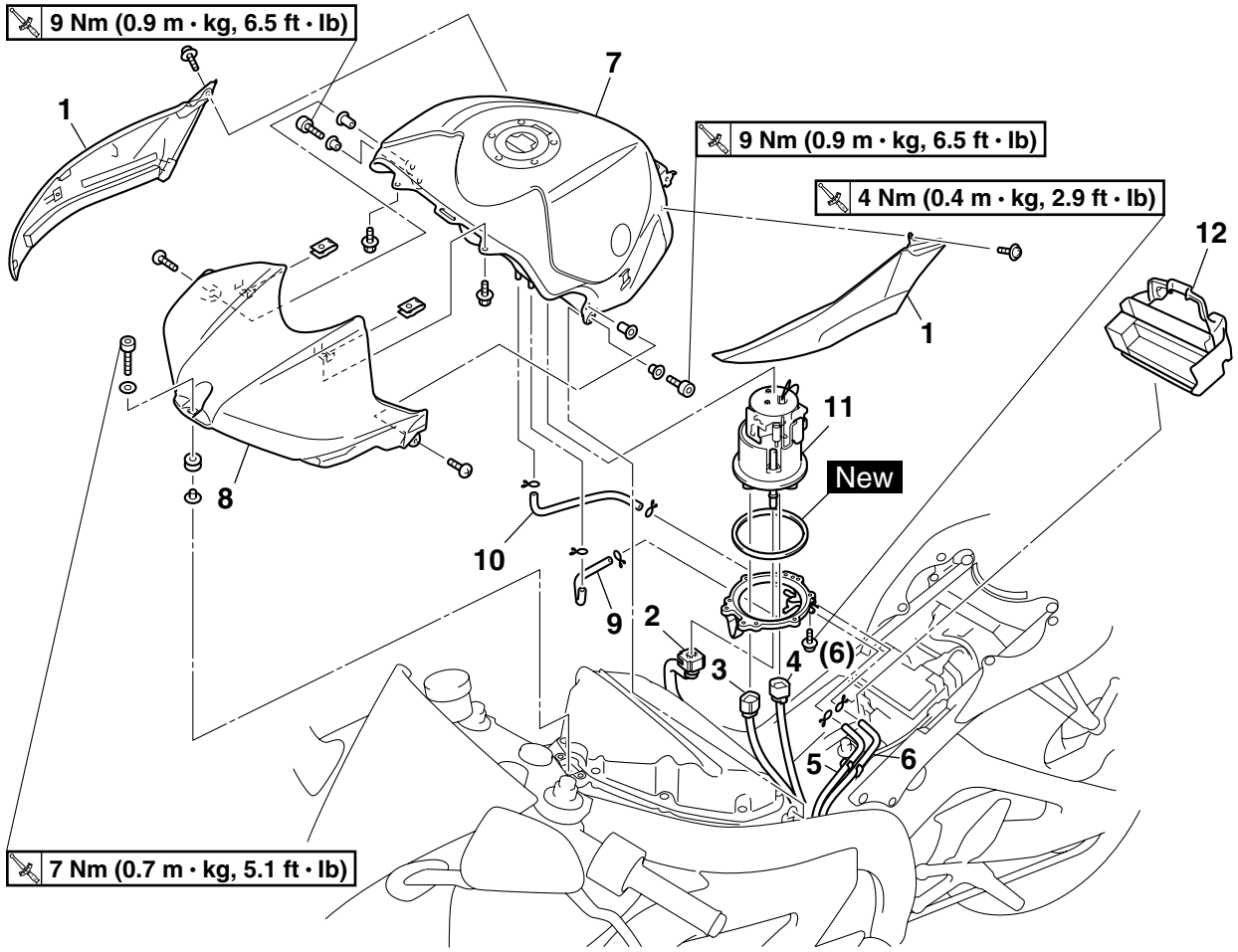


| Order | Job/Parts to remove | Q'ty | Remarks |
|---|---|---|---|
| | Rider seat/Fuel tank bracket | | Refer to "GENERAL CHASSIS" on page 4-1. |
| 1 | Fuel tank side cover | 2 | |
| 2 | Fuel hose (fuel tank to primary injector fuel rail) | 1 | Disconnect. |
| 3 | Fuel sender coupler | 1 | Disconnect. |
| 4 | Fuel pump coupler | 1 | Disconnect. |
| 5 | Fuel tank overflow hose | 1 | Disconnect. |
| 6 | Fuel tank breather hose | 1 | Disconnect. |
| 7 | Fuel tank | 1 | |
| 8 | Fuel tank upper cover | 1 | |
| 9 | Fuel tank overflow hose (fuel tank to hose joint) | 1 | |
| 10 | Fuel tank breather hose (fuel tank to hose joint) | 1 | |
| 11 | Fuel pump | 1 | |
| 12 | Battery cover | 1 | |
| | | | For installation, reverse the removal procedure. |

EAS26630
## REMOVING THE FUEL TANK
1. Extract the fuel in the fuel tank through the fuel tank cap with a pump.
2. Remove:
   - Fuel hose (fuel tank to primary injector rail)

EW2C01008
**WARNING**

**Cover fuel hose connections with a cloth when disconnecting them. Residual pressure in the fuel lines could cause fuel to spurt out when removing the hoses.**

**NOTE:**
- To remove the fuel hose from the fuel pump, slide the fuel hose connector cover “1” on the end of the hose in the direction of the arrow shown, press the two buttons “2” on the sides of the connector, and then remove the hose.
- Remove the fuel hose manually without using any tools.
- Before removing the hose, place a few rags in the area under where it will be removed.

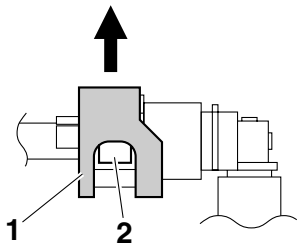


3. Remove:
   - Fuel tank

**NOTE:**

Place the fuel tank on a level surface, resting on its end and the bracket “1” as shown in the illustration. Make sure that the fuel pipe does not contact the ground; otherwise, the fuel pump could be damaged.

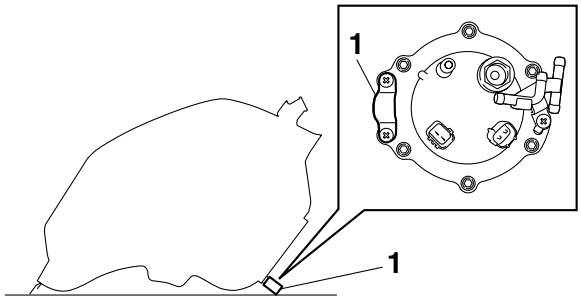


EAS26640
## REMOVING THE FUEL PUMP
1. Remove:
   - Fuel pump

ECA14720
**CAUTION:**
- **Do not drop the fuel pump or give it a strong shock.**
- **Do not touch the base section of the fuel sender.**

EAS26670
## CHECKING THE FUEL PUMP BODY
1. Check:
   - Fuel pump body
     Obstruction → Clean.
     Cracks/damage → Replace fuel pump assembly.
2. Check:
   - Diaphragms and gaskets
     Tears/fatigue/cracks → Replace fuel pump assembly.

EAS26690
## CHECKING THE FUEL PUMP OPERATION
1. Check:
   - Fuel pump operation
     Refer to “CHECKING THE FUEL PUMP” on page 8-108.

EAS26710
## INSTALLING THE FUEL PUMP
1. Tighten:
   - Fuel pump

| | |
|---|---|
| | **Fuel pump bolt**<br>**4 Nm (0.4 m·kg, 2.9 ft·lb)** |

**NOTE:**
- Do not damage the installation surfaces of the fuel tank when installing the fuel pump.
- Always use a new fuel pump gasket.
- Install the fuel pump as shown in the illustration.
- Align the projection “a” on the fuel pump with the slot in the fuel pump bracket.
- Tighten the fuel pump bolts in the proper tightening sequence as shown.

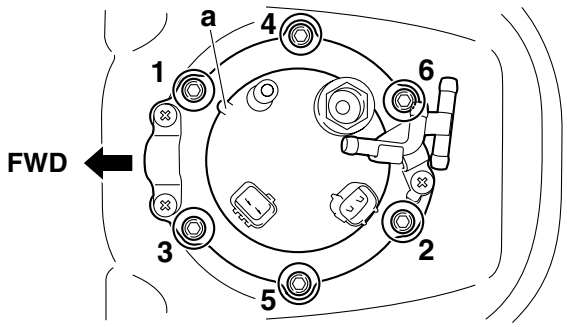


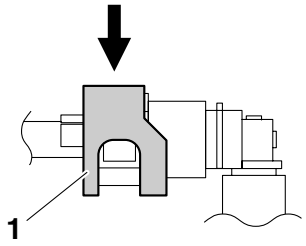


ET2C01010

## INSTALLING THE FUEL TANK

1. Connect:
   - Fuel tank breather hose (fuel tank to hose joint) “1”
   - Fuel tank overflow hose (fuel tank to hose joint) “2”
   - Fuel tank breather hose “3”
   - Fuel tank overflow hose “4”

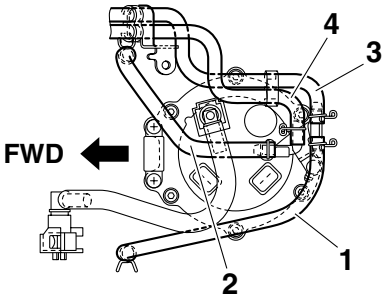


2. Connect:
   - Fuel hose (fuel tank to primary injector rail)

EC2C01017

**CAUTION:**

**When installing the fuel hose, make sure that it is securely connected, and that the fuel hose connector cover on the fuel hose is in the correct position, otherwise the fuel hose will not be properly installed.**

**NOTE:**

- Install the fuel hose securely onto the fuel pump until a distinct “click” is heard.
- To install the fuel hose onto the fuel pump, slide the fuel hose connector cover “1” on the end of the hose in the direction of the arrow shown.

ET2C01003

# AIR FILTER CASE

**Removing the air filter case and secondary injectors**

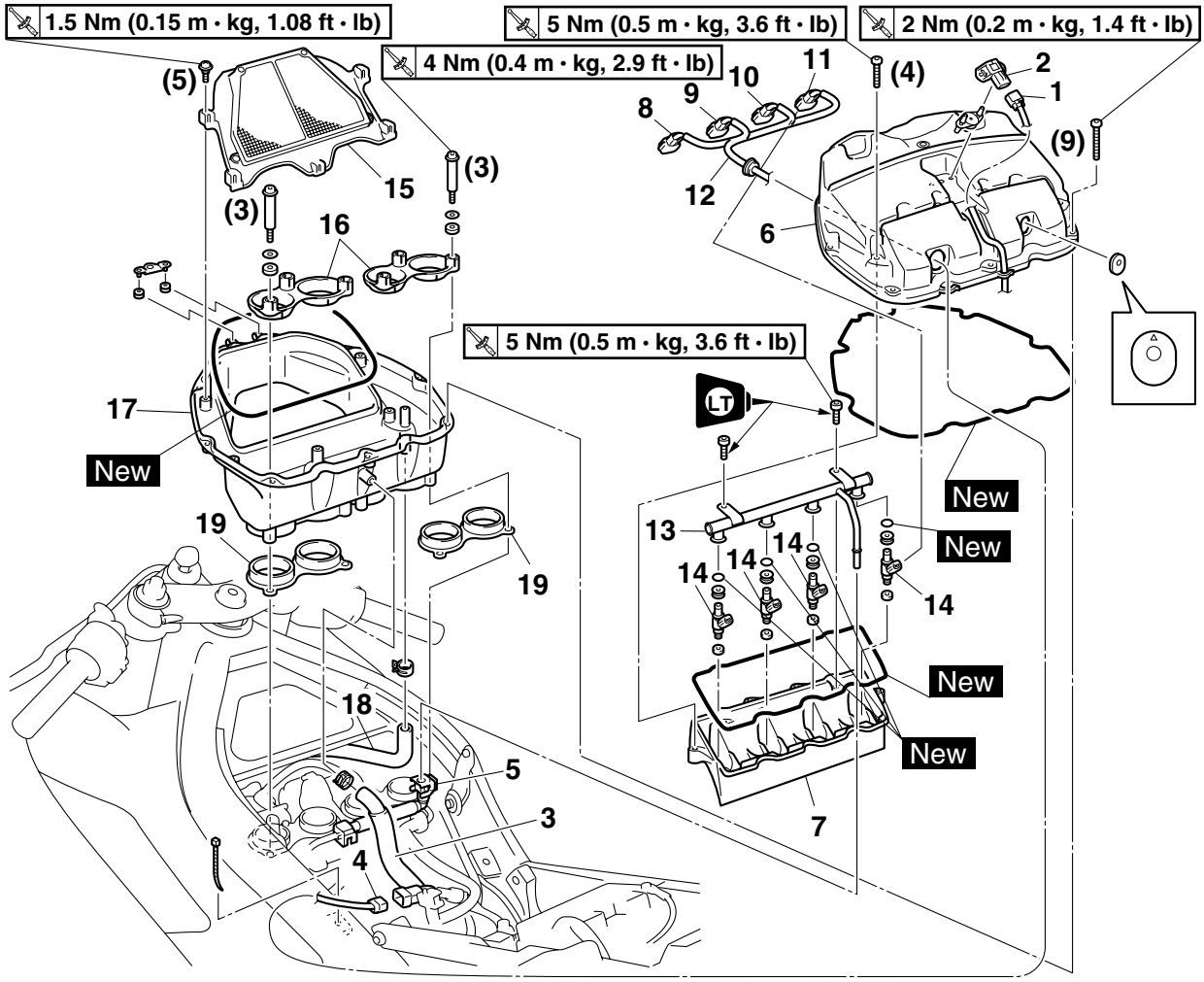


| Order | Job/Parts to remove | Q'ty | Remarks |
|---|---|---|---|
| | Fuel tank | | Refer to "FUEL TANK" on page 7-1. |
| 1 | Atmospheric pressure sensor coupler | 1 | Disconnect. |
| 2 | Atmospheric pressure sensor | 1 | |
| 3 | Crankcase breather hose | 1 | Disconnect. |
| 4 | Sub-wire harness 3 coupler | 1 | Disconnect. |
| 5 | Fuel hose (primary injector fuel rail to secondary injector fuel rail) | 1 | Disconnect. |
| 6 | Upper air filter case | 1 | |
| 7 | Secondary injector holder | 1 | |
| 8 | Cylinder-#1 secondary injector coupler | 1 | Disconnect. |
| 9 | Cylinder-#2 secondary injector coupler | 1 | Disconnect. |
| 10 | Cylinder-#3 secondary injector coupler | 1 | Disconnect. |
| 11 | Cylinder-#4 secondary injector coupler | 1 | Disconnect. |
| 12 | Sub-wire harness 3 | 1 | |
| 13 | Secondary injector fuel rail | 1 | |
| 14 | Secondary injector | 4 | |

**Removing the air filter case and secondary injectors**

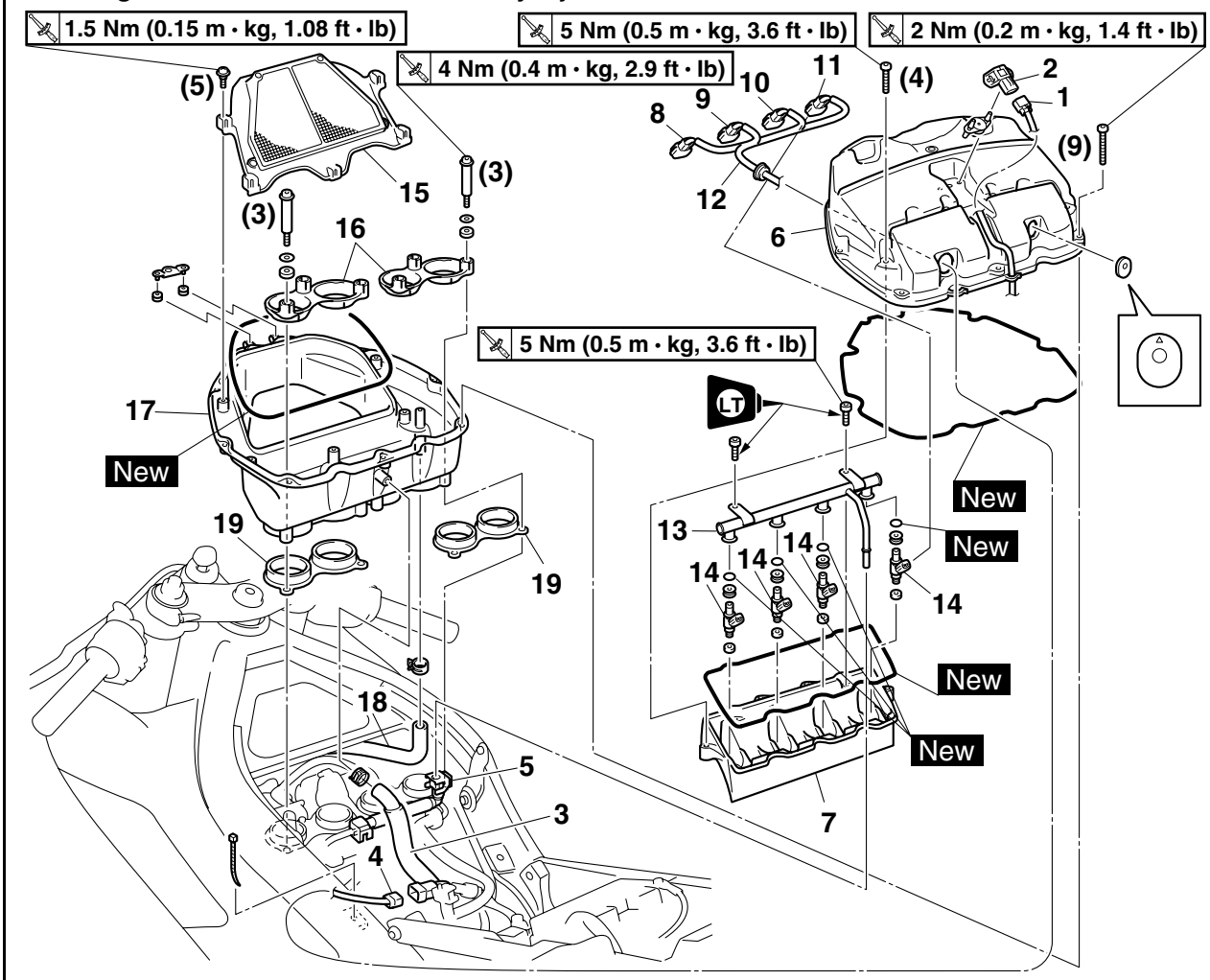


| Order | Job/Parts to remove | Q'ty | Remarks |
|---|---|---|---|
| 15 | Air filter element | 1 | |
| 16 | Air filter case joint (upper) | 2 | |
| 17 | Lower air filter case | 1 | |
| 18 | Air induction system hose (air filter case to air cut-off valve) | 1 | Disconnect. |
| 19 | Air filter case joint (lower) | 2 | |
| | | | For installation, reverse the removal procedure. |

ET2C01005

### REMOVING THE FUEL HOSE (PRIMARY INJECTOR FUEL RAIL TO SECONDARY INJECTOR FUEL RAIL)

1. Remove:
   - Fuel hose (primary injector fuel rail to secondary injector fuel rail)

EW2C01008

**WARNING**

**Cover fuel hose connections with a cloth when disconnecting them. Residual pressure in the fuel lines could cause fuel to spurt out when removing the hoses.**

**NOTE:**

- To remove the fuel hose from the secondary injector fuel rail, slide the fuel hose connector cover "1" on the end of the hose in the direction of the arrow shown, press the two buttons "2" on the sides of the connector, and then remove the hose.
- Remove the fuel hose manually without using any tools.
- Before removing the hose, place a few rags in the area under where it will be removed.

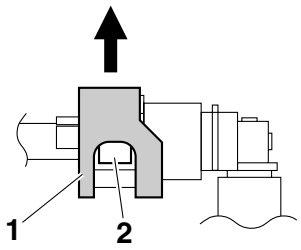


ET2C01017

### CHECKING THE SECONDARY INJECTORS

1. Check:
   - Injectors
     Damage → Replace.

ET2C01006

### INSTALLING THE FUEL HOSE (PRIMARY INJECTOR FUEL RAIL TO SECONDARY INJECTOR FUEL RAIL)

1. Connect:
   - Fuel hose (primary injector fuel rail to secondary injector fuel rail)

EC2C01017

**CAUTION:**

**When installing the fuel hose, make sure that it is securely connected, and that the fuel hose connector cover on the fuel hose is in the correct position, otherwise the fuel hose will not be properly installed.**

**NOTE:**

- Install the fuel hose securely onto the secondary injector fuel rail until a distinct "click" is heard.
- To install the fuel hose onto the secondary injector fuel rail, slide the fuel hose connector cover "1" on the end of the hose in the direction of the arrow shown.

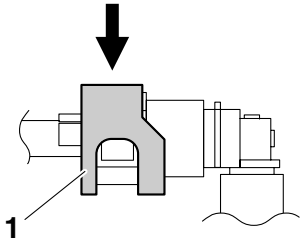

EAS26970

# THROTTLE BODIES

**Removing the throttle body assembly**

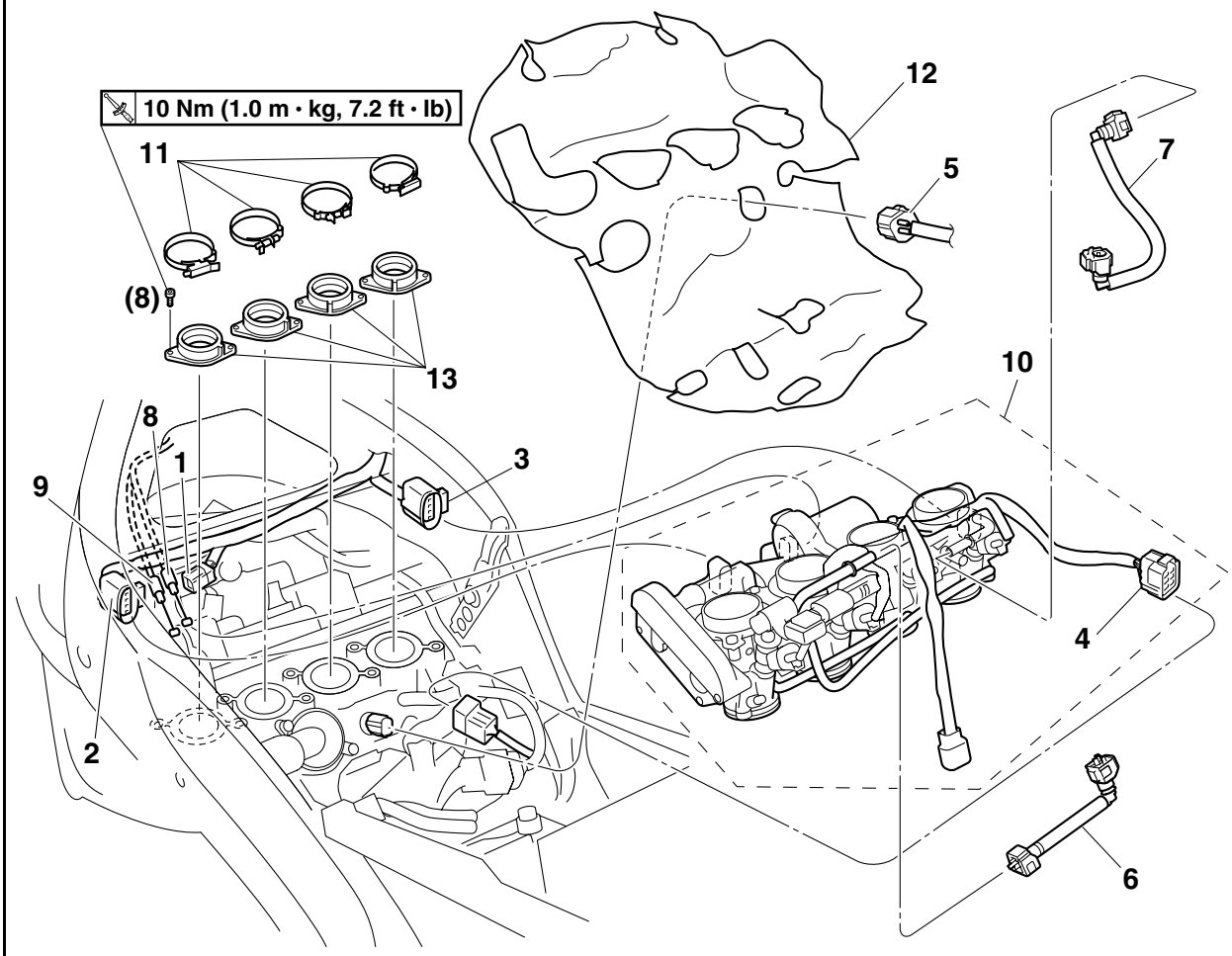


| Order | Job/Parts to remove | Q'ty | Remarks |
|---|---|---|---|
| | Fuel tank | | Refer to "FUEL TANK" on page 7-1. |
| | Air filter case | | Refer to "AIR FILTER CASE" on page 7-4. |
| | Air induction system cover | | Refer to "AIR INDUCTION SYSTEM" on page 7-13. |
| 1 | Throttle servo motor coupler | 1 | Disconnect. |
| 2 | Throttle position sensor (for throttle cable pulley) coupler | 1 | Disconnect. |
| 3 | Throttle position sensor (for throttle valves) coupler | 1 | Disconnect. |
| 4 | Sub-wire harness 2 coupler | 1 | Disconnect. |
| 5 | Coolant temperature sensor coupler | 1 | Disconnect. |
| 6 | Fuel hose (primary injector fuel rail to secondary injector fuel rail) | 1 | |
| 7 | Fuel hose (fuel tank to primary injector fuel rail) | 1 | |
| 8 | Throttle cable (decelerator cable) | 1 | |
| 9 | Throttle cable (accelerator cable) | 1 | |
| 10 | Throttle body assembly | 1 | |

**Removing the throttle body assembly**

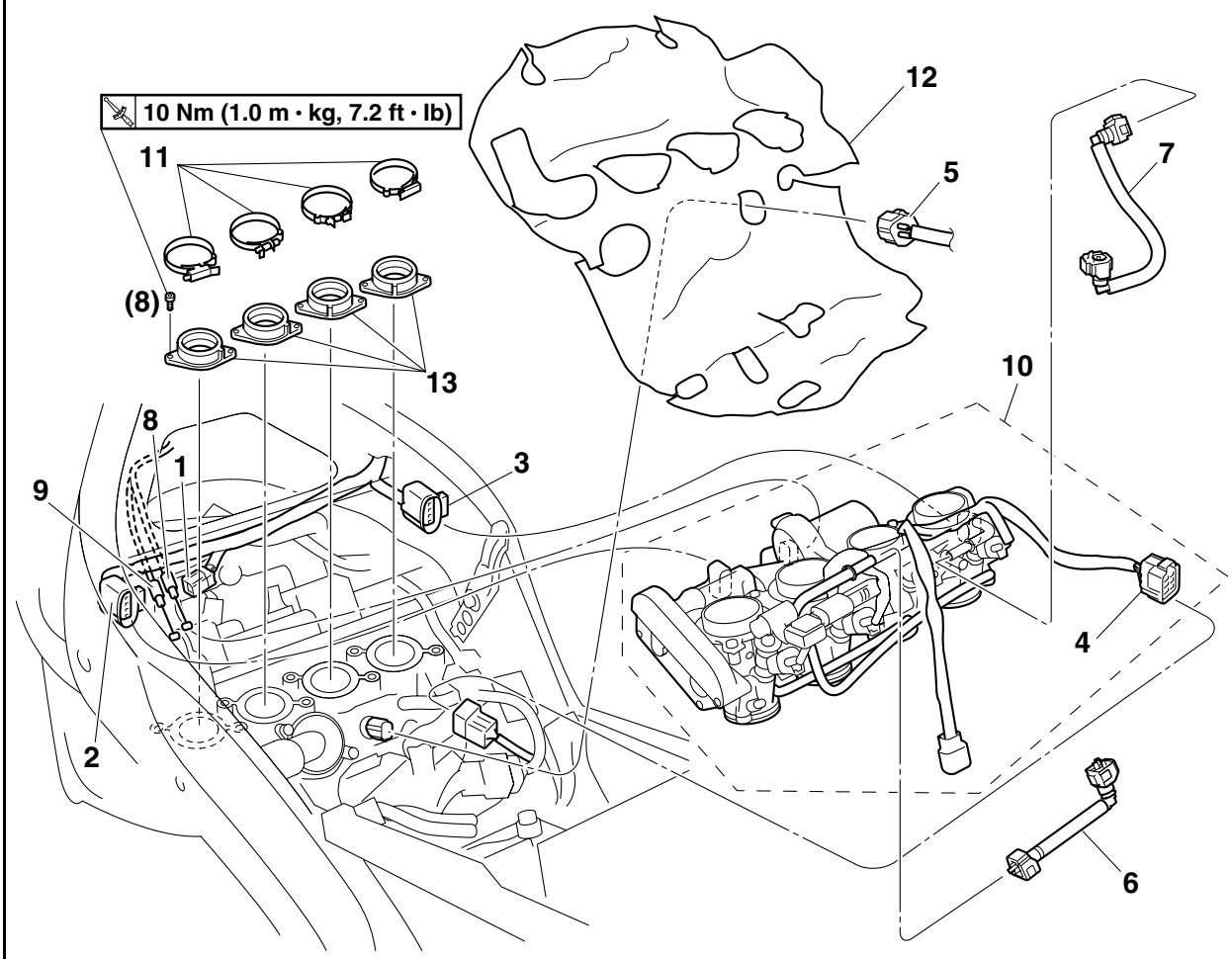


| Order | Job/Parts to remove | Q'ty | Remarks |
|---|---|---|---|
| 11 | Throttle body joint clamp | 4 | |
| 12 | Heat protector | 1 | |
| 13 | Throttle body joint | 4 | |
| | | | For installation, reverse the removal procedure. |

**Removing the primary injectors**

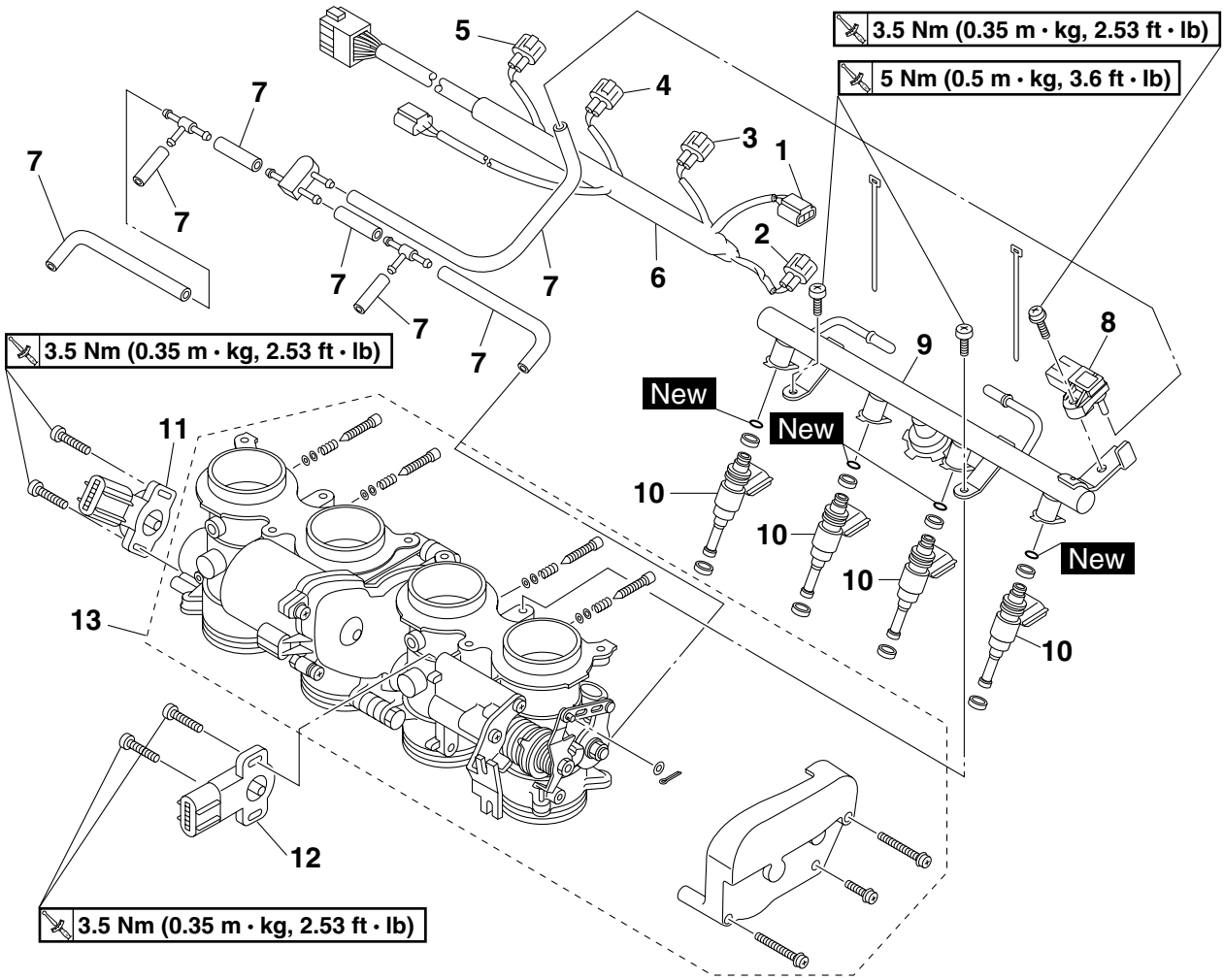


| Order | Job/Parts to remove | Q'ty | Remarks |
|---|---|---|---|
| 1 | Intake air pressure sensor coupler | 1 | Disconnect. |
| 2 | Cylinder-#1 primary injector coupler | 1 | Disconnect. |
| 3 | Cylinder-#2 primary injector coupler | 1 | Disconnect. |
| 4 | Cylinder-#3 primary injector coupler | 1 | Disconnect. |
| 5 | Cylinder-#4 primary injector coupler | 1 | Disconnect. |
| 6 | Sub-wire harness 2 | 1 | |
| 7 | Intake air pressure sensor hose | 7 | |
| 8 | Intake air pressure sensor | 1 | |
| 9 | Primary injector fuel rail | 1 | |
| 10 | Primary injector | 4 | |
| 11 | Throttle position sensor (for throttle valves) | 1 | |
| 12 | Throttle position sensor (for throttle cable pulley) | 1 | |
| 13 | Throttle bodies | 1 | ECA14600<br>**CAUTION:**<br>**The throttle bodies should not be disassembled.** |
| | | | For installation, reverse the removal procedure. |

EAS26980
### CHECKING THE PRIMARY INJECTORS
1. Check:
   - Injectors
     Damage → Replace.

EAS26990
### CHECKING THE THROTTLE BODIES
1. Check:
   - Throttle bodies
     Cracks/damage → Replace the throttle bodies as a set.
2. Check:
   - Fuel passages
     Obstructions → Clean.

▼▼▼▼▼▼▼▼▼▼▼▼▼▼▼▼▼▼▼▼▼▼▼▼▼▼▼▼▼▼▼▼▼▼

a. Wash the throttle bodies in a petroleum-based solvent.
   Do not use any caustic carburetor cleaning solution.
b. Blow out all of the passages with compressed air.

▲▲▲▲▲▲▲▲▲▲▲▲▲▲▲▲▲▲▲▲▲▲▲▲▲▲▲▲▲▲▲▲▲▲

EAS27010
### CHECKING THE FUEL PRESSURE
1. Check:
   - Fuel pressure

▼▼▼▼▼▼▼▼▼▼▼▼▼▼▼▼▼▼▼▼▼▼▼▼▼▼▼▼▼▼▼▼▼▼

a. Remove the rider seat.
   Refer to “GENERAL CHASSIS” on page 4-1.
b. Disconnect the fuel hose (fuel tank to primary injector fuel rail) “1” from the primary injector fuel rail.

EW2C01008
**WARNING**

**Cover fuel hose connections with a cloth when disconnecting them. Residual pressure in the fuel lines could cause fuel to spurt out when removing the hoses.**

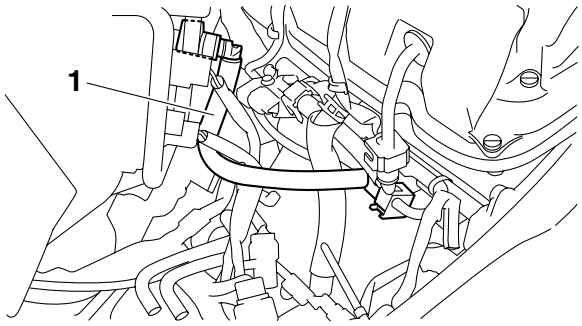


c. Connect the pressure gauge “2” and adapter “3” to the fuel hose (fuel tank to primary injector fuel rail).

**Pressure gauge**
**90890-03153**
**Pressure gauge**
**YU-03153**
**Fuel pressure adapter**
**90890-03176**
**YM-03176**

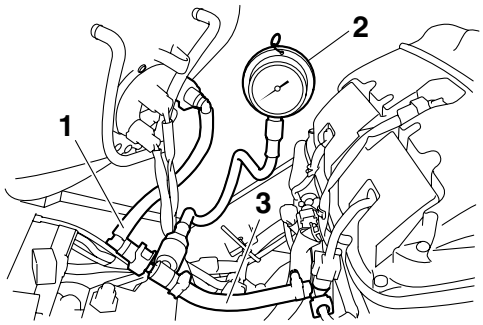


d. Start the engine.
e. Measure the fuel pressure.

**Fuel pressure**
**324 kPa (46.1 psi) (3.24 kg/cm²)**

Faulty → Replace the fuel pump.

▲▲▲▲▲▲▲▲▲▲▲▲▲▲▲▲▲▲▲▲▲▲▲▲▲▲▲▲▲▲▲▲▲▲

ET2C01007
### ADJUSTING THE THROTTLE POSITION SENSOR (FOR THROTTLE VALVES)
1. Check:
   - Throttle position sensor (for throttle valves)
     Refer to “CHECKING THE THROTTLE POSITION SENSOR (FOR THROTTLE VALVES)” on page 8-107.
2. Adjust:
   - Throttle position sensor angle

▼▼▼▼▼▼▼▼▼▼▼▼▼▼▼▼▼▼▼▼▼▼▼▼▼▼▼▼▼▼▼▼▼▼

a. Connect the two C size batteries to the throttle servo motor terminal as shown.

- Positive battery lead
  light green/red terminal “1”
- Negative battery lead
  yellow/red terminal “2”

EC2C01027
**CAUTION:**

**Do not use a 12 V battery to operate the throttle valves.**

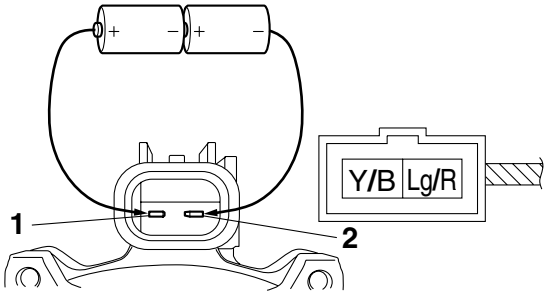


b. Check that the throttle valves are fully closed.
c. Connect the throttle position sensor coupler to the throttle position sensor.
d. Connect the digital circuit tester to the throttle position sensor.

- Positive tester probe
  blue terminal “1” or green terminal “2”
- Negative tester probe
  black/blue terminal “3”

**Digital circuit tester**
**90890-03174**
**Model 88 Multimeter with tachometer**
**YU-A1927**

e. Measure the throttle position sensor voltage.
f. Adjust the throttle position sensor angle so that the voltage is within the specified range.

**Output voltage**
**0.590–0.690 V**

g. After adjusting the throttle position sensor angle, tighten the throttle position sensor screws “4”.

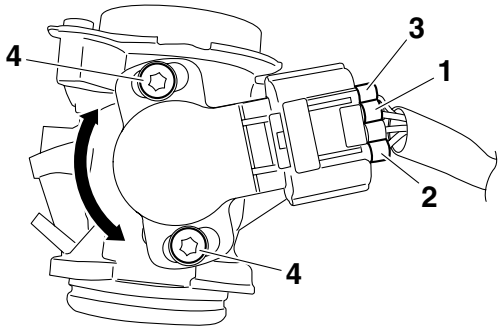


ET2C01008

## ADJUSTING THE THROTTLE POSITION SENSOR (FOR THROTTLE CABLE PULLEY)

1. Check:
   - Throttle position sensor (for throttle cable pulley)
     Refer to “CHECKING THE THROTTLE POSITION SENSOR (FOR THROTTLE CABLE PULLEY)” on page 8-108.
2. Adjust:
   - Throttle position sensor angle

a. Connect the throttle position sensor coupler to the throttle position sensor.
b. Connect the digital circuit tester to the throttle position sensor.

- Positive tester probe
  white terminal “1” or white/red terminal “2”
- Negative tester probe
  black/blue terminal “3”

**Digital circuit tester**
**90890-03174**
**Model 88 Multimeter with tachometer**
**YU-A1927**

c. Measure the throttle position sensor voltage.
d. Adjust the throttle position sensor angle so that the voltage is within the specified range.

**Output voltage**
**0.630–0.730 V**

e. After adjusting the throttle position sensor angle, tighten the throttle position sensor screws “4”.

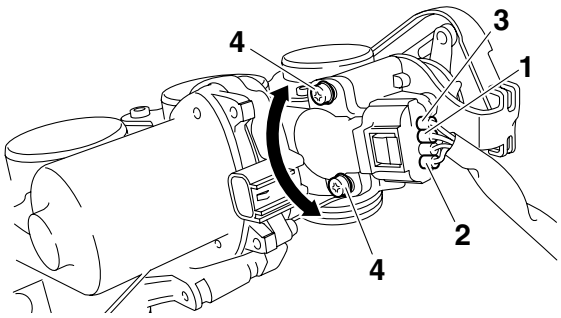


ET2C01009

## INSTALLING THE THROTTLE BODY JOINTS

1. Install:
   - Throttle body joints “1”

| | |
|---|---|
| 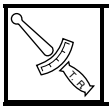 | **Throttle body joint bolt**<br>**10 Nm (1.0 m·kg, 7.2 ft·lb)** |

**NOTE:**

Be sure to install the throttle body joints with the "L" mark onto the throttle body openings for cylinders #1 and #2 and the joints with the "R" mark onto the openings for cylinders #3 and #4.

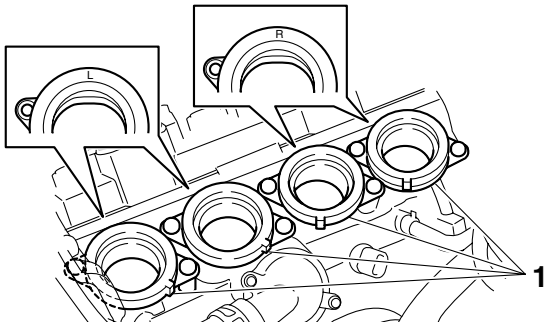

EAS27040

# AIR INDUCTION SYSTEM

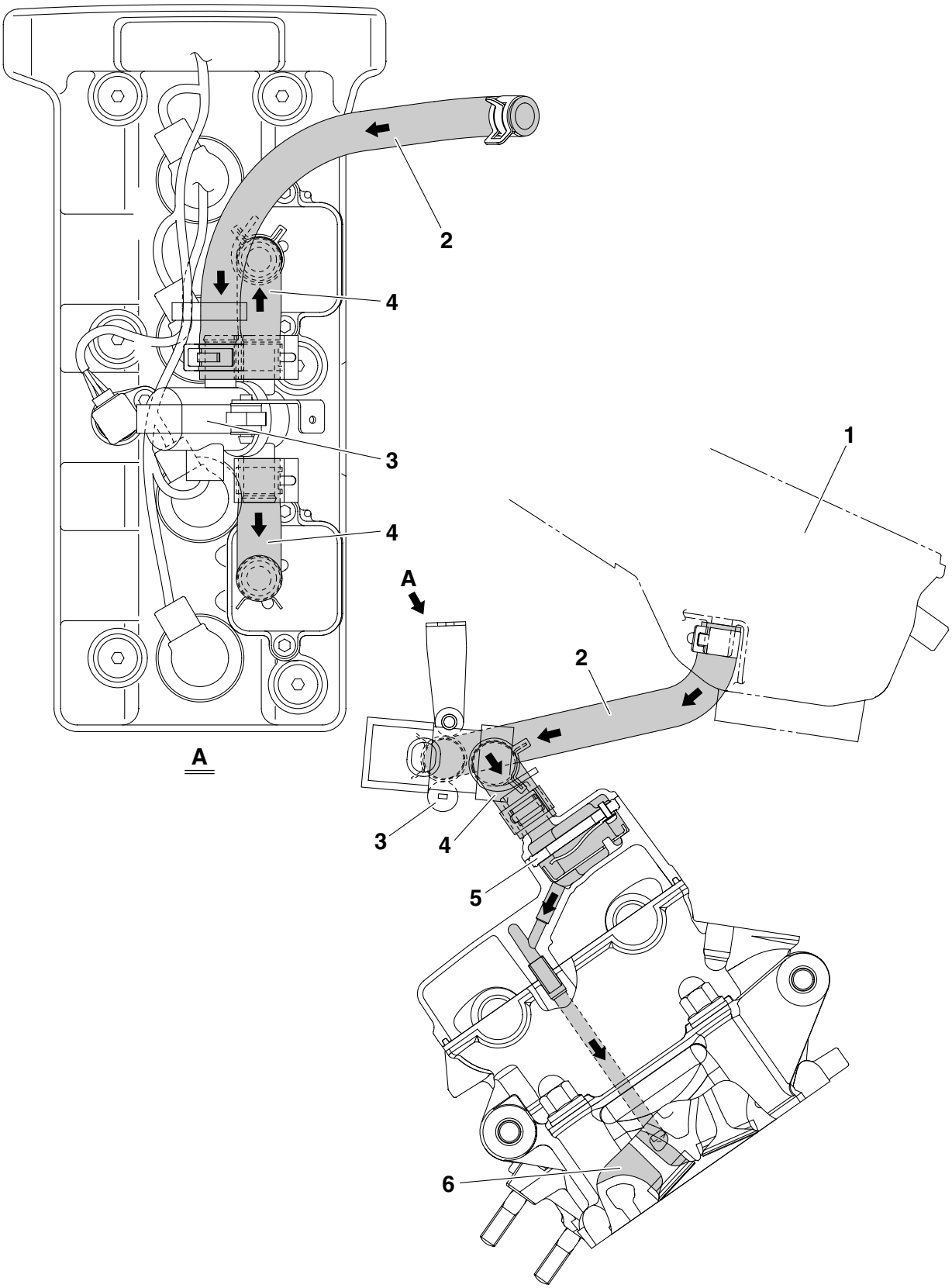

1. Lower air filter case
2. Air induction system hose (air filter case to air cut-off valve)
3. Air cut-off valve
4. Air induction system hose (air cut-off valve to cylinder head cover)
5. Reed valve assembly
6. Exhaust port

**Removing the air cut-off valve**

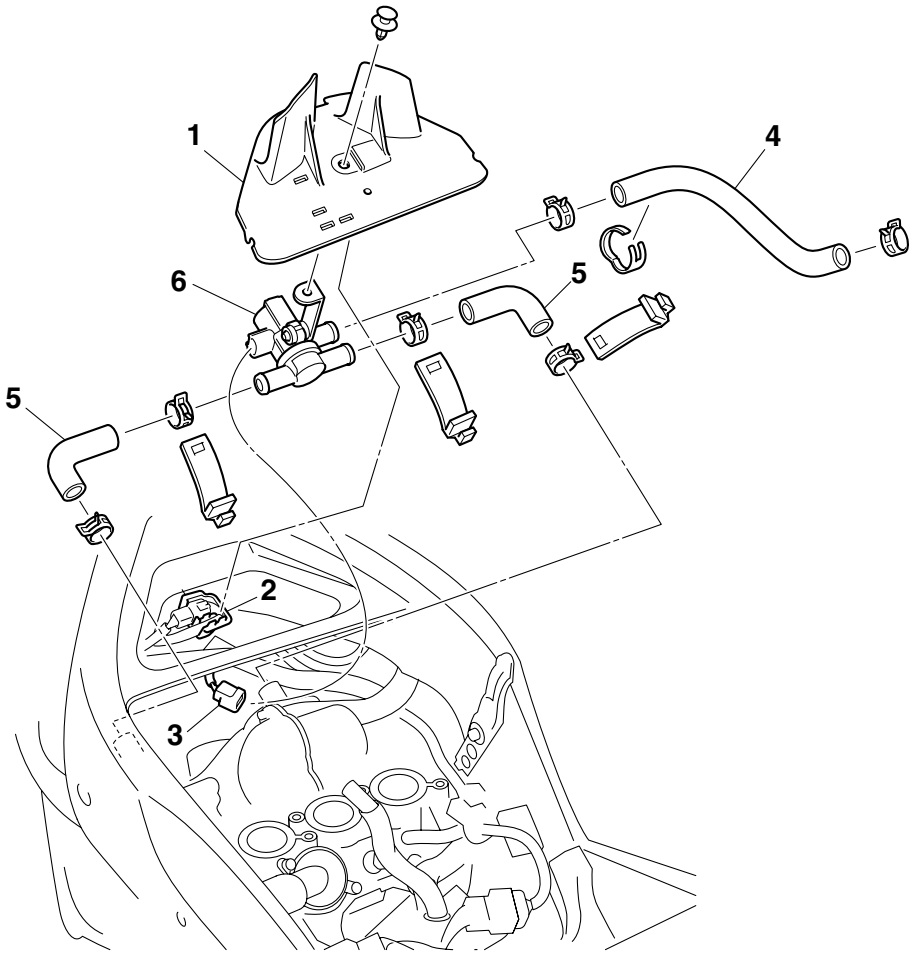


| Order | Job/Parts to remove | Q'ty | Remarks |
|---|---|---|---|
| | Fuel tank | | Refer to "FUEL TANK" on page 7-1. |
| | Air filter case | | Refer to "AIR FILTER CASE" on page 7-4. |
| 1 | Air induction system cover | 1 | |
| 2 | Immobilizer unit coupler holder | 1 | |
| 3 | Air induction system solenoid coupler | 1 | Disconnect. |
| 4 | Air induction system hose (air filter case to air cut-off valve) | 1 | |
| 5 | Air induction system hose (air cut-off valve to cylinder head cover) | 2 | |
| 6 | Air cut-off valve | 1 | |
| | | | For installation, reverse the removal procedure. |

**Removing the reed valves**

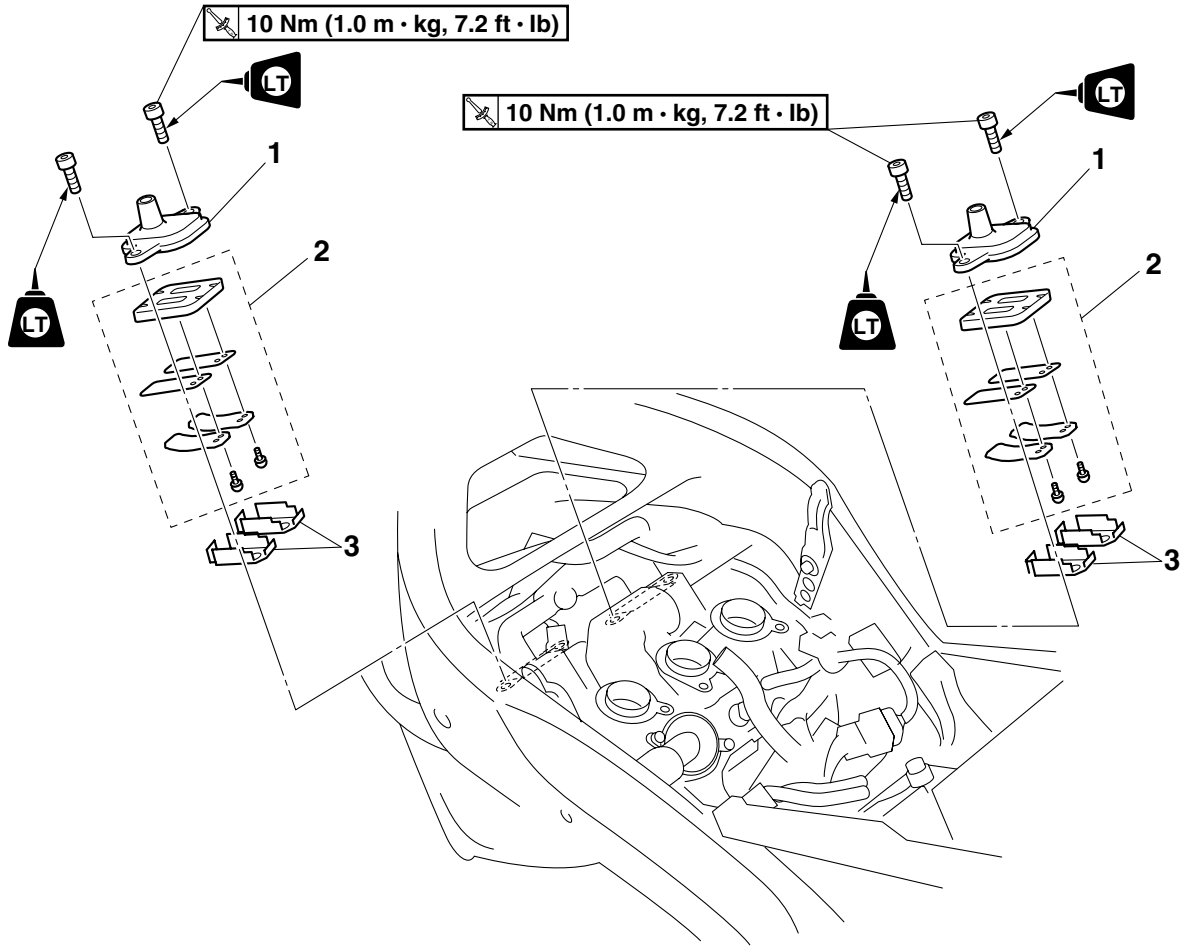


| Order | Job/Parts to remove | Q'ty | Remarks |
|---|---|---|---|
| 1 | Reed valve cover | 2 | |
| 2 | Reed valve assembly | 2 | |
| 3 | Reed valve plate | 4 | |
| | | | For installation, reverse the removal procedure. |

EAS27060
## CHECKING THE AIR INDUCTION SYSTEM

### Air injection
The air induction system burns unburned exhaust gases by injecting fresh air (secondary air) into the exhaust port, reducing the emission of hydrocarbons. When there is negative pressure at the exhaust port, the reed valve opens, allowing secondary air to flow into the exhaust port. The required temperature for burning the unburned exhaust gases is approximately 600 to 700 °C (1112 to 1292 °F).

### Air cut-off valve
The air cut-off valve is controlled by the signals from the ECU in accordance with the combustion conditions. Ordinarily, the air cut-off valve opens to allow the air to flow during idle and closes to cut-off the flow when the vehicle is being driven. However, if the coolant temperature is below the specified value, the air cut-off valve remains open and allows the air to flow into the exhaust pipe assembly until the temperature becomes higher than the specified value.

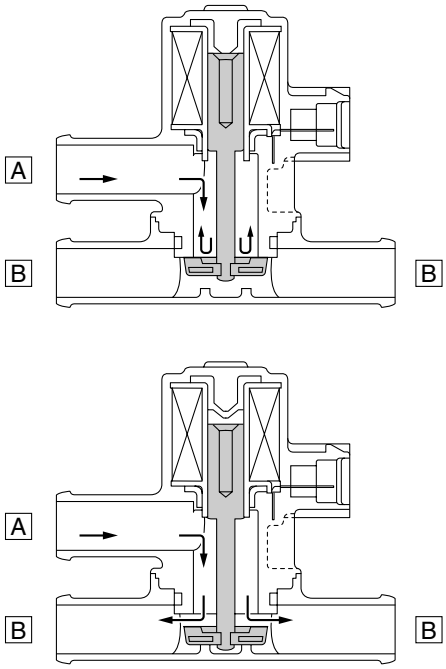


A. From the air filter case
B. To the cylinder head

1. Check:
   - Hoses
     Loose connections → Connect properly.
     Cracks/damage → Replace.
2. Check:
   - Reed valve
   - Reed valve stopper
   - Reed valve seat
     Cracks/damage → Replace the reed valve assembly.
3. Measure:
   - Reed valve bending limit “a”
     Out of specification → Replace the reed valve assembly.

| | |
|---|---|
| | **Reed valve bending limit 0.4 mm (0.016 in)** |

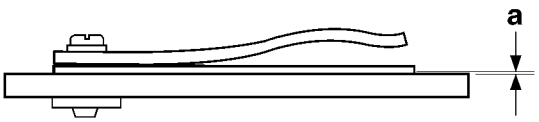


4. Check:
   - Air cut-off valve
     Cracks/damage → Replace.
5. Check:
   - Air induction system solenoid
     Refer to “CHECKING THE AIR INDUCTION SYSTEM SOLENOID” on page 8-109.

# ELECTRICAL SYSTEM

**IGNITION SYSTEM** ..... 8-1
CIRCUIT DIAGRAM ..... 8-1
ENGINE STOPPING DUE TO SIDESTAND OPERATION ..... 8-3
TROUBLESHOOTING ..... 8-4

**ELECTRIC STARTING SYSTEM** ..... 8-7
CIRCUIT DIAGRAM ..... 8-7
STARTING CIRCUIT CUT-OFF SYSTEM OPERATION ..... 8-9
TROUBLESHOOTING ..... 8-11

**CHARGING SYSTEM** ..... 8-13
CIRCUIT DIAGRAM ..... 8-13
TROUBLESHOOTING ..... 8-15

**LIGHTING SYSTEM** ..... 8-17
CIRCUIT DIAGRAM ..... 8-17
TROUBLESHOOTING ..... 8-19

**SIGNALING SYSTEM** ..... 8-21
CIRCUIT DIAGRAM ..... 8-21
TROUBLESHOOTING ..... 8-23

**COOLING SYSTEM** ..... 8-29
CIRCUIT DIAGRAM ..... 8-29
TROUBLESHOOTING ..... 8-31

**FUEL INJECTION SYSTEM** ..... 8-33
CIRCUIT DIAGRAM ..... 8-33
ECU SELF-DIAGNOSTIC FUNCTION ..... 8-35
SELF-DIAGNOSTIC FUNCTION TABLE ..... 8-36
TROUBLESHOOTING METHOD ..... 8-39
DIAGNOSTIC MODE ..... 8-40
TROUBLESHOOTING DETAILS ..... 8-48

**FUEL PUMP SYSTEM** ..... 8-73
CIRCUIT DIAGRAM ..... 8-73
TROUBLESHOOTING ..... 8-75

**IMMOBILIZER SYSTEM** ..... 8-77
CIRCUIT DIAGRAM ..... 8-77
GENERAL INFORMATION ..... 8-79
PART REPLACEMENT AND KEY CODE REGISTRATION REQUIREMENTS ..... 8-79
TROUBLESHOOTING ..... 8-83
SELF-DIAGNOSIS FAULT CODE INDICATION ..... 8-83

**ELECTRICAL COMPONENTS** ..... 8-87
CHECKING THE SWITCHES ..... 8-91
CHECKING THE BULBS AND BULB SOCKETS ..... 8-94
CHECKING THE FUSES ..... 8-95
CHECKING AND CHARGING THE BATTERY ..... 8-96
CHECKING THE RELAYS ..... 8-99
CHECKING THE TURN SIGNAL RELAY ..... 8-100
CHECKING THE RELAY UNIT (DIODE) ..... 8-101
CHECKING THE IGNITION COILS ..... 8-102
CHECKING THE CRANKSHAFT POSITION SENSOR ..... 8-103
CHECKING THE LEAN ANGLE SENSOR ..... 8-103
CHECKING THE STARTER MOTOR OPERATION ..... 8-103
CHECKING THE STATOR COIL ..... 8-104
CHECKING THE RECTIFIER/REGULATOR ..... 8-104
CHECKING THE HORN ..... 8-105
CHECKING THE OIL LEVEL SWITCH ..... 8-105
CHECKING THE FUEL SENDER ..... 8-105
CHECKING THE SPEED SENSOR ..... 8-106
CHECKING THE RADIATOR FAN MOTORS ..... 8-106
CHECKING THE COOLANT TEMPERATURE SENSOR ..... 8-107
CHECKING THE THROTTLE POSITION SENSOR (FOR THROTTLE VALVES) ..... 8-107
CHECKING THE THROTTLE POSITION SENSOR (FOR THROTTLE CABLE PULLEY) ..... 8-108
CHECKING THE FUEL PUMP ..... 8-108
CHECKING THE AIR INDUCTION SYSTEM SOLENOID ..... 8-109
CHECKING THE ATMOSPHERIC PRESSURE SENSOR ..... 8-109
CHECKING THE CYLINDER IDENTIFICATION SENSOR ..... 8-110
CHECKING THE INTAKE AIR PRESSURE SENSOR ..... 8-110
CHECKING THE AIR TEMPERATURE SENSOR ..... 8-110

EAS27090
# IGNITION SYSTEM

EAS27110
## CIRCUIT DIAGRAM

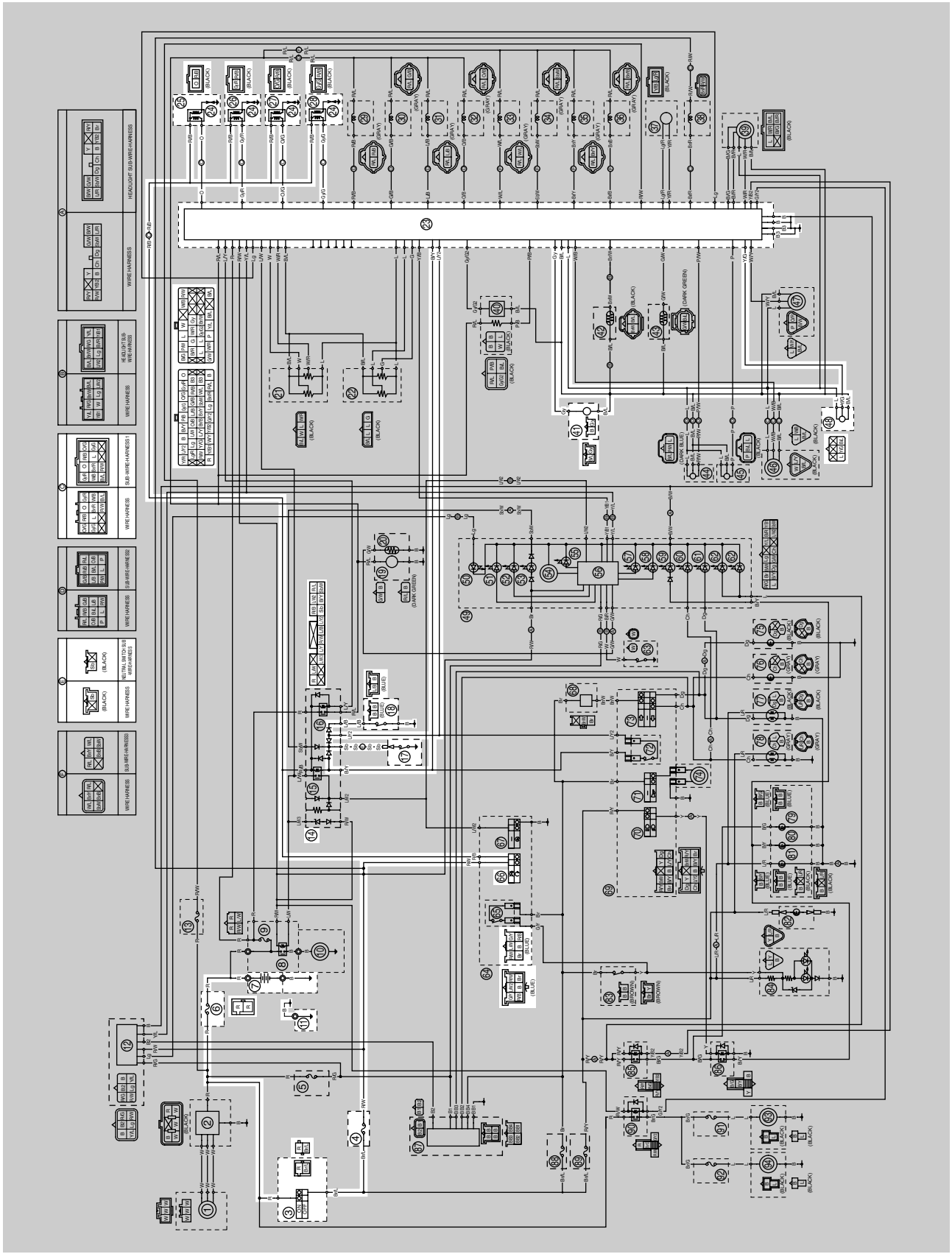

3. Main switch
4. Ignition fuse
6. Main fuse
7. Battery
11. Engine ground
14. Relay unit
17. Neutral switch
18. Sidestand switch
23. ECU (engine control unit)
24. Spark plug
25. Cylinder-#1 ignition coil
26. Cylinder-#2 ignition coil
27. Cylinder-#3 ignition coil
28. Cylinder-#4 ignition coil
41. Crankshaft position sensor
48. Lean angle sensor
66. Engine stop switch

ET2C01023

## ENGINE STOPPING DUE TO SIDESTAND OPERATION

When the engine is running and the transmission is in gear, the engine will stop if the sidestand is moved down. This is because the electric current from the ignition coils does not flow to the ECU when both the neutral switch and sidestand switch are set to “OFF”, thereby preventing the spark plugs from producing a spark. However, the engine continues to run under the following conditions:

- The transmission is in gear (the neutral switch circuit is open) and the sidestand is up (the sidestand switch circuit is closed).
- The transmission is in neutral (the neutral switch circuit is closed) and the sidestand is down (the sidestand switch circuit is open).

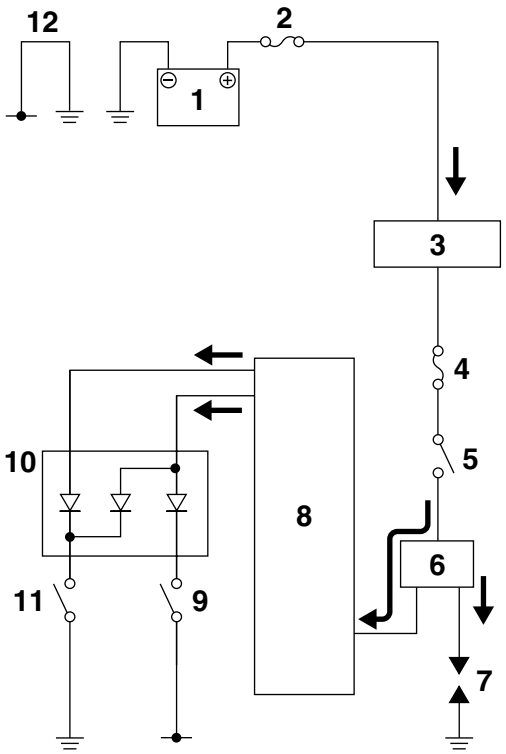


1. Battery
2. Main fuse
3. Main switch
4. Ignition fuse
5. Engine stop switch
6. Ignition coil
7. Spark plug
8. ECU (engine control unit)
9. Sidestand switch
10. Relay unit (diode)
11. Neutral switch
12. Engine ground

EAS27150

## TROUBLESHOOTING

The ignition system fails to operate (no spark or intermittent spark).

**NOTE:**

• Before troubleshooting, remove the following part(s):
1. Rider seat
2. Fuel tank
3. Air filter case
4. Side cowlings
5. Bottom cowlings

| | | |
|---|---|---|
| 1. Check the fuses. (Main and ignition) Refer to "CHECKING THE FUSES" on page 8-95. | NG → | Replace the fuse(s). |
| OK ↓ | | |
| 2. Check the battery. Refer to "CHECKING AND CHARGING THE BATTERY" on page 8-96. | NG → | • Clean the battery terminals.<br>• Recharge or replace the battery. |
| OK ↓ | | |
| 3. Check the spark plugs. Refer to "CHECKING THE SPARK PLUGS" on page 3-8. | NG → | Re-gap or replace the spark plug(s). |
| OK ↓ | | |
| 4. Check the ignition spark gap. Refer to "CHECKING THE IGNITION COILS" on page 8-102. | OK → | Ignition system is OK. |
| NG ↓ | | |
| 5. Check the ignition coils. Refer to "CHECKING THE IGNITION COILS" on page 8-102. | NG → | Replace the ignition coil(s). |
| OK ↓ | | |
| 6. Check the crankshaft position sensor. Refer to "CHECKING THE CRANKSHAFT POSITION SENSOR" on page 8-103. | NG → | Replace the crankshaft position sensor. |
| OK ↓ | | |
| 7. Check the main switch. Refer to "CHECKING THE SWITCHES" on page 8-91. | NG → | Replace the main switch/immobilizer unit. |
| OK ↓ | | |

| | | |
|---|---|---|
| 8. Check the engine stop switch. Refer to “CHECKING THE SWITCHES” on page 8-91. | NG → | Replace the right handlebar switch. |
| OK ↓ | | |
| 9. Check the neutral switch. Refer to “CHECKING THE SWITCHES” on page 8-91. | NG → | Replace the neutral switch. |
| OK ↓ | | |
| 10. Check the sidestand switch. Refer to “CHECKING THE SWITCHES” on page 8-91. | NG → | Replace the sidestand switch. |
| OK ↓ | | |
| 11. Check the relay unit (diode). Refer to “CHECKING THE RELAY UNIT (DIODE)” on page 8-101. | NG → | Replace the relay unit. |
| OK ↓ | | |
| 12. Check the lean angle sensor. Refer to “CHECKING THE LEAN ANGLE SENSOR” on page 8-103. | NG → | Replace the lean angle sensor. |
| OK ↓ | | |
| 13. Check the entire ignition system’s wiring. Refer to “CIRCUIT DIAGRAM” on page 8-1. | NG → | Properly connect or repair the ignition system’s wiring. |
| OK ↓ | | |
| Replace the ECU. | | |

EAS27160

# ELECTRIC STARTING SYSTEM

EAS27170

## CIRCUIT DIAGRAM

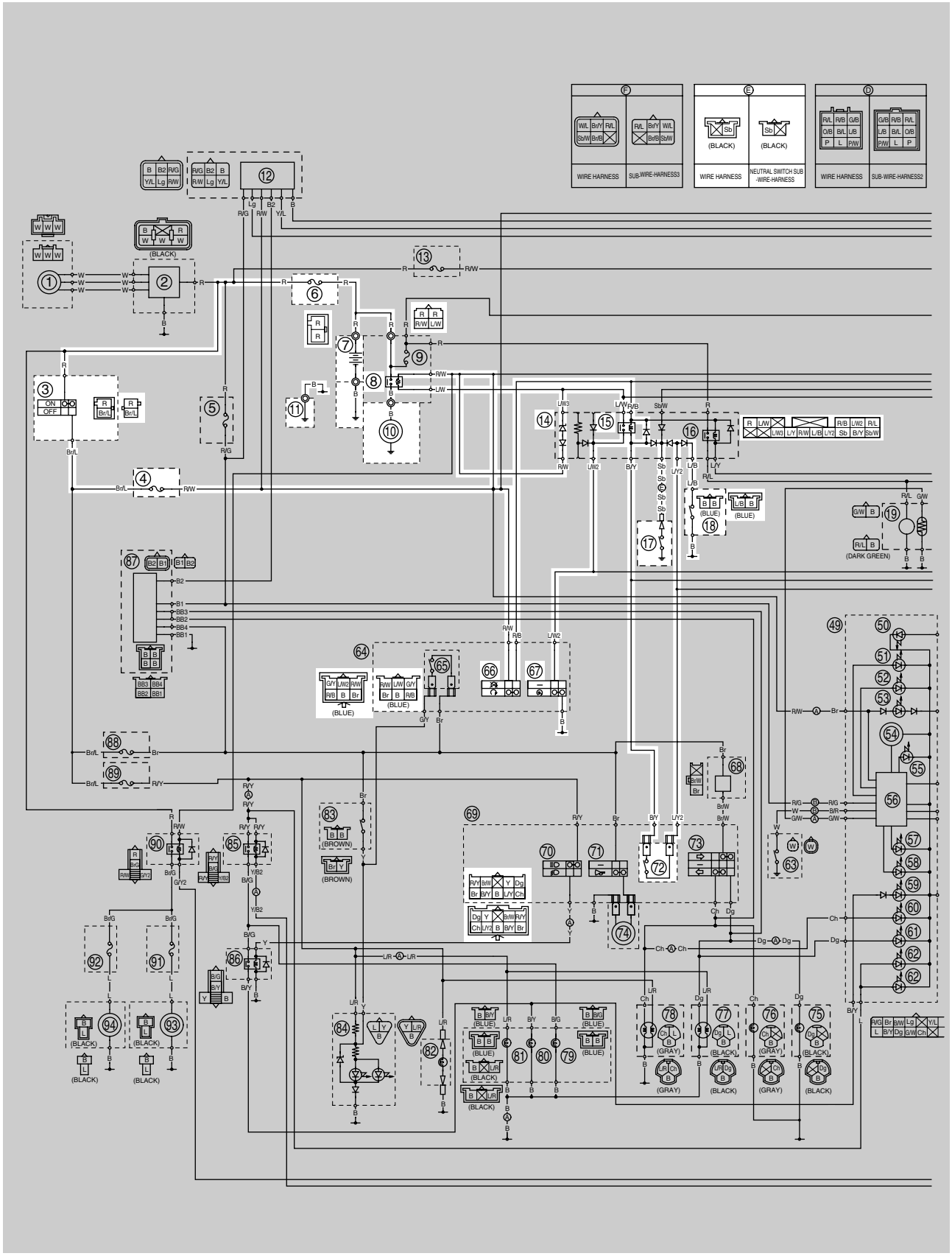

3. Main switch
4. Ignition fuse
6. Main fuse
7. Battery
8. Starter relay
10. Starter motor
11. Engine ground
14. Relay unit
15. Starting circuit cut-off relay
17. Neutral switch
18. Sidestand switch
66. Engine stop switch
67. Start switch
72. Clutch switch

EAS27180

## STARTING CIRCUIT CUT-OFF SYSTEM OPERATION

If the engine stop switch is set to "◯" and the main switch is set to "ON" (both switches are closed), the starter motor can only operate if at least one of the following conditions is met:

- The transmission is in neutral (the neutral switch is closed).
- The clutch lever is pulled to the handlebar (the clutch switch is closed) and the sidestand is up (the sidestand switch is closed).

The starting circuit cut-off relay prevents the starter motor from operating when neither of these conditions has been met. In this instance, the starting circuit cut-off relay is open so current cannot reach the starter motor. When at least one of the above conditions has been met the starting circuit cut-off relay is closed and the engine can be started by pressing the start switch.

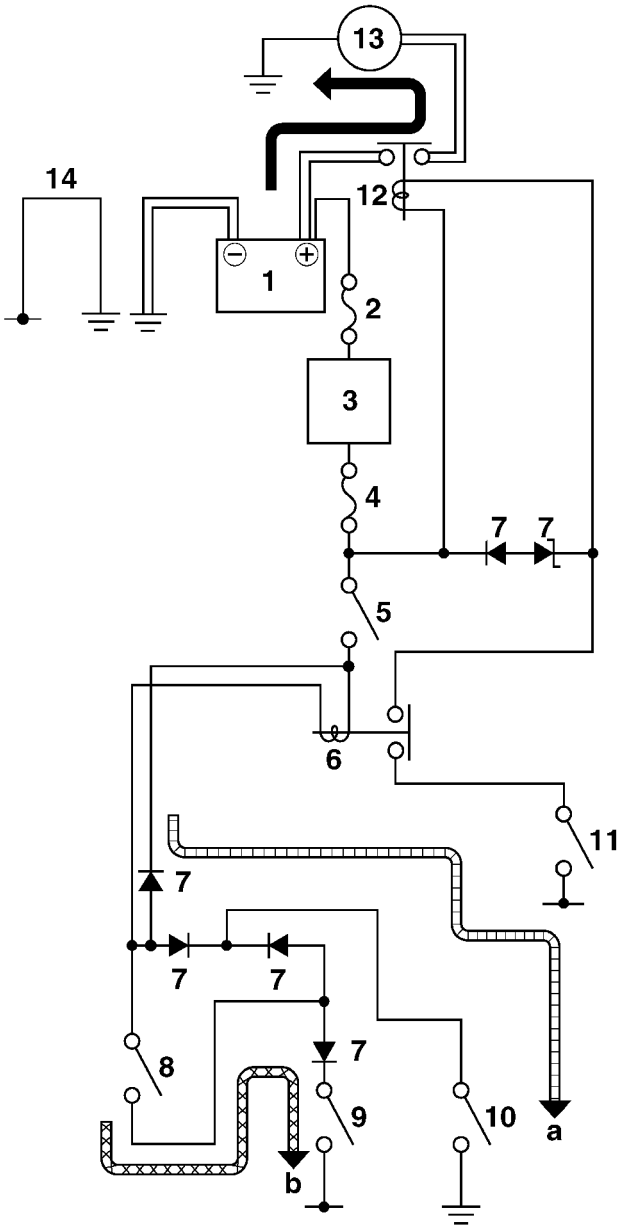

a. WHEN THE TRANSMISSION IS IN NEUTRAL
b. WHEN THE SIDESTAND IS UP AND THE CLUTCH LEVER IS PULLED TO THE HANDLEBAR
1. Battery
2. Main fuse
3. Main switch
4. Ignition fuse
5. Engine stop switch
6. Relay unit (starting circuit cut-off relay)
7. Relay unit (diode)
8. Clutch switch
9. Sidestand switch
10. Neutral switch
11. Start switch
12. Starter relay
13. Starter motor
14. Engine ground

EAS27190

## TROUBLESHOOTING

The starter motor fails to turn.

**NOTE:**

• Before troubleshooting, remove the following part(s):
1. Rider seat
2. Fuel tank
3. Air filter case
4. Side cowlings
5. Thermostat

| | | |
|---|---|---|
| 1. Check the fuses. (Main and ignition) Refer to "CHECKING THE FUSES" on page 8-95. | NG → | Replace the fuse(s). |
| OK ↓ | | |
| 2. Check the battery. Refer to "CHECKING AND CHARGING THE BATTERY" on page 8-96. | NG → | • Clean the battery terminals.<br>• Recharge or replace the battery. |
| OK ↓ | | |
| 3. Check the starter motor operation. Refer to "CHECKING THE STARTER MOTOR OPERATION" on page 8-103. | OK → | Starter motor is OK. Perform the electric starting system troubleshooting, starting with step 5. |
| NG ↓ | | |
| 4. Check the starter motor. Refer to "CHECKING THE STARTER MOTOR" on page 5-35. | NG → | Repair or replace the starter motor. |
| OK ↓ | | |
| 5. Check the relay unit (starting circuit cut-off relay). Refer to "CHECKING THE RELAYS" on page 8-99. | NG → | Replace the relay unit. |
| OK ↓ | | |
| 6. Check the relay unit (diode). Refer to "CHECKING THE RELAY UNIT (DIODE)" on page 8-101. | NG → | Replace the relay unit. |
| OK ↓ | | |
| 7. Check the starter relay. Refer to "CHECKING THE RELAYS" on page 8-99. | NG → | Replace the starter relay. |
| OK ↓ | | |

| | | |
|---|---|---|
| 8. Check the main switch.<br>Refer to “CHECKING THE SWITCHES” on page 8-91. | NG → | Replace the main switch/immobilizer unit. |
| OK ↓ | | |
| 9. Check the engine stop switch.<br>Refer to “CHECKING THE SWITCHES” on page 8-91. | NG → | Replace the right handlebar switch. |
| OK ↓ | | |
| 10. Check the neutral switch.<br>Refer to “CHECKING THE SWITCHES” on page 8-91. | NG → | Replace the neutral switch. |
| OK ↓ | | |
| 11. Check the sidestand switch.<br>Refer to “CHECKING THE SWITCHES” on page 8-91. | NG → | Replace the sidestand switch. |
| OK ↓ | | |
| 12. Check the clutch switch.<br>Refer to “CHECKING THE SWITCHES” on page 8-91. | NG → | Replace the clutch switch. |
| OK ↓ | | |
| 13. Check the start switch.<br>Refer to “CHECKING THE SWITCHES” on page 8-91. | NG → | Replace the right handlebar switch. |
| OK ↓ | | |
| 14. Check the entire starting system’s wiring.<br>Refer to “CIRCUIT DIAGRAM” on page 8-7. | NG → | Properly connect or repair the starting system’s wiring. |
| OK ↓ | | |
| The starting system circuit is OK. | | |

EAS27200
# CHARGING SYSTEM

EAS27210
## CIRCUIT DIAGRAM

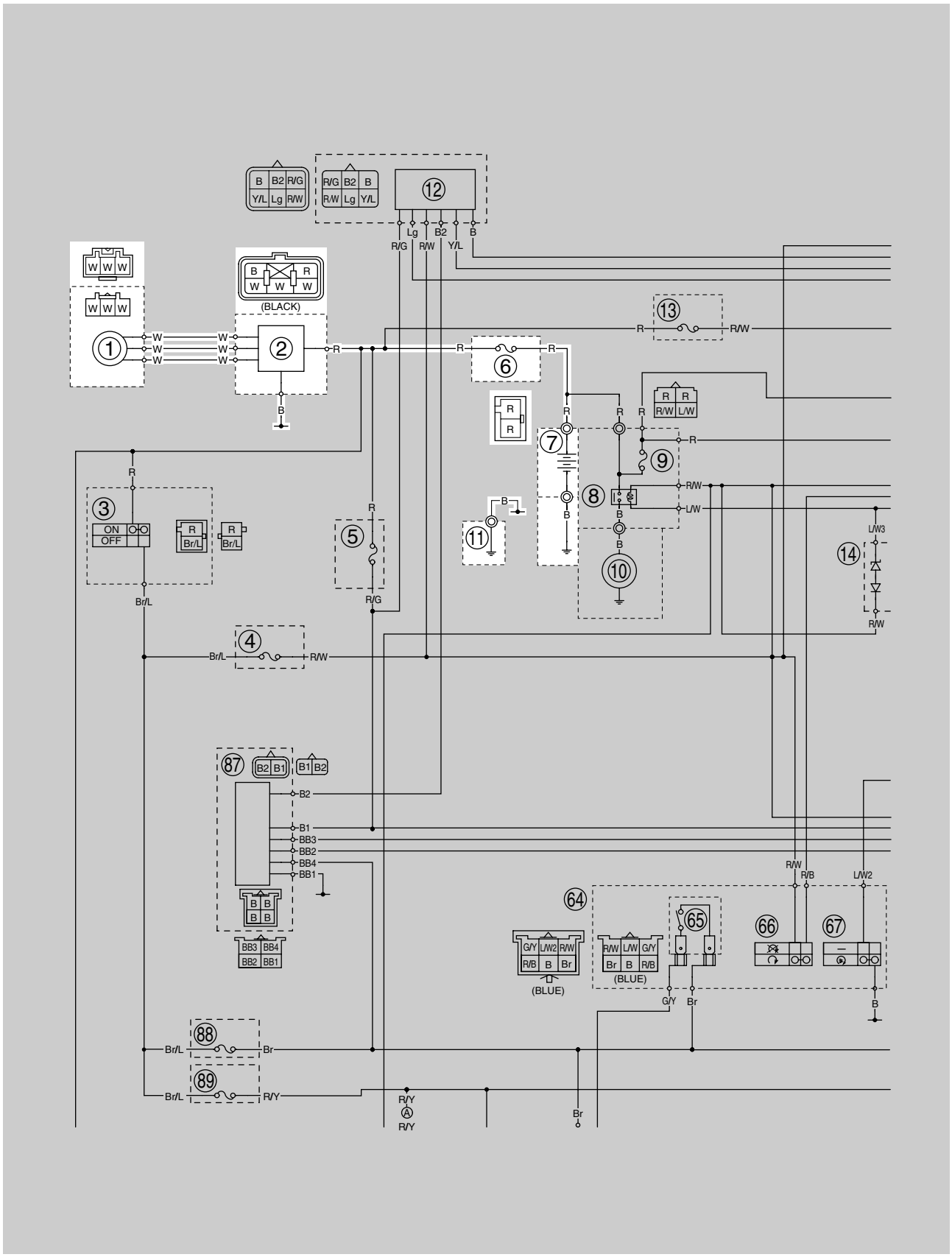

1. AC magneto
2. Rectifier/regulator
6. Main fuse
7. Battery
11. Engine ground

EAS27230

## TROUBLESHOOTING

The battery is not being charged.

**NOTE:**

• Before troubleshooting, remove the following part(s):
1. Rider seat
2. Fuel tank
3. Bottom cowlings

| | | |
|---|---|---|
| 1. Check the fuse. (Main) Refer to "CHECKING THE FUSES" on page 8-95. | NG → | Replace the fuse. |
| OK ↓ | | |
| 2. Check the battery. Refer to "CHECKING AND CHARGING THE BATTERY" on page 8-96. | NG → | • Clean the battery terminals.<br>• Recharge or replace the battery. |
| OK ↓ | | |
| 3. Check the stator coil. Refer to "CHECKING THE STATOR COIL" on page 8-104. | NG → | • Replace the stator coil assembly. |
| OK ↓ | | |
| 4. Check the rectifier/regulator. Refer to "CHECKING THE RECTIFIER/REGULATOR" on page 8-104. | NG → | Replace the rectifier/regulator. |
| OK ↓ | | |
| 5. Check the entire charging system's wiring. Refer to "CIRCUIT DIAGRAM" on page 8-13. | NG → | Properly connect or repair the charging system's wiring. |
| OK ↓ | | |
| The charging system circuit is OK. | | |

EAS27240

# LIGHTING SYSTEM

EAS27250

## CIRCUIT DIAGRAM

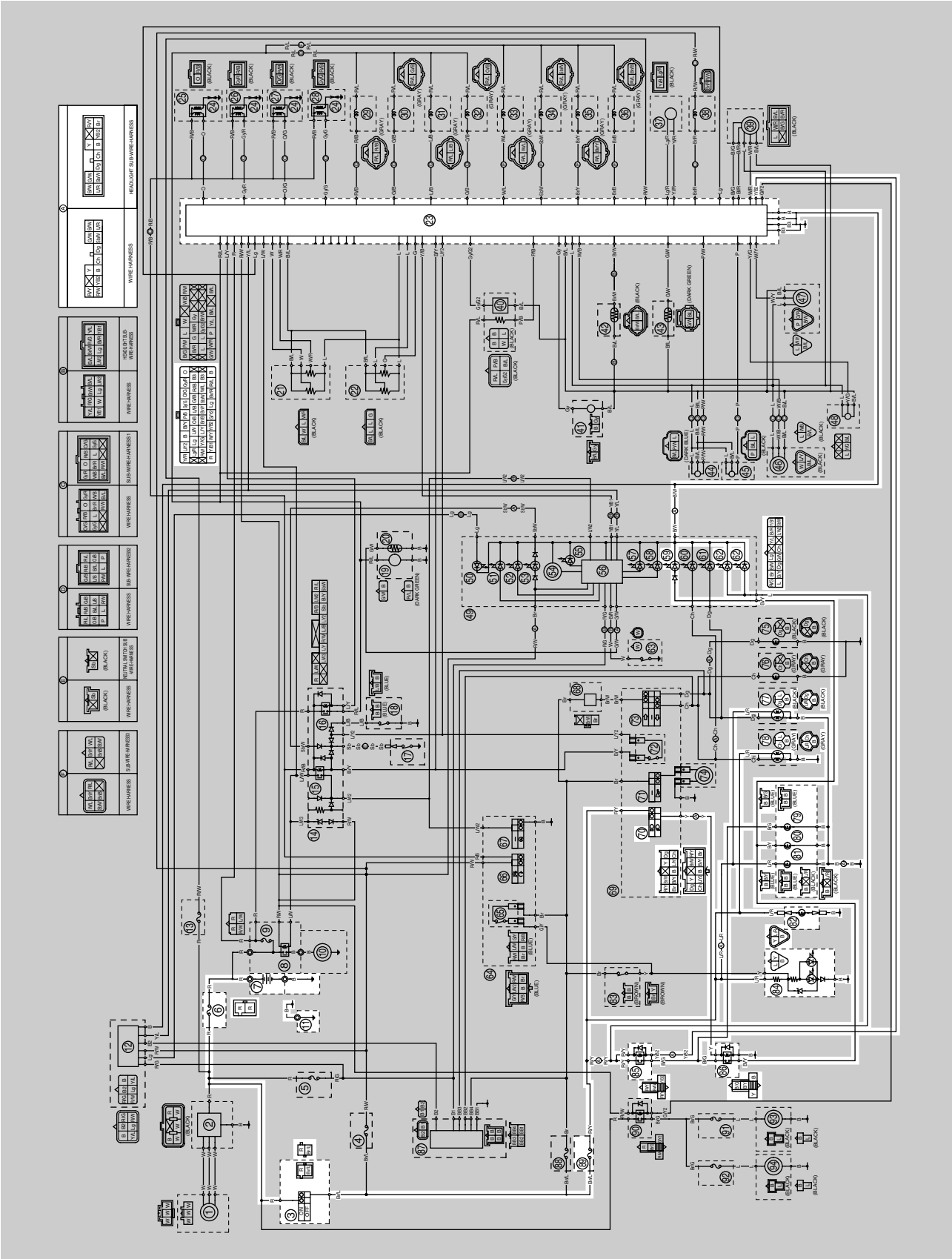

3. Main switch
6. Main fuse
7. Battery
11. Engine ground
23. ECU (engine control unit)
59. High beam indicator light
62. Meter light
70. Dimmer switch
77. Front right turn signal/position light
78. Front left turn signal/position light
79. Headlight (low beam)
80. Headlight (high beam)
81. Auxiliary light
82. License plate light
84. Tail/brake light
85. Headlight relay (on/off)
86. Headlight relay (dimmer)
89. Headlight fuse

EAS27260

## TROUBLESHOOTING

Any of the following fail to light: headlight (high beam), headlight (low beam), high beam indicator light, taillight, license plate light, auxiliary light or meter light.

**NOTE:**

• Before troubleshooting, remove the following part(s):
1. Rider seat
2. Fuel tank
3. Side cowlings
4. Rear cowling
5. Front cowling

| | | |
|---|---|---|
| 1. Check the condition of each bulb and bulb socket. Refer to "CHECKING THE BULBS AND BULB SOCKETS" on page 8-94. | NG → | Replace the bulb(s) and bulb socket(s). |
| OK ↓ | | |
| 2. Check the fuses. (Main and headlight) Refer to "CHECKING THE FUSES" on page 8-95. | NG → | Replace the fuse(s). |
| OK ↓ | | |
| 3. Check the battery. Refer to "CHECKING AND CHARGING THE BATTERY" on page 8-96. | NG → | • Clean the battery terminals.<br>• Recharge or replace the battery. |
| OK ↓ | | |
| 4. Check the main switch. Refer to "CHECKING THE SWITCHES" on page 8-91. | NG → | Replace the main switch/immobilizer unit. |
| OK ↓ | | |
| 5. Check the dimmer switch. Refer to "CHECKING THE SWITCHES" on page 8-91. | NG → | Replace the left handlebar switch. |
| OK ↓ | | |
| 6. Check the headlight relay (on/off). Refer to "CHECKING THE RELAYS" on page 8-99. | NG → | Replace the headlight relay (on/off). |
| OK ↓ | | |
| 7. Check the headlight relay (dimmer). Refer to "CHECKING THE RELAYS" on page 8-99. | NG → | Replace the headlight relay (dimmer). |
| OK ↓ | | |

| | | |
|---|---|---|
| 8. Check the entire lighting system's wiring.<br>Refer to "CIRCUIT DIAGRAM" on page 8-17. | NG → | Properly connect or repair the lighting system's wiring. |
| OK ↓ | | |
| This circuit is OK. | | |

EAS27270
# SIGNALING SYSTEM

EAS27280
## CIRCUIT DIAGRAM

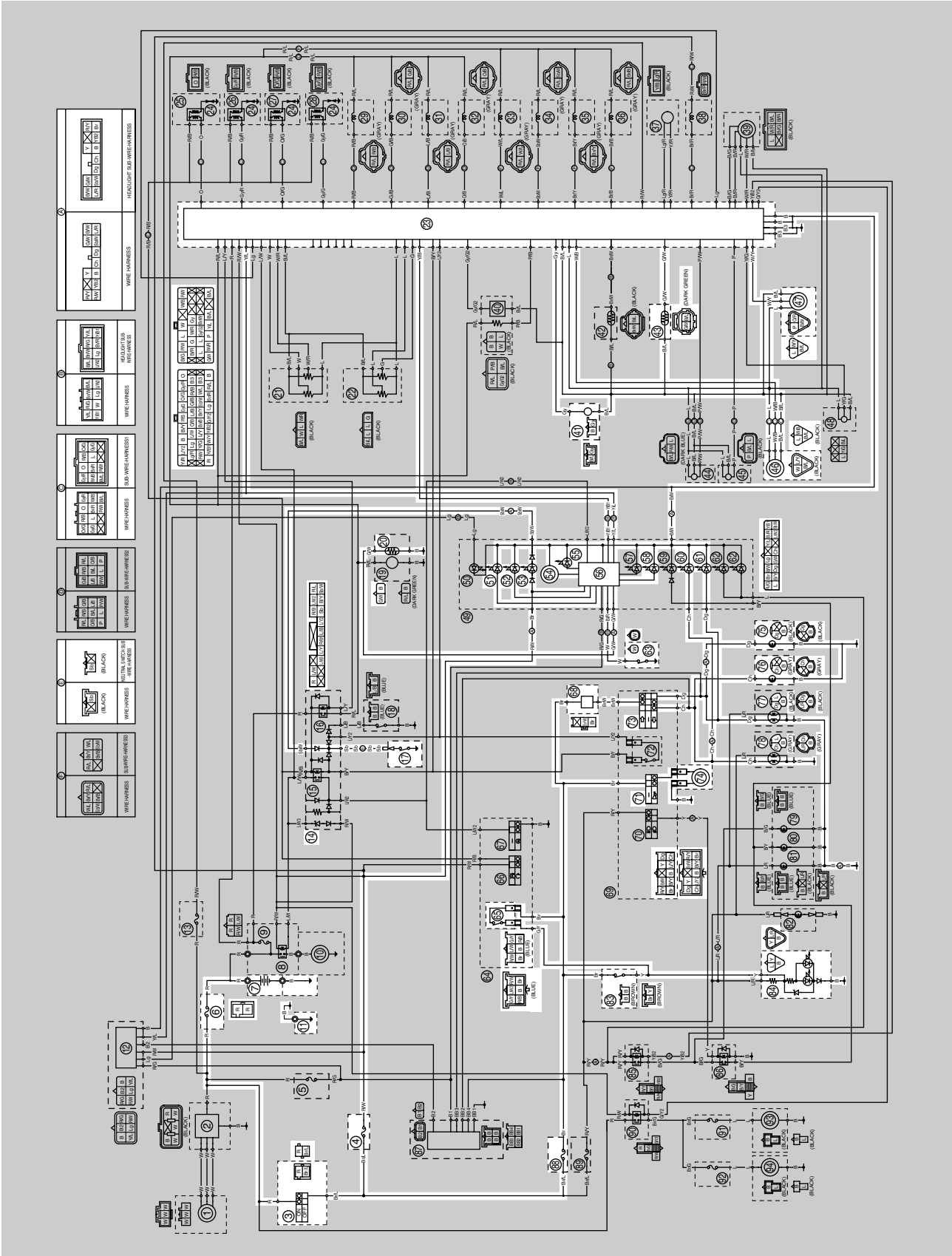

3. Main switch
4. Ignition fuse
6. Main fuse
7. Battery
11. Engine ground
14. Relay unit
17. Neutral switch
20. Fuel sender
23. ECU (engine control unit)
41. Crankshaft position sensor
43. Coolant temperature sensor
46. Cylinder identification sensor
47. Speed sensor
51. Fuel level warning light
52. Oil level warning light
53. Neutral indicator light
54. Tachometer
55. Shift timing indicator light
56. Multi-function meter
58. Coolant temperature warning light
60. Left turn signal indicator light
61. Right turn signal indicator light
63. Oil level switch
65. Front brake light switch
68. Turn signal relay
71. Horn switch
73. Turn signal switch
74. Horn
75. Rear right turn signal light
76. Rear left turn signal light
77. Front right turn signal/position light
78. Front left turn signal/position light
83. Rear brake light switch
84. Tail/brake light
88. Signaling system fuse

EAS27290

## TROUBLESHOOTING

- Any of the following fail to light: turn signal light, brake light or indicator light.
- The horn fails to sound.

**NOTE:**

- Before troubleshooting, remove the following part(s):

1. Rider seat
2. Fuel tank
3. Side cowlings
4. Bottom cowlings
5. Rear cowling

| | | |
|---|---|---|
| 1. Check the fuses. (Main, ignition and signaling system) Refer to "CHECKING THE FUSES" on page 8-95. | NG → | Replace the fuse(s). |
| OK ↓ | | |
| 2. Check the battery. Refer to "CHECKING AND CHARGING THE BATTERY" on page 8-96. | NG → | • Clean the battery terminals.<br>• Recharge or replace the battery. |
| OK ↓ | | |
| 3. Check the main switch. Refer to "CHECKING THE SWITCHES" on page 8-91. | NG → | Replace the main switch/immobilizer unit. |
| OK ↓ | | |
| 4. Check the entire signaling system's wiring. Refer to "CIRCUIT DIAGRAM" on page 8-21. | NG → | Properly connect or repair the signaling system's wiring. |
| OK ↓ | | |
| Check the condition of each of the signaling system's circuits. Refer to "Checking the signaling system". | | |

### Checking the signaling system

The horn fails to sound.

| | | |
|---|---|---|
| 1. Check the horn switch. Refer to "CHECKING THE SWITCHES" on page 8-91. | NG → | Replace the left handlebar switch. |
| OK ↓ | | |
| 2. Check the horn. Refer to "CHECKING THE HORN" on page 8-105. | NG → | Replace the horn. |
| OK ↓ | | |

| | | |
|---|---|---|
| 3. Check the entire signaling system's wiring.<br>Refer to "CIRCUIT DIAGRAM" on page 8-21. | NG → | Properly connect or repair the signaling system's wiring. |
| OK ↓ | | |
| This circuit is OK. | | |

The brake light fails to come on.

| | | |
|---|---|---|
| 1. Check the front brake light switch.<br>Refer to "CHECKING THE SWITCHES" on page 8-91. | NG → | Replace the front brake light switch. |
| OK ↓ | | |
| 2. Check the rear brake light switch.<br>Refer to "CHECKING THE SWITCHES" on page 8-91. | NG → | Replace the rear brake light switch. |
| OK ↓ | | |
| 3. Check the entire signaling system's wiring.<br>Refer to "CIRCUIT DIAGRAM" on page 8-21. | NG → | Properly connect or repair the signaling system's wiring. |
| OK ↓ | | |
| This circuit is OK. | | |

The turn signal light, turn signal indicator light or both fail to blink.

| | | |
|---|---|---|
| 1. Check the turn signal light bulbs and sockets.<br>Refer to "CHECKING THE BULBS AND BULB SOCKETS" on page 8-94. | NG → | Replace the turn signal light bulb(s), socket(s) or both. |
| OK ↓ | | |
| 2. Check the turn signal switch.<br>Refer to "CHECKING THE SWITCHES" on page 8-91. | NG → | Replace the left handlebar switch. |
| OK ↓ | | |
| 3. Check the turn signal relay.<br>Refer to "CHECKING THE TURN SIGNAL RELAY" on page 8-100. | NG → | Replace the turn signal relay. |
| OK ↓ | | |

| | | |
|---|---|---|
| 4. Check the entire signaling system's wiring.<br>Refer to "CIRCUIT DIAGRAM" on page 8-21. | NG → | Properly connect or repair the signaling system's wiring. |
| OK ↓ | | |
| This circuit is OK. | | |

The neutral indicator light fails to come on.

| | | |
|---|---|---|
| 1. Check the neutral switch.<br>Refer to "CHECKING THE SWITCHES" on page 8-91. | NG → | Replace the neutral switch. |
| OK ↓ | | |
| 2. Check the relay unit (diode).<br>Refer to "CHECKING THE RELAY UNIT (DIODE)" on page 8-101. | NG → | Replace the relay unit. |
| OK ↓ | | |
| 3. Check the entire signaling system's wiring.<br>Refer to "CIRCUIT DIAGRAM" on page 8-21. | NG → | Properly connect or repair the signaling system's wiring. |
| OK ↓ | | |
| This circuit is OK. | | |

The oil level warning light fails to come on.

| | | |
|---|---|---|
| 1. Check the oil level switch.<br>Refer to "CHECKING THE OIL LEVEL SWITCH" on page 8-105. | NG → | Replace the oil level switch. |
| OK ↓ | | |
| 2. Check the entire signaling system's wiring.<br>Refer to "CIRCUIT DIAGRAM" on page 8-21. | NG → | Properly connect or repair the signaling system's wiring. |
| OK ↓ | | |
| This circuit is OK. | | |

The fuel level warning light fails to come on.

| | | |
|---|---|---|
| 1. Check the fuel sender.<br>Refer to "CHECKING THE FUEL SENDER" on page 8-105. | NG → | Replace the fuel pump assembly. |
| OK ↓ | | |

| | | |
|---|---|---|
| 2. Check the entire signaling system's wiring.<br>Refer to "CIRCUIT DIAGRAM" on page 8-21. | NG → | Properly connect or repair the signaling system's wiring. |
| OK ↓ | | |
| This circuit is OK. | | |

The coolant temperature warning light fails to come on.

| | | |
|---|---|---|
| 1. Check the coolant temperature sensor.<br>Refer to "CHECKING THE COOLANT TEMPERATURE SENSOR" on page 8-107. | NG → | Replace the coolant temperature sensor. |
| OK ↓ | | |
| 2. Check the entire signaling system's wiring.<br>Refer to "CIRCUIT DIAGRAM" on page 8-21. | NG → | Properly connect or repair the signaling system's wiring. |
| OK ↓ | | |
| This circuit is OK. | | |

The speedometer fails to operate.

| | | |
|---|---|---|
| 1. Check the speed sensor.<br>Refer to "CHECKING THE SPEED SENSOR" on page 8-106. | NG → | Replace the speed sensor. |
| OK ↓ | | |
| 2. Check the entire signaling system's wiring.<br>Refer to "CIRCUIT DIAGRAM" on page 8-21. | NG → | Properly connect or repair the signaling system's wiring. |
| OK ↓ | | |
| Replace the meter assembly. | | |

The shift timing indicator light fails to come on.

| | | |
|---|---|---|
| 1. Check that the shift timing indicator light is set to come on and that the brightness level of the light is adjusted properly.<br>Refer to "FEATURES" on page 1-2. | NG → | Replace the meter assembly. |
| OK ↓ | | |

2. Check the entire signaling system's wiring.
   Refer to "CIRCUIT DIAGRAM" on page 8-21.

NG →

Properly connect or repair the signaling system's wiring.

OK ↓

This circuit is OK.

EAS27300
# COOLING SYSTEM

EAS27310
## CIRCUIT DIAGRAM

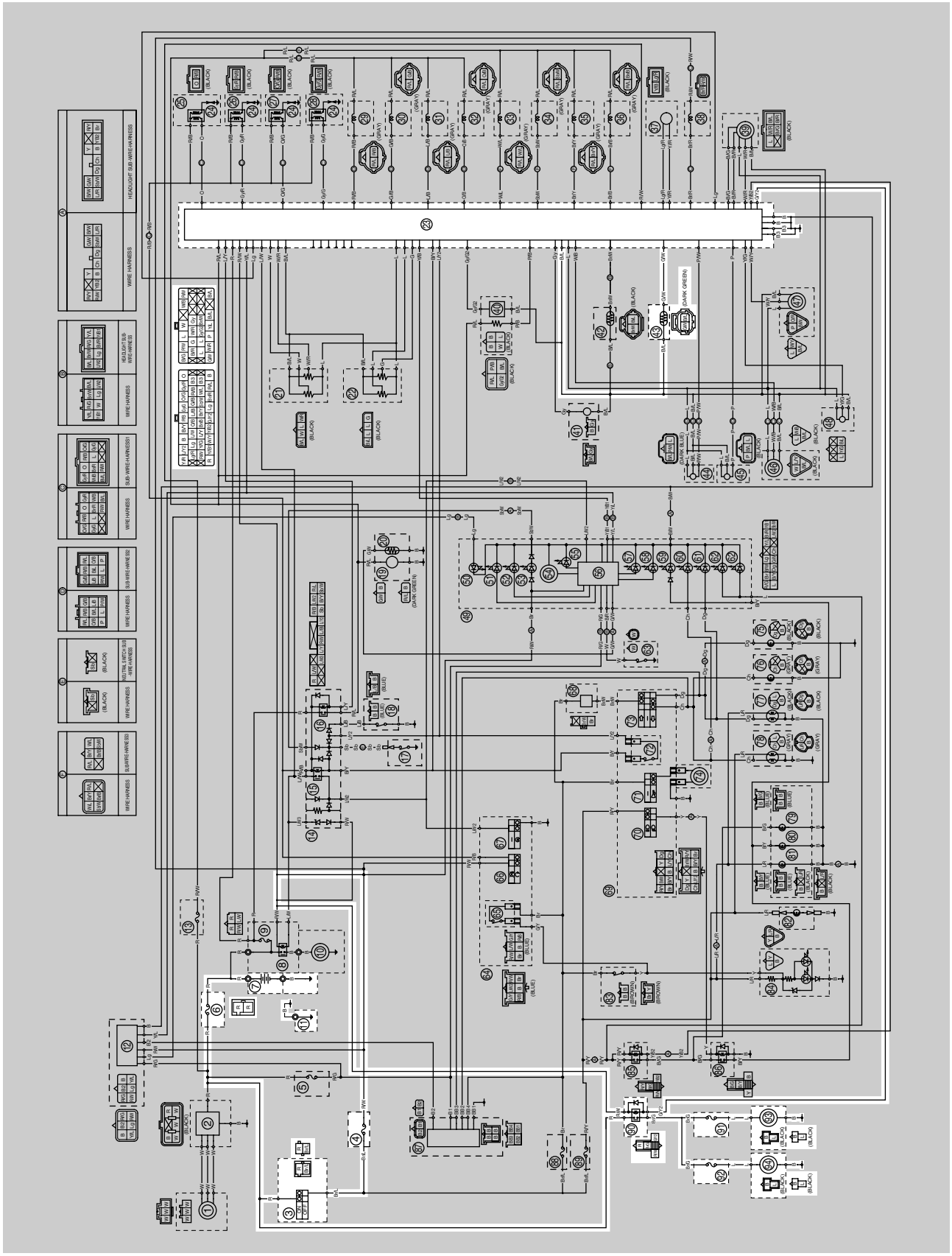

3. Main switch
4. Ignition fuse
6. Main fuse
7. Battery
11. Engine ground
23. ECU (engine control unit)
43. Coolant temperature sensor
90. Radiator fan motor relay
91. Right radiator fan motor fuse
92. Left radiator fan motor fuse
93. Right radiator fan motor
94. Left radiator fan motor

EAS27320
## TROUBLESHOOTING

**NOTE:**

• Before troubleshooting, remove the following part(s):
1. Rider seat
2. Fuel tank
3. Side cowlings

| | | |
|---|---|---|
| 1. Check the fuses. (Main, ignition and radiator fan motor) Refer to "CHECKING THE FUSES" on page 8-95. | NG → | Replace the fuse(s). |
| OK ↓ | | |
| 2. Check the battery. Refer to "CHECKING AND CHARGING THE BATTERY" on page 8-96. | NG → | • Clean the battery terminals.<br>• Recharge or replace the battery. |
| OK ↓ | | |
| 3. Check the main switch. Refer to "CHECKING THE SWITCHES" on page 8-91. | NG → | Replace the main switch/immobilizer unit. |
| OK ↓ | | |
| 4. Check the radiator fan motors. Refer to "CHECKING THE RADIATOR FAN MOTORS" on page 8-106. | NG → | Replace the radiator fan motor(s). |
| OK ↓ | | |
| 5. Check the radiator fan motor relay. Refer to "CHECKING THE RELAYS" on page 8-99. | NG → | Replace the radiator fan motor relay. |
| OK ↓ | | |
| 6. Check the coolant temperature. Refer to "CHECKING THE COOLANT TEMPERATURE SENSOR" on page 8-107. | NG → | Replace the coolant temperature sensor. |
| OK ↓ | | |
| 7. Check the entire cooling system's wiring. Refer to "CIRCUIT DIAGRAM" on page 8-29. | NG → | Properly connect or repair the cooling system's wiring. |
| OK ↓ | | |
| This circuit is OK. | | |

EAS27330
# FUEL INJECTION SYSTEM

EAS27340
## CIRCUIT DIAGRAM

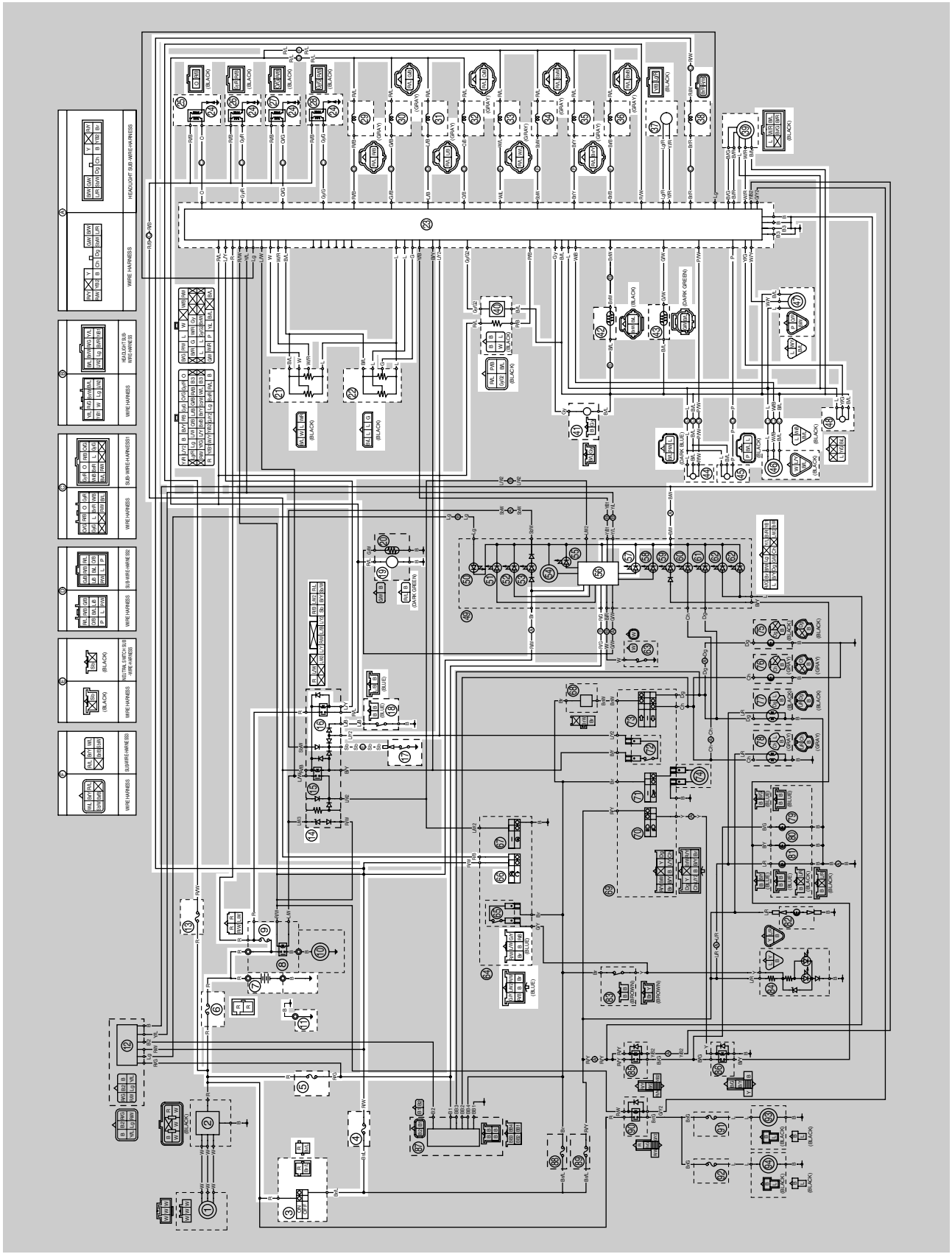

3. Main switch
4. Ignition fuse
5. Backup fuse (odometer, clock and immobilizer system)
6. Main fuse
7. Battery
9. Fuel injection system fuse
11. Engine ground
13. ETV fuse
14. Relay unit
16. Fuel pump relay
17. Neutral switch
18. Sidestand switch
19. Fuel pump
21. Throttle position sensor (for throttle cable pulley)
22. Throttle position sensor (for throttle valves)
23. ECU (engine control unit)
24. Spark plug
25. Cylinder-#1 ignition coil
26. Cylinder-#2 ignition coil
27. Cylinder-#3 ignition coil
28. Cylinder-#4 ignition coil
29. Primary injector #1
30. Primary injector #2
31. Primary injector #3
32. Primary injector #4
33. Secondary injector #1
34. Secondary injector #2
35. Secondary injector #3
36. Secondary injector #4
37. Throttle servo motor
38. Air induction system solenoid
39. EXUP servo motor
40. $O_2$ sensor
41. Crankshaft position sensor
42. Air temperature sensor
43. Coolant temperature sensor
44. Intake air pressure sensor
45. Atmospheric pressure sensor
46. Cylinder identification sensor
47. Speed sensor
48. Lean angle sensor
56. Multi-function meter
57. Engine trouble warning light
66. Engine stop switch

EAS27350

## ECU SELF-DIAGNOSTIC FUNCTION

The ECU is equipped with a self-diagnostic function in order to ensure that the fuel injection system is operating normally. If this function detects a malfunction in the system, it immediately operates the engine under substitute characteristics and illuminates the engine trouble warning light to alert the rider that a malfunction has occurred in the system. Once a malfunction has been detected, a fault code is stored in the memory of the ECU.

- To inform the rider that the fuel injection system is not functioning, the engine trouble warning light flashes when the start switch is being pushed to start the engine.
- If a malfunction is detected in the system by the self-diagnostic function, the ECU provides an appropriate substitute characteristic operation, and alerts the rider of the detected malfunction by illuminating the engine trouble warning light.
- After the engine has been stopped, the lowest fault code number appears on the odometer/tripmeter/fuel reserve tripmeter LCD. Once a fault code has been displayed, it remains stored in the memory of the ECU until it is deleted.

**Engine trouble warning light indication and fuel injection system operation**

| Warning light indication | ECU operation | Fuel injection operation | Vehicle operation |
|---|---|---|---|
| Flashing* | Warning provided when unable to start engine | Operation stopped | Cannot be operated |
| Remains on | Malfunction detected | Operated with substitute characteristics in accordance with the description of the malfunction | Can or cannot be operated depending on the fault code |

* The warning light flashes when any one of the conditions listed below is present and the start switch is pushed:

| | | | |
|---|---|---|---|
| 11: | Cylinder identification sensor | 30: | Lean angle sensor (latch up detected) |
| 12: | Crankshaft position sensor | 41: | Lean angle sensor (open or short-circuit) |
| 19: | Sidestand switch (open circuit in the wire to the ECU) | 50: | ECU internal malfunction (memory check error) |

**Checking the engine trouble warning light**

The engine trouble warning light comes on for 1.4 seconds after the main switch has been turned to “ON” and it comes on while the start switch is being pushed. If the warning light does not come on under these conditions, the warning light (LED) may be defective.

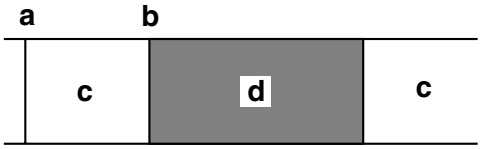


a. Main switch “OFF”
b. Main switch “ON”
c. Engine trouble warning light off
d. Engine trouble warning light on for 1.4 seconds

EAS27380
## SELF-DIAGNOSTIC FUNCTION TABLE

If the ECU detects an abnormal signal from a sensor while the vehicle is being driven, the ECU illuminates the engine trouble warning light and provides the engine with alternate operating instructions that are appropriate for the type of malfunction.
When an abnormal signal is received from a sensor, the ECU processes the specified values that are programmed for each sensor in order to provide the engine with alternate operating instructions that enable the engine to continue to operate or stop operating, depending on the conditions.

**Self-Diagnostic Function table**

| Fault code No. | Item | Symptom | Able/unable to start | Able/unable to drive |
|---|---|---|---|---|
| 11 | Cylinder identification sensor | No normal signals are received from the cylinder identification sensor when the engine is started or while the vehicle is being driven. | Unable | Able |
| 12 | Crankshaft position sensor | No normal signals are received from the crankshaft position sensor. | Unable | Unable |
| 13 | Intake air pressure sensor (open or short circuit) | Intake air pressure sensor: open or short circuit detected. | Able | Able |
| 14 | Intake air pressure sensor hose line (piping system) | Intake air pressure sensor: hose system malfunction (clogged or detached hose). | Able | Able |
| 15 | Throttle position sensor (for throttle valves) (open or short circuit/loose connection) | Throttle position sensor (for throttle valves): open or short circuit detected. Throttle position sensor (for throttle valves) coupler connection is loose. | Able/Unable | Able/Unable |
| 17 | EXUP servo motor circuit (open or short circuit) | EXUP servo motor circuit: open or short circuit detected. | Able | Able |

| Fault code No. | Item | Symptom | Able/unable to start | Able/unable to drive |
|---|---|---|---|---|
| 18 | EXUP servo motor (stuck) | EXUP servo motor is stuck. | Able | Able |
| 19 | Sidestand switch (open circuit in the wire to the ECU) | Open circuit is detected in the input line from the sidestand switch to the ECU. | Unable | Unable |
| 20 | Intake air pressure sensor or atmospheric pressure sensor | When the main switch is turned to “ON”, the atmospheric pressure sensor voltage and intake air pressure sensor voltage differ greatly. | Able | Able |
| 21 | Coolant temperature sensor (open or short circuit) | Coolant temperature sensor: open or short circuit detected. | Able | Able |
| 22 | Air temperature sensor (open or short circuit) | Air temperature sensor: open or short circuit detected. | Able | Able |
| 23 | Atmospheric pressure sensor (open or short circuit) | Atmospheric pressure sensor: open or short circuit detected. | Able | Able |
| 24 | $O_2$ sensor | No normal signal is received from the $O_2$ sensor. | Able | Able |
| 30 | Lean angle sensor | Latch up detected. No normal signal is received from the lean angle sensor. | Unable | Unable |
| 33 | Cylinder-#1 ignition coil (open circuit) | Primary lead of the cylinder-#1 ignition coil: open circuit detected. | Able (depending on the number of faulty cylinders) | Able (depending on the number of faulty cylinders) |
| 34 | Cylinder-#2 ignition coil (open circuit) | Primary lead of the cylinder-#2 ignition coil: open circuit detected. | Able (depending on the number of faulty cylinders) | Able (depending on the number of faulty cylinders) |
| 35 | Cylinder-#3 ignition coil (open circuit) | Primary lead of the cylinder-#3 ignition coil: open circuit detected. | Able (depending on the number of faulty cylinders) | Able (depending on the number of faulty cylinders) |
| 36 | Cylinder-#4 ignition coil (open circuit) | Primary lead of the cylinder-#4 ignition coil: open circuit detected. | Able (depending on the number of faulty cylinders) | Able (depending on the number of faulty cylinders) |

| Fault code No. | Item | Symptom | Able/unable to start | Able/unable to drive |
|---|---|---|---|---|
| 39 | Primary injector (open circuit) | Primary injector: open circuit detected. | Able (depending on the number of faulty cylinders) | Able (depending on the number of faulty cylinders) |
| 40 | Secondary injector (open circuit) | Secondary injector: open circuit detected. | Able (depending on the number of faulty cylinders) | Able (depending on the number of faulty cylinders) |
| 41 | Lean angle sensor (open or short-circuit) | Lean angle sensor: open or short circuit detected. | Unable | Unable |
| 42 | Speed sensor | No normal signals are received from the speed sensor. | Able | Able |
| | Neutral switch | Neutral switch: open or short circuit detected. | | |
| 43 | Fuel system voltage (monitoring voltage) | Power supply to the injectors and the fuel pump is not normal. | Able | Able |
| 44 | Error in writing the amount of CO adjustment on EEPROM | An error is detected while reading or writing on EEPROM (CO adjustment value). | Able | Able |
| 46 | Vehicle system power supply (monitoring voltage) | Power supply is not normal. | Able | Able |
| 50 | ECU internal malfunction | ECU memory is faulty. (When this malfunction is detected in the ECU, the fault code number might not appear on the meter.) | Able/Unable | Able/Unable |
| 59 | Throttle position sensor (for throttle cable pulley) (open or short circuit/loose connection) | Throttle position sensor (for throttle cable pulley): open or short circuit detected. Throttle position sensor (for throttle cable pulley) coupler connection is loose. | Able/Unable | Able/Unable |
| 60 | Throttle servo motor | Throttle servo motor: open or short circuit detected. Motor is defective or ECU internal malfunction. | Able/Unable | Able/Unable |

**Communication error with the meter**

| Fault code No. | Item | Symptom | Able/unable to start | Able/unable to drive |
|---|---|---|---|---|
| Er-1 | ECU internal malfunction (output signal error) | No signals are received from the ECU. | Unable | Unable |

| Fault code No. | Item | Symptom | Able/unable to start | Able/unable to drive |
|---|---|---|---|---|
| Er-2 | ECU internal malfunction (output signal error) | No signals are received from the ECU within the specified duration. | Unable | Unable |
| Er-3 | ECU internal malfunction (output signal error) | Data from the ECU cannot be received correctly. | Unable | Unable |
| Er-4 | ECU internal malfunction (input signal error) | Non-registered data has been received from the meter. | Unable | Unable |

EAS27400

## TROUBLESHOOTING METHOD

**The engine operation is not normal and the engine trouble warning light comes on.**

1. Check:
   - Fault code number

▼▼▼▼▼▼▼▼▼▼▼▼▼▼▼▼▼▼▼▼▼▼▼▼▼▼▼▼▼▼▼▼▼▼▼▼

a. Check the fault code number displayed on the meter.
b. Identify the faulty system with the fault code. Refer to “Self-Diagnostic Function table”.
c. Identify the probable cause of the malfunction. Refer to “Fault code table”.

▲▲▲▲▲▲▲▲▲▲▲▲▲▲▲▲▲▲▲▲▲▲▲▲▲▲▲▲▲▲▲▲▲▲▲▲

2. Check and repair the probable cause of malfunction.

| Fault code No. | No fault code No. |
|---|---|
| Check and repair. Refer to “TROUBLESHOOTING DETAILS” on page 8-48. Monitor the operation of the sensors and actuators in the diagnostic mode. Refer to “Sensor operation table” and “Actuator operation table”. | Check and repair. |

3. Perform Fuel injection system reinstatement action.
   Refer to “Reinstatement method” of table in “TROUBLESHOOTING DETAILS”.
4. Turn the main switch to “OFF” and back to “ON”, then check that no fault code number is displayed.

**NOTE:**

If fault codes are displayed, repeat steps (1) to (4) until no fault code number is displayed.

5. Erase the malfunction history in the diagnostic mode. Refer to “Sensor operation table (Diagnostic code No. 62)”.

**NOTE:**

Turning the main switch to “OFF” will not erase the malfunction history.

**The engine operation is not normal but the engine trouble warning light does not come on.**

1. Check the operation of following sensors and actuators in the Diagnostic mode. Refer to “Sensor operation table” and “Actuator operation table”.

| |
|---|
| 01: Throttle position sensor (for throttle valves) signal 1 (throttle angle)<br>13: Throttle position sensor (for throttle valves) signal 2 (throttle angle)<br>14: Throttle position sensor (for throttle cable pulley) signal 1 (throttle angle)<br>15: Throttle position sensor (for throttle cable pulley) signal 2 (throttle angle)<br>48: Air induction system solenoid |

If a malfunction is detected in the sensors or actuators, repair or replace all faulty parts.
If no malfunction is detected in the sensors and actuators, check and repair inner parts of the engine.

EAS27420

## DIAGNOSTIC MODE

Setting the diagnostic mode

1. Turn the main switch to “OFF”.
2. Disconnect the wire harness coupler from the fuel pump.
3. Press and hold the “SELECT” and “RESET” buttons, turn the main switch to “ON”, and continue to press the buttons for 8 seconds or more.

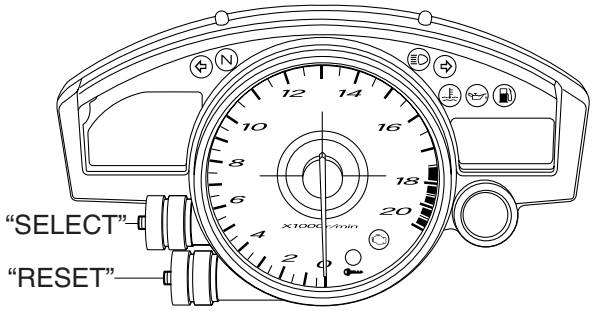


**NOTE:**

- All displays on the meter disappear except the odometer/trip meter/fuel reserve trip meter/stopwatch display.
- “dIAG” appears on the odometer/trip meter/fuel reserve trip meter/stopwatch LCD.

4. Press the “SELECT” button to select the diagnostic mode “dIAG”.
5. After selecting “dIAG”, simultaneously press the “SELECT” and “RESET” buttons for 2 seconds or more to activate the diagnostic mode. The diagnostic code number “d01” appears on the clock LCD.
6. Select the diagnostic code number corresponding to the fault code number by pressing the “SELECT” and “RESET” buttons.

**NOTE:**

- To decrease the selected diagnostic code number, press the “RESET” button. Press the “RESET” button for 1 second or longer to automatically decrease the diagnostic code numbers.
- To increase the selected diagnostic code number, press the “SELECT” button. Press the “SELECT” button for 1 second or longer to automatically increase the diagnostic code numbers.

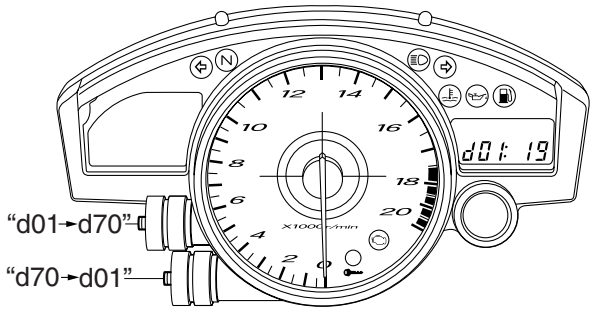


7. Verify the operation of the sensor or actuator.
   - Sensor operation
     The data representing the operating conditions of the sensor appears on the odometer/trip meter/fuel reserve trip meter/stopwatch LCD.
   - Actuator operation
     Set the engine stop switch to “◯” to operate the actuator.

**NOTE:**

If the engine stop switch is set to “◯”, set it to “⊗”, and then set it to “◯” again.

8. Turn the main switch to “OFF” to cancel the diagnostic mode.

**Fault code table**

| Fault code No. | Symptom | Probable cause of malfunction | Diagnostic code No. |
|---|---|---|---|
| 11 | No normal signals are received from the cylinder identification sensor when the engine is started or while the vehicle is being driven. | • Open or short circuit in sub-wire-harness 1.<br>• Open or short circuit in wire harness.<br>• Defective cylinder identification sensor.<br>• Malfunction in ECU.<br>• Improperly installed sensor. | — |
| 12 | No normal signals are received from the crankshaft position sensor. | • Open or short circuit in wire harness.<br>• Defective crankshaft position sensor.<br>• Malfunction in pickup rotor.<br>• Malfunction in ECU.<br>• Improperly installed sensor. | — |
| 13 | Intake air pressure sensor: open or short circuit detected. | • Open or short circuit in wire harness.<br>• Defective intake air pressure sensor.<br>• Malfunction in ECU. | 03 |
| 14 | Intake air pressure sensor: hose system malfunction (clogged or detached hose). | • Intake air pressure sensor hose is detached, clogged, kinked, or pinched.<br>• Malfunction in ECU. | 03 |
| 15 | Throttle position sensor (for throttle valves): open or short circuit detected.<br>Throttle position sensor (for throttle valves) coupler connection is loose. | • Open or short circuit in wire harness.<br>• Defective throttle position sensor (for throttle valves).<br>• Malfunction in ECU.<br>• Improperly installed throttle position sensor (for throttle valves). | 01<br>13 |
| 17 | EXUP servo motor circuit: open or short circuit detected or loose connection. | • Open or short circuit in wire harness.<br>• Defective EXUP servo motor (potentiometer circuit). | 53 |
| 18 | EXUP servo motor is stuck. | • Open or short circuit in wire harness.<br>• Stuck EXUP servo motor (mechanism).<br>• Stuck EXUP servo motor (motor). | 53 |
| 19 | Open circuit is detected in the input lead from the sidestand switch to the ECU. | • Open circuit in wire harness (ECU coupler).<br>• Malfunction in ECU.<br>• Relay unit (diode) | 20 |
| 20 | When the main switch is turned to “ON”, the atmospheric pressure sensor voltage and intake air pressure sensor voltage differ greatly. | • Atmospheric pressure sensor hose is clogged.<br>• Intake air pressure sensor hose is clogged, kinked, or pinched.<br>• Malfunction of the atmospheric pressure sensor in the intermediate electrical potential.<br>• Malfunction of the intake air pressure sensor in the intermediate electrical potential.<br>• Malfunction in ECU. | 03<br>02 |
| 21 | Coolant temperature sensor: open or short circuit detected. | • Open or short circuit in wire harness.<br>• Defective coolant temperature sensor.<br>• Malfunction in ECU.<br>• Improperly installed coolant temperature sensor. | 06 |

| Fault code No. | Symptom | Probable cause of malfunction | Diagnostic code No. |
|---|---|---|---|
| 22 | Air temperature sensor: open or short circuit detected. | • Open or short circuit in wire harness.<br>• Defective air temperature sensor.<br>• Malfunction in ECU.<br>• Improperly installed air temperature sensor. | 05 |
| 23 | Atmospheric pressure sensor: open or short circuit detected. | • Open or short circuit in wire harness.<br>• Defective atmospheric pressure sensor.<br>• Improperly installed atmospheric pressure sensor.<br>• Malfunction in ECU. | 02 |
| 24 | No normal signal is received from the $O_2$ sensor. | • Open or short circuit in wire harness.<br>• Defective $O_2$ sensor.<br>• Malfunction in ECU.<br>• Improperly installed $O_2$ sensor. | — |
| 30 | Latch up detected.<br>No normal signal is received from the lean angle sensor. | • The vehicle has overturned.<br>• Defective lean angle sensor.<br>• Malfunction in ECU.<br>• Improperly installed lean angle sensor. | 08 |
| 33 | Open circuit detected in the primary lead of the cylinder-#1 ignition coil. | • Open circuit in wire harness.<br>• Malfunction in ignition coil.<br>• Malfunction in ECU. | 30 |
| 34 | Open circuit detected in the primary lead of the cylinder-#2 ignition coil. | • Open circuit in wire harness.<br>• Malfunction in ignition coil.<br>• Malfunction in ECU. | 31 |
| 35 | Open circuit detected in the primary lead of the cylinder-#3 ignition coil. | • Open circuit in wire harness.<br>• Malfunction in ignition coil.<br>• Malfunction in ECU. | 32 |
| 36 | Open circuit detected in the primary lead of the cylinder-#4 ignition coil. | • Open circuit in wire harness.<br>• Malfunction in ignition coil.<br>• Malfunction in ECU. | 33 |
| 39 | Open circuit detected in a primary injector. | • Open or short circuit in wire harness.<br>• Defective primary injector.<br>• Malfunction in ECU.<br>• Improperly installed primary injector. | 36<br>37<br>38<br>39 |
| 40 | Open circuit detected in a secondary injector. | • Open or short circuit in wire harness.<br>• Defective secondary injector.<br>• Malfunction in ECU.<br>• Improperly installed secondary injector. | 40<br>41<br>42<br>43 |
| 41 | Lean angle sensor: open or short circuit detected. | • Open or short circuit in wire harness.<br>• Defective lean angle sensor.<br>• Malfunction in ECU. | 08 |
| 42 | No normal signals are received from the speed sensor. | • Open circuit in wire harness.<br>• Malfunction in speed sensor.<br>• Malfunction in ECU. | 07 |
| | Neutral switch: open or short circuit detected. | • Open circuit in wire harness.<br>• Malfunction in neutral switch.<br>• Malfunction in ECU. | 21 |

| Fault code No. | Symptom | Probable cause of malfunction | Diagnostic code No. |
|---|---|---|---|
| 43 | Power supply to the injectors and the fuel pump is not normal. | • Open or short circuit in wire harness.<br>• Malfunction in ECU. | 09 |
| 44 | An error is detected while reading or writing on EEPROM (CO adjustment value). | • Malfunction in ECU.<br>(The CO adjustment value is not properly written on or read from the internal memory). | 60 |
| 46 | Power supply is not normal. | • Malfunction in the charging system.<br>Refer to “CHARGING SYSTEM” on page 8-13. | — |
| 50 | Faulty ECU memory.<br>(When this malfunction is detected in the ECU, the fault code number might not appear on the meter.) | • Malfunction in ECU.<br>(The program and data are not properly written on or read from the internal memory.) | — |
| 59 | Throttle position sensor (for throttle cable pulley): open or short circuit detected.<br>Throttle position sensor (for throttle cable pulley) coupler connection is loose. | • Open or short circuit in wire harness.<br>• Defective throttle position sensor.<br>• Improperly installed throttle position sensor.<br>• Malfunction in ECU. | 14<br>15 |
| 60 | Throttle servo motor: open or short circuit detected.<br>Defective throttle servo motor.<br>Malfunction in ECU (servo motor driving system). | • Open or short circuit in wire harness.<br>• Defective throttle servo motor (potentiometer circuit).<br>• Stuck throttle servo motor (mechanism).<br>• Stuck throttle servo motor (motor).<br>• Malfunction in ECU. | 01 |
| Er-1 | No signals are received from the ECU. | • Open or short circuit in wire harness.<br>• Malfunction in meter.<br>• Malfunction in ECU.<br>• Defective wire connection of the ECU coupler. | — |
| Er-2 | No signals are received from the ECU within the specified duration. | • Improper connection in wire harness.<br>• Malfunction in meter.<br>• Malfunction in ECU. | — |
| Er-3 | Data from the ECU cannot be received correctly. | • Improper connection in wire harness.<br>• Malfunction in meter.<br>• Malfunction in ECU. | — |
| Er-4 | Non-registered data has been received from the meter. | • Improper connection in wire harness.<br>• Malfunction in meter.<br>• Malfunction in ECU. | — |

**Sensor operation table**

| Diagnostic code No. | Item | Meter display | Checking method |
|---|---|---|---|
| 01 | Throttle position sensor (for throttle valves) signal 1 | | |
| | • Fully closed position | 12–21 | Check with throttle valves fully closed. |
| | • Fully opened position | 97–106 | Check with throttle valves fully opened. |
| 02 | Atmospheric pressure | Displays the atmospheric pressure. | Compare the actually measured atmospheric pressure with the meter display value. |
| 03 | Intake air pressure | Displays intake air pressure. | Compare the actually measured atmospheric pressure with the meter display value without cranking the engine. |
| 05 | Intake air temperature | Displays the intake air temperature. | Compare the actually measured air temperature with the meter display value. |
| 06 | Coolant temperature | Displays the coolant temperature. | Compare the actually measured coolant temperature with the meter display value. |
| 07 | Vehicle speed pulse | 0–999 | Check that the number increases when the rear wheel is rotated. The number is cumulative and does not reset each time the wheel is stopped. |
| 08 | Lean angle sensor | | Remove the lean angle sensor and incline it more than 65 degrees. |
| | • Upright | 0.4–1.4 | |
| | • Overturned | 3.7–4.4 | |
| 09 | Fuel system voltage (battery voltage) | Approximately 12.0 | Set the engine stop switch to "◯", and then compare with the actually measured battery voltage. (If the battery voltage is lower, recharge the battery.) |
| 13 | Throttle position sensor (for throttle valves) signal 2 | | |
| | • Fully closed position | 9–23 | Check with throttle valve fully closed. |
| | • Fully opened position | 94–108 | Check with throttle valve fully opened. |

| Diagnostic code No. | Item | Meter display | Checking method |
|---|---|---|---|
| 14 | Throttle position sensor (for throttle cable pulley) signal 1 | | |
| | • Fully closed position | 12–22 | Check with throttle grip fully closed. |
| | • Fully opened position | 97–107 | Check with throttle grip fully opened. |
| 15 | Throttle position sensor (for throttle cable pulley) signal 2 | | |
| | • Fully closed position | 10–24 | Check with throttle grip fully closed. |
| | • Fully opened position | 95–109 | Check with throttle grip fully opened. |
| 20 | Sidestand switch | | Set ON/OFF the sidestand switch (with the transmission in gear). |
| | • Stand retracted | ON | |
| | • Stand extended | OFF | |
| 21 | Neutral switch | | Shift the transmission. |
| | • Neutral | ON | |
| | • In gear | OFF | |
| 60 | EEPROM fault cylinder No. | | — |
| | • No history | 00 | |
| | • History exists | 01-04 (fault cylinder No.)<br>• (If more than one cylinder is defective, the display changes every two seconds to show all the detected cylinder numbers. When all cylinder numbers are shown, the display repeats.) | |
| 61 | Malfunction history code | | — |
| | • No history | 00 | |
| | • History exists | Fault codes 11-60<br>• (If more than one code number is detected, the display changes every two seconds to show all the detected code numbers. When all code numbers are shown, the display repeats.) | |

| Diagnostic code No. | Item | Meter display | Checking method |
|---|---|---|---|
| 62 | Malfunction history code erasure<br>• No history<br>• History exists | <br>00<br>• Displays the total number of malfunctions, including the current malfunction, that have occurred since the history was last erased. (For example, if there have been three malfunctions, “03” is displayed.) | <br>—<br>To erase the history, set the engine stop switch from “⊗” to “◯”. |
| 63 | Malfunction code reinstate (for fault code No. 24 and 40 only)<br>• No malfunction code<br>• Malfunction code exists | <br>00<br>Fault codes 24, 40<br>• (If more than one code number is detected, the display changes every two seconds to show all the detected code numbers. When all code numbers are shown, the display repeats.) | <br>—<br>To reinstate, set the engine stop switch from “⊗” to “◯”. |
| 70 | Control number | 00 | — |

**Actuator operation table**

| Diagnostic code No. | Item | Actuation | Checking method |
|---|---|---|---|
| 30 | Cylinder-#1 ignition coil | Actuates the cylinder-#1 ignition coil five times at one-second intervals. Illuminates the engine trouble warning light. | Check the spark five times.<br>• Connect an ignition checker. |
| 31 | Cylinder-#2 ignition coil | Actuates the cylinder-#2 ignition coil five times at one-second intervals. Illuminates the engine trouble warning light. | Check the spark five times.<br>• Connect an ignition checker. |
| 32 | Cylinder-#3 ignition coil | Actuates the cylinder-#3 ignition coil five times at one-second intervals. Illuminates the engine trouble warning light. | Check the spark five times.<br>• Connect an ignition checker. |

| Diagnostic code No. | Item | Actuation | Checking method |
|---|---|---|---|
| 33 | Cylinder-#4 ignition coil | Actuates the cylinder-#4 ignition coil five times at one-second intervals.<br>Illuminates the engine trouble warning light. | Check the spark five times.<br>• Connect an ignition checker. |
| 36 | Primary injector #1 | Actuates the primary injector #1 five times at one-second intervals.<br>Illuminates the engine trouble warning light. | Check the operating sound of the primary injector #1 five times. |
| 37 | Primary injector #2 | Actuates the primary injector #2 five times at one-second intervals.<br>Illuminates the engine trouble warning light. | Check the operating sound of the primary injector #2 five times. |
| 38 | Primary injector #3 | Actuates the primary injector #3 five times at one-second intervals.<br>Illuminates the engine trouble warning light. | Check the operating sound of the primary injector #3 five times. |
| 39 | Primary injector #4 | Actuates the primary injector #4 five times at one-second intervals.<br>Illuminates the engine trouble warning light. | Check the operating sound of the primary injector #4 five times. |
| 40 | Secondary injector #1 | Actuates the secondary injector #1 five times at one-second intervals.<br>Illuminates the engine trouble warning light. | Check the operating sound of the secondary injector #1 five times. |
| 41 | Secondary injector #2 | Actuates the secondary injector #2 five times at one-second intervals.<br>Illuminates the engine trouble warning light. | Check the operating sound of the secondary injector #2 five times. |
| 42 | Secondary injector #3 | Actuates the secondary injector #3 five times at one-second intervals.<br>Illuminates the engine trouble warning light. | Check the operating sound of the secondary injector #3 five times. |
| 43 | Secondary injector #4 | Actuates the secondary injector #4 five times at one-second intervals.<br>Illuminates the engine trouble warning light. | Check the operating sound of the secondary injector #4 five times. |

| Diagnostic code No. | Item | Actuation | Checking method |
|---|---|---|---|
| 48 | Air induction system solenoid | Actuates the air induction system solenoid five times at one-second intervals. Illuminates the engine trouble warning light. | Check the operating sound of the air induction system solenoid five times. |
| 50 | Fuel injection system relay | Actuates the fuel injection system relay five times at one-second intervals. Illuminates the engine trouble warning light. (The engine trouble warning light is OFF when the relay is ON, and the engine trouble warning light is ON when the relay is OFF). | Check the operating sound of the fuel injection system relay five times. |
| 51 | Radiator fan motor relay | Actuates the radiator fan motor relay five times at one-second intervals. (ON 2 seconds, OFF 3 seconds) Illuminates the engine trouble warning light. | Check the operating sound of the radiator fan motor relay five times. |
| 52 | Headlight relay | Actuates the headlight relay five times at one-second intervals. (ON 2 seconds, OFF 3 seconds) Illuminates the engine trouble warning light. | Check the operating sound of the headlight relay five times. |
| 53 | EXUP servo motor | Actuates the servo motor (turns to open side and to closed side). Illuminates the engine trouble warning light. | Check the operating sound. |

EAS27460

**TROUBLESHOOTING DETAILS**

This section describes the measures per fault code number displayed on the meter. Check and service the items or components that are the probable cause of the malfunction following the order given.
After the check and service of the malfunctioning part has been completed, reset the meter display according to the reinstatement method.
Fault code No.:
Code number displayed on the meter when the engine failed to work normally. Refer to “Self-Diagnostic Function table”.
Diagnostic code No.:
Diagnostic code number to be used when the diagnostic mode is operated. Refer to “DIAGNOSTIC MODE” on page 8-40.

| Fault code No. | 11 | Symptom | No normal signals are received from the cylinder identification sensor when the engine is started or while the vehicle is being driven. |
|---|---|---|---|
| Diagnostic code No. | | — | — |

| Order | Item/components and probable cause | Check or maintenance job | Reinstatement method |
|---|---|---|---|
| 1 | Installed condition of cylinder identification sensor. | Check for looseness or pinching. | Cranking the engine. |
| 2 | Connections<br>• Cylinder identification sensor coupler<br>• Main wire harness ECU coupler | • Check the couplers for any pins that may be pulled out.<br>• Check the locking condition of the couplers.<br>• If there is a malfunction, repair it and connect the coupler securely. | |
| 3 | Open or short circuit in wire harness. | • Repair or replace if there is an open or short circuit.<br>• Between the cylinder identification sensor coupler and ECU coupler.<br>(blue–blue)<br>(white/black–white/black)<br>(black/blue–black/blue) | |
| 4 | Defective cylinder identification sensor. | • Replace if defective.<br>Refer to “CHECKING THE CYLINDER IDENTIFICATION SENSOR” on page 8-110. | |

| Fault code No. | 12 | Symptom | No normal signals are received from the crankshaft position sensor. |
|---|---|---|---|
| Diagnostic code No. | | — | — |

| Order | Item/components and probable cause | Check or maintenance job | Reinstatement method |
|---|---|---|---|
| 1 | Installed condition of crankshaft position sensor. | Check for looseness or pinching. | Cranking the engine. |
| 2 | Connections<br>• Crankshaft position sensor coupler<br>• Main wire harness ECU coupler | • Check the couplers for any pins that may be pulled out.<br>• Check the locking condition of the couplers.<br>• If there is a malfunction, repair it and connect the coupler securely. | |
| 3 | Open or short circuit in wire harness. | • Repair or replace if there is an open or short circuit.<br>• Between the crankshaft position sensor coupler and ECU coupler.<br>(gray–gray)<br>(black/blue–black/blue) | |
| 4 | Defective crankshaft position sensor. | • Replace if defective.<br>Refer to “CHECKING THE CRANKSHAFT POSITION SENSOR” on page 8-103. | |

| Fault code No. | 13 | Symptom | Intake air pressure sensor: open or short circuit detected. |
|---|---|---|---|
| Diagnostic code No. | | 03 | Intake air pressure sensor |

| Order | Item/components and probable cause | Check or maintenance job | Reinstatement method |
|---|---|---|---|
| 1 | Connections<br>• Intake air pressure sensor coupler<br>• Main wire harness ECU coupler | • Check the couplers for any pins that may be pulled out.<br>• Check the locking condition of the couplers.<br>• If there is a malfunction, repair it and connect the coupler securely. | Reinstated automatically if a normal signal is received. |
| 2 | Open or short circuit in wire harness and/or sub-wire-harness 2. | • Repair or replace if there is an open or short circuit.<br>• Between intake air pressure sensor coupler and ECU coupler.<br>(black/blue–black/blue)<br>(pink/white–pink/white)<br>(blue–blue) | |
| 3 | Defective intake air pressure sensor. | • Execute the diagnostic mode. (Code No. 03)<br>• Replace if defective.<br>Refer to “CHECKING THE INTAKE AIR PRESSURE SENSOR” on page 8-110. | |

| Fault code No. | 14 | Symptom | Intake air pressure sensor: hose system malfunction (clogged or detached hose). |
|---|---|---|---|
| Diagnostic code No. | | 03 | Intake air pressure sensor |

| Order | Item/components and probable cause | Check or maintenance job | Reinstatement method |
|---|---|---|---|
| 1 | Intake air pressure sensor hose | • Check the intake air pressure sensor hose condition.<br>• Repair or replace the sensor hose. | Cranking the engine. |
| 2 | Defective intake air pressure sensor. | • Execute the diagnostic mode. (Code No. 03)<br>• Replace if defective.<br>Refer to “CHECKING THE INTAKE AIR PRESSURE SENSOR” on page 8-110. | |

| Fault code No. | 15 | Symptom | Throttle position sensor (for throttle valves): open or short circuit detected. |
|---|---|---|---|
| Diagnostic code No. | | 01<br>13 | Throttle position sensor (for throttle valves) signal 1<br>Throttle position sensor (for throttle valves) signal 2 |

| Order | Item/components and probable cause | Check or maintenance job | Reinstatement method |
|---|---|---|---|
| 1 | Installed condition of throttle position sensor (for throttle valves). | • Check for looseness or pinching.<br>• Check that the sensor is installed in the specified position. | Turning the main switch to “ON”. |
| 2 | Connections<br>• Throttle position sensor (for throttle valves) coupler<br>• Main wire harness ECU coupler | • Check the couplers for any pins that may be pulled out.<br>• Check the locking condition of the couplers.<br>• If there is a malfunction, repair it and connect the coupler securely. | |
| 3 | Open or short circuit in wire harness. | • Repair or replace if there is an open or short circuit.<br>• Between throttle position sensor (for throttle valves) coupler and ECU coupler.<br>(black/blue–black/blue)<br>(blue–blue)<br>(blue–blue)<br>(green–green) | |
| 4 | Defective throttle position sensor (for throttle valves). | • Execute the diagnostic mode. (Code Nos. 01, 13)<br>• Replace if defective.<br>Refer to “CHECKING THE THROTTLE POSITION SENSOR (FOR THROTTLE VALVES)” on page 8-107. | |

| Fault code No. | 17 | Symptom | EXUP servo motor circuit: open or short circuit detected. |
|---|---|---|---|
| Diagnostic code No. | | 53 | EXUP servo motor |

| Order | Item/components and probable cause | Check or maintenance job | Reinstatement method |
|---|---|---|---|
| 1 | Connections<br>• EXUP servo motor coupler<br>• Main wire harness ECU coupler | • Check the couplers for any pins that may be pulled out.<br>• Check the locking condition of the couplers.<br>• If there is a malfunction, repair it and connect the coupler securely. | Reinstated automatically if a normal signal is received. |
| 2 | Open or short circuit in wire harness. | • Repair or replace if there is an open or short circuit.<br>• Between EXUP servo motor coupler and ECU coupler.<br>(blue–blue)<br>(white/red–white/red)<br>(black/blue–black/blue) | |
| 3 | Defective EXUP servo motor (potentiometer circuit). | • Execute the diagnostic mode. (Code No. 53)<br>• Replace if defective. | |

| Fault code No. | 18 | Symptom | EXUP servo motor is stuck. |
|---|---|---|---|
| Diagnostic code No. | | 53 | EXUP servo motor |

| Order | Item/components and probable cause | Check or maintenance job | Reinstatement method |
|---|---|---|---|
| 1 | Connections<br>• EXUP servo motor coupler<br>• Main wire harness ECU coupler | • Check the couplers for any pins that may be pulled out.<br>• Check the locking condition of the couplers.<br>• If there is a malfunction, repair it and connect the coupler securely. | Turning the main switch to “ON”.<br>It takes 3 seconds at the maximum before the original state returns. |
| 2 | Open or short circuit in wire harness. | • Repair or replace if there is an open or short circuit.<br>• Between EXUP servo motor coupler and ECU coupler.<br>(black/green–black/green)<br>(black/red–black/red) | |
| 3 | Defective EXUP servo motor. | • Execute the diagnostic mode. (Code No. 53)<br>• Replace if defective. | |
| 4 | Defective EXUP valve, pulley, and cables. | Replace if defective. | |

| Fault code No. | 19 | Symptom | Open circuit is detected in the input lead from the sidestand switch to the ECU. |
|---|---|---|---|
| Diagnostic code No. | | 20 | Sidestand switch |

| Order | Item/components and probable cause | Check or maintenance job | Reinstatement method |
|---|---|---|---|
| 1 | Connections<br>• Main wire harness ECU coupler | • Execute the diagnostic mode. (Code No. 20)<br>• Check the coupler for any pins that may be pulled out.<br>• Check the locking condition of the coupler.<br>• If there is a malfunction, repair it and connect the coupler securely. | If the transmission is in gear, retracting the sidestand.<br>If the transmission is in neutral, reconnecting the wiring. |
| 2 | Open or short circuit in wire harness. | • Repair or replace if there is an open or short circuit.<br>• Between ECU coupler and relay unit coupler. (blue/yellow–blue/yellow)<br>• Between relay unit coupler and sidestand switch coupler. (blue/black–blue/black)<br>• Between sidestand switch coupler and engine ground. (black–black) | |
| 3 | Defective sidestand switch. | • Replace if defective.<br>Refer to “CHECKING THE SWITCHES” on page 8-91. | |

| Fault code No. | 20 | Symptom | When the main switch is turned to “ON”, the atmospheric pressure sensor voltage and intake air pressure sensor voltage differ greatly. |
|---|---|---|---|
| Diagnostic code No. | | 03<br>02 | Intake air pressure sensor<br>Atmospheric pressure sensor |

| Order | Item/components and probable cause | Check or maintenance job | Reinstatement method |
|---|---|---|---|
| 1 | Defective intake air pressure sensor or atmospheric pressure sensor. | • Execute the diagnostic mode. (Code Nos. 03, 02)<br>• Replace if defective.<br>Refer to “CHECKING THE INTAKE AIR PRESSURE SENSOR” on page 8-110 or “CHECKING THE ATMOSPHERIC PRESSURE SENSOR” on page 8-109. | Turning the main switch to “ON”. |

| Fault code No. | 21 | Symptom | Coolant temperature sensor: open or short circuit detected. |
|---|---|---|---|
| Diagnostic code No. | | 06 | Coolant temperature sensor |

| Order | Item/components and probable cause | Check or maintenance job | Reinstatement method |
|---|---|---|---|
| 1 | Connections<br>• Coolant temperature sensor coupler<br>• Main wire harness ECU coupler | • Check the couplers for any pins that may be pulled out.<br>• Check the locking condition of the couplers.<br>• If there is a malfunction, repair it and connect the coupler securely. | Reinstated automatically if a normal signal is received. |
| 2 | Open or short circuit in wire harness. | • Repair or replace if there is an open or short circuit.<br>• Between coolant temperature sensor coupler and ECU coupler.<br>(green/white–green/white)<br>(black/blue–black/blue) | |
| 3 | Defective coolant temperature sensor. | • Execute the diagnostic mode. (Code No. 06)<br>• Replace if defective.<br>Refer to “CHECKING THE COOLANT TEMPERATURE SENSOR” on page 8-107. | |

| Fault code No. | 22 | Symptom | Air temperature sensor: open or short circuit detected. |
|---|---|---|---|
| Diagnostic code No. | | 05 | Air temperature sensor |

| Order | Item/components and probable cause | Check or maintenance job | Reinstatement method |
|---|---|---|---|
| 1 | Connections<br>• Air temperature sensor coupler<br>• Main wire harness ECU coupler | • Check the couplers for any pins that may be pulled out.<br>• Check the locking condition of the couplers.<br>• If there is a malfunction, repair it and connect the coupler securely. | Reinstated automatically if a normal signal is received. |
| 2 | Open or short circuit in wire harness. | • Repair or replace if there is an open or short circuit.<br>• Between air temperature sensor coupler and ECU coupler.<br>(brown/white–brown/white)<br>(black/blue–black/blue) | |
| 3 | Defective air temperature sensor. | • Execute the diagnostic mode. (Code No. 05)<br>• Replace if defective.<br>Refer to “CHECKING THE AIR TEMPERATURE SENSOR” on page 8-110. | |

| Fault code No. | 23 | Symptom | Atmospheric pressure sensor: open or short circuit detected. |
|---|---|---|---|
| Diagnostic code No. | | 02 | Atmospheric pressure sensor |

| Order | Item/components and probable cause | Check or maintenance job | Reinstatement method |
|---|---|---|---|
| 1 | Connections<br>• Atmospheric pressure sensor coupler<br>• Main wire harness ECU coupler | • Check the couplers for any pins that may be pulled out.<br>• Check the locking condition of the couplers.<br>• If there is a malfunction, repair it and connect the coupler securely. | Reinstated automatically if a normal signal is received. |
| 2 | Open or short circuit in wire harness and/or sub-wire-harness 2. | • Repair or replace if there is an open or short circuit.<br>• Between atmospheric pressure sensor coupler and ECU coupler.<br>(black/blue–black/blue)<br>(pink–pink)<br>(blue–blue) | |
| 3 | Defective atmospheric pressure sensor. | • Execute the diagnostic mode. (Code No. 02)<br>• Replace if defective.<br>Refer to “CHECKING THE ATMOSPHERIC PRESSURE SENSOR” on page 8-109. | |

| Fault code No. | 24 | Symptom | No normal signal is received from the $O_2$ sensor. |
|---|---|---|---|
| Diagnostic code No. | | — | — |

| Order | Item/components and probable cause | Check or maintenance job | Reinstatement method |
|---|---|---|---|
| 1 | Installed state of $O_2$ sensor. | Check for looseness or pinching. | Execute the diagnostic mode (Code No. 63). (Set the engine stop switch to "∩".) |
| 2 | Connections<br>• $O_2$ sensor coupler<br>• Main wire harness ECU coupler | • Check the couplers for any pins that may be pulled out.<br>• Check the locking condition of the couplers.<br>• If there is a malfunction, repair it and connect the coupler securely. | |
| 3 | Open or short circuit in wire harness. | • Repair or replace if there is an open or short circuit.<br>• Between $O_2$ sensor coupler and ECU coupler.<br>(gray/green–gray/green)<br>(black/blue–black/blue)<br>(pink/black–pink/black)<br>(red/blue–red/blue) | |
| 4 | Check fuel pressure. | • Refer to "THROTTLE BODIES" on page 7-7. | |
| 5 | Defective $O_2$ sensor. | • Replace if defective. | |

| Fault code No. | 30 | Symptom | Latch up detected.<br>No normal signal is received from the lean angle sensor. |
|---|---|---|---|
| Diagnostic code No. | | 08 | Lean angle sensor |

| Order | Item/components and probable cause | Check or maintenance job | Reinstatement method |
|---|---|---|---|
| 1 | The vehicle has overturned. | Raise the vehicle upright. | Turning the main switch to "ON" (however, the engine cannot be restarted unless the main switch is first turned to "OFF"). |
| 2 | Installed state of the lean angle sensor. | Check the installed direction and condition of the sensor. | |
| 3 | Defective lean angle sensor. | • Execute the diagnostic mode. (Code No. 08)<br>• Replace if defective.<br>Refer to "CHECKING THE LEAN ANGLE SENSOR" on page 8-103. | |

| Fault code No. | 33 | Symptom | Open circuit detected in the primary lead of the cylinder-#1 ignition coil. |
|---|---|---|---|
| Diagnostic code No. | | 30 | Cylinder-#1 ignition coil |

| Order | Item/components and probable cause | Check or maintenance job | Reinstatement method |
|---|---|---|---|
| 1 | Connections<br>• Cylinder-#1 ignition coil coupler<br>• Main wire harness ECU coupler<br>• Sub-wire harness 1 coupler | • Check the couplers for any pins that may be pulled out.<br>• Check the locking condition of the couplers.<br>• If there is a malfunction, repair it and connect the coupler securely. | Cranking the engine.<br>(Connect the cylinder-#1 ignition coil coupler.) |
| 2 | Open or short circuit in wire harness and/or sub-wire harness 1. | • Repair or replace if there is an open or short circuit.<br>• Between cylinder-#1 ignition coil coupler and ECU coupler.<br>(red/black–red/blue)<br>(orange–orange) | |
| 3 | Defective cylinder-#1 ignition coil. | • Execute the diagnostic mode. (Code No. 30)<br>• Test the primary and secondary coils for continuity.<br>• Replace if defective.<br>Refer to “CHECKING THE IGNITION COILS” on page 8-102. | |

| Fault code No. | 34 | Symptom | Open circuit detected in the primary lead of the cylinder-#2 ignition coil. |
|---|---|---|---|
| Diagnostic code No. | | 31 | Cylinder-#2 ignition coil |

| Order | Item/components and probable cause | Check or maintenance job | Reinstatement method |
|---|---|---|---|
| 1 | Connections<br>• Cylinder-#2 ignition coil coupler<br>• Main wire harness ECU coupler<br>• Sub-wire harness 1 coupler | • Check the couplers for any pins that may be pulled out.<br>• Check the locking condition of the couplers.<br>• If there is a malfunction, repair it and connect the coupler securely. | Cranking the engine.<br>(Connect the cylinder-#2 ignition coil coupler.) |
| 2 | Open or short circuit in wire harness and/or sub-wire harness 1. | • Repair or replace if there is an open or short circuit.<br>• Between cylinder-#2 ignition coil coupler and ECU coupler.<br>(red/black–red/blue)<br>(gray/red–gray/red) | |
| 3 | Defective cylinder-#2 ignition coil. | • Execute the diagnostic mode. (Code No. 31)<br>• Test the primary and secondary coils for continuity.<br>• Replace if defective.<br>Refer to “CHECKING THE IGNITION COILS” on page 8-102. | |

| Fault code No. | 35 | Symptom | Open circuit detected in the primary lead of the cylinder-#3 ignition coil. |
|---|---|---|---|
| Diagnostic code No. | | 32 | Cylinder-#3 ignition coil |

| Order | Item/components and probable cause | Check or maintenance job | Reinstatement method |
|---|---|---|---|
| 1 | Connections<br>• Cylinder-#3 ignition coil coupler<br>• Main wire harness ECU coupler<br>• Sub-wire harness 1 coupler | • Check the couplers for any pins that may be pulled out.<br>• Check the locking condition of the couplers.<br>• If there is a malfunction, repair it and connect the coupler securely. | Cranking the engine.<br>(Connect the cylinder-#3 ignition coil coupler.) |
| 2 | Open or short circuit in wire harness and/or sub-wire harness 1. | • Repair or replace if there is an open or short circuit.<br>• Between cylinder-#3 ignition coil coupler and ECU coupler.<br>(red/black–red/blue)<br>(orange/green–orange/green) | |
| 3 | Defective cylinder-#3 ignition coil. | • Execute the diagnostic mode. (Code No. 32)<br>• Test the primary and secondary coils for continuity.<br>• Replace if defective.<br>Refer to “CHECKING THE IGNITION COILS” on page 8-102. | |

| Fault code No. | 36 | Symptom | Open circuit detected in the primary lead of the cylinder-#4 ignition coil. |
|---|---|---|---|
| Diagnostic code No. | | 33 | Cylinder-#4 ignition coil |

| Order | Item/components and probable cause | Check or maintenance job | Reinstatement method |
|---|---|---|---|
| 1 | Connections<br>• Cylinder-#4 ignition coil coupler<br>• Main wire harness ECU coupler<br>• Sub-wire harness 1 coupler | • Check the couplers for any pins that may be pulled out.<br>• Check the locking condition of the couplers.<br>• If there is a malfunction, repair it and connect the coupler securely. | Cranking the engine.<br>(Connect the cylinder-#4 ignition coil coupler.) |
| 2 | Open or short circuit in wire harness and/or sub-wire harness 1. | • Repair or replace if there is an open or short circuit.<br>• Between cylinder-#4 ignition coil coupler and ECU coupler/main wire harness.<br>(red/black–red/blue)<br>(gray/green–gray/green) | |
| 3 | Defective cylinder-#4 ignition coil. | • Execute the diagnostic mode. (Code No. 33)<br>• Test the primary and secondary coils for continuity.<br>• Replace if defective.<br>Refer to “CHECKING THE IGNITION COILS” on page 8-102. | |

| Fault code No. | 39 | Symptom | Open circuit detected in a primary injector. |
|---|---|---|---|
| Diagnostic code No. | | 36<br>37<br>38<br>39 | Primary injector #1<br>Primary injector #2<br>Primary injector #3<br>Primary injector #4 |

| Order | Item/components and probable cause | Check or maintenance job | Reinstatement method |
|---|---|---|---|
| 1 | Connections<br>• Primary injector coupler<br>• Main wire harness ECU coupler<br>• Sub-wire harness 2 coupler | • Check the couplers for any pins that may be pulled out.<br>• Check the locking condition of the couplers.<br>• If there is a malfunction, repair it and connect the coupler securely. | Cranking the engine.<br>(Connect the fuel injector couplers.) |
| 2 | Open or short circuit in wire harness and/or sub-wire harness 2. | • Repair or replace if there is an open or short circuit.<br>• Between primary injector coupler and ECU coupler.<br>(red/blue–red/blue)<br>#1: (red/black–red/black)<br>#2: (green/black–green/black)<br>#3: (blue/black–blue/black)<br>#4: (orange/black–orange/black) | |
| 3 | Defective primary injector. | • Execute the diagnostic mode. (Code Nos. 36, 37, 38, 39)<br>• Replace if defective.<br>Refer to “CHECKING THE PRIMARY INJECTORS” on page 7-10. | |

| Fault code No. | 40 | Symptom | Open circuit detected in a secondary injector. |
|---|---|---|---|
| Diagnostic code No. | | 40<br>41<br>42<br>43 | Secondary injector #1<br>Secondary injector #2<br>Secondary injector #3<br>Secondary injector #4 |

| Order | Item/components and probable cause | Check or maintenance job | Reinstatement method |
|---|---|---|---|
| 1 | Connections<br>• Secondary injector coupler<br>• Main wire harness ECU coupler<br>• Sub-wire harness 2 coupler | • Check the couplers for any pins that may be pulled out.<br>• Check the locking condition of the couplers.<br>• If there is a malfunction, repair it and connect the coupler securely. | Execute the diagnostic mode (Code No. 63). (Set the engine stop switch to "◠".) |
| 2 | Open or short circuit in wire harness and/or sub-wire harness 2. | • Repair or replace if there is an open or short circuit.<br>• Between secondary injector coupler and ECU coupler. (red/blue–red/blue)<br>#1: (white/blue–white/blue)<br>#2: (sky blue/white–sky blue/white)<br>#3: (brown/yellow–brown/yellow)<br>#4: (brown/black–brown/black) | |
| 3 | Defective secondary injector. | • Execute the diagnostic mode. (Code Nos. 40, 41, 42, 43)<br>• Replace if defective.<br>Refer to "CHECKING THE SECONDARY INJECTORS" on page 7-6. | |

| Fault code No. | 41 | Symptom | Lean angle sensor: open or short circuit detected. |
|---|---|---|---|
| Diagnostic code No. | | 08 | Lean angle sensor |

| Order | Item/components and probable cause | Check or maintenance job | Reinstatement method |
|---|---|---|---|
| 1 | Connections<br>• Lean angle sensor coupler<br>• Main wire harness ECU coupler | • Check the couplers for any pins that may be pulled out.<br>• Check the locking condition of the couplers.<br>• If there is a malfunction, repair it and connect the coupler securely. | Reinstated automatically if a normal signal is received. |
| 2 | Open or short circuit in lead. | • Repair or replace if there is an open or short circuit.<br>• Between lean angle sensor coupler and ECU coupler.<br>(blue–blue)<br>(yellow/green–yellow/green)<br>(black/blue–black/blue) | |
| 3 | Defective lean angle sensor. | • Execute the diagnostic mode. (Code No. 08)<br>• Replace if defective.<br>Refer to “CHECKING THE LEAN ANGLE SENSOR” on page 8-103. | |

| Fault code No. | 42 | Symptom | | A. No normal signals are received from the speed sensor.<br>B. Open circuit is detected in the neutral switch. |
|---|---|---|---|---|
| Diagnostic code No. | | A | 07 | Speed sensor |
| | | B | 21 | Neutral switch |

| Order | Item/components and probable cause | Check or maintenance job | Reinstatement method |
|---|---|---|---|
| A-1 | Installed state of speed sensor. | Check for looseness or pinching. | Starting the engine, and activating the speed sensor by operating the vehicle. |
| A-2 | Connections<br>• Speed sensor coupler<br>• Main wire harness ECU coupler | • Check the couplers for any pins that may be pulled out.<br>• Check the locking condition of the couplers.<br>• If there is a malfunction, repair it and connect the coupler securely. | |
| A-3 | Open or short circuit in lead. | • Repair or replace if there is an open or short circuit.<br>• Between speed sensor coupler and ECU coupler.<br>(blue–blue)<br>(white/yellow–white/yellow)<br>(black/blue–black/blue) | |
| A-4 | Defective speed sensor. | • Execute the diagnostic mode. (Code No. 07)<br>• Replace if defective.<br>Refer to “CHECKING THE SPEED SENSOR” on page 8-106. | |

| Fault code No. | 42 | Symptom | | A. No normal signals are received from the speed sensor.<br>B. Open circuit is detected in the neutral switch. |
|---|---|---|---|---|
| Diagnostic code No. | | A | 07 | Speed sensor |
| | | B | 21 | Neutral switch |

| Order | Item/components and probable cause | Check or maintenance job | Reinstatement method |
|---|---|---|---|
| B-1 | Installed state of neutral switch. | Check for looseness or pinching. | Starting the engine, and activating the speed sensor by operating the vehicle. |
| B-2 | Connections<br>• Neutral switch coupler<br>• Main wire harness ECU coupler | • Check the couplers for any pins that may be pulled out.<br>• Check the locking condition of the couplers.<br>• If there is a malfunction, repair it and connect the coupler securely. | |
| B-3 | Open circuit in neutral switch lead. | • Repair or replace if there is an open circuit.<br>• Between neutral switch coupler and relay unit coupler. (sky blue–sky blue)<br>• Between relay unit coupler and ECU coupler. (blue/yellow–blue/yellow) | |
| B-4 | Defective neutral switch. | • Execute the diagnostic mode. (Code No. 21)<br>• Replace if defective. Refer to “CHECKING THE SWITCHES” on page 8-91. | |
| B-5 | Faulty shift drum (neutral detection area). | • Replace if defective. Refer to “TRANSMISSION” on page 5-71. | |

| Fault code No. | 43 | Symptom | Power supply to the injectors and fuel pump is not normal. |
|---|---|---|---|
| Diagnostic code No. | | 09 | Fuel system voltage (battery voltage) |

| Order | Item/components and probable cause | Check or maintenance job | Reinstatement method |
|---|---|---|---|
| 1 | Connections<br>• Relay unit coupler (fuel pump relay)<br>• Main wire harness ECU coupler | • Check the couplers for any pins that may be pulled out.<br>• Check the locking condition of the couplers.<br>• If there is a malfunction, repair it and connect the coupler securely. | Turning the main switch to “ON” when the engine stop switch is set to “◯”. |
| 2 | Open or short circuit in wire harness. | • Repair or replace if there is an open or short circuit.<br>• Between relay unit coupler and ECU coupler.<br>(blue/yellow–blue/yellow)<br>(red/blue–red/blue)<br>• Between relay unit coupler and starter relay coupler.<br>(red–red)<br>• Between relay unit coupler and right handlebar switch coupler.<br>(red/black–red/black) | |
| 3 | Malfunction or open circuit in fuel pump relay. | • Execute the diagnostic mode. (Code No. 09)<br>• Replace if defective.<br>• If there is no malfunction with the fuel pump relay, replace the ECU. | |

| Fault code No. | 44 | Symptom | An error is detected while reading or writing on EEPROM (CO adjustment value). |
|---|---|---|---|
| Diagnostic code No. | | 60 | EEPROM fault cylinder No. |

| Order | Item/components and probable cause | Check or maintenance job | Reinstatement method |
|---|---|---|---|
| 1 | Malfunction in ECU. | • Set the faulty cylinder's exhaust gas volume.<br>1. Execute the diagnostic mode (Code No. 60) to check the faulty cylinder number. (If multiple cylinders are defective, the numbers of the faulty cylinders are displayed alternately at 2-second intervals.)<br>2. Execute the CO adjustment mode and set the exhaust gas volume of the faulty cylinder to "0".<br>• Replace ECU if it does not recover from the malfunction. | Turning the main switch to "ON". (Readjust the exhaust gas volume after it is reinstated.) |

| Fault code No. | 46 | Symptom | Power supply is not normal. |
|---|---|---|---|
| Diagnostic code No. | | — | — |

| Order | Item/components and probable cause | Check or maintenance job | Reinstatement method |
|---|---|---|---|
| 1 | Malfunction in rectifier/regulator | • Replace if defective.<br>Refer to "CHARGING SYSTEM" on page 8-13. | Starting the engine and operating it at idle. |
| 2 | Open or short circuit in wire harness. | • Repair or replace if there is an open or short circuit in the charging system's wiring.<br>Refer to "CHARGING SYSTEM" on page 8-13. | |

| Fault code No. | 50 | Symptom | Faulty ECU memory. (When this malfunction is detected in the ECU, the fault code number might not appear on the meter.) |
|---|---|---|---|
| Diagnostic code No. | | — | — |

| Order | Item/components and probable cause | Check or maintenance job | Reinstatement method |
|---|---|---|---|
| 1 | Malfunction in ECU. | Replace the ECU.<br>**NOTE:**<br>Be sure to turn the main switch to "OFF" before replacing the ECU. | Turning the main switch to "ON". |

| Fault code No. | 59 | Symptom | Throttle position sensor (for throttle cable pulley): open or short circuit detected.<br>Throttle position sensor (for throttle cable pulley): coupler connection is loose. |
|---|---|---|---|
| Diagnostic code No. | | 14<br>15 | Throttle position sensor (for throttle cable pulley) signal 1<br>Throttle position sensor (for throttle cable pulley) signal 2 |

| Order | Item/components and probable cause | Check or maintenance job | Reinstatement method |
|---|---|---|---|
| 1 | Installed state of throttle position sensor (for throttle cable pulley). | • Check for looseness or pinching.<br>• Check that the sensor is installed in the specified position. | Turning the main switch to “ON”. |
| 2 | Connections<br>• Throttle position sensor (for throttle cable pulley) coupler<br>• Main wire harness ECU coupler | • Check the couplers for any pins that may be pulled out.<br>• Check the locking condition of the couplers.<br>• If there is a malfunction, repair it and connect the coupler securely. | |
| 3 | Open or short circuit in wire harness. | • Repair or replace if there is an open or short circuit.<br>• Between throttle position sensor (for throttle cable pulley) coupler and ECU coupler.<br>(black/blue–black/blue)<br>(white–white)<br>(white/red–white/red)<br>(blue–blue) | |
| 4 | Defective throttle position sensor (for throttle cable pulley). | • Execute the diagnostic mode. (Code Nos. 14, 15)<br>• Replace if defective.<br>Refer to “CHECKING THE THROTTLE POSITION SENSOR (FOR THROTTLE CABLE PULLEY)” on page 8-108. | |

| Fault code No. | 60 | Symptom | Throttle servo motor: open or short circuit detected.<br>Defective throttle servo motor.<br>Malfunction in ECU (servo motor driving system). |
|---|---|---|---|
| Diagnostic code No. | | 01<br>13 | Throttle position sensor (for throttle valves) signal 1<br>Throttle position sensor (for throttle valves) signal 2 |

| Order | Item/components and probable cause | Check or maintenance job | Reinstatement method |
|---|---|---|---|
| 1 | Installed state of throttle position sensor (for throttle valves). | • Check for looseness or pinching.<br>• Check that the sensor is installed in the specified position. | Turning the main switch to “ON”. |
| 2 | Connections<br>• Throttle servo motor coupler<br>• Main wire harness ECU coupler | • Check the couplers for any pins that may be pulled out.<br>• Check the locking condition of the couplers.<br>• If there is a malfunction, repair it and connect the coupler securely. | |
| 3 | Open or short circuit in wire harness. | • Repair or replace if there is an open or short circuit.<br>• Between throttle servo motor coupler and ECU coupler. (yellow/red–yellow/red) (light green/red–light green/red) | |
| 4 | Defective throttle servo motor. | • Execute the diagnostic mode. (Code Nos. 01, 13)<br>• Replace the throttle body assembly if defective. | |
| 5 | Malfunction in ECU. | Replace the ECU. | |

| Fault code No. | Er-1 | Symptom | No signals are received from the ECU. |
|---|---|---|---|
| Diagnostic code No. | | — | — |

| Order | Item/components and probable cause | Check or maintenance job | Reinstatement method |
|---|---|---|---|
| 1 | Connections<br>• Main wire harness ECU coupler<br>• Main wire harness meter assembly coupler | • Check the couplers for any pins that may be pulled out.<br>• Check the locking condition of the couplers.<br>• If there is a malfunction, repair it and connect the coupler securely. | Turning the main switch to “ON”. |
| 2 | Open or short circuit in wire harness. | • Repair or replace if there is an open or short circuit.<br>• Between meter assembly coupler and ECU coupler. (yellow/blue–yellow/blue) | |
| 3 | Malfunction in meter assembly. | Replace the meter assembly. | |
| 4 | Malfunction in ECU. | Replace the ECU. | |

| Fault code No. | Er-2 | Symptom | No signals are received from the ECU within the specified duration. |
|---|---|---|---|
| Diagnostic code No. | | — | — |

| Order | Item/components and probable cause | Check or maintenance job | Reinstatement method |
|---|---|---|---|
| 1 | Connections<br>• Main wire harness ECU coupler<br>• Main wire harness meter assembly coupler | • Check the couplers for any pins that may be pulled out.<br>• Check the locking condition of the couplers.<br>• If there is a malfunction, repair it and connect the coupler securely. | Turning the main switch to “ON”. |
| 2 | Open or short circuit in wire harness. | • Repair or replace if there is an open or short circuit.<br>• Between meter assembly coupler and ECU coupler. (yellow/blue–yellow/blue) | |
| 3 | Malfunction in meter assembly. | Replace the meter assembly. | |
| 4 | Malfunction in ECU. | Replace the ECU. | |

| Fault code No. | Er-3 | Symptom | Data from the ECU cannot be received correctly. |
|---|---|---|---|
| Diagnostic code No. | | — | — |

| Order | Item/components and probable cause | Check or maintenance job | Reinstatement method |
|---|---|---|---|
| 1 | Connections<br>• Main wire harness ECU coupler<br>• Main wire harness meter assembly coupler | • Check the couplers for any pins that may be pulled out.<br>• Check the locking condition of the couplers.<br>• If there is a malfunction, repair it and connect the coupler securely. | Turning the main switch to “ON”. |
| 2 | Open or short circuit in wire harness. | • Repair or replace if there is an open or short circuit.<br>• Between meter assembly coupler and ECU coupler. (yellow/blue–yellow/blue) | |
| 3 | Malfunction in meter assembly. | Replace the meter assembly. | |
| 4 | Malfunction in ECU. | Replace the ECU. | |

| Fault code No. | Er-4 | Symptom | Non-registered data has been received from the meter. | |
|---|---|---|---|---|
| Diagnostic code No. | | — | — | |
| **Order** | **Item/components and probable cause** | | **Check or maintenance job** | **Reinstatement method** |
| 1 | Connections<br>• Main wire harness ECU coupler<br>• Main wire harness meter assembly coupler | | • Check the couplers for any pins that may be pulled out.<br>• Check the locking condition of the couplers.<br>• If there is a malfunction, repair it and connect the coupler securely. | Turning the main switch to “ON”. |
| 2 | Open or short circuit in wire harness. | | • Repair or replace if there is an open or short circuit.<br>• Between meter assembly coupler and ECU coupler. (yellow/blue–yellow/blue) | |
| 3 | Malfunction in meter assembly. | | Replace the meter assembly. | |
| 4 | Malfunction in ECU. | | Replace the ECU. | |

EAS27550

# FUEL PUMP SYSTEM

EAS27560

## CIRCUIT DIAGRAM

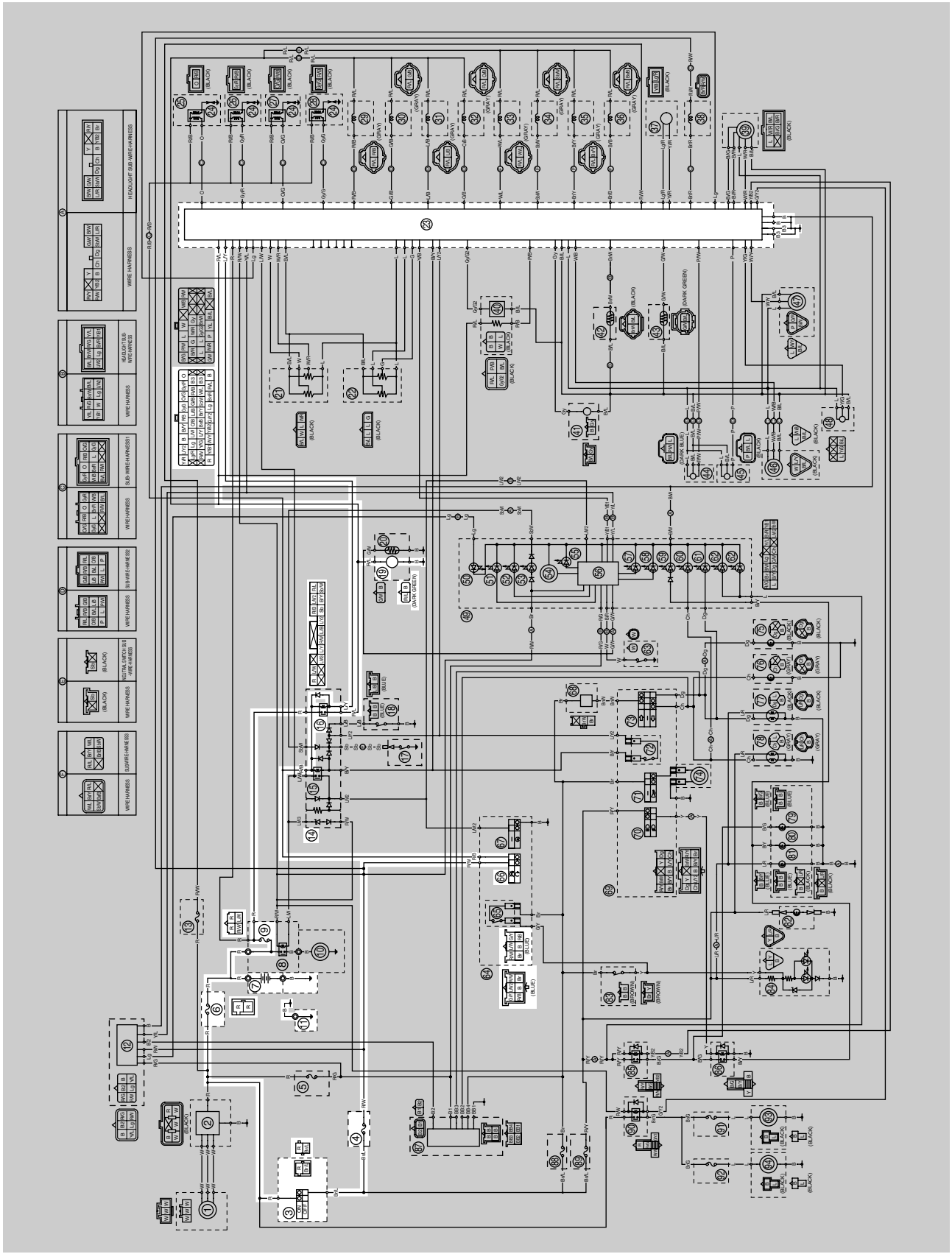

3. Main switch
4. Ignition fuse
6. Main fuse
7. Battery
9. Fuel injection system fuse
11. Engine ground
14. Relay unit
16. Fuel pump relay
19. Fuel pump
23. ECU (engine control unit)
66. Engine stop switch

EAS27570

## TROUBLESHOOTING

If the fuel pump fails to operate.

**NOTE:**

• Before troubleshooting, remove the following part(s):
1. Rider seat
2. Fuel tank
3. Side cowlings

| | | |
|---|---|---|
| 1. Check the fuses. (Main, ignition and fuel injection system) Refer to "CHECKING THE FUSES" on page 8-95. | NG → | Replace the fuse(s). |
| OK ↓ | | |
| 2. Check the battery. Refer to "CHECKING AND CHARGING THE BATTERY" on page 8-96. | NG → | • Clean the battery terminals.<br>• Recharge or replace the battery. |
| OK ↓ | | |
| 3. Check the main switch. Refer to "CHECKING THE SWITCHES" on page 8-91. | NG → | Replace the main switch/immobilizer unit. |
| OK ↓ | | |
| 4. Check the engine stop switch. Refer to "CHECKING THE SWITCHES" on page 8-91. | NG → | Replace the right handlebar switch. |
| OK ↓ | | |
| 5. Check the relay unit (fuel pump relay). Refer to "CHECKING THE RELAYS" on page 8-99. | NG → | Replace the relay unit. |
| OK ↓ | | |
| 6. Check the fuel pump. Refer to "CHECKING THE FUEL PUMP" on page 8-108. | NG → | Replace the fuel pump. |
| OK ↓ | | |
| 7. Check the entire fuel pump system's wiring. Refer to "CIRCUIT DIAGRAM" on page 8-73. | NG → | Properly connect or repair the fuel pump system's wiring. |
| OK ↓ | | |
| Replace the ECU. | | |

EAS27640

# IMMOBILIZER SYSTEM

EAS27650

## CIRCUIT DIAGRAM

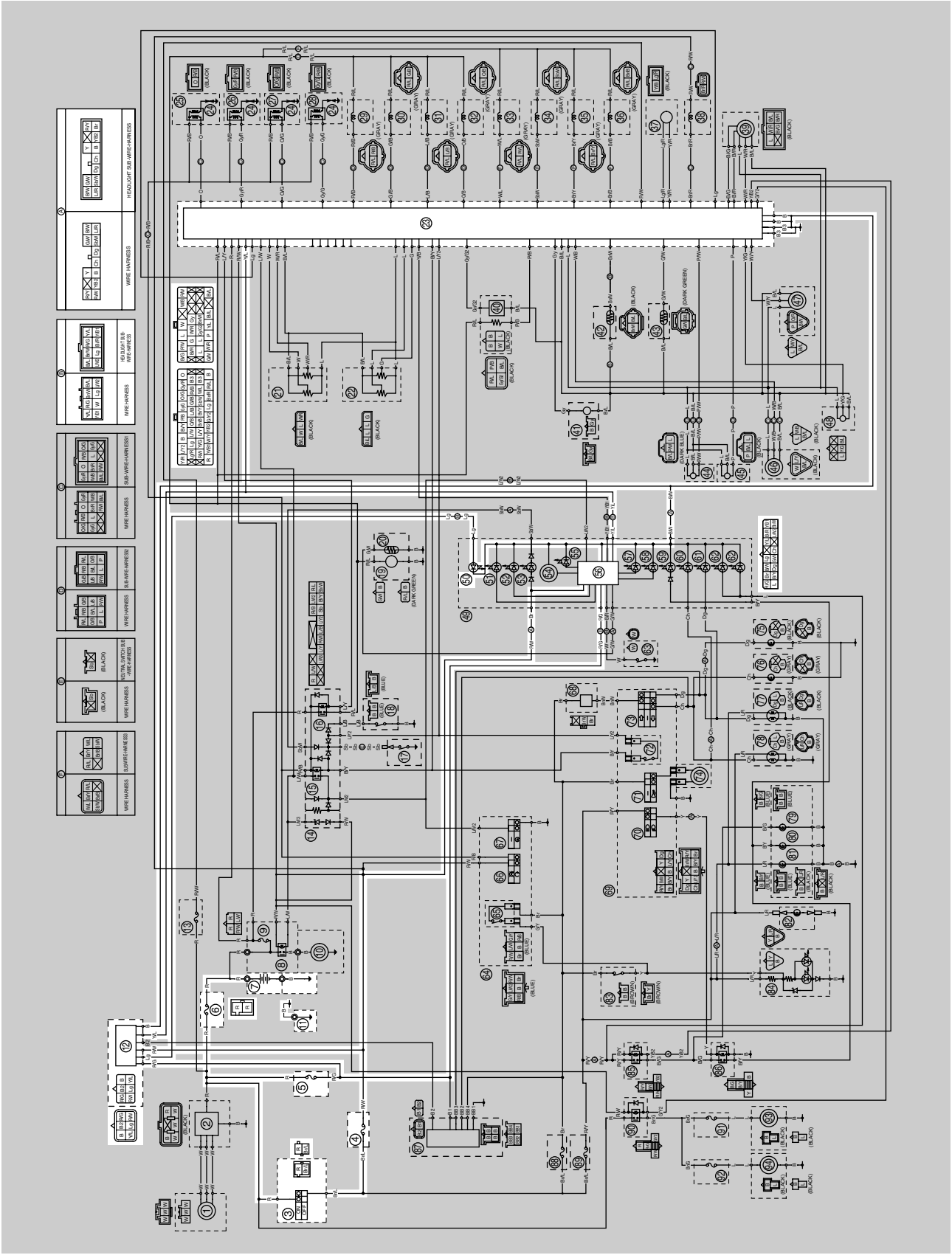

3. Main switch
4. Ignition fuse
5. Backup fuse (odometer, clock and immobilizer system)
6. Main fuse
7. Battery
11. Engine ground
12. Immobilizer unit
23. ECU (engine control unit)
50. Immobilizer system indicator light
56. Multi-function meter

EAS27670

## GENERAL INFORMATION

This vehicle is equipped with an immobilizer system to help prevent theft by re-registering codes in the standard keys. This system consists of the following:

- a code re-registering key (with a red bow)
- two standard keys (with a black bow) that can be re-registered with new codes
- a transponder (installed in the red key bow)
- an immobilizer unit
- the ECU
- an immobilizer system indicator light

The key with the red bow is used to register codes in each standard key. Do not use the key with the red bow for driving. It should only be used for re-registering new codes in the standard keys. The immobilizer system cannot be operated with a new key until the key is registered with a code. If you lose the code re-registering key, the ECU and main switch (equipped with the immobilizer unit) need to be replaced.

Therefore, always use a standard key for driving. (See caution below.)

**NOTE:**

Each standard key is registered during production, therefore re-registering at purchase is not necessary.

EC2C01001

**CAUTION:**

- **DO NOT LOSE THE CODE RE-REGISTERING KEY! If the code re-registering key is lost, registering new codes in the standard keys is impossible. The standard keys can still be used to start the vehicle. However, if code re-registering is required (e.g., if a new standard key is made or all keys are lost) the entire immobilizer system must be replaced. Therefore, it is highly recommended to use either standard key for driving, and to keep the code re-registering key in a safe place.**
- **Do not submerse the keys in water.**
- **Do not expose the keys to excessively high temperatures.**
- **Do not place the keys close to magnets (this includes, but is not limited to, products such as speakers, etc.).**
- **Do not place heavy items on the keys.**
- **Do not grind the keys or alter their shape.**
- **Do not disassemble the key bows.**
- **Do not put two keys of any immobilizer system on the same key ring.**
- **Keep the standard keys as well as other immobilizer system keys away from the code re-registering key.**
- **Keep other immobilizer system keys away from the main switch as they may cause signal interference.**

EAS27690

## PART REPLACEMENT AND KEY CODE REGISTRATION REQUIREMENTS

In the course of use, you may encounter the following cases where replacement of parts and registration of code re-registering/standard keys are required.

**NOTE:**

Each standard key is registered during production, therefore re-registering at purchase is not necessary.

| | Parts to be replaced | | | | | Key registration requirement |
|---|---|---|---|---|---|---|
| | Main switch/immobilizer unit | | Standard key | ECU | Accessory lock* and key | |
| | Main switch | Immobilizer unit | | | | |
| Standard key is lost | | | √ | | | New standard key |
| All keys have been lost (including code re-registering key) | √ | | √ | √ | √ | Code re-registering key and standard keys |
| ECU is defective | | | | √ | | Code re-registering key and standard keys |
| Immobilizer unit is defective | | √ | | | | Code re-registering key and standard keys |
| Main switch is defective | √ | | √ | √ | √ | Code re-registering key and standard keys |
| Accessory lock* is defective | | | | | √ | Not required |

* Accessory locks mean the seat lock, fuel tank cap or the helmet holder.

**Code re-registering key registration:**
When the immobilizer unit or ECU is replaced, the code re-registering key must be registered to the unit.
To register a code re-registering key:
1. Turn the main switch to “ON” with the code re-registering key.

**NOTE:**
Check that the immobilizer system indicator light comes on for one second, then goes off. When the immobilizer system indicator light goes off, the code re-registering key has been registered.

2. Check that the engine can be started.
3. Register the standard key, following the instructions in the section below.

**Standby mode:**
To enable the immobilizer system, turn the ignition key to “OFF”. 30 seconds later, the indicator light will start flashing continuously in the standby flashing mode pattern for up to 24 hours. After that time, the indicator light will stop flashing, but the immobilizer system is still enabled.

**Standby mode**

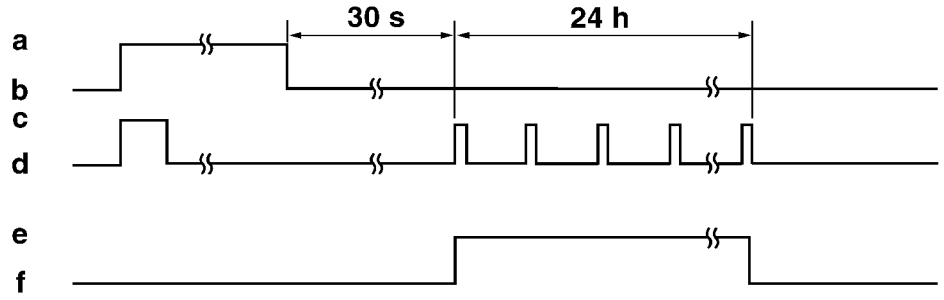


a. Main switch “ON”
b. Main switch “OFF”
c. LED on
d. LED off
e. Standby mode on
f. Standby mode off

**Standard key registration:**

Standard key registration is required when a standard key is lost and needs to be replaced, or when the code re-registering key is re-registered after the immobilizer unit or ECU are replaced.

**NOTE:**

Do not start the engine with a standard key that has not been registered. If the main switch is turned “ON” with a standard key that has not been registered, the immobilizer system indicator light flashes to indicate fault code “52”. (Refer to “SELF-DIAGNOSIS FAULT CODE INDICATION” on page 8-83.)

1. Check that the immobilizer system indicator light signals the standby mode.
2. Using the code re-registering key, turn the main switch to “ON”, then “OFF”, and then remove the key within 5 seconds.
3. Insert the first standard key to be registered into the main switch, then turn the key to “ON” within 5 seconds to activate the key registration mode.

**NOTE:**

The existing standard key code is erased from the memory when the key registration mode is activated. When the key registration mode is activated, the immobilizer system indicator light flashes rapidly.

4. While the indicator light is flashing, turn the main switch to “OFF”, remove the key, and within 5 seconds, insert the second standard key to be registered into the main switch.

**NOTE:**

If the immobilizer system indicator light stops flashing 5 seconds after the first standard key is registered, the registration mode is deactivated. If this occurs, the second standard key cannot be registered, and steps 2 to 4 need to be repeated to register both standard keys.

5. Turn the main switch to “ON”.

**NOTE:**

When the indicator light goes off, the registration is complete.

6. Check that the engine can be started with the two registered standard keys.

**Standard key registration**

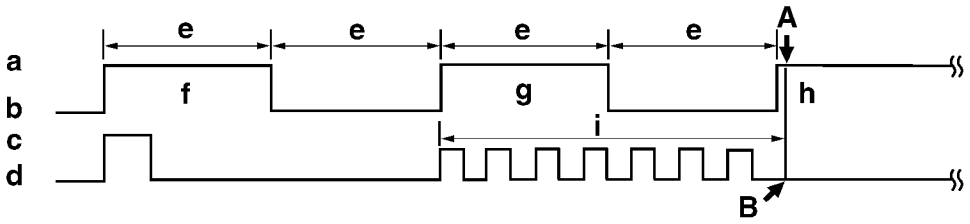


a. Main switch “ON”
b. Main switch “OFF”
c. LED on
d. LED off
e. Less than 5.0 s
f. Code re-registering key
g. First standard key
h. Second standard key
i. Registration mode
A. Registration of the second standard key is complete.
B. Immobilizer system indicator light stops flashing when the registration of the second standard key is complete.

**Voiding the standard key code:**

If a standard key has been lost, it is possible to disable its use by re-registering the remaining standard key. Standard key registration erases the stored standard key code from the memory, thus disabling the lost standard key. To re-register, refer to “Standard key registration”.

**Standard key code voiding method**

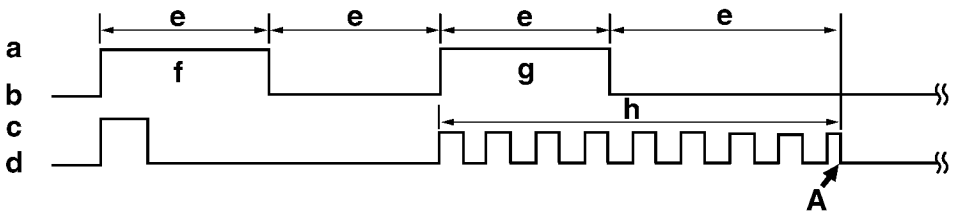


a. Main switch “ON”
b. Main switch “OFF”
c. LED on
d. LED off
e. Less than 5.0 s
f. Code re-registering key
g. Remaining standard key
h. Registration mode
A. If the immobilizer system indicator light stops flashing 5 seconds after the first standard key is registered, the second standard key cannot be registered.

EAS27700

## TROUBLESHOOTING

When the main switch is turned to “ON”, the immobilizer system indicator light does not come on nor flashes.

| | | |
|---|---|---|
| 1. Check the fuses.<br>(Main, ignition, and backup)<br>Refer to “CHECKING THE FUSES” on page 8-95. | NG → | Replace the fuse(s). |
| OK ↓ | | |
| 2. Check the battery.<br>Refer to “CHECKING AND CHARGING THE BATTERY” on page 8-96. | NG → | • Clean the battery terminals.<br>• Recharge or replace the battery. |
| OK ↓ | | |
| 3. Check the main switch.<br>Refer to “CHECKING THE SWITCHES” on page 8-91. | NG → | Replace the main switch/immobilizer unit. |
| OK ↓ | | |
| 4. Check the entire immobilizer system wiring.<br>Refer to “CIRCUIT DIAGRAM” on page 8-77. | NG → | Properly connect or repair the immobilizer system wiring. |
| OK ↓ | | |
| • Check the condition each of the immobilizer system circuits.<br>Refer to “SELF-DIAGNOSIS FAULT CODE INDICATION” on page 8-83. | | |

EAS27720

## SELF-DIAGNOSIS FAULT CODE INDICATION

When a system malfunction occurs, the fault code number is signaled by the immobilizer system indicator light.

| Fault code | Part | Symptom | Cause | Action |
|---|---|---|---|---|
| 51 | IMMOBILIZER UNIT | Code cannot be transmitted between the key and the immobilizer unit. | 1. Radio wave interference caused by objects around the keys and antennas.<br>2. Immobilizer unit malfunction.<br>3. Key malfunction. | 1. Keep magnets, metal objects, and other immobilizer system keys away from the keys and antennas.<br>2. Replace the main switch/immobilizer unit.<br>3. Replace the key. |

| Fault code | Part | Symptom | Cause | Action |
|---|---|---|---|---|
| 52 | IMMOBILIZER UNIT | Codes between the key and immobilizer unit do not match. | 1. Signal received from other transponder (failed to recognize code after ten consecutive attempts).<br>2. Signal received from unregistered standard key. | 1. Place the immobilizer unit at least 50 mm away from the transponder of other vehicles.<br>2. Register the standard key. |
| 53 | IMMOBILIZER UNIT | Codes cannot be transmitted between the ECU and the immobilizer unit. | Noise interference or disconnected lead/cable.<br>1. Interference due to radio wave noise.<br>2. Disconnected communication harness.<br>3. Immobilizer unit malfunction.<br>4. ECU malfunction. | 1. Check the wire harness and connector.<br>2. Replace the main switch/immobilizer unit.<br>3. Replace the ECU. |
| 54 | IMMOBILIZER UNIT | Codes transmitted between the ECU and the immobilizer unit do not match. | Noise interference or disconnected lead/cable.<br>1. Interference due to radio wave noise.<br>2. Disconnected communication harness.<br>3. Immobilizer unit malfunction.<br>4. ECU failure. (The ECU or immobilizer unit was replaced with a used unit from another vehicle.) | 1. Register the code re-registering key.<br>2. Check the wire harness and connector.<br>3. Replace the main switch/immobilizer unit.<br>4. Replace the ECU. |
| 55 | IMMOBILIZER UNIT | Key code registration malfunction. | Same standard key was attempted to be registered two consecutive times. | Register another standard key. |
| 56 | ECU | Unidentified code is received. | Noise interference or disconnected lead/cable. | 1. Check the wire harness and connector.<br>2. Replace the main switch/immobilizer unit.<br>3. Replace the ECU. |

**Immobilizer system indicator light fault code indication**
Units of 10: Cycles of on for 1 second and off for 1.5 seconds.
Units of 1: Cycles of on for 0.5 second and off for 0.5 second.
Example: fault code 52

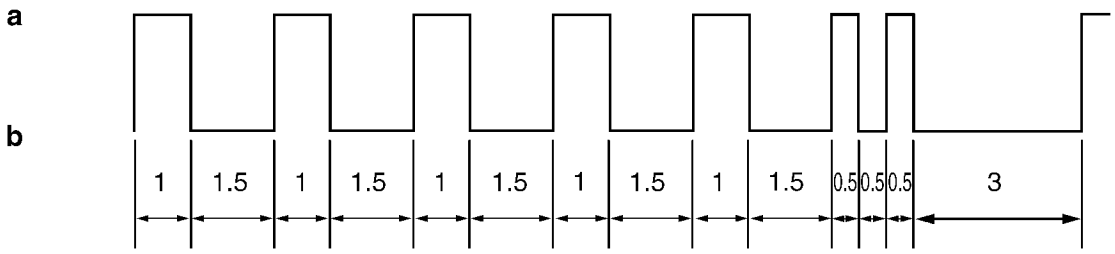


a. Light on
b. Light off

EAS27970

# ELECTRICAL COMPONENTS

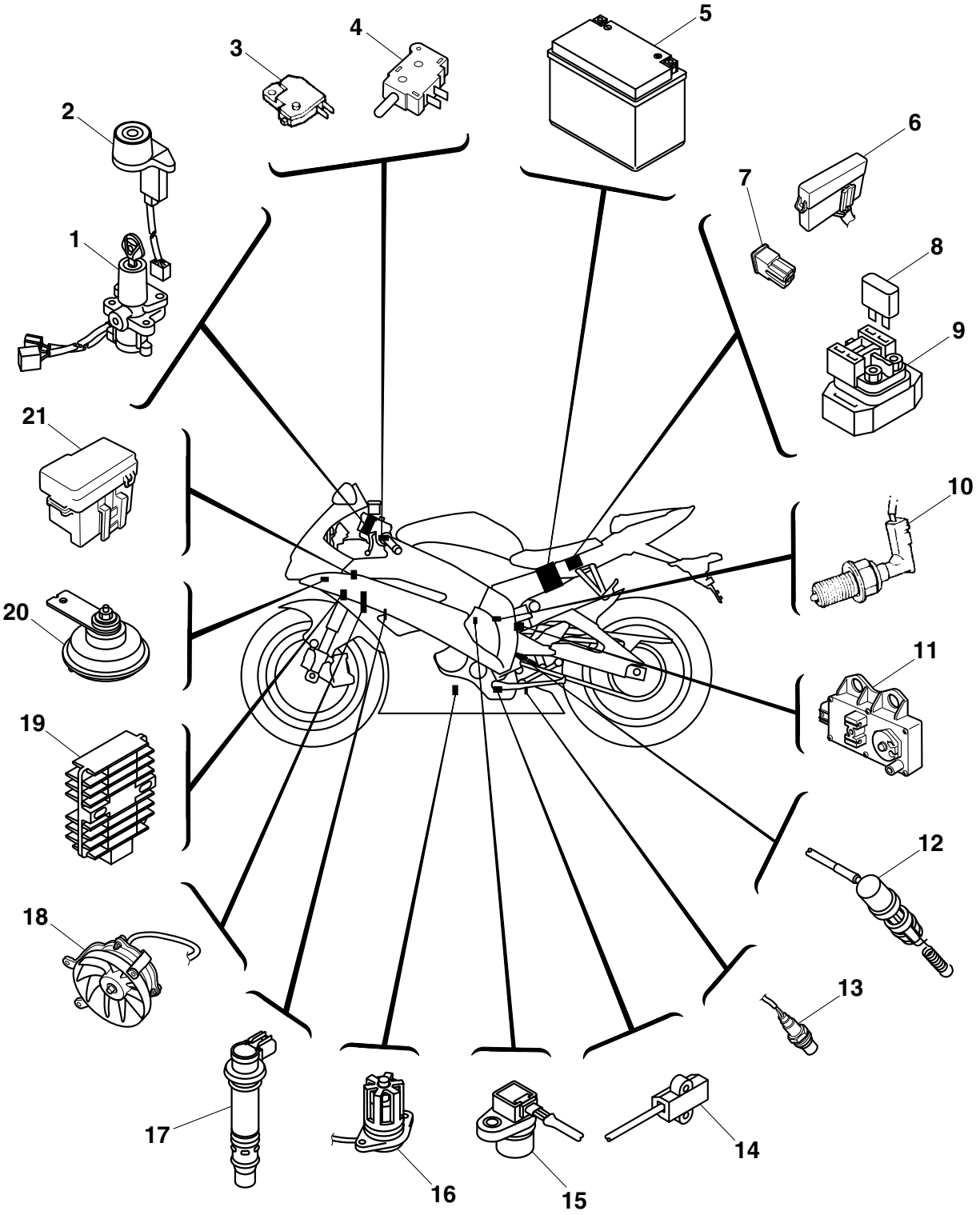

1. Main switch
2. Immobilizer unit
3. Front brake light switch
4. Clutch switch
5. Battery
6. Fuse box (backup, ETV)
7. Main fuse
8. Fuel injection system fuse
9. Starter relay
10. Neutral switch
11. EXUP servo motor
12. Rear brake light switch
13. $O_2$ sensor
14. Sidestand switch
15. Speed sensor
16. Oil level switch
17. Ignition coil
18. Radiator fan motor
19. Rectifier/regulator
20. Horn
21. Fuse box (radiator fan motor, signaling system, ignition, headlight)

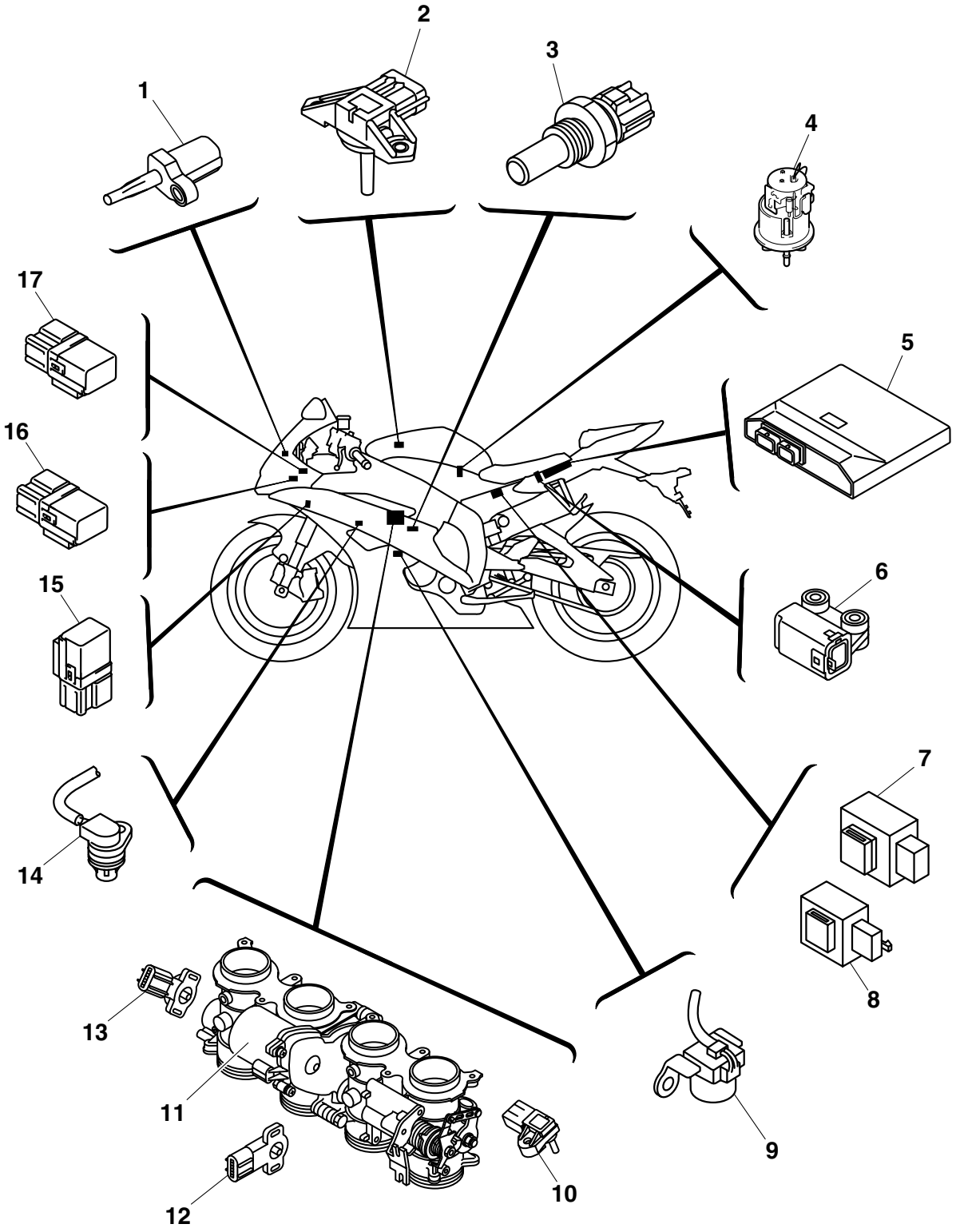
1
2
3
4
5
6
7
8
9
10
11
12
13
14
15
16
17

1. Air temperature sensor
2. Atmospheric pressure sensor
3. Coolant temperature sensor
4. Fuel pump
5. ECU (engine control unit)
6. Lean angle sensor
7. Relay unit
8. Turn signal relay
9. Crankshaft position sensor
10. Intake air pressure sensor
11. Throttle servo motor
12. Throttle position sensor (for throttle cable pulley)
13. Throttle position sensor (for throttle valves)
14. Cylinder identification sensor
15. Radiator fan motor relay
16. Headlight relay (dimmer)
17. Headlight relay (on/off)

EAS27980
## CHECKING THE SWITCHES

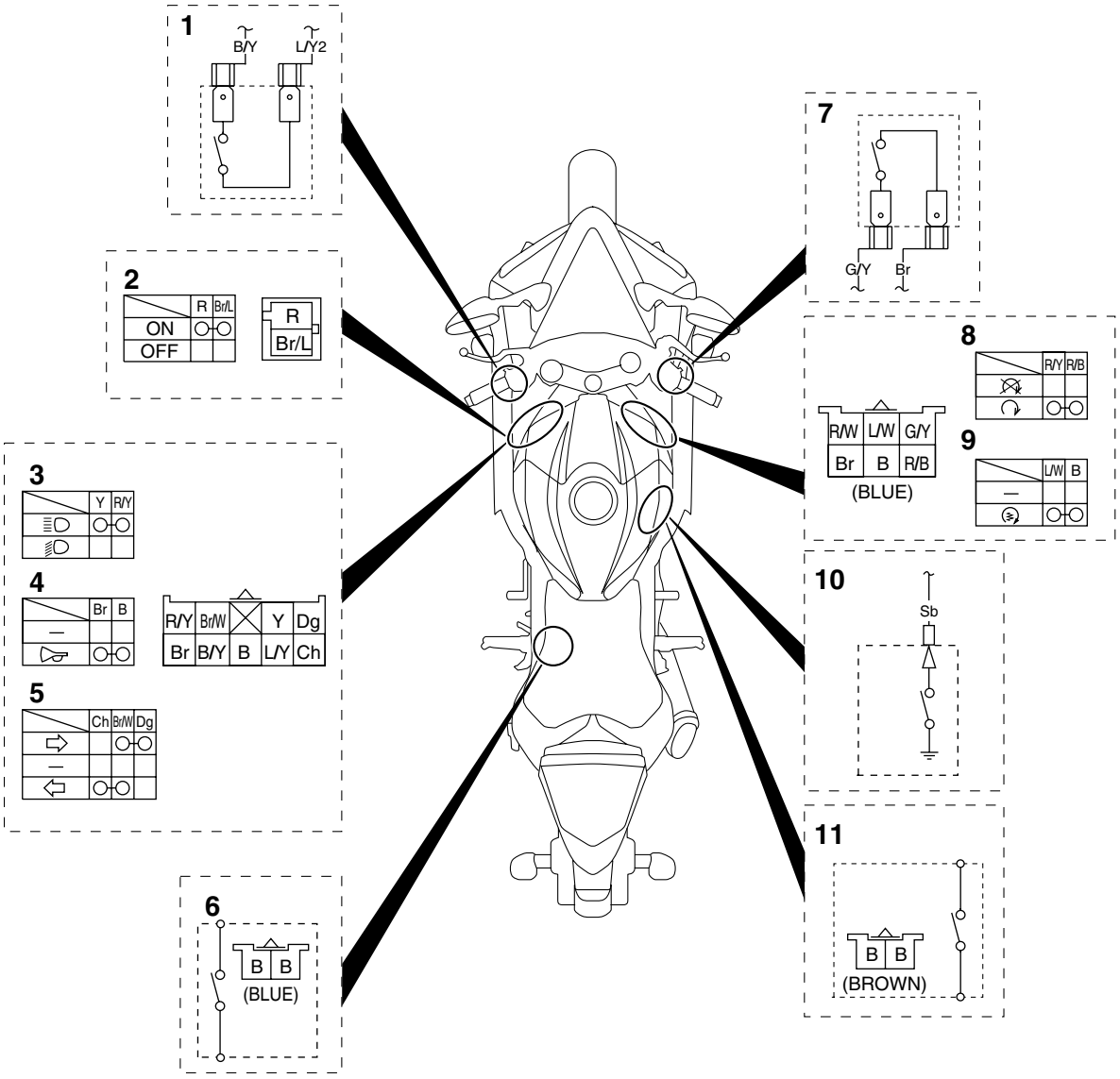

1. Clutch switch
2. Main switch
3. Dimmer switch
4. Horn switch
5. Turn signal switch
6. Sidestand switch
7. Front brake light switch
8. Engine stop switch
9. Start switch
10. Neutral switch
11. Rear brake light switch

Check each switch for continuity with the pocket tester. If the continuity reading is incorrect, check the wiring connections and if necessary, replace the switch.

ECA14370

**CAUTION:**

**Never insert the tester probes into the coupler terminal slots "a". Always insert the probes from the opposite end of the coupler, taking care not to loosen or damage the leads.**

**Pocket tester**
**90890-03112**
**Analog pocket tester**
**YU-03112-C**

**NOTE:**

- Before checking for continuity, set the pocket tester to "0" and to the "Ω × 1" range.
- When checking for continuity, switch back and forth between the switch positions a few times.

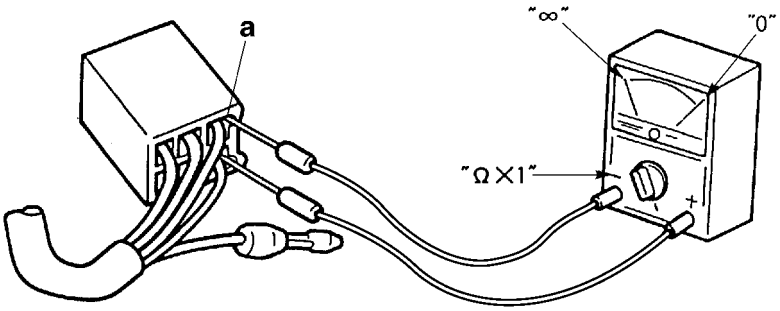


The switches and their terminal connections are illustrated as in the following example of the main switch.
The switch positions "a" are shown in the far left column and the switch lead colors "b" are shown in the top row.
The continuity (i. e., a closed circuit) between switch terminals at a given switch position is indication by " ○——○ ". There is continuity between red and brown/blue when the switch is set to "ON".

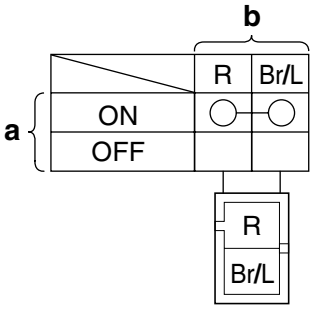

EAS27990
## CHECKING THE BULBS AND BULB SOCKETS

**NOTE:**

Do not check any of the lights that use LEDs.

Check each bulb and bulb socket for damage or wear, proper connections, and also for continuity between the terminals.
Damage/wear → Repair or replace the bulb, bulb socket or both.
Improperly connected → Properly connect.
No continuity → Repair or replace the bulb, bulb socket or both.

### Types of bulbs

The bulbs used on this vehicle are shown in the following illustration.

- Bulbs “a” and “b” are used for the headlights and usually use a bulb holder that must be detached before removing the bulb. The majority of these types of bulbs can be removed from their respective socket by turning them counterclockwise.
- Bulbs “c” are used for turn signal and tail/brake lights and can be removed from the socket by pushing and turning the bulb counterclockwise.
- Bulbs “d” and “e” are used for meter and indicator lights and can be removed from their respective socket by carefully pulling them out.

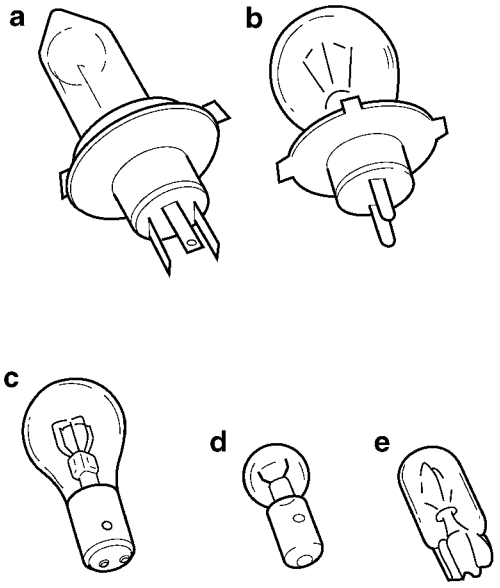


### Checking the condition of the bulbs

The following procedure applies to all of the bulbs.

1. Remove:
   - Bulb

EW2C01001
**WARNING**

**Since headlight bulbs get extremely hot, keep flammable products and your hands away from them until they have cooled down.**

EC2C01002
**CAUTION:**

- **Be sure to hold the socket firmly when removing the bulb. Never pull the lead, otherwise it may be pulled out of the terminal in the coupler.**
- **Avoid touching the glass part of a headlight bulb to keep it free from oil, otherwise the transparency of the glass, the life of the bulb, and the luminous flux will be adversely affected. If a headlight bulb gets soiled, thoroughly clean it with a cloth moistened with alcohol or lacquer thinner.**

2. Check:
   - Bulb (for continuity)
     (with the pocket tester)
     No continuity → Replace.

**Pocket tester**
**90890-03112**
**Analog pocket tester**
**YU-03112-C**

**NOTE:**

Before checking for continuity, set the pocket tester to “0” and to the “Ω × 1” range.

▼▼▼▼▼▼▼▼▼▼▼▼▼▼▼▼▼▼▼▼▼▼▼▼▼▼▼▼▼▼▼▼▼▼

a. Connect the positive tester probe to terminal “1” and the negative tester probe to terminal “2”, and check the continuity.
b. Connect the positive tester probe to terminal “1” and the negative tester probe to terminal “3”, and check the continuity.
c. If either of the readings indicate no continuity, replace the bulb.

▲▲▲▲▲▲▲▲▲▲▲▲▲▲▲▲▲▲▲▲▲▲▲▲▲▲▲▲▲▲▲▲▲▲

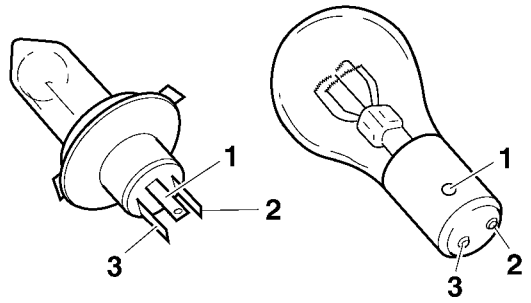


**Checking the condition of the bulb sockets**
The following procedure applies to all of the bulb sockets.
1. Check:
   - Bulb socket (for continuity) (with the pocket tester)
     No continuity → Replace.

**Pocket tester**
**90890-03112**
**Analog pocket tester**
**YU-03112-C**

**NOTE:**
Check each bulb socket for continuity in the same manner as described in the bulb section; however, note the following.

▼▼▼▼▼▼▼▼▼▼▼▼▼▼▼▼▼▼▼▼▼▼▼▼▼▼▼▼▼▼▼▼▼▼
a. Install a good bulb into the bulb socket.
b. Connect the pocket tester probes to the respective leads of the bulb socket.
c. Check the bulb socket for continuity. If any of the readings indicate no continuity, replace the bulb socket.
▲▲▲▲▲▲▲▲▲▲▲▲▲▲▲▲▲▲▲▲▲▲▲▲▲▲▲▲▲▲▲▲▲▲

EAS28000
## CHECKING THE FUSES
The following procedure applies to all of the fuses.
EC2C01003
**CAUTION:**
**To avoid a short circuit, always turn the main switch to "OFF" when checking or replacing a fuse.**

1. Remove:
   - Rider seat
   - Left upper side cowling
     Refer to "GENERAL CHASSIS" on page 4-1.
2. Check:
   - Fuse

▼▼▼▼▼▼▼▼▼▼▼▼▼▼▼▼▼▼▼▼▼▼▼▼▼▼▼▼▼▼▼▼▼▼
a. Connect the pocket tester to the fuse and check the continuity.

**NOTE:**
Set the pocket tester selector to "Ω × 1".

**Pocket tester**
**90890-03112**
**Analog pocket tester**
**YU-03112-C**

b. If the pocket tester indicates "∞", replace the fuse.
▲▲▲▲▲▲▲▲▲▲▲▲▲▲▲▲▲▲▲▲▲▲▲▲▲▲▲▲▲▲▲▲▲▲

3. Replace:
   - Blown fuse

▼▼▼▼▼▼▼▼▼▼▼▼▼▼▼▼▼▼▼▼▼▼▼▼▼▼▼▼▼▼▼▼▼▼
a. Set the main switch to "OFF".
b. Install a new fuse of the correct amperage rating.
c. Set on the switches to verify if the electrical circuit is operational.
d. If the fuse immediately blows again, check the electrical circuit.

| Fuses | Amperage rating | Q'ty |
|---|---|---|
| Main | 50 A | 1 |
| Ignition | 15 A | 1 |
| Headlight | 15 A | 1 |
| Fuel injection system | 15 A | 1 |
| Left radiator fan motor | 15 A | 1 |
| Right radiator fan motor | 15 A | 1 |
| Signaling system | 10 A | 1 |
| Backup (odometer, clock and immobilizer system) | 7.5 A | 1 |
| ETV | 7.5 A | 1 |
| Spare | 15 A | 1 |
| Spare | 15 A | 1 |
| Spare | 10 A | 1 |
| Spare | 7.5 A | 1 |

EWA13310
**WARNING**
**Never use a fuse with an amperage rating other than that specified. Improvising or using a fuse with the wrong amperage rating may cause extensive damage to the electri-**

**cal system, cause the lighting and ignition systems to malfunction and could possibly cause a fire.**

▲▲▲▲▲▲▲▲▲▲▲▲▲▲▲▲▲▲▲▲▲▲▲▲▲▲▲▲▲▲▲▲

4. Install:
   - Left upper side cowling
   - Rider seat
     Refer to “GENERAL CHASSIS” on page 4-1.

EAS28030

## CHECKING AND CHARGING THE BATTERY

EWA13290

**WARNING**

**Batteries generate explosive hydrogen gas and contain electrolyte which is made of poisonous and highly caustic sulfuric acid. Therefore, always follow these preventive measures:**

- **Wear protective eye gear when handling or working near batteries.**
- **Charge batteries in a well-ventilated area.**
- **Keep batteries away from fire, sparks or open flames (e.g., welding equipment, lighted cigarettes).**
- **DO NOT SMOKE when charging or handling batteries.**
- **KEEP BATTERIES AND ELECTROLYTE OUT OF REACH OF CHILDREN.**
- **Avoid bodily contact with electrolyte as it can cause severe burns or permanent eye injury.**

**FIRST AID IN CASE OF BODILY CONTACT:**
**EXTERNAL**

- **Skin — Wash with water.**
- **Eyes — Flush with water for 15 minutes and get immediate medical attention.**

**INTERNAL**

- **Drink large quantities of water or milk followed with milk of magnesia, beaten egg or vegetable oil. Get immediate medical attention.**

EC2C01024

**CAUTION:**

- **This is a sealed battery. Never remove the sealing caps because the balance between cells will not be maintained and battery performance will deteriorate.**
- **Charging time, charging amperage and charging voltage for an MF battery are different from those of conventional batteries. The MF battery should be charged according to the instructions for the charging method. If the battery is overcharged, the electrolyte level will drop considerably. Therefore, take special care when charging the battery.**

**NOTE:**

Since MF batteries are sealed, it is not possible to check the charge state of the battery by measuring the specific gravity of the electrolyte. Therefore, the charge of the battery has to be checked by measuring the voltage at the battery terminals.

1. Remove:
   - Rider seat
   - Fuel tank bracket
     Refer to “GENERAL CHASSIS” on page 4-1.
2. Disconnect:
   - Battery leads
     (from the battery terminals)

ECA13640

**CAUTION:**

**First, disconnect the negative battery lead “1”, and then positive battery lead “2”.**

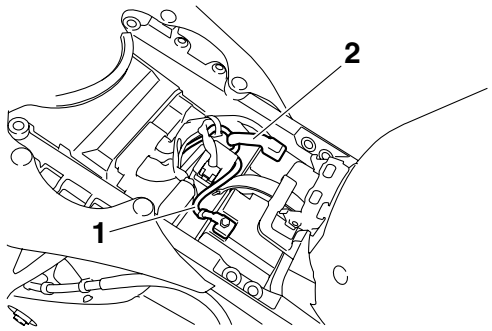


3. Remove:
   - Battery band
   - Battery
4. Check:
   - Battery charge

▼▼▼▼▼▼▼▼▼▼▼▼▼▼▼▼▼▼▼▼▼▼▼▼▼▼▼▼▼▼▼▼

a. Connect a pocket tester to the battery terminals.

| |
|---|
| • Positive tester probe → positive battery terminal<br>• Negative tester probe → negative battery terminal |

**NOTE:**

- The charge state of an MF battery can be checked by measuring its open-circuit voltage (i.e., the voltage when the positive battery terminal is disconnected).
- No charging is necessary when the open-circuit voltage equals or exceeds 12.8 V.

b. Check the charge of the battery, as shown in the charts and the following example.

| |
|---|
| Example<br>Open-circuit voltage = 12.0 V<br>Charging time = 6.5 hours<br>Charge of the battery = 20–30% |

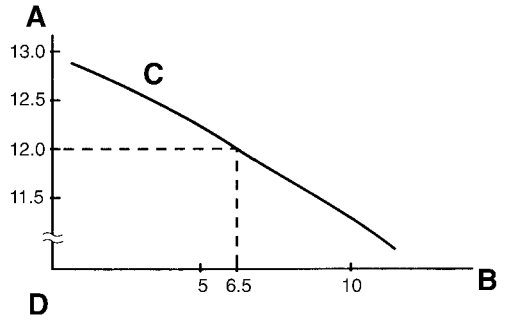


A. Open-circuit voltage (V)
B. Charging time (hours)
C. Relationship between the open-circuit voltage and the charging time at 20 °C (68 °F)
D. These values vary with the temperature, the condition of the battery plates, and the electrolyte level.

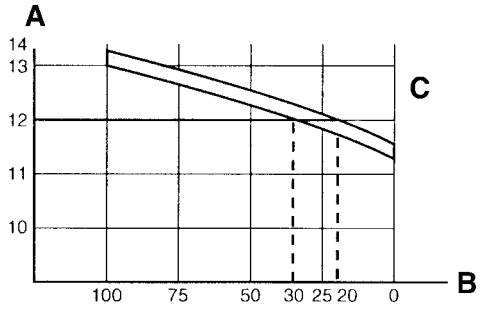


A. Open-circuit voltage (V)
B. Charging condition of the battery (%)
C. Ambient temperature 20 °C (68 °F)

▲▲▲▲▲▲▲▲▲▲▲▲▲▲▲▲▲▲▲▲▲▲▲▲▲▲▲▲▲▲▲

5. Charge:
   - Battery
     (refer to the appropriate charging method illustration)

EWA13300

**WARNING**

**Do not quick charge a battery.**

ECA13670

**CAUTION:**

- **Never remove the MF battery sealing caps.**
- **Do not use a high-rate battery charger since it forces a high-amperage current into the battery quickly and can cause battery overheating and battery plate damage.**
- **If it is impossible to regulate the charging current on the battery charger, be careful not to overcharge the battery.**
- **When charging a battery, be sure to remove it from the vehicle. (If charging has to be done with the battery mounted on the vehicle, disconnect the negative battery lead from the battery terminal.)**
- **To reduce the chance of sparks, do not plug in the battery charger until the battery charger leads are connected to the battery.**
- **Before removing the battery charger lead clips from the battery terminals, be sure to turn off the battery charger.**
- **Make sure the battery charger lead clips are in full contact with the battery terminal and that they are not shorted. A corroded battery charger lead clip may generate heat in the contact area and a weak clip spring may cause sparks.**
- **If the battery becomes hot to the touch at any time during the charging process, disconnect the battery charger and let the battery cool before reconnecting it. Hot batteries can explode!**
- **As shown in the following illustration, the open-circuit voltage of an MF battery stabilizes about 30 minutes after charging has been completed. Therefore, wait 30 minutes after charging is completed before measuring the open-circuit voltage.**

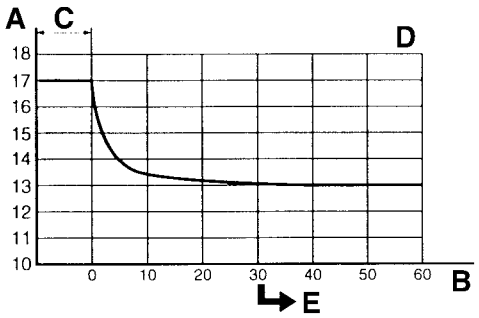


A. Open-circuit voltage (V)
B. Time (minutes)
C. Charging
D. Ambient temperature 20 °C (68 °F)
E. Check the open-circuit voltage.

▼▼▼▼▼▼▼▼▼▼▼▼▼▼▼▼▼▼▼▼▼▼▼▼▼▼▼▼▼▼▼▼▼▼

**Charging method using a variable-current (voltage) charger**

a. Measure the open-circuit voltage prior to charging.

**NOTE:**

Voltage should be measured 30 minutes after the engine is stopped.

b. Connect a charger and ammeter to the battery and start charging.

**NOTE:**

Set the charging voltage at 16–17 V. If the setting is lower, charging will be insufficient. If too high, the battery will be over-charged.

c. Make sure that the current is higher than the standard charging current written on the battery.

**NOTE:**

If the current is lower than the standard charging current written on the battery, set the charging voltage adjust dial at 20–24 V and monitor the amperage for 3–5 minutes to check the battery.

- Standard charging current is reached
  Battery is good.
- Standard charging current is not reached
  Replace the battery.

d. Adjust the voltage so that the current is at the standard charging level.
e. Set the time according to the charging time suitable for the open-circuit voltage.
f. If charging requires more than 5 hours, it is advisable to check the charging current after a lapse of 5 hours. If there is any change in the amperage, readjust the voltage to obtain the standard charging current.
g. Measure the battery open-circuit voltage after leaving the battery unused for more than 30 minutes.

12.8 V or more --- Charging is complete.
12.7 V or less --- Recharging is required.
Under 12.0 V --- Replace the battery.

▲▲▲▲▲▲▲▲▲▲▲▲▲▲▲▲▲▲▲▲▲▲▲▲▲▲▲▲▲▲▲▲▲▲

▼▼▼▼▼▼▼▼▼▼▼▼▼▼▼▼▼▼▼▼▼▼▼▼▼▼▼▼▼▼▼▼▼▼

**Charging method using a constant voltage charger**

a. Measure the open-circuit voltage prior to charging.

**NOTE:**

Voltage should be measured 30 minutes after the engine is stopped.

b. Connect a charger and ammeter to the battery and start charging.
c. Make sure that the current is higher than the standard charging current written on the battery.

**NOTE:**

If the current is lower than the standard charging current written on the battery, this type of battery charger cannot charge the MF battery. A variable voltage charger is recommended.

d. Charge the battery until the battery's charging voltage is 15 V.

**NOTE:**

Set the charging time at 20 hours (maximum).

e. Measure the battery open-circuit voltage after leaving the battery unused for more than 30 minutes.

12.8 V or more --- Charging is complete.
12.7 V or less --- Recharging is required.
Under 12.0 V --- Replace the battery.

▲▲▲▲▲▲▲▲▲▲▲▲▲▲▲▲▲▲▲▲▲▲▲▲▲▲▲▲▲▲▲▲▲▲

6. Install:
   - Battery
   - Battery band
7. Connect:
   - Battery leads
     (to the battery terminals)

ECA13630

**CAUTION:**

**First, connect the positive battery lead "1", and then the negative battery lead "2".**

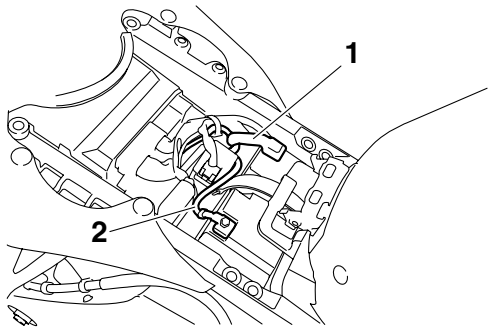


8. Check:
   - Battery terminals
     Dirt → Clean with a wire brush.
     Loose connection → Connect properly.
9. Lubricate:
   - Battery terminals

**Recommended lubricant**
**Dielectric grease**

10.Install:
- Fuel tank bracket
- Rider seat
  Refer to “GENERAL CHASSIS” on page 4-1.

EAS28040
## CHECKING THE RELAYS
Check each switch for continuity with the pocket tester. If the continuity reading is incorrect, replace the relay.

**Pocket tester**
**90890-03112**
**Analog pocket tester**
**YU-03112-C**

1. Disconnect the relay from the wire harness.
2. Connect the pocket tester ($\Omega \times 1$) and battery (12 V) to the relay terminal as shown.
   Check the relay operation.
   Out of specification → Replace.

### Starter relay

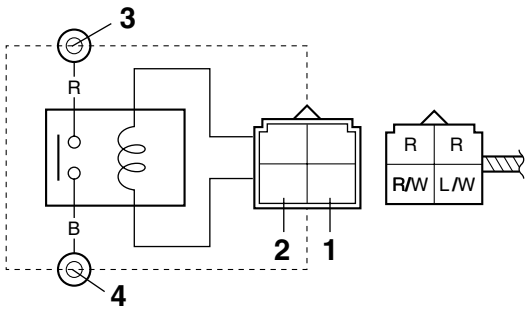


1. Positive battery terminal
2. Negative battery terminal
3. Positive tester probe
4. Negative tester probe

**Result**
**Continuity**
**(between “3” and “4”)**

### Relay unit (starting circuit cut-off relay)

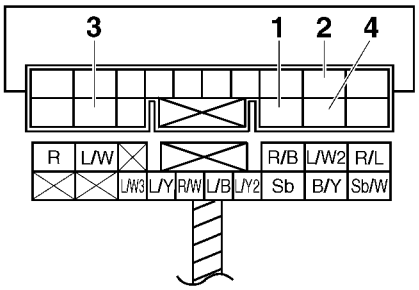


1. Positive battery terminal
2. Negative battery terminal
3. Positive tester probe
4. Negative tester probe

**Result**
**Continuity**
**(between “3” and “4”)**

### Relay unit (fuel pump relay)

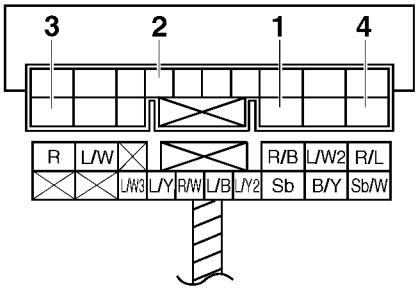


1. Positive battery terminal
2. Negative battery terminal
3. Positive tester probe
4. Negative tester probe

**Result**
**Continuity**
**(between “3” and “4”)**

### Headlight relay (on/off)

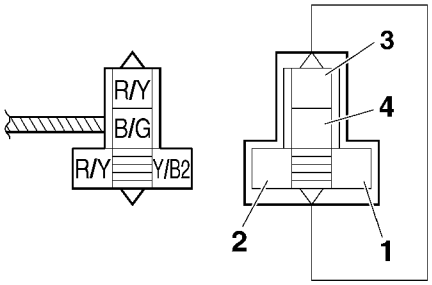


1. Positive battery terminal
2. Negative battery terminal

3. Positive tester probe
4. Negative tester probe

**Result**
**Continuity**
**(between “3” and “4”)**

**Headlight relay (dimmer)**

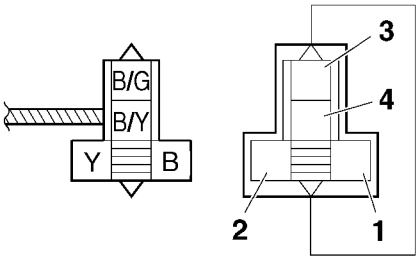


1. Positive battery terminal
2. Negative battery terminal
3. Positive tester probe
4. Negative tester probe

**Result**
**Continuity**
**(between “3” and “4”)**

**Radiator fan motor relay**

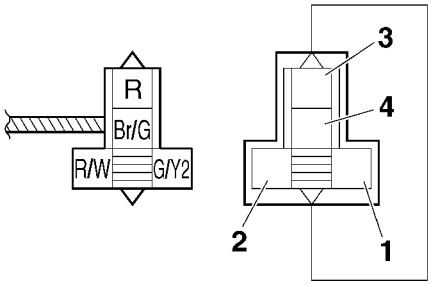


1. Positive battery terminal
2. Negative battery terminal
3. Positive tester probe
4. Negative tester probe

**Result**
**Continuity**
**(between “3” and “4”)**

ET2C01021

## CHECKING THE TURN SIGNAL RELAY

1. Check:
   - Turn signal relay input voltage
     Out of specification → The wiring circuit from the main switch to the turn signal relay coupler is faulty and must be repaired.

**Turn signal relay input voltage**
**DC 12 V**

▼▼▼▼▼▼▼▼▼▼▼▼▼▼▼▼▼▼▼▼▼▼▼▼▼▼▼▼▼▼▼▼▼▼

a. Connect the pocket tester (DC 20 V) to the turn signal relay terminal as shown.

**Pocket tester**
**90890-03112**
**Analog pocket tester**
**YU-03112-C**

- Positive tester probe → brown “1”
- Negative tester probe → ground

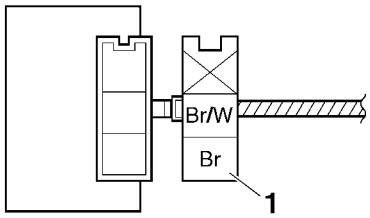


b. Turn the main switch to “ON”.
c. Measure the turn signal relay input voltage.

▲▲▲▲▲▲▲▲▲▲▲▲▲▲▲▲▲▲▲▲▲▲▲▲▲▲▲▲▲▲▲▲▲▲

2. Check:
   - Turn signal relay output voltage
     Out of specification → Replace.

**Turn signal relay output voltage**
**DC 12 V**

▼▼▼▼▼▼▼▼▼▼▼▼▼▼▼▼▼▼▼▼▼▼▼▼▼▼▼▼▼▼▼▼▼▼

a. Connect the pocket tester (DC 20 V) to the turn signal relay terminal as shown.

**Pocket tester**
**90890-03112**
**Analog pocket tester**
**YU-03112-C**

- Positive tester probe → brown/white “1”
- Negative tester probe → ground

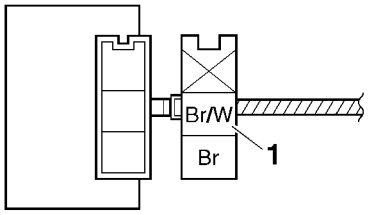


b. Turn the main switch to “ON”.
c. Measure the turn signal relay output voltage.

▲▲▲▲▲▲▲▲▲▲▲▲▲▲▲▲▲▲▲▲▲▲▲▲▲▲▲▲▲▲▲▲

EAS28050

## CHECKING THE RELAY UNIT (DIODE)

1. Check:
   - Relay unit (diode)
     Out of specification → Replace.

**Pocket tester**
**90890-03112**
**Analog pocket tester**
**YU-03112-C**

**NOTE:**

The pocket tester or the analog pocket tester readings are shown in the following table.

**Continuity**
**Positive tester probe → sky blue “1”**
**Negative tester probe → black/yellow “2”**
**No continuity**
**Positive tester probe → black/yellow “2”**
**Negative tester probe → sky blue “1”**
**Continuity**
**Positive tester probe → sky blue “1”**
**Negative tester probe → blue/yellow “3”**
**No continuity**
**Positive tester probe → blue/yellow “3”**
**Negative tester probe → sky blue “1”**
**Continuity**
**Positive tester probe → sky blue “1”**
**Negative tester probe → sky blue/white “4”**
**No continuity**
**Positive tester probe → sky blue/white “4”**
**Negative tester probe → sky blue “1”**
**Continuity**
**Positive tester probe → blue/black “5”**
**Negative tester probe → blue/yellow “3”**
**No continuity**
**Positive tester probe → blue/yellow “3”**
**Negative tester probe → blue/black “5”**

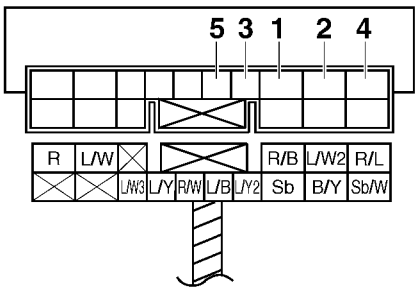


▼▼▼▼▼▼▼▼▼▼▼▼▼▼▼▼▼▼▼▼▼▼▼▼▼▼▼▼▼▼▼▼

a. Disconnect the relay unit coupler from the wire harness.
b. Connect the pocket tester (Ω × 1) to the relay unit terminal as shown.

c. Check the relay unit (diode) for continuity.
d. Check the relay unit (diode) for no continuity.

▲▲▲▲▲▲▲▲▲▲▲▲▲▲▲▲▲▲▲▲▲▲▲▲▲▲▲▲▲▲▲▲

EAS28100

## CHECKING THE IGNITION COILS

The following procedure applies to all of the ignition coils.

1. Check:
   - Primary coil resistance
     Out of specification → Replace.

**Primary coil resistance**
**1.19–1.61 Ω**

▼▼▼▼▼▼▼▼▼▼▼▼▼▼▼▼▼▼▼▼▼▼▼▼▼▼▼▼▼▼▼▼

a. Remove the ignition coil from the spark plug.
b. Connect the pocket tester (Ω × 1) to the ignition coil as shown.

**Pocket tester**
**90890-03112**
**Analog pocket tester**
**YU-03112-C**

- Positive tester probe →
  red/black "1"
- Negative tester probe →
  orange or gray/red or orange/green or gray/green "2"

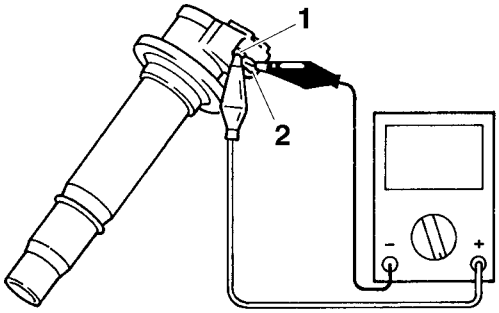


c. Measure the primary coil resistance.

▲▲▲▲▲▲▲▲▲▲▲▲▲▲▲▲▲▲▲▲▲▲▲▲▲▲▲▲▲▲▲▲

2. Check:
   - Secondary coil resistance
     Out of specification → Replace.

**Secondary coil resistance**
**8.5–11.5 kΩ**

▼▼▼▼▼▼▼▼▼▼▼▼▼▼▼▼▼▼▼▼▼▼▼▼▼▼▼▼▼▼▼▼

a. Connect the pocket tester (Ω × 1k) to the ignition coil as shown.

**Pocket tester**
**90890-03112**
**Analog pocket tester**
**YU-03112-C**

- Negative tester probe →
  red/black "1"
- Positive tester probe →
  spark plug terminal "2"

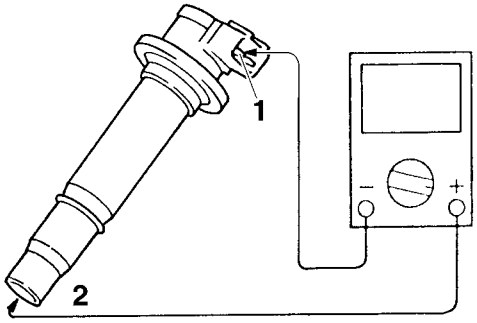


b. Measure the secondary coil resistance.

▲▲▲▲▲▲▲▲▲▲▲▲▲▲▲▲▲▲▲▲▲▲▲▲▲▲▲▲▲▲▲▲

3. Check:
   - Ignition spark gap
     Out of specification → Replace.

**Minimum ignition spark gap**
**6.0 mm (0.24 in)**

▼▼▼▼▼▼▼▼▼▼▼▼▼▼▼▼▼▼▼▼▼▼▼▼▼▼▼▼▼▼▼▼

a. Connect the ignition checker "1" as shown.

**Ignition checker**
**90890-06754**
**Opama pet-4000 spark checker**
**YM-34487**

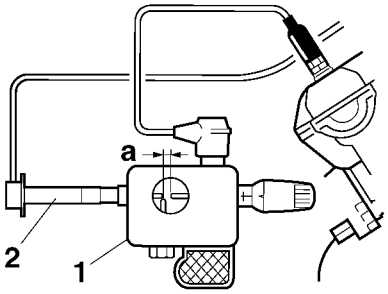


2. Ignition coil

b. Turn the main switch to "ON" and engine stop switch to "◯".
c. Measure the ignition spark gap "a".

d. Crank the engine by pushing the start switch "⊛" and gradually increase the spark gap until a misfire occurs.

▲▲▲▲▲▲▲▲▲▲▲▲▲▲▲▲▲▲▲▲▲▲▲▲▲▲▲▲▲▲▲▲

EAS28120

## CHECKING THE CRANKSHAFT POSITION SENSOR

1. Disconnect:
   - Crankshaft position sensor coupler (from the wire harness)
2. Check:
   - Crankshaft position sensor resistance
     Out of specification → Replace the crankshaft position sensor.

**Crankshaft position sensor resistance**
**248–372 Ω at 20 °C (68 °F)**

▼▼▼▼▼▼▼▼▼▼▼▼▼▼▼▼▼▼▼▼▼▼▼▼▼▼▼▼▼▼▼▼

a. Connect the pocket tester (Ω × 100) to the crankshaft position sensor coupler as shown.

**Pocket tester**
**90890-03112**
**Analog pocket tester**
**YU-03112-C**

- Positive tester probe → gray "1"
- Negative tester probe → black "2"

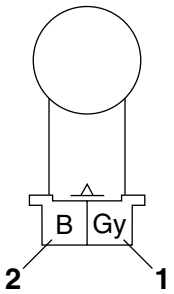


b. Measure the crankshaft position sensor resistance.

▲▲▲▲▲▲▲▲▲▲▲▲▲▲▲▲▲▲▲▲▲▲▲▲▲▲▲▲▲▲▲▲

EAS28130

## CHECKING THE LEAN ANGLE SENSOR

1. Remove:
   - Lean angle sensor (from the bracket)
2. Check:
   - Lean angle sensor output voltage
     Out of specification → Replace.

**Lean angle sensor output voltage**
**Less than 65°: 0.4–1.4 V**
**More than 65°: 3.7–4.4 V**

▼▼▼▼▼▼▼▼▼▼▼▼▼▼▼▼▼▼▼▼▼▼▼▼▼▼▼▼▼▼▼▼

a. Connect the lean angle sensor coupler to the lean angle sensor.
b. Connect the pocket tester (DC 20 V) to the lean angle sensor coupler as shown.

**Pocket tester**
**90890-03112**
**Analog pocket tester**
**YU-03112-C**

- Positive tester probe → yellow/green "1"
- Negative tester probe → black/blue "2"

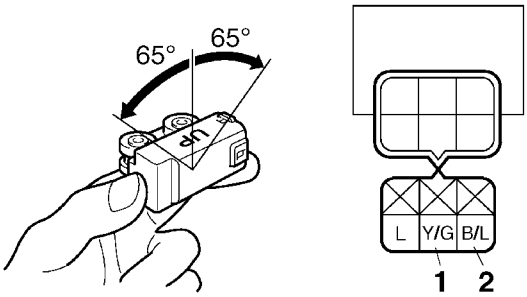


c. Turn the main switch to "ON".
d. Turn the lean angle sensor to 65°.
e. Measure the lean angle sensor output voltage.

▲▲▲▲▲▲▲▲▲▲▲▲▲▲▲▲▲▲▲▲▲▲▲▲▲▲▲▲▲▲▲▲

ET2C01012

## CHECKING THE STARTER MOTOR OPERATION

1. Check:
   - Starter motor operation
     Does not operate → Perform the electric starting system troubleshooting, starting with step 4.
     Refer to "TROUBLESHOOTING" on page 8-11.

▼▼▼▼▼▼▼▼▼▼▼▼▼▼▼▼▼▼▼▼▼▼▼▼▼▼▼▼▼▼▼▼

a. Connect the positive battery terminal "1" and starter motor lead "2" with a jumper lead "3".

EWA13810

**⚠ WARNING**

- **A wire that is used as a jumper lead must have at least the same capacity of the battery lead, otherwise the jumper lead may burn.**

- **This check is likely to produce sparks, therefore, make sure no flammable gas or fluid is in the vicinity.**

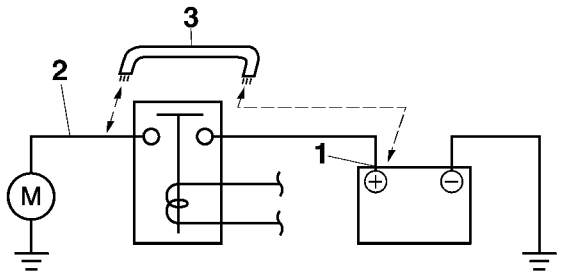


b. Check the starter motor operation.

▲▲▲▲▲▲▲▲▲▲▲▲▲▲▲▲▲▲▲▲▲▲▲▲▲▲▲▲▲▲▲▲

EAS28150

## CHECKING THE STATOR COIL

1. Disconnect:
   - Stator coil coupler (from the wire harness)
2. Check:
   - Stator coil resistance
     Out of specification → Replace the stator coil.

| | |
|---|---|
| | **Stator coil resistance**<br>**0.12–0.18 Ω at 20 °C (68 °F)** |

▼▼▼▼▼▼▼▼▼▼▼▼▼▼▼▼▼▼▼▼▼▼▼▼▼▼▼▼▼▼▼▼

a. Connect the pocket tester (Ω × 1) to the stator coil coupler as shown.

| | |
|---|---|
| | **Pocket tester**<br>**90890-03112**<br>**Analog pocket tester**<br>**YU-03112-C** |

- Positive tester probe → white “1”
- Negative tester probe → white “2”

- Positive tester probe → white “1”
- Negative tester probe → white “3”

- Positive tester probe → white “2”
- Negative tester probe → white “3”

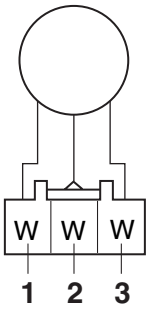


b. Measure the stator coil resistance.

▲▲▲▲▲▲▲▲▲▲▲▲▲▲▲▲▲▲▲▲▲▲▲▲▲▲▲▲▲▲▲▲

EAS28170

## CHECKING THE RECTIFIER/REGULATOR

1. Check:
   - Charging voltage
     Out of specification → Replace the rectifier/regulator.

| | |
|---|---|
| | **Charging voltage**<br>**14 V at 5000 r/min** |

▼▼▼▼▼▼▼▼▼▼▼▼▼▼▼▼▼▼▼▼▼▼▼▼▼▼▼▼▼▼▼▼

a. Set the engine tachometer to the cylinder-#1 ignition coil.
b. Connect the pocket tester (DC 20 V) to the rectifier/regulator coupler as shown.

| | |
|---|---|
| | **Pocket tester**<br>**90890-03112**<br>**Analog pocket tester**<br>**YU-03112-C** |

- Positive tester probe → red “1”
- Negative tester probe → black “2”

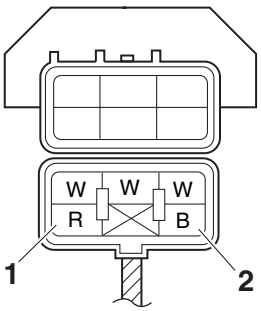


c. Start the engine and let it run at approximately 5000 r/min.
d. Measure the charging voltage.

▲▲▲▲▲▲▲▲▲▲▲▲▲▲▲▲▲▲▲▲▲▲▲▲▲▲▲▲▲▲▲▲

EAS28180
## CHECKING THE HORN

1. Check:
   - Horn resistance
     Out of specification → Replace.

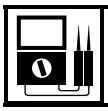

**Coil resistance**
**1.15–1.25 Ω at 20 °C (68 °F)**

▼▼▼▼▼▼▼▼▼▼▼▼▼▼▼▼▼▼▼▼▼▼▼▼▼▼▼▼▼▼▼▼▼▼

a. Disconnect the horn leads from the horn terminals.
b. Connect the pocket tester (Ω × 1) to the horn terminals.

**Pocket tester**
**90890-03112**
**Analog pocket tester**
**YU-03112-C**

- Positive tester probe →
  horn terminal “1”
- Negative tester probe →
  horn terminal “2”

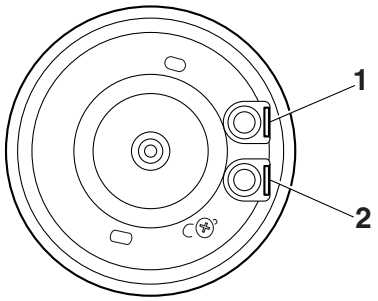


c. Measure the horn resistance.

▲▲▲▲▲▲▲▲▲▲▲▲▲▲▲▲▲▲▲▲▲▲▲▲▲▲▲▲▲▲▲▲▲▲

2. Check:
   - Horn sound
     Faulty sound → Adjust or replace.

▼▼▼▼▼▼▼▼▼▼▼▼▼▼▼▼▼▼▼▼▼▼▼▼▼▼▼▼▼▼▼▼▼▼

a. Connect a battery (12 V) to the horn.
b. Turn the adjusting screw in direction “a” or “b” until the horn sound is obtained.

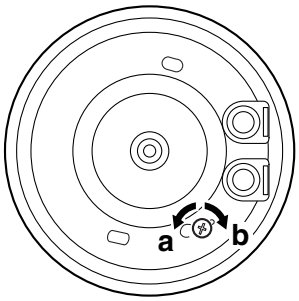


▲▲▲▲▲▲▲▲▲▲▲▲▲▲▲▲▲▲▲▲▲▲▲▲▲▲▲▲▲▲▲▲▲▲

EAS28190
## CHECKING THE OIL LEVEL SWITCH

1. Drain:
   - Engine oil
2. Remove:
   - Oil level switch
     (from the oil pan)
3. Check:
   - Oil level switch resistance
     Out of specification → Replace the oil level switch.

**Oil level switch resistance**
**Maximum level position**
**484–536 Ω**
**Minimum level position**
**114–126 Ω**

▼▼▼▼▼▼▼▼▼▼▼▼▼▼▼▼▼▼▼▼▼▼▼▼▼▼▼▼▼▼▼▼▼▼

a. Connect the pocket tester (Ω × 100) to the oil level switch terminal as shown.

**Pocket tester**
**90890-03112**
**Analog pocket tester**
**YU-03112-C**

Minimum level position “A”
- Positive tester probe →
  connector (white) “1”
- Negative tester probe →
  body earth “2”

Maximum level position “B”
- Positive tester probe →
  connector (white) “1”
- Negative tester probe →
  body earth “2”

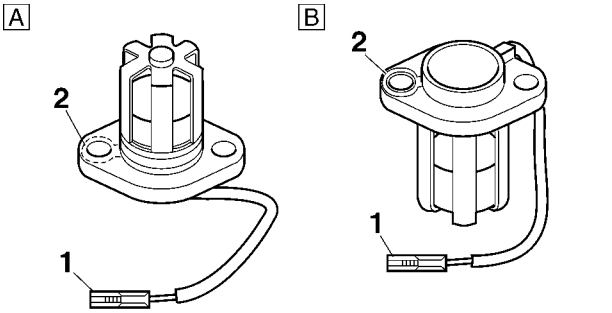


b. Measure the oil level switch resistance.

▲▲▲▲▲▲▲▲▲▲▲▲▲▲▲▲▲▲▲▲▲▲▲▲▲▲▲▲▲▲▲▲▲▲

EAS28230
## CHECKING THE FUEL SENDER

1. Disconnect:
   - Fuel pump coupler

- Fuel sender coupler
  (from the wire harness)

2. Remove:
   - Fuel tank
3. Remove:
   - Fuel pump
     (from the fuel tank)
4. Check:
   - Fuel sender resistance

**Fuel sender resistance**
**900–1050 Ω at 25 °C (77 °F)**

▼▼▼▼▼▼▼▼▼▼▼▼▼▼▼▼▼▼▼▼▼▼▼▼▼▼▼▼▼▼▼▼▼▼

a. Connect the pocket tester (Ω × 1) to the fuel sender terminal as shown.

**Pocket tester**
**90890-03112**
**Analog pocket tester**
**YU-03112-C**

- Positive tester probe → green/white “1”
- Negative tester probe → black “2”

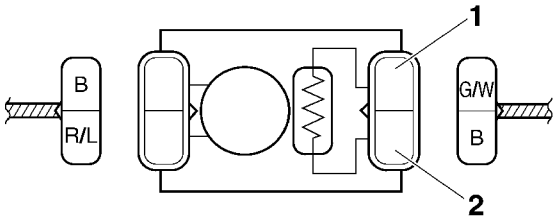


b. Measure the fuel sender resistance.

▲▲▲▲▲▲▲▲▲▲▲▲▲▲▲▲▲▲▲▲▲▲▲▲▲▲▲▲▲▲▲▲▲▲

EAS28240

## CHECKING THE SPEED SENSOR

1. Check:
   - Speed sensor output voltage
     Out of specification → Replace.

**Output voltage reading cycle**
**0.6 V to 4.8 V to 0.6 V to 4.8 V**

▼▼▼▼▼▼▼▼▼▼▼▼▼▼▼▼▼▼▼▼▼▼▼▼▼▼▼▼▼▼▼▼▼▼

a. Connect the pocket tester (DC 20 V) to the speed sensor coupler (wire harness side) as shown.

**Pocket tester**
**90890-03112**
**Analog pocket tester**
**YU-03112-C**

- Positive tester probe → white/yellow “1”
- Negative tester probe → black/blue “2”

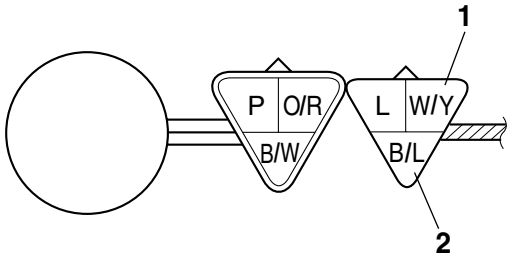


b. Turn the main switch to “ON”.
c. Elevate the rear wheel and slowly rotate it.
d. Measure the voltage of white/yellow and black/blue. With each full rotation of the rear wheel, the voltage reading should cycle from 0.6 V to 4.8 V to 0.6 V to 4.8 V.

▲▲▲▲▲▲▲▲▲▲▲▲▲▲▲▲▲▲▲▲▲▲▲▲▲▲▲▲▲▲▲▲▲▲

EAS28250

## CHECKING THE RADIATOR FAN MOTORS

1. Check:
   - Radiator fan motor
     Faulty/rough movement → Replace.

▼▼▼▼▼▼▼▼▼▼▼▼▼▼▼▼▼▼▼▼▼▼▼▼▼▼▼▼▼▼▼▼▼▼

a. Disconnect the radiator fan motor coupler from the wire harness.
b. Connect the battery (DC 12 V) as shown.

- Positive tester probe → blue “1”
- Negative tester probe → black “2”

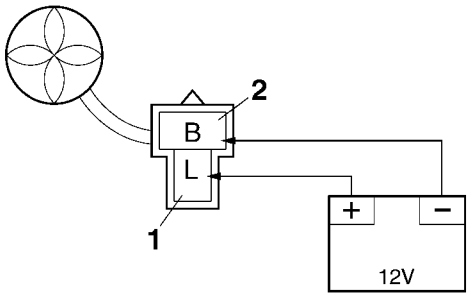


c. Measure the radiator fan motor movement.

▲▲▲▲▲▲▲▲▲▲▲▲▲▲▲▲▲▲▲▲▲▲▲▲▲▲▲▲▲▲▲▲▲▲

EAS28260

## CHECKING THE COOLANT TEMPERATURE SENSOR

1. Remove:
   - Coolant temperature sensor
     Refer to “THERMOSTAT” on page 6-7.

EWA14130

**WARNING**

- **Handle the coolant temperature sensor with special care.**
- **Never subject the coolant temperature sensor to strong shocks. If the coolant temperature sensor is dropped, replace it.**

2. Check:
   - Coolant temperature sensor resistance
     Out of specification → Replace.

| | |
|---|---|
| 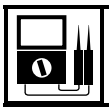 | **Resistance at 80 °C**<br>**290–354 Ω** |

▼▼▼▼▼▼▼▼▼▼▼▼▼▼▼▼▼▼▼▼▼▼▼▼▼▼▼▼▼▼▼▼▼▼

a. Connect the pocket tester (Ω × 100) to the coolant temperature sensor as shown.

| | |
|---|---|
| | **Pocket tester**<br>**90890-03112**<br>**Analog pocket tester**<br>**YU-03112-C** |

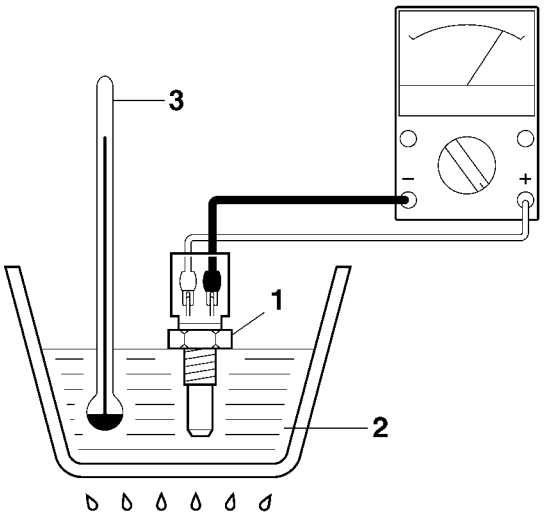


b. Immerse the coolant temperature sensor “1” in a container filled with coolant “2”.

**NOTE:**

Make sure the coolant temperature sensor terminals do not get wet.

c. Place a thermometer “3” in the coolant.
d. Slowly heat the coolant, then let it cool down to the specified temperature.
e. Measure the coolant temperature sensor resistance.

▲▲▲▲▲▲▲▲▲▲▲▲▲▲▲▲▲▲▲▲▲▲▲▲▲▲▲▲▲▲▲▲▲▲

EAS28300

## CHECKING THE THROTTLE POSITION SENSOR (FOR THROTTLE VALVES)

1. Remove:
   - Throttle position sensor (for throttle valves) (from the throttle body)
2. Check:
   - Throttle position sensor (for throttle valves) maximum resistance
     Out of specification → Replace the throttle position sensor (for throttle valves).

| | |
|---|---|
| 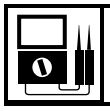 | **Resistance**<br>**2.0–3.0 kΩ** |

▼▼▼▼▼▼▼▼▼▼▼▼▼▼▼▼▼▼▼▼▼▼▼▼▼▼▼▼▼▼▼▼▼▼

a. Connect the pocket tester (Ω × 1k) to the throttle position sensor (for throttle valves) terminal as shown.

| | |
|---|---|
| | **Pocket tester**<br>**90890-03112**<br>**Analog pocket tester**<br>**YU-03112-C** |

- Positive tester probe →
  blue “1”
- Negative tester probe →
  black/blue “2”

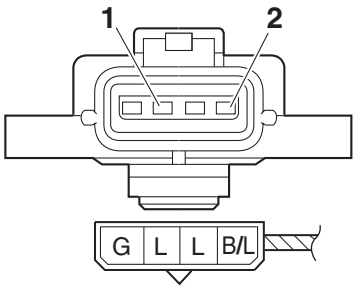


b. Measure the throttle position sensor (for throttle valves) maximum resistance.

▲▲▲▲▲▲▲▲▲▲▲▲▲▲▲▲▲▲▲▲▲▲▲▲▲▲▲▲▲▲▲▲▲▲

3. Install:
   - Throttle position sensor (for throttle valves)

**NOTE:**

When installing the throttle position sensor (for throttle valves), adjust its angle properly. Refer to "ADJUSTING THE THROTTLE POSITION SENSOR (FOR THROTTLE VALVES)" on page 7-10.

ET2C01001

## CHECKING THE THROTTLE POSITION SENSOR (FOR THROTTLE CABLE PULLEY)

1. Remove:
   - Throttle position sensor (for throttle cable pulley)
     (from the throttle body)
2. Check:
   - Throttle position sensor (for throttle cable pulley) maximum resistance
     Out of specification → Replace the throttle position sensor (for throttle cable pulley).

| |
|---|
| **Resistance**<br>**2.0–3.0 kΩ** |

▼▼▼▼▼▼▼▼▼▼▼▼▼▼▼▼▼▼▼▼▼▼▼▼▼▼▼▼▼▼▼▼▼▼▼▼▼▼

a. Connect the pocket tester (Ω × 1k) to the throttle position sensor (for throttle cable pulley) terminal as shown.

| |
|---|
| **Pocket tester**<br>**90890-03112**<br>**Analog pocket tester**<br>**YU-03112-C** |

- Positive tester probe → blue "1"
- Negative tester probe → black/blue "2"

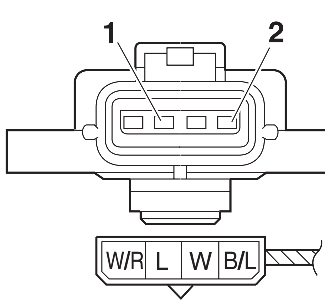


b. Measure the throttle position sensor (for throttle cable pulley) maximum resistance.

▲▲▲▲▲▲▲▲▲▲▲▲▲▲▲▲▲▲▲▲▲▲▲▲▲▲▲▲▲▲▲▲▲▲▲▲▲▲

3. Install:
   - Throttle position sensor (for throttle cable pulley)

**NOTE:**

When installing the throttle position sensor (for throttle cable pulley), adjust its angle properly. Refer to "ADJUSTING THE THROTTLE POSITION SENSOR (FOR THROTTLE CABLE PULLEY)" on page 7-11.

EAS28350

## CHECKING THE FUEL PUMP

EWA13850

**WARNING**

**Gasoline is extremely flammable and under certain circumstances there can be a danger of an explosion or fire. Be extremely careful and note the following points:**
- **Stop the engine before refueling.**
- **Do not smoke, and keep away from open flames, sparks, or any other source of fire.**
- **If you do accidentally spill gasoline, wipe it up immediately with dry rags.**
- **If gasoline touches the engine when it is hot, a fire may occur. Therefore, make sure the engine is completely cool before performing the following test.**

1. Disconnect:
   - Fuel pump coupler
   - Fuel sender coupler
     (from the wire harness)
2. Remove:
   - Fuel tank
3. Check:
   - Fuel pump operation
     Faulty/rough movement → Replace.

▼▼▼▼▼▼▼▼▼▼▼▼▼▼▼▼▼▼▼▼▼▼▼▼▼▼▼▼▼▼▼▼▼▼▼▼▼▼

a. Fill the fuel tank.
b. Put the end of the fuel hose "1" into an open container.
c. Connect the battery (DC 12 V) to the fuel pump terminal as shown.

- Positive battery lead → red/blue "2"
- Negative battery lead → black "3"

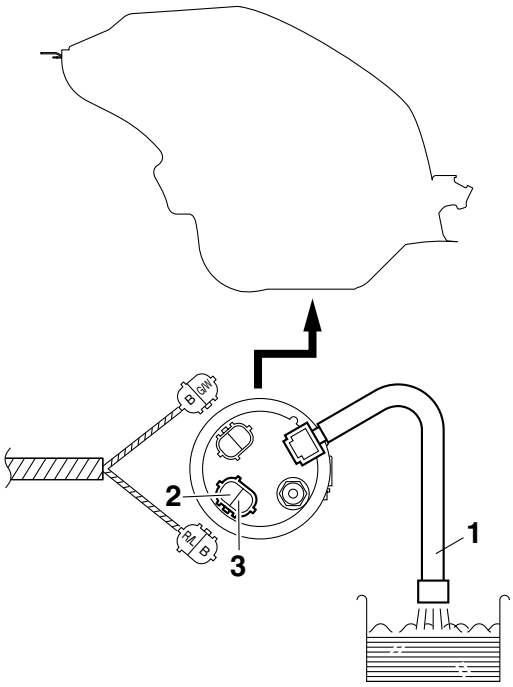


d. Check the fuel pump operation.

▲▲▲▲▲▲▲▲▲▲▲▲▲▲▲▲▲▲▲▲▲▲▲▲▲▲▲▲▲▲▲▲

EAS28370

## CHECKING THE AIR INDUCTION SYSTEM SOLENOID

1. Check:
   - Air induction system solenoid resistance
     Out of specification → Replace.

| | |
|---|---|
| | **Solenoid resistance**<br>**18–22 Ω at 20 °C (68 °F)** |

▼▼▼▼▼▼▼▼▼▼▼▼▼▼▼▼▼▼▼▼▼▼▼▼▼▼▼▼▼▼▼▼

a. Disconnect the air induction system solenoid coupler from the air induction system solenoid.
b. Connect the pocket tester (Ω × 1) to the air induction system solenoid terminal as shown.

| | |
|---|---|
| | **Pocket tester**<br>**90890-03112**<br>**Analog pocket tester**<br>**YU-03112-C** |

- Positive tester probe →
  brown/red “1”
- Negative tester probe →
  red/white “2”

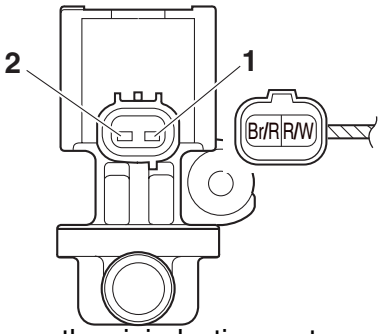


c. Measure the air induction system solenoid resistance.

▲▲▲▲▲▲▲▲▲▲▲▲▲▲▲▲▲▲▲▲▲▲▲▲▲▲▲▲▲▲▲▲

EAS28380

## CHECKING THE ATMOSPHERIC PRESSURE SENSOR

1. Check:
   - Atmospheric pressure sensor output voltage
     Out of specification → Replace.

| | |
|---|---|
| | **Atmospheric pressure sensor output voltage**<br>**3.15–4.15 V** |

▼▼▼▼▼▼▼▼▼▼▼▼▼▼▼▼▼▼▼▼▼▼▼▼▼▼▼▼▼▼▼▼

a. Connect the pocket tester (DC 20 V) to the atmospheric pressure sensor coupler as shown.

| | |
|---|---|
| | **Pocket tester**<br>**90890-03112**<br>**Analog pocket tester**<br>**YU-03112-C** |

- Positive tester probe →
  pink “1”
- Negative tester probe →
  black/blue “2”

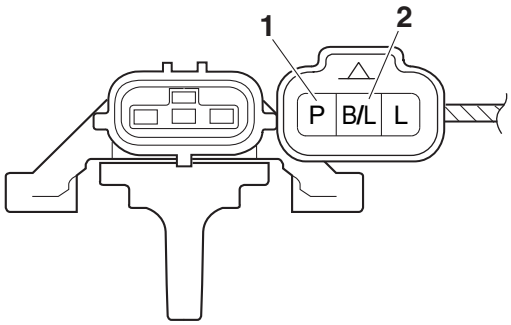


b. Turn the main switch to “ON”.
c. Measure the atmospheric pressure sensor output voltage.

▲▲▲▲▲▲▲▲▲▲▲▲▲▲▲▲▲▲▲▲▲▲▲▲▲▲▲▲▲▲▲▲

EAS28390

## CHECKING THE CYLINDER IDENTIFICATION SENSOR

1. Remove:
   - Timing plate cover
2. Check:
   - Cylinder identification sensor output voltage
     Out of specification → Replace.

**Cylinder identification sensor output voltage (ON)**
**Less than 0.8 V**
**Cylinder identification sensor output voltage (OFF)**
**More than 4.8 V**

▼▼▼▼▼▼▼▼▼▼▼▼▼▼▼▼▼▼▼▼▼▼▼▼▼▼▼▼▼▼▼▼▼▼

a. Connect the pocket tester (DC 20 V) to the cylinder identification sensor coupler (wire harness side) as shown.

**Pocket tester**
**90890-03112**
**Analog pocket tester**
**YU-03112-C**

- Positive tester probe → white/black “1”
- Negative tester probe → black/blue “2”

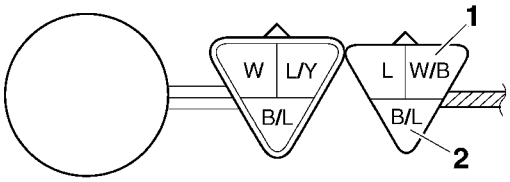


b. Turn the main switch to “ON”.
c. Rotate the crankshaft.
d. Measure the voltage of white/black and black/blue. Turn the crankshaft twice and check that the output voltage rises to approximately 4.8 V once.

▲▲▲▲▲▲▲▲▲▲▲▲▲▲▲▲▲▲▲▲▲▲▲▲▲▲▲▲▲▲▲▲▲▲

EAS28410

## CHECKING THE INTAKE AIR PRESSURE SENSOR

1. Check:
   - Intake air pressure sensor output voltage
     Out of specification → Replace.

**Intake air pressure sensor output voltage**
**3.15–4.15 V**

▼▼▼▼▼▼▼▼▼▼▼▼▼▼▼▼▼▼▼▼▼▼▼▼▼▼▼▼▼▼▼▼▼▼

a. Connect the pocket tester (DC 20 V) to the intake air pressure sensor coupler as shown.

**Pocket tester**
**90890-03112**
**Analog pocket tester**
**YU-03112-C**

- Positive tester probe → pink/white “1”
- Negative tester probe → black/blue “2”

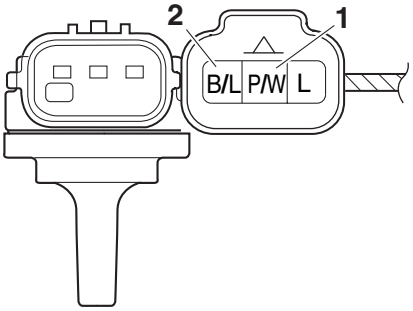


b. Turn the main switch to “ON”.
c. Measure the intake air pressure sensor output voltage.

▲▲▲▲▲▲▲▲▲▲▲▲▲▲▲▲▲▲▲▲▲▲▲▲▲▲▲▲▲▲▲▲▲▲

ET2C01022

## CHECKING THE AIR TEMPERATURE SENSOR

1. Remove:
   - Air temperature sensor

EW2C01002

**WARNING**

- **Handle the air temperature sensor with special care.**
- **Never subject the air temperature sensor to strong shocks. If the air temperature sensor is dropped, replace it.**

2. Check:
   - Air temperature sensor resistance
     Out of specification → Replace.

**Air temperature sensor resistance**
**290–390 Ω at 80 °C (176 °F)**

▼▼▼▼▼▼▼▼▼▼▼▼▼▼▼▼▼▼▼▼▼▼▼▼▼▼▼▼▼▼▼▼▼▼

a. Connect the pocket tester (Ω × 100) to the air temperature sensor terminal as shown.

**Pocket tester**
**90890-03112**
**Analog pocket tester**
**YU-03112-C**

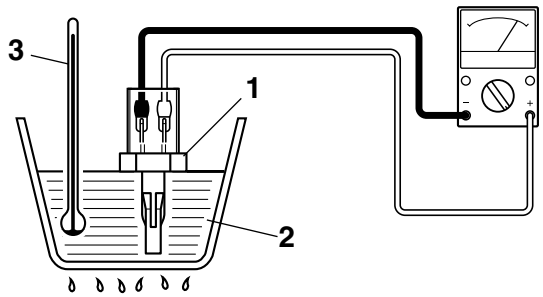


b. Immerse the air temperature sensor “1” in a container filled with water “2”.

**NOTE:**

Make sure that the air temperature sensor terminals do not get wet.

c. Place a thermometer “3” in the water.
d. Slowly heat the water, then let it cool down to the specified temperature.
e. Measure the air temperature sensor resistance.

▲▲▲▲▲▲▲▲▲▲▲▲▲▲▲▲▲▲▲▲▲▲▲▲▲▲▲▲▲▲▲▲▲▲

# TROUBLESHOOTING

**TROUBLESHOOTING** ..... 9-1
GENERAL INFORMATION ..... 9-1
STARTING FAILURES ..... 9-1
INCORRECT ENGINE IDLING SPEED ..... 9-1
POOR MEDIUM-AND-HIGH-SPEED PERFORMANCE ..... 9-2
FAULTY GEAR SHIFTING ..... 9-2
SHIFT PEDAL DOES NOT MOVE ..... 9-2
JUMPS OUT OF GEAR ..... 9-2
FAULTY CLUTCH ..... 9-2
OVERHEATING ..... 9-2
OVERCOOLING ..... 9-3
POOR BRAKING PERFORMANCE ..... 9-3
FAULTY FRONT FORK LEGS ..... 9-3
UNSTABLE HANDLING ..... 9-3
FAULTY LIGHTING OR SIGNALING SYSTEM ..... 9-4

EAS28450
# TROUBLESHOOTING

EAS28460
## GENERAL INFORMATION

**NOTE:**

The following guide for troubleshooting does not cover all the possible causes of trouble. It should be helpful, however, as a guide to basic troubleshooting. Refer to the relative procedure in this manual for checks, adjustments, and replacement of parts.

EAS28470
## STARTING FAILURES

### Engine

1. Cylinder(s) and cylinder head
   - Loose spark plug
   - Loose cylinder head
   - Damaged cylinder head gasket
   - Worn or damaged cylinder
   - Incorrect valve clearance
   - Improperly sealed valve
   - Incorrect valve-to-valve-seat contact
   - Incorrect valve timing
   - Faulty valve spring
   - Seized valve
2. Piston(s) and piston ring(s)
   - Improperly installed piston ring
   - Damaged, worn or fatigued piston ring
   - Seized piston ring
   - Seized or damaged piston
3. Air filter
   - Improperly installed air filter
   - Clogged air filter element
4. Crankcase and crankshaft
   - Improperly assembled crankcase
   - Seized crankshaft

### Fuel system

1. Fuel tank
   - Empty fuel tank
   - Clogged fuel tank drain hose
   - Deteriorated or contaminated fuel
2. Fuel pump
   - Faulty fuel pump
   - Faulty fuel pump relay
3. Throttle body(-ies)
   - Deteriorated or contaminated fuel
   - Sucked-in air

### Electrical system

1. Battery
   - Discharged battery
   - Faulty battery
2. Fuse(s)
   - Blown, damaged or incorrect fuse
   - Improperly installed fuse
3. Spark plug(s)
   - Incorrect spark plug gap
   - Incorrect spark plug heat range
   - Fouled spark plug
   - Worn or damaged electrode
   - Worn or damaged insulator
4. Ignition coil(s)
   - Cracked or broken ignition coil body
   - Broken or shorted primary or secondary coils
5. Ignition system
   - Faulty ECU
   - Faulty crankshaft position sensor
   - Faulty cylinder identification sensor
6. Switches and wiring
   - Faulty main switch
   - Faulty engine stop switch
   - Broken or shorted wiring
   - Faulty neutral switch
   - Faulty start switch
   - Faulty sidestand switch
   - Faulty clutch switch
   - Improperly grounded circuit
   - Loose connections
7. Starting system
   - Faulty starter motor
   - Faulty starter relay
   - Faulty starting circuit cut-off relay
   - Faulty starter clutch

EAS28490
## INCORRECT ENGINE IDLING SPEED

### Engine

1. Cylinder(s) and cylinder head
   - Incorrect valve clearance
   - Damaged valve train components
2. Air filter
   - Clogged air filter element

### Fuel system

1. Throttle body(-ies)
   - Damaged or loose throttle body joint
   - Improperly synchronized throttle bodies
   - Improper throttle cable free play
   - Flooded throttle body
   - Faulty air induction system

**Electrical system**
1. Battery
   - Discharged battery
   - Faulty battery
2. Spark plug(s)
   - Incorrect spark plug gap
   - Incorrect spark plug heat range
   - Fouled spark plug
   - Worn or damaged electrode
   - Worn or damaged insulator
3. Ignition coil(s)
   - Broken or shorted primary or secondary coils
   - Cracked or broken ignition coil
4. Ignition system
   - Faulty ECU
   - Faulty crankshaft position sensor
   - Faulty cylinder identification sensor

EAS28510
## POOR MEDIUM-AND-HIGH-SPEED PERFORMANCE
Refer to “STARTING FAILURES” on page 9-1.

**Engine**
1. Air filter
   - Clogged air filter element

**Fuel system**
1. Fuel pump
   - Faulty fuel pump

EAS28530
## FAULTY GEAR SHIFTING

**Shifting is difficult**
Refer to “Clutch drags”.

EAS28540
## SHIFT PEDAL DOES NOT MOVE

**Shift shaft**
- Improperly adjusted shift rod
- Bent shift shaft

**Shift drum and shift forks**
- Foreign object in a shift drum groove
- Seized shift fork
- Bent shift fork guide bar

**Transmission**
- Seized transmission gear
- Foreign object between transmission gears
- Improperly assembled transmission

EAS28550
## JUMPS OUT OF GEAR

**Shift shaft**
- Incorrect shift pedal position
- Improperly returned stopper lever

**Shift forks**
- Worn shift fork

**Shift drum**
- Incorrect axial play
- Worn shift drum groove

**Transmission**
- Worn gear dog

EAS28560
## FAULTY CLUTCH

**Clutch slips**
1. Clutch
   - Improperly assembled clutch
   - Improperly adjusted clutch cable
   - Loose or fatigued clutch spring
   - Worn friction plate
   - Worn clutch plate
2. Engine oil
   - Incorrect oil level
   - Incorrect oil viscosity (low)
   - Deteriorated oil

**Clutch drags**
1. Clutch
   - Unevenly tensioned clutch springs
   - Warped pressure plate
   - Bent clutch plate
   - Swollen friction plate
   - Bent clutch pull rod
   - Broken clutch boss
   - Burnt primary driven gear bushing
   - Match marks not aligned
2. Engine oil
   - Incorrect oil level
   - Incorrect oil viscosity (high)
   - Deteriorated oil

EAS28600
## OVERHEATING

**Engine**
1. Clogged coolant passages
   - Cylinder head and piston(s)
   - Heavy carbon buildup

2. Engine oil
   - Incorrect oil level
   - Incorrect oil viscosity
   - Inferior oil quality

**Cooling system**

1. Coolant
   - Low coolant level
2. Radiator
   - Damaged or leaking radiator
   - Faulty radiator cap
   - Bent or damaged radiator fin
3. Water pump
   - Damaged or faulty water pump
   - Thermostat
   - Thermostat stays closed
   - Oil cooler
   - Clogged or damaged oil cooler
   - Hose(s) and pipe(s)
   - Damaged hose
   - Improperly connected hose
   - Damaged pipe
   - Improperly connected pipe

**Fuel system**

1. Throttle body(-ies)
   - Damaged or loose throttle body joint
2. Air filter
   - Clogged air filter element

**Chassis**

1. Brake(s)
   - Dragging brake

**Electrical system**

1. Spark plug(s)
   - Incorrect spark plug gap
   - Incorrect spark plug heat range
2. Ignition system
   - Faulty ECU
3. Cooling system
   - Faulty radiator fan motor relay
   - Faulty coolant temperature sensor
   - Faulty ECU

EAS28610

## OVERCOOLING

**Cooling system**

1. Thermostat
   - Thermostat stays open

EAS28620

## POOR BRAKING PERFORMANCE

- Worn brake pad
- Worn brake disc
- Air in hydraulic brake system
- Leaking brake fluid
- Faulty brake caliper kit
- Faulty brake caliper seal
- Loose union bolt
- Damaged brake hose
- Oil or grease on the brake disc
- Oil or grease on the brake pad
- Incorrect brake fluid level

EAS28660

## FAULTY FRONT FORK LEGS

**Leaking oil**

- Bent, damaged or rusty inner tube
- Cracked or damaged outer tube
- Improperly installed oil seal
- Damaged oil seal lip
- Incorrect oil level (high)
- Loose damper rod assembly
- Cracked or damaged cap bolt O-ring

**Malfunction**

- Bent or damaged inner tube
- Bent or damaged outer tube
- Damaged fork spring
- Worn or damaged outer tube bushing
- Bent or damaged damper rod
- Incorrect oil viscosity
- Incorrect oil level

EAS28680

## UNSTABLE HANDLING

**Handlebars**

- Bent or improperly installed right handlebar
- Bent or improperly installed left handlebar

1. Steering head components
   - Improperly installed upper bracket
   - Improperly installed lower bracket (improperly tightened ring nut)
   - Bent steering stem
   - Damaged ball bearing or bearing race
2. Front fork leg(s)
   - Uneven oil levels (both front fork legs)
   - Unevenly tensioned fork spring (both front fork legs)
   - Broken fork spring
   - Bent or damaged inner tube
   - Bent or damaged outer tube
3. Swingarm
   - Worn bearing or bushing
   - Bent or damaged swingarm

**Rear shock absorber assembly**
- Faulty rear shock absorber spring
- Leaking oil or gas

**Tire(s)**
- Uneven tire pressures (front and rear)
- Incorrect tire pressure
- Uneven tire wear

**Wheel(s)**
- Incorrect wheel balance
- Deformed cast wheel
- Damaged wheel bearing
- Bent or loose wheel axle
- Excessive wheel runout

**Frame**
- Bent frame
- Damaged steering head pipe
- Improperly installed bearing race

EAS28710
## FAULTY LIGHTING OR SIGNALING SYSTEM

**Headlight does not come on**
- Wrong headlight bulb
- Too many electrical accessories
- Hard charging
- Incorrect connection
- Improperly grounded circuit
- Poor contacts (main switch)
- Burnt-out headlight bulb

**Headlight bulb burnt out**
- Wrong headlight bulb
- Faulty battery
- Faulty rectifier/regulator
- Improperly grounded circuit
- Faulty main switch
- Headlight bulb life expired

**Tail/brake light does not come on**
- Wrong tail/brake light LED
- Too many electrical accessories
- Incorrect connection
- Burnt-out tail/brake light LED

**Tail/brake light bulb burnt out**
- Wrong tail/brake light LED
- Faulty battery
- Incorrectly adjusted rear brake light switch
- Tail/brake light LED life expired

**Turn signal does not come on**
- Faulty turn signal switch
- Faulty turn signal relay
- Burnt-out turn signal bulb
- Incorrect connection
- Damaged or faulty wire harness
- Improperly grounded circuit
- Faulty battery
- Blown, damaged or incorrect fuse

**Turn signal flashes slowly**
- Faulty turn signal relay
- Faulty main switch
- Faulty turn signal switch
- Incorrect turn signal bulb

**Turn signal remains lit**
- Faulty turn signal relay
- Burnt-out turn signal bulb

**Turn signal flashes quickly**
- Incorrect turn signal bulb
- Faulty turn signal relay
- Burnt-out turn signal bulb

**Horn does not sound**
- Improperly adjusted horn
- Damaged or faulty horn
- Faulty main switch
- Faulty horn switch
- Faulty battery
- Blown, damaged or incorrect fuse
- Faulty wire harness

EAS28740

# WIRING DIAGRAM

**YZFR6V 2006**

1. AC magneto
2. Rectifier/regulator
3. Main switch
4. Ignition fuse
5. Backup fuse (odometer, clock and immobilizer system)
6. Main fuse
7. Battery
8. Starter relay
9. Fuel injection system fuse
10. Starter motor
11. Engine ground
12. Immobilizer unit
13. ETV fuse
14. Relay unit
15. Starting circuit cut-off relay
16. Fuel pump relay
17. Neutral switch
18. Sidestand switch
19. Fuel pump
20. Fuel sender
21. Throttle position sensor (for throttle cable pulley)
22. Throttle position sensor (for throttle valves)
23. ECU (engine control unit)
24. Spark plug
25. Cylinder-#1 ignition coil
26. Cylinder-#2 ignition coil
27. Cylinder-#3 ignition coil
28. Cylinder-#4 ignition coil
29. Primary injector #1
30. Primary injector #2
31. Primary injector #3
32. Primary injector #4
33. Secondary injector #1
34. Secondary injector #2
35. Secondary injector #3
36. Secondary injector #4
37. Throttle servo motor
38. Air induction system solenoid
39. EXUP servo motor
40. $O_2$ sensor
41. Crankshaft position sensor
42. Air temperature sensor
43. Coolant temperature sensor
44. Intake air pressure sensor
45. Atmospheric pressure sensor
46. Cylinder identification sensor
47. Speed sensor
48. Lean angle sensor
49. Meter assembly
50. Immobilizer system indicator light
51. Fuel level warning light
52. Oil level warning light
53. Neutral indicator light
54. Tachometer
55. Shift timing indicator light
56. Multi-function meter
57. Engine trouble warning light
58. Coolant temperature warning light
59. High beam indicator light
60. Left turn signal indicator light
61. Right turn signal indicator light
62. Meter light
63. Oil level switch
64. Right handlebar switch
65. Front brake light switch
66. Engine stop switch
67. Start switch
68. Turn signal relay
69. Left handlebar switch
70. Dimmer switch
71. Horn switch
72. Clutch switch
73. Turn signal switch
74. Horn
75. Rear right turn signal light
76. Rear left turn signal light
77. Front right turn signal/position light
78. Front left turn signal/position light
79. Headlight (low beam)
80. Headlight (high beam)
81. Auxiliary light
82. License plate light
83. Rear brake light switch
84. Tail/brake light
85. Headlight relay (on/off)
86. Headlight relay (dimmer)
87. Anti-theft alarm (OPTION)
88. Signaling system fuse
89. Headlight fuse
90. Radiator fan motor relay
91. Right radiator fan motor fuse
92. Left radiator fan motor fuse
93. Right radiator fan motor
94. Left radiator fan motor

EAS28750

## COLOR CODE

| | |
|---|---|
| B | Black |
| Br | Brown |
| Ch | Chocolate |
| Dg | Dark green |
| G | Green |
| Gy | Gray |
| L | Blue |
| Lg | Light green |
| O | Orange |
| P | Pink |
| R | Red |
| Sb | Sky blue |
| W | White |
| Y | Yellow |
| B/G | Black/Green |
| B/L | Black/Blue |
| B/R | Black/Red |
| B/W | Black/White |
| B/Y | Black/Yellow |
| Br/B | Brown/Black |
| Br/G | Brown/Green |
| Br/L | Brown/Blue |
| Br/R | Brown/Red |
| Br/W | Brown/White |
| Br/Y | Brown/Yellow |
| G/B | Green/Black |
| G/R | Green/Red |
| G/W | Green/White |
| G/Y | Green/Yellow |
| Gy/G | Gray/Green |
| Gy/R | Gray/Red |
| L/B | Blue/Black |
| L/R | Blue/Red |
| L/W | Blue/White |
| L/Y | Blue/Yellow |
| Lg/R | Light green/Red |
| O/B | Orange/Black |
| O/G | Orange/Green |
| P/B | Pink/Black |
| P/W | Pink/White |
| R/B | Red/Black |
| R/G | Red/Green |
| R/L | Red/Blue |
| R/W | Red/White |
| R/Y | Red/Yellow |
| Sb/W | Sky blue/White |
| W/B | White/Black |
| W/L | White/Blue |
| W/R | White/Red |
| W/Y | White/Yellow |
| Y/B | Yellow/Black |
| Y/G | Yellow/Green |
| Y/L | Yellow/Blue |
| Y/R | Yellow/Red |

**YZFR6V 2006**
**WIRING DIAGRAM**

**YZFR6V 2006**
**SCHÉMA DE CÂBLAGE**

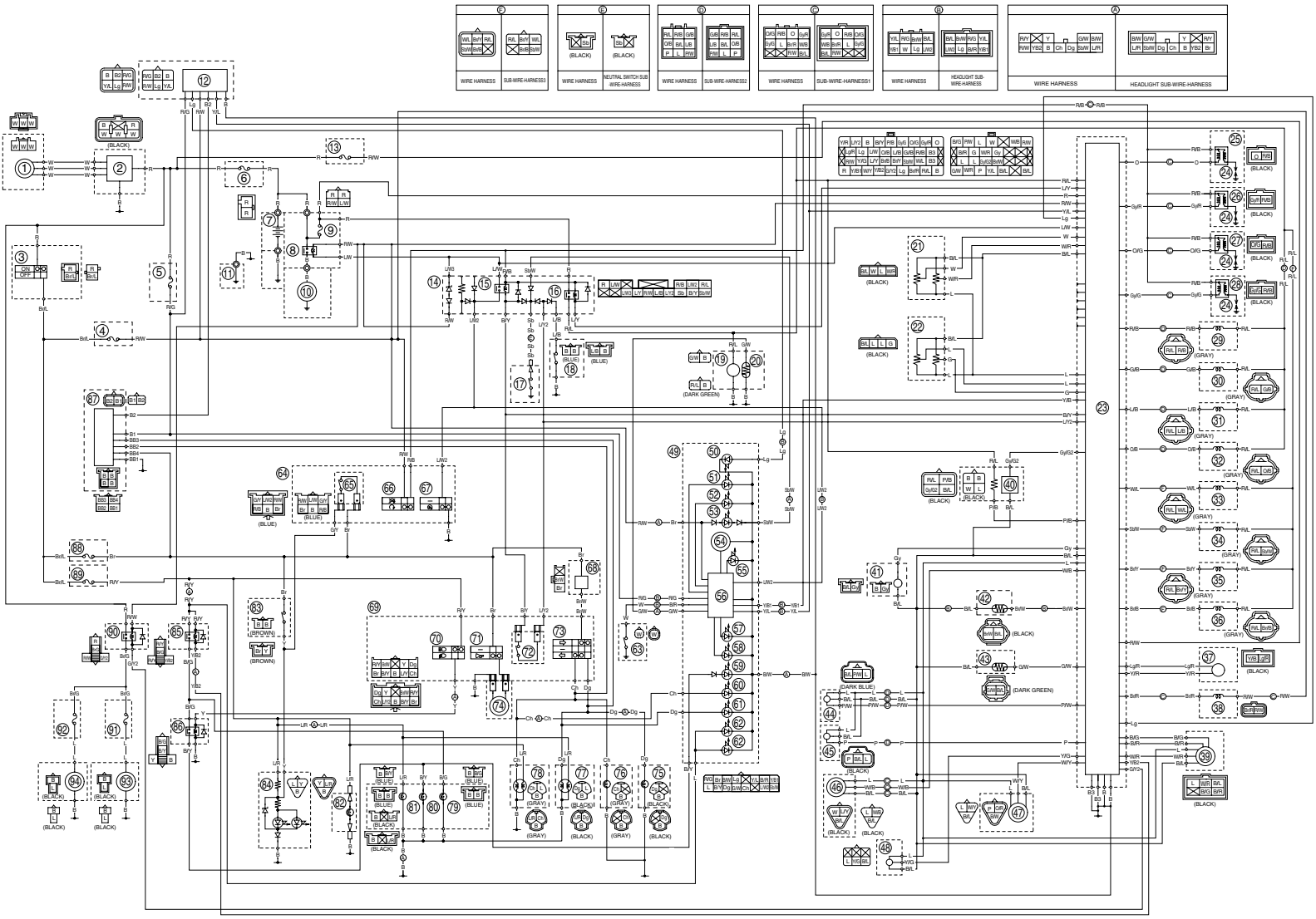

Yamaha Motor Canada Ltd.
480 Gordon Baker Road
Toronto, ON M2H 3B4