SUZUKI
PARTS CATALOGUE

DL1000

(BS111/BS121)

DL1000K2

DL1000K3

DL1000K4

2003-12

5TH EDITION

This part catalogue supersedes all the following part catalogue with immediate effect.

Model of catalogue	Part catalogue No.
DL1000 (K2/K3)	9900B-30146-011

INFORMATION ILLUSTRATION INDEX 1

ENGINE TRANSMISSION 2

ELECTRICAL 3

BODY 4

PARTS NUMBER INDEX 5

DL1000K2

DL1000K3

DL1000K4

PREFACE

When it becomes necessary to replace parts on SUZUKI MOTORCYCLES, always use SUZUKI GENUINE PARTS which have passed a strict inspection which guarantees quality and performance.
This parts catalogue covers the list of all service parts for SUZUKI DL1000K2, DL1000K3, DL1000K4.

INSTRUCTIONS FOR QUOTING THE CATALOGUE

1. DIMENSIONS
   Dimensions of the parts in this catalogue are indicated in unit millimeters.

2. ABBREVIATIONS
   Abbreviations used in this catalogue are as follows:

AR	: As required	NT	: Number of teeth
ASSY	: Assembly	OPT	: Optional
E.No.	: Engine number	OS	: Over size
F.No.	: Frame number	STD	: Standard
D	: Diameter of material	T	: Thickness
ID	: Inside diameter	US	: Under size
OD	: Outside diameter	W	: Width
L	: Length		
LH	: Left hand side		
RH	: Right hand side		
~100045	: Up to F.No.100045		
100046~	: From F.No.100046		

   12 x 34 x 5.6 ····· Figures in the description column show the dimensions of parts.
   ID OD T(or W, L)

3. INNER PARTS OF ASSEMBLY
   Part name with a dot (.) in front as shown in the description column indicates the component of the assembly also available individually.

4. MODIFICATION NOTICE
   A parts bulletin will be sent to you on all occasions when changes in parts occur, including interchangeable modifications between new parts and old ones.

5. NOTE
   5-1. There are some different parts from those of production models among spare parts for the administrative reasons and common use of them with other models.

   5-2. In respect of rubber hoses and vinyl tubes, please be sure to use them by cutting off according to the length mentioned on parts catalogue or what is actually required on the vehicle.

   5-3. Note that the drawings on the illustration page are for ready reference of spare parts number, not to be used as an assembly manual.
   When assembling, use "SUZUKI SERVICE MANUAL".

6. SPECIFICATION CODE
   This catalogue contains the parts for the model designed for the following spec.;
   spec. code: DL1000K2 : E2,E19,E24,P37.
   DL1000K3 : E2,E19,E24,P37.
   DL1000K4 : E2,E19,E24.

7. SERIAL FRAME NUMBER

DL1000K2(E2)	:	JS1BS111200100001~
DL1000K2(E19)	:	JS1BS111100100001~
DL1000K2(E24)	:	JS1BS121300100001~
DL1000K3(E2)	:	JS1BS111200100598~
DL1000K3(E19)	:	JS1BS111100108795~
DL1000K3(E24)	:	JS1BS121300100132~
DL1000K4(E2)	:	JS1BS111200100766~
DL1000K4(E19)	:	JS1BS111100112373~
DL1000K4(E24)	:	JS1BS121300100213~

PREFACE

When it becomes necessary to replace parts on SUZUKI MOTORCYCLES, always use SUZUKI GENUINE PARTS which have passed a strict inspection which guarantees quality and performance.

This parts catalogue covers the list of all service parts for SUZUKI DL1000K2, DL1000K3, DL1000K4.

INSTRUCTIONS FOR QUOTING THE CATALOGUE

1. DIMENSIONS
   Dimensions of the parts in this catalogue are indicated in unit millimeters.

2. ABBREVIATIONS
   Abbreviations used in this catalogue are as follows:

AR	: As required	NT	: Number of teeth
ASSY	: Assembly	OPT	: Optional
E.No.	: Engine number	OS	: Over size
F.No.	: Frame number	STD	: Standard
D	: Diameter of material	T	: Thickness
ID	: Inside diameter	US	: Under size
OD	: Outside diameter	W	: Width
L	: Length		
LH	: Left hand side		
RH	: Right hand side		
~100045	: Up to F.No.100045		
100046~	: From F.No.100046		

12 x 34 x 5.6 ····· Figures in the description column show the dimensions of parts.

ID OD T(or W, L)

3. INNER PARTS OF ASSEMBLY
   Part name with a dot (.) in front as shown in the description column indicates the component of the assembly also available individually.

4. MODIFICATION NOTICE
   A parts bulletin will be sent to you on all occasions when changes in parts occur, including interchangeable modifications between new parts and old ones.

5. NOTE
   5-1. There are some different parts from those of production models among spare parts for the administrative reasons and common use of them with other models.

   5-2. In respect of rubber hoses and vinyl tubes, please be sure to use them by cutting off according to the length mentioned on parts catalogue or what is actually required on the vehicle.

   5-3. Note that the drawings on the illustration page are for ready reference of spare parts number, not to be used as an assembly manual.
   When assembling, use "SUZUKI SERVICE MANUAL".

6. SPECIFICATION CODE
   This catalogue contains the parts for the model designed for the following spec.:
   spec. code: DL1000K2 : E2,E19,E24,P37.
   DL1000K3 : E2,E19,E24,P37.
   DL1000K4 : E2,E24.

7. SERIAL FRAME NUMBER

DL1000K2(E2)	:	JS1BS111200100001~
DL1000K2(E19)	:	JS1BS111100100001~
DL1000K2(E24)	:	JS1BS121300100001~
DL1000K3(E2)	:	JS1BS111200100598~
DL1000K3(E19)	:	JS1BS111100108795~
DL1000K3(E24)	:	JS1BS121300100132~
DL1000K4(E2)	:	JS1BS111200100766~
DL1000K4(E19)	:	JS1BS111100112373~
DL1000K4(E24)	:	JS1BS121300100213~

COLOR CHART
TABLEAU DES COULEURS

COLOR NO. NO DE COULEUR	COLOR DESCRIPTION DESCRIPTION DE COULEUR	COLOR NO. NO DE COULEUR	COLOR DESCRIPTION DESCRIPTION DE COULEUR
ABF	0AT,YBA	YAG	MAT WARM SILVER METALLIC
ACV	0AT,YAY	YAY	PEARL NEBULAR BLACK
AML	20H,YAY	YBA	SUZUKI DEEP BLUE NO.2
AMR	20H,24K,YAY	YCG	MAT FLINT GRAY METALLIC
AMT	1ZZ,20G,YD8	YD8	SONIC SILVER METALLIC
AMV	1ZZ,YBA	YGP	HIAR LINE CHROME BLACK NO.3
AMW	1ZZ,20G,YBA	YU8	FLINT GRAY METALLIC
ASL	YGP,YD8	YU9	PEARL ORPIMENT YELLOW
CT5	YD8,019	YZ5	GRAY METALLIC
HT8	20G,YD8	Y7H	DARK SPACE BLUE
HW5	YZ5,YAG	Y7L	SATURN BLACK METALLIC
H1N	T15,P21	ZJX	PEARL ORPIMENT YELLOW
JL8	17U,1ZY,Y7H	0AT	SILVER
JL9	1ZY,YD8,YU8	019	BLACK
JM1	1ZY,17U,YU9	1ZY	URBAN LIGHT GRAY METALLIC
LP7	YZ5,YCG	1ZZ	URBAN MIDIAM GRAY METALLIC
LY4	Y7H,YU8,YD8	13L	BRIGHT SILVER METALLIC
LY5	Y7H,17U,YU9	17U	GRAY METALLIC
LY6	YD8,1ZY,YBA	20G	CHARCOAL GRAY METALLIC
P21	BLACK (LEATHER)	20H	WARM SILVER METALLIC
T15	BLACK (LEATHER)	24K	LIGHT CHARCOAL METALLIC
W69	BLACK (LEATHER)	291	BLACK (SEMI-GLOSS)

COLOR NO. NO DE COULEUR	COLOR DESCRIPTION DESCRIPTION DE COULEUR	COLOR NO. NO DE COULEUR	COLOR DESCRIPTION DESCRIPTION DE COULEUR
33J	PEARL NOVELTY BLACK		
5PK	BLACK		

MILLIMETER → INCH CONVERSION CHART

	0	1	2	3	4	5	6	7	8	9
00	.000	.039	.079	.118	.157	.197	.236	.276	.315	.354
10	.394	.433	.472	.512	.551	.591	.630	.669	.709	.748
20	.787	.827	.866	.906	.945	.984	1.024	1.063	1.102	1.142
30	1.181	1.220	1.260	1.299	1.339	1.378	1.417	1.457	1.496	1.535
40	1.575	1.614	1.654	1.693	1.732	1.772	1.811	1.850	1.890	1.929
50	1.969	2.008	2.047	2.087	2.126	2.165	2.205	2.214	2.283	2.323
60	2.362	2.402	2.441	2.480	2.520	2.559	2.598	2.638	2.677	2.717
70	2.756	2.795	2.835	2.874	2.913	2.953	2.992	3.031	3.071	3.110
80	3.150	3.189	3.228	3.268	3.307	3.346	3.386	3.425	3.465	3.504
90	3.543	3.583	3.622	3.661	3.701	3.740	3.780	3.819	3.858	3.898

How to read

	0	1	2	3	4
00	---	---	---	---	---
10	---	---	---	---	---
20	---	---	---	0.906	---
30	---	---	---	---	---

23 millimeters equal 0.906 inch

Contents are subject to change without notice or obligation.

FIG.1 GASKET SET (B-2)

DL150KR3-E02_001
GASKET SET

FIG.2 FRONT CYLINDER HEAD (B-3)

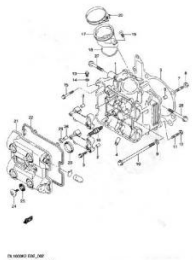

DL150KR3-E02_002
FRONT CYLINDER HEAD

FIG.3 REAR CYLINDER HEAD (B-4)

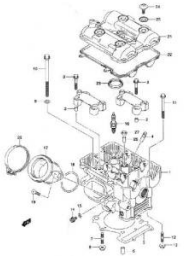

DL150KR3-E02_003
REAR CYLINDER HEAD

FIG.4 CYLINDER (B-5)

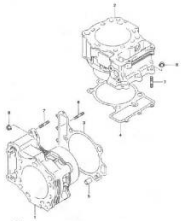

DL150KR3-E02_004
CYLINDER

FIG.5 CRANKCASE (B-6)

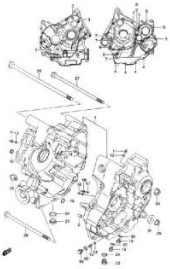

DL150KR3-E02_005
CRANKCASE

FIG.6 CRANKCASE COVER (C-2)

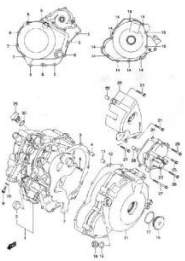

DL150KR3-E02_006
CRANKCASE COVER

FIG.7 CRANKSHAFT (C-3)

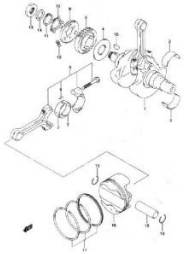

DL150KR3-E02_007
CRANKSHAFT

FIG.8 STARTER CLUTCH (C-5)

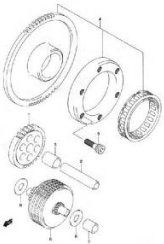

DL150KR3-E02_008
STARTER CLUTCH

FIG.9 CAM SHAFT/VALVE (C-6)

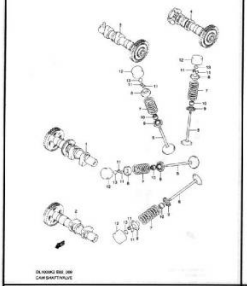

FIG.10 CAM CHAIN (C-8)

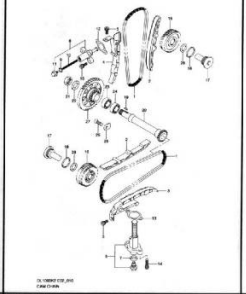

FIG.11 THROTTLE BODY (C-9)

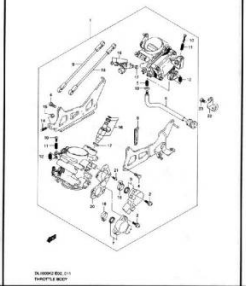

FIG.12 FUEL DELIVERY PIPE (C-10)

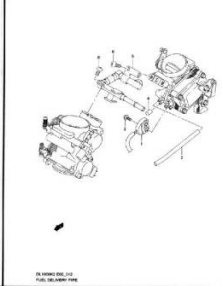

FIG.13 AIR CLEANER (D-2)

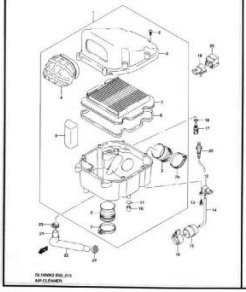

FIG.14 MUFFLER (D-3)

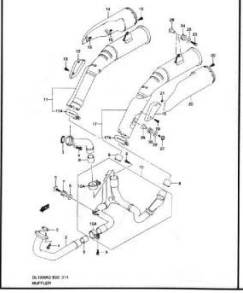

FIG.15 OIL PUMP (D-5)

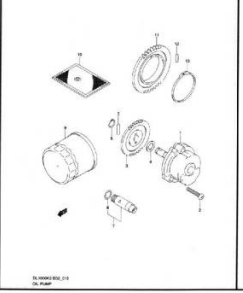

FIG.16 FUEL PUMP (MODEL K2/K3) (D-6)

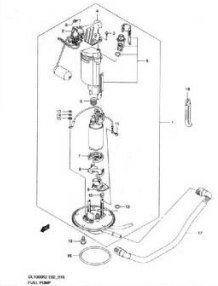

FIG.16A FUEL PUMP (MODEL K4) (D-7)

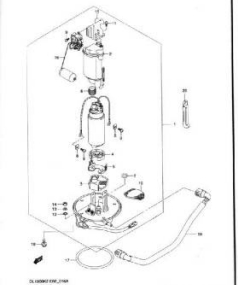

FIG.17 OIL COOLER (D-8)

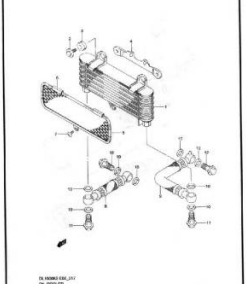

FIG.18 WATER PUMP (D-9)

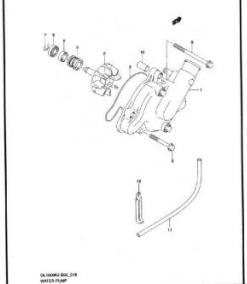

FIG.19 RADIATOR (D-10)

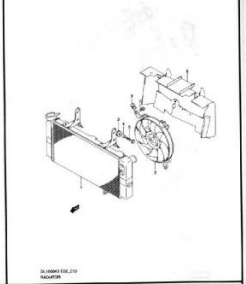

FIG.20 RADIATOR HOSE (D-11)

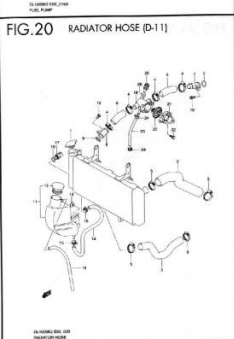

FIG.21 2ND AIR (D-12)

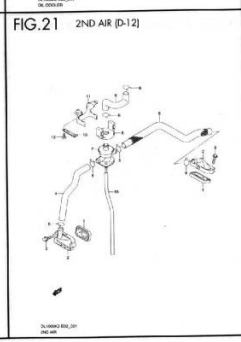

FIG.22 CLUTCH (E-2)

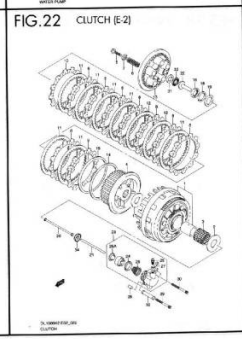

FIG.23 TRANSMISSION (MODEL K2/K3) (E-4)

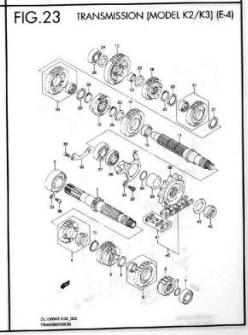

FIG.23A TRANSMISSION (MODEL K4) (E-6)

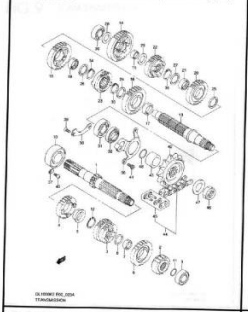

FIG.24 GEAR SHIFTING (E-8)

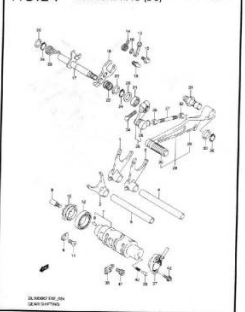

FIG.25 STARTING MOTOR (F-2)

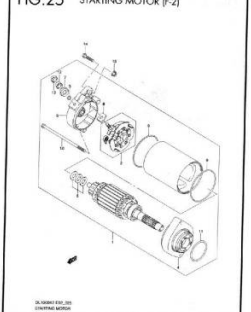

FIG.26 MAGNETO (F-3)

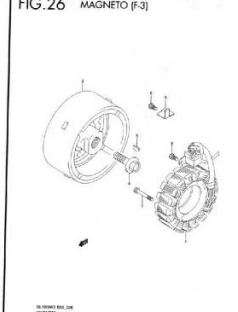

FIG.27 ELECTRICAL (F-4)

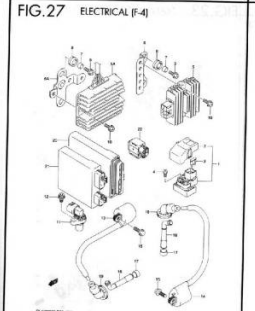

FIG.28 BATTERY (F-5)

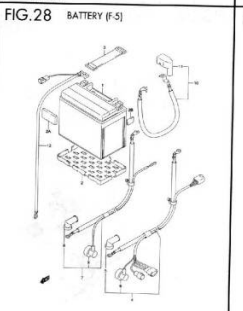

FIG.29 SPEEDOMETER (MODEL K2/K3) (G-2)

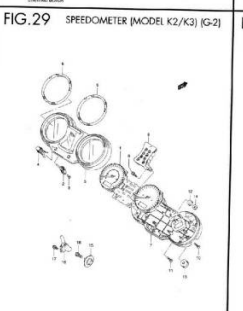

FIG.29A SPEEDOMETER (MODEL K4) (G-3)

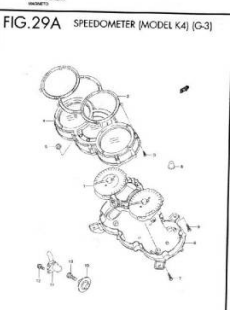

FIG.30 HEADLAMP (G-4)

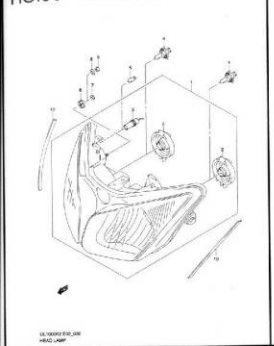

FIG.30A HEADLAMP (E19,P37) (G-5)

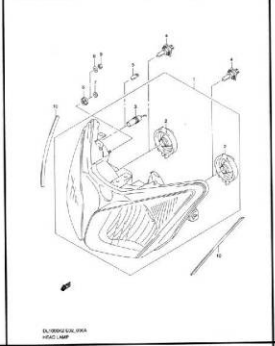

FIG.30B HEADLAMP (E24) (G-6)

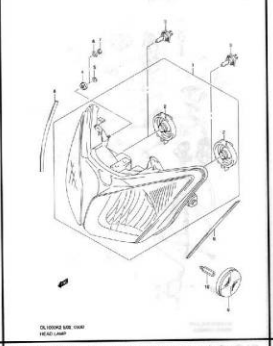

FIG.31 TURNSIGNAL LAMP (MODEL K2/K3) (G-7)

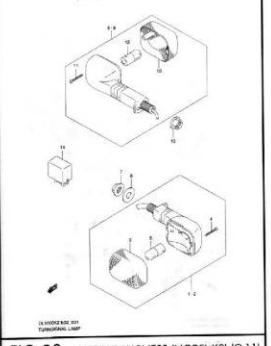

FIG.31A TURNSIGNAL LAMP (MODEL K4) (G-8)

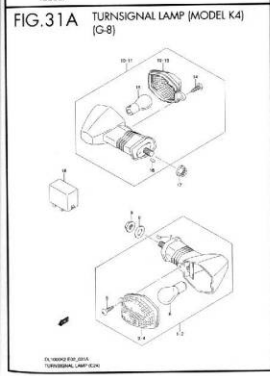

FIG.32 TAIL LAMP (MODEL K2/K3) (G-9)

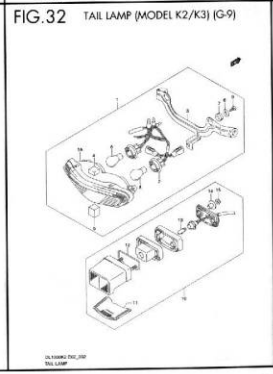

FIG.32A TAIL LAMP (MODEL K4) (G-10)

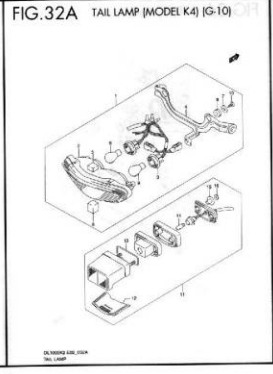

FIG.33 WIRING HARNESS (MODEL K2) (G-11)

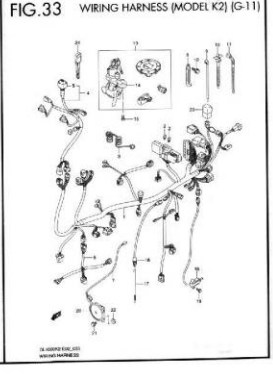

FIG.33A WIRING HARNESS (MODEL K3) (G-12)

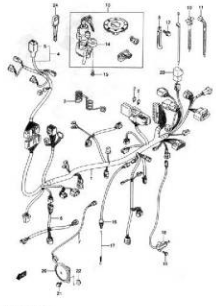

FIG.33B WIRING HARNESS (MODEL K4) (G-13)

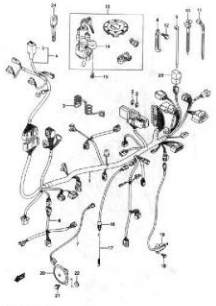

FIG.34 HANDLE SWITCH (MODEL K2) (G-14)

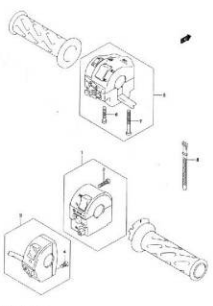

FIG.34A HANDLE SWITCH (MODEL K3/K4) (G-15)

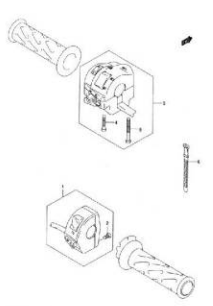

FIG.35 FRAME (H-2)

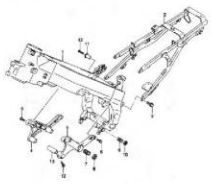

FIG.36 STAND (H-3)

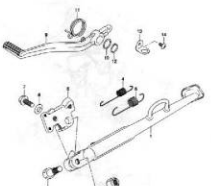

FIG.37 FOOTREST (H-4)

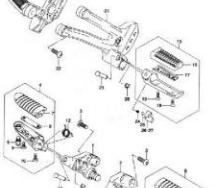

FIG.38 CARRIER (H-5)

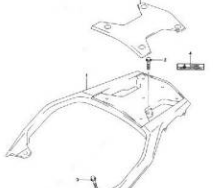

FIG.39 FUEL TANK (H-6)

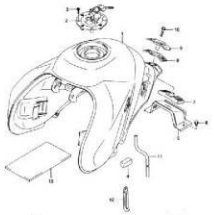

FIG.40 FRONT BRACKET (H-7)

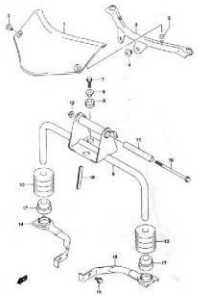

FIG.41 FRAME COVER (H-8)

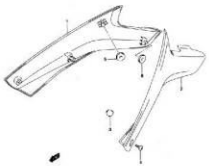

FIG.42 FRONT FENDER (H-9)

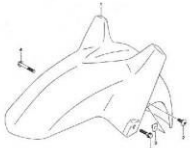

FIG.43 HANDLEBAR (MODEL K2/K3) (I-2)

WWW.VSTROM.FORO.ST

FIG.43A HANDLEBAR (MODEL K4) (I-3)

FIG.44 HANDLE LEVER (I-4)

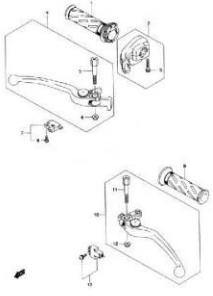

FIG.45 KNUCKLE COVER (I-5)

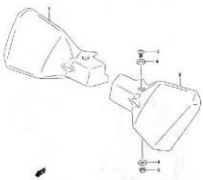

FIG.46 REAR FENDER (I-6)

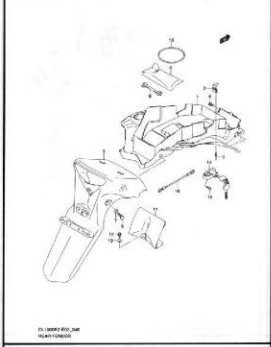

FIG.47 COWLING BODY (MODEL K2/K3) (I-7)

FIG.47A COWLING BODY (MODEL K4) (I-8)

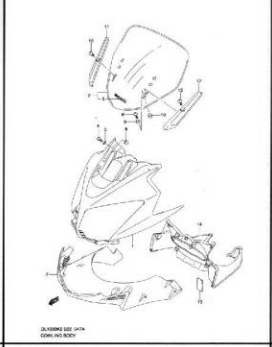

FIG.48 COWL BODY INSTALLATION PARTS (MODEL K2/K3) (I-9)

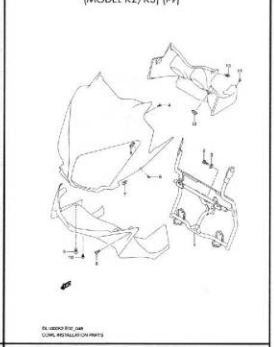

FIG.48A COWL BODY INSTALLATION PARTS (MODEL K4) (I-10)

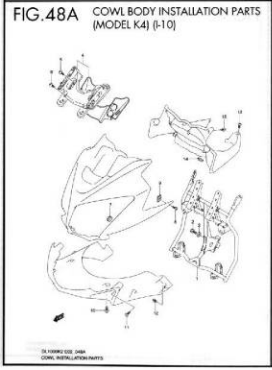

FIG.49 SIDE COWLING (MODEL K2) (I-11)

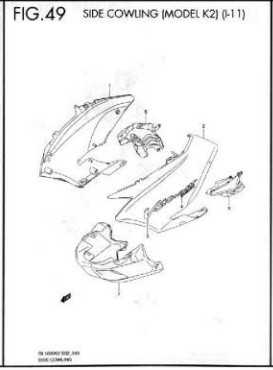

FIG.49A SIDE COWLING (MODEL K3) (I-12)

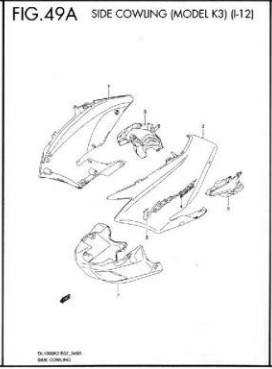

FIG.49B SIDE COWLING (MODEL K4) (I-13)

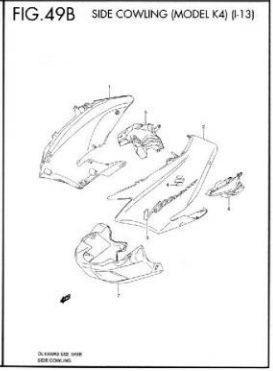

FIG.50 SIDE COWL INSTALLATION PARTS (I-14)

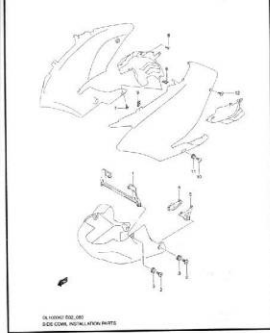

FIG.51 LABEL (I-15)

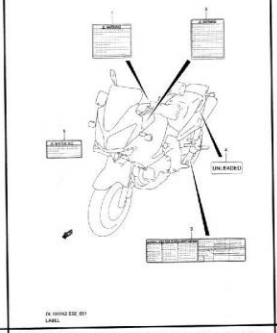

FIG.52 SEAT (J-2)

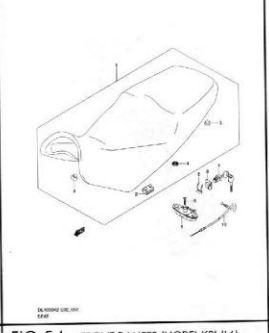

FIG.53 SEAT TAIL COVER (MODEL K2) (J-3)

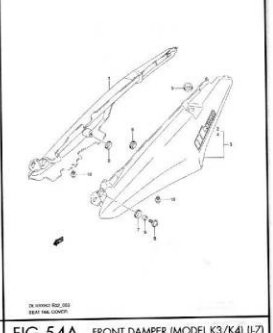

FIG.53A SEAT TAIL COVER (MODEL K3) (J-4)

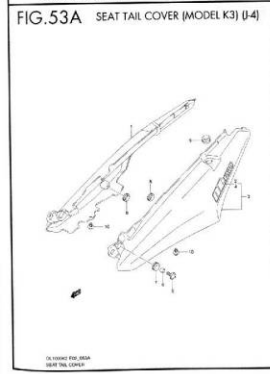

FIG.53B SEAT TAIL COVER (MODEL K4) (J-5)

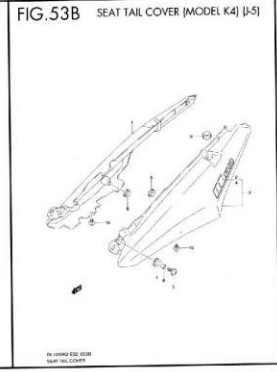

FIG.54 FRONT DAMPER (MODEL K2) (J-6)

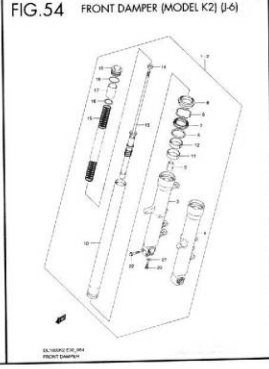

FIG.54A FRONT DAMPER (MODEL K3/K4) (J-7)

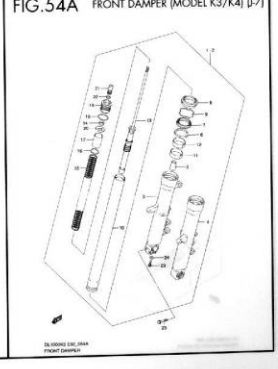

FIG.55 STEERING STEM (J-8)

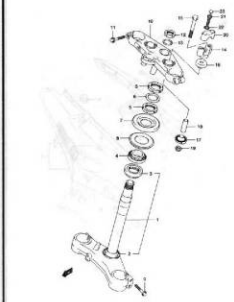

FIG.56 FRONT WHEEL (J-9)

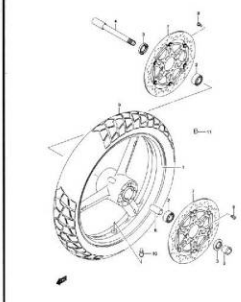

FIG.57 FRONT CALIPER (J-10)

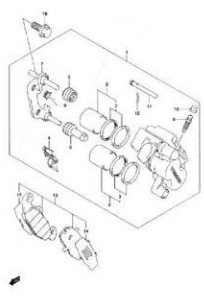

FIG.58 FRONT BRAKE HOSE (J-11)

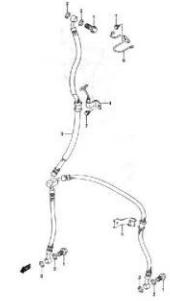

FIG.59 FRONT MASTER CYLINDER (J-12)

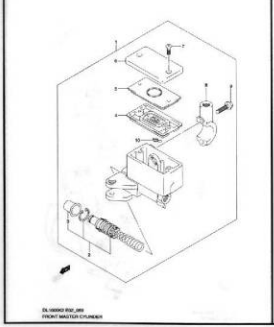

FIG.60 CLUTCH MASTER CYLINDER (J-13)

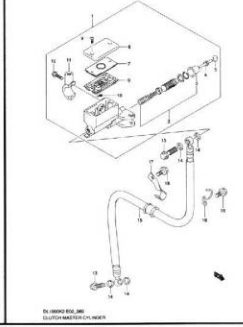

FIG.61 REAR SWINGING ARM (K-2)

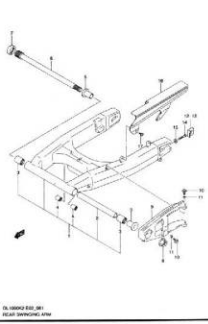

FIG.62 REAR CUSHION LEVER (K-3)

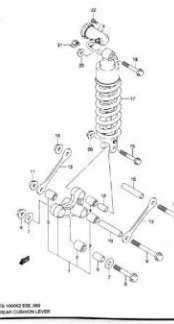

FIG.63 REAR WHEEL (K-4)

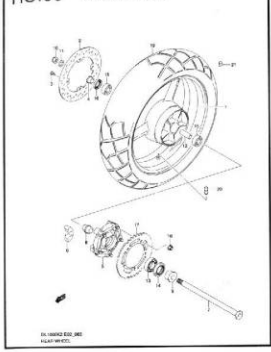

FIG.64 REAR CALIPER (K-5)

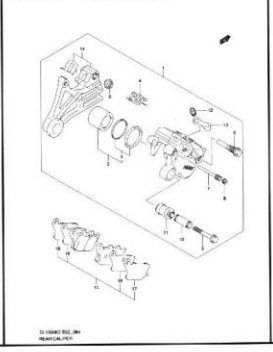

FIG.65 REAR MASTER CYLINDER (K-6)

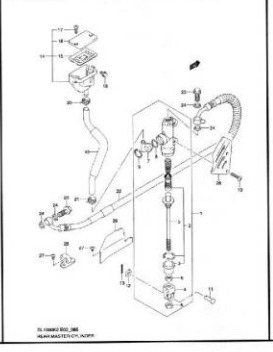

FIG.66 OPTIONAL (K-7)

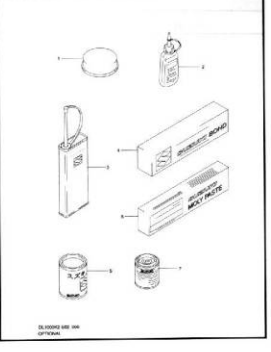

FIG.1

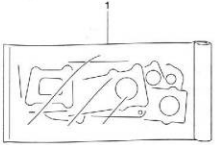

FIG.1 (B-2) GASKET SET

REF NO.	PART NO.	DESCRIPTION	QTY	REMARKS
1-1	11401-06810	GASKET SET	1	MODEL K2/K3 OPT
1-2	11401-06840	GASKET SET	1	MODEL K4 OPT
2	11141-02F01	·GASKET, CYLINDER HEAD	2	NOT SHOWN
3	11173-02F00	·GASKET, CYLINDER HEAD COVER NO.1	2	NOT SHOWN
4	11178-17E00	·GASKET, CYLINDER HEAD COVER NO.2	2	NOT SHOWN
5	11182-35F00	·GASKET, 2ND AIR PASSAGE	2	NOT SHOWN
6	11241-02F01	·GASKET, CYLINDER FRONT	1	NOT SHOWN
7	11242-02F01	·GASKET, CYLINDER REAR	1	NOT SHOWN
8-1	11482-06G00	·GASKET, CLUTCH COVER	1	NOT SHOWN MODEL K2/K3
8-2	11482-06G10	·GASKET, CLUTCH COVER	1	NOT SHOWN MODEL K4
9	11483-02F10	·GASKET, MAGNETO COVER	1	NOT SHOWN
10	11485-02F10	·GASKET, GEAR SHIFT COVER	1	NOT SHOWN
11	12837-19B10	·GASKET, TENSIONER ADJUSTER	1	NOT SHOWN
12	12837-24A10	·GASKET, TENSIONER ADJUSTER	1	NOT SHOWN
13	14181-31D00	·GASKET, EXHAUST PIPE	2	NOT SHOWN
14	14771-02F00	·CONNECTOR, EXHAUST	4	NOT SHOWN
15	15201-35F00	·O RING, FUEL PUMP	1	NOT SHOWN
16	17689-50F00	·O RING	1	NOT SHOWN
17-1	09168-14002	·GASKET (13.8X18.8X0.4)	1	NOT SHOWN MODEL K2/K3
17-2	09168-14002	·GASKET (13.8X18.8X0.4)	2	NOT SHOWN MODEL K4
18-1	09168-14011	·GASKET (14X20X1.5)	8	NOT SHOWN
18-2	09168-14015	·GASKET (14X20X1.5)	8	NOT SHOWN MODEL K4
19	09280-33004	·O RING (D:3.1, ID:32.7)	1	NOT SHOWN
20	09280-55005	·O RING (D:2.4, ID:55.6)	2	NOT SHOWN

FIG.2

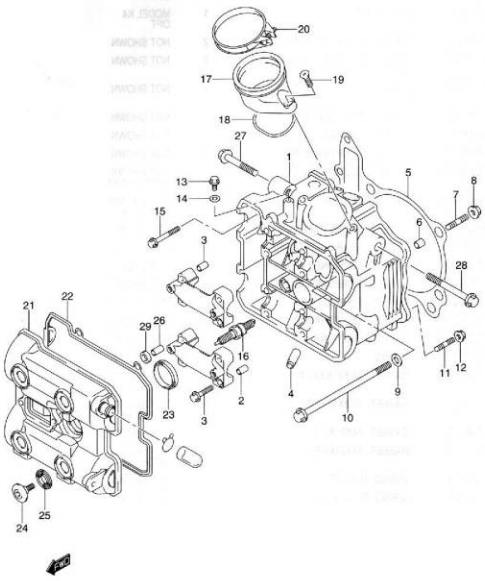

DL1000K2 E02_002
FRONT CYLINDER HEAD

FIG.2 (B-3) FRONT CYLINDER HEAD

REF NO.	PART NO.	DESCRIPTION	QTY	REMARKS
1	11100-06G00	HEAD ASSY, CYLINDER FRONT	1	
2	09206-08001	•PIN	4	
3	09103-06026	•BOLT (6X39)	8	
4	11115-32E70	GUIDE, VALVE (OS:0.3)	4	OPT
5	11141-02F01	GASKET, CYLINDER HEAD	1	
6	04211-13189	PIN	2	
7	09108-08143	STUD BOLT (8X35)	1	
8	08316-10083	NUT	1	
9	09160-10082	WASHER	4	
10	09103-10276	BOLT (10X175)	4	
11	09108-06096	STUD BOLT (6X30)	2	
12	08316-10063	NUT	2	
13	07120-06123	PLUG	1	
14	09168-06023	GASKET	1	
15	09103-06103	BOLT (6X70)	2	
16-1	09482-00412	SPARK PLUG (NGK, CR8EK)	1	
16-2	09482-00413	SPARK PLUG (DENSO, U24ETR)	1	
16-3	09482-00410	SPARK PLUG (NGK, CR9EK)	1	OPT
16-4	09482-00411	SPARK PLUG (DENSO, U27ETR)	1	OPT
16-5	09482-00462	SPARK PLUG (NGK, CR10EK)	1	OPT
16-6	09482-00463	SPARK PLUG (DENSO, U31ETR)	1	OPT
17	13101-06G00	PIPE, INTAKE FRONT	1	
18	09280-55005	•O RING	1	
19	02122-06163	SCREW	2	
20	09402-70203	CLAMP	1	
21	11171-06G01	COVER, CYLINDER HEAD	1	
22	11173-02F00	GASKET, CYLINDER HEAD COVER	1	
23	11178-17E00	GASKET	1	
24	09106-07009	BOLT (7X17.5)	4	
25	09161-11008	WASHER	4	
26	09206-08007	PIN	1	
27	01550-10657	BOLT, RH	1	
28	01550-10857	BOLT, LH	1	
29	11182-35F00	GASKET, 2ND AIR PASSAGE	1	

FIG.3

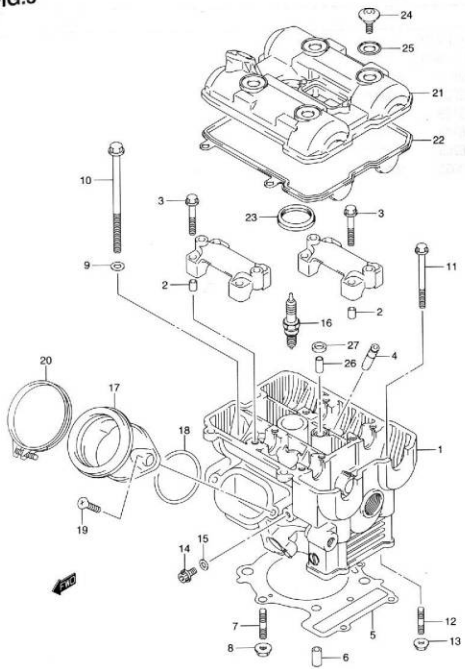

FIG.3 (B-4) REAR CYLINDER HEAD

REF NO.	PART NO.	DESCRIPTION	Q'TY	REMARKS
1	11100-06G00	HEAD ASSY, CYLINDER REAR	1	
2	09206-08001	·PIN	4	
3	09103-06026	·BOLT (6X39)	8	
4	11115-32E70	GUIDE, VALVE (OS:0.3)	4	OPT
5	11141-02F01	GASKET, CYLINDER HEAD	1	
6	04211-13189	PIN	2	
7	09108-08143	STUD BOLT (8X35)	1	
8	08316-10083	NUT	1	
9	09160-10082	WASHER	4	
10	09103-10276	BOLT (10X175)	4	
11	09103-06103	BOLT (6X70)	2	
12	09108-06096	STUD BOLT (6X30)	2	
13	08316-10063	NUT	2	
14	07120-06123	PLUG	1	
15	09168-06023	GASKET	1	
16-1	09482-00412	SPARK PLUG (NGK, CR8EK)	1	
16-2	09482-00413	SPARK PLUG (DENSO, U24ETR)	1	
16-3	09482-00410	SPARK PLUG (NGK, CR9EK)	1	OPT
16-4	09482-00411	SPARK PLUG (DENSO, U27ETR)	1	OPT
16-5	09482-00462	SPARK PLUG (NGK, CR10EK)	1	OPT
16-6	09482-00463	SPARK PLUG (DENSO, U31ETR)	1	OPT
17	13102-06G00	PIPE, INTAKE REAR	1	
18	09280-55005	·O RING	1	
19	02122-06163	SCREW	2	
20	09402-70203	CLAMP	1	
21	11172-06G00	COVER, CYLINDER HEAD	1	
22	11173-02F00	GASKET, CYLINDER HEAD COVER	1	
23	11178-17E00	GASKET	1	
24	09106-07009	BOLT (7X17.5)	4	
25	09161-11008	WASHER	4	
26	09206-08007	PIN	1	
27	11182-35F00	GASKET, 2ND AIR PASSAGE	1	

FIG.4

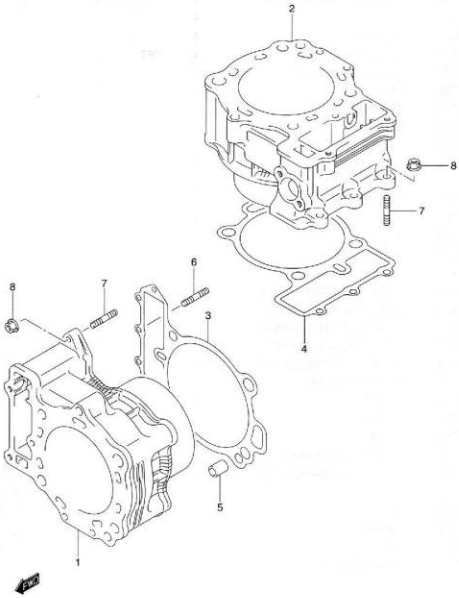

FIG.4 (B-5) CYLINDER

REF NO.	PART NO.	DESCRIPTION	Q'TY	REMARKS
1	11211-06G00-0F0	CYLINDER, FRONT	1	
2	11221-06G00-0F0	CYLINDER, REAR	1	
3	11241-02F01	GASKET, CYLINDER FRONT	1	
4	11242-02F01	GASKET, CYLINDER REAR	1	
5	04211-13189	PIN	4	
6	09108-06118	STUD BOLT	1	
7	01421-06203	STUD BOLT	5	
8	08316-10063	NUT	6	

FIG.5

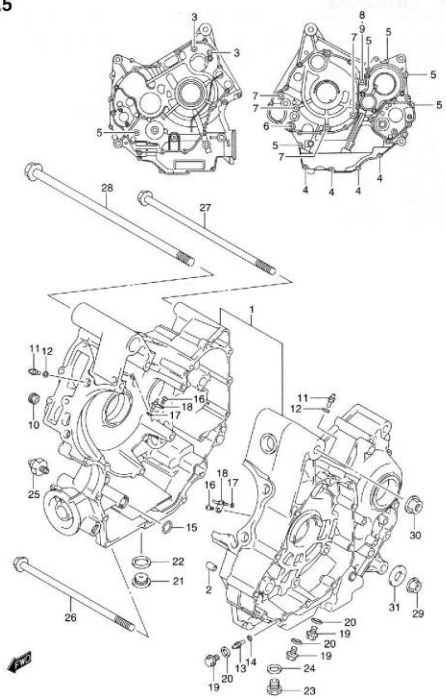

DL1000K2 E02_005
CRANKCASE

FIG.5 (B-6) CRANKCASE

REF NO.	PART NO.	DESCRIPTION	Q'TY	REMARKS
1-1	11302-06812	CRANKCASE SET	1	MODEL K2/K3
1-2	11302-06821	CRANKCASE SET	1	MODEL K4
2	11319-33E00	·PIN	2	
3	09106-08142	·BOLT (L:110)	2	
4	01547-06303	·BOLT	4	
5	01547-06703	·BOLT	7	
6	01547-06853	·BOLT	1	
7	07120-08903	·BOLT	4	
8	09106-08136	·BOLT (L:125)	1	
9	08322-01083	·WASHER, CRANKCASE BOLT	1	
10	11329-02F00	·JET, OIL GALLERY 3.6	1	
11	09493-20014	·JET, OIL GALLERY	2	
12	09280-04004	·O RING (D:1.2, ID:4.0)	2	
13	09493-20014	·JET, OIL GALLERY MISSION	1	
14	09280-04004	·O RING	1	
15	09280-12009	·O RING, CRANKCASE	1	
16-1	09125-06086	BOLT	2	MODEL K2/K3
16-2	09106-06075	BOLT	2	MODEL K4
17	09280-04004	O RING (D:1.2, ID:4.0)	2	
18	11390-06G00	JET, PISTON COOLING	2	
19	01550-08123	BOLT	4	
20-1	09168-08015	GASKET	4	MODEL K2/K3
20-2	09168-08016	GASKET	4	MODEL K4
21	09248-16012	PLUG	1	
22	09168-16002	GASKET	1	
23	09247-14036	PLUG, OIL DRAIN	1	
24	09168-14002	GASKET	1	

FIG.5

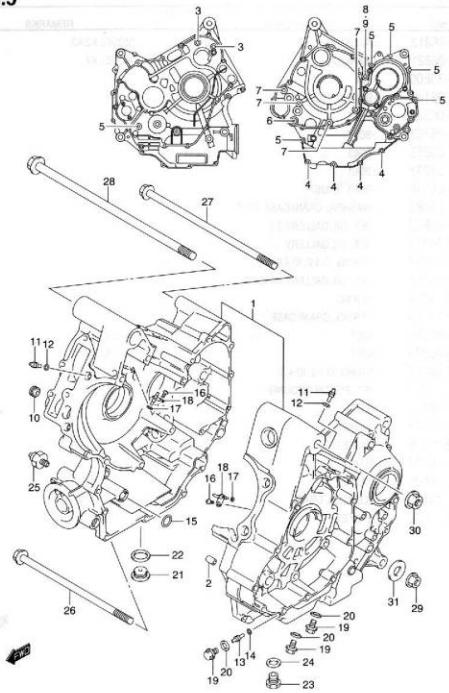

DL1000K2 E02_005
CRANKCASE

FIG.5 (B-7) CRANKCASE

REF NO.	PART NO.	DESCRIPTION	Q'TY	REMARKS
25	37820-33D10	SWITCH ASSY, OIL PRESSURE	1	
26	09103-10205	BOLT (L:225)	1	
27-1	09103-10226	BOLT (L:260)	1	MODEL K2/K3
27-2	09103-10347	BOLT (L:275)	1	MODEL K4
28-1	09103-12069	BOLT (L:320)	1	MODEL K2/K3
28-2	09103-12073	BOLT (L:330)	1	MODEL K4
29-1	09159-10058	NUT	1	MODEL K2/K3
29-2	08319-31103	NUT	1	MODEL K4
30	09159-12054	NUT	1	
31	09160-10039	WASHER	1	MODEL K2/K3

FIG.6

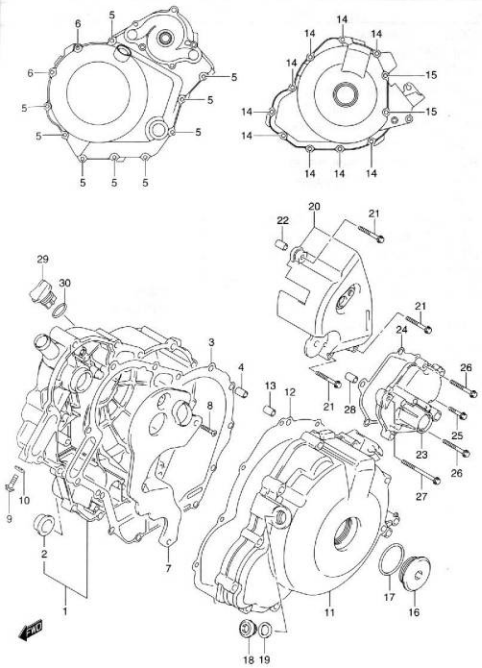

DL1000K2 E02_006
CRANKCASE COVER

FIG.6 (C-2) CRANKCASE COVER

REF NO.	PART NO.	DESCRIPTION	Q'TY	REMARKS
1-1	11340-06G00	COVER, CLUTCH	1	MODEL K2
1-2	11340-06G10	COVER, CLUTCH	1	MODEL K3
1-3	11340-06G20	COVER, CLUTCH	1	MODEL K4
2	11971-33210	•LENS, OIL LEVEL CHECK	1	
3-1	11482-06G00	GASKET, CLUTCH COVER	1	MODEL K2/K3
3-2	11482-06G10	GASKET, CLUTCH COVER	1	MODEL K4
4	04211-09149	PIN	2	
5	09103-06213	BOLT (L:30)	9	
6	09103-06257	BOLT (L:75)	2	
7	11342-06G00	SEPARATOR, OIL	1	
8	02112-06123	SCREW, OIL SEPARATOR	4	
9	01550-06103	BOLT, CLUTCH COVER WATER DRAIN	1	
10	09168-06004	GASKET, CLUTCH COVER WATER DRAIN	1	
11	11351-02F51	COVER, MAGNETO	1	
12	11483-02F10	GASKET, MAGNETO COVER	1	
13	04211-09149	PIN	1	
14	09103-06214	BOLT (L:35)	9	
15	09103-06225	BOLT (L:70)	2	
16	09259-36016-20H	PLUG, CRANKSHAFT HOLE	1	
17	09280-33004	O RING (D:3.1, ID:32.7)	1	
18	09248-14011	PLUG	1	
19	09168-14002	GASKET	1	
20	11360-06G00	COVER, ENGINE SPROCKET	1	
21	09103-06214	BOLT	3	
22	04211-09149	PIN	2	
23	11381-06G00	COVER, GEAR SHIFT	1	
24	11485-02F10	GASKET	1	
25	09103-06126	BOLT	1	
26	01547-06253	BOLT	2	
27	01547-06353	BOLT	2	
28	04211-09149	PIN	2	
29-1	11971-12C51	PLUG, OIL FILLER	1	MODEL K2/K3
29-2	11971-25D00	PLUG, OIL FILLER	1	MODEL K4
30	09280-17003	O RING	1	

FIG.7

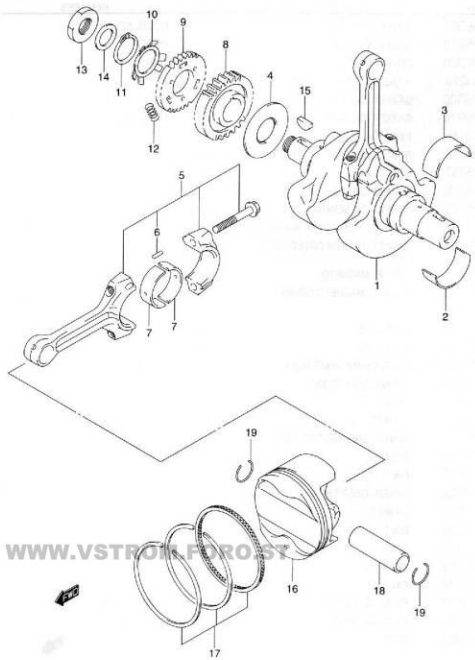

WWW.VSTROM-FORUM.CZ

FIG.7 (C-3) CRANKSHAFT

REF NO.	PART NO.	DESCRIPTION	Q'TY	REMARKS
1	12220-06G00	CRANKSHAFT	1	
2-1	12229-06G01-0A0	BEARING, LOWER (GREEN)	2	
2-2	12229-06G01-0B0	BEARING, LOWER (BLACK)	2	
2-3	12229-06G01-0C0	BEARING, LOWER (BROWN)	2	
3-1	12229-06G01-0A0	BEARING, UPPER (GREEN)	2	
3-2	12229-06G01-0B0	BEARING, UPPER (BLACK)	2	
3-3	12229-06G01-0C0	BEARING, UPPER (BROWN)	2	
4	12652-38B00	WASHER, CRANK THRUST	1	
5	12160-06G00	CONNECTING ROD ASSY	2	
6	12165-27A50	·PIN	4	
7-1	12164-02F11-0A0	BEARING, CRANK PIN (GREEN)	4	
7-2	12164-02F11-0B0	BEARING, CRANK PIN (BLACK)	4	
7-3	12164-02F11-0C0	BEARING, CRANK PIN (BROWN)	4	
7-4	12164-02F11-0D0	BEARING, CRANK PIN (YELLOW)	4	
8-1	21111-02F20	GEAR, PRIMARY DRIVE	1	MODEL K2
8-2	21111-02F11	GEAR, PRIMARY DRIVE	1	MODEL K3/K4
9	21112-02F00	GEAR, PRIMARY DRIVE SCISSORS	1	
10	21114-02F00	WASHER	1	
11	08331-31406	CIRCLIP	1	
12	09440-07001	SPRING	1	
13	09140-22012	NUT	1	
14	09164-22007	WASHER	1	

FIG.7

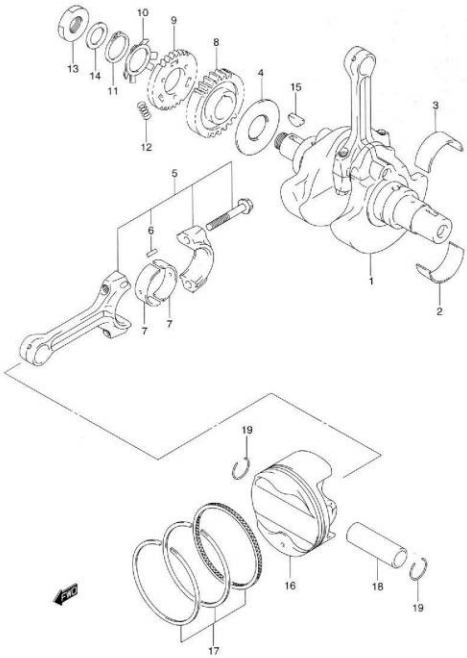

FIG.7 (C-4) CRANKSHAFT

REF NO.	PART NO.	DESCRIPTION	Q'TY	REMARKS
15	09420-06001	KEY	1	
16	12111-06G00-0F0	PISTON	2	
17	12140-02F42	RING SET, PISTON	2	
18	12151-02F00	PIN, PISTON	2	
19	09381-22002	CIRCLIP	4	

FIG.8

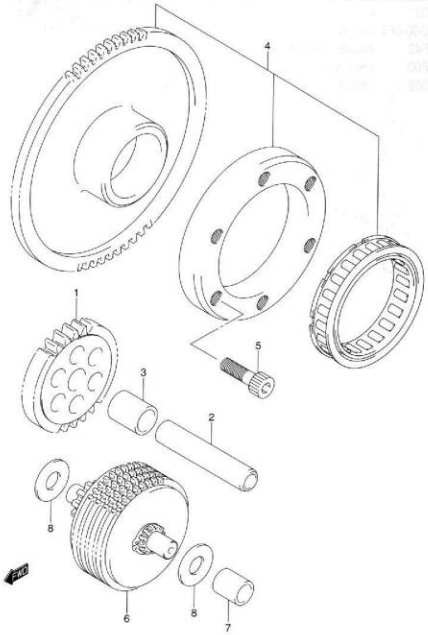

DL1000K2 E02_008
STARTER CLUTCH

FIG.8 (C-5) STARTER CLUTCH

REF NO.	PART NO.	DESCRIPTION	QTY	REMARKS
1	12612-06G00	GEAR, STARTER IDLE	1	
2	09206-12002	PIN	1	
3	09180-12140	SPACER	1	
4	12600-06810	CLUTCH SET, STARTER	1	
5	09106-08106	BOLT	6	
6	12600-06G00	LIMITER ASSY, STARTER IDLE GEAR	1	
7	12618-31D01	BUSH	2	
8	08211-10221	WASHER	2	

FIG.9

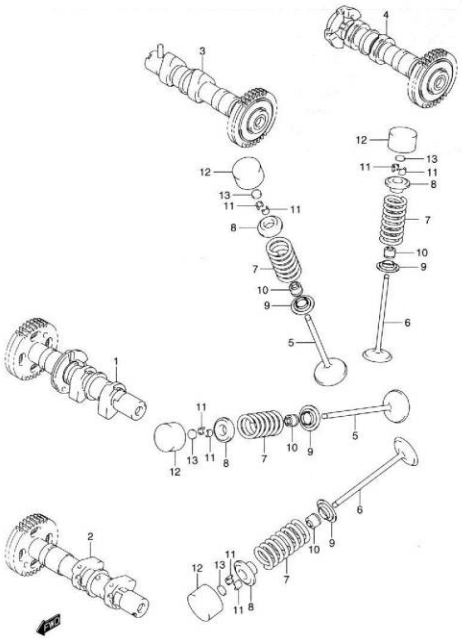

FIG.9 (C-6) CAM SHAFT/VALVE

REF NO.	PART NO.	DESCRIPTION	Q'TY	REMARKS
1	12701-06G00	CAM SHAFT ASSY, INTAKE FRONT	1	
2	12702-06G00	CAM SHAFT ASSY, EXHAUST FRONT	1	
3	12703-06G00	CAM SHAFT ASSY, INTAKE REAR	1	
4	12704-06G00	CAM SHAFT ASSY, EXHAUST REAR	1	
5-1	12911-06G00	VALVE, INTAKE	4	MODEL K2
5-2	12911-16G00	VALVE, INTAKE	4	MODEL K3/K4
6	12912-02F00	VALVE, EXHAUST	4	
7	12921-06G00	SPRING VALVE	8	
8	12931-06G00	RETAINER, VALVE SPRING	8	
9	12933-06G00	SEAT, VALVE SPRING	8	
10	09289-05015	SEAL, VALVE STEM OIL	8	
11	12932-24400	COTTER, VALVE	16	
12	12891-02F00	TAPPET	8	
13-1	12892-41C00-230	SHIM, TAPPET (T:2.30)	8	
13-2	12892-41C00-235	SHIM, TAPPET (T:2.35)	8	
13-3	12892-41C00-240	SHIM, TAPPET (T:2.40)	8	
13-4	12892-41C00-245	SHIM, TAPPET (T:2.45)	8	
13-5	12892-41C00-250	SHIM, TAPPET (T:2.50)	8	
13-6	12892-41C00-255	SHIM, TAPPET (T:2.55)	8	
13-7	12892-41C00-260	SHIM, TAPPET (T:2.60)	8	
13-8	12892-41C00-265	SHIM, TAPPET (T:2.65)	8	
13-9	12892-41C00-270	SHIM, TAPPET (T:2.70)	8	
13-10	12892-41C00-275	SHIM, TAPPET (T:2.75)	8	
13-11	12892-41C00-280	SHIM, TAPPET (T:2.80)	8	
13-12	12892-41C00-285	SHIM, TAPPET (T:2.85)	8	
13-13	12892-41C00-290	SHIM, TAPPET (T:2.90)	8	
13-14	12892-41C00-295	SHIM, TAPPET (T:2.95)	8	
13-15	12892-41C00-300	SHIM, TAPPET (T:3.00)	8	
13-16	12892-41C00-305	SHIM, TAPPET (T:3.05)	8	
13-17	12892-41C00-310	SHIM, TAPPET (T:3.10)	8	
13-18	12892-41C00-315	SHIM, TAPPET (T:3.15)	8	
13-19	12892-41C00-320	SHIM, TAPPET (T:3.20)	8	
13-20	12892-41C00-325	SHIM, TAPPET (T:3.25)	8	

FIG.9

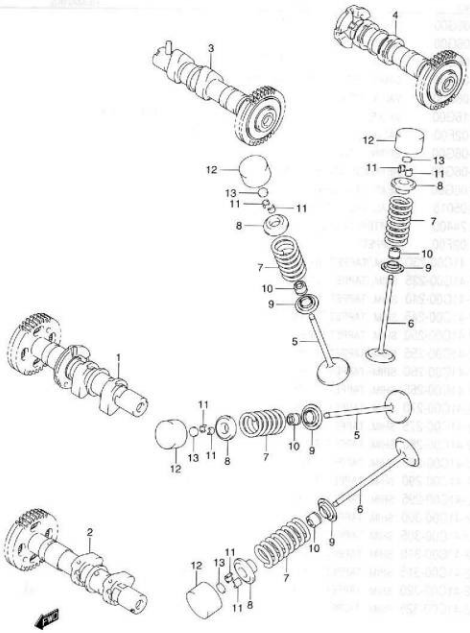

FIG.9 (C-7) CAM SHAFT/VALVE

REF NO.	PART NO.	DESCRIPTION	Q'TY	REMARKS
13-21	12892-41C00-330	SHIM, TAPPET (T:3.30)	8	
13-22	12892-41C00-335	SHIM, TAPPET (T:3.35)	8	
13-23	12892-41C00-340	SHIM, TAPPET (T:3.40)	8	
13-24	12892-41C00-345	SHIM, TAPPET (T:3.45)	8	
13-25	12892-41C00-350	SHIM, TAPPET (T:3.50)	8	
14	12800-41810	SHIM SET, TAPPET (INC.REF.NO.13-1~13-25 (5PCS.EACH) & NO.15	1	OPT NOT SHOWN
15	99000-69471	·CASE, TAPPET SHIM	1	OPT NOT SHOWN

FIG.10

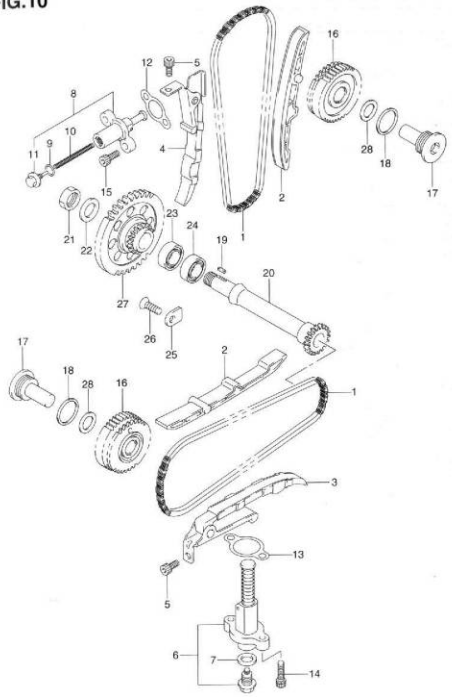

FIG.10 (C-8) CAM CHAIN

REF NO.	PART NO.	DESCRIPTION	Q'TY	REMARKS
1	12760-23F00	CHAIN, CAM SHAFT DRIVE	2	
2	12771-06G00	GUIDE, CAM CHAIN	2	
3	12810-06G00	TENSIONER, FRONT CAM CHAIN	1	
4	12815-06G00	TENSIONER, REAR CAM CHAIN	1	
5	07120-06123	BOLT	2	
6	12832-05A10	ADJUSTER ASSY, FRONT TENSIONER	1	
7	09168-12018	·GASKET	1	
8	12830-30A01	ADJUSTER ASSY, REAR TENSIONER	1	
9	12832-02A00	·O RING	1	
10	12833-30A01	·SPRING	1	
11	12834-02A00	·PLUG	1	
12	12837-19B10	GASKET	1	
13	12837-24A10	GASKET	1	
14	07130-06253	BOLT	2	
15	07130-06203	BOLT	2	
16	12750-06G00	GEAR, CAM CHAIN IDLER NO.2	2	
17	12755-02F01	SHAFT, IDLER NO.2	2	
18	09168-26001	GASKET	2	
19	09421-04004	KEY	1	
20	12716-06G00	SHAFT, IDLER	1	
21-1	09140-16005	NUT	1	MODEL K2/K3
21-2	09140-16001	NUT	1	MODEL K4
22	09181-16212	WASHER	1	
23	08113-63030	BEARING, RH	1	
24	09262-25006	BEARING, LH	1	
25	24741-20A00	RETAINER, BEARING	1	
26	09126-06011	SCREW	1	
27	12731-06G00	SPROCKET, IDLER NO.1	1	
28-1	09181-15164	SHIM, CAM CHAIN IDLER, T:0.9	2	
28-2	09181-15166	SHIM, CAM CHAIN IDLER, T:1.0	2	
28-3	09181-15172	SHIM, CAM CHAIN IDLER, T:1.1	2	
28-4	09181-15176	SHIM, CAM CHAIN IDLER, T:1.2	2	
28-5	09181-15181	SHIM, CAM CHAIN IDLER, T:1.3	2	
28-6	09181-15182	SHIM, CAM CHAIN IDLER, T:1.4	2	

FIG.11

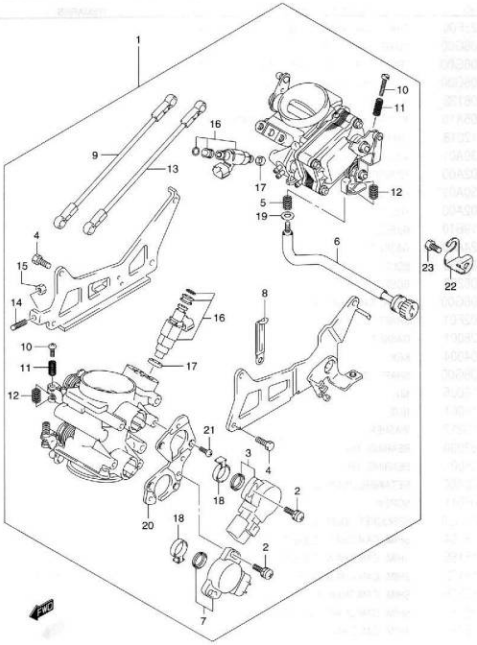

DL1000K2 E02_011
THROTTLE BODY

FIG.11 (C-9) THROTTLE BODY

REF NO.	PART NO.	DESCRIPTION	Q'TY	REMARKS
1-1	13405-06G01	INJECTION ASSY	1	MODEL K2/K3 E2, E19
1-2	13405-06G21	INJECTION ASSY	1	MODEL K2/K3 E24, P37
1-3	13405-06G30	INJECTION ASSY	1	MODEL K4 E2, E19
2	13605-02F00	·SCREW	4	
3	13580-06G00	·SENSOR ASSY	1	
4	13612-02F00	·BOLT	8	
5	13271-93011	·SPRING	1	
6	13270-06G00	·ADJUST SCREW ASSY	1	
7	13580-02F00	·SENSOR ASSY	1	
8	09404-06429	·CLAMP	1	
9	13552-06G10	·ROD ASSY	1	
10	13548-42F00	·SCREW	2	
11	13271-44B00	·SPRING	2	
12	13268-89J00	·SPRING	2	
13	13552-06G00	·ROD ASSY	1	
14	13605-06G00	·ADJUST SCREW	1	
15	13607-47070	·NUT	1	
16	15710-06G00	·INJECTOR ASSY	2	
17	13672-33E00	·CUSHION	2	
18	13311-06G00	·RING	2	
19	13386-09410	·WASHER	1	
20	13627-06G00	·PLATE	1	
21	02112-04107	·SCREW	4	
22	13279-06G00	PLATE, IDLE ADJUST	1	
23	01500-06123	BOLT, IDLE ADJUST PLATE	1	

FIG.12

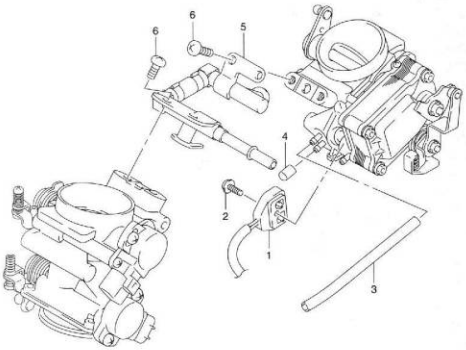

FIG.12 (C-10) FUEL DELIVERY PIPE

REF NO.	PART NO.	DESCRIPTION	Q'TY	REMARKS
1	13477-39F00	HARNESS ASSY	1	
2	02112-34163	SCREW	1	
3	13683-10F60	HOSE	1	L:125
4	13274-84000	CAP	2	
5	15730-06G00	DELIVERY PIPE ASSY	1	
6	13602-06128	SCREW	4	

FIG.13

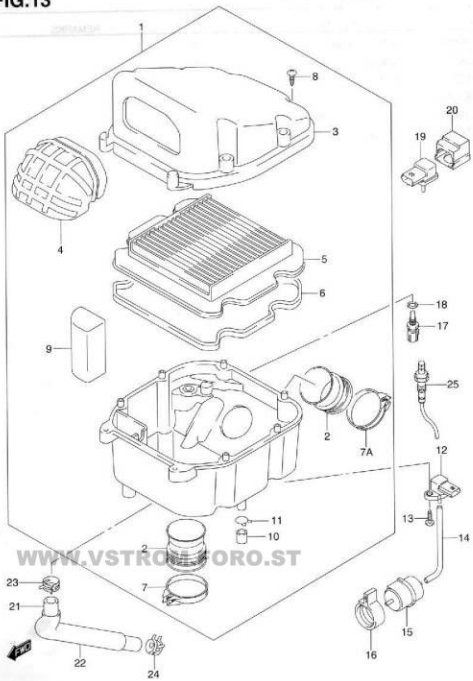

WWW.VSTROM-MORO.ST

DL1000K2 E02_013
AIR CLEANER

FIG.13 (D-2) AIR CLEANER

REF NO.	PART NO.	DESCRIPTION	Q'TY	REMARKS
1	13700-06G00	CLEANER ASSY, AIR	1	
2	13881-06G00	·TUBE, OUTLET	2	
3	13741-06G00	·CAP, AIR CLEANER	1	
4	13891-06G00	·TUBE, INLET	1	
5	13780-06G00	·FILTER, AIR CLEANER	1	
6	13746-06G00	·GASKET, AIR CLEANER	1	
7	13170-06G00	·CLAMP, OUTLET TUBE FRONT	1	
7A	09402-60208	·CLAMP, OUTLET TUBE REAR	1	
8	03142-05163	·SCREW	8	
9	13788-06G00	·FILTER, BREATHER	1	
10	13859-41B10	·PLUG	1	
11	09401-14301	·CLIP	2	
12	18590-80C40	SENSOR BOOST	1	
13	03541-05163	SCREW	1	
14	13697-17F00	HOSE, BOOST SENSOR	1	
15	13715-06G00	CHAMBER, VACUUM	1	
16	13912-02FA0	BAND, VACUUM CHAMBER	1	
17	13650-57F00	SENSOR, AIR TEMP	1	
18	09168-12017	GASKET, TEMP SENSOR	1	
19	18591-42F00	SENSOR, PRESSURE	1	
20	18595-42F00	HOLDER, SENSOR	1	
21	13851-06G00	TUBE, BREATHER	1	
22	13858-06G00	PROTECTOR, BREATHER TUBE	1	
23	09401-22405	CLIP	1	
24	09402-28511	CLAMP	1	
25	18213-06G00	SENSOR, OXYGEN	1	E2, E19

FIG.14

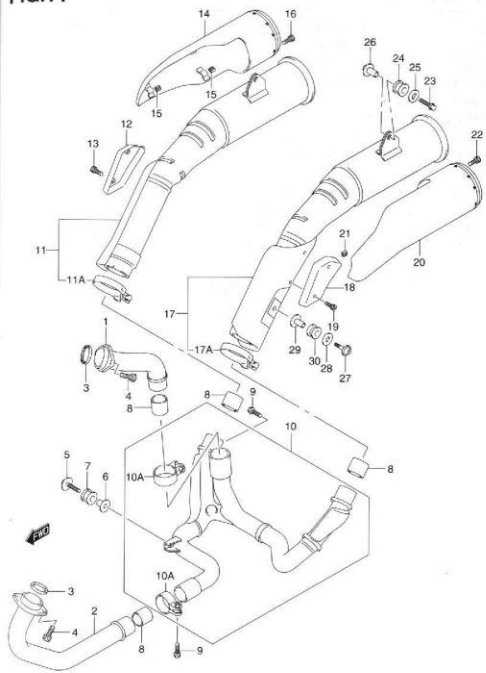

FIG.14 (D-3) MUFFLER

REF NO.	PART NO.	DESCRIPTION	Q'TY	REMARKS
1	14150-06G00	PIPE, EXHAUST RH	1	
2	14160-06G00	PIPE, EXHAUST LH	1	
3	14181-31D00	GASKET, EXHAUST PIPE	2	
4	09106-08104	BOLT, EXHAUST PIPE	4	
5	09118-08152	BOLT, EXHAUST SUPPORT	1	
6	09180-08152	SPACER, EXHAUST SUPPORT	1	
7	09320-12048	CUSHION, EXHAUST SUPPORT	1	
8	14771-02F00	CONNECTOR, EXHAUST	4	
9	09103-08392	BOLT, CONNECTOR	4	
10-1	14205-06G00	PIPE, EXHAUST CENTER	1	E2, E19
10-2	14205-06G10	PIPE, EXHAUST CENTER	1	E24, P37
10A	14459-42F10	·CLAMP, MUFFLER CONNECTOR	2	
11-1	14305-06G00	MUFFLER, RH	1	MODEL K2 E2, E19
11-2	14305-06G10-H01	MUFFLER, RH	1	MODEL K2 E2, E19
11-3	14305-06G02	MUFFLER, RH	1	MODEL K3/K4 E2, E19
11-4	14305-06G11-H01	MUFFLER, RH	1	MODEL K3/K4 E24, P37
11A	14459-42F10	·CLAMP, MUFFLER CONNECTOR	1	
12	14186-06G00	PROTECTOR, MUFFLER COVER RH	1	
13	07130-05123	SCREW, PROTECTOR MUFFLER	2	
14-1	14780-06G00	COVER, MUFFLER RH	1	MODEL K2
14-2	14780-06G01	COVER, MUFFLER RH	1	MODEL K3/K4
15	14795-06G00	GROMMET, MUFFLER COVER	3	
16	09106-06076	SCREW, MUFFLER COVER	2	
17-1	14306-06G00	MUFFLER, LH	1	MODEL K2 E2, E19
17-2	14306-06G10-H01	MUFFLER, LH	1	MODEL K2 E24, P37
17-3	14306-06G02	MUFFLER, LH	1	MODEL K3/K4 E2, E19
17-4	14306-06G11-H01	MUFFLER, LH	1	MODEL K3/K4 E24, P37
17A	14459-42F10	·CLAMP, MUFFLER CONNECTOR	1	
18	14196-06G00	PROTECTOR, MUFFLER COVER LH	1	
19	07130-05123	SCREW, PROTECTOR MUFFLER	2	

FIG.14

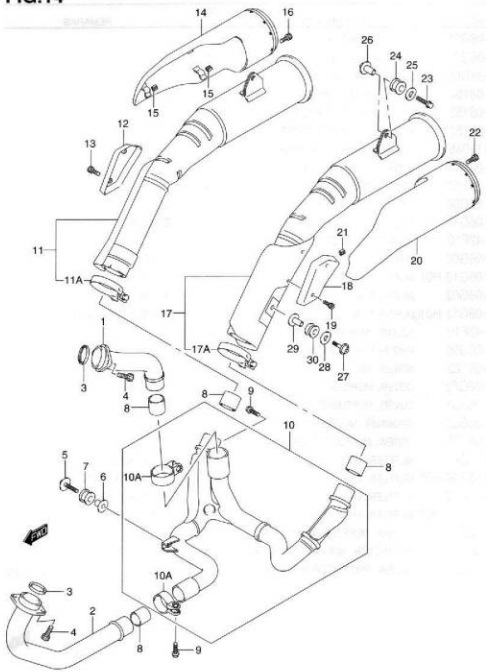

DL1000K2 E02_014
MUFFLER

FIG.14 (D-4) MUFFLER

REF NO.	PART NO.	DESCRIPTION	Q'TY	REMARKS
20-1	14790-06G00	COVER, MUFFLER LH	1	MODEL K2
20-2	14790-06G01	COVER, MUFFLER LH	1	MODEL K2/K3
21	14795-06G00	GROMMET, MUFFLER COVER	3	
22	09106-06076	SCREW, MUFFLER COVER	2	
23	09103-08358	BOLT, MUFFLER SUPPORT	2	
24	09320-12049	CUSHION, MUFFLER SUPPORT	2	
25	09160-08146	WASHER, MUFFLER SUPPORT	2	
26	14414-06G00	NUT, MUFFLER SUPPORT	2	
27	09106-08147	BOLT, MUFFLER SUPPORT FRONT	2	
28	09160-08134	WASHER, MUFFLER SUPPORT FRONT	2	
29	09180-08151	SPACER, MUFFLER SUPPORT FRONT	2	
30	09320-12043	CUSHION, MUFFLER SUPPORT FRONT	2	

FIG.15

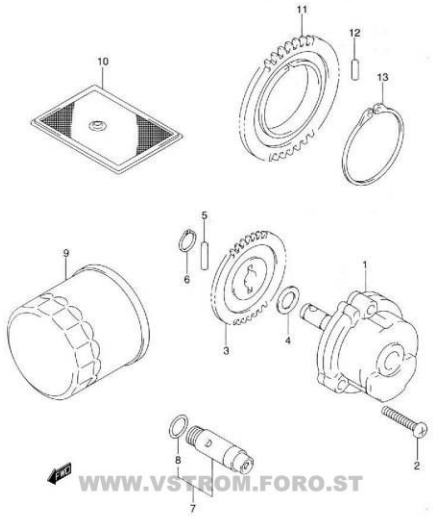

WWW.VSTROM.FORO.ST

FIG.15 (D-5) OIL PUMP

REF NO.	PART NO.	DESCRIPTION	Q'TY	REMARKS
1	16400-02FB0	PUMP ASSY, ENGINE OIL	1	
2	02112-06253	SCREW	3	
3	16331-02F00	GEAR, OIL PUMP DRIVEN	1	
4	09181-10158	WASHER	1	
5	09261-04009	PIN	1	
6	08331-31106	CIRCLIP	1	
7	16440-24F00	VALVE ASSY, OIL RELIEF	1	
8	09280-13004	·O RING	1	
9	16510-03G00-X07	FILTER ASSY, ENGINE OIL	1	
10	16520-32E00	STRAINER, ENGINE OIL	1	
11	16321-02F00	GEAR, OIL PUMP DRIVE	1	
12	09261-06002	PIN	1	
13	08331-31506	CIRCLIP	1	

FIG.16

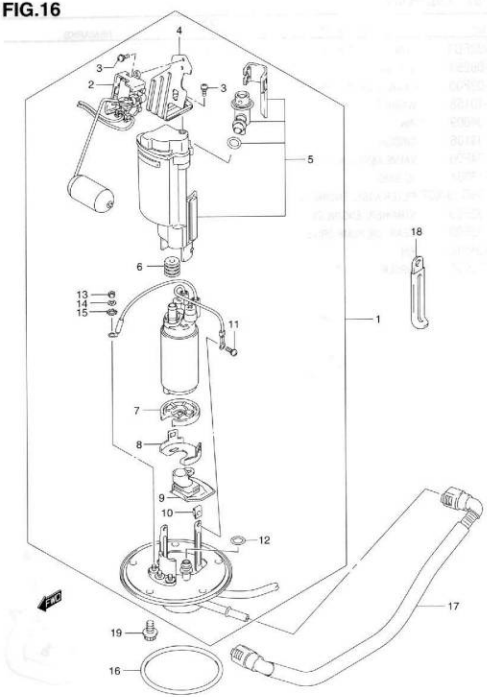

DL1000K2 E02_016
FUEL PUMP

FIG.16 (D-6) FUEL PUMP (MODEL K2/K3)

REF NO.	PART NO.	DESCRIPTION	Q'TY	REMARKS
1	15100-06G00	PUMP ASSY, FUEL	1	
2	34810-06G00	·GAUGE ASSY, FUEL LEVER	1	
3	15116-35F10	·SCREW	2	
4	15181-06G00	·BRACKET, FUEL GAUGE	1	
5	15410-24FB0	·FUEL FILTER	1	
6	15114-35F00	·BUSH	1	
7	15111-35F00	·CUSHION, FUEL PUMP	1	
8	15112-42F00	·HOLDER, FUEL PUMP	1	
9	15420-24FB0	·STRAINER, FUEL	1	
10	15115-35F00	·NUT	2	
11	15116-35F10	·SCREW	2	
12	15113-35F00	·O RING	1	
13	15173-35F00	·NUT	3	
14	15172-35F00	·SPRING WASHER	3	
15	15171-35F00	·WASHER	3	
16	15201-35F00	O RING	1	
17	15810-06G00	FUEL HOSE	1	
18	09404-06432	CLAMP, FUEL PUMP HARNESS	1	
19	07120-06123	BOLT, FUEL PUMP	5	

REFER TO FIG.16A (D-7) FOR MODEL K4

FIG.16A

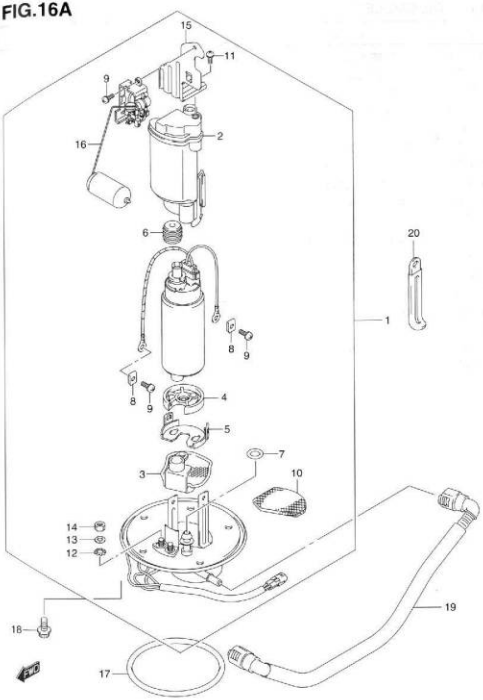

FIG.16A (D-7) FUEL PUMP (MODEL K4)

REF NO.	PART NO.	DESCRIPTION	Q'TY	REMARKS
1	15100-06G10	PUMP ASSY, FUEL	1	
2	15410-24FB0	·FILTER ASSY, FUEL	1	
3	15420-35F01	·STRAINER, FUEL PUMP	1	
4	15111-35F00	·CUSHION, FUEL PUMP	1	
5	15112-42F00	·HOLDER, FUEL PUMP	1	
6	15114-35F00	·BUSH, FUEL PUMP	1	
7	15113-35F00	·O RING	1	
8	15115-35F00	·NUT	2	
9	15116-06G10	·SCREW	1	
10	15117-06G10	·SHEET	1	
11	15116-35F10	·SCREW	4	
12	15171-35F00	·WASHER	2	
13	15172-35F00	·SPRING WASHER	2	
14	15173-35F00	·NUT	2	
15	15181-06G00	·BRACKET, FUEL GAUGE	1	
16	34810-06G10	·GAUGE ASSY	1	
17	15201-35F00	O RING, FUEL PUMP	1	
18	07120-06123	BOLT	5	
19	15810-06G00	HOSE, FUEL	1	
20	09404-06429	CLAMP	1	

FIG.17

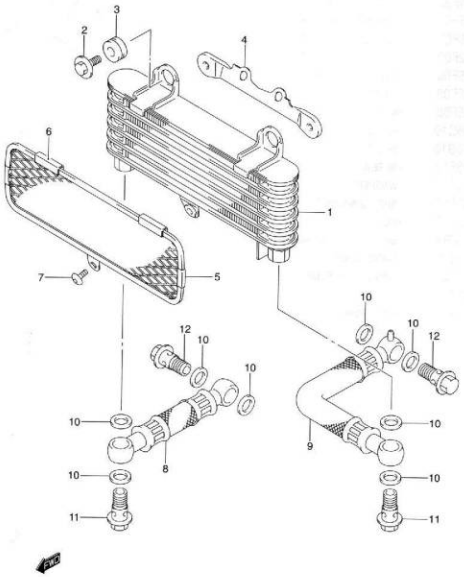

DL1000K2 E02_017
OIL COOLER

FIG.17 (D-8) OIL COOLER

REF NO.	PART NO.	DESCRIPTION	Q'TY	REMARKS
1-1	16600-06G00	COOLER ASSY, OIL	1	MODEL K2/K3
1-2	16600-16G00	COOLER ASSY, OIL	1	MODEL K4
2	09116-06167	BOLT	2	
3-1	09320-10015	CUSHION	2	MODEL K2/K3
3-2	09320-09009	CUSHION	2	MODEL K4
4	16620-02F00	BRACKET, OIL COOLER	1	
5-1	16650-02F00	GUARD, OIL COOLER	1	MODEL K2/K3
5-2	16650-16G00	GUARD, OIL COOLER	1	MODEL K4
6	17765-09F00	·PROTECTOR, CENTER	2	
7	02142-05103	BOLT	1	
8-1	16460-02F00	HOSE, OIL COOLER RH	1	MODEL K2/K3
8-2	16460-16G00	HOSE, OIL COOLER RH	1	MODEL K4
9-1	16470-06G00	HOSE, OIL COOLER LH	1	MODEL K2/K3
9-2	16470-16G00	HOSE, OIL COOLER LH	1	MODEL K4
10-1	09168-14011	GASKET	8	MODEL K2/K3
10-2	09168-14015	GASKET	8	MODEL K4
11	09360-12012	BOLT, UNION	2	
12	09360-14012	BOLT	2	

FIG.18

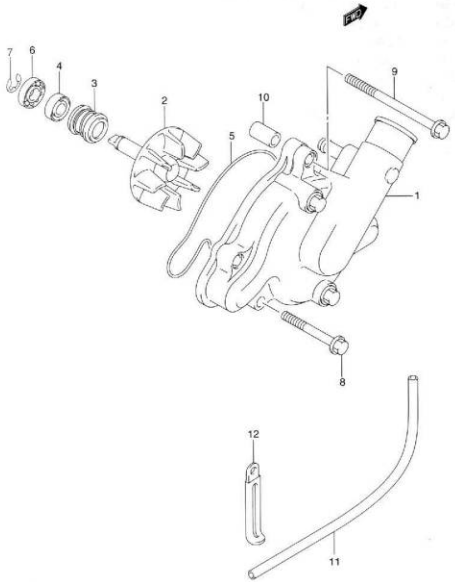

FIG.18 (D-9) WATER PUMP

REF NO.	PART NO.	DESCRIPTION	Q'TY	REMARKS
1-1	17410-02F20	CASE, WATER PUMP	1	MODEL K2/K3
1-2	17410-02F40	CASE, WATER PUMP	1	MODEL K4
2-1	17491-06G00	IMPELLER	1	MODEL K2/K3
2-2	17491-16G00	IMPELLER	1	MODEL K4
3	17470-02F10	SEAL, MECHANICAL	1	
4	09283-10005	OIL SEAL	1	
5	17435-02F00	O RING	1	
6	09262-10016	BEARING, WATER PUMP	2	
7	08332-11086	E RING	1	
8	09103-06213	SCREW	2	
9	09103-06239	BOLT	3	
10	04211-09149	PIN	1	
11	09352-42703-600	HOSE	1	MODEL K3/K4 L:600→220
12	09404-06431	CLAMP	1	MODEL K3/K4

FIG.19

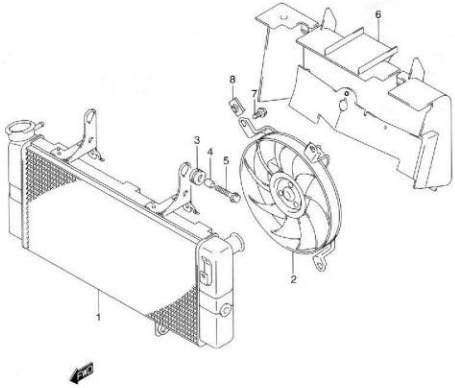

FIG.19 (D-10) RADIATOR

REF NO.	PART NO.	DESCRIPTION	Q'TY	REMARKS
1	17710-06G00	RADIATOR ASSY, WATER	1	
2	17800-06G00	FAN ASSY	1	
3-1	09320-10042	CUSHION	3	MODEL K2/K3
3-2	09320-10051	CUSHION	3	MODEL K4
4	09180-06290	SPACER	2	
5	09118-06097	BOLT (6X20)	2	
6	17760-06G00	SHIELD, RADIATOR HEAT	1	
7	17711-40F00	BOLT	3	
8	17712-40F00	NUT	3	

FIG.20

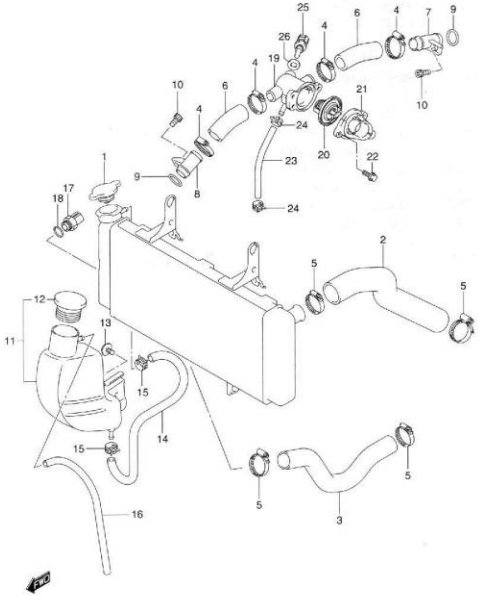

FIG.20 (D-11) RADIATOR HOSE

REF NO.	PART NO.	DESCRIPTION	Q'TY	REMARKS
1	17730-12C20	CAP, RADIATOR	1	
2	17851-06G00	HOSE, RADIATOR INLET	1	
3	17852-06G00	HOSE, RADIATOR OUTLET	1	
4	09402-28511	CLAMP	4	
5	09402-38511	CLAMP	4	
6	17853-02F00	HOSE, CONNECTOR INLET	2	
7-1	17890-06G00	UNION, CONNECTOR HOSE	1	MODEL K2/K3
7-2	17890-06G20	UNION, CONNECTOR HOSE	1	MODEL K4
8-1	17890-06G10	UNION, CONNECTOR HOSE FRONT	1	MODEL K2/K3
8-2	17890-06G20	UNION, CONNECTOR HOSE	1	MODEL K4
9	09280-18009	O RING	2	
10	07130-06123	BOLT	2	
11-1	17910-06G00	TANK ASSY, RESERVOIR	1	MODEL K2/K3
11-2	17910-06G10	TANK ASSY, RESERVOIR	1	MODEL K4
12	17931-06G00	·CAP	1	
13-1	09116-06191	SCREW	1	MODEL K2/K3
13-2	09111-06085	BOLT	1	MODEL K4
14	17981-19F00	HOSE, RESERVOIR TANK INLET	1	
15	09401-08411	CLIP	2	
16	09352-50901-00B	HOSE, RESERVOIR TANK	1	L:2000→950
17	17680-33E00	SWITCH, RADIATOR FAN	1	
18	17689-50F00	·O RING	1	
19	17662-02F11	CONNECTOR, THERMOSTAT INLET	1	
20-1	17670-06G30	THERMOSTAT	1	MODEL K2
20-2	17670-06G50	THERMOSTAT	1	MODEL K3/K4
21	17663-42E00	CAP, THERMOSTAT CONNECTOR	1	
22	01550-06163	BOLT, CONNECTOR	2	
23-1	17856-02F10	HOSE, CONNECTOR TO WATER PUMP	1	MODEL K2
23-2	17856-16G00	HOSE, CONNECTOR TO WATER PUMP	1	MODEL K3
23-3	17856-16G10	HOSE, WATER BYPASS	1	MODEL K4
24	09401-12409	CLIP	2	
25	13650-57F00	SENSOR, WATER TEMP	1	
26	09168-12017	GASKET, TEMP SENSOR	1	

FIG.21

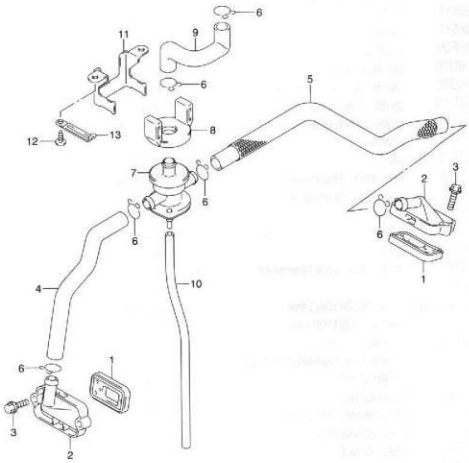

WWW.VSTROM.FORO.ST

FIG.21 (D-12) 2ND AIR

REF NO.	PART NO.	DESCRIPTION	Q'TY	REMARKS
1	18450-06G00	VALVE ASSY, 2ND AIR REED	2	
2	18531-06G01	COVER, 2ND AIR REED VALVE	2	
3	09103-06217	BOLT	4	
4	18461-06G00	HOSE, 2ND AIR VALVE FRONT	1	
5	18471-06G00	HOSE, 2ND AIR VALVE REAR	1	
6	09401-15101	CLIP	6	
7-1	18510-06G00	VALVE ASSY, AIR CUT	1	E2, E19
7-2	18510-35F00	VALVE ASSY, AIR CUT	1	E24, P37
8	18517-06G10	CUSHION, 2ND AIR CLEANER	1	E24, P37
9-1	18711-06G00	HOSE, 2ND AIR CLEANER	1	E2, E19
9-2	18711-06G10	HOSE, 2ND AIR CLEANER	1	E24, P37
10	13697-02A00	HOSE, 2ND AIR VALVE VACUUM	1	E24, P37
11	18610-06G00	BRACKET, 2ND AIR VALVE	1	
12	03542-06123	SCREW	2	
13	09404-06429	CLAMP	1	E2, E19

FIG.22

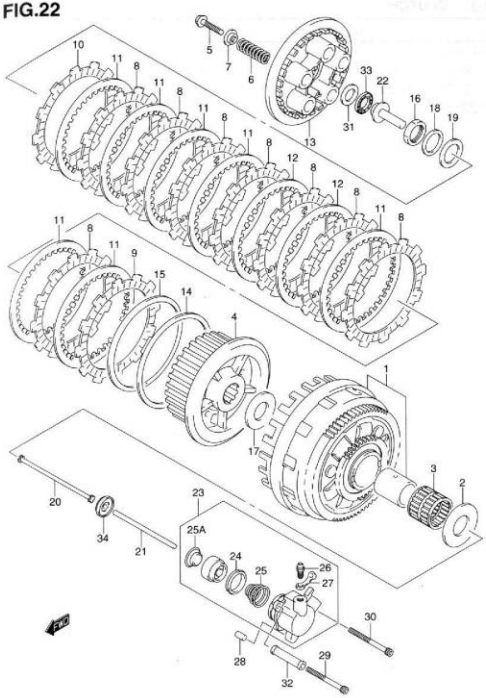

FIG.22 (E-2) CLUTCH

REF NO.	PART NO.	DESCRIPTION	Q'TY	REMARKS
1	21200-06811	GEAR ASSY, PRIMARY DRIVEN	1	NT:57, ←21200−06810
2	09160-25074	WASHER (25X52X2.5)	1	
3	09263-35013	BEARING (35X40X39.8)	1	
4	21410-06G00	HUB, CLUTCH SLEEVE	1	
5	21412-06G00	BOLT, SPRING SUPPORT	5	
6-1	21413-06G00	SPRING, CLUTCH	5	MODEL K2/K3
6-2	21413-06G10	SPRING, CLUTCH	5	MODEL K4
7	21414-29F00	WASHER	5	
8	21441-24F20	PLATE, CLUTCH DRIVE NO.1	8	126X161X2.8
9	21442-24F00	PLATE, CLUTCH DRIVE NO.2	1	135X161X3.7
10	21441-24F10	PLATE, CLUTCH DRIVE NO.3	1	127X161X3.7
11	21451-24F00	PLATE, CLUTCH DRIVEN	7	T:2.0
12	21451-24F10	PLATE, CLUTCH DRIVEN	2	T:2.3
13	21462-06G00	DISK, CLUTCH PRESSURE	1	
14	21471-06G00	SEAT, WAVE WASHER	1	
15	21472-06G00	WASHER, CLUTCH PLATE WAVE	1	
16	09159-24010	NUT, CLUTCH SLEEVE HUB	1	
17	09160-25056	WASHER, CLUTCH SLEEVE	1	25X50X2.5
18	09164-24006	WASHER, CLUTCH SLEEVE	1	24.2X35X2
19	09181-25223	WASHER, SLEEVE HUB NUT	1	25X38X1.0
20	23110-27A00	ROD, CLUTCH PUSH RH	1	
21	23111-26D00	ROD, CLUTCH PUSH LH	1	
22	23121-31E00	PIECE, CLUTCH PUSH	1	
23	23160-06G01	CYLINDER, CLUTCH RELEASE	1	←23160−06G00
24	23163-06B00	·CUP	1	
25	23164-05A00	·SPRING	1	
25A	23166-02F20	·COVER, DUST	1	
26	59121-01A00	·BLEEDER	1	
27	59122-01A00	·CAP, BLEEDER	1	
28	04221-08149	PIN, CLUTCH RELEASE CYLINDER	1	
29	07130-06653	BOLT, CLUTCH RELEASE CYLINDER	1	
30	07130-06703	BOLT, CLUTCH RELEASE CYLINDER	1	

FIG.22

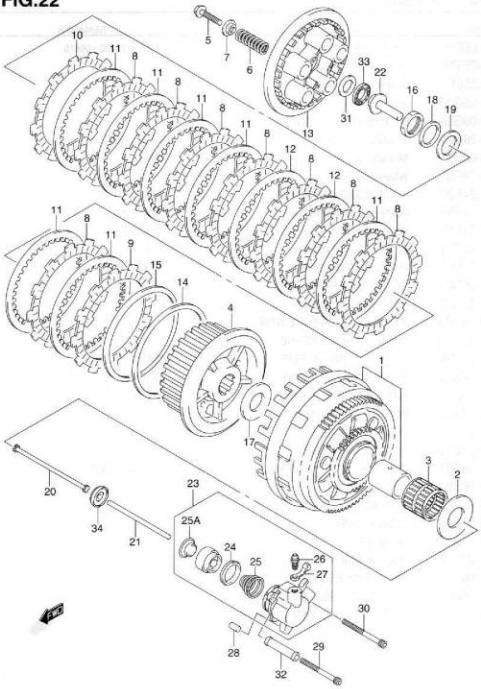

DL1000K2 E02_022
CLUTCH

FIG.22 (E-3) CLUTCH

REF NO.	PART NO.	DESCRIPTION	Q'TY	REMARKS
31	09160-15045	WASHER, CLUTCH PUSH	1	15.5X28X1
32	23171-06G00	SPACER, CLUTCH RELEASE	1	
33	09263-15003	BEARING, CLUTCH PUSH	1	15X28X2
34	09283-06008	SEAL, CLUTCH PUSH (6X34X10.5)	1	

FIG.23

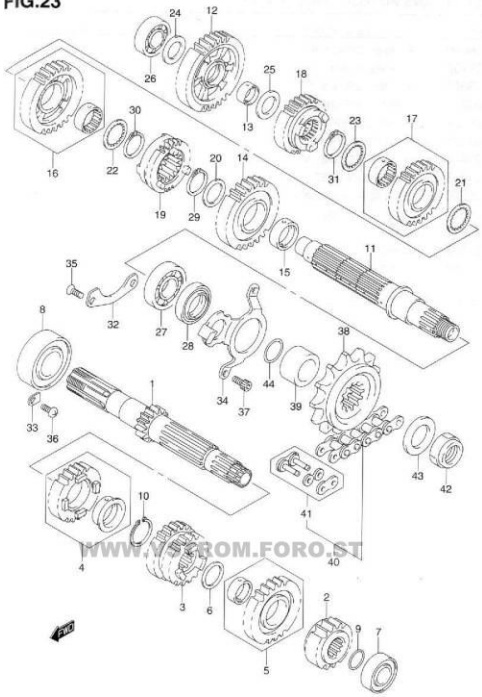

WWW.VSROM.FORO.ST

FIG.23 (E-4) TRANSMISSION (MODEL K2/K3)

REF NO.	PART NO.	DESCRIPTION	Q'TY	REMARKS
1	24120-06G00	SHAFT, COUNTER (NT:12)	1	
2	24221-02F01	GEAR, 2ND DRIVE (NT:15)	1	
3	24231-02F13	GEAR, 3RD & 4TH DRIVE	1	NT:18/27
4	24251-02811	GEAR SET, 5TH DRIVE (NT:23)	1	←24251−02810
5	24261-02820	GEAR SET, 6TH DRIVE (NT:23)	1	
6	09181-22167	WASHER, 6TH DRIVE	1	22X30X1.0
7	09262-20139	BEARING, CENTER SHAFT LH	1	20X47X14
8	09262-25073	BEARING, CENTER SHAFT RH	1	25X62X17
9	09280-17004	O RING, CENTER SHAFT	1	D:1.9, ID:16.6
10	09380-27001	CIRCLIP, 5TH DRIVE	1	
11	24130-02F10	SHAFT, DRIVE	1	
12	24311-06G00	GEAR, 1ST DRIVEN (NT:36)	1	
13	24312-02F00	BUSH, 1ST DRIVEN	1	
14	24321-02F11	GEAR, 2ND DRIVEN (NT:29)	1	
15	24322-02F01	BUSH, 2ND DRIVEN	1	
16	24331-02811	GEAR SET, 3RD DRIVEN (NT:27)	1	←24331−02810
17	24341-02811	GEAR SET, 4TH DRIVEN (NT:27)	1	←24341−02810
18	24351-02F13	GEAR, 5TH DRIVEN (NT:25)	1	
19	24361-06G00	GEAR, 6TH DRIVEN (NT:21)	1	
20	09160-27008	WASHER, 2ND DRIVEN GEAR	1	27X36X1
21	09167-27002	WASHER, 3RD & 4TH DRIVEN	1	27X36X2
22	24333-02F00	WASHER, 3RD DRIVEN	1	
23	24333-02F00	WASHER, 4TH DRIVEN	1	
24	09181-20251	WASHER, 1ST DRIVEN RH	1	20X34X1
25	09181-22223	WASHER, 1ST DRIVEN LH	1	22X34X1
26	09262-20082	BEARING, DRIVE SHAFT RH	1	20X52X15
27	09262-28040	BEARING, DRIVE SHAFT LH	1	28X68X20
28	09283-38020	SEAL, DRIVE SHAFT	1	38X52X8
29	09380-27001	CIRCLIP, 2ND DRIVEN	1	
30	09380-27001	CIRCLIP, 3RD DRIVEN	1	
31	09380-27001	CIRCLIP, 4TH DRIVEN	1	

REFER TO FIG.23A (E-6) FOR MODEL K4

FIG.23

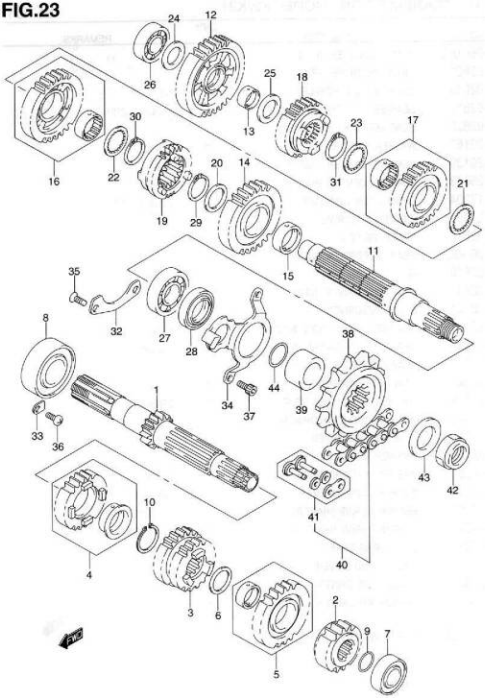

FIG.23 (E-5) TRANSMISSION (MODEL K2/K3)

REF NO.	PART NO.	DESCRIPTION	Q'TY	REMARKS
32	24741-06G00	RETAINER, DRIVE SHAFT	1	
33	24741-21A00	RETAINER, CENTER SHAFT	1	
34	24751-06G00	RETAINER, DRIVE SHAFT	1	
35	09126-06011	SCREW, DRIVE SHAFT (6X12)	2	
36	02112-06123	SCREW, CENTER SHAFT	1	
37	07130-06123	BOLT, DRIVE SHAFT OIL	2	
38	27510-20A20	SPROCKET, ENGINE (NT:17)	1	
39	27531-24B13	SPACER, SPROCKET	1	
40	27600-06G00-112	CHAIN ASSY (RK525SMOZ7)	1	
41	27620-06G00	·JOINT SET, CHAIN	1	
42	09159-20004	NUT	1	
43	09160-25009	WASHER (25X41X3)	1	
44	09280-24010	O RING (D:2.4, ID:23.7)	1	

REFER TO FIG.23A (E-6) FOR MODEL K4

FIG.23A

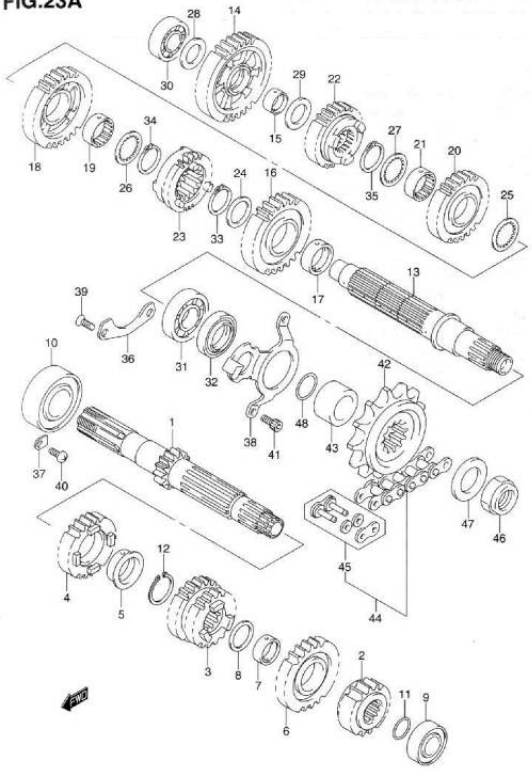

FIG.23A (E-6) TRANSMISSION (MODEL K4)

REF NO.	PART NO.	DESCRIPTION	QTY	REMARKS
1	24120-06G00	SHAFT, COUNTER (NT:12)	1	
2	24221-02F01	GEAR, 2ND DRIVE (NT:15)	1	
3	24231-02F20	GEAR, 3RD & 4TH DRIVE	1	NT:18/27
4	24251-02F11	GEAR, 5TH DRIVE (NT:23)	1	
5	24252-02F10	BUSH, 5TH DRIVE GEAR	1	
6	24261-06G00	GEAR, 6TH DRIVE (NT:23)	1	
7	24262-02F00	BUSH, 6TH DRIVE GEAR	1	
8	09181-22167	WASHER, 6TH DRIVE	1	22X30X1.0
9	09262-20139	BEARING, CENTER SHAFT LH	1	20X47X14
10	09262-25073	BEARING, CENTER SHAFT RH	1	25X62X17
11	09280-17004	O RING, CENTER SHAFT	1	D:1.9, ID:16.6
12	09380-27001	CIRCLIP, 5TH DRIVE	1	
13	24130-02F10	SHAFT, DRIVE	1	
14	24311-06G00	GEAR, 1ST DRIVEN (NT:36)	1	
15	24312-02F00	BUSH, 1ST DRIVEN	1	
16	24321-02F11	GEAR, 2ND DRIVEN (NT:29)	1	
17	24322-02F01	BUSH, 2ND DRIVEN	1	
18	24331-02F12	GEAR, 3RD DRIVEN (NT:27)	1	
19	24332-17E20	BUSH, 3RD DRIVEN GEAR	1	
20	24341-02F20	GEAR, 4TH DRIVEN (NT:27)	1	
21	24332-17E20	BUSH, 4TH DRIVEN GEAR	1	
22	24351-02F13	GEAR, 5TH DRIVEN (NT:25)	1	
23	24361-06G00	GEAR, 6TH DRIVEN (NT:21)	1	
24	09160-27008	WASHER, 2ND DRIVEN GEAR	1	27X36X1
25	09167-27002	WASHER, 3RD & 4TH DRIVEN	1	27X36X2
26	24333-02F00	WASHER, 3RD DRIVEN	1	
27	24333-02F00	WASHER, 4TH DRIVEN	1	
28	09181-20251	WASHER, 1ST DRIVEN RH	1	20X34X1
29	09181-22223	WASHER, 1ST DRIVEN LH	1	22X34X1

FIG.23A

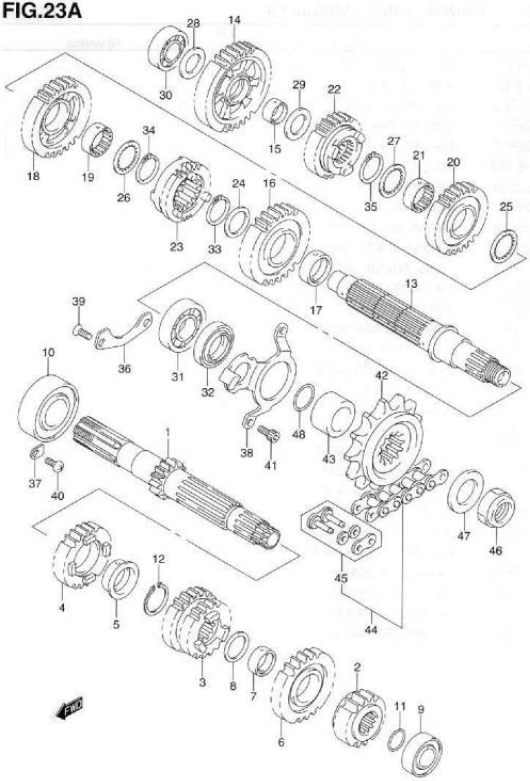

FIG.23A (E-7) TRANSMISSION (MODEL K4)

REF NO.	PART NO.	DESCRIPTION	QTY	REMARKS
30	09262-20082	BEARING, DRIVE SHAFT RH	1	20X52X15
31	09262-28040	BEARING, DRIVE SHAFT LH	1	28X68X20
32	09283-38020	SEAL, DRIVE SHAFT	1	38X52X8
33	09380-27001	CIRCLIP, 2ND DRIVEN	1	
34	09380-27001	CIRCLIP, 3RD DRIVEN	1	
35	09380-27001	CIRCLIP, 4TH DRIVEN	1	
36	24741-06G00	RETAINER, DRIVE SHAFT	1	
37	24741-21A00	RETAINER, CENTER SHAFT	1	
38	24751-06G00	RETAINER, DRIVE SHAFT	1	
39	09126-06011	SCREW, DRIVE SHAFT (6X12)	2	
40	02112-06123	SCREW, CENTER SHAFT	1	
41	07130-06123	BOLT, DRIVE SHAFT OIL	2	
42	27510-20A20	SPROCKET, ENGINE (NT:17)	1	
43	27531-24B13	SPACER, SPROCKET	1	
44	27600-06G00-112	CHAIN ASSY (RK525SMOZ7)	1	
45	27620-06G00	•JOINT SET, CHAIN	1	
46	09159-20004	NUT	1	
47	09160-25009	WASHER (25X41X3)	1	
48	09280-24010	O RING (D:2.4, ID:23.7)	1	

FIG.24

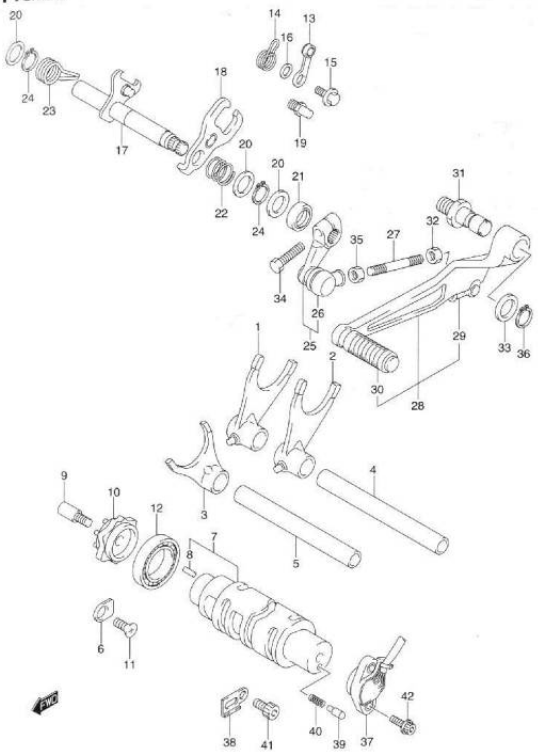

FIG.24 (E-8) GEAR SHIFTING

REF NO.	PART NO.	DESCRIPTION	Q'TY	REMARKS
1	25211-17E01	FORK, GEAR SHIFT NO.2	1	
2	25211-35F00	FORK, GEAR SHIFT NO.1	1	
3	25231-35F00	FORK, GEAR SHIFT NO.3	1	
4	25411-02F20	SHAFT, GEAR SHIFT FORK NO.2	1	
5	25411-02F20	SHAFT, GEAR SHIFT FORK NO.1	1	
6	24741-21A00	RETAINER, SHIFT CAM	2	
7	25310-02F10	CAM, GEAR SHIFT	1	
8	04221-04089	·PIN, SHIFT CAM	1	
9	25312-12C00	STOPPER, SHIFT CAM	1	
10-1	25381-13E10	PLATE, GEAR SHIFT	1	MODEL K2/K3
10-2	25381-13E00	PLATE, GEAR SHIFT	1	MODEL K4
11	09125-06110	SCREW, SHIFT CAM, 6X12	2	
12	08113-69050	BEARING, SHIFT CAM	1	
13	25350-06G00	STOPPER, SHIFT CAM	1	
14-1	25355-13E00	SPRING, STOPPER ARM	1	MODEL K2/K3
14-2	25355-38F00	SPRING, STOPPER ARM	1	MODEL K4
15	09111-06041	BOLT (6X14.3)	1	
16	08211-06141	WASHER	1	
17-1	25510-06G00	SHAFT, GEAR SHIFT	1	MODEL K2/K3
17-2	25510-06G10	SHAFT, GEAR SHIFT	1	MODEL K4
18	25512-06G00	PLATE, GEAR SHIFT	1	
19	25671-01011	STOPPER, GEAR SHIFT	1	
20	09181-14167	WASHER, GEAR SHIFT RH	3	14X22X1.0
21	09283-14006	SEAL, SHIFT SHAFT OIL	1	14X22X6.0
22	09440-17009	SPRING, GEAR SHIFT PLATE	1	
23	09444-20001	SPRING, SHIFT SHAFT	1	
24	08331-31146	CIRCLIP, GEAR SHIFT	2	
25	25520-06G00	ARM, GEAR SHIFT LINK	1	
26	25526-47000	·COVER, DUST	1	
27	25525-43510	ROD, GEAR SHIFT LINK	1	
28-1	25600-06G00	LEVER ASSY, GEAR SHIFT	1	MODEL K2/K3
28-2	25600-06G10	LEVER ASSY, GEAR SHIFT	1	MODEL K4
29	25526-47000	·COVER, DUST	1	
30	25652-20C00	·RUBBER	1	

FIG.24

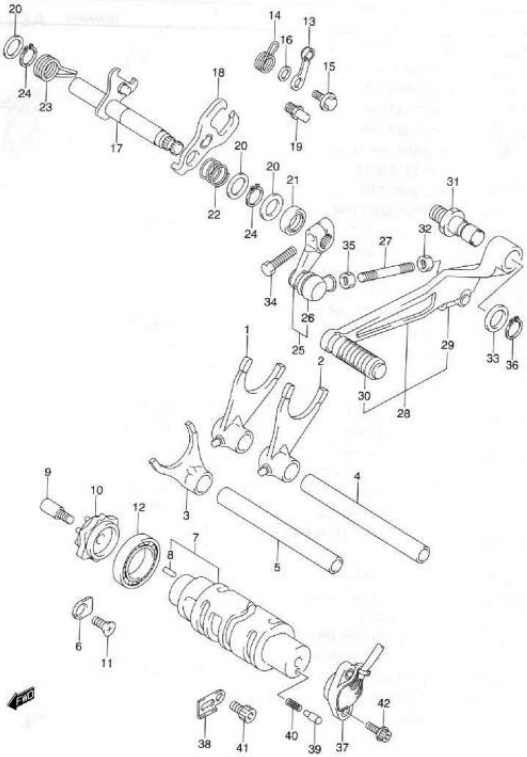

DL1000K2 E02_024
GEAR SHIFTING

FIG.24 (E-9) GEAR SHIFTING

REF NO.	PART NO.	DESCRIPTION	Q'TY	REMARKS
31	25617-03F00	SHAFT, GEAR SHIFT LEVER	1	
32	09140-06025	NUT	1	
33	09160-12011	WASHER (12.5X20X1)	1	
34	01500-06203	BOLT	1	
35	08310-00067	NUT	1	
36	08331-31126	CIRCLIP	1	
37	37730-06G00	BASE ASSY, GEAR SHIFT TERM	1	
38	31497-45000	CLAMP, GEAR SHIFT	1	
39	09209-05011	CONTACT, GEAR SHIFT	1	
40	09440-04010	SPRING, GEAR SHIFT SW	1	
41	07130-05103	SCREW, CLAMP	1	
42	07120-05163	SCREW, GEAR SHIFT SW	2	

FIG.25

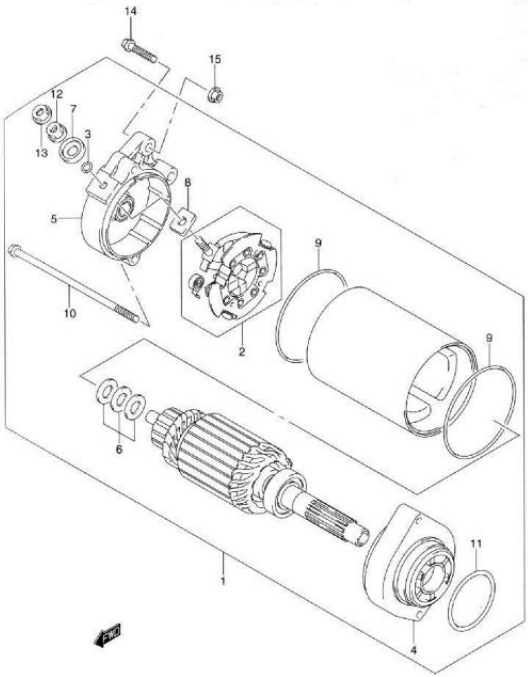

FIG.25 (F-2) STARTING MOTOR

REF NO.	PART NO.	DESCRIPTION	Q'TY	REMARKS
1	31100-06G00	MOTOR ASSY, STARTING	1	
2	31132-45C00	·HOLDER SET, BRUSH	1	
3	31143-38300	·O RING	1	
4	31150-44B10	·HOUSING	1	
5	31170-02F10	·FRAME	1	
6	31170-43400	·SHIM SET	1	
7	31172-38300	·BUSHING	1	
8	31173-88C00	·BUSHING	1	
9	31264-44110	·O RING	2	
10	31281-24B10	·BOLT	2	
11	31156-48B00	·O RING	1	
12	08310-00067	·NUT	1	
13	08361-35068	·NUT	1	
14	09103-06212	BOLT (6X25)	2	
15	08361-35068	NUT	1	

FIG.26

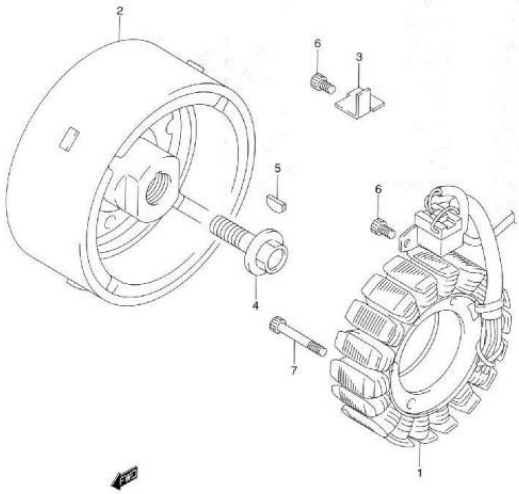

FIG.26 (F-3) MAGNETO

REF NO.	PART NO.	DESCRIPTION	QTY	REMARKS
1-1	32101-06G00	STATOR ASSY	1	MODEL K2
1-2	32101-06G10	STATOR ASSY	1	MODEL K3/K4
2-1	32102-06G00	ROTOR ASSY	1	MODEL K2
2-2	32102-06G10	ROTOR ASSY	1	MODEL K3/K4
3	32371-13E00	CLAMP, MAGNETO	1	
4	32491-06G00	BOLT, ROTOR	1	
5	09420-04008	KEY	1	
6	07130-05103	BOLT, PICK UP	3	
7	07130-06353	BOLT, STATOR	3	

FIG.27

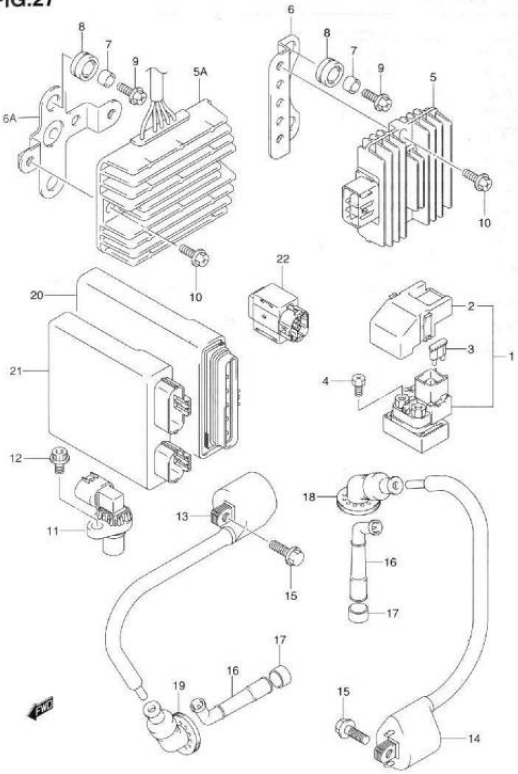

DL1000K2 E02_027
ELECTRICAL

FIG.27 (F-4) ELECTRICAL

REF NO.	PART NO.	DESCRIPTION	Q'TY	REMARKS
1	31800-06G00	RELAY ASSY, STARTING	1	
2	31861-47E00	·COVER, RELAY ASSY	1	←31861-21E20
3	09481-30101	·FUSE, 30A	2	
4	09128-06013	BOLT (6X8)	2	
5	32800-42F00	RECTIFIER ASSY	1	MODEL K2
5A	32800-06G00	RECTIFIER ASSY	1	MODEL K3/K4
6	32831-06G00	BRACKET, RECTIFIER	1	MODEL K2
6A	32831-06G10	BRACKET, RECTIFIER	1	MODEL K3/K4
7	09180-06258	SPACER (6.5X9X6.7)	2	
8	09320-09036	CUSHION	2	
9	02162-06203	BOLT, BRACKET	2	
10	02162-06203	BOLT, RECTIFIER	2	
11	33220-80G00	SENSOR ASSY, CAM POSITION	1	
12	07130-06163	BOLT	1	
13	33410-06G00	COIL ASSY, IGNITION	1	
14	33420-06G00	COIL ASSY, IGNITION	1	
15	01547-06203	BOLT	4	
16-1	33510-11D00	CAP ASSY, SPARK PLUG	2	MODEL K2/K3
16-2	33510-17G00	CAP ASSY, SPARK PLUG	2	MODEL K4
17	33541-23E01	SEAL, SPARK PLUG CAP	2	
18	33542-06G00	SEAL, HIGH TENSION CORD, RR	1	
19	33542-06G10	SEAL, HIGH TENSION CORD, FR	1	
20-1	32920-06G00	CONTROL UNIT, FI	1	MODEL K2/K3 E2, E19
20-2	32920-06G10	CONTROL UNIT, FI	1	MODEL K2/K3 E24
20-3	32920-06G30	CONTROL UNIT, FI	1	MODEL K2 P37
21-1	32920-06G40	CONTROL UNIT, FI	1	MODEL K4 E2, E19
21-2	32920-06G50	CONTROL UNIT, FI	1	MODEL K4 E24
22-1	33960-06G00	SENSOR ASSY, FUEL CUT	1	MODEL K2
22-2	33960-06G10	SENSOR ASSY, FUEL CUT	1	MODEL K3/K4

FIG.28

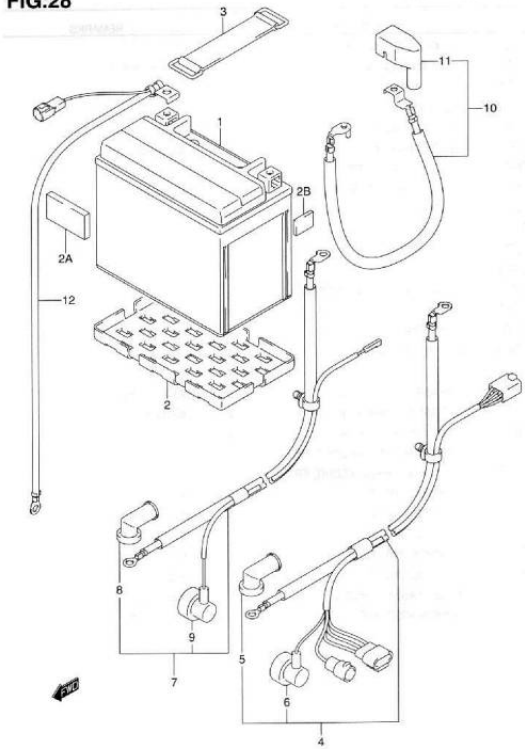

DL1000K2 E02_028
BATTERY

FIG.28 (F-5) BATTERY

REF NO.	PART NO.	DESCRIPTION	Q'TY	REMARKS
1	33610-26D10	BATTERY ASSY	1	YTX14-BS, 12V12AH
2-1	33652-05G00	PROTECTOR, BATTERY	1	MODEL K2/K3
2-2	33652-16G00	PROTECTOR, BATTERY	1	MODEL K4
2A	33652-28010	PROTECTOR, BATTERY	1	20X45X6
2B	33651-37000	PROTECTOR, BATTERY (170X95X3)	1	MODEL K4 CUT AS REQUIRED PROFILE (12X20
3	09462-00007	BAND, BATTERY	1	
4	33810-06G00	WIRE, STARTER MOTOR LEAD	1	
5	31861-48B10	·CAP, STARTER MOTOR	1	
6	36618-43410	·CAP, OIL PRESSURE	1	
7	33810-06G10	WIRE, STARTER MOTOR LEAD	1	E24
8	31861-48B10	·CAP, STARTER MOTOR	1	E24
9	36618-43410	·CAP, OIL PRESSURE	1	E24
10	33820-06G00	WIRE, BATTERY PLUS LEAD	1	
11	33624-38400	·CAP, BATTERY PLUG	1	
12	33860-06G00	WIRE, BATTERY MINUS	1	

FIG.29

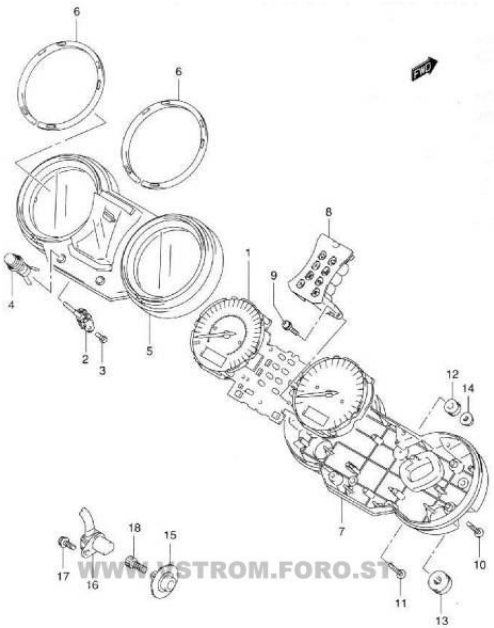

WWW.VSTROM.FORO.ST

FIG.29 (G-2) SPEEDOMETER (MODEL K2/K3)

REF NO.	PART NO.	DESCRIPTION	Q'TY	REMARKS
1-1	34120-06G10	SPEEDOMETER (MILE/KILO)	1	MODEL K2
1-2	34120-06G40	SPEEDOMETER (MILE/KILO)	1	MODEL K3
1-3	34120-06G00	SPEEDOMETER (KILO)	1	MODEL K2 E19, E24, P37
1-4	34120-06G30	SPEEDOMETER (KILO)	1	MODEL K3 E19, E24, P37
2	34123-06G00	SWITCH LEVER	2	
3	34183-06G00	SCREW (3X10)	4	
4	34124-06G00	SWITCH GUM	2	
5	34150-06G00	UPPER CASE	1	
6	34188-06G00	DAMPER	2	
7	34111-06G00	LOWER CASE	1	
8	34165-06G00	INNER CASE	1	
9	34149-31F10	SCREW (3X14)	2	
10	09132-03008	SCREW (3X16)	7	
11	34383-31F10	SCREW (3X16)	3	
12	34189-32B00	CUSHION, METER NO.1	1	
13	34955-13E00	CUSHION, METER NO.2	2	
14	09159-05044	NUT	1	
15	34981-35F00	ROTOR, SPEED	1	
16	34990-47F00	SENSOR, SPEED	1	
17	07120-05103	BOLT, SPEED SENSOR	1	
18	07130-08253	BOLT, SPEED ROTOR	1	

REFER TO FIG.29A (G-3) FOR MODEL K4

3

FIG.29A

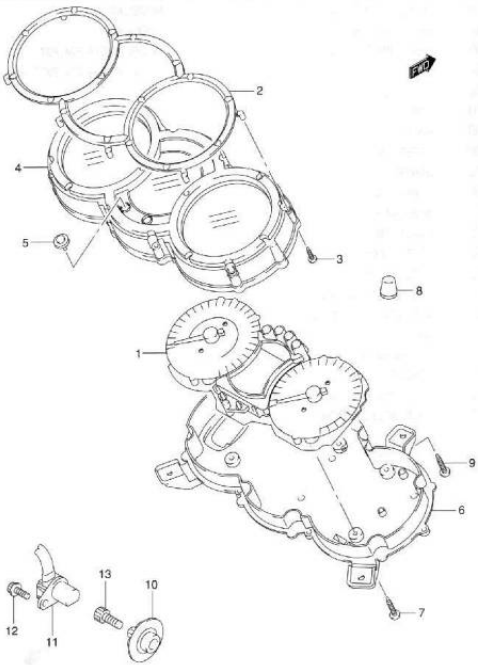

DL1000K2 E02_029A
SPEEDOMETER

FIG.29A (G-3) SPEEDOMETER (MODEL K4)

REF NO.	PART NO.	DESCRIPTION	Q'TY	REMARKS
1-1	34120-06G60	SPEEDOMETER (MILE/KILO)	1	
1-2	34120-06G50	SPEEDOMETER (KILO)	1	E19, E24
2	34193-06G50	RING	1	
3	34183-31F10	SCREW	8	
4	34150-27G00	CASE, UPPER	1	
5	34124-24F00	KNOB	2	
6	34111-27G00	CASE, LOWER	1	
7	09132-03008	SCREW (3X16)	14	
8	34955-10G00	CUSHION, SPEEDOMETER	2	
9	03541-05203	SCREW	4	
10	34981-35F00	ROTOR, SPEED	1	
11	34990-47F00	SENSOR, SPEED	1	
12	07120-05103	BOLT, SPEED SENSOR	1	
13	07130-08253	BOLT, SPEED ROTOR	1	

FIG.30

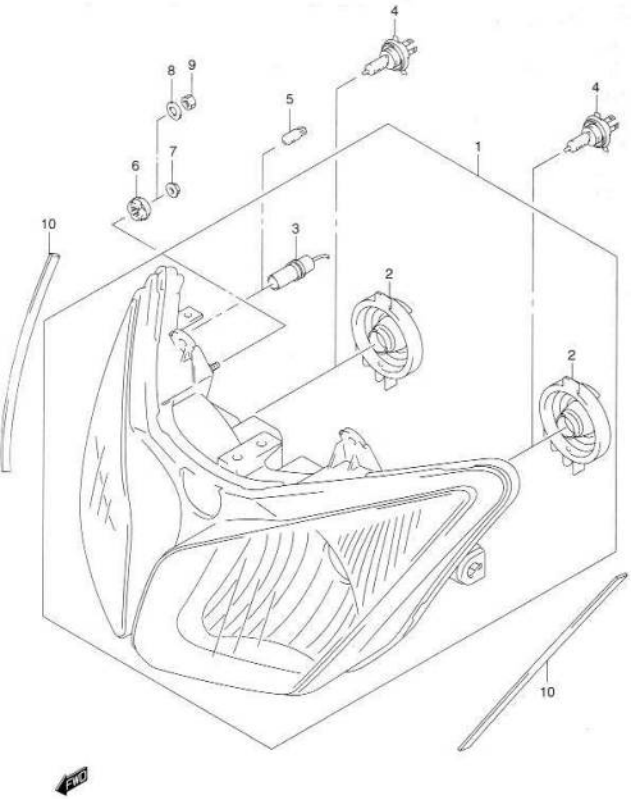

FIG.30 (G-4) HEADLAMP

REF NO.	PART NO.	DESCRIPTION	Q'TY	REMARKS
1	35100-06G20-999	HEADLAMP ASSY	1	
2	35125-77A00	·SOCKET, COVER	2	
3	36118-06G50	·CORE ASSY	1	
4	09471-12182	BULB (12V, 60/55W, H4)	2	
5	09471-12216	BULB (12V, 5W)	1	
6	09320-09010	CUSHION	4	
7	09159-06086	NUT	4	MODEL K2/K3
8	09160-06088	WASHER, 6.5X20X1.6	4	MODEL K4
9	08310-00063	NUT	4	MODEL K4
10	33652-06G10	CUSHION, HEADLAMP	2	

REFER TO FIG.30A (G-5) FOR E19, P37
REFER TO FIG.30B (G-6) FOR E24

3

FIG.30A

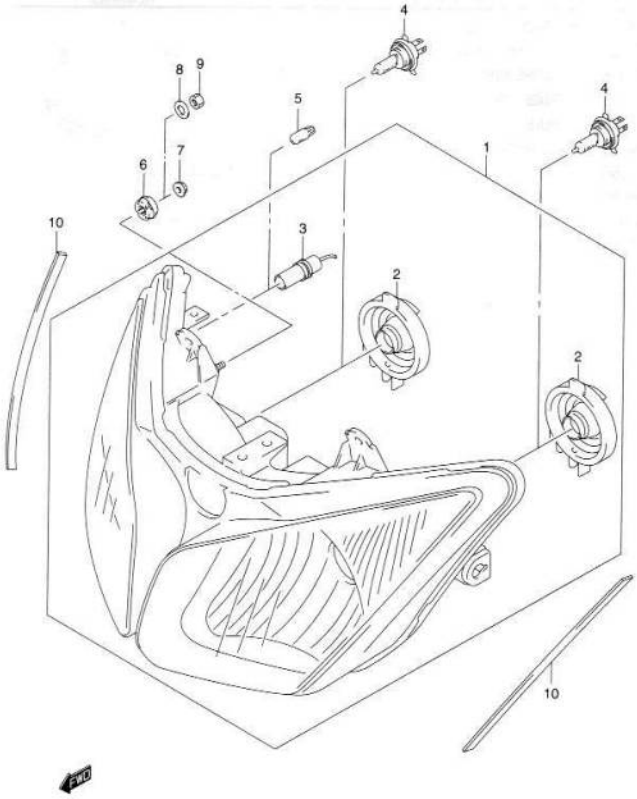

FIG.30A (G-5) HEADLAMP (E19, P37)

REF NO.	PART NO.	DESCRIPTION	Q'TY	REMARKS
1	35100-06G50-999	HEADLAMP ASSY	1	
2	35125-77A00	·SOCKET, COVER	2	
3	36118-06G50	·CORD ASSY	1	
4	09471-12182	BULB (12V, 60/55W, H4)	2	
5	09471-12216	BULB (12V, 5W)	1	
6	09320-09010	CUSHION	4	
7	09159-06086	NUT	4	MODEL K2/K3
8	09160-06088	WASHER, 6.5X20X1.6	4	MODEL K4
9	08310-00063	NUT	4	MODEL K4
10	33652-06G10	CUSHION, HEADLAMP	2	

REFER TO FIG.30B (G-6) FOR E24

FIG.30B

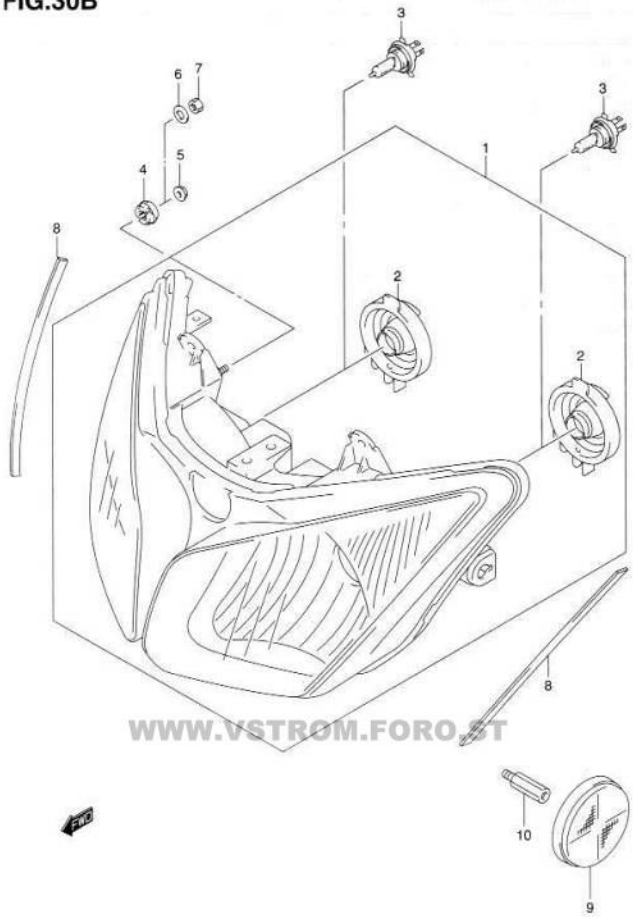

WWW.VSTROM.FORO.ST

FIG.30B (G-6) HEADLAMP (E24)

REF NO.	PART NO.	DESCRIPTION	Q'TY	REMARKS
1	35100-06G30-999	HEADLAMP ASSY	1	
2	35125-77A00	·SOCKET, COVER	2	
3	09471-12182	BULB (12V, 60/55W, H4)	2	
4	09320-09010	CUSHION	4	
5	09159-06086	NUT	4	MODEL K2/K3
6	09160-06088	WASHER, 6.5X20X1.6	4	MODEL K4
7	08310-00063	NUT	4	MODEL K4
8	33652-06G10	CUSHION, HEADLAMP	2	
9	35950-14A00	REFLEX REFLECTOR ASSY, FRONT	2	
10	09119-05023	BOLT	2	

FIG.31

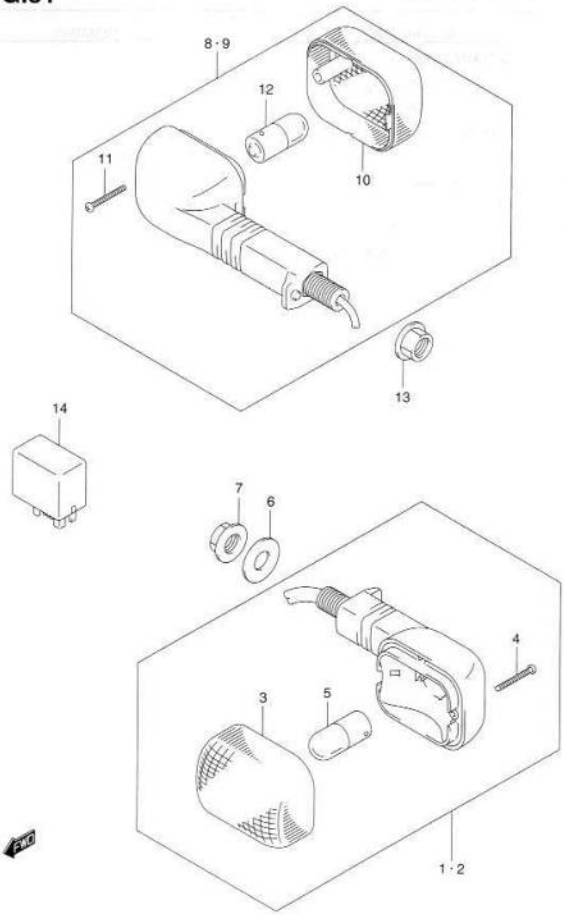

FIG.31 (G-7) TURNSIGNAL LAMP (MODEL K2/K3)

REF NO.	PART NO.	DESCRIPTION	Q'TY	REMARKS
1-1	35601-06G00	LAMP ASSY, FRONT TURNSIGNAL RH	1	
1-2	35601-06G30	LAMP ASSY, FRONT TURNSIGNAL RH	1	E24
2-1	35602-06G00	LAMP ASSY, FRONT TURNSIGNAL LH	1	
2-2	35602-06G30	LAMP ASSY, FRONT TURNSIGNAL LH	1	E24
3	35612-06G00	·LENS	2	
4	35623-06G00	·SCREW	2	
5	09471-12177	·BULB (12V, 10W)	2	
6	09160-12092	WASHER	2	
7	08316-10123	NUT	2	
8	35601-06G00	LAMP ASSY, REAR TURNSIGNAL RH	1	
9	35602-06G00	LAMP ASSY, REAR TURNSIGNAL LH	1	
10	35612-06G00	·LENS	2	
11	35623-06G00	·SCREW	2	
12	09471-12177	·BULB (12V, 10W)	2	
13	08316-10123	NUT	2	
14	38610-12FA0	RELAY ASSY, TURNSIGNAL LAMP	1	

REFER TO FIG.31A (G-8) FOR MODEL K4

FIG.31A

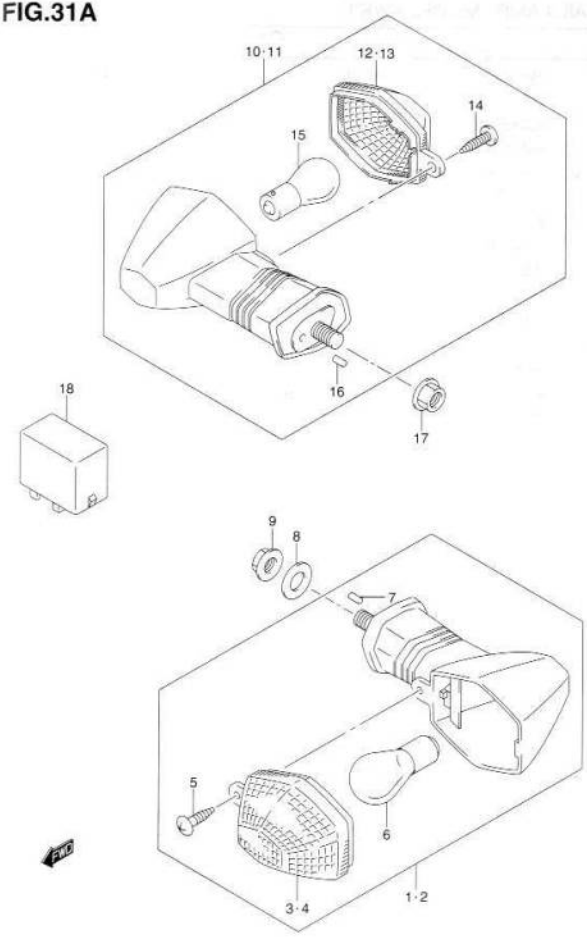

FIG.31A (G-8) TURNSIGNAL LAMP (MODEL K4)

REF NO.	PART NO.	DESCRIPTION	Q'TY	REMARKS
1	35601-27G00	LAMP ASSY, FRONT TURNSIGNAL RH	1	
2	35602-27G00	LAMP ASSY, FRONT TURNSIGNAL LH	1	
3	35612-31F30	•LENS	2	
4	35632-31F30	•LENS, LH	1	
5	03242-04163	•SCREW, RH	1	
6	09471-12045	•BULB(12V,21W)	2	
7	09202-04017	•PIN	2	
8	09160-12092	WASHER	2	
9	08316-10123	NUT	2	
10	35603-06G10	LAMP ASSY, REAR TURNSIGNAL RH	1	
11	35604-06G10	LAMP ASSY, REAR TURNSIGNAL LH	1	
12	35632-31F30	•LENS, RH	2	
13	35612-31F30	•LENS, LH	1	
14	03242-04163	•SCREW	2	
15	09471-12045	•BULB (12V,21W)	2	
16	09202-04017	•PIN	2	
17	08316-10123	NUT	2	
18	38610-03F00	RELAY ASSY, TURNSIGNAL LAMP	1	

FIG.32

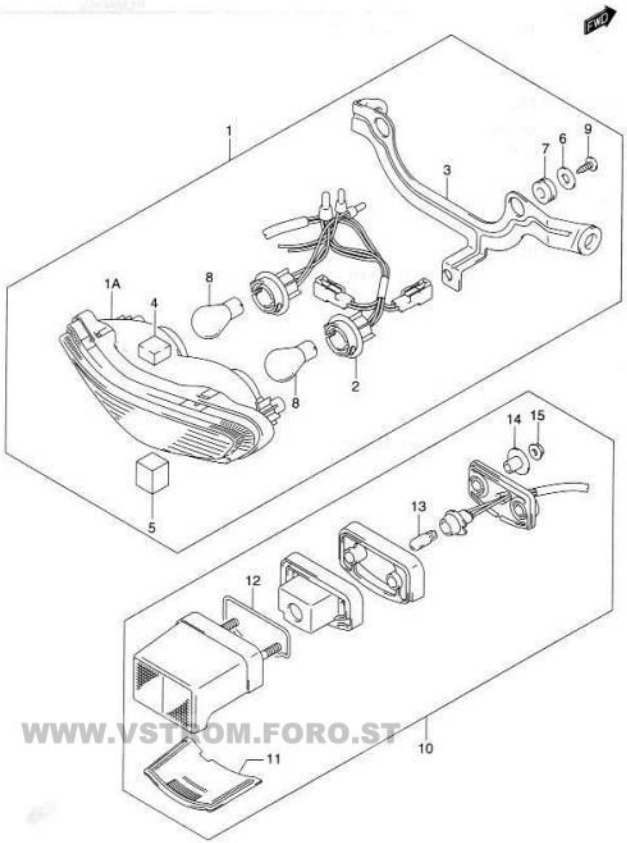

WWW.VSTROM.FORO.ST

FIG.32 (G-9) TAIL LAMP (MODEL K2/K3)

REF NO.	PART NO.	DESCRIPTION	Q'TY	REMARKS
1	35710-06G00	LAMP ASSY, REAR COMBINATION	1	
1A	35720-06G00	·UNIT	1	COLOR : RED SMOKE
2	35718-06G00	·SOCKET & CORD	1	
3	35726-06G00	·BRACKET	1	
4	35734-06G00	·CUSHION, UPPER (20X20X12)	1	
5	35739-06G00	·CUSHION, LOWER (20X20X25)	1	
6	09160-05501	·WASHER (5.5X20X1.2)	2	
7	09320-10049	·CUSHION	2	
8	09471-12083	·BULB (12V, 21/5W)	2	
9	03242-05163	·SCREW	2	
10	35910-06G00	LAMP ASSY, LICENSE	1	
11	35912-08F00	·LENS	1	
12	35913-08F00	·GASKET	1	
13	09471-12081	·BULB (12V, 5W)	1	
14	35766-08F00	·SPACER	2	
15	08316-20063	·NUT	2	

REFER TO FIG.32A (G-10) FOR MODEL K4

FIG.32A

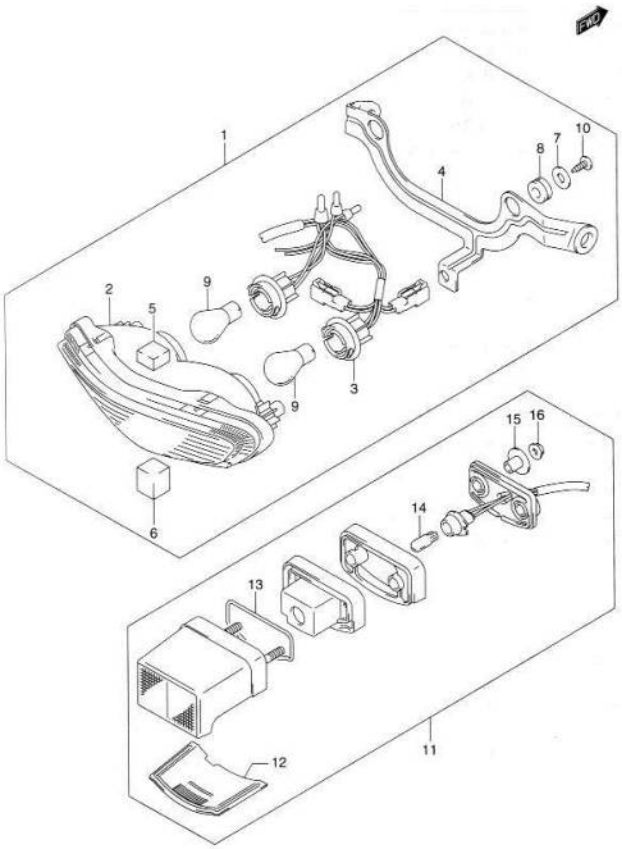

FIG.32A (G-10) TAIL LAMP (MODEL K4)

REF NO.	PART NO.	DESCRIPTION	Q'TY	REMARKS
1	35710-06G50	LAMP ASSY, REAR COMBINATION	1	
2	35720-06G00	·UNIT	1	COLOR : RED SMOKE
3	35718-06G50	·SOCKET & CORD	1	
4	35726-06G00	·BRACKET	1	
5	35734-06G00	·CUSHION, UPPER (20X20X12)	1	
6	35739-06G00	·CUSHION, LOWER (20X20X25)	1	
7	09160-05501	·WASHER (5.5X20X1.2)	2	
8	09320-10049	·CUSHION	2	
9	09471-12083	·BULB (12V, 21/5W)	2	
10	03242-05163	·SCREW	2	
11	35910-06G01	LAMP ASSY, LICENSE	1	
12	35912-08F00	·LENS	1	
13	35913-08F00	·GASKET	1	
14	09471-12216	·BULB (12V, 5W)	1	
15	35766-27G30	·SPACER	2	
16	08316-20063	·NUT	2	

3

FIG.33

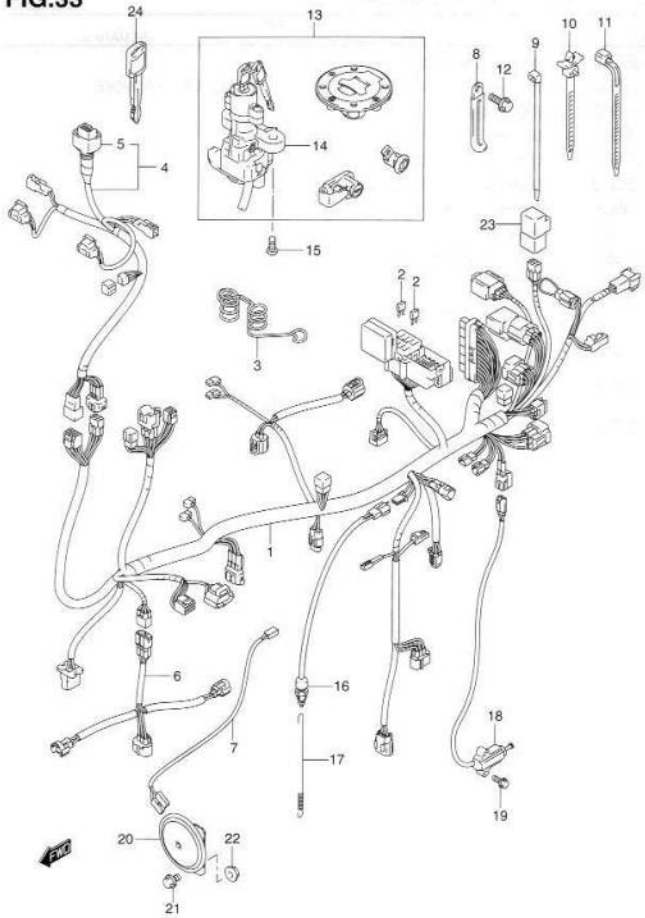

FIG.33 (G-11) WIRING HARNESS (MODEL K2)

REF NO.	PART NO.	DESCRIPTION	Q'TY	REMARKS
1-1	36610-06G00	HARNESS, WIRING NO.1	1	
1-2	36610-06G10	HARNESS, WIRING NO.1	1	E24
2-1	09481-10501	·FUSE (10A)	4	
2-2	09481-15501	·FUSE (15A)	2	
3	36619-06G00	GUIDE, WIRING HARNESS	1	
4-1	36620-06G00	HARNESS, WIRING NO.2	1	
4-2	36620-06G10	HARNESS, WIRING NO.2	1	E24
5	36618-33E00	·COVER, SPEEDOMETER	1	
6	36859-06G00	WIRE, INJECTOR LEAD	1	
7	36852-06G00	WIRE, HORN LEAD	1	
8	09404-06432	CLAMP (L:80)	2	
9	09407-14407	CLAMP (L:145)	2	
10	09407-14408	CLAMP (L:120)	1	
11	09407-14403	CLAMP (L:125)	3	
12	01550-06103	BOLT	1	
13-1	37000-06860	LOCK SET	1	
13-2	37000-06880	LOCK SET	1	E24
14-1	37100-06G00	·LOCK ASSY, STEERING	1	
14-2	37100-06G10	·LOCK ASSY, STEERING	1	E24
15	09139-08016	SCREW (8X20)	2	
16	37740-31D00	SWITCH ASSY, STOP LAMP	1	
17	43259-06G00	SPRING, STOP LAMP	1	
18	37840-06G00	SWITCH ASSY, SIDE STAND	1	
19	01550-06163	BOLT	2	
20	38500-41F00	HORN ASSY	1	
21	01550-08123	BOLT	1	
22	08316-10083	NUT	1	
23	38740-24X50	RELAY ASSY, FUEL PUMP	1	
24	37146-33E00	KEY, BLANK	1	OPT

REFER TO FIG.33A (G-12) FOR MODEL K3
REFER TO FIG.33B (G-13) FOR MODEL K4

FIG.33A

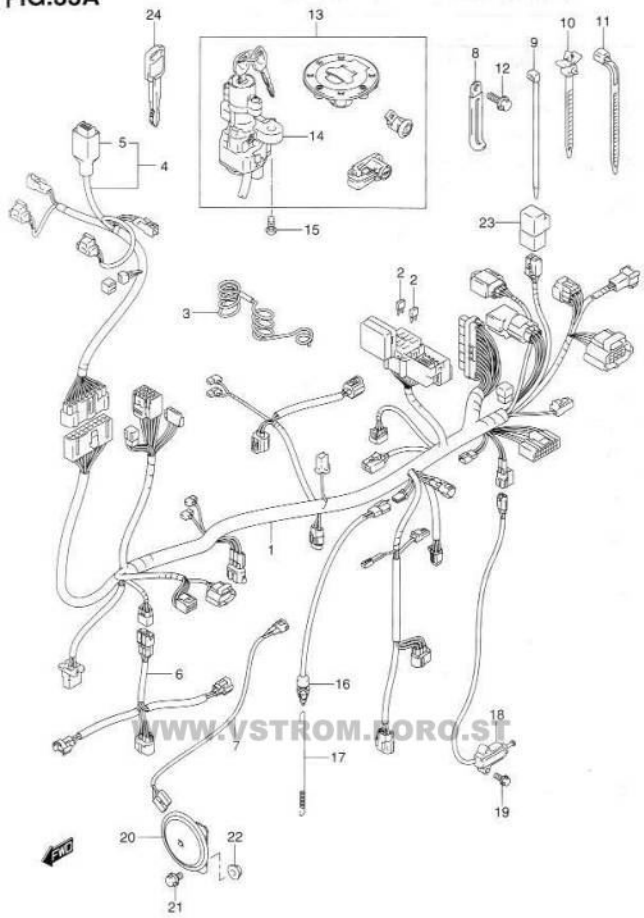

WWW.VSTROM.FORO.ST

DL1000K2 E02_033A
WIRING HARNESS

FIG.33A (G-12) WIRING HARNESS (MODEL K3)

REF NO.	PART NO.	DESCRIPTION	Q'TY	REMARKS
1-1	36610-06G20	HARNESS, WIRING NO.1	1	
1-2	36610-06G30	HARNESS, WIRING NO.1	1	E24
2-1	09481-10501	·FUSE (10A)	1	
2-2	09481-15501	·FUSE (15A)	5	
3	36619-06G00	GUIDE, WIRING HARNESS	1	
4-1	36620-06G00	HARNESS, WIRING NO.2	1	
4-2	36620-06G10	HARNESS, WIRING NO.2	1	E24
5	36618-33E00	·COVER, SPEEDOMETER	1	
6	36859-06G00	WIRE, INJECTOR LEAD	1	
7	36852-06G00	WIRE, HORN LEAD	1	
8-1	09404-06432	CLAMP (L:80, T:1.0)	1	
8-2	09404-06431	CLAMP (L:80, T:0.7)	1	
9	09407-14407	CLAMP (L:145)	2	
10-1	09407-14408	CLAMP (L:120)	1	
10-2	09407-17401	CLAMP (L:150)	1	
11	09407-14403	CLAMP (L:125)	3	
12	01550-06103	BOLT	1	
13-1	37000-06860	LOCK SET	1	
13-2	37000-06880	LOCK SET	1	E24
14-1	37100-06G00	·LOCK ASSY, STEERING	1	
14-2	37100-06G10	·LOCK ASSY, STEERING	1	E24
15	09139-08016	SCREW (8X20)	2	
16	37740-31D00	SWITCH ASSY, STOP LAMP	1	
17	43259-06G00	SPRING, STOP LAMP	1	
18	37840-06G00	SWITCH ASSY, SIDE STAND	1	
19	01550-06163	BOLT	2	
20	38500-41F00	HORN ASSY	1	
21	01550-08123	BOLT	1	
22	08316-10083	NUT	1	
23	38740-24X50	RELAY ASSY, FUEL PUMP	1	
24	37146-33E00	KEY, BLANK	1	OPT

REFER TO FIG.33B (G-13) FOR MODEL K4

FIG.33B

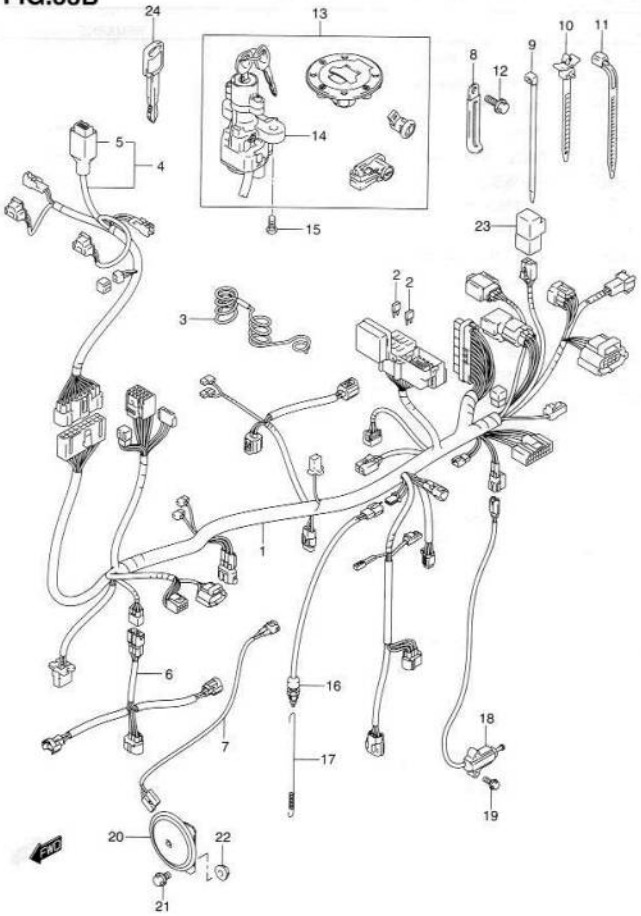

DL1000K2 E02_033B
WIRING HARNESS

FIG.33B (G-13) WIRING HARNESS (MODEL K4)

REF NO.	PART NO.	DESCRIPTION	Q'TY	REMARKS
1-1	36610-06G40	HARNESS, WIRING NO.1	1	
1-2	36610-06G50	HARNESS, WIRING NO.1	1	E24
2-1	09481-10501	·FUSE (10A)	2	
2-2	09481-15501	·FUSE (15A)	4	
3	36619-06G01	GUIDE, WIRING HARNESS	1	
4-1	36620-27G10	HARNESS, WIRING NO.2	1	
4-2	36620-27G30	HARNESS, WIRING NO.2	1	E24
5	36618-18G10	·COVER, SPEEDOMETER	1	
6	36859-06G00	WIRE, INJECTOR LEAD	1	
7	36852-06G00	WIRE, HORN LEAD	1	
8-1	09404-06429	CLAMP (L:45)	1	
8-2	09404-06431	CLAMP (L:80)	1	
9	09407-14407	CLAMP (L:145)	1	
10	09407-17401	CLAMP (L:150)	1	
11	09407-14403	CLAMP (L:125)	3	
12	01547-06103	BOLT	1	
13-1	37000-06860	LOCK SET	1	
13-2	37000-06880	LOCK SET	1	MODEL K2/K3 E24
13-3	37000-06860	LOCK SET	1	MODEL K4 E24
14-1	37100-06G00	·LOCK ASSY, STEERING	1	
14-2	37100-06G10	·LOCK ASSY, STEERING	1	MODEL K2/K3 E24
14-3	37100-06G00	·LOCK ASSY, STEERING	1	MODEL K4 E24
15	09139-08016	SCREW (8X20)	2	
16	37740-31D00	SWITCH ASSY, STOP LAMP	1	
17	43259-06G00	SPRING, STOP LAMP	1	
18	37840-06G00	SWITCH ASSY, SIDE STAND	1	
19	01550-06163	BOLT	2	
20	38500-41F00	HORN ASSY	1	
21	01550-08123	BOLT	1	
22	08316-10083	NUT	1	
23	38740-24X50	RELAY ASSY, FUEL PUMP	1	
24	37146-33E00	KEY, BLANK	1	OPT

FIG.34

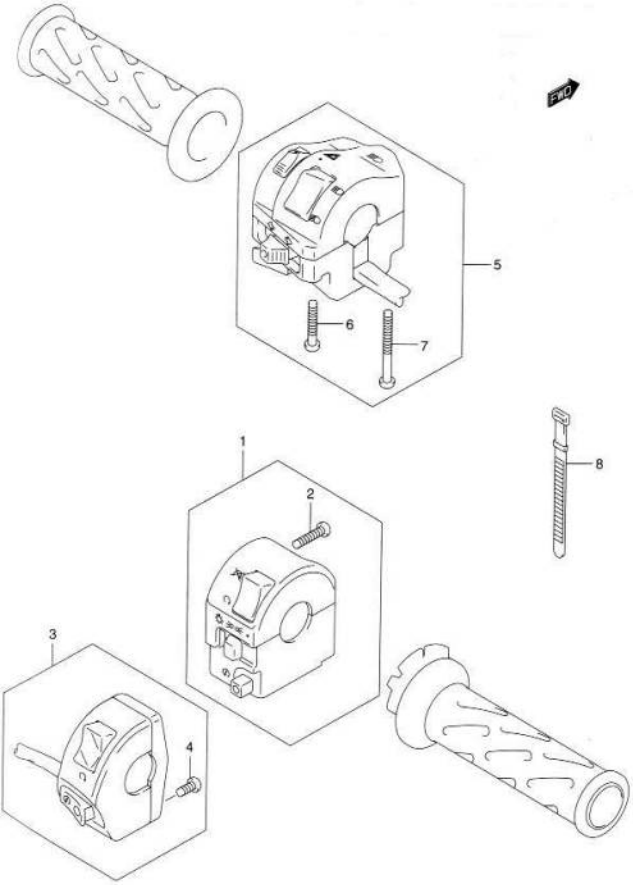

DL1000K2 E02_034
HANDLE SWITCH

FIG.34 (G-14) HANDLE SWITCH (MODEL K2)

REF NO.	PART NO.	DESCRIPTION	Q'TY	REMARKS
1	37200-06G10	SWITCH ASSY, HANDLE RH	1	
2	02112-05455	·SCREW	2	
3	37200-06G30	SWITCH ASSY, HANDLE RH	1	E24
4	02112-05223	·SCREW	2	E24
5-1	37400-06G10	SWITCH ASSY, HANDLE LH	1	
5-2	37400-06G40	SWITCH ASSY, HANDLE RH	1	E24
6	02112-05305	·SCREW	1	
7	02112-05403	·SCREW	1	
8	09407-12402	CLAMP (L:120)	2	

REFER TO FIG.34A (G-15) FOR MODEL K3/K4

FIG.34A

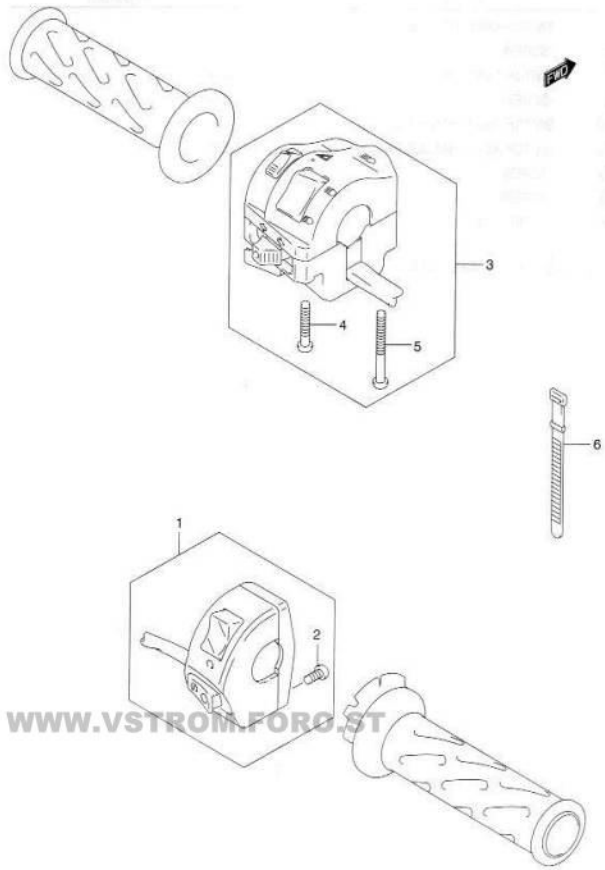

WWW.VSTROM.FORO.ST

FIG.34A (G-15) HANDLE SWITCH (MODEL K3/K4)

REF NO.	PART NO.	DESCRIPTION	Q'TY	REMARKS
1	37200-06G30	SWITCH ASSY, HANDLE RH	1	
2	02112-05223	·SCREW	2	
3-1	37400-06G10	SWITCH ASSY, HANDLE LH	1	
3-2	37400-06G40	SWITCH ASSY, HANDLE RH	1	MODEL K2/K3 E24
3-3	37400-06G10	SWITCH ASSY, HANDLE RH	1	MODEL K4 E24
4	02112-05305	·SCREW	1	
5	02112-05403	·SCREW	1	
6	09407-12402	CLAMP (L:120)	2	

FIG.35

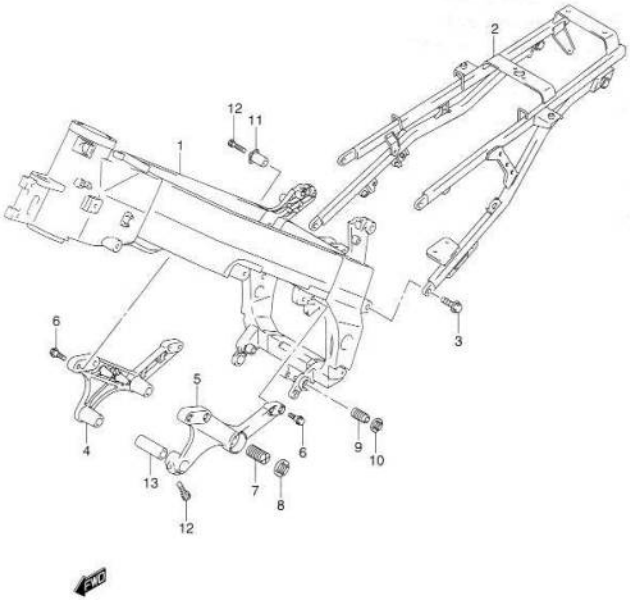

FIG.35 (H-2) FRAME

REF NO.	PART NO.	DESCRIPTION	Q'TY	REMARKS
1	41100-06G00-YD8	FRAME (SILVER)	1	
2	41200-06G00	RAIL, SEAT	1	
3	01550-10303	BOLT	4	
4-1	41911-06G00-YD8	BRACKET, MOUNT RH (SILVER)	1	MODEL K2/K3
4-2	41911-06G01-YD8	BRACKET, MOUNT RH (SILVER)	1	MODEL K4
5-1	41912-06G00-YD8	BRACKET, MOUNT LH (SILVER)	1	MODEL K2/K3
5-2	41912-06G01-YD8	BRACKET, MOUNT LH (SILVER)	1	MODEL K4
6	09106-08121	BOLT	8	
7-1	41921-19F11	BOLT, ADJUSTER CENTER	1	MODEL K2/K3
7-2	41923-16G00	BOLT, ADJUSTER CENTER	1	MODEL K4
8	41922-19F00	NUT, ADJUSTER CENTER	1	
9-1	41921-33E11	BOLT, ADJUSTER LOWER	1	MODEL K2/K3
9-2	41921-16G00	BOLT, ADJUSTER LOWER	1	MODEL K4
10	41922-33E00	NUT, ADJUSTER LOWER	1	
11	41941-19F01	SPACER, ADJUSTER UPPER	1	
12	09106-08149	BOLT	2	
13	41198-02F00	SPACER, HEAD FRONT LH	1	

FIG.36

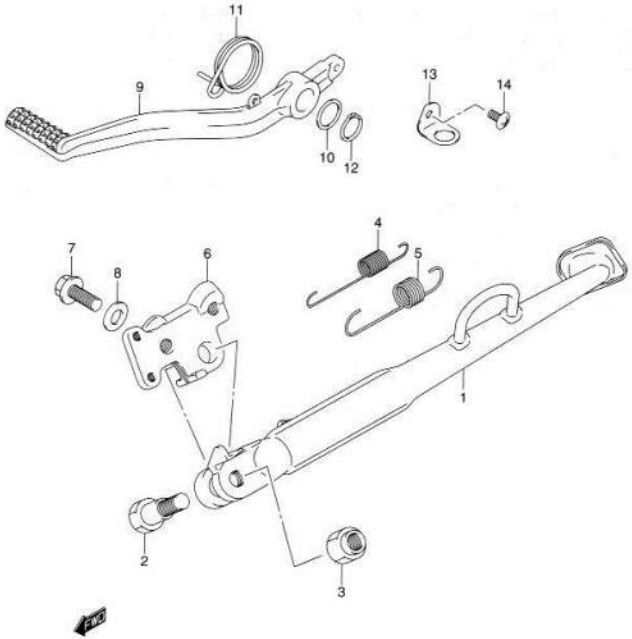

FIG.36 (H-3) STAND

REF NO.	PART NO.	DESCRIPTION	Q'TY	REMARKS
1	42310-06G00	STAND, PROP	1	
2	09111-10058	BOLT	1	
3	42321-03FK0	NUT	1	
4	09443-14058	SPRING, INNER	1	
5	09443-19011	SPRING, OUTER	1	
6	42330-06G00	BRACKET, PROP STAND	1	
7	09100-12084	BOLT	2	
8	09160-12061	WASHER	2	
9	43111-06G00	PEDAL, BRAKE	1	
10	09160-18022	WASHER	1	
11	09448-41005	SPRING	1	
12	08331-31186	CLIP	1	
13	43251-06G00	BRACKET, STOP SWITCH	1	
14	02142-06123	SCREW	1	

FIG.37

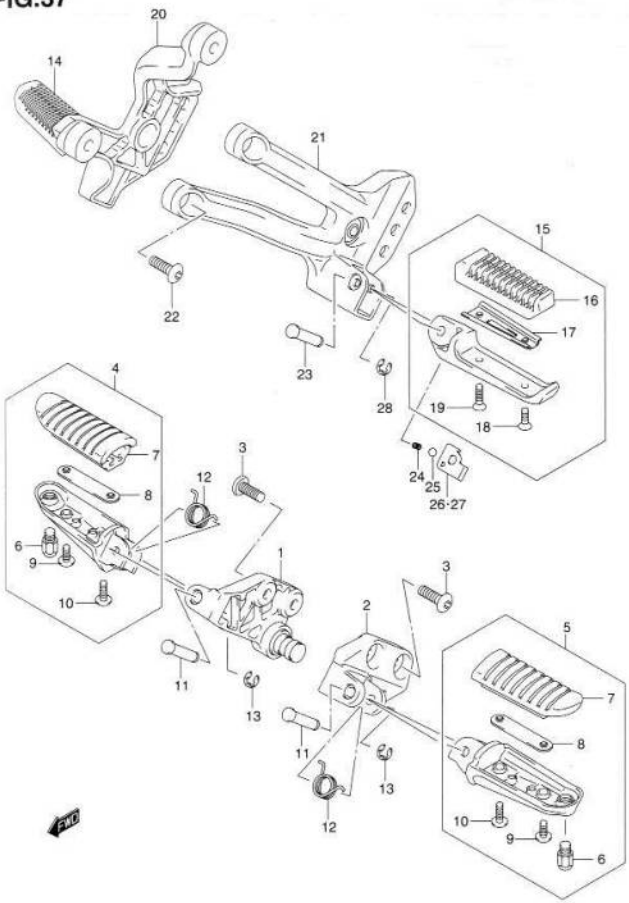

FIG.37 (H-4) FOOTREST

REF NO.	PART NO.	DESCRIPTION	Q'TY	REMARKS
1	43510-06G00	BRACKET, FRONT RH	1	
2	43521-06G00	BRACKET, FRONT LH	1	
3	09106-08150	BOLT	4	
4-1	43501-06G00	FOOTREST ASSY, FRONT RH	1	MODEL K2/K3
4-2	43501-06G01	FOOTREST ASSY, FRONT RH	1	MODEL K4
5-1	43502-06G00	FOOTREST ASSY, FRONT LH	1	MODEL K2/K3
5-2	43502-06G01	FOOTREST ASSY, FRONT LH	1	MODEL K4
6	43576-07D01	·BOLT, BANK SENSOR	2	
7	43551-06G00	·RUBBER	2	
8	43552-06G00	·PLATE	2	
9	02142-05163	·SCREW, OUTER	2	
10	02142-05203	·SCREW, INNER	2	
11	09208-08016	PIN	2	
12	09448-18022	SPRING	2	
13	08332-11063	E RING	2	
14	43600-42F00	FOOTREST ASSY, PILLION RH	1	
15	43700-42F00	FOOTREST ASSY, PILLION LH	1	
16	43612-31300	·RUBBER	2	
17	43632-45501	·PLATE, STOP	2	
18	02122-05123	·SCREW, OUTER	2	
19	02122-05163	·SCREW, INNER	2	
20	43811-06G00	BRACKET, PILLION FOOTREST RH	1	
21	43821-06G00	BRACKET, PILLION FOOTREST LH	1	
22	09106-08150	BOLT, BRACKET	4	
23	09208-08010	PIN	2	
24	09440-05005	SPRING	2	
25	06111-07004	BALL	2	
26	43816-42F10	PLATE, FOOTREST RH	1	
27	43826-42F10	PLATE, FOOTREST LH	1	
28	08332-11063	E RING	2	

FIG.38

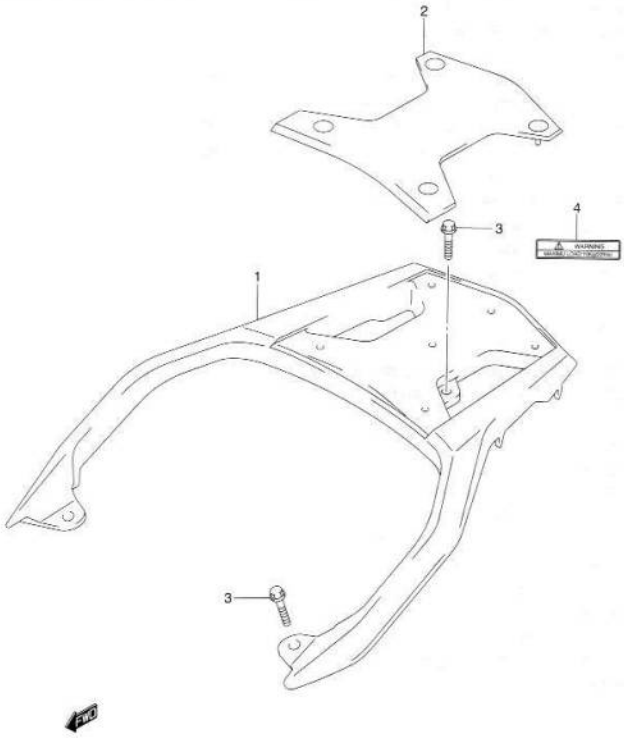

FIG.38 (H-5) CARRIER

REF NO.	PART NO.	DESCRIPTION	Q'TY	REMARKS
1	46311-06G00-YD8	CARRIER, SPORT (SILVER)	1	
2	46321-06G00	MAT, CARRIER	1	
3-1	09103-08341	BOLT	4	MODEL K2/K3
3-2	09103-08391	BOLT	4	MODEL K4
4	68391-06G00	LABEL, CARRIER	1	

FIG.39

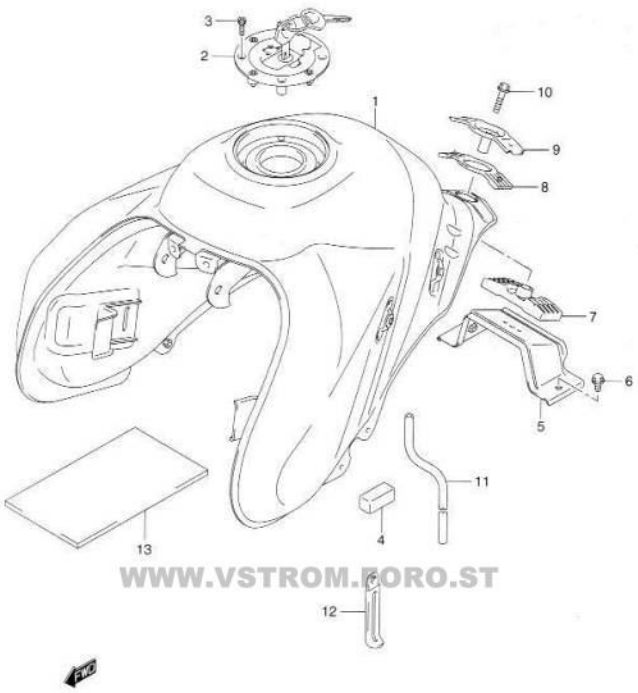

WWW.VSTROM.FORO.ST

FIG.39 (H-6) FUEL TANK

REF NO.	PART NO.	DESCRIPTION	Q'TY	REMARKS
1-1	44110-06G10-Y7H	TANK, FUEL (BLUE)	1	MODEL K2 E2, E19
1-2	44110-06G10-YU8	TANK, FUEL (GRAY)	1	MODEL K2 E2, E19
1-3	44110-06G10-YU9	TANK, FUEL (YELLOW)	1	MODEL K2/K3 E2, E19
1-4	44110-06G10-YD8	TANK, FUEL (SILVER)	1	MODEL K3/K4 E2, E19
1-5	44110-06G10-YBA	TANK, FUEL (BLUE)	1	MODEL K3/K4 E2, E19
1-6	44110-06G10-YAY	TANK, FUEL (BLACK)	1	MODEL K4 E2, E19
1-7	44110-06G00-Y7H	TANK, FUEL (BLUE)	1	MODEL K2 E24
1-8	44110-06G00-YU8	TANK, FUEL (GRAY)	1	MODEL K2 E24
1-9	44110-06G00-YU9	TANK, FUEL (GRAY)	1	MODEL K2/K3 E24
1-10	44110-06G00-YD8	TANK, FUEL (SILVER)	1	MODEL K3/K4 E24
1-11	44110-06G00-YBA	TANK, FUEL (BLUE)	1	MODEL K3/K4 E24
1-12	44110-06G00-YAY	TANK, FUEL (BLACK)	1	MODEL K4 E24
2	44201-33820	CAP SET, FUEL TANK	1	
3	09106-05017	BOLT	4	
4	44541-06G00	CUSHION, SIDE	2	
5-1	44550-06G00	BRACKET, REAR LOWER	1	MODEL K2/K3
5-2	44550-06G01	BRACKET, REAR LOWER	1	MODEL K4
6	01550-08163	BOLT	2	
7	44545-06G00	CUSHION, LOWER	1	
8	44542-06G00	CUSHION, UPPER	1	
9	44530-06G00	BRACKET, UPPER	1	
10	01550-08353	BOLT	1	
11	44423-06G00	HOSE, WATER DRAIN	1	
12	09404-06432	CLAMP	1	
13	44194-06G00	SHIELD, TANK CENTER	1	

FIG.40

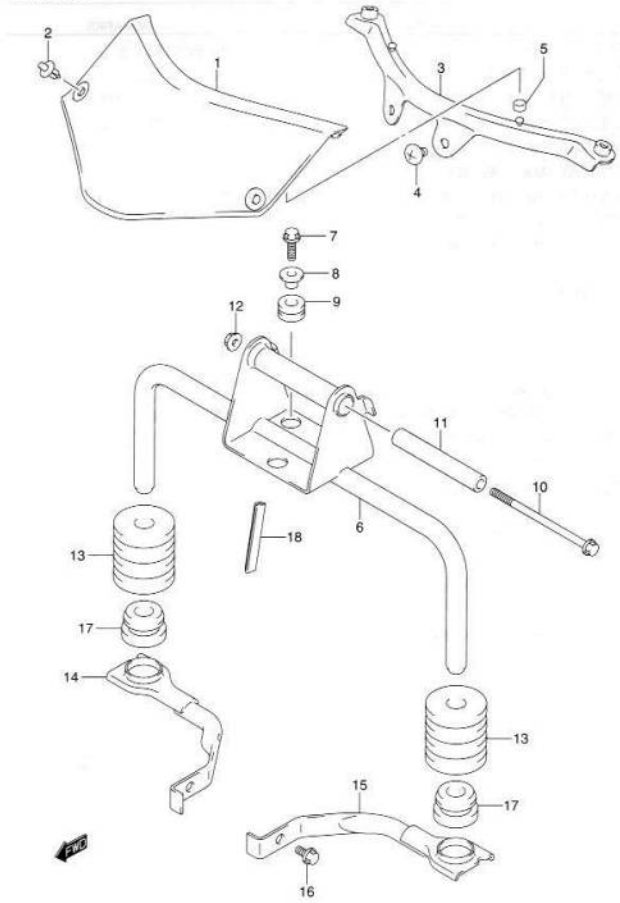

DL1000K2 E02_040
FRONT BRACKET

FIG.40 (H-7) FRONT BRACKET

REF NO.	PART NO.	DESCRIPTION	Q'TY	REMARKS
1-1	44171-06G00-YZ5	COVER, FRONT (BLACK)	1	MODEL K2/K3
1-2	44171-06G10-291	COVER, FRONT (BLACK)	1	MODEL K4
2	09409-06314-5PK	CLIP (BLACK)	2	
3	44160-06G00	BRACKET, COVER	1	
4	02142-06123	SCREW	2	
5	44164-06G00	CUSHION, COVER	2	
6	44520-06G00	BRACKET, FRONT	1	
7	01550-06203	BOLT	3	
8	09169-06062	SPACER	3	
9	09320-08001	CUSHION	3	
10	01550-06953	BOLT	1	
11	44561-35F00	SPACER	1	
12	08319-31063	NUT	1	
13	44511-06G00	CUSHION	2	
14	44560-06G00	BRACKET, SIDE RH	1	
15	44570-06G00	BRACKET, SIDE LH	1	
16	01550-06123	BOLT	2	
17	09320-12054	CUSHION	2	
18	68241-04X50-300	MOLDING, COVER	2	

FIG.41

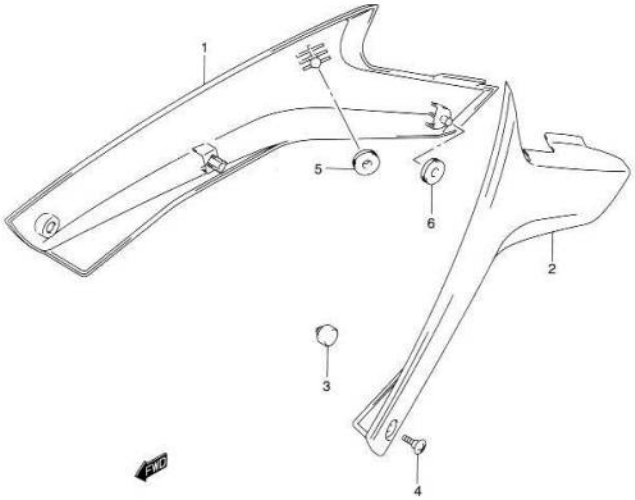

FIG.41 (H-8) FRAME COVER

REF NO.	PART NO.	DESCRIPTION	Q'TY	REMARKS
1-1	47111-06G00-YZ5	COVER, FRAME RH (BLACK)	1	MODEL K2/K3
1-2	47111-06G00-291	COVER, FRAME RH (BLACK)	1	MODEL K4
2-1	47211-06G00-YZ5	COVER, FRAME LH (BLACK)	1	MODEL K2/K3
2-2	47211-06G00-291	COVER, FRAME LH (BLACK)	1	MODEL K4
3	09321-10002	CUSHION, CENTER	2	
4	09139-06107	SCREW, FRONT	2	
5	09320-08018	CUSHION, UPPER	2	
6	09320-08028	CUSHION, LOWER	2	

FIG.42

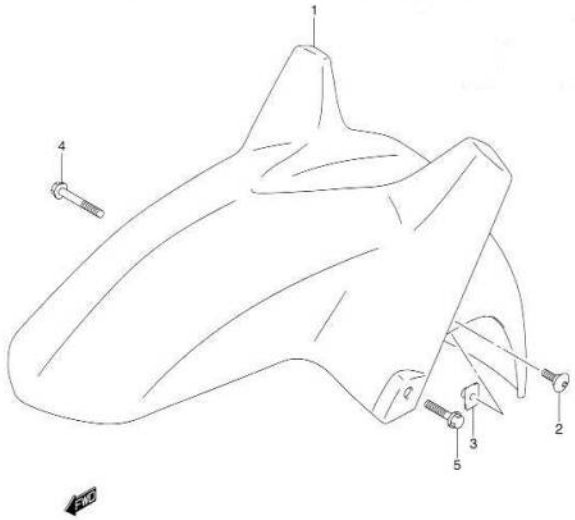

FIG.42 (H-9) FRONT FENDER

REF NO.	PART NO.	DESCRIPTION	Q'TY	REMARKS
1-1	53111-06G00-33J	FENDER, FRONT (BLACK)	1	MODEL K2/K3 FOR Y7H, YBA
1-2	53111-06G00-Y7L	FENDER, FRONT (BLACK)	1	MODEL K2/K3 FOR YU8, YU9, YD8
1-3	53111-06G00-YAY	FENDER, FRONT (BLACK)	1	MODEL K4
2	09139-06121	BOLT, FRONT	2	
3	53122-06G00	NUT	2	
4	01547-06453	BOLT, RH	1	
5	01547-06303	BOLT, LH	1	

FIG.43

WWW.VSTROM.FORO.ST

FIG.43 (I-2) HANDLEBAR (MODEL K2/K3)

REF NO.	PART NO.	DESCRIPTION	Q'TY	REMARKS
1-1	56111-06G00	HANDLEBAR	1	MODEL K2 E2, E19
1-2	56111-06G10	HANDLEBAR	1	MODEL K2 E24
1-3	56111-06G10	HANDLEBAR	1	MODEL K3
2	56200-06841	BALANCER SET, HANDLEBAR	2	
3	09127-06021	·SCREW	2	
4	56272-06G00	·EXPANDER, OUTER	2	
5	56276-17D00	·SPACER	2	
6	09160-06130	·WASHER	2	
7	56272-42F00	·EXPANDER, INNER	2	
8	09159-06024	·NUT	2	
9	56500-06G00	MIRROR ASSY, REAR VIEW RH	1	
10	56600-06G00	MIRROR ASSY, REAR VIEW LH	1	
11-1	58300-06G00	CABLE ASSY, THROTTLE	1	MODEL K2
11-2	58300-06G01	CABLE ASSY, THROTTLE	1	MODEL K3
12	58621-06G00	GUIDE, CABLE	1	
13	02162-06123	BOLT	1	

REFER TO FIG.43A (I-3) FOR MODEL K4

4

FIG.43A

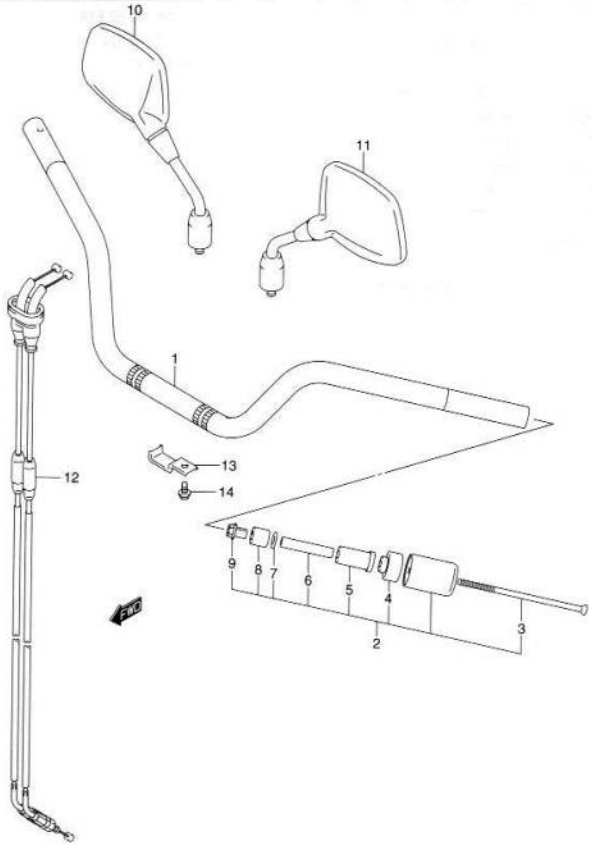

DL1000K2 E02_043A
HANDLE BAR

FIG.43A (I-3) HANDLEBAR (MODEL K4)

REF NO.	PART NO.	DESCRIPTION	Q'TY	REMARKS
1	56111-06G10	HANDLEBAR	1	
2	56200-06860	BALANCER SET, HANDLEBAR	2	
3	09127-06023	·SCREW	2	
4	57346-14G00	·SPACER	2	
5	56272-06G00	·EXPANDER, OUTER	2	
6	56276-17D00	·SPACER	2	
7	09160-06130	·WASHER	2	
8	56272-10G00	·EXPANDER, INNER	2	
9	56273-10G00	·NUT	2	
10	56500-04F20	MIRROR ASSY, REAR VIEW RH	1	
11	56600-04F20	MIRROR ASSY, REAR VIEW LH	1	
12	58300-06G10	CABLE ASSY, THROTTLE	1	
13	58621-06G00	GUIDE, CABLE	1	
14	02162-06123	BOLT	1	

FIG.44

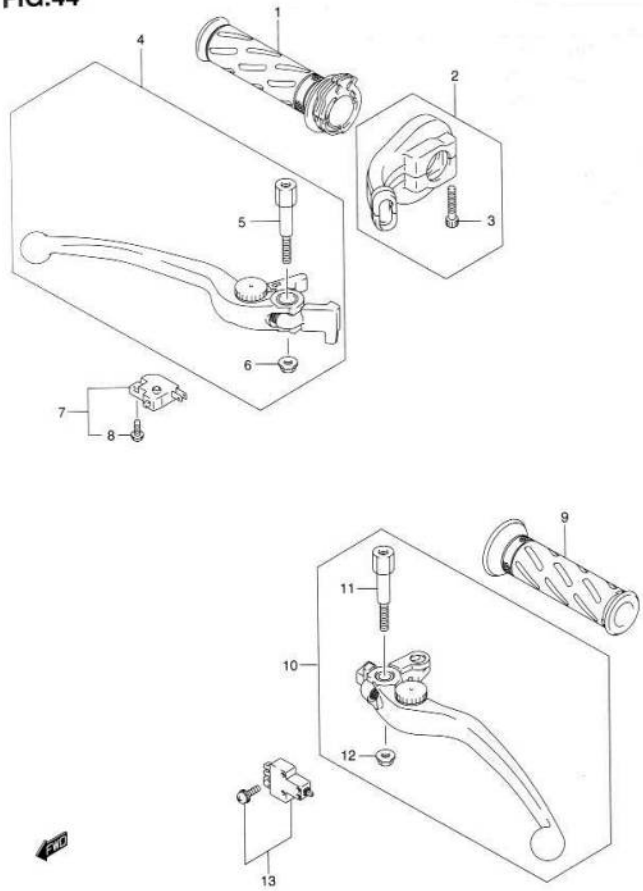

FIG.44 (I-4) HANDLE LEVER

REF NO.	PART NO.	DESCRIPTION	Q'TY	REMARKS
1	57110-45D02	GRIP, THROTTLE	1	
2	57100-42F00	CASE ASSY, THROTTLE	1	
3	07130-05253	·BOLT	2	
4	57300-06G00	LEVER ASSY, BRAKE	1	
5	57431-06G00	·BOLT	1	
6	08316-10063	·NUT	1	
7-1	57460-17C00	SWITCH ASSY, STOP	1	MODEL K2/K3
7-2	57460-17C11	SWITCH ASSY, STOP	1	MODEL K4
8	57465-17C00	·SCREW	1	
9	57211-22D01	GRIP LH	1	
10-1	57500-06G00	LEVER ASSY, CLUTCH	1	MODEL K2/K3
10-2	57500-06G10	LEVER ASSY, CLUTCH	1	MODEL K4
11-1	57431-06G00	·BOLT	1	MODEL K2/K3
11-2	57431-06G10	·BOLT	1	MODEL K4
12	08316-10063	·NUT	1	
13	57560-02FA0	SWITCH ASSY, CLUTCH	1	

FIG.45

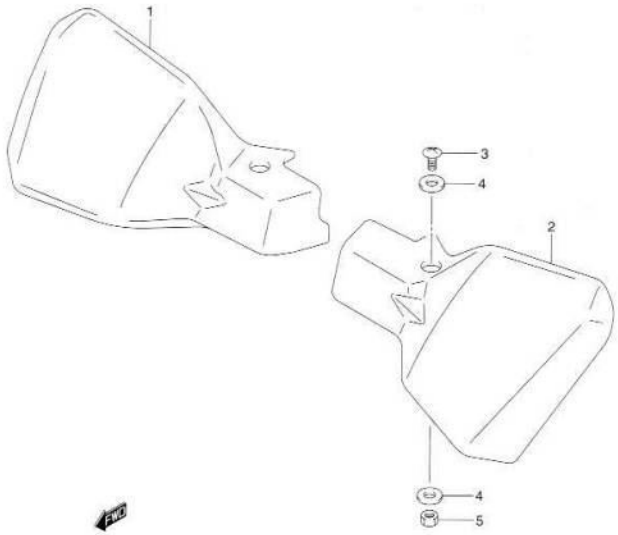

WWW.VSTROM.FORO.ST

FIG.45 (I-5) KNUCKLE COVER

REF NO.	PART NO.	DESCRIPTION	Q'TY	REMARKS
1-1	57341-06G00-019	COVER, KNUCKLE RH (BLACK)	1	MODEL K2/K3
1-2	57341-27G00-291	COVER, KNUCKLE RH (BLACK)	1	MODEL K4
2-1	57541-06G00-019	COVER, KNUCKLE LH (BLACK)	1	MODEL K2/K3
2-2	57541-06G10-291	COVER, KNUCKLE LH (BLACK)	1	MODEL K4
3	02142-06107	SCREW	2	
4	09160-06130	WASHER	4	
5	08319-21068	NUT	2	

FIG.46

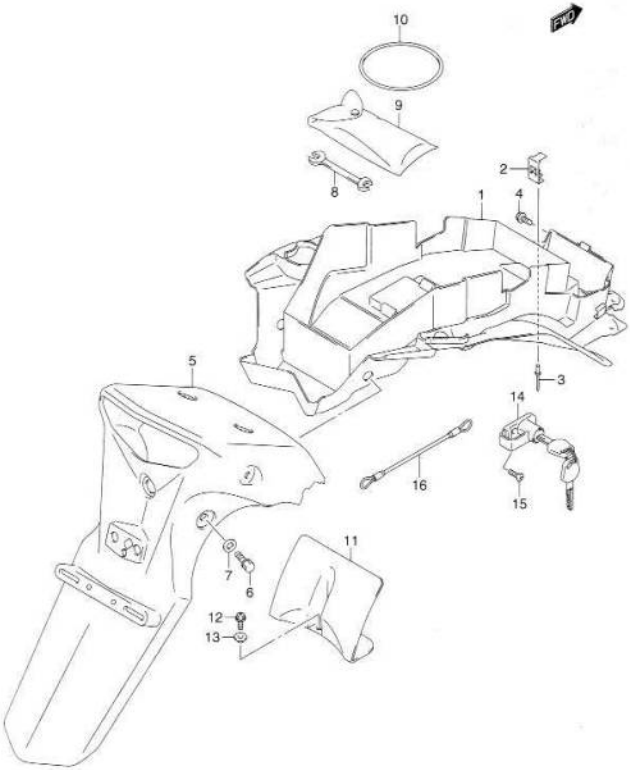

FIG.46 (I-6) REAR FENDER

REF NO.	PART NO.	DESCRIPTION	Q'TY	REMARKS
1	63111-06G00	FENDER, REAR FRONT	1	
2	47412-06G00	BRACKET, FUEL SENSOR	1	
3	09229-04020	RIVET	2	
4	09116-06098	BOLT	2	
5-1	63112-06G00-YZ5	FENDER, REAR (BLACK)	1	MODEL K2/K3
5-2	63112-06G00-291	FENDER, REAR (BLACK)	1	MODEL K4
6	01547-06123	BOLT	2	
7	09160-06109	WASHER	2	
8	09813-00027	SPANNER, 8X10	1	
9	09800-21035	TOOL ASSY	1	
10	09280-61002	BAND, TOOL	1	
11	63421-19F00	MUD GUARD, REAR FENDER LOWER	1	
12	02162-06163	BOLT	1	
13	09169-06071	WASHER	1	
14	95700-42810	LOCK SET, HELMET	1	
15	02122-06203	SCREW	1	
16	95740-06G00	CABLE, HELMET LOCK	1	

FIG.47

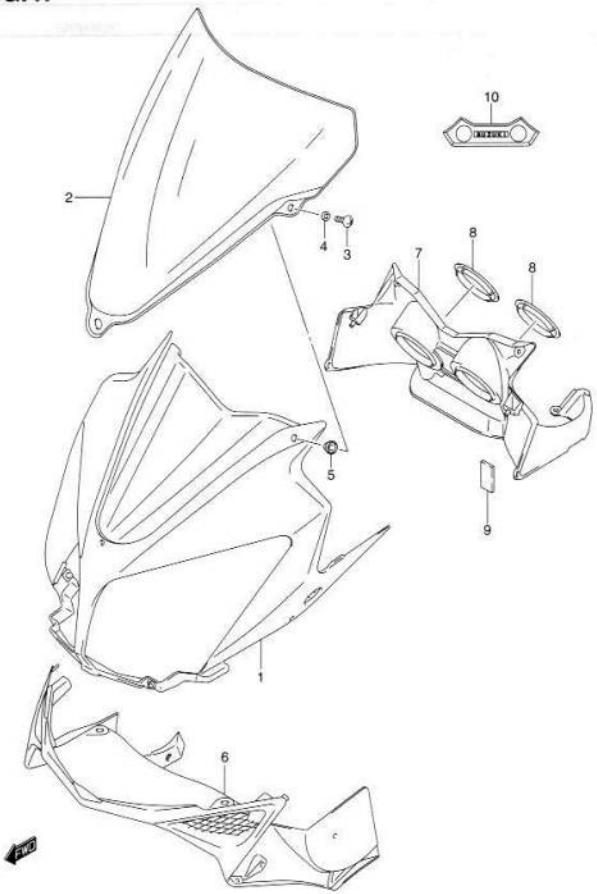

DL1000K2 E02_047
COWLING BODY

FIG.47 (I-7) COWLING BODY (MODEL K2/K3)

REF NO.	PART NO.	DESCRIPTION	Q'TY	REMARKS
1-1	94410-06G00-33J	BODY, COWLING (BLACK)	1	FOR Y7H, YBA
1-2	94410-06G00-Y7L	BODY, COWLING (BLACK)	1	FOR YU8, YU9, YD8
2	94610-06G00	WINDSCREEN	1	
3	09139-05075	SCREW	2	
4	08322-01053	WASHER	2	
5	94619-36A00	NUT	2	
6	94461-06G00-YZ5	COVER, COWL INNER (BLACK)	1	
7-1	94630-06G00-HW5	PANEL, METER	1	MODEL K2
7-2	94630-06G00-LP7	PANEL, METER	1	MODEL K3
8-1	94632-06G00-YAG	·RING, METER PANEL (SILVER)	2	MODEL K2
8-2	94632-06G00-YCG	·RING, METER PANEL (GRAY)	2	MODEL K3
9	44885-38A00	·CUSHION	1	
10-1	68281-06G00	EMBLEM	1	MODEL K2
10-2	68281-06G00-YCG	EMBLEM (GRAY)	1	MODEL K3

REFER TO FIG.47A (I-8) FOR MODEL K4

FIG.47A

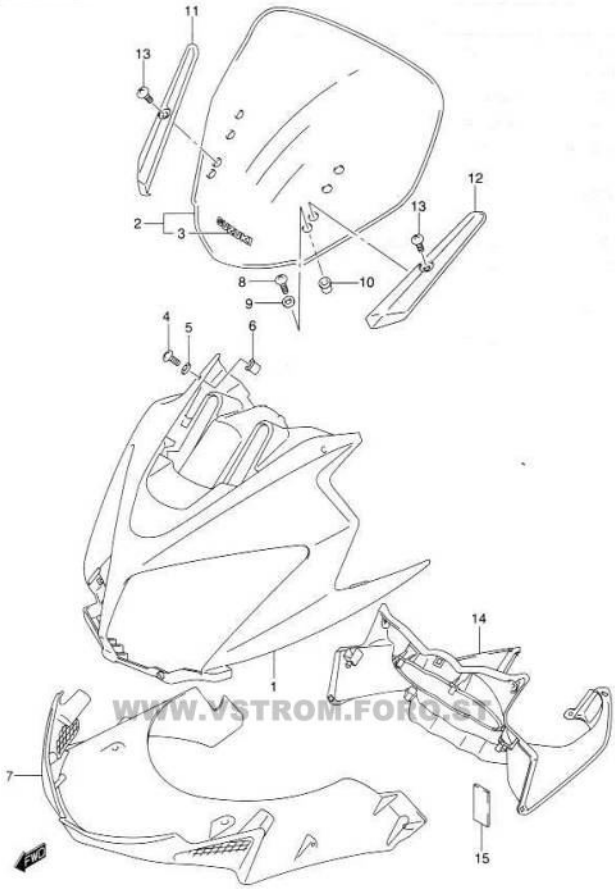

WWW.VSTROM.FORO.ST

DL1000K2 E02_047A
COWLING BODY

FIG.47A (I-8) COWLING BODY (MODEL K4)

REF NO.	PART NO.	DESCRIPTION	Q'TY	REMARKS
1	94410-27G00-YAY	BODY, COWLING (BLACK)	1	
2	94610-27G00	WINDSCREEN	1	
3	68270-27G00-CT5	·TAPE	1	
4	09139-05075	SCREW, LOWER	2	
5	08322-01053	WASHER	2	
6	94619-36A00	NUT	2	
7	94461-06G00-291	COVER, COWL INNER (BLACK)	1	
8	02142-05203	SCREW, UPPER	4	
9	09161-05017	WASHER	4	
10	09159-05019	NUT	4	
11	94641-27G00-291	COVER, WINDSCREEN RH (BLACK)	1	
12	94642-27G00-291	COVER, WINDSCREEN LH (BLACK)	1	
13	09132-05053	SCREW	2	
14	94630-27G00-291	PANEL, METER (BLACK)	1	
15	44885-38A00	·CUSHION	1	

FIG.48

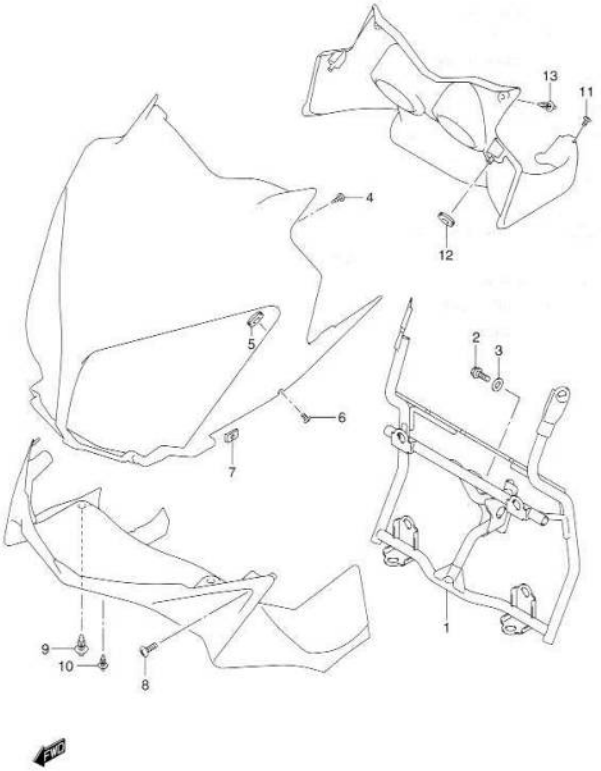

FIG.48 (I-9) COWL BODY INSTALLATION PARTS (MODEL K2/K3)

REF NO.	PART NO.	DESCRIPTION	Q'TY	REMARKS
1	94510-06G00	BRACE, COWLING	1	
2	09103-08505	BOLT	2	
3	09164-08020	WASHER	2	
4	09132-05041	SCREW, UPPER	2	
5	09320-08028	CUSHION	4	
6	09139-05064	SCREW, SIDE	4	
7	09148-05038	NUT, SIDE	2	
8	03242-05103	SCREW, FRONT	2	
9	09409-07333	CLIP, INNER COVER UPPER	2	
10	09409-06314-5PK	CLIP, SIDE (BLACK)	6	
11	09139-06122	SCREW, METER PANEL REAR	2	
12	09320-06016	CUSHION, METER PANEL REAR	2	
13	09409-06314-5PK	CLIP, METER PANEL (BLACK)	2	

REFER TO FIG.48A (I-10) FOR MODEL K4

FIG.48A

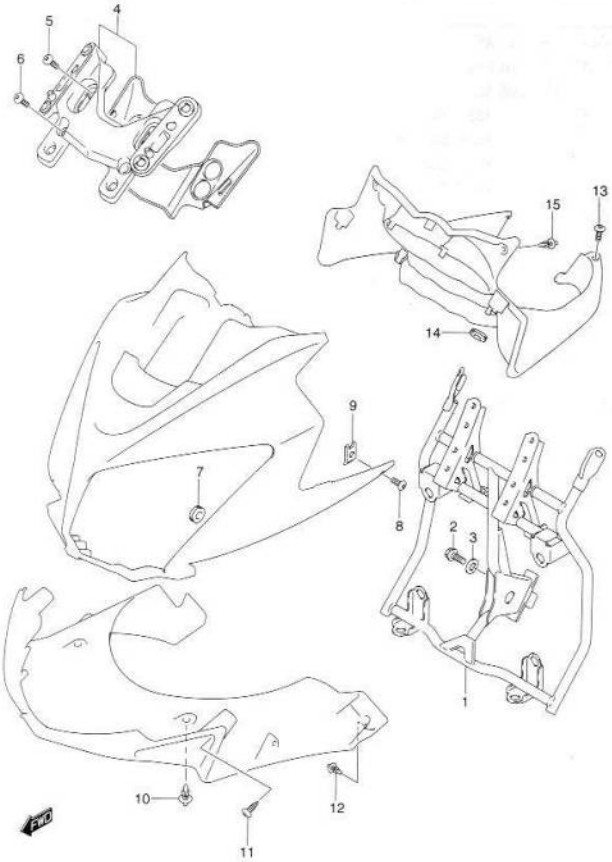

FIG.48A (I-10) COWL BODY INSTALLATION PARTS (MODEL K4)

REF NO.	PART NO.	DESCRIPTION	Q'TY	REMARKS
1	94510-27G00	BRACE, COWLING	1	
2	09103-08505	BOLT	2	
3	09164-08020	WASHER	2	
4	94600-27G00	BRACE, WINDSCREEN	1	
5	09139-06126	SCREW, UPPER	2	
6	09139-06120	SCREW, LOWER	2	
7	09320-08028	CUSHION	4	
8	09139-05064	SCREW, SIDE	4	
9	09148-05038	NUT, SIDE	2	
10	09409-07333	CLIP, INNER COVER UPPER	2	
11	03242-05163	SCREW, INNER COVER	2	
12	09409-06314-5PK	CLIP, SIDE (BLACK)	6	
13	09139-06122	SCREW, METER PANEL REAR SIDE	2	
14	09320-06016	CUSHION, METER PANEL REAR	2	
15	09409-06314-5PK	CLIP, METER PANEL (BLACK)	2	

FIG.49

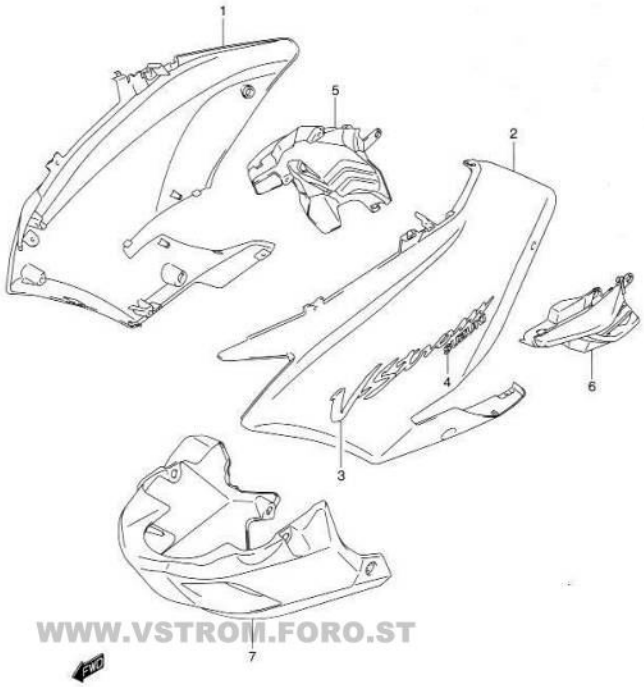

WWW.VSTROM.FORO.ST

FIG.49 (I-11) SIDE COWLING (MODEL K2)

REF NO.	PART NO.	DESCRIPTION	Q'TY	REMARKS
1-1	94402-06G00-Y7H	COWL ASSY, SIDE RH (BLUE)	1	
1-2	94402-06G00-YU8	COWL ASSY, SIDE RH (GRAY)	1	
1-3	94402-06G10-YU9	COWL ASSY, SIDE RH (YELLOW)	1	
2-1	94403-06G00-Y7H	COWL ASSY, SIDE LH (BLUE)	1	
2-2	94403-06G00-YU8	COWL ASSY, SIDE LH (GRAY)	1	
2-3	94403-06G10-YU9	COWL ASSY, SIDE LH (YELLOW)	1	
3-1	68681-06G00-1ZY	·EMBLEM (GRAY)	2	FOR Y7H
3-2	68681-06G00-YD8	·EMBLEM (SILVER)	2	FOR YU8
3-3	68681-06G00-17U	·EMBLEM (GRAY)	2	FOR YU9
4-1	68166-31300-17U	·EMBLEM, "SUZUKI" (GRAY)	2	FOR Y7H
4-2	68166-31300-1ZY	·EMBLEM, "SUZUKI" (GRAY)	2	FOR YU8, YU9
5	94440-06G00-YZ5	COVER, SIDE RH (BLACK)	1	
6	94450-06G00-YZ5	COVER, SIDE RH (BLACK)	1	
7	94471-06G00-YZ5	COWLING, UNDER (BLACK)	1	

REFER TO FIG.49A (I-12) FOR MODEL K3
REFER TO FIG.49B (I-13) FOR MODEL K4

FIG.49A

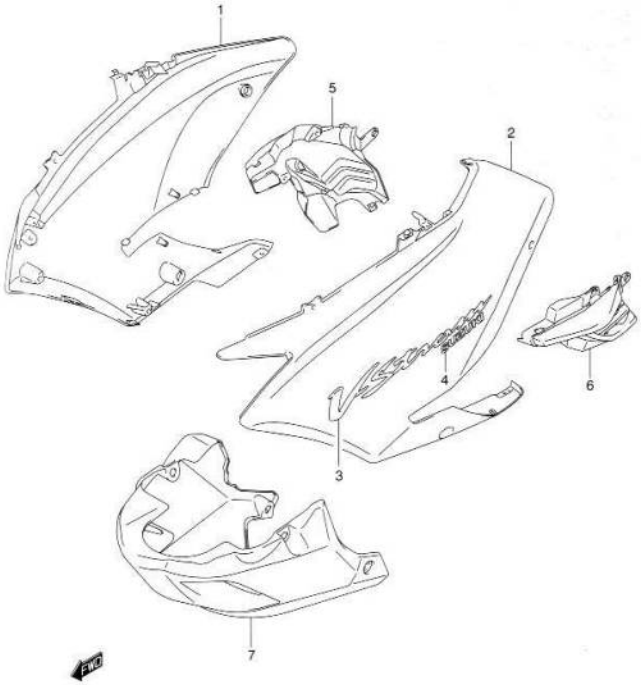

FIG.49A (I-12) SIDE COWLING (MODEL K3)

REF NO.	PART NO.	DESCRIPTION	Q'TY	REMARKS
1-1	94402-06G10-YD8	COWL ASSY, SIDE RH (SILVER)	1	
1-2	94402-06G10-ZJX	COWL ASSY, SIDE RH (YELLOW)	1	
1-3	94402-06G00-YBA	COWL ASSY, SIDE RH (BLUE)	1	
2-1	94403-06G10-YD8	COWL ASSY, SIDE LH (SILVER)	1	
2-2	94403-06G10-ZJX	COWL ASSY, SIDE LH (YELLOW)	1	
2-3	94403-06G00-YBA	COWL ASSY, SIDE LH (BLUE)	1	
3-1	68681-06G00-Y7H	·EMBLEM (BLUE)	2	FOR YD8
3-2	68681-06G00-17U	·EMBLEM (GRAY)	2	FOR ZJX
3-3	68681-06G00-YD8	·EMBLEM (SILVER)	2	FOR YBA
4-1	68166-31300-YU8	·EMBLEM, "SUZUKI" (GRAY)	2	FOR YD8
4-2	68166-31300-Y7H	·EMBLEM, "SUZUKI" (BLUE)	2	FOR ZJX
4-3	68166-31300-1ZY	·EMBLEM, "SUZUKI" (GRAY)	2	FOR YBA
5	94440-06G00-YZ5	COVER, SIDE RH (BLACK)	1	
6	94450-06G00-YZ5	COVER, SIDE RH (BLACK)	1	
7	94471-06G00-YZ5	COWLING, UNDER (BLACK)	1	

REFER TO FIG.49B (I-13) FOR MODEL K4

FIG.49B

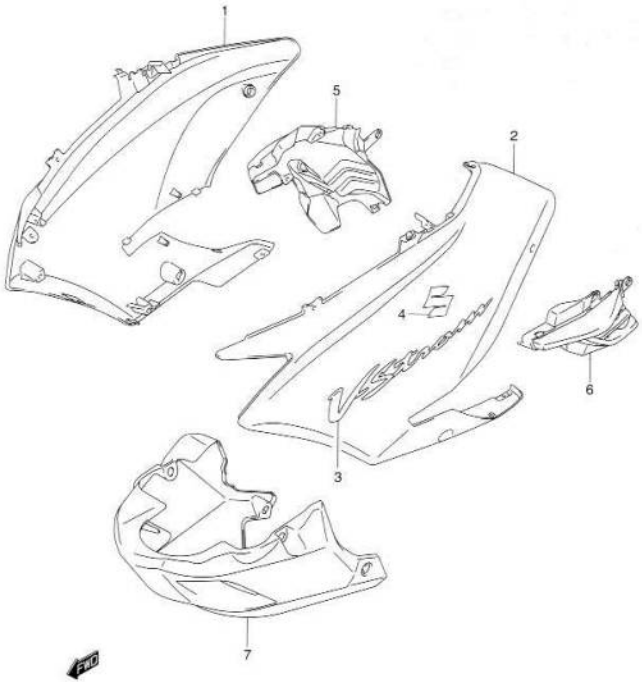

FIG.49B (I-13) SIDE COWLING (MODEL K4)

REF NO.	PART NO.	DESCRIPTION	Q'TY	REMARKS
1-1	94402-06G30-YD8	COWL ASSY, SIDE RH (SILVER)	1	
1-2	94402-06G20-YAY	COWL ASSY, SIDE RH (BLACK)	1	
1-3	94402-06G20-YBA	COWL ASSY, SIDE RH (BLUE)	1	
2-1	94403-06G30-YD8	COWL ASSY, SIDE LH (SILVER)	1	
2-2	94403-06G20-YAY	COWL ASSY, SIDE LH (BLACK)	1	
2-3	94403-06G20-YBA	COWL ASSY, SIDE LH (BLUE)	1	
3-1	68681-27G00-HT8	·EMBLEM	2	FOR YD8
3-2	68681-27G00-AML	·EMBLEM	2	FOR YAY
3-3	68681-27G00-AMV	·EMBLEM	2	FOR YBA
4-1	68111-18G00-ASL	·EMBLEM	2	FOR YD8
4-2	68111-18G00-ACV	·EMBLEM	2	FOR YAY
4-3	68111-18G00-ABF	·EMBLEM	2	FOR YBA
5	94440-06G00-291	COVER, SIDE RH (BLACK)	1	
6	94450-06G00-291	COVER, SIDE RH (BLACK)	1	
7	94471-06GA0-291	COWLING, UNDER (BLACK)	1	

FIG.50

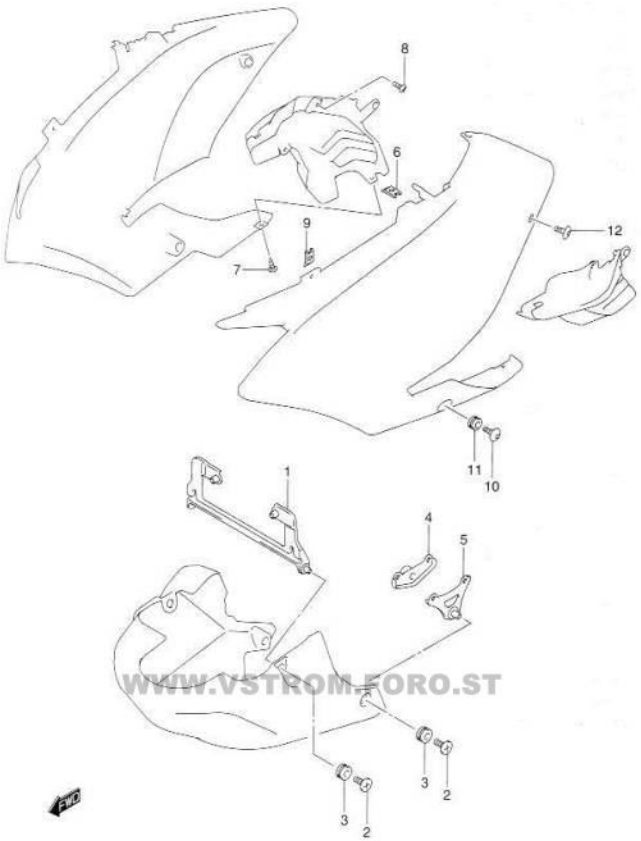

WWW.VSTROM-FORO.ST

FIG.50 (I-14) SIDE COWL INSTALLATION PARTS

REF NO.	PART NO.	DESCRIPTION	Q'TY	REMARKS
1	94520-06G00	BRACKET, UNDER FRONT	1	
2	11178-12F10	SCREW	4	
3	09320-09016	CUSHION	4	
4	94530-06G00	BRACKET, RH	1	
5	94540-06G00	BRACKET, LH	1	
6	09148-05038	NUT	4	
7	03242-05103	SCREW	4	
8	02142-05103	SCREW, CENTER	4	
9	94484-24F00	NUT, UPPER	4	
10	09139-06087	SCREW, SIDE	2	
11	09320-09016	CUSHION	2	
12	09139-06122	SCREW, SIDE REAR	2	

4

FIG.51

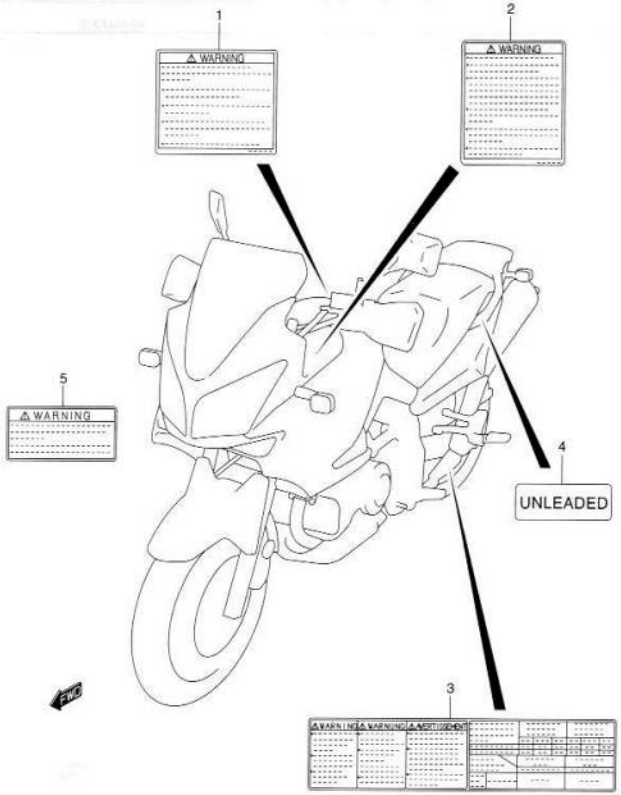

FIG.51 (I-15) LABEL

REF NO.	PART NO.	DESCRIPTION	Q'TY	REMARKS
1-1	68319-29F00	LABEL, WARNING (ENGLISH)	1	E2, E19, E24
1-2	68319-29F20	LABEL, WARRING (GERMAN)	1	E19
1-3	68319-29F30	LABEL, WARRING (FRENCH)	1	E19
1-4	68319-29F40	LABEL, WARRING (ITALIAN)	1	E19
1-5	68319-29F50	LABEL, WARRING (SPANISH)	1	E19
1-6	68319-29F70	LABEL, WARRING (DUTCH)	1	E19
1-7	68319-29F80	LABEL, WARRING (PORTUGUESE)	1	E19, P37
1-8	68319-29F90	LABEL, WARRING (SWEDISH)	1	E19
1-9	68319-29FA0	LABEL, WARRING (FINNISH)	1	E19
1-10	68319-29FB0	LABEL, WARRING (NORWEGIAN)	1	E19
1-11	68319-29FC0	LABEL, WARRING (DANISH)	1	E19
1-12	68319-30F40	LABEL, WARRING (ITALIAN)	1	E19
1-13	68319-30F90	LABEL, WARRING (SWEDISH)	1	E19
2-1	68922-29F00	LABEL, SCREEN (ENGLISH)	1	E2, E19, E24
2-2	68922-29F20	LABEL, SCREEN (GERMAN)	1	E19
2-3	68922-29F30	LABEL, SCREEN (FRENCH)	1	E19
2-4	68922-29F40	LABEL, SCREEN (ITALIAN)	1	E19
2-5	68922-29F50	LABEL, SCREEN (SPANISH)	1	E19
2-6	68922-29F70	LABEL, SCREEN (DUTCH)	1	E19
2-7	68922-29F80	LABEL, SCREEN (PORTUGUESE)	1	E19, P37
2-8	68922-29F90	LABEL, SCREEN (SWEDISH)	1	E19
2-9	68922-29FA0	LABEL, SCREEN (FINNISH)	1	E19
2-10	68922-29FB0	LABEL, SCREEN (NORWEGIAN)	1	E19
2-11	68922-29FC0	LABEL, SCREEN (DANISH)	1	E19
2-12	68922-14F40	LABEL, SCREEN (ITALIAN)	1	E19
2-13	68922-14F90	LABEL, SCREEN (SWEDISH)	1	E19
3	68332-06G00	LABEL, TIRE INFORMATION	1	
4-1	68623-17D00	LABEL, FUEL	1	E2
4-2	86932-73060	LABEL, FUEL	1	E24
5	68613-24F00	LABEL, STEERING	1	

FIG.51

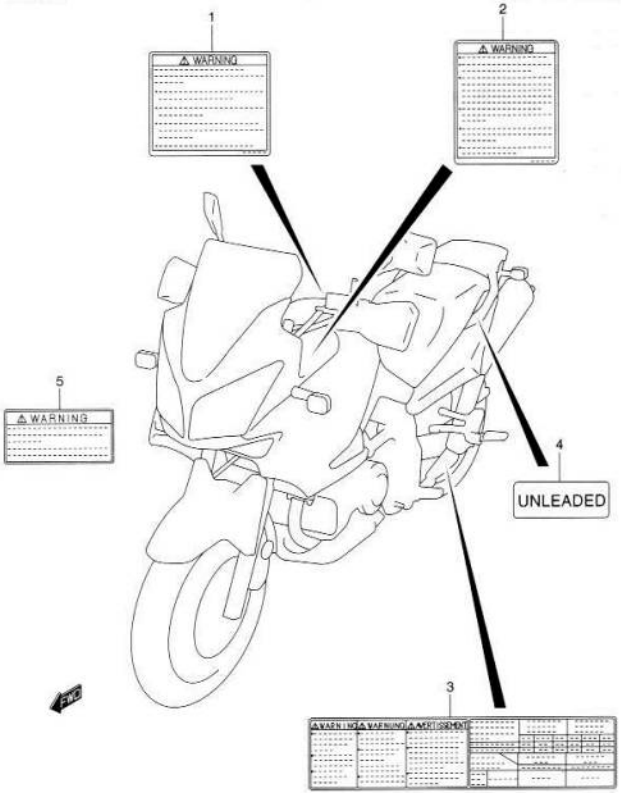

FIG.51 (I-16) LABEL

REF NO.	PART NO.	DESCRIPTION	Q'TY	REMARKS
6-1	99011-06G50-01A	MANUAL, OWNER'S	1	MODEL K2 E2, E19, E24
6-2	99011-06G51-01A	MANUAL, OWNER'S	1	MODEL K3 E19, E24
6-3	99011-06G52-01A	MANUAL, OWNER'S	1	MODEL K4 E2, E19, E24
6-4	99011-06G50-01F	MANUAL, OWNER'S	1	MODEL K2 E19
6-5	99011-06G51-01F	MANUAL, OWNER'S	1	MODEL K3 E19
6-6	99011-06G52-01F	MANUAL, OWNER'S	1	MODEL K4 E19
6-7	99011-06G50-01K	MANUAL, OWNER'S	1	MODEL K2 E19
6-8	99011-06G51-01K	MANUAL, OWNER'S	1	MODEL K3 E19
6-9	99011-06G52-01K	MANUAL, OWNER'S	1	MODEL K4 E19
6-10	99011-06G50-SDE	MANUAL, OWNER'S	1	MODEL K2 E19
6-11	99011-06G51-SDE	MANUAL, OWNER'S	1	MODEL K3 E19
6-12	99011-06G52-SDE	MANUAL, OWNER'S	1	MODEL K4 E19
6-13	99011-06G50-01W	MANUAL, OWNER'S	1	MODEL K2 E19
6-14	99011-06G51-01W	MANUAL, OWNER'S	1	MODEL K3 E19
6-15	99011-06G52-01W	MANUAL, OWNER'S	1	MODEL K4 E19
6-16	99011-06G50-057	MANUAL, OWNER'S	1	MODEL K2 P37 DRAWING NOT SHOWN

FIG.52

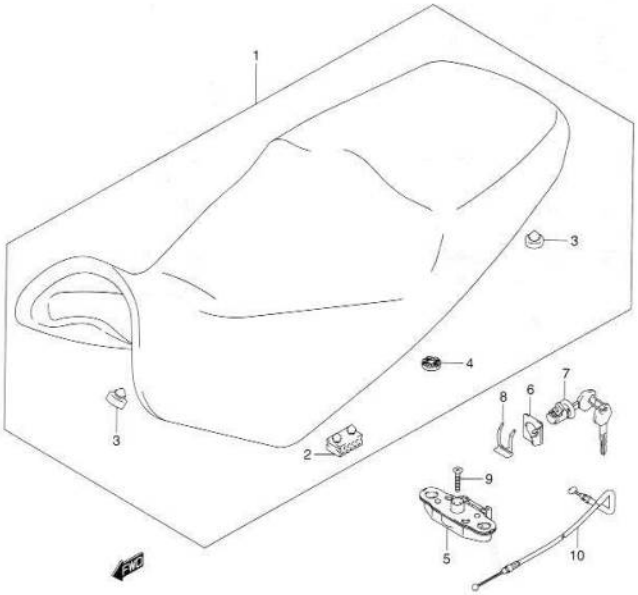

FIG.52 (J-2) SEAT

REF NO.	PART NO.	DESCRIPTION	Q'TY	REMARKS
1-1	45100-06G00-W69	SEAT ASSY	1	MODEL K2
1-2	45100-06G10-H1N	SEAT ASSY	1	MODEL K3/K4
2	09321-08006	·CUSHION, SEAT	4	
3	09321-10012	·CUSHION	3	
4	45213-13601	·CUSHION	2	
5	45220-20A01	BRACKET, SEAT SUPPORT REAR	1	
6	45288-14F00	GUIDE, SEAT LOCK CABLE	1	
7	95700-14810	LOCK SET, SEAT	1	
8	45289-11F00	PLATE, SEAT LOCK ASSY	1	
9	02122-06303	SCREW	2	
10	45280-06G00	CABLE, SEAT LOCK	1	

FIG.53

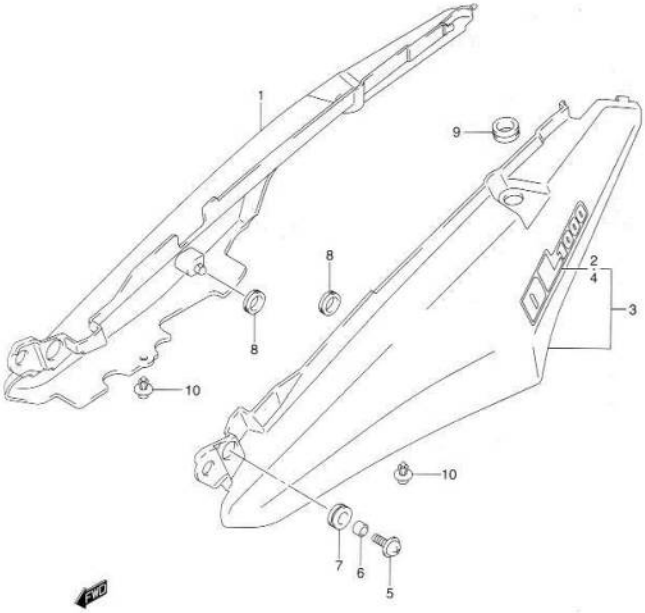

FIG.53 (J-3) SEAT TAIL COVER (MODEL K2)

REF NO.	PART NO.	DESCRIPTION	Q'TY	REMARKS
1-1	45501-06G00-YU8	COVER ASSY, SEAT TAIL RH (GRAY)	1	
1-2	45501-06G00-YU9	COVER ASSY, SEAT TAIL RH (YELLOW)	1	
1-3	45501-06G00-Y7H	COVER ASSY, SEAT TAIL RH (BLUE)	1	
2-1	68161-06G00-JL9	·EMBLEM, SEAT TAIL COVER	1	FOR YU8
2-2	68161-06G00-JM1	·EMBLEM, SEAT TAIL COVER	1	FOR YU9
2-3	68161-06G00-JL8	·EMBLEM, SEAT TAIL COVER	1	FOR Y7H
3-1	45502-06G00-YU8	COVER ASSY, SEAT TAIL LH (GRAY)	1	
3-2	45502-06G00-YU9	COVER ASSY, SEAT TAIL LH (YELLOW)	1	
3-3	45502-06G00-Y7H	COVER ASSY, SEAT TAIL LH (BLUE)	1	
4-1	68161-06G00-JL9	·EMBLEM, SEAT TAIL COVER	1	FOR YU8
4-2	68161-06G00-JM1	·EMBLEM, SEAT TAIL COVER	1	FOR YU9
4-3	68161-06G00-JL8	·EMBLEM, SEAT TAIL COVER	1	FOR Y7H
5	09136-06081	SCREW, FRONT	2	
6	09180-06300	SPACER, FRONT	2	
7	09320-12068	CUSHION, FRONT	2	
8	09320-08018	CUSHION, CENTER	2	
9	09320-15008	CUSHION, REAR	2	
10	09409-06314-5PK	CLIP (BLACK)	2	

REFER TO FIG.53A (J-4) FOR MODEL K3
REFER TO FIG.53B (J-5) FOR MODEL K4

4

FIG.53A

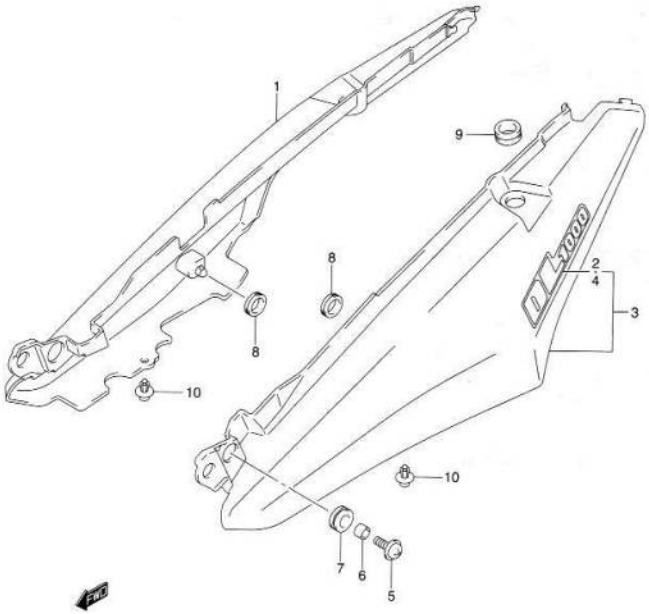

FIG.53A (J-4) SEAT TAIL COVER (MODEL K3)

REF NO.	PART NO.	DESCRIPTION	Q'TY	REMARKS
1-1	45501-06G00-YD8	COVER ASSY, SEAT TAIL RH (SILVER)	1	
1-2	45501-06G00-ZJX	COVER ASSY, SEAT TAIL RH (YELLOW)	1	
1-3	45501-06G00-YBA	COVER ASSY, SEAT TAIL RH (BLUE)	1	
2-1	68161-06G00-LY4	·EMBLEM, SEAT TAIL COVER	1	FOR YD8
2-2	68161-06G00-LY5	·EMBLEM, SEAT TAIL COVER	1	FOR YU9
2-3	68161-06G00-LY6	·EMBLEM, SEAT TAIL COVER	1	FOR YBA
3-1	45502-06G00-YD8	COVER ASSY, SEAT TAIL LH (SILVER)	1	
3-2	45502-06G00-ZJX	COVER ASSY, SEAT TAIL LH (YELLOW)	1	
3-3	45502-06G00-YBA	COVER ASSY, SEAT TAIL LH (BLUE)	1	
4-1	68161-06G00-LY4	·EMBLEM, SEAT TAIL COVER	1	FOR YD8
4-2	68161-06G00-LY5	·EMBLEM, SEAT TAIL COVER	1	FOR YU9
4-3	68161-06G00-LY6	·EMBLEM, SEAT TAIL COVER	1	FOR YBA
5	09136-06081	SCREW, FRONT	2	
6	09180-06300	SPACER, FRONT	2	
7	09320-12068	CUSHION, FRONT	2	
8	09320-08018	CUSHION, CENTER	2	
9	09320-15008	CUSHION, REAR	2	
10	09409-06314-5PK	CLIP (BLACK)	2	

REFER TO FIG.53B (J-5) FOR MODEL K4

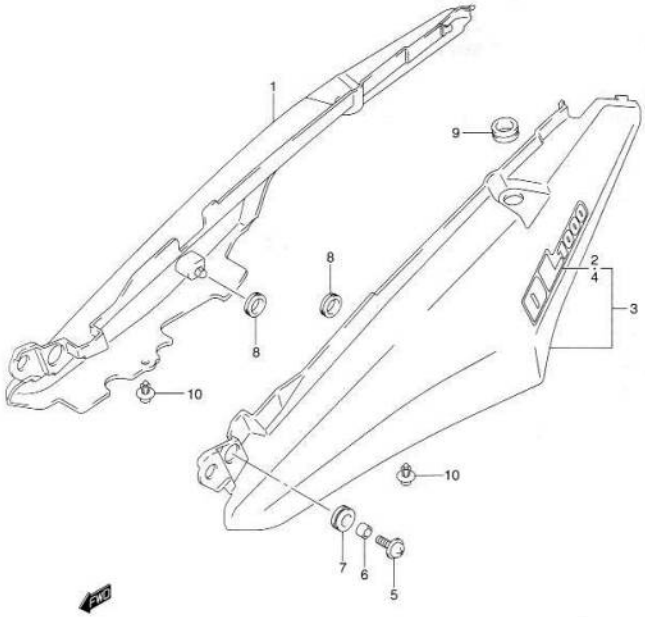

FIG.53B (J-5) SEAT TAIL COVER (MODEL K4)

REF NO.	PART NO.	DESCRIPTION	Q'TY	REMARKS
1-1	45501-06G10-YD8	COVER ASSY, SEAT TAIL RH (SILVER)	1	
1-2	45501-06G10-YAY	COVER ASSY, SEAT TAIL RH (BLACK)	1	
1-3	45501-06G10-YBA	COVER ASSY, SEAT TAIL RH (BLUE)	1	
2-1	68161-06G10-AMT	·EMBLEM, SEAT TAIL COVER	1	FOR YD8
2-2	68161-06G10-AMR	·EMBLEM, SEAT TAIL COVER	1	FOR YAY
2-3	68161-06G10-AMW	·EMBLEM, SEAT TAIL COVER	1	FOR YBA
3-1	45502-06G10-YD8	COVER ASSY, SEAT TAIL LH (SILVER)	1	
3-2	45502-06G10-YAY	COVER ASSY, SEAT TAIL LH (BLACK)	1	
3-3	45502-06G10-YBA	COVER ASSY, SEAT TAIL LH (BLUE)	1	
4-1	68161-06G10-AMT	·EMBLEM, SEAT TAIL COVER	1	FOR YD8
4-2	68161-06G10-AMR	·EMBLEM, SEAT TAIL COVER	1	FOR YAY
4-3	68161-06G10-AMW	·EMBLEM, SEAT TAIL COVER	1	FOR YBA
5	09136-06081	SCREW, FRONT	2	
6	09180-06300	SPACER, FRONT	2	
7	09320-12068	CUSHION, FRONT	2	
8	09320-08018	CUSHION, CENTER	2	
9	09320-15008	CUSHION, REAR	2	
10	09409-06314-5PK	CLIP (BLACK)	2	

FIG.54

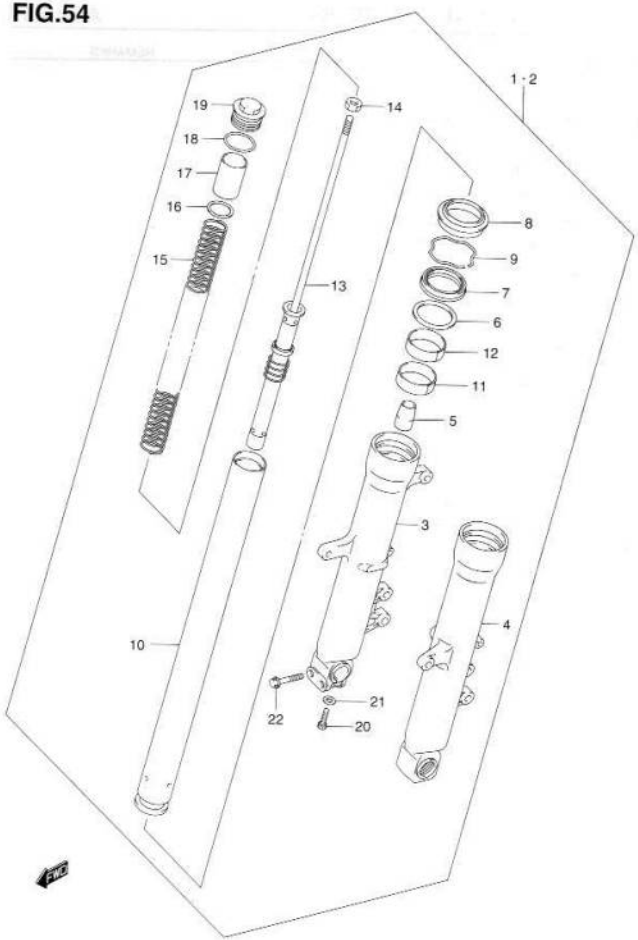

DL1000K2 E02_054
FRONT DAMPER

FIG.54 (J-6) FRONT DAMPER (MODEL K2)

REF NO.	PART NO.	DESCRIPTION	Q'TY	REMARKS
1-1	51103-06G00	DAMPER ASSY, FRONT FORK RH	1	
1-2	51103-06G10	DAMPER ASSY, FRONT FORK RH	1	P37
2	51104-06G00	DAMPER ASSY, FRONT FORK LH	1	
3	51130-06G00	·TUBE, OUTER RH	1	
4	51140-06G00	·TUBE, OUTER LH	1	
5	51195-31E00	·PIECE, OIL LOCK	2	
6	51168-17C00	·SPACER, SEAL	2	
7	51153-14D00	·SEAL, OIL	2	
8	51173-29E00	·SEAL, DUST	2	
9	51556-38B00	·RING, OIL SEAL STOPPER	2	
10	51110-06G00	·TUBE, INNER	2	
11	51121-13E00	·BUSH, SLIDE	2	
12	51152-13E00	·BUSH, GUIDE	2	
13	52110-06G00	·ROD, FRONT DAMPER	2	
14	51827-27E00	·NUT	2	
15	51171-06G00	·SPRING, FRONT	2	
16	51186-17C00	·SEAT, SPRING	2	
17	51176-12C10	·COLLAR, SPRING	2	
18	51117-17C00	·O RING	2	
19	51351-14E30	·BOLT, FORK	2	
20	51147-48130	·BOLT	2	
21	51148-36011	·GASKET	2	
22	51166-06G00	·BOLT, RH	2	

REFER TO FIG.54A (J-7) FOR MODEL K3/K4

FIG.54A

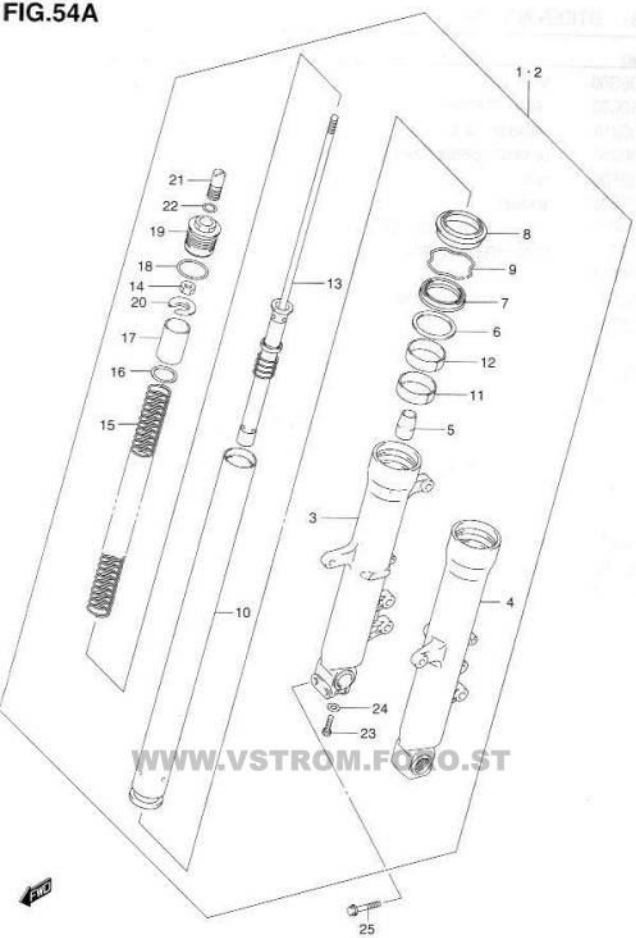

WWW.VSTROM.FORO.ST

DL1000K2 E02_054A
FRONT DAMPER

FIG.54A (J-7) FRONT DAMPER (MODEL K3/K4)

REF NO.	PART NO.	DESCRIPTION	Q'TY	REMARKS
1	51103-06G20	DAMPER ASSY, FRONT FORK RH	1	
2	51104-06G20	DAMPER ASSY, FRONT FORK LH	1	
3	51130-06G00	·TUBE, OUTER RH	1	
4	51140-06G00	·TUBE, OUTER LH	1	
5	51195-31E00	·PIECE, OIL LOCK	2	
6	51168-17C00	·SPACER, SEAL	2	
7	51153-14D00	·SEAL, OIL	2	
8	51173-29E00	·SEAL, DUST	2	
9	51556-38B00	·RING, OIL SEAL STOPPER	2	
10	51110-06G20	·TUBE, INNER	2	
11	51121-13E00	·BUSH, SLIDE	2	
12	51152-13E00	·BUSH, GUIDE	2	
13	52110-06G20	·ROD, FRONT DAMPER	2	
14	51827-27E00	·NUT	2	
15	51171-06G20	·SPRING, FRONT	2	
16	51186-17C00	·SEAT, SPRING	2	
17	51176-12C10	·COLLAR, SPRING	2	
18	51117-17C00	·O RING	2	
19	51189-14D00	·BOLT, FORK	2	
20	51172-17C00	·SEAT, SPRING UPPER	2	
21	51185-31E00	·ADJUSTER, SPRING	2	
22	09280-14011	·O RING	2	
23	51147-48130	·BOLT	2	
24	51148-36011	·GASKET	2	
25	51166-06G00	BOLT, RH	2	

FIG.55

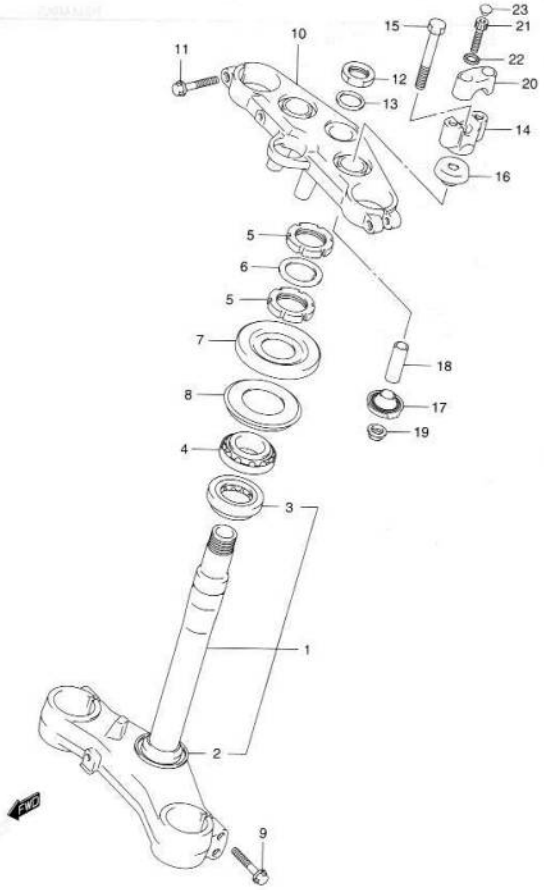

DL1000K2 E02_055
STEERING STEM

FIG.55 (J-8) STEERING STEM

REF NO.	PART NO.	DESCRIPTION	Q'TY	REMARKS
1	51410-06G00	STEM, STEERING	1	
2	51644-12C00	•SEAL, STEERING LOWER	1	
3	09267-30010	•BEARING (30X55X17)	1	
4	09267-30010	BEARING, UPPER (30X55X17)	1	
5	51631-33E00	NUT	2	
6	51641-33E00	WASHER	1	
7	51643-24F10	COVER, STEERING UPPER	1	
8	51644-12C00	SEAL, STEERING UPPER	1	
9	51166-35F00	BOLT	4	
10	51311-06G00	HEAD, STEERING STEM	1	
11	51166-35F00	BOLT	2	
12	51353-06G00	NUT	1	
13	51354-06G00	WASHER	1	
14	56221-27E00	HOLDER, HANDLE LOWER	2	
15	56321-27E00	BOLT	2	
16	56241-27E00	RUBBER, UPPER	2	
17	56260-42A00	RUBBER, LOWER	2	
18	56243-42A00	SPACER	2	
19	08319-31107	NUT	2	
20	56211-32F00	HOLDER, HANDLE UPPER	2	
21	51321-06G00	BOLT	4	
22	09164-08015	WASHER	4	
23	09250-06011	CAP	4	

FIG.56

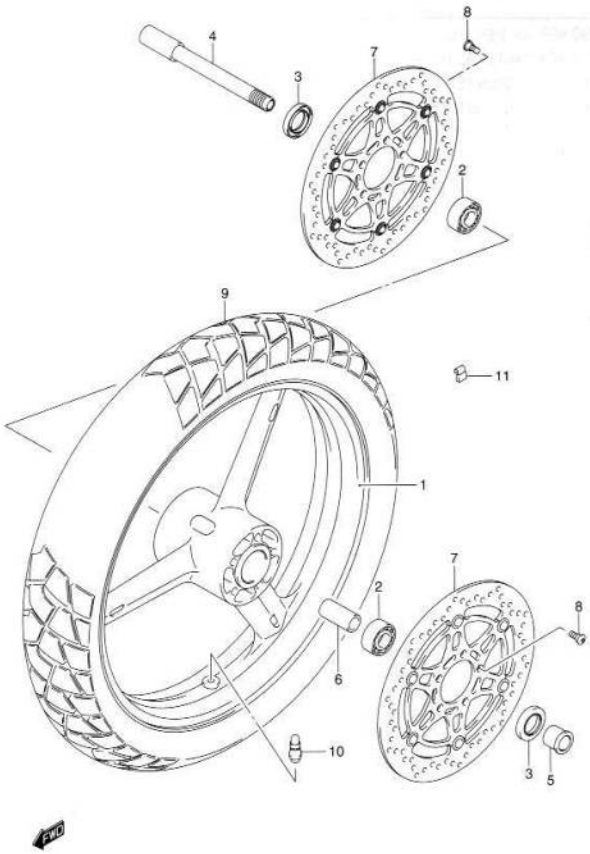

FIG.56 (J-9) FRONT WHEEL

REF NO.	PART NO.	DESCRIPTION	Q'TY	REMARKS
1	54111-06G00-019	WHEEL, FRONT (19M/CXMT2.50) (BLACK)	1	
2	08123-62047	BEARING	2	
3	09285-28001	SEAL, OIL	2	
4	54711-06G00	AXLE, FRONT	1	
5	54751-06G00	SPACER, FRONT AXLE	1	
6	09180-20062	SPACER, FRONT HUB BEARING	1	
7-1	59210-06G00	DISC, FRONT BRAKE	2	MODEL K2/K3
7-2	59210-27G00	DISC, FRONT BRAKE	2	MODEL K4
8	09106-08160	BOLT	10	
9	55110-06G00	TIRE, FRONT (110/80R19M/C 59H)	1	BRIDGESTONE
10	43130-24A00	VALVE ASSY, WHEEL RIM	1	
11-1	43232-82000	BALANCER, WHEEL NO.1	0~3	→43222−73H10
11-2	43234-82000	BALANCER, WHEEL NO.2	0~3	→43224−73H10
11-3	43236-82000	BALANCER, WHEEL NO.3	0~3	→43226−73H10

4

FIG.57

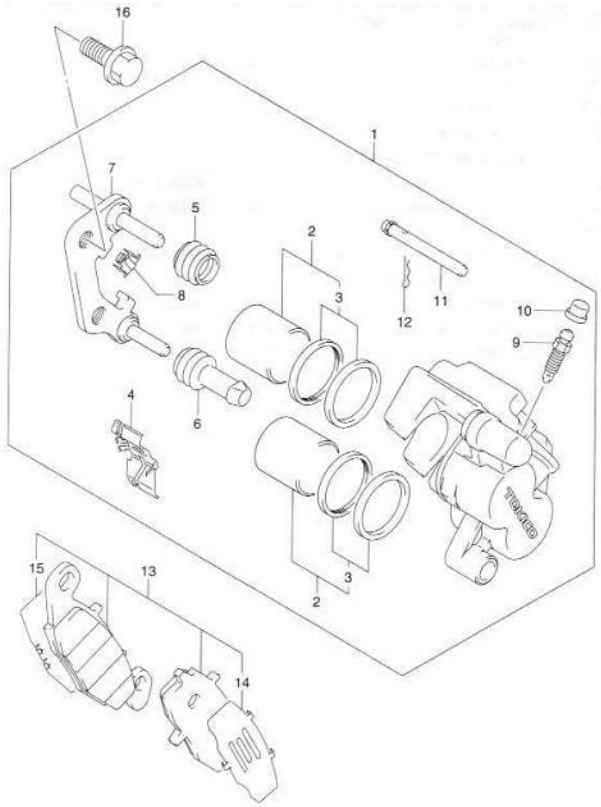

FIG.57 (J-10) FRONT CALIPER

REF NO.	PART NO.	DESCRIPTION	Q'TY	REMARKS
1-1	59100-33D90-999	CALIPER ASSY, FRONT RH	1	
1-2	59300-33D90-999	CALIPER ASSY, FRONT LH	1	
2	59300-33831	·PISTON SET	2	
3	59300-33841	··SEAL SET, PISTON	2	
4-1	59115-33D00	·SPRING RH	1	
4-2	59315-33D00	·SPRING LH	1	
5	59112-44B00	·BOOT	2	
6	59313-36500	·INSULATOR	2	
7-1	59150-33D01	·CARRIER, CALIPER, R	1	
7-2	59350-33D01	·CARRIER, CALIPER, L	1	
8	59116-33D00	·GUIDE	2	
9	59121-18410	·BLEEDER	2	
10	55156-66310	·CAP	2	
11	59141-44B01	·PIN	2	
12	69142-45000	·CLIP	2	
13-1	59102-33870	PAD & SHIM SET RH	1	
13-2	59302-33850	PAD & SHIM SET LH	1	
14	59171-33D00	·SHIM	1	
15	59172-33D00	·SHIM, NO.2	1	
16	01550-10253	BOLT	4	

FIG.58

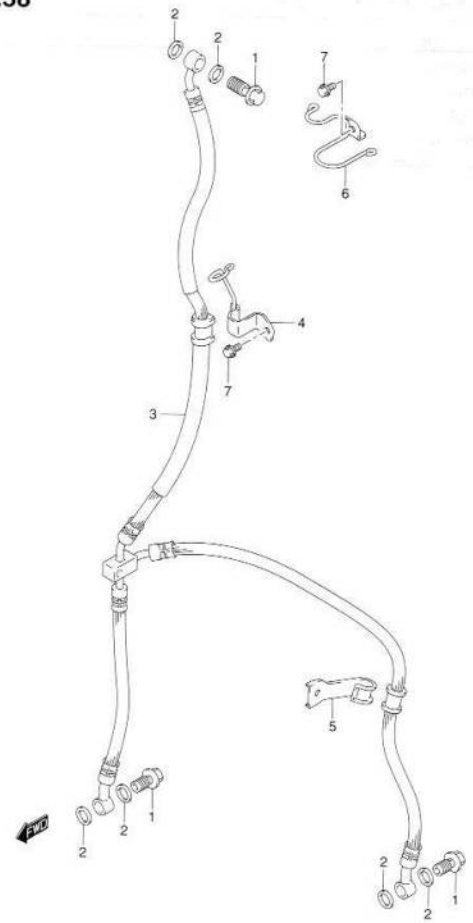

FIG.58 (J-11) FRONT BRAKE HOSE

REF NO.	PART NO.	DESCRIPTION	Q'TY	REMARKS
1	09360-10042	BOLT (10X1.25X22)	3	
2	09161-10009	WASHER (10X15X1.5)	6	
3	59480-06G00	HOSE, FRONT BLAKE	1	
4	59260-06G00	CLAMP, FRONT BRAKE HOSE	1	
5	59268-06G00	CLAMP, FRONT BRAKE HOSE	1	
6	59540-06G00	GUIDE, FRONT BRAKE HOSE	1	
7	01547-06123	BOLT, CLAMP	2	

DL1000K2 E02_058
FRONT BRAKE HOSE

FIG.59

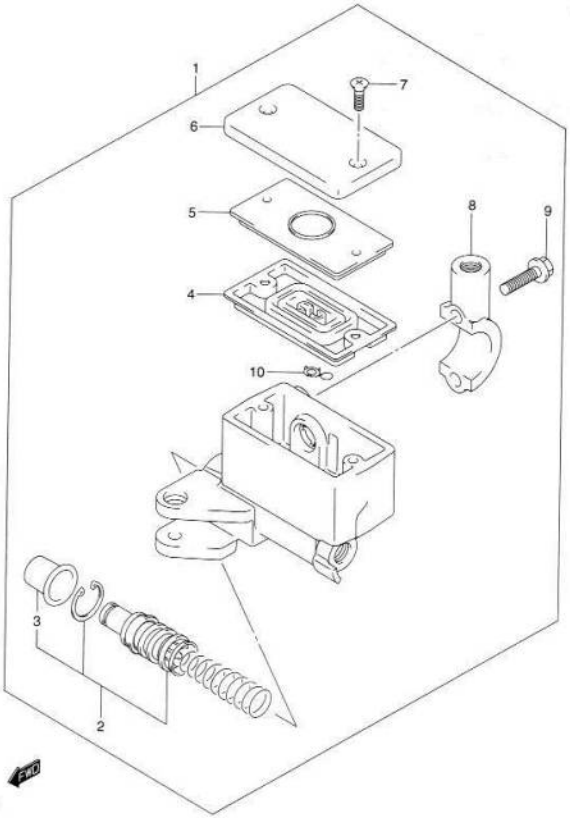

FIG.59 (J-12) FRONT MASTER CYLINDER

REF NO.	PART NO.	DESCRIPTION	Q'TY	REMARKS
1	59600-42F00	CYLINDER ASSY, FRONT MASTER	1	
2	59600-45860	·PISTON/CUP SET	1	
3	59666-44300	··BOOT	1	
4	59667-49460	·DIAPHRAGM	1	
5	59668-41C00	·PLATE, DIAPHRAGM	1	
6	59669-41C00	·CAP	1	
7	69689-49300	·SCREW	2	
8	59671-32F00	·HOLDER	1	
9	59675-02FA0	·BOLT (6X22)	2	
10	59664-32F00	·PROTECTOR	1	

FIG.60

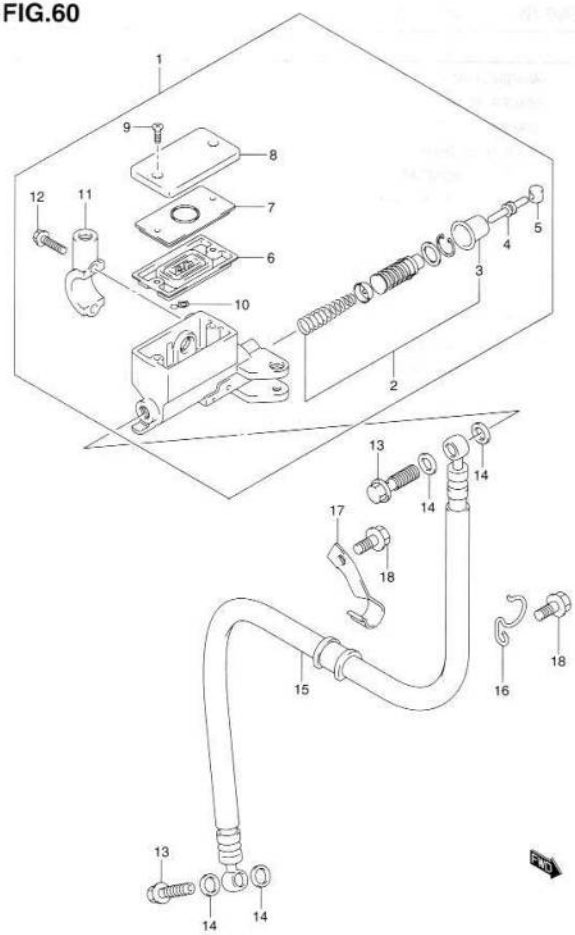

DL1000K2 E02_060
CLUTCH MASTER CYLINDER

FIG.60 (J-13) CLUTCH MASTER CYLINDER

REF NO.	PART NO.	DESCRIPTION	Q'TY	REMARKS
1	59800-32F00	CYLINDER ASSY, CLUTCH MASTER	1	
2	59800-08810	·PISTON/CUP SET	1	
3	59666-44300	··BOOT	1	
4	59871-38A00	·PUSH ROD	1	
5	59892-08A00	·BUSH	1	
6	59667-49460	·DIAPHRAGM	1	
7	59668-41C00	·PLATE, DIAPHRAGM	1	
8	59669-41C00	·CAP	1	
9	69689-49300	·SCREW	2	
10	59664-32F00	·PROTECTOR	1	
11	59671-32F00	·HOLDER	1	
12	59675-02FA0	·BOLT (6X22)	2	
13	09360-10042	BOLT (10X1.25X22)	2	
14	09161-10009	WASHER, (10X15X1.5)	4	
15	59910-06G00	HOSE, CLUTCH	1	
16	59915-24F00	CLAMP, CLUTCH HOSE NO.1	1	
17	59921-06G00	CLAMP, CLUTCH HOSE NO.2	1	
18	01550-06123	BOLT	2	

FIG.61

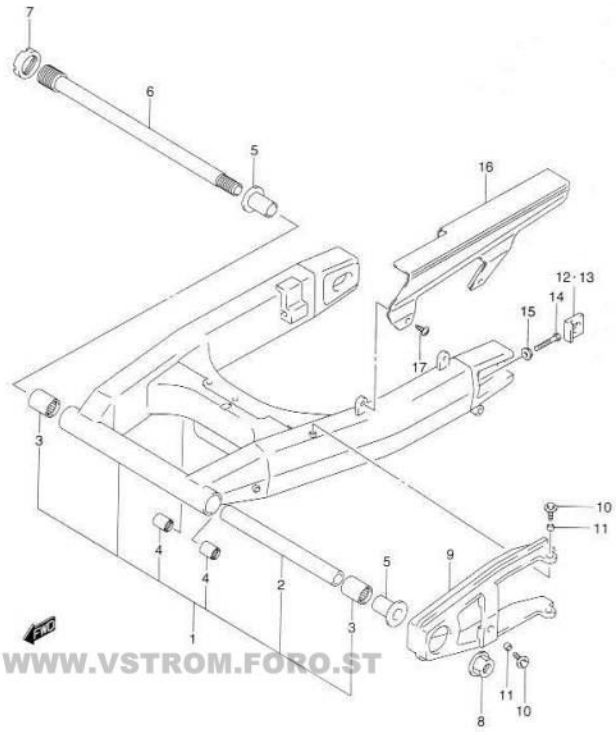

WWW.VSTROM.FORO.ST

FIG.61 (K-2) REAR SWINGING ARM

REF NO.	PART NO.	DESCRIPTION	Q'TY	REMARKS
1	61000-06G00	SWINGING ARM ASSY, REAR	1	
2	09180-20118	·SPACER, REAR SWINGING ARM	1	
3	09263-25059	·BEARING, PIVOT	2	
4	09263-17037	·BEARING, CUSHION ROD	2	
5	61251-31E00	SPACER, SWINGING ARM	2	
6	61211-06G00	SHAFT, RR SWINGING ARM PIVOT	1	
7	61214-19F00	NUT, PIVOT SHAFT	1	
8	08319-31188	NUT	1	
9	61273-06G00	BUFFER, CHAIN TOUCH DEFENSE	1	
10	09116-06152	BOLT (6X20)	3	
11	09180-06306	SPACER (6.5X9X5)	3	
12	61446-17E10	ADJUSTER, CHAIN LH	1	
13	61446-27C20	ADJUSTER, CHAIN RH	1	
14	09100-08287	BOLT (8X50)	2	
15	08316-10083	NUT	2	
16	61310-34E00	CASE, CHAIN	1	
17	09139-06083	SCREW	2	

FIG.63

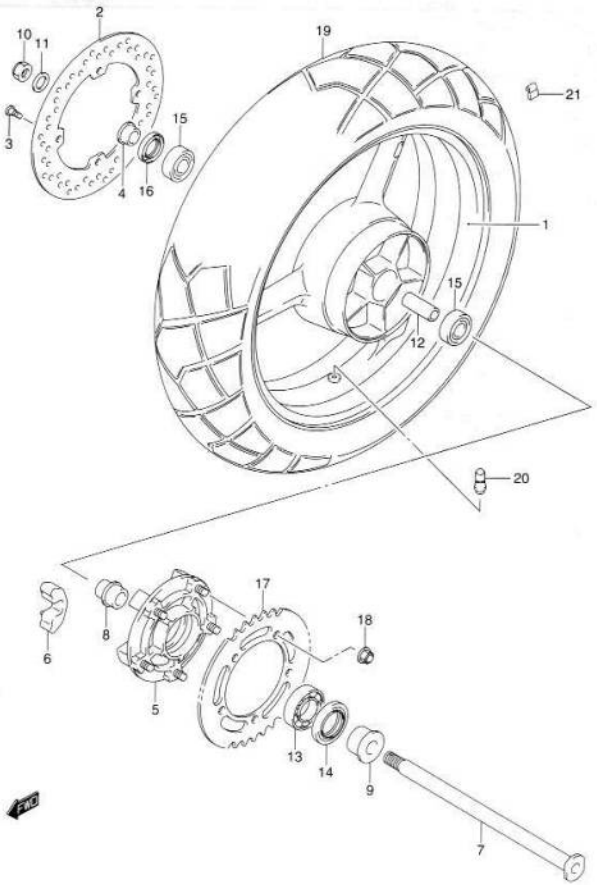

FIG.63 (K-4) REAR WHEEL

REF NO.	PART NO.	DESCRIPTION	Q'TY	REMARKS
1	64111-06G00-019	WHEEL, REAR (17M/CXMT4.00) (BLACK)	1	
2	69211-06G00	DISC, REAR BRAKE	1	
3	09106-08160	BOLT	4	
4	64741-10F00	SPACER, REAR AXLE RH	1	
5	64610-06G00	DRUM, REAR SPROCKET	1	
6-1	64651-35F00	ABSORBER, REAR HUB SHOCK	5	MODEL K2
6-2	64651-35F10	ABSORBER, REAR HUB SHOCK	5	MODEL K3/K4
7	64711-06G00	AXLE, REAR	1	
8	64733-06G00	RETAINER, REAR SPROCKET DRUM	1	
9	64751-06G00	SPACER, REAR AXLE LH	1	
10	09159-18007	NUT	1	
11	09160-19022	WASHER (19X32X3.2)	1	
12	09180-20112	SPACER, REAR HUB BEARING	1	
13	09262-32007	BEARING (32X65X17)	1	
14	09285-39001	SEAL, REAR SPROCKET DRUM OIL	1	
15	08123-62047	BEARING (20X47X14)	2	
16	09285-28001	SEAL, DUST	1	
17	64511-35F20	SPROCKET, REAR (NT:42−525)	1	
18	08319-31107	NUT	5	
19	65110-06G00	TIRE, REAR (150/70R17M/C 69H)	1	BRIDGESTONE
20	43130-24A00	VALVE ASSY, WHEEL RIM	1	
21-1	43232-82000	BALANCER, WHEEL NO.1	0~3	→43222−73H10
21-2	43234-82000	BALANCER, WHEEL NO.2	0~3	→43224−73H10
21-3	43236-82000	BALANCER, WHEEL NO.3	0~3	→43226−73H10

FIG.62

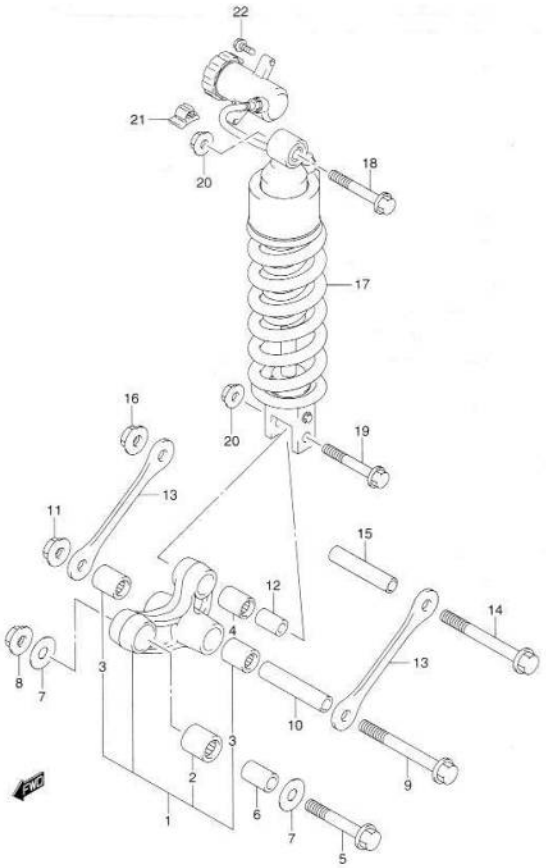

DL1000K2 E02_062
REAR CUSHION LEVER

FIG.62 (K-3) REAR CUSHION LEVER

REF NO.	PART NO.	DESCRIPTION	Q'TY	REMARKS
1	62600-06860	LEVER SET, REAR CUSHION	1	
2	09263-20073	·BEARING, FRONT (20X27X30)	1	
3	09263-17037	·BEARING, CENTER (17X24X25)	2	
4	09263-17034	·BEARING, REAR (17X24X26)	1	
5	62658-19F00	BOLT, FRONT (12X78)	1	
6	62684-12C00	SPACER, FRONT (12X78)	1	
7	09160-12037	WASHER	2	
8	09159-12056	NUT	1	
9	62621-19D00	BOLT, CENTER (12X111)	1	
10	09180-12122	SPACER, CENTER (12X17X85)	1	
11	09159-12056	NUT	1	
12	62684-40A10	SPACER, REAR (10X17X30)	1	
13	62641-06G00	ROD, REAR CUSHION	2	
14	62621-19D00	BOLT, ROD (12X111)	1	
15	09180-12122	SPACER, ROD (12X17X85)	1	
16	09159-12056	NUT	1	
17	62100-06G10-13L	ABSORBER ASSY, REAR SHOCK (SILVER)	1	
18	09103-10033	BOLT, UPPER (10X70)	1	
19	09103-10143	BOLT, LOWER	1	
20	09159-10058	NUT	2	
21	09403-10313	CLAMP, ADJUSTER HOSE	2	
22	01550-06163	BOLT, TANK	2	

FIG.64

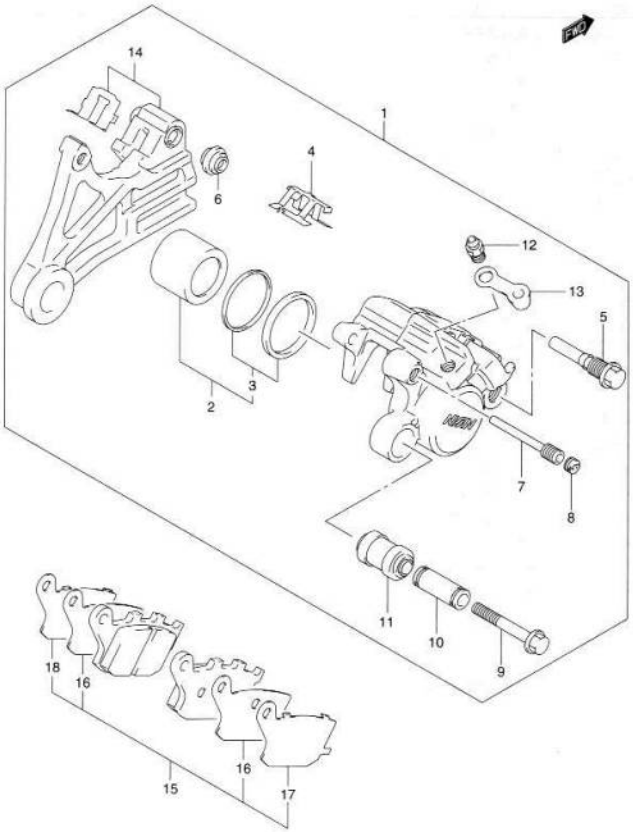

FIG.64 (K-5) REAR CALIPER

REF NO.	PART NO.	DESCRIPTION	Q'TY	REMARKS
1	69100-06G00-999	CALIPER ASSY, REAR	1	
2	69100-04810	·PISTON SET	1	
3	69100-04820	··SEAL SET, PISTON	1	
4	69115-06G00	·SPRING, PAD	1	
5	69105-04F00	·BOLT	1	
6	59303-14500	·BOOT	1	
7	69141-40F00	·PIN, HANGER	1	
8	59146-21E10	·PLUG	1	
9	69182-04F00	·BOLT	1	
10	69185-04F00	·SLEEVE	1	
11	69186-04F00	·BOOT	1	
12	59121-01A00	·BLEEDER	1	
13	59122-01A00	·CAP	1	
14	69150-06G00	·BRACKET	1	
15	69100-06830	PAD & RETAINER SET	1	
16	69132-06G00	·INSULATOR	2	
17	69133-06G00	·RETAINER	1	
18	69134-06G00	·RETAINER	1	

FIG.65

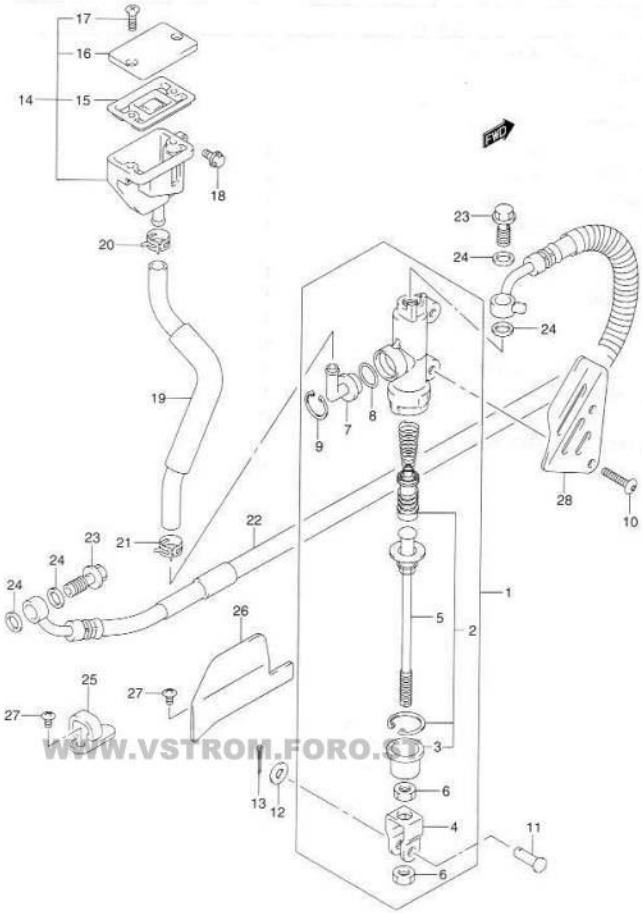

WWW.VSTROM.FORO.CL

FIG.65 (K-6) REAR MASTER CYLINDER

REF NO.	PART NO.	DESCRIPTION	Q'TY	REMARKS
1	69600-06G00	CYLINDER ASSY, REAR MASTER	1	
2	69600-34820	·PISTON/CUP SET	1	
3	69691-00A00	··BOOT	1	
4	69692-19A00	·YOKE	1	
5	69670-03G00	·ROD, PUSH	1	
6	69693-05A00	·NUT	2	
7	69672-00B20	·CONNECTOR	1	
8	69686-34200	·O RING	1	
9	69674-00B20	·CIRCLIP	1	
10	09139-06029	BOLT (6X25)	2	
11	09200-06037	PIN	1	
12	08322-01063	WASHER	1	
13	04111-20158	COTTER PIN	1	
14	69740-01D02	TANK ASSY, REAR RESERVOIR	1	
15	59667-04700	·DIAPHRAGM	1	
16	59669-05D00	·CAP	1	
17	69689-04A00	·SCREW	2	
18	01547-06123	BOLT	1	
19	69730-06G00	HOSE, RESERVOIR TANK	1	
20	09401-13417	CLIP, UPPER	1	
21	09401-12404	CLIP, LOWER	1	
22	69480-06G00	HOSE, REAR BRAKE	1	
23	09360-10042	BOLT, CALIPER (10X1.25X22)	2	
24	09161-10009	WASHER (10X15X1.5)	4	
25	61196-27C30	GUIDE, BRAKE HOSE	1	
26	61196-06G00	GUIDE, REAR BRAKE HOSE FRONT	1	
27	02142-05103	SCREW	2	
28	69641-06G00	COVER, REAR MASTER CYLINDER	1	

FIG.66

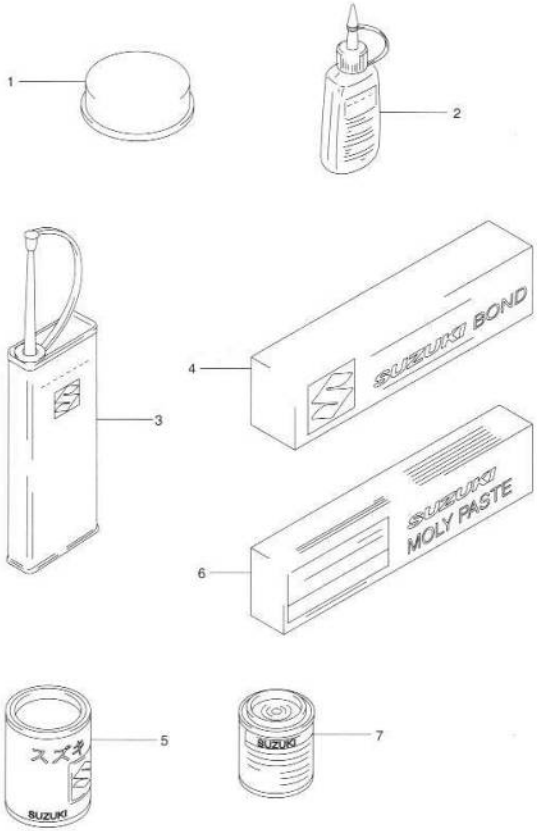

FIG.66 (K-7) OPTIONAL

REF NO.	PART NO.	DESCRIPTION	Q'TY		REMARKS
1	99000-25110	SUZUKI PBC GREASE	1	20G	
2-1	99000-32020	THREAD LOCK SUPER (1333B)	1	50G	
2-2	99000-32030	THREAD LOCK SUPER (1303B)	1	50G	
2-3	99000-32050	THREAD LOCK SUPER (1342)	1	50G	
2-4	99000-32100	THREAD LOCK SUPER (1305)	1	50G	
2-5	99000-32130	THREAD LOCK SUPER (1360)	1	50G	
3	99000-32040	THREAD LOCK CEMENT	1	200G	
4-1	99000-31140	SUZUKI BOND (1207B) (BLACK)	1	100G	
4-2	99000-31110	SUZUKI BOND (1215)	1	100G	
5	99000-25030	SUZUKI SUPER GREASE	1	150G	
6	99000-25140	SUZUKI MOLY PASTE	1	50G	
7-1	99000-10209-YD8	PAINT (SONIC SILVER METALLIC)	1	90G	
7-2	99000-10209-Y7H	PAINT (PEARL DARK SPACE BLUE)	1	90G	
7-3	99000-10209-YU8	PAINT (GRAY METALLIC)	1	90G	
7-4	99000-10209-YU9	PAINT (PEARL YELLOW)	1	90G	
7-5	99000-10209-YAY	PAINT (PEARL NEBULAR BLACK)	1	90G	

PART NO.	FIG.NO.-REF.NO.
10000	
11100-06G00	2-1
	3-1
11115-32E70	2-4
	3-4
11141-02F01	1-2
	2-5
	3-5
11171-06G01	2-21
11172-06G00	3-21
11173-02F00	1-3
	2-22
	3-22
11178-12F10	50-2
11178-17E00	1-4
	2-23
	3-23
11182-35F00	1-5
	2-29
	3-27
11211-06G00-0F0	4-1
11221-06G00-0F0	4-2
11241-02F01	1-6
	4-3
11242-02F01	1-7
	4-4
11302-06812	5-1
11302-06821	5-1
11319-33E00	5-2
11329-02F00	5-10
11340-06G00	6-1
11340-06G10	6-1
11340-06G20	6-1
11342-06G00	6-7
11351-02F51	6-11
11360-06G00	6-20
11381-06G00	6-23
11390-06G00	5-18
11401-06810	1-1
11401-06840	1-1
11482-06G00	1-8
	6-3
11482-06G10	1-8
	6-3
11483-02F10	1-9
	6-12

PART NO.	FIG.NO.-REF.NO.
11485-02F10	1-10
	6-24
11971-12C51	6-29
11971-25D00	6-29
11971-33210	6-2
12111-06G00-0F0	7-16
12140-02F42	7-17
12151-02F00	7-18
12160-06G00	7-5
12164-02F11-0A0	7-7
12164-02F11-0B0	7-7
12164-02F11-0C0	7-7
12164-02F11-0D0	7-7
12165-27A50	7-6
12220-06G00	7-1
12229-06G01-0A0	7-2
	7-3
12229-06G01-0B0	7-2
	7-3
12229-06G01-0C0	7-2
	7-3
12600-06G00	8-6
12600-06810	8-4
12612-06G00	8-1
12618-31D01	8-7
12652-38B00	7-4
12701-06G00	9-1
12702-06G00	9-2
12703-06G00	9-3
12704-06G00	9-4
12716-06G00	10-20
12731-06G00	10-27
12750-06G00	10-16
12755-02F01	10-17
12760-23F00	10-1
12771-06G00	10-2
12800-41810	9-14
12810-06G00	10-3
12815-06G00	10-4
12830-30A01	10-8
12832-02A00	10-9
12832-05A10	10-6
12833-30A01	10-10
12834-02A00	10-11
12837-19B10	1-11
	10-12
12837-24A10	1-12
	10-13
12891-02F00	9-12
12892-41C00-230	9-13

PART NO.	FIG.NO.-REF.NO.
12892-41C00-235	9-13
12892-41C00-240	9-13
12892-41C00-245	9-13
12892-41C00-250	9-13
12892-41C00-255	9-13
12892-41C00-260	9-13
12892-41C00-265	9-13
12892-41C00-270	9-13
12892-41C00-275	9-13
12892-41C00-280	9-13
12892-41C00-285	9-13
12892-41C00-290	9-13
12892-41C00-295	9-13
12892-41C00-300	9-13
12892-41C00-305	9-13
12892-41C00-310	9-13
12892-41C00-315	9-13
12892-41C00-320	9-13
12892-41C00-325	9-13
12892-41C00-330	9-13
12892-41C00-335	9-13
12892-41C00-340	9-13
12892-41C00-345	9-13
12892-41C00-350	9-13
12911-06G00	9-5
12911-16G00	9-5
12912-02F00	9-6
12921-06G00	9-7
12931-06G00	9-8
12932-24400	9-11
12933-06G00	9-9
13101-06G00	2-17
13102-06G00	3-17
13170-06G00	13-7
13268-89J00	11-12
13270-06G00	11-6
13271-44B00	11-11
13271-93011	11-5
13274-84000	12-4
13279-06G00	11-22
13311-06G00	11-18
13386-09410	11-19
13405-06G01	11-1
13405-06G21	11-1
13405-06G30	11-1
13477-39F00	12-1
13548-42F00	11-10
13552-06G00	11-13
13552-06G10	11-9
13580-02F00	11-7

PART NO.	FIG.NO.-REF.NO.
13580-06G00	11-3
13602-06128	12-6
13605-02F00	11-2
13605-06G00	11-14
13607-47070	11-15
13612-02F00	11-4
13627-06G00	11-20
13650-57F00	13-17
	20-25
13672-33E00	11-17
13683-10F60	12-3
13697-02A00	21-10
13697-17F00	13-14
13700-06G00	13-1
13715-06G00	13-15
13741-06G00	13-3
13746-06G00	13-6
13780-06G00	13-5
13788-06G00	13-9
13851-06G00	13-21
13858-06G00	13-22
13859-41B10	13-10
13881-06G00	13-2
13891-06G00	13-4
13912-02FA0	13-16
14150-06G00	14-1
14160-06G00	14-2
14181-31D00	1-13
	14-3
14186-06G00	14-12
14196-06G00	14-18
14205-06G00	14-10
14205-06G10	14-10
14305-06G00	14-11
14305-06G02	14-11
14305-06G10-H01	14-11
14305-06G11-H01	14-11
14306-06G00	14-17
14306-06G02	14-17
14306-06G10-H01	14-17
14306-06G11-H01	14-17
14414-06G00	14-26
14459-42F10	14-10A
	14-11A
	14-17A
14771-02F00	1-14
	14-8
14780-06G00	14-14
14780-06G01	14-14
14790-06G00	14-20

PART NO.	FIG.NO.-REF.NO.
14790-06G01	14-20
14795-06G00	14-15
	14-21
15100-06G00	16-1
15100-06G10	16A-1
15111-35F00	16-7
	16A-4
15112-42F00	16-8
	16A-5
15113-35F00	16-12
	16A-7
15114-35F00	16-6
	16A-6
15115-35F00	16-10
	16A-8
15116-06G10	16A-9
15116-35F10	16-3
	16-11
	16A-11
15117-06G10	16A-10
15171-35F00	16-15
	16A-12
15172-35F00	16-14
	16A-13
15173-35F00	16-13
	16A-14
15181-06G00	16-4
	16A-15
15201-35F00	1-15
	16-16
	16A-17
15410-24FB0	16-5
	16A-2
15420-24FB0	16-9
15420-35F01	16A-3
15710-06G00	11-16
15730-06G00	12-5
15810-06G00	16-17
	16A-19
16321-02F00	15-11
16331-02F00	15-3
16400-02FB0	15-1
16440-24F00	15-7
16460-02F00	17-8
16460-16G00	17-8
16470-06G00	17-9
16470-16G00	17-9
16510-03G00-X07	15-9
16520-32E00	15-10
16600-06G00	17-1

PART NO.	FIG.NO.-REF.NO.
16600-16G00	17-1
16620-02F00	17-4
16650-02F00	17-5
16650-16G00	17-5
17410-02F20	18-1
17410-02F40	18-1
17435-02F00	18-5
17470-02F10	18-3
17491-06G00	18-2
17491-16G00	18-2
17662-02F11	20-19
17663-42E00	20-21
17670-06G30	20-20
17670-06G50	20-20
17680-33E00	20-17
17689-50F00	1-16
	20-18
17710-06G00	19-1
17711-40F00	19-7
17712-40F00	19-8
17730-12C20	20-1
17760-06G00	19-6
17765-09F00	17-6
17800-06G00	19-2
17851-06G00	20-2
17852-06G00	20-3
17853-02F00	20-6
17856-02F10	20-23
17856-16G00	20-23
17856-16G10	20-23
17890-06G00	20-7
17890-06G10	20-8
17890-06G20	20-7
	20-8
17910-06G00	20-11
17910-06G10	20-11
17931-06G00	20-12
17981-19F00	20-14
18213-06G00	13-25
18450-06G00	21-1
18461-06G00	21-4
18471-06G00	21-5
18510-06G00	21-7
18510-35F00	21-7
18517-06G10	21-8
18531-06G01	21-2
18590-80C40	13-12
18591-42F00	13-19
18595-42F00	13-20
18610-06G00	21-11

5

PART NO.	FIG.NO.-REF.NO.
18711-06G00	21-9
18711-06G10	21-9
20000	
21111-02F11	7-8
21111-02F20	7-8
21112-02F00	7-9
21114-02F00	7-10
21200-06811	22-1
21410-06G00	22-4
21412-06G00	22-5
21413-06G00	22-6
21413-06G10	22-6
21414-29F00	22-7
21441-24F10	22-10
21441-24F20	22-8
21442-24F00	22-9
21451-24F00	22-11
21451-24F10	22-12
21462-06G00	22-13
21471-06G00	22-14
21472-06G00	22-15
23110-27A00	22-20
23111-26D00	22-21
23121-31E00	22-22
23160-06G01	22-23
23163-06B00	22-24
23164-05A00	22-25
23166-02F20	22-25A
23171-06G00	22-32
24120-06G00	23-1
	23A-1
24130-02F10	23-11
	23A-13
24221-02F01	23-2
	23A-2
24231-02F13	23-3
24231-02F20	23A-3
24251-02F11	23A-4
24251-02811	23-4
24252-02F10	23A-5
24261-02820	23-5
24261-06G00	23A-6
24262-02F00	23A-7

PART NO.	FIG.NO.-REF.NO.
24311-06G00	23-12
	23A-14
24312-02F00	23-13
	23A-15
24321-02F11	23-14
	23A-16
24322-02F01	23-15
	23A-17
24331-02F12	23A-18
24331-02811	23-16
24332-17E20	23A-19
	23A-21
24333-02F00	23-22
	23-23
	23A-26
	23A-27
24341-02F20	23A-20
24341-02811	23-17
24351-02F13	23-18
	23A-22
24361-06G00	23-19
	23A-23
24741-06G00	23-32
	23A-36
24741-20A00	10-25
24741-21A00	23-33
	23A-37
	24-6
24751-06G00	23-34
	23A-38
25211-17E01	24-1
25211-35F00	24-2
25231-35F00	24-3
25310-02F10	24-7
25312-12C00	24-9
25350-06G00	24-13
25355-13E00	24-14
25355-38F00	24-14
25381-13E00	24-10
25381-13E10	24-10
25411-02F20	24-4
	24-5
25510-06G00	24-17
25510-06G10	24-17
25512-06G00	24-18
25520-06G00	24-25
25525-43510	24-27
25526-47000	24-26
	24-29
25600-06G00	24-28

PART NO.	FIG.NO.-REF.NO.
25600-06G10	24-28
25617-03F00	24-31
25652-20C00	24-30
25671-01011	24-19
27510-20A20	23-38
27531-24B13	23A-42
	23-39
	23A-43
27600-06G00-112	23-40
	23A-44
27620-06G00	23-41
	23A-45
30000	
31100-06G00	25-1
31132-45C00	25-2
31143-38300	25-3
31150-44B10	25-4
31156-48B00	25-11
31170-02F10	25-5
31170-43400	25-6
31172-38300	25-7
31173-88C00	25-8
31264-44110	25-9
31281-24B10	25-10
31497-45000	24-38
31800-06G00	27-1
31861-47E00	27-2
31861-48B10	28-5
	28-8
32101-06G00	26-1
32101-06G10	26-1
32102-06G00	26-2
32102-06G10	26-2
32371-13E00	26-3
32491-06G00	26-4
32800-06G00	27-5A
32800-42F00	27-5
32831-06G00	27-6
32831-06G10	27-6A
32920-06G00	27-20
32920-06G10	27-20
32920-06G30	27-20
32920-06G40	27-21

PART NO.	FIG.NO.-REF.NO.
32920-06G50	27-21
33220-80G00	27-11
33410-06G00	27-13
33420-06G00	27-14
33510-11D00	27-16
33510-17G00	27-16
33541-23E01	27-17
33542-06G00	27-18
33542-06G10	27-19
33610-26D10	28-1
33624-38400	28-11
33651-37000	28-2B
33652-05G00	28-2
33652-06G10	30-10
	30A-10
	30B-8
33652-16G00	28-2
33652-28010	28-2A
33810-06G00	28-4
33810-06G10	28-7
33820-06G00	28-10
33860-06G00	28-12
33960-06G00	27-22
33960-06G10	27-22
34111-06G00	29-7
34111-27G00	29A-6
34120-06G00	29-1
34120-06G10	29-1
34120-06G30	29-1
34120-06G40	29-1
34120-06G50	29A-1
34120-06G60	29A-1
34123-06G00	29-2
34124-06G00	29-4
34124-24F00	29A-5
34149-31F10	29-9
34150-06G00	29-5
34150-27G00	29A-4
34165-06G00	29-8
34183-06G00	29-3
34183-31F10	29A-3
34188-06G00	29-6
34189-32B00	29-12
34193-06G50	29A-2
34383-31F10	29-11
34810-06G00	16-2
34810-06G10	16A-16
34955-10G00	29A-8
34955-13E00	29-13
34981-35F00	29-15

PART NO.	FIG.NO.-REF.NO.
34981-35F00	29A-10
34990-47F00	29-16
	29A-11
35100-06G20-999	30-1
35100-06G30-999	30B-1
35100-06G50-999	30A-1
35125-77A00	30-2
	30A-2
	30B-2
35601-06G00	31-1
	31-8
35601-06G30	31-1
35601-27G00	31A-1
35602-06G00	31-2
	31-9
35602-06G30	31-2
35602-27G00	31A-2
35603-06G10	31A-10
35604-06G10	31A-11
35612-06G00	31-3
	31-10
35612-31F30	31A-3
	31A-13
35623-06G00	31-4
	31-11
35632-31F30	31A-4
	31A-12
35710-06G00	32-1
35710-06G50	32A-1
35718-06G00	32-2
35718-06G50	32A-3
35720-06G00	32-1A
	32A-2
35726-06G00	32-3
	32A-4
35734-06G00	32-4
	32A-5
35739-06G00	32-5
	32A-6
35766-08F00	32-14
35766-27G30	32A-15
35910-06G00	32-10
35910-06G01	32A-11
35912-08F00	32-11
	32A-12
35913-08F00	32-12
	32A-13
35950-14A00	30B-9
36118-06G50	30-3
	30A-3

PART NO.	FIG.NO.-REF.NO.
36610-06G00	33-1
36610-06G10	33-1
36610-06G20	33A-1
36610-06G30	33A-1
36610-06G40	33B-1
36610-06G50	33B-1
36618-18G10	33B-5
36618-33E00	33-5
	33A-5
36618-43410	28-6
	28-9
36619-06G00	33-3
	33A-3
36619-06G01	33B-3
36620-06G00	33-4
	33A-4
36620-06G10	33-4
	33A-4
36620-27G10	33B-4
36620-27G30	33B-4
36852-06G00	33-7
	33A-7
	33B-7
36859-06G00	33-6
	33A-6
	33B-6
37000-06860	33-13
	33A-13
	33B-13
	33B-13
	33B-13
37000-06880	33-13
	33A-13
	33B-13
37100-06G00	33-14
	33A-14
	33B-14
	33B-14
37100-06G10	33-14
	33A-14
	33B-14
37146-33E00	33-24
	33A-24
	33B-24
37200-06G10	34-1
37200-06G30	34-3
	34A-1
37400-06G10	34-5
	34A-3
	34A-3
37400-06G40	34-5

5

PART NO.	FIG.NO.-REF.NO.
37400-06G40	34A-3
37730-06G00	24-37
37740-31D00	33-16
	33A-16
	33B-16
37820-33D10	5-25
37840-06G00	33-18
	33A-18
	33B-18
38500-41F00	33-20
	33A-20
	33B-20
38610-03F00	31A-18
38610-12FA0	31-14
38740-24X50	33-23
	33A-23
	33B-23
40000	
41100-06G00-YD8	35-1
41198-02F00	35-13
41200-06G00	35-2
41911-06G00-YD8	35-4
41911-06G01-YD8	35-4
41912-06G00-YD8	35-5
41912-06G01-YD8	35-5
41921-16G00	35-9
41921-19F11	35-7
41921-33E11	35-9
41922-19F00	35-8
41922-33E00	35-10
41923-16G00	35-7
41941-19F01	35-11
42310-06G00	36-1
42321-03FK0	36-3
42330-06G00	36-6
43111-06G00	36-9
43130-24A00	56-10
	63-20
43232-82000	56-11
	63-21
43234-82000	56-11
	63-21
43236-82000	56-11

PART NO.	FIG.NO.-REF.NO.
43236-82000	63-21
43251-06G00	36-13
43259-06G00	33-17
	33A-17
	33B-17
43501-06G00	37-4
43501-06G01	37-4
43502-06G00	37-5
43502-06G01	37-5
43510-06G00	37-1
43521-06G00	37-2
43551-06G00	37-7
43552-06G00	37-8
43576-07D01	37-6
43600-42F00	37-14
43612-31300	37-16
43632-45501	37-17
43700-42F00	37-15
43811-06G00	37-20
43816-42F10	37-26
43821-06G00	37-21
43826-42F10	37-27
44110-06G00-YAY	39-1
44110-06G00-YBA	39-1
44110-06G00-YD8	39-1
44110-06G00-YU8	39-1
44110-06G00-YU9	39-1
44110-06G00-Y7H	39-1
44110-06G10-YAY	39-1
44110-06G10-YBA	39-1
44110-06G10-YD8	39-1
44110-06G10-YU8	39-1
44110-06G10-YU9	39-1
44110-06G10-Y7H	39-1
44160-06G00	40-3
44164-06G00	40-5
44171-06G00-YZ5	40-1
44171-06G10-291	40-1
44194-06G00	39-13
44201-33820	39-2
44423-06G00	39-11
44511-06G00	40-13
44520-06G00	40-6
44530-06G00	39-9
44541-06G00	39-4
44542-06G00	39-8
44545-06G00	39-7
44550-06G00	39-5
44550-06G01	39-5
44560-06G00	40-14

PART NO.	FIG.NO.-REF.NO.
44561-35F00	40-11
44570-06G00	40-15
44885-38A00	47-9
	47A-15
45100-06G00-W69	52-1
45100-06G10-H1N	52-1
45213-13601	52-4
45220-20A01	52-5
45280-06G00	52-10
45288-14F00	52-6
45289-11F00	52-8
45501-06G00-YBA	53A-1
45501-06G00-YD8	53A-1
45501-06G00-YU8	53-1
45501-06G00-YU9	53-1
45501-06G00-Y7H	53-1
45501-06G00-ZJX	53A-1
45501-06G10-YAY	53B-1
45501-06G10-YBA	53B-1
45501-06G10-YD8	53B-1
45502-06G00-YBA	53A-3
45502-06G00-YD8	53A-3
45502-06G00-YU8	53-3
45502-06G00-YU9	53-3
45502-06G00-Y7H	53-3
45502-06G00-ZJX	53A-3
45502-06G10-YAY	53B-3
45502-06G10-YBA	53B-3
45502-06G10-YD8	53B-3
46311-06G00-YD8	38-1
46321-06G00	38-2
47111-06G00-YZ5	41-1
47111-06G00-291	41-1
47211-06G00-YZ5	41-2
47211-06G00-291	41-2
47412-06G00	46-2
50000	
51103-06G00	54-1
51103-06G10	54-1
51103-06G20	54A-1
51104-06G00	54-2
51104-06G20	54A-2

PART NO.	FIG.NO.-REF.NO.
51110-06G00	54-10
51110-06G20	54A-10
51117-17C00	54-18
	54A-18
51121-13E00	54-11
	54A-11
51130-06G00	54-3
	54A-3
51140-06G00	54-4
	54A-4
51147-48130	54-20
	54A-23
51148-36011	54-21
	54A-24
51152-13E00	54-12
	54A-12
51153-14D00	54-7
	54A-7
51166-06G00	54-22
	54A-25
51166-35F00	55-9
	55-11
51168-17C00	54-6
	54A-6
51171-06G00	54-15
51171-06G20	54A-15
51172-17C00	54A-20
51173-29E00	54-8
	54A-8
51176-12C10	54-17
	54A-17
51185-31E00	54A-21
51186-17C00	54-16
	54A-16
51189-14D00	54A-19
51195-31E00	54-5
	54A-5
51311-06G00	55-10
51321-06G00	55-21
51351-14E30	54-19
51353-06G00	55-12
51354-06G00	55-13
51410-06G00	55-1
51556-38B00	54-9
	54A-9
51631-33E00	55-5
51641-33E00	55-6
51643-24F10	55-7
51644-12C00	55-2
	55-8

PART NO.	FIG.NO.-REF.NO.
51827-27E00	54-14
	54A-14
52110-06G00	54-13
52110-06G20	54A-13
53111-06G00-YAY	42-1
53111-06G00-Y7L	42-1
53111-06G00-33J	42-1
53122-06G00	42-3
54111-06G00-019	56-1
54711-06G00	56-4
54751-06G00	56-5
55110-06G00	56-9
55156-66310	57-10
56111-06G00	43-1
56111-06G10	43-1
	43-1
	43A-1
56200-06841	43-2
56200-06860	43A-2
56211-32F00	55-20
56221-27E00	55-14
56241-27E00	55-16
56243-42A00	55-18
56260-42A00	55-17
56272-06G00	43-4
	43A-5
56272-10G00	43A-8
56272-42F00	43-7
56273-10G00	43A-9
56276-17D00	43-5
	43A-6
56321-27E00	55-15
56500-04F20	43A-10
56500-06G00	43-9
56600-04F20	43A-11
56600-06G00	43-10
57100-42F00	44-2
57110-45D02	44-1
57211-22D01	44-9
57300-06G00	44-4
57341-06G00-019	45-1
57341-27G00-291	45-1
57346-14G00	43A-4
57431-06G00	44-5
	44-11
57431-06G10	44-11
57460-17C00	44-7
57460-17C11	44-7
57465-17C00	44-8
57500-06G00	44-10

PART NO.	FIG.NO.-REF.NO.
57500-06G10	44-10
57541-06G00-019	45-2
57541-06G10-291	45-2
57560-02FA0	44-13
58300-06G00	43-11
58300-06G01	43-11
58300-06G10	43A-12
58621-06G00	43-12
	43A-13
59100-33D90-999	57-1
59102-33870	57-13
59112-44B00	57-5
59115-33D00	57-4
59116-33D00	57-8
59121-01A00	22-26
	64-12
59121-18410	57-9
59122-01A00	22-27
	64-13
59141-44B01	57-11
59146-21E10	64-8
59150-33D01	57-7
59171-33D00	57-14
59172-33D00	57-15
59210-06G00	56-7
59210-27G00	56-7
59260-06G00	58-4
59268-06G00	58-5
59300-33D90-999	57-1
59300-33831	57-2
59300-33841	57-3
59302-33850	57-13
59303-14500	64-6
59313-36500	57-6
59315-33D00	57-4
59350-33D01	57-7
59480-06G00	58-3
59540-06G00	58-6
59600-42F00	59-1
59600-45860	59-2
59664-32F00	59-10
	60-10
59666-44300	59-3
	60-3
59667-04700	65-15
59667-49460	59-4
	60-6
59668-41C00	59-5
	60-7
59669-05D00	65-16

5

PART NO.	FIG.NO.-REF.NO.
59669-41C00	59-6
	60-8
59671-32F00	59-8
	60-11
59675-02FA0	59-9
	60-12
59800-08810	60-2
59800-32F00	60-1
59871-38A00	60-4
59892-08A00	60-5
59910-06G00	60-15
59915-24F00	60-16
59921-06G00	60-17
60000	
61000-06G00	61-1
61196-06G00	65-26
61196-27C30	65-25
61211-06G00	61-6
61214-19F00	61-7
61251-31E00	61-5
61273-06G00	61-9
61310-34E00	61-16
61446-17E10	61-12
61446-27C20	61-13
62100-06G10-13L	62-17
62600-06860	62-1
62621-19D00	62-9
	62-14
62641-06G00	62-13
62658-19F00	62-5
62684-12C00	62-6
62684-40A10	62-12
63111-06G00	46-1
63112-06G00-YZ5	46-5
63112-06G00-291	46-5
63421-19F00	46-11
64111-06G00-019	63-1
64511-35F20	63-17
64610-06G00	63-5
64651-35F00	63-6
64651-35F10	63-6
64711-06G00	63-7
64733-06G00	63-8
64741-10F00	63-4

PART NO.	FIG.NO.-REF.NO.
64751-06G00	63-9
65110-06G00	63-19
68111-18G00-ABF	49B-4
68111-18G00-ACV	49B-4
68111-18G00-ASL	49B-4
68161-06G00-JL8	53-2
	53-4
68161-06G00-JL9	53-2
	53-4
68161-06G00-JM1	53-2
	53-4
68161-06G00-LY4	53A-2
	53A-4
68161-06G00-LY5	53A-2
	53A-4
68161-06G00-LY6	53A-2
	53A-4
68161-06G10-AMR	53B-2
	53B-4
68161-06G10-AMT	53B-2
	53B-4
68161-06G10-AMW	53B-2
	53B-4
68166-31300-YU8	49A-4
68166-31300-Y7H	49A-4
68166-31300-1ZY	49-4
	49A-4
68166-31300-17U	49-4
68241-04X50-300	40-18
68270-27G00-CT5	47A-3
68281-06G00-YCG	47-10
68281-06G00	47-10
68319-29FA0	51-1
68319-29FB0	51-1
68319-29FC0	51-1
68319-29F00	51-1
68319-29F20	51-1
68319-29F30	51-1
68319-29F40	51-1
68319-29F50	51-1
68319-29F70	51-1
68319-29F80	51-1
68319-29F90	51-1
68319-30F40	51-1
68319-30F90	51-1
68332-06G00	51-3
68391-06G00	38-4
68613-24F00	51-5
68623-17D00	51-4
68681-06G00-YD8	49-3

PART NO.	FIG.NO.-REF.NO.
68681-06G00-YD8	49A-3
68681-06G00-Y7H	49A-3
68681-06G00-1ZY	49-3
68681-06G00-17U	49-3
	49A-3
68681-27G00-AML	49B-3
68681-27G00-AMV	49B-3
68681-27G00-HT8	49B-3
68922-14F40	51-2
68922-14F90	51-2
68922-29FA0	51-2
68922-29FB0	51-2
68922-29FC0	51-2
68922-29F00	51-2
68922-29F20	51-2
68922-29F30	51-2
68922-29F40	51-2
68922-29F50	51-2
68922-29F70	51-2
68922-29F80	51-2
68922-29F90	51-2
69100-04810	64-2
69100-04820	64-3
69100-06G00-999	64-1
69100-06830	64-15
69105-04F00	64-5
69115-06G00	64-4
69132-06G00	64-16
69133-06G00	64-17
69134-06G00	64-18
69141-40F00	64-7
69142-45000	57-12
69150-06G00	64-14
69182-04F00	64-9
69185-04F00	64-10
69186-04F00	64-11
69211-06G00	63-2
69480-06G00	65-22
69600-06G00	65-1
69600-34820	65-2
69641-06G00	65-28
69670-03G00	65-5
69672-00B20	65-7
69674-00B20	65-9
69686-34200	65-8
69689-04A00	65-17
69689-49300	59-7
	60-9
69691-00A00	65-3
69692-19A00	65-4

PART NO.	FIG.NO.-REF.NO.
69693-05A00	65-6
69730-06G00	65-19
69740-01D02	65-14
80000	
86932-73060	51-4
90000	
94402-06G00-YBA	49A-1
94402-06G00-YU8	49-1
94402-06G00-Y7H	49-1
94402-06G10-YD8	49A-1
94402-06G10-YU9	49-1
94402-06G10-ZJX	49A-1
94402-06G20-YAY	49B-1
94402-06G20-YBA	49B-1
94402-06G30-YD8	49B-1
94403-06G00-YBA	49A-2
94403-06G00-YU8	49-2
94403-06G00-Y7H	49-2
94403-06G10-YD8	49A-2
94403-06G10-YU9	49-2
94403-06G10-ZJX	49A-2
94403-06G20-YAY	49B-2
94403-06G20-YBA	49B-2
94403-06G30-YD8	49B-2
94410-06G00-Y7L	47-1
94410-06G00-33J	47-1
94410-27G00-YAY	47A-1
94440-06G00-YZ5	49-5
	49A-5
94440-06G00-291	49B-5
94450-06G00-YZ5	49-6
	49A-6
94450-06G00-291	49B-6
94461-06G00-YZ5	47-6
94461-06G00-291	47A-7
94471-06GA0-291	49B-7

PART NO.	FIG.NO.-REF.NO.
94471-06G00-YZ5	49-7
	49A-7
94484-24F00	50-9
94510-06G00	48-1
94510-27G00	48A-1
94520-06G00	50-1
94530-06G00	50-4
94540-06G00	50-5
94600-27G00	48A-4
94610-06G00	47-2
94610-27G00	47A-2
94619-36A00	47-5
	47A-6
94630-06G00-HW5	47-7
94630-06G00-LP7	47-7
94630-27G00-291	47A-14
94632-06G00-YAG	47-8
94632-06G00-YCG	47-8
94641-27G00-291	47A-11
94642-27G00-291	47A-12
95700-14810	52-7
95700-42810	46-14
95740-06G00	46-16
99000-10209-YAY	66-7
99000-10209-YD8	66-7
99000-10209-YU8	66-7
99000-10209-YU9	66-7
99000-10209-Y7H	66-7
99000-25030	66-5
99000-25110	66-1
99000-25140	66-6
99000-31110	66-4
99000-31140	66-4
99000-32020	66-2
99000-32030	66-2
99000-32040	66-3
99000-32050	66-2
99000-32100	66-2
99000-32130	66-2
99000-69471	9-15
99011-06G50-SDE	51-6
99011-06G50-01A	51-6
99011-06G50-01F	51-6
99011-06G50-01K	51-6
99011-06G50-01W	51-6
99011-06G50-057	51-6
99011-06G51-SDE	51-6
99011-06G51-01A	51-6
99011-06G51-01F	51-6
99011-06G51-01K	51-6

PART NO.	FIG.NO.-REF.NO.
99011-06G51-01W	51-6
99011-06G52-SDE	51-6
99011-06G52-01A	51-6
99011-06G52-01F	51-6
99011-06G52-01K	51-6
99011-06G52-01W	51-6
00000	
01421-06203	4-7
01500-06123	11-23
01500-06203	24-34
01547-06103	33B-12
01547-06123	46-6
	58-7
	65-18
01547-06203	27-15
01547-06253	6-26
01547-06303	5-4
	42-5
01547-06353	6-27
01547-06453	42-4
01547-06703	5-5
01547-06853	5-6
01550-06103	6-9
	33-12
	33A-12
01550-06123	40-16
	60-18
01550-06163	20-22
	33-19
	33A-19
	33B-19
	62-22
01550-06203	40-7
01550-06953	40-10
01550-08123	5-19
	33-21
	33A-21
	33B-21
01550-08163	39-6
01550-08353	39-10
01550-10253	57-16
01550-10303	35-3

5

PART NO.	FIG.NO.-REF.NO.
01550-10657	2-27
01550-10857	2-28
02112-04107	11-21
02112-05223	34-4
	34A-2
02112-05305	34-6
	34A-4
02112-05403	34-7
	34A-5
02112-05455	34-2
02112-06123	6-8
	23-36
	23A-40
02112-06253	15-2
02112-34163	12-2
02122-05123	37-18
02122-05163	37-19
02122-06163	2-19
	3-19
02122-06203	46-15
02122-06303	52-9
02142-05103	17-7
	50-8
	65-27
02142-05163	37-9
02142-05203	37-10
	47A-8
02142-06107	45-3
02142-06123	36-14
	40-4
02162-06123	43-13
	43A-14
02162-06163	46-12
02162-06203	27-9
	27-10
03142-05163	13-8
03242-04163	31A-5
	31A-14
03242-05103	48-8
	50-7
03242-05163	32-9
	32A-10
	48A-11
03541-05163	13-13
03541-05203	29A-9
03542-06123	21-12
04111-20158	65-13
04211-09149	6-4
	6-13
	6-22

PART NO.	FIG.NO.-REF.NO.
04211-09149	6-28
	18-10
04211-13189	2-6
	3-6
	4-5
04221-04089	24-8
04221-08149	22-28
06111-07004	37-25
07120-05103	29-17
	29A-12
07120-05163	24-42
07120-06123	2-13
	3-14
	10-5
	16-19
	16A-18
07120-08903	5-7
07130-05103	24-41
	26-6
07130-05123	14-13
	14-19
07130-05253	44-3
07130-06123	20-10
	23-37
	23A-41
07130-06163	27-12
07130-06203	10-15
07130-06253	10-14
07130-06353	26-7
07130-06653	22-29
07130-06703	22-30
07130-08253	29-18
	29A-13
08113-63030	10-23
08113-69050	24-12
08123-62047	56-2
	63-15
08211-06141	24-16
08211-10221	8-8
08310-00063	30-9
	30A-9
	30B-7
08310-00067	24-35
	25-12
08316-10063	2-12
	3-13
	4-8
	44-6
	44-12
08316-10083	2-8

PART NO.	FIG.NO.-REF.NO.
08316-10083	3-8
	33-22
	33A-22
	33B-22
	61-15
08316-10123	31-7
	31-13
	31A-9
	31A-17
08316-20063	32-15
	32A-16
08319-21068	45-5
08319-31063	40-12
08319-31103	5-29
08319-31107	55-19
	63-18
08319-31188	61-8
08322-01053	47-4
	47A-5
08322-01063	65-12
08322-01083	5-9
08331-31106	15-6
08331-31126	24-36
08331-31146	24-24
08331-31186	36-12
08331-31406	7-11
08331-31506	15-13
08332-11063	37-13
	37-28
08332-11086	18-7
08361-35068	25-13
	25-15
09100-08287	61-14
09100-12084	36-7
09103-06026	2-3
	3-3
09103-06103	2-15
	3-11
09103-06126	6-25
09103-06212	25-14
09103-06213	6-5
	18-8
09103-06214	6-14
	6-21
09103-06217	21-3
09103-06225	6-15
09103-06239	18-9
09103-06257	6-6
09103-08341	38-3
09103-08358	14-23

PART NO.	FIG.NO.-REF.NO.
09103-08391	38-3
09103-08392	14-9
09103-08505	48-2
	48A-2
09103-10033	62-18
09103-10143	62-19
09103-10205	5-26
09103-10226	5-27
09103-10276	2-10
	3-10
09103-10347	5-27
09103-12069	5-28
09103-12073	5-28
09106-05017	39-3
09106-06075	5-16
09106-06076	14-16
	14-22
09106-07009	2-24
	3-24
09106-08104	14-4
09106-08106	8-5
09106-08121	35-6
09106-08136	5-8
09106-08142	5-3
09106-08147	14-27
09106-08149	35-12
09106-08150	37-3
	37-22
09106-08160	56-8
	63-3
09108-06096	2-11
	3-12
09108-06118	4-6
09108-08143	2-7
	3-7
09111-06041	24-15
09111-06085	20-13
09111-10058	36-2
09116-06098	46-4
09116-06152	61-10
09116-06167	17-2
09116-06191	20-13
09118-06097	19-5
09118-08152	14-5
09119-05023	30B-10
09125-06086	5-16
09125-06110	24-11
09126-06011	10-26
	23-35
	23A-39

PART NO.	FIG.NO.-REF.NO.
09127-06021	43-3
09127-06023	43A-3
09128-06013	27-4
09132-03008	29-10
	29A-7
09132-05041	48-4
09132-05053	47A-13
09136-06081	53-5
	53A-5
	53B-5
09139-05064	48-6
	48A-8
09139-05075	47-3
	47A-4
09139-06029	65-10
09139-06083	61-17
09139-06087	50-10
09139-06107	41-4
09139-06120	48A-6
09139-06121	42-2
09139-06122	48-11
	48A-13
	50-12
09139-06126	48A-5
09139-08016	33-15
	33A-15
	33B-15
09140-06025	24-32
09140-16001	10-21
09140-16005	10-21
09140-22012	7-13
09148-05038	48-7
	48A-9
	50-6
09159-05019	47A-10
09159-05044	29-14
09159-06024	43-8
09159-06086	30-7
	30A-7
	30B-5
09159-10058	5-29
	62-20
09159-12054	5-30
09159-12056	62-8
	62-11
	62-16
09159-18007	63-10
09159-20004	23-42
	23A-46
09159-24010	22-16

PART NO.	FIG.NO.-REF.NO
09160-05501	32-6
	32A-7
09160-06088	30-8
	30A-8
	30B-6
09160-06109	46-7
09160-06130	43-6
	43A-7
	45-4
09160-08134	14-28
09160-08146	14-25
09160-10039	5-31
09160-10082	2-9
	3-9
09160-12011	24-33
09160-12037	62-7
09160-12061	36-8
09160-12092	31-6
	31A-8
09160-15045	22-31
09160-18022	36-10
09160-19022	63-11
09160-25009	23-43
	23A-47
09160-25056	22-17
09160-25074	22-2
09160-27008	23-20
	23A-24
09161-05017	47A-9
09161-10009	58-2
	60-14
	65-24
09161-11008	2-25
	3-25
09164-08015	55-22
09164-08020	48-3
	48A-3
09164-22007	7-14
09164-24006	22-18
09167-27002	23-21
	23A-25
09168-06004	6-10
09168-06023	2-14
	3-15
09168-08015	5-20
09168-08016	5-20
09168-12017	13-18
	20-26
09168-12018	10-7
09168-14002	1-17

5

PART NO.	FIG.NO.-REF.NO.
09168-14002	1-17
	5-24
	6-19
09168-14011	1-18
	17-10
09168-14015	1-18
	17-10
09168-16002	5-22
09168-26001	10-18
09169-06062	40-8
09169-06071	46-13
09180-06258	27-7
09180-06290	19-4
09180-06300	53-6
	53A-6
	53B-6
09180-06306	61-11
09180-08151	14-29
09180-08152	14-6
09180-12122	62-10
	62-15
09180-12140	8-3
09180-20062	56-6
09180-20112	63-12
09180-20118	61-2
09181-10158	15-4
09181-14167	24-20
09181-15164	10-28
09181-15166	10-28
09181-15172	10-28
09181-15176	10-28
09181-15181	10-28
09181-15182	10-28
09181-16212	10-22
09181-20251	23-24
	23A-28
09181-22167	23-6
	23A-8
09181-22223	23-25
	23A-29
09181-25223	22-19
09200-06037	65-11
09202-04017	31A-7
	31A-16
09206-08001	2-2
	3-2
09206-08007	2-26
	3-26
09206-12002	8-2
09208-08010	37-23

PART NO.	FIG.NO.-REF.NO.
09208-08016	37-11
09209-05011	24-39
09229-04020	46-3
09247-14036	5-23
09248-14011	6-18
09248-16012	5-21
09250-06011	55-23
09259-36016-20H	6-16
09261-04009	15-5
09261-06002	15-12
09262-10016	18-6
09262-20082	23-26
	23A-30
09262-20139	23-7
	23A-9
09262-25006	10-24
09262-25073	23-8
	23A-10
09262-28040	23-27
	23A-31
09262-32007	63-13
09263-15003	22-33
09263-17034	62-4
09263-17037	61-4
	62-3
09263-20073	62-2
09263-25059	61-3
09263-35013	22-3
09267-30010	55-3
	55-4
09280-04004	5-12
	5-14
	5-17
09280-12009	5-15
09280-13004	15-8
09280-14011	54A-22
09280-17003	6-30
09280-17004	23-9
	23A-11
09280-18009	20-9
09280-24010	23-44
	23A-48
09280-33004	1-19
	6-17
09280-55005	1-20
	2-18
	3-18
09280-61002	46-10
09283-06008	22-34
09283-10005	18-4

PART NO.	FIG.NO.-REF.NO.
09283-14006	24-21
09283-38020	23-28
	23A-32
09285-28001	56-3
	63-16
09285-39001	63-14
09289-05015	9-10
09320-06016	48-12
	48A-14
09320-08001	40-9
09320-08018	41-5
	53-8
	53A-8
	53B-8
09320-08028	41-6
	48-5
	48A-7
09320-09009	17-3
09320-09010	30-6
	30A-6
	30B-4
09320-09016	50-3
	50-11
09320-09036	27-8
09320-10015	17-3
09320-10042	19-3
09320-10049	32-7
	32A-8
09320-10051	19-3
09320-12043	14-30
09320-12048	14-7
09320-12049	14-24
09320-12054	40-17
09320-12068	53-7
	53A-7
	53B-7
09320-15008	53-9
	53A-9
	53B-9
09321-08006	52-2
09321-10002	41-3
09321-10012	52-3
09352-42703-600	18-11
09352-50901-00B	20-16
09360-10042	58-1
	60-13
	65-23
09360-12012	17-11
09360-14012	17-12
09380-27001	23-10

PART NO.	FIG.NO.-REF.NO.
09380-27001	23-29
	23-30
	23-31
	23A-12
	23A-33
	23A-34
	23A-35
09381-22002	7-19
09401-08411	20-15
09401-12404	65-21
09401-12409	20-24
09401-13417	65-20
09401-14301	13-11
09401-15101	21-6
09401-22405	13-23
09402-28511	13-24
	20-4
09402-38511	20-5
09402-60208	13-7A
09402-70203	2-20
	3-20
09403-10313	62-21
09404-06429	11-8
	16A-20
	21-13
	33B-8
09404-06431	18-12
	33A-8
	33B-8
09404-06432	16-18
	33-8
	33A-8
	39-12
09407-12402	34-8
	34A-6
09407-14403	33-11
	33A-11
	33B-11
09407-14407	33-9
	33A-9
	33B-9
09407-14408	33-10
	33A-10
09407-17401	33A-10
	33B-10
09409-06314-5PK	40-2
	48-10
	48-13
	48A-12
	48A-15

PART NO.	FIG.NO.-REF.NO.
09409-06314-5PK	53-10
	53A-10
	53B-10
09409-07333	48-9
	48A-10
09420-04008	26-5
09420-06001	7-15
09421-04004	10-19
09440-04010	24-40
09440-05005	37-24
09440-07001	7-12
09440-17009	24-22
09443-14058	36-4
09443-19011	36-5
09444-20001	24-23
09448-18022	37-12
09448-41005	36-11
09462-00007	28-3
09471-12045	31A-6
	31A-15
09471-12081	32-13
09471-12083	32-8
	32A-9
09471-12177	31-5
	31-12
09471-12182	30-4
	30A-4
	30B-3
09471-12216	30-5
	30A-5
	32A-14
09481-10501	33-2
	33A-2
	33B-2
09481-15501	33-2
	33A-2
	33B-2
09481-30101	27-3
09482-00410	2-16
	3-16
09482-00411	2-16
	3-16
09482-00412	2-16
	3-16
09482-00413	2-16
	3-16
09482-00462	2-16
	3-16
09482-00463	2-16
	3-16

PART NO.	FIG.NO.-REF.NO.
09493-20014	5-11
	5-13
09800-21035	46-9
09813-00027	46-8

5

DL1000K3 V-Strom

1.00 ENGINE & 2.00 CHASSIS

1.01 Clutch cover

* Drain hose Ⓐ for the coolant pump mechanical seal has been added to the clutch cover (like SV1000)
* Drain hose eliminates accumulation of assembly grease residue on the cover which could look like a coolant or oil leak

Service notes:
As noted above, do not confuse the normal accumulation of assembly grease, coolant or oil residue near the coolant pump mechanical seal drain hole or hose as a failure-caused leak. Follow the testing procedure in the service manual to determine if a leak exists before servicing the mechanical seal.

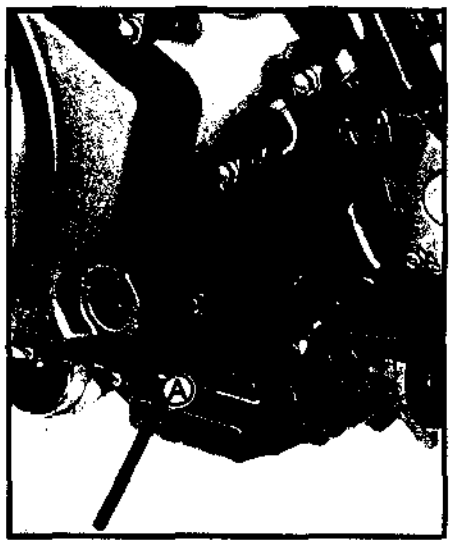

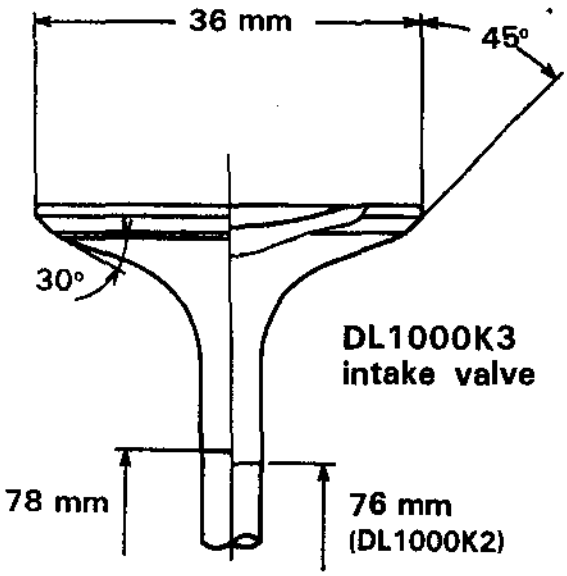

1.02 Intake valves

* The intake valves have been changed to improve flow
* These valves are the same parts as used in the SV1000K3
* Valve head diameter: 36 mm
* The machined (5.5 mm diameter) portion of the valve stem has been extended 2 mm (76 mm to 78 mm) plus an additional 30° machine cut has been added to the valve head
* All other valve specifications and service procedures remain the same as DL1000K2

2.01 Front suspension

* Spring preload adjuster have been added to the top of each inner fork tube
* Change permits the customer to adjust the spring tension to suit riding style and load
* Parts cannot be easily interchanged to a DL1000K2 (see image on the following page)

	DL1000K3	DL1000K2
Front fork stroke:	160 mm (6.3 in)	160 mm (6.3 in)
Front spring length:	433.6 mm (17.07 in)	451.1 mm (17.75 in)
Preload adjuster setting:	3rd groove from the top	N/A
Fork fluid type:	SS08 or equivalent	SS08 or equivalent
Fork fluid level:	140 mm (5.51 in)	133.0 mm (5.24 in)
Fork fluid capacity:	496 ml (16.76 qt)	505 ml (17.07 qt)

2.01 Front suspension, *continued:*

The parts called out and listed are NEW to the DL1000K3:

① Preload adjuster
51185-31E00 (adjuster)
09280-14011 (O-ring)
51189-14D00 (cap)

② Spring seat
51172-17C00

③ Spring
51171-06G00

④ Damper rod (cartridge)
52110-06G20

⑤ Inner fork tube
51110-06G20

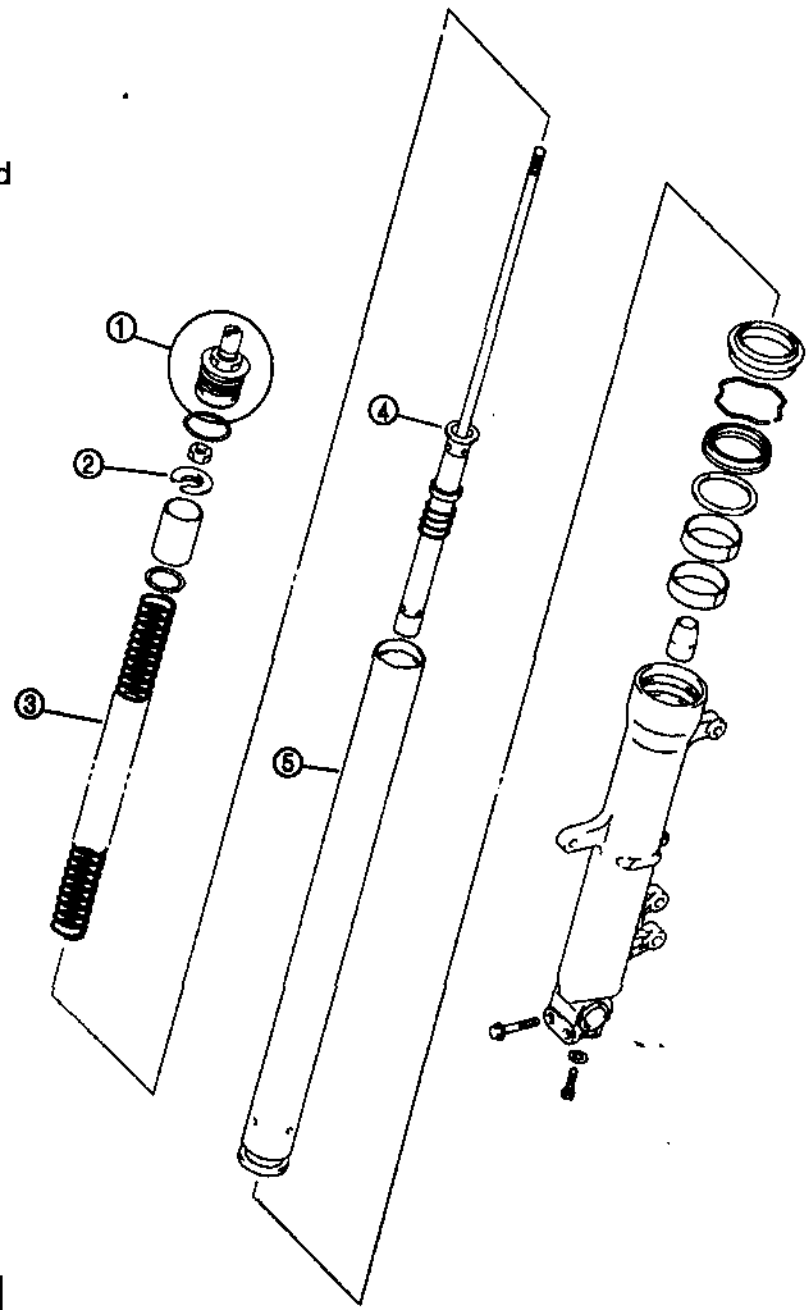

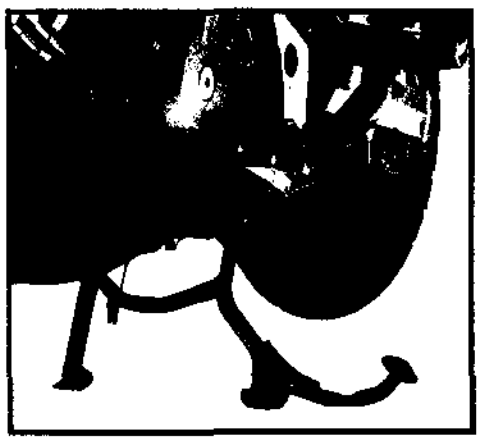

2.02 Optional center stand

* An optional Suzuki Accessory center stand can be fitted to the motorcycle to ease service

Center stand: 42100-06840