SUZUKI
PARTS CATALOGUE

GSX1400

(BN111)

GSX1400K2
GSX1400U1K2
GSX1400K3
GSX1400U1K3

2002-6

2ND EDITION

This part catalogue supersedes all the following part catalogue with immediate effect.

Model of catalogue	Part catalogue No.
GSX1400(U1)K2	9900B-30142

INFORMATION ILLUSTRATION INDEX 1

ENGINE TRANSMISSION 2

ELECTRICAL 3

BODY 4

PARTS NUMBER INDEX 5

GSX1400(U1)K2

PHOTO : GSX1400K2

GSX1400(U1)K3

PHOTO : GSX1400K3

PREFACE

When it becomes necessary to replace parts on SUZUKI MOTORCYCLES, always use SUZUKI GENUINE PARTS which have passed a strict inspection which guarantees quality and performance.
This parts catalogue covers the list of all service parts for SUZUKI GSX1400K2, GSX1400U1K2, GSX1400K3, GSX1400U1K3.

INSTRUCTIONS FOR QUOTING THE CATALOGUE

1. DIMENSIONS
   Dimensions of the parts in this catalogue are indicated in unit millimeters.

2. ABBREVIATIONS
   Abbreviations used in this catalogue are as follows:

AR	: As required	NT	: Number of teeth
ASSY	: Assembly	OPT	: Optional
E.No.	: Engine number	OS	: Over size
F.No.	: Frame number	STD	: Standard
D	: Diameter of material	T	: Thickness
ID	: Inside diameter	US	: Under size
OD	: Outside diameter	W	: Width
L	: Length		
LH	: Left hand side		
RH	: Right hand side		
~100045	: Up to F.No.100045		
100046~	: From F.No.100046		

12 x 34 x 5.6 ····· Figures in the description column show the dimensions of parts.
ID OD T(or W, L)

→12345-56781 (Parts No.) : indicates that the parts number was changed to 12345-56781 and the new parts are interchangeable with the former ones but the former ones are not interchangeable with new ones.

←12345-56781 (Parts No.) : indicates that the former and new parts are interchangeable with each other and both are usable.

3. INNER PARTS OF ASSEMBLY
   Part name with a dot (.) in front as shown in the description column indicates the component of the assembly also available individually.

4. MODIFICATION NOTICE
   A parts bulletin will be sent to you on all occasions when changes in parts occur, including interchangeable modifications between new parts and old ones.

5. NOTE
   5-1. There are some different parts from those of production models among spare parts for the administrative reasons and common use of them with other models.
   5-2. In respect of rubber hoses and vinyl tubes, please be sure to use them by cutting off according to the length mentioned on parts catalogue or what is actually required on the vehicle.
   5-3. Note that the drawings on the illustration page are for ready reference of spare parts number, not to be used as an assembly manual.
   When assembling, use "SUZUKI SERVICE MANUAL".

6. SPECIFICATION CODE
   This catalogue contains the parts for the model designed for the following spec.;
   spec. code : GSX1400K2/K3 : E2,E19,E24.
   GSX1400U1K2/U1K3 : E19.

7. SERIAL FRAME NUMBER

GSX1400K2(E2)	: JS1BN111200100001~
GSX1400K2(E19)	: JS1BN111100100001~
GSX1400U1K2(E19)	: JS1BN211100100001~
GSX1400K2(E24)	: JS1BN111300100001~
GSX1400K3(E2)	: JS1BN111200101509~
GSX1400K3(E19)	: JS1BN111100107358~
GSX1400U1K3(E19)	: JS1BN2111001
GSX1400K3(E24)	: JS1BN111300100331~

COLOR CHART
TABLEAU DES COULEURS

COLOR NO. NO DE COULEUR	COLOR DESCRIPTION DESCRIPTION DE COULEUR	COLOR NO. NO DE COULEUR	COLOR DESCRIPTION DESCRIPTION DE COULEUR
GF6	W37,R0S	1ZY	URBAN LIGHT GRAY METALLIC
GJ7	YD8,0MT,019,0JW	13L	BRIGHT SILVER METALLIC
GJ8	0JW,1LE,Y7L	17U	GRAY METALLIC
GJ9	0JW,1LF,YD8	28W	SPECIAL WHITE
G8Z	0JW,1LF,1LE	291	BLACK (SEMI-GLOSS)
JJ8	YAD,291	5PK	BLACK
JM4	17U,1ZY	84N	019,291
JM5	YD8,YAD		
L99	0JW,1LF		
M18	0JW,1LE		
R0S	TAMABUCHI BLACK NO.2 (LEATHER)		
W37	BLACK (LEATHER)		
YAD	BLACK 50～ GLOSS		
YC2	CANDY GRAND BLUE		
YD8	SONIC SILVER METALLIC		
YM6	GALAXY SILVER METALLIC		
Y7L	SATURN BLACK METALLIC		
0JW	PEARL STILL WHITE		
0MT	SILVER		
019	BLACK		
1LE	PEARL MEDIUM BLUE		
1LF	PRL DEEP BLUE		

MILLIMETER → INCH CONVERSION CHART

	0	1	2	3	4	5	6	7	8	9
00	.000	.039	.079	.118	.157	.197	.236	.276	.315	.354
10	.394	.433	.472	.512	.551	.591	.630	.669	.709	.748
20	.787	.827	.866	.906	.945	.984	1.024	1.063	1.102	1.142
30	1.181	1.220	1.260	1.299	1.339	1.378	1.417	1.457	1.496	1.535
40	1.575	1.614	1.654	1.693	1.732	1.772	1.811	1.850	1.890	1.929
50	1.969	2.008	2.047	2.087	2.126	2.165	2.205	2.214	2.283	2.323
60	2.362	2.402	2.441	2.480	2.520	2.559	2.598	2.638	2.677	2.717
70	2.756	2.795	2.835	2.874	2.913	2.953	2.992	3.031	3.071	3.110
80	3.150	3.189	3.228	3.268	3.307	3.346	3.386	3.425	3.465	3.504
90	3.543	3.583	3.622	3.661	3.701	3.740	3.780	3.819	3.858	3.898

How to read

	0	1	2	3	4
00	---	---	---	---	---
10	---	---	---	---	---
20	---	---	---	0.906	---
30	---	---	---	---	---

23 millimeters equal 0.906 inch

Contents are subject to change without notice or obligation.

FIG.1 GASKET SET (B-2)

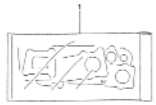

GSX1400K2 E02_001
GASKET SET

FIG.2 CYLINDER HEAD COVER (B-3)

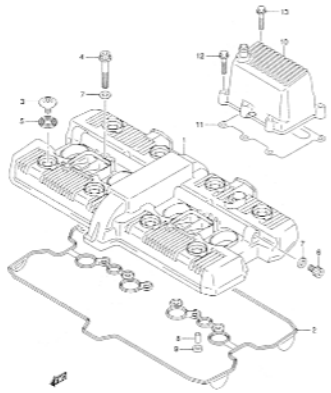

GSX1400K2 E02_002
CYLINDER HEAD COVER

FIG.3 CYLINDER HEAD (B-4)

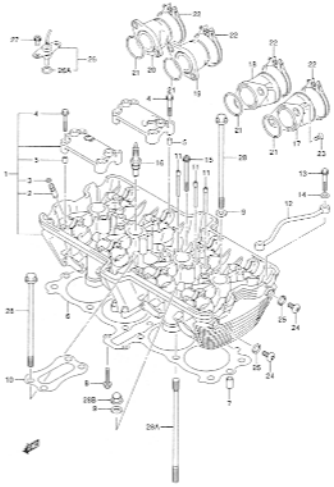

GSX1400K2 E02_003
CYLINDER HEAD

FIG.4 CYLINDER (B-6)

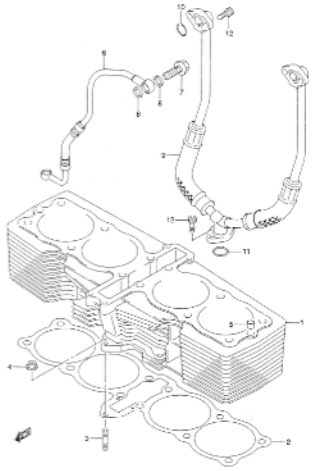

GSX1400K2 E02_004
CYLINDER

FIG.5 CRANKCASE (B-7)

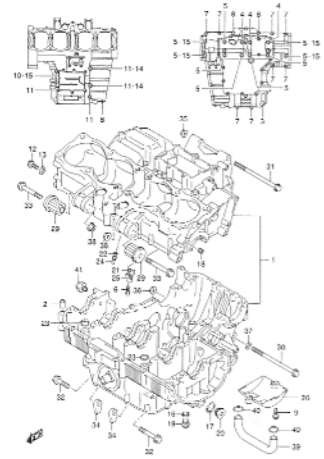

GSX1400K2 E02_005
CRANKCASE

FIG.6 CRANKCASE COVER (B-9)

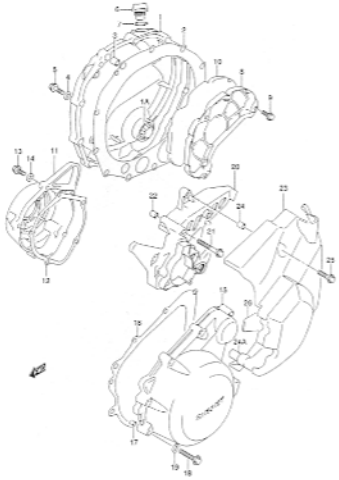

GSX1400K2 E02_006
CRANKCASE COVER

FIG.7 OIL PAN (B-11)

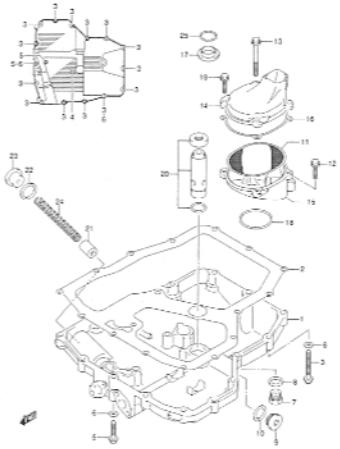

GSX1400K2 E02_007
OIL PAN

FIG.8 OIL PUMP (B-12)

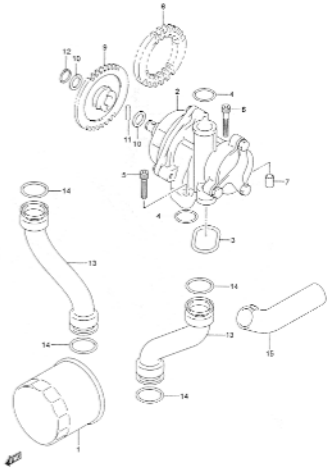

GSX1400K2 E02_008
OIL PUMP

FIG.9 CRANKSHAFT (C-2)

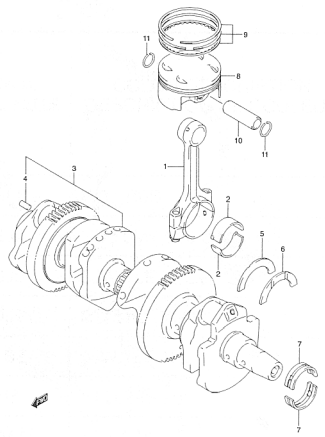

GSX1400K2 E02_009
CRANKSHAFT

FIG.10 STARTER CLUTCH (C-4)

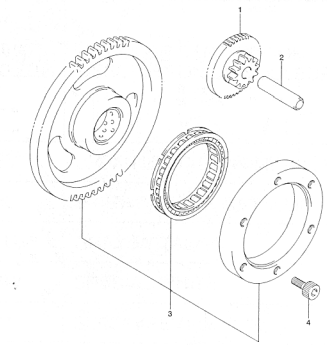

GSX1400K2 E02_010
STARTER CLUTCH

FIG.11 CRANK BALANCER (C-5)

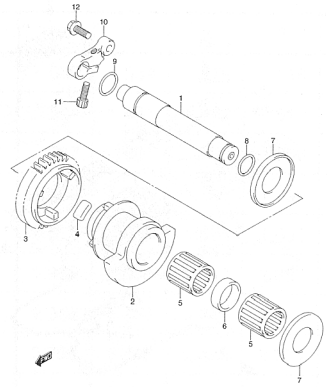

GSX1400K2 E02_011
CRANK BALANCER

FIG.12 CAM SHAFT/VALVE (C-6)

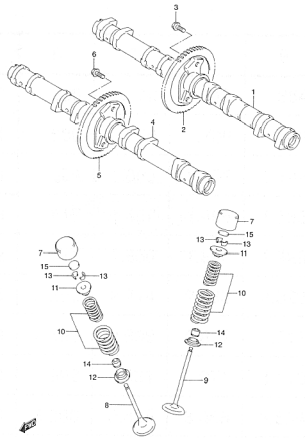

GSX1400K2 E02_012
CAM SHAFT/VALVE

FIG.13 CAM CHAIN (C-8)

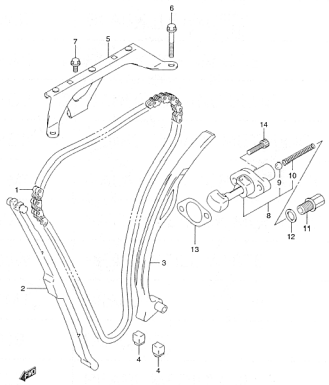

GSX1400K2 E02_013
CAM CHAIN

FIG.14 THROTTLE BODY (MODEL K2) (C-9)

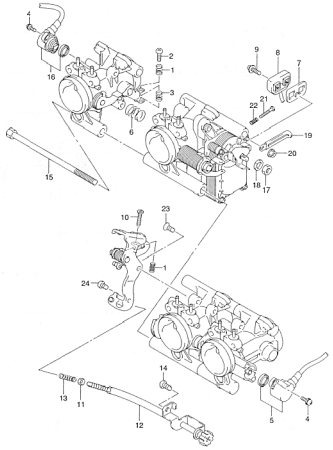

GSX1400K2 E02_014
THROTTLE BODY

FIG.14A THROTTLE BODY (MODEL K3) (C-10)

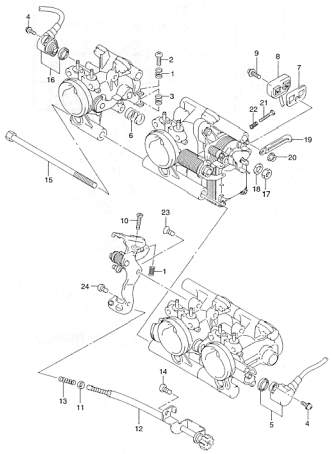

GSX1400K2 E02_014A
THROTTLE BODY

FIG.15 THROTTLE BODY HOSE/JOINT (MODEL K2) (C-11)

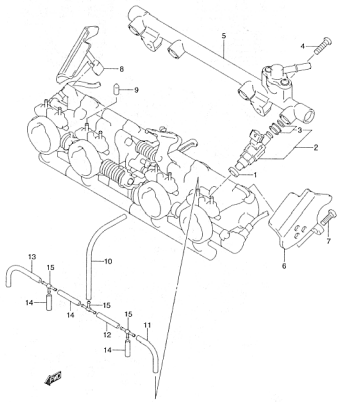

GSX1400K2 E02_015
THROTTLE BODY HOSE/JOINT

FIG.15A THROTTLE BODY HOSE/JOINT (MODEL K3) (C-12)

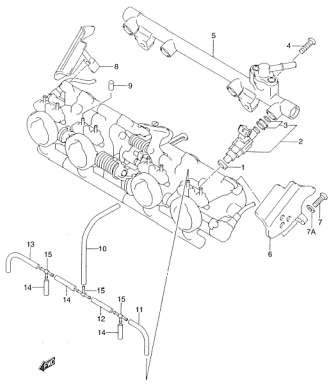

GSX1400K2 E02_015A
THROTTLE BODY HOSE/JOINT

FIG.16 AIR CLEANER (D-2)

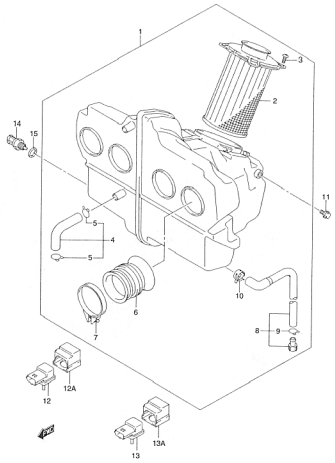

GSX1400K2 E02_016
AIR CLEANER

FIG.17 MUFFLER (D-3)

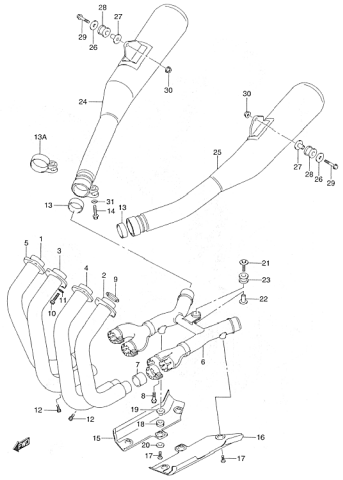

GSX1400K2 E02_017
MUFFLER

FIG.18 OIL COOLER (D-5)

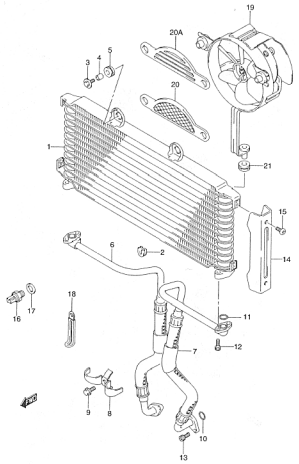

GSX1400K2 E02_018
OIL COOLER

FIG.19 FUEL PUMP (D-6)

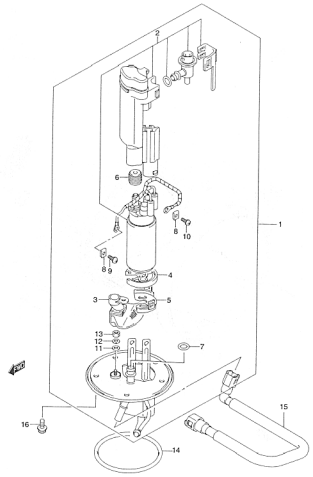

GSX1400K2 E02_019
FUEL PUMP

FIG.20 SECOND AIR (D-7)

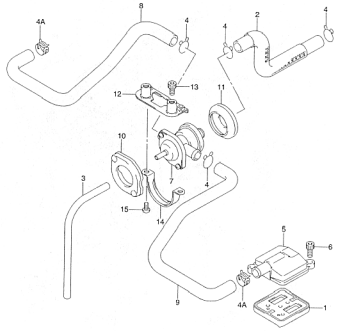

GSX1400K2 E02_020
2ND AIR

FIG.21 CLUTCH (D-8)

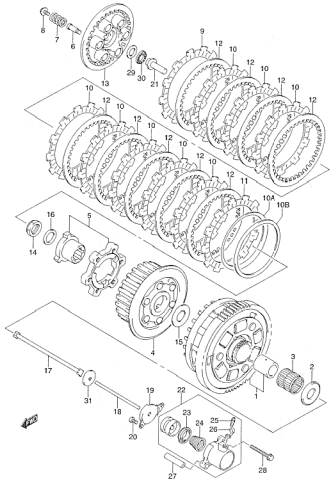

GSX1400K2 E02_021
CLUTCH

FIG.22 TRANSMISSION (D-9)

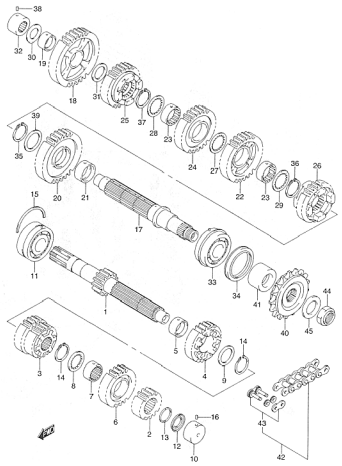

GSX1400K2 E02_022
TRANSMISSION

FIG.23 GEAR SHIFTING (D-11)

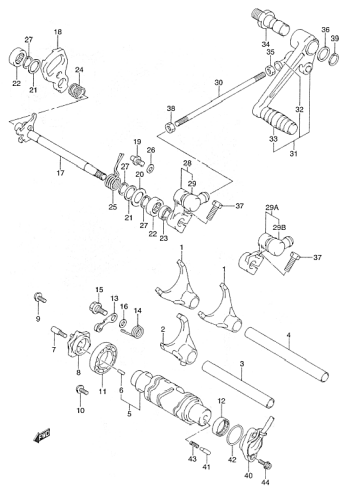

GSX1400K2 E02_023
GEAR SHIFTING

FIG.24 STARTING MOTOR (E-2)

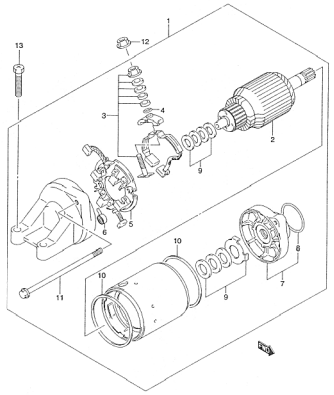

GSX1400K2 E02_024
STARTING MOTOR

FIG.25 GENERATOR (E-3)

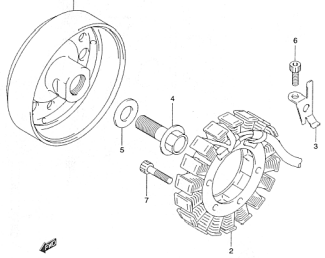

GSX1400K2 E02_025
GENERATOR

FIG.26 SIGNAL GENETATOR (E-4)

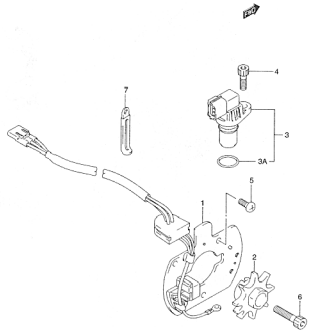

GSX1400K2 E02_026
SIGNAL GENERATOR

FIG.27 ELECTRICAL (E-5)

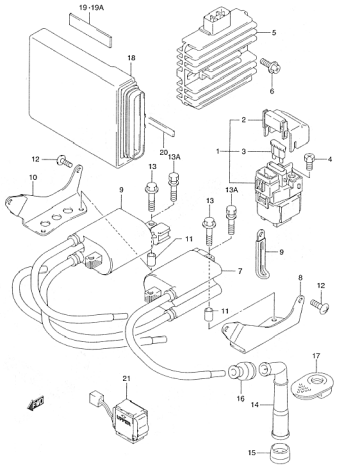

GSX1400K2 E02_027
ELECTRICAL

FIG.28 BATTERY (E-6)

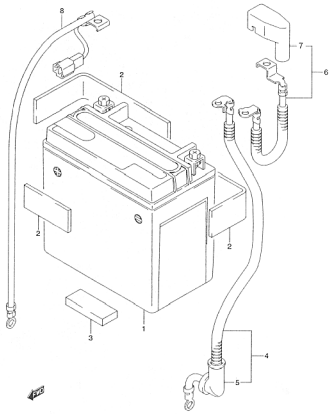

GSX1400K2 E02_028
BATTERY

FIG.29 SPEEDOMETER (F-2)

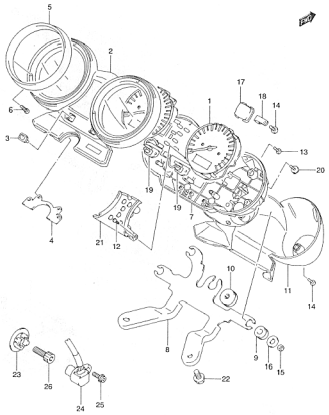

GSX1400K2 E02_029
SPEEDOMETER

FIG.30 HEADLAMP ASSY (E2,E19) (F-3)

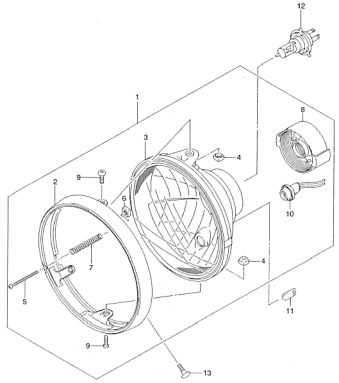

GSX1400K2 E02_030
HEAD LAMP

FIG.31 HEADLAMP ASSY (E24) (F-4)

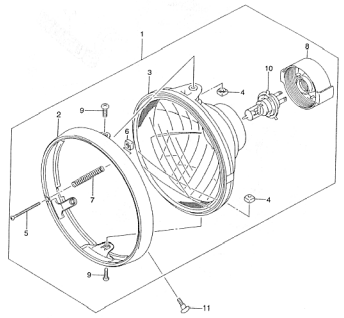

GSX1400K2 E02_031
HEAD LAMP

FIG.32 TURNSIGNAL LAMP (E2,E19) (F-5)

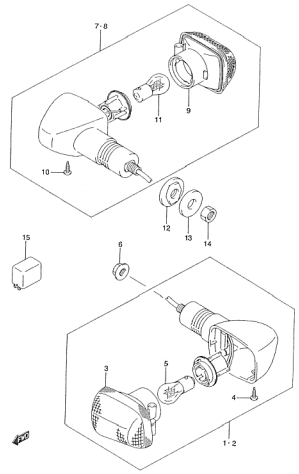

GSX1400K2 E02_032
TURNSIGNAL LAMP

FIG.33 TURNSIGNAL LAMP (E24,~F.NO.100196) (F-6)

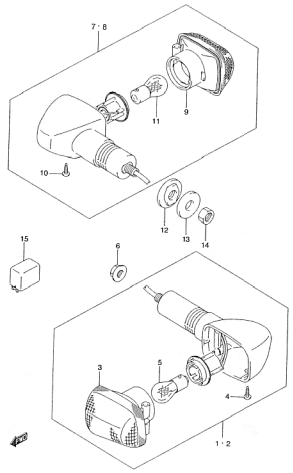

GSX1400K2 E02_033
TURNSIGNAL LAMP

FIG.33A TURNSIGNAL LAMP (E24,F.NO.100197~) (F-7)

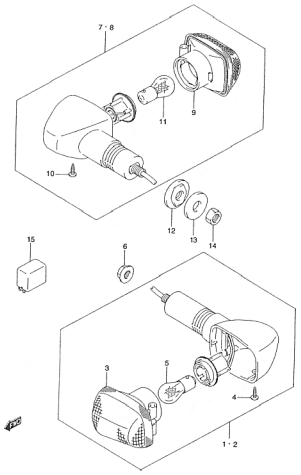

GSX1400K2 E02_033A
TURNSIGNAL LAMP

FIG.34 REAR COMBINATION LAMP (F-8)

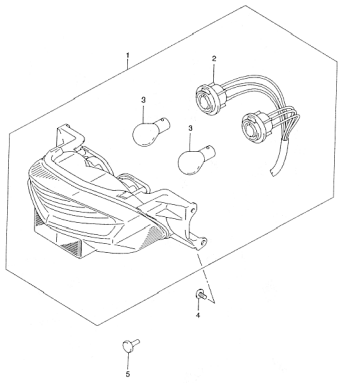

GSX1400K2 E02_034
REAR COMBINATION LAMP

FIG.35 WIRING HARNESS (F-9)

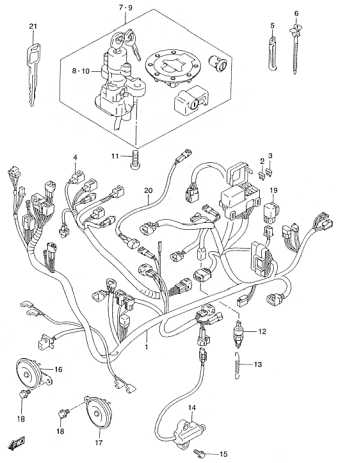

GSX1400K2 E02_035
WIRING HARNESS

FIG.36 HANDLE SWITCH (F-10)

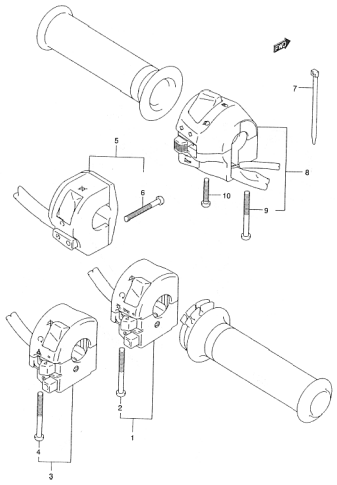

GSX1400K2 E02_036
HANDLE SWITCH

FIG.37 FRAME (G-2)

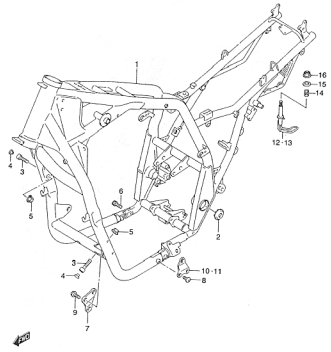

GSX1400K2 E02_037
FRAME

FIG.38 STAND (G-3)

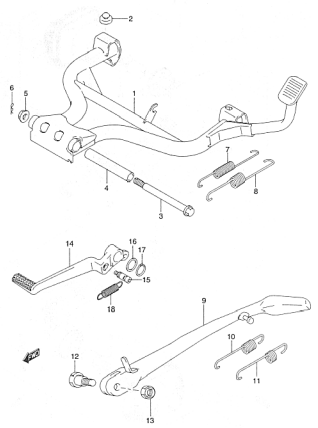

GSX1400K2 E02_038
STAND

FIG.39 FOOTREST (G-4)

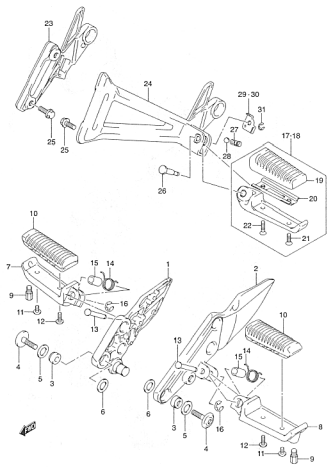

GSX1400K2 E02_039
FOOTREST

FIG.40 FUEL TANK (MODEL K2) (G-5)

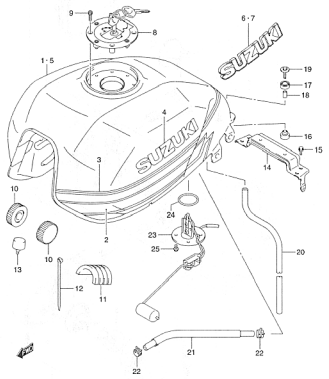

GSX1400K2 E02_040
FUEL TANK

FIG.40A FUEL TANK (MODEL K3) (G-6)

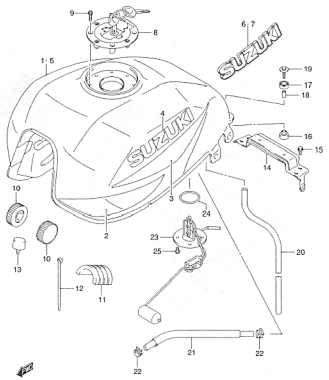

GSX1400K2 E02_040A
FUEL TANK

FIG.41 FRAME COVER (MODEL K2) (G-7)

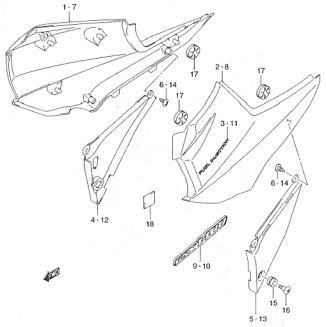

GSX1400K2 E02_041
FRAME COVER

FIG.41A FRAME COVER (MODEL K3) (G-8)

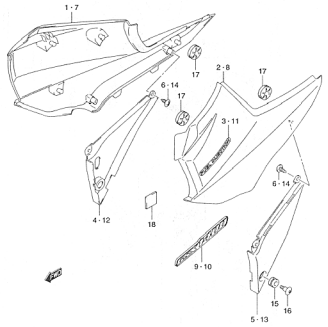

GSX1400K2 E02_041A
FRAME COVER

FIG.42 HEADLAMP HOUSING (G-9)

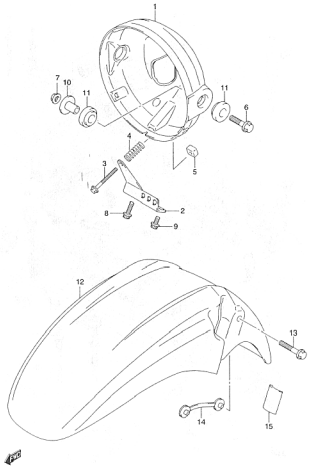

GSX1400K2 E02_042
FRONT FENDER

FIG.43 HANDLEBAR (G-10)

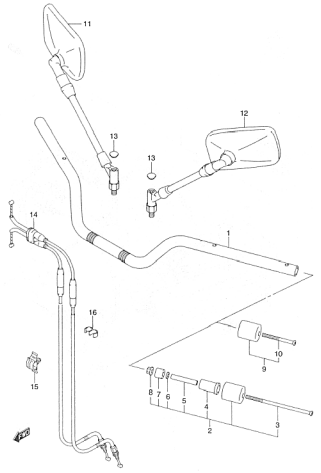

GSX1400K2 E02_043
HANDLE BAR

FIG.44 HANDLE LEVER (G-11)

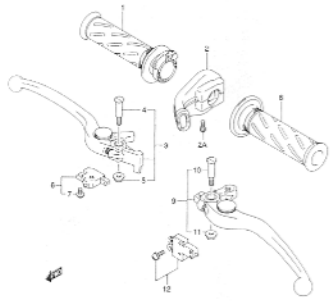

GSX1400K2 E02_044
HANDLE LEVER

FIG.45 REAR FENDER (H-2)

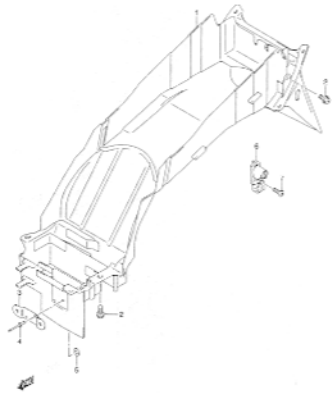

GSX1400K2 E02_045
REAR FENDER

FIG.46 LUGGAGE BOX (H-3)

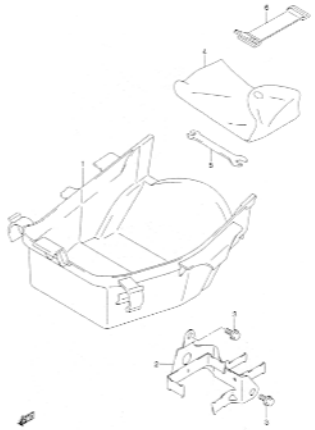

GSX1400K2 E02_046
LUGGAGE BOX

FIG.47 LABEL (H-4)

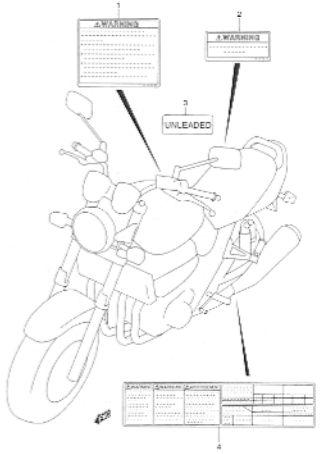

GSX1400K2 E02_047
LABEL

FIG.48 SEAT (H-6)

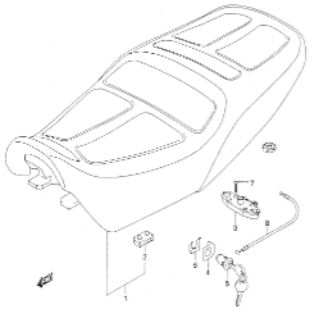

GSX1400K2 E02_048
SEAT

FIG.49 SEAT TAIL COVER (MODEL K2) (H-7)

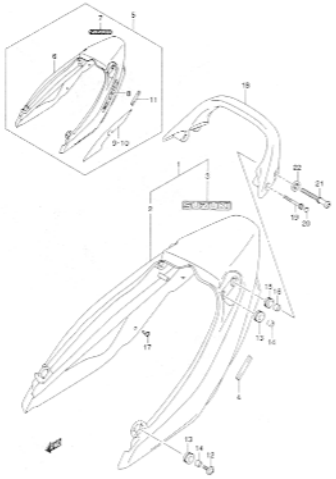

GSX1400K2 E02_049
SEAT TAIL COVER

FIG.49A SEAT TAIL COVER (MODEL K3) (H-8)

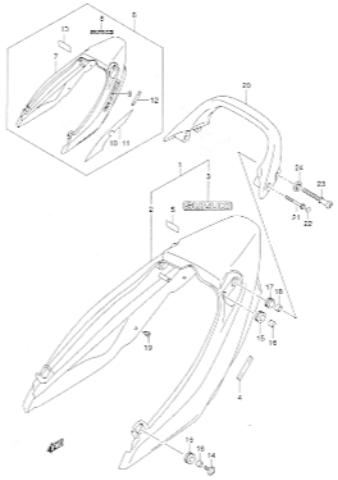

GSX1400K2 E02_049A
SEAT TAIL COVER

FIG.50 FRONT FORK DAMPER (H-9)

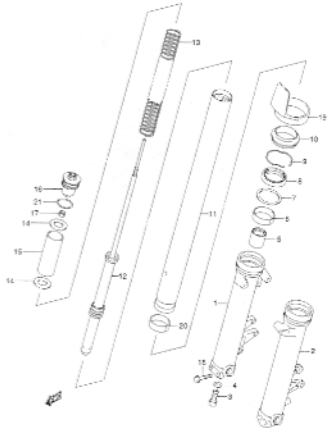

GSX1400K2 E02_050
FRONT FORK DAMPER

FIG.51 STEERING STEM (H-10)

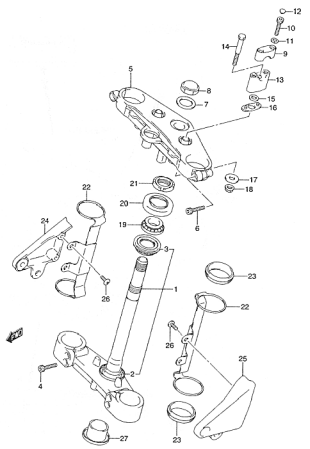

GSX1400K2 E02_051
FRONT FORK BRACKET

FIG.52 FRONT WHEEL (I-2)

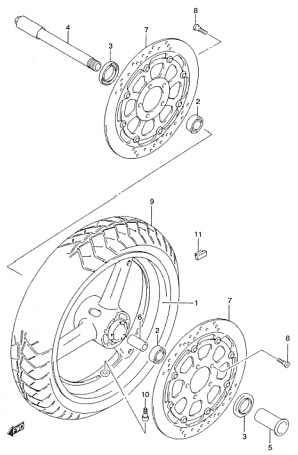

GSX1400K2 E02_052
FRONT WHEEL

FIG.53 FRONT CALIPER (I-3)

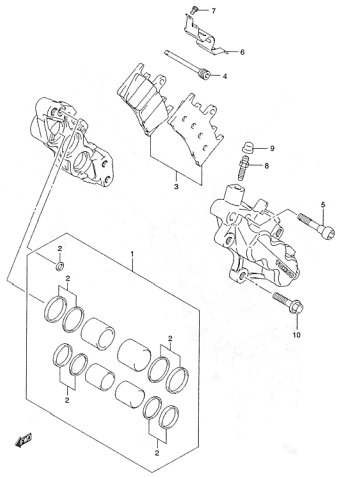

GSX1400K2 E02_053
FRONT CALIPER

FIG.54 FRONT BRAKE HOSE (I-4)

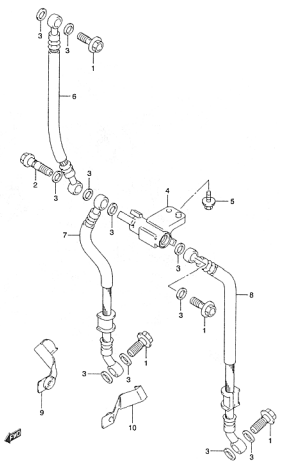

GSX1400K2 E02_054
FRONT BRAKE HOSE

FIG.55 FRONT MASTER CYLINDER (I-5)

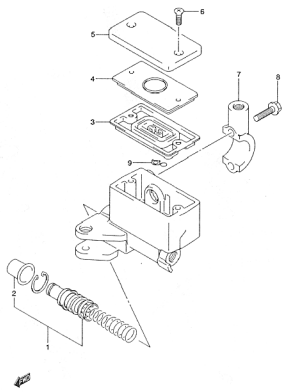

GSX1400K2 E02_055
FRONT MASTER CYLINDER

FIG.56 CLUTCH MASTER CYLINDER (I-6)

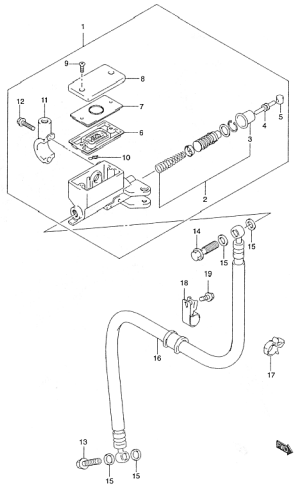

GSX1400K2 E02_056
CLUTCH MASTER CYLINDER

FIG.57 REAR SWINGINGARM (MODEL K2) (J-2)

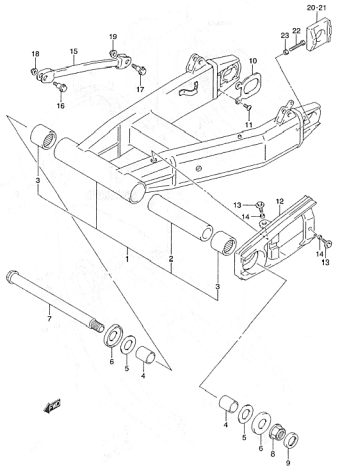

GSX1400K2 E02_057
REAR SWINGING ARM

FIG.57A REAR SWINGINGARM (MODEL K3) (J-3)

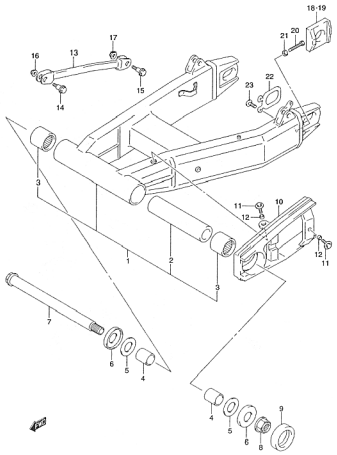

GSX1400K2 E02_057A
REAR SWINGNG ARM

FIG.58 REAR SHOCK ABSORBER (J-4)

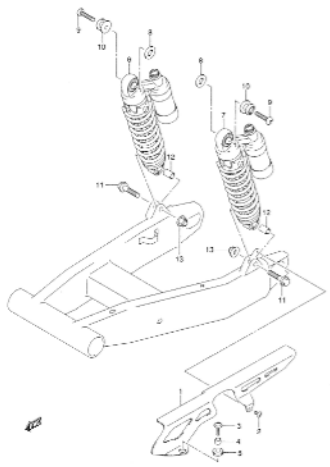

GSX1400K2 E02_058
REAR SHOCK ABSORBER

FIG.59 REAR WHEEL (J-5)

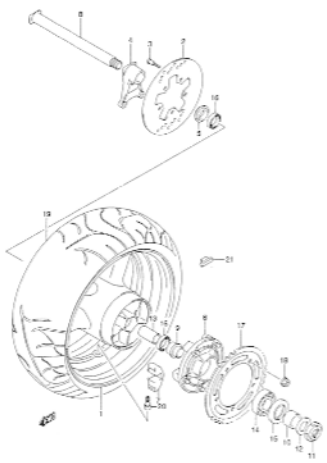

GSX1400K2 E02_059
REAR WHEEL

FIG.60 REAR CALIPER (J-6)

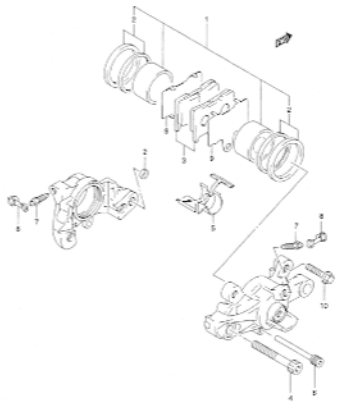

GSX1400K2 E02_060
REAR CALIPER

FIG.61 REAR MASTER CYLINDER (J-7)

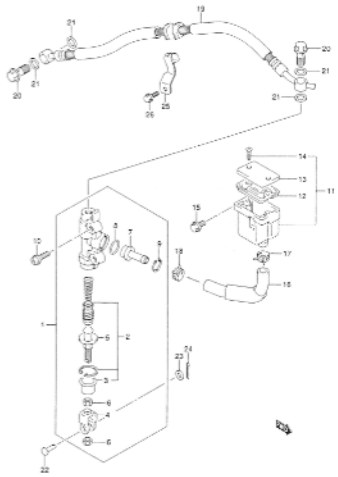

GSX1400K2 E02_061
REAR MASTER CYLINDER

FIG.62 OPTIONAL (J-8)

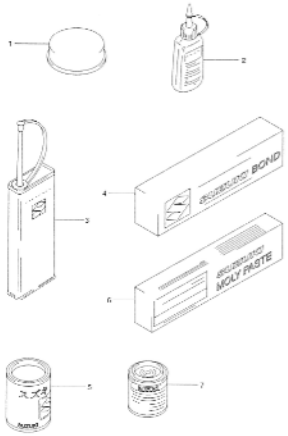

GSX1400K2 E02_062
OPTIONAL

FIG.1

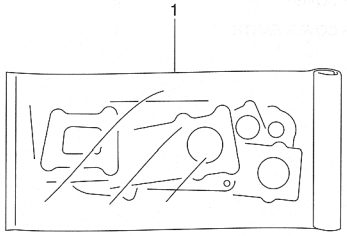

FIG.1 (B-2) GASKET SET

REF NO.	PART NO.	DESCRIPTION	Q'TY	REMARKS
1	11401-42811	GASKET SET	1	OPT
2	11141-42F00	·GASKET, CYLINDER HEAD	1	NOT SHOWN
3	11173-42F01	·GASKET, HEAD COVER	1	NOT SHOWN
4	11182-35F00	·GASKET, 2ND AIR PASSAGE	4	NOT SHOWN
5	11241-42F00	·GASKET, CYLINDER	1	NOT SHOWN
6	11482-42F00	·GASKET, CLUCH COVER	1	NOT SHOWN
7	11483-42F00	·GASKET, MAGNETO COVER (NA)	1	NOT SHOWN
8	11484-42F01	·GASKET, BREATHER COVER (NA)	1	NOT SHOWN
9	11489-42F00	·GASKET, OIL PAN (NA)	1	NOT SHOWN
10	11491-42F00	·GASKET, SIGNAL GENERATER COVER (NA)	1	NOT SHOWN
11	12837-35F00	·GASKET, TENSIONER ADJUSTER	1	NOT SHOWN
12	14181-46E00	·GASKET, EXHAUST PIPE	4	NOT SHOWN
13	16491-27A01	·O RING, OIL PAN	1	NOT SHOWN
14	16527-42F00	·GASKET, OIL STRAINER COVER (NA)	1	NOT SHOWN
15	16529-27A01	·GASKET, OIL OUTLET	1	NOT SHOWN
16	09161-11008	·WASHER	8	NOT SHOWN
17	09280-12012	·O RING (D:2.4, ID:11.8)	2	NOT SHOWN
18	09280-15003	·O RING (D:2.4, ID:14.8)	2	NOT SHOWN
19	09280-42003	·O RING	4	NOT SHOWN

FIG.2

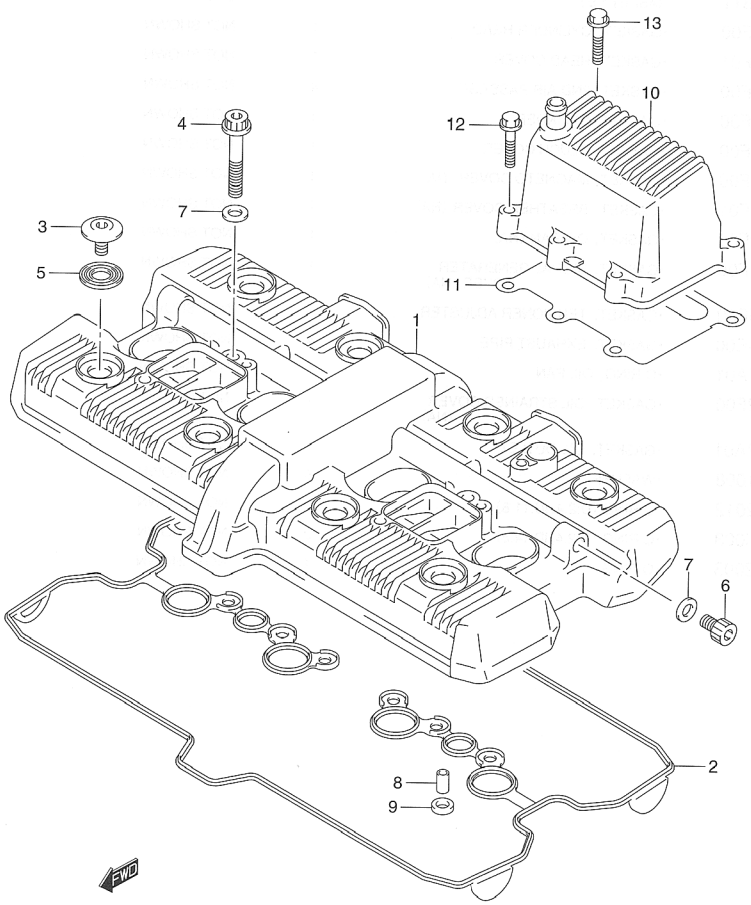

FIG.2 (B-3) CYLINDER HEAD COVER

REF NO.	PART NO.	DESCRIPTION	Q'TY	REMARKS
1	11171-42F00	COVER CYLINDER HEAD	1	
2	11173-42F01	GASKET, HEAD COVER	1	
3	09106-07009	BOLT, HEAD COVER	8	
4	07120-08503	BOLT, HEAD COVER	2	
5	09161-11008	WASHER, HEAD COVER	8	
6	07130-08123	PLUG, HEAD COVER	2	
7	09168-08029	GASKET	4	
8	09206-08007	KNOCK PIN	4	
9	11182-35F00	GASKET, 2ND AIR PASSAGE	4	
10	11330-42F00	COVER, BREATHER	1	
11	11484-42F01	GASKET, BREATHER COVER (NA)	1	
12	01547-06303	BOLT, BREATHER COVER	5	
13	01547-06307	BOLT, BREATHER COVER EARTH	1	

FIG.3

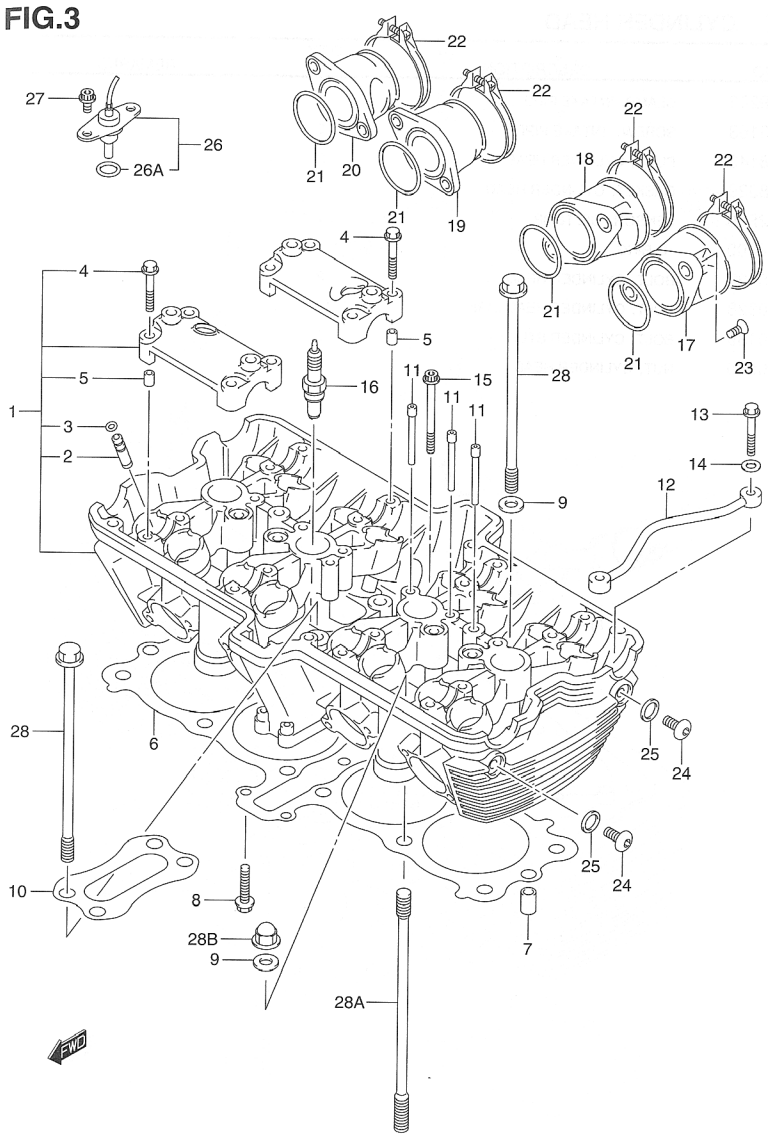

FIG.3 (B-4) CYLINDER HEAD

REF NO.	PART NO.	DESCRIPTION	Q'TY	REMARKS
1	11100-42F00	HEAD ASSY, CYLINDER	1	
2	11115-18D72	·GUIDE, VALVE (OS:0.3)	16	
3	09381-10004	·SNAP RING	16	
4	09103-06026	·BOLT, CAMSHAFT HOUSING	16	
5	09206-08001	·KNOCK PIN	8	
6	11141-42F00	GASKET, CYLINDER HEAD	1	
7	04211-11189	PIN	2	
8	01550-06353	BOLT, CYLINDER HEAD BOLT	2	
9	09168-10031	GASKET, CYLINDER HEAD BOLT	8	
10	11138-42F00	PLATE, HEAD REINF	1	
11	11131-27A00	PIPE, OIL	6	
12	11134-42F00	PIPE, CYLINDER HEAD	1	
13	01550-06403	BOLT, OIL PIPE	2	
14	08322-01063	WASHER, OIL PIPE BOLT	2	
15	07120-06703	BOLT, CYLINDER HEAD	2	
16-1	09482-00413	SPARK PURUG U24ETR (NGK)	4	
16-2	09482-00412	SPARK PURUG CR8EK (NGK)	4	
16-3	09482-00415	SPARK PURUG U22ETR (ND)	4	OPT
16-4	09482-00414	SPARK PURUG CR7EK (NGK)	4	OPT
16-5	09482-00411	SPARK PURUG U27ETR (ND)	4	OPT
16-6	09482-00410	SPARK PURUG CR9EK (NGK)	4	OPT
17	13101-42F00	PIPE ASSY, INTAKE NO.1	1	
18	13102-42F00	PIPE ASSY, INTAKE NO.2	1	
19	13103-42F00	PIPE ASSY, INTAKE NO.3	1	
20	13104-42F00	PIPE ASSY, INTAKE NO.4	1	
21	09280-42003	·O RING, INTAKE PIPE	4	

FIG.3

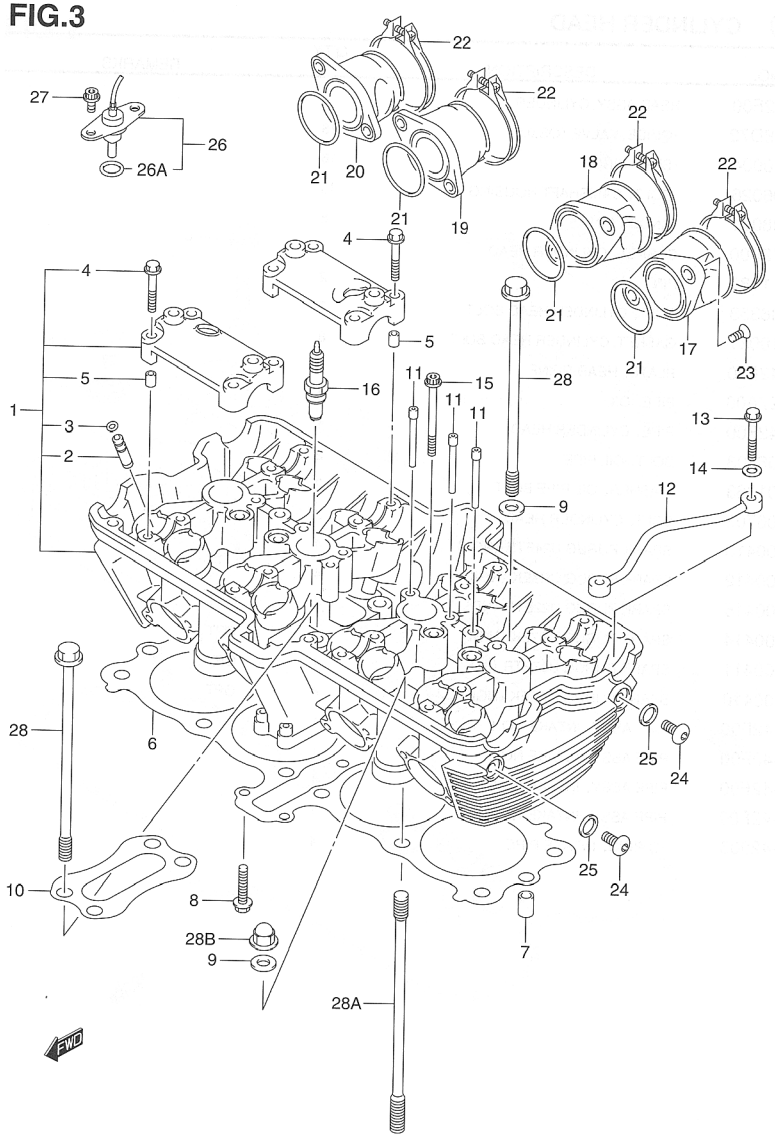

FIG.3 (B-5) CYLINDER HEAD

REF NO.	PART NO.	DESCRIPTION	Q'TY	REMARKS
22	09402-58208	CLAMP, INTAKE PIPE	4	
23	02122-06163	SCREW, INTAKE PIPE	8	
24	09106-08140	PULG, CYLINDER HEAD	2	
25	09168-08029	GASKET, CYLINDER HEAD	2	
26	13650-42F00	SENSOR, OIL TEMP	1	
26A	13652-42F00	·O RING	1	
27	07120-06123	BOLT, CYLINDER HEAD	2	
28	09103-10328	BOLT, CYLINDER HEAD L195	10	
28A	09108-10139	BOLT, CYLINDER STUD	2	
28B	09159-10069	NUT, CYLINDER HEAD	2	

FIG.4

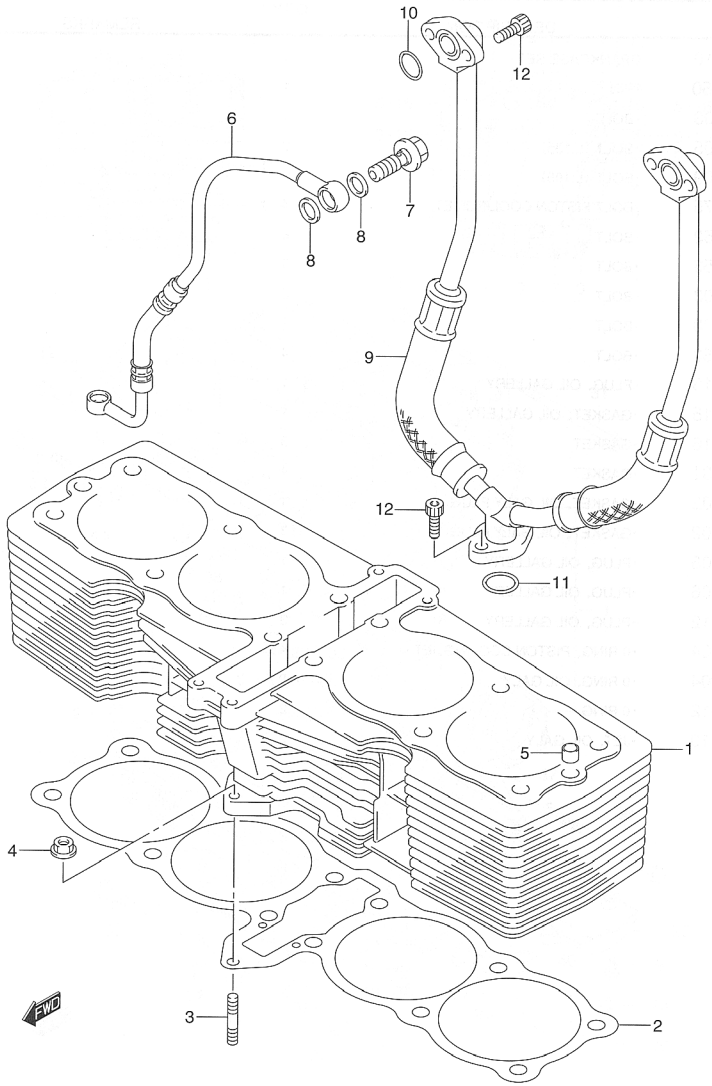

FIG.4 (B-6) CYLINDER

REF NO.	PART NO.	DESCRIPTION	Q'TY	REMARKS
1	11211-42F00-0F0	CYLINDER	1	
2	11241-42F00	GASKET, CYLINDER	1	
3	09108-06002	BOLT, STUD	1	
4	08316-10063	NUT, CYLINDER	1	
5	09206-13017	KNOCK PIN	2	
6	11282-42F00	HOSE, CYLINDER HEAD OIL	1	
7	09360-10032	BOLT, UNION	2	
8	09168-10007	GASKET (10.1X16X1)	4	
9	11328-42F01	HOSE, OIL HEAD COOLER	1	←11328—42F00
10	09280-14011	0 RING (D:2.5 ID:13.8)	2	
11	09280-15007	0 RING (D:2.4 ID:15.8)	1	
12	07130-06163	BOLT	6	

FIG.5

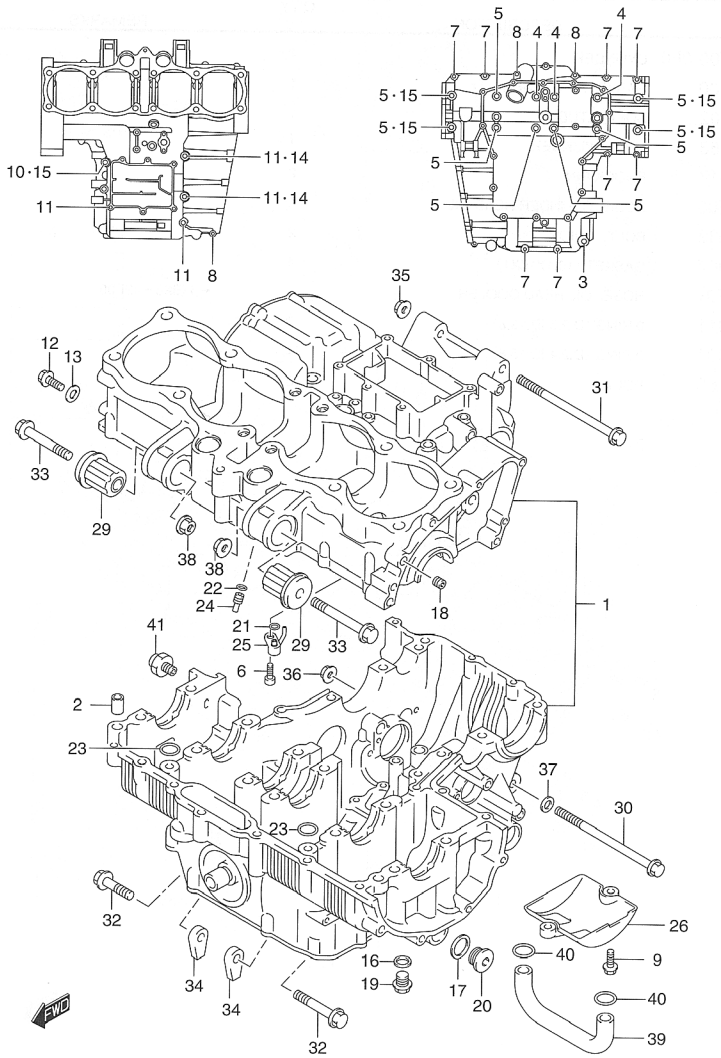

FIG.5 (B-7) CRANKCASE

REF NO.	PART NO.	DESCRIPTION	Q'TY	REMARKS
1	11301-42810	CRANKCASE SET	1	
2	11319-33E50	·PIN	1	
3	01550-08603	·BOLT	1	
4	09103-09005	·BOLT (L:135)	3	
5	09103-09009	·BOLT (L:105)	9	
6	09106-06075	·BOLT PISTON COOLING JET	4	
7	01547-06353	·BOLT	8	
8	01547-06553	·BOLT	3	
9	01550-06203	·BOLT	2	
10	01550-08603	·BOLT	1	
11	01550-08753	·BOLT	4	
12	09106-08116	·PLUG, OIL GALLERY	1	
13	09168-08015	·GASKET, OIL GALLERY	1	
14	09168-08016	·GASKET	3	
15	09168-10031	·GASKET	4	
16	09168-12002	·GASKET, OIL GALY PLUG	1	
17	09168-16002	·GASKET, OIL GALY PLUG	3	
18	09246-05006	·PLUG, OIL GALLERY	1	
19	09247-12006	·PLUG, OIL GALLERY	1	
20	09248-16012	·PLUG, OIL GALLERY	3	
21	09280-04004	·0 RING, PISTON COOLING JET	4	
22	09280-04004	·0 RING, OIL GALY	2	
23	09280-08012	·0 RING	2	
24	09493-24010	·JET, OIL GALY	2	

FIG.5

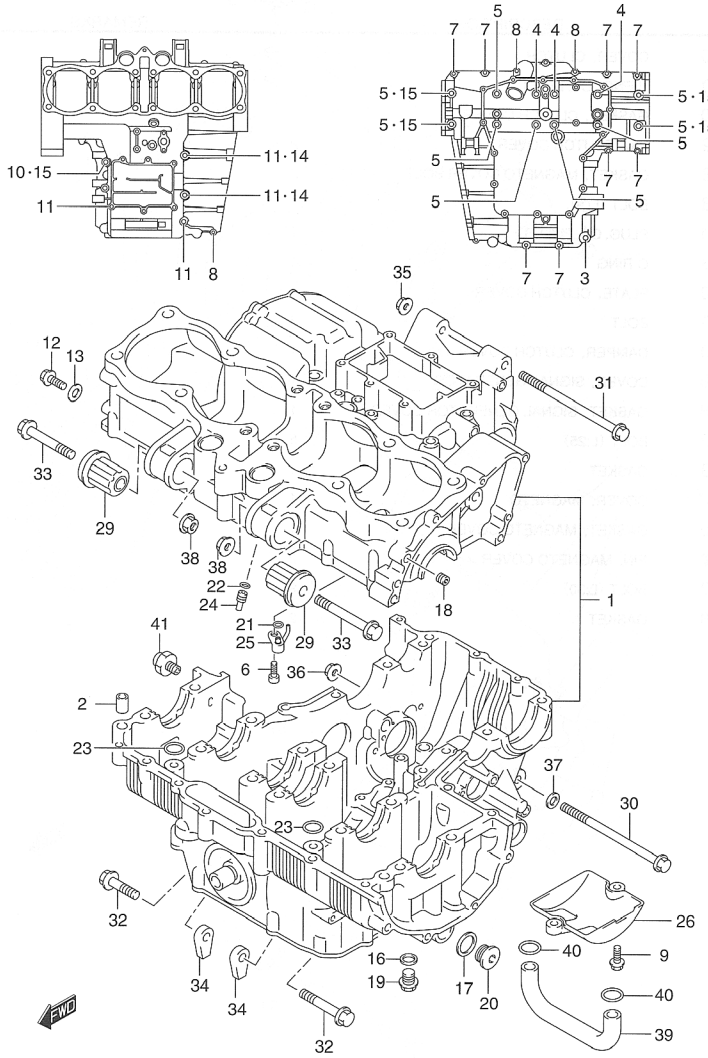

FIG.5 (B-8) CRANKCASE

REF NO.	PART NO.	DESCRIPTION	Q'TY	REMARKS
25	11390-42F00	·JET, PISTON COOLING	4	
26	11323-42F00	·SEPARATOR, OIL	1	
27	12228-24F00-0D0	·BEARING, CRANK THRUST (GREEN)	1	RH SEE ILLUSTRATION FIG.9
28-1	12228-24F00-0A0	·BEARING, CRANK THRUST (RED)	1	LH SEE ILLUSTRATION FIG.9
28-2	12228-24F00-0B0	·BEARING, CRANK THRUST (BLACK)	1	
28-3	12228-24F00-0C0	·BEARING, CRANK THRUST (BLUE)	1	
28-4	12228-24F00-0D0	·BEARING, CRANK THRUST (GREEN)	1	
28-5	12228-24F00-0E0	·BEARING, CRANK THRUST (YELLOW	1	
28-6	12228-24F00-0F0	·BEARING, CRANK THRUST (WHITE)	1	
29	11681-06B00	BUSH, ENGINE MOUNT FRONT	2	
30	09100-12053	BOLT L:140	1	
31	09103-10146	BOLT L:155	1	
32	09103-10335	BOLT L:50	2	
33	09103-10336	BOLT L:60	2	
34	09159-10020	NUT, CENTER LOWER	2	
35	09159-10103	NUT, UPPER	1	
36	09159-12054	NUT, LOWER	1	
37	08322-01123	WASHER, LOWER	1	
38	08316-10103	NUT, FRONT	2	
39	11281-42F00	PIPE, OIL MAIN GALLERY	1	
40	09280-14011	O RING	2	
41	37820-33D10	SWITCH ASSY, OIL PRESSURE	1	

FIG.6

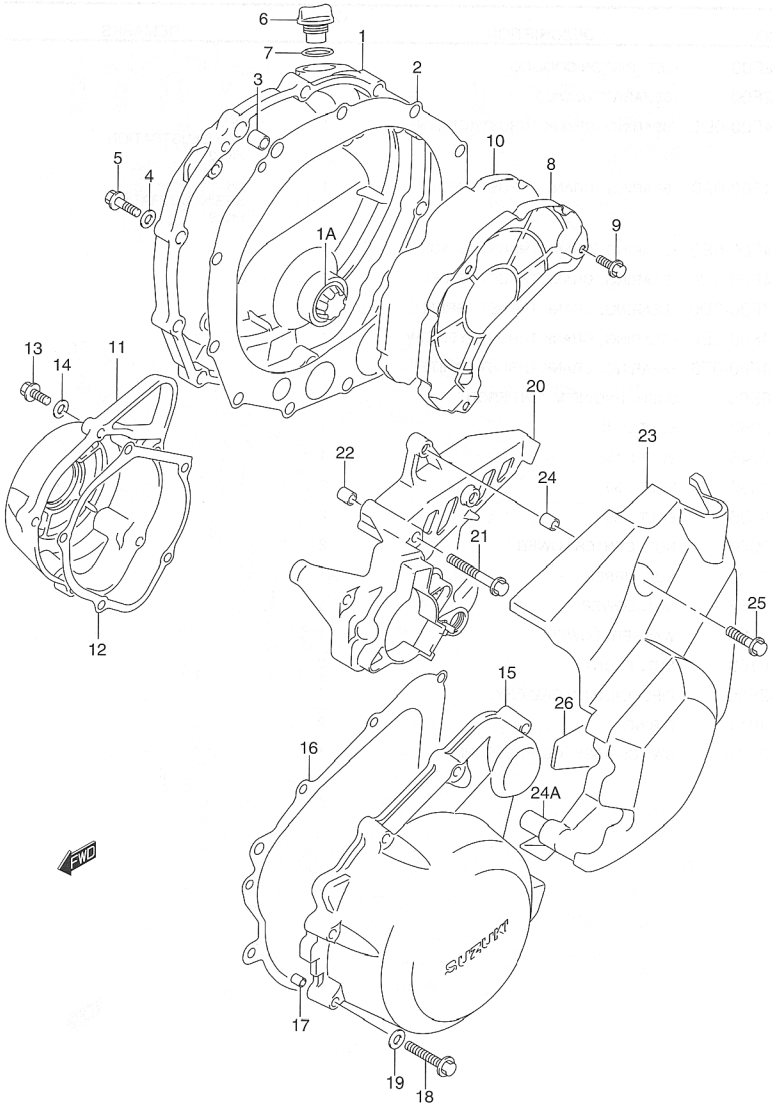

FIG.6 (B-9) CRANKCASE COVER

REF NO.	PART NO.	DESCRIPTION	Q'TY	REMARKS
1	11340-42F00	COVER, CLUTCH	1	
1A	11971-33210	·LENS, OIL LEVEL	1	
2	11482-42F00	GASKET, CLUTCH COVER	1	
3	04211-09189	PIN, CLUTCH COVER	2	
4	09168-06023	GASKET, MAGNETO COVER BOLT	2	
5	09103-06213	BOLT (L:30)	11	
6	11971-12C51	PLUG, OIL FILLER	1	
7	09280-17003	O RING	1	
8	11342-42F00	PLATE, CLUTCH COVER	1	
9	01550-06123	BOLT	3	
10	11343-42F00	DAMPER, CLUTCH COVER	1	
11	11381-42F00	COVER, SIGNAL GENERATOR	1	
12	11491-42F00	GASKET, SIGNAL GENERATOR COVER	1	
13	09103-06212	BOLT (L:25)	5	
14	09168-06023	GASKET	1	
15	11351-42F00	COVER, MAGNETO	1	
16	11483-42F00	GASKET, MAGNETO COVER	1	
17	04211-09149	PIN, MAGNETO COVER	2	
18	09103-06213	BOLT (L:30)	9	
19	09168-06023	GASKET	2	

FIG.6

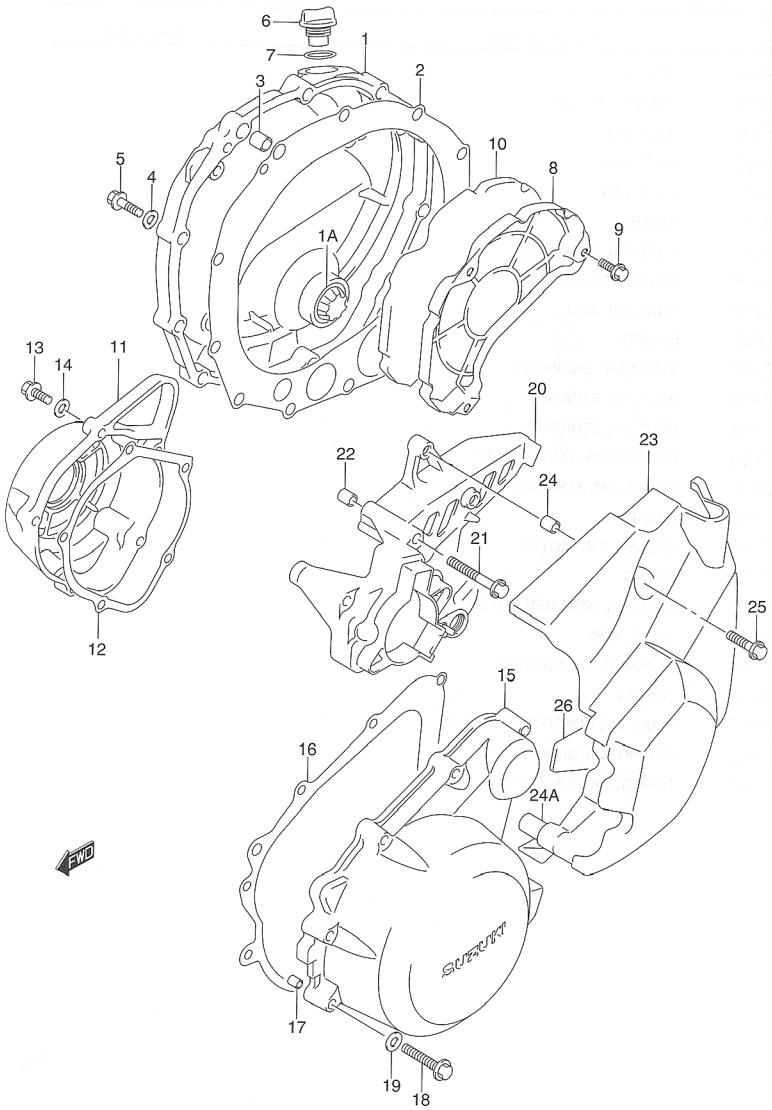

FIG.6 (B-10) CRANKCASE COVER

REF NO.	PART NO.	DESCRIPTION	Q'TY	REMARKS
20	11371-42F00	COVER, ENGINE SPROCKET INNER	1	
21	01547-06653	BOLT	3	
22	04211-09149	PIN	2	
23	11360-42F00	COVER, ENGINE SPROKET OUTER	1	
24	09180-06307	·SPACER (6.5X9X10)	1	
24A	09180-06275	·SPACER (6.5X9X23)	2	
25	01547-06357	BOLT	3	
26	11362-42F00	DAMPER, ENGINE SPROCKET COVER OUTER	1	

2

FIG.7

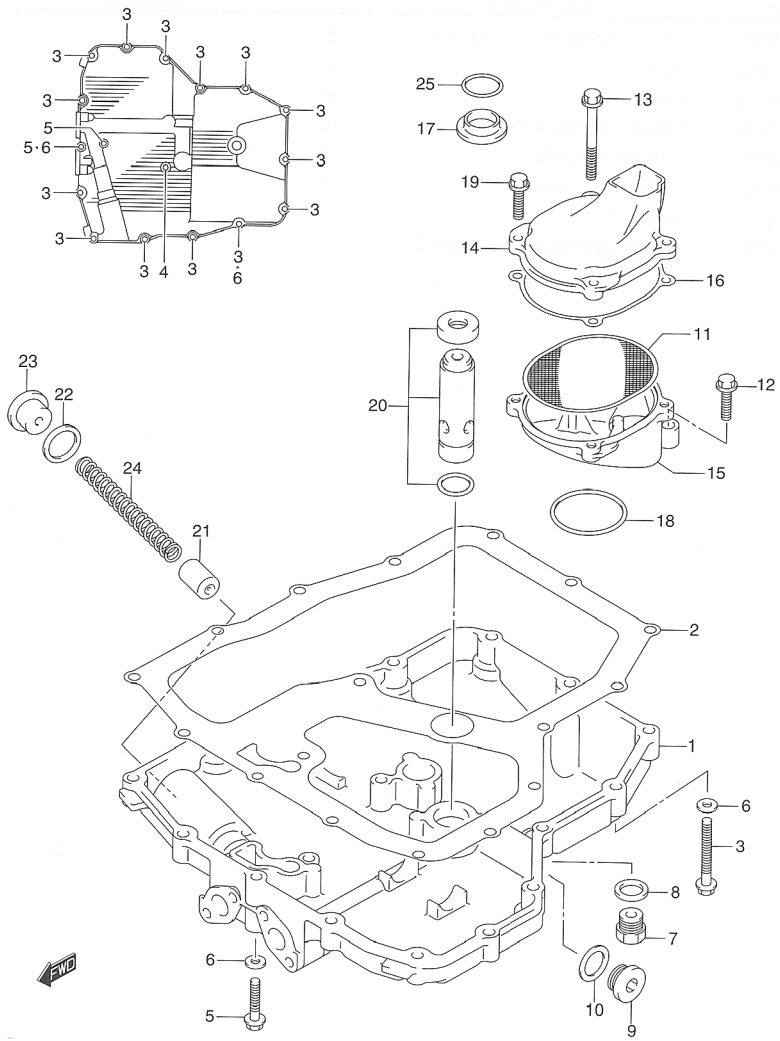

FIG.7 (B-11) OIL PAN

REF NO.	PART NO.	DESCRIPTION	Q'TY	REMARKS
1	11511-42F00	PAN, OIL	1	
2	11489-42F00	GASKET, OIL PAN	1	
3	01550-06303	BOLT (L:30)	14	
4	01550-06403	BOLT (L:40)	1	
5	01550-06503	BOLT (L:50)	2	
6	09168-06023	GASKET	2	
7	09247-14036	PLUG, OIL DRAIN	1	
8	09168-14002	GASKET, OIL DRAIN	1	
9	09248-16012	PLUG, OIL GALL	1	
10	09168-16002	GASKET	1	
11	16520-42F00	STRAINER, ENGINE OIL	1	
12	01550-06253	BOLT, OIL STRAINER	1	
13	01550-06603	BOLT, OIL STRAINER	1	
14	16525-42F00	PROTECTOR, OIL STRAINER	1	
15	16526-42F00	COVER, OIL STRAINER	1	
16	16527-42F00	GASKET	1	
17	16529-27A01	GASKET, OIL OUTLET	1	
18	09280-40010	O RING	1	
19	01550-06203	BOLT, OIL STRAINER COVER	3	
20	16440-42F00	VALVE ASSY	1	
21	16442-34301	PLUNGER, OIL CONTROL	1	
22	09168-16002	GASKET	1	
23	09248-16012	PLUG, OIL CONTROL PLUNGER	1	
24	09440-09023	SPRING, OIL CONTROL	1	
25	09280-18009	O RING, OIL PUMP OUT	1	

FIG.8

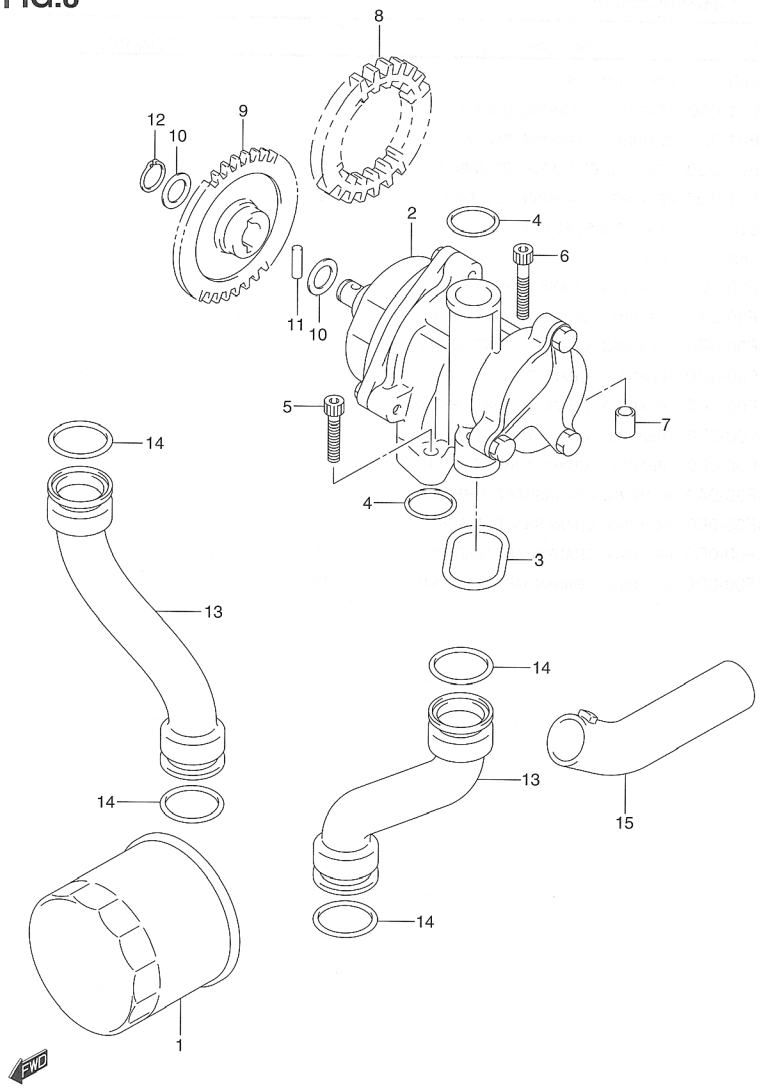

FIG.8 (B-12) OIL PUMP

REF NO.	PART NO.	DESCRIPTION	Q'TY	REMARKS
1	16510-34E00	FILTER ASSY, ENGINE OIL	1	
2-1	16400-42F00	PUMP ASSY, OIL	1	MODEL K2
2-2	16400-42F10	PUMP ASSY, OIL	1	MODEL K3
3	16491-27A01	O RING	1	
4	09280-18009	O RING, OIL PUMP OUT	2	
5	09106-06089	BOLT	2	
6	09106-06088	BOLT	1	
7	04211-09129	PIN, OIL PUMP	2	
8	16321-42F00	GEAR, OIL OUMP DRIVE	1	NT:37
9	16331-26D01-0B0	GEAR, OIL OUMP DRIVEN	1	NT:39
10	08221-12205	WASHER	2	
11	09261-05006	PIN	1	
12	08331-31126	CIRCLIP	1	
13	16481-42F00	PIPE, OIL OUTLET	2	
14	09280-22016	O RING	4	
15	16530-42F00	PIPE, OIL OUTLET UNDER	1	

FIG.9

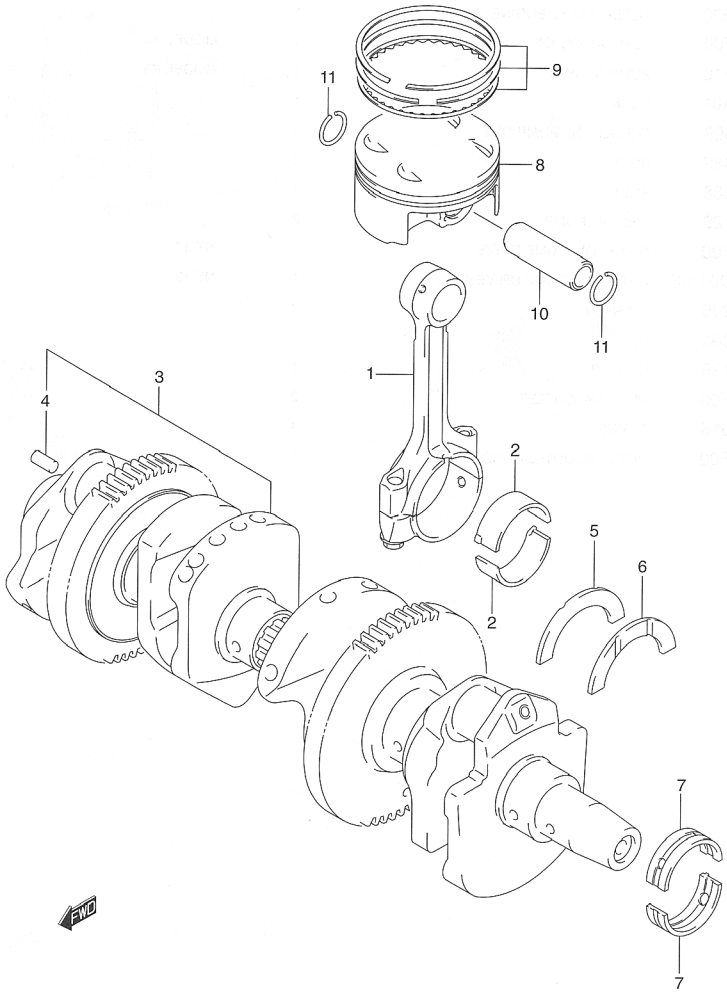

FIG.9 (C-2) CRANKSHAFT

REF NO.	PART NO.	DESCRIPTION	Q'TY	REMARKS
1	12160-42F00	CONNROD ASSY	4	
2-1	12164-46E01-0A0	BEARING, CRANKPIN (GREEN)	8	
2-2	12164-46E01-0B0	BEARING, CRANKPIN (BLACK)	8	
2-3	12164-46E01-0C0	BEARING, CRANKPIN (BROWN)	8	
2-4	12164-46E01-0D0	BEARING, CRANKPIN (YELLOW)	8	
3	12000-42810	CRANKSHAFT SET	1	
4	04221-04089	·PIN	1	
5	12228-24F00-0D0	·BEARING, CRANK THRUST (GREEN)	1	RH
6-1	12228-24F00-0A0	·BEARING, CRANK THRUST (RED)	1	LH
6-2	12228-24F00-0B0	·BEARING, CRANK THRUST (BLACK)	1	
6-3	12228-24F00-0C0	·BEARING, CRANK THRUST (BLUE)	1	
6-4	12228-24F00-0D0	·BEARING, CRANK THRUST (GREEN)	1	
6-5	12228-24F00-0E0	·BEARING, CRANK THRUST (YELLOW	1	
6-6	12228-24F00-0F0	·BEARING, CRANK THRUST (WHITE)	1	
7-1	12229-24F00-0A0	BEARING, CRANKSHAFT (GREEN)	12	
7-2	12229-24F00-0B0	BEARING, CRANKSHAFT (BLACK)	12	
7-3	12229-24F00-0C0	BEARING, CRANKSHAFT (BROWN)	12	
7-4	12229-24F00-0D0	BEARING, CRANKSHAFT (YELLOW)	12	

FIG.9

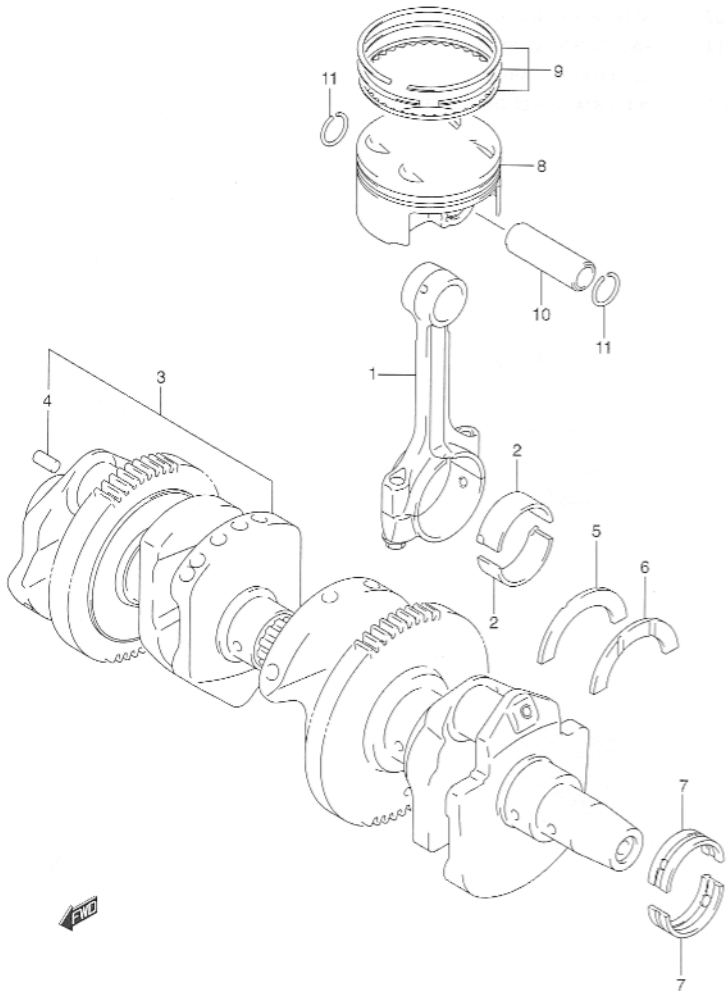

FIG.9 (C-3) CRANKSHAFT

REF NO.	PART NO.	DESCRIPTION	Q'TY	REMARKS
8	12111-42F00-0F0	PISTON	4	
9	12140-42F00	RING SET, PISTON	4	
10	12151-07D00	PISTON PIN	4	
11	09381-18003	CIRCLIP	8	

2

FIG.10

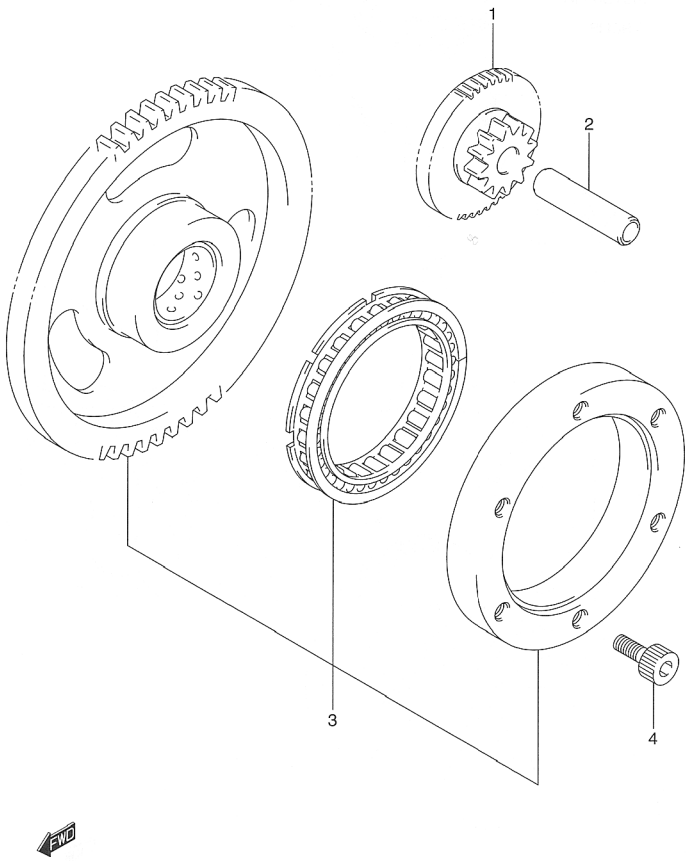

FIG.10 (C-4) STARTER CLUTCH

REF NO.	PART NO.	DESCRIPTION	Q'TY	REMARKS
1	12611-42F00	GEAR, STARTER IDLE	1	
2	09206-11014	PIN, STATER IDLE GEAR	1	
3	12600-42810	CLUTCH SET, STARTER	1	
4	09106-08095	BOLT, STARTER CLUTCH, 8X16	6	

FIG.11

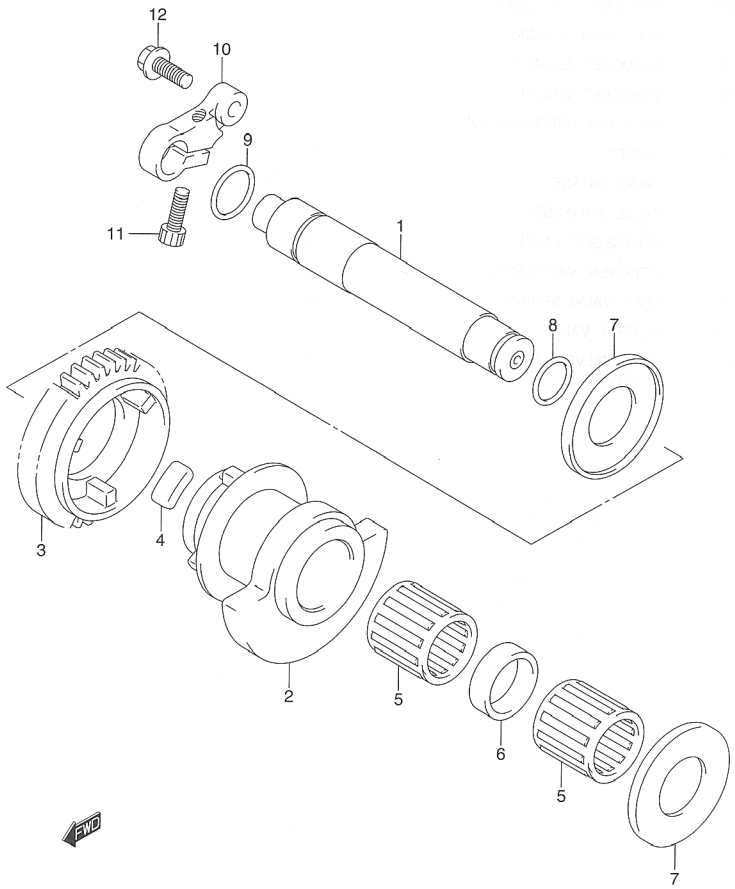

FIG.11 (C-5) CRANK BALANCER

REF NO.	PART NO.	DESCRIPTION	Q'TY	REMARKS
1	12650-42F00-0F0	SHAFT, CRANK BALANCER	1	
2	12654-24F00-0F0	BALANCER, CRANK	1	
3	12666-24F00	GEAR, CRANK BALANCE	1	
4	12686-24F00	DAMPER, CRANK BALANCER	6	
5	09263-19015	BEARING (19X26X25.2)	2	
6	09180-19014	SPACER	1	
7	09169-21001	WASHER	2	
8	09280-14015	O RING	1	
9	09280-17007	O RING	1	
10	12681-26D00	ARM, BALANCER SHAFT	1	
11	07130-06203	BOLT	1	
12	09103-06130	BOLT (6X20)	1	

FIG.12

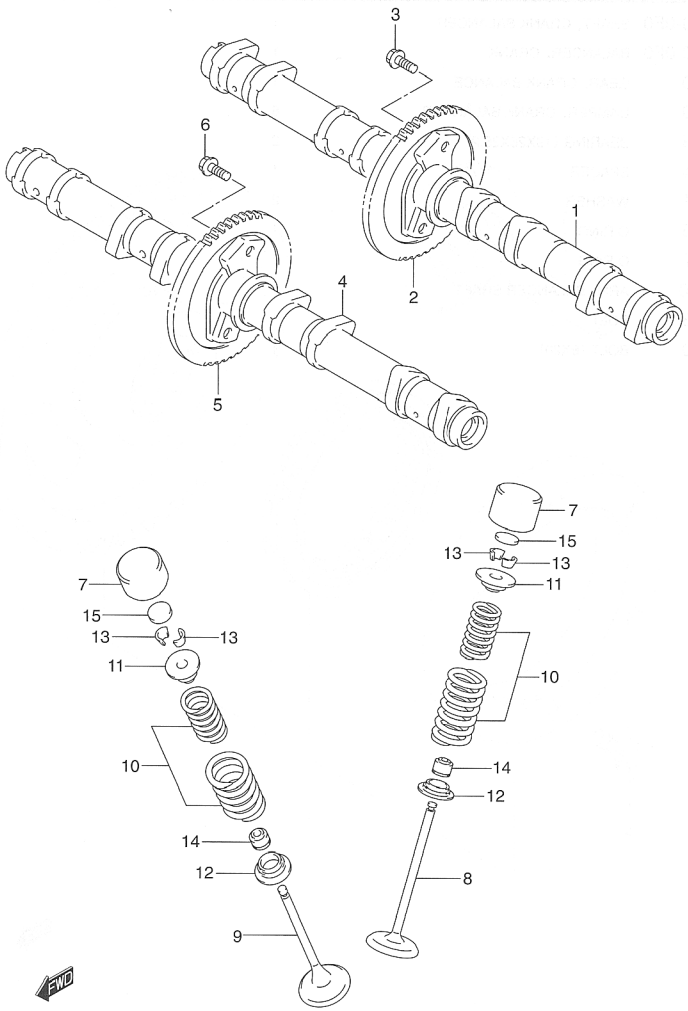

FIG.12 (C-6) CAM SHAFT/VALVE

REF NO.	PART NO.	DESCRIPTION	Q'TY	REMARKS
1	12710-42F00	CAMSHAFT, INTAKE	1	
2	12741-42F00	SPROCKET, CAM SHAFT	1	
3	09103-07001	BOLT, CAM SPROCKET, 7X11	2	
4	12720-42F00	SPROCKET, EXHAUST	1	
5	12741-42F00	SPROCKET, CAM SHAFT	1	
6	09103-07001	BOLT, CAM SPROCKET, 7X11	2	
7	12891-17E00	TAPPET	16	
8	12911-42F00	VALVE, INTAKE	8	
9	12912-42F00	VALVE, EXHAUST	8	
10	12920-13E00	SPRING SET, VALVE	16	
11	12931-13E00	RETAINER, VALVE SPRING	16	
12	12933-39E00	SEAT, VALVE SPRING	16	
13	12932-32C00	COTTER, VALVE	32	
14	09289-04002	SEAL, VALVE STEM OIL (4.5X10X8)	16	

FIG.12

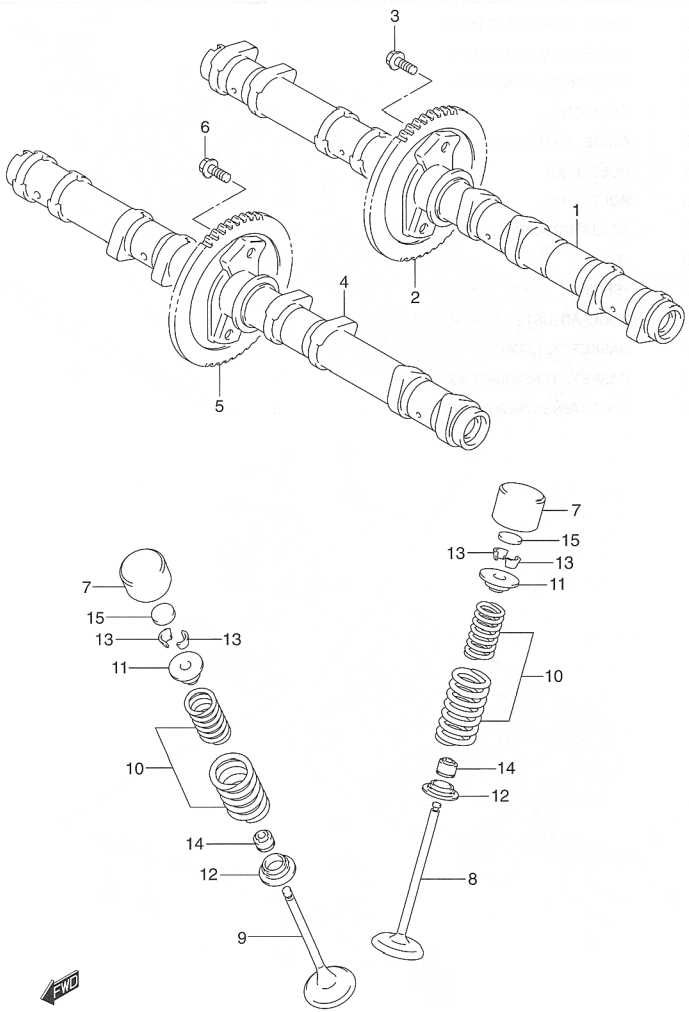

FIG.12 (C-7) CAM SHAFT/VALVE

REF NO.	PART NO.	DESCRIPTION	Q'TY	REMARKS
15-1	12892-05C00-120	SHIM, TAPPET, T:1.20	16	
15-2	12892-05C00-125	SHIM, TAPPET, T:1.25	16	
15-3	12892-05C00-130	SHIM, TAPPET, T:1.30	16	
15-4	12892-05C00-135	SHIM, TAPPET, T:1.35	16	
15-5	12892-05C00-140	SHIM, TAPPET, T:1.40	16	
15-6	12892-05C00-145	SHIM, TAPPET, T:1.45	16	
15-7	12892-05C00-150	SHIM, TAPPET, T:1.50	16	
15-8	12892-05C00-155	SHIM, TAPPET, T:1.55	16	
15-9	12892-05C00-160	SHIM, TAPPET, T:1.60	16	
15-10	12892-05C00-165	SHIM, TAPPET, T:1.65	16	
15-11	12892-05C00-170	SHIM, TAPPET, T:1.70	16	
15-12	12892-05C00-175	SHIM, TAPPET, T:1.75	16	
15-13	12892-05C00-180	SHIM, TAPPET, T:1.80	16	
15-14	12892-05C00-185	SHIM, TAPPET, T:1.85	16	
15-15	12892-05C00-190	SHIM, TAPPET, T:1.90	16	
15-16	12892-05C00-195	SHIM, TAPPET, T:1.95	16	
15-17	12892-05C00-200	SHIM, TAPPET, T:2.00	16	
15-18	12892-05C00-205	SHIM, TAPPET, T:2.05	16	
15-19	12892-05C00-210	SHIM, TAPPET, T:2.10	16	
15-20	12892-05C00-215	SHIM, TAPPET, T:2.15	16	
15-21	12892-05C00-220	SHIM, TAPPET, T:2.20	16	
16	12800-05820	SHIM, TAPPET	1	OPT NOT SHOWN
17	99000-69471	·CASE, TAPPET SHIM	1	OPT NOT SHOWN

FIG.13

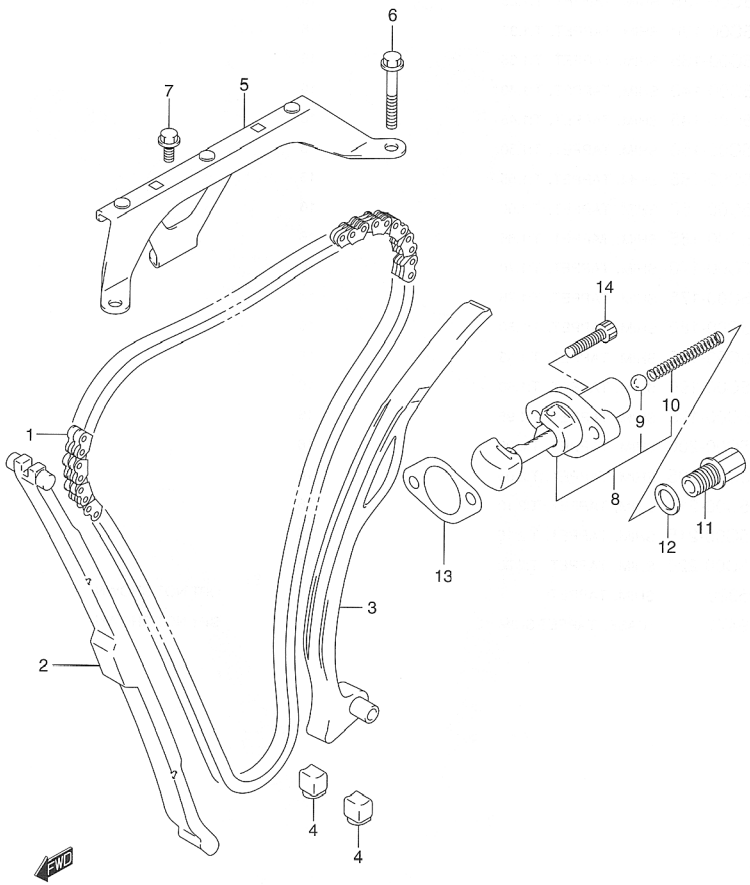

FIG.13 (C-8) CAM CHAIN

REF NO.	PART NO.	DESCRIPTION	Q'TY	REMARKS
1	12760-42F00	CHAIN, CAM SHAFT DRIVE	1	
2	12771-42F00	GUIDE, CAM CHAIN NO.1	1	
3	12810-42F00	TENSIONER, CAM CHAIN	1	
4	12814-34200	CUSHION	2	
5	12782-42F00	GUIDE, CAM CHAIN NO.2	1	
6	09103-06026	BOLT (L:39)	2	
7	01550-06123	BOLT (L:12)	1	
8	12830-35F00	ADJUSTER ASSY, TENSIONER	1	
9	12839-35F00	•BALL	1	
10	12831-35F00	•SPRING	1	
11	12836-42F00	BOLT, ADJUSTER SPRING	1	
12	09168-12017	GASKET (12X17X1)	1	
13	12837-35F00	GASKET, TENSIONER ADJUSTER	1	
14	07130-06253	BOLT, TENSIONER ADJUSTER	2	

FIG.14

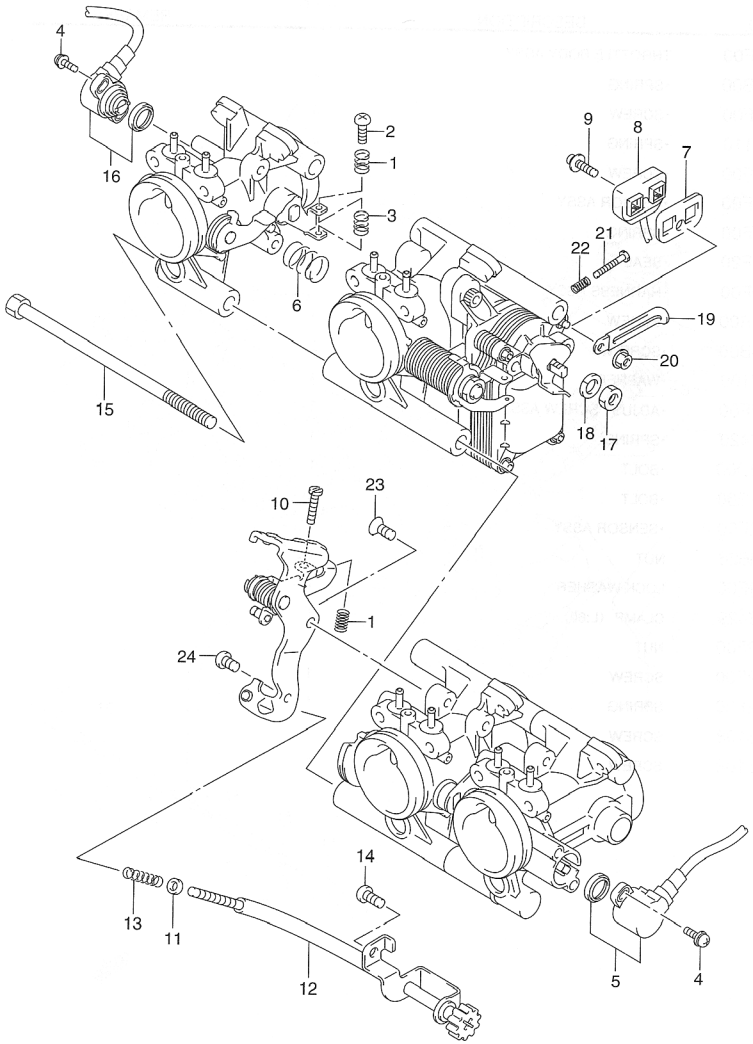

FIG.14 (C-9) THROTTLE BODY (MODEL K2)

REF NO.	PART NO.	DESCRIPTION	Q'TY	REMARKS
	13405-42F00	THROTTLE BODY ASSY	1	
1	13271-44B00	·SPRING	5	
2	13548-42F00	·SCREW	3	
3	13268-96110	·SPRING	5	
4	13605-39F00	·SCREW	4	
5	13580-26F00	·SENSOR ASSY	1	
6	13543-39F00	·SPRING	2	
7	13673-39F20	·SEAL	1	
8	13477-39F00	·HARNESS ASSY	1	
9	13601-47A00	·SCREW	1	
10	13267-44B00	·SCREW	2	
11	13432-37100	·WASHER	1	
12	13270-42F00	·ADJUST SCREW ASSY	1	
13	13268-37420	·SPRING	1	
14	95158-60D00	·BOLT	1	
15	13612-34E00	·BOLT	2	
16	13580-42F00	·SENSOR ASSY	1	
17	13586-13626	NUT	1	
18	13614-39F00	LOCK WASHER	1	
19	09404-06429	CLAMP (L:60)	1	
20	13607-39F00	NUT	1	
21	13267-42F00	SCREW	1	
22	13268-42F00	SPRING	1	
23	13603-05108	SCREW	1	
24	13602-05108	SCREW	1	

REFER TO FIG.14A (C-10) FOR MODEL K3

FIG.14A

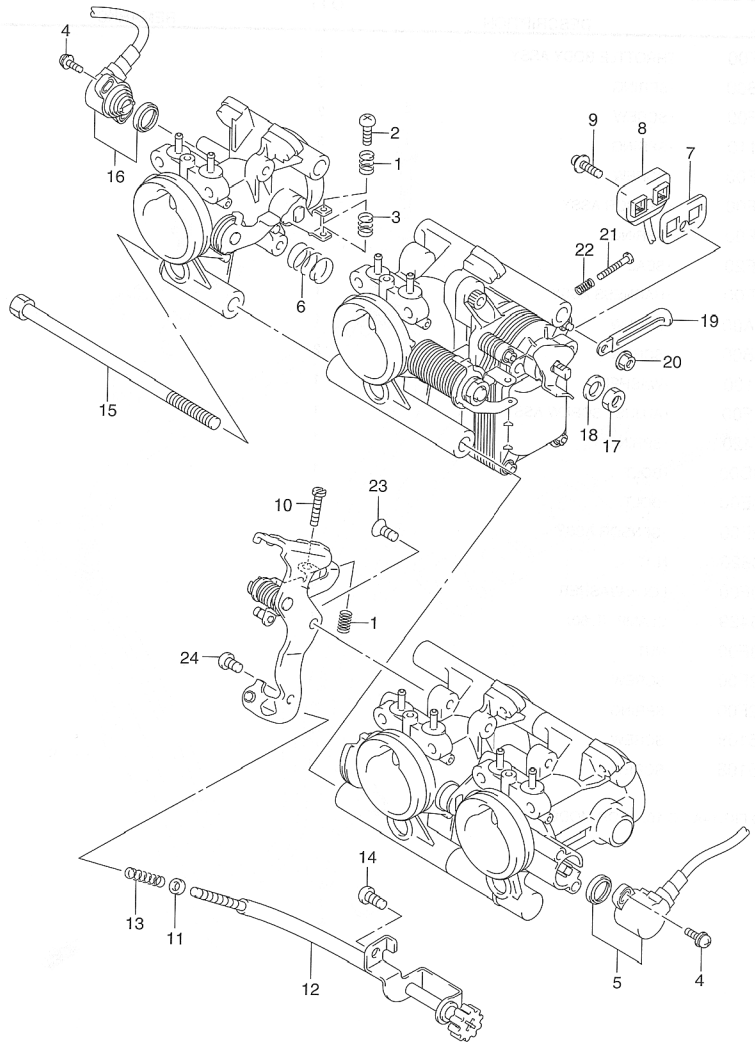

FIG.14A (C-10) THROTTLE BODY (MODEL K3)

REF NO.	PART NO.	DESCRIPTION	Q'TY	REMARKS
	13405-42F00	THROTTLE BODY ASSY	1	
1	13271-44B00	·SPRING	5	
2	13548-42F00	·SCREW	3	
3	13268-96110	·SPRING	5	
4	13605-39F00	·SCREW	4	
5	13580-26F00	·SENSOR ASSY	1	
6	13543-39F00	·SPRING	2	
7	13673-39F20	·SEAL	1	
8	13477-39F00	·HARNESS ASSY	1	
9	13601-47A00	·SCREW	1	
10	13267-44B00	·SCREW	2	
11	13432-37100	·WASHER	1	
12	13270-42F00	·ADJUST SCREW ASSY	1	
13	13268-37420	·SPRING	1	
14	95158-60D00	·BOLT	1	
15	13612-34E00	·BOLT	2	
16	13580-42F00	·SENSOR ASSY	1	
17	13586-13626	NUT	1	
18	13614-39F00	LOCK WASHER	1	
19	09404-06429	CLAMP (L:60)	1	
20	13607-39F00	NUT	1	
21	13267-42F00	SCREW	1	
22	13268-42F00	SPRING	1	
23	13603-05108	SCREW	1	
24	13602-05108	SCREW	1	

FIG.15

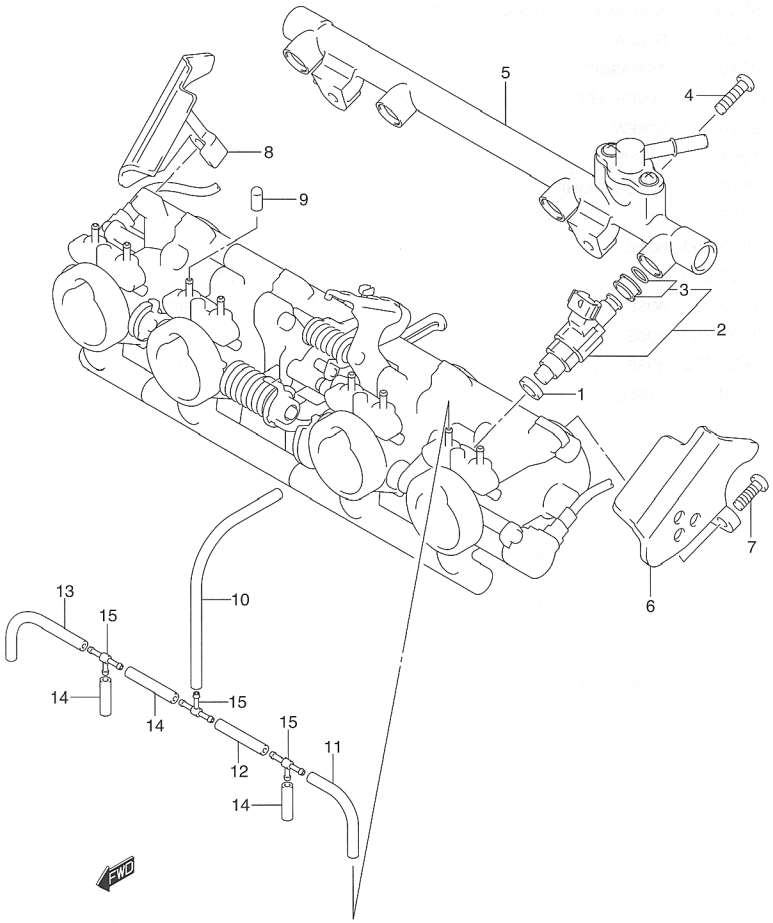

FIG.15 (C-11) THROTTLE BODY HOSE/JOINT (MODEL K2)

REF NO.	PART NO.	DESCRIPTION	Q'TY	REMARKS
1	13672-33E00	CUSHION, FUEL INJECTOR	4	
2	15710-65D00	INJECTOR ASSY, FUEL	4	
3	15716-65DT0	•GROMMET SET, FUEL INJECTOR	4	
4	13602-42F00	SCREW	2	
5	15731-42F00	PIPE ASSY	1	
6	13431-42F00	COVER, LEFT	1	
7	13602-42F10	SCREW	2	
8	13432-42F00	COVER, RIGHT	1	
9	13274-84000	CAP	3	
10	13681-39F00-250	HOSE	1	
11	13681-39F00-250	HOSE	1	L:250→70
12	13681-39F00-250	HOSE	1	L:250→60
13	13681-39F00-250	HOSE	1	L:250→90
14	13681-39F00-250	HOSE	3	L:250→40
15	13471-02FA0	NIPPLE	3	

REFER TO FIG.15A (C-12) FOR MODEL K3

FIG.15A

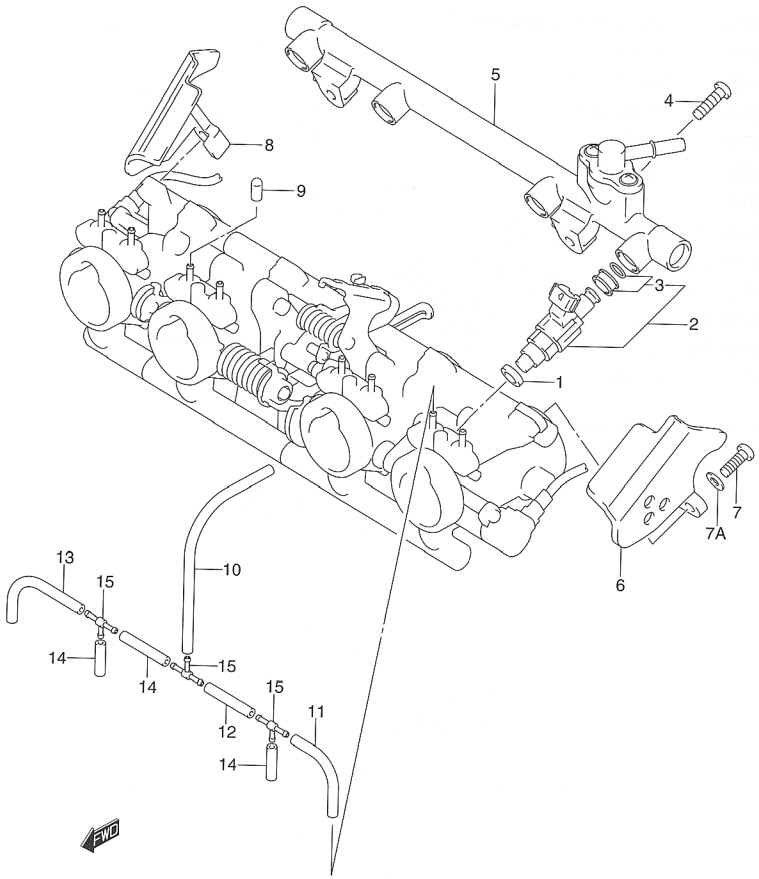

FIG.15A (C-12) THROTTLE BODY HOSE/JOINT (MODEL K3)

REF NO.	PART NO.	DESCRIPTION	Q'TY	REMARKS
1	13672-33E00	CUSHION, FUEL INJECTOR	4	
2	15710-65D00	INJECTOR ASSY, FUEL	4	
3	15716-65DT0	·GROMMET SET, FUEL INJECTOR	4	
4	13602-42F00	SCREW	2	
5	15731-42F10	PIPE ASSY	1	
6	13431-42F10	COVER, LEFT	1	
7	13602-42F10	SCREW	2	
7A	08322-01083	WASHER	2	
8	13432-42F10	COVER, RIGHT	1	
9	13274-84000	CAP	3	
10	13681-39F00-250	HOSE	1	
11	13681-39F00-250	HOSE	1	L:250→70
12	13681-39F00-250	HOSE	1	L:250→60
13	13681-39F00-250	HOSE	1	L:250→90
14	13681-39F00-250	HOSE	3	L:250→40
15	13471-02FA0	NIPPLE	3	

FIG.16

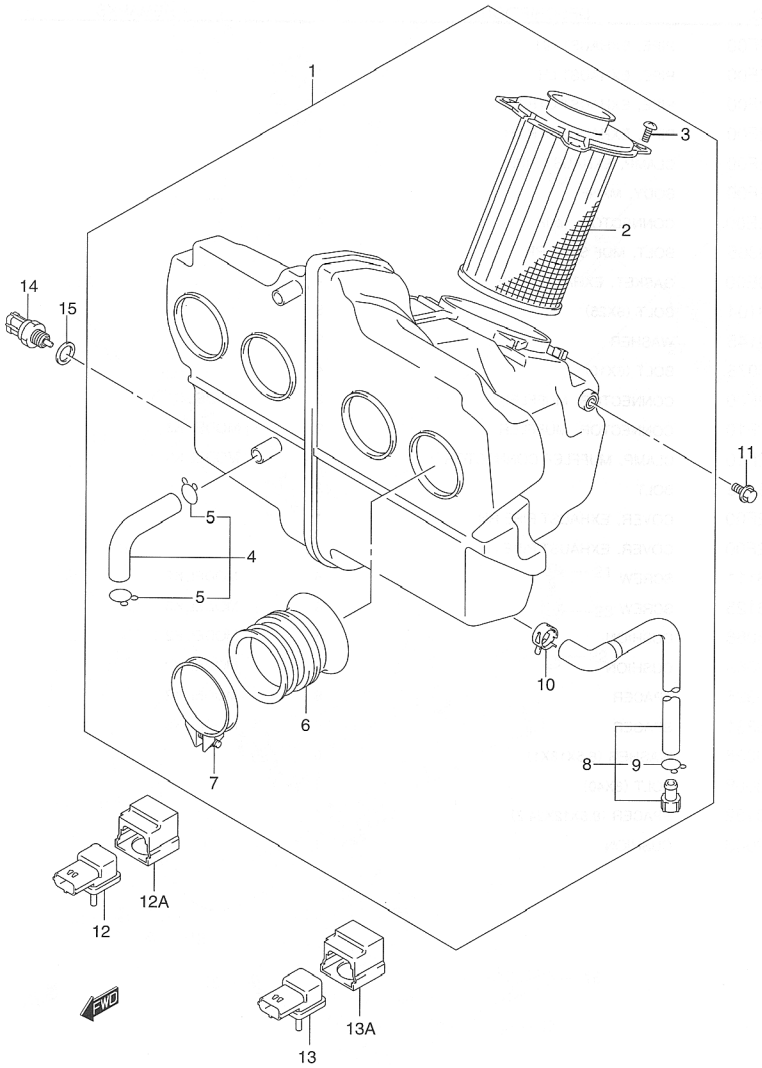

FIG.16 (D-2) AIR CLEANER

REF NO.	PART NO.	DESCRIPTION	Q'TY	REMARKS
1	13700-42F00	CLEANER ASSY, AIR	1	
2	13780-42F00	·FILTER ASSY, AIR CLEANER	1	
3	02142-05123	·SCREW	4	
4	13853-42F00	·TUBE, BREATHER	1	
5	09401-14301	··CLIP	2	
6	13881-42F00	·TUBE, OUTLET	4	
7	09402-50208	·CLAMP	4	
8	13870-21458	·TUBE, DRAIN	1	
9	09401-11101	··CLIP	1	
10	09401-13417	·CLIP	1	
11	01550-06123	BOLT	2	
12	18591-42F00	SENSOR, BOOST	1	
12A	18595-42F10	HOLDER, SENSOR	1	
13	18591-42F00	SENSOR, AIR PRESSURE	1	
13A	18595-42F10	HOLDER, SENSOR	1	
14	13650-56B00	SENSOR, INLET AIR TEMP	1	
15	09168-12017	GASKET (12X17X1)	1	

FIG.17

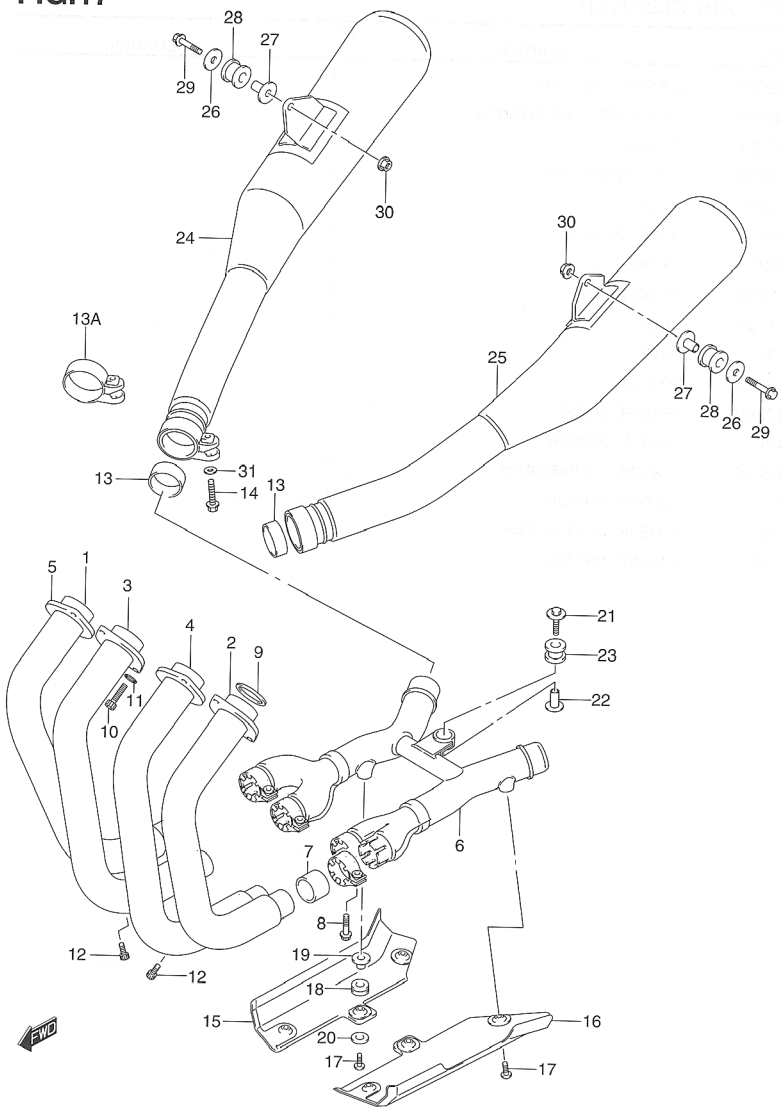

FIG.17 (D-3) MUFFLER

REF NO.	PART NO.	DESCRIPTION	Q'TY	REMARKS
1	14150-42F00	PIPE, EXHAUST RH	1	
2	14160-42F00	PIPE, EXHAUST LH	1	
3	14170-42F00	PIPE, EXHAUST CTR RH	1	
4	14180-42F00	PIPE, EXHAUST CTR LH	1	
5	14182-42F00	CLAMP, EXHAUST PIPE	4	
6	14210-42F00	BODY, MANF	1	
7	14771-32E00	CONNECTOR, MUF	4	
8	09103-08365	BOLT, MUF SPRT RR	4	
9	14181-46E00	GASKET, EXHAUST PIPE	4	
10	09106-08104	BOLT (6X25)	8	
11	09160-08145	WASHER	8	
12	09106-06076	BOLT (6X10)	4	
13-1	14771-02F00	CONNECTOR, MUFFLER	2	MODEL K2
13-2	14771-42F10	CONNECTOR, MUFFLER	2	MODEL K3
13A	14459-42F10	CLAMP, MUFFLER CONNECTOR	2	MODEL K3
14	01550-08403	BOLT	2	
15	14780-42F00	COVER, EXHAUST PIPE RH	1	
16	14790-42F00	COVER, EXHAUST PIPE LH	1	
17-1	09139-06111	SCREW	6	MODEL K2
17-2	09139-06125	SCREW	6	MODEL K3
18-1	09320-08066	CUSHION	6	MODEL K2
18-2	09320-08068	CUSHION	6	MODEL K3
19-1	09180-06325	SPACER	6	MODEL K2
19-2	09180-06331	SPACER	6	MODEL K3
20	09160-06028	WASHER (6.5X18X1)	6	
21	09118-08068	BOLT (8X40)	1	
22	09180-08152	SPACER (8.6X12X24.2)	1	
23	09320-12048	CUSHION	1	

FIG.17

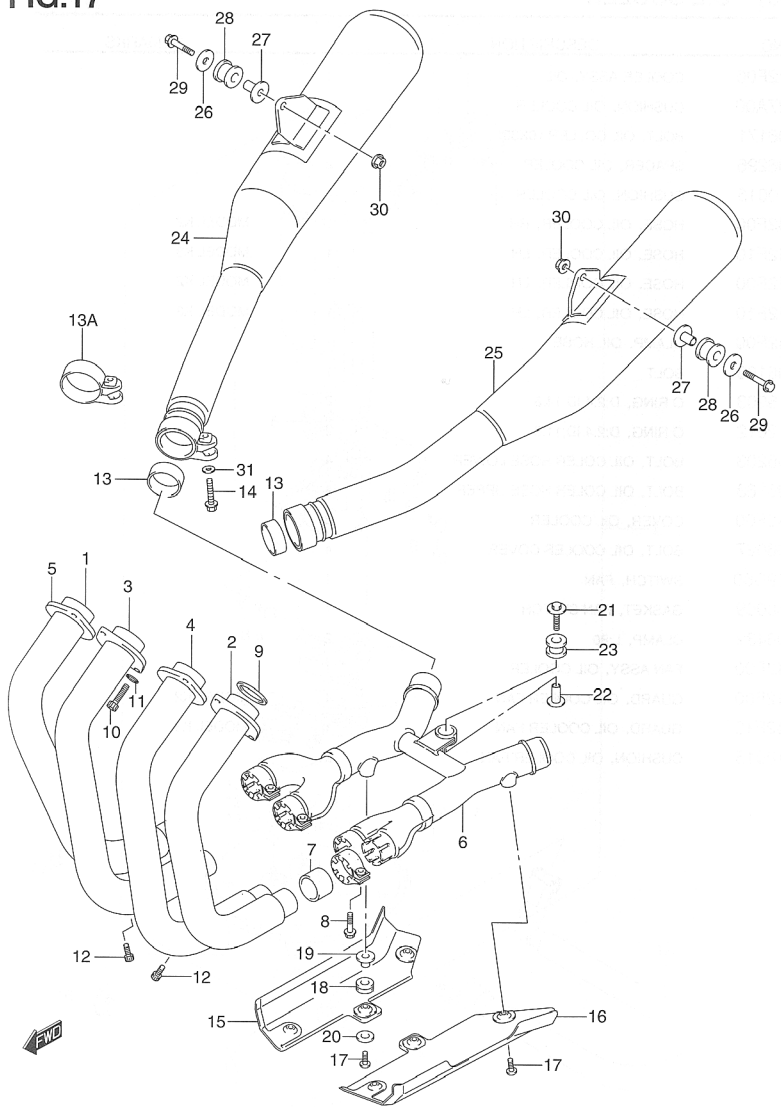

FIG.17 (D-4) MUFFLER

REF NO.	PART NO.	DESCRIPTION	Q'TY	REMARKS
24-1	14310-42F00	BODY, MUFFLER RH	1	MODEL K2
24-2	14310-42F10	BODY, MUFFLER RH	1	MODEL K3
25-1	14340-42F00	BODY, MUFFLER LH	1	MODEL K2
25-2	14340-42F10	BODY, MUFFLER LH	1	MODEL K3
26	09160-08147	WASHER	2	
27	09180-08216	SPACER (8.6X12X25.2)	2	
28	09320-12049	CUSHION	2	
29	09103-08358	BOLT, MUF SUPPORT	2	
30	08361-25088	NUT	2	
31	08322-01083	WASHER	2	

FIG.18

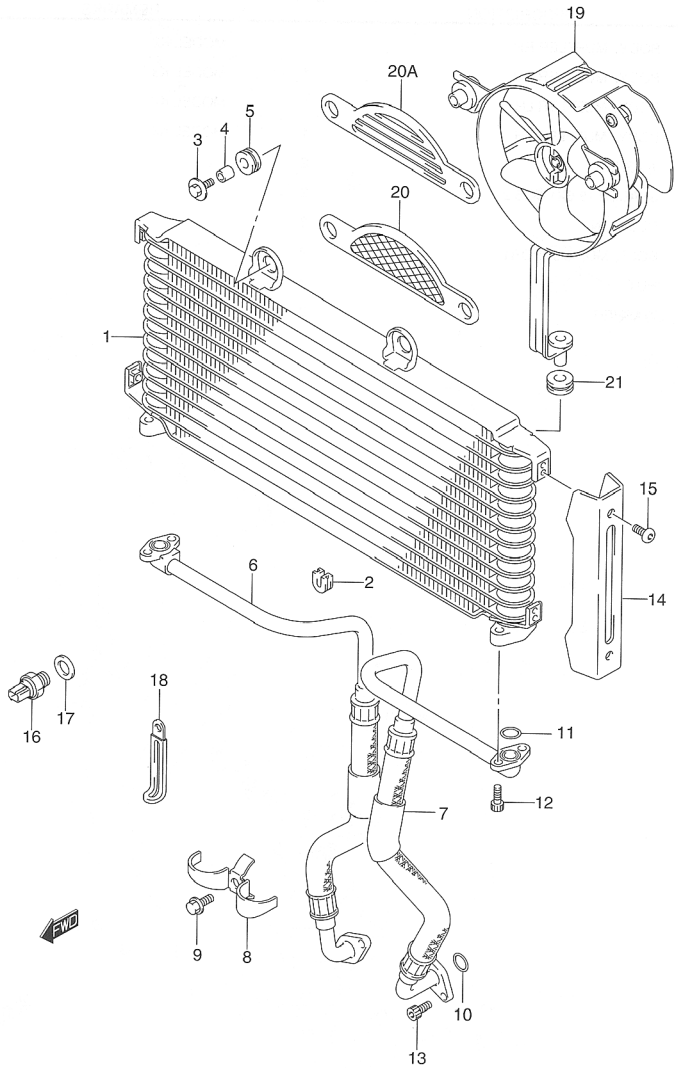

FIG.18 (D-5) OIL COOLER

REF NO.	PART NO.	DESCRIPTION	Q'TY	REMARKS
1	16600-42F00	COOLER ASSY, OIL	1	
2	16628-27A00	CUSHION, OIL COOLER	2	
3	09116-06171	BOLT, OIL COLLER (6X30)	2	
4	09180-06296	SPACER, OIL COOLER	2	
5	09320-10015	CUSHION, OIL COOLER	2	
6-1	16460-42F00	HOSE, OIL COOLER, RH	1	MODEL K2
6-2	16460-42F10	HOSE, OIL COOLER, LH	1	MODEL K3
7-1	16470-42F00	HOSE, OIL COOLER, LH	1	MODEL K2
7-2	16470-42F10	HOSE, OIL COOLER, LH	1	MODEL K3
8	16490-42F00	CLAMP, OIL HOSE	1	
9	01550-06163	BOLT	1	
10	09280-15003	O RING, D:2.4 ID:14.8	2	
11	09280-12012	O RING, D:2.4 ID:11.8	2	
12	07130-06203	BOLT, OIL COLER HOSE LOWER	4	
13	07130-06163	BOLT, OIL COLER HOSE UPPER	4	
14	16621-42F00	COVER, OIL COOLER	2	
15	09139-06027	BOLT, OIL COOLER COVER	4	
16	17680-39D00	SWITCH, FAN	1	
17	09168-18009	GASKET, FAN SWITCH	1	
18	09404-06432	CLAMP, L:80	2	
19	17800-42F00	FAN ASSY, OIL COOLER	1	
20	17810-42F00	GUARD, OIL COOLER FAN	1	MODEL K2
20A	17811-42F10	GUARD, OIL COOLER FAN	1	MODEL K3
21	09320-10015	CUSHION, OIL COOLER FAN	2	

FIG.19

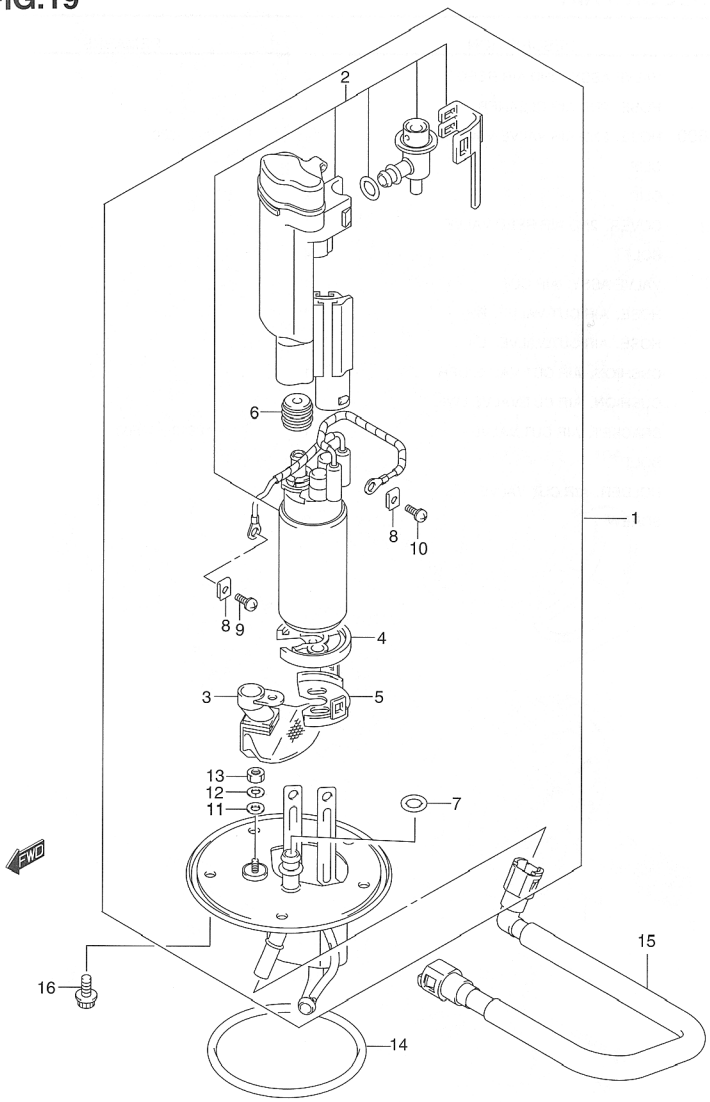

FIG.19 (D-6) FUEL PUMP

REF NO.	PART NO.	DESCRIPTION	Q'TY	REMARKS
1	15100-42F01	PUMP ASSY, FUEL	1	←15100—42F00
2	15410-42F00	·FILTER ASSY FUEL	1	
3	15420-35F01	·STRAINER, FUEL PUMP	1	
4	15111-35F00	·CUSHION, FUEL PUMP	1	
5	15112-42F00	·HOLDER, FUEL PUMP	1	
6	15114-35F00	·BUSH, FUEL PUMP	1	
7	15113-35F00	·O RING	1	
8	15115-35F00	·NUT	2	
9	15116-35F00	·SCREW	1	
10	15182-24FA0	·SCREW, FUEL GAUGE	1	
11	15171-35F00	·WASHER	1	
12	15172-35F00	·SPRING WASHER	1	
13	15173-35F00	·NUT	1	
14	15201-35F00	O RING, FUEL PUMP	1	
15	15810-42F00	HOSE, FUEL	1	
16	07120-06123	BOLT	5	

FIG.20

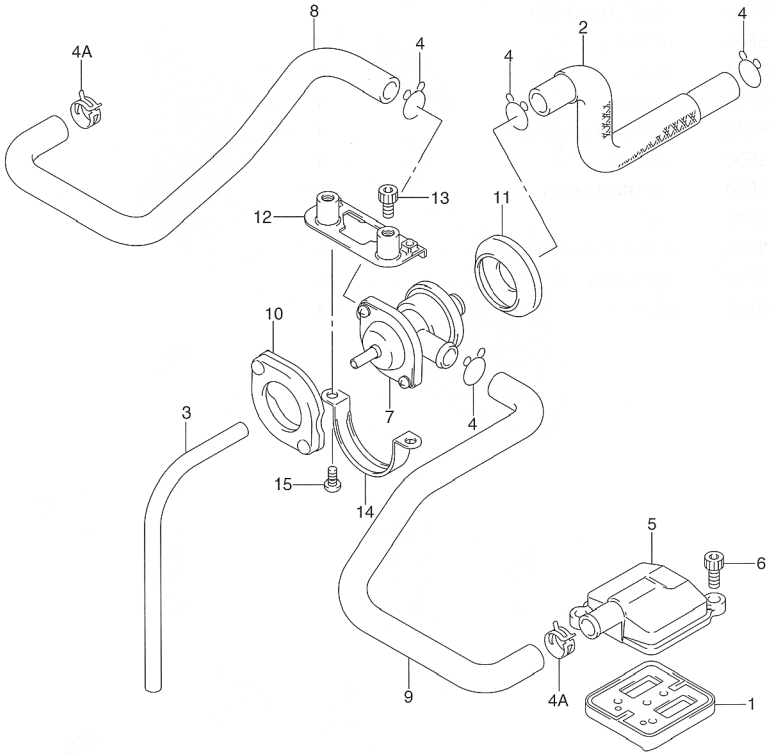

FIG.20 (D-7) SECOND AIR

REF NO.	PART NO.	DESCRIPTION	Q'TY	REMARKS
1	18450-42F00	VALVE ASSY, 2ND AIR REED	2	
2	18711-42F00	HOSE, 2ND AIR CLEANER	1	
3	09355-35755-600	HOSE, 2ND AIR VALVE VACUUM	1	L:600→330
4	09401-15101	CLIP	4	
4A	09401-16406	CLIP	2	
5	18531-42F00	COVER, 2ND AIR REED VALVE	2	
6	07130-06163	BOLT	4	
7	18510-35F00	VALVE ASSY, AIR CUT	1	
8	18461-42F00	HOSE, AIR CUT VALVE, RH	1	
9	18471-42F00	HOSE, AIR CUT VALVE, LH	1	
10	18516-35F00	CUSHION, AIR CUT VALVE UPR	1	
11	18517-35F00	CUSHION, AIR CUT VALVE LWR	1	
12	18610-42F01	BRACKET, AIR CUT VALVE	1	←18610—42F00
13	07130-06103	BOLT	2	
14	18618-42F00	HOLDER, AIR CUT VALVE	1	
15	02112-05103	SCREW	2	

FIG.21

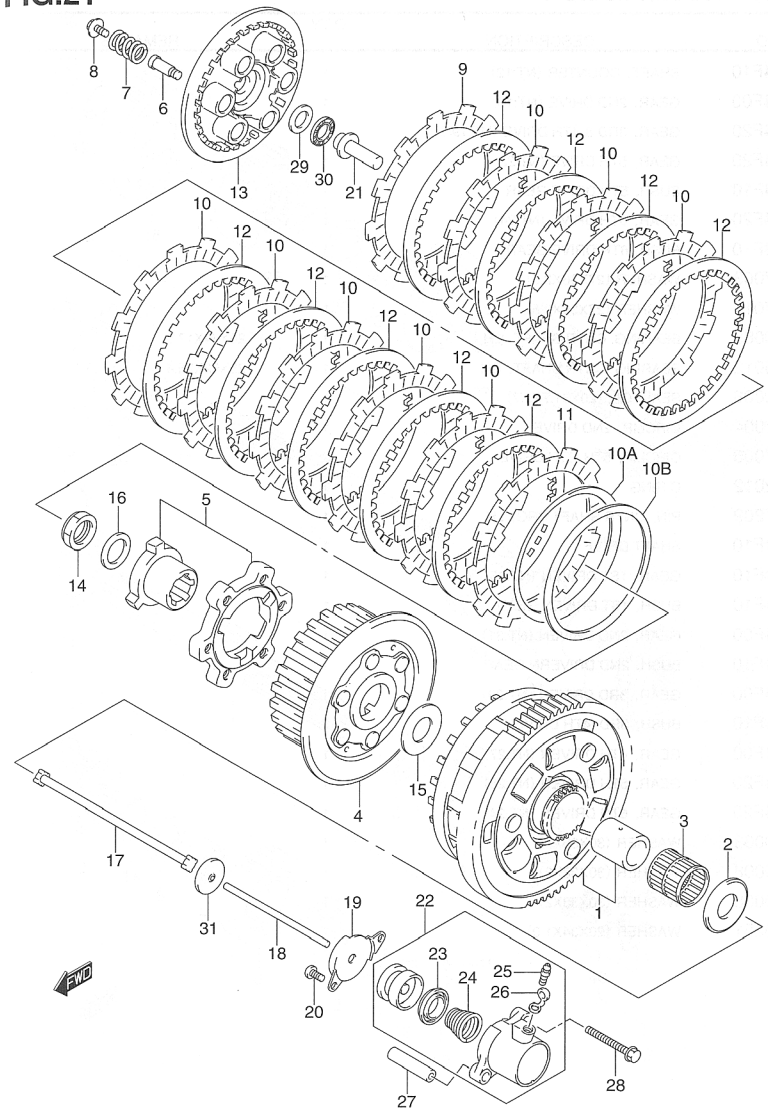

FIG.21 (D-8) CLUTCH

REF NO.	PART NO.	DESCRIPTION	Q'TY	REMARKS
1	21200-42820	GRAR ASSY, PRIMARY DRIVEN	1	NT:83
2	09160-25037	WASHER (25.1X54X2.5)	1	
3	09263-35017	BEARING (35X40X35.8)	1	
4	21410-42F00	HUB, CLUTCH SLEEVE	1	
5	21610-02F12	CAM SET, CLUTCH	1	
6	21481-42F00	BOLT, CLUTCH SPG SUPPORT	6	
7	21413-42F00	SPRING, CLUTCH	6	
8	21482-13E00	BOLT, CLUTCH SPRING	6	
9	21441-42F00	PLATE, CLUTCH DRIVE, NO.2	1	
10	21441-42F10	PLATE, CLUTCH DRIVE, NO.1	8	
10A	21472-02F10	WASHER, CLUTCH PLATE	1	
10B	21471-02F10	SEAT, WAVE WASHER	1	
11	21442-42F00	PLATE, CLUTCH DRIVE, NO.3	1	T:3.3
12	21451-02F10	PLATE, CLUTCH DRIVEN	9	T:1.6
13	21462-02F10	DISK, CLUTCH PRESSURE	1	
14	09159-24010	NUT	1	
15	09160-25056	WASHER (25X50X2.5)	1	
16	09164-24006	WASHER (24.2X35X2)	1	
17	23110-38B00	ROD, CLUTCH PUSH, RH	1	
18	23111-42F00	ROD, CLUTCH PUSH, LH	1	
19	23117-46E00	COVER, CLUTCH RELEASE CYLINDER	1	
20	02112-06103	SCREW	2	
21	23121-31E00	PIECE, CLUTCH PUSH	1	
22	23160-06B02	CYLINDER, CLUTCH PELEASE	1	
23	23163-06B00	·CUP	1	
24	23164-05A00	·SPRING	1	
25	59121-01A00	·BLEEDER	1	
26	59122-01A00	·CAP, BLEEDER	1	
27	04211-09129	PIN	2	
28	07130-06253	BOLT	2	
29	09160-15045	WASHER (15.5X28X1)	1	
30	09263-15003	BEARING (15X28X2)	1	
31	09283-06007	SEAL (6X34X5.5)	1	

FIG.22

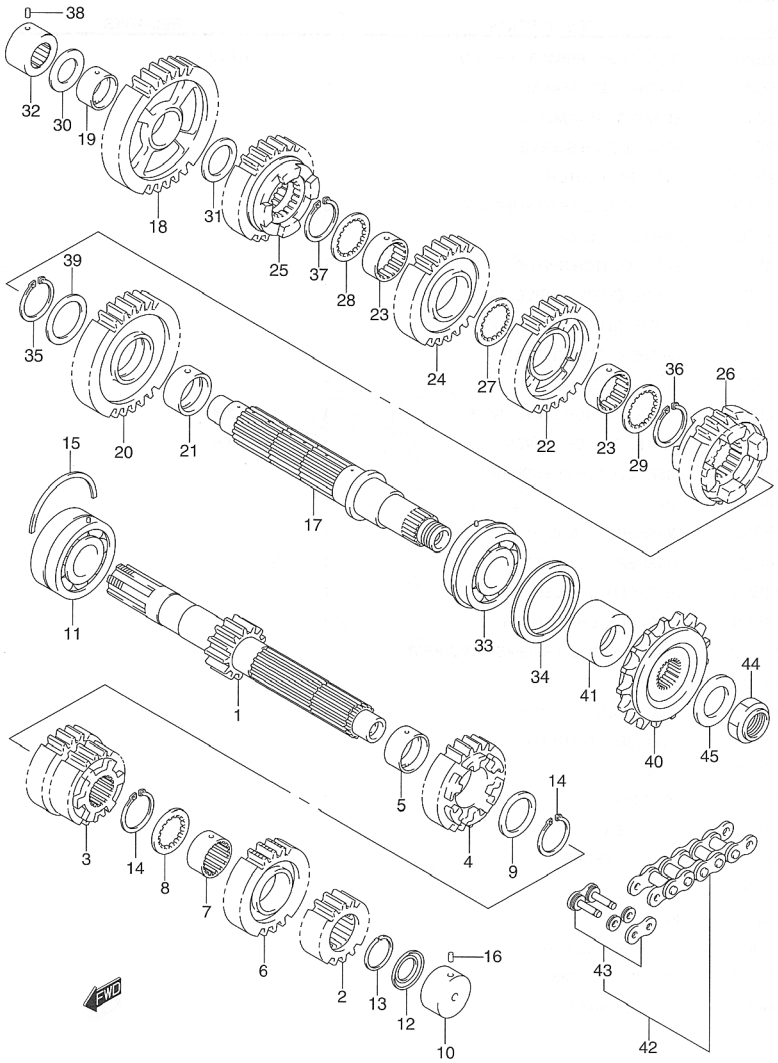

FIG.22 (D-9) TRANSMISSION

REF NO.	PART NO.	DESCRIPTION	Q'TY	REMARKS
1	24120-24F10	SHAFT, COUNTER (NT:12)	1	
2	24221-24F00	GEAR, 2ND DRIVE (NT:16)	1	
3	24231-24F20	GEAR, 3RD & 4TH DRIVE (NT:19/2	1	
4	24251-24F20	GEAR, 5TH DRIVE (NT:22)	1	
5	24252-24F10	BUSH, 5TH DRIVE GEAR	1	
6	24261-24F20	GEAR, 6TH DRIVE (NT:24)	1	
7	24262-24F10	BUSH, 6TH DRIVE GEAR	1	
8	09167-27003	WASHER (27X36X2.5)	1	
9	09181-27014	WASHER (27X36X2.5)	1	
10	09263-20085	BEARING. CNTR SHAFT, LH	1	20X34X17.5
11	09267-25012	BEARING. CNTR SHAFT, RH	1	25X62X25.4
12	09285-20006	SEAL, OIL (20X31.7X2.7)	1	
13	09380-27004	CIRCLIP, 2ND DRIVE	1	
14	09380-27006	CIRCLIP, 5TH /6TH DRIVE	2	
15	09390-62012	C RING	1	
16	04221-07209	PIN, CNTR SHAFT BRG, LH	1	
17	24131-24F10	SHAFT DRIVE	1	
18	24311-24F10	GEAR, 1ST DRIVEN (NT:35)	1	
19	24312-24F10	BUSH, 1ST DRIVEN GEAR	1	
20	24321-24F00	GEAR, 2ND DRIVEN (NT:31)	1	
21	24322-24F10	BUSH, 2ND DRIVERN GEAR	1	
22	24331-24F00	GEAR, 3RD DRIVEN (NT:29)	1	
23	24332-24F10	BUSH, 3RD /4TH DRIVEN	2	
24	24341-24F00	GEAR, 4TH DRIVEN (NT:27)	1	
25	24351-24F20	GEAR, 5TH DRIVEN (NT:25)	1	
26	24361-24F20	GEAR, 6TH DRIVEN (NT:24)	1	
27	09167-30008	WASHER (30X38X2)	1	
28	09167-30008	WASHER (30X38X2)	1	
29	09167-30008	WASHER (30X38X2)	1	
30	09181-20251	WASHER (20X34X1.0)	1	

FIG.22

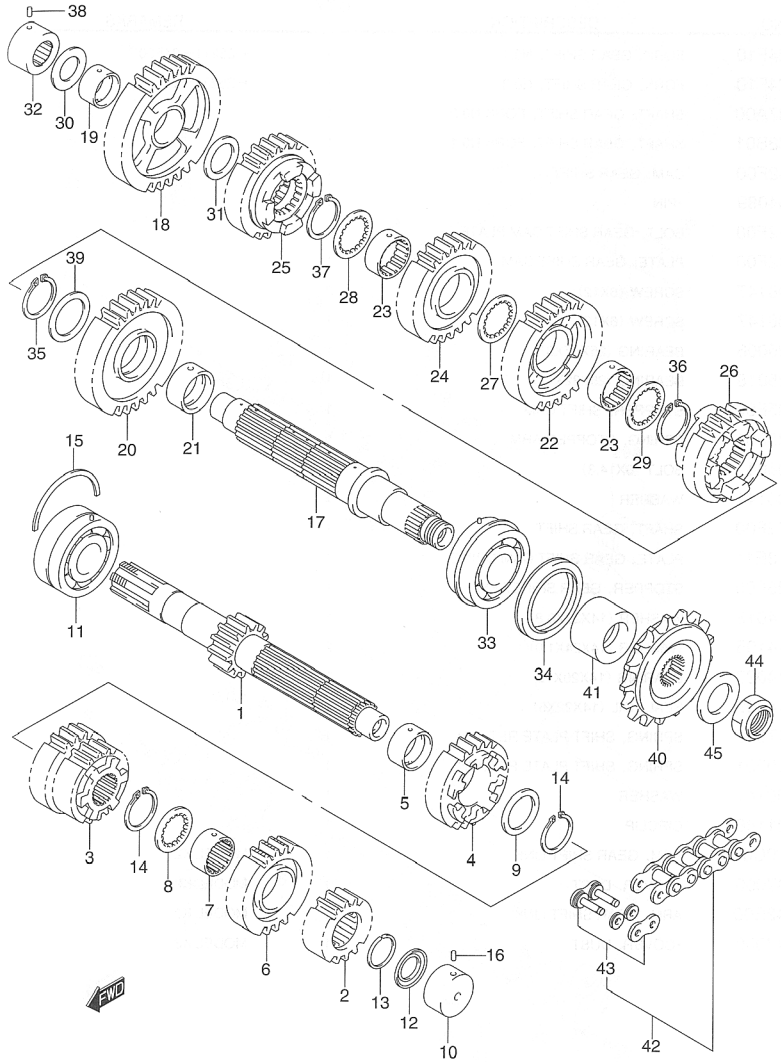

FIG.22 (D-10) TRANSMISSION

REF NO.	PART NO.	DESCRIPTION	Q'TY	REMARKS
31	09181-24005	WASHER (24X34X1.0)	1	
32	09263-20040	BEARING, DRIVE SHAFT, RH	1	20X34X20
33	09267-30011	BEARING, DRIVE SHAFT, LH	1	30X62X23.8
34	09283-42017	SEAL, OIL (24X62X7)	1	
35	09380-30009	CIRCLIP, 2ND	1	
36	09380-30009	CIRCLIP, 3RD	1	
37	09380-30009	CIRCLIP, 4TH	1	
38	04221-07209	PIN, DRIVE SHAFT BRG, RH	1	
39	08211-30405	WASHER	1	
40	27510-21A40	SPROCKET, ENGINE (NT:18)	1	
41	27531-42F00	SPACER, SPROCKET INNER	1	
42	27600-24F10-116	CHAIN ASSY (RK GB50GSVZ3, 116LE	1	
43	27620-24F00	·JOINT SET	1	
44	09159-20004	NUT, ENGINE SPROCKET	1	
45	09160-25009	WASHER (25X41X3)	1	

2

FIG.23

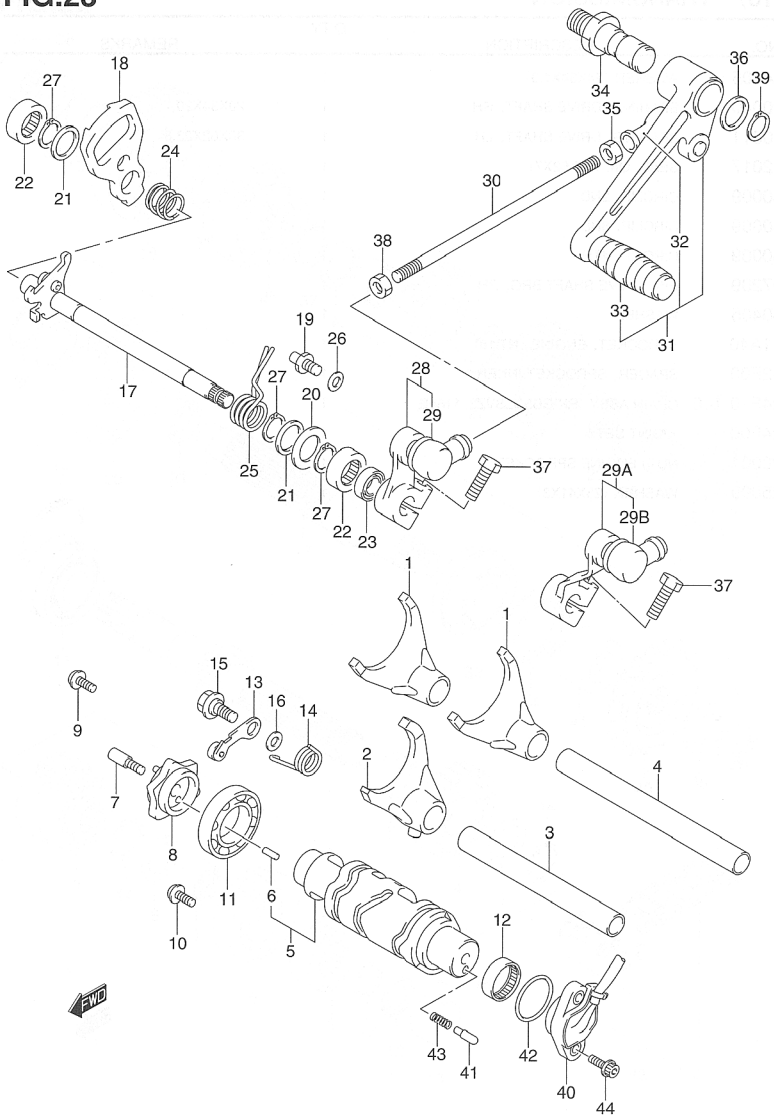

FIG.23 (D-11) GEAR SHIFTING

REF NO.	PART NO.	DESCRIPTION	Q'TY	REMARKS
1	25211-24F10	FORK, GEAR SHIFT, N0.1	2	←25211—24F00
2	25231-24F10	FORK, GEAR SHIFT, N0.3	1	←25231—24F00
3	25411-27A00	SHAFT, GEAR SHIFT, FORK N0.2	1	
4	25411-38B01	SHAFT, GEAR SHIFT, FORK N0.1	1	
5	25310-42F00	CAM, GEAR SHIFT	1	
6	04221-04089	·PIN	1	
7	25312-42F00	BOLT, GEAR SHIFT CAM PLATE	1	
8	25381-42F00	PLATE, GEAR SHIFT CAM	1	
9	09136-06147	SCREW (6X12)	2	
10	09136-06147	SCREW (6X12)	1	
11	09262-25006	BEARING (25X47X8)	1	
12	09263-25018	BEARING (25X32X12)	1	
13	25350-35F00	STOPPER, SHIFT CAM	1	
14	25355-35F01	SPRING, STOPPER ARM	1	
15	09111-06041	BOLT (6X14.3)	1	
16	08211-06141	WASHER	1	
17	25510-42F00	SHAFT, GEAR SHIFT	1	
18	25512-13E11	PLATE, GEAR SHIFT CAM DRIVE	1	
19	25671-35F00	STOPPER, GEAR SHIFT ARM	1	
20	09160-14016	WASHER (14X29X0.8)	1	
21	09181-14195	WASHER (14X24X1.0)	2	
22	09263-14027	BEARING (14X20X12)	2	
23	09283-14006	SEAL, OIL (14X22X6)	1	
24	09440-17009	SPRING, SHIFT PLATE RETURN	1	
25	09444-20001	SPRING, SHIFT PLATE RETURN	1	
26	08211-06141	WASHER	1	
27	08331-31146	CIRCLIP	3	
28	25520-19C02	ARM, GEAR SHIFT LINK	1	MODEL K2
29	25526-47000	·COVER, DUST	1	MODEL K2
29A	25520-42E00	ARM, GEAR SHIFT LINK	1	MODEL K3
29B	25526-47000	·COVER, DUST	1	MODEL K3

FIG.23

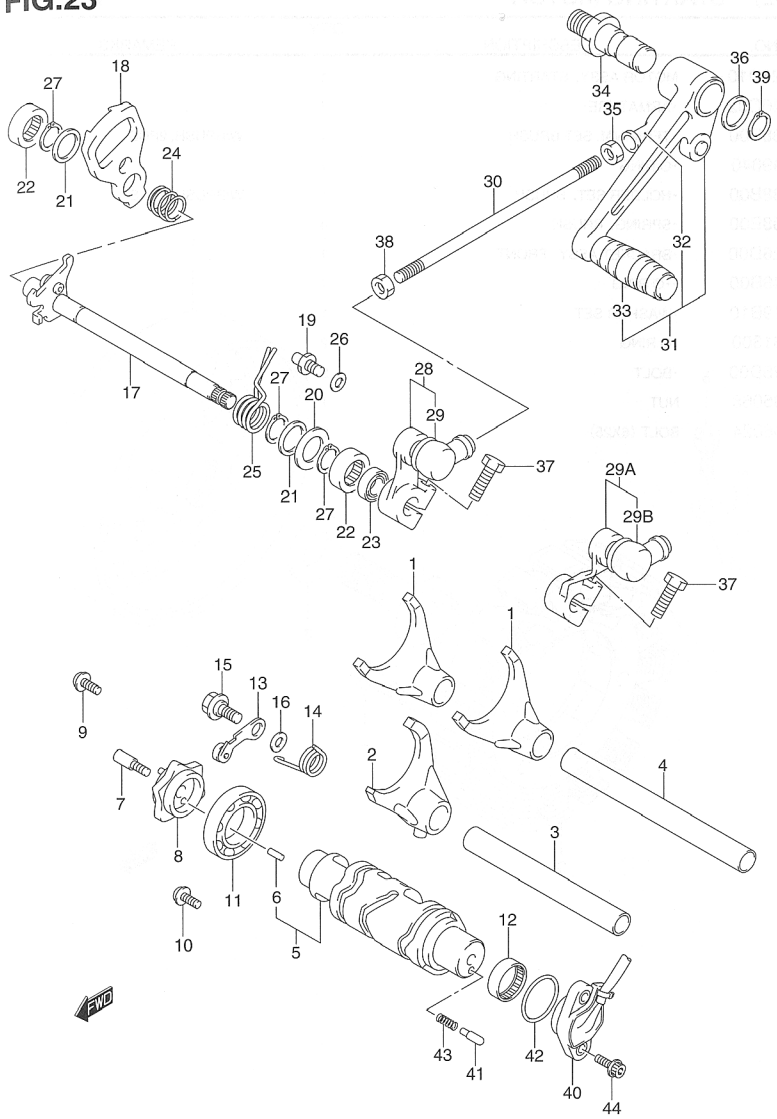

FIG.23 (D-12) GEAR SHIFTING

REF NO.	PART NO.	DESCRIPTION	Q'TY	REMARKS
30	25525-07A10	ROD, GEAR SHIFT LINK	1	
31	25600-42F00	LEVER ASSY, GEAR SHIFT	1	
32	25526-47000	·COVER, DUST	1	
33	25652-16500	·RUBBER	1	
34	25617-03F00	SHAFT, GEAR SHIFT	1	
35	09140-06020	NUT	1	
36	09160-12011	WASHER (12.5X20X1)	1	
37	01500-06253	BOLT	1	
38	09140-06011	NUT	1	
39	08331-31126	CIRCLIP	1	
40	37730-35F10	BASE ASSY, GEAR SHIFT TERM	1	
41	09209-05011	CONTACT, GEAR SHIFT SW	2	
42	09280-26005	O RING (D:2.4, ID:26.2)	1	
43	09440-04010	SPRING	2	
44	07120-05163	BOLT	2	

FIG.24

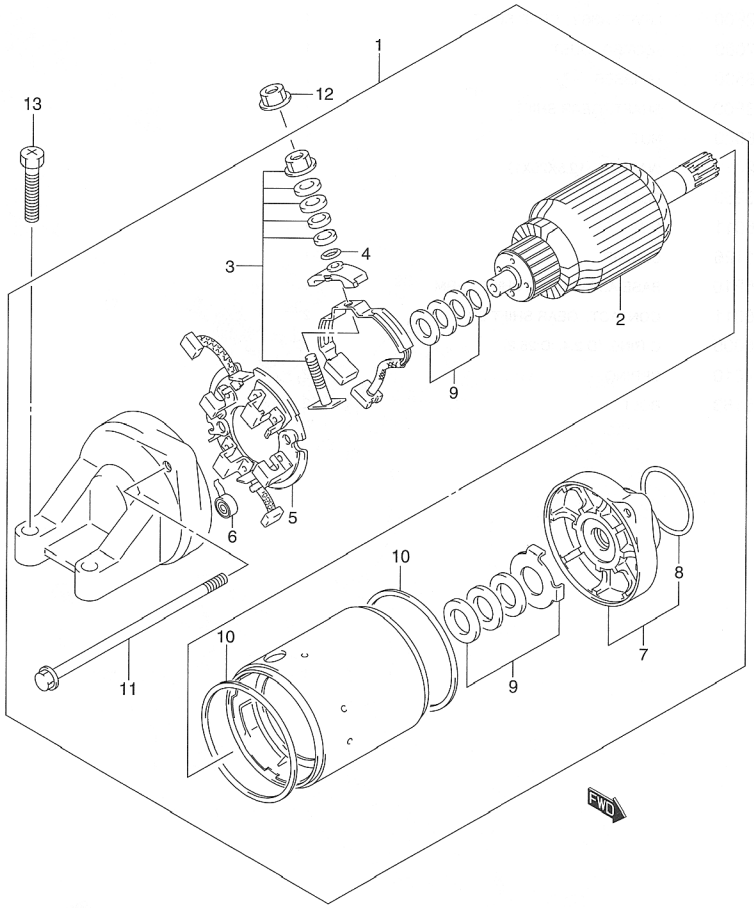

FIG.24 (E-2) STARTING MOTOR

REF NO.	PART NO.	DESCRIPTION	Q'TY	REMARKS
1	31100-26D10	MOTOR ASSY, STARTING	1	
2	31310-40C02	·ARMATURE	1	
3	31130-38B00	·TERMINAL SET BRUSH	1	W/BRUSH, 2PCS
4	31143-49040	·O RING	1	
5	31132-38B00	·HOLDER SET, BRUSH	1	W/BRUSH, 2PCS
6	31135-38B00	·SPRING, BRUSH	4	
7	31150-26D00	·BRACKET ASSY, FRONT	1	
8	31156-48B00	··O RING	1	
9	31170-19B10	·WASHER SET	1	
10	31264-31300	·O RING	2	
11	31280-26D00	·BOLT	2	
12	08361-35068	NUT	1	
13	09128-06024	BOLT (6X25)	2	

FIG.25

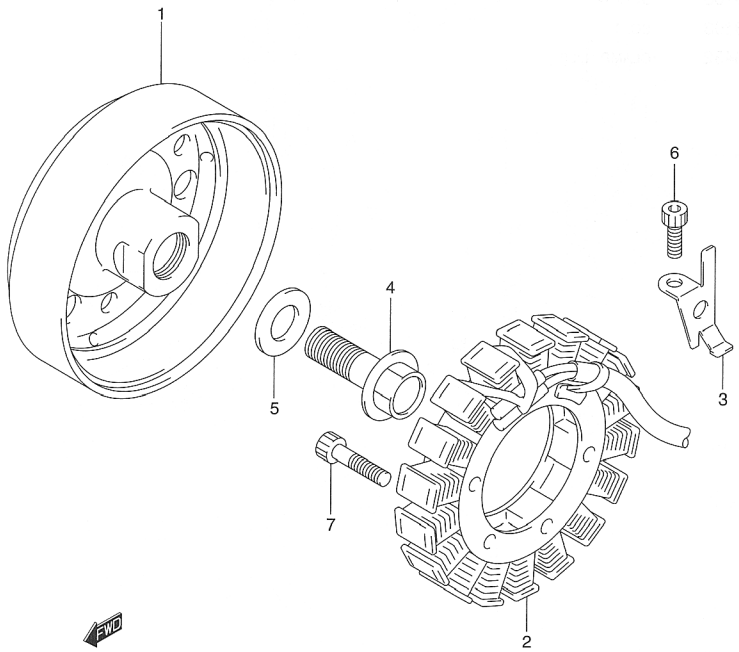

FIG.25 (E-3) GENERATOR

REF NO.	PART NO.	DESCRIPTION	Q'TY	REMARKS
1	31402-42F00	ROTOR ASSY, GENERATOR	1	
2	31401-42F00	STATOR ASSY, GENERATOR	1	
3	32371-33E00	CLAMP	1	
4	09103-14022	BOLT (12X30)	1	
5	09160-14009	WASHER (12X27X2)	1	
6	07130-06123	BOLT	1	
7	07130-06253	BOLT	4	

3

FIG.26

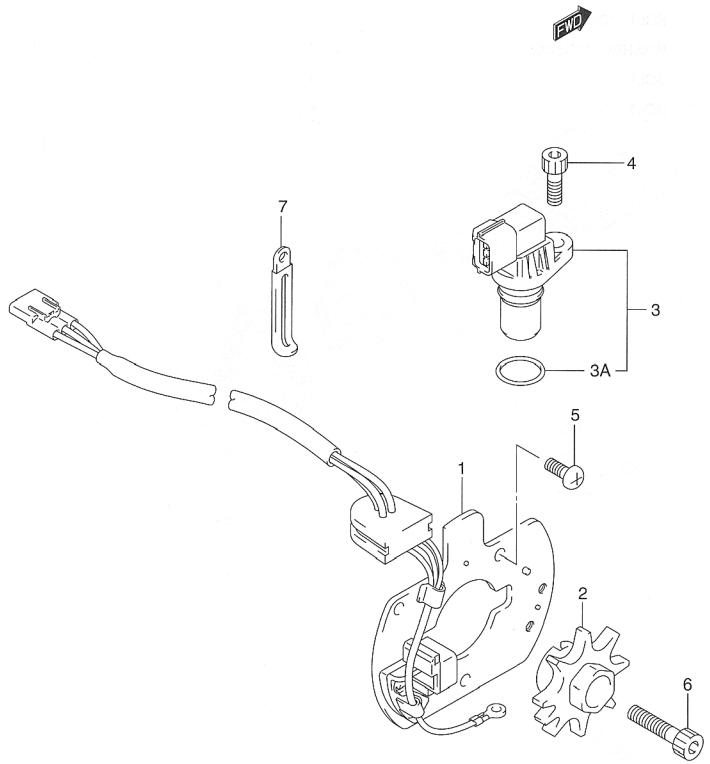

FIG.26 (E-4) SIGNAL GENETATOR

REF NO.	PART NO.	DESCRIPTION	Q'TY	REMARKS
1	33110-31F00	STATOR, SIGNAL GENETATOR	1	
2	33120-42F00	ROTOR, SIGNAL GENETATOR	1	
3	33220-84G00	SENSOR ASSY, CAM POSITION	1	←33220—99E00
3A	33221-42F00	·O RING	1	
4	07130-06163	BOLT	1	
5	02112-05103	SCREW	3	
6	07130-08303	BOLT	1	
7	09404-06432	CLAMP (L:80)	1	

FIG.27

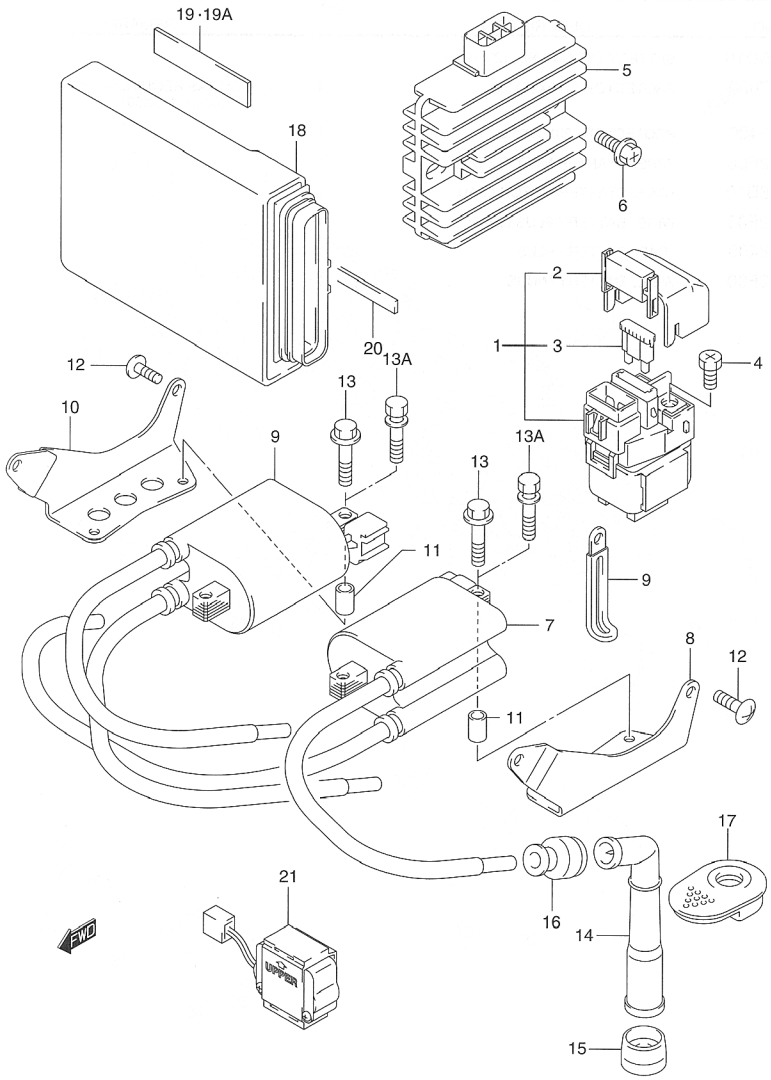

FIG.27 (E-5) ELECTRICAL

REF NO.	PART NO.	DESCRIPTION	Q'TY	REMARKS
1	31800-26E00	RELAY ASSY, STARTING MOTOR	1	
2	31861-26E00	·COVER	1	
3	09481-30101	·FUSE (30A)	2	
4	09128-06013	BOLT (6X8)	2	
5	32800-42F00	RECTIFIER ASSY	1	
6	02162-06203	BOLT	2	
7	33410-42F00	COIL ASSY, IGNITION	1	L:290/400
8	33414-42F00	BRACKET, IGN COIL, LH	1	
9	33420-42F00	COIL ASSY, IGNITION	1	L:300/300
10	33424-42F00	BRACKET, IGN COIL, RH	1	
11	09180-06195	SPACER (6.4X10X18)	4	
12	02142-06163	SCREW	4	
13	01500-06403	BOLT	4	MODEL K2
13A	09116-06187	BOLT	4	MODEL K3
14	33510-48B10	CAP, SPARK PLUG	4	
15	33541-23E01	SEAL, SPARK PLUG	4	
16	33542-38B00	SEAL, HIGH TENSION CORD	4	
17	33543-48B00	COVER, SPARK PLUG CAP	4	
18-1	32920-42F11	CONTROL UNIT, FI	1	GSX1400K2/K3 E2, E19, E24 ←32920—42F10
18-2	32920-42F21	CONTROL UNIT, FI	1	GSX1400UDK2/K3 E19 ←32920—42F20
19	33652-07D00	CUSHION (80X80X2)	2	MODEL K2 CUT AS REQUIRED PROFILE (80X20)
19A	33651-37000	CUSHION (170X95X3.0)	2	MODEL K3 CUT AS REQUIRED PROFILE (20X90)
20	33652-42F00	CUHSION (130X10X2)	1	
21	33960-02F00	SENSOR ASSY, FUEL CUT	1	

FIG.28

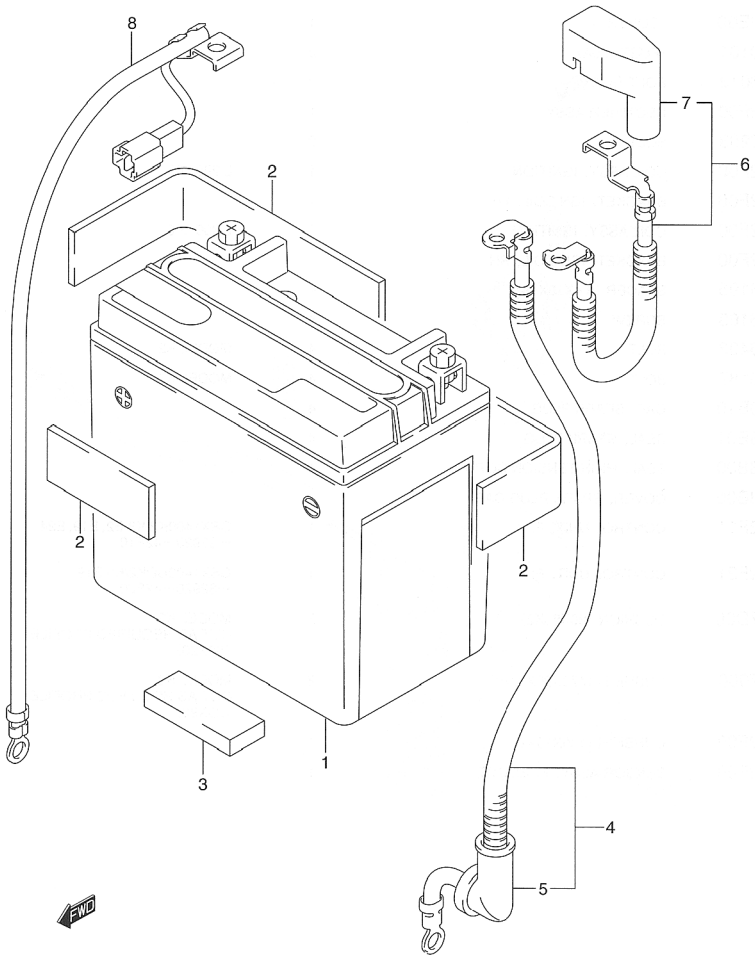

FIG.28 (E-6) BATTERY

REF NO.	PART NO.	DESCRIPTION	Q'TY	REMARKS
1	33610-26D10	BATTERY (YTX14—BS, 12V 12AH)	1	
2	33651-37000	PROTECTOR (170X95X3.0)	4	CUT AS REQUIRED PROFILE (20X90) (115X50)
3	33652-35400	PROTECTOR (20X50X8.0)	1	
4	33810-42F00	WIRE, STARTER MOTOR LEAD	1	
5	31861-48B10	•CAP, STARTER MOTOR LEAD	1	
6	33820-42F00	WIRE, BATTERY PLUS LEAD	1	
7	33624-38400	•CAP, BATTERY PLUS	1	
8	33860-42F00	WIRE, BATTERY MINUS	1	

FIG.29

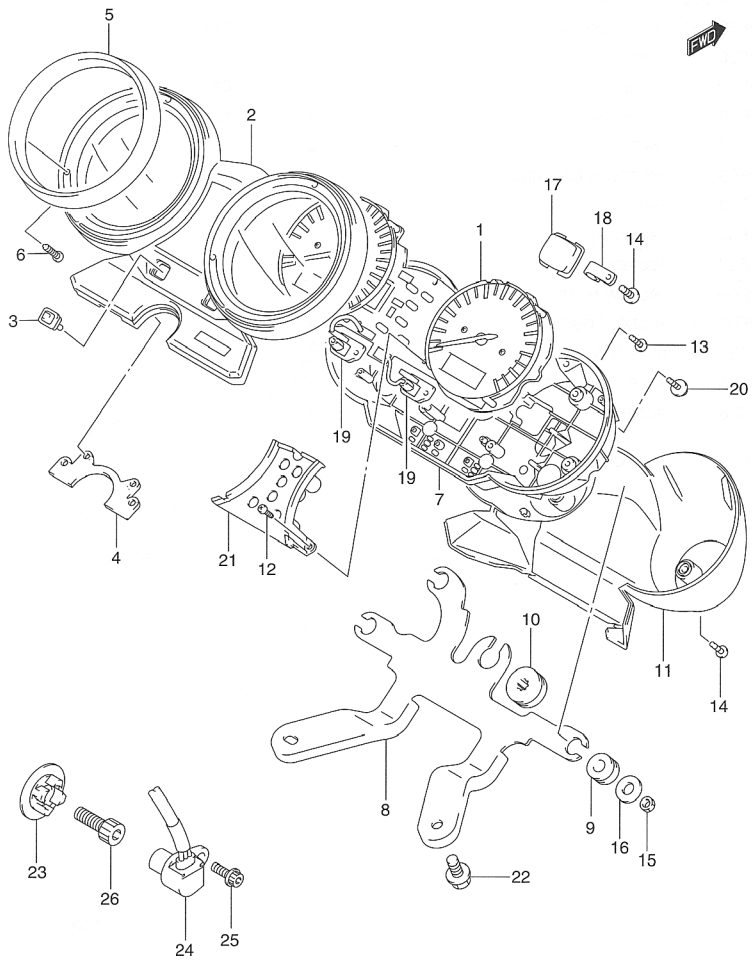

FIG.29 (F-2) SPEEDOMETER

REF NO.	PART NO.	DESCRIPTION	Q'TY	REMARKS
1-1	34120-42F10	SPEEDOMETER (MILE/KILO)	1	E2
1-2	34120-42F00	SPEEDOMETER (KILO)	1	E19, E24
2	34150-42F00	CASE, UPPER	1	
3	34124-31F10	RUBBER, SWITCH	2	
4	34188-42F00	DAMPER	1	
5	34193-42F00	COVER, METER	2	
6	34183-31F10	SCREW (2.3X8)	6	
7	34111-31F10	CASE ASSY, LOWER	1	
8	34950-42F00	BRACKET	1	
9	34189-32B00	CUSHION	3	
10	34955-13E00	CUSHION	1	
11	34152-42F00	COVER	1	
12	34149-31F10	SCREW, PAN HEAD (3X14)	2	
13	09132-03008	SCREW (3X16)	1	
14	03512-04149	SCREW	3	
15	08310-00057	NUT	2	
16	09160-05013	WASHER (5.2X16X1)	2	
17	34198-19F20	GROMMET	1	
18	34179-21F00	CLAMP	1	
19	34177-42F00	PLATE, PRINTED CIRCUIT	2	
20	34383-31F10	SCREW, PAN HEAD	4	
21	34165-42F00	CASE, INNER	1	
22	07120-06163	BOLT	2	
23	34981-35F00	ROTOR, SPEED	1	
24	34990-35F00	SENSOR, SPEED	1	
25	07120-05123	BOLT	1	
26	07130-08253	BOLT	1	

FIG.30

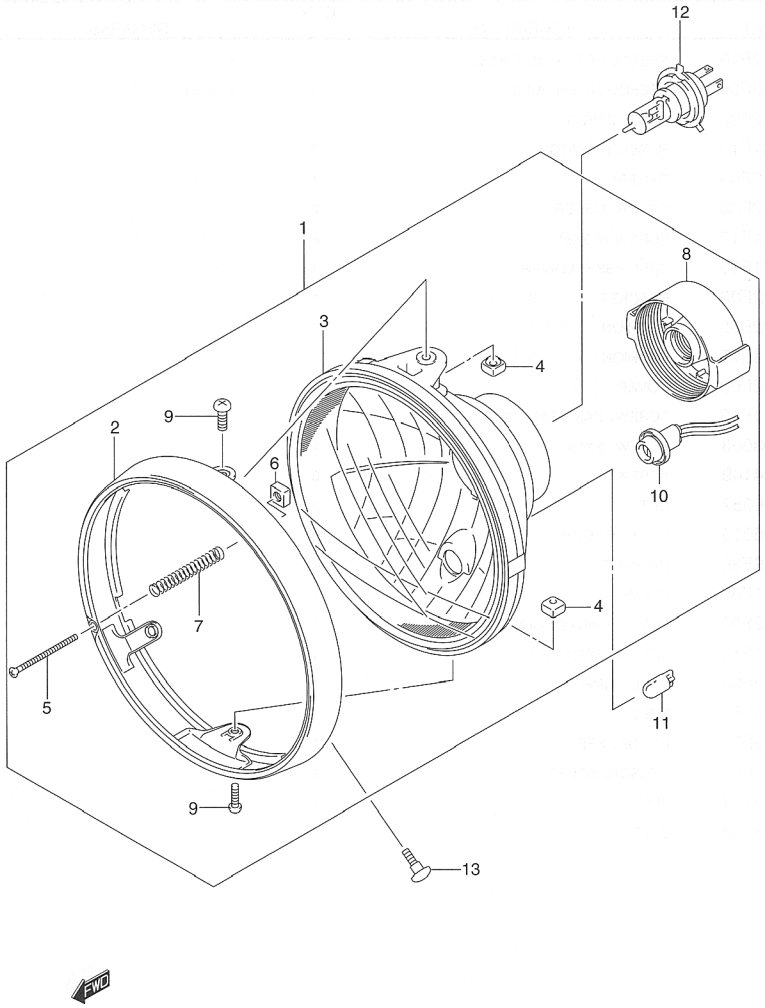

FIG.30 (F-3) HEADLAMP ASSY (E2, E19)

REF NO.	PART NO.	DESCRIPTION	Q'TY	REMARKS
1-1	35100-19F60-999	HEADLAMP ASSY	1	E2
1-2	35100-19F50-999	HEADLAMP ASSY	1	E19
2	35111-19F00	·RIM	1	
3-1	35121-19F60	·LAMP UNIT	1	E2
3-2	35121-19F50	·LAMP UNIT	1	E19
4	35135-45900	·NUT	2	
5	35151-19F00	·SCREW, ADJUSTING	1	
6	35152-45600	·NUT	1	
7	35154-13F00	·SPRING	1	
8	35174-19F00	·COVER, SOCKET	1	
9	35181-19F00	·SCREW (5X16)	2	
10	36118-19F00	·CORD, POSITION	1	
11	09471-12081	BULB (12V, 5W)	1	
12	09471-12185	BULB (12V, 60/55W)	1	
13	09139-05038	SCREW	2	

REFTER TO FIG.31 (F- 4) FOR E24

FIG.31

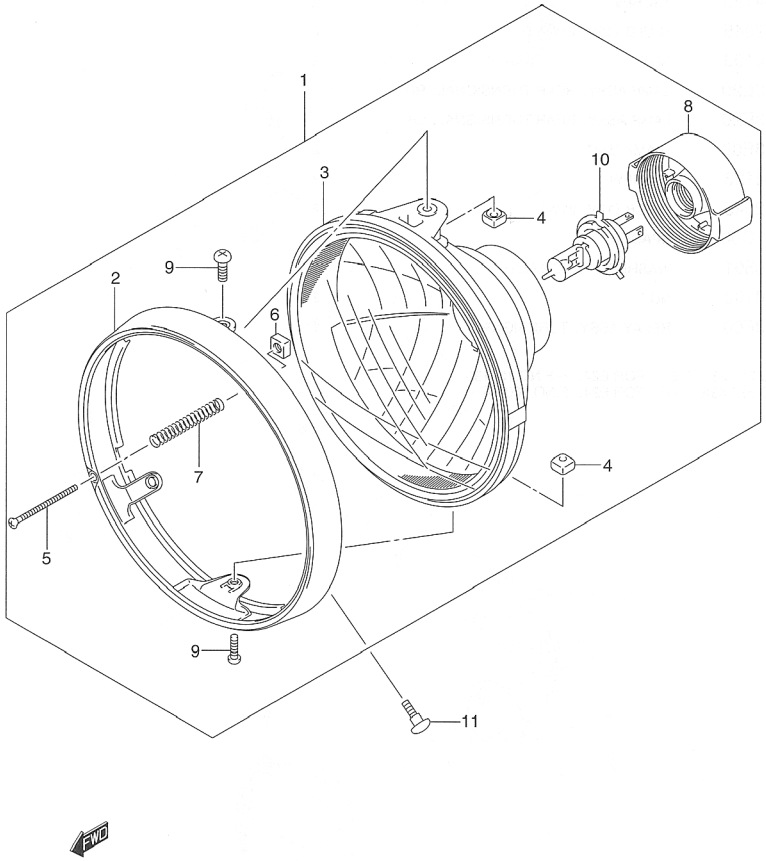

FIG.31 (F-4) HEADLAMP ASSY (E24)

REF NO.	PART NO.	DESCRIPTION	Q'TY	REMARKS
1	35100-19F00-999	HEAD LAMP ASSY	1	
2	35111-19F00	·RIM	1	
3	35121-19F00	·LAMP UNIT	1	
4	35135-45900	·NUT	2	
5	35151-19F00	·SCREW, ADJUSTING	1	
6	35152-45600	·NUT	1	
7	35154-13F00	·SPRING	1	
8	35174-19F00	·COVER, SOCKET	1	
9	35181-19F00	·SCREW (5X16)	2	
10	09471-12185	BULB (12V, 60/55W)	1	
11	09139-05038	SCREW	2	

3

FIG.32

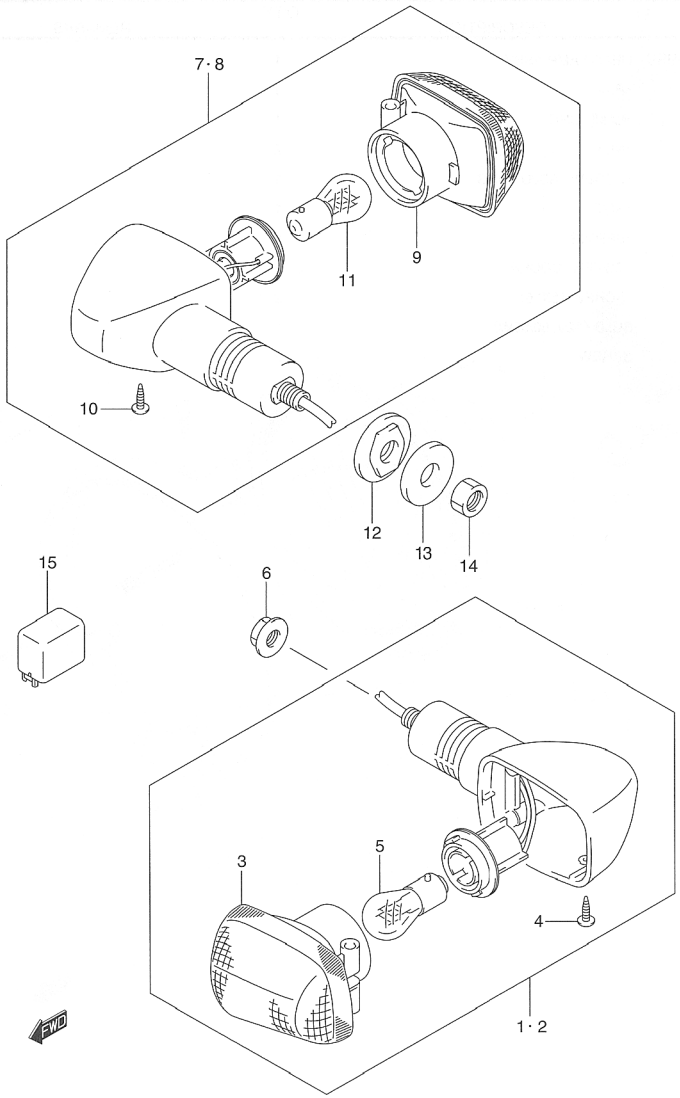

FIG.32 (F-5) TURNSIGNAL LAMP (E2, E19)

REF NO.	PART NO.	DESCRIPTION	Q'TY	REMARKS
1	35604-33E30	LAMP ASSY, FRONT TURNSIGNAL, R	1	
2	35603-33E30	LAMP ASSY, FRONT TURNSIGNAL, L	1	
3	35610-33E00	·LAMP UNIT	2	
4	03242-04123	·SCREW	2	
5	09471-12045	·BULB (12V, 21W)	2	
6	08316-10103	NUT	2	
7	35603-33E20	LAMP ASSY, REAR TURNSIGNAL, RH	1	
8	35604-33E20	LAMP ASSY, REAR TURNSIGNAL, LH	1	
9	35610-33E00	·LAMP UNIT	2	
10	03242-04123	·SCREW	2	
11	09471-12045	·BULB (12V, 21W)	2	
12	35695-17C00	SPACER	2	
13	09160-10501	WASHER (10.5X30X2.3)	2	
14	08310-00103	NUT	2	
15	38610-03F00	RELAY ASSY, TURNSIGNAL	1	

REFER TO FIG.33 (F-6) FOR E24, ~F.NO.100196
REFER TO FIG.33A (F-7) FOR E24, F.NO.100197~

FIG.33

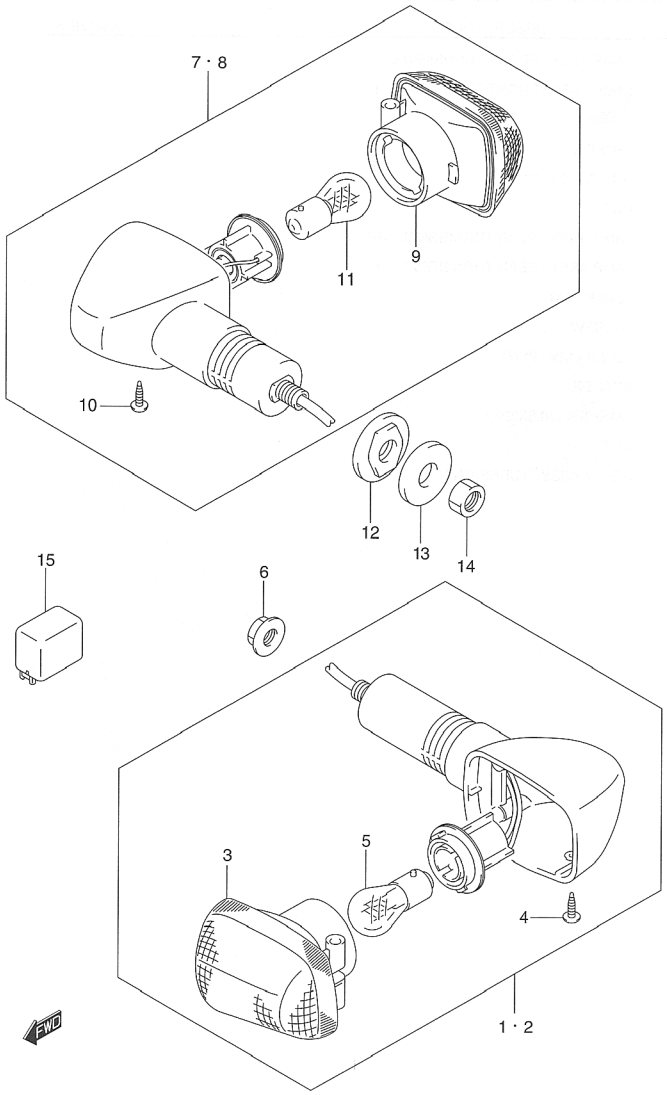

FIG.33 (F-6) TURNSIGNAL LAMP (E24, ~F.NO.100196)

REF NO.	PART NO.	DESCRIPTION	Q'TY	REMARKS
1	35601-03FC0	LAMP ASSY, FRONT TURNSIGNAL, R	1	
2	35602-03FC0	LAMP ASSY, FRONT TURNSIGNAL, L	1	
3	35610-33E00	・LAMP UNIT	2	
4	03242-04123	・SCREW	2	
5	09471-12045	・BULB (12V, 21W)	2	
6	08316-10103	NUT	2	
7	35603-33E20	LAMP ASSY, REAR TURNSIGNAL, RH	1	
8	35604-33E20	LAMP ASSY, REAR TURNSIGNAL, LH	1	
9	35610-33E00	・LAMP UNIT	2	
10	03242-04123	・SCREW	2	
11	09471-12045	・BULB (12V, 21W)	2	
12	35695-17C00	SPACER	2	
13	09160-10501	WASHER (10.5X30X2.3)	2	
14	08310-00103	NUT	2	
15	38610-03F00	RELAY ASSY, TURNSIGNAL	1	

REFER TO FIG.33A (F-7) FOR E24, F.NO.100197~

3

FIG.33A

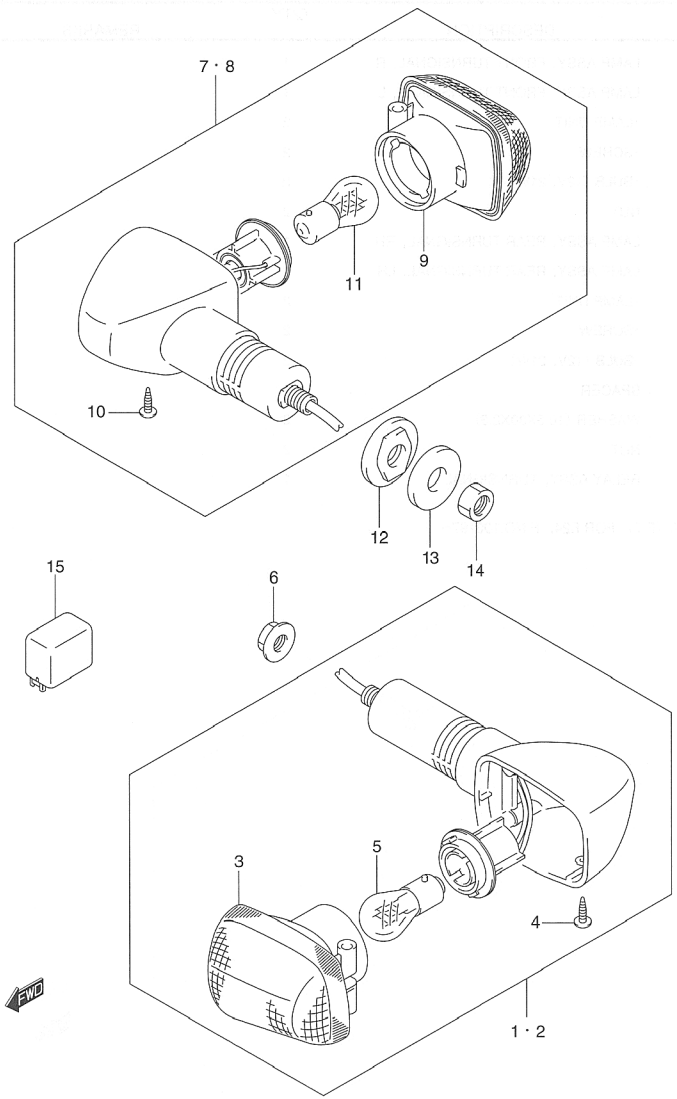

FIG.33A (F-7) TURNSIGNAL LAMP (E24, F.NO.100197～)

REF NO.	PART NO.	DESCRIPTION	Q'TY	REMARKS
1	35601-20F30	LAMP ASSY, FRONT TURNSIGNAL, R	1	
2	35602-20F30	LAMP ASSY, FRONT TURNSIGNAL, L	1	
3	35610-33E00	・LAMP UNIT	2	
4	03242-04123	・SCREW	2	
5	09471-12045	・BULB (12V, 21W)	2	
6	08316-10103	NUT	2	
7	35603-33E20	LAMP ASSY, REAR TURNSIGNAL, RH	1	
8	35604-33E20	LAMP ASSY, REAR TURNSIGNAL, LH	1	
9	35610-33E00	・LAMP UNIT	2	
10	03242-04123	・SCREW	2	
11	09471-12045	・BULB (12V, 21W)	2	
12	35695-17C00	SPACER	2	
13	09160-10501	WASHER (10.5X30X2.3)	2	
14	08310-00103	NUT	2	
15	38610-03F00	RELAY ASSY, TURNSIGNAL	1	

FIG.34

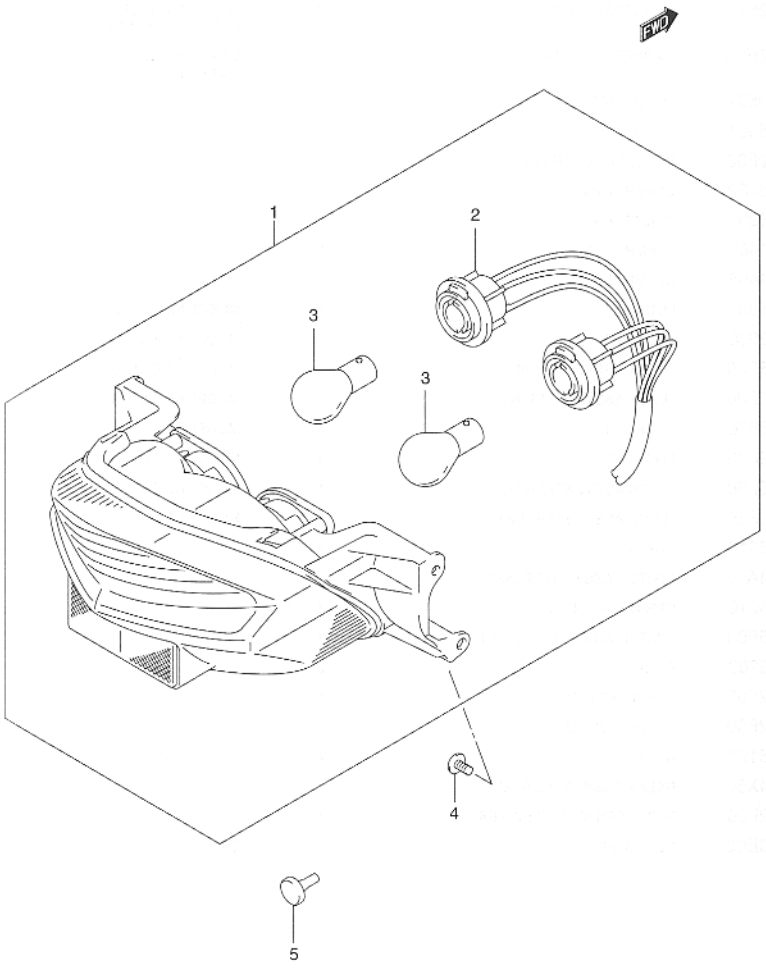

FIG.34 (F-8) REAR COMBINATION LAMP

REF NO.	PART NO.	DESCRIPTION	Q'TY	REMARKS
1	35710-42F00	LAMP ASSY, READ COMB	1	
2	35718-35F00	·SOCKET & CORD	1	
3	09471-12083	·BULB (12V, 21/5W)	2	
4	02142-05103	SCREW	4	
5	09321-06026	CUSHION, LICENSE PLATE	1	MODEL K2

3

FIG.35

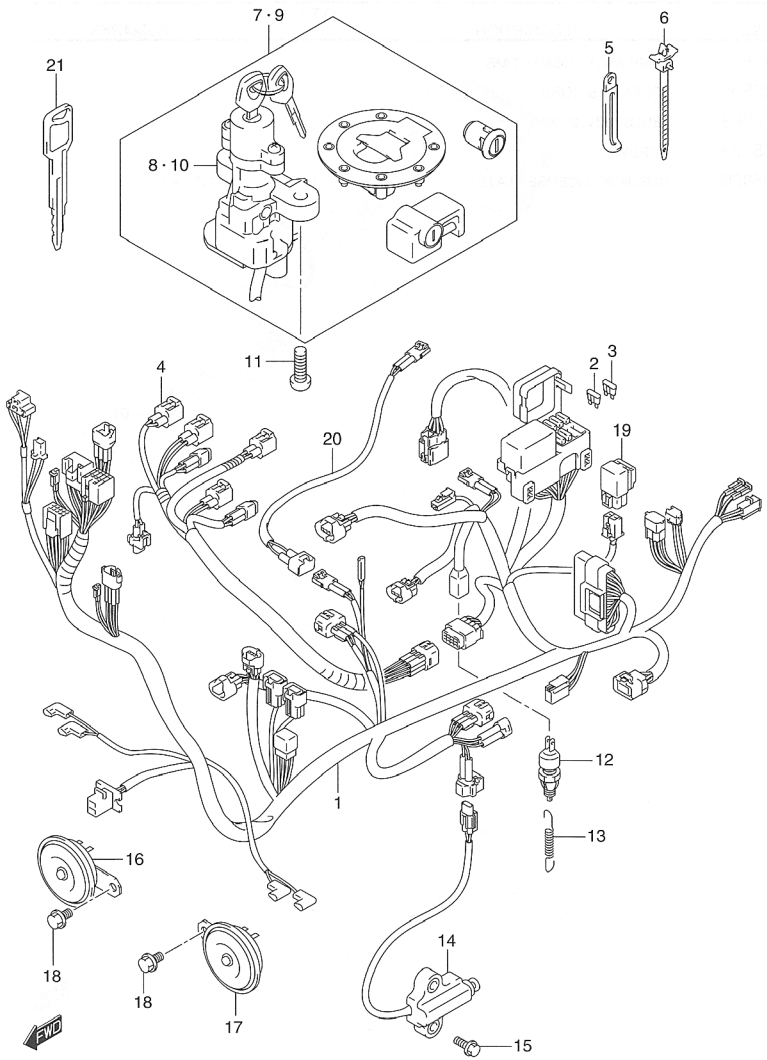

FIG.35 (F-9) WIRING HARNESS

REF NO.	PART NO.	DESCRIPTION	Q'TY	REMARKS
1-1	36610-42F10	HARNESS, WIRING	1	GSX1400K2/1400UKK2
1-2	36610-42F70	HARNESS, WIRING	1	GSX1400K3 E2, E19 GSX1400UDK3 E19
1-3	36610-42F60	HARNESS, WIRING	1	GSX1400K3 E24 GSX1400LK3 E19
2	09481-10501	·FUSE (10A)	4	
3	09481-15501	·FUSE (15A)	2	
4	36859-42F00	WIRE, INJECTOR LEAD	1	
5-1	09404-06432	CLAMP (L:80)	1	
5-2	09404-08207	CLAMP (L:97)	2	
6-1	09407-11402	CLAMP (L:90)	2	
6-2	09407-14408	CLAMP (L:120)	1	
7-1	37000-35880	LOCK SET	1	MODEL K2 E2, E19
7-2	37000-42830	LOCK SET	1	MODEL K3 E2, E19
8-1	37100-35F20	·LOCK ASSY, STEERING	1	MODEL K2 E2, E19
8-2	37100-42F00	·LOCK ASSY, STEERING	1	MODEL K3 E2, E19
9-1	37000-35870	LOCK SET	1	MODEL K2 E24
9-2	37000-42820	LOCK SET	1	MODEL K3 E24
10-1	37100-35F30	·LOCK ASSY, STEERING	1	MODEL K2 E24
10-2	37100-42F10	·LOCK ASSY, STEERING	1	MODEL K3 E24
11	09139-08016	SCREW	2	
12	37740-24A00	SWITCH ASSY, STOPLAMP	1	
13	09443-06016	SPRING, STOPLAMP	1	
14	37840-35F00	SWITCH ASSY, SIDE STAND	1	
15	01550-06203	BOLT	2	
16	38501-42F00	HORN ASSY, RH	1	
17	38502-42F00	HORN ASSY, LH	1	
18	01550-08123	BOLT	2	
19	38740-24X50	RELAY ASSY, FUEL PUMP	1	
20	36852-42F00	WIRE, FAN MOTOR SW LEAD	1	
21	37146-33E00	KEY, BLANK	1	OPT

FIG.36

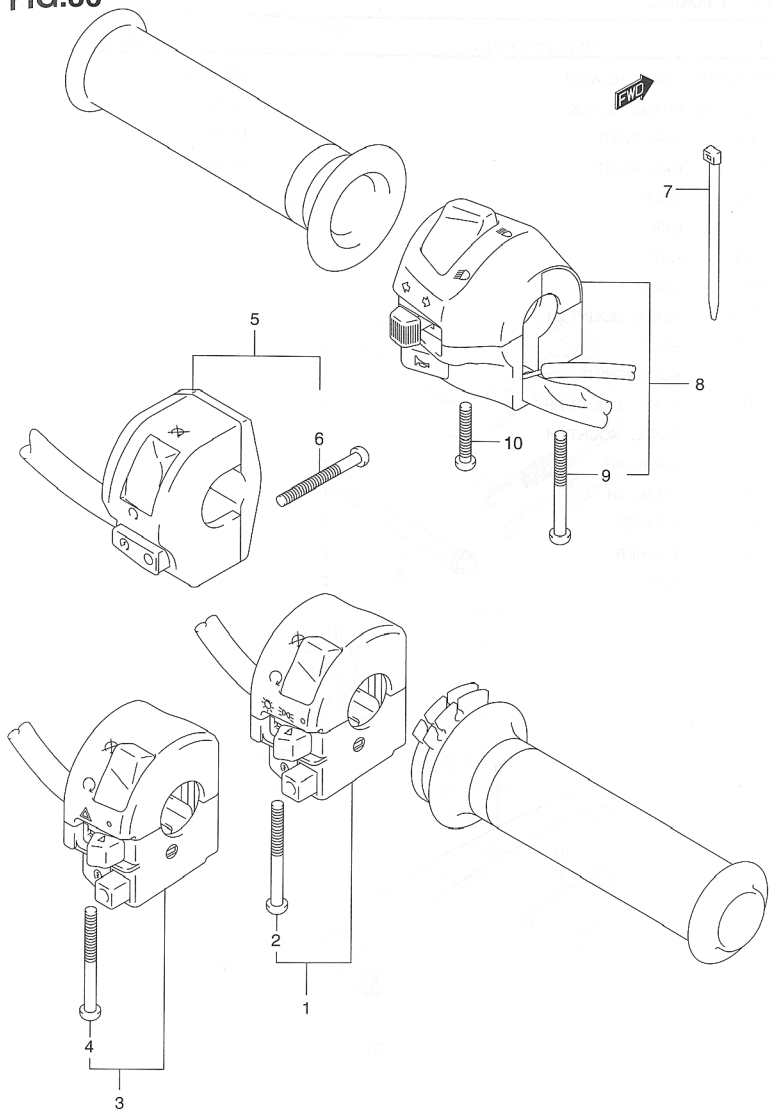

FIG.36 (F-10) HANDLE SWITCH

REF NO.	PART NO.	DESCRIPTION	Q'TY	REMARKS
1	37200-42F10	SWITCH ASSY, HANDLE, RH	1	GSX1400K2, E2, E19 GSX1400LK3 E19
2	02112-05453	·SCREW	2	
3	37200-42F50	SWITCH ASSY, HANDLE, RH	1	GSX1400K3 E2, E19 GSX1400UDK3 E19
4	02112-05453	·SCREW	2	
5	37200-42F30	SWITCH ASSY, HANDLE, RH	1	E24
6	09125-05065	·SCREW (6X22)	2	
7	09407-14407	CLAMP (L:145)	2	
8	37400-42F10	SWITCH ASSY, HANDLE, LH	1	
9	02112-05453	·SCREW	1	
10	02112-05253	·SCREW	1	

FIG.37

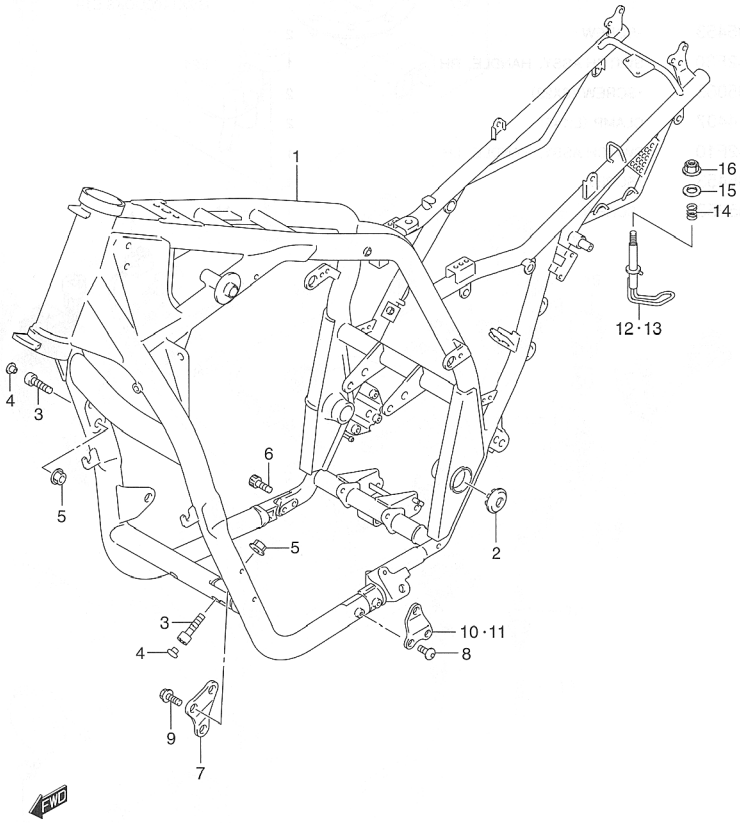

FIG.37 (G-2) FRAME

REF NO.	PART NO.	DESCRIPTION	Q'TY	REMARKS
1-1	41100-42F00-019	FRAME (BLACK)	1	MODEL K2
1-2	41100-42F01-019	FRAME (BLACK)	1	MODEL K3
2-1	41899-42F00	CAP, PIVOT	2	MODEL K2
2-2	41899-42F10	CAP, PIVOT	2	MODEL K3
3	07130-10353	BOLT	4	
4	09250-08012	CAP	4	
5	08319-31103	NUT	4	
6	07130-10253	BOLT	2	
7	41921-42F00	PLATE, MOUNT LH	1	
8	09106-08140	BOLT	4	
9	01550-08163	BOLT, FRONT	2	
10	41931-42F00	PLATE, MOUNT RH	1	
11	42941-42F00	PLATE, MOUNT LH	1	
12	46110-42F00	HOOK, RH	1	
13	46120-42F00	HOOK, LH	1	
14	09440-12018	SPRING	2	
15	08322-01063	WASHER	2	
16	08319-31063	NUT	2	

FIG.38

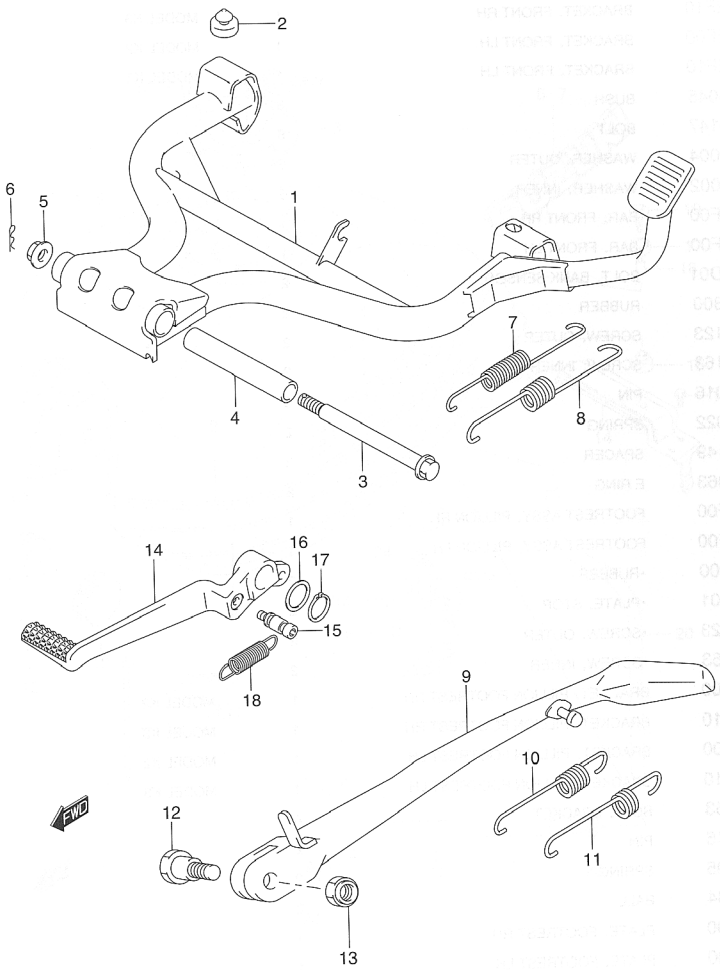

FIG.38 (G-3) STAND

REF NO.	PART NO.	DESCRIPTION	Q'TY	REMARKS
1	42100-42F00	STAND, CENTER	1	
2-1	09321-10002	CUSHION	1	MODEL K2
2-2	09321-10035	CUSHION	1	MODEL K3
3	09101-10043	BOLT, CENTER STAND	2	
4	09180-10064	SPACER	1	
5	08319-31103	NUT	1	
6	09385-10005	CLIP	1	
7	09443-14059	SPRING, INNER	1	
8	09443-22013	SPRING, OUTER	1	
9-1	42310-42F00	STAND, PROP	1	MODEL K2
9-2	42310-42F01	STAND, PROP	1	MODEL K3
10	09443-14058	SPRING, INNER	1	
11	09443-19011	SPRING, OUTER	1	
12	09111-10058	BOLT	1	
13	42321-03FK0	NUT	1	
14	43111-42F00	PADAL, BRAKE	1	
15	43561-24F00	HOOK, SPRING	1	
16	09160-18022	WASHER	1	
17	08331-31186	CLIP	1	
18	09443-11030	SPRING, RETURN	1	

4

FIG.39

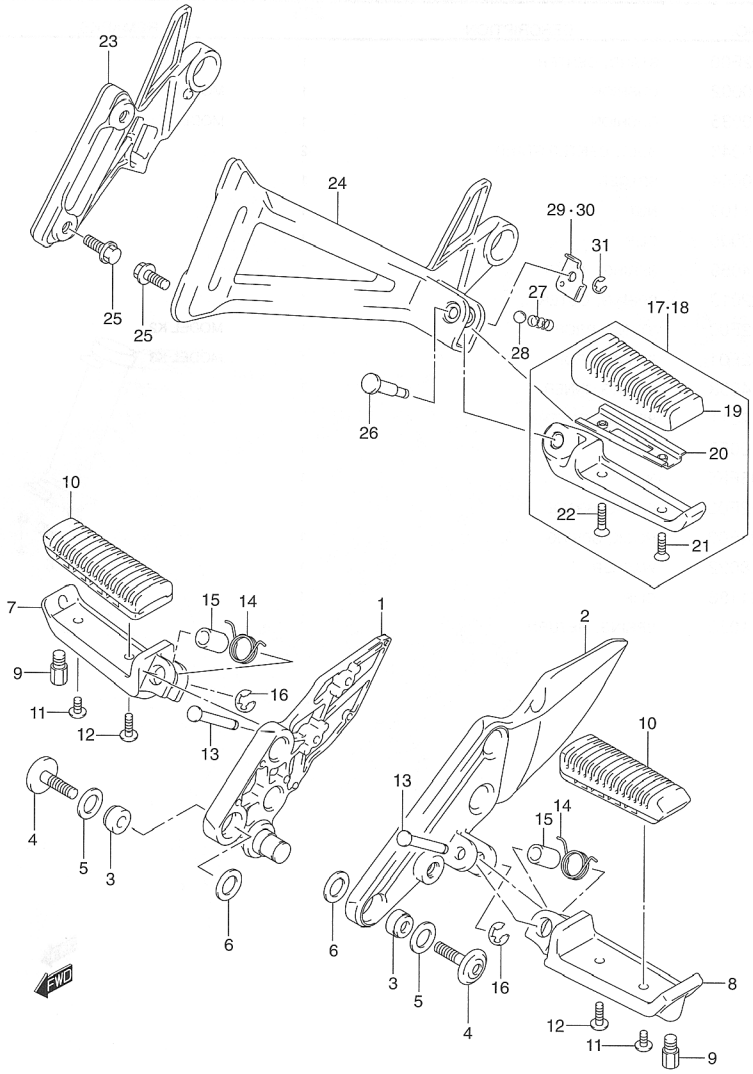

FIG.39 (G-4) FOOTREST

REF NO.	PART NO.	DESCRIPTION	Q'TY	REMARKS
1-1	43530-42F00	BRACKET, FRONT RH	1	MODEL K2
1-2	43530-42F10	BRACKET, FRONT RH	1	MODEL K3
2-1	43541-42F00	BRACKET, FRONT LH	1	MODEL K2
2-2	43541-42F10	BRACKET, FRONT LH	1	MODEL K3
3	09319-08045	BUSH	6	
4	09106-08147	BOLT	6	
5	09161-13004	WASHER, OUTER	6	
6	09161-17002	WASHER, INNER	6	
7	43511-42F00	BAR, FRONT RH	1	
8	43521-42F00	BAR, FRONT LH	1	
9	43576-07D01	BOLT, BANK SENSOR	2	
10	43550-31300	RUBBER	2	
11	02142-05123	SCREW, OUTER	2	
12	02142-05163	SCREW, INNER	2	
13	09208-08016	PIN	2	
14	09448-18022	SPRING	2	
15	09180-08149	SPACER	2	
16	08332-11063	E RING	2	
17	43600-42F00	FOOTREST ASSY, PILLION RH	1	
18	43700-42F00	FOOTREST ASSY, PILLION LH	1	
19	43612-31300	·RUBBER	2	
20	43632-45501	·PLATE, STOP	2	
21	02122-05123	·SCREW, OUTER	2	
22	02122-05163	·SCREW, INNER	2	
23-1	43811-42F00	BRACKET, PILLION FOOTREST RH	1	MODEL K2
23-2	43811-42F10	BRACKET, PILLION FOOTREST RH	1	MODEL K3
24-1	43821-42F00	BRACKET, PILLION FOOTREST LH	1	MODEL K2
24-2	43821-42F10	BRACKET, PILLION FOOTREST LH	1	MODEL K3
25	01550-08163	BOLT, BRACKET	4	
26	09208-08016	PIN	2	
27	09440-05005	SPRING	2	
28	06111-07004	BALL	2	
29	43816-42F00	PLATE, FOOTREST RH	1	
30	43826-42F00	PLATE, FOOTREST LH	1	
31	08332-11063	E RING	2	

FIG.40

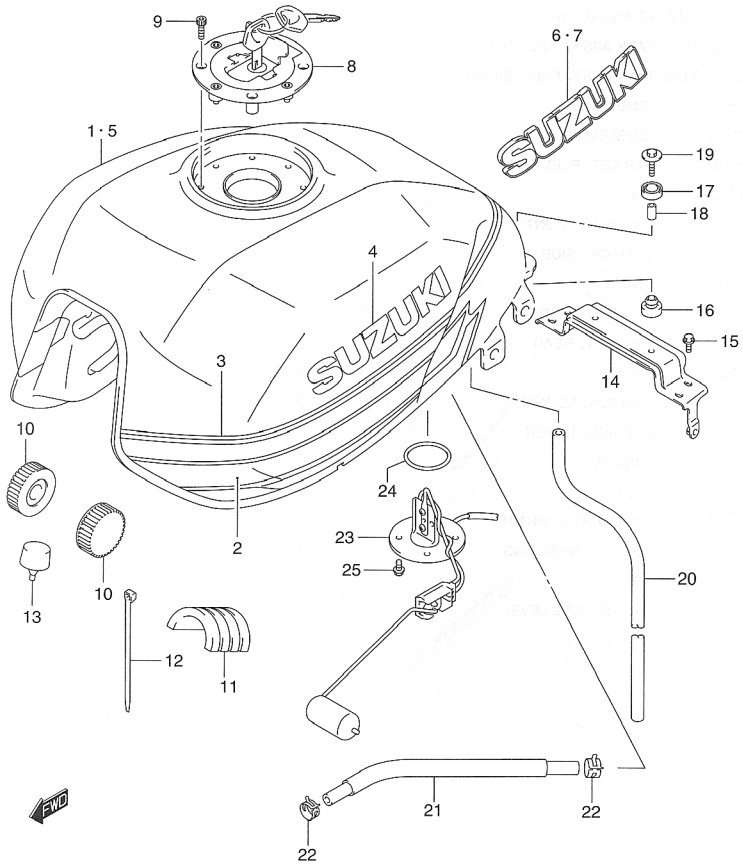

FIG.40 (G-5) FUEL TANK (MODEL K2)

REF NO.	PART NO.	DESCRIPTION	Q'TY	REMARKS
1	44100-42FA0-L99	TANK ASSY, FUEL	1	
2	68110-42F00-GJ8	·TAPE SET, FUEL TANK	1	
3	68115-42F00-GJ9	·TAPE, TANK SIDE UPPER	1	
4	68181-32B20-YD8	·EMBLEM (SILVER)	2	
5-1	44100-42F00-YC2	TANK ASSY, FUEL (BLUE)	1	
5-2	44100-42F00-YM6	TANK ASSY, FUEL (SILVER)	1	
6	68111-42F00	EMBLEM RH	1	
7	68121-42F00	EMBLEM LH	1	
8	44201-33820	CAP SET, FUEL TANK	1	
9	09106-05017	BOLT	4	
10	44511-42F00	CUSHION, FRONT	2	
11	44541-42F00	CUSHION, SIDE	2	
12	09407-25402	CLAMP	2	
13	44542-35F00	CUSHION CENTER	1	
14	44550-42F00	BRACKET, REAR	1	
15	01550-06123	BOLT	4	
16	09320-10038	CUSHION, LOWER	2	
17	44512-42E00	CUSHION, UPPER	2	
18	09180-06271	SPACER	2	
19	09116-06172	BOLT	2	
20	44423-42F00	HOSE, EATER DRAIN	1	
21	44128-42F00	HOSE, CONNECTING	1	
22	09401-11407	CLIP	2	
23	34810-42F00	GAUGE, FUEL LEVEL	1	
24	34825-31F00	GASKET	1	
25	07120-06123	BOLT	4	

REFER TO FIG.40A (G-6) FOR MODEL K3

4

FIG.40A

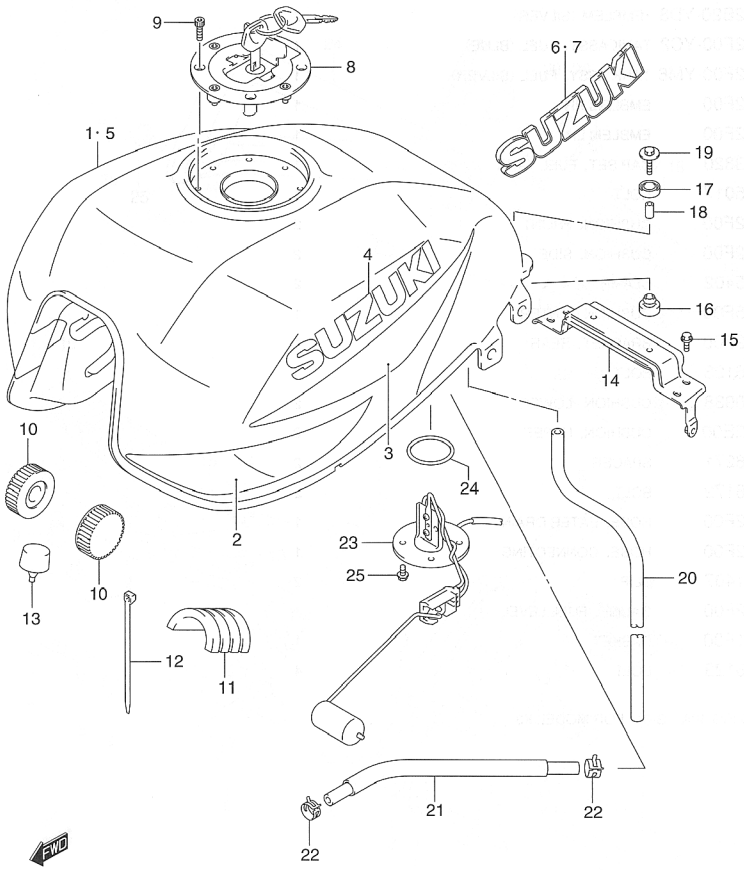

FIG.40A (G-6) FUEL TANK (MODEL K3)

REF NO.	PART NO.	DESCRIPTION	Q'TY	REMARKS
1	49100-42FB0-L99	TANK ASSY, FUEL	1	
2	68110-42F10-JM4	·TAPE SET, FUEL TANK	1	
3	68110-42F20-1LE	·TAPE, TANK SIDE UPPER (BLUE)	1	
4	68111-47C10-0JW	·EMBLEM (WHITE)	2	
5-1	49100-42F00-1LF	TANK ASSY, FUEL (BLUE)	1	
5-2	49100-42F00-YD8	TANK ASSY, FUEL (SILVER)	1	
6	68111-42F00	·EMBLEM RH	1	
7	68121-42F00	·EMBLEM LH	1	
8	44201-33820	CAP SET, FUEL TANK	1	
9	09106-05017	BOLT	4	
10	44511-42F00	CUSHION, FRONT	2	
11	44541-42F00	CUSHION, SIDE	2	
12	09407-25402	CLAMP	2	
13	44542-35F00	CUSHION CENTER	1	
14	44550-42F00	BRACKET, REAR	1	
15	01550-06123	BOLT	4	
16	09320-10038	CUSHION, LOWER	2	
17	44512-42E00	CUSHION, UPPER	2	
18	09180-06271	SPACER	2	
19	09116-06172	BOLT	2	
20	44423-42F00	HOSE, EATER DRAIN	1	
21	44128-42F10	HOSE, CONNECTING	1	
22	09401-11407	CLIP	2	
23	34810-42F00	GAUGE, FUEL LEVEL	1	
24	34825-31F00	GASKET	1	
25	07120-06123	BOLT	4	

FIG.41

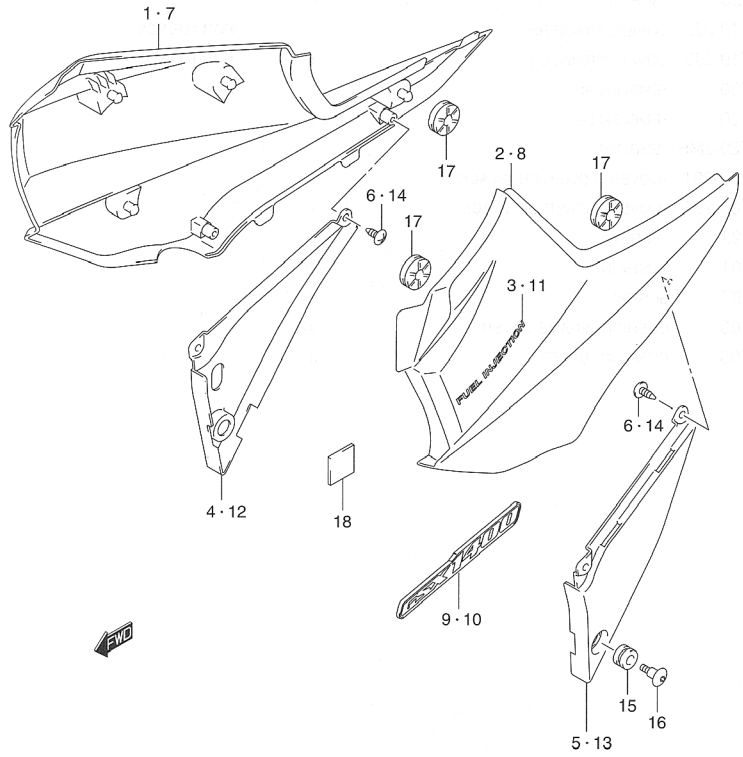

FIG.41 (G-7) FRAME COVER (MODEL K2)

REF NO.	PART NO.	DESCRIPTION	Q'TY	REMARKS
1	47110-42FA0-84N	COVER, FRAME RH	1	FOR L99
2	47210-42FA0-84N	COVER, FRAME LH	1	FOR L99
3	68131-42F10-YD8	·EMBLEM (SILVER)	2	
4	47121-42F00-291	·COVER, LOWER RH (BLACK)	1	
5	47221-42F00-291	·COVER, LOWER LH (BLACK)	1	
6	03541-05123	·SCREW	4	
7	47110-42F00-84N	COVER, FRAME RH	1	FOR YC2, YM6
8	47210-42F00-84N	COVER, FRAME LH	1	FOR YC2, YM6
9	68131-42F00	·EMBLEM RH	1	
10	68141-42F00	·EMBLEM LH	1	
11	68131-42F10-YD8	·EMBLEM (SILVER)	2	
12	47121-42F00-291	·COVER, LOWER RH (BLACK)	1	
13	47221-42F00-291	·COVER, LOWER LH (BLACK)	1	
14	03541-05123	·SCREW	4	
15	09320-09501	CUSHION	2	
16	09139-06087	SCREW	2	
17	47119-42F00	CUSHION, FRAME COVER	8	
18	47117-42F00	CUSHION, UPPER	2	

REFER TO FIG.41A (G-8) FOR MODEL K3

4

FIG.41A

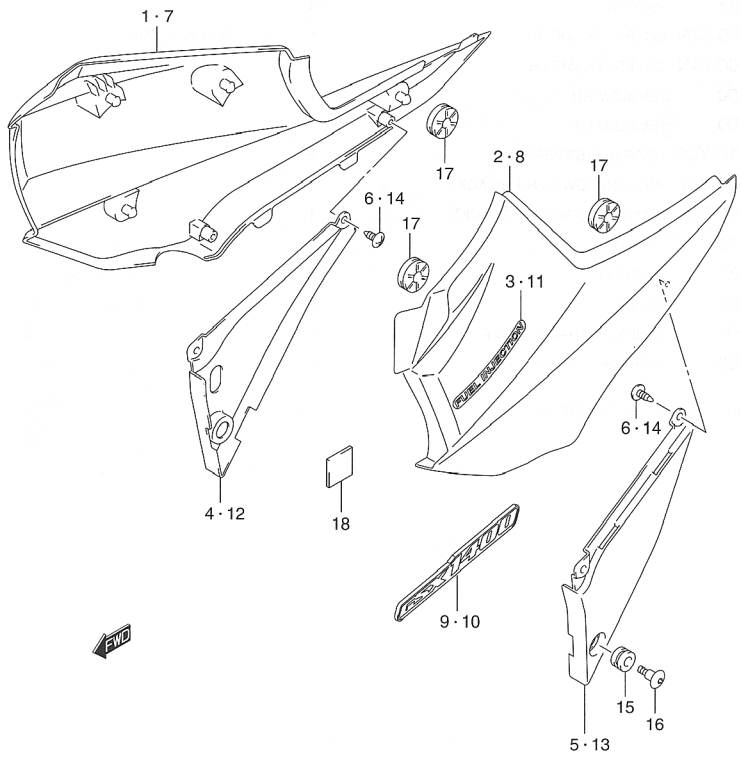

FIG.41A (G-8) FRAME COVER (MODEL K3)

REF NO.	PART NO.	DESCRIPTION	Q'TY	REMARKS
1	47110-42FB0-JJ8	COVER, FRAME RH	1	FOR L99
2	47210-42FB0-JJ8	COVER, FRAME LH	1	FOR L99
3	68131-42F20-JM5	·EMBLEM	2	
4	47121-42F00-291	·COVER, LOWER RH (BLACK)	1	
5	47221-42F00-291	·COVER, LOWER LH (BLACK)	1	
6	03541-05123	·SCREW	4	
7	47110-42F10-JJ8	COVER, FRAME RH	1	FOR 1LF, YD8
8	47210-42F10-JJ8	COVER, FRAME LH	1	FOR 1LF, YD8
9	68131-42F00	·EMBLEM RH	1	
10	68141-42F00	·EMBLEM LH	1	
11	68131-42F20-JM5	·EMBLEM	2	
12	47121-42F00-291	·COVER, LOWER RH (BLACK)	1	
13	47221-42F00-291	·COVER, LOWER LH (BLACK)	1	
14	03541-05123	·SCREW	4	
15	09320-09501	CUSHION	2	
16	09139-06087	SCREW	2	
17	47119-42F00	CUSHION, FRAME COVER	8	
18	47117-42F00	CUSHION, UPPER	2	

FIG.42

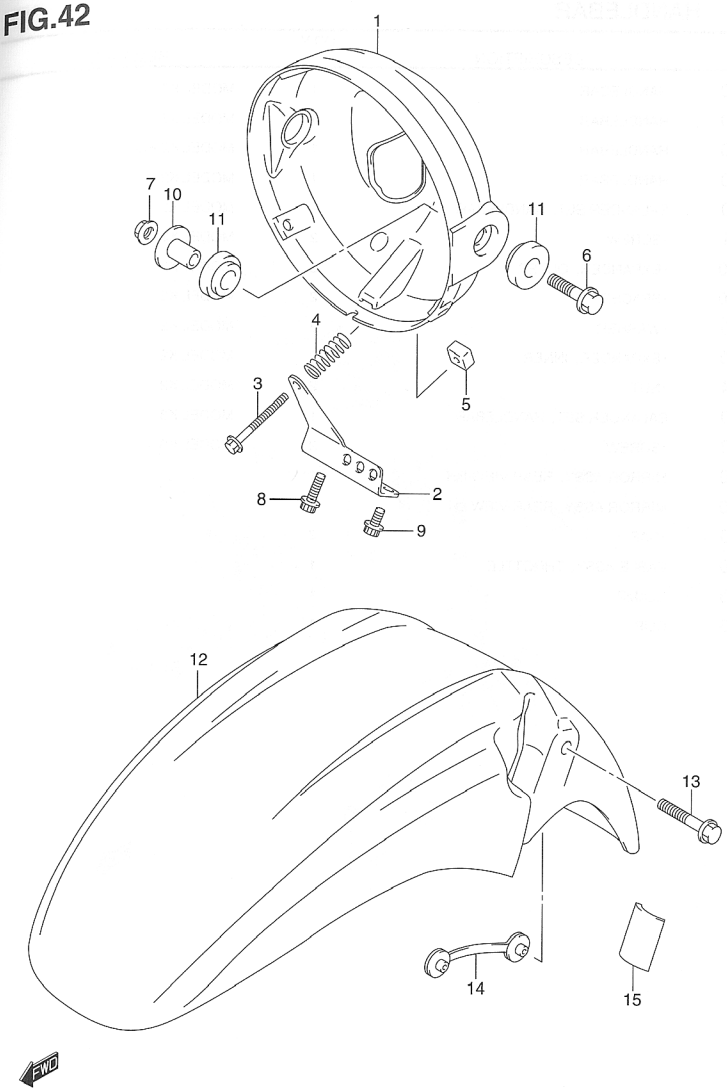

FIG.42 (G-9) HEADLAMP HOUSING

REF NO.	PART NO.	DESCRIPTION	Q'TY	REMARKS
1	51810-42F00	HOUSING, HEADLAMP	1	
2	51814-42F00	PLATE	1	
3-1	51858-42F00	BOLT, ADJUSTER	1	MODEL K2
3-2	51858-42F01	BOLT, ADJUSTER	1	MODEL K3
4	51837-25D00	SPRING, ADJUSTER	1	
5	51825-41F00	NUT, ADJUSTER	1	
6	09116-08118	BOLT	2	
7	08316-10083	NUT	2	
8	07120-06203	BOLT	1	
9	07120-06123	BOLT	1	
10	09180-08168	SPACER	2	
11	09320-12065	CUSION	4	
12-1	53111-42F00-YC2	FENDER, FRONT (BLUE)	1	FOR YC2
12-2	53111-42F00-YM6	FENDER, FRONT (SILVER)	1	FOR YM6
12-3	53111-42F00-1LF	FENDER, FRONT (BLUE)	1	MODEL K2 FOR L99
12-4	53111-42F00-YD8	FENDER, FRONT (SILVER)	1	FOR YD8
12-5	53111-42F00-1LF	FENDER, FRONT (BLUE)	1	MODEL K3 FOR 1LF, L99
13	09103-06214	BOLT	4	
14	53120-42F00	PLATE, FRONT FENDER	2	
15	94583-05C10	CUSHION	2	

FIG.43

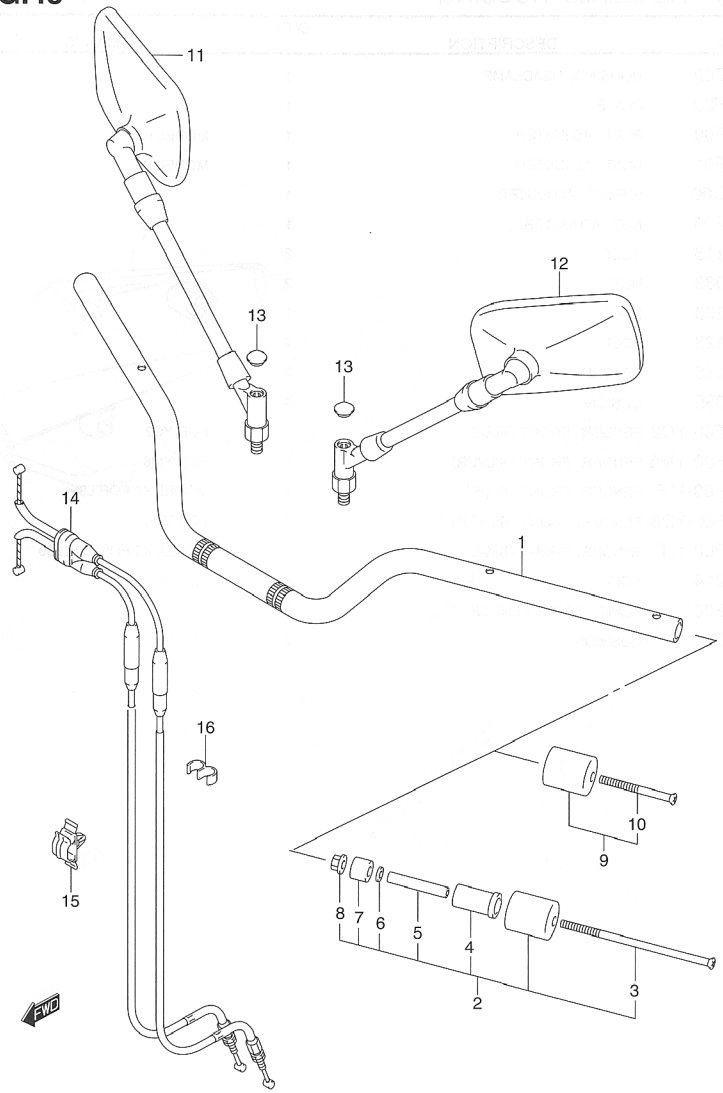

FIG.43 (G-10) HANDLEBAR

REF NO.	PART NO.	DESCRIPTION	Q'TY	REMARKS
1-1	56111-42F00	HANDLEBAR	1	MODEL K2
1-2	56110-42F20	HANDLEBAR	1	MODEL K3
1-3	56111-42F10	HANDLEBAR	1	MODEL K2 E24
1-4	56110-42F30	HANDLEBAR	1	MODEL K2
2	56200-42810	BALANCER SET, HANDLEBAR	2	MODEL K2
3	09127-06021	·SCREW	2	MODEL K2
4	56272-19D00	·EXPANDER, OUTER	2	MODEL K2
5	56276-17D00	·SPACER	2	MODEL K2
6	09160-06130	·WASHER	2	MODEL K2
7	56272-42F00	·EXPANDER, INNER	2	MODEL K2
8	09159-06024	·NUT	2	MODEL K2
9	56200-32830	BALANCER SET, HANDLEBAR	1	MODEL K3
10	02122-06503	·SCREW	2	MODEL K3
11	56500-03F80	MIRROR ASSY, REAR VIEW RH	1	
12	56600-03F80	MIRROR ASSY, REAR VIEW LH	1	
13	56524-28600	·CAP	2	
14	58300-42F00	CABLE ASSY, THROTTLE	1	
15	09403-10319	CLAMP	1	
16	09408-00066	CLIP	1	

FIG.44

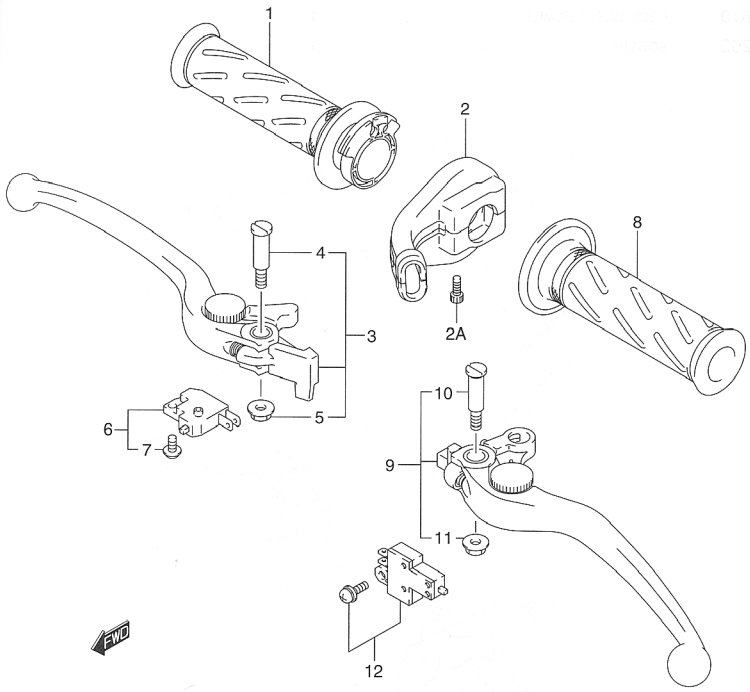

FIG.44 (G-11) HANDLE LEVER

REF NO.	PART NO.	DESCRIPTION	Q'TY	REMARKS
1	57110-45D02	GRIP, THROTTLE	1	
2	57100-42F00	CASE ASSY, THROTTLE	1	
2	07130-05253	·BOLT	2	
3	57300-33E01	LEVER ASSY, BRAKE	1	
4	57431-17C00	·BOLT	1	
5	08316-10063	·NUT	1	
6	57460-17C00	SWITCH ASSY, STOP	1	
7	57465-17C00	·SCREW	1	
8	57211-22D01	GRIP LH	1	
9	57500-24F00	LEVER ASSY, CLUTCH	1	
10	57431-17C00	·BOLT	1	
11	08316-10063	·NUT	1	
12	57560-02FA0	SWITCH ASSY, CLUTCH	1	

4

FIG.45

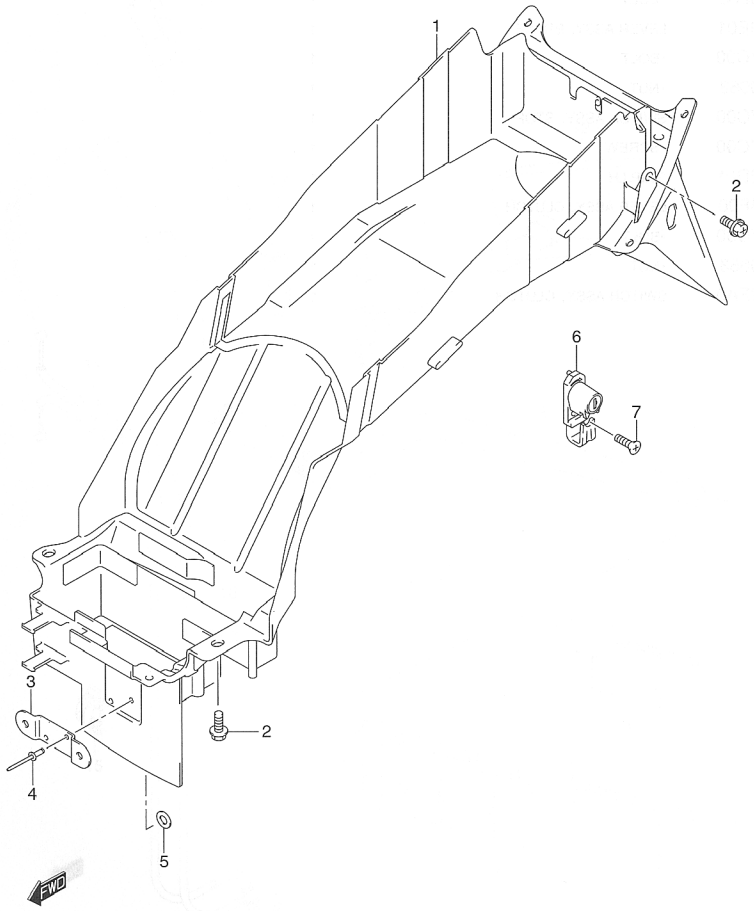

FIG.45 (H-2) REAR FENDER

REF NO.	PART NO.	DESCRIPTION	Q'TY	REMARKS
1	63111-42F00	FENDER, REAR	1	
2	09113-06001	BOLT	4	
3	63466-42F00	BRACKET	1	
4	09229-04020	RIVET	2	
5	08322-01043	WASHER	2	
6	95700-42810	LOCK SET, HELMET	1	
7	02122-06203	SCREW	1	

FIG.46

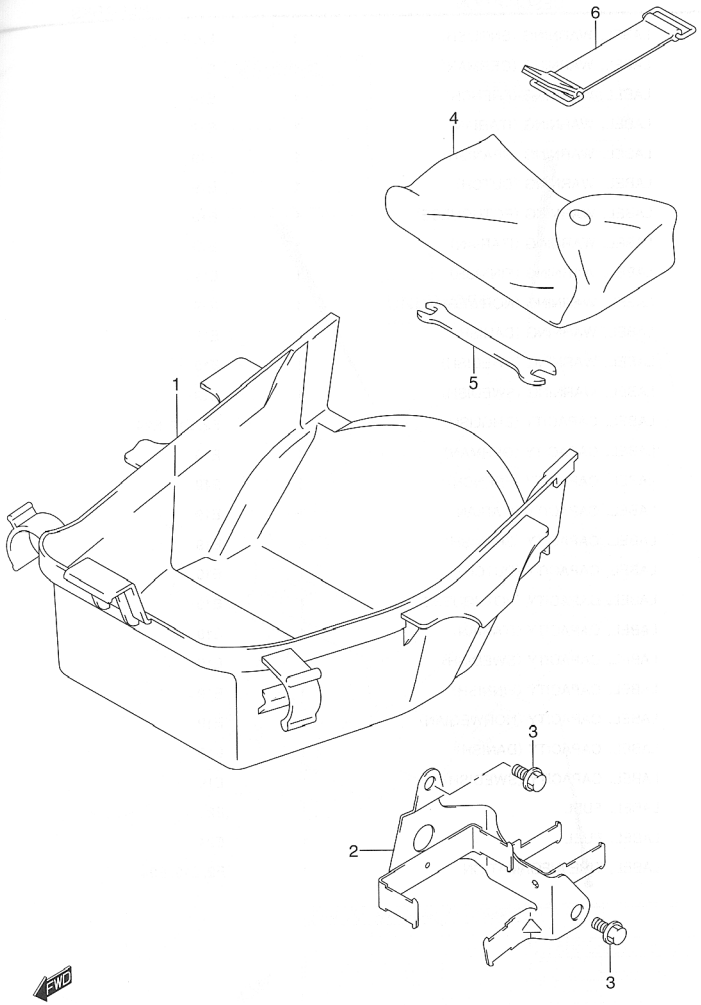

FIG.46 (H-3) LUGGAGE BOX

REF NO.	PART NO.	DESCRIPTION	Q'TY	REMARKS
1	92211-42F00	BODY, LUGGAGE BOX	1	
2-1	47410-42F00	HOLDER, ELECTRIC PARTS	1	MODEL K2
2-2	47411-42F10	HOLDER, ELECTRIC PARTS	1	MODEL K3
3	01550-06123	BOLT	2	
4	09800-21039	TOOL ASSY	1	
5	09813-00027	SPANNER (8X10)	1	
6	09462-00093	BAND, TOOL	1	

4

FIG.47

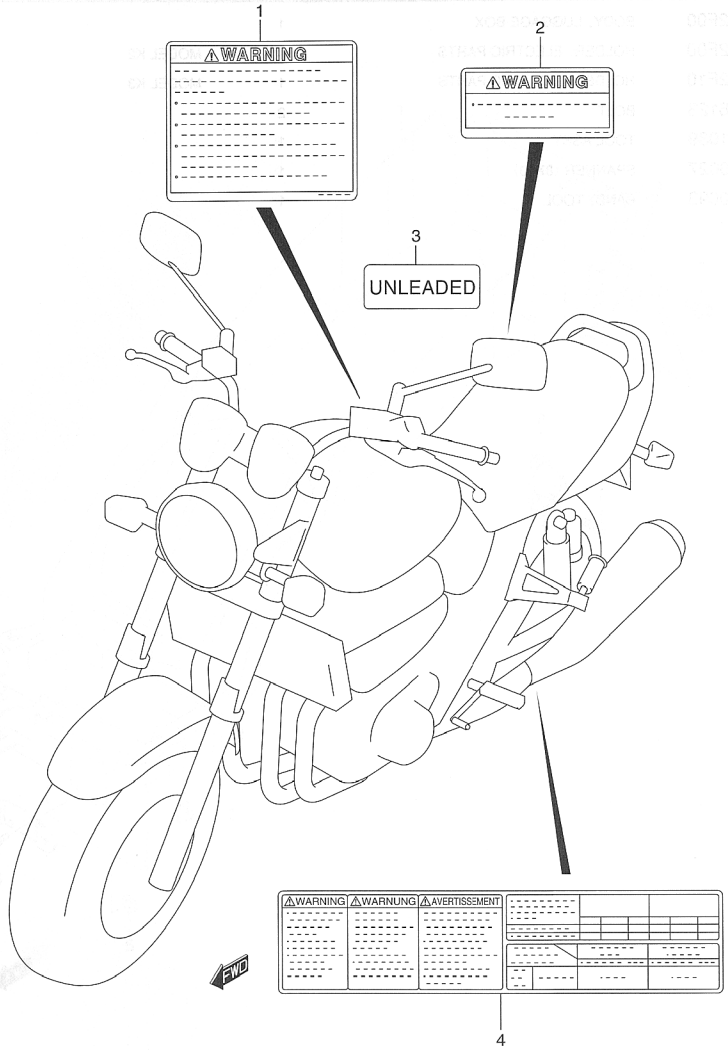

FIG.47 (H-4) LABEL

REF NO.	PART NO.	DESCRIPTION	Q'TY	REMARKS
1-1	68319-29F00	LABEL, WARNING (ENGLISH)	1	E2, E19, E24
1-2	68319-29F20	LABEL, WARNING (GERMAN)	1	E19
1-3	68319-29F30	LABEL, WARNING (FRENCH)	1	E19
1-4	68319-29F40	LABEL, WARNING (ITARIAN)	1	E19
1-5	68319-29F50	LABEL, WARNING (SPANISH)	1	E19
1-6	68319-29F70	LABEL, WARNING (DUTCH)	1	E19
1-7	68319-29F80	LABEL, WARNING (POTUGUESE)	1	E19
1-8	68319-30F40	LABEL, WARNING (ITARIAN)	1	E19
1-9	68319-29FA0	LABEL, WARNING (FINNISH)	1	E19
1-10	68319-29FB0	LABEL, WARNING (NORWEGIAN)	1	E19
1-11	68319-29FC0	LABEL, WARNING (DANISH)	1	E19
1-12	68319-29F90	LABEL, WARNING (SWEDISH)	1	E19
1-13	68319-30F90	LABEL, WARNING (SWEDISH)	1	E19
2-1	68911-42F00	LABEL, CAPACITY (ENGLISH)	1	E2, E19, E24
2-2	68911-42F20	LABEL, CAPACITY (GERMAN)	1	E19
2-3	68911-42F30	LABEL, CAPACITY (FRENCH)	1	E19
2-4	68911-42F40	LABEL, CAPACITY (ITARIAN)	1	E19
2-5	68911-42F50	LABEL, CAPACITY (SPANISH)	1	E19
2-6	68911-42F70	LABEL, CAPACITY (DUTCH)	1	E19
2-7	68911-42F80	LABEL, CAPACITY (POTUGUESE)	1	E19
2-8	68391-42F40	LABEL, CAPACITY (ITARIAN)	1	E19
2-9	68391-42F90	LABEL, CAPACITY (SWEDISH)	1	E19
2-10	68911-42FA0	LABEL, CAPACITY (FINNISH)	1	E19
2-11	68911-42FB0	LABEL, CAPACITY (NORWEGIAN)	1	E19
2-12	68911-42FC0	LABEL, CAPACITY (DANISH)	1	E19
2-13	68911-42F90	LABEL, CAPACITY (SWEDISH)	1	E19
3-1	68623-17D00	LABEL, FUEL	1	E2
3-2	86932-73060	LABEL, FUEL	1	E24
4	68332-42F10	LABEL, TIRE INFORMATION	1	E2, E19, E24

FIG.47

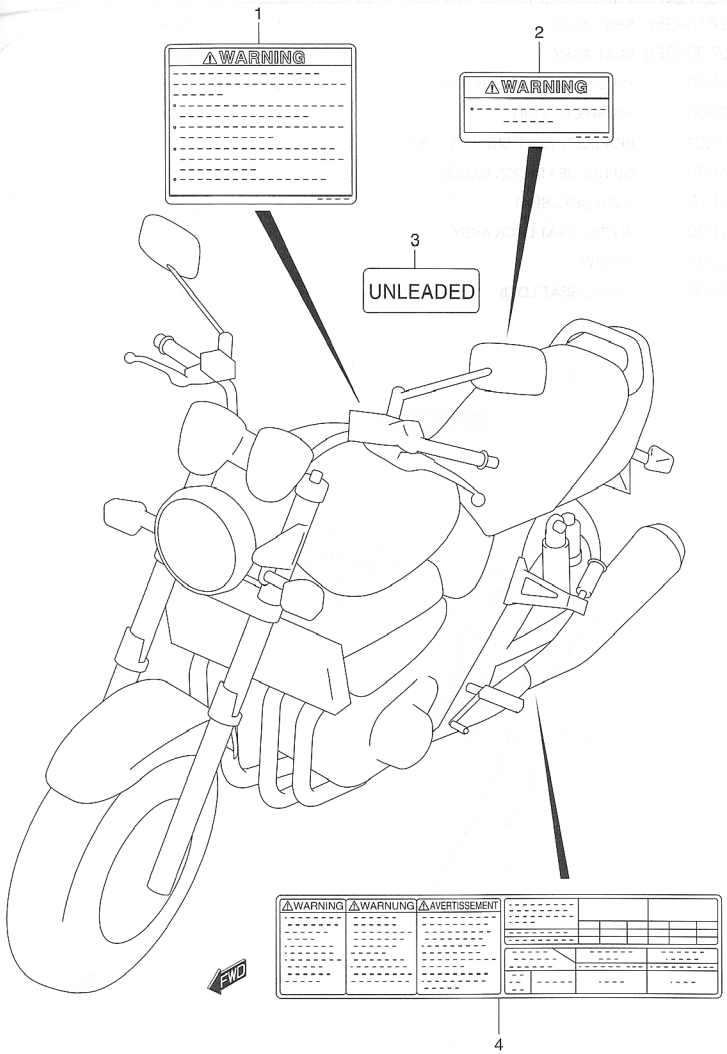

FIG.47 (H-5) LABEL

REF NO.	PART NO.	DESCRIPTION	Q'TY	REMARKS
5-1	99011-42F50-01A	MANUAL, OWNER'S	1	MODEL K2 E2, E19, E24
5-2	99011-42F50-01F	MANUAL, OWNER'S	1	MODEL K2 E19
5-3	99011-42F50-01K	MANUAL, OWNER'S	1	MODEL K2 E19
5-4	99011-42F50-SDE	MANUAL, OWNER'S	1	MODEL K2 E19
5-5	99011-42F50-01W	MANUAL, OWNER'S	1	MODEL K2 E19
5-6	99011-42F51-01A	MANUAL, OWNER'S	1	MODEL K3 E2, E19, E24
5-7	99011-42F51-01F	MANUAL, OWNER'S	1	MODEL K3 E19
5-8	99011-42F51-01K	MANUAL, OWNER'S	1	MODEL K3 E19
5-9	99011-42F51-SDE	MANUAL, OWNER'S	1	MODEL K3 E19
5-10	99011-42F51-01W	MANUAL, OWNER'S	1	MODEL K3 E19 DRAWING NOT SHOWN

FIG.48

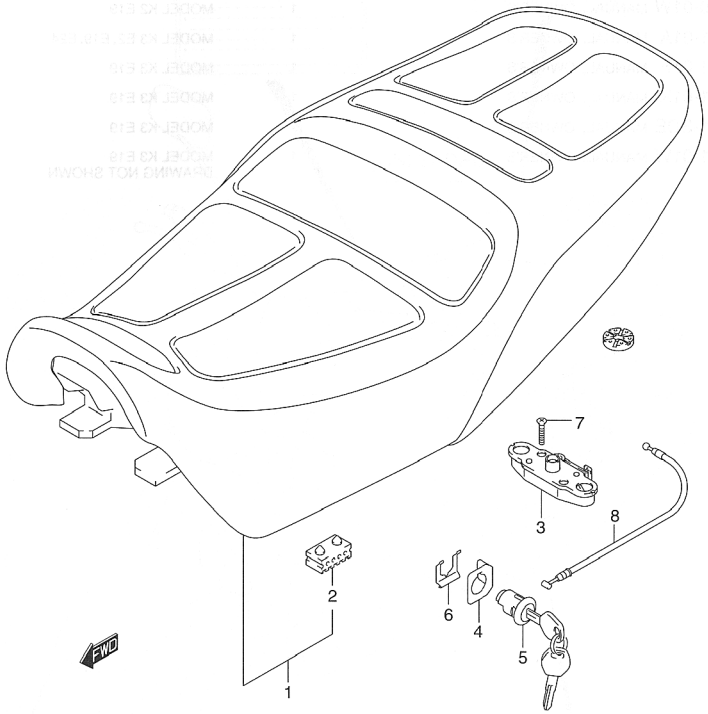

FIG.48 (H-6) SEAT

REF NO.	PART NO.	DESCRIPTION	Q'TY	REMARKS
1-1	45100-42F10-GF6	SEAT ASSY	1	MODEL K2
1-2	45100-42F30-GF6	SEAT ASSY	1	MODEL K3
2-1	45149-31300	·CUSHION, SEAT (40X20X15)	6	MODEL K2
2-2	45149-42F00	·CUSHION, SEAT	6	MODEL K3
3	45220-20A01	BRACKET, SEAT SUPPORT, REAR	1	
4	45288-14F00	GUIDE, SEAT LOCK CABLE	1	
5	95700-14810	LOCK SET, SEAT	1	
6	45289-11F00	PLATE, SEAT LOCK ASSY	1	
7	02122-06303	SCREW	2	
8	45280-38400	CABLE, SEAT LOCK	1	

FIG.49

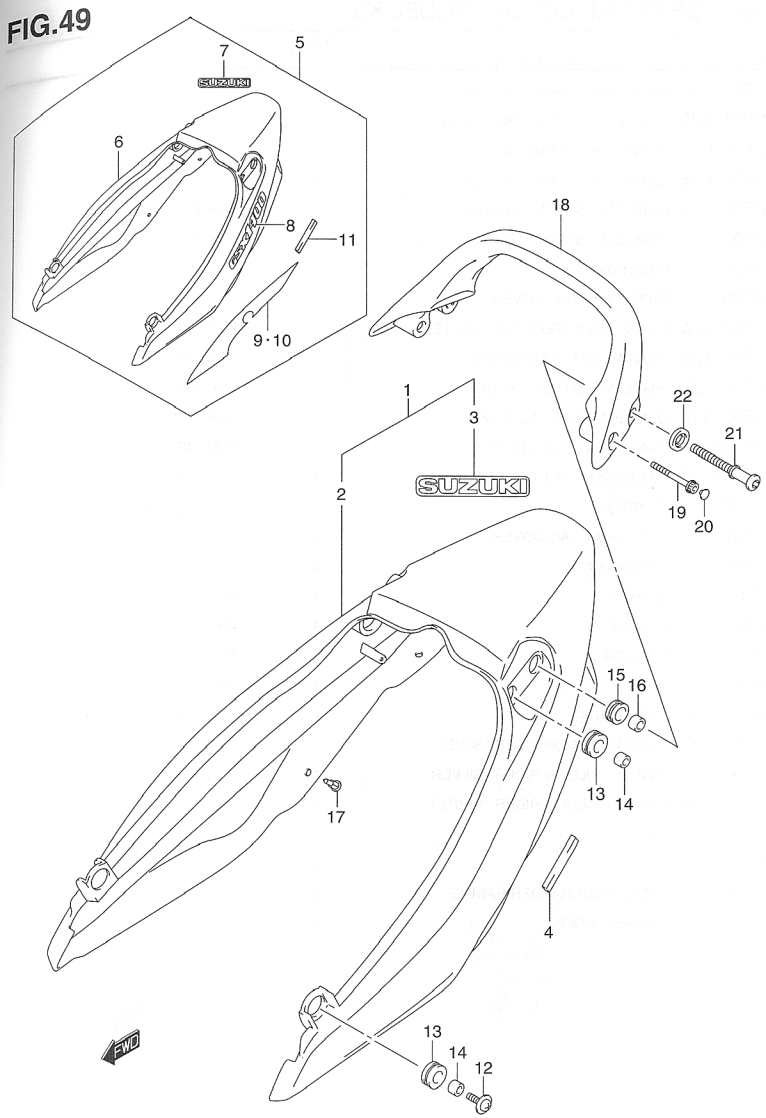

FIG.49 (H-7) SEAT TAIL COVER (MODEL K2)

REF NO.	PART NO.	DESCRIPTION	Q'TY	REMARKS
1-1	45500-42F00-YC2	COVER ASSY, SEAT TAIL (BLUE)	1	
1-2	45500-42F00-YM6	COVER ASSY, SEAT TAIL (SILVER)	1	
2-1	45510-42F00-YC2	·COVER, SEAT TAIL (BLUE)	1	
2-2	45510-42F00-YM6	·COVER, SEAT TAIL (SILVER)	1	
3-1	68280-04F00-YD8	·EMBLEM, "SUZUKI" (SILVER)	1	FOR YC2
3-2	68280-04F00-019	·EMBLEM, "SUZUKI" (BLACK)	1	FOR YM6
4	45515-42F00	·CUSHION	1	
5	45500-42FA0-0JW	COVER ASSY, SEAT TAIL (WHITE)	1	FOR L99
6	45510-42F00-0JW	·COVER, SEAT TAIL (WHITE)	1	FOR L99
7	68280-04F00-1LF	·EMBLEM, "SUZUKI" (BLUE)	1	FOR 0JW
8	68161-42F00-GJ7	·EMBLEM, SEAT TAIL COVER	2	FOR 0JW
9	68165-42F00-M18	·TAPE, SEAT TAIL COVER R	1	FOR 0JW
10	68167-42F00-M18	·TAPE, SEAT TAIL COVER L	1	FOR 0JW
11	45515-42F00	·CUSHION	1	
12	09136-06081	SCREW (6X20)	2	
13	09320-12068	CUSHION	4	FR
14	09180-06300	SPACER	4	FR
15	09320-14023	CUSHION	2	RR
16	09180-08199	SPACER	2	RR
17	09409-06314-5PK	CLIP (BLACK)	4	
18-1	46211-32F00-YC2	HANDLE, PILLION RIDER (BLUE)	1	
18-2	46211-32F00-YM6	HANDLE, PILLION RIDER (SILVER)	1	
18-3	46211-32F00-0JW	HANDLE, PILLION RIDER (WHITE)	1	
19	07120-06453	BOLT	2	
20	09250-05009	CAP	2	
21	46316-31F00	HOOK, PILLION RIDER HANDLE	2	
22	46317-31F00	WASHER, HOOK	2	

REFER TO FIG.49A (H-8) FOR MODEL K3

FIG.49A

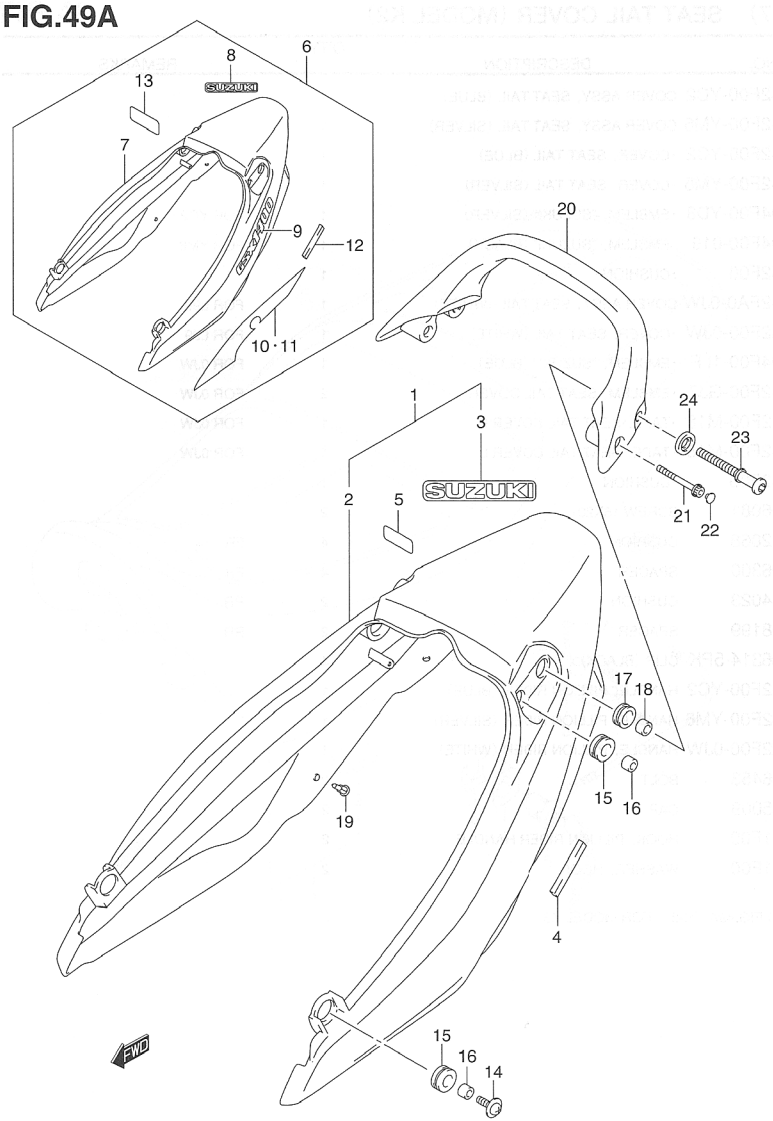

FIG.49A (H-8) SEAT TAIL COVER (MODEL K3)

REF NO.	PART NO.	DESCRIPTION	Q'TY	REMARKS
1-1	45500-42F01-1LF	COVER ASSY, SEAT TAIL (BLUE)	1	
1-2	45500-42F01-YD8	COVER ASSY, SEAT TAIL (SILVER)	1	
2-1	45510-42F00-1LF	·COVER, SEAT TAIL (BLUE)	1	
2-2	45510-42F00-YD8	·COVER, SEAT TAIL (SILVER)	1	
3-1	68280-04F00-YD8	·EMBLEM, "SUZUKI" (SILVER)	1	FOR 1LF
3-2	68280-04F00-019	·EMBLEM, "SUZUKI" (BLACK)	1	FOR YD8
4	45515-42F00	·CUSHION	1	
5	45516-42F00	TAPE, SEAT TAIL COVER	2	
6	45500-42FB0-0JW	COVER ASSY, SEAT TAIL (WHITE)	1	FOR L99
7	45510-42F00-0JW	·COVER, SEAT TAIL (WHITE)	1	FOR L99
8	68280-04F00-1LF	·EMBLEM, "SUZUKI" (BLUE)	1	FOR 0JW
9	68161-42F00-GJ7	·EMBLEM, SEAT TAIL COVER	2	FOR 0JW
10	68165-42F10-G8Z	·TAPE, SEAT TAIL COVER R	1	FOR 0JW
11	68167-42F10-G8Z	·TAPE, SEAT TAIL COVER L	1	FOR 0JW
12	45515-42F00	·CUSHION	1	
13	45516-42F00	TAPE, SEAT TAIL COVER	2	
14	09136-06081	SCREW (6X20)	2	
15	09320-12068	CUSHION	4	FR
16	09180-06300	SPACER	4	FR
17	09320-14023	CUSHION	2	RR
18	09180-08199	SPACER	2	RR
19	09409-06314-5PK	CLIP (BLACK)	4	
20-1	46211-32F00-1LF	HANDLE, PILLION RIDER (BLUE)	1	
20-2	46211-32F00-YD8	HANDLE, PILLION RIDER (SILVER)	1	
20-3	46211-32F00-0JW	HANDLE, PILLION RIDER (WHITE)	1	
21	07120-06453	BOLT	2	
22	09250-05009	CAP	2	
23	46316-31F00	HOOK, PILLION RIDER HANDLE	2	
24	46317-31F00	WASHER, HOOK	2	

FIG.50

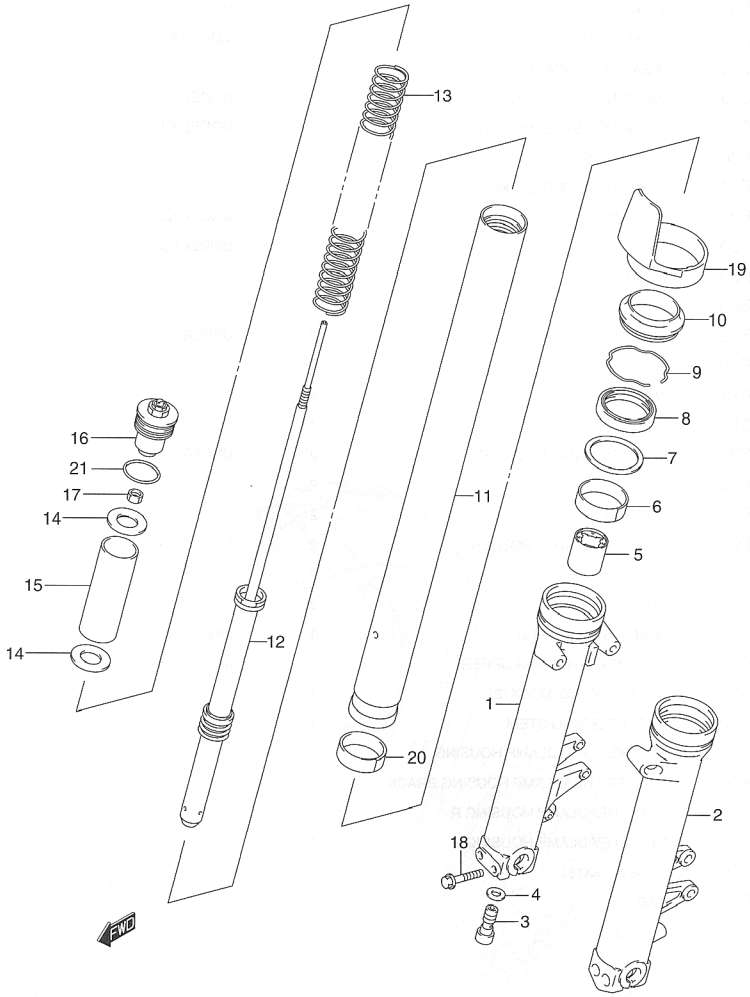

FIG.50 (H-9) FRONT FORK DAMPER

REF NO.	PART NO.	DESCRIPTION	Q'TY	REMARKS
	51103-42F10	DAMPER ASSY, FRONT FORK R	1	MODEL K2 KAYABA
	51104-42F10	DAMPER ASSY, FRONT FORK L	1	MODEL K2 KAYABA
	51103-42F40	DAMPER ASSY, FRONT FORK R	1	MODEL K3 KAYABA
	51104-42F40	DAMPER ASSY, FRONT FORK R	1	MODEL K3 KAYABA
1	51130-42F00	·TUBE, OUTER R	1	
2	51140-42F00	·TUBE, OUTER L	1	
3	51147-40C00	·BOLT (12X22)	2	
4	51148-40300	·GASCKET	2	
5	51195-42F00	·PIECE, OIL LOCK	2	
6	51167-37F00	·BUSH, GUIDE	2	
7	51158-27C00	·WASHER	2	
8	51153-42F00	·SEAL, OIL	2	
9	51156-27C00	·RING, STOPPER	2	
10	51173-42F00	·SEAL, DUST	2	
11-1	51110-42F00	·TUBE, INNER	2	MODEL K2
11-2	51110-42F30	·TUBE, INNER	2	MODEL K3
12-1	51146-42F00	·CYLINDER	2	MODEL K2
12-2	51146-42F00	·CYLINDER	2	MODEL K3
13	51171-42F00	·SPRING, FRONT	2	
14	51172-42F00	·WASHER	4	
15	51176-42F00	·SPACER, SPRING	2	
16	51351-42F00	·CAP, FORK	4	
17	51352-13A60	·NUT, ROD	2	
18	51166-42F00	·BOLT	2	
19	51201-42F00	·PROTECTOR	2	
20	51121-37F00	·BUSH, SLIDE	2	
21	51117-27C00	·O RING	2	

4

FIG.51

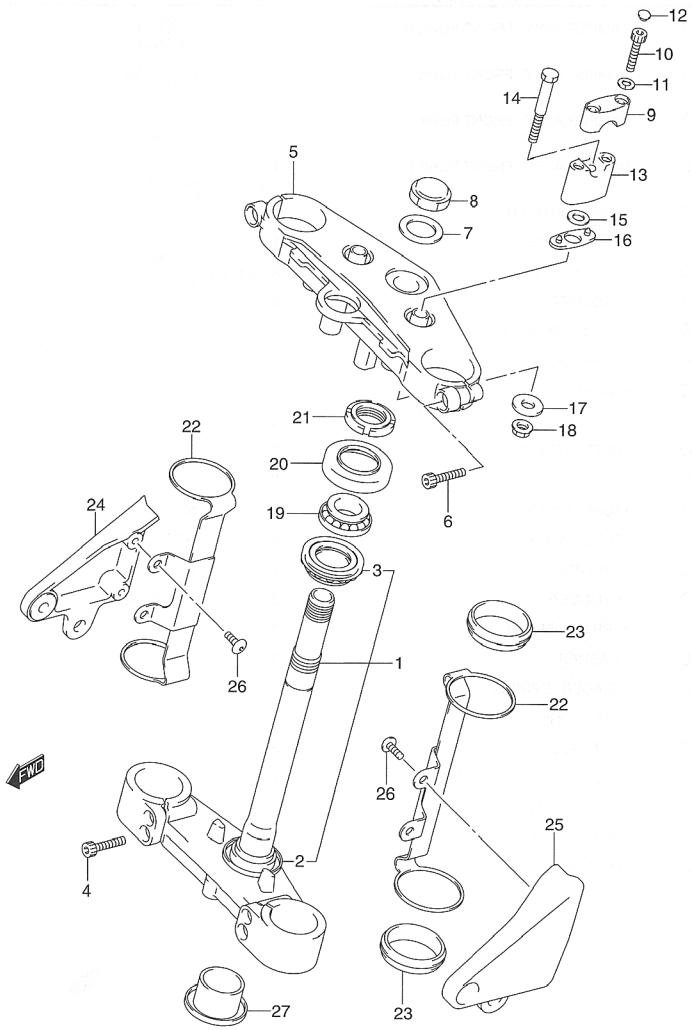

FIG.51 (H-10) STEERING STEM

REF NO.	PART NO.	DESCRIPTION	Q'TY	REMARKS
1-1	51410-42F00	STEM, STEERING	1	MODEL K2
1-2	51410-42F30	STEM, STEERING	1	MODEL K3
2	51644-12C00	·SEAL, STEERING LOWER	1	
3-1	09267-30010	·BEARING (30X55X17)	1	MODEL K2
3-2	09265-30020	·BEARING, STEERING LOWER	1	MODEL K3
4	51328-42F00	BOLT (8X35)	4	
5	51311-42F00	HEAD, STEERING STEM	1	
6-1	51328-42F00	BOLT (8X35)	2	MODEL K2
6-2	51166-26F00	BOLT	2	MODEL K3
7	51356-42F00	WASHER	1	
8	51353-24B00	NUT	1	
9	56211-42F00	HOLDER, HANDLE	2	UPPER
10	51381-48E10	BOLT	4	
11	09164-08015	WASHER	4	
12	09250-06011	CAP	4	
13	56221-42F00	HOLDER, HANDLE, UNDER	2	UNDER
14	51226-42F00	BOLT	2	
15	51354-42F00	WASHER	2	
16	56245-42F00	RUBBER, HANDLE HOLDER	2	
17	51355-42F00	WASHER	2	
18	08319-31107	NUT	2	
19-1	09267-25009	BEARING (25X47X15)	1	MODEL K2
19-2	09265-25019	BEARING, STEERING UPPER	1	MODEL K3
20	51643-40502	DUST SEAL (33.5X59X12)	1	
21	51631-31F00	NUT, STEERING STEM	1	
22	51530-42F00	BRACKET, HEADLAMP HOUSING	2	
23	51553-42F00	DAMPER, HEADLAMP HOUSING BRACK	4	
24	51851-42F00	STAY, HEADLAMP HOUSING R	1	
25	51861-42F00	STAY, HEADLAMP HOUSING L	1	
26	09139-06030	SCREW (6X16)	4	
27	51482-26F00	CAP	1	

FIG.52

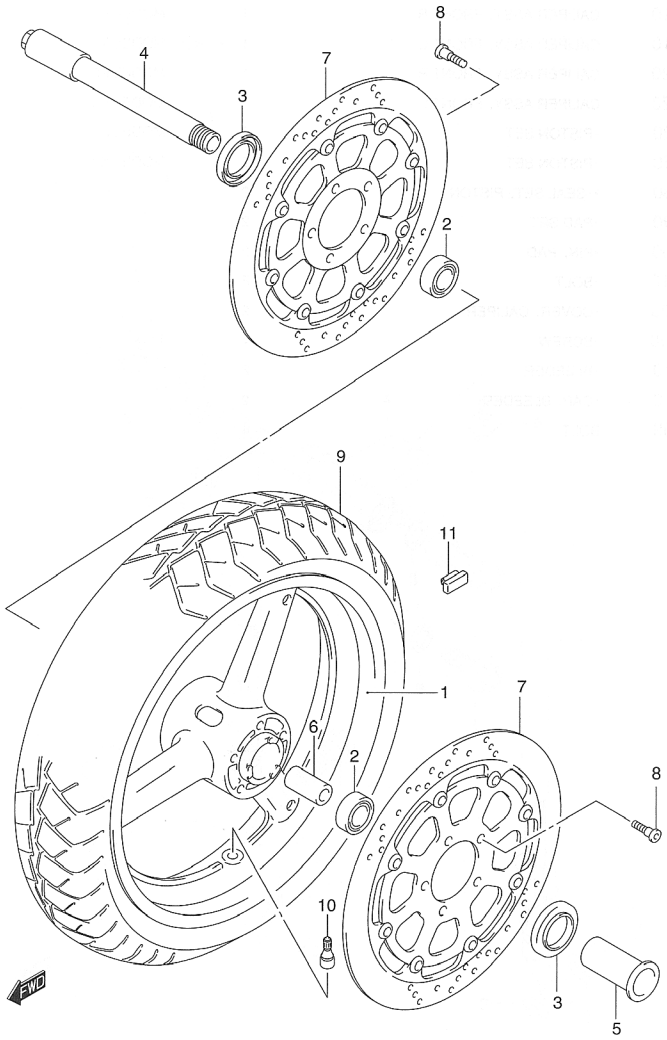

FIG.52 (I-2) FRONT WHEEL

REF NO.	PART NO.	DESCRIPTION	Q'TY	REMARKS
1-1	54111-33E10-019	WHEEL, FRONT, 17XMT3.50 (BLACK	1	MODEL K2 FOR YC2, YM6 MODEL K3 FOR 1LF, YD8
1-2	54111-33E10-28W	WHEEL, FRONT, 17XMT3.50 (WHITE	1	MODEL K2/K3 FOR L99
2-1	09262-25061	BEARING (25X52X15)	2	MODEL K2
2-2	08143-62057	BEARING (25X52X15)	2	MODEL K3
3	09285-32004	SEAL, OIL (32X52X7)	2	
4	54711-42F00	AXLE, FRONT	1	
5	54712-33E00	NUT, FRONT AXLE	1	
6	54731-33E10	SPACER, FRONT HUB BEARING	1	
7	59210-33E90	DISC, FRONT BRAKE	2	
8	09106-08148	BOLT (8X33)	10	
9	55110-42F00	TIRE, FRONT, 120/70ZR17 (58W)	1	BRIDGESTONE
10	43130-24A00	VALVE ASSY, WHEEL RIM	1	
11-1	55411-00A00	BALANCER, WHEEL, 10G	0~3	
11-2	55412-00A01	BALANCER, WHEEL, 20G	0~3	

4

FIG.53

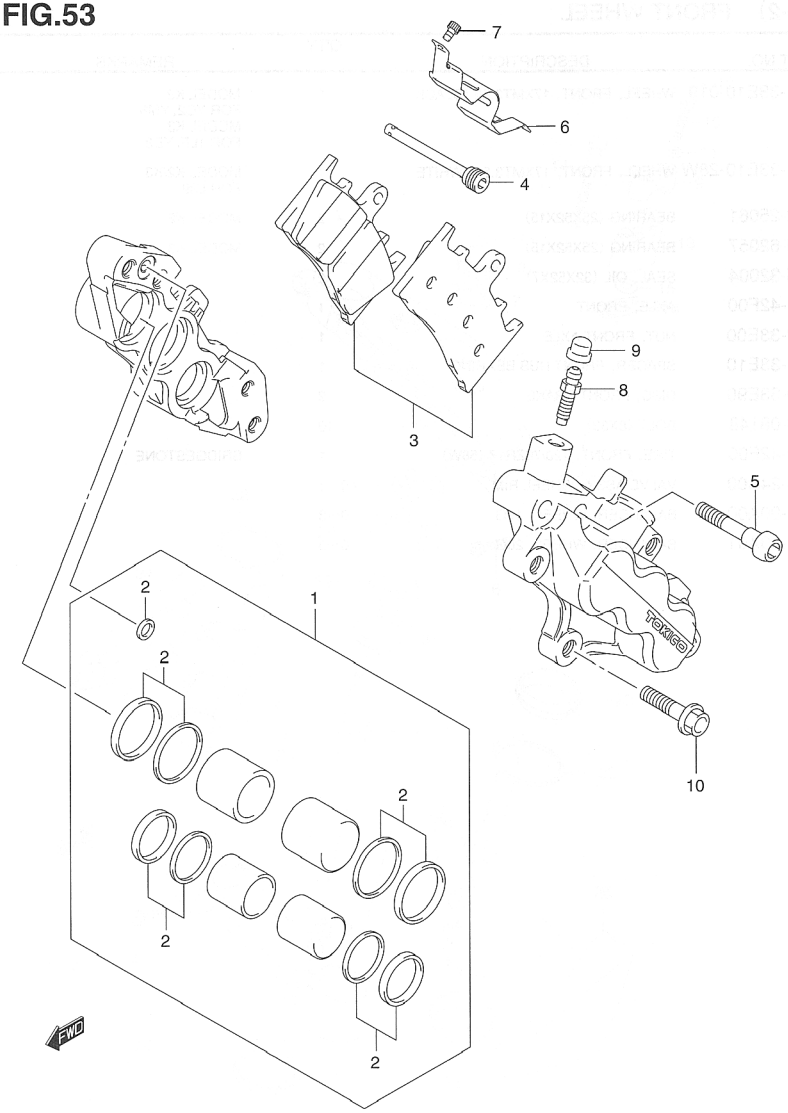

FIG.53 (I-3) FRONT CALIPER

REF NO.	PART NO.	DESCRIPTION	Q'TY	REMARKS
	59100-40F10	CALIPER ASSY, FRONT R	1	MODEL K2
	59300-40F10	CALIPER ASSY, FRONT L	1	MODEL K2
	59100-40F20	CALIPER ASSY, FRONT R	1	MODEL K3
	59300-40F20	CALIPER ASSY, FRONT L	1	MODEL K3
1-1	59100-40820	·PISTON SET	2	MODEL K2
1-2	59100-40850	·PISTON SET	2	MODEL K3
2	59100-40830	··SEAL SET, PISTON	2	
3	59301-33890	·PAD SET	2	
4	59141-40F00	·PIN, PAD	2	
5	59145-33E10	·BOLT	8	
6	59151-46E00	·COVER, CALIPER	2	
7	59153-22D00	·SCREW	4	
8	59121-18410	·BLEEDER	2	
9	55156-66310	·CAP, BLEEDER	2	
10	09103-08359	BOLT	4	

FIG.54

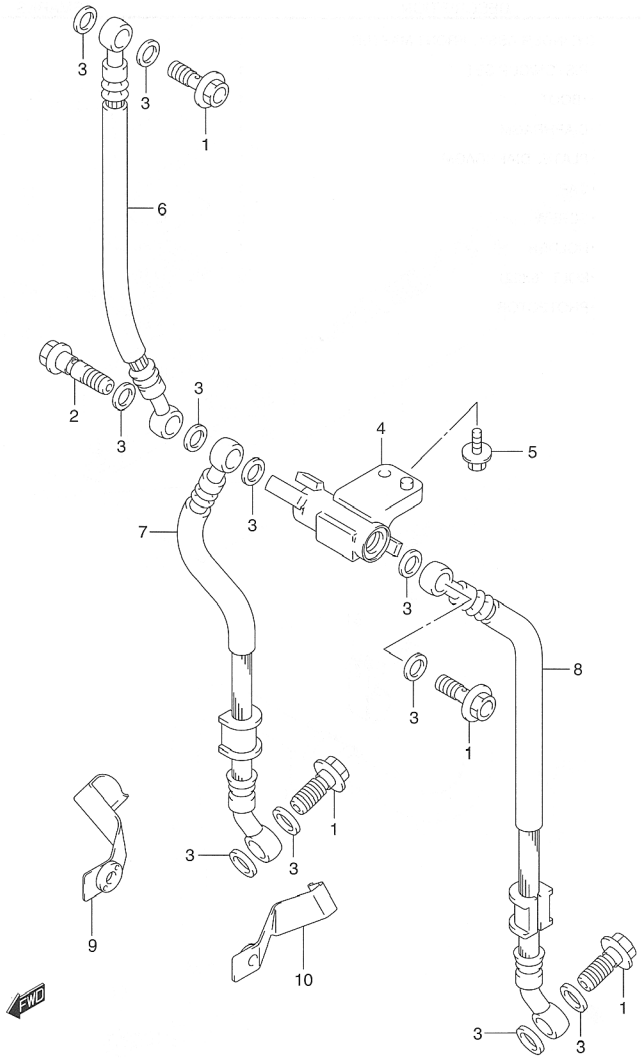

FIG.54 (I-4) FRONT BRAKE HOSE

REF NO.	PART NO.	DESCRIPTION	Q'TY	REMARKS
1	09360-10042	BOLT (10X1.25X22)	4	
2	09360-10044	BOLT (10X1.25X36)	1	JOINT
3	09161-10009	WASHER (10X15X1.5)	11	
4	59491-17E10	JOINT, FRONT BRAKE HOSE	1	
5	01550-06163	BOLT	1	
6	59480-42F00	HOSE, FRONT BLAKE NO.1	1	
7	59240-42F00	HOSE, FRONT BLAKE NO.2, R	1	
8	59440-42F00	HOSE, FRONT BLAKE NO.2, L	1	
9	59260-42F00	CLAMP, FRONT BRAKE HOSE NO.2,	1	
10	59270-42F00	CLAMP, FRONT BRAKE HOSE NO.2,	1	

4

FIG.55

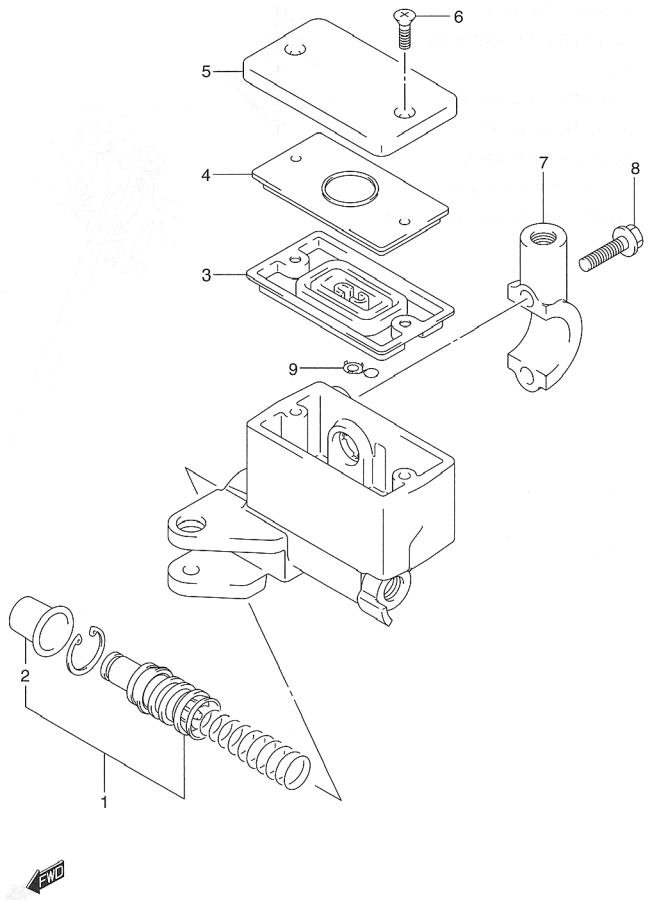

FIG.55 (I-5) FRONT MASTER CYLINDER

REF NO.	PART NO.	DESCRIPTION	Q'TY	REMARKS
	59600-42F00	CYLINDER ASSY, FRONT MASTER	1	
1	59600-45860	·PISTON/CUP SET	1	
2	59666-44300	··BOOT	1	
3	59667-49460	·DIAPHRAGM	1	
4	59668-41C00	·PLATE, DIAPHRAGM	1	
5	59669-41C00	·CAP	1	
6	69689-49300	·SCREW	2	
7	59671-32F00	·HOLDER	1	
8	59675-02FA0	·BOLT (6X22)	2	
9	59664-32F00	·PROTECTOR	1	

FIG.56

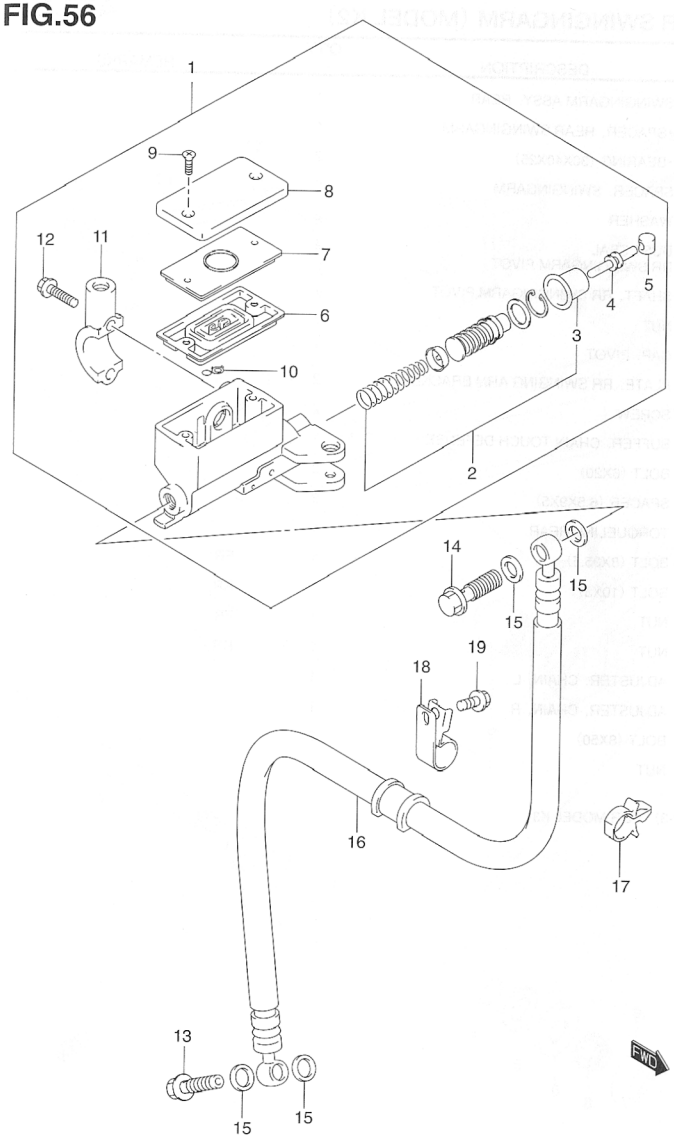

FIG.56 (I-6) CLUTCH MASTER CYLINDER

REF NO.	PART NO.	DESCRIPTION	Q'TY	REMARKS
1	59800-32F00	CYLINDER ASSY, CLITCH MASTER	1	
2	59800-08810	·PISTON & CUP SET	1	
3	59666-44300	··BOOT	1	
4	59871-38A00	·PUSH ROD	1	
5	59892-08A00	·BUSH	1	
6	59667-49460	·DIAPHRAGM	1	
7	59668-41C00	·PLATE, DIAPHRAGM	1	
8	59669-41C00	·CAP	1	
9	69689-49300	·SCREW	2	
10	59664-32F00	·PROTECTOR	1	
11	59671-32F00	·HOLDER	1	
12	59675-02FA0	·BOLT (6X22)	2	
13	09360-10041	BOLT (10X1.00X22)	1	
14	09360-10042	BOLT (10X1.25X22)	1	
15	09161-10009	WASHER, (10X15X1.5)	4	
16	59910-42F00	HOSE, CLUTCH	1	
17	09403-14304	CLAMP	1	
18	59268-45D00	CLAMP, FRONT BRAKE HOSE, NO.2	1	
19	01547-06123	BOLT	1	

FIG.57

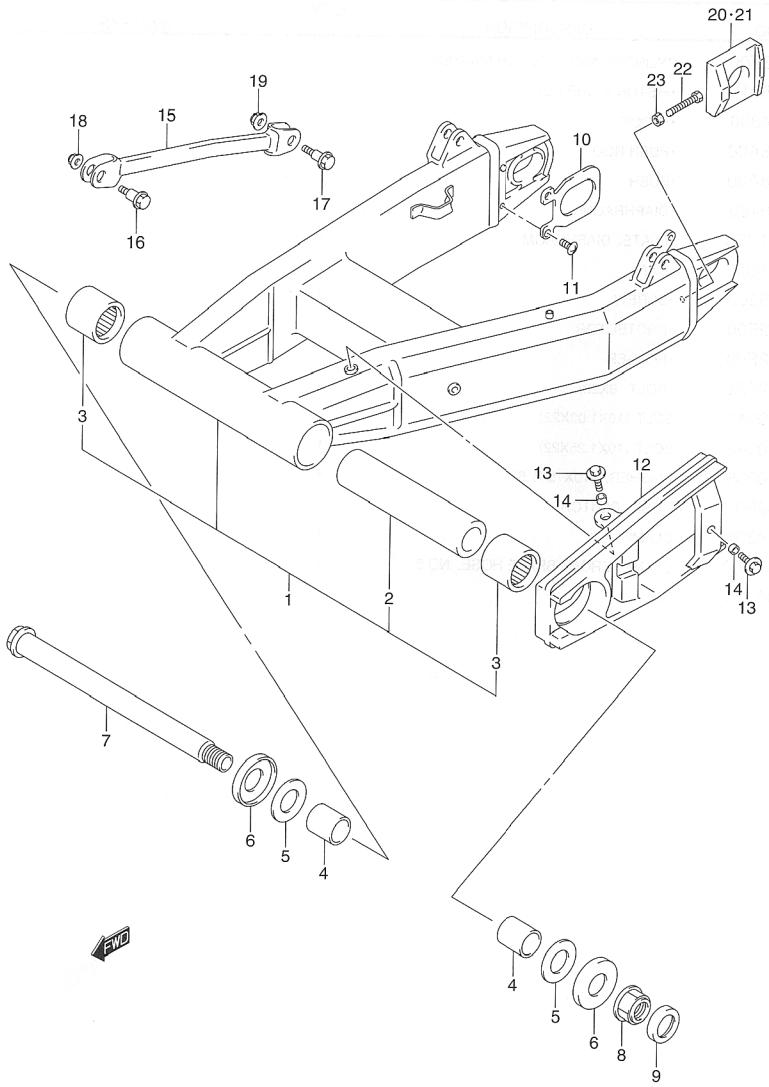

FIG.57 (J-2) REAR SWINGINGARM (MODEL K2)

REF NO.	PART NO.	DESCRIPTION	Q'TY	REMARKS
1	61000-42F00	SWINGINGARM ASSY, REAR	1	
2	61281-33E10	·SPACER, REAR SWINGINGARM	1	
3	09263-30040	·BEARING (30X40X25)	2	
4	61251-17E10	SPACER, SWINGINGARM	2	
5	08211-25481	WASHER	2	
6	61262-17E10	DUST SEAL RR SWINGINGARM PIVOT	2	
7	61211-42F00	SHAFT, RR SWINGINGARM PIVOT	1	
8	09159-20013	NUT	1	
9	61264-42F00	CAP, PIVOT	1	
10	61124-33E00	PLATE, RR SWINGING ARM BRACKET	2	
11	02142-06163	SCREW	2	
12	61273-42F00	BUFFER, CHAIN TOUCH DEFENSE	1	
13	09116-06152	BOLT (6X20)	3	
14	09180-06306	SPACER (6.5X9X5)	3	
15	64310-42F00	TORQUELINK REAR	1	
16	09111-08085	BOLT (8X35.5)	1	FR
17	09103-10019	BOLT (10X37)	1	RR
18	08319-31087	NUT	1	FR
19	08319-31107	NUT	1	RR
20	61445-33E00	ADJUSTER, CHAIN, L	1	
21	61446-33E10	ADJUSTER, CHAIN, R	1	
22	09100-08287	BOLT (8X50)	2	
23	08316-10083	NUT	2	

REFER TO FIG.57A (J-3) FOR MODEL K3

FIG.57A

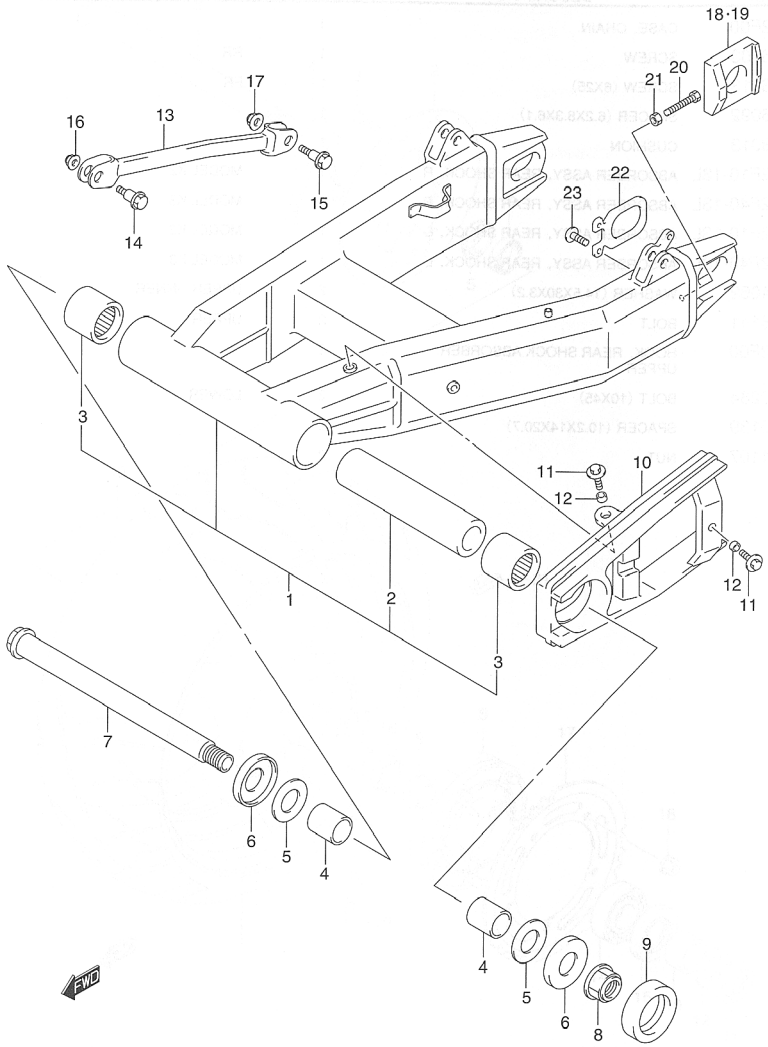

FIG.57A (J-3) REAR SWINGINGARM (MODEL K3)

REF NO.	PART NO.	DESCRIPTION	Q'TY	REMARKS
1	61000-42F10	SWINGINGARM ASSY, REAR	1	
2	61281-33E10	·SPACER, REAR SWINGINGARM	1	
3	09263-30040	·BEARING (30X40X25)	2	
4	61251-17E10	SPACER, SWINGINGARM	2	
5	08211-25481	WASHER	2	
6	61262-17E10	DUST SEAL RR SWINGINGARM PIVOT	2	
7	61211-42F00	SHAFT, RR SWINGINGARM PIVOT	1	
8	09159-20013	NUT	1	
9	61264-42F00	CAP, PIVOT	1	
10	61273-42F00	BUFFER, CHAIN TOUCH DEFENSE	1	
11	09116-06152	BOLT (6X20)	3	
12	09180-06306	SPACER (6.5X9X5)	3	
13	64310-42F00	TORQUELINK REAR	1	
14	09111-08085	BOLT (8X35.5)	1	FR
15	09103-10019	BOLT (10X37)	1	RR
16	08319-31087	NUT	1	FR
17	08319-31107	NUT	1	RR
18	61445-33E00	ADJUSTER, CHAIN, L	1	
19	61446-33E10	ADJUSTER, CHAIN, R	1	
20	09100-08287	BOLT (8X50)	2	
21	08316-10083	NUT	2	
22	61124-33E00	PLATE, REAR SWINGING ARM BRACKET	1	
23	02142-06163	SCREW	1	

4

FIG.58

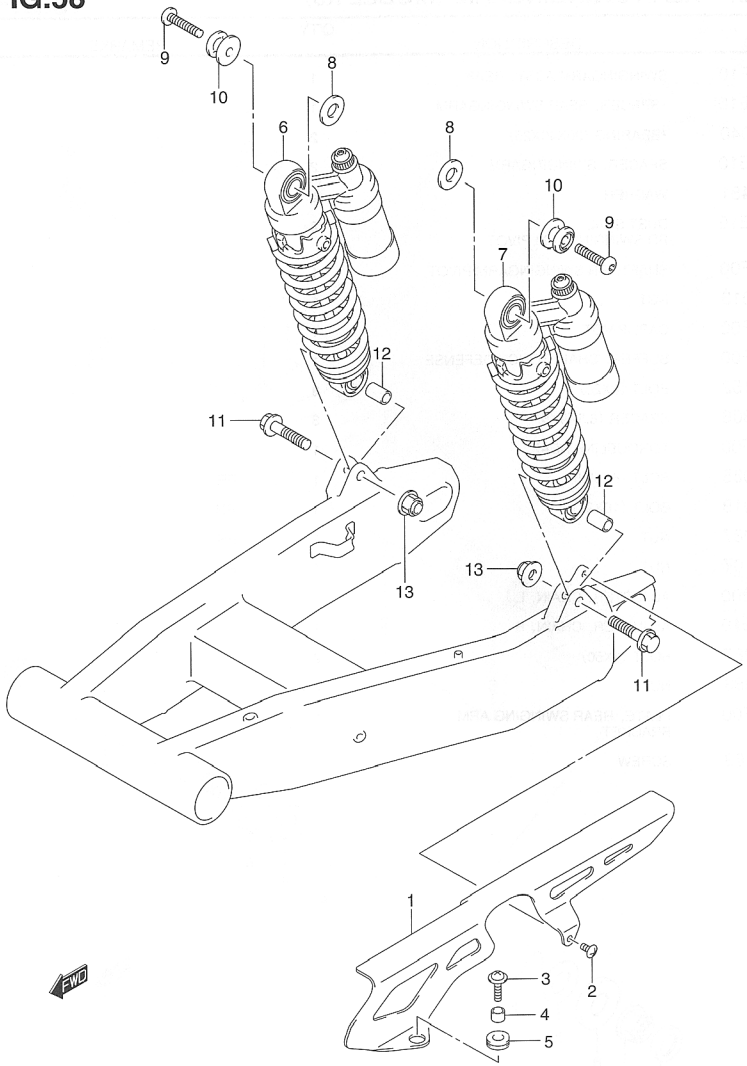

FIG.58 (J-4) REAR SHOCK ABSORBER

REF NO.	PART NO.	DESCRIPTION	Q'TY	REMARKS
1	61311-42F00	CASE, CHAIN	1	
2	02142-06103	SCREW	1	RR
3	09136-06113	SCREW (6X25)	1	FR
4	09180-06092	SPACER (6.2X8.3X6.1)	1	
5	09320-08013	CUSHION	1	
6-1	62103-42F10-13L	ABSORBER ASSY, REAR SHOCK, R	1	MODEL K2
6-2	62103-42F40-13L	ABSORBER ASSY, REAR SHOCK, R	1	MODEL K3
7-1	62104-42F10-13L	ABSORBER ASSY, REAR SHOCK, L	1	MODEL K2
7-2	62104-42F40-13L	ABSORBER ASSY, REAR SHOCK, L	1	MODEL K3
8	09160-14062	WASHER (14.5X30X3.2)	2	UPPER, INNER
9	09106-08141	BOLT	2	UPPER
10	62318-42F00	HOOK, REAR SHOCK ABSORBER UPPER	2	
11	09103-10284	BOLT (10X45)	2	LOWER
12	09180-10139	SPACER (10.2X14X20.7)	2	
13	08319-31107	NUT	2	

FIG.59

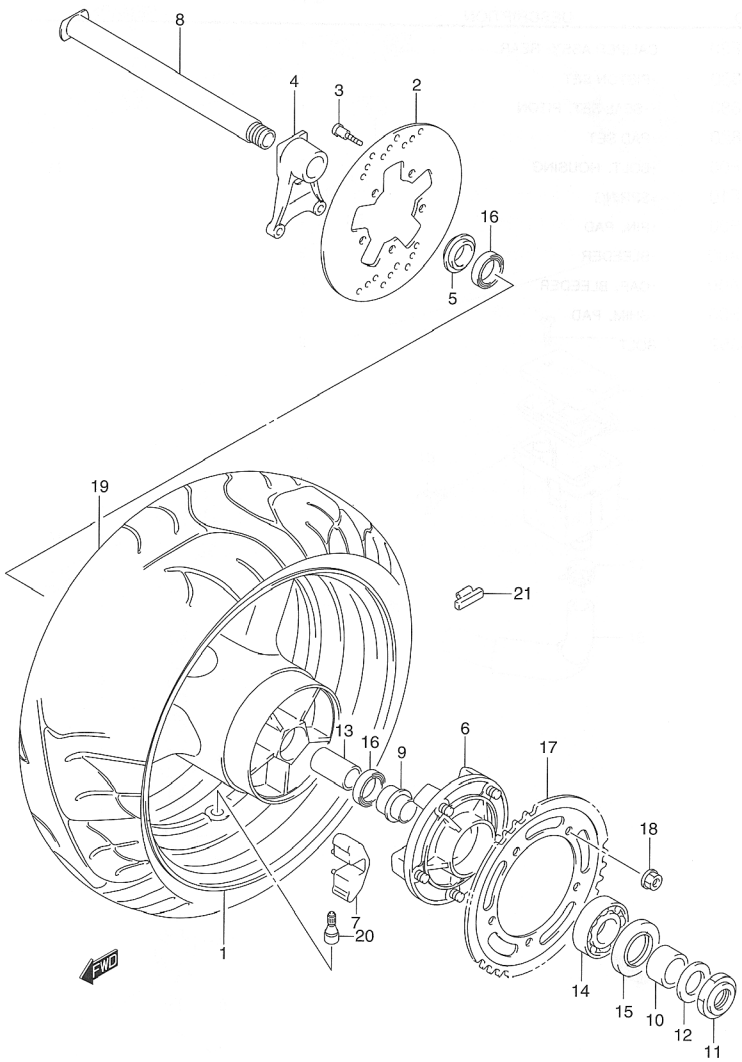

FIG.59 (J-5) REAR WHEEL

REF NO.	PART NO.	DESCRIPTION	Q'TY	REMARKS
1-1	64111-42F00-019	WHEEL, REAR, 17XMT6.00 (BLACK)	1	MODEL K2 FOR YC2, YM6 MODEL K3 FOR 1LF, YD8
1-2	64111-42F00-28W	WHEEL, REAR, 17XMT6.00 (WHITE)	1	MODEL K2/K3 FOR L99
2	69211-42F00	DISC, REAR BRAKE	1	
3	09106-08148	BOLT (8X33)	5	
4	69721-42F00	BRACKET, REAR CALIPER	1	
5	64740-42F00	SPACER, REAR AXEL, R	1	
6	64610-35F20	DRUM, REAR SPROCKET	1	
7	64651-35F00	ABSORBER, RR HUB SHOCK	5	
8	64711-42F00	AXEL, REAR	1	
9	64733-35F00	RETAINER, RR SPROCKET DRUM	1	
10	64751-42F00	SPACER, REAR AXLE, L	1	
11	09159-25001	NUT	1	
12	09160-25070	WASHER (25.2X42X3.2)	1	
13	64731-40F00	SPACER, RR HUB BEARING	1	
14	09262-32007	BEARING (32X65X17)	1	
15	09285-39001	SEAL, RR SPROCKET DRUM, OIL	1	
16	09262-28043	BEARING (28X52X12)	2	
17	64511-40F00	SPROCKET, REAR, NT:41—530	1	
18	08319-31128	NUT	5	
19	65110-42F00	TIRE, REAR, 190/50ZR17 (73W)	1	BRIDGESTONE
20	43130-24A00	VALVE ASSY, WHEEL RIM	1	
21-1	55411-00A00	BALANCER, WHEEL, 10G	0~3	
21-2	55412-00A01	BALANCER, WHEEL, 20G	0~3	

4

FIG.60

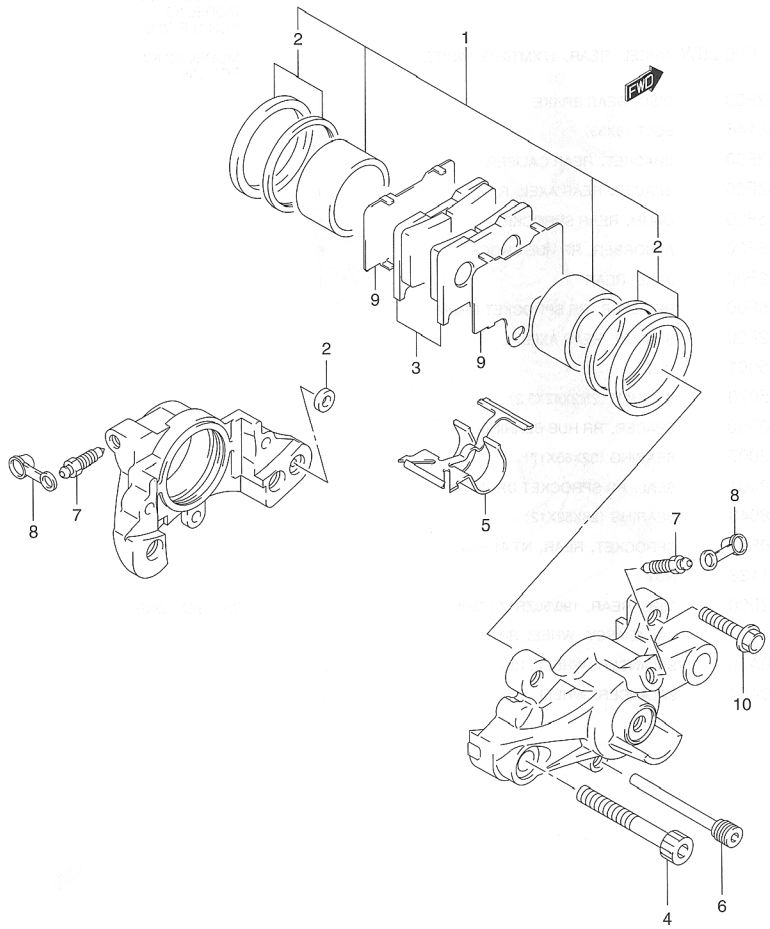

FIG.60 (J-6) REAR CALIPER

REF NO.	PART NO.	DESCRIPTION	Q'TY	REMARKS
	69100-40F20	CALIPER ASSY, REAR	1	
1	69100-40830	·PISTON SET	1	
2	69100-14880	··SEAL SET, PITON	1	
3	69100-40820	·PAD SET	1	
4	69145-40F00	·BOLT, HOUSING	2	
5	69315-40F10	·SPRING	1	
6	69141-40F00	·PIN, PAD	1	
7	59121-01A00	·BLEEDER	2	
8	59122-01A00	·CAP, BLEEDER	2	
9	69171-40F00	·SHIM, PAD	2	
10	09103-08359	BOLT	2	

FIG.61

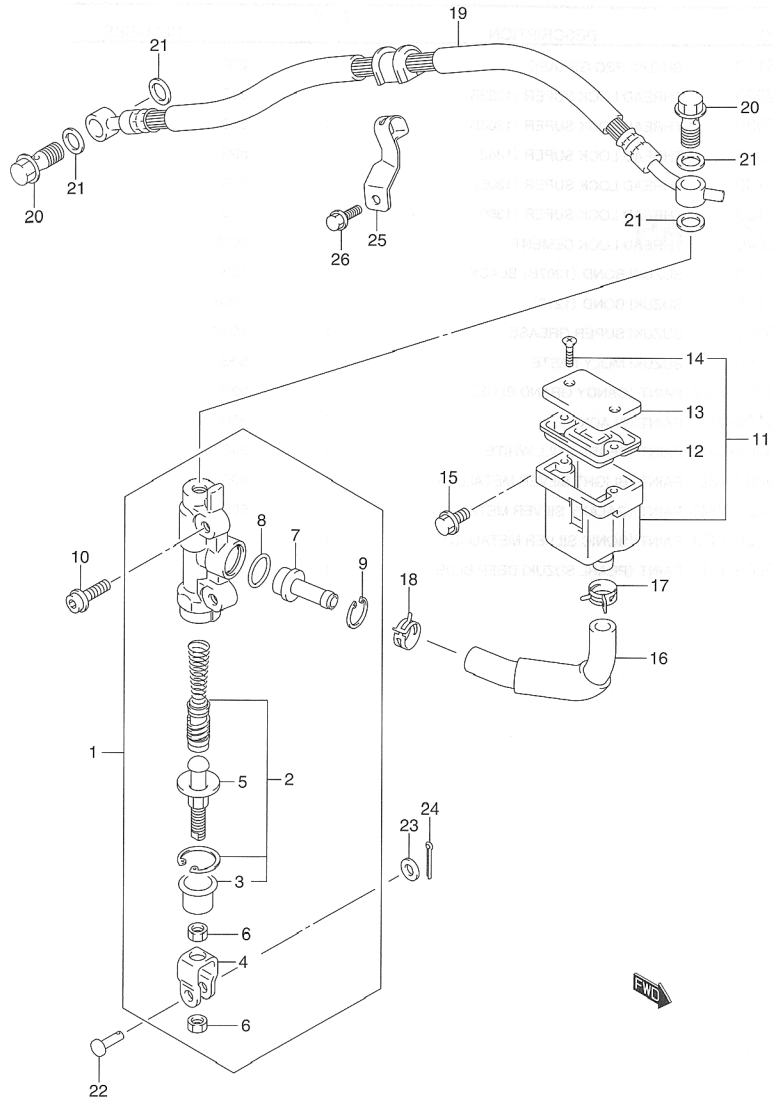

FIG.61 (J-7) REAR MASTER CYLINDER

REF NO.	PART NO.	DESCRIPTION	Q'TY	REMARKS
1	69600-42F00	CYLINDER ASSY, REAR MASTER	1	
2	69600-04820	·PISTON/CUP SET	1	
3	69691-00A00	··BOOT	1	
4	69692-27A30	·YOKE	1	
5	69670-00B21	·ROD, PUSH	1	
6	69693-05A00	·NUT	2	
7	69672-23E00	·CONNECTOR	1	
8	69686-34200	·O RING	1	
9	69674-00B20	·CIRCLIP	1	
10	09103-06212	BOLT	2	
11	69740-38B21	TANK ASSY, RESERVOIR	1	
12	59667-04700	·DIAPHRAGM	1	
13	59669-05D00	·CAP	1	
14	69689-04A00	·SCREW	2	
15	01550-06123	BOLT	1	
16	69730-42F00	HOSE, REAR RESERVOIR TANK	1	
17	09401-13417	CLIP	1	
18	09401-12404	CLIP	1	
19	69480-42F00	HOSE, REAR BRAKE	1	
20	09360-10042	BOLT (10X1.25X22)	2	
21	09161-10009	WASHER (10X15X1.5)	4	
22	09200-06037	PIN	1	
23	08322-01063	WASHER	1	
24	04111-20158	PIN, COTTER	1	
25	69268-42F00	CLAMP, REAR BRAKE HOSE	1	
26	01547-06163	BOLT	1	

FIG.62

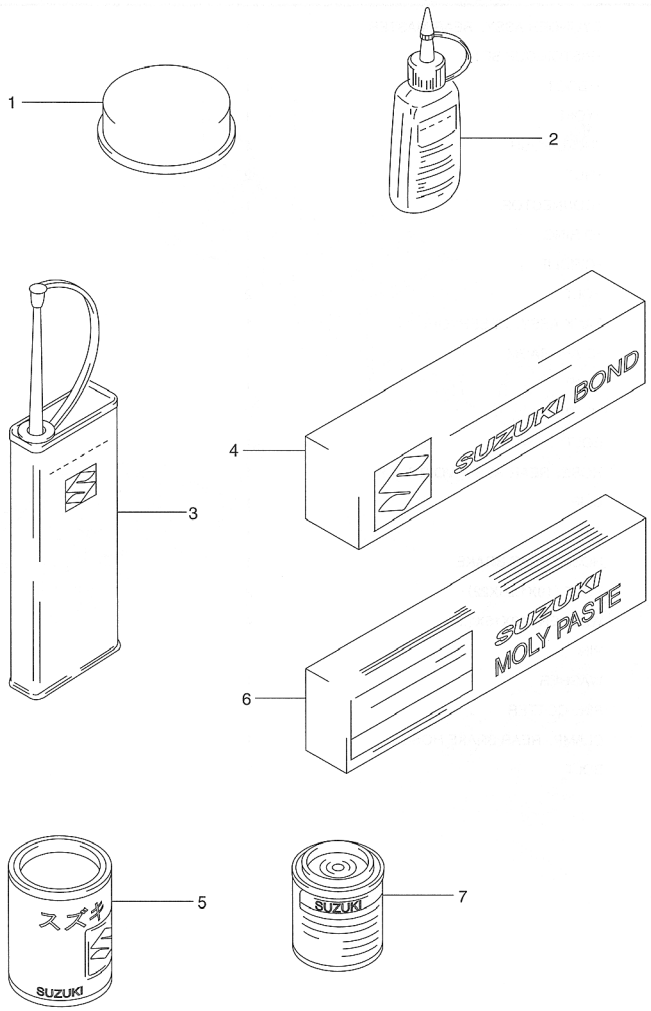

FIG.62 (J-8) OPTIONAL

REF NO.	PART NO.	DESCRIPTION	Q'TY	REMARKS
1	99000-25110	SUZUKI PBC GREASE	1	20G
2-1	99000-32020	THREAD LOCK SUPER (1333B)	1	50G
2-2	99000-32030	THREAD LOCK SUPER (1303B)	1	50G
2-3	99000-32050	THREAD LOCK SUPER (1342)	1	50G
2-4	99000-32100	THREAD LOCK SUPER (1305)	1	50G
2-5	99000-32130	THREAD LOCK SUPER (1360)	1	50G
3	99000-32040	THREAD LOCK CEMENT	1	200G
4-1	99000-31140	SUZUKI BOND (1207B) BLACK	1	100G
4-2	99000-31110	SUZUKI BOND (1215)	1	100G
5	99000-25030	SUZUKI SUPER GREASE	1	150G
6	99000-25140	SUZUKI MOLY PASTE	1	50G
7-1	99000-10209-YC2	PAINT (CANDY GRAND BLUE)	1	90G
7-2	99000-10109-019	PAINT (BLACK)	1	90G
7-3	99000-10209-0JW	PAINT (PEARL STILL WHITE)	1	90G
7-4	99000-10209-13L	PAINT (BLIGHT SILVER METALLIC)	1	90G
7-5	99000-10209-YM6	PAINT (GALAXY SILVER METALLIC)	1	90G
7-6	99000-10209-YD8	PAINT (SONIC SILVER METALLIC)	1	90G
7-7	99000-10209-1LF	PAINT (PEARL SUZUKI DEEP BLUE)	1	90G

PARTS NUMBER INDEX

5

PART NO.	FIG.NO.-REF.NO.
10000	
11100-42F00	3-1
11115-18D72	3-2
11131-27A00	3-11
11134-42F00	3-12
11138-42F00	3-10
11141-42F00	1-2
	3-6
11171-42F00	2-1
11173-42F01	1-3
	2-2
11182-35F00	1-4
	2-9
11211-42F00-0F0	4-1
11241-42F00	1-5
	4-2
11281-42F00	5-39
11282-42F00	4-6
11301-42810	5-1
11319-33E50	5-2
11323-42F00	5-26
11328-42F01	4-9
11330-42F00	2-10
11340-42F00	6-1
11342-42F00	6-8
11343-42F00	6-10
11351-42F00	6-15
11360-42F00	6-23
11362-42F00	6-26
11371-42F00	6-20
11381-42F00	6-11
11390-42F00	5-25
11401-42811	1-1
11482-42F00	1-6
	6-2
11483-42F00	1-7
	6-16
11484-42F01	1-8
	2-11
11489-42F00	1-9
	7-2
11491-42F00	1-10
	6-12
11511-42F00	7-1
11681-06B00	5-29
11971-12C51	6-6

PART NO.	FIG.NO.-REF.NO.
11971-33210	6-1A
12000-42810	9-3
12111-42F00-0F0	9-8
12140-42F00	9-9
12151-07D00	9-10
12160-42F00	9-1
12164-46E01-0A0	9-2
12164-46E01-0B0	9-2
12164-46E01-0C0	9-2
12164-46E01-0D0	9-2
12228-24F00-0A0	5-28
	9-6
12228-24F00-0B0	5-28
	9-6
12228-24F00-0C0	5-28
	9-6
12228-24F00-0D0	5-27
	5-28
	9-5
	9-6
12228-24F00-0E0	5-28
	9-6
12228-24F00-0F0	5-28
	9-6
12229-24F00-0A0	9-7
12229-24F00-0B0	9-7
12229-24F00-0C0	9-7
12229-24F00-0D0	9-7
12600-42810	10-3
12611-42F00	10-1
12650-42F00-0F0	11-1
12654-24F00-0F0	11-2
12666-24F00	11-3
12681-26D00	11-10
12686-24F00	11-4
12710-42F00	12-1
12720-42F00	12-4
12741-42F00	12-2
	12-5
12760-42F00	13-1
12771-42F00	13-2
12782-42F00	13-5
12800-05820	12-16
12810-42F00	13-3
12814-34200	13-4
12830-35F00	13-8
12831-35F00	13-10
12836-42F00	13-11
12837-35F00	1-11
	13-13

PART NO.	FIG.NO.-REF.NO.
12839-35F00	13-9
12891-17E00	12-7
12892-05C00-120	12-15
12892-05C00-125	12-15
12892-05C00-130	12-15
12892-05C00-135	12-15
12892-05C00-140	12-15
12892-05C00-145	12-15
12892-05C00-150	12-15
12892-05C00-155	12-15
12892-05C00-160	12-15
12892-05C00-165	12-15
12892-05C00-170	12-15
12892-05C00-175	12-15
12892-05C00-180	12-15
12892-05C00-185	12-15
12892-05C00-190	12-15
12892-05C00-195	12-15
12892-05C00-200	12-15
12892-05C00-205	12-15
12892-05C00-210	12-15
12892-05C00-215	12-15
12892-05C00-220	12-15
12911-42F00	12-8
12912-42F00	12-9
12920-13E00	12-10
12931-13E00	12-11
12932-32C00	12-13
12933-39E00	12-12
13101-42F00	3-17
13102-42F00	3-18
13103-42F00	3-19
13104-42F00	3-20
13267-42F00	14-21
	14A-21
13267-44B00	14-10
	14A-10
13268-37420	14-13
	14A-13
13268-42F00	14-22
	14A-22
13268-96110	14-3
	14A-3
13270-42F00	14-12
	14A-12
13271-44B00	14-1
	14A-1
13274-84000	15-9
	15A-9
13405-42F00	14-

PART NO.	FIG.NO.-REF.NO.
13405-42F00	14A-
13431-42F00	15-6
13431-42F10	15A-6
13432-37100	14-11
	14A-11
13432-42F00	15-8
13432-42F10	15A-8
13471-02FA0	15-15
	15A-15
13477-39F00	14-8
	14A-8
13543-39F00	14-6
	14A-6
13548-42F00	14-2
	14A-2
13580-26F00	14-5
	14A-5
13580-42F00	14-16
	14A-16
13586-13626	14-17
	14A-17
13601-47A00	14-9
	14A-9
13602-05108	14-24
	14A-24
13602-42F00	15-4
	15A-4
13602-42F10	15-7
	15A-7
13603-05108	14-23
	14A-23
13605-39F00	14-4
	14A-4
13607-39F00	14-20
	14A-20
13612-34E00	14-15
	14A-15
13614-39F00	14-18
	14A-18
13650-42F00	3-26
13650-56B00	16-14
13652-42F00	3-26A
13672-33E00	15-1
	15A-1
13673-39F20	14-7
	14A-7
13681-39F00-250	15-10
	15-11
	15-12
	15-13

PART NO.	FIG.NO.-REF.NO.
13681-39F00-250	15-14
	15A-10
	15A-11
	15A-12
	15A-13
	15A-14
13700-42F00	16-1
13780-42F00	16-2
13853-42F00	16-4
13870-21458	16-8
13881-42F00	16-6
14150-42F00	17-1
14160-42F00	17-2
14170-42F00	17-3
14180-42F00	17-4
14181-46E00	1-12
	17-9
14182-42F00	17-5
14210-42F00	17-6
14310-42F00	17-24
14310-42F10	17-24
14340-42F00	17-25
14340-42F10	17-25
14459-42F10	17-13A
14771-02F00	17-13
14771-32E00	17-7
14771-42F10	17-13
14780-42F00	17-15
14790-42F00	17-16
15100-42F01	19-1
15111-35F00	19-4
15112-42F00	19-5
15113-35F00	19-7
15114-35F00	19-6
15115-35F00	19-8
15116-35F00	19-9
15171-35F00	19-11
15172-35F00	19-12
15173-35F00	19-13
15182-24FA0	19-10
15201-35F00	19-14
15410-42F00	19-2
15420-35F01	19-3
15710-65D00	15-2
	15A-2
15716-65DT0	15-3
	15A-3
15731-42F00	15-5
15731-42F10	15A-5
15810-42F00	19-15

PART NO.	FIG.NO.-REF.NO.
16321-42F00	8-8
16331-26D01-0B0	8-9
16400-42F00	8-2
16400-42F10	8-2
16440-42F00	7-20
16442-34301	7-21
16460-42F00	18-6
16460-42F10	18-6
16470-42F00	18-7
16470-42F10	18-7
16481-42F00	8-13
16490-42F00	18-8
16491-27A01	1-13
	8-3
16510-34E00	8-1
16520-42F00	7-11
16525-42F00	7-14
16526-42F00	7-15
16527-42F00	1-14
	7-16
16529-27A01	1-15
	7-17
16530-42F00	8-15
16600-42F00	18-1
16621-42F00	18-14
16628-27A00	18-2
17680-39D00	18-16
17800-42F00	18-19
17810-42F00	18-20
17811-42F10	18-20A
18450-42F00	20-1
18461-42F00	20-8
18471-42F00	20-9
18510-35F00	20-7
18516-35F00	20-10
18517-35F00	20-11
18531-42F00	20-5
18591-42F00	16-12
	16-13
18595-42F10	16-12A
	16-13A
18610-42F01	20-12
18618-42F00	20-14
18711-42F00	20-2
20000	

PART NO.	FIG.NO.-REF.NO.
21200-42820	21-1
21410-42F00	21-4
21413-42F00	21-7
21441-42F00	21-9
21441-42F10	21-10
21442-42F00	21-11
21451-02F10	21-12
21462-02F10	21-13
21471-02F10	21-10B
21472-02F10	21-10A
21481-42F00	21-6
21482-13E00	21-8
21610-02F12	21-5
23110-38B00	21-17
23111-42F00	21-18
23117-46E00	21-19
23121-31E00	21-21
23160-06B02	21-22
23163-06B00	21-23
23164-05A00	21-24
24120-24F10	22-1
24131-24F10	22-17
24221-24F00	22-2
24231-24F20	22-3
24251-24F20	22-4
24252-24F10	22-5
24261-24F20	22-6
24262-24F10	22-7
24311-24F10	22-18
24312-24F10	22-19
24321-24F00	22-20
24322-24F10	22-21
24331-24F00	22-22
24332-24F10	22-23
24341-24F00	22-24
24351-24F20	22-25
24361-24F20	22-26
25211-24F10	23-1
25231-24F10	23-2
25310-42F00	23-5
25312-42F00	23-7
25350-35F00	23-13
25355-35F01	23-14
25381-42F00	23-8
25411-27A00	23-3
25411-38B01	23-4
25510-42F00	23-17
25512-13E11	23-18
25520-19C02	23-28
25520-42E00	23-29A

PART NO.	FIG.NO.-REF.NO.
25525-07A10	23-30
25526-47000	23-29
	23-29B
	23-32
25600-42F00	23-31
25617-03F00	23-34
25652-16500	23-33
25671-35F00	23-19
27510-21A40	22-40
27531-42F00	22-41
27600-24F10-116	22-42
27620-24F00	22-43
30000	
31100-26D10	24-1
31130-38B00	24-3
31132-38B00	24-5
31135-38B00	24-6
31143-49040	24-4
31150-26D00	24-7
31156-48B00	24-8
31170-19B10	24-9
31264-31300	24-10
31280-26D00	24-11
31310-40C02	24-2
31401-42F00	25-2
31402-42F00	25-1
31800-26E00	27-1
31861-26E00	27-2
31861-48B10	28-5
32371-33E00	25-3
32800-42F00	27-5
32920-42F11	27-18
32920-42F21	27-18
33110-31F00	26-1
33120-42F00	26-2
33220-84G00	26-3
33221-42F00	26-3A
33410-42F00	27-7
33414-42F00	27-8
33420-42F00	27-9
33424-42F00	27-10
33510-48B10	27-14
33541-23E01	27-15

PART NO.	FIG.NO.-REF.NO.
33542-38B00	27-16
33543-48B00	27-17
33610-26D10	28-1
33624-38400	28-7
33651-37000	27-19A
	28-2
33652-07D00	27-19
33652-35400	28-3
33652-42F00	27-20
33810-42F00	28-4
33820-42F00	28-6
33860-42F00	28-8
33960-02F00	27-21
34111-31F10	29-7
34120-42F00	29-1
34120-42F10	29-1
34124-31F10	29-3
34149-31F10	29-12
34150-42F00	29-2
34152-42F00	29-11
34165-42F00	29-21
34177-42F00	29-19
34179-21F00	29-18
34183-31F10	29-6
34188-42F00	29-4
34189-32B00	29-9
34193-42F00	29-5
34198-19F20	29-17
34383-31F10	29-20
34810-42F00	40-23
	40A-23
34825-31F00	40-24
	40A-24
34950-42F00	29-8
34955-13E00	29-10
34981-35F00	29-23
34990-35F00	29-24
35100-19F00-999	31-1
35100-19F50-999	30-1
35100-19F60-999	30-1
35111-19F00	30-2
	31-2
35121-19F00	31-3
35121-19F50	30-3
35121-19F60	30-3
35135-45900	30-4
	31-4
35151-19F00	30-5
	31-5
35152-45600	30-6

PART NO.	FIG.NO.-REF.NO.
35152-45600	31-6
35154-13F00	30-7
	31-7
35174-19F00	30-8
	31-8
35181-19F00	30-9
	31-9
35601-03FC0	33-1
35601-20F30	33A-1
35602-03FC0	33-2
35602-20F30	33A-2
35603-33E20	32-7
	33-7
	33A-7
35603-33E30	32-2
35604-33E20	32-8
	33-8
	33A-8
35604-33E30	32-1
35610-33E00	32-3
	32-9
	33-3
	33-9
	33A-3
	33A-9
35695-17C00	32-12
	33-12
	33A-12
35710-42F00	34-1
35718-35F00	34-2
36118-19F00	30-10
36610-42F10	35-1
36610-42F60	35-1
36610-42F70	35-1
36852-42F00	35-20
36859-42F00	35-4
37000-35870	35-9
37000-35880	35-7
37000-42820	35-9
37000-42830	35-7
37100-35F20	35-8
37100-35F30	35-10
37100-42F00	35-8
37100-42F10	35-10
37146-33E00	35-21
37200-42F10	36-1
37200-42F30	36-5
37200-42F50	36-3
37400-42F10	36-8
37730-35F10	23-40

PART NO.	FIG.NO.-REF.NO.
37740-24A00	35-12
37820-33D10	5-41
37840-35F00	35-14
38501-42F00	35-16
38502-42F00	35-17
38610-03F00	32-15
	33-15
	33A-15
38740-24X50	35-19
40000	
41100-42F00-019	37-1
41100-42F01-019	37-1
41899-42F00	37-2
41899-42F10	37-2
41921-42F00	37-7
41931-42F00	37-10
42100-42F00	38-1
42310-42F00	38-9
42310-42F01	38-9
42321-03FK0	38-13
42941-42F00	37-11
43111-42F00	38-14
43130-24A00	52-10
	59-20
43511-42F00	39-7
43521-42F00	39-8
43530-42F00	39-1
43530-42F10	39-1
43541-42F00	39-2
43541-42F10	39-2
43550-31300	39-10
43561-24F00	38-15
43576-07D01	39-9
43600-42F00	39-17
43612-31300	39-19
43632-45501	39-20
43700-42F00	39-18
43811-42F00	39-23
43811-42F10	39-23
43816-42F00	39-29
43821-42F00	39-24
43821-42F10	39-24
43826-42F00	39-30
44100-42FA0-L99	40-1
44100-42F00-YC2	40-5

PART NO.	FIG.NO.-REF.NO.
44100-42F00-YM6	40-5
44128-42F00	40-21
44128-42F10	40A-21
44201-33820	40-8
	40A-8
44423-42F00	40-20
	40A-20
44511-42F00	40-10
	40A-10
44512-42E00	40-17
	40A-17
44541-42F00	40-11
	40A-11
44542-35F00	40-13
	40A-13
44550-42F00	40-14
	40A-14
45100-42F10-GF6	48-1
45100-42F30-GF6	48-1
45149-31300	48-2
45149-42F00	48-2
45220-20A01	48-3
45280-38400	48-8
45288-14F00	48-4
45289-11F00	48-6
45500-42FA0-0JW	49-5
45500-42FB0-0JW	49A-6
45500-42F00-YC2	49-1
45500-42F00-YM6	49-1
45500-42F01-YD8	49A-1
45500-42F01-1LF	49A-1
45510-42F00-YC2	49-2
45510-42F00-YD8	49A-2
45510-42F00-YM6	49-2
45510-42F00-0JW	49-6
	49A-7
45510-42F00-1LF	49A-2
45515-42F00	49-4
	49-11
	49A-4
	49A-12
45516-42F00	49A-5
	49A-13
46110-42F00	37-12
46120-42F00	37-13
46211-32F00-YC2	49-18
46211-32F00-YD8	49A-20
46211-32F00-YM6	49-18
46211-32F00-0JW	49-18
	49A-20

5

PART NO.	FIG.NO.-REF.NO.
46211-32F00-1LF	49A-20
46316-31F00	49-21
	49A-23
46317-31F00	49-22
	49A-24
47110-42FA0-84N	41-1
47110-42FB0-JJ8	41A-1
47110-42F00-84N	41-7
47110-42F10-JJ8	41A-7
47117-42F00	41-18
	41A-18
47119-42F00	41-17
	41A-17
47121-42F00-291	41-4
	41-12
	41A-4
	41A-12
47210-42FA0-84N	41-2
47210-42FB0-JJ8	41A-2
47210-42F00-84N	41-8
47210-42F10-JJ8	41A-8
47221-42F00-291	41-5
	41-13
	41A-5
	41A-13
47410-42F00	46-2
47411-42F10	46-2
49100-42FB0-L99	40A-1
49100-42F00-YD8	40A-5
49100-42F00-1LF	40A-5
50000	
51103-42F10	50-
51103-42F40	50-
51104-42F10	50-
51104-42F40	50-
51110-42F00	50-11
51110-42F30	50-11
51117-27C00	50-21
51121-37F00	50-20
51130-42F00	50-1
51140-42F00	50-2
51146-42F00	50-12
	50-12
51147-40C00	50-3
51148-40300	50-4
51153-42F00	50-8

PART NO.	FIG.NO.-REF.NO.
51156-27C00	50-9
51158-27C00	50-7
51166-26F00	51-6
51166-42F00	50-18
51167-37F00	50-6
51171-42F00	50-13
51172-42F00	50-14
51173-42F00	50-10
51176-42F00	50-15
51195-42F00	50-5
51201-42F00	50-19
51226-42F00	51-14
51311-42F00	51-5
51328-42F00	51-4
	51-6
51351-42F00	50-16
51352-13A60	50-17
51353-24B00	51-8
51354-42F00	51-15
51355-42F00	51-17
51356-42F00	51-7
51381-48E10	51-10
51410-42F00	51-1
51410-42F30	51-1
51482-26F00	51-27
51530-42F00	51-22
51553-42F00	51-23
51631-31F00	51-21
51643-40502	51-20
51644-12C00	51-2
51810-42F00	42-1
51814-42F00	42-2
51825-41F00	42-5
51837-25D00	42-4
51851-42F00	51-24
51858-42F00	42-3
51858-42F01	42-3
51861-42F00	51-25
53111-42F00-YC2	42-12
53111-42F00-YD8	42-12
53111-42F00-YM6	42-12
53111-42F00-1LF	42-12
	42-12
53120-42F00	42-14
54111-33E10-019	52-1
54111-33E10-28W	52-1
54711-42F00	52-4
54712-33E00	52-5
54731-33E10	52-6
55110-42F00	52-9

PART NO.	FIG.NO.-REF.NO.
55156-66310	53-9
55411-00A00	52-11
	59-21
55412-00A01	52-11
	59-21
56110-42F20	43-1
56110-42F30	43-1
56111-42F00	43-1
56111-42F10	43-1
56200-32830	43-9
56200-42810	43-2
56211-42F00	51-9
56221-42F00	51-13
56245-42F00	51-16
56272-19D00	43-4
56272-42F00	43-7
56276-17D00	43-5
56500-03F80	43-11
56524-28600	43-13
56600-03F80	43-12
57100-42F00	44-2
57110-45D02	44-1
57211-22D01	44-8
57300-33E01	44-3
57431-17C00	44-4
	44-10
57460-17C00	44-6
57465-17C00	44-7
57500-24F00	44-9
57560-02FA0	44-12
58300-42F00	43-14
59100-40F10	53-
59100-40F20	53-
59100-40820	53-1
59100-40830	53-2
59100-40850	53-1
59121-01A00	21-25
	60-7
59121-18410	53-8
59122-01A00	21-26
	60-8
59141-40F00	53-4
59145-33E10	53-5
59151-46E00	53-6
59153-22D00	53-7
59210-33E90	52-7
59240-42F00	54-7
59260-42F00	54-9
59268-45D00	56-18
59270-42F00	54-10

PART NO.	FIG.NO.-REF.NO.
59300-40F10	53-
59300-40F20	53-
59301-33890	53-3
59440-42F00	54-8
59480-42F00	54-6
59491-17E10	54-4
59600-42F00	55-
59600-45860	55-1
59664-32F00	55-9
	56-10
59666-44300	55-2
	56-3
59667-04700	61-12
59667-49460	55-3
	56-6
59668-41C00	55-4
	56-7
59669-05D00	61-13
59669-41C00	55-5
	56-8
59671-32F00	55-7
	56-11
59675-02FA0	55-8
	56-12
59800-08810	56-2
59800-32F00	56-1
59871-38A00	56-4
59892-08A00	56-5
59910-42F00	56-16
60000	
61000-42F00	57-1
61000-42F10	57A-1
61124-33E00	57-10
	57A-22
61211-42F00	57-7
	57A-7
61251-17E10	57-4
	57A-4
61262-17E10	57-6
	57A-6
61264-42F00	57-9
	57A-9
61273-42F00	57-12
	57A-10
61281-33E10	57-2

PART NO.	FIG.NO.-REF.NO.
61281-33E10	57A-2
61311-42F00	58-1
61445-33E00	57-20
	57A-18
61446-33E10	57-21
	57A-19
62103-42F10-13L	58-6
62103-42F40-13L	58-6
62104-42F10-13L	58-7
62104-42F40-13L	58-7
62318-42F00	58-10
63111-42F00	45-1
63466-42F00	45-3
64111-42F00-019	59-1
64111-42F00-28W	59-1
64310-42F00	57-15
	57A-13
64511-40F00	59-17
64610-35F20	59-6
64651-35F00	59-7
64711-42F00	59-8
64731-40F00	59-13
64733-35F00	59-9
64740-42F00	59-5
64751-42F00	59-10
65110-42F00	59-19
68110-42F00-GJ8	40-2
68110-42F10-JM4	40A-2
68110-42F20-1LE	40A-3
68111-42F00	40-6
	40A-6
68111-47C10-0JW	40A-4
68115-42F00-GJ9	40-3
68121-42F00	40-7
	40A-7
68131-42F00	41-9
	41A-9
68131-42F10-YD8	41-3
	41-11
68131-42F20-JM5	41A-3
	41A-11
68141-42F00	41-10
	41A-10
68161-42F00-GJ7	49-8
	49A-9
68165-42F00-M18	49-9
68165-42F10-G8Z	49A-10
68167-42F00-M18	49-10
68167-42F10-G8Z	49A-11
68181-32B20-YD8	40-4

PART NO.	FIG.NO.-REF.NO.
68280-04F00-YD8	49-3
	49A-3
68280-04F00-019	49-3
	49A-3
68280-04F00-1LF	49-7
	49A-8
68319-29FA0	47-1
68319-29FB0	47-1
68319-29FC0	47-1
68319-29F00	47-1
68319-29F20	47-1
68319-29F30	47-1
68319-29F40	47-1
68319-29F50	47-1
68319-29F70	47-1
68319-29F80	47-1
68319-29F90	47-1
68319-30F40	47-1
68319-30F90	47-1
68332-42F10	47-4
68391-42F40	47-2
68391-42F90	47-2
68623-17D00	47-3
68911-42FA0	47-2
68911-42FB0	47-2
68911-42FC0	47-2
68911-42F00	47-2
68911-42F20	47-2
68911-42F30	47-2
68911-42F40	47-2
68911-42F50	47-2
68911-42F70	47-2
68911-42F80	47-2
68911-42F90	47-2
69100-14880	60-2
69100-40F20	60-
69100-40820	60-3
69100-40830	60-1
69141-40F00	60-6
69145-40F00	60-4
69171-40F00	60-9
69211-42F00	59-2
69268-42F00	61-25
69315-40F10	60-5
69480-42F00	61-19
69600-04820	61-2
69600-42F00	61-1
69670-00B21	61-5
69672-23E00	61-7
69674-00B20	61-9

PART NO.	FIG.NO.-REF.NO.
69686-34200	61-8
69689-04A00	61-14
69689-49300	55-6
	56-9
69691-00A00	61-3
69692-27A30	61-4
69693-05A00	61-6
69721-42F00	59-4
69730-42F00	61-16
69740-38B21	61-11
80000	
86932-73060	47-3
90000	
92211-42F00	46-1
94583-05C10	42-15
95158-60D00	14-14
	14A-14
95700-14810	48-5
95700-42810	45-6
99000-10109-019	62-7
99000-10209-YC2	62-7
99000-10209-YD8	62-7
99000-10209-YM6	62-7
99000-10209-0JW	62-7
99000-10209-1LF	62-7
99000-10209-13L	62-7
99000-25030	62-5
99000-25110	62-1
99000-25140	62-6
99000-31110	62-4
99000-31140	62-4
99000-32020	62-2
99000-32030	62-2
99000-32040	62-3
99000-32050	62-2
99000-32100	62-2
99000-32130	62-2
99000-69471	12-17

PART NO.	FIG.NO.-REF.NO.
99011-42F50-SDE	47-5
99011-42F50-01A	47-5
99011-42F50-01F	47-5
99011-42F50-01K	47-5
99011-42F50-01W	47-5
99011-42F51-SDE	47-5
99011-42F51-01A	47-5
99011-42F51-01F	47-5
99011-42F51-01K	47-5
99011-42F51-01W	47-5
00000	
01500-06253	23-37
01500-06403	27-13
01547-06123	56-19
01547-06163	61-26
01547-06303	2-12
01547-06307	2-13
01547-06353	5-7
01547-06357	6-25
01547-06553	5-8
01547-06653	6-21
01550-06123	6-9
	13-7
	16-11
	40-15
	40A-15
	46-3
	61-15
01550-06163	18-9
	54-5
01550-06203	5-9
	7-19
	35-15
01550-06253	7-12
01550-06303	7-3
01550-06353	3-8
01550-06403	3-13
	7-4
01550-06503	7-5
01550-06603	7-13
01550-08123	35-18
01550-08163	37-9
	39-25
01550-08403	17-14
01550-08603	5-3
	5-10

PART NO.	FIG.NO.-REF.NO.
01550-08753	5-11
02112-05103	20-15
	26-5
02112-05253	36-10
02112-05453	36-2
	36-4
	36-9
02112-06103	21-20
02122-05123	39-21
02122-05163	39-22
02122-06163	3-23
02122-06203	45-7
02122-06303	48-7
02122-06503	43-10
02142-05103	34-4
02142-05123	16-3
	39-11
02142-05163	39-12
02142-06103	58-2
02142-06163	27-12
	57-11
	57A-23
02162-06203	27-6
03242-04123	32-4
	32-10
	33-4
	33-10
	33A-4
	33A-10
03512-04149	29-14
03541-05123	41-6
	41-14
	41A-6
	41A-14
04111-20158	61-24
04211-09129	8-7
	21-27
04211-09149	6-17
	6-22
04211-09189	6-3
04211-11189	3-7
04221-04089	9-4
	23-6
04221-07209	22-16
	22-38
06111-07004	39-28
07120-05123	29-25
07120-05163	23-44
07120-06123	3-27
	19-16

PART NO.	FIG.NO.-REF.NO.
07120-06123	40-25
	40A-25
	42-9
07120-06163	29-22
07120-06203	42-8
07120-06453	49-19
	49A-21
07120-06703	3-15
07120-08503	2-4
07130-05253	44-2
07130-06103	20-13
07130-06123	25-6
07130-06163	4-12
	18-13
	20-6
	26-4
07130-06203	11-11
	18-12
07130-06253	13-14
	21-28
	25-7
07130-08123	2-6
07130-08253	29-26
07130-08303	26-6
07130-10253	37-6
07130-10353	37-3
08143-62057	52-2
08211-06141	23-16
	23-26
08211-25481	57-5
	57A-5
08211-30405	22-39
08221-12205	8-10
08310-00057	29-15
08310-00103	32-14
	33-14
	33A-14
08316-10063	4-4
	44-5
	44-11
08316-10083	42-7
	57-23
	57A-21
08316-10103	5-38
	32-6
	33-6
	33A-6
08319-31063	37-16
08319-31087	57-18
	57A-16

PART NO.	FIG.NO.-REF.NO.
08319-31103	37-5
	38-5
08319-31107	51-18
	57-19
	57A-17
	58-13
08319-31128	59-18
08322-01043	45-5
08322-01063	3-14
	37-15
	61-23
08322-01083	15A-7A
	17-31
08322-01123	5-37
08331-31126	8-12
	23-39
08331-31146	23-27
08331-31186	38-17
08332-11063	39-16
	39-31
08361-25088	17-30
08361-35068	24-12
09100-08287	57-22
	57A-20
09100-12053	5-30
09101-10043	38-3
09103-06026	3-4
	13-6
09103-06130	11-12
09103-06212	6-13
	61-10
09103-06213	6-5
	6-18
09103-06214	42-13
09103-07001	12-3
	12-6
09103-08358	17-29
09103-08359	53-10
	60-10
09103-08365	17-8
09103-09005	5-4
09103-09009	5-5
09103-10019	57-17
	57A-15
09103-10146	5-31
09103-10284	58-11
09103-10328	3-28
09103-10335	5-32
09103-10336	5-33
09103-14022	25-4

PART NO.	FIG.NO.-REF.NO.
09106-05017	40-9
	40A-9
09106-06075	5-6
09106-06076	17-12
09106-06088	8-6
09106-06089	8-5
09106-07009	2-3
09106-08095	10-4
09106-08104	17-10
09106-08116	5-12
09106-08140	3-24
	37-8
09106-08141	58-9
09106-08147	39-4
09106-08148	52-8
	59-3
09108-06002	4-3
09108-10139	3-28A
09111-06041	23-15
09111-08085	57-16
	57A-14
09111-10058	38-12
09113-06001	45-2
09116-06152	57-13
	57A-11
09116-06171	18-3
09116-06172	40-19
	40A-19
09116-06187	27-13A
09116-08118	42-6
09118-08068	17-21
09125-05065	36-6
09127-06021	43-3
09128-06013	27-4
09128-06024	24-13
09132-03008	29-13
09136-06081	49-12
	49A-14
09136-06113	58-3
09136-06147	23-9
	23-10
09139-05038	30-13
	31-11
09139-06027	18-15
09139-06030	51-26
09139-06087	41-16
	41A-16
09139-06111	17-17
09139-06125	17-17
09139-08016	35-11

5

PART NO.	FIG.NO.-REF.NO.	PART NO.	FIG.NO.-REF.NO.	PART NO.	FIG.NO.-REF.NO.
09140-06011	23-38	09168-08029	3-25	09247-14036	7-7
09140-06020	23-35	09168-10007	4-8	09248-16012	5-20
09159-06024	43-8	09168-10031	3-9		7-9
09159-10020	5-34		5-15		7-23
09159-10069	3-28B	09168-12002	5-16	09250-05009	49-20
09159-10103	5-35	09168-12017	13-12		49A-22
09159-12054	5-36		16-15	09250-06011	51-12
09159-20004	22-44	09168-14002	7-8	09250-08012	37-4
09159-20013	57-8	09168-16002	5-17	09261-05006	8-11
	57A-8		7-10	09262-25006	23-11
09159-24010	21-14		7-22	09262-25061	52-2
09159-25001	59-11	09168-18009	18-17	09262-28043	59-16
09160-05013	29-16	09169-21001	11-7	09262-32007	59-14
09160-06028	17-20	09180-06092	58-4	09263-14027	23-22
09160-06130	43-6	09180-06195	27-11	09263-15003	21-30
09160-08145	17-11	09180-06271	40-18	09263-19015	11-5
09160-08147	17-26		40A-18	09263-20040	22-32
09160-10501	32-13	09180-06275	6-24A	09263-20085	22-10
	33-13	09180-06296	18-4	09263-25018	23-12
	33A-13	09180-06300	49-14	09263-30040	57-3
09160-12011	23-36		49A-16		57A-3
09160-14009	25-5	09180-06306	57-14	09263-35017	21-3
09160-14016	23-20		57A-12	09265-25019	51-19
09160-14062	58-8	09180-06307	6-24	09265-30020	51-3
09160-15045	21-29	09180-06325	17-19	09267-25009	51-19
09160-18022	38-16	09180-06331	17-19	09267-25012	22-11
09160-25009	22-45	09180-08149	39-15	09267-30010	51-3
09160-25037	21-2	09180-08152	17-22	09267-30011	22-33
09160-25056	21-15	09180-08168	42-10	09280-04004	5-21
09160-25070	59-12	09180-08199	49-16		5-22
09161-10009	54-3		49A-18	09280-08012	5-23
	56-15	09180-08216	17-27	09280-12012	1-17
	61-21	09180-10064	38-4		18-11
09161-11008	1-16	09180-10139	58-12	09280-14011	4-10
	2-5	09180-19014	11-6		5-40
09161-13004	39-5	09181-14195	23-21	09280-14015	11-8
09161-17002	39-6	09181-20251	22-30	09280-15003	1-18
09164-08015	51-11	09181-24005	22-31		18-10
09164-24006	21-16	09181-27014	22-9	09280-15007	4-11
09167-27003	22-8	09200-06037	61-22	09280-17003	6-7
09167-30008	22-27	09206-08001	3-5	09280-17007	11-9
	22-28	09206-08007	2-8	09280-18009	7-25
	22-29	09206-11014	10-2		8-4
09168-06023	6-4	09206-13017	4-5	09280-22016	8-14
	6-14	09208-08016	39-13	09280-26005	23-42
	6-19		39-26	09280-40010	7-18
	7-6	09209-05011	23-41	09280-42003	1-19
09168-08015	5-13	09229-04020	45-4		3-21
09168-08016	5-14	09246-05006	5-18	09283-06007	21-31
09168-08029	2-7	09247-12006	5-19	09283-14006	23-23

PART NO.	FIG.NO.-REF.NO.	PART NO.	FIG.NO.-REF.NO.	PART NO.	FIG.NO.-REF.NO.
09283-42017	22-34	09402-50208	16-7	09482-00415	3-16
09285-20006	22-12	09402-58208	3-22	09493-24010	5-24
09285-32004	52-3	09403-10319	43-15	09800-21039	46-4
09285-39001	59-15	09403-14304	56-17	09813-00027	46-5
09289-04002	12-14	09404-06429	14-19		
09319-08045	39-3		14A-19		
09320-08013	58-5	09404-06432	18-18		
09320-08066	17-18		26-7		
09320-08068	17-18		35-5		
09320-09501	41-15	09404-08207	35-5		
	41A-15	09407-11402	35-6		
09320-10015	18-5	09407-14407	36-7		
	18-21	09407-14408	35-6		
09320-10038	40-16	09407-25402	40-12		
	40A-16		40A-12		
09320-12048	17-23	09408-00066	43-16		
09320-12049	17-28	09409-06314-5PK	49-17		
09320-12065	42-11		49A-19		
09320-12068	49-13	09440-04010	23-43		
	49A-15	09440-05005	39-27		
09320-14023	49-15	09440-09023	7-24		
	49A-17	09440-12018	37-14		
09321-06026	34-5	09440-17009	23-24		
09321-10002	38-2	09443-06016	35-13		
09321-10035	38-2	09443-11030	38-18		
09355-35755-600	20-3	09443-14058	38-10		
09360-10032	4-7	09443-14059	38-7		
09360-10041	56-13	09443-19011	38-11		
09360-10042	54-1	09443-22013	38-8		
	56-14	09444-20001	23-25		
	61-20	09448-18022	39-14		
09360-10044	54-2	09462-00093	46-6		
09380-27004	22-13	09471-12045	32-5		
09380-27006	22-14		32-11		
09380-30009	22-35		33-5		
	22-36		33-11		
	22-37		33A-5		
09381-10004	3-3		33A-11		
09381-18003	9-11	09471-12081	30-11		
09385-10005	38-6	09471-12083	34-3		
09390-62012	22-15	09471-12185	30-12		
09401-11101	16-9		31-10		
09401-11407	40-22	09481-10501	35-2		
	40A-22	09481-15501	35-3		
09401-12404	61-18	09481-30101	27-3		
09401-13417	16-10	09482-00410	3-16		
	61-17	09482-00411	3-16		
09401-14301	16-5	09482-00412	3-16		
09401-15101	20-4	09482-00413	3-16		
09401-16406	20-4A	09482-00414	3-16		

1 INFORMATION ILLUSTRATION INDEX

2 ENGINE TRANSMISSION

3 ELECTRICAL

4 BODY

5 PARTS NUMBER INDEX

SUZUKI MOTOR CORPORATION

9900B-30142-010

9900B-30142-010

Printed in Japan

Ⓢ